https://truckmanualshub.com/



Canter 2012 Service Manual

https://truckmanualshub.com/

FE.FG

SERVICE MANUAL
2012 Model
FOREWORD

This Service Manual contains maintenance and repair methods for the Mitsubishi Fuso Truck FE. FG Series. Read this manual carefully as an aid in providing correct, efficient maintenance. Please note that the information and specifications contained within this manual may change without notice. This is due to product modifications and continued vehicle improvements that are made throughout the model years. Should you encounter any discrepancy in the information provided, please do not hesitate to contact your nearest Mitsubishi Fuso Dealer or Mitsubishi Fuso Truck of America, Inc.

MARCH 2011

GROUP INDEX

GENERAL 00
MAINTENANCE SCHEDULE 01
ENGINE 11
LUBRICATION 12
FUEL AND ENGINE CONTROL 13
COMMON RAIL SYSTEM 13E
COOLING 14
INTAKE AND EXHAUST 15
EMISSION CONTROL 17
BlueTec® SYSTEM 17E
CLUTCH 21
TRANSMISSION <DUONIC™> 22
DUONIC™ 22E
TRANSFER 24
PROPELLER SHAFT 25
FRONT AXLE
<FE> 26A
<FG> 26B
REAR AXLE 27
WHEEL AND TIRE 31
FRONT SUSPENSION 33
REAR SUSPENSION 34
BRAKE 35
ANTI-LOCK BRAKE SYSTEM (ABS) 35E
PARKING BRAKE 36
STEERING 37
BUMPER AND FRAME 41
CAB 42
DOOR 43
EXTERIOR 51
INTERIOR 52
ELECTRICAL 54
HEATER, AIR-CONDITIONER AND VENTILATION 55
FULL AUTOMATIC AIR-CONDITIONER 55E

https://truckmanualshub.com/

FUSO

Group 00

General

MITSUBISHI FUSO TRUCK OF AMERICA, Inc.

Pub.No.00ELT0001-00

https://truckmanualshub.com/

INDEX

EQUIPMENT TYPE CODES LIST 00-2

POWER TRAIN TABLE 00-3

HOW TO READ THIS MANUAL 00-4

CHASSIS NUMBER, ENGINE NUMBER,
POWER TRAIN LABEL 00-12

VEHICLE IDENTIFICATION NUMBER 00-13

PRECAUTIONS FOR MAINTENANCE OPERATION
1. Handling Precautions for Electric Circuits 00-19
2. Service Precautions for Alternators 00-22
3. Intermittent Faults 00-24
4. Precautions for Arc Welding 00-25
5. Cautions When Handling DEF 00-26
6. Precautions When Repainting 00-26
7. Precautions When Handling a Vehicle with DUONIC™ System ... 00-26
8. Precautions on Cleaning When Servicing the Engine and Transmission 00-27

JACKING UP THE VEHICLE 00-30

DIAGNOSIS CODES
1. Diagnosis Codes 00-34
2. Reading and Erasing the Diagnosis Code 00-40

TABLE OF STANDARD TIGHTENING TORQUES 00-44

https://truckmanualshub.com/

EQUIPMENT TYPE CODES LIST

Component	Name plate marking	Code description
Engine		
4P10T5	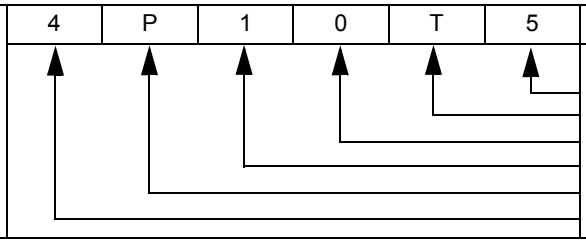	Power version number Turbocharged Order of development within same series Order of development among different series Diesel engine No. of cylinders (4)
Transmission		
M038S6W	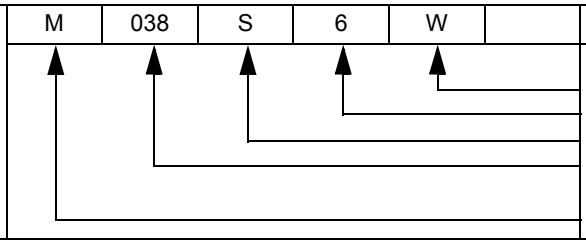	Variation (W: With directly-mounted transfer) Forward speeds Type of mesh (S: Synchromesh) Load carrying capacity of truck class (tonnage) on which the clutch is primarily used Initial letter of the transmission
Propeller shaft		
P3	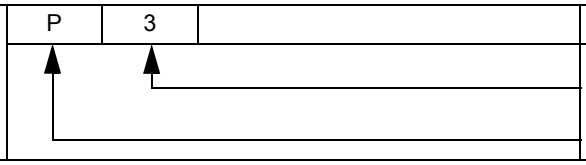	Load carrying capacity of truck class (tonnage) on which the clutch is primarily used Initial letter of the propeller shaft
Front axle		
F200T	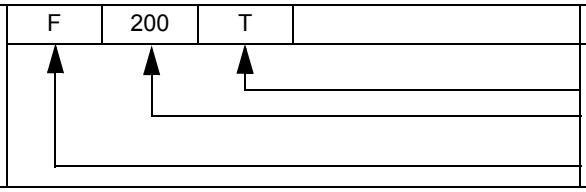	Vehicle type (T: Truck) Load carrying capacity of truck class (tonnage) on which the clutch is primarily used Initial letter of the front axle
Rear axle		
R033T	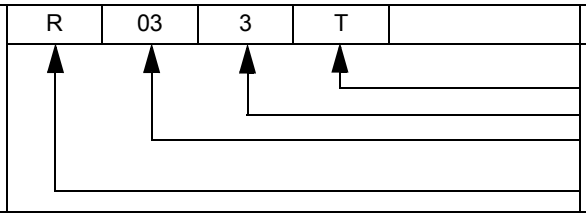	Vehicle type (T: Truck) Order of development within same series Load carrying capacity of truck class (tonnage) on which the clutch is primarily used Initial letter of the rear axle
Reduction and differential		
D033H	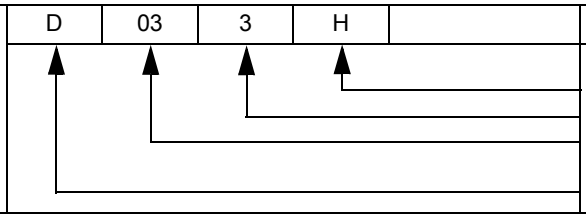	Tooth profile (H: Hypoid gear) Order of development within same series Load carrying capacity of truck class (tonnage) on which the clutch is primarily used Initial letter of the reduction & differential

https://truckmanualshub.com/

POWER TRAIN TABLE

Vehicle model	Engine	Clutch	Transmission	Propeller shaft	Rear axle	Reduction & differential
FEC52CL3SUHD	4P10-T5	–	M038S6	P3	R033T	D033H
FEC52EL3SUHD	4P10-T5	–	M038S6	P3	R033T	D033H
FEC52GL3SUHD	4P10-T5	–	M038S6	P3	R033T	D033H
FEC72CL3SUHD	4P10-T5	–	M038S6	P3	R035T	D035H
FEC72EL3SUHD	4P10-T5	–	M038S6	P3	R035T	D035H
FEC72GL3SUHD	4P10-T5	–	M038S6	P3	R035T	D035H
FEC72HL3SUHD	4P10-T5	–	M038S6	P3	R035T	D035H
FEC72KL3SUHD	4P10-T5	–	M038S6	P3	R035T	D035H
FEC72HL3WUHD	4P10-T5	–	M038S6	P3	R035T	D035H
FEC72KL3WUHD	4P10-T5	–	M038S6	P3	R035T	D035H
FEC92CL3SUHD	4P10-T5	–	M038S6	P3	R035T	D035H
FEC92EL3SUHD	4P10-T5	–	M038S6	P3	R035T	D035H
FEC92GL3SUHD	4P10-T5	–	M038S6	P3	R035T	D035H
FEC92HL3SUHD	4P10-T5	–	M038S6	P3	R035T	D035H
FEC92KL3SUHD	4P10-T5	–	M038S6	P3	R035T	D035H
FGB72EL3SUHD	4P10-T5	–	M038S6W	Front: P2 Rear: P3	R035T	Front: D1H Rear: D035H

https://truckmanualshub.com/

HOW TO READ THIS MANUAL

This manual consists of the following parts:
- Specifications
- Structure and Operation
- Troubleshooting
- Circuits
- Electrical Equipment Installation Positions
- Inspection of Electrical Equipment
- On-vehicle Inspection and Adjustment
- Connector configuration chart

On-vehicle Inspection and Adjustment
- Procedures for inspection and adjustment of individual parts and assemblies as mounted on the vehicle are described including specific items to check and adjust. Specified or otherwise, inspection should be performed for looseness, play, backlash, crack, damage, etc.

Service procedures
- Procedures for servicing components and parts off the vehicle are described centering on key points in their removal, installation, disassembly, reassembly, inspection, etc.

Inspection
- Check items subject to “acceptable/unacceptable” judgement on the basis of service standards are all given.
- Some routine visual checks and cleaning of some reused parts are not described but must always be included in actual service work.

Caution
- This service manual contains important cautionary instructions and supplementary information under the following four headings which identify the nature of the instructions and information:

DANGER ⚠	Precautions that should be taken in handling potentially dangerous substances such as battery fluid and coolant additives.
WARNING ⚠	Precautionary instructions, which, if not observed, could result in serious injury or death.
CAUTION ⚠	Precautionary instructions, which, if not observed, could result in damage to or destruction of equipment or parts.
NOTE	Suggestions or supplementary information for more efficient use of equipment or better understanding.

Terms and Units
- Front and rear
  The forward running direction of the vehicle is referred to as the front and the reverse running direction is referred to as the rear.

- Left and right
  Left hand side and right hand side, when facing the forward running direction of the vehicle, are respectively left and right.

Standard value
- Standard value dimensions in designs indicating: the design dimensions of individual parts, the standard clearance between two parts when assembled, and the standard value for an assembly part, as the case may be.

https://truckmanualshub.com/

Limit
- When the value of a part exceeds this, it is no longer serviceable in respect of performance and strength and must be replaced or repaired.

Tightening torque
- Values are directly specified for out-of-standard tightening torques for bolts and nuts.
- Where there is no specified figure for tightening torque, follow the table covering standard tightening torques. (Values for standard tightening torques are based on thread size and material.)
- When the item is to be tightened in a wet state, “wet” is indicated. Where there is no indication, read it as dry.

Units
- Tightening torques and other parameters are given in SI* units with imperial unit and metric units added in brackets { }.

***SI: Le Système International d’Unités**

Example: 390 N·m {290 ft.lbs, 40 kgf·m}

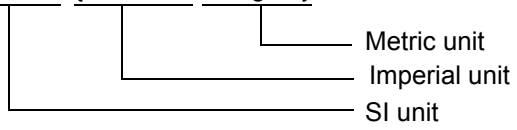

Unit		SI unit {imperial unit, metric unit}	Conversion factor
Force		N {lbs, kgf}	9.80665 N {2.2046 lbs, 1 kgf}
Moment of force		N·m {ft.lbs, kgf·m}	9.80665 N·m {7.2329 ft.lbs, 1 kgf·m}
Pressure	Positive pressure	kPa {psi, kgf/cm^2}	98.0665 kPa {14.22 psi, 1 kgf/cm^2}
	Vacuum pressure	kPa {in.Hg, mmHg}	0.133322 kPa {0.03937 in.Hg, 1 mmHg}
Volume		J {BTU, kcal}	4186.05 J {3.96825BTU, 1 kcal}
Heat quantity		W {BTU/h, kcal/h}	1.16279W {3.96825BTU/h, 1 kcal/h}

Example: 30 mm {1.18 in.}

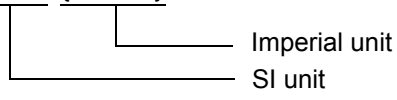

Unit	SI unit {imperial unit}	Conversion factor
Length	mm {in.}	1 mm {0.03937 in.}
	m {ft.}	1 m {3.2808 ft.}
	km {mile}	1 km {0.6214 mile}
Mass	kg {lb}	1 kg {2.2046 lb}
	g {oz}	1 g {0.035274 oz}
Temperature (in degree Celsius)	°C {°F}	1°C {(1°C × 1.8 + 32)°F}
Velocity	km/h {mph}	1 km/h {0.6214 mph}
	m/s {ft/s}	1 m/s {3.281 ft/s}
Volume	L {qts}, L {gal}	1 L {1.05336 qts}, 1 L {0.2642 gal}
	cm^3 {cu.in.}	1 cm^3 {0.061023 cu.in.}
Area	m^2 {in^2}, m^2 {ft^2}	1 m^2 {1.550 × 10^3 in^2}, 1 m^2 {1.076 × 10 ft^2}

https://truckmanualshub.com/

HOW TO READ THIS MANUAL

Illustrated Parts Breakdown and Service Procedures

Symbol	Denotation	Application	Remarks
Ta	Tightening torque	Parts not tightened to standard torques (standard torques specified where necessary for servicing)	Specified values shown in table See Table of Standard Tightening Torques for parts for which no tightening torques are specified.
P	Locating pin	Parts to be positioned for installation	
⊗	Non-reusable parts	Parts not to be reused	
a	Lubricant and/or sealant	Parts to be coated with lubricant or sealant for assembly or installation	Necessary lubricant and/or sealant, quantity required, etc. are specified in table.
a	Special tool	Parts for which special tools are required for service operation	Tool name/shape and part number are shown in table.
*a	Associated part	Parts associated with those removed/disassembled for servicing	

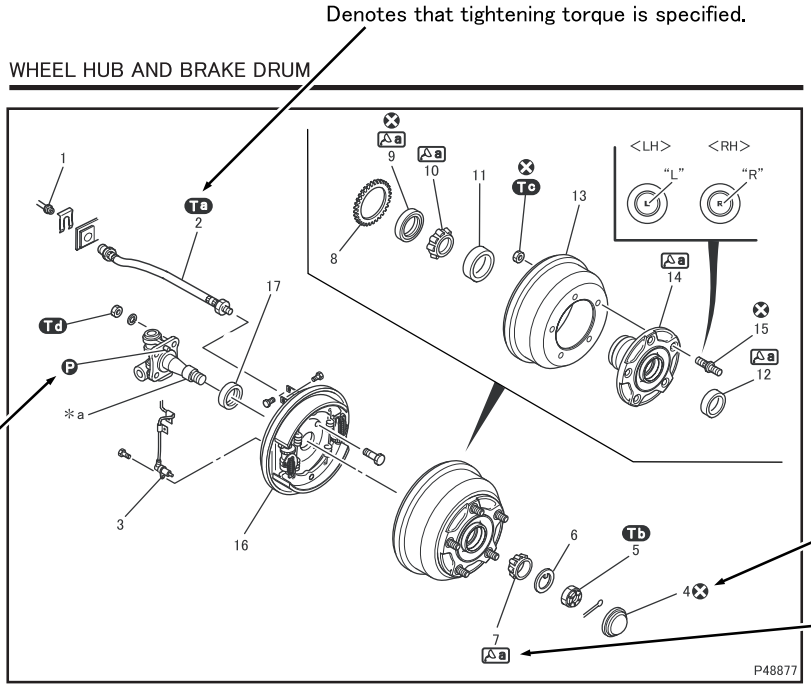

● Disassembly sequence

1 Brake pipe
2 Brake hose
3 Wheel speed sensor
4 Hub cap
5 Lock nut
6 Lock washer
7 Outer bearing inner race
8 Anti-lock brake system rotor
9 Oil seal
10 Inner bearing inner race
11 Inner bearing outer race
12 Outer bearing outer race
13 Brake drum
14 Wheel hub
15 Hub bolt
16 Front drum brake (See Gr.35A)
17 Spacer

*a : Knuckle
P : Locating pin
⊗ : Non-reusable parts

● Assembly sequence

Follow the disassembly sequence in reverse.

Service standards (unit : mm {in.})

Location	Maintenance item		Standard value	Limit	Remedy
7, 10, 11, 12	Starting torque of wheel hub bearing (Tangential force at hub bolt position with oil seal fitted in)		1 to 3.5 N·m {0.7 to 2.6 ft.lbs, 0.10 to 0.35 kgf·m} (Tangential force:8.8 to 28.4 N {2.0 to 6.4 lbs, 0.9 to 2.9 kgf})	–	Adjust or replace
14	Brake drum	Inside diameter	320 {12.6}	322 {12.7}	Repair or replace
		Cylindricality	0.05 {0.0020}	0.05 {0.0079}	

These location numbers correspond with disassembly sequence numbers.

P58289N

https://truckmanualshub.com/

"Wet" is indicated when part is to be tightened with oil or grease applied to its threads.

Tightening torque (unit: N·m{ft.lbs, kgf·m})

Mark	Part to be tightened	Tightening torque	Remarks
Ta	Brake force tightening	13 to 17{9.6 to 13, 1.3 to 1.7}	–
Tb	Lock nut	113 ± 15{83 ± 11, 11.5 ± 1.5}	Wet
Tc	Nut (brake drum and wheel hub mounting)	343 ± 39{250 ± 29, 35 ± 4}	–
Td	Nut (front drum brake mounting)	118 ± 20{87 ± 15, 12 ± 2}	–

Lubricant and/or sealant

Mark	Point of application	Specified lubricant and/or sealant	Quantity
Aa	Between rolls of outer bearing inner race and inner bearing inner race	Mitsubishi wheel bearing grease	As required
	Inside wheel hub		395 ± 40 g {13.9 ± 1.41 oz}

Special tools (unit: mm {in.})

Mark	Tool name and shape	Part No.	Application
Ca	Hub Cap Wrench A: 0.5°, B: 78° 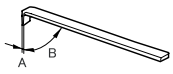 P49261	MB999108	Removal of hub cap
Cb	Oil Seal Installer A: ϕ84 {3.31}, B: ϕ70 {2.76} 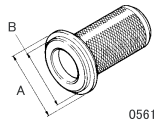 05619	MB999097	Installation of oil seal

Identification marks for special tools are the same as used in the text.

◆ Removal procedure

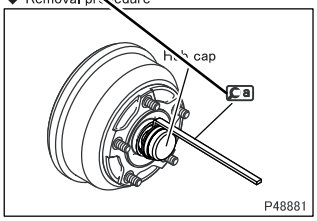

P48881

■Removal: Hub cap

◆Installation procedure◆

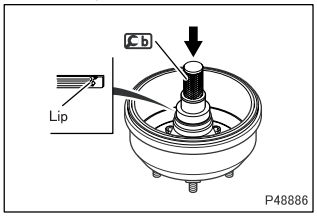

P48886

■Installation: Oil seal
Apply grease to the lip of the oil seal, then fit the oil seal onto the wheel huh in the illustrated direction.

P58290N

https://truckmanualshub.com/

How to Read Circuits (Electrical)

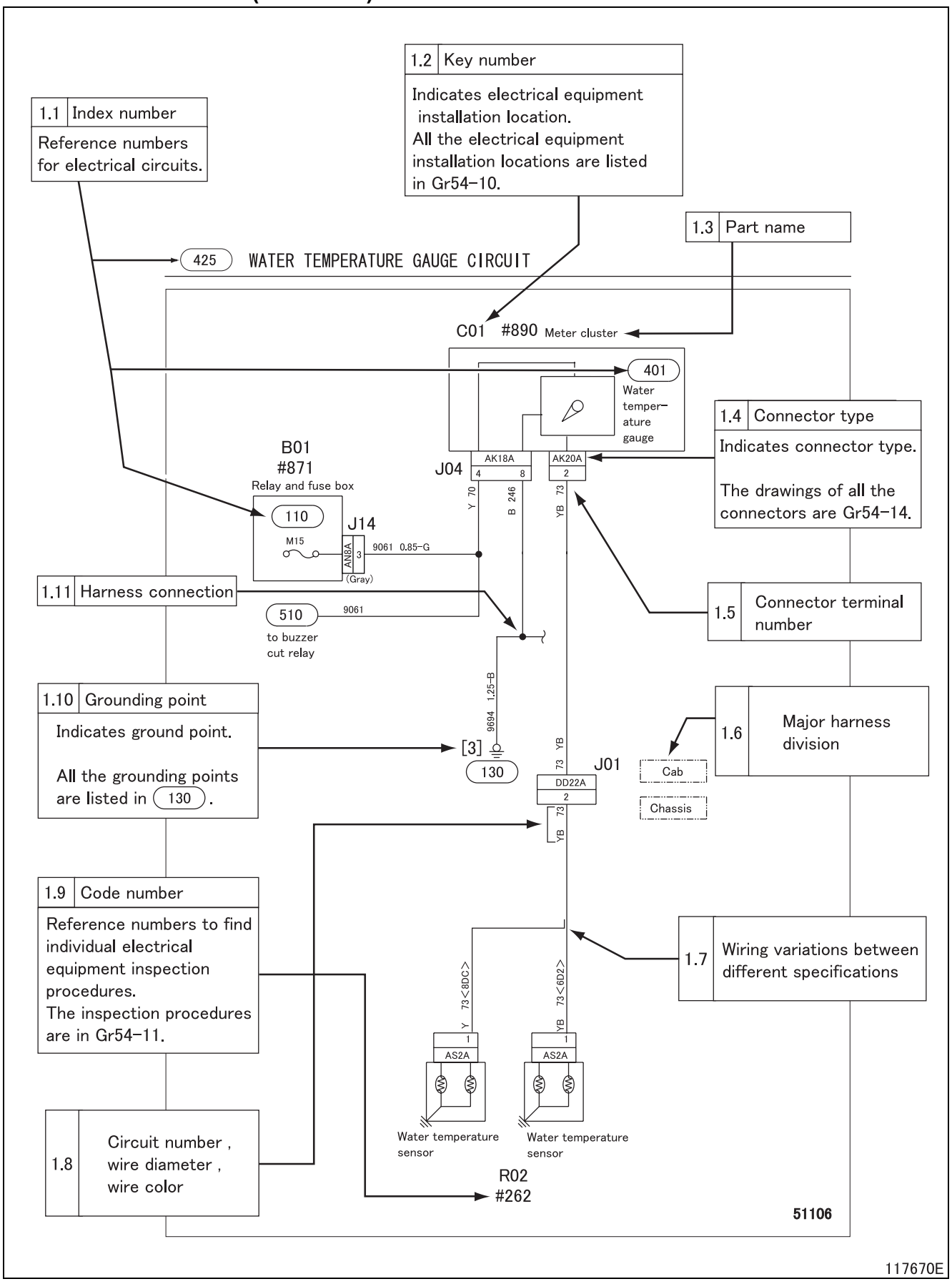

https://truckmanualshub.com/

1.1 Index number: (100) to (999)

- Index numbers are used as reference numbers for electrical circuits. Each electrical circuit has been assigned its own index number.

1.2 Key number: A01 to Z99

- Key numbers indicate electrical equipment installation locations. The installation location of an electrical equipment can be easily found using its key number shown in a circuit diagram.
  All of the electrical equipment installation locations are listed in Gr54-10.

1.3 Part name

1.4 Connector type (type indication)

- A list of the connectors used is included in Gr54-14.

1.5 Connector terminal number

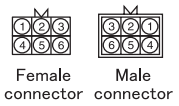

Connector terminal numbering starts with the upper left corner for female connectors and with the upper right corner for male connectors.

P50678E

1.6 Major harness division

- Major harness divisions are shown.

1.7 Wiring variations between different specifications

- Variations in wiring/circuit between different vehicle specifications are clearly indicated as shown.

1.8 Circuit number, wire diameter, wire color

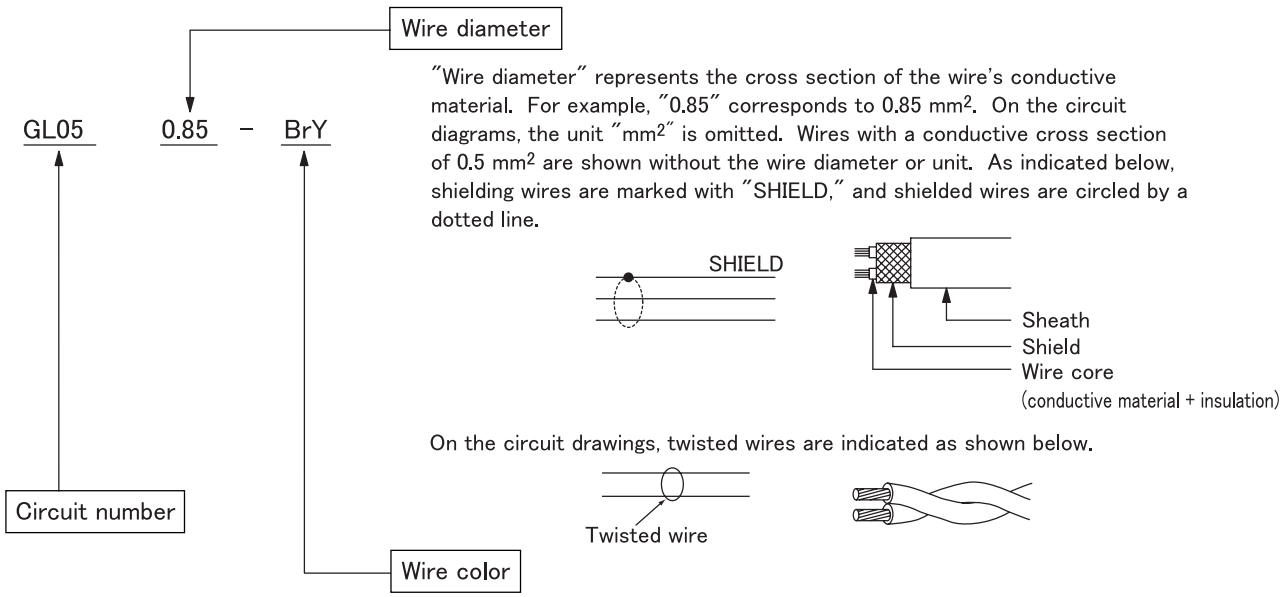

"Wire diameter" represents the cross section of the wire's conductive material. For example, "0.85" corresponds to 0.85 mm². On the circuit diagrams, the unit "mm²" is omitted. Wires with a conductive cross section of 0.5 mm² are shown without the wire diameter or unit. As indicated below, shielding wires are marked with "SHIELD," and shielded wires are circled by a dotted line.

On the circuit drawings, twisted wires are indicated as shown below.

Wire colors are represented by the first letter of the color.
Colors that all start with the letter "B" are indicated as follows.

- BLACK → B
- BLUE → L
- BROWN → Br

Wires that have both base and tracer colors are indicated by two letters.

RY (Yellow tracer on Red base)
GL (Blue tracer on Green base)

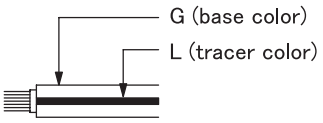

P50680E

1.9 Code number: #001 to #999

- Code numbers are reference numbers to find individual electrical equipment inspection procedures. The inspection procedure for an electrical equipment can be found using its code number shown in a circuit diagram.

https://truckmanualshub.com/

1.10 Grounding point: [1] to [99]

- Locations where wires are grounded to the vehicle. All of the grounding points are listed in (130).

1.11 Harness connection

- The arrow in the wiring diagram indicates where harnesses are connected, and NOT the flow of electricity.

Wire color

Wire color		Base color + tracer									
B	Black	BW	Black/ white	BY	Black/ yellow	BR	Black/red	BG	Black/ green	BL	Black/ blue		
Br	Brown	BrW	Brown/ white	BrB	Brown/ black	BrY	Brown/ yellow	BrR	Brown/ red	BrG	Brown/ green		
G	Green	GW	Green/ white	GR	Green/ red	GY	Green/ yellow	GB	Green/ black	GL	Green/ blue	GO	Green/ orange
Gr, Gy	Gray	GrL, GyL	Gray/ blue	GrR, GyR	Gray/ red								
L	Blue	LW	Blue/ white	LR	Blue/red	LY	Blue/ yellow	LB	Blue/ black	LO	Blue/ orange	LG	Blue/ green
Lg	Light green	LgR	Light green/ red	LgY	Light green/ yellow	LgB	Light green/ black	LgW	Light green/ white				
O	Orange	OL	Orange/ blue	OB	Orange/ black	OG	Orange/ green						
P	Pink	PB	Pink/ black	PG	Pink/ green	PL	Pink/ blue	PW	Pink/ white				
Pu	Purple												
R	Red	RW	Red/ white	RB	Red/ black	RY	Red/ yellow	RG	Red/ green	RL	Red/blue	RO	Red/ orange
Sb	Sky blue												
V	Violet	VY	Violet/ yellow	VW	Violet/ white	VR	Violet/red	VG	Violet/ green				
W	White	WR	White/ red	WB	White/ black	WL	White/ blue	WG	White/ green	WO	White/ orange		
Y	Yellow	YR	Yellow/ red	YB	Yellow/ black	YG	Yellow/ green	YL	Yellow/ blue	YW	Yellow/ white	YO	Yellow/ orange
		YP	Yellow/ pink	YV	Yellow/ violet								

https://truckmanualshub.com/

M E M O

https://truckmanualshub.com/

CHASSIS NUMBER, ENGINE NUMBER, POWER TRAIN LABEL

- Chassis and engine numbers are assigned to each vehicle and engine respectively in the order of production. These numbers are required at vehicle inspection for registration.

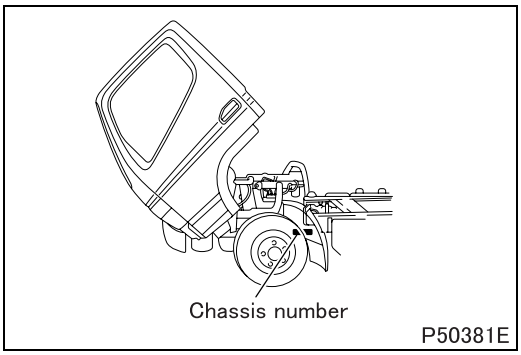

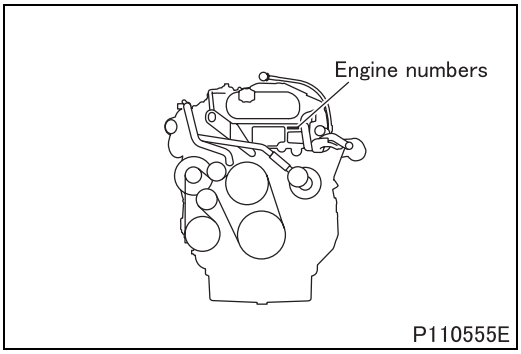

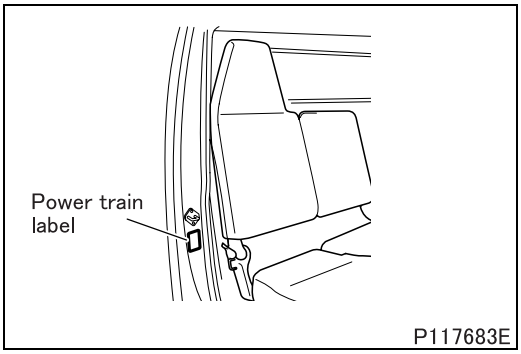

- Power train label located in the position illustrated indicates the vehicle model, chassis number and information relevant to the vehicle's power train components.

https://truckmanualshub.com/

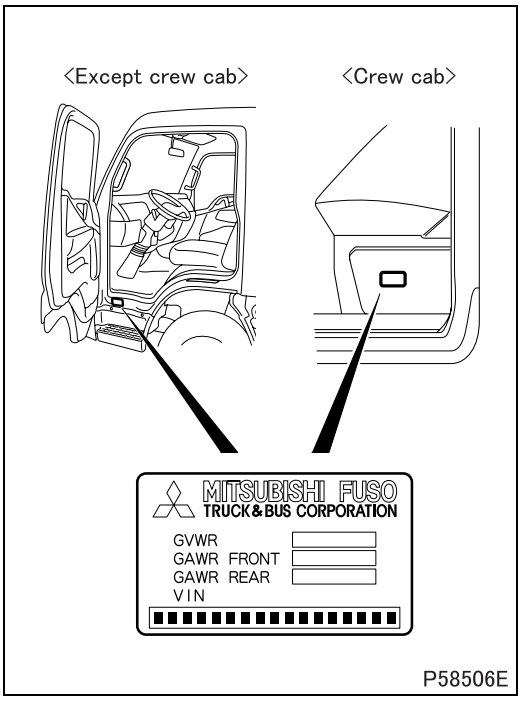

- The vehicle identification number is punch-marked on the plate, which is attached in the position as illustrated.
  The vehicle identification number consists of a 17-digit set of alphanumeric characters. Each digit represents the following specifications.

J	L	6	A	R	G	1	A	■	C	K	■■■■■■
(1)	(2)	(3)	(4)	(5)	(6)	(7)	(8)	(9)	(10)	(11)	(12)

(1)	Country	J:	Japan
(2), (3)	Vehicle type	L, 6:	Incomplete vehicle
(4)	Gross vehicle weight / Brake system		
		A:	10,001 to 14,000 lbs. / Hydraulic
		B:	14,001 to 16,000 lbs. / Hydraulic
		C:	16,001 to 19,500 lbs. / Hydraulic
(5)	Line	M:	FEC52S
		N:	FEC72S
		P:	FEC72W
		R:	FEC92S
		S:	FGB72S
(6)	Series (wheel base)	D:	2.6 to 2.89 m (8.53 to 9.48 ft.)
		E:	3.2 to 3.49 m (10.49 to 11.44 ft.)
		G:	3.8 to 4.09 m (12.46 to 13.41 ft.)
		H:	4.1 to 4.39 m (13.45 to 14.40 ft.)
		K:	4.7 to 4.99 m (15.41 to 16.37 ft.)
(7)	Cab/chassis type and make		
		1:	Chassis cab for Mitsubishi Fuso
(8)	Engine	A:	2.998 L Diesel turbo charged and charge air cooled
(9)	Check digit		
(10)	Model year	A:	2012
(11)	Plant	K:	Kawasaki
(12)	Plant sequential number		

https://truckmanualshub.com/

PRECAUTIONS FOR MAINTENANCE OPERATION

DANGER ⚠

- **This product contains or emits chemicals known to the State of California to cause cancer and birth defects or other reproductive harm.**

- Before performing service operations, inquire into the customer's complaints and ascertain the condition by checking the total distance traveled, the conditions under which the vehicle is operated, and other relevant factors on the vehicle. And note the necessary information. This information will help you to service the vehicle efficiently.
  - Check the location of the fault, and identify its cause. Based on your findings, determine whether parts must be removed or disassembled. Then, follow the service procedure given in this manual.

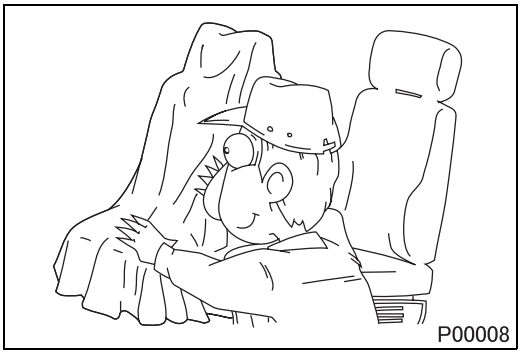
P00008

- Perform service operations on a level surface. Before starting, take the following preparatory steps:
  - To prevent soiling and damage, place covers over the seats, trim and floor in the cab and over the paintwork of the body.

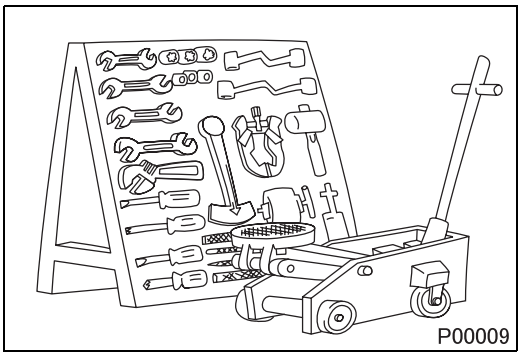
P00009

- Prepare all the general and special tools necessary for the job.

WARNING ⚠

- **Special tools must be used wherever specified in this manual. Do not attempt to use other tools since they could cause injuries and/or vehicle damage.**

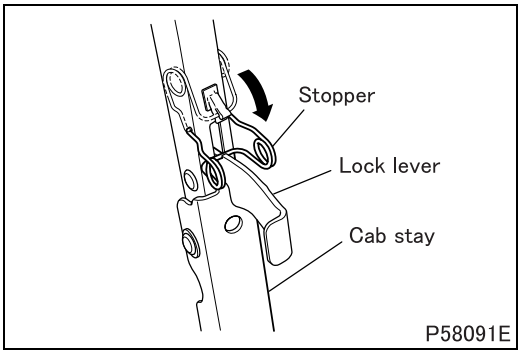

P58091E

- After manually tilting the cab, be sure to engage the stopper with the lock lever to secure the cab stay in a rigid state.

https://truckmanualshub.com/

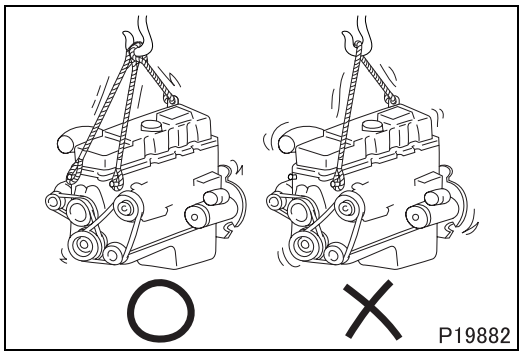

- Take extreme care when removing/installing heavy items such as engine, transmission and axle. When lifting heavy items using a cable etc., observe the following precautions.
  - Identify the weight of the item being lifted. Use the cable that is strong enough to support the weight.

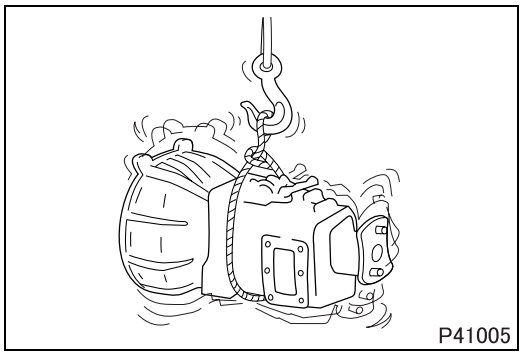

  - If lifting eyes are not provided on the item being lifted, tie a cable around the item taking into account the item's center of gravity.

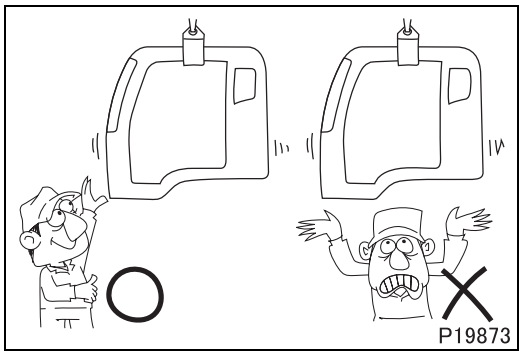

  - Do not allow anyone to pass or stay under a lifted item which may possibly fall.



- Never work in shoes that have oily soles.
  When working with a partner or in a group, use pre-arranged signals and pay constant attention to safety. Be careful not to touch switches and levers unintentionally.

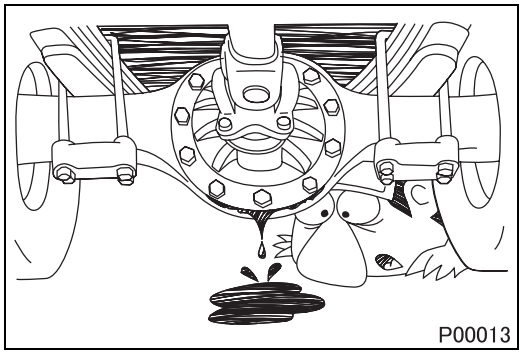

- Inspect for oil leakage etc. before washing the vehicle. If the order is reversed, any oil leakage or fault that may exist could go unnoticed during inspection.

https://truckmanualshub.com/

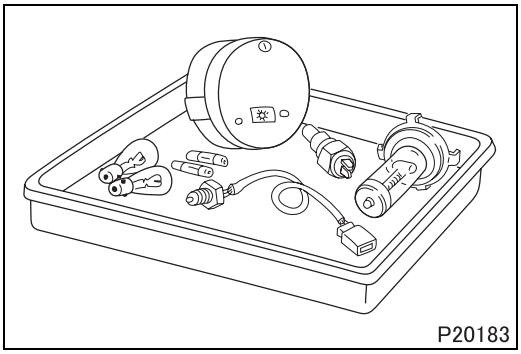
P20183

- Prepare replacement parts ready for installation.

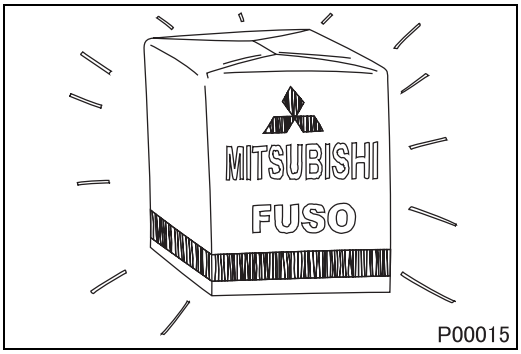

P00015

- Oil seals, packings, O-rings and other rubber parts, gaskets, and split pins must be replaced with new ones after removal. Use only genuine MITSUBISHI replacement parts.

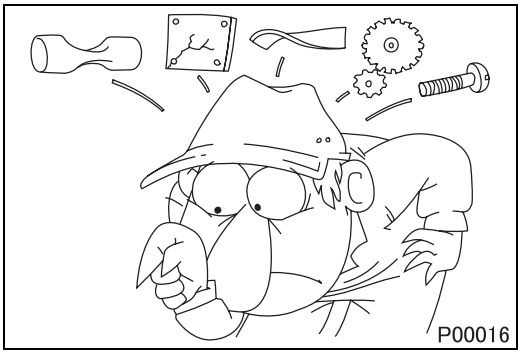
P00016

- When disassembling parts, visually check them for wear, cracks, damage, deformation, deterioration, rust, corrosion, defective rotation, fatigue, clogging and any other possible defect.

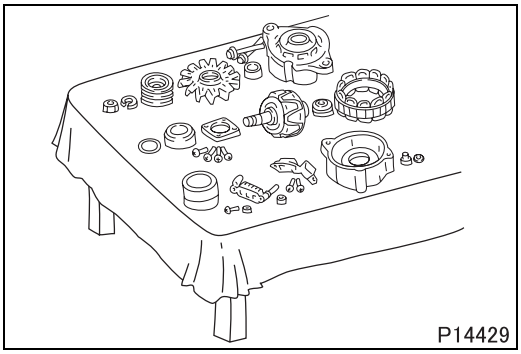
P14429

- To facilitate correct reassembly of parts, make alignment marks on them before disassembly and arrange disassembled parts neatly. Make punch marks and other alignment marks where they will not detract from parts' functionality and appearance.
- After removing parts from the vehicle, cover the area to keep it free of dust.

CAUTION ⚠

- **Be careful not to mix up identical parts, similar parts and parts that have left/right alignments.**
- **Keep new replacement parts and original (removed) parts separately.**

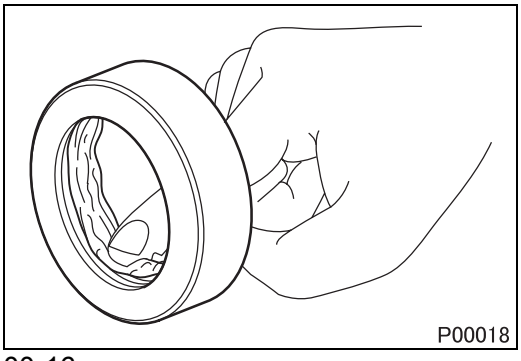
P00018

- Apply the specified oil or grease to U-seals, oil seals, dust seals and bearings before reassembly.
- Always use the specified oils and greases when performing inspection or replacement. Immediately wipe away any excess oil or grease with a rag.

https://truckmanualshub.com/

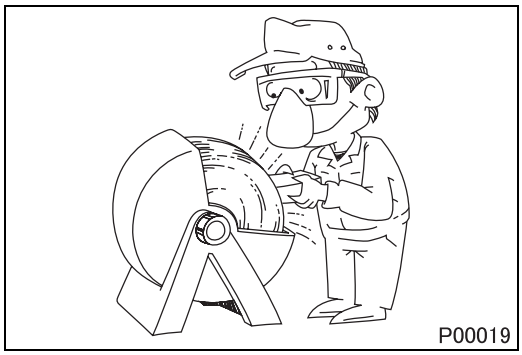
P00019

- Wear safety goggles when using a grinder or welder. Wear gloves when necessary, and watch out for sharp edges and other items that might wound your hands.

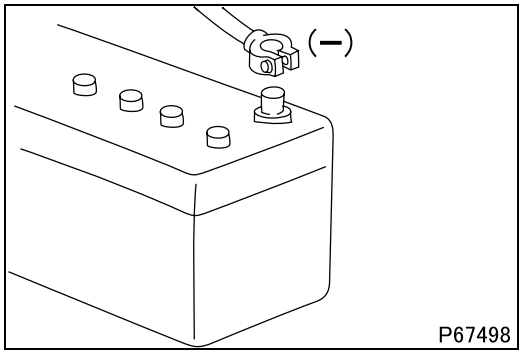

P67498

- Before working on the electrical system, disconnect the (–) battery cable to prevent short circuits.

CAUTION ⚠

- **Make sure that the starter switch and lighting switches are OFF before disconnecting or connecting battery cable. (Semiconductor components may otherwise be damaged.)**
- **Be sure to place the starter switch into the LOCK or OFF position and wait for about 2 minutes before disconnecting battery cables, harnesses or connectors. (This is because the BlueTec® system is still in operation.)**
- **Disconnect the (–) battery cable, then insulate the (–) terminal of the battery and (–) battery cable with insulating tape or the like.**
- **If the (–) battery cable is not disconnected, battery voltage will remain constantly applied to the B terminal, inviting danger of electric shock.**

CAUTION ⚠

- **Make sure that the starter switch and lighting switches are OFF before disconnecting or connecting battery cable. (Semiconductor components may otherwise be damaged.)**
- **The BlueTec® system remains in operation for about 2 minutes after the starter switch is set to the LOCK position. Before disconnecting battery cables, harnesses or connectors, be sure to wait for at least 2 minutes after turning the starter switch to the LOCK or OFF position.**
- **Connect the (+) and (–) battery cables correctly. If the polarity of the battery connections was reverse, the power switch and SAM would be damaged, leading to a vehicle fire.**

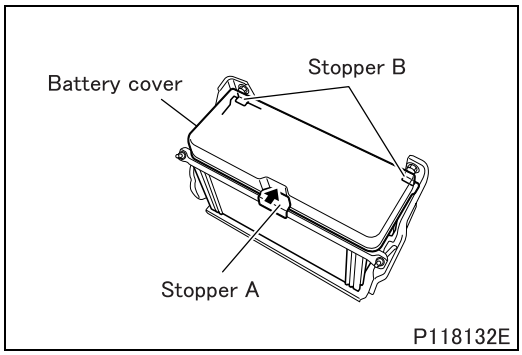

P118132E

- Removal and installation of the battery cover
  - Press the stopper A at the arrow to release the battery cover from the stopper A.
  - Draw the battery cover toward you to detach it from the stoppers B.
  - To install the battery cover, follow the removal sequence in reverse. After installing, make sure that the battery cover is securely attached.

https://truckmanualshub.com/

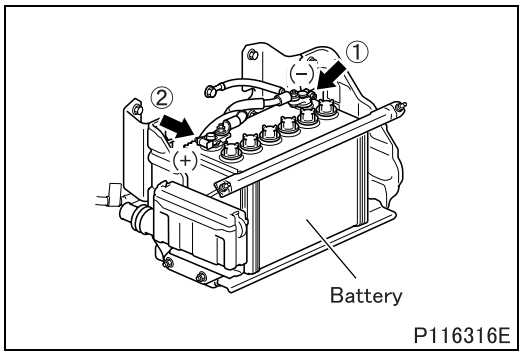

- Removal and installation of battery
  - Disconnect the battery cables at the battery terminals in the following sequence.
  - Disconnect the battery cable at the (–) terminal (1).
  - Disconnect the battery cable at the (+) terminal (2).
  - To connect battery cable, follow the disconnection sequence in reverse. Press in the terminal of the battery cable all the way to the bottom of the battery terminal post and tighten the nut to secure the cable.
    Tightening torque: 5 to 7 N·m {3.7 to 5.2 ft.lbs, 0.5 to 0.7 kgf·m}

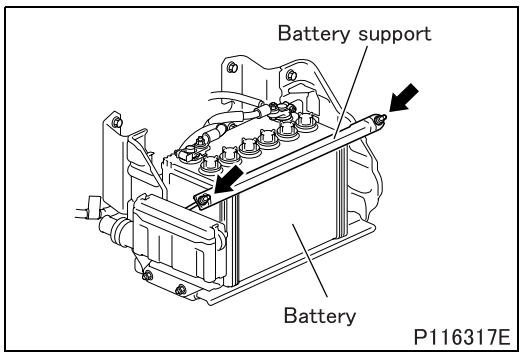

- Remove the nuts holding the battery, then remove the battery support.
- Remove the battery.
- To install the battery, follow the removal sequence in reverse. After installing, make sure that the battery is securely held in place.

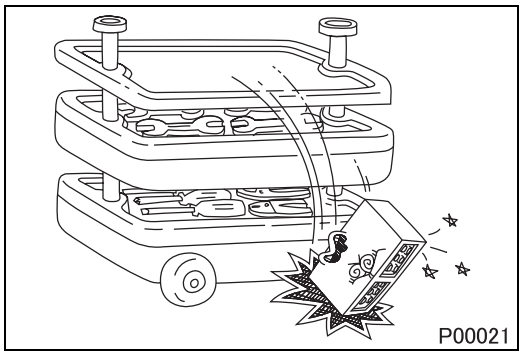

- Carefully handle sensors relays, and other items that are sensitive to shock and heat. Do not remove or paint the cover of any control unit.

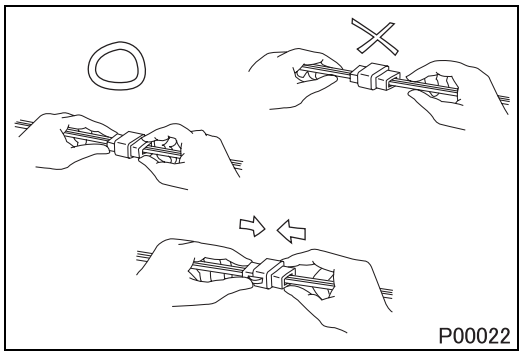

- When separating connectors, grasp the connectors themselves rather than the harnesses.
- To separate locking connectors, first push them in the direction of the arrows. To reconnect locking connectors, push them together until they click.

https://truckmanualshub.com/

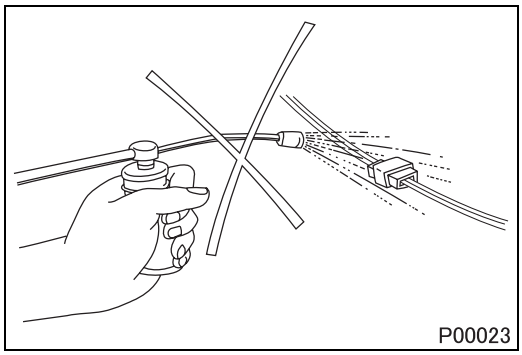

- Before washing the vehicle, cover electrical parts to keep them dry. (Use plastic sheets or equivalent.) Keep water away from harness connectors and sensors and immediately wipe off any water that gets on them.

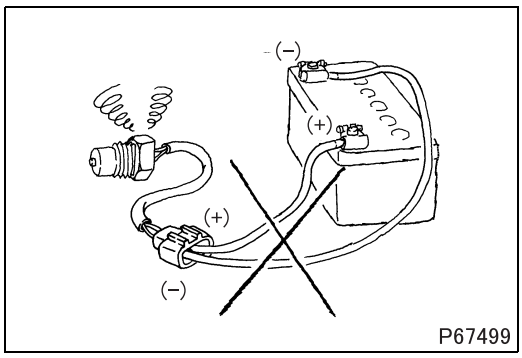

- When applying a voltage to a part for inspection purposes, check that the (+) and (–) cables are connected properly then gradually increase the voltage from zero. Do not exceed the specified voltage.
  Remember that control units and sensors do not necessarily operate on the battery voltage.

1. Handling Precautions for Electric Circuits

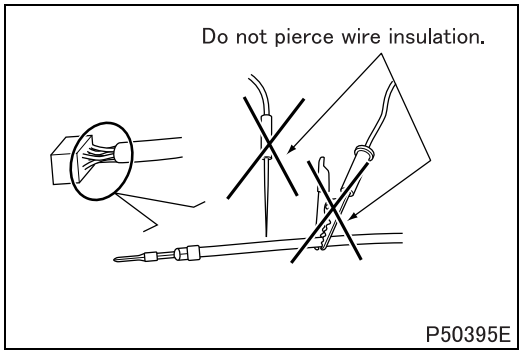

CAUTION ⚠

- **Do not pierce wire insulation with test probes or alligator clips when performing electrical inspections. Doing so can, particularly with the chassis harness, hasten corrosion.**

1.1 Inspection of harnesses

(1) Inspections with connectors fitted together

(1.1) Waterproof connectors

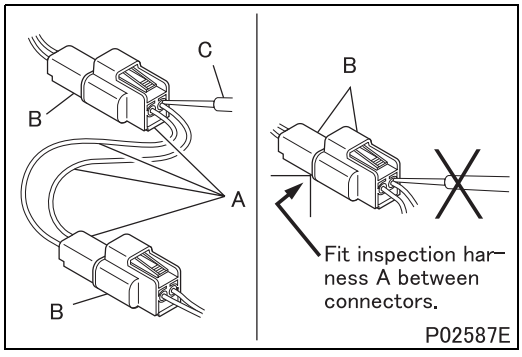

- Connect an inspection harness and connector A between the connectors B of the circuit to be inspected. Perform the inspection by applying a test probe C to the connectors of the inspection harness. Do not insert the test probe C into the wire-entry sides of the waterproof connectors since this would damage their waterproof seals and lead to rust.

https://truckmanualshub.com/

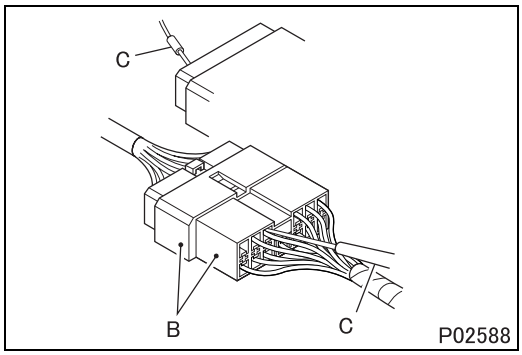

(1.2) Non-waterproof connectors

- Perform the inspection by inserting a test probe C into the wire-entry sides of the connectors. An extra-narrow probe is required for control unit connectors, which are smaller than other types of connector. Do not force a regular-size probe into control unit connectors since this would cause damage.

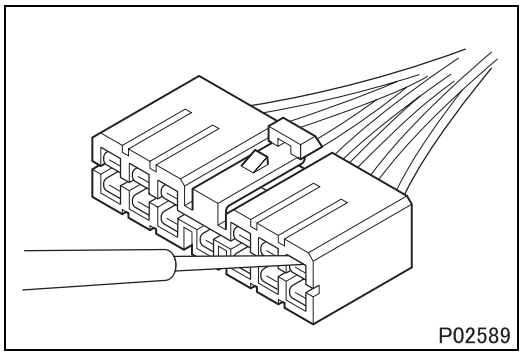

(2) Inspections with connectors separated

(2.1) Inspections on female terminals

- Perform the inspection by carefully inserting a test probe into the terminals. Do not force the test probe into the terminals since this could deform them and cause poor connections.

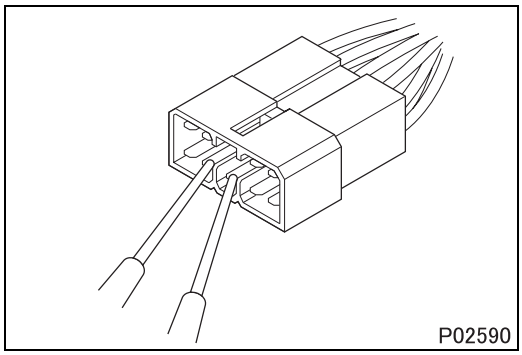

(2.2) Inspections on male terminals

- Perform the inspection by applying test probes directly to the pins.

CAUTION ⚠

- **Be careful not to short-circuit pins together with the test probes. With control unit connectors, short-circuiting of pins can cause damage to the control unit's internal circuitry.**

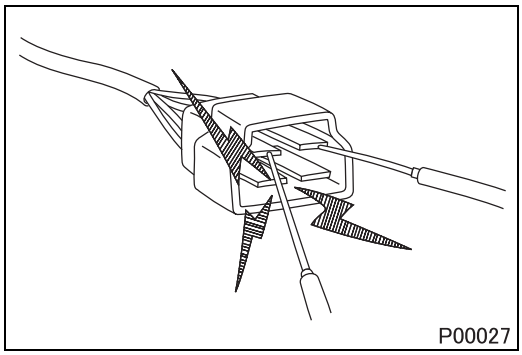

- When using a multimeter to check continuity, do not allow the test probes to touch the wrong terminals.

https://truckmanualshub.com/

1.2 Inspection of connectors

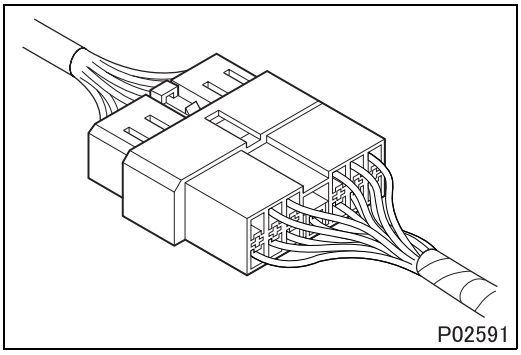

(1) Visual inspection

- Check that the connectors are fitted together securely.

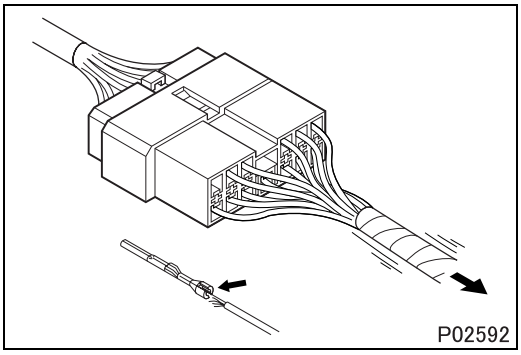

- Check whether wires have been separated from their terminals due to pulling of the harness.

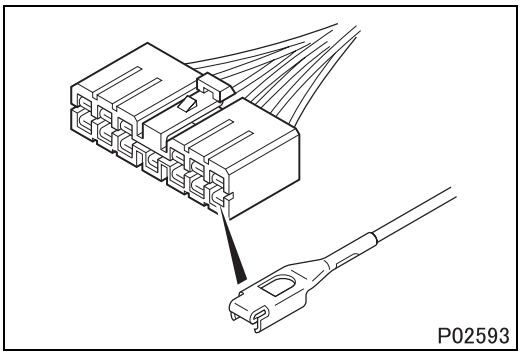

- Check that male and female terminals fit together tightly.
- Check for defective connections caused by loose terminals, by rust on terminals, or by contamination of terminals by foreign substances.

(2) Checking for loose terminals

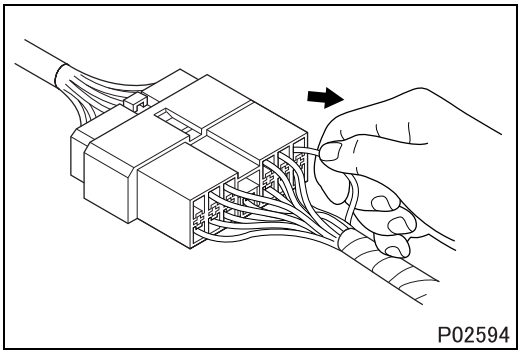

- If connector terminal retainers become damaged, male and female terminals may not mate with each other when the connector bodies are fitted together. To check for such terminals, gently pull each wire and see whether any terminals slip out of their connector housings.

https://truckmanualshub.com/

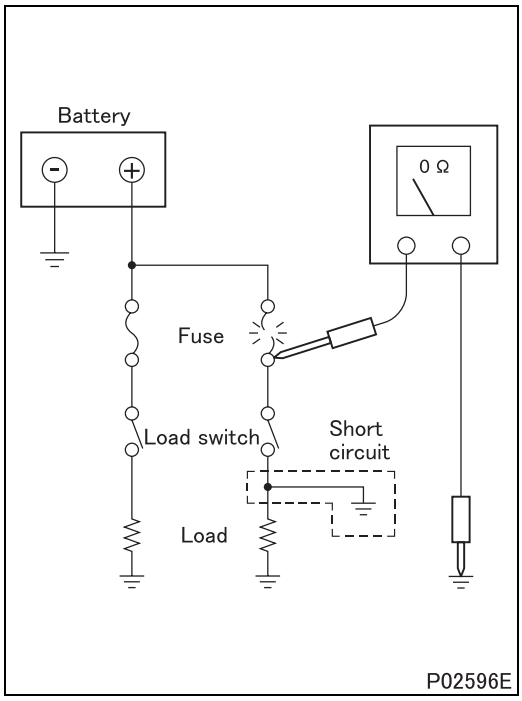

1.3 Inspections when a fuse blows

- Remove the fuse, then measure the resistance between ground and the fuse's load side.
  Next, close the switch of each circuit connected to the fuse. If the resistance measurement between any switch and ground is zero, there is a short circuit between the switch and the load. If the resistance measurement is not zero, the circuit is not currently short-circuited; the fuse probably blew due to a momentary short circuit.

- The main causes of short circuits are as follows:
  - Harnesses trapped between chassis parts
  - Harness insulation damage due to friction or heat
  - Moisture in connectors or circuitry
  - Human error (accidental short-circuiting of components)

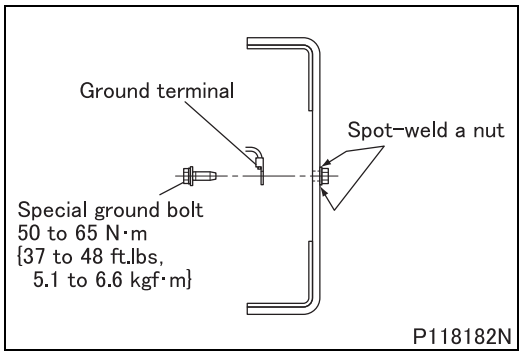

1.4 Inspection of chassis ground

- A special ground bolt is used to tighten a ground terminal. When servicing the ground point, be sure to follow the procedures described below:
  - When reinstalling the ground bolt
    Tighten the ground bolt to the specified torque.
  - When relocating the ground point
    A special ground bolt must be used. Spot-weld a nut to a frame and tighten the ground bolt to the specified torque. Be sure to apply touch-up paint to the welded point.

2. Service Precautions for Alternators

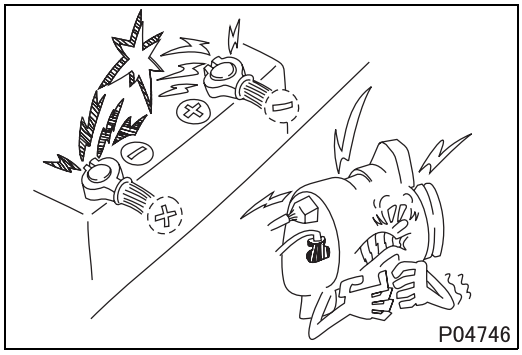

- When servicing alternators, observe the following precautions:
  - Never reverse the polarity of battery connections.
    If the polarity of the battery connections were to be reversed, a large current would flow from the battery to the alternator, damaging the diodes and regulator.

https://truckmanualshub.com/

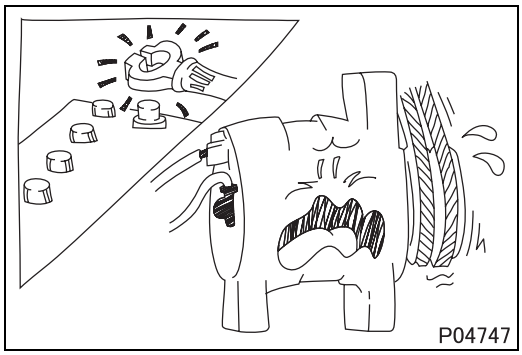

- Never disconnect the battery cables with the engine running.
  Disconnection of the battery cables during engine operation would cause a surge voltage, leading to deterioration of the diodes and regulator.

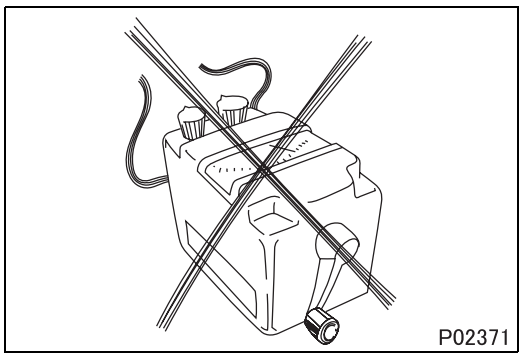

- Never perform inspections using a high-voltage multimeter.
  The use of a high-voltage multimeter could damage the diodes and regulator.

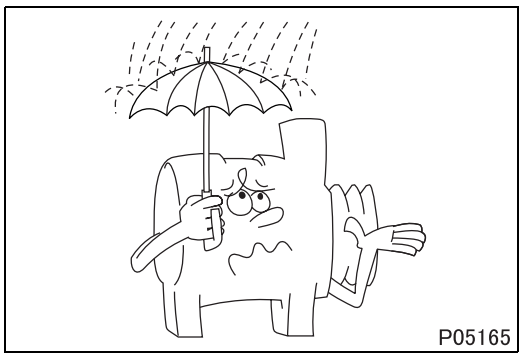

- Keep alternators dry.
  Water on alternators can cause internal short circuits and damage.

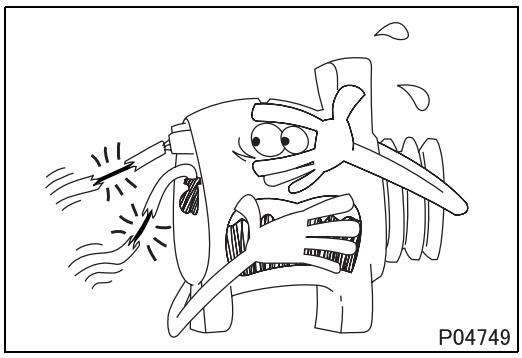

- Never operate an alternator with the B and L terminals short-circuited. Operation with the B and L terminals connected together would damage the diode trio.

https://truckmanualshub.com/

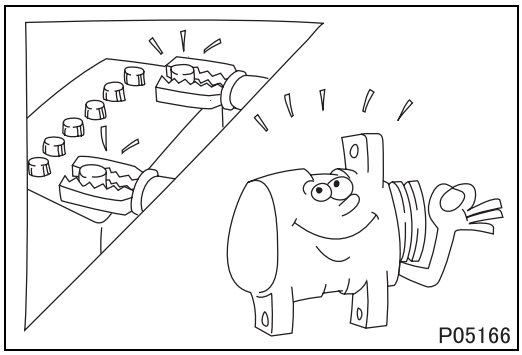

- Disconnect the battery cables before quick-charging the battery with a quick charger.
  Unless the battery cables are disconnected, quick-charging can damage the diodes and regulator.

3. Intermittent Faults

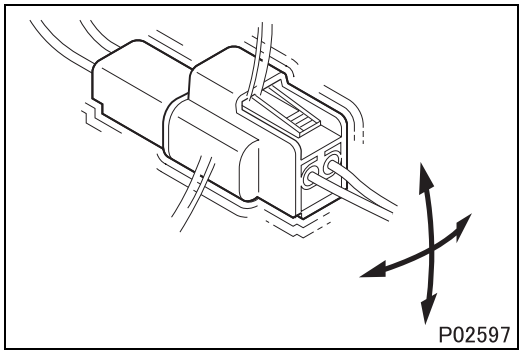

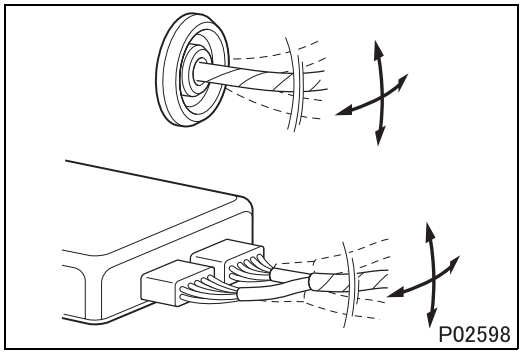

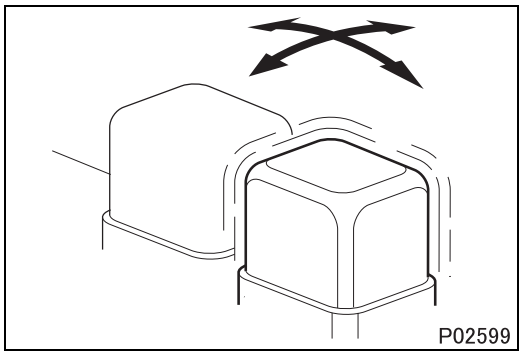

- An intermittent fault typically occurs only under certain operating conditions. Once these conditions have been identified, the cause of the intermittent fault can be ascertained easily. First, ask the customer about the vehicle operating conditions and weather conditions under which the fault occurs. Also ask about the frequency with which the fault occurs and about the fault symptoms. Then, reproduce the fault based on this information.
  In accordance with the conditions under which the fault occurs, determine whether the fault is caused by vibration, heat or other factors. if vibration is a possible factor, see if the fault can be reproduced by performing the following checks on individual connectors and other parts:
  - Gently move connectors up and down and to left and right.
  - Gently move wiring harnesses up and down and to left and right.
  - Gently wiggle sensors and other devices by hand.
  - Gently wiggle wiring harnesses on suspension systems and other moving parts.

- Connectors and other parts to be checked are those included or given as likely fault locations in inspection procedures corresponding to diagnosis codes and/or fault symptoms.

https://truckmanualshub.com/

4. Precautions for Arc Welding

- When arc welding is performed, current from the welder flows to ground via the vehicle's metal parts. Unless appropriate steps are taken, this current can damage control units, other electrical devices and wiring harnesses. And any electrical device near the point on the vehicle to which the (–) cable of the welder is connected, might be largely damaged.

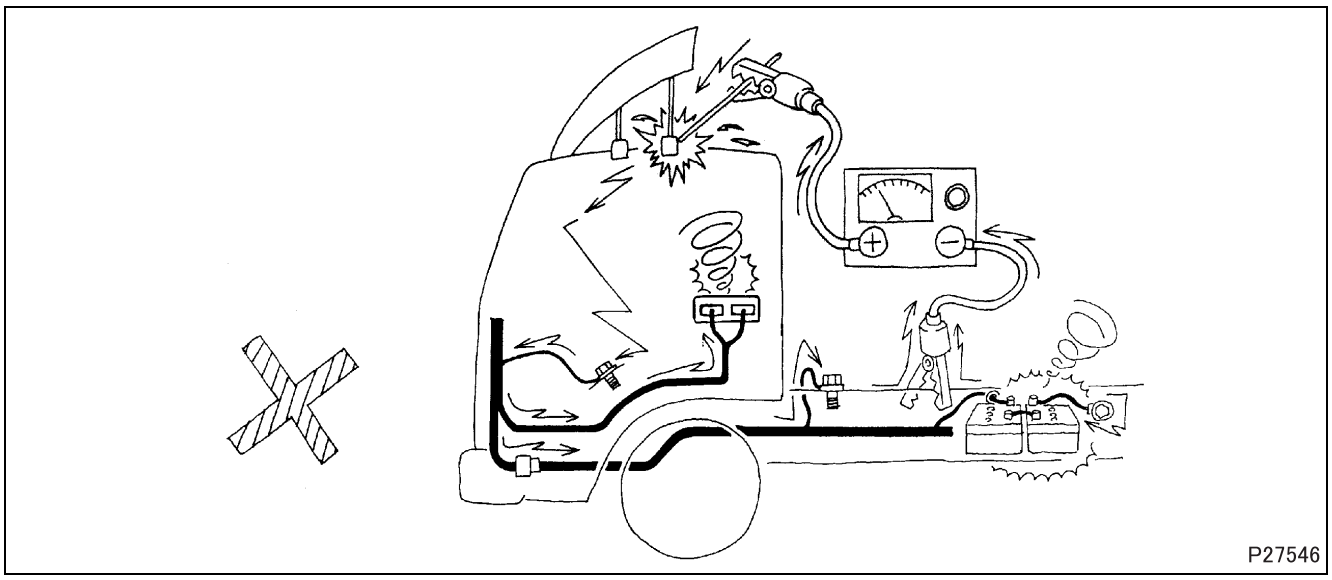

- Current flows backward as shown below.

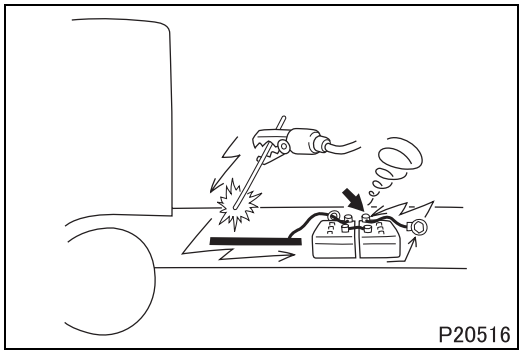

4.1 From battery (–) cable

To prevent damage to the battery and to electrical devices that are connected directly to the battery, it is essential to disconnect the battery's (–) cable.

4.2 Procedure

- Turn the starter switch to the LOCK position.
- Disconnect the battery's (–) cable.
- Cover all parts of the vehicle that may be damaged by welding sparks.
- Connect the welder's (–) cable to the vehicle as close as possible to the area being welded. Do not connect the welder's (–) cable to the cab if the frame is being welded, and vice versa.
- Set the welding current in accordance with the part being welded.

https://truckmanualshub.com/

5. Cautions When Handling DEF

- DEF is a colorless, transparent, odorless and harmless water solution (urea 32.5%, water 67.5%; freezing temperature –11°C), so no problem will occur if you get it on your skin. However, some persons with delicate skin may in very rare cases get a rash, so carry out the following procedure.
  - If DEF gets into your eyes, immediately wash your eyes with a large amount of water, then see a physician to receive treatment.
  - If DEF gets on your skin, wash it off with water. If there is any change in your skin or it is painful, promptly see a physician to receive treatment.
- Be sure to use DEF that conforms to ISO 22241 (International Organization for Standardization).
- Do not dilute the DEF nor mix the DEF with another reagent. This may cause a malfunction of the selective catalytic reduction system.
- When starting the engine, make sure that there is sufficient amount of DEF in the urea tank.
  If the urea tank is empty, the engine restart will be restricted by the engine restart inhibit control of the urea selective catalytic reduction system.

DEF: Diesel exhaust fluid
ISO: International organization for standardization

6. Precautions When Repainting

- When repainting, cover the following electronic control components with a masking material. If paint get on these components, functional reliability could be deteriorated as a result of the poor connection of connectors, internal circuit failure caused by heat build-up due to poor heat dissipation, erroneous sensor values due to clogged ventilation holes.
  - Engine electronic control unit, DUONIC^{TM} electronic control unit, and other electronic control units
  - Sensors

7. Precautions When Handling a Vehicle with DUONIC^{TM} System

7.1 Test driving

- When rotating only the rear wheels for a certain period of time with the front wheels held using a chassis dynamometer, etc., set the DUONIC^{TM} drive mode to the manual mode (manual shift mode in the hold range).
  At this time, the anti-lock brake system warning and DUONIC^{TM} warning are displayed and the DUONIC^{TM} electronic control unit will shift gears normally due to failure mode control, but there is no problem in test driving in the manual mode.

NOTE

- **Test driving cannot be performed in the drive range because normal shifting is not possible due to failure mode control.**

- Even if the test driving is normally completed, be sure to erase the diagnosis codes for the anti-lock brake system and DUONIC^{TM} system. This is because the diagnosis codes generated at the time of failure remains recognized by the electronic control unit as past diagnosis codes.

7.2 How to release shift lock

- If normal shifting is not possible because the electrical system is not properly connected or the battery has run out, operate the shift lock release lever to make gear shifting possible as follows.

https://truckmanualshub.com/

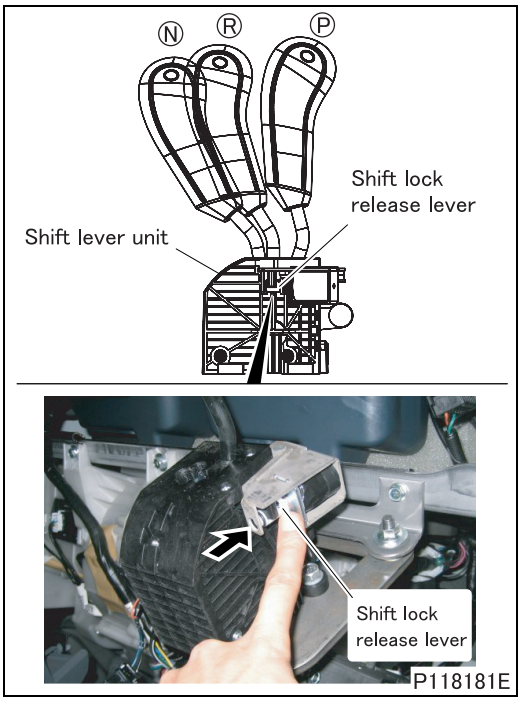

Operating procedure

- Remove the lower center panel. (See Gr52.)
- Push the shift lock release lever of the shift lever unit approximately 2 mm (0.079 in.) forward in the illustrated direction to unlock the shift lever, then perform gear shifting.

7.3 Towing

- Before towing the vehicle, be sure to remove the propeller shaft to prevent possible damage to the DUONIC^{TM} system.

8. Precautions on Cleaning When Servicing the Engine and Transmission

When servicing the engine or transmission (DUONIC^{TM}), care needs to taken with the following to prevent failures caused by dust and foreign objects.

Works that require care to prevent the entry of dust and foreign objects are marked with  and indicated as “Work that requires dust protection”.

8.1 Work area

- The working place needs to be well organized and kept clean.
- Do not work outdoors. Take dust prevention measures when working indoors. Do not place parts directly on the floor. Put covers on parts to protect them from dust. Keep the over head doors closed unless necessary such as when a vehicle comes in or goes out.
- When servicing components related to the hydraulic circuit of the transmission (DUONIC^{TM}), it is recommended that the work be done in an enclosed environment with a cleanliness level equivalent to that of meeting rooms. If these environmental requirements cannot be satisfied, establish a special procedure to protect the work area for servicing these components from dust. (See Gr22.)

8.2 Clothing and protective wear

- Wear clean working clothes. Do not wear shoes smudged with oil or dirt when working.
- If oil gets on your clothes, immediately wipe it off.
- When a working glove or protective wear becomes dirty or ragged, immediately change it.
- Use of an apron is recommended. (For vehicles with DUONIC^{TM} system.)
- Do not use cotton work gloves. Use rubber or plastic gloves that cover the lower part of your arms. (For vehicles with DUONIC^{TM} system.)

https://truckmanualshub.com/

8.3 Tools

- Common tools, special tools and workbenches used for servicing should be cleaned with a cleaner and rags in advance.
- Whenever a tool or workbench gets damaged or dirty during servicing, immediately clean or replace it.
- Do not use air tools on components related to the hydraulic circuit of the transmission (DUONIC^{TM}). (See Gr22.)

8.4 Washing and drying

- Thoroughly wash the outside of the engine before removing sub-assemblies from the engine.
- After that, remove and disassemble sub-assemblies, then wash each part. The detailed instructions on washing and drying are given in the sections describing washing and inspection procedures and precautions in the engine service manual. Carefully read these instructions to ensure the correct procedures are followed.
- Thoroughly wash the clutch housing before servicing components related to the hydraulic circuit of the transmission (DUONIC^{TM}).
- Use the specified cleaner when washing.
- After washing, dry with compressed air to make sure that foreign objects (such as broken bristles of a cleaning brush) do not remain on parts.

8.5 Rust prevention and removal of rust-preventive agent (for engine)

- If parts are not used immediately after washing, apply the specified rust-preventive agent (such as engine oil).
- Remove rust-preventive agent when installing a part on the engine.
- When installing a new part to which rust-preventive agent has been applied (such as a crankcase), thoroughly wash it to remove rust and rust-preventive agent. Pay special attention to the fuel and oil lines in particular. Follow the procedure given in the engine service manual for the removal of rust-preventive agent.

8.6 New parts (MITSUBISHI genuine parts)

- Have new parts ready in advance.
- To prevent dust from attaching a new part, unpack immediately before the replacement work.
- Oil seals, packings, O-rings and other rubber parts, gaskets and split pins need to be replaced with new parts after each disassembly. Use MITSUBISHI FUSO genuine parts for replacement.
- Since cleanliness assurance requirements are specified to each part and quality is assured for the delivered parts, handle new parts with care so as not to allow the entry of foreign objects.

8.7 Reused parts

8.7.1 Precautions on removal

- Parts removed from engines as well as places where the parts have been removed (intake, exhaust, fuel, lubrication, coolant and other systems) need to be covered with clean paper, rag, plastic sheet, etc. secured with a clean plastic tape if necessary, to prevent the entry of dust.
- Be sure to handle the transmission (DUONIC^{TM}) properly by carefully reading the instructions given in the chassis service manual.
- Since it is not possible to visually check for dust that has entered pipes in particular, cover both ends of a pipe immediately after washing it.

8.7.2 Handling reused parts

- Put removed parts in order for each engine to allow efficient inspection and installation.
- Parts with machined surfaces should not be put directly on the floor. Put these parts on an appropriate wood surface so that the machined surfaces are not damaged.
- Also, other sub-assemblies removed should not be put directly on the floor. Put the sub-assemblies on a clean surface.
- Be sure to handle the transmission (DUONIC^{TM}) properly by carefully reading the instructions given in the chassis service manual.

https://truckmanualshub.com/

8.8 Installation

- Install parts by following the instructions given in the engine and chassis service manuals.
- To prevent the entry of dust and foreign objects during installation, thoroughly check that the parts to be installed are clean and free of foreign objects before installation.
- Blow air into reused parts (piping in the intake and injection systems, etc.) again before installation.

8.9 Fuel

- Use the specified fuel. Use only clean fuel. Do not use contaminated fuel.
- Be sure to observe the following if fuel is stored on the service site.
  - Cover the filler cap of the storage tank to prevent water contamination.
  - Keep the tank clean. In particular, the filler cap and area around the filler port should be kept clean.
  - Position the tank so that it is slightly inclined toward the bottom drain. This facilitates discharging of accumulated water and deposits. Drain off water at least once a month.
  - Keep the tank as full as possible to minimize condensation.
  - After filling the fuel storage tank, wait for a few hours before filling the equipment's tank. This allows contamination to deposit.

8.10 Oils

- Use MITSUBISHI genuine products for the engine oil, transmission gear oil and automatic transmission fluid. Use only clean oils. Do not use contaminated oils.
- It is not recommended to reuse drained oil or automatic transmission fluid. If it is judged that drained oil or automatic transmission fluid can be reused because it is within the replacement interval and is not excessively contaminated, be sure to observe the following.
  - Store the drained oil or automatic transmission fluid in a clean, dedicated container. Do not use containers that were used to store fuel or water.
  - Make sure that the container is appropriately stored so as to prevent the entry of dust and foreign objects.

8.11 Coolant

- Use MITSUBISHI genuine products for the coolant. Use only clean coolant. Do not use contaminated coolant.
- It is not recommended to reuse drained coolant. If it is judged that coolant can be reused because it is within the replacement interval and is not excessively contaminated, be sure to observe the following.
  - Store the drained coolant in a clean, dedicated container. Do not use containers that were used to store fuel or oil.
  - Make sure that the container is appropriately stored so as to prevent the entry of dust and foreign objects.

8.12 Miscellaneous

- Thoroughly wash the vehicle before servicing. Do not service a dust covered vehicle.
- The garage air must be clean.
  - Blow air onto white paper to check for the presence of water and/or oil in the air flow.
  - If a problem is found, immediately check the compressor.

https://truckmanualshub.com/

JACKING UP THE VEHICLE

<Front of Vehicle>

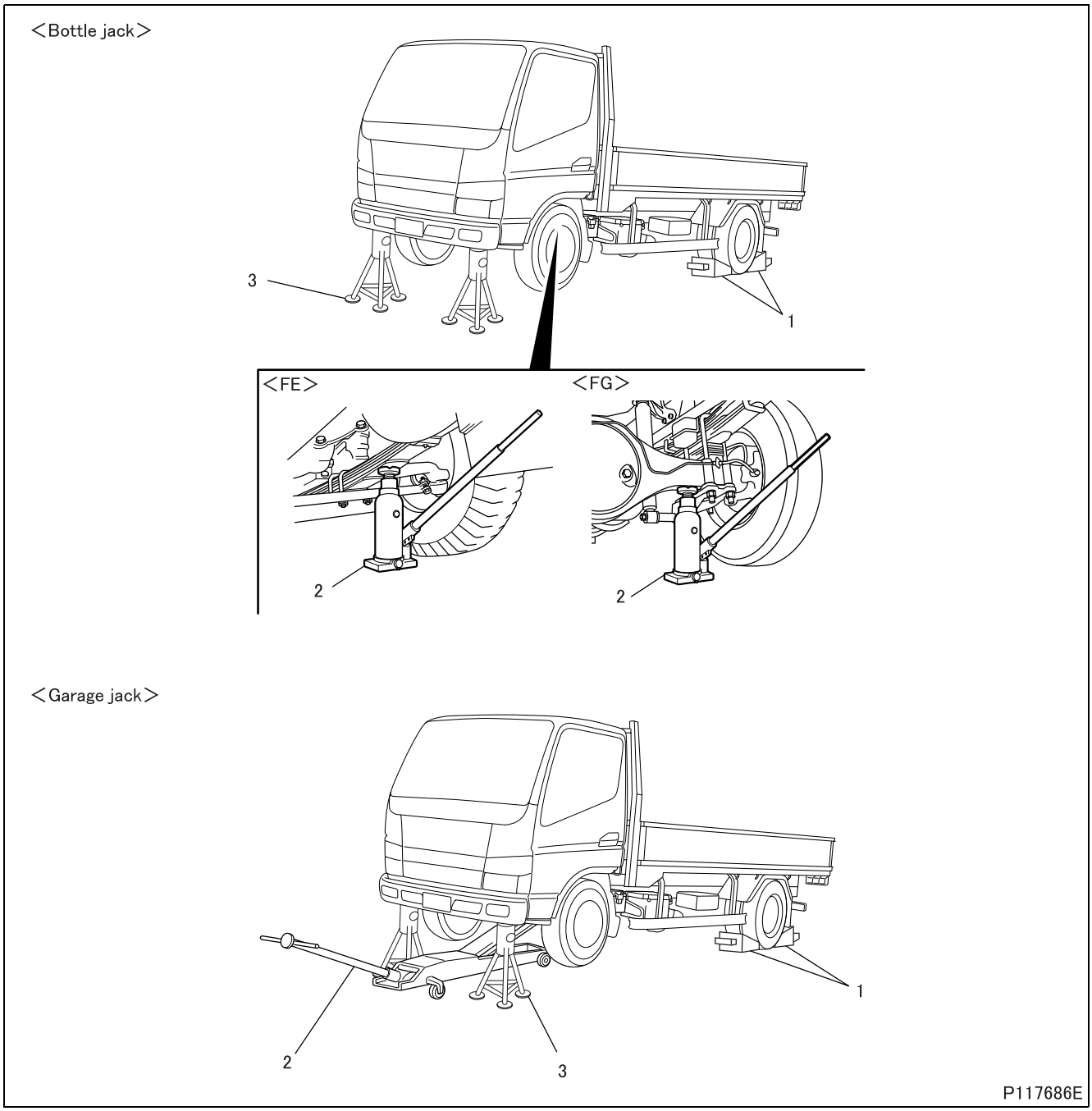

Jacking up procedure

1. Place chocks against the rear wheels.
2. Jack up the front of the vehicle with a bottle jack or garage jack.
3. If you use a bottle jack, set it at the jack-up point shown in the figure. If you use a garage jack, set it at the center of the front axle.
4. Support the front of the vehicle frame on jack stands.

https://truckmanualshub.com/

WARNING ⚠

- **Chock the wheels firmly to prevent the vehicle from rolling away.**
- **Do not attempt to remove the chocks until the operation is completed.**
- **It is extremely dangerous to support the vehicle with only bottle jack or garage jack. Be sure to additionally support the front of the vehicle frame on jack stands.**
- **Never attempt to remove the bottle jack, garage jack, or jack stands until the operation is completed.**

https://truckmanualshub.com/

JACKING UP THE VEHICLE

<Rear of Vehicle>

＜Bottle jack＞

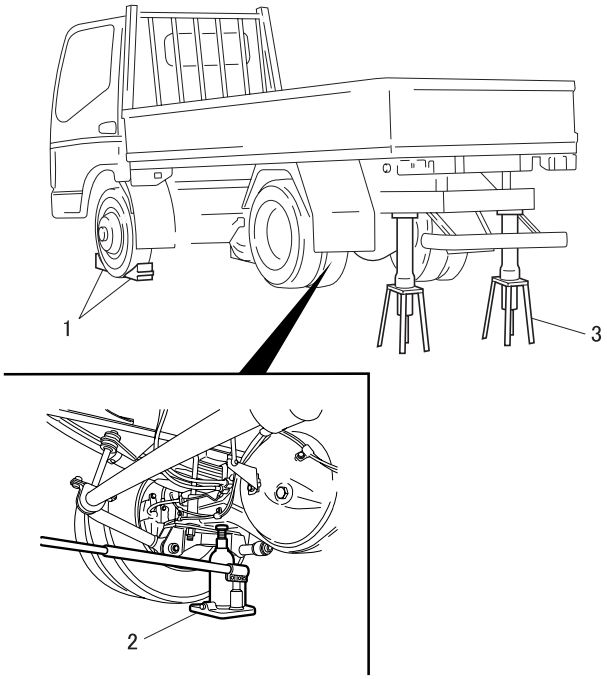

＜Garage jack＞

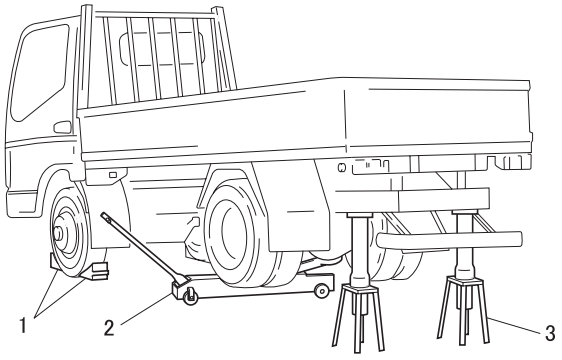

P101652E

Jacking up procedure

1 Place chocks against the rear wheels.
2 Jack up the rear of the vehicle using a bottle jack or garage jack as illustrated above.
3 Support the vehicle frame on jack stands on both sides.

WARNING ⚠

- **Chock the wheels firmly to prevent the vehicle from rolling away.**
- **Do not attempt to remove the chocks until the operation is completed.**
- **It is extremely dangerous to support the vehicle with only bottle jack or garage jack. Be sure to additionally support the vehicle frame on jack stands on both sides.**
- **Never attempt to remove the bottle jack, garage jack, or jack stands until the operation is completed.**

https://truckmanualshub.com/

M E M O

https://truckmanualshub.com/

DIAGNOSIS CODES

1. Diagnosis Codes

- The diagnosis system consists of electronic control unit functions to detect failures of electrical components, communicate with diagnosis tools, and update various data.
- When an electronic control unit detects a failure, it stores the failure information as a diagnosis code (that describes a failure of the vehicle) and alerts the user by displaying a warning.
- By reading diagnosis codes and checking for problems accordingly (troubleshooting), failures in electronically controlled systems can be efficiently identified and remedied.
- Diagnosis codes (fault codes) can be displayed in the following two methods:
  - Using the FUSO Diagnostics. (See later section.)
  - Using the multi-information display in the meter cluster. (See later section.)

1.1 Reference Gr list for diagnosis codes

Warning	System	Reference Gr
ENG SYS	Common rail	13E
	BlueTec® system	
T/M SYS	DUONIC™	22E
ABS	Anti-lock brake system	35E
	Immobilizer	54
METER	Meter cluster	54
SAM BAT EQ	Sensor and actuator module	54
–	Fully automatic air conditioner	55E

1.2 Types of diagnosis codes

- There are two types of diagnosis codes: current codes and past codes

1.2.1 Current diagnosis code

- The current failures in the vehicle can be checked by reading the current diagnosis codes.
- When a current diagnosis code is generated, the warning (or indicator) from the failed system is displayed and its electronic control unit initiates failure mode control such as stopping control or exercising backup control.

1.2.2 Past diagnosis code

- The past failures in the vehicle can be checked by reading the past diagnosis codes.
- When the indication changes from the current diagnosis codes to the past diagnosis codes, the warning (or indicator) showing a failure goes off and the electronic control unit recovers from failure mode control to normal control. (The recovery timing varies depending on the diagnosis code.)
- If the failure has not been resolved, the electronic control unit will detect it again and generate a current diagnosis code.

https://truckmanualshub.com/

1.3 Follow the flowchart below to inspect the system.

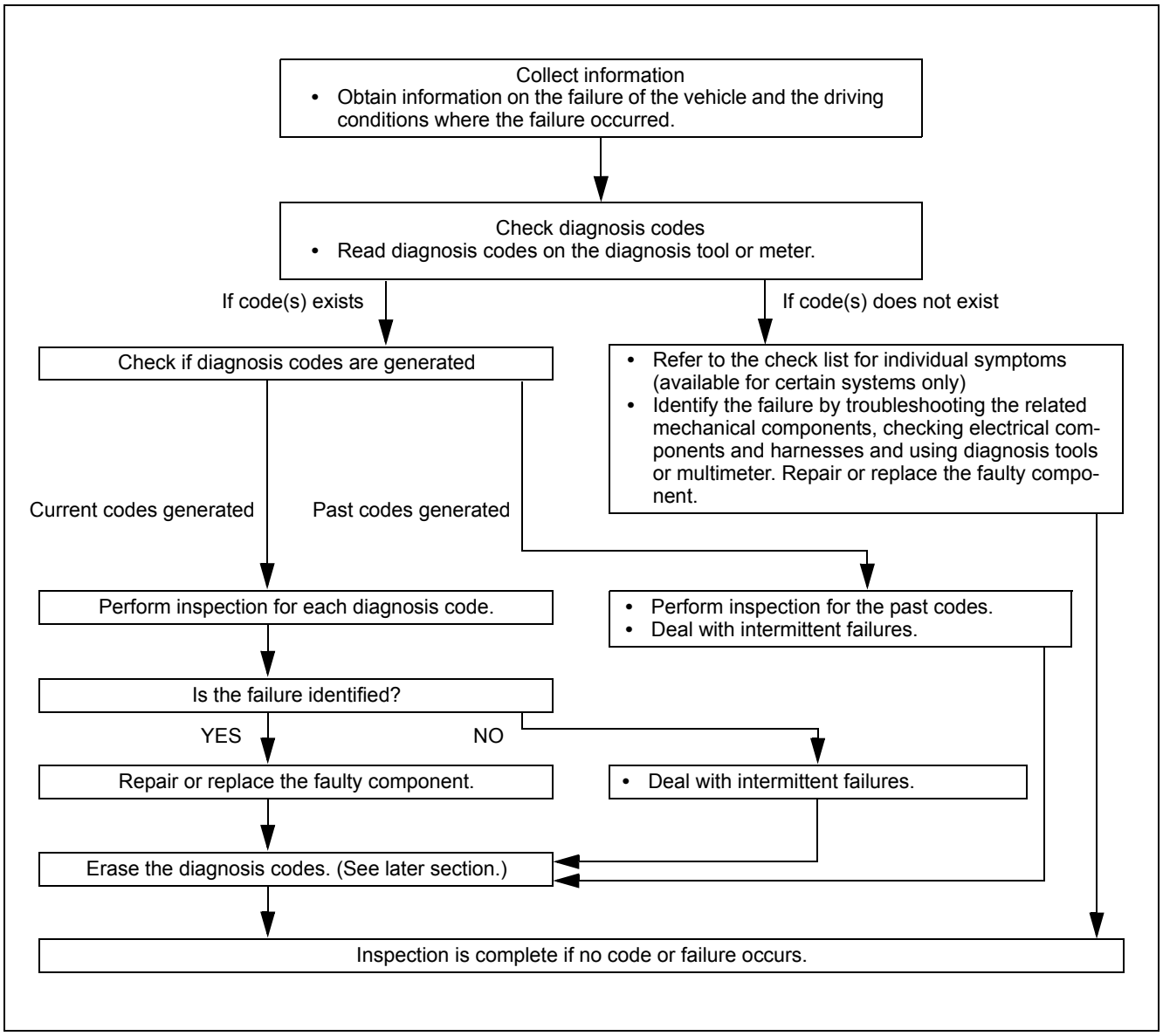

1.4 Precautions on troubleshooting

- Check the charging state and specific gravity of the battery before measuring voltage. If inspection is performed with insufficient charging or specific gravity, accurate measurements may not be displayed.
- Be sure to place the starter switch to the LOCK or OFF position and wait for about 5 minutes before removing battery cables, harnesses or connectors. (This is because the BlueTec® system is still in operation.)
- When installing battery cables, harnesses or connectors, place the starter switch and lighting switch to the LOCK or OFF position. Otherwise, electrical components could be damaged.
- When measuring with a multimeter, carefully handle the test bars so that the bars do not short-circuit between connector pins or with the body. Otherwise, electronic control units' internal circuits and electrical components could be damaged.
- Since resistance values are affected by temperature, refer to the descriptions on temperature in this manual as a guideline for pass/fail judgment. If temperature is not specified, normal temperature (10 to 35°C {50 to 95°F}) is assumed.

https://truckmanualshub.com/

1.5 Inspecting the input and output signals at the electronic control unit connector

- This inspection is to confirm that signals from electronic control units and electrical components are correctly transmitted to the harnesses and connectors on the vehicle side.

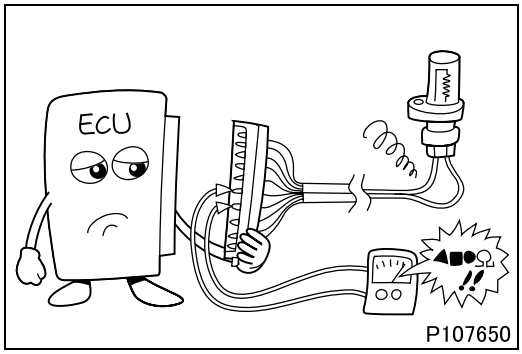

- This inspection includes the following checks:
  - Measure the input voltage of switches and sensors and the output voltage of relays to check for open circuit and short circuit to battery or ground by inserting the test bars from the back side of the connector with the harness (on the electronic control unit connector) on the vehicle side connected.
  - Measure the resistance of temperature sensors, rotation sensors and solenoids to check for open circuit by disconnecting the electronic control unit connector and inserting the test bars into the harness on the vehicle side.
  - Check the operation of magnetic valves for open circuit and valve failure by disconnecting the electronic control unit connector and applying a voltage from the harness on the vehicle side.
- Some electronic unit connectors are equipped with water- or dust-proofing treatment and do not allow test probes to be inserted from the back side of the connectors.

1.6 Inspecting the electrical components

- This inspection is to check that electrical components are operating normally.

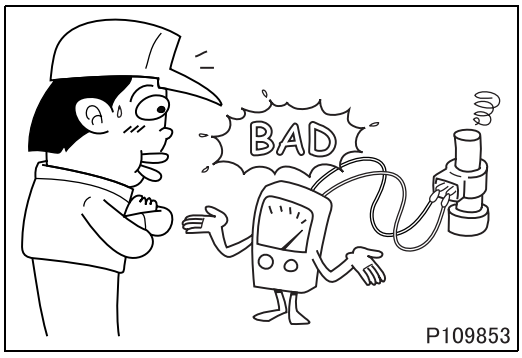

- This inspection includes the following checks:
  - Check if electrical components actually operate.
  - Check the internal circuits of electrical components for open and short circuit.
  - Check the characteristics of the output signals from electrical components.
- Operation or signal characteristics checking is not easy on some electrical components, for which only electrical checking for open and short circuit is performed. As a result, there may be cases where a mechanical failure exists in these components even if they are electrically normal. Therefore, it is necessary to make a pass/fail judgment on these electrical components by checking the overall system operation and the related components such as harnesses and connectors.

https://truckmanualshub.com/

1.7 Inspecting the harnesses

- This inspection is to check for faulty sections of harnesses and connectors.

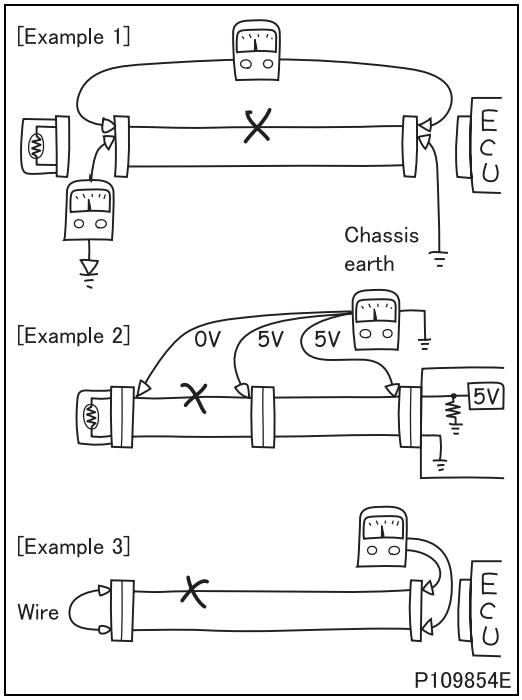

1.7.1 Open circuit

- An open circuit means a harness is broken.

[Inspection example 1]

- Measure the resistance between components to confirm that that there is continuity. Gently shake the harness up and down while measuring.
- If the connectors to be measured are far apart from each other, chassis ground may be used.
  Standard value: Less than 5 Ω
- If the measurement is out of the standard value, there is an open circuit in the harness or a poor connection of pins in the connector.

[Inspection example 2]

- Measure voltage from the back side of each connector. Gently shake the harness up and down while measuring.
- If there is a voltage drop, there is an open circuit in the harness in that section or a poor connection of pins in the connector.

[Inspection example 3]

- Connect a wire or equivalent to the component side and measure the resistance between adjacent harnesses. Gently shake the harnesses up and down while measuring.
- If the measurement is out of the standard value shown above, there is an open circuit in the harnesses or a poor connection of pins in the connector.

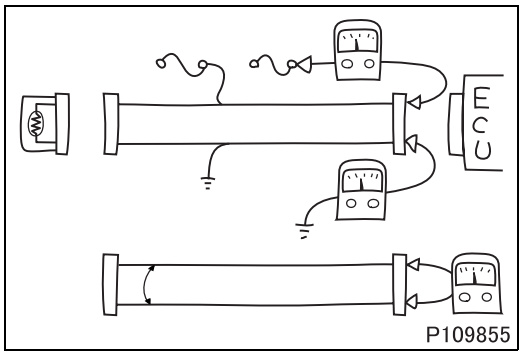

1.7.2 Short circuit

- A short circuit means a harness is in contact with another harness. A large current may occur if the power supply harness directly touches a grounding harness without going through a load.
- A short circuit to power refers to a short circuit to the power supply line carrying the same voltage as the battery voltage. A short circuit to ground refers to a short circuit to a grounding line.

[Inspection example]

- Check the following to confirm that there is no continuity. Gently shake the harness up and down while measuring.
  - Measure the resistance between the pins to be inspected.
  - Measure the resistance between the pin to be inspected and a power line. (short circuit to power)
  - Measure the resistance between the pin to be inspected and a grounding line or chassis ground. (short circuit to ground)
    Standard value: More than 1 MΩ
- If the measurement is out of the standard value, there is a short circuit in the harness or in the connector.

https://truckmanualshub.com/

1.8 Intermittent faults

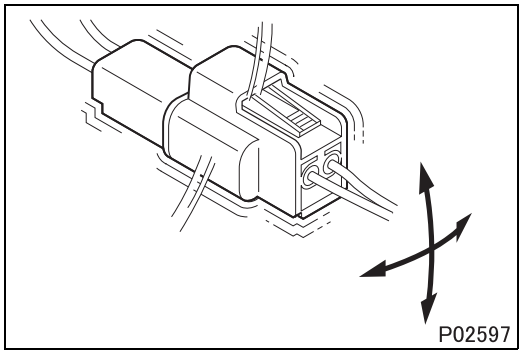

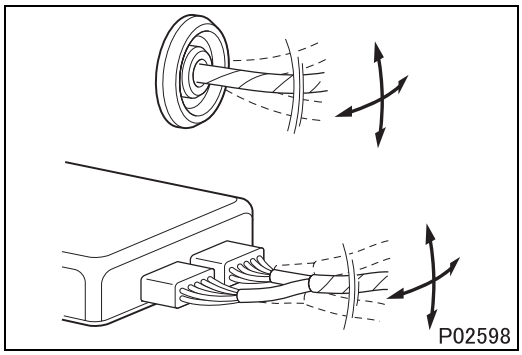

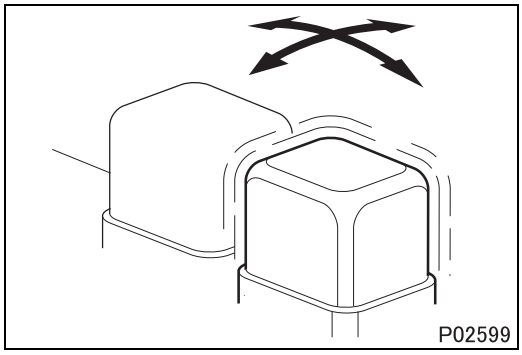

- An intermittent fault typically occurs only under certain operating conditions. Once these conditions have been identified, the cause of the intermittent fault can be ascertained easily. First, ask the customer about the vehicle operating conditions and weather conditions under which the fault occurs. Also ask about the frequency with which the fault occurs and about the fault symptoms. Then, reproduce the fault based on this information.
  In accordance with the conditions under which the fault occurs, determine whether the fault is caused by vibration, heat or other factors. if vibration is a possible factor, see if the fault can be reproduced by performing the following checks on individual connectors and other parts:
  - Gently move connectors up and down and to left and right.
  - Gently move wiring harnesses up and down and to left and right.
  - Gently wiggle sensors and other devices by hand.
  - Gently wiggle wiring harnesses on suspension systems and other moving parts.

- Connectors and other parts to be checked are those included or given as likely fault locations in inspection procedures corresponding to diagnosis codes and/or fault symptoms.

https://truckmanualshub.com/

1.9 Diagnosis tool functions and available tests

1.9.1 Basic functions

- The basic functions of the diagnosis tools include the readout of diagnosis codes and control information from electronic control units. Efficient troubleshooting can be made by using these functions. A writing function is also provided to allow registering or changing information on electronic control units.
- If you perform a short test with the FUSO Diagnostics, the systems on the vehicle that support the FUSO Diagnostics are automatically determined and a list of the current diagnosis codes (fault codes) is displayed.
- Failures can be efficiently identified and removed by reading diagnosis codes and taking actions (troubleshooting) accordingly.

(1) Reading diagnosis codes

- By reading diagnosis codes, failures in the vehicle can be efficiently identified and remedied.

(2) Reading service data (measured values)

- Service data shows the values and information used for control by an electronic control unit, allowing you to check if the switches, sensors, harnesses or connectors that provide the information are operating normally.

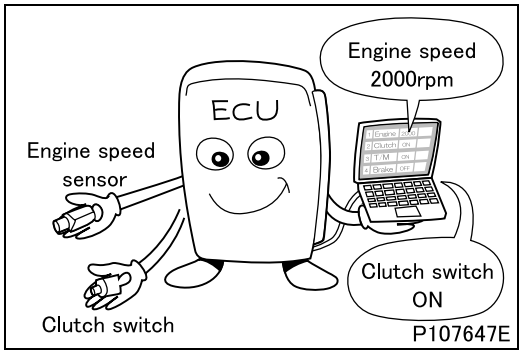

- The following types of service data are available (which varies depending on the electronic control unit):
  - Input or calculated values from switches, sensors and other electronic control units
  - Output values to relays and actuators
  - Vehicle specifications stored in the electronic control unit
- If backup values are displayed as service data, the electrical component or harness associated with the service data is faulty.
- Since some systems store related service data when a diagnosis code is generated as freeze frame data, there may be cases where the cause of a failure can be presumed without reproducing the failure.

(3) Performing the actuator test (control)

- By performing an actuator test, functions of an electrical component or electronic control unit can be easily activated to check if the component or unit is faulty or not. Since operation checks can be performed without driving the vehicle, greater efficiency and safety of troubleshooting are assured.

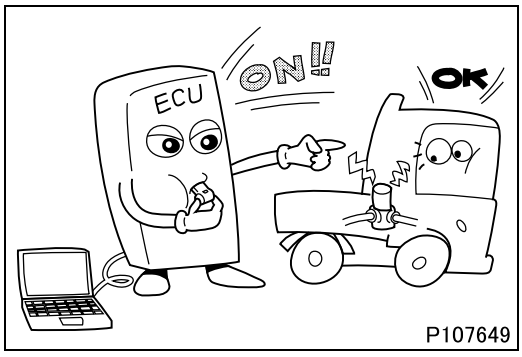

- The following types of actuator tests are available (which varies depending on the electronic control unit):
  - Make an electrical component operate to determine and check failures.
  - Input pseudo signals to an electronic control unit (e.g. a signal that tells the unit that a switch is set to ON regardless of the actual position of the switch).
- In actuator tests, service data may be displayed as “Operating” even if the electrical component is not operating normally. Therefore, also check for operation sound, etc. to make sure.
- When an electronic control unit is exercising failure mode control, the unit may not activate the actuator even if an actuator test is performed (depending on the electronic control unit and failure conditions).

https://truckmanualshub.com/

(4) Registering, changing and resetting the specifications and parameters of electronic control units and coding such as calibration

- It is possible to check the specifications and parameters stored in electronic control units, register, change, or reset the parameters or data upon replacement of related components, and update learned values.

2. Reading and Erasing the Diagnosis Code

2.1 Using the FUSO Diagnostics

Special tools

Mark	Tool name and shape	Part No.	Application
ⓒa	PC 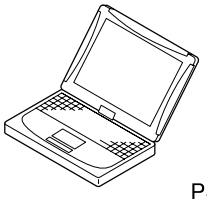 P57295	FDS-R10-6 or higher (FUSO Diagnostics version)	Data transmission between FUSO connect and PC
ⓒb	FUSO Connect  111971	MH064036	Data transmission between electronic control unit and PC
ⓒc	FUSO Diagnostics test harness 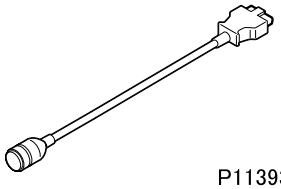 P113938	MH062998	Power supply to FUSO connect and communication with electronic control unit

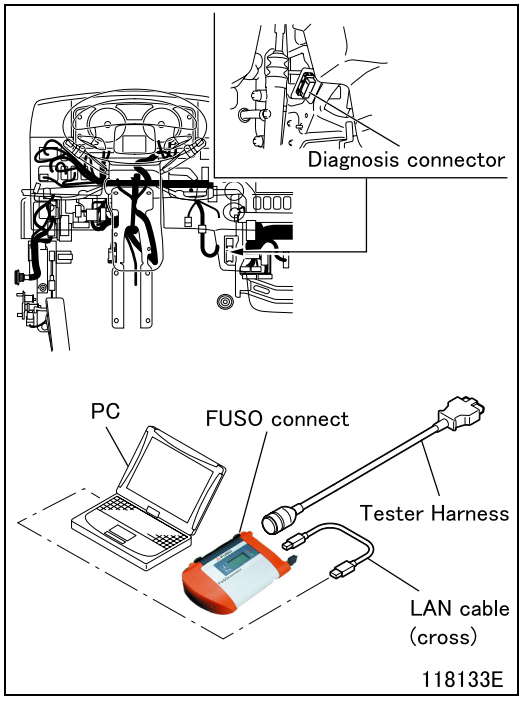

(1) Connecting the FUSO Diagnostics

- Turn the starter switch to the LOCK position.
- Connect ⓒa, ⓒb, ⓒc and LAN cable (cross cable; category 5 or higher).
- Connect the diagnostic connector to the ⓒc connector.

https://truckmanualshub.com/

- Even if the FUSO Diagnostics is not available, you can display or erase diagnosis codes by using the multi-information display on the meter cluster as follows.

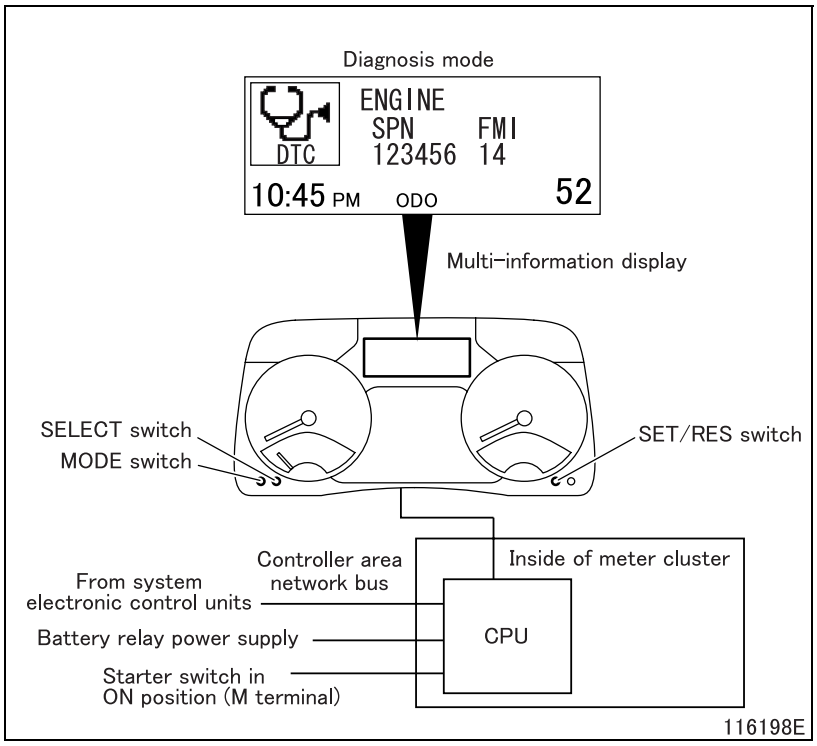

(1.1) Preparations for system inspection

- Stop the vehicle.
- Turn the starter switch ON.
- Press the SELECT, MODE and SET/RES switches simultaneously.
- The multi-information display in the meter cluster enters the diagnosis mode.

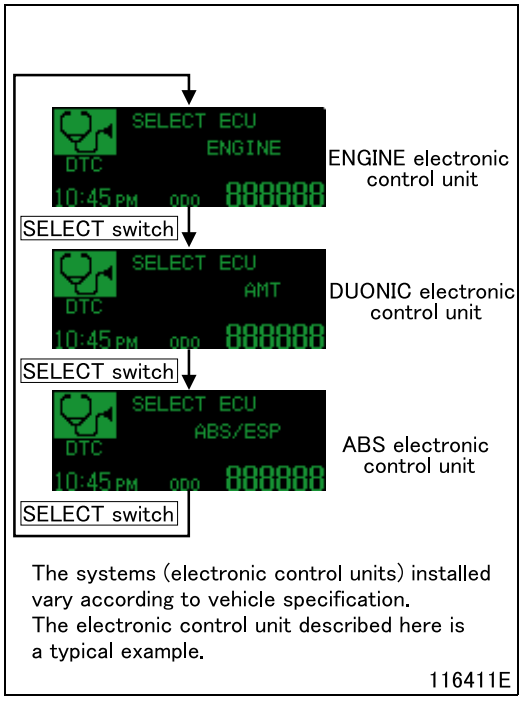

(1.2) System (electronic control unit) selection mode

- Press the SELECT switch to select the system (electronic control unit) to be checked.
- Press the SET/RES switch to enter the function selection mode.

https://truckmanualshub.com/

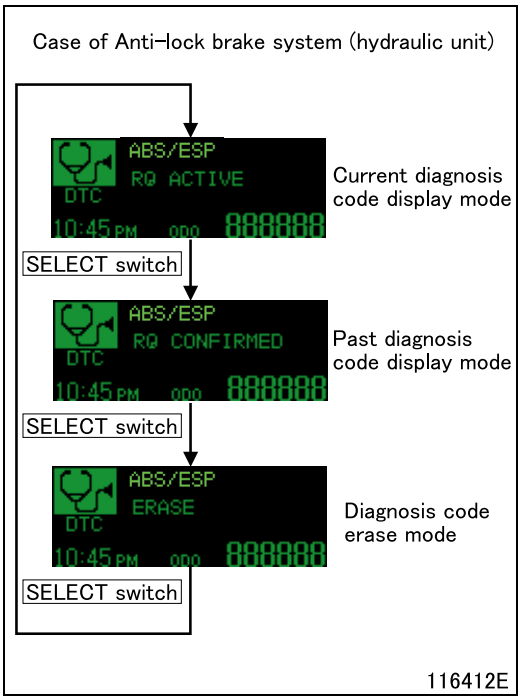

(1.3) Function selection mode

- Press the SELECT switch to select the desired mode.
- Press the SET/RES switch to enter one of the following modes:
  - Current diagnosis code display mode
  - Past diagnosis code display mode
  - Diagnosis code erase mode
- When the MODE switch is pressed, the system (electronic control unit) selection mode will be entered.

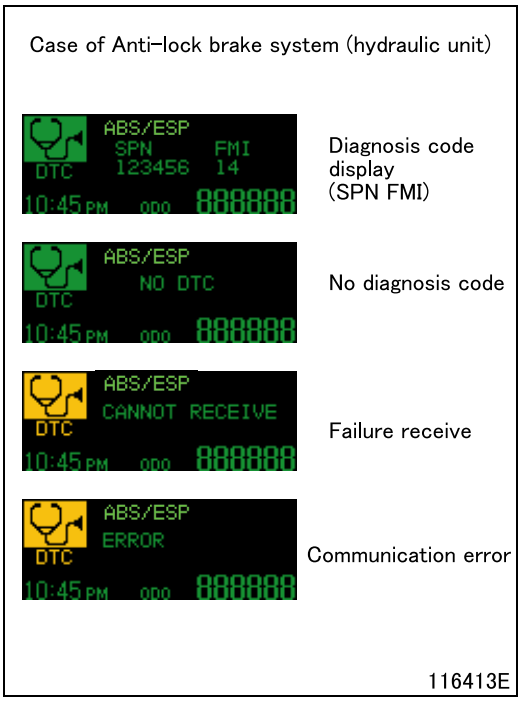

(1.4) Current and past diagnosis code display modes

- Generated diagnosis codes are displayed. When two or more diagnosis codes have been generated, they are displayed in turns at 3-second intervals. If there is no diagnosis code, “NO DTC” is displayed.
- If “ERROR” or “CANNOT RECEIVE” is displayed during communication, perform the operation again.
- When the MODE switch is pressed, the function selection mode will be entered.

NOTE

- **For the engine electronic control unit, check the diagnosis code shown in the “RQ CONFIRMED” screen.**
- **For the engine electronic control unit, “RQ ACTIVE” is not a diagnosis code indicating a failure.**

https://truckmanualshub.com/

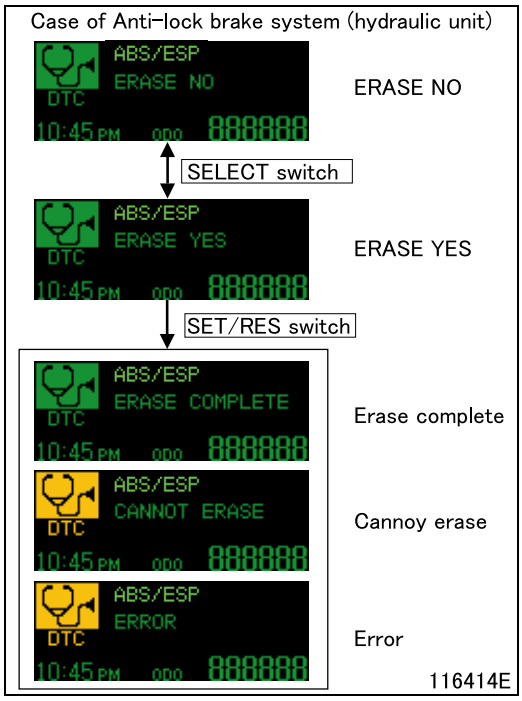

(1.5) Diagnosis code erase mode

- If the SET/RES switch is pressed in the “ERASE YES” screen, all diagnosis codes stored in the selected electronic control unit will be erased and “ERASE COMPLETE” will be displayed.
- If “CANNOT ERASE” or “ERROR” screen is displayed, connect the FUSO Diagnostics to check each system and take necessary actions.
- When the MODE switch is pressed, the function selection mode will be entered.
- When the SET/RES switch is pressed in the “ERASE NO” screen, the function selection mode will be entered.

https://truckmanualshub.com/

TABLE OF STANDARD TIGHTENING TORQUES

- Use specified bolts and nuts, tightening them to the torques specified in this section unless otherwise stated.
- Threaded portions and bearing surfaces should be dry.
- Where the property class differs between the nut and bolt (or stud bolt), use the tightening torque specified in the table for the bolt.

Hexagon Headed Bolt, Stud Bolt (Unit: N·m {ft.lbs, kgf·m})

Strength	4T		7T		8T	
Identification symbol Nominal diameter	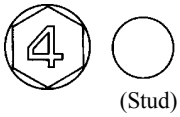		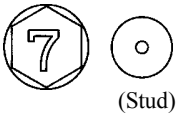		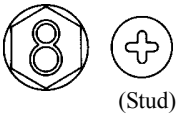	
M5	2 to 3 {1.5 to 2.2, 0.2 to 0.3}	–	4 to 6 {3.0 to 4.4, 0.4 to 0.6}	–	5 to 7 {3.7 to 5.2, 0.5 to 0.7}	–
M6	4 to 6 {3.0 to 4.4, 0.4 to 0.6}	–	7 to 10 {5.2 to 7.4, 0.7 to 1.0}	–	8 to 12 {5.9 to 8.9, 0.8 to 1.2}	–
M8	9 to 13 {6.6 to 9.6, 0.9 to 1.3}	–	16 to 24 {12 to 18, 1.7 to 2.5}	–	19 to 28 {14 to 21, 2.0 to 2.9}	–
M10	18 to 27 {13 to 20, 1.8 to 2.7}	17 to 25 {13 to 18, 1.8 to 2.6}	34 to 50 {25 to 37, 3.5 to 5.1}	32 to 48 {24 to 35, 3.3 to 4.9}	45 to 60 {33 to 44, 4.5 to 6.0}	37 to 55 {27 to 41, 3.8 to 5.7}
M12	34 to 50 {25 to 37, 3.4 to 5.1}	31 to 45 {23 to 33, 3.1 to 4.6}	70 to 90 {52 to 66, 7.0 to 9.5}	65 to 85 {48 to 63, 6.5 to 8.5}	80 to 105 {59 to 77, 8.5 to 11}	75 to 95 {55 to 70, 7.5 to 10}
M14	60 to 80 {44 to 59, 6.0 to 8.0}	55 to 75 {41 to 55, 5.5 to 7.5}	110 to 150 {81 to 110, 11 to 15}	100 to 140 {74 to 105, 11 to 14}	130 to 170 {96 to 125, 13 to 17}	120 to 160 {89 to 120, 12 to 16}
M16	90 to 120 {66 to 89, 9 to 12}	90 to 110 {66 to 81, 9 to 11}	170 to 220 {125 to 160, 17 to 23}	160 to 210 {120 to 155, 16 to 21}	200 to 260 {145 to 190, 20 to 27}	190 to 240 {140 to 175, 19 to 25}
M18	130 to 170 {96 to 125, 14 to 18}	120 to 150 {89 to 110, 12 to 16}	250 to 330 {185 to 245, 25 to 33}	220 to 290 {160 to 215, 23 to 30}	290 to 380 {215 to 280, 30 to 39}	250 to 340 {185 to 250, 26 to 35}
M20	180 to 240 {130 to 175, 19 to 25}	170 to 220 {125 to 160, 17 to 22}	340 to 460 {250 to 340, 35 to 47}	310 to 410 {230 to 300, 32 to 42}	400 to 530 {295 to 390, 41 to 55}	360 to 480 {265 to 355, 37 to 49}
M22	250 to 330 {185 to 245, 25 to 33}	230 to 300 {170 to 220, 23 to 30}	460 to 620 {340 to 455, 47 to 63}	420 to 560 {310 to 415, 43 to 57}	540 to 720 {400 to 530, 55 to 73}	490 to 650 {360 to 480, 50 to 67}
M24	320 to 430 {235 to 315, 33 to 44}	290 to 380 {215 to 280, 29 to 39}	600 to 810 {440 to 595, 62 to 83}	540 to 720 {400 to 530, 55 to 73}	700 to 940 {515 to 695, 72 to 96}	620 to 830 {455 to 610, 63 to 85}

Hexagon Headed Flange Bolt (Unit: N·m {ft.lbs, kgf·m})

Strength	4T		7T		8T	
Identification symbol Nominal diameter		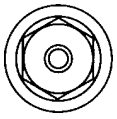		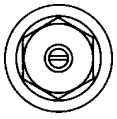		
M6	4 to 6 {3.0 to 4.4, 0.4 to 0.6}	–	8 to 12 {5.9 to 8.9, 0.8 to 1.2}	–	10 to 14 {7.4 to 10, 1.0 to 1.4}	–
M8	10 to 15 {7.4 to 11, 1.0 to 1.5}	–	19 to 28 {14 to 21, 2.0 to 2.9}	–	22 to 33 {16 to 24, 2.3 to 3.3}	–
M10	21 to 31 {15 to 23, 2.1 to 3.1}	20 to 29 {15 to 21, 2.0 to 3.0}	45 to 55 {33 to 41, 4.5 to 5.5}	37 to 54 {27 to 40, 3.8 to 5.6}	50 to 65 {37 to 48, 5.0 to 6.5}	50 to 60 {37 to 44, 5.0 to 6.5}
M12	38 to 56 {28 to 41, 3.8 to 5.5}	35 to 51 {26 to 38, 3.5 to 5.2}	80 to 105 {59 to 77, 8.0 to 10.5}	70 to 95 {52 to 95, 7.5 to 9.5}	90 to 120 {66 to 89, 9 to 12}	85 to 110 {63 to 81, 8.5 to 11}

https://truckmanualshub.com/

Hexagon Nuts (Unit: N·m {ft.lbs, kgf·m})

Strength	4T		6T	
Identification symbol			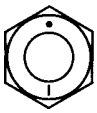   	
Nominal diameter	Standard screw thread	Coarse screw thread	Standard screw thread	Coarse screw thread
M5	2 to 3 {1.5 to 2.2, 0.2 to 0.3}	–	4 to 6 {3.0 to 4.4, 0.4 to 0.6}	–
M6	4 to 6 {3.0 to 4.4, 0.4 to 0.6}	–	7 to 10 {5.2 to 7.4, 0.7 to 1.0}	–
M8	9 to 13 {6.6 to 9.6, 0.9 to 1.3}	–	16 to 24 {12 to 18, 1.7 to 2.5}	–
M10	18 to 27 {13 to 20, 1.8 to 2.7}	17 to 25 {13 to 18, 1.8 to 2.6}	34 to 50 {25 to 37, 3.5 to 5.1}	32 to 48 {24 to 35, 3.3 to 4.9}
M12	34 to 50 {25 to 37, 3.4 to 5.1}	31 to 45 {23 to 33, 3.1 to 4.6}	70 to 90 {52 to 66, 7.0 to 9.5}	65 to 85 {48 to 63, 6.5 to 8.5}
M14	60 to 80 {44 to 59, 6.0 to 8.0}	55 to 75 {41 to 55, 5.5 to 7.5}	110 to 150 {81 to 110, 11 to 15}	100 to 140 {74 to 105, 11 to 14}
M16	90 to 120 {66 to 89, 9 to 12}	90 to 110 {66 to 81, 9 to 11}	170 to 220 {125 to 160, 17 to 23}	160 to 210 {120 to 155, 16 to 21}
M18	130 to 170 {96 to 125, 14 to 18}	120 to 150 {89 to 110, 12 to 16}	250 to 330 {185 to 245, 25 to 33}	220 to 290 {160 to 215, 23 to 30}
M20	180 to 240 {130 to 175, 19 to 25}	170 to 220 {125 to 160, 17 to 22}	340 to 460 {250 to 340, 35 to 47}	310 to 410 {230 to 300, 32 to 42}
M22	250 to 330 {185 to 245, 25 to 33}	230 to 300 {170 to 220, 23 to 30}	460 to 620 {340 to 455, 47 to 63}	420 to 560 {310 to 415, 43 to 57}
M24	320 to 430 {235 to 315, 33 to 44}	290 to 380 {215 to 280, 29 to 39}	600 to 810 {440 to 595, 62 to 83}	540 to 720 {400 to 530, 55 to 73}

Hexagon Flange Nuts (Unit: N·m {ft.lbs, kgf·m})

Strength	4T	
Identification symbol	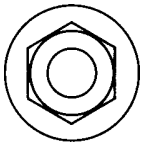	
Nominal diameter	Standard screw thread	Coarse screw thread
M6	4 to 6 {3.0 to 4.4, 0.4 to 0.6}	–
M8	10 to 15 {7.4 to 11, 1.0 to 1.5}	–
M10	21 to 31 {15 to 23, 2.1 to 3.1}	20 to 29 {15 to 21, 2.0 to 3.0}
M12	38 to 56 {28 to 41, 3.8 to 5.6}	35 to 51 {26 to 38, 3.5 to 5.2}

https://truckmanualshub.com/

TABLE OF STANDARD TIGHTENING TORQUES

Tightening Torque for General-Purpose Flare Nut (Unit: N·m {ft.lbs, kgf·m})

Pipe diameter	ϕ4.76 mm {0.19 in.}	ϕ6.35 mm {0.25 in.}	ϕ8 mm {0.31 in.}	ϕ10 mm {0.39 in.}	ϕ12 mm {0.47 in.}	ϕ15 mm {0.59 in.}
Tightening torque	17 {13, 1.7}	25 {18, 2.6}	39 {29, 4.0}	59 {44, 6.0}	88 {65, 9.0}	98 {72, 10}

Tightening Torque for General-Purpose Air Piping Nylon Tube (DIN Type) (Unit: N·m {ft.lbs, kgf·m})

Nominal diameter × wall thickness	6 × 1 mm {0.24 × 0.039 in.}	10 × 1.25 mm {0.39 × 0.049 in.}	12 × 1.5 mm {0.47 × 0.059 in.}	15 × 1.5 mm {0.59 × 0.059 in.}
Tightening torque	20^{+6}_{0} {$15^{+4.4}_{0}$ $2.0^{+0.6}_{0}$}	34^{+10}_{0} {$25^{+7.4}_{0}$ $3.5^{+1.0}_{0}$}	49^{+10}_{0} {$36^{+7.4}_{0}$ $5.0^{+1.0}_{0}$}	54^{+5}_{0} {$40^{+3.7}_{0}$ $5.5^{+0.5}_{0}$}

Tightening Torque for General-Purpose Air Piping Nylon Tube (SAE Type) (Unit: N·m {ft.lbs, kgf·m})

Nominal diameter	1/4 in.	3/8 in.	1/2 in.	5/8 in.
Tightening torque	13^{+4}_{0} {$9.6^{+3.0}_{0}$ $1.3^{+0.4}_{0}$}	29^{+5}_{0} {$21^{+3.7}_{0}$ $3.0^{+0.5}_{0}$}	49^{+5}_{0} {$36^{+3.7}_{0}$ $5.0^{+0.5}_{0}$}	64^{+5}_{0} {$47^{+3.7}_{0}$ $6.5^{+0.5}_{0}$}

https://truckmanualshub.com/

FUSO

Group 01

Maintenance Schedule

MITSUBISHI FUSO TRUCK OF AMERICA, Inc.

Pub.No.00ELT0001-01

https://truckmanualshub.com/

INDEX

HOW TO READ THE MAINTENANCE SCHEDULE TABLES 01-2

MAINTENANCE SCHEDULE TABLES 01-4

MAINTENANCE OPERATIONS 01-8

LUBRICATION TABLES 01-10

LUBRICATION 01-12

https://truckmanualshub.com/

HOW TO READ THE MAINTENANCE SCHEDULE TABLES

Example Table:

Ⓔ: Exhaust emission items.
Ⓝ: Noise control items.

Item (1)	Time of inspection and maintenance (2)									Working procedures (3)	Reference Gr (4)
			Inspection interval								
	Pre-operational checks	New vehicle at 4,000 km/ 2,500 miles	Every 10,000 km/ 6,000 miles	Every 20,000 km/ 12,000 miles	Every 30,000 km/ 18,000 miles	Every 40,000 km/ 24,000 miles	Every 50,000 km/ 30,000 miles	Every 90,000 km/ 54,000 miles	Every 250,000 km/ 150 ,000 miles		
ENGINE											
Fuel, oil, or coolant leaks from engine	×									Check engine for fuel, oil and coolant leaks.	Gr11, 12 13A, 14
ⒺⓃ Engine conditions	×									Check the engine for smooth starting and quiet running.	Gr11, 13 15, 17, 54
Manifold bolts and nuts torque							×			Check inlet exhaust manifold dolts and nuts for looseness.	Gr15
Ⓔ Check and adjust valve clearance		×					×			Check valve clearance with thickness gauge.	Gr11
Ⓔ Oil filter replacement			Every 10,000 km/6,000 miles or 12 months							Replace oil filters	Gr12

(1) This column contains the maintenance and inspection items.

(2) The periods between inspection and service are based on the assumption that the vehicle will be driven approximately 60,000 kilometers (36,000 miles) per year.
Inspections which must be made are indicated by an "×" or by the appropriate period between servicing.

(3) This column provides a simplified explanation of the operational procedures involved for each inspection or maintenance item.

(4) The Gr. No. refers to the "group number" in this Service Manual. For visual checks and simple inspections, see the sections labelled "Working Procedures".

https://truckmanualshub.com/

M E M O

https://truckmanualshub.com/

MAINTENANCE SCHEDULE TABLES

Ⓔ: Exhaust emission items.
Ⓝ: Noise control items.

Item	Time of inspection and maintenance									Working procedures	Reference Gr
	Pre-operational checks	1st maintenance at 4,000 km/2,500 miles	Inspection interval: Every 10,000 km/6,000 miles	Every 20,000 km/12,000 miles	Every 30,000 km/18,000 miles	Every 40,000 km/24,000 miles	Every 50,000 km/30,000 miles	Every 90,000 km/54,000 miles	Every 250,000 km/150,000 miles		
ENGINE											
Leakage of coolant, fuel and oil	×									Check the underneath of the vehicle for any sign of leakage.	Gr11, 12, 13, 14
ⒺⓃ Engine conditions	×									Check the engine for smooth starting and quiet running.	Gr11, 13, 15, 17, 54
Ⓔ Oil filter replacement			Every 30,000 km/18,000 miles or 12 months							Replace oil filters.	Gr12
Ⓔ Fuel filter replacement			Every 30,000 km/18,000 miles or 12 months							Replace fuel filter.	Gr13
Ⓔ Fuel line leakage and damage			Every 30,000 km/18,000 miles or 12 months							Check for leakage of fuel from the fuel line. Check the pipe, hose and tube for damage and loose installation.	Gr13
ⒺⓃ Belts tension and damage			Every 30,000 km/18,000 miles or 12 months							Inspect belts for crack, wear and tension.	Gr14
V-belt replacement			Every 120,000 km/72,000 miles or 24 months							Replace V-belt	Gr13
Ⓔ Cooling system			Every 30,000 km/18,000 miles or 12 months							Check radiator and pressure cap for sealing performance and mounting condition. Inspect hoses for looseness, deterioration, damage causing leakage. Remove dust and foreign matter deposit from radiator and intercooler front.	Gr14
Coolant level	×									Check that the coolant level is between the “FULL” and “LOW” marks on the reservoir tank.	Gr14
Coolant replacement			Every 24 months							Replace coolant.	Gr14
ⒺⓃ Air cleaner element replacement			Every 30,000 km/18,000 miles or 12 months							Replace air cleaner element.	Gr15
ⒺⓃ Exhaust system			Every 30,000 km/18,000 miles or 12 months							Inspect the exhaust system for damage, corrosion and loose connection causing leakage.	Gr15
Ⓔ DPF			Every 30,000 km/18,000 miles or 12 months							Check the diesel particulate filter for damage and exhaust gas leaks. Check for loose mounting bolts and nuts. Check the mounting brackets for damage.	Gr15
DEF line leakage and damage			Every 30,000 km/18,000 miles or 12 months							Check for leakage of Diesel Exhaust Fluid from the DEF line. Check the pipe, hose and tube for damage and loose installation.	Gr17

https://truckmanualshub.com/

Item	Time of inspection and maintenance									Working procedures	Reference Gr
			Inspection interval								
	Pre-operational checks	1st maintenance at 4,000 km/2,500 miles	Every 10,000 km/ 6,000 miles	Every 20,000 km/ 12,000 miles	Every 30,000 km/ 18,000 miles	Every 40,000 km/ 24,000 miles	Every 50,000 km/ 30,000 miles	Every 90,000 km/ 54,000 miles	Every 250,000 km/ 150,000 miles		
Alternator tensioner replacement			Every 240,000 km/144,000 miles or 60 months							Replace alternator and tensioner	Gr14
Glow plug replacement			Every 240,000 km/144,000 miles or 60 months							Replace glow plug	Gr11
POWER TRAIN											
Propeller shaft flange torque and universal joint looseness		×	Every 30,000 km/18,000 miles or 12 months							Check flange yoke bolts for looseness and universal joint for play.	Gr25
Propeller shaft center bearing			Every 60,000 km/36,000 miles or 24 months							Check center bearing if trace of grease flowing out is evident. Check center bearing for wear, damage and play.	Gr25
FRONT AND REAR AXLE											
Wheel hub bearing			Every 60,000 km/36,000 miles or 12 months							Check wheel hub bearing for play.	Gr26, 27
Wheel hub bearing hub seals replacement			Every 60,000 km/36,000 miles or 12 months							When wheel hub bearing grease is replaced, also replace the wheel hub bearing hub seals.	Gr26, 27
Wheel and tire	×									Measure inflation pressure with tire gauge.	Gr31
	×		Every 30,000 km/18,000 miles or 12 months							Check disc wheel for corrosion, deformation and cracks. Check tire tread and side wall for cracks and damage. Measure tire tread groove depth to make sure it is deep enough. Check tire tread for uneven wear, stepped wear and other abnormal wear.	
			Every 30,000 km/18,000 miles or 12 months							Rotate all tires.	See later section.
Tie rod ball joint dust boots			Every 30,000 km/18,000 miles or 12 months							Check the ball joint dust boots for cracks and wear.	Gr37
Wheel nut looseness		×	Every 30,000 km/18,000 miles or 12 months							Check wheel nuts for looseness. Check at the first 50 to 100 km/30 to 60 miles after changing a wheel.	Gr31
SUSPENSION SYSTEM											
Suspension springs	×									Check for broken springs and tilt of vehicle body toward either side.	Gr33, 34
U-bolts looseness		×	Every 30,000 km/18,000 miles or 12 months							Check U-bolt nuts for looseness. Check at the first 1,000 km/600 miles after removing and retightening U-bolt nuts.	Gr33, 34
BRAKING SYSTEM											
Service brake pedal	×									Check brake pedal play and stroke.	Gr35

https://truckmanualshub.com/

MAINTENANCE SCHEDULE TABLES

Item	Time of inspection and maintenance									Working procedures	Reference Gr
			Inspection interval								
	Pre-operational checks	1st maintenance at 4,000 km/2,500 miles	Every 10,000 km/ 6,000 miles	Every 20,000 km/ 12,000 miles	Every 30,000 km/ 18,000 miles	Every 40,000 km/ 24,000 miles	Every 50,000 km/ 30,000 miles	Every 90,000 km/ 54,000 miles	Every 250,000 km/ 150,000 miles		
Brake performance	×									Press the brake pedal and check that the brakes work effectively and evenly on all wheels.	Gr35
Disc brake pad and disc			Every 30,000 km/18,000 miles or 12 months							Check disc brake pad and disc for damage and wear.	Gr35
Brake lining			Every 30,000 km/18,000 miles or 12 months							Check lining for wear through inspection hole.	Gr35
Brake drum			Every 30,000 km/18,000 miles or 12 months							Disassemble and check drum for wear, crack and damage.	
Parking brake lever stroke	×									Check parking brake lever stroke.	Gr36
Looseness, play and damage of brake system parts			Every 30,000 km/18,000 miles or 12 months							Inspect brake lines and hoses looseness, play and damage. Inspect wheel cylinder and brake master cylinder for looseness, play and damage.	Gr35
STEERING SYSTEM											
Steering wheel play	×									Turn steering wheel right and left to measure play at steering wheel rim. Measure while engine is running.	Gr37
Steering wheel operation	×									Check that the steering wheel does not vibrate or pull to one side and that it is not unduly heavy. Also make sure that the steering wheel returns to its neutral position smoothly.	Gr37
Steering system			Every 30,000 km/18,000 miles or 12 months							Check steering system for looseness, steering wheel play and operating condition. Inspect for oil leaks, booster and oil pump function.	Gr37
Drag link ball joint dust cover			Every 30,000 km/18,000 miles or 12 months							Check the dust cover for wear, cracks and other damage.	Gr37
CAB											
Defroster	×									Make sure that warm air blows properly onto the windshield.	Gr55
Rearview mirrors	×									Seated in the driver's seat, adjust the angles for clear views of the sides and rear. Make sure the mirrors are clean.	Gr51
License plate and reflector condition	×									Check the license plate and reflectors for loose installation, damage, and dirt.	–
Door locks	×									Push down the lock knob and verify that the door does not open even when the inner handle is operated.	Gr43

https://truckmanualshub.com/

Item	Time of inspection and maintenance									Working procedures	Reference Gr
			Inspection interval								
	Pre-operational checks	1st maintenance at 4,000 km/2,500 miles	Every 10,000 km/ 6,000 miles	Every 20,000 km/ 12,000 miles	Every 30,000 km/ 18,000 miles	Every 40,000 km/ 24,000 miles	Every 50,000 km/ 30,000 miles	Every 90,000 km/ 54,000 miles	Every 250,000 km/ 150,000 miles		
Seat belts	×									Confirm that the seat belt buckles function correctly when fastening and unfastening.	Gr52
ELECTRICAL SYSTEM											
Horn operation	×									Press the horn button to check that the horn is working properly.	Gr54
Windshield washer fluid level	×									Confirm that the windshield washer fluid level is above the bottom of the inspection window.	–
Windshield wiper and washer operation	×									Check the washer for proper fluid spray direction and the wipers for normal action.	Gr51, 54
Lighting system	×									Make sure that each lamp lights up or flashes properly. Check lamp lenses for dirt and damage.	Gr54
Gauge, warning/indicator lamp operation	×									Check that gauges, warning lamps and indicators are working properly.	Gr54
Battery	×									Check the battery fluid level.	Gr54

https://truckmanualshub.com/

Tire rotation

Tires wear differently, according to the location where they are mounted. To make this wear uniform and prolong the life of your tires, they should be rotated every 10,000 km (6,000 miles) in the rotation order shown below:

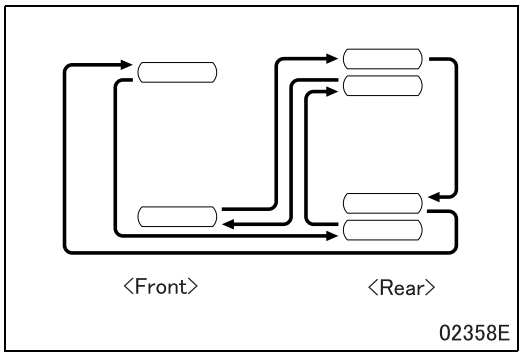

- When the tread patterns for all tires are identical:

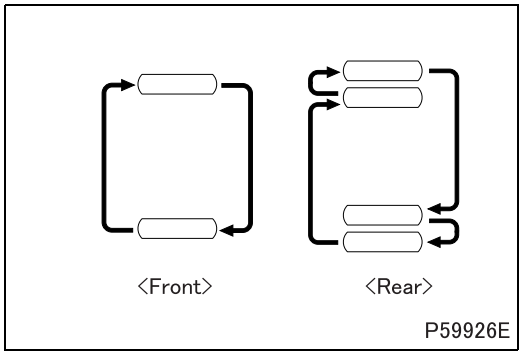

- When the tread patterns are different for the front and rear tires:

CAUTION ⚠

- **Always adjust air pressure after running-in new tires.**
- **When using tires of different tread patterns, use rib-type patterns for the front tires and traction type patterns for the rear tires.**
- **Avoid using both radial and biased tires on the same vehicle.**

https://truckmanualshub.com/

M E M O

https://truckmanualshub.com/

LUBRICATION TABLES

Ⓔ: Exhaust emission items.

Items	Time of inspection and maintenance							Lubricant specifications	Reference Gr
	Pre-operational checks	1st maintenance at 4,000 km/2,500 miles	Inspection interval: Every 10,000 km/6,000 miles	Every 20,000 km/12,000 miles	Every 30,000 km/18,000 miles	Every 40,000 km/24,000 miles	Every 50,000 km/30,000 miles		
Ⓔ Engine oil level	×							Engine oil API classification, CJ-4 Over 30°C {86°F} SAE 40 Over –15°C {5°F} SAE 15W-40 Below 0°C {32°F} SAE 10W-30 ACEA C2 Over –15°C {5°F} SAE 15W-40	Gr12
Ⓔ Engine oil replacement			Every 30,000 km/18,000 miles or 12 months						
Transmission oil replacement			Every 60,000 km/36,000 miles or 24 months					Engine oil Vehicle operated continuously at high speed API classification CC SAE 30 or SAE 40 Gear oil API classification GL-3 SAE 80 (general) GL-3 SAE 90 (warm region) GL-4 SAE 90 (tropical region)	Gr22
Clutch control fluid replacement			Every 60,000 km/36,000 miles or 24 months					Automatic transmission fluid FUSO ATF SP3	Gr22
Transfer gear oil replacement <FG model only>			Every 60,000 km/36,000 miles or 24 months					Gear oil API classification GL-3 SAE 80 (general) GL-3 SAE 90 (warm region) GL-4 SAE 90 (tropical region)	Gr24
Rear axle housing gear oil replacement			Every 60,000 km/36,000 miles or 24 months					Gear oil API classification GL-5 Below 40°C {104°F} SAE 90 Over 40°C {104°F} SAE 140 or 85W-140 Use SAE 140 or 85W-140 when operating vehicle at high load, such as continuous ascent on slopes and when the outside temperature is 10°C {50°F} or more <Limited slip differential only> Limited slip differential oil API classification GL-5 SAE 90 Genuine Gear Oil Part No. 8149630EX	Gr27
Front axle housing gear oil replacement <FG model only>			Every 60,000 km/36,000 miles or 24 months					Gear oil API classification GL-5 Below 40°C {104°F} SAE 90 Over 40°C {104°F} SAE 140 Use SAE 140 when operating vehicle at high load, such as continuous ascent on slopes and when the outside temperature is 10°C {50°F} or more	Gr26B
Hub bearing grease replacement			Every 60,000 km/36,000 miles or 12 months					Wheel bearing grease [NLGI No. 2 (Li soap)]	Gr26A, 27
Front axle birfield joint grease replacement <FG model only>					×			Wheel bearing grease [NLGI No. 2 (Li soap)]	Gr26B
Front axle kingpin bearing grease replacement <FG model only>					×			Wheel bearing grease [NLGI No. 2 (Li soap)]	Gr26B
Front axle steering knuckle grease replacement <FG model only>					×			Wheel bearing grease [NLGI No. 2 (Li soap)]	Gr26B
Brake reservoir tank fluid level	×							Brake fluid <SAE J1703f or FMVSS No. 116 DOT3>	Gr35
Brake fluid replacement			Every 24 months						
Power steering fluid replacement			Every 30,000 km/18,000 miles or 12 months					Automatic transmission fluid <DEXRON II or DEXRON III type>	Gr37

https://truckmanualshub.com/

Items		Time of inspection and maintenance							Lubricant specifications	Reference Gr
		Pre-operational checks	1st maintenance at 4,000 km/2,500 miles	Inspection interval: Every 10,000 km/6,000 miles	Every 20,000 km/12,000 miles	Every 30,000 km/18,000 miles	Every 40,000 km/24,000 miles	Every 50,000 km/30,000 miles		
Lubrication of propeller shaft	Center bearing			Every 60,000 km/36,000 miles or 24 months					Bearing grease [NLGI No. 3 (Li soap)]	Gr25
	Universal joint, slip joint		×	Every 30,000 km/18,000 miles or 12 months					Wheel bearing grease [NLGI No. 2 (Li soap)]	See later section.
	Double Cardan joint <FG model only>			×						
Lubrication of rear suspension spring pin				Every 30,000 km/18,000 miles or 12 months					Chassis grease [NLGI No. 1 (Li soap)]	See later section.
Lubrication of kingpins				Every 30,000 km/18,000 miles or 12 months					Wheel bearing grease [NLGI No. 2 (Li soap)]	See later section.
Lubrication of door hinge				Every 30,000 km/18,000 miles or 12 months					Chassis grease [NLGI No. 1 (Li soap)]	Gr43
Lubrication of anchor hook <Except crew cab>				Every 30,000 km/18,000 miles or 12 months					Chassis grease [NLGI No. 1 (Li soap)]	Gr42

https://truckmanualshub.com/

Greasing Various Areas of Chassis

Carefully clean away all dust and dirt from the grease nipples, and use the specified type of grease. The areas to be greased are shown in the following illustration.

<FE>

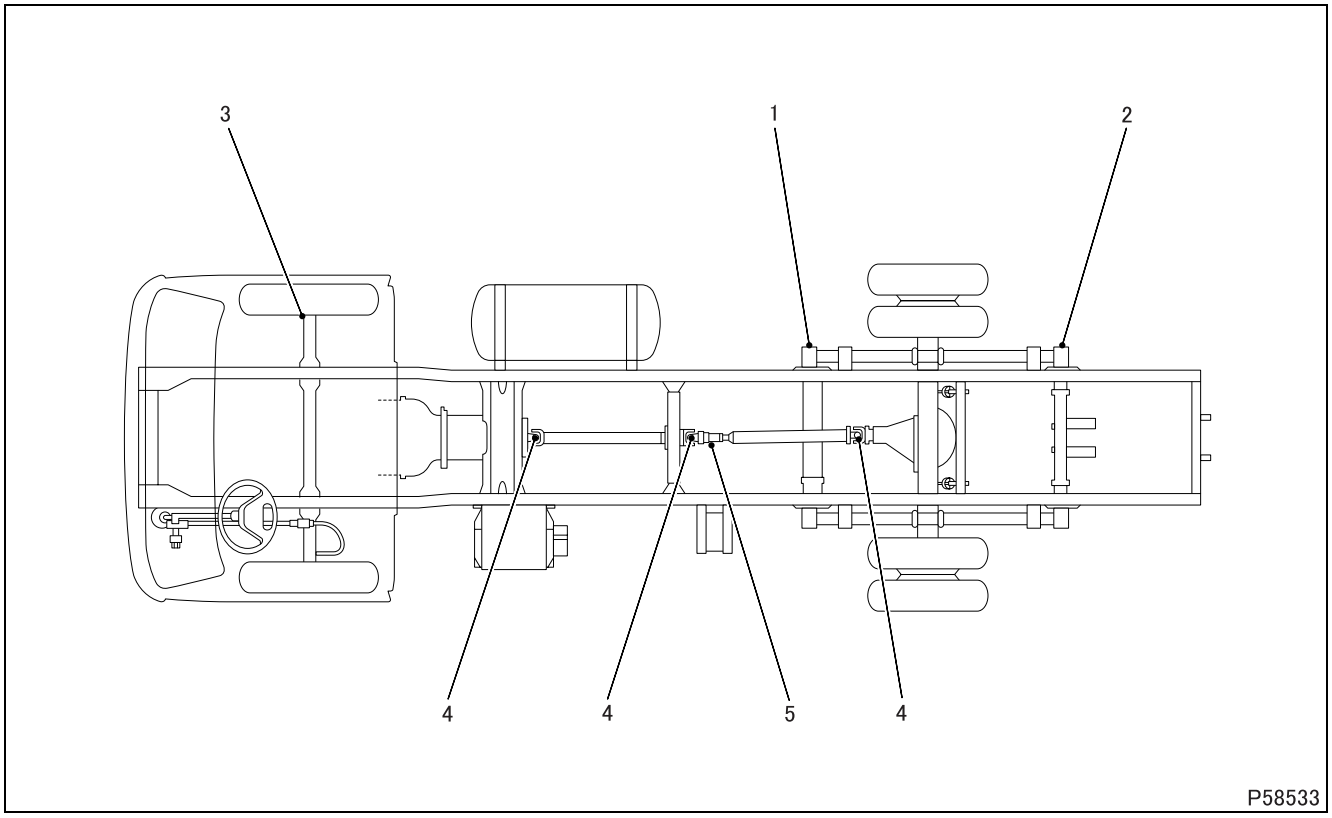

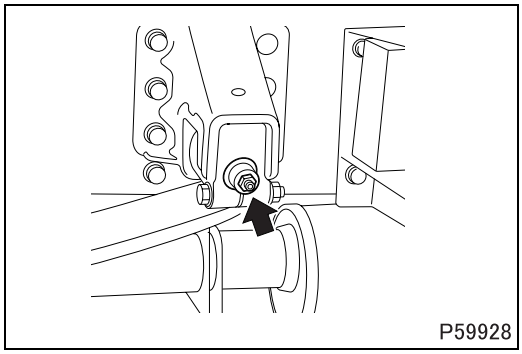

1. Rear spring pin front (left and right, 2 points)

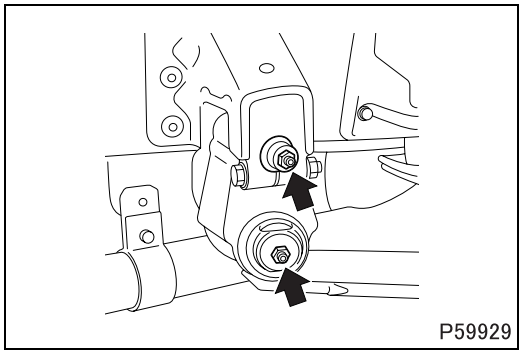

2. Rear spring pin rear (left and right, 4 points)

https://truckmanualshub.com/

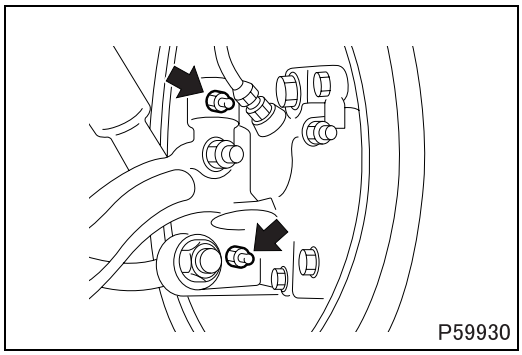

3. Kingpin bearing (left and right, 4 points)

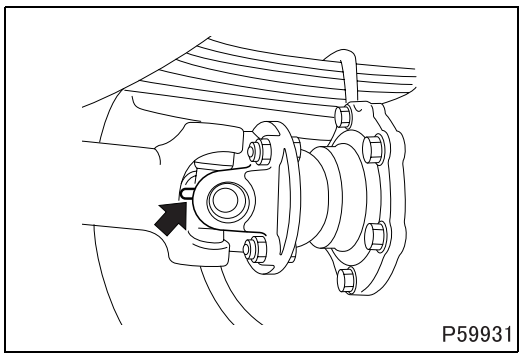

4. Propeller shaft universal joint's-all

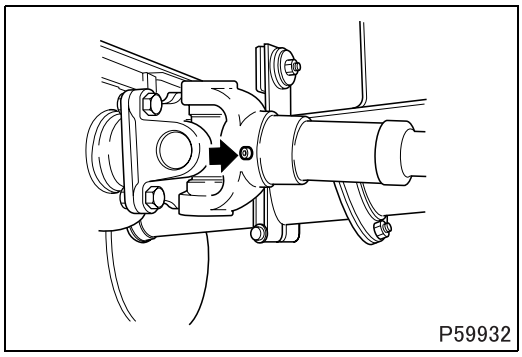

5. Propeller shaft slip joint

https://truckmanualshub.com/

LUBRICATION

<FG>

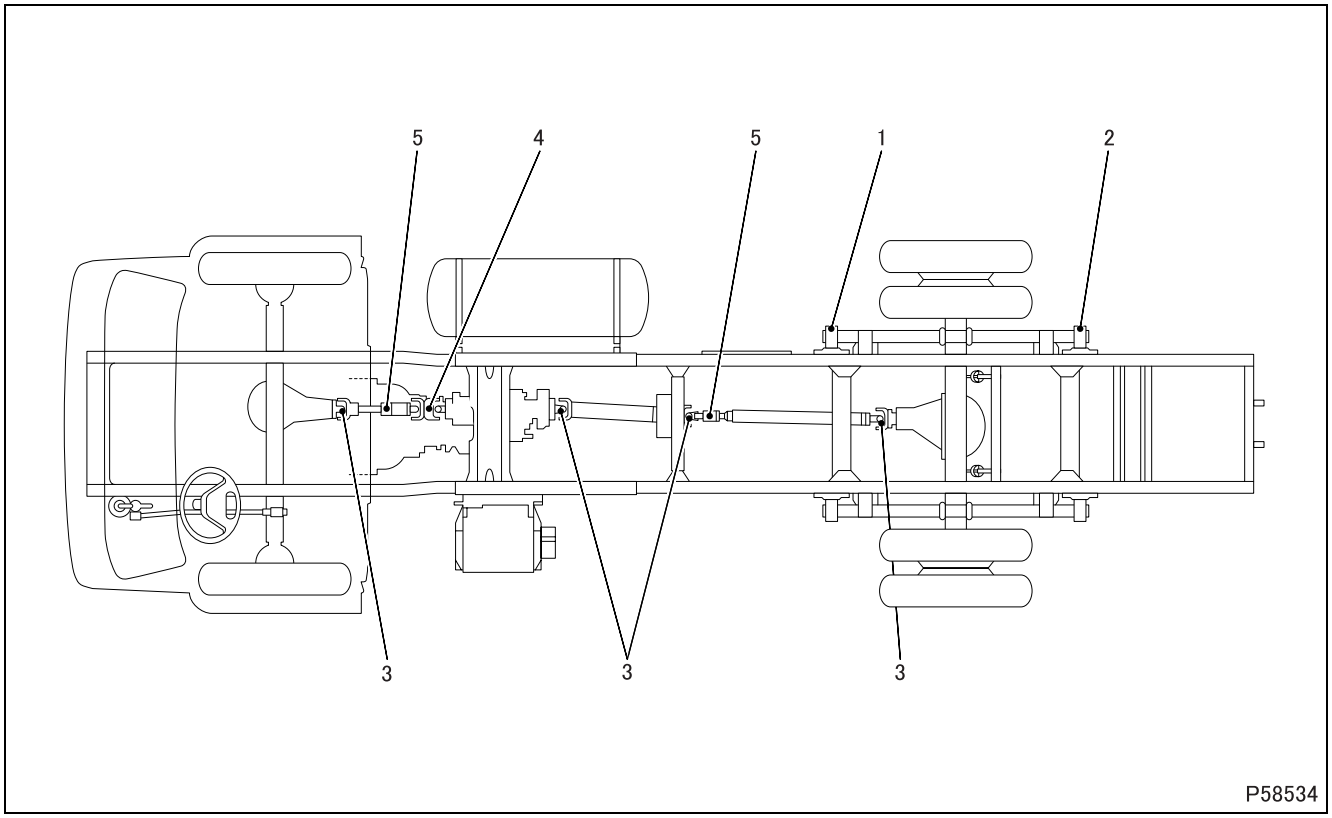

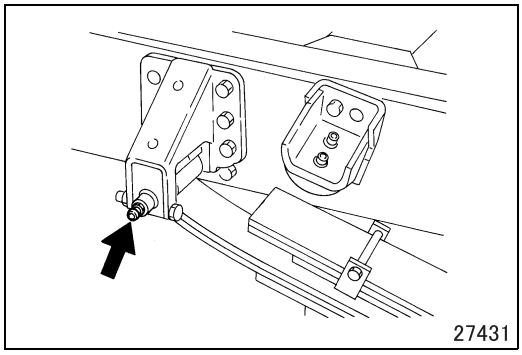

1. Rear spring pin front (left and right, 2 points)

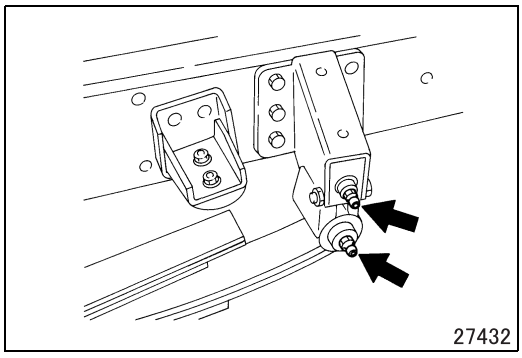

2. Rear spring pin rear (left and right, 4 points)

https://truckmanualshub.com/

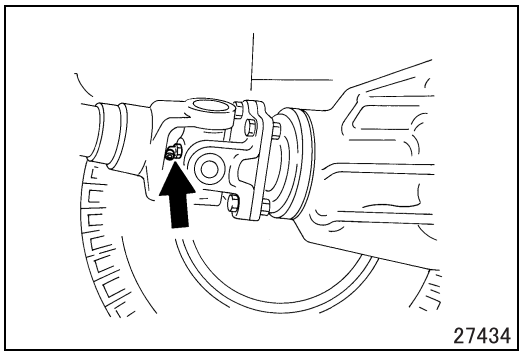

3. Propeller shaft universal joint's-all

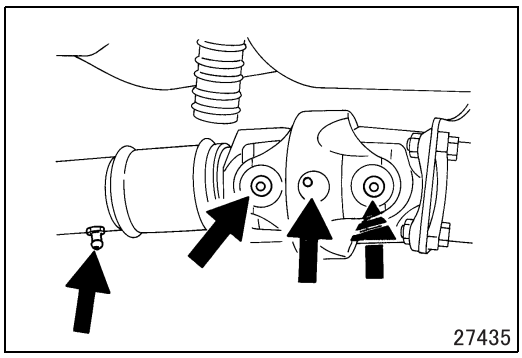

4. Double Cardin joint, propeller shaft slip joint, propeller shaft universal joint

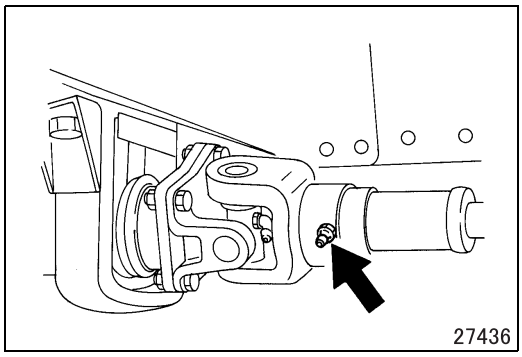

5. Propeller shaft slip joint

https://truckmanualshub.com/

FUSO

Group 11

Engine

MITSUBISHI FUSO TRUCK OF AMERICA, Inc.

Pub.No.00ELT0001-11

https://truckmanualshub.com/

INDEX

SPECIFICATIONS 11-2

STRUCTURE AND OPERATION
1. Engine Proper 11-3
2. Timing System 11-3
3. Main Bearing 11-5
4. Connecting Rod, Piston 11-5
5. Rocker Arms, Tappets 11-8

TROUBLESHOOTING 11-9

ENGINE REMOVAL AND INSTALLATION
<TILT CAB> 11-10
<FIXED CAB> 11-14

WORK FOR OVERHAULING ENGINE 11-18

TIMING GEAR CASE 11-48

TIMING GEAR, CHAIN 11-54

OVERHEAD, CYLINDER HEAD 11-68

PISTON AND CONNECTING ROD 11-88

FLYWHEEL 11-98

CRANKSHAFT AND CRANKCASE 11-102

https://truckmanualshub.com/

SPECIFICATIONS

Item		Specifications
Engine model		4P10T5
Type		4-cylinder, in-line, water-cooled, 4-cycle diesel engine
Combustion chamber		Direct injection type
Valve mechanism		Double overhead camshaft (DOHC)
Maximum output	HP / rpm	120 / 2865 to 3400
Maximum torque	ft.lbf / rpm	400 / 1300 to 2865
Bore × stroke	mm {in.}	ϕ95.8 × 104 {ϕ3.77 × 4.09}
Total displacement	L {qts}	2.998 {3.2}
Compression ratio		17.5

https://truckmanualshub.com/

1. Engine Proper

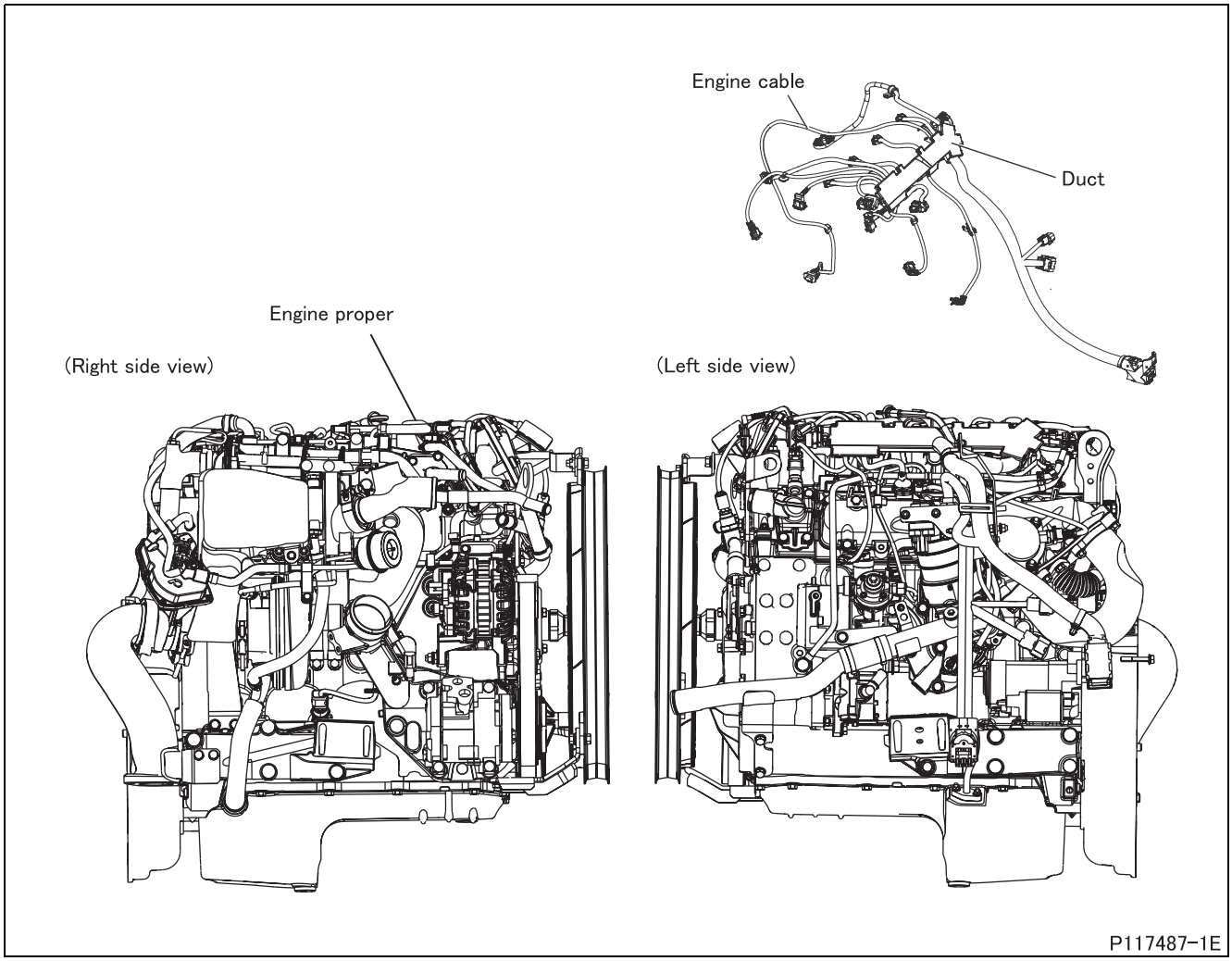

2. Timing System

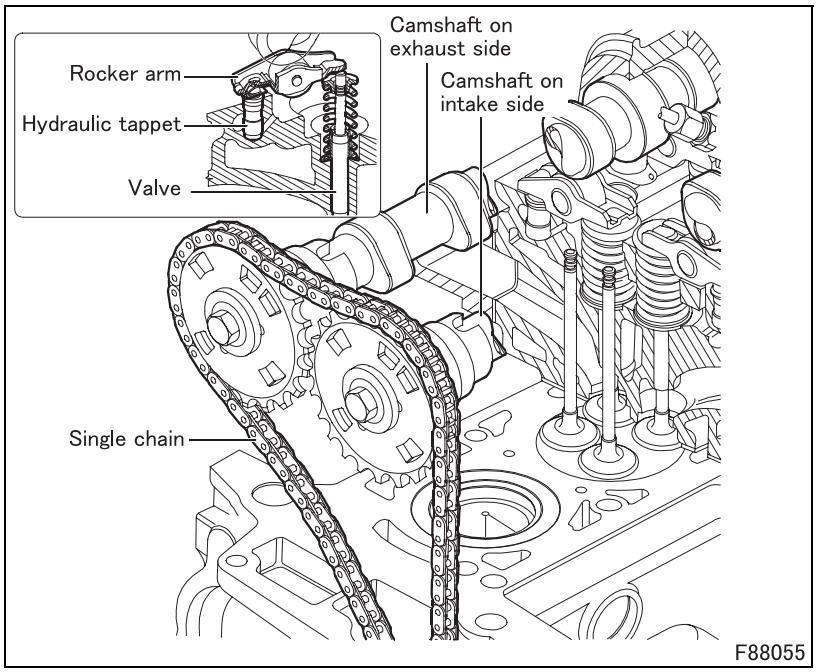

- The timing system is the type with a twin camshaft in the head and four valves per cylinder with hydraulic tappets.
- The control is transmitted by two chains.
  - A double chain by 3/8” is set in motion by the driving shaft and sets the control shafts in motion: oil pump/ vacuum pump - high pressure pump.
  - A single chain is set in motion by the high pressure control shaft gear and sets the camshafts in motion.
- The rocker arms, one for the valve, are kept in contact with the corresponding cam by an hydraulic tappet, thus eliminating the need for regular adjustments.

https://truckmanualshub.com/

2.1 Timing system and auxiliary system diagram

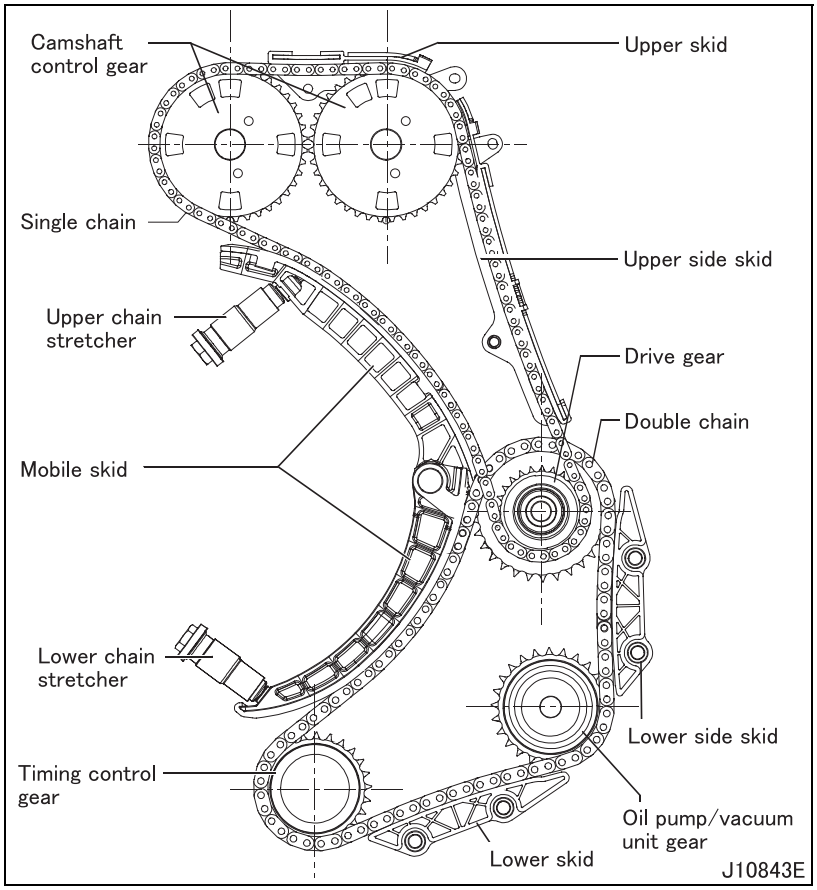

- Replace both chains even if an abnormality occurs in only one chain. When replacing the chains, it is also necessary to replace the oil pump/vacuum unit gear, the drive gear, each skid (upper, upper side, lower side, and lower), the camshaft control gear and the chain stretcher.
- Replace the chain stretcher with anti-return device each time you disassemble the timing system. Once the lock of the main body opens and the piston is thrust outward, the chain stretcher can no longer be reinstalled in its original position.

2.2 Hydraulic chain stretcher upper

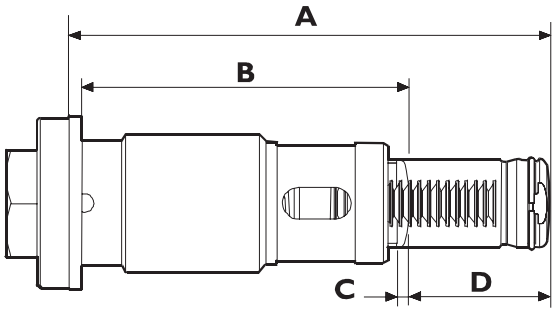

A : Max. range 76.9±0.4 mm{3.03±0.016 in.}
B : Piston engaged 53.6 mm{2.11 in.}
C : Min. travel for piston disengagement 2.3 mm{0.091 in.}
D : Working travel 24.5 mm{0.96 in.}

N130208

https://truckmanualshub.com/

3. Main Bearing

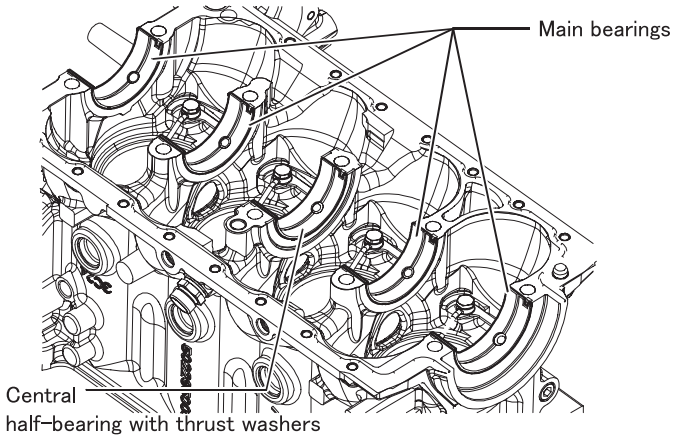

F5092−1

- Undersize main bearings are provided as spare parts.
- A thrust plate is installed on the central half-bearing.
- The pilot hole in bulkhead of #5 position is larger than the pilot holes in bulkheads of #1 to #4 positions. (#1 to #4 positions are the same size.)

4. Connecting Rod, Piston

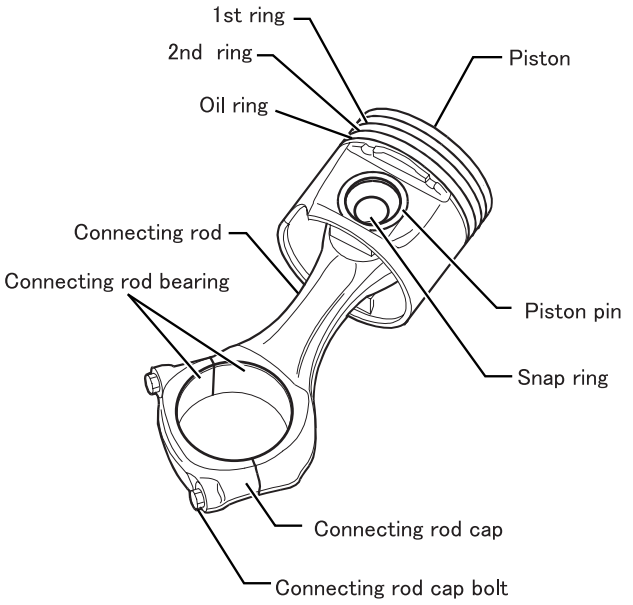

J5087−1E

- A replacement piston is supplied with piston rings, the piston pin and the snap ring.

https://truckmanualshub.com/

4.1 Piston

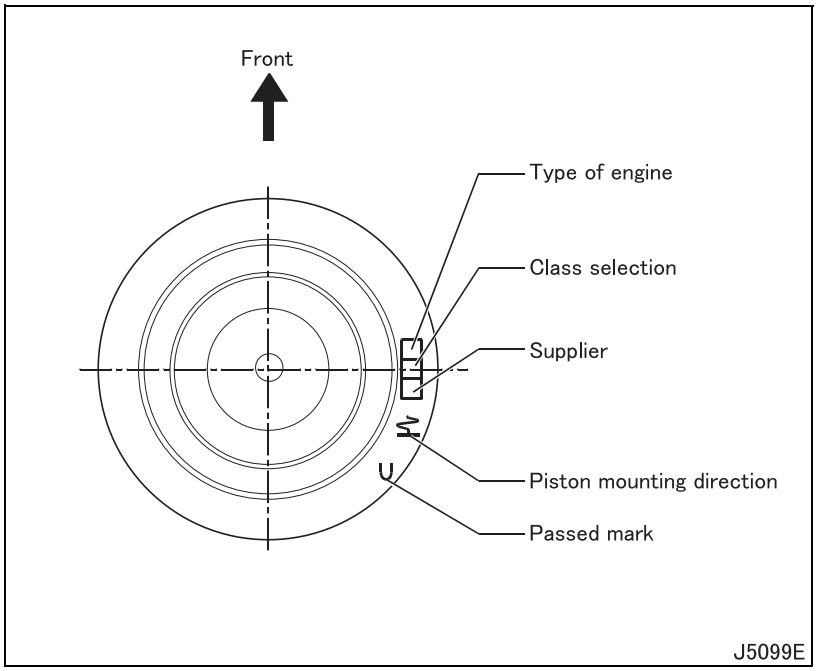

- Etched on the top of the piston are the following.
  - The type of engine.
  - Class selection and supplier.
  - Piston mounting direction.
  - Passed mark: “Test passed” symbol.

https://truckmanualshub.com/

4.2 Connecting rod

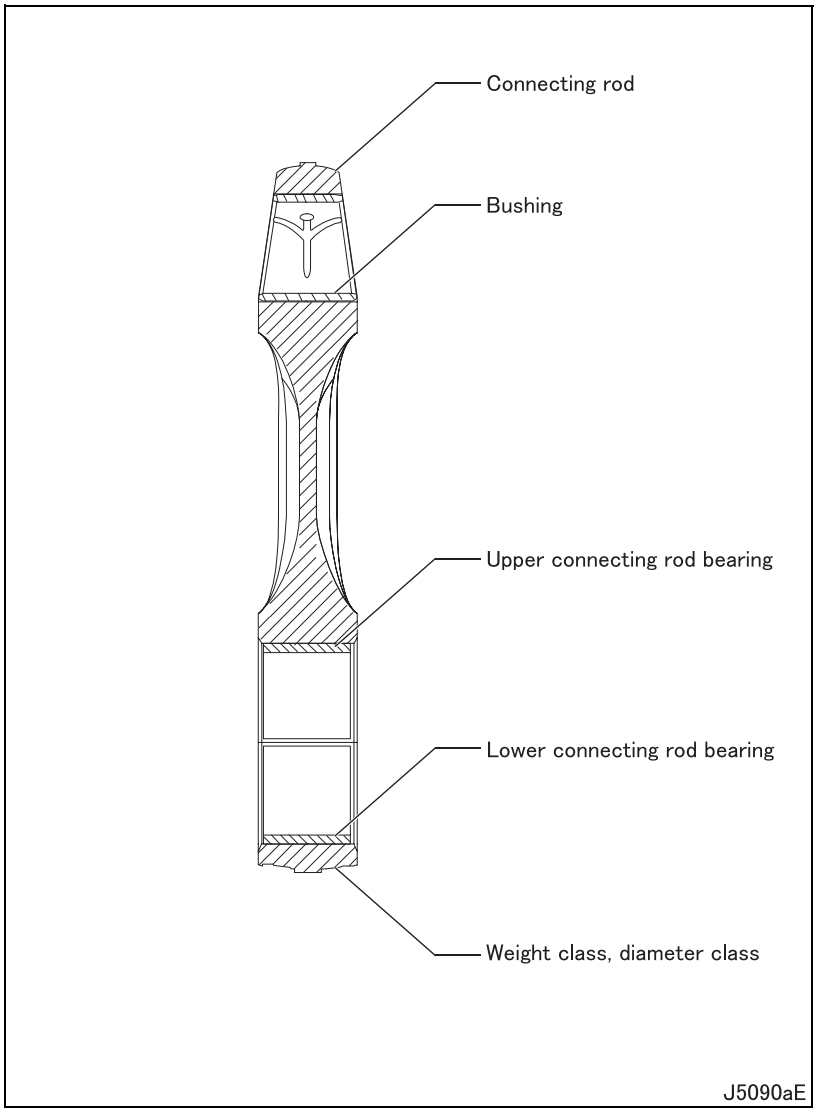

- Each connecting rod has its cap marked with the following.
  - A number indicating the weight class of the connecting rod mounted in production.
  - A letter: O or X indicating the diameter class of the big end mounted in production.

https://truckmanualshub.com/

5. Rocker Arms, Tappets

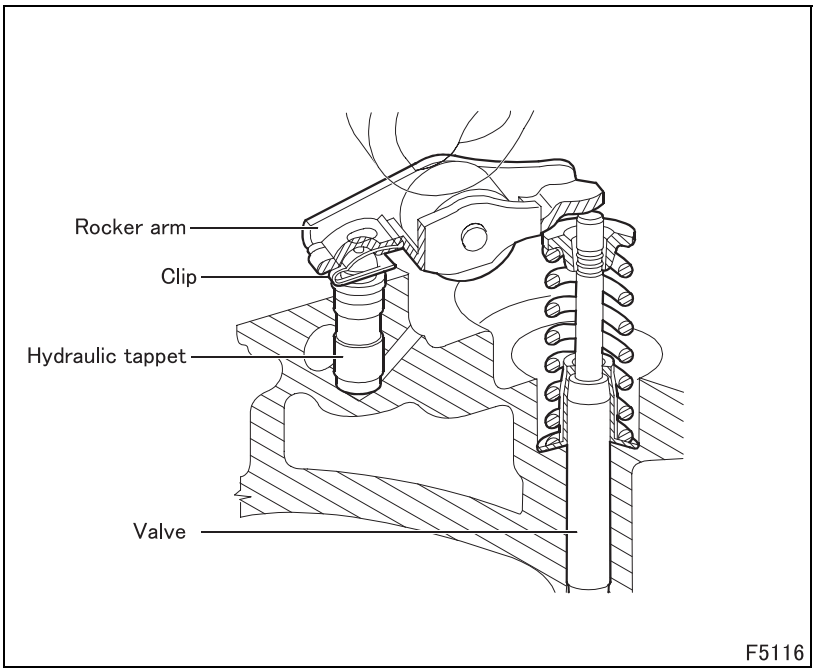

- The rocker arm assembly is composed of the rocker arm, hydraulic tappet, made integral with each other by the clip.

5.1 Cross section of the hydraulic tappet

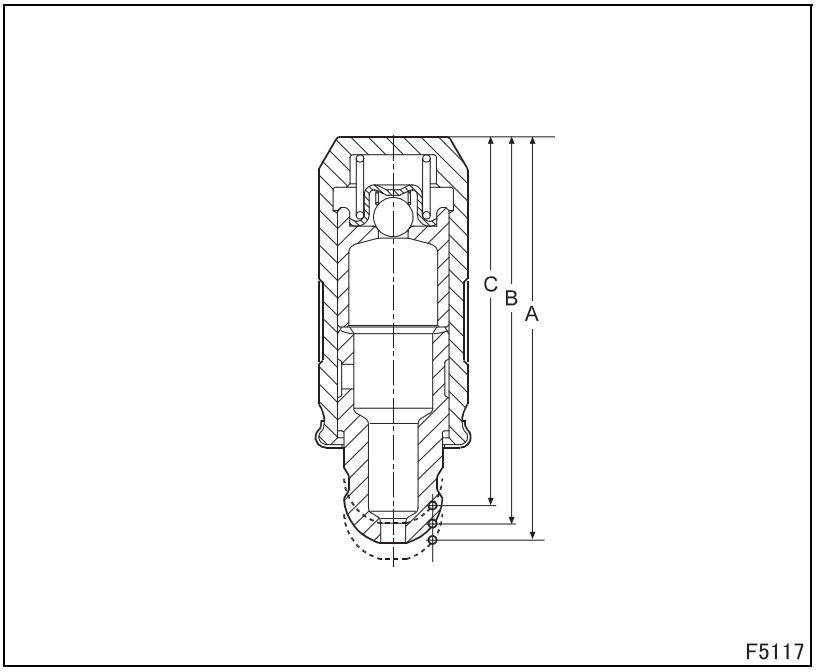

- A = 32.44 mm ± 0.3 mm {1.28 in. ± 0.012 in.}, end of stroke
- B = 31.30 mm {1.23 in.}, working position
- C = 29.75 mm ± 0.25 mm {1.17 in. ± 0.0098 in.}, start of stroke

https://truckmanualshub.com/

Possible causes \ Symptoms		Low power output	Abnormal engine noise	Electronic control unit diagnosis lamp	Reference Gr
Cylinder head and valve mechanism	Rocker arm broken/out of place	O	O		
	Rocker arm roll worn	O	O		
	Hydraulic tappet leakage	O	O		
	Hydraulic tappet blocked	O	O		
	Worn valve and valve seat; carbon deposits	O	O		
	Defective cylinder head gasket	O	O		
	Weakened valve spring	O	O		
Defective timing chain-related parts			O	O	
Timing sprockets/skids	Incorrect tension on chain branches		O	O	
	Poor lubrication of timing gears and idler shaft		O		
Camshaft	Worn camshaft	O	O		
Pistons and connecting rods	Worn/damaged piston ring groove(s)	O	O		
	Worn/damaged piston ring(s)	O	O		
	Worn piston pin and connecting rod small end		O		
Crankshaft	Excessive end play in crankshaft		O		
	Incorrectly fitted crankshaft		O		
	Worn/damaged crankshaft pins and connecting rod bearings		O		
	Worn/damaged crankshaft journals and main bearings		O		
Fuel system	Defective supply pump	O	O	O	Gr13
	Defective high pressure pump	O	O	O	
	Faulty fuel spray from injector	O	O		
	Inappropriate fuel injection timing	O	O	O	
	Air trapped in fuel system components	O		O	
Cooling system	Malfunctioning cooling system	O		O	Gr14
	Loose/damaged V-belts		O	O	
Intake and exhaust system	Clogged air cleaner	O			Gr15
	Clogged muffler	O			
Defective/incorrectly fitted alternator and other auxiliaries			O		Gr14
Incorrect oil viscosity		O			Gr12
Improper fuel		O			Gr13
Incorrectly fitted piping and hoses			O		
Malfunctioning turbocharger		O	O		Gr15

https://truckmanualshub.com/

ENGINE REMOVAL AND INSTALLATION <TILT CAB>

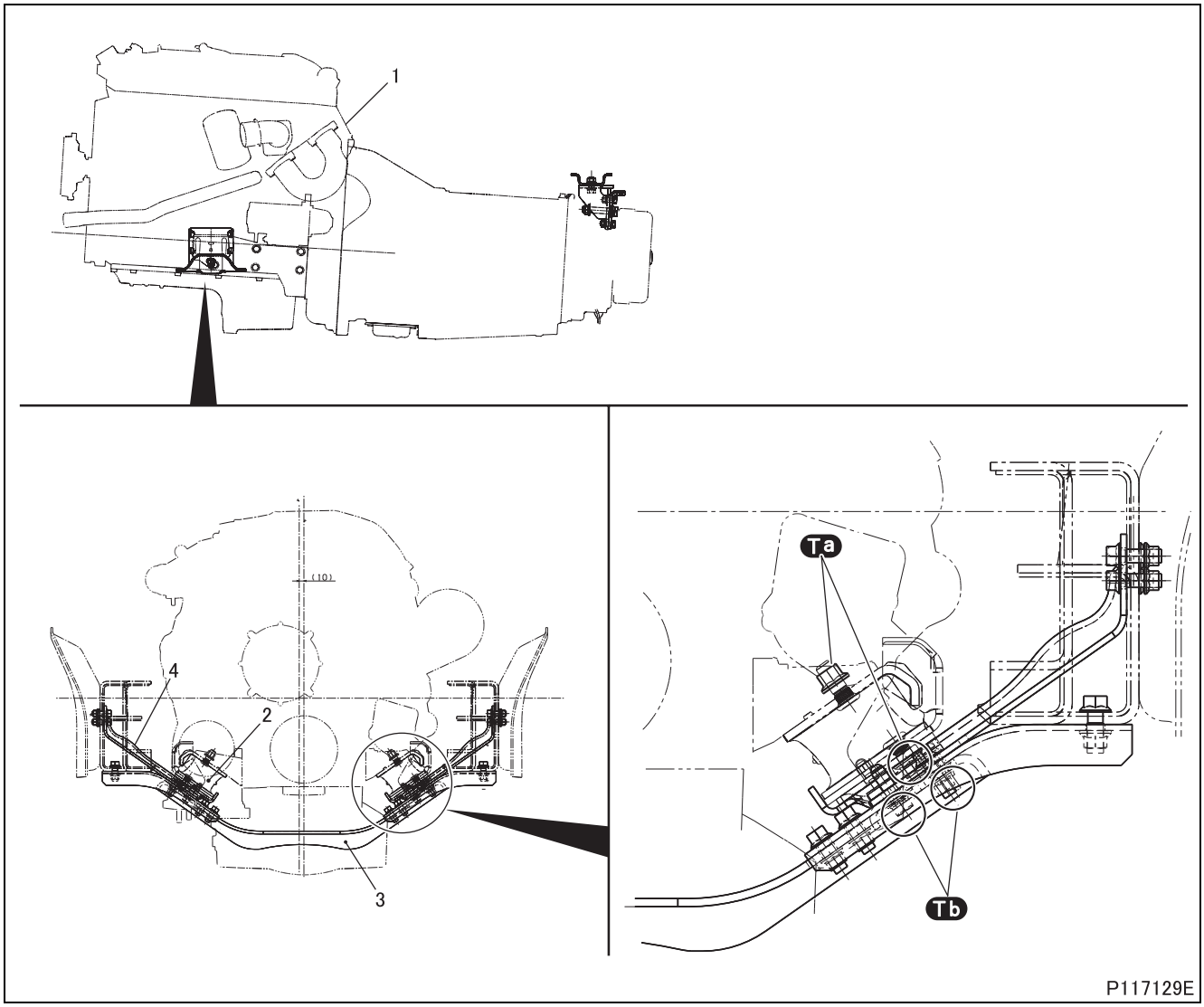

● **Removal sequence**

1 Engine
2 Cushion rubber
3 Engine mounting support cross member
4 Engine mounting support bracket

● **Installation sequence**

Follow the removal sequence in reverse.

CAUTION ⚠

- **When lifting the engine, make sure that the engine does not strike the cab and the rear body.**
- **Only use hoisting equipment appropriate for the engine weight (approximately 350 kg {770 lb}).**

Tightening torque (Unit: N·m {ft.lbs, kgf·m})

Mark	Parts to be tightened		Tightening torque	Remarks
Ta	Nut (cushion rubber installation)	Two wheel drive	76.5 {56, 7.8}	–
		Four wheel drive	115 {85, 12}	
Tb	Bolt (engine mounting support bracket installation)		58.7 {43, 6.0}	–

https://truckmanualshub.com/

◆Removal procedure◆

■ Work before removal

- Remove the transmission. (See Gr22.)
- Drain off the cooling water. (See Gr14.)
- Remove the wiring, pipes and related parts in the vicinity of the engine.
- Remove the rear mounting bridge. (See Gr42.)

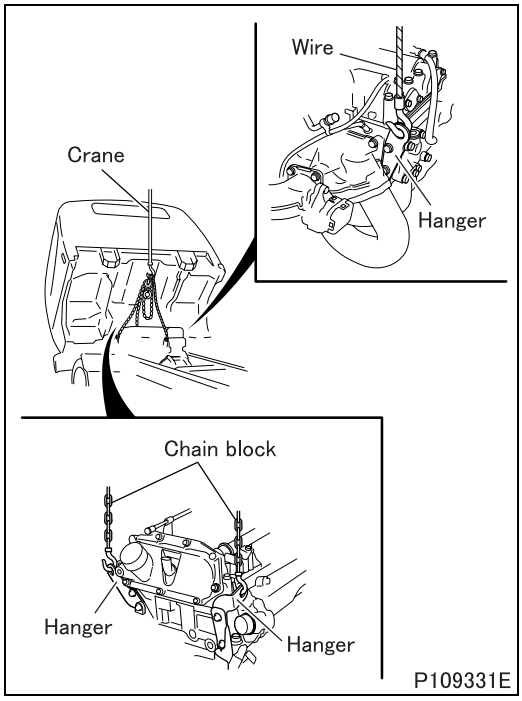

■ Removal: Engine

- Connect the wires to the chain block and onto the three hangers on the engine and lift the engine with a crane until they are tight.
- Support the transmission with a transmission jack.
- Check that all wiring and piping have been disconnected from the engine.

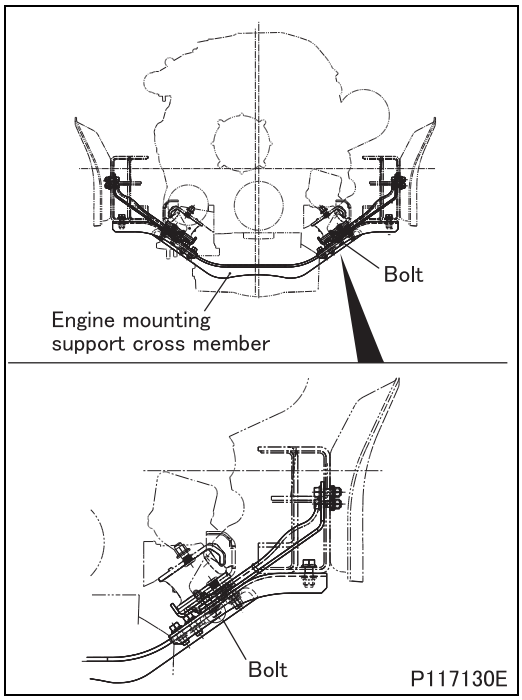

- Remove the bolts shown in the drawing from the bottom of the vehicle and separate the engine from the engine mounting support cross member.

https://truckmanualshub.com/

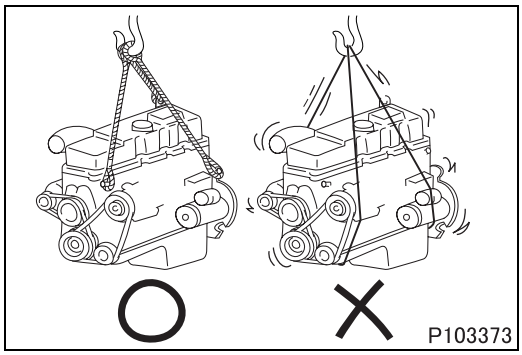

- Adjust the lifting angle of the engine as necessary in this step. Once the engine has cleared the rear of the cab, turn the engine 90 degrees clockwise so as to prevent it from hitting the frame and cab, then lower it to the right side of the vehicle.

◆Inspection procedure◆

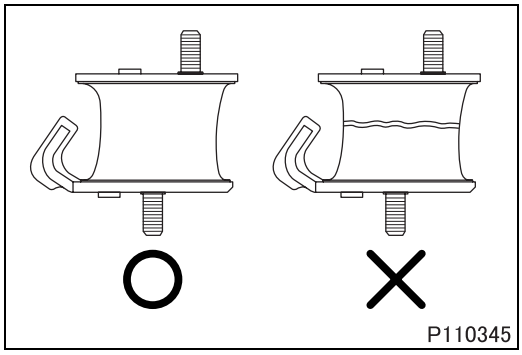

■ Inspection: Cushion rubber

- Check the entire periphery of the cushion rubber for cracks, breakage, oil stains or any other defect.
- Replace the cushion rubber if it is defective.

◆Installation procedure◆

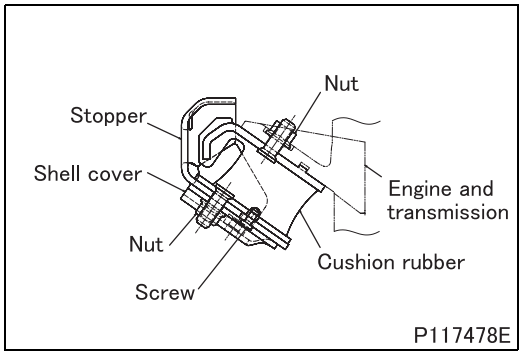

■ Installation: Cushion rubber

- Install the stopper and the shell cover on the cushion rubber, and then install them on the engine.

■ Installation: Engine

- While finely adjusting the hoisting angle of the engine, install the engine taking care that it does not strike the frame or the cab.
- Install the engine on the engine mounting support cross member.

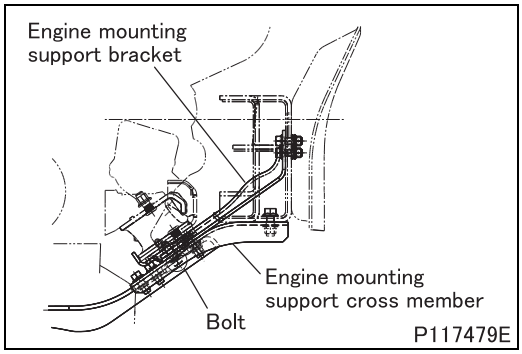

- Remove the wire and chain block from the engine hanger (3 points).

https://truckmanualshub.com/

■ **Work after installation**

- Install the transmission. (See Gr22.)
- Reinstall the wiring, pipes and related parts in the vicinity of the engine.
- Reinstall the rear mounting bridge. (See Gr42.)
- Replenish cooling water. (See Gr14.)

https://truckmanualshub.com/

ENGINE REMOVAL AND INSTALLATION <FIXED CAB>

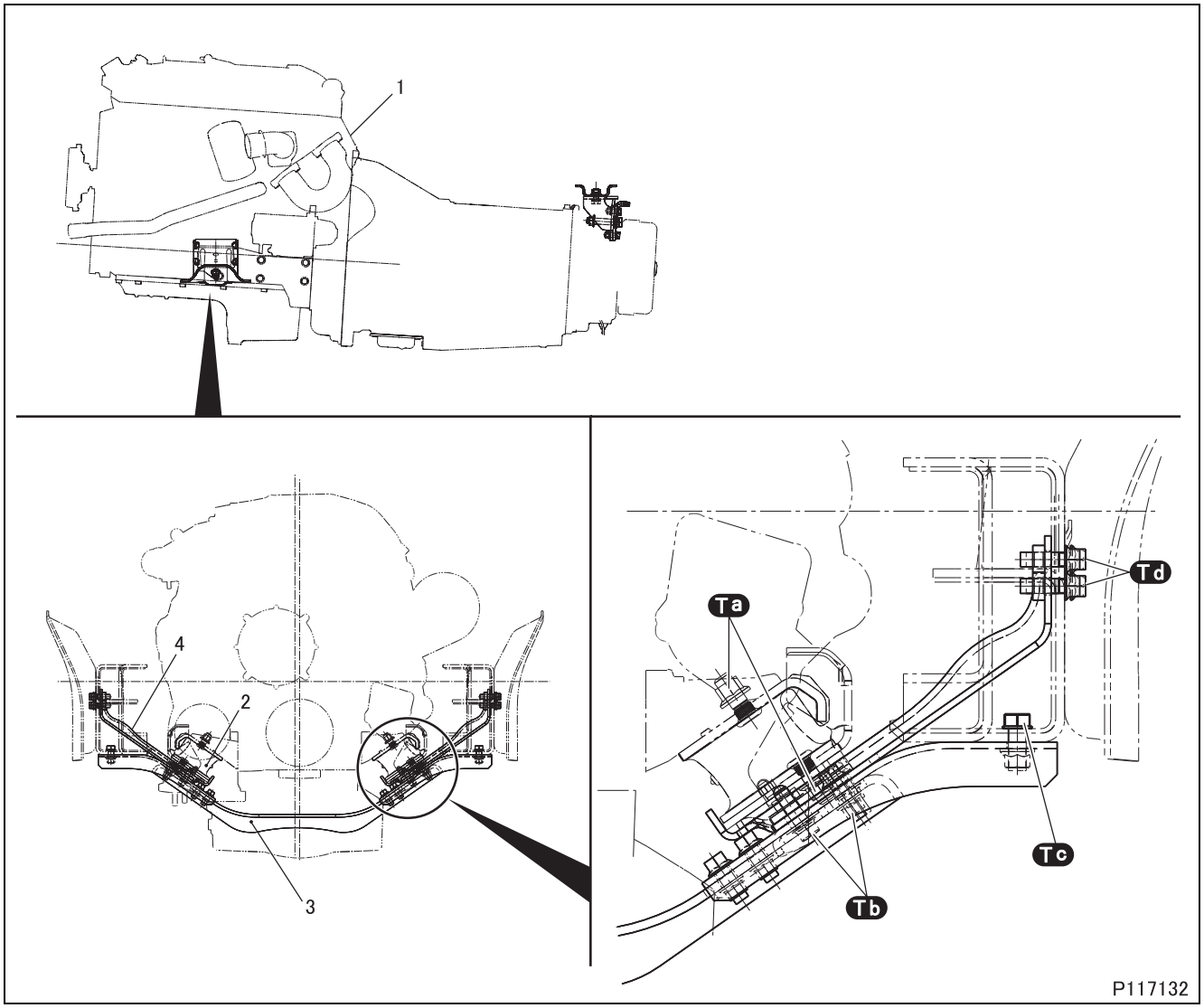

● **Removal sequence**

1 Engine
2 Cushion rubber
3 Engine mounting support cross member
4 Engine mounting support bracket

● **Installation sequence**

Follow the removal sequence in reverse.

CAUTION ⚠

- **When removing and installing the engine, make sure that the engine does not strike the cab and the rear body.**
- **Secure the engine with the engine jack before removing each part.**

https://truckmanualshub.com/

Tightening torque (Unit: N·m {ft.lbs, kgf·m})

Mark	Parts to be tightened	Tightening torque	Remarks
Ta	Nut (cushion rubber installation)	76.5 {56, 7.8}	–
Tb	Bolt (engine mounting support bracket installation)	58.7 {43, 6.0}	–
Tc	Bolt (engine mounting support cross member installation)	106 {78, 11}	–
Td	Bolt (engine mounting support bracket installation)	81.4 {60, 8.3}	–

◆Removal procedure◆

■ Work before removal

- Jack up the vehicle. (See Gr00.)
- Remove the transmission. (See Gr22.)
- Remove the front axle. (See Gr26.)
- Drain off the cooling water. (See Gr14.)
- Remove the wiring, pipes and related parts in the vicinity of the engine.

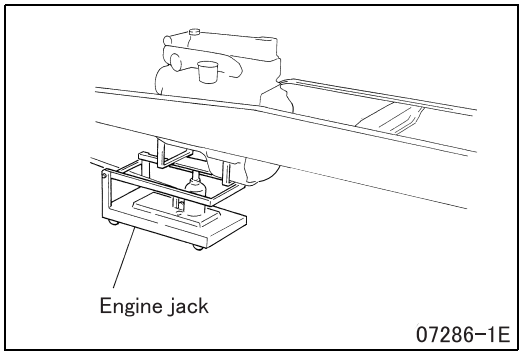

■ Removal: Engine

- Support the engine with an engine jack.
- Check that all wiring and piping are completely disconnected from the engine.

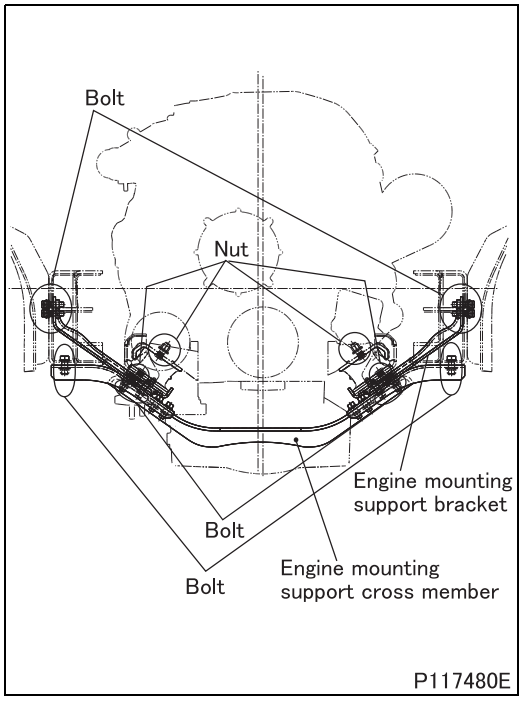

- For the rigid leaf type, separate the engine from different parts, while adjusting its lift amount (jack-up height), and remove the engine mounting support bracket from the engine compartment.

https://truckmanualshub.com/

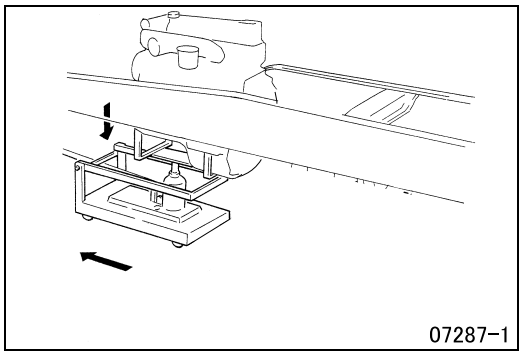

- While keeping the engine level, fully lower the engine.
- Lift the vehicle with a jack and move the engine forward.

◆Inspection procedure◆

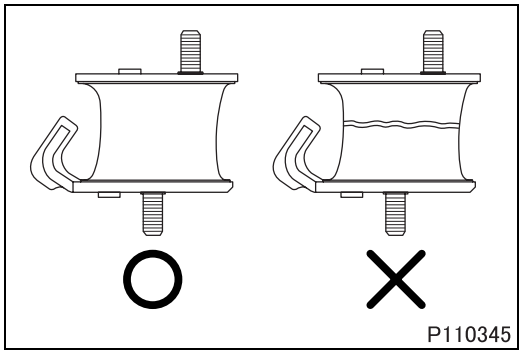

■ Inspection: Cushion rubber

- Check the entire periphery of the cushion rubber for cracks, breakage, oil stains or any other defect.
- Replace the cushion rubber if it is defective.

◆Installation procedure◆

■ Installation: Cushion rubber

- Support the engine with the engine lifter.
- While maintaining the engine horizontal, move the cushion rubber to the bottom of the frame, and then slowly raise the engine.
- While adjusting the lift of the engine (jacked-up height), install the nuts and bolts.

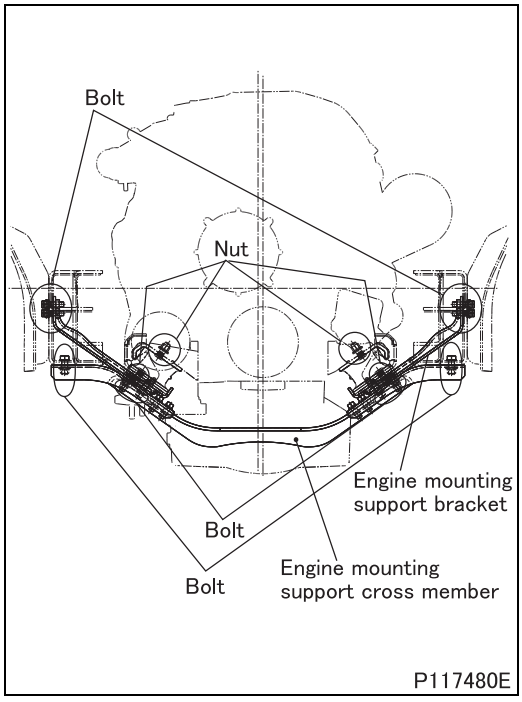

- Remove the engine lifter.

https://truckmanualshub.com/

■ **Work after installation**

- Install the transmission. (See Gr22.)
- Install the front axle. (See Gr26.)
- Install the wiring, pipes and related parts in the vicinity of the engine.
- Jack down the vehicle. (See Gr00.)
- Replenish the cooling water. (See Gr14.)

https://truckmanualshub.com/

Tightening torque (Unit: N·m {ft.lbs, kgf·m})

Mark	Parts to be tightened		Tightening torque	Remarks
–	Bolt (oil return pipe mounting)		10 {7.4, 1}	–
–	Bolt (oil cooler mounting)		25 {18, 2.5}	–
	Bolt (connection pipe mounting)			
	Bolt (high pressure pipe bracket mounting)			
	Bolt (mixing pipe mounting)			
	Bolt (pulley mounting)			
	Bolt (water pump mounting)	M8		
	Bolt (alternator bracket mounting)	M8		
	Bolt (water pipe mounting)			
	Nut (air inlet pipe mounting)			
	Bolt (oil level gauge mounting)			
	Bolt (exhaust gas recirculation unit mounting)			
	Bolt (intake manifold mounting)			
	Bolt (thermostat mounting)			
	Bolt (automatic tensioner mounting)			
	Bolt (air duct mounting)			
	Bolt (oil return hose mounting)			
	Bolt (air conditioner compressor mounting)			
	Bolt (exhaust manifold and turbocharger mounting)			
	Bolt (bracket mounting)			
–	Bolt (alternator mounting)		40 {29, 4}	–
	Bolt (idle pulley mounting)			
	Water temperature sensor			
–	Bolt (water pump mounting)	M10	50 {37, 5}	–
	Bolt (alternator bracket mounting)	M10		
	Bolt (engine support mounting)			
–	Nut (pipe mounting)		30 {22, 3.1}	–
	Nut (exhaust gas recirculation valve mounting)			
	Connector (support bracket mounting)			
	Connector (oil pipe mounting)			
–	Automatic cooling fan coupling		90 to 112 {66 to 83, 9.2 to 11}	–
–	Bolt (common rail mounting)		28 {21, 2.8}	–
–	Bolt (injector bracket mounting)		32 {24, 3.2}	–
–	Union (fuel pipe mounting)	Injector side	25 ± 2 {18 ± 1.9, 2.5 ± 0.2}	–
		Common rail side	19 ± 2 {14 ± 1.9, 1.9 ± 0.2}	
–	Union (high pressure fuel pipe mounting)		19 ± 2 {14 ± 1.9, 1.9 ± 0.2}	–
–	Oil filter		25 to 30 {18 to 22, 2.5 to 3.1}	–
–	Air pulling out plug		1.5 ± 0.6 {1.1 ± 0.4, 0.15 ± 0.06}	–
–	Vacuum pipe		35 {25, 3.6}	–

Lubricant and/or sealant

Mark	Points of application	Specified lubricant and/or sealant	Quantity
–	O-ring	Engine oil	As required
	Bracket bolt (turbocharger mounting)	Loctite 242	

https://truckmanualshub.com/

Special tools

Mark	Tool name and shape	Part No.	Application
[a]	Engine rotary stand bracket 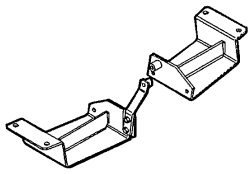 99361041	MH063991	Securing engine (to be used in combination) PRECAUTIONS ON USE 1. Drill holes in right and left rails of [b] for securing [a]. 2. Since these tools are not stable, secure them using anchor bolts. 3. Never rotate engine when oil is remaining inside. (Otherwise oil enters the combustion chamber, which will necessitate an overhaul.)
[b]	Rotary stand 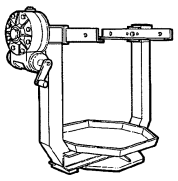 99322205	MH063960	
[d]	Head, flare nut wrench (width across flats: 18 mm {0.71 in.}) 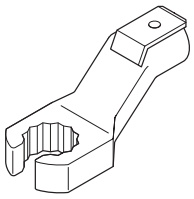 P110453	MH063983	Removal and installation of injection pipe and fuel pipe
[e]	Head, flare nut wrench (width across flats: 19 mm {0.75 in.}) 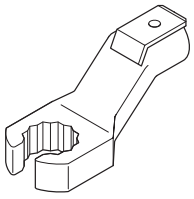 P110453	MH063982	
[f]	Socket wrench  P116185	MH064203	Removal and installation of injection pipe and fuel pipe <Four wheel drive>
[g]	Coupling fan attachment 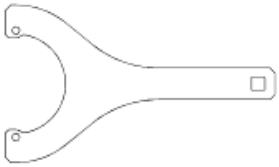 P116337	MH064219	Removal and installation of pulley
[h]	Injector extractor 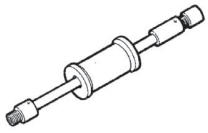 99340205	MH063990	Removal and installation of injector

https://truckmanualshub.com/

WORK FOR OVERHAULING ENGINE

◆Removal procedure◆

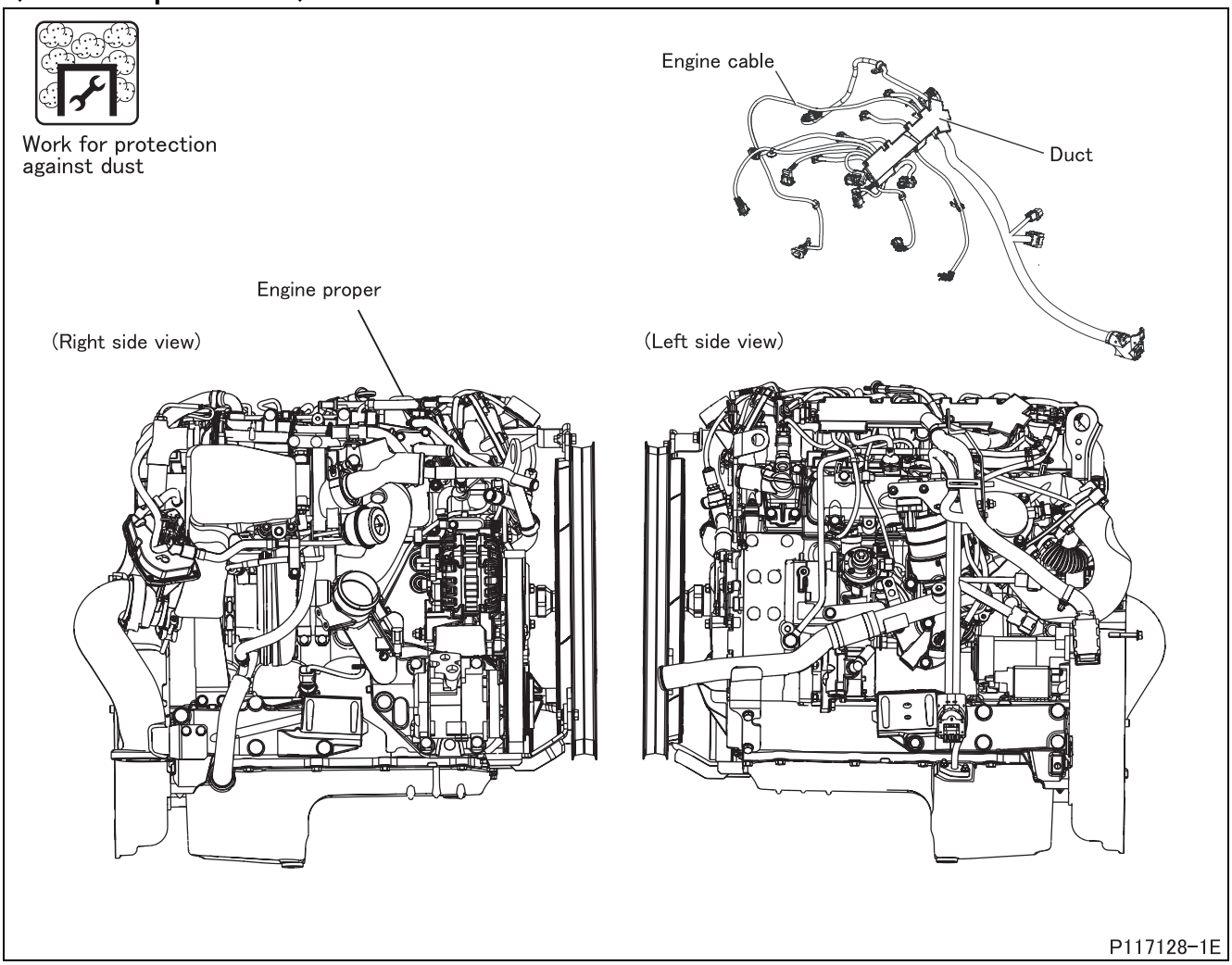

: This work requires protection against dust.

- If fine dust enters the high pressure fuel pump, engine performance will significantly be affected. Be sure to cover the openings after removing parts such as pipes.

■ Removal: Engine cable, duct, starter

- To be able to fit the ca for the cb to the crankcase, it is necessary to carry out some preliminary operations as described below.
- Remove the engine cable together with the duct, disconnecting the electrical connections from the following parts.
  - Blow-by pressure sensors.
  - EBS (Exhaust Brake System) valve.
  - Glow plugs.
  - Injectors.
  - EGR (Exhaust Gas Recirculation) cooler outlet temperature sensor.
  - EGR (Exhaust Gas Recirculation) actuator.
  - Pressure sensor.
  - VGT (Variable Geometry Turbocharger) actuator.

https://truckmanualshub.com/

- Pressure regulation valve.
- Boost pressure and temperature sensor.
- Water temperature sensor.
- Camshaft timing sensor.
- Engine speed sensor.
- Oil pressure sensor.

• Remove the starter motor.

NOTE

- **Block the turbocharger air/exhaust gas inlets and outlets to prevent the entry of foreign material.**

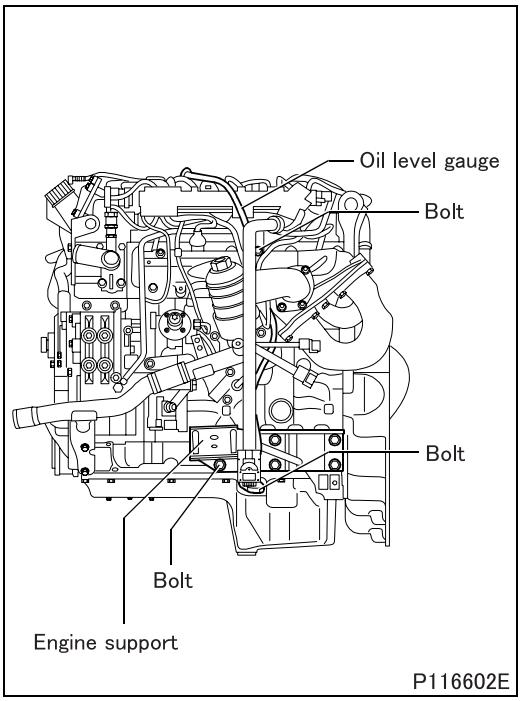

■ Working from the left-hand side

• Remove the pipe for checking the oil level. Unscrew and remove the screw fastening the pipe to the intake manifold; unscrew and remove the screws fastening the pipe to the oil pan.

• Remove the engine support.

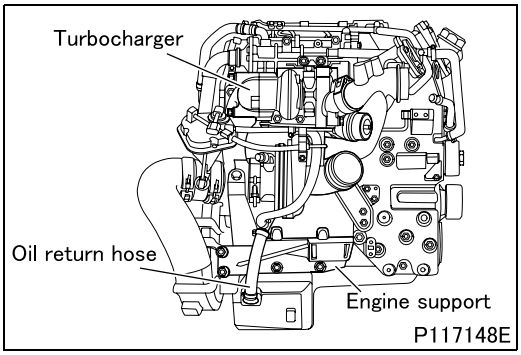

■ Working from the right-hand side

• Remove the turbocharger protector.

• Remove the oil return pipe from the turbocharger.

• Remove the fixing screws and remove the engine support.

• Fit the [a] to the crankcase and use these to secure the engine to the [b].

• Drain the oil from the engine by removing the plug from the oil pan.

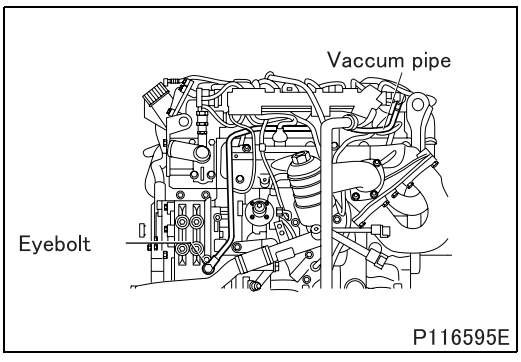

■ Removal: Vacuum pipe

• Remove the eyebolt, and remove the vacuum pipe.

https://truckmanualshub.com/

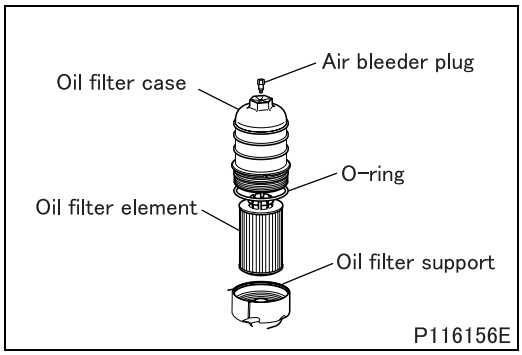

■ **Removal: Oil filter case, oil filter element**

- Loosen the oil filter case (by approx. 2.5 turns).
- Remove the air bleeder plug.
- Remove the oil filter case.
- Remove the oil filter element and O-ring.

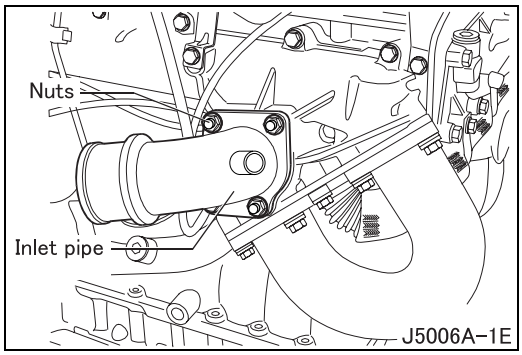

■ **Removal: Air inlet pipe**

- Remove the nuts and detach the air inlet pipe.

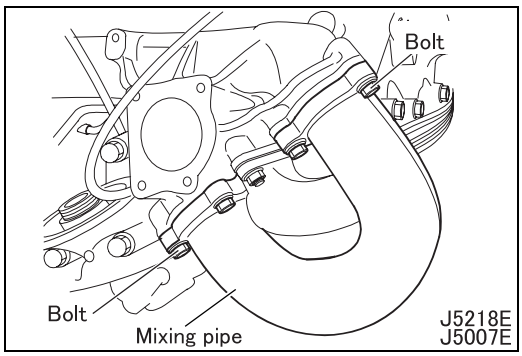

■ **Removal: Mixing pipe**

- Remove the mixing pipe.

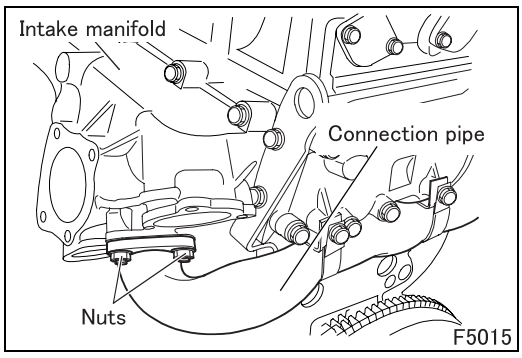

■ **Removal: Connection pipe**

- Remove the two nuts; disconnect the pipe from the intake manifold.

https://truckmanualshub.com/

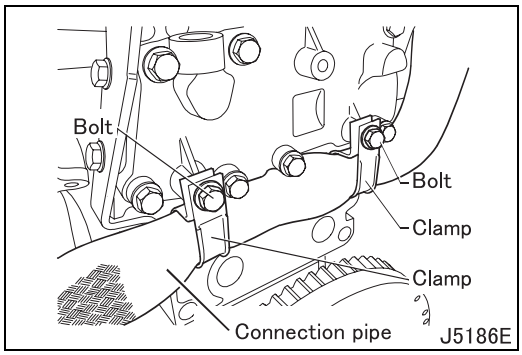

- Remove the clamps from the connection pipe.

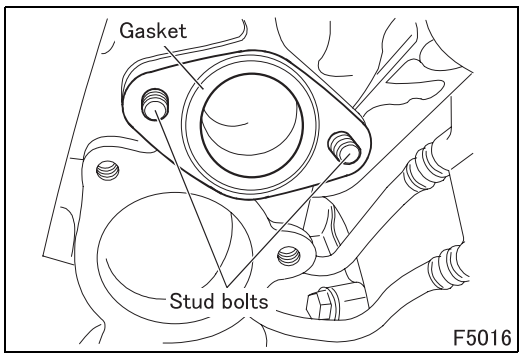

■ **Removal: Gasket, stud bolt**

- Remove the gasket.
- Remove the stud bolts.

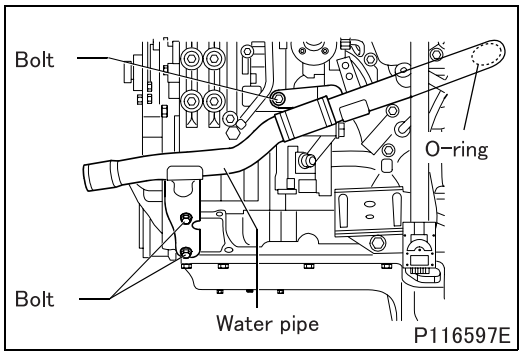

■ **Removal: Water pipe**

- Remove the water pipe from the oil cooler.

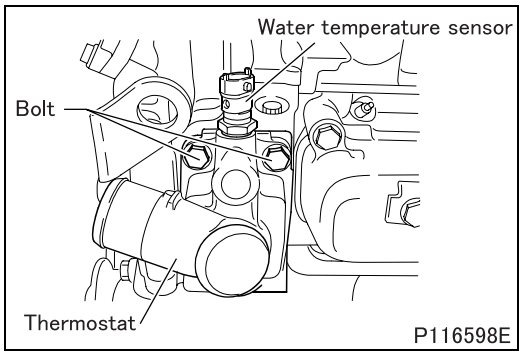

■ **Removal: Thermostat, water temperature sensors**

- Remove the thermostat and the water temperature sensor.

https://truckmanualshub.com/

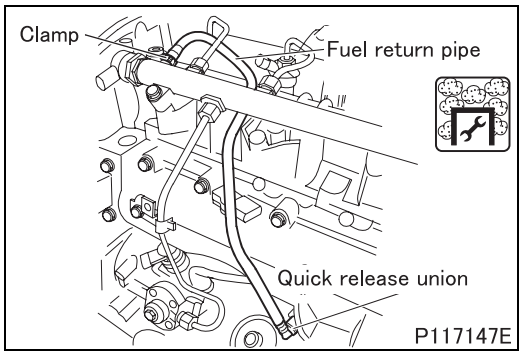

■ **Removal: Fuel return pipe**

: This work requires protection against dust.

- Remove the clamp fastening the fuel return pipe to the common rail.
- Open the quick release union and remove the fuel return pipe for fuel return from the common rail.

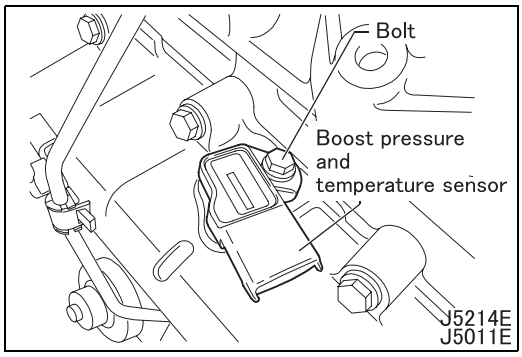

■ **Removal: Boost pressure and temperature sensor**

- Remove the boost pressure and temperature sensor from the intake manifold.

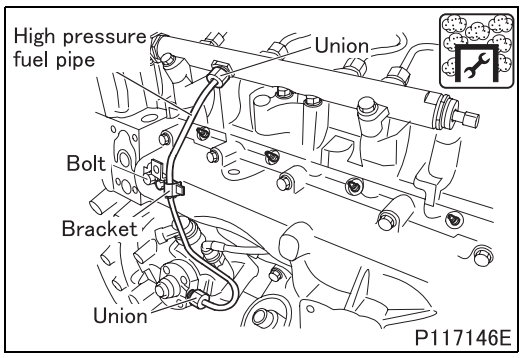

■ **Removal: High pressure fuel pipe**

: This work requires protection against dust.

- Loosen the bolts of the pipe retaining bracket and remove the high pressure fuel pipe.

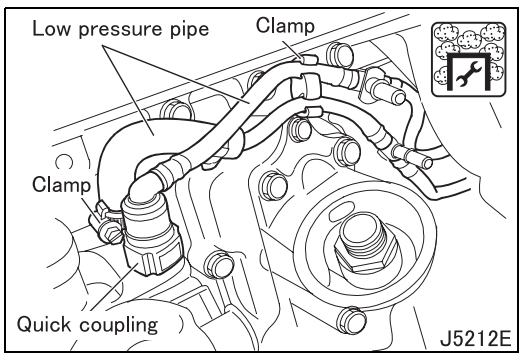

■ **Removal: Low pressure pipe**

: This work requires protection against dust.

- Remove the connectors on the injector side and the common rail side of the fuel pipe.
- Remove the common rail from the engine overhead.

https://truckmanualshub.com/

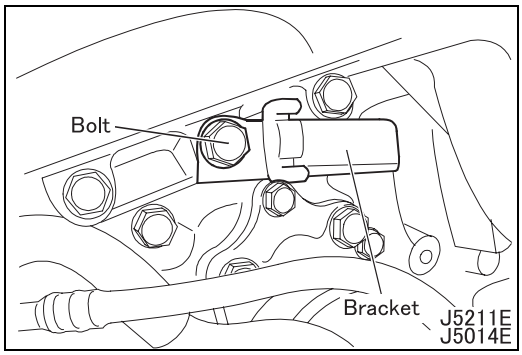

■ **Removal: Bracket**

- Remove the bracket.

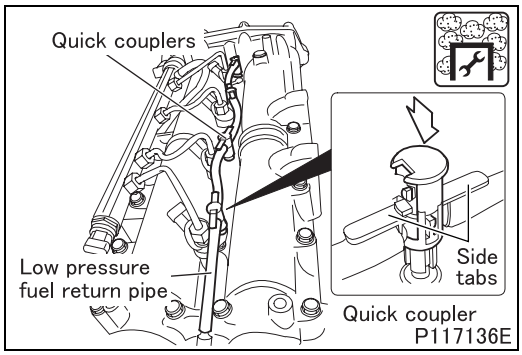

■ **Removal: Low pressure fuel return pipe**

: This work requires protection against dust.

- To remove the low pressure fuel return pipe from the injectors it is necessary to open the quick couplers.
- To open the quick couplers press on the side tabs and raise the central body as shown in the figure.

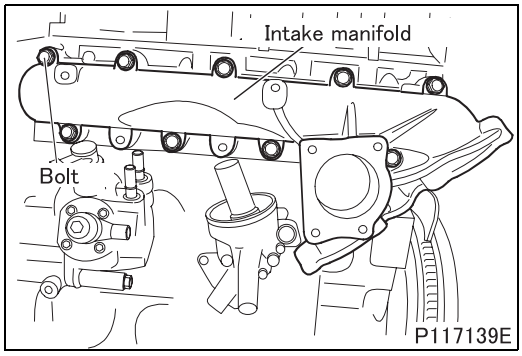

■ **Removal: Intake manifold**

- Remove the intake manifold together with the gasket.

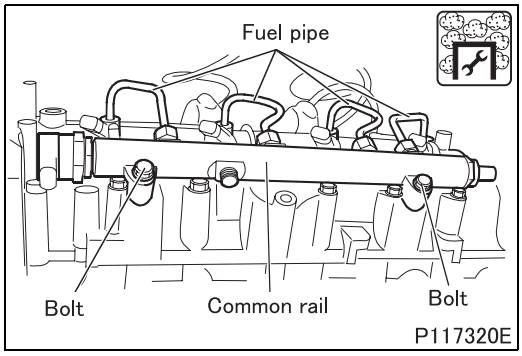

■ **Removal: Fuel pipe, common rail**

: This work requires protection against dust.

- Remove the injector side connectors using cf <Four wheel drive>.
- Remove the common rail side connectors using cd.
- Unscrew and remove the bolts. Detach the common rail from the engine overhead.

https://truckmanualshub.com/

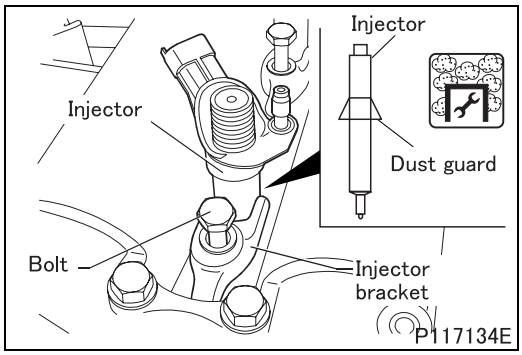

■**Removal: Injector bracket**

: This work requires protection against dust.

- Remove the injector bracket.

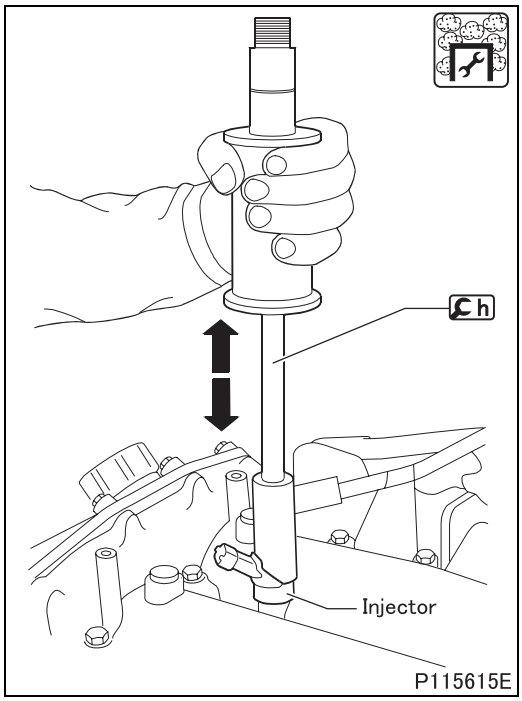

■**Removal: Injector**

: This work requires protection against dust.

- Remove the injector from the engine overhead using . (There is no gasket as the injector employs a direct sealing structure.)

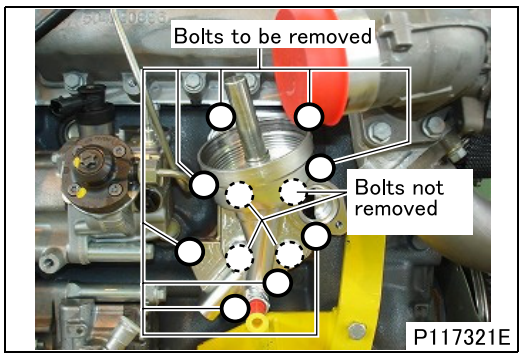

■ **Removal: Oil cooler**

- Remove the screws and detach the oil cooler with its gasket.

CAUTION ⚠

- **Do not remove the four bolts inside the oil filter support. If you remove these bolts, the heat exchanger in the oil cooler will become loose, which will mix oil and water, posing a danger.**

- The crankcase does not have a drain plug for draining off the cooling water, so when you remove the crankcase the cooling water will flow out. In this case, rotate the engine until all of the cooling water remaining in the engine flows out.

https://truckmanualshub.com/

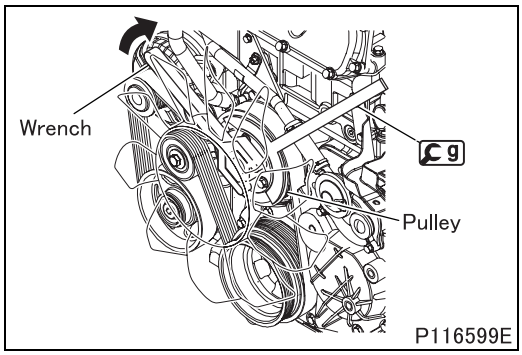

■ **Removal: Automatic cooling fan coupling, belt**

- Install g on the pulley, loosen the nut, and then remove the automatic cooling fan coupling.

CAUTION ⚠

- **The automatic cooling fan coupling has left hand thread.**

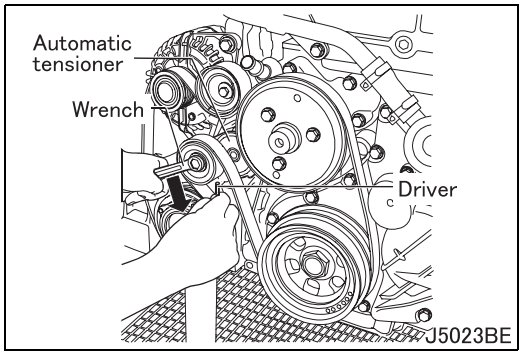

- Using a wrench, by turning the automatic tensioner in the direction of the arrow so as to slacken the belt.
- Insert a screwdriver, or the like, into the hole in the automatic tensioner, and lock the automatic tensioner in the “Stop” position.

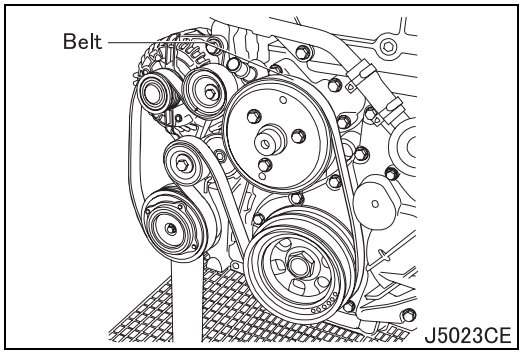

- Remove the belt.
- Remove the screwdriver that you inserted, from the automatic tensioner.

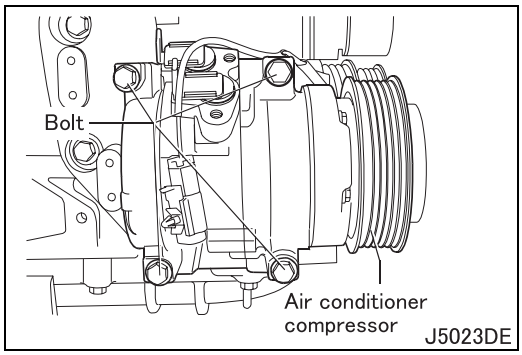

■ **Removal: Air conditioner compressor**

- Remove the air conditioner compressor.

https://truckmanualshub.com/

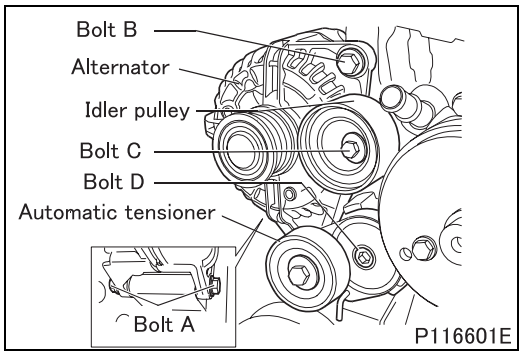

■ **Removal: Alternator, idler pulley, automatic tensioner**

- Loosen bolt C, and remove the idler pulley.
- Loosen bolt D, and remove the automatic tensioner.
- Remove through bolt A fixing the alternator.
- Remove bolt B, and then remove the alternator.

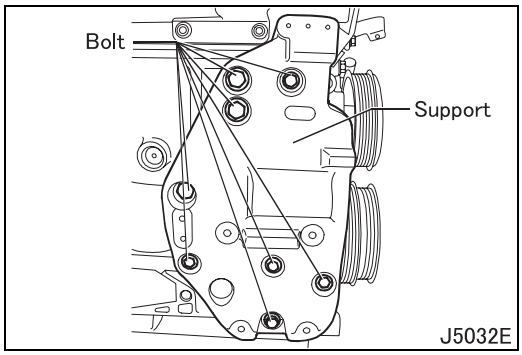

■ **Removal: Support**

- Remove the alternator support from the crankcase.

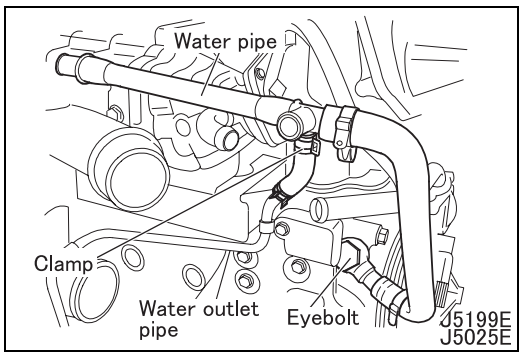

■ **Removal: Water pipe**

- Free the clamp on the water outlet pipe, and remove the water pipe.
- Remove the eyebolt together with the copper gasket.

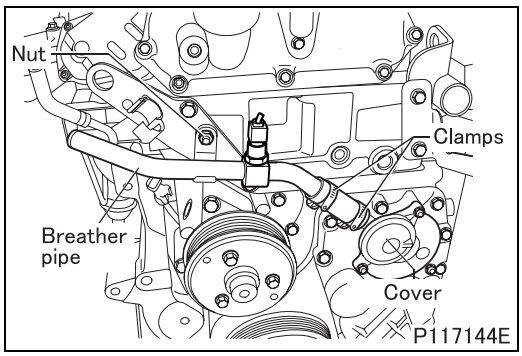

■ **Removal: Breather pipe**

- Remove the breather pipe from the cover.

https://truckmanualshub.com/

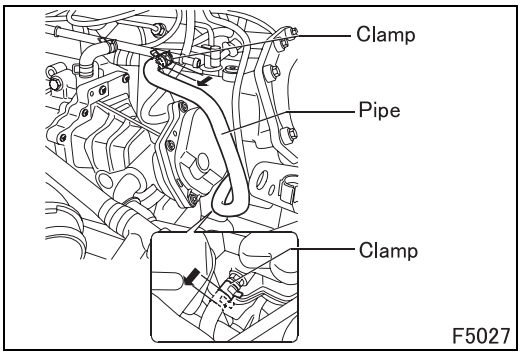

■ **Removal: Hose**

- Free the clamp, separate it from the position where it was fixing the hose, then move it in the direction of the arrow and remove the hose.

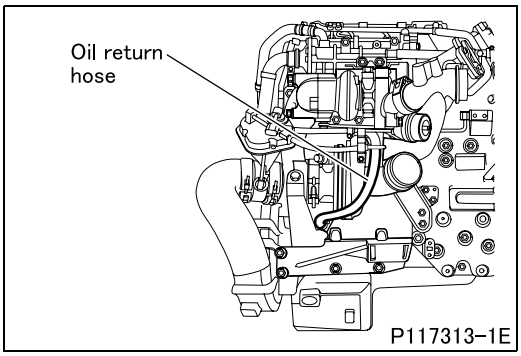

■ **Removal: Oil return hose**

- Disconnect the oil return hose from the turbocharger.

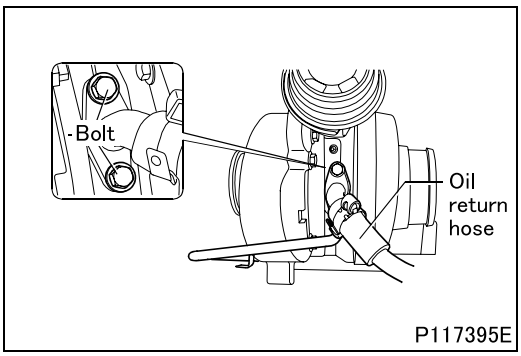

■ **Removal: Oil return hose**

- Disconnect the oil return hose.

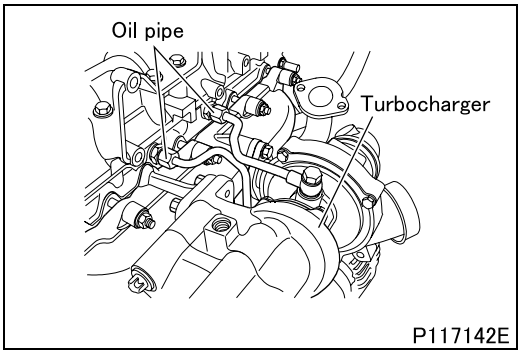

■ **Removal: Oil pipe**

- Remove the oil pipe.

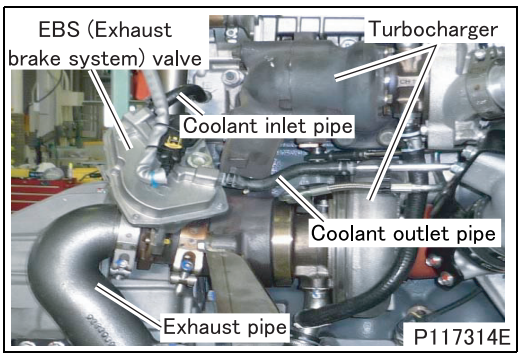

■ **Removal: Exhaust pipe, coolant inlet pipe, coolant outlet pipe, EBS (Exhaust Brake System) valve, bracket**

- Open the clamp and move it away form the position locking the coolant inlet pipe to the union on the EBS (Exhaust Brake System) valve.
- Remove the coolant inlet pipe from the EBS valve.
- Open the clamp and move it away from the position locking the coolant outlet pipe to the union on the EBS valve. Remove the coolant outlet pipe from the EBS valve.

https://truckmanualshub.com/

- Undo the screw, loosen the clamp and detach the exhaust pipe from the EBS valve.
- Undo the screw, loosen the clamp and remove the EBS valve from the turbocharger.

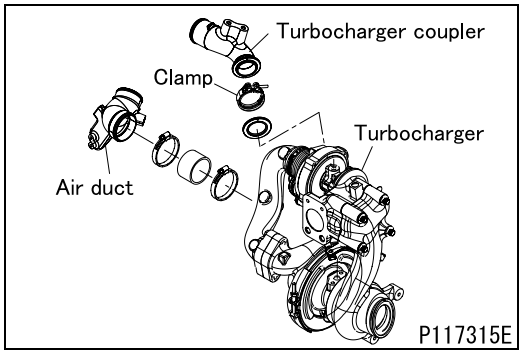

■ **Removal: Turbocharger coupler, air duct**

- Unfasten the clamp and remove the turbocharger coupler.
- Remove the air duct after unfastening the clamp.

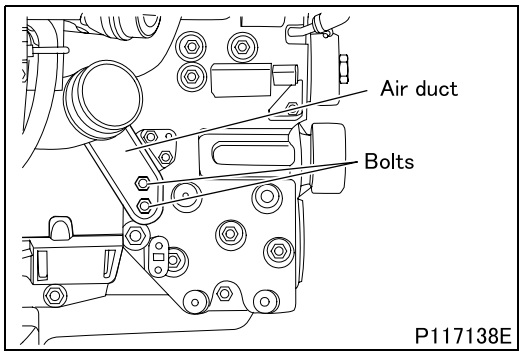

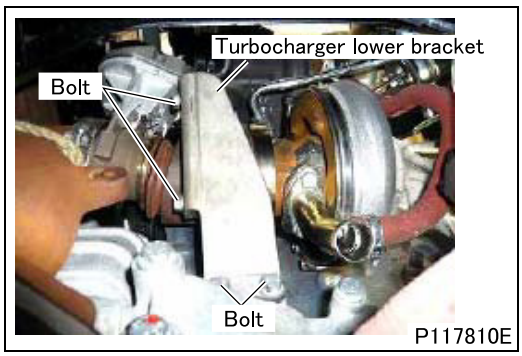

■ **Removal: Bracket**

- Remove the bracket that secures the turbocharger in place.

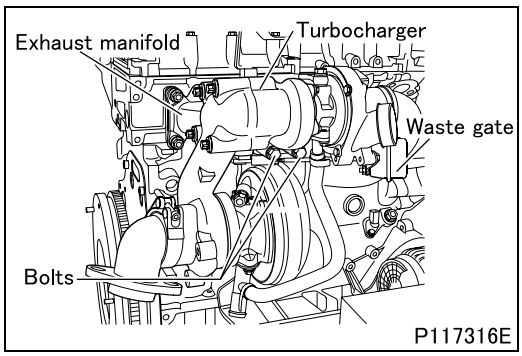

■ **Removal: Turbocharger**

- Remove the turbocharger from the exhaust manifold.

https://truckmanualshub.com/

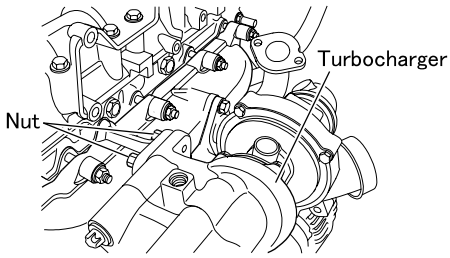

P117811E

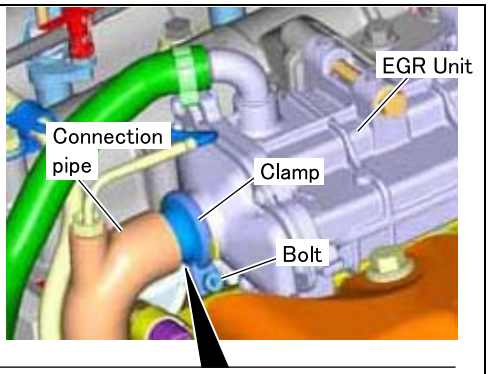

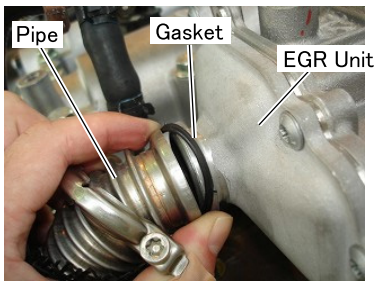

P117815E

■ **Removal: Connection Pipe**

- Remove the clamp.
- Remove the connection pipe and gasket from the exhaust gas recirculation unit.

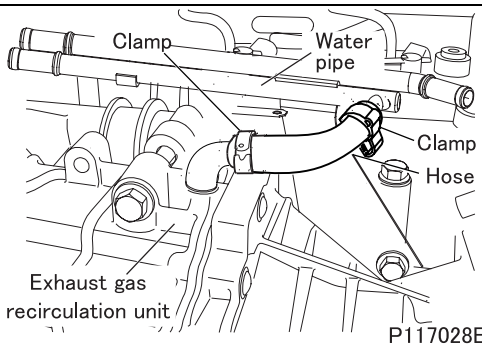

P117028E

■ **Removal: Hose**

- Open the clamps and move them away from the position locking the pipe to the water outlet pipe and EGR (Exhaust Gas Recirculation) unit.
- Remove the pipe.

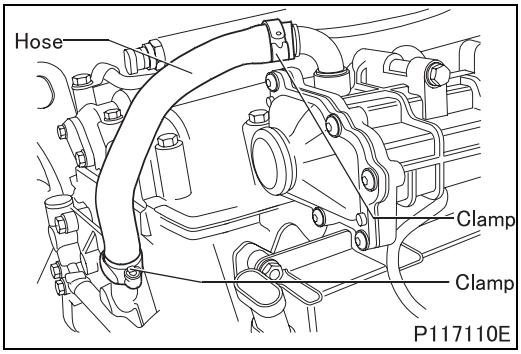

P117110E

■ **Removal: Hose**

- Remove the retaining clamps.
- Remove the hose from EGR (Exhaust Gas Recirculation) and from the cover.

https://truckmanualshub.com/

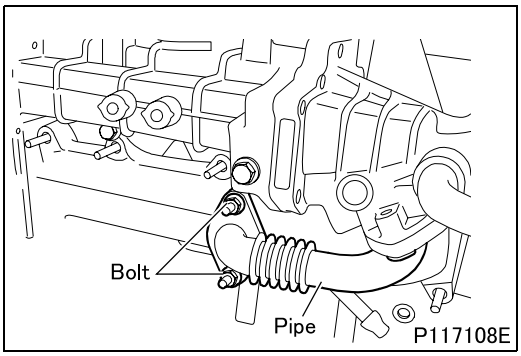

■ **Removal: EGR (Exhaust Gas Recirculation) valve pipe**

- Remove the two fixing bolts.
- Detach the pipe from the exhaust manifold, taking care to remove the gaskets.

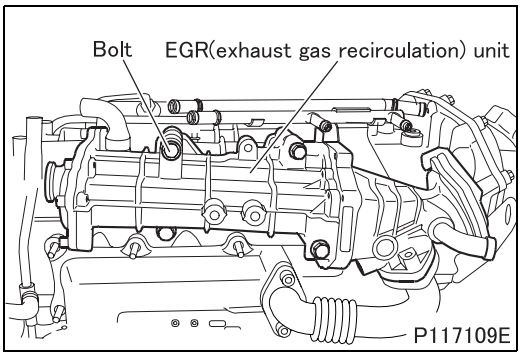

■ **Removal: EGR (Exhaust Gas Recirculation) unit**

- Remove the EGR (Exhaust Gas Recirculation) unit.

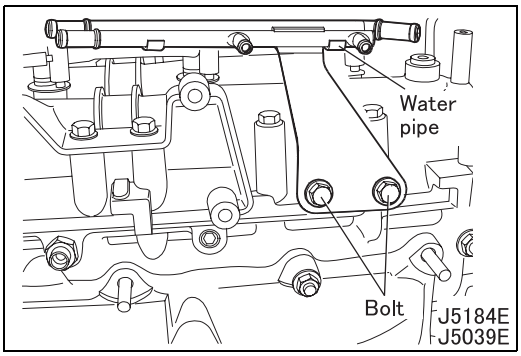

■ **Removal: Water pipe, supporting bracket**

- Remove the water pipe together with the supporting bracket.

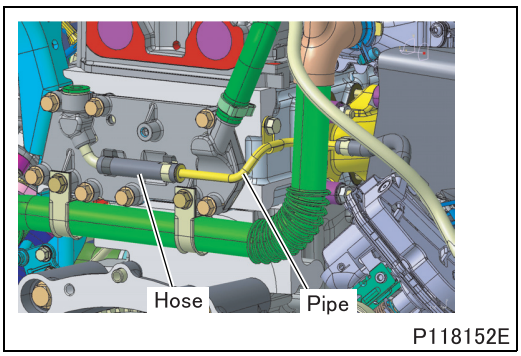

■ **Removal: Hose**

- Remove the hose.

https://truckmanualshub.com/

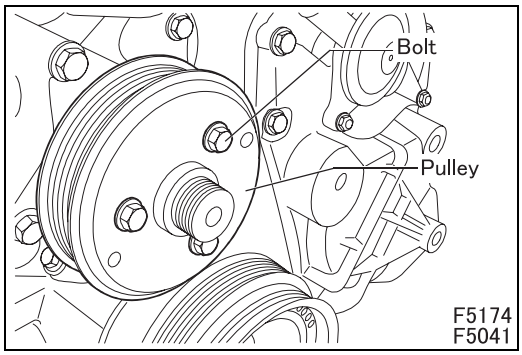

■ **Removal: Pulley**

- Hold the pulley using [C g], then remove the pulley from the water pump.

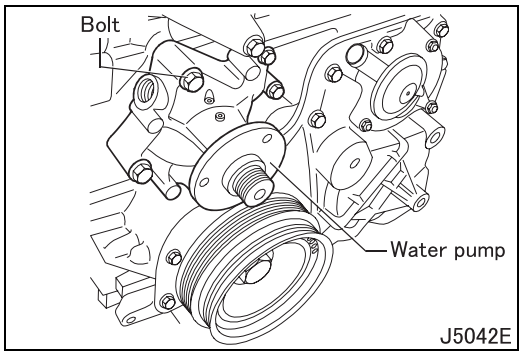

■ **Removal: Water pump**

- Remove the water pump, and remove the gasket.
- The crankcase does not have a drain plug for draining off the cooling water, so when you remove the crankcase the cooling water will flow out. In this case, rotate the engine until all of the cooling water remaining in the engine flows out.

- For further removal procedures, see later sections.
- Timing gear case
- Over head, cylinder head
- Pistons, connecting rod
- Flywheel
- Timing gears, chain

◆Installation procedure◆

- For further installation procedures, see later sections.
- Timing gear case
- Over head, cylinder head
- Pistons, connecting rod
- Flywheel
- Timing gears, chain

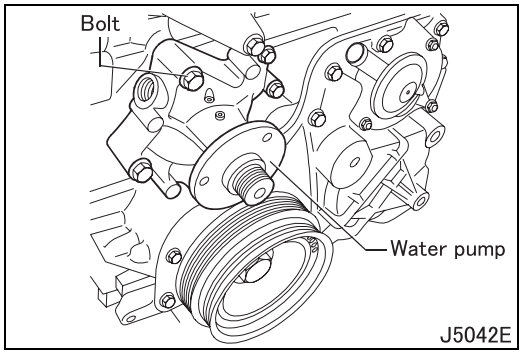

■ **Installation: Water pump**

- Install the water pump with a new gasket.
- Install the screws and tighten them to the prescribed torque.
  - Bolts M10 × 1.5 × 55 mm torque 50 N·m {37 ft.lbs, 51 kgf·m}.
  - Bolts M8 × 1.25 × 45 mm torque 25 N·m {18 ft.lbs, 2.5 kgf·m}.

https://truckmanualshub.com/

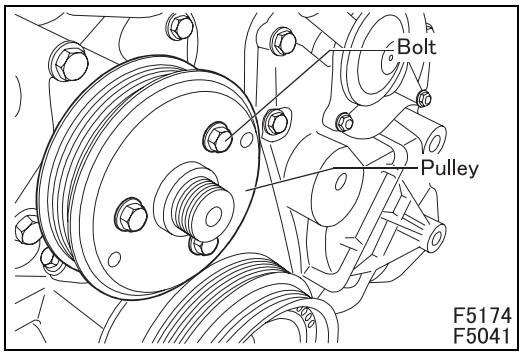

■ **Installation: Pulley**

- Install the pulley on the water pump, hold the pulley using [g], and then install the bolts to a torque of 25 N·m {18 ft.lbs, 2.5 kgf·m}.

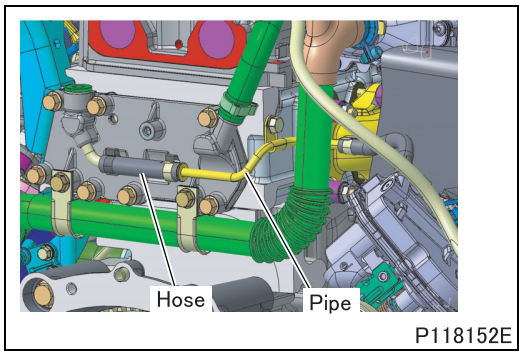

■ **Installation: Hose**

- Install the hose.

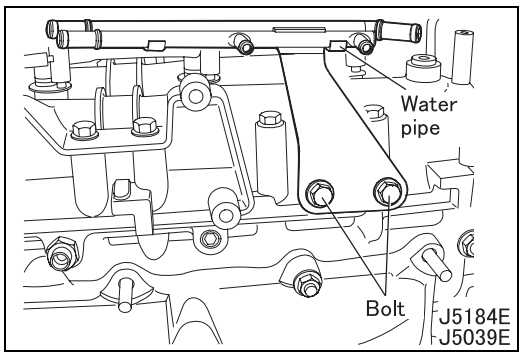

■ **Installation: Water pipe**

- Install the water pipe.
- Install the fixing screws and tighten it to a torque of 25 N·m {18 ft.lbs, 2.5 kgf·m}.

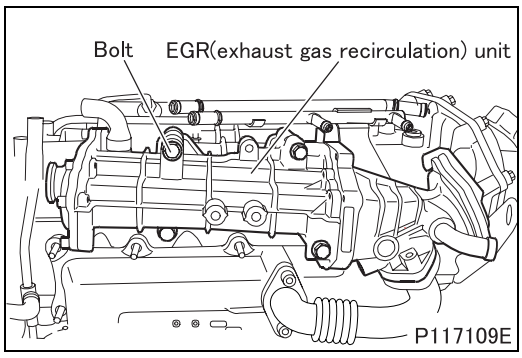

■ **Installation: EGR (Exhaust Gas Recirculation) unit**

- Install the EGR unit on the overhead and tighten the fixing screws to a tightening torque of 25 N·m {18 ft.lbs, 2.5 kgf·m}.

https://truckmanualshub.com/

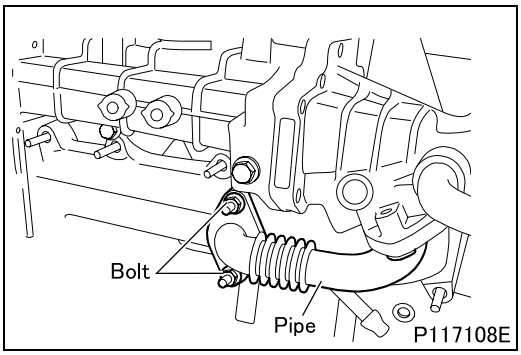

■ **Installation: EGR (Exhaust Gas Recirculation) valve pipe**

- Install the pipe with a new gasket to exhaust manifold.
- Tighten the two bolts.
- Tighten the two nuts to a torque of 30 N·m {22 ft.lbs, 3.1 kgf·m}.

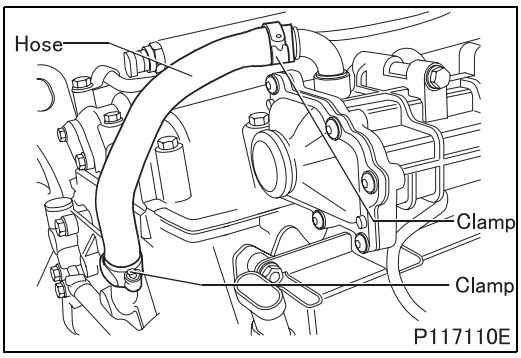

■ **Installation: Cross adapter, hose**

- Connect the hose with the heat exchanger and the cover.
- Retain it with the new clamps.

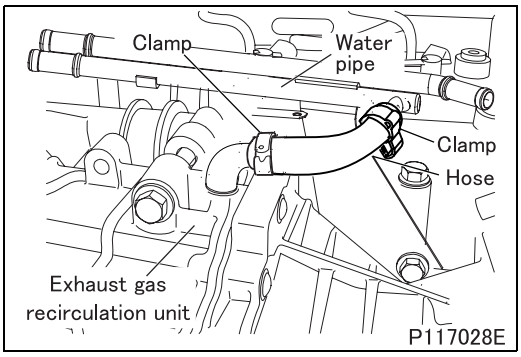

■ **Installation: Hose**

- Connect the hose between the water pipe and the EGR (Exhaust Gas Recirculation) unit.
- Fasten the hose to the adapters using the clamps.

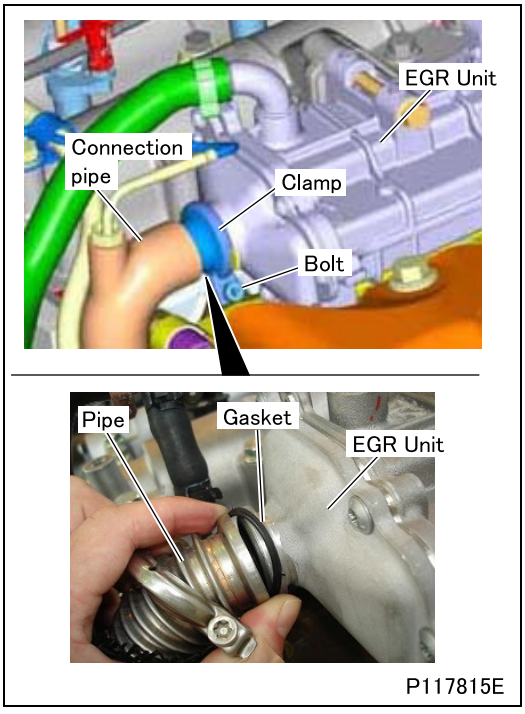

■ **Installation: Connection pipe**

- Install the exhaust gas recirculation connection pipe and gasket on the exhaust gas recirculation unit.
- Install the clamp as shown.
- Tighten the clamp bolt.

https://truckmanualshub.com/

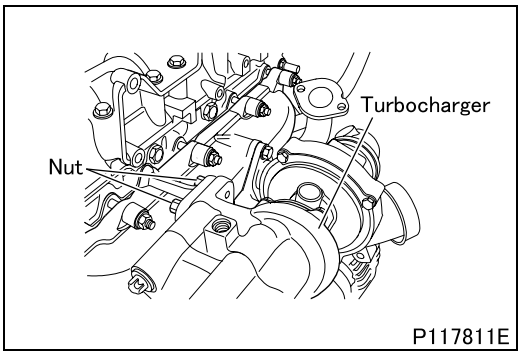

■ **Installation: Turbocharger, exhaust manifold**

- Install the turbocharger unit with a new gasket onto the exhaust manifold complete with pipes and waste gate.
- Screw down the two lower bolts securing the turbocharger assembly to the exhaust manifold and tighten them to the prescribed torque of 25 N·m {18 ft.lbs, 2.5 kgf·m}.
- Fit the cooling pipe on the turbocharger.

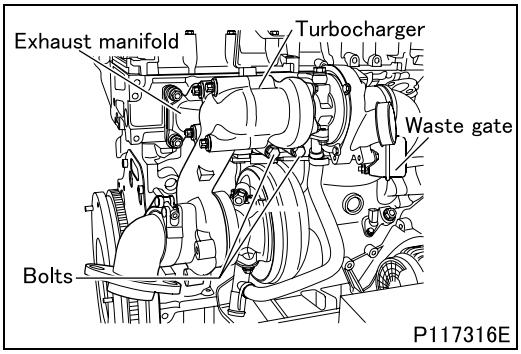

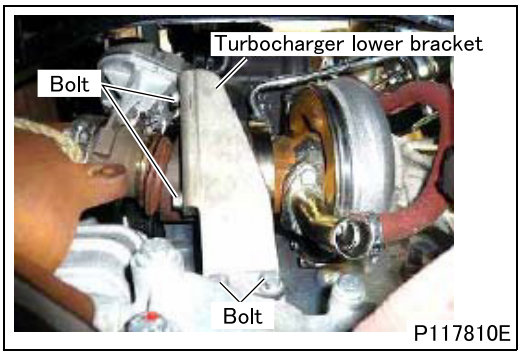

■ **Installation: Bracket**

- Install the bracket.
- Install the screws and tighten it to a torque of 25 N·m {18 ft.lbs, 2.5 kgf·m}.

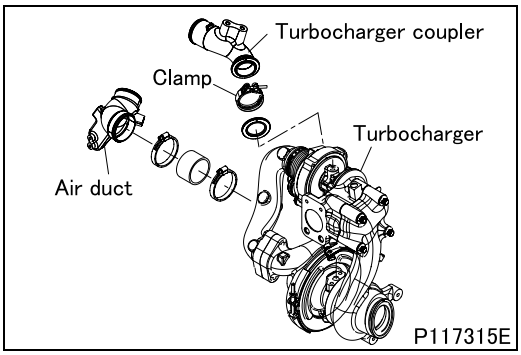

■ **Installation: Turbocharger coupler, air duct**

- Install the turbocharger coupler and air duct to the turbocharger.

https://truckmanualshub.com/

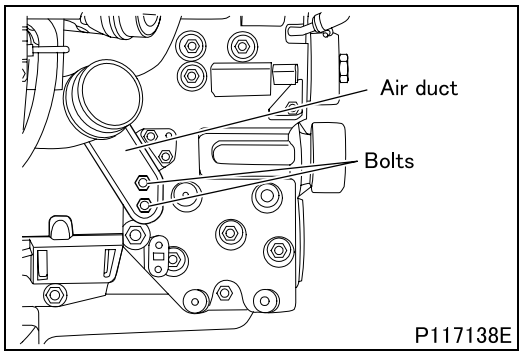

- Install the air duct.
- Install the screws and tighten it to a torque of 25 N·m {18 ft.lbs, 2.5 kgf·m}.

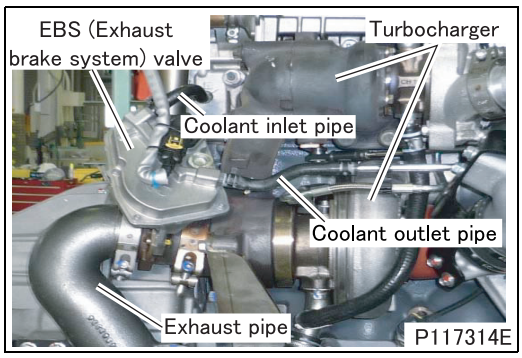

■ Installation: Exhaust pipe, coolant inlet pipe, coolant outlet pipe, EBS (Exhaust Brake System) valve, bracket

- Reinstall the EBS valve on the turbine outlet; place the clamp and tighten the screw.
- Install the exhaust pipe on the EBS valve.
- Install the clamp and position it so that the screw doesn't interfere with the operation of the valve.
- Insert the coolant inlet pipe for EBS valve in the union. Tighten the clamp to the stop position.
- Insert the coolant outlet pipe for EBS valve in the union. Tighten the clamp to the stop position.

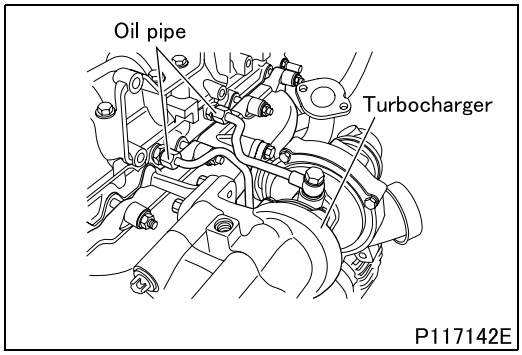

■ Installation: Oil pipe

- Connect the oil pipe to the turbocharger and the cylinder head, and tighten the pipe unions to the prescribed torque: 30 N·m {22 ft.lbs, 3.1 kgf·m}.

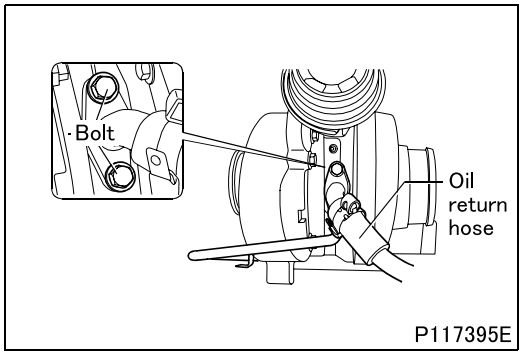

■ Installation: Oil return hose

- Install the oil return pipe on the turbocharger.
- Install the fixing bolts and tighten it to a torque of 10 N·m {7.4 ft.lbs, 1.0 kgf·m}.
- Install the coolant inlet pipe on the turbocharger.
- Install without fully tightening the union.

https://truckmanualshub.com/

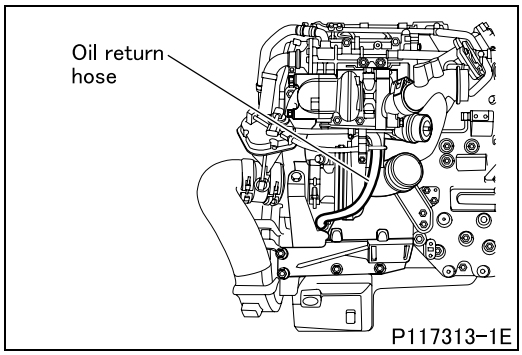

■ **Installation: Oil return hose**

- Connect the oil return hose to the turbocharger.

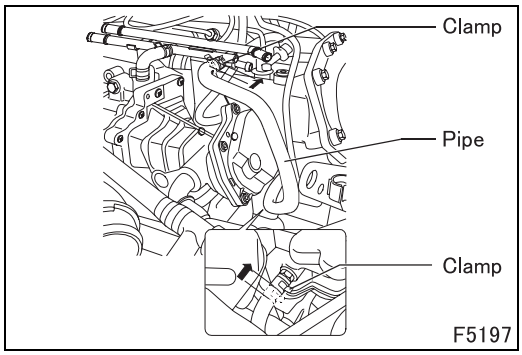

■ **Installation: Pipe**

- Install the hose with the clamp.

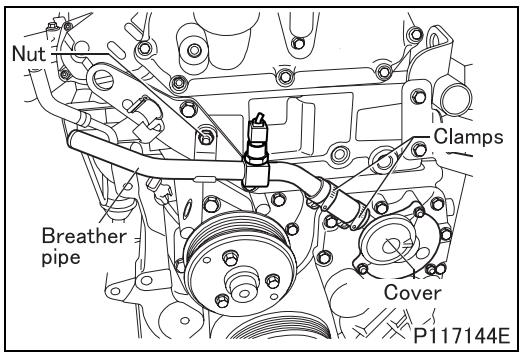

■ **Installation: Breather pipe**

- Install the breather pipe on the cover using a new clamp.

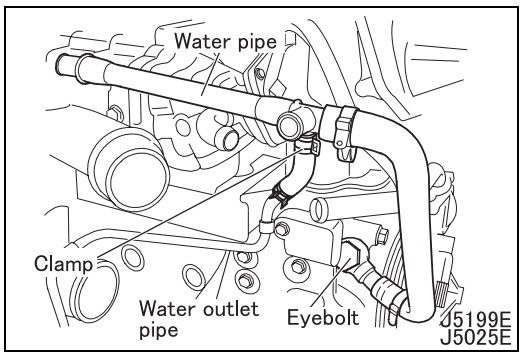

■ **Installation: Water pipe**

- Install the water outlet pipe on the crankcase using a new clamp.
- Install the eyebolt together with a new gasket.

https://truckmanualshub.com/

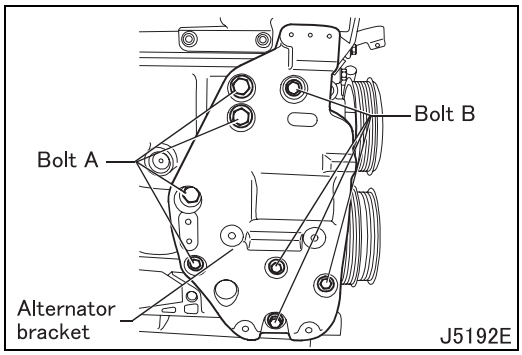

■ **Installation: Alternator bracket**

- Install the alternator bracket on the crankcase.
- Install the bolts and tighten them to the prescribed torque.
  - Bolts A M10 × 1.25 torque 50 N·m {37 ft.lbs, 5.1 kgf·m}.
  - Bolts B M8 × 1.25 torque 25 N·m {18 ft.lbs, 2.5 kgf·m}.

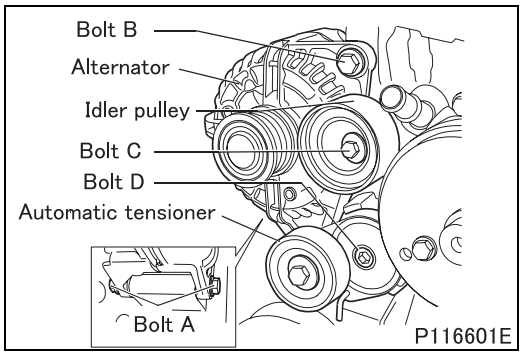

■ **Installation: Alternator, idler pulley, automatic tensioner**

- Install the alternator on the bracket, and tighten bolts A and B to a torque of 40 N·m {29 ft.lbs, 4.0 kgf·m}.
- Install the automatic tensioner, and tighten bolt D to a torque of 25 N·m {18 ft.lbs, 2.5 kgf·m}.
- Install the idler pulley, and tighten bolt C to a torque of 40 N·m {29 ft.lbs, 4.0 kgf·m}.

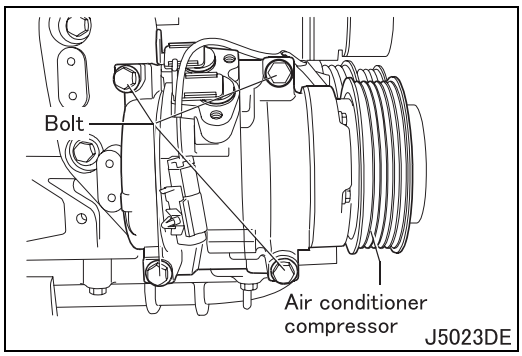

■ **Installation: Air conditioner compressor**

- Install the air conditioner compressor on the support.
- Install and tighten the bolts to a torque of 25 N·m {1.8 ft.lbs, 2.5 kgf·m}.

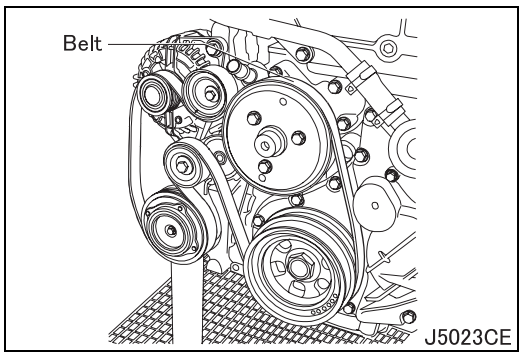

■ **Installation: Belt, automatic cooling fan coupling**

- Insert a screwdriver, or the like, into the hole in the automatic tensioner, and lock the automatic tensioner in the “Stop” position.
- Install the belt.

https://truckmanualshub.com/

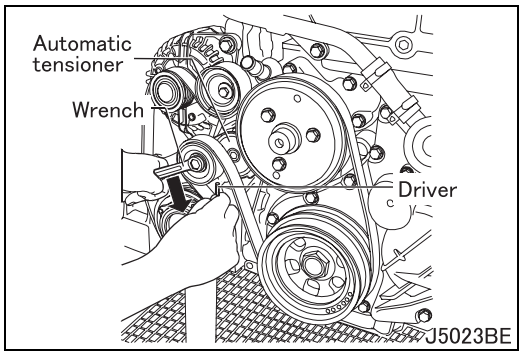

- After operating the automatic tensioner in the direction of the arrow using a wrench, remove the driver.

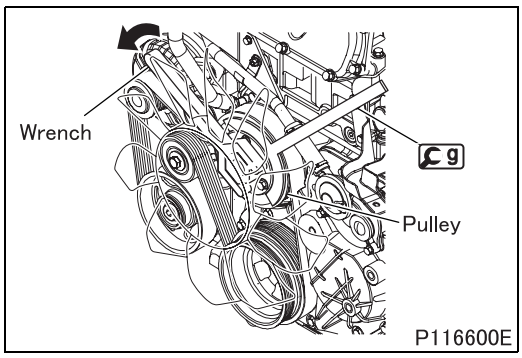

- Install [g] on the fan pulley.
- Holding [g], tighten the automatic cooling fan coupling to a torque of 90 to 112 N·m {66 to 83 ft.lbs, 9.2 to 11 kgf·m}.

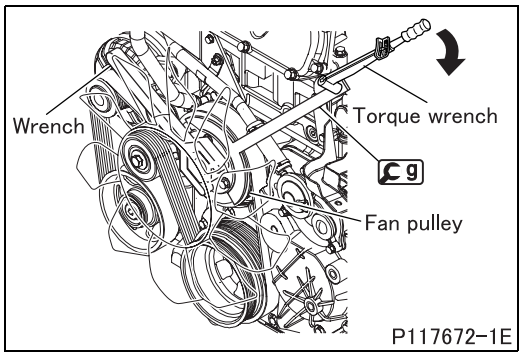

- If it is difficult to check the tightening torque of the automatic cooling fan coupling, set a torque wrench at the [g] while retaining the automatic cooling fan coupling with a wrench, turn the wrench so as to fix the fan pulley, and check the tightening torque.
- In this case, the value of the tightening torque must take into account of the 230 mm {9.06 in.} length of the [g].

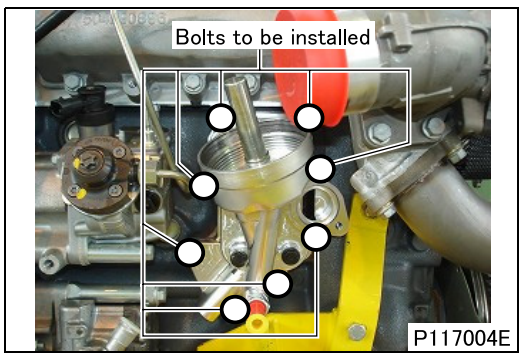

■ **Installation: Oil cooler**

- Install the oil cooler together with a new gasket on the crankcase, and install it using a torque of 25 N·m {18 ft.lbs, 2.5 kgf·m}.

https://truckmanualshub.com/

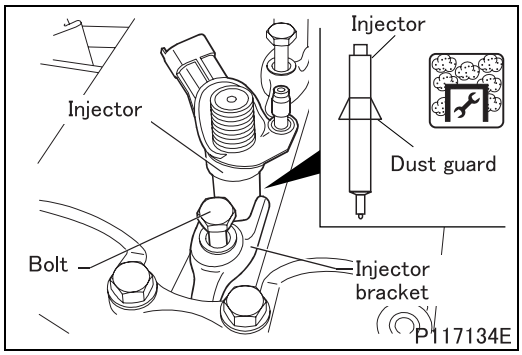

: This work requires protection against dust.

- Install a new dust guard on the injector.
- Install the injector on the engine overhead, and temporarily install the injector bracket. (The injector is of a direct sealing type, so it does not use a gasket.)
- After installing the fuel pipe and the common line, tighten the injector bracket to a torque of 32 N·m {24 ft.lbs, 3.2 kgf·m}.

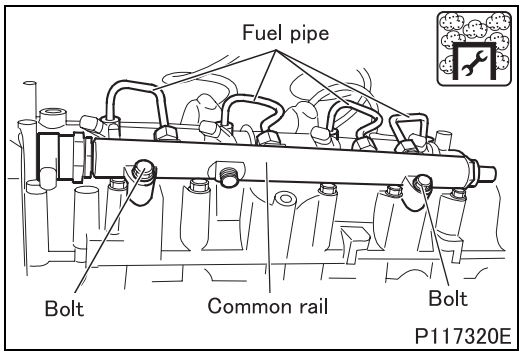

■ Installation: Common rail, fuel pipe

: This work requires protection against dust.

- Install the common rail on the engine overhead.
- Tighten the bolt to a torque of 28 N·m {21 ft.lbs, 2.8 kgf·m}.
- Connect the new fuel pipes to the injectors and the common rail.
- Install the injector side connectors using Cf. <Four wheel drive>
  - Connector on the injector torque 25 ± 2 N·m {18.0 ± 1.5 ft.lbs, 2.5 ± 0.2 kgf·m}
  - Install the common rail side connectors using Cd.
  - Connector on the common rail torque 19 ± 2 N·m {14.0 ± 1.5 ft.lbs, 1.9 ± 0.2 kgf·m}

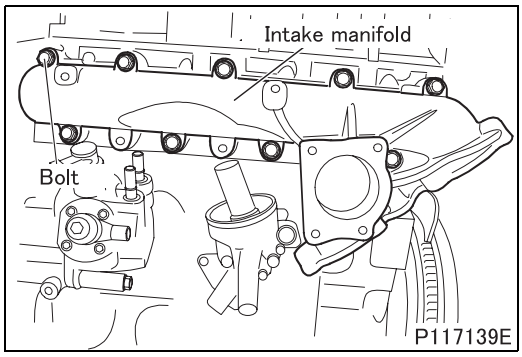

■ Installation: Intake manifold

- Install the intake manifold with a new gasket.
- Tighten the screws to the prescribed torque: 25 N·m {18 ft.lbs, 2.5 kgf·m}.

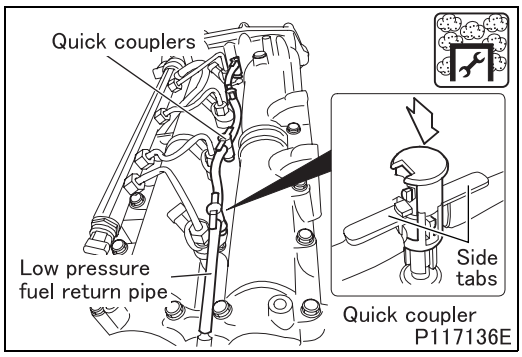

■ Installation: Low pressure fuel return pipe

: This work requires protection against dust.

- Install the injectors low pressure fuel return pipe.
- Push down the center body of the quick coupler in the direction of the arrow.

https://truckmanualshub.com/

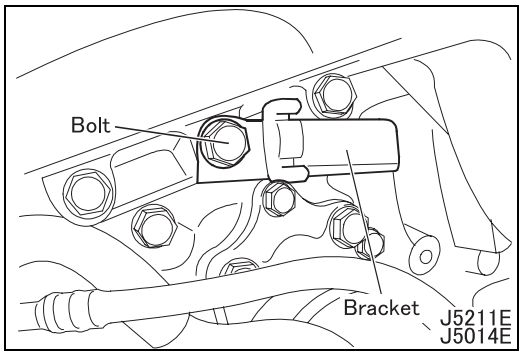

■ **Installation: Bracket**

- Fit the bracket.
- Tighten the screw to a torque of 25 N·m {18 ft.lbs, 2.5 kgf·m}.

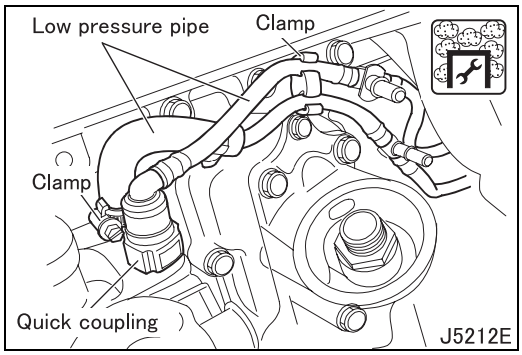

■ **Installation: Low pressure pipe**

: This work requires protection against dust.

- Clamp the quick coupling and the clamp of the low pressure fuel pipe to the high pressure fuel pump, and install the low pressure fuel pipe.
- Fix the low pressure fuel pipe to the clip.

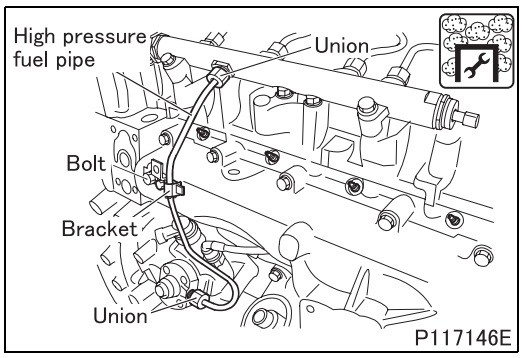

■ **Installation: High pressure fuel pipe**

: This work requires protection against dust.

- Install a new high pressure fuel pipe.
- Screw the bracket to the intake manifold using the bolt. Tighten the bolt to a torque of 25 N·m {18.0 ft.lbs, 2.5 kgf·m}.
- Screw the connector in the high pressure fuel pump and tighten it to a torque of 19 ± 2 N·m {14.0 ± 1.5 ft.lbs, 1.9 ± 0.2 kgf·m} using e.
- Screw the connector in the common rail and tighten it to a torque of 19 ± 2 N·m {14.0 ± 1.5 ft.lbs, 1.9 ± 0.2 kgf·m} using b.

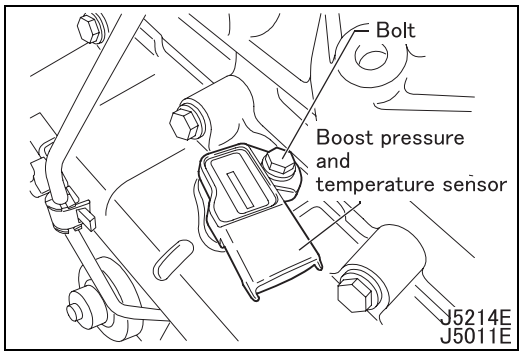

■ **Installation: Boost pressure and temperature sensor**

- Install the boost pressure and temperature sensor on the intake manifold.

https://truckmanualshub.com/

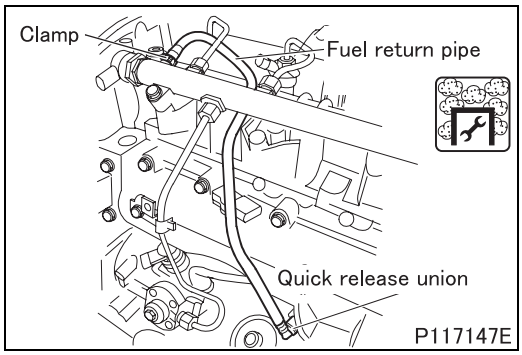

■ **Installation: Fuel return pipe**

: This work requires protection against dust.

- Install the fuel return pipe.
- Fasten the fuel return pipe to the common rail by means of a clamp.
- Connect the fuel return pipe with the quick coupling to the high pressure pump return pipe.

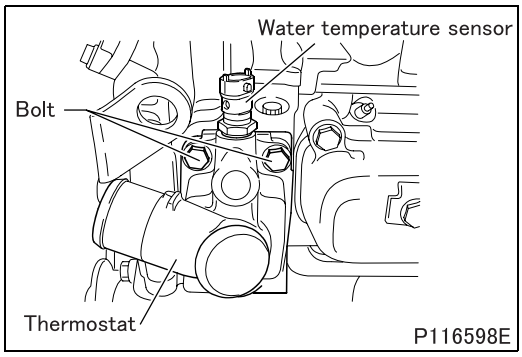

■ **Installation: Thermostat, water temperature sensors**

- Install a new gasket between the thermostat and the cylinder head, and install the thermostat on the cylinder head using a torque of 25 N·m {18 ft.lbs, 2.5 kgf·m}.
- Install the water temperature sensor on the thermostat using a torque of 40 N·m {30 ft.lbs, 4.0 kgf·m}.

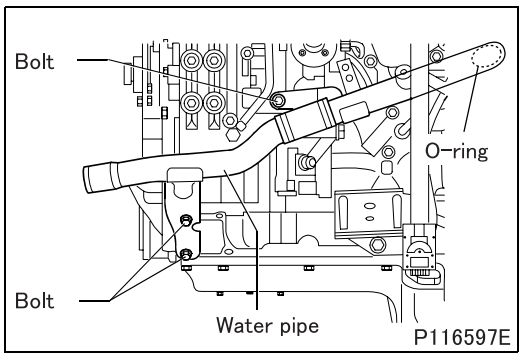

■ **Installation: Water pipe**

- Apply engine oil to a new O-ring.
- Install the water pipe on the oil cooler using a torque of 25 N·m {18 ft.lbs, 2.5 kgf·m}.

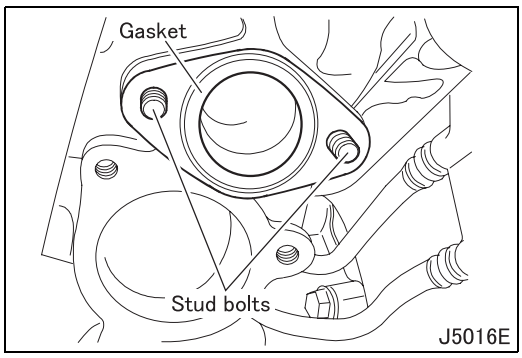

■ **Installation: Connection pipe**

- Install a new gasket.

https://truckmanualshub.com/

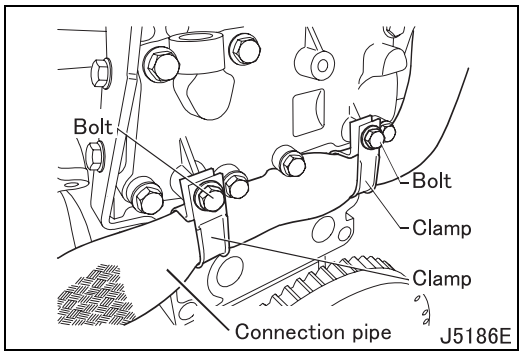

- Install the connection pipe using a clamp.

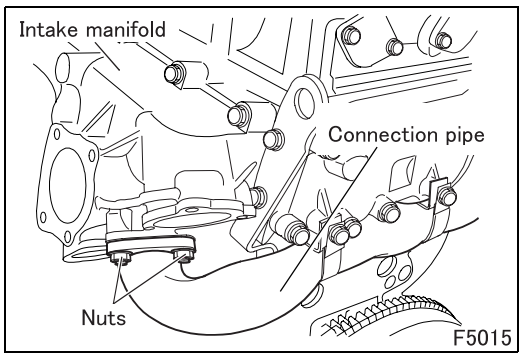

- Install the connection pipe on the intake manifold using a torque of 25 N·m {18 ft.lbs, 2.5 kgf·m}.

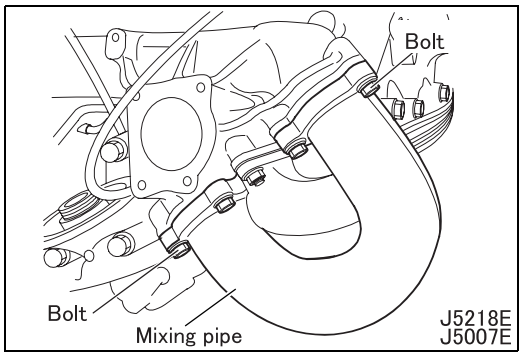

■ Installation: Mixing pipe

- Install a new gasket on the mixing pipe, and install the mixing pipe on the intake manifold using a torque of 25 N·m {18 ft.lbs, 2.5 kgf·m}.

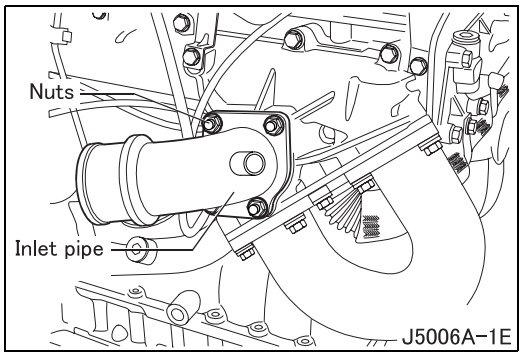

■ Installation: Air inlet pipe

- Install the air inlet pipe together with a new gasket on the intake manifold, using a torque of 25 N·m {18 ft.lbs, 2.5 kgf·m}.

https://truckmanualshub.com/

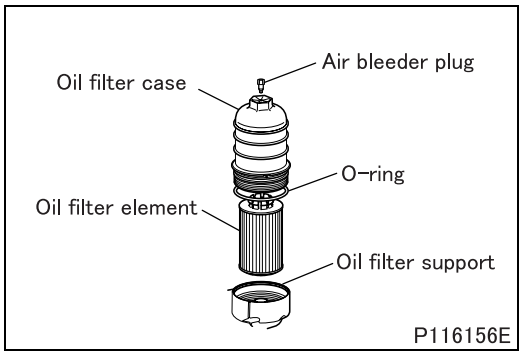

■ **Installation: Oil filter case, oil filter element**

- Apply engine oil to a new O-ring, and install the O-ring on the oil filter case.
- Use the O-ring and air bleeder plug that are provided with the new oil filter element.
- Install the oil filter element with the hole facing downward.
- Install a new air bleeder plug on the oil filter case using a torque of 1.5 ± 0.6 N·m {1.1 ± 0.4 ft.lbs, 0.15 ± 0.06 kgf·m}.

CAUTION ⚠

- **Do not overtighten the air bleeder plug. Otherwise, the air bleeder plug will be damaged.**

- Install the oil filter case on the oil filter support using a torque of 25 to 30 N·m {18 to 22 ft.lbs, 2.5 to 30 kgf·m}.

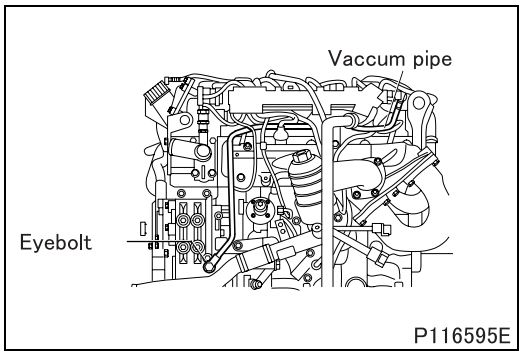

■ **Installation: Vacuum pipe**

- Install the vacuum pipe using a torque of 35 N·m {25 ft.lbs, 3.6 kgf·m}.

◆Work after installation◆

■ **Removal: Rotary stand**

- Install the suspension hook on the engine hanger, then fix the engine hanger to the hoist, and lower the engine from the [b]. Remove the [a].

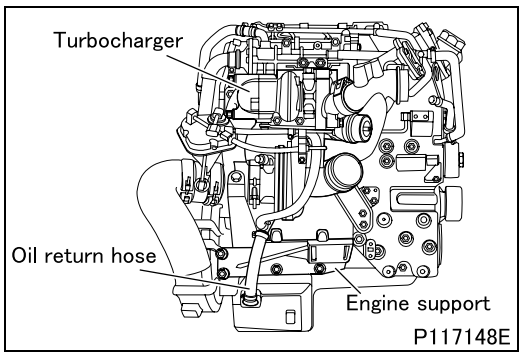

■ **Working by the engine right side**

- Connect the oil return hose to the turbocharger.
- Install the engine support using a torque of 50 N·m {37 ft.lbs, 5.1 kgf·m}.

https://truckmanualshub.com/

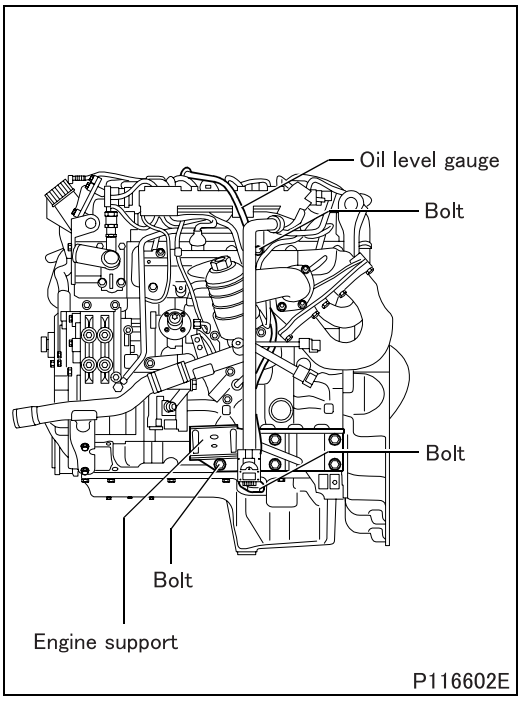

■ **Working on the left side of the engine**

- Install the engine support using a torque of 50 N·m {37 ft.lbs, 5.1 kgf·m}.
- Install the oil level gauge guide on the intake manifold and the oil pan using a torque of 25 N·m {18 ft.lbs, 2.5 kgf·m}.

■ **Installation: Engine cable**

- Install the engine assembly with the engine cable connecting the electrical connectors.
  - Blow-by pressure sensors.
  - EBS (Exhaust Brake System) valve.
  - Glow plugs.
  - Injectors.
  - EGR (Exhaust Gas Recirculation) cooler outlet temperature sensor.
  - EGR (Exhaust Gas Recirculation) actuator.
  - Pressure sensor.
  - Pressure regulation.
  - Boost pressure and temperature sensor.
  - VGT (Variable Geometry Turbocharger) actuator.
  - Water temperature sensor.
  - Camshaft timing sensor.
  - Engine speed sensor.
  - Oil pressure sensor.

https://truckmanualshub.com/

M E M O

https://truckmanualshub.com/

TIMING GEAR CASE

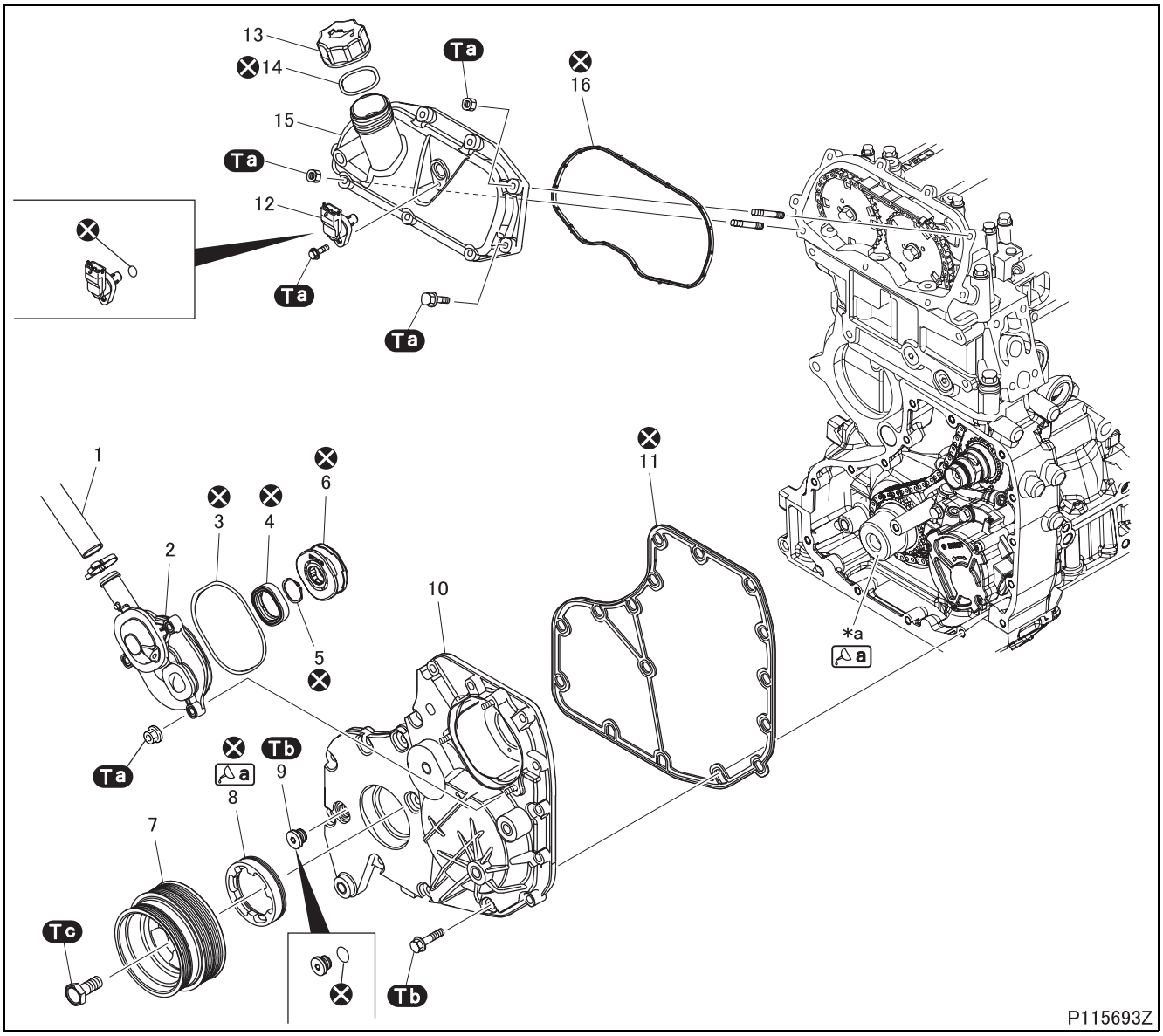

● **Removal sequence**

1 Breather hose
2 Cover
3 O-ring
4 Seal ring
5 Snap ring
6 Air cleaner (centrifugal filter)
7 Damper pulley
8 Front oil seal
9 Plug
10 Distribution cover
11 Gasket
12 Camshaft timing sensor (See Gr54.)
13 Oil filter cap
14 O-ring
15 Cover
16 Gasket

***a**: Crankshaft
⊗: Non-reusable parts

● **Installation sequence**

Follow the disassembly sequence in reverse.

https://truckmanualshub.com/

Tightening torque (Unit: N·m {ft.lbs, kgf·m})

Mark	Parts to be tightened	Tightening torque	Remarks
Ta	Bolt (cover mounting)	10 {7.4, 1.0}	–
	Nut (cover mounting)		
	Bolt (camshaft timing sensor mounting)		
Tb	Bolt (distribution cover mounting)	25 {18, 2.5}	–
	Plug		
Tc	Bolt (damper pulley mounting)	350 {260, 35}	–

Lubricant and/or sealant

Mark	Points of application	Specified lubricant and/or sealant	Quantity
a	Crankshaft tip and front oil seal installer	Engine oil	As required

Special tools

Mark	Tool name and shape	Part No.	Application
a	Retainer, flywheel 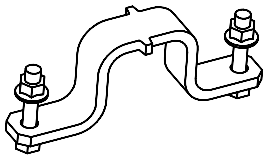 P116334	MH064205	Stop the rotation of the flywheel
b	Seal ring remover 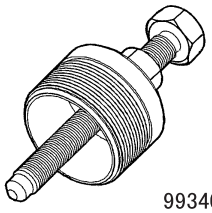 99340059	MH063989	Removal of front oil seal
c	Shaft, cranking 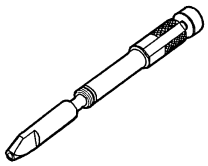 99360615	MH063969	Stop the rotation of the engine <Timing locating tool>
d	Installer, front seal 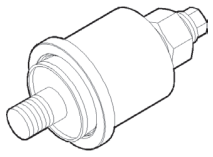 99346258	MH063962	Installation of front oil seal
e	Handle 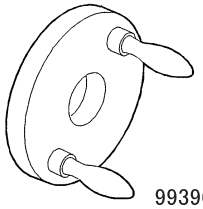 99396039	MH063979	Centering of cover

https://truckmanualshub.com/

TIMING GEAR CASE

◆Removal procedure◆

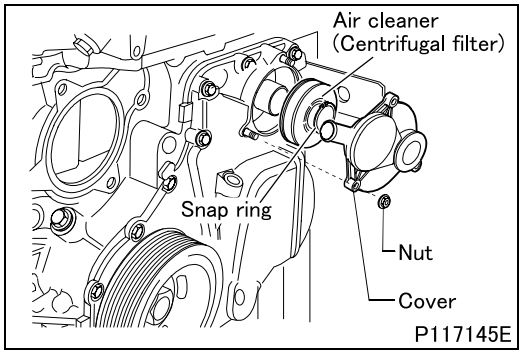

■ **Removal: Air cleaner (centrifugal filter)**

- Remove the nuts and the cover. Take off the snap ring. Pull out the air cleaner.

NOTE

- **The centrifugal filter and the seal ring of the cover must be changed at every removal.**

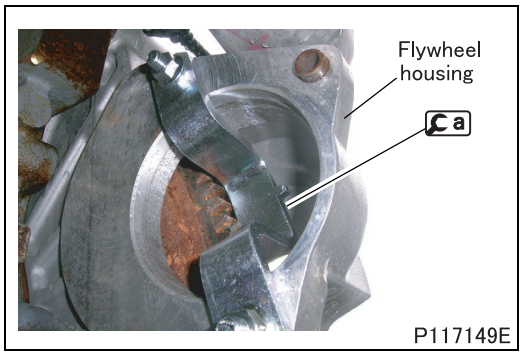

■ **Removal: Damper pulley**

- Using a, block rotation of the engine flywheel, through the starter opening.

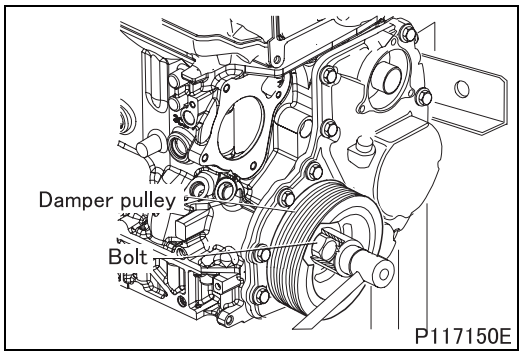

- Take out the bolt and remove the damper pulley.

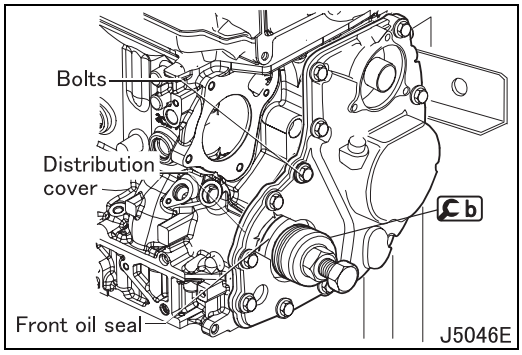

■ **Removal: Distribution cover, front oil seal**

- Screw in the b to the rear of the crankshaft, and set the b.
- Remove the front oil seal from the distribution cover.
- Check the installation direction of the front oil seal.
- Remove the gasket remaining on the crankshaft.
- Remove the distributor cover.

https://truckmanualshub.com/

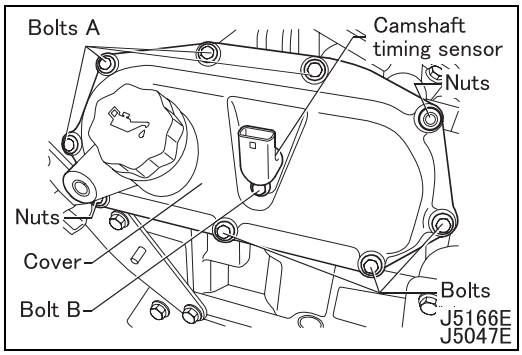

■ Removal: Camshaft timing sensor, cover

- Take out the bolt and remove the camshaft timing sensor.
- Remove the bolts and nuts; remove the cover.

◆Installation procedure◆

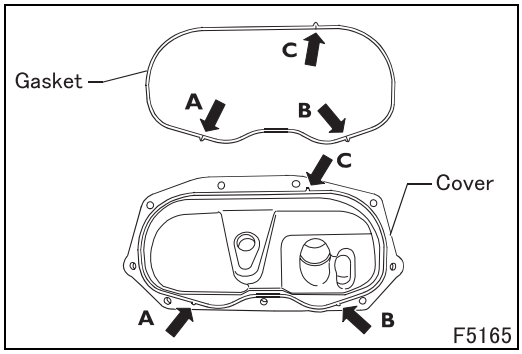

■ Installation: Cover, camshaft timing sensor

- Install a new gasket on the cover. Fit the gasket in the housing for the cover with the “knife edge” facing the engine.
- Align the three references (A, B and C) on the gasket with the seats in the cover.

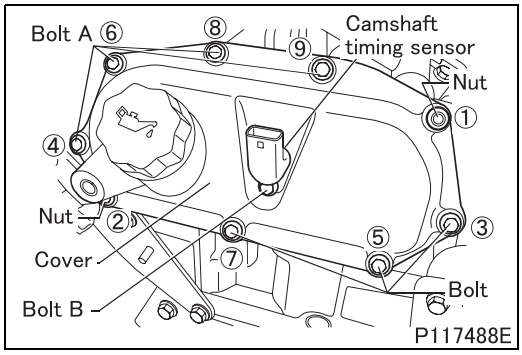

- Tighten the nuts and bolts in the sequence (1) to (9) indicated in the drawing, and install the cover on the overhead cover using a torque of 10 N·m {7.4 ft.lbs, 10 kgf·m}.
- Install the camshaft timing sensor on the cover using a torque of 10 N·m {7.4 ft.lbs, 1.0 kgf·m}.

CAUTION ⚠

- **When installing the camshaft timing sensor, take care that the O-ring does not break.**

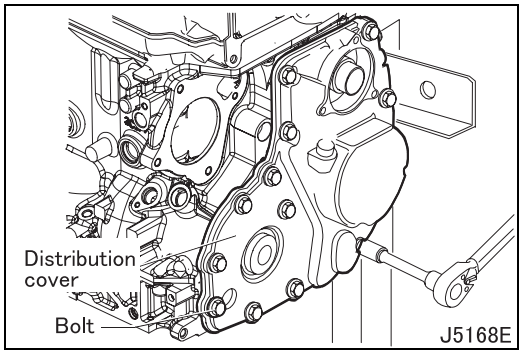

■ Installation: Distribution cover, front oil seal

- Install a new gasket on the distribution cover.
- Temporarily fix the distribution cover.

https://truckmanualshub.com/

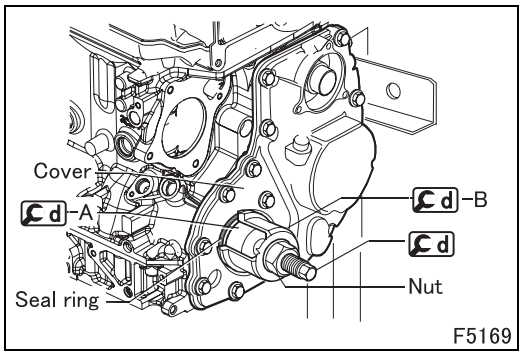

- Clean the mounting face of the front oil seal of the distribution cover.
- Apply engine oil to the inner side of the new front oil seal and also to the crankshaft.
- Carefully install the front oil seal on the d-B.
- Place the d-B over the d-A, and tighten the nut until the front oil seal is completely installed on the cover.

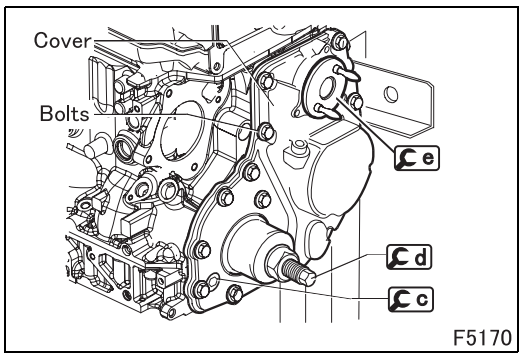

- Install the e in the housing of the air cleaner in order to center the cover.
- Turn the handle of the e, and confirm that the e rotates freely.
- Remove the plug.
- Using the c, confirm that the engine timing remains unchanged.
- While checking the rotation of the e, tighten the cover gradually, and finally tighten it to the specified torque of 25 N·m {18 ft.lbs, 2.5 kgf·m}.
- Remove the e, d and c.
- Install the plug using a torque of 25 N·m {18 ft.lbs, 2.5 kgf·m}.

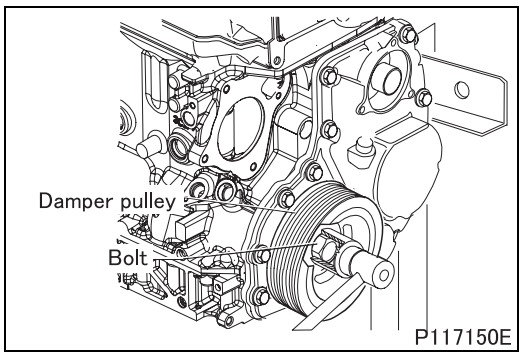

■Installation: Damper pulley and air cleaner

- Install the damper pulley and temporarily tighten it.

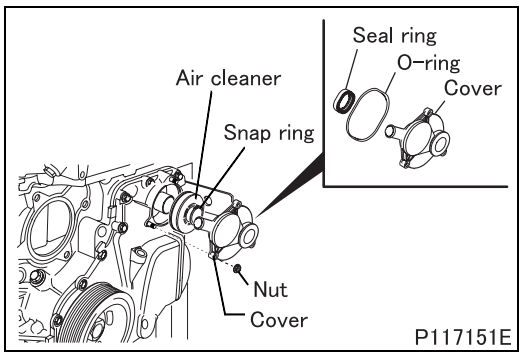

- Install on the new air cleaner with a snap ring.
- Install a new seal ring and O-ring on the cover.
- Install the cover on the distribution cover.
- Tighten the nut to a torque of 10 N·m {7.4 ft.lbs, 1.0 kgf·m}.

https://truckmanualshub.com/

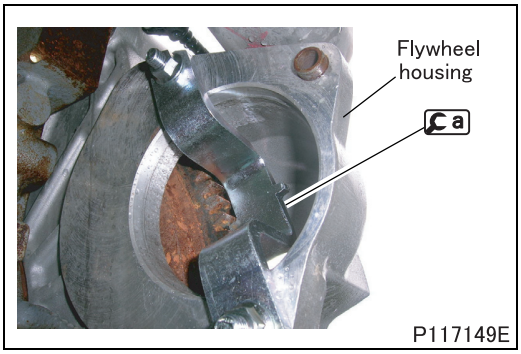

■ **Installation: Damper pulley**

- Prevent the flywheel from rotating using a through the starter opening.

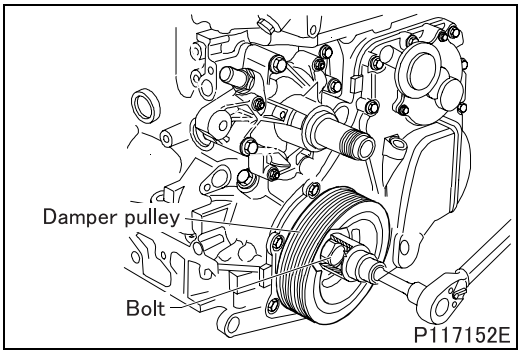

- Install the damper pulley.
- Tighten the bolt to a torque of 350 N·m {260 ft.lbs, 35 kgf·m}.

https://truckmanualshub.com/

TIMING GEAR, CHAIN

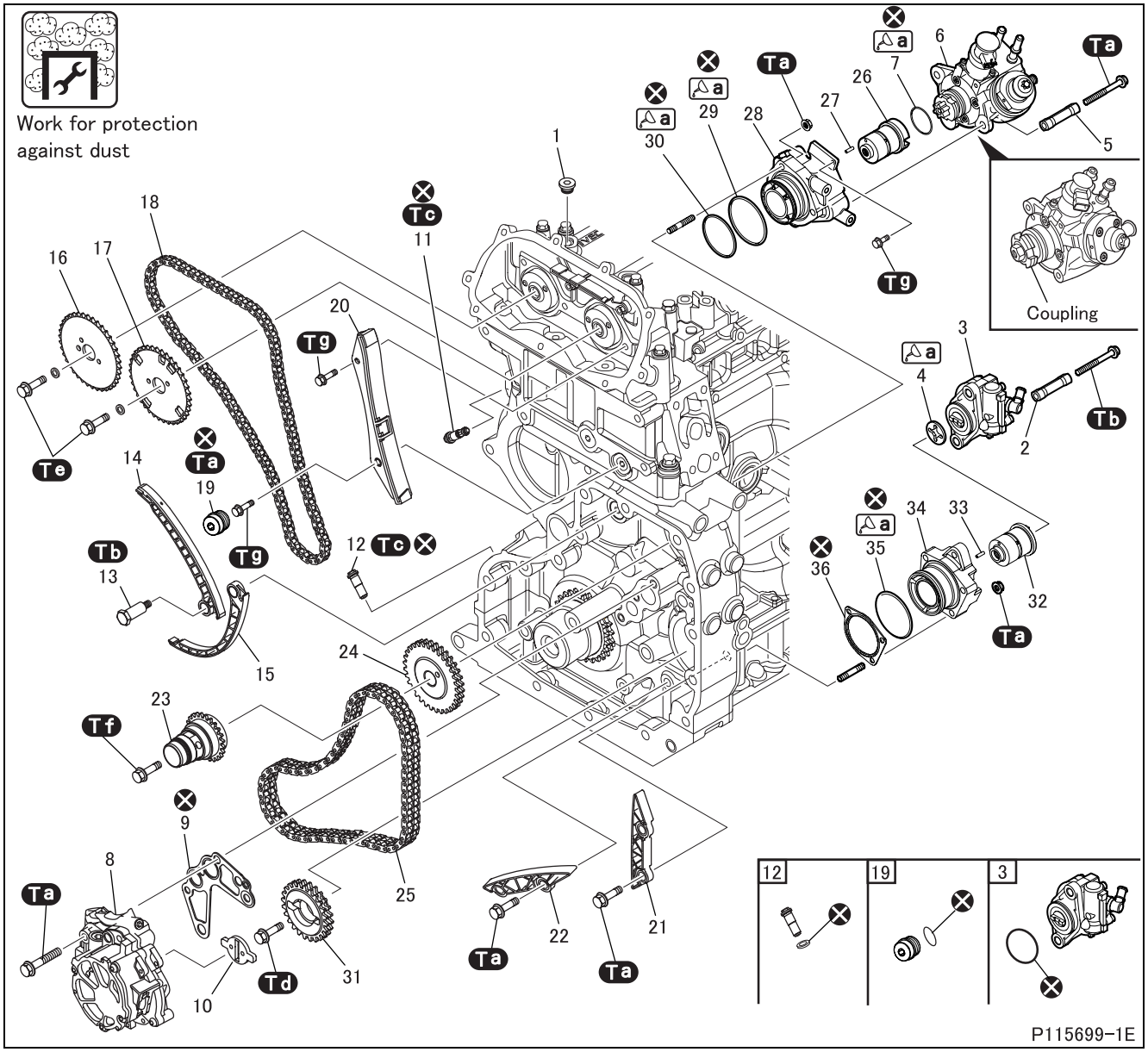

● **Removal sequence**

1 Lock plug
2 Spacer
3 Power steering oil pump (See Gr37.)
4 Coupling
5 Spacer
6 High pressure fuel pump (See Gr13.)
7 O-ring
8 Oil pump/vacuum unit (See Gr12 and Gr35.)
9 Gasket
10 Oil pump coupling
11 Upper chain stretcher
12 Lower chain stretcher
13 Mobile skid shaft
14 Upper mobile skid
15 Lower mobile skid
16 Camshaft control gear (exhaust)
17 Camshaft control gear (intake)
18 Single chain
19 Lock plug
20 Upper side skid
21 Lower side skid
22 Lower skid
23 Drive gear
24 High pressure fuel pump gear
25 Double chain
26 High pressure fuel pump control shaft
27 Locating pin
28 High pressure fuel pump support
29 O-ring
30 O-ring
31 Oil pump/vacuum unit gear
32 Power steering oil pump control shaft
33 Locating pin
34 Power steering oil pump support
35 O-ring
36 Gasket

⊗: Non-reusable parts

https://truckmanualshub.com/

 : This work requires protection against dust.

- If fine dust enters the high pressure fuel pump, engine performance will significantly be affected. Be sure to cover the openings after removing parts such as pipes.

NOTE

- **Both chains and related parts must be replaced as a kit.**
- **A chain stretcher with self-locking mechanism needs to be replaced whenever it has been removed. The chain stretcher also needs to be replaced if the piston is inadvertently removed from the chain stretcher.**
- **Once the pump housing is unlocked and the piston protrudes, the chain stretcher cannot be assembled as before.**

● Installation sequence

36→35→34→33→32→30→29→28→27→26→31→25→24→23→22→21→20→
19→18→17→16→15→14→13→12→11→7→6→5→10→9→8→4→3→2→1

Tightening torque (Unit: N·m {ft.lbs, kgf·m})

Mark	Parts to be tightened	Tightening torque	Remarks
Ta	Nut (high pressure fuel pump support mounting)	25 {18, 2.5}	–
	Nut (power steering oil pump support mounting)		
	Bolt (lower side skid mounting)		
	Bolt (lower skid mounting)		
	Lock plug		
	Bolt (high pressure fuel pump mounting)		
	Bolt (oil pump/vacuum unit)		
Tb	Mobile skid shaft	40 {30, 4.0}	–
	Bolt (power steering oil pump mounting)		
Tc	Lower chain stretcher	50 {37, 5.0}	–
	Upper chain stretcher		
Td	Bolt (oil pump/vacuum unit gear mounting)	130 {96, 13}	–
Te	Bolt (camshaft control gear mounting)	110 {81, 11}	–
Tf	Bolt (drive gear mounting)	135 {100, 13.5}	–
Tg	Bolt (upper side skid mounting)	10 {7.4, 1.0}	–
	Bolt (high pressure fuel pump mounting)		

Lubricant and/or sealant

Mark	Points of application	Specified lubricant and/or sealant	Quantity
a	O-ring	Engine oil	As required

https://truckmanualshub.com/

Special tools

Mark	Tool name and shape	Part No.	Application
a	Cranking shaft 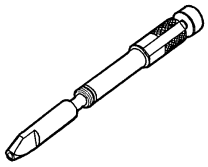 99360615	MH063969	Stop the rotation of the engine <Timing locating tool>
b	Power steering installer 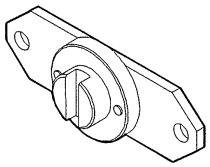 99360187	MH063965	Stop the rotation of the hydraulic power steering pump control shaft
c	Camshaft guide 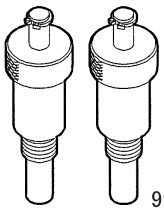 99360614	MH063968	Installation of overhead

◆Removal procedure◆

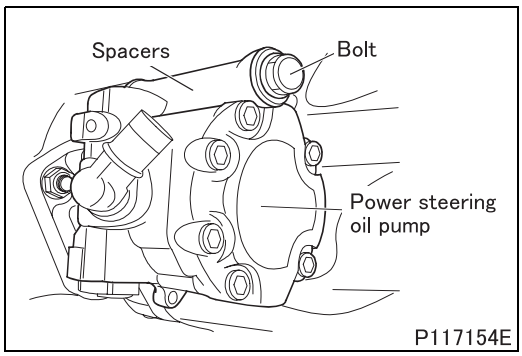

■ Removal: Power steering oil pump

- Remove the bolts with the spacers and detach the power steering oil pump.

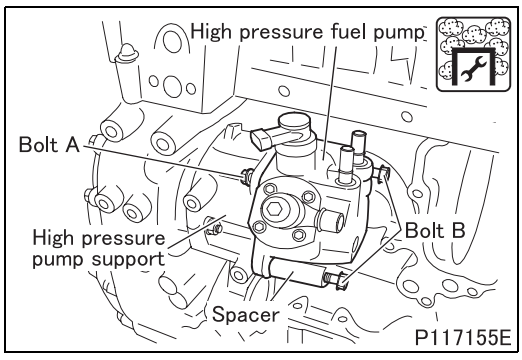

■ Removal: High pressure fuel pump

: This work requires protection against dust.

- Set the engine to top dead center at the #1 cylinder.
- Loosen bolt A, and then remove it.
- Loosen bolt B, and remove it together with the spacer.
- Remove the high pressure fuel pump from the high pressure fuel pump support.
- Check the direction of the coupling installed on the high pressure fuel pump.

https://truckmanualshub.com/

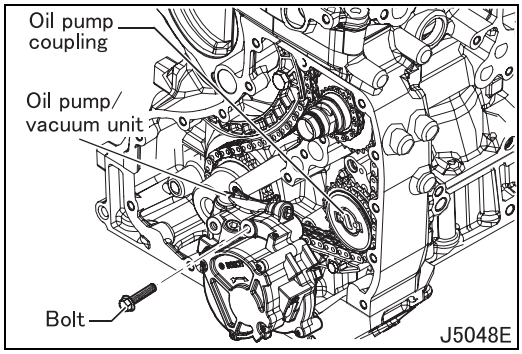

■ **Removal: Oil pump/vacuum unit**

- Remove the oil pump/vacuum unit.
- Remove the oil pump coupling.

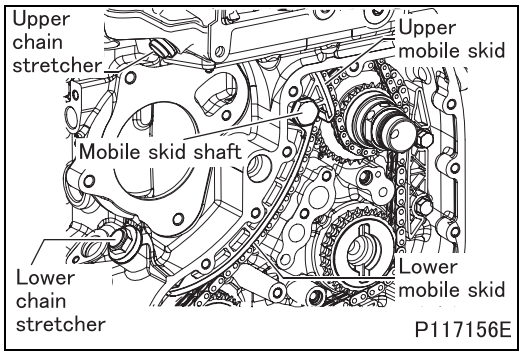

■ **Removal: Mobile skid shaft, mobile skid**

- Remove the chain stretcher: upper and lower.
- Remove the mobile skid shaft and disassemble the mobile skid: lower and upper.

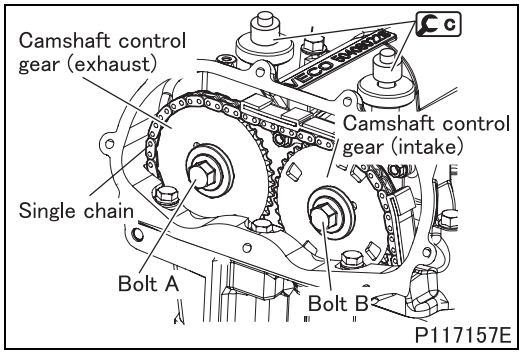

■ **Removal: Camshaft control gear and single chain**

- Install [C] on the camshaft slot through the overhead screw hole into the cam slot.
- Remove bolts A and B, and then remove the camshaft control gear (exhaust), camshaft control gear (intake) and single chain. (The single chain has no preferred mounting orientation (front/ back).)

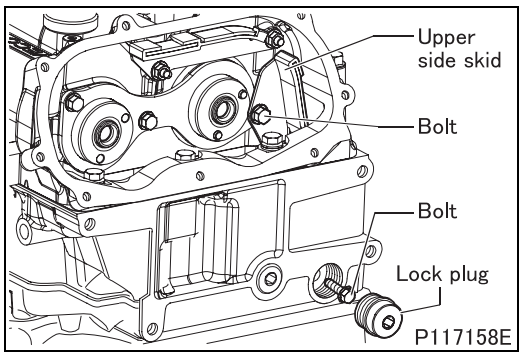

■ **Removal: Lock plug, upper side skid**

- Remove the rubber cap, the screws and the upper side skid.

https://truckmanualshub.com/

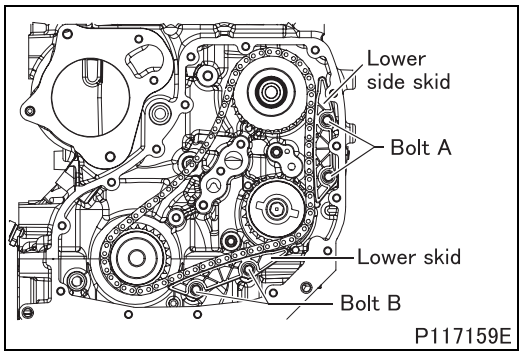

■ **Removal: Lower side skid, lower skid**

- Remove the bolts and the lower side skid.
- Remove the bolts and the lower skid.

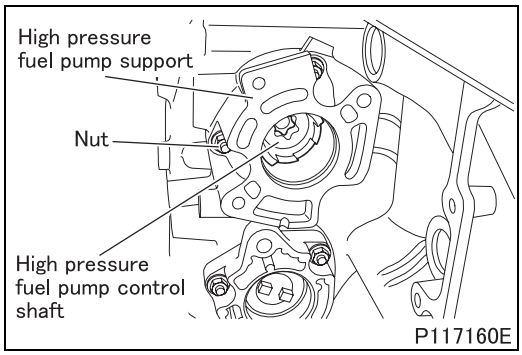

■ **Removal: Drive gear, high pressure fuel pump gear, double chain**

- Insert an appropriate wrench (T90 Torx bit socket) into the high pressure fuel pump control shaft to prevent the shaft from rotating.

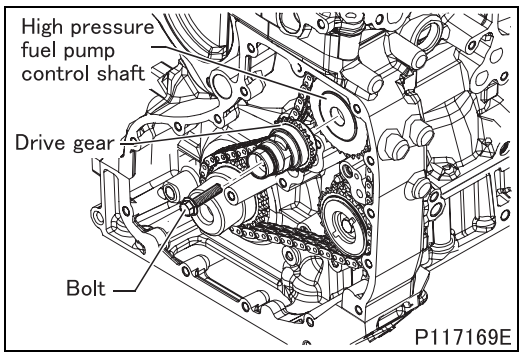

- Remove the screw and the single chain drive gear from the high pressure fuel pump control shaft.

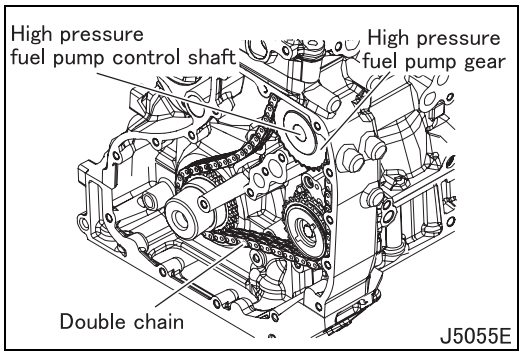

- Remove the high pressure fuel pump gear double chain and the double chain from the high pressure fuel pump control shaft. (The double chain has no preferred mounting orientation (front/back).)

https://truckmanualshub.com/

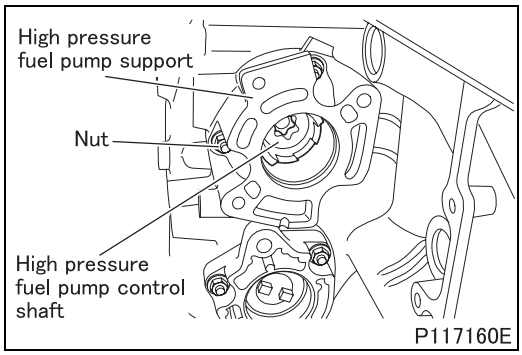

■ **Removal: High pressure fuel pump control shaft, support**

- Remove the high pressure fuel pump control shaft.
- Remove the nuts and the support.

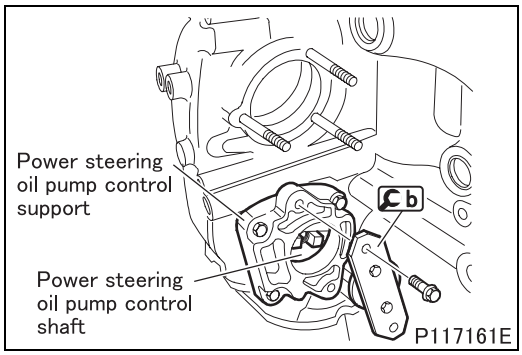

■ **Removal: Oil pump/vacuum unit gear**

- Stop the rotation of the power steering oil pump control shaft by inserting b in the shaft and fastening the b on the support by means of the bolts.

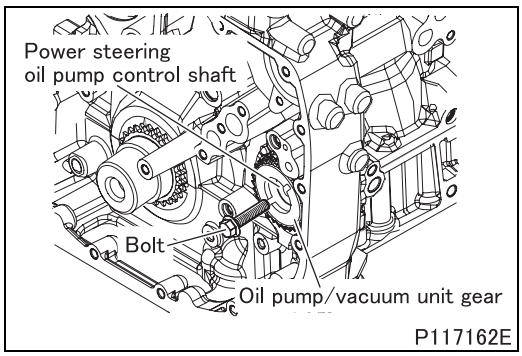

- Remove the bolt and the gear from the hydraulic power steering pump control shaft.

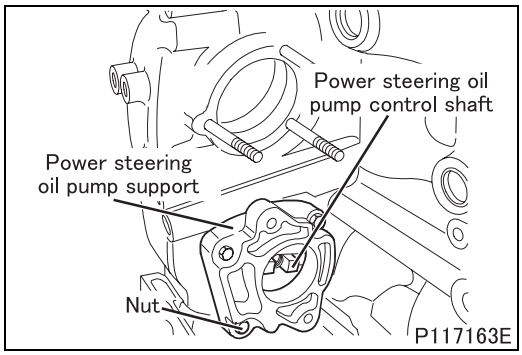

■ **Removal: Power steering oil pump control shaft, support**

- Remove the hydraulic power steering pump control shaft.
- Remove the nuts and the support.

https://truckmanualshub.com/

◆Installation procedure◆

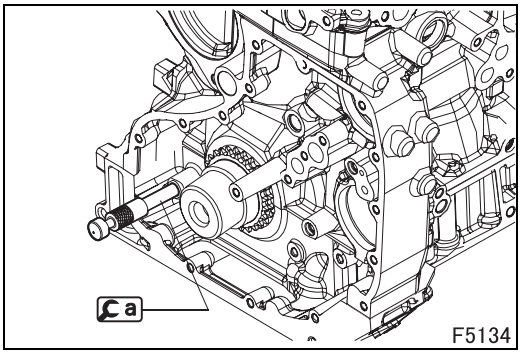

■ Installation: Cranking shaft

- Using the a, rotate the crankshaft and install it by inserting it into the crankshaft hole from the cylinder lock hole.
- When rotating the crankshaft, be careful that it does not interfere with the valve.
- Stop rotating the engine when it is in a condition that enables the subsequent parts to be installed on it.

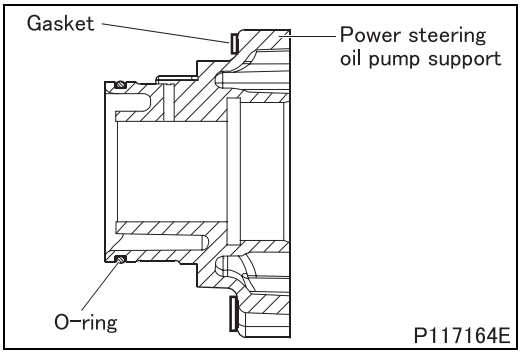

■ Installation: Support, power steering oil pump control shaft

- Lubricate the O-ring with engine oil and install it on the support.
- Take care not to damage the O-ring.

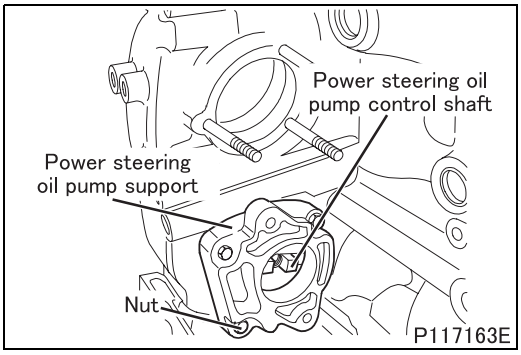

- Install a new gasket and the power steering oil pump support, screw in the nuts, and then tighten them to a torque of 25 N·m {18 ft.lbs, 2.5 kgf·m}.
- Install the positioning pin on the power steering oil pump control shaft.
- Install the power steering oil pump control shaft on the inside of the power steering oil pump support.

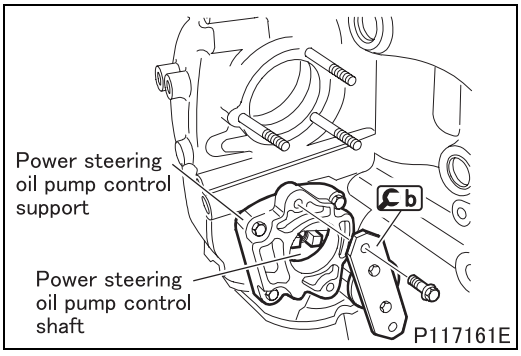

- Stop the hydraulic power steering pump control shaft rotation of the hydraulic power steering pump by inserting in the latter the b and fastening the b on the support by means of the bolts.

https://truckmanualshub.com/

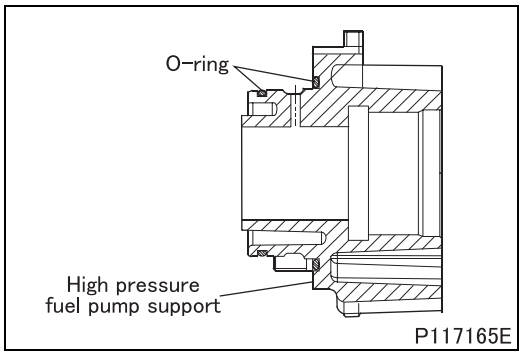

■ **Installation: High pressure fuel pump support, high pressure fuel pump control shaft**

- Lubricate the new O-rings with engine oil and install them on the support.

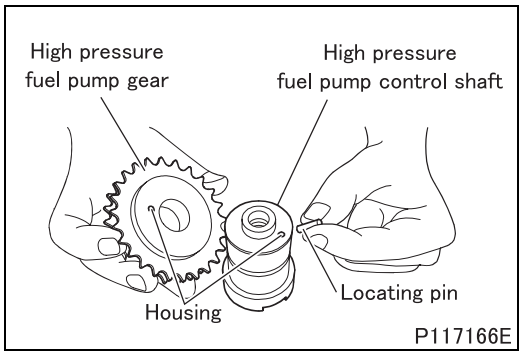

- There is a housing for the locating pin in the through hole in the high pressure fuel pump gear.
- The through hole in the high pressure fuel pump gear has a reference point which needs to be kept in a vertical position when timing the pump.
- There is a housing for the locating pin in the high pressure fuel pump control shaft.
- The position of the housing for the locating pin in the shaft has been determined so as to ensure the timing between the pump and crankshaft.

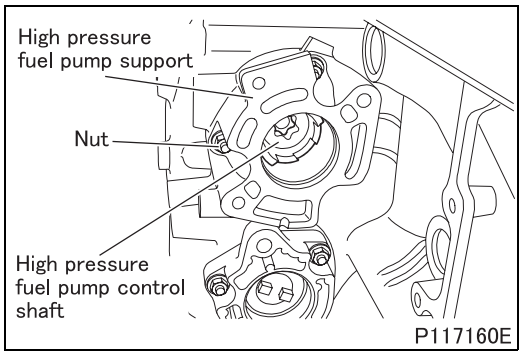

- Install the support and the nuts and tighten them to the prescribed torque (25 N·m {18 ft.lbs, 2.5 kgf·m}).
- Install the high pressure fuel pump control shaft of the high pressure fuel pump.

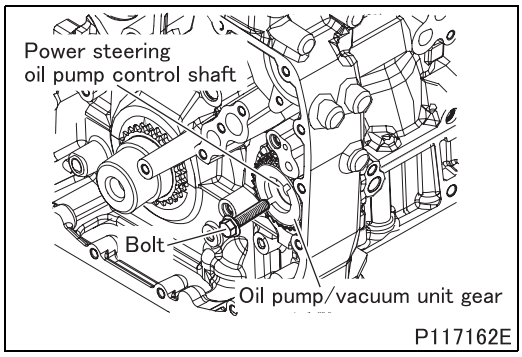

■ **Installation: Oil pump/vacuum unit gear**

- Install the oil pump/vacuum unit gear on the power steering oil pump control shaft.

https://truckmanualshub.com/

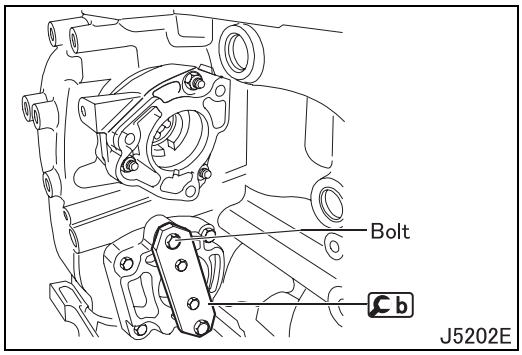

- Remove the bolt, and then remove the b.

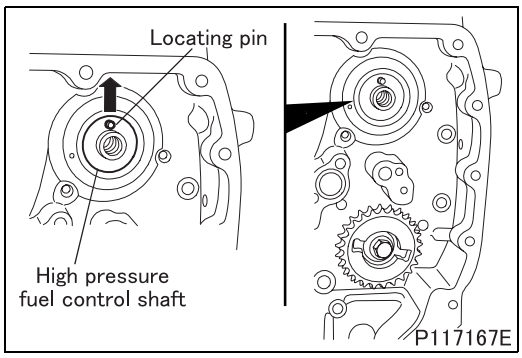

■ **Installation: Drive gears, double chain**

- As far as possible, install the high pressure fuel pump control shaft with the locating pin facing directly upward.

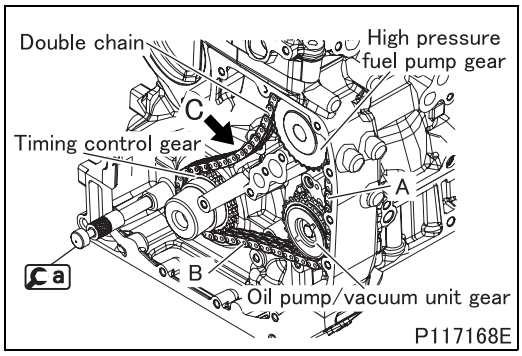

- Position the high pressure fuel pump gear so that the chamfered side is facing the drive gear, and install the double chain on the high pressure fuel pump gear.
- Align the high pressure fuel pump gear with the locating pin of the high pressure fuel pump control shaft, and then install it on the control shaft.
- After installing the fuel pump gear, press C of the double chain, and confirm that the chain is taut at sections A and B, and also that the locating pin of the high pressure fuel pump gear is facing directly upward.

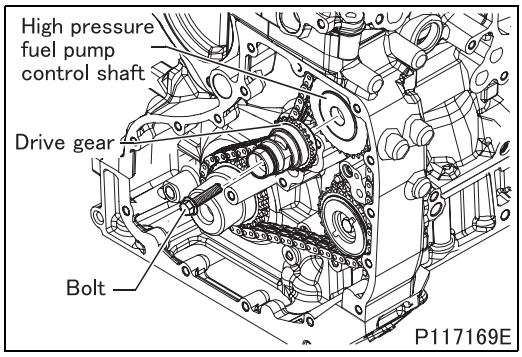

- Clean the contacting faces of the drive gear and the high pressure fuel pump gear.
- Install the drive gear on the high pressure fuel pump control shaft, and temporarily tighten the bolt (to the extent that the drive gear can be easily rotated by hand).

https://truckmanualshub.com/

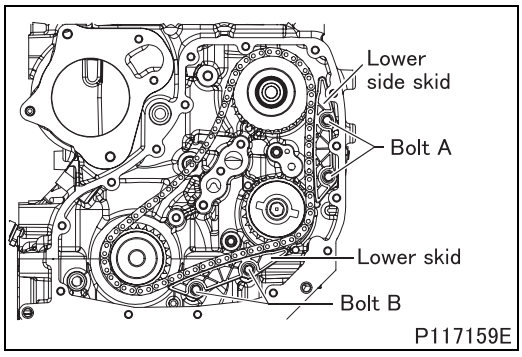

■ **Installation: Lower side skid, lower skid**

- Inspect the condition of each skid, and replace any worn skids.
- Install the lower skid, then screw in the bolt and tighten it to a torque of 25 N·m {18 ft.lbs, 2.5 kgf·m}.
- Install the lower side skid, and tighten the bolt to a torque of 25 N·m {18 ft.lbs, 2.5 kgf·m}.

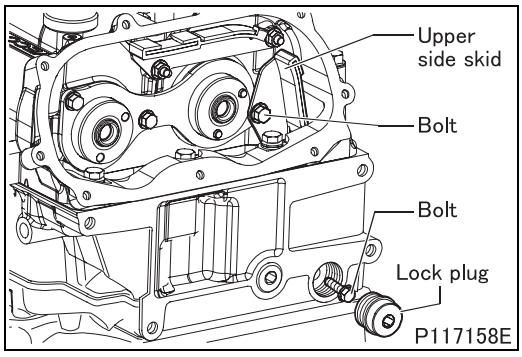

■ **Installation: Upper side skid**

- Install the upper side skid, and tighten the bolt to a torque of 10 N·m {7.4 ft.lbs, 1.0 kgf·m}.
- Tighten the bolt at the rear of the lock plug to a torque of 10 N·m {7.4 ft.lbs, 1.0 kgf·m}, then tighten the new lock plug to a torque of 25 N·m {18 ft.lbs, 2.5 kgf·m}.

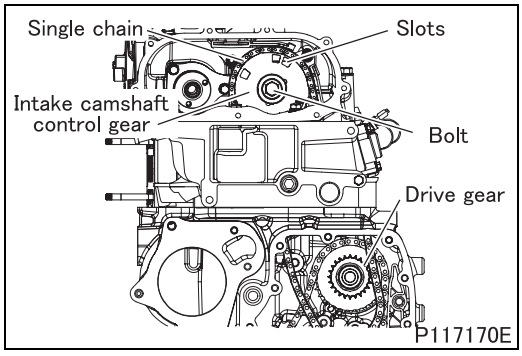

■ **Installation: Single chain, gear**

- Install the camshaft control gears (intake and exhaust) with the stamped side of the gear facing the camshaft side.
- Install the camshaft control gear (intake) with the slot on the gear at the position shown in the illustration, and then temporarily tighten the bolt.
- Install the single chain on the drive gear and the camshaft controller gear (intake).

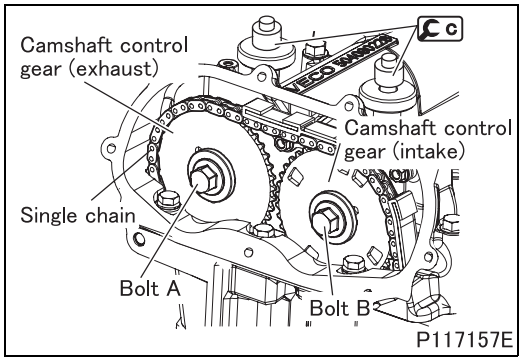

- Use the largest of the three dowel pin insertion holes in the camshaft control gear (exhaust).
- Place the single chain on the camshaft control gear (exhaust), and temporarily tighten the gear mounting bolt (to the extent that the drive gear can be easily rotated by hand).
- Then, check to see if the single chain between the exhaust and intake camshaft control gears can be tensioned by removing the play of the dowel pins in the insertion holes.

https://truckmanualshub.com/

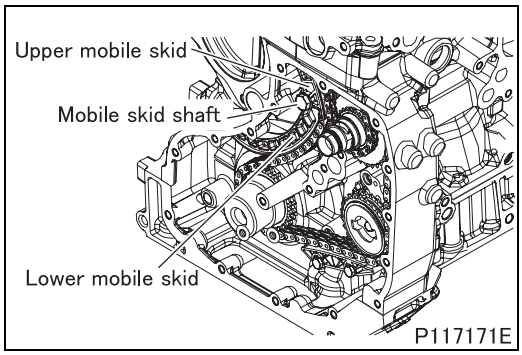

■ **Installation: Lower mobile skid, upper mobile skid**

- Check the condition of the lower and upper mobile skids. If the skids are worn, replace them.
- Install the lower and upper mobile skids, and install the mobile skid shaft on the crankshaft.
- Tighten the mobile skid shaft to a torque of 40 N·m {30 ft.lbs, 4.0 kgf·m}.

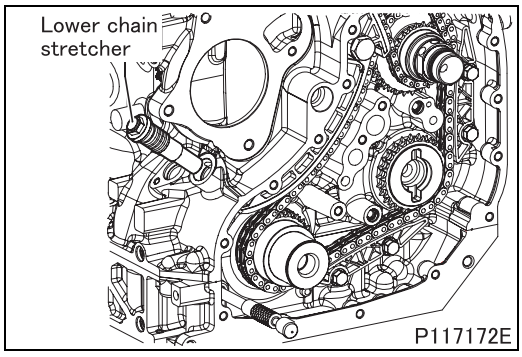

■ **Installation: Lower chain stretcher**

- Install the lower chain stretcher, and tighten it to a torque of 50 N·m {37 ft.lbs, 5.0 kgf·m}.

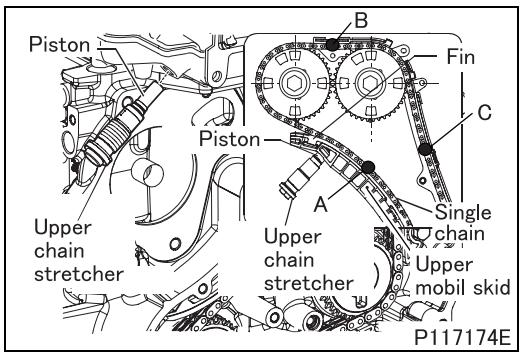

■ **Installation: Upper chain stretcher**

- A chain stretcher with self-locking mechanism needs to be replaced whenever it has been removed. The chain stretcher also needs to be replaced if the piston is inadvertently removed from the chain stretcher.
- Install the upper chain stretcher, and tighten it to a torque of 50 N·m {37 ft.lbs, 5.0 kgf·m}.
- Insert an appropriate screwdriver through the opening in the overhead and push the fin of the upper mobile skid until the piston of the upper stretcher reaches its stroke end.
- Check that tension is given to the chain when the piston is displaced from the seat.
- Then, confirm that chains A, B and C are taut. (Tighten each gear when the chains are taut.)

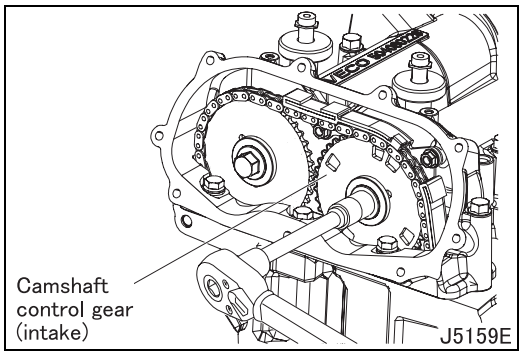

■ **Installation: Camshaft control gear (intake)**

- Tighten the temporarily installed camshaft control gear (intake) to a torque of 110 N·m {81 ft.lbs, 11 kgf·m}.

https://truckmanualshub.com/

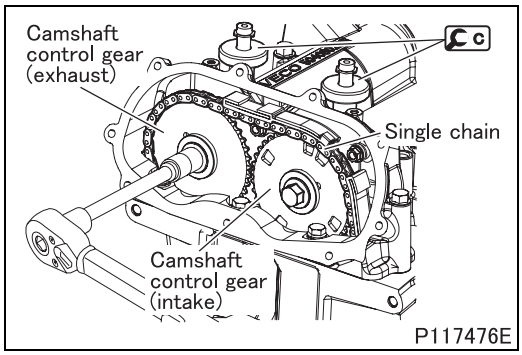

■ **Installation: Camshaft control gear (exhaust)**

- Tighten the temporarily installed camshaft control gear (exhaust) to a torque of 110 N·m {81 ft.lbs, 11 kgf·m}.
- After installation, confirm that the part of the chain between the exhaust and intake sides is taut.

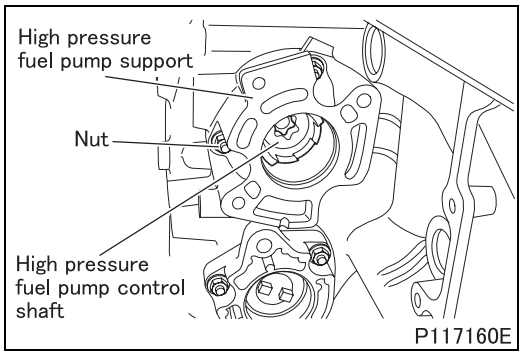

- Insert an appropriate wrench (T90 Torx bit socket) into the high pressure fuel pump control shaft to prevent the shaft from rotating.

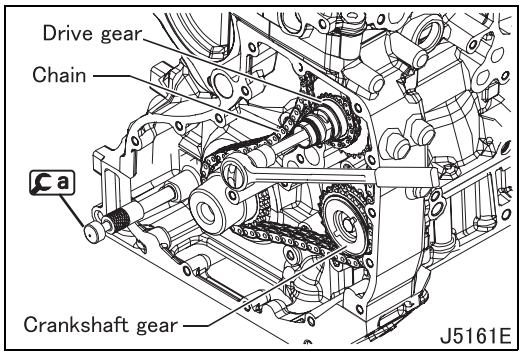

■ **Installation: Drive gear**

- Confirm that the part of the single chain between the drive gear and the camshaft control gear is taut, then tighten the drive gear to a torque of 135 N·m {100 ft.lbs, 14 kgf·m}, and remove the a.

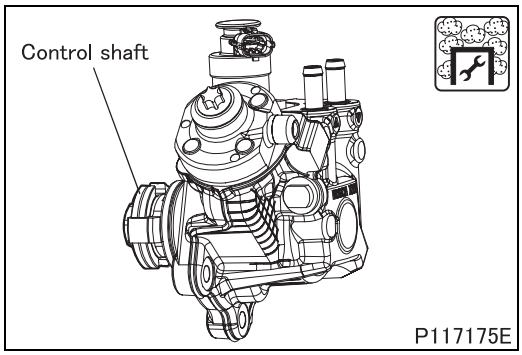

■ **Installation: High pressure fuel pump**

: This work requires protection against dust.

- The relative positions of the control shaft and pump axis are determined by the flange installed on the pump.
- The high pressure pump needs to be installed in a balanced position (bottom dead center), which is obtained by rotating the control shaft.
- Bosch provides a new high pressure pump in a stable and balanced position (bottom dead center) with the flange installed on the pump. Check that the pump shaft is unloaded (no tension).

https://truckmanualshub.com/

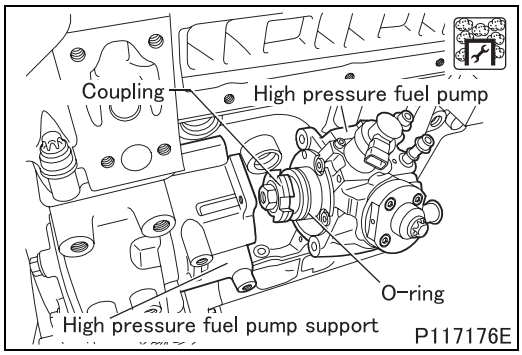

- Apply engine oil to the O-ring, and then install the O-ring on the high pressure fuel pump.
- Be careful not to damage the O-ring when installing it.
- Install the pump so that the control shaft teeth are engaged with the coupling.
- Rotate the high pressure fuel pump (with the shaft and gear locked) to align the bolt holes in the high pressure fuel pump support and high pressure fuel pump.

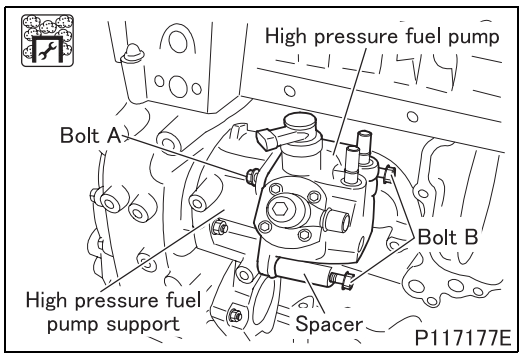

- Fully tighten mounting bolt A on the high pressure fuel pump support.
- Tighten two sets of bolt B and spacer.

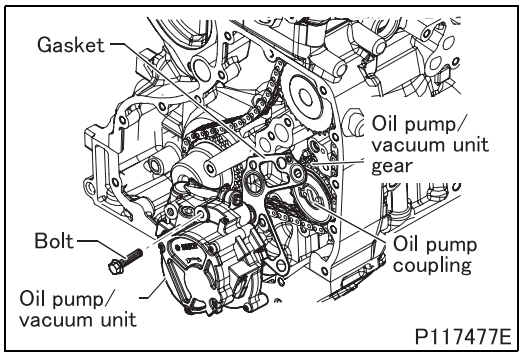

■ **Installation: Oil pump/vacuum unit**

- Install the oil pump coupling on the inner side of the oil pump/ vacuum unit gear.
- Insert a new gasket, and install the oil pump/vacuum unit.
- Screw in the bolts of the oil pump/vacuum unit, and confirm that the unit is installed correctly. Tighten the bolts to a torque of 25 N·m {18 ft.lbs, 2.5 kgf·m}.

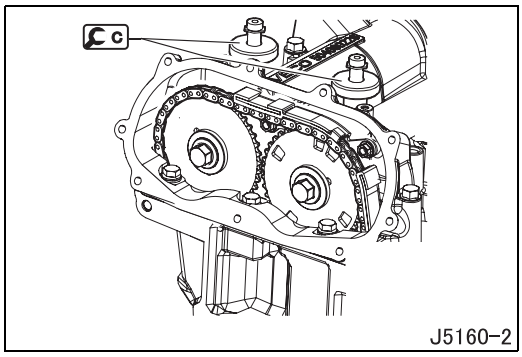

- Remove the C.

https://truckmanualshub.com/

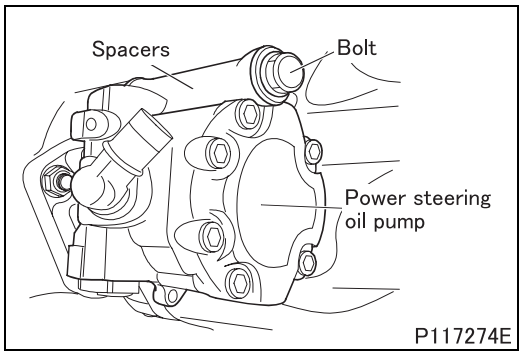

■ **Installation: Power steering oil pump**

- Apply engine oil to the O-ring, install the O-ring on the power steering oil pump, and then tighten the bolts of the power steering oil pump to a torque of 40 N·m {30 ft.lbs, 4.0 kgf·m}.

https://truckmanualshub.com/

OVERHEAD, CYLINDER HEAD

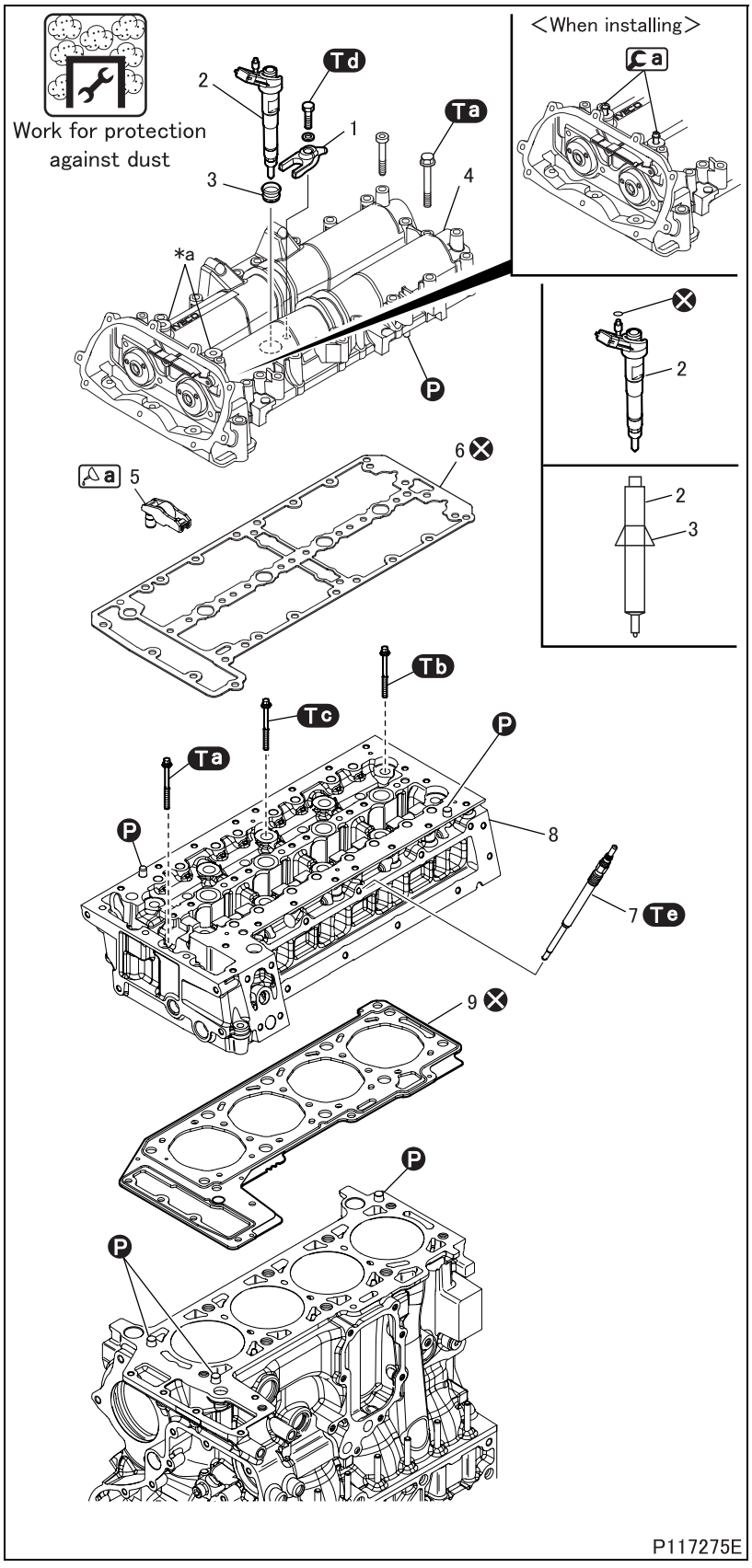

● Removal sequence

1. Injector bracket
2. Injector
3. Dust guard
4. Overhead (See later section.)
5. Rocker arm and hydraulic tappet
6. Gasket
7. Glow plug
8. Cylinder head (See later section.)
9. Cylinder head gasket

***a**: Lock plug
Ⓟ: Locating pin
⊗: Non-reusable parts

: This work requires protection against dust.

- If fine dust enters the high pressure fuel pump, engine performance will significantly be affected. Be sure to cover the openings after removing parts such as pipes.

● Installation sequence

Follow the removal sequence in reverse.

https://truckmanualshub.com/

Service standards (Unit: mm {in.})

Location	Maintenance item			Standard value	Limit	Remedy
5	Rocker arm and hydraulic tappet	Hydraulic tappet length	End of stroke	32.44 ± 0.3 {1.28 ± 0.012}	–	Replace
			Start of stroke	29.75 ± 0.25 {0.471 to 0.472}	–	Replace
		Outer diameter of hydraulic tappet		11.988 to 12.000 {0.471 to 0.472}	–	Replace
5, 8	Clearance between rocker arm and hydraulic tappet and seats on cylinder head			0.016 to 0.046 {0.00063 to 0.0018}	–	Replace
8	Inner diameter of seats on cylinder head for hydraulic tappet			12.016 to 12.034 {0.473 to 0.474}	–	Replace

Tightening torques (Unit: N·m {ft.lbs, kgf·m})

Mark	Parts to be tightened		Tightening torque	Remarks
Ta	Bolt (overhead mounting)		25 {18, 2.5}	–
	Bolt (cylinder head mounting)	M8		
Tb	Bolt (cylinder head mounting)	M12	65 {48, 6.5} + 90° + 60°	–
Tc	Bolt (cylinder head mounting)	M15	130 {96, 13} + 90° + 90°	–
Td	Bolt (injector bracket mounting)		32 {24, 3.3}	–
Te	Glow plug		8 to 10 {5.9 to 7.4, 0.8 to 1.0}	–

Lubricant and/or sealant

Mark	Points of application	Specified lubricant and/or sealant	Quantity
a	Rocker arm and hydraulic tappet	Engine oil	As required

Special tools

Mark	Tool name and shape	Part No.	Application
a	Guide, camshaft 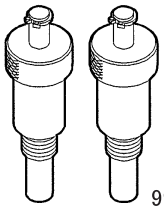 99360614	MH063968	Installation of overhead
b	Glow plug wrench  P116190	MH064216	Removal and installation of glow plug
c	Percussion puller 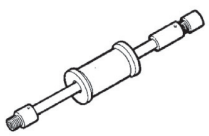 99340205	MH063990	Removal of injector

https://truckmanualshub.com/

◆Removal procedure◆

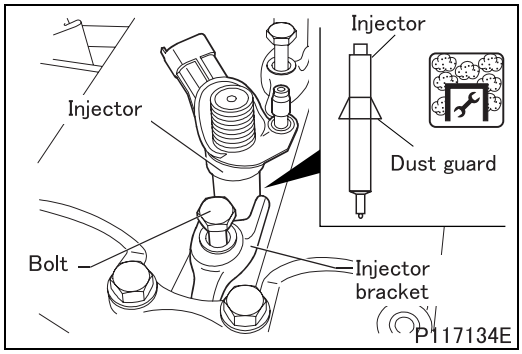

■ Removal: Injector

: This work requires protection against dust.

- Remove the injector bracket.

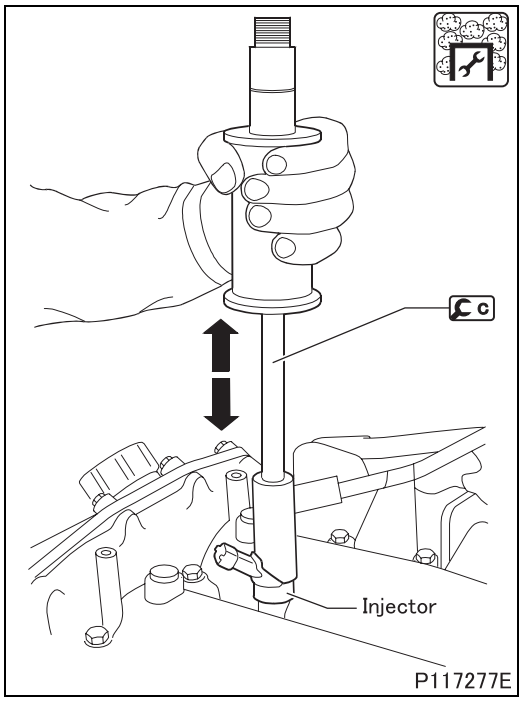

- Using the c, remove the injector from the engine overhead. (The injector is of a direct sealing type, so it does not use a gasket.)

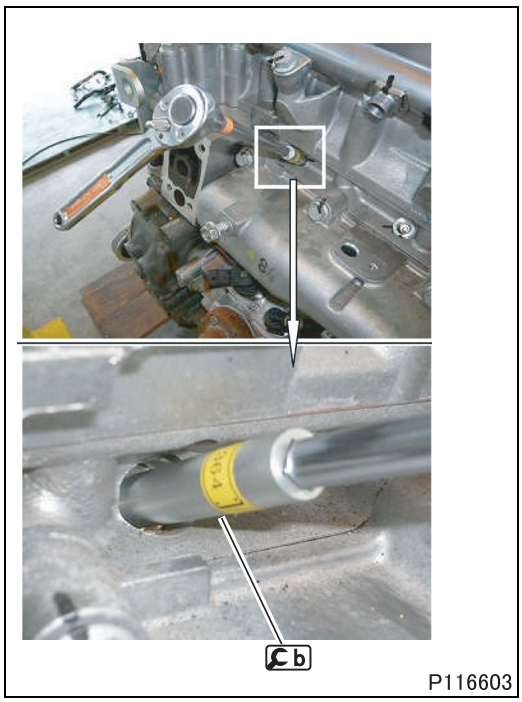

■ Removal: Glow plug

- Using the b, remove the glow plug from the cylinder head.

https://truckmanualshub.com/

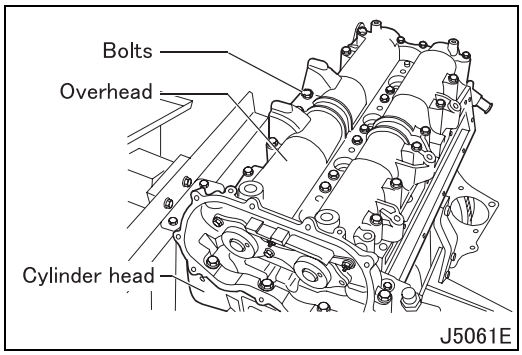

■ **Removal: Overhead**

- Remove the bolts and detach the overhead from the cylinder head.

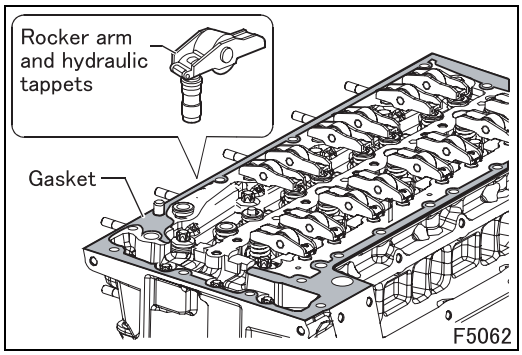

■ **Removal: Rocker arm and hydraulic tappet**

- Remove the rocker arm and the hydraulic tappets.
- Remove the gasket.

NOTE

- **Tappets must be marked for position if they are going to be reused.**

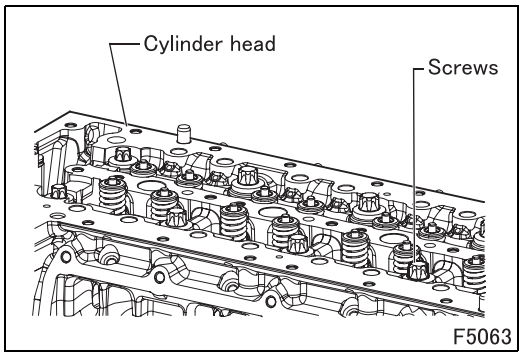

■ **Removal: Cylinder head**

- Remove the screws and remove the cylinder head.

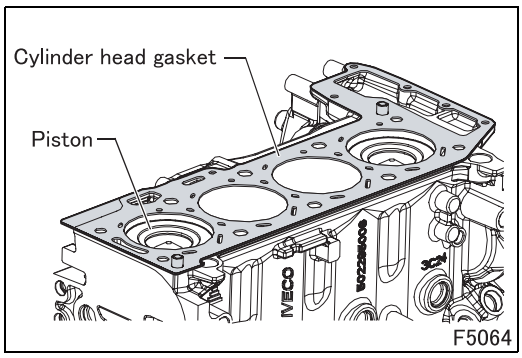

■ **Removal: Cylinder head gasket**

- Remove the cylinder head gasket.
- Check the protrusion of the pistons as described under the relevant heading to check the possibility of facing the crankcase if it has deformed.

https://truckmanualshub.com/

◆Inspection procedure◆

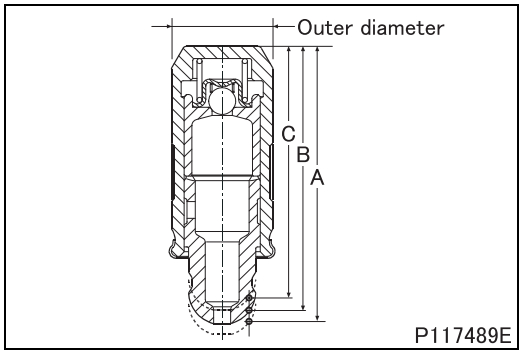

■ Inspection: Rocker arm and hydraulic tappet

(1) Visual inspection

- The sliding surface of the tappets must have no scoring/dents; replace them if they do.

(2) Hydraulic tappet length

- Measure the each length of hydraulic tappet for the end and start of stroke.
  A = 32.44 ± 0.3 mm {1.28 ± 0.012 in.}, end of stroke
  B = 31.30 mm {1.23 in.}, working position: reference
  C = 29.75 ± 0.25 mm {1.17 ± 0.0098 in.}, start of stroke

- If the measurement is not within the standard valve range, replace the hydraulic tappet.

(3) Outer diameter of hydraulic tappet

- If the measurement is not within the standard valve range, replace the hydraulic tappet.

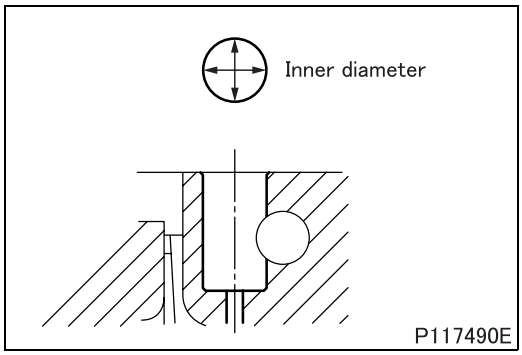

■ Inspection: Inner diameter of seats on cylinder head for hydraulic tappet

- If the measurement is not within the standard value range, replace the cylinder head.

◆Installation procedure◆

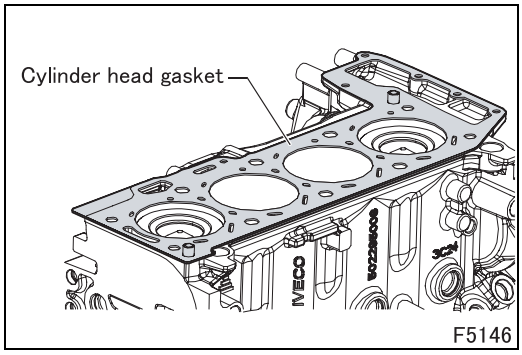

■ Installation: Cylinder head gasket

- Check that the mating surfaces of the cylinder head and crankcase are clean.
- Keep the cylinder head gasket clean.
- Place the cylinder head gasket of the cylinder head with the thickness given in section “Check piston protrusion”, with the “TOP” sign facing the head.

NOTE

- **It is essential to keep the cylinder head gasket sealed in its package until just before assembly.**

https://truckmanualshub.com/

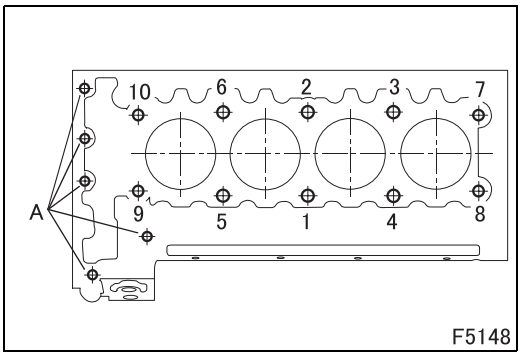

■ **Inspection: Cylinder head**

- Mount the cylinder head.
- Apply engine oil to the threads of the cylinder head bolts and install the bolts, and then tighten them in three phases as follows in the order shown in the drawing.
- Diagram of the tightening sequence for the cylinder head fixing bolts.
  - **1st phase**: pre-tightening with torque wrench
    - Bolts 1-2-3-4-5-6 to a torque of 130 N·m {96 ft.lbs, 13 kgf·m}.
    - Bolts 7-8-9-10 to a torque of 65 N·m {48 ft.lbs, 6.6 kgf·m}.
  - **2nd phase**: angle closing
    - Bolts 1-2-3-4-5-6 90°.
    - Bolts 7-8-9-10 90°.
  - **3rd phase**: angle closing
    - Bolts 1-2-3-4-5-6 90°.
    - Bolts 7-8-9-10 60°.
  - Bolts A, to a torque of 25 N·m {18 ft.lbs, 2.5 kgf·m}.

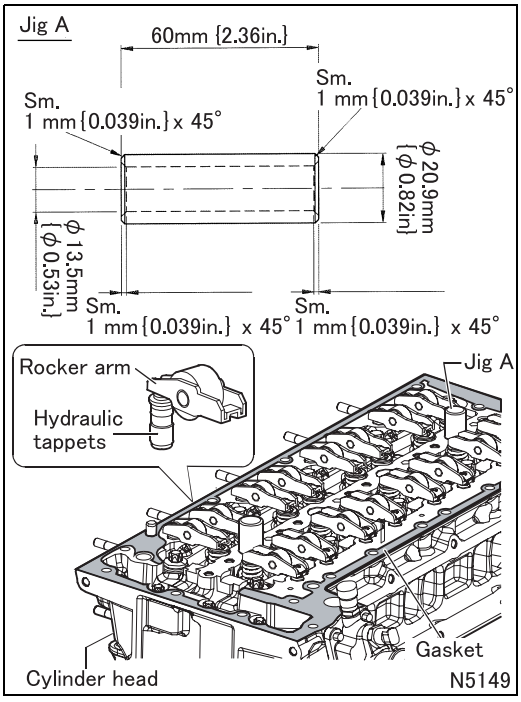

■ **Installation: Rocker arm and hydraulic tappet, overhead**

- Make a fixture jig A as shown in the illustration.
- Thoroughly clean the hydraulic tappets, lubricate them and fit them in the cylinder head, positioning the rocker arms on the valves correctly.
- Install the gasket.
- Insert the two jigs into the injector seats for subsequent centering of the overhead on the cylinder head.

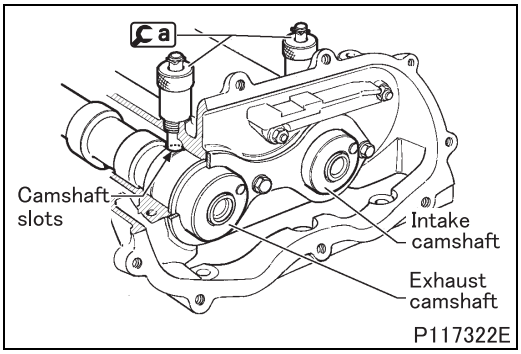

- Position the camshafts so that the Ca can be inserted in the camshaft slots through the overhead threaded holes.

https://truckmanualshub.com/

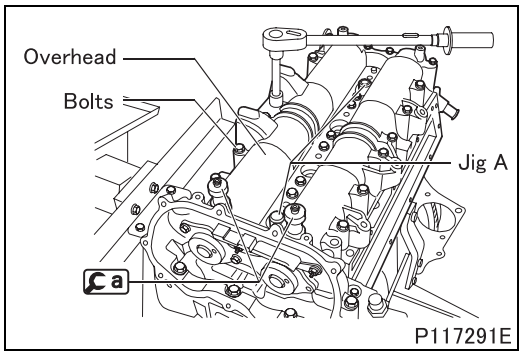

- Mount the overhead together with the a for the timing and tighten the fixing bolts to the prescribed torque: 25 N·m {18 ft.lbs, 2.5 kgf·m}.
- Take out the jig A.

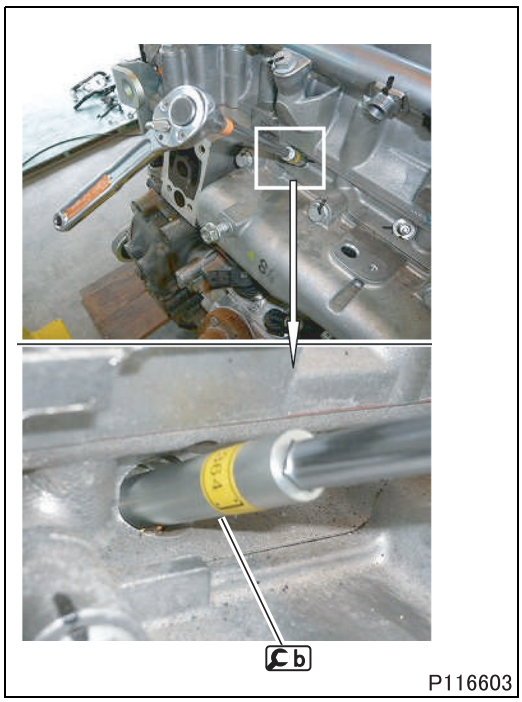

■ **Installation: Glow plug**

- Using the b, install the glow plug on the cylinder head using a torque of 8 to 10 N·m {5.9 to 7.4 ft.lbs, 0.8 to 1.0 kgf·m}.

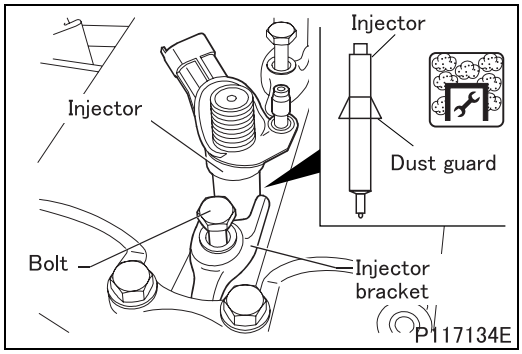

■ **Installation: Injector**

: This work requires protection against dust.

- Install a new dust guard on the injector.
- Install the injector on the overhead.
- Install the injector bracket.
- Install the bolt without tightening it.
- After installing the fuel pipes to the injector and to the common rail, tighten the injector bracket mounting bolt to the prescribed torque: 32 N·m {24 ft.lbs, 3.3 kgf·m}.

https://truckmanualshub.com/

Overhead

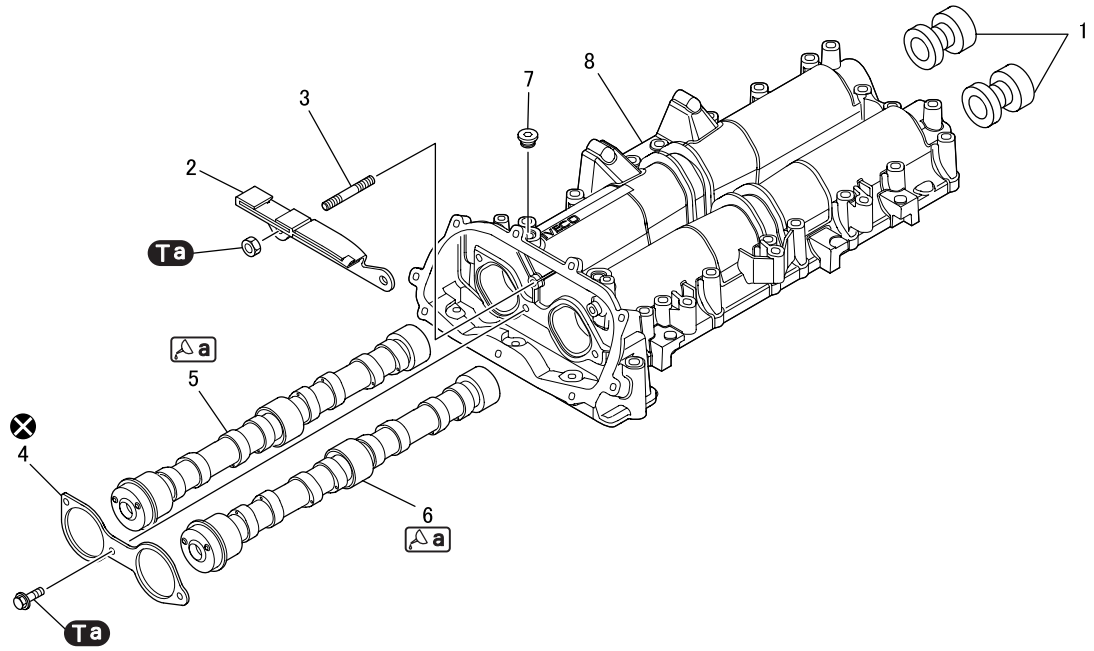

P117278

● Disassembly sequence

1 Cover
2 Upper skid
3 Stud
4 Shoulder plate
5 Camshaft (exhaust)
6 Camshaft (intake)
7 Lock plug
8 Overhead

⊗: Non-reusable parts

● Assembly sequence

8→3→7→1→6→5→2→4

Service standards (Unit: mm {in.})

Location	Maintenance item			Standard value	Limit	Remedy
5, 6	Camshaft	Journal alignment		–	0.04 {0.0016}	Replace
		Outer diameter of supporting pin	No.1	48.925 to 48.950 {1.926 to 1.927}	–	Replace
			No.2	46.925 to 46.950 {1.848 to 1.849}	–	
			No.3	35.925 to 35.950 {1.414 to 1.415}	–	
		Useful cam lobe height	Exhaust	3.622 {0.14}	–	Replace
			Intake	4.328 {0.17}	–	
5, 6, 8	Camshaft pin-to-overhead supporting seat clearance			0.032 to 0.087 {0.0013 to 0.0034}	–	Replace

https://truckmanualshub.com/

OVERHEAD, CYLINDER HEAD

Location	Maintenance item		Standard value	Limit	Remedy
8	Inner diameter of camshaft pin seats in overhead	No.1	48.988 to 49.012 {1.929 to 1.930}	–	Replace
		No.2	46.988 to 47.012 {1.850 to 1.851}	–	
		No.3	35.988 to 36.012 {1.417 to 1.418}	–	

Tightening torque (Unit: N·m {ft.lbs, kgf·m})

Mark	Parts to be tightened	Tightening torque	Remarks
Ta	Bolt (cover mounting)	10 {7.4, 1.0}	–
	Nut (upper skid mounting)		
	Bolt (shoulder plate mounting)		

Lubricant and/or sealant

Mark	Points of application	Specified lubricant and/or sealant	Quantity
a	Support pin of the camshaft	Engine oil	As required

◆Removal procedure◆

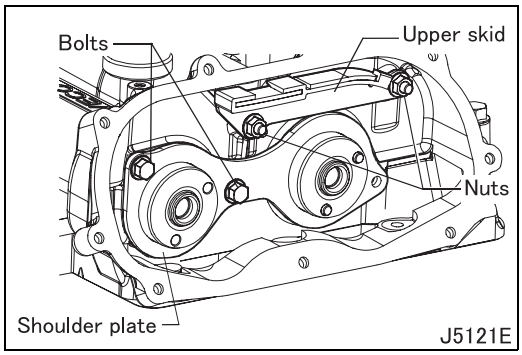

- Remove the nuts and the upper skid. Remove the bolts and the shoulder plate.

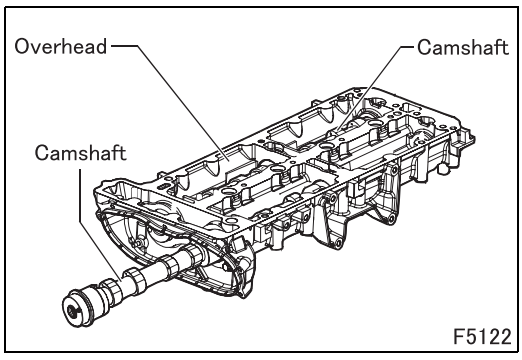

- Tilt the overhead and take care not to damage the seats, then remove the camshafts from the overhead.

https://truckmanualshub.com/

◆Inspection procedure◆

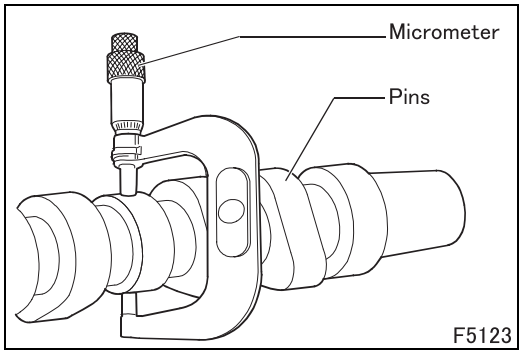

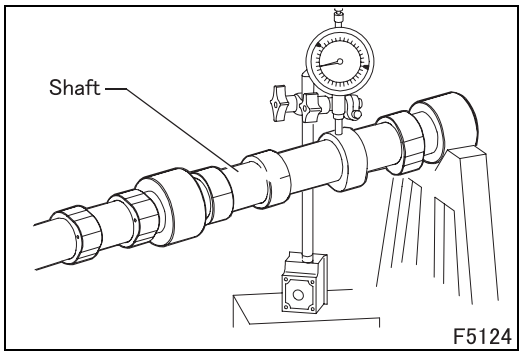

■ Inspection: Camshaft and overhead

(1) Camshaft pin-to-overhead supporting seat clearance

- The surfaces of the shaft supporting pins and of the cams must be finely honed; if there is any sign of wear or scoring, replace the shaft.
- Using a micrometer, measure the diameter of the pins of the camshaft and, using a bore meter, measure the diameter of the supporting seats in the overhead.
- The difference between these two measurements gives the existing clearance.
  The nominal assembly clearance is 0.032 to 0.087 mm {0.0013 to 0.0034 in.}.

(2) Camshaft useful cam lobe height and bend

- Place the shaft on the V-blocks and use a dial gauge fitted on the central support to check that the bend does not exceed 0.04 mm {0.0016 in.}; otherwise, change the shaft.
- Check also the useful camshaft lobe height: it must correspond to the standard value; if different values are detected, change the shaft.

https://truckmanualshub.com/

OVERHEAD, CYLINDER HEAD

- See the following “MAIN DATA, CAMSHAFT PINS AND SEATS”.

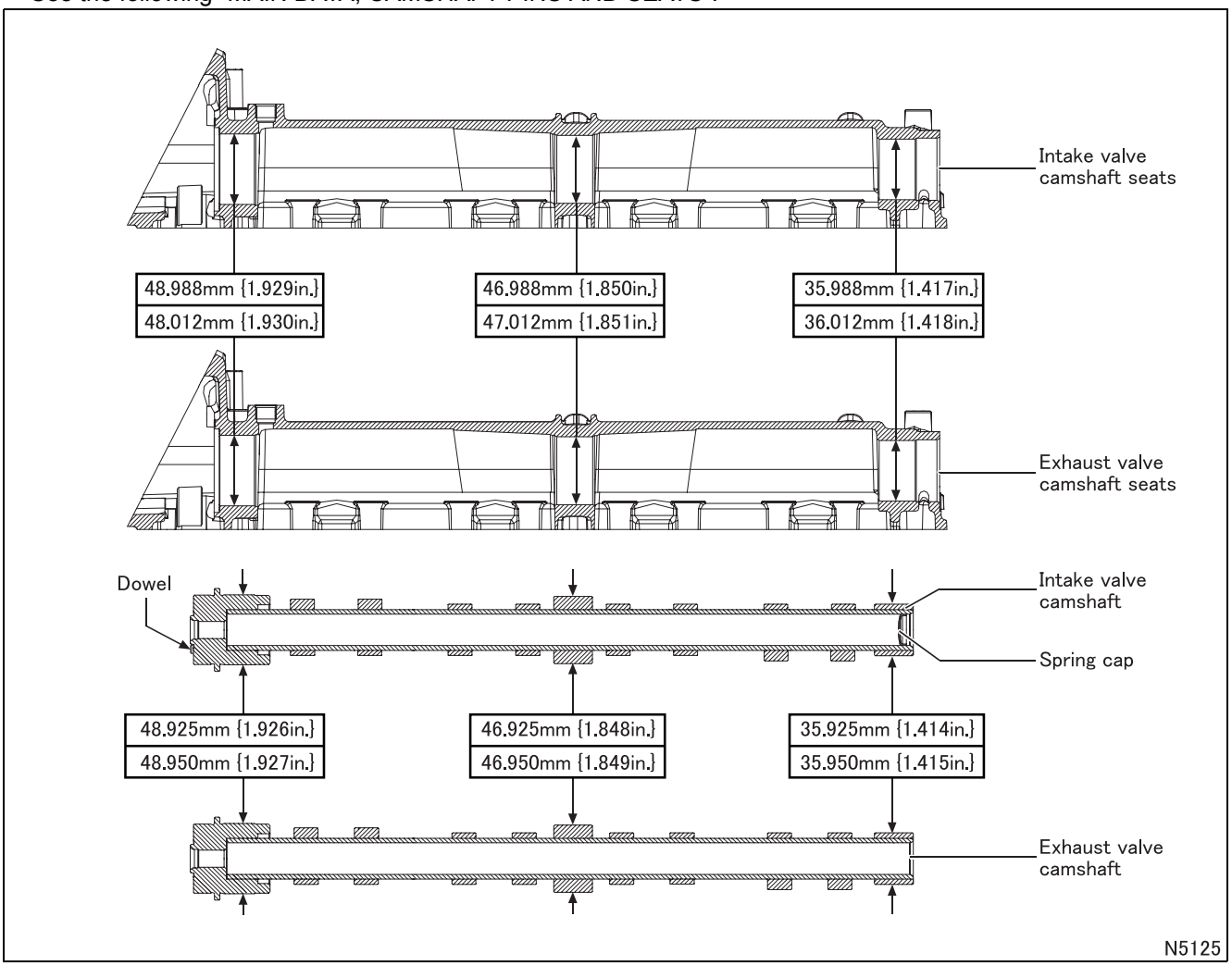

◆Installation procedure◆

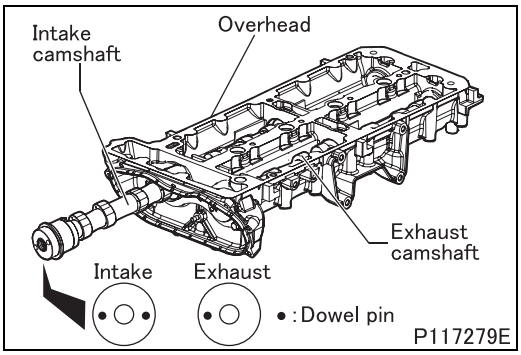

■ Installation: Camshaft

- Apply engine oil to the support pins of the intake camshaft and exhaust camshafts, and install the camshaft on the overhead.
- During this work, do not change over the mounting positions of the shafts.
  The intake camshaft can be identified by the number of dowel pins on the front face. (intake: 2 dowel pins, exhaust: 1 dowel pin) Be careful not to damage the support seat of the overhead shaft.

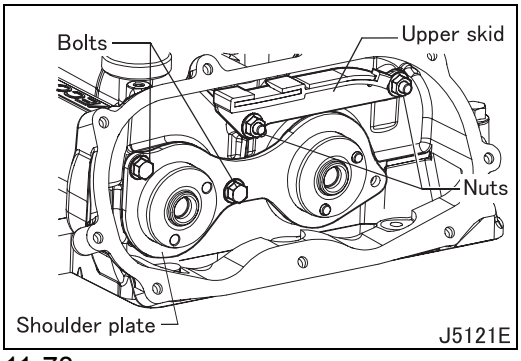

- Install the upper skid using a tightening torque of 10 N·m {7.4 ft.lbs, 1.0 kgf·m}.
- Install a new shoulder plate using a torque of 10 N·m {7.4 ft.lbs, 10 kgf·m}.

https://truckmanualshub.com/

Cylinder head

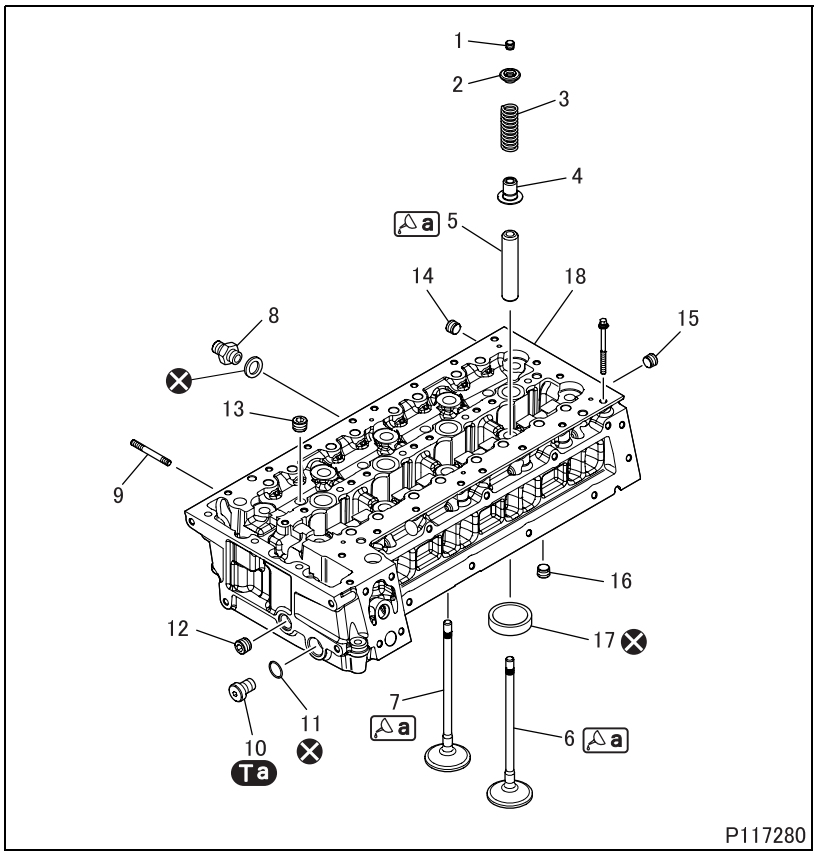

● Disassembly sequence

1 Cotters
2 Retainer
3 Spring
4 Stem seal
5 Valve guide
6 Intake valve
7 Exhaust valve
8 Connector
9 Stud
10 Lock plug
11 Gasket
12 Taper plug (diam: 1/2”)
13 Taper plug (diam: 3/8”)
14 Taper plug (diam: 1/8”)
15 Taper plug (diam: 1/4”)
16 Taper plug (diam: 1/2”)
17 Valve seat
18 Cylinder head

⊗: Non-reusable parts

● Assembly sequence

Follow the disassembly sequence in reverse.

Service standards (Unit: mm {in.})

Location	Maintenance item		Standard value	Limit	Remedy
–	Protrusion	Injector	–0.10 to +0.20 {–0.0039 to +0.0079}	–	Reface
		Glow plug	3.77 ± 0.30 {0.15 ± 0.012}	–	Reface
3	Valve spring height	Free spring	55.05 {2.17}	–	Replace
		Load of N320 ± 16	45 {1.77}	–	Replace
		Load of N657 ± 30	35 {1.38}	–	Replace
5	Valve guide	Inside diameter	6.023 to 6.038 {0.237 to 0.238}	–	Reface or replace
		Outside diameter	10.028 to 10.039 {0.394 to 0.395}	–	Reface or replace
5, 6, 7	Clearance between valve stem and valve guide	Intake	0.023 to 0.053 {0.00091 to 0.0023}	–	Inspect
		Exhaust	0.033 to 0.063 {0.0013 to 0.0025}	–	Replace
5, 18	Interference between valve guide and seats on cylinder head		0.028 to 0.059 {0.0011 to 0.0023}	–	Replace
6	Intake valve	Stem outside diameter	5.985 to 6.000 {0.235 to 0.236}	–	Replace
		Seat angle	60° ± 7’	–	Reface
6, 7	Valve recessing (intake and exhaust)		0.475 to 0.5250 {0.019 to 0.021}	–	Inspect
	Valve centering error		–	0.03 {0.0012}	Replace

https://truckmanualshub.com/

OVERHEAD, CYLINDER HEAD

Location	Maintenance item		Standard value	Limit	Remedy
7	Exhaust valve	Stem outside diameter	5.975 to 5.990 {0.235 to 0.236}	–	Replace
		Seat angle	60° ± 7’	–	Reface
17	Valve seats (intake and exhaust)	Outside diameter	34.595 to 34.610 {1.362 to 1.363}	–	Replace
		Angle	59.5 ± 0.5°	–	Replace
17, 18	Interference between valve seat and cylinder head		0.08 to 0.12 {0.0031 to 0.0047}	–	Replace
18	Cylinder head	Deformation of mating surface	–	0.20 {0.0079}	Reface or replace
		Thickness from top to bottom	112 ± 0.1 {4.41 ± 0.0039}	111.8 {4.40}	
	Inside diameter of seat on cylinder head for valve seat (intake and exhaust)		34.490 to 34.515 {1.358 to 1.359}	–	Replace
	Inside diameter of valve guide seat		9.980 to 10.000 {0.392 to 0.394}	–	Replace

Tightening torque (Unit: N·m {ft.lbs, kgf·m})

Mark	Parts to be tightened	Tightening torque	Remarks
Ta	Rubber cap	25 {18, 2.5}	–

Lubricant and/or sealant

Mark	Points of application	Specified lubricant and/or sealant	Quantity
a	Valve guide	Engine oil	As required
	Stem of intake valve and exhaust valve		

Special tools

Mark	Tool name and shape	Part No.	Application
Ca	Lifter, valve 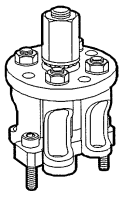 99360260	MH063966	Tool for removing and refitting valves
Cb	Injector support seat cutter 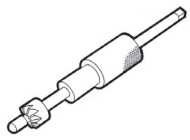 99304038	MH064257	Cleaning of injector seat surface
Cc	Base, dial gauge 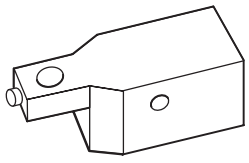 99370415	MH063971	Measurement for piston protrusion, etc.

https://truckmanualshub.com/

◆Removal procedure◆

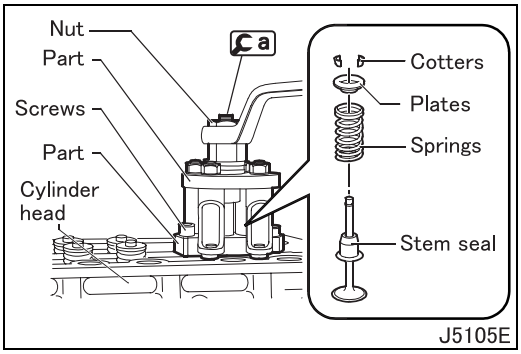

■ Removal: Valve

- Install part of a onto the cylinder head and secure it with the screws.
- Install part of a onto part, screw down the nut so that on compressing the springs it is possible to remove the cotters. Then take out the plates and the springs.
- Using suitable pliers, remove the stem seal.
- Repeat these operations on the remaining valves.
- Turn the cylinder head over.

◆Inspection procedure◆

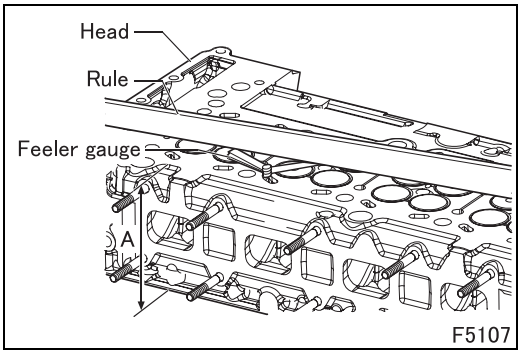

■ Inspection: Cylinder head deformation of mating surface

- The mating surface of the head with the cylinder block is checked using a rule and a feeler gauge.
- The deformation found on the entire length of the cylinder head must be no greater than 0.2 mm {0.0079 in.}.
- The nominal thickness A of the cylinder head is 112 ± 0.1 mm {4.41 ± 0.0039 in.}; the maximum permissible removal of metal must not exceed a thickness of 0.2 mm {0.0079 in.}.
- After regrinding, check the valve recessing and if necessary regrind the valve seats to make the prescribed valve recessing.

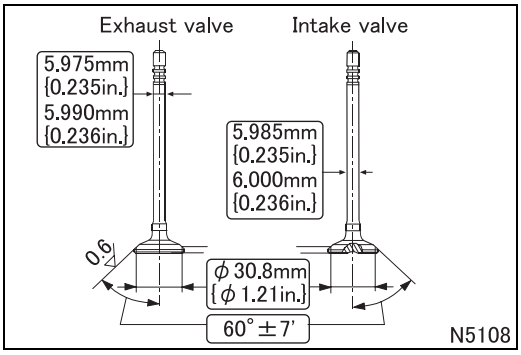

■ Inspection: Intake valve, exhaust valve

(1) Visual inspection

- Remove the carbon deposits on the valves with a wire brush. Check that the valves show no signs of seizure, cracking or burning.

(2) Stem outside diameter

- Replace the valve stem if the measured value is not within the standard value range.

(3) Valve seat angle

- Replace the valve seat if the measured value is not within the standard value range.

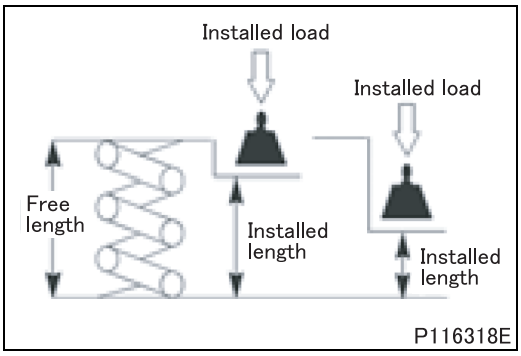

■Inspection: Valve spring

(1) Free length

Standard value: 55.05 mm {2.17 in.}

- If the measurement is out of the standard value, replace the valve spring.

(2) Installed load (installed length)

Standard value: 45 mm {1.77 in.} 320 ± 16 N {72 ± 3.6 lbs, 32.6 ± 1.6 kgf}
: 35 mm {1.38 in.} 657 ± 30 N {145 ± 6.7 lbs, 67.0 ± 3.1 kgf}

- If the measurement is out of the standard value, correct the valve.

https://truckmanualshub.com/

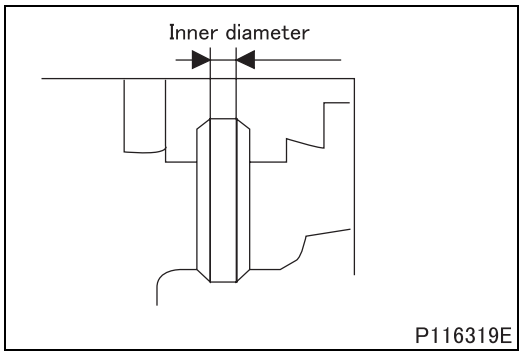

■**Inspection: Valve guide inner diameter**

- Measure the valve guide inner diameter using a small hole diameter gauge.
  Standard value: 6.023 to 6.038 mm {0.237 to 0.238 in.}
- If the measurement is out of the standard value, replace the valve guide.

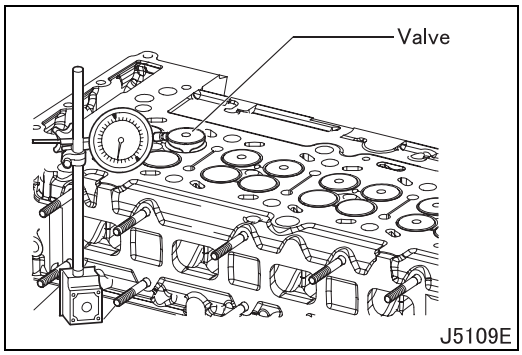

■ **Inspection: Clearance between valve stem and valve guide and centering valves**

- The checks are made using [C] with a magnetic base, positioned as illustrated.
- The assembly clearance is 0.033 to 0.063 mm {0.0013 to 0.0025 in.}.
  Rotate the valve, check that the centering error is no greater than 0.03 mm {0.0012 in.}.
- If measurement is not within the standard value range or exceeds the limit, replace the defective parts.

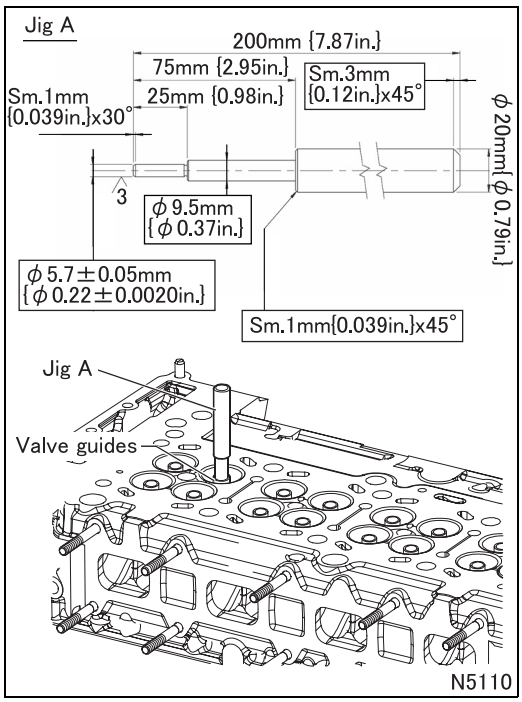

■ **Replacement of valve guide**

[Removal]

- Make the fixture jig A as shown in the illustration.
- Remove the valve guides with the drift jig A.

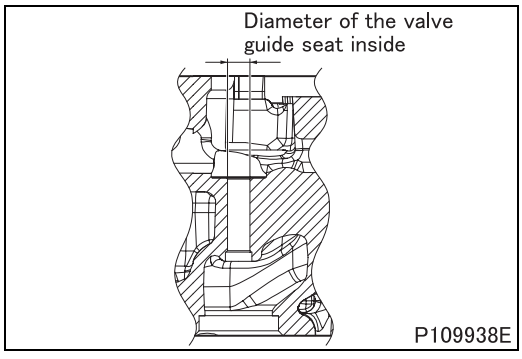

[Installation]

- Measure the diameter of the valve guide seat inside in the cylinder head.

Standard value of valve guides–Seats

Valve guide seat inside φ	9.980 to 10.000 mm {0.393 to 0.394 in.}
Valve guide outside φ	10.028 mm to 10.039 mm {0.394 to 0.395 in.}

https://truckmanualshub.com/

- If the measurement is not within the standard value, select an oversized valve guide from the table below.
- Recondition the valve guide mounting hole to the diameter corresponding to the diameter of the selected oversized valve guide.

Unit: mm {in.}

Available oversize	0.05 {0.002}	0.1 {0.0039}	0.25 {0.0098}
Valve guide outside diameter	10.078 to 10.089 {0.396 to 0.397}	10.128 to 10.139 {0.398 to 0.399}	10.278 to 10.289 {0.404 to 0.405}

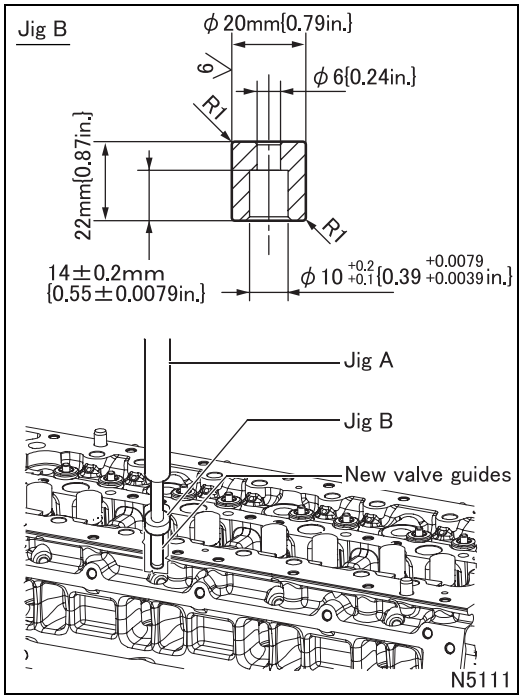

- Make the fixture jig B as shown in the illustration.
- Warm up the cylinder head to 80 to 100°C {176 to 212°F} and, by means of beater jig A fitted with element jig B, fit the new valve guides previously lubricated with engine oil. Driving force 4.2 to 12 kN {945 to 2700 lbs, 430 to 1250 kgf}.

- Measurement to be made after driving in the valve guides.

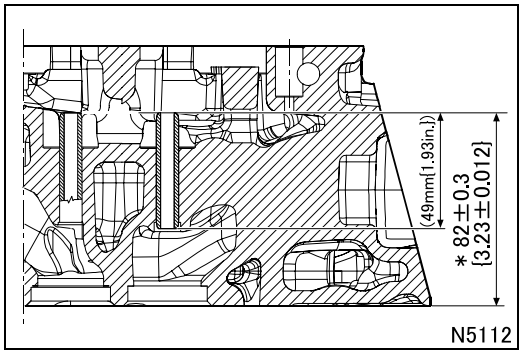

- If the above mentioned tools are not available, fit the valve guides by positioning them in the cylinder head according to the value shown in figure.

https://truckmanualshub.com/

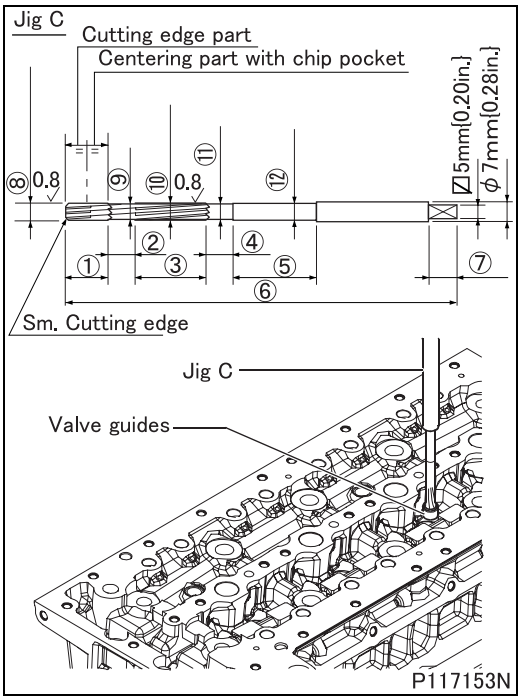

Refacing the valve guide

- Make the fixture jig C as shown in the illustration.
- After driving in the valve guides, regrind them with the smoother jig C.

(1) 15 mm {0.59 in.}
(2) 10 mm {0.39 in.}
(3) 25 mm {0.98 in.}
(4) 10 mm {0.39 in.}
(5) 30 mm {1.18 in.}
(6) 140 mm {5.51 in.}
(7) 10 mm {0.39 in.}
(8) ϕ5.9 ± 0.05 mm {0.23 ± 0.0020 in.}
(9) ϕ5.5 mm {0.22 in.}
(10) $6.03\ ^{+0}_{+0.005}$ mm {$0.24\ ^{+0}_{+0.00020}$ in.}
(11) ϕ5.5 mm {0.22 in.}
(12) ϕ5.95 mm {0.24 in.}

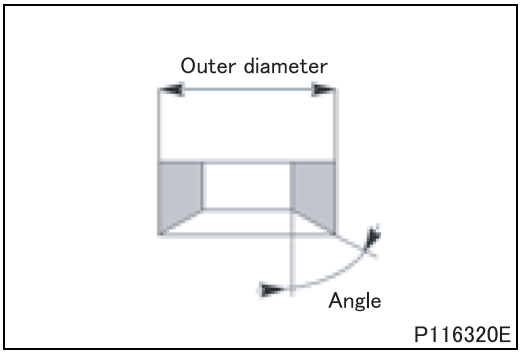

■Inspection: Valve seat (when replaced with a new part)

(1) Outer diameter

Standard value: 34.595 to 34.610 mm {1.362 to 1.363 in.}

- If the measurement is out of the standard value, replace the valve seat.

(2) Angle

Standard value: 59.5 ± 0.5°

- If the measurement is out of the standard value, replace the valve seat.

■ Inspection: Valve seat

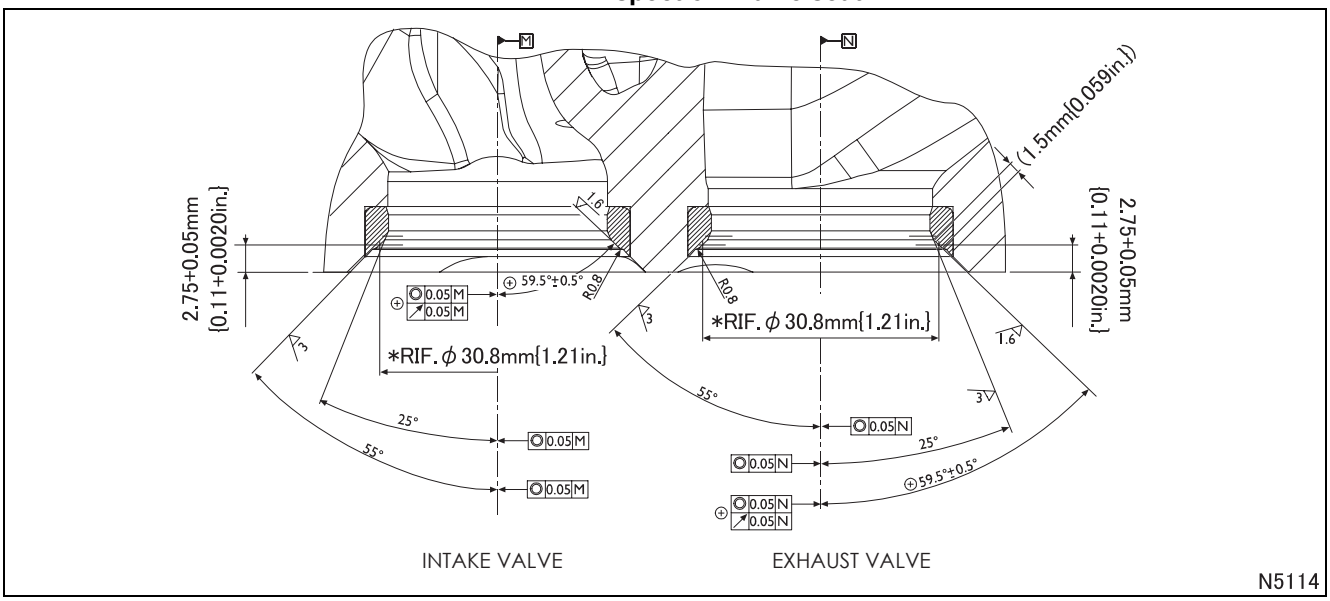

https://truckmanualshub.com/

- Check the valve seats. On finding any slight scoring or burns, regrind them with an appropriate tool according to the angles given in figure.
- Having to replace them, with the same tool and taking care not to affect the cylinder head, remove as much material from the valve seats as possible until, with a punch, it is possible to extract them from the cylinder head.
- Heat the cylinder head to 80 to 100°C {176 to 212°F} and, using a suitable drift, fit in it the new valve seats, previously chilled in liquid nitrogen.
- Using a specific tool, regrind the valve seats according to the angles given in figure.
- Mount the valves, block the seat of the electro-injectors and glow plugs; using a suitable tool, check the seal of the valves/seats.

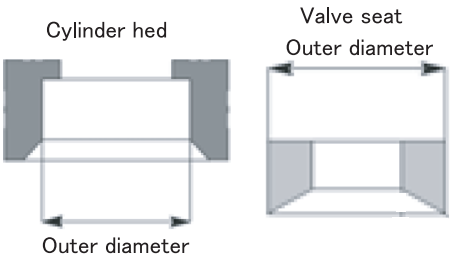

P116321E

■**Clearance between valve seat and cylinder head**

Standard value: 0.08 to 0.12 mm {0.0031 to 0.0047 in.}

- If the measurement is out of the standard value, replace defective parts.

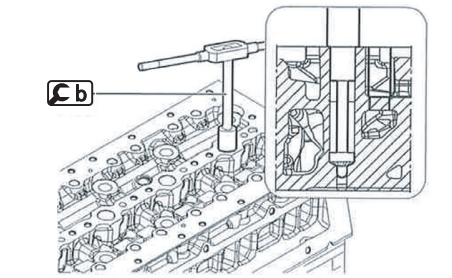

116333

■**Inspection: Injector support seat**

- Check the injector support seat for carbon deposits.
- If carbon deposits are present, clean the injector support seat using b.

CAUTION ⚠

- **Never grind the aluminum surface of the injector support seat.**

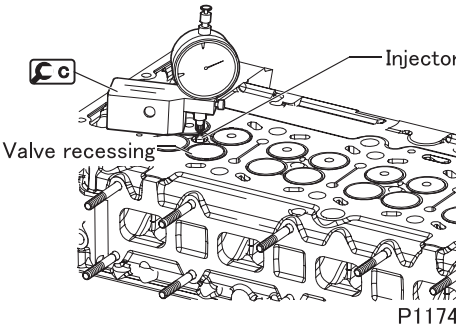

P117412E

■ **Inspection: Valve recessing, protrusion of injector and glow plug**

- Using dial gauge and relevant base c, check that, from the plane of the cylinder head, the valve recessing and the protrusion of the injector and of the glow plug have the prescribed value.
  - Valve recessing: 0.475 to 0.5250 mm {0.019 to 0.021 in.}
  - Injector protrusion: –0.10 to +0.20 mm {–0.0039 to 0.0079 in.}
  - Glow plug protrusion: 3.77 ± 0.30 mm {0.15 ± 0.012 in.}
- If the measurement is not within the standard value range, replace the defective parts.

https://truckmanualshub.com/

◆Installation procedure◆

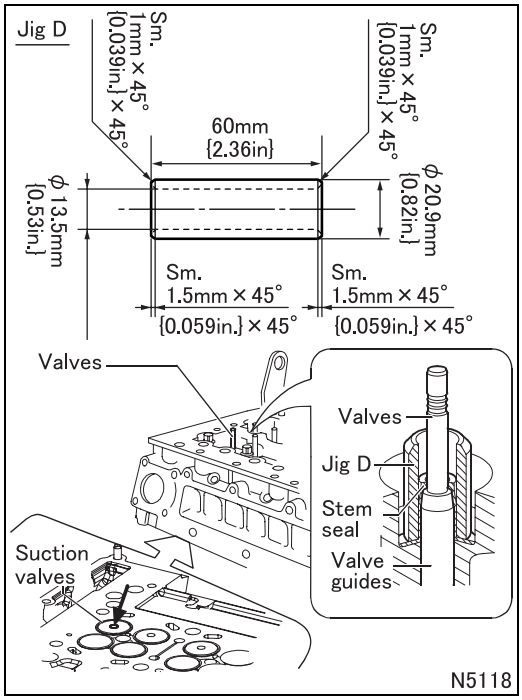

■ **Installation: Valve**

- Make a fixture jig D as shown in the illustration.
- Lubricate the stem of the valves and insert them into the associated valve guides according to the position marked during removal. Using jig D, mount the stem seals on the valve guides.

NOTE

- **The intake valves are different from the exhaust ones for a dimple (→) in the center of the valve head.**

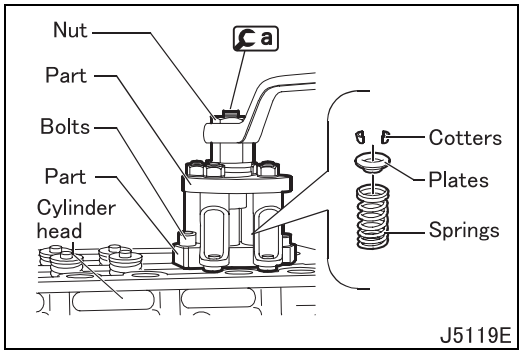

- Position the springs and plates on the cylinder head.
- Install the part of a onto the cylinder head and secure it with the screws.
- Install the part of a onto part, screw down the nut so that by compressing the springs it is possible to insert the retaining cotters; then unscrew the nut checking that the cotters have settled in correctly.
- Repeat these operations on the remaining valves.

https://truckmanualshub.com/

M E M O

https://truckmanualshub.com/

PISTON AND CONNECTING ROD

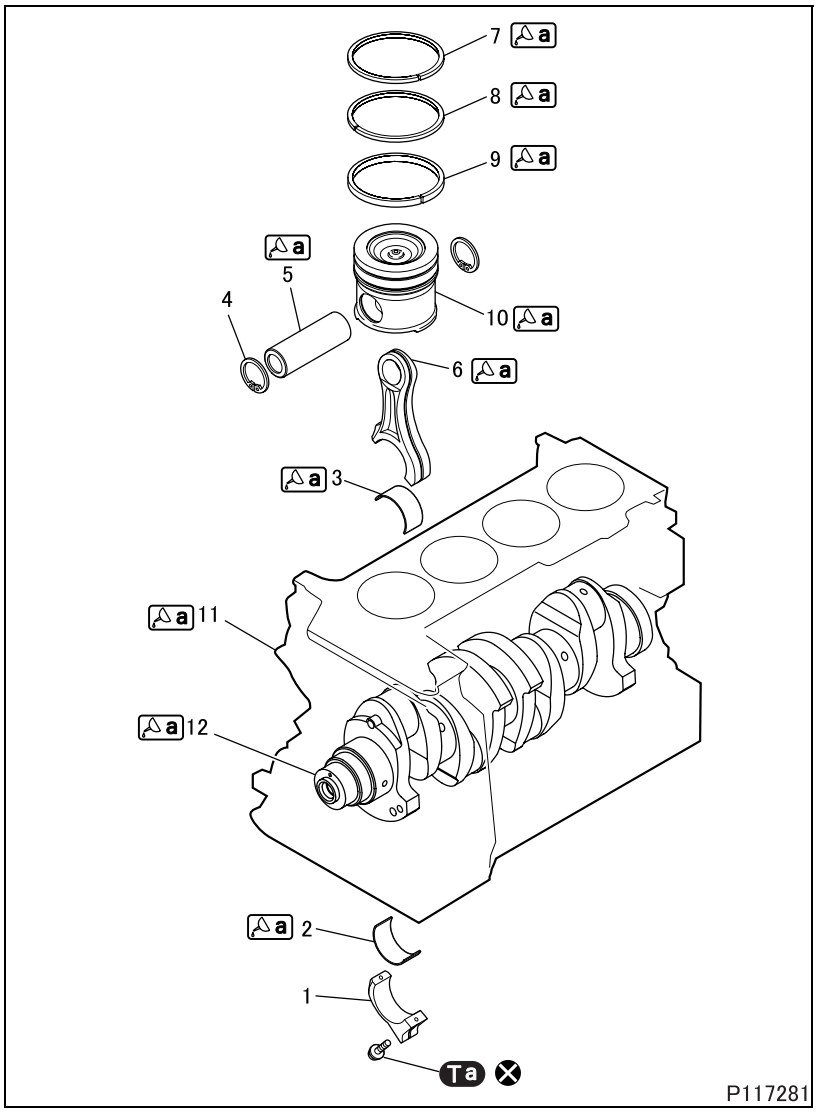

● **Removal sequences**

1 Connecting rod cap
2 Lower connecting rod bearing
3 Upper connecting rod bearing
4 Snap pin
5 Piston pin
6 Connecting rod
7 1st ring
8 2nd ring
9 Oil ring
10 Piston

***a**: Crankcase
***b**: Crankshaft
⊗: Non-reusable parts

● **Installation sequence**

Follow the disassembly sequence in reverse.

Service standards (Unit: mm {in.})

Location	Maintenance item	Standard value	Limit	Remedy
1	Upper rod half bearing thickness	1.882 to 1.892 {0.0741 to 0.0745}	–	Replace
1, 2, 3, 6, *b	Bearing shells to crankpins clearance	0.035 to 0.083 {0.0014 to 0.0033}	–	Replace
1, 6	Connecting rod bearing seat	67.833 to 67.848 {2.670 to 2.671}	–	Replace
3	Lower rod half bearing thickness	1.878 to 1.888 {0.073 to 0.074}	–	Replace
5	Piston pin outside diameter	35.990 to 35.996 {1.416 to 1.417}	–	Replace
5, 6	Piston pin to connecting rod bushing clearance	0.014 to 0.030 {0.00055 to 0.0012}	–	Replace
5, 10	Piston pin to pin clearance	0.07 to 0.019 {0.0028 to 0.00075}	–	Replace

https://truckmanualshub.com/

Location	Maintenance item		Standard value	Limit	Remedy
7 to 9	Piston ring thickness	1st ring (measured at 1.5 {0.059} from external diameter)	2.068 to 2.097 {0.081 to 0.083}	–	Replace
		2nd ring	1.970 to 1.990 {0.077 to 0.078}	–	Replace
		Oil ring	2.470 to 2.495 {0.097 to 0.098}	–	Replace
	Piston ring end opening in cylinder liner	1st ring	0.20 to 0.35 {0.0079 to 0.014}	–	Replace
		2nd ring	0.60 to 0.80 {0.024 to 0.031}	–	Replace
		Oil ring	0.30 to 0.60 {0.012 to 0.024}	–	Replace
7 to 10	Piston ring to slots clearance	1st ring	0.103 to 0.162 {0.0041 to 0.064}	–	Replace
		2nd ring	0.060 to 0.100 {0.0024 to 0.0039}	–	Replace
		Oil ring	0.045 to 0.090 {0.0018 to 0.0035}	–	Replace
10	Piston ring slots width	1st ring (measured on ϕ92.8 {ϕ3.65})	2.200 to 2.230 {0.087 to 0.088}	–	Replace
		2nd ring	2.050 to 2.070 {0.0807 to 0.0815}	–	Replace
		Oil ring	2.540 to 2.560 {0.100 to 0.101}	–	Replace
	Piston outside diameter (measured at 10 {0.39} from bottom of piston)	Class A	95.705 to 95.715 {3.7679 to 3.7683}	–	Replace
		Class B	95.715 to 95.725 {3.7683 to 3.7687}	–	Replace
	Pistons seat diameter for pin		36.003 to 36.009 {1.4174 to 1.4177}	–	Replace
10, *a	Piston protrusion from crankcase		0.3 to 0.6 {0.012 to 0.024}	–	Replace

Tightening torque (Unit: N·m {ft.lbs, kgf·m})

Mark	Parts to be tightened	Tightening torque	Remarks
Ta	Screw (connecting rod cap mounting)	50 {37, 5.1} + 70°	–

Lubricant and/or sealant

Mark	Points of application	Specified lubricant and/or sealant	Quantity
a	Piston pin outside surface	Engine oil	As required
	Piston outside surface		
	Piston ring		
	Cylinder liner of the crankcase		
	Connecting rod bearing inside surface		

https://truckmanualshub.com/

PISTON AND CONNECTING ROD

Special tools

Mark	Tool name and shape	Part No.	Application
a	Base, dial gauge 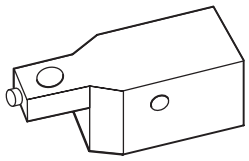 99370415	MH063971	Dial gauge base for various measurements
b	Piston clamp (60 to 125 mm {2.36 to 4.92 in.}) 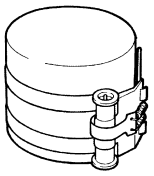 99360605	MH063992	Installation of piston to cylinder liner

◆Removal procedure◆

■ **Removal: Piston and connecting rod**

- Before removing the piston, remove carbon deposits from the inside of the cylinder so as to prevent the piston walls from becoming damaged.
- Set the piston and connecting rod assembly to the bottom dead center.
- Loosen the connecting rod cap, and rotate the engine in the vertical position.
- Remove the connecting rod cap and the lower connecting rod bearing.

CAUTION ⚠

- **After removing the connecting rod cap, be sure to place the connecting rod cap and the connecting rod bearing with their sides facing downward. If you place them with the end face downward, the connecting rod bearing assembly will be damaged. If damage occurs, it will be necessary to replace the connecting rod assembly.**

- Withdraw the piston and the connecting rod assembly from the top of the crankcase.
- Next, install the connecting rod cap and the lower connecting rod bearing on the connecting rod. During this work, confirm that there is no foreign matter on the mating faces.

CAUTION ⚠

- **After removing a piston and its connecting rod assembly, install the connecting rod cap and the bearing on the same connecting rod before removing a different connecting rod cap. During this work, ensure that no clearance occurs between the mating face to prevent these faces from being damaged.**

https://truckmanualshub.com/

- Because it is necessary to re-install all of the component parts in their original locations, make a note of the cylinder number and the front and rear directions of the engine on each connecting rod and the connecting rod cap before removing these parts. Also, after removing a connecting rod cap, make a mark using a scriber on the notch of the bearing shell to identify top and bottom, and also indicate the cylinder number.

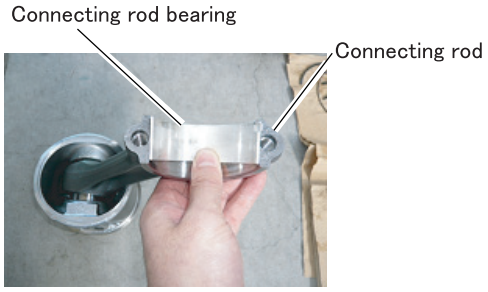

- Push the connecting rod bearing from the side, and remove the bearing from the connecting rod.

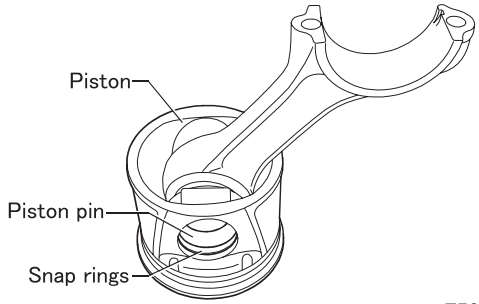

- Hold the piston with the top facing downward, and place the piston on a table.
- Using snap ring pliers, remove the snap ring from the piston.
- Slide the piston pin and remove it, then remove the connecting rod from the piston.
- Using piston ring pliers, remove the 1st ring and 2nd ring from the piston.
- Remove the oil ring by hand, and then pull out the joint core wire and remove the oil expander spring remaining on the piston side.

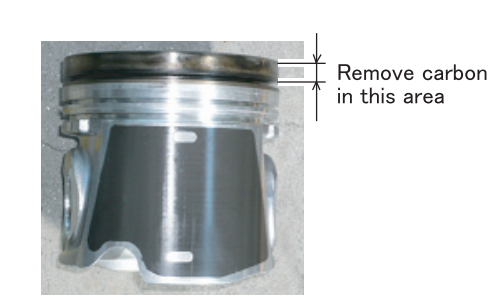

- Remove the carbon in the area shown in the drawing from the removed pistons using a carbon scraper and steel scrubbing brush.

https://truckmanualshub.com/

PISTON AND CONNECTING ROD

◆Inspection procedure◆

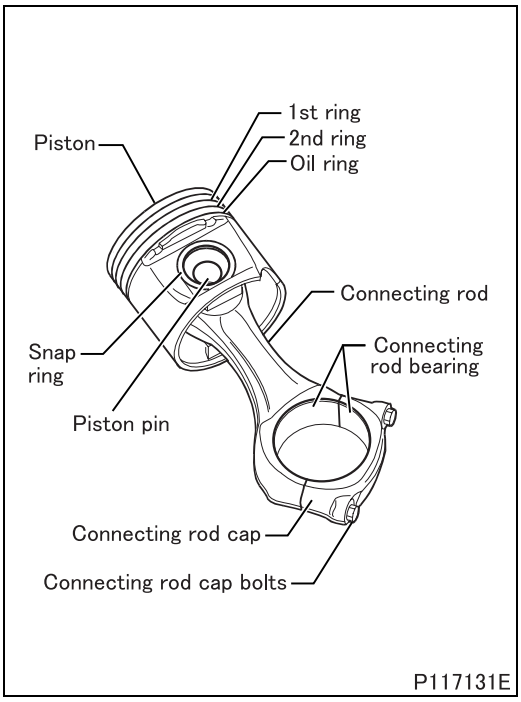

■ Inspection: Piston and connecting rod

- Check the pistons. They must show no signs of seizure, scoring, cracking or excessive wear; replace them if they do.

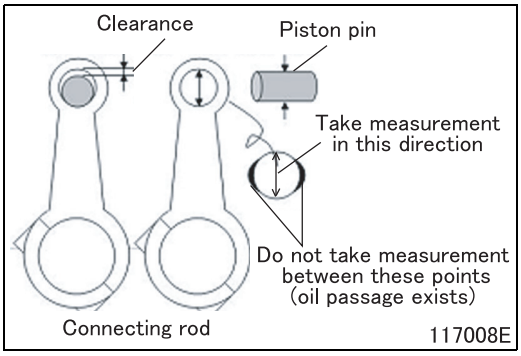

■ Inspection: Clearance between piston pin and connecting rod bushing

Standard value: 0.014 to 0.030 mm {0.00055 to 0.0012 in.}

- If the measurement is out of the standard value, replace the bushing.

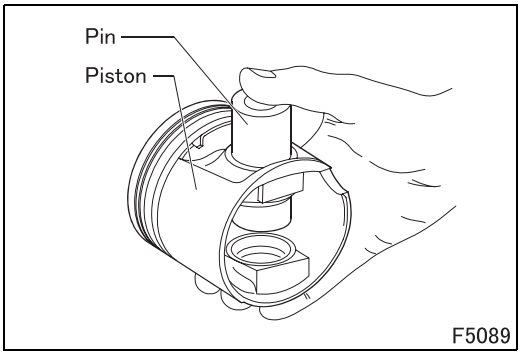

■ Inspection: Piston pin

- Lubricate the pin and its seat on the hubs of the piston with engine oil. The pin must go into the piston by lightly pressing with the fingers and must not drop out by gravity.
- If the pin drops out by gravity, replace the defective part.

https://truckmanualshub.com/

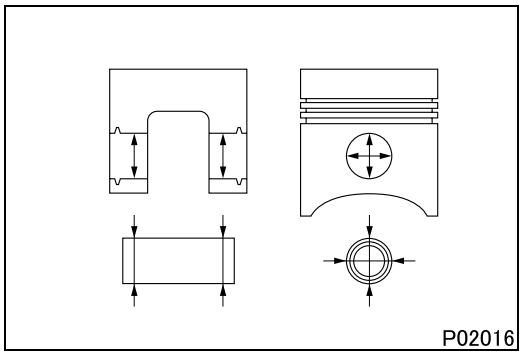
P02016

- Clearance between piston pin and piston
  Standard value: 0.07 to 0.019 mm {0.0028 to 0.00075 in.}
  - If the measurement is out of the standard value, replace defective parts.

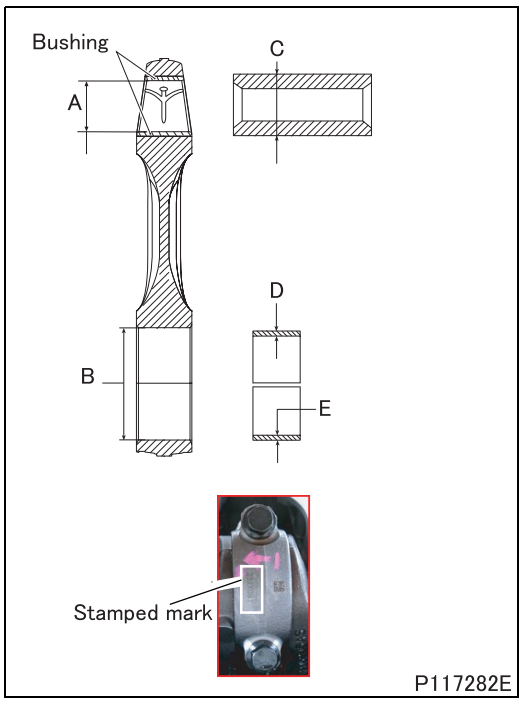

P117282E

■ **Inspection: Connecting rod and bearing**

Standard value: A = 36.010 to 36.020 mm {1.417 to 1.418 in.}
B = 67.833 to 67.848 mm {2.670 to 2.671 in.}
C = 35.990 to 35.996 mm {1.416 to 1.417 in.}
D = 1.882 to 1.892 mm {0.074 to 0.0745 in.}
E = 1.878 to 1.888 mm {0.073 to 0.074 in.}

- If the measurement is out of the standard value, replace defective parts.
- Tighten the connecting rod cap bolt to a torque of 50 N·m {37 ft.lbs, 5.0 kgf·m} when measuring dimension B.

- Each connecting rod has its cap marked with the followings.
  - A number indicating the weight class of the connecting rod mounted in production.
  - A letter: O or X indicating the diameter class of the big end mounted in production.
- In addition, it could be stamped with the number of the cylinder in which it is fitted.
  In the event of replacement it is therefore necessary to number the new connecting rod with the same number as the one replaced.
- The numbering must be done on the opposite side to the bearing shell retaining slots.
  The connecting rods are supplied as spare parts with the diameter of the big end 67.833 to 67.848 mm {2.670 to 2.671 in.} marked with the letter O and the weight class marked with the number 33.
- It is not permissible to remove material.
- Connecting rods assembled on one engine must be of the same class and the same supplier.

- Check that the bushing in the small end has not come loose and shows no sign of seizure or scoring. If it does, replace the complete connecting rod.

https://truckmanualshub.com/

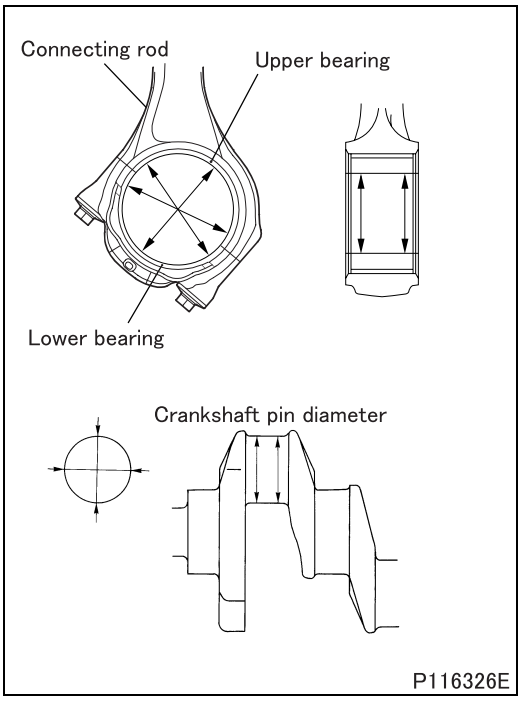

■**Inspection: Clearance (oil clearance) between connecting rod bearing (big end) and crankshaft**

- Tighten the connecting rod cap bolt to a torque of 50 N·m {37 ft.lbs, 5.0 kgf·m} when measuring the clearance.
- For the measuring method and standard value of the crankshaft, see CRANKSHAFT AND CRANKCASE.
- Measure the inner diameter of the bearing and the outer diameter of the crankshaft pin to determine the oil clearance.
  Standard value: 0.035 to 0.083 mm {0.0014 to 0.0033 in.}
- If the measurement is out of the standard value, replace defective parts.

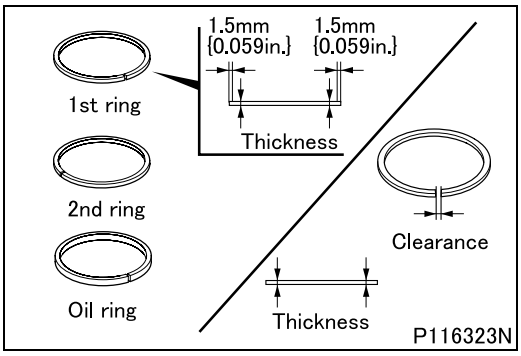

■**Inspection: Piston ring**

Standard value	1st ring	*Thickness	2.068 to 2.097 mm {0.081 to 0.083 in.}
		Clearance	0.20 to 0.35 mm {0.0079 to 0.014 in.}
	2nd ring	Thickness	1.970 to 1.990 mm {0.077 to 0.078 in.}
		Clearance	0.060 to 0.80 mm {0.024 to 0.031 in.}
	Oil ring	Thickness	2.470 to 2.495 mm {0.097 to 0.098 in.}
		Clearance	0.30 to 0.60 mm {0.012 to 0.024 in.}

- * Measure the 1st ring in the position shown in the drawing.
- If the measurement is out of the standard value, replace the piston ring.

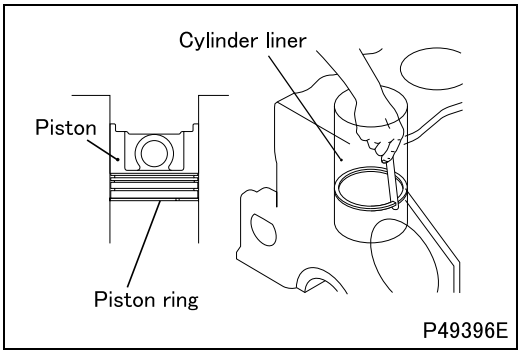

■**Inspection: Piston ring end gap**

- Using the piston head, insert the piston ring into the crankcase cylinder while keeping the ring level. The piston ring should be inserted to the lower part where cylinder wear is small.
- Measure the piston ring end gap while taking care not to allow the ring to move.

Standard value	*1st ring	0.103 to 0.162 mm {0.0041 to 0.0064 in.}
	2nd ring	0.060 to 0.100 mm {0.0024 to 0.0039 in.}
	Oil ring	0.045 to 0.090 mm {0.0018 to 0.0035 in.}

- If any of the measurements is out of the standard value, replace the piston rings as a set.

https://truckmanualshub.com/

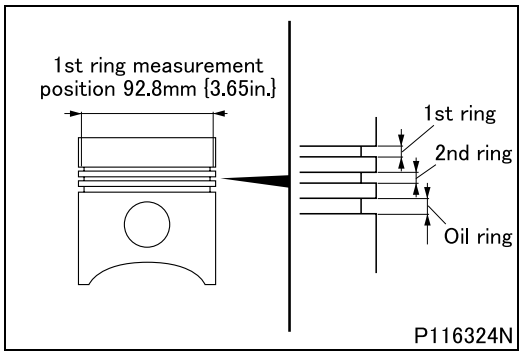

■Inspection: Piston ring groove width

- Remove carbon in the piston ring grooves before taking measurements.
- Take measurements at all around the piston ring groove circumferences.

Standard value	*1st ring	2.200 to 2.230 mm {0.087 to 0.088 in.}
	2nd ring	2.050 to 2.070 mm {0.0807 to 0.0815 in.}
	Oil ring	2.540 to 2.560 mm {0.100 to 0.101 in.}

- * Measure the 1st ring in the position shown in the drawing.
- If the measurement is out of the standard value, replace the piston.

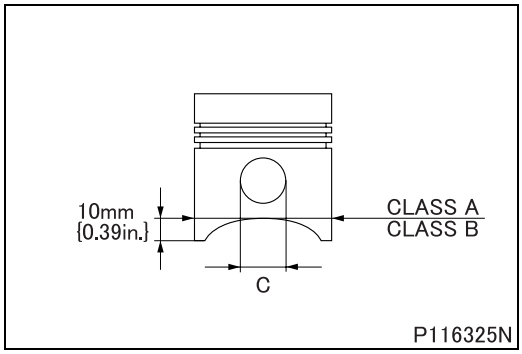

■Inspection: Piston

Standard value	CLASS A	95.705 to 95.715 mm {3.7679 to 3.7683 in.}
	CLASS B	95.715 to 95.725 mm {3.7683 to 3.7687 in.}
	C	36.003 to 36.009 mm {1.4174 to 1.4177 in.}

- If the measurement is out of the standard value, replace the piston.

◆Installation procedure◆

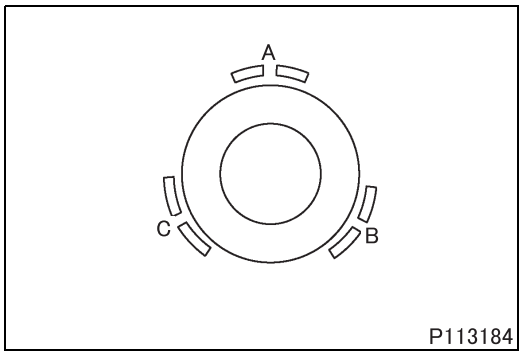

■Installation: Piston and connecting rod

- Apply engine oil to the piston rings and oil ring.
- Install the piston rings and oil ring so that the ring gaps are separated 120 degrees with each other.
- The oil ring gap and expander spring gap should be separated 180 degrees.

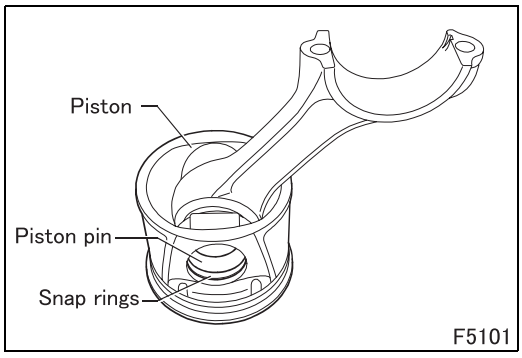

- Apply engine oil to the connecting rod and piston pin.
- Position the connecting rod on the piston, insert the piston pin and secure it with the snap rings.

https://truckmanualshub.com/

PISTON AND CONNECTING ROD

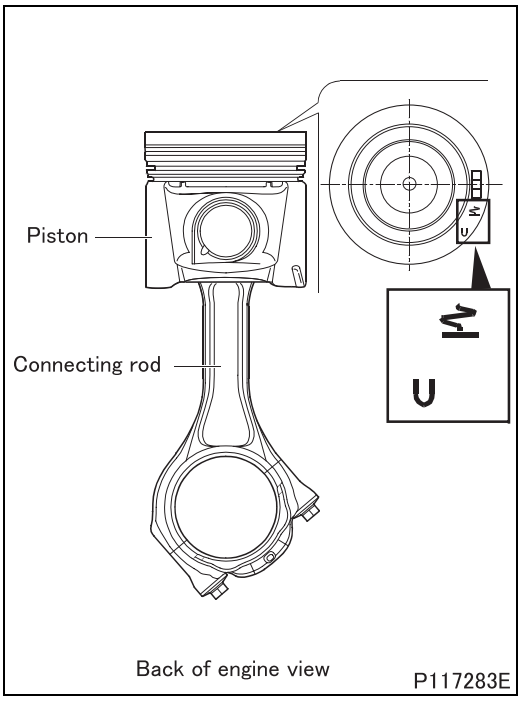

■ **Installation: Piston and connecting rod**

- Connect the piston to the connecting rod together with its cap so that the piston assembly reference, position of the connecting rod and of the cap are observed as shown in the figure.

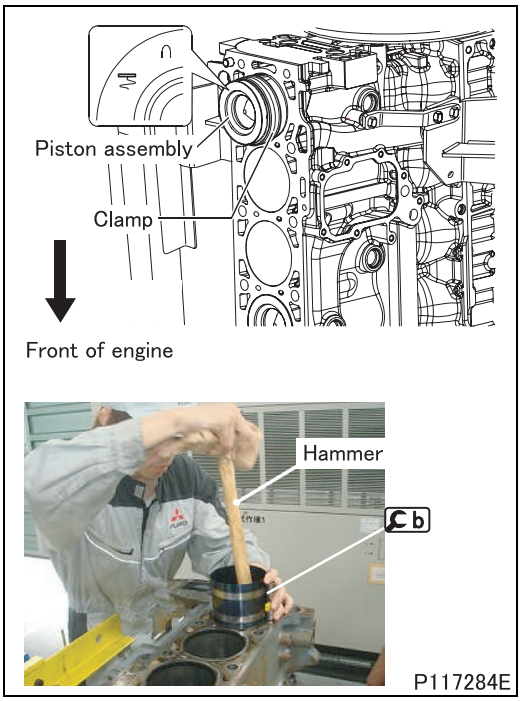

- Lubricate the pistons well, including the piston rings and the inside of the cylinder block.
  With the aid of b, fit the connecting rod – piston assembly in the cylinder block, checking that:
  - The number of each connecting rod corresponds to the cap mating number.
  - The openings of the piston rings are staggered 120° apart.
  - The pistons are all of the same weight.
  - The symbol punched on the top of the pistons faces the engine flywheel, or the recess in the skirt of the pistons tallies with the oil spray nozzles.
- If connecting rod bearings are reused, you need to fit them back in exactly the same sequence and position found on disassembly.

https://truckmanualshub.com/

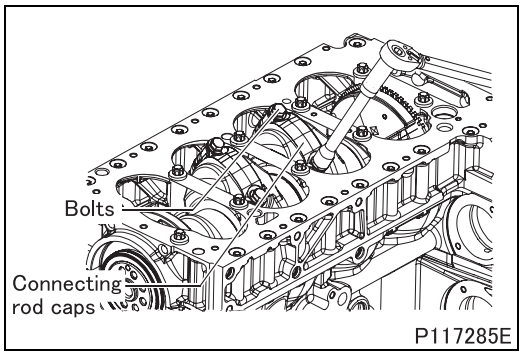

- Install the connecting rod caps with the associated bearing shells.
- The connecting rod cap fixing bolts must always be replaced for permanent assembly.

- Tighten the bolts in two steps.
  Step 1: With a torque wrench, to a torque of 50 N·m {37 ft.lbs, 5.1 kgf·m}.
  Step 2: Closing to an angle of 70°

- Manually check the connecting rod end play to ensure that the connecting rods slide axially on the pins of the crankshaft.

◆Work after installation◆

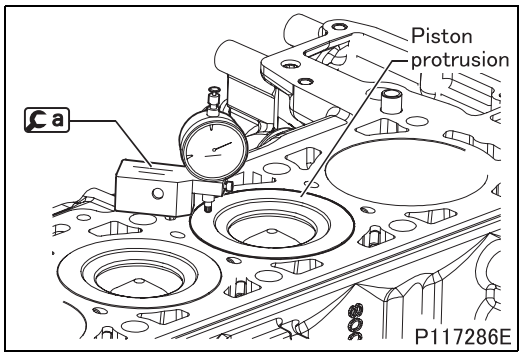

■ Inspection: Piston and connecting rod

- Compare the protrusion of piston at its top dead center with the cylinder block top surface using a.
- Measure the piston protrusion at the top dead center for all pistons.
- The difference between the minimum and maximum protrusions of the four pistons must be ≤ 0.15 mm {0.0059 in.}.

https://truckmanualshub.com/

FLYWHEEL

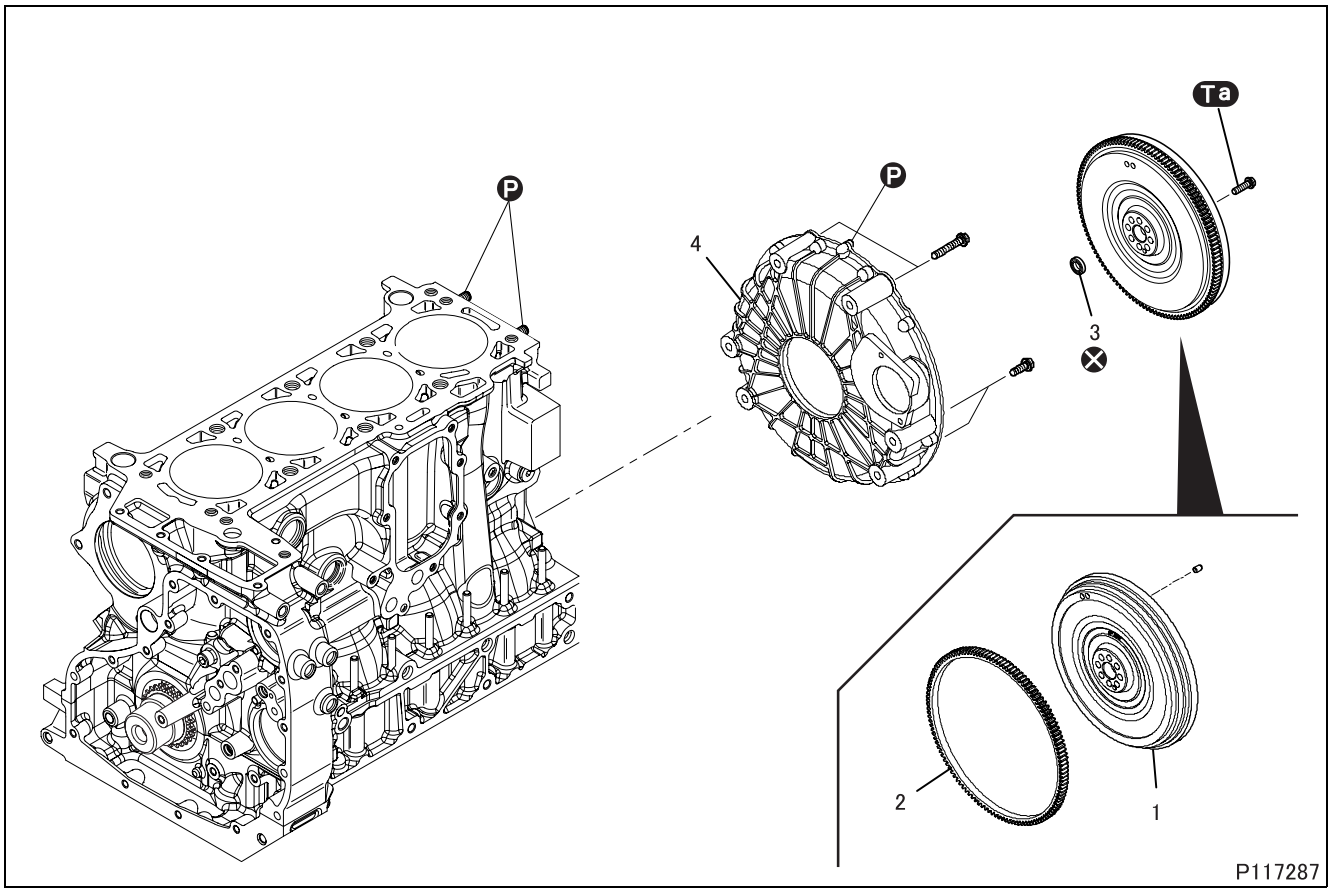

● **Disassembly sequence**

1 Flywheel
2 Ring gear
3 Bearing
4 Flywheel housing

Ⓟ: Locating pin

● **Assembly sequence**

Follow the disassembly sequence in reverse.

Tightening torques (Unit: N·m {ft.lbs, kgf·m})

Mark	Parts to be tightened	Tightening torque	Remarks
Ta	Bolt (flywheel housing mounting)	30 {22, 3.0} + 90°	–

https://truckmanualshub.com/

Special tools

Mark	Tool name and shape	Part No.	Application
ⓐ	Flywheel, retainer 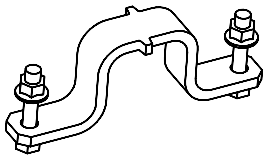 P116334	MH064205	Block rotation of the flywheel

◆Removal procedure◆

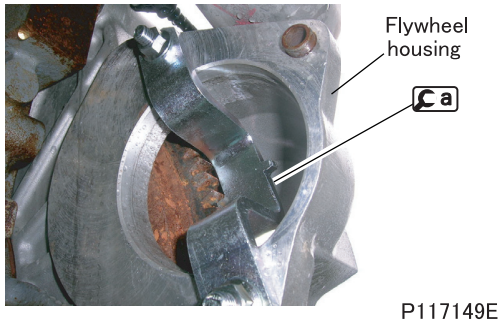

■ Removal: Engine flywheel

- Set ⓐ on the starter mount of the flywheel housing to prevent the flywheel from rotating.
- Loosen the bolts to remove the flywheel housing and flywheel.
- After removing the flywheel, check the inside of the flywheel housing for contamination. Clean the inside if it is dirty.

◆Inspection procedure◆

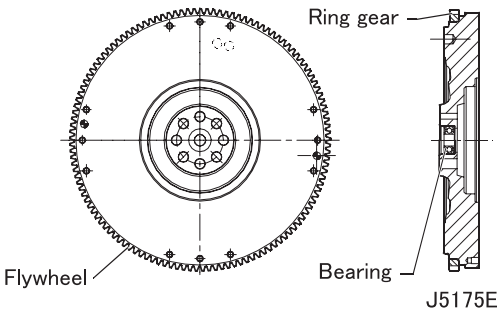

■ Inspection: Engine flywheel

(1) Visual check

- Check the clutch disc mating surface, if there are too many scratches, change the engine flywheel.

Replacing the ring gear
[Removal]

- Heat the ring gear evenly to a temperature of 200°C {392°F} using a gas burner or the like and remove it from the flywheel.

WARNING ⚠

- **Never touch heated areas to avoid burns.**

https://truckmanualshub.com/

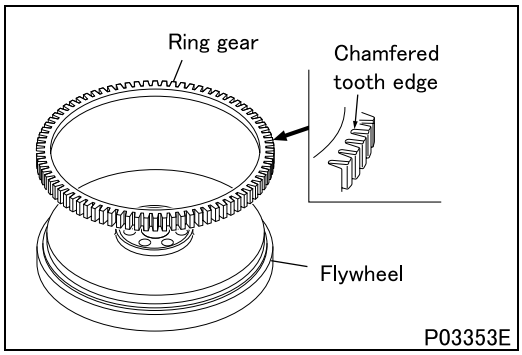

[Installation]

- Heat the ring gear evenly to a temperature of 200°C {392°F} using a gas burner or the like.

WARNING ⚠

- **Never touch heated areas to avoid burns.**

- Fit the ring gear with the side having non-chamfered teeth edges side facing the flywheel.

(2) Bearing

- Replace the bearing if damage, wear or poor rotation is observed.

◆Installation procedure◆

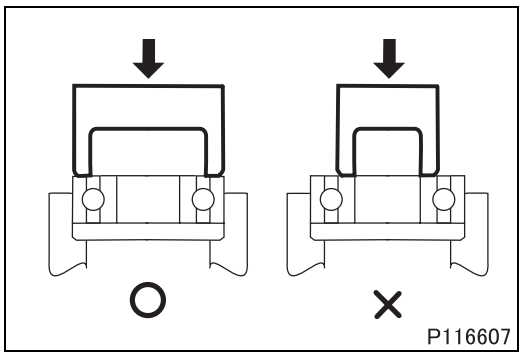

■ Installation: Bearing

- Install the bearing by setting the jig in the position shown in the drawing.

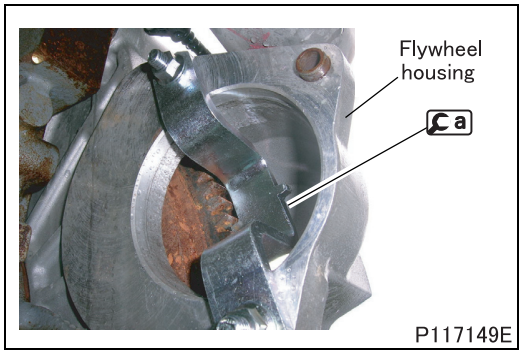

■ Installation: Engine flywheel

- Set cb on the starter mount of the flywheel housing to prevent the flywheel from rotating.
- Install the flywheel housing.

- Tighten the bolts fixing the flywheel in two steps.
  Step 1: With a torque wrench, to a torque of 30 N·m {22 ft.lbs, 3.1 kgf·m}.
  Step 2: Closing to an angle of 90°.

https://truckmanualshub.com/

M E M O

https://truckmanualshub.com/

CRANKSHAFT AND CRANKCASE

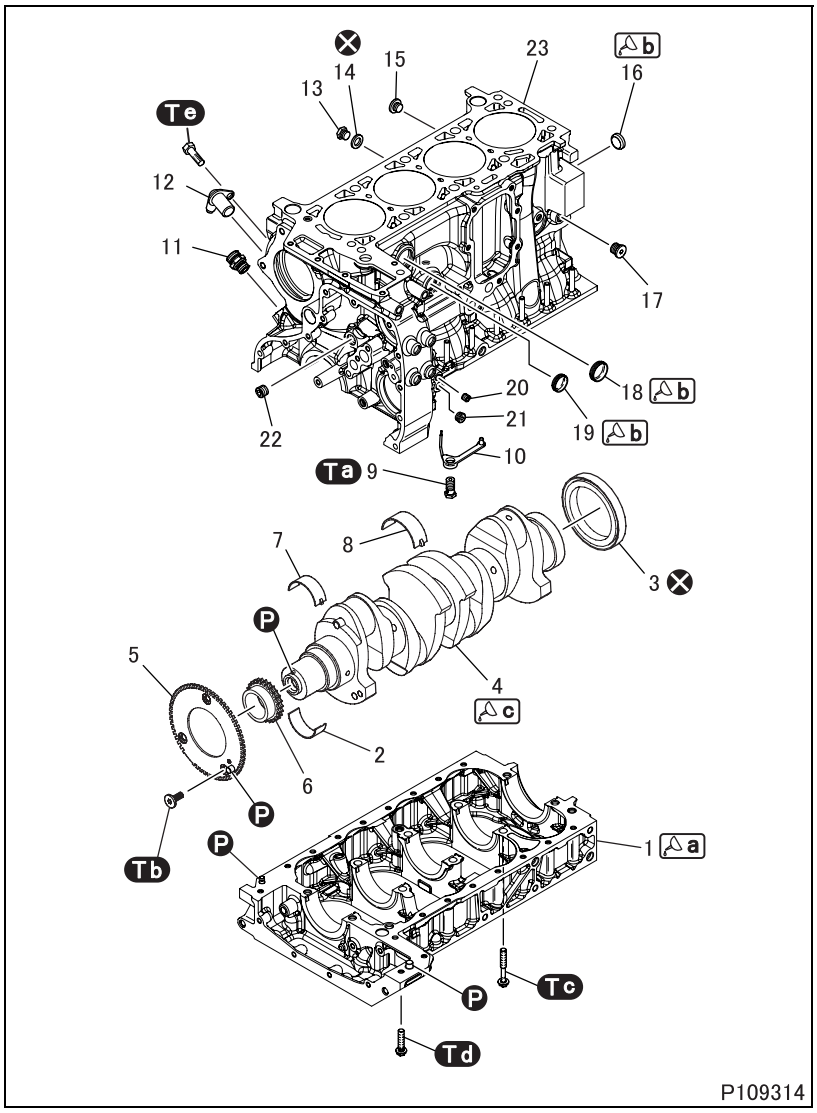

● Removal sequence

1 Lower crankcase
2 Lower main bearing
3 Rear oil seal
4 Crankshaft
5 Phonic wheel
6 Timing control gear
7 Upper main bearing
8 Central half-bearing
9 Eyebolt
10 Oil jet
11 Taper plug (diam = 1/8”)
12 Engine speed sensor
13 Taper plug (M14 × 1.5)
14 Seal gasket
15 Taper plug (M10 × 1.5)
16 Lock plug (ϕ25 mm {0.98 in.})
17 Taper plug (M14 × 1.5)
18 Lock plug (ϕ32 mm {1.26 in.})
19 Lock plug (ϕ28 mm {1.10 in.})
20 Taper plug (diam = 1/8”)
21 Taper plug (M14 × 1.5)
22 Taper plug (diam = 3/8”)
23 Upper crankcase

Ⓟ: Locating pin
⊗: Non-reusable parts

● Installation sequence

Follow the removal sequence in reverse, except the following sequence.
4→2→1→3

Service standards (Unit: mm {in.})

Location	Maintenance item		Standard value	Limit	Remedy
–	Crankshaft end play		0.010 to 0.210 {0.00039 to 0.083}	–	Rectify or replace
1, 23	Inside diameter of main bearing housing	No. 1, 2, 3, 4	80.588 to 80.614 {3.1727 to 3.1738}	–	Replace
		No. 5	87.588 to 87.614 {3.4483 to 3.4494}	–	
	Main bearing housing width for shoulder		27.290 to 27.340 {1.074 to 1.076}	–	Replace
2, 7	Main bearing shell thickness		2.165 to 2.174 {0.0852 to 0.0855}	–	Replace
	Bearing shells to main journals clearance		0.032 to 0.102 {0.0013 to 0.0040}		
4	Main journal width for shoulder		32.500 to 32.550 {1.280 to 1.281}	–	Replace

https://truckmanualshub.com/

Tightening torque (Unit: N·m {ft.lbs, kgf·m})

Mark	Parts to be tightened	Tightening torque	Remarks
Ta	Eyebolt (oil jet mounting)	25 {18, 2.5}	–
Tb	Bolt (phonic wheel mounting)	10 ± 1 {7.4 ± 0.1, 1.0 ± 0.1}	–
Tc	Bolt (crankcase base mounting)	50 {37, 5.0} + 60° + 60°	–
Td	Bolt (crankcase base mounting)	26 {19, 2.6}	–
Te	Bolt (engine speed sensor mounting)	10 {7.4, 0.1}	–

Lubricant and/or sealant

Mark	Points of application	Specified lubricant and/or sealant	Quantity
a	Crankcase mounting surface of crankcase base	Loctite 510	As required
b	Lock plug	Loctite 263	As required
c	Rear shank of the crankshaft	Engine oil	As required

Special tools

Mark	Tool name and shape	Part No.	Application
Ca	Rear oil seal installer 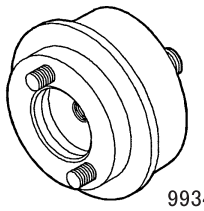 99346259	MH063963	Installation of rear oil seal

Bearing shells to main journals clearance is 0.032 to 0.102 mm {0.0013 to 0.0040 in.}.

◆Work before disassembly◆

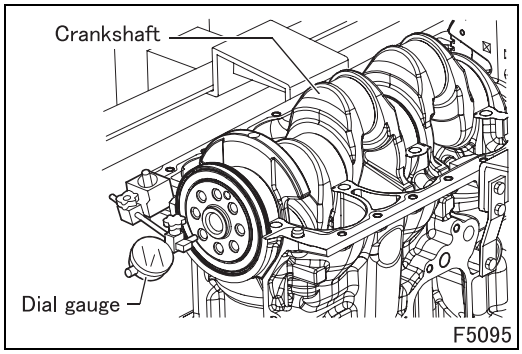

■ Crankshaft end play

- With the crankshaft installed, check the following item.
- The end play is checked by setting a dial gauge with a magnetic base on the crankshaft as shown in the figure. The normal assembly clearance is 0.010 to 0.210 mm {0.00039 to 0.0083 in.}.
- If you find the clearance to be greater than as required, replace the central half-bearing shells carrying the thrust bearings and repeat the clearance check between the crankshaft pins and the main bearing shells. Bearing shells to main journals clearance is 0.032 to 0.102 mm {0.0013 to 0.0040 in.}.
- If the end play of the crankshaft does not come within the prescribed values, it is necessary to grind the crankshaft and accordingly change the main bearing shells.

NOTE

- **The central half-bearing has half thrust washers integrated in it, so it performs the function of a thrust bearing. It is supplied as a spare part only with the normal shoulder thickness.**

https://truckmanualshub.com/

◆Removal procedure◆

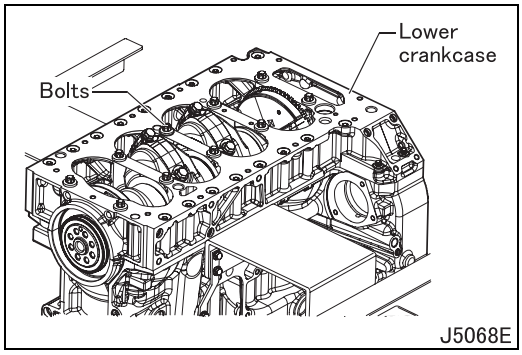

■ **Removal: Lower crankcase**

- Remove the bolts and take off the crankcase.

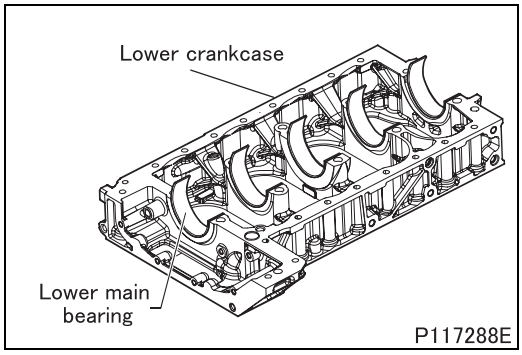

■ **Removal: Lower main bearing**

- If the lower main bearing is reused, make a note of its assembly position since it needs to be installed in the original position before removal.

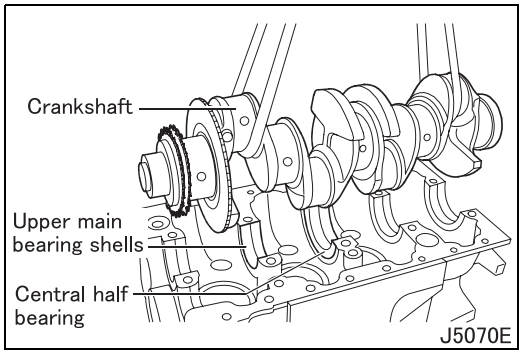

■ **Removal: Crankshaft, upper main bearing, central half-bearing**

- With the aid of a hoist and a rope, remove the crankshaft.
- Note the assembly position of the top main bearing shells since, if they are reused, they will need to be fitted in the position found during removal.
- The central half-bearing is fitted with shoulder half-rings.

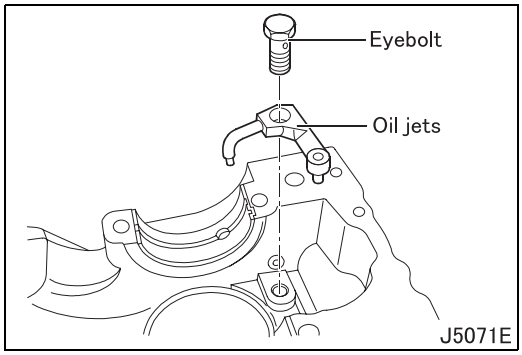

■ **Removal: Oil jet**

- Take out the eyebolts and remove the oil jets.

https://truckmanualshub.com/

◆Inspection procedure◆

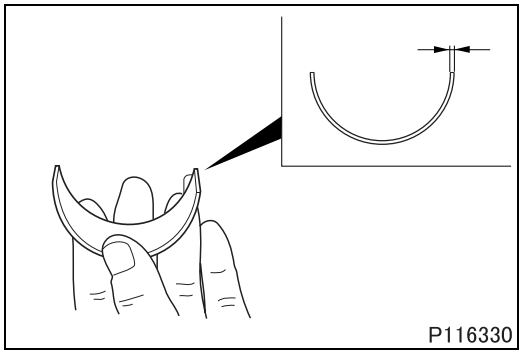

■Main bearing thickness

- If the measurement is out of the standard value, replace the main bearing.
  Standard value: 2.165 to 2.174 mm {0.0852 to 0.0855 in.}

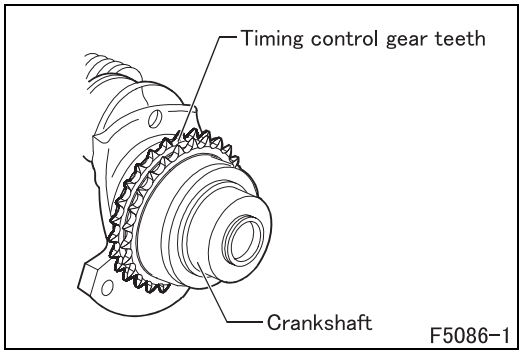

■ Inspection: Timing control gear

- On finding the timing control gear teeth damaged or worn, remove them from the crankshaft using a suitable extractor.

Replacement of timing control gear
[Installation]

- The new gear is fitted onto the crankshaft by heating it to a temperature of 180°C {356°F}.

WARNING ⚠

- **Never touch heated areas to avoid burns.**

- On completing assembly and after the gear has cooled, it must withstand a torque of 150 N·m {110 ft.lbs, 15 kgf·m} without slipping.

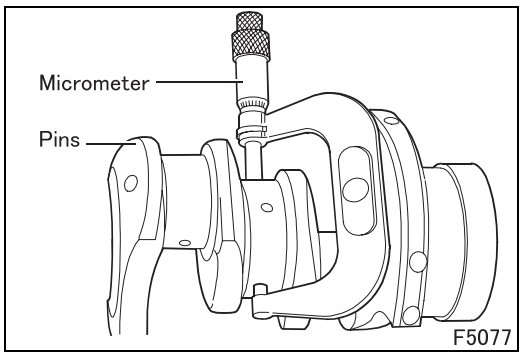

■ Inspection: Crankshaft

- When inspecting the main journals and crankpins, if any signs of seizure or scoring are found, or if they are found to be excessively out of round, it is necessary to regrind the pins. Before grinding the pins, measure the shaft pins with a micrometer to establish to what diameter it is necessary to decrease the pins.

NOTE

- **It is advisable to enter the measurements in a table.**

https://truckmanualshub.com/

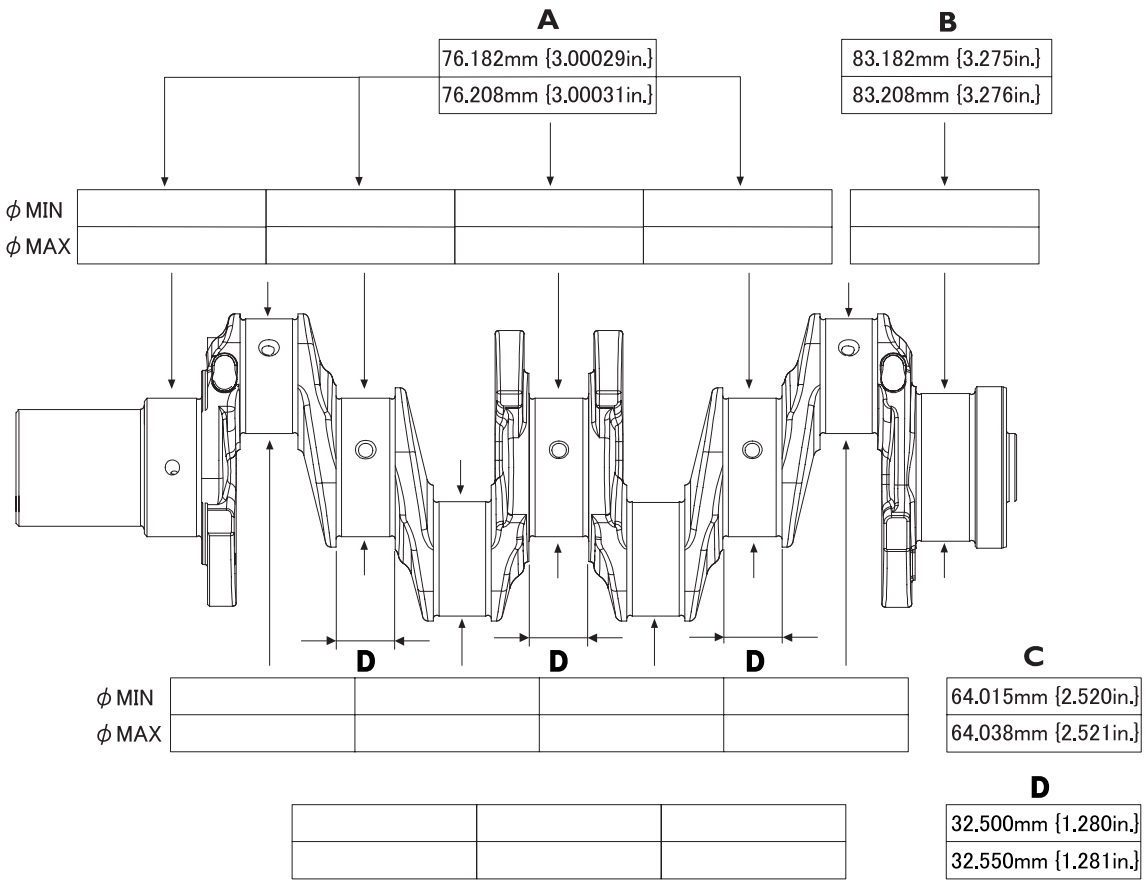

TABLE IN WHICH TO ENTER THE MEASUREMENTS OF THE CRANKSHAFT MAIN JORNALS AND CRANKPINS
A, B, C=NOMINAL VALUE

N5078

- The main journals and crankpins must always be ground to the same undersize class.
- The undersizing performed, on the main journals or crankpins, must be marked by punching on the side of crank arm number. 1.
  - For undersized crankpins, letter M.
  - For undersized main journals, letter B.
  - For undersized crankpins and main journals, letter MB.
- The undersize classes are: 0.254 to 0.508 mm {0.0100 to 0.020 in.}.

https://truckmanualshub.com/

[Correction]

- When correcting, keep the following dimension.

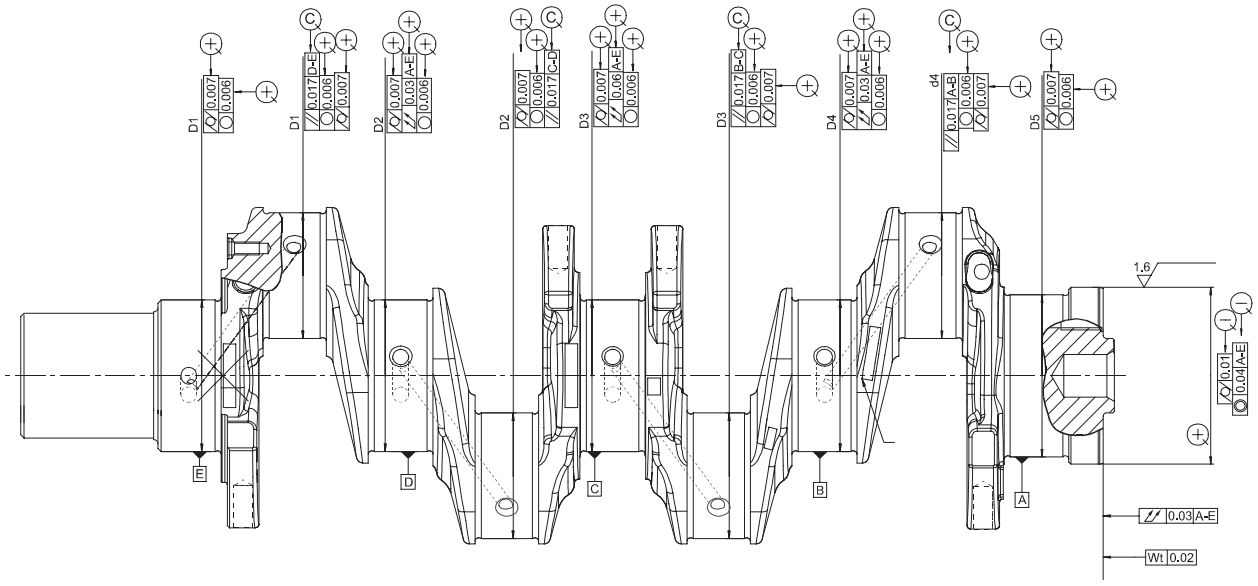

MAIN CRANKSHAFT TOLERANCES

TOLERANCES	TOLERANCE CHARACTERISTIC	GRAPHIC SYMBOL
SHAPE	Circularity	○
	Cylindricality	⌭
ORIENTATION	Parallelism	//
	Perpendicularity	⊥
POSITION	Concentricity or coaxiality	◎
OSCILLATION	Circular oscillation	↗
	Total oscillation	⌰

CLASS OF IMPORTANCE ATTRIBUTED TO PRODUCT CHARACTERISTICS	GRAPHIC SYMBOL
CRITICAL	Ⓒ
IMPORTANT	⊕
SECONDARY	⊖

F5079

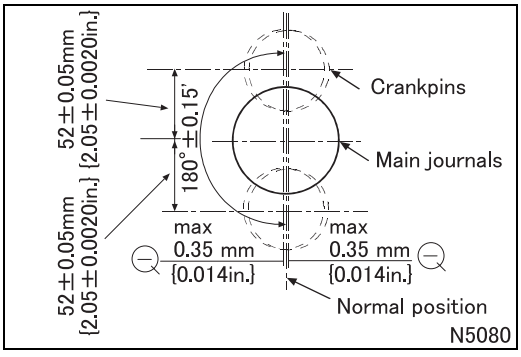

N5080

NOTE

- **The checks on the tolerances indicated in the figures must be made after grinding the crankshaft pins.**

- Symmetry between main journals and crankpins
- After grinding, keep to the following.
  - Round off the edges of deburring the holes for lubrication of the main journals and crankpins.

https://truckmanualshub.com/

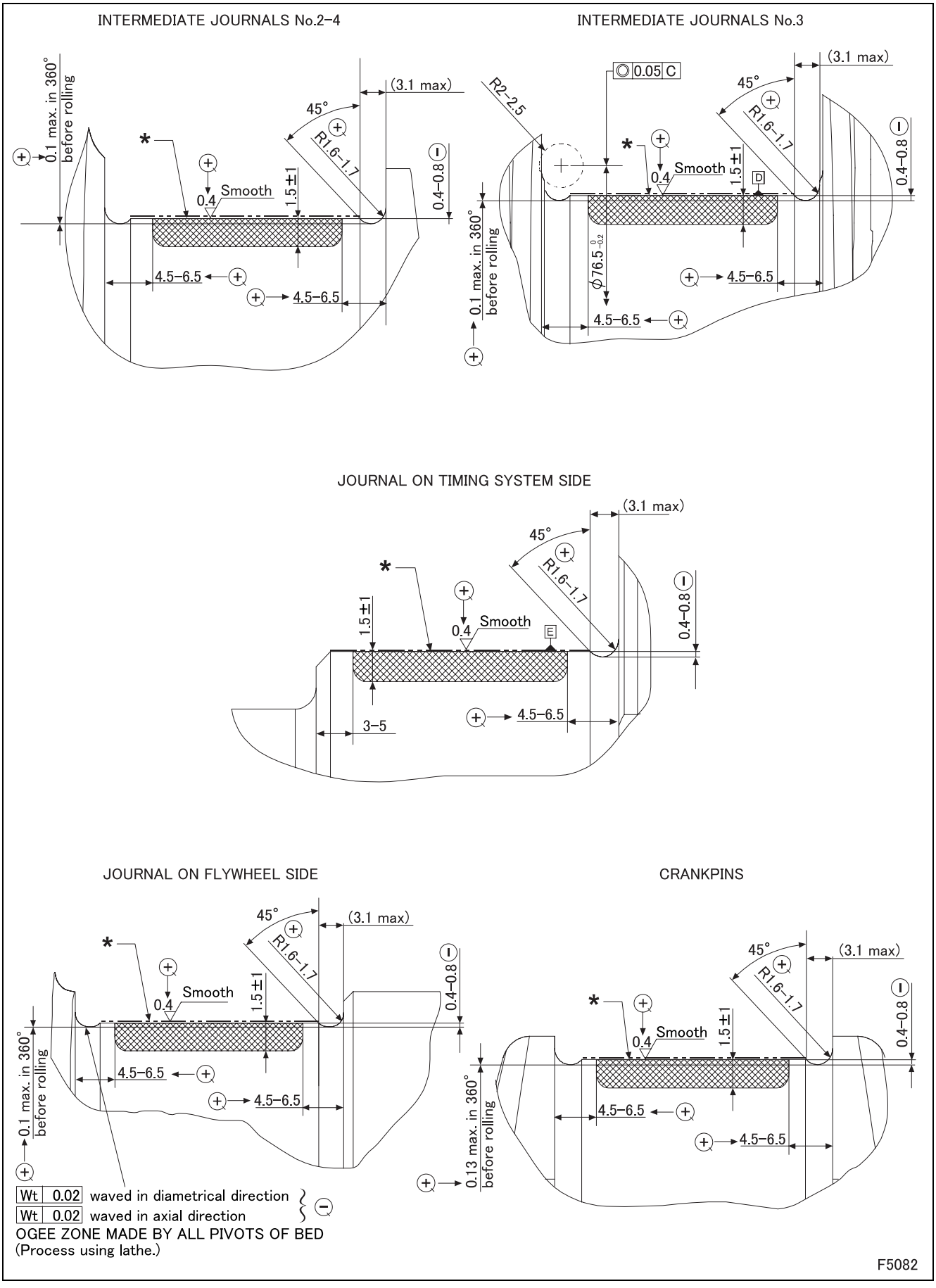

https://truckmanualshub.com/

NOTE

- **Since, during the 0.254 and 0.508 mm {0.0100 to 0.020 in.} under sizing on the diameter of the crankpins and main journals, the rolled portion of the side races of the pins may get involved, it is necessary to turn the races keeping to the data given in the figure and to do the rolling keeping to the following instructions.**

- Rolling force:
  - 1st main journal: 925 ± 25 daN.
  - 2nd - 3rd - 4th - 5th main journal: 1850 ± 50 daN.
  - Crankpin: 1850 ± 50 daN.
- Rolling turns: 3 approach, 12 effective, 3 out.
- Rolling speed: 56 rpm.
- Reduction of the connecting rod pin slot diameter after rolling: 0.15 to 0.30 mm {0.0059 to 0.012 in.}*.
- Reduction of the journal slots after rolling: 0.15 to 0.30 mm {0.0059 to 0.012 in.}*.

* Measured with calibrated rollers ϕ2.5 mm {0.098 in.}.

■ Inspection: Crankcase

(1) Visual inspection of crankcase

- Once the engine removal is complete, carefully clean the crankcase.
- For the crankcase transportation use the suitable rings.
- Carefully check that the crankcase has no cracks in it.
- Check the state of the plugs. If they are rusty or there is any doubt about their seal, replace them. When fitting the caps into place, apply Loctite 270 sealant to the same.

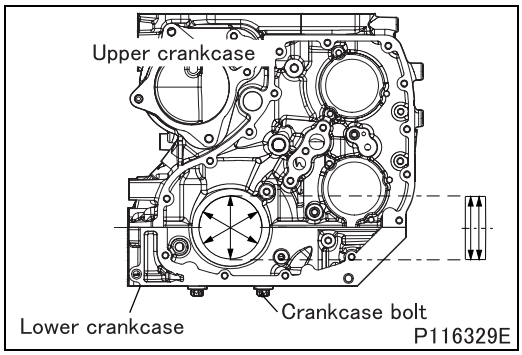

(2) Inner diameter of crankcase

- Install the lower crankcase on the upper crankcase, and then tighten the crankcase bolts to a torque of 50 N·m {37 ft.lbs, 5.1 kgf·m}.
- Measure the inner diameter of the crankcase.
  Standard value
  No.1, 2, 3, 4: 80.588 to 80.614 mm {3.1727 to 3.1738 in.}
  No.5: 87.588 to 87.614 mm {3.4483 to 3.4494 in.}
- If the measurement is out of the standard value, replace defective parts.

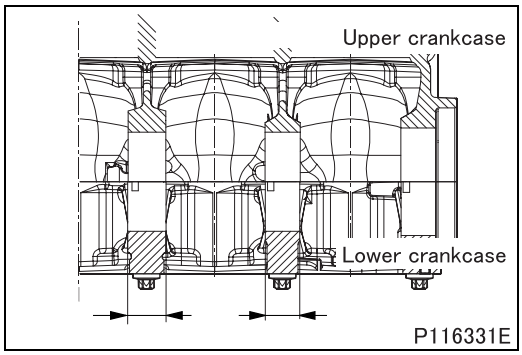

(3) Main bearing width of crankcase

- If the measurement out of the standard value, replace the crankcase.
  Standard value: 27.290 to 27.340 mm {1.074 to 1.076 in.}

https://truckmanualshub.com/

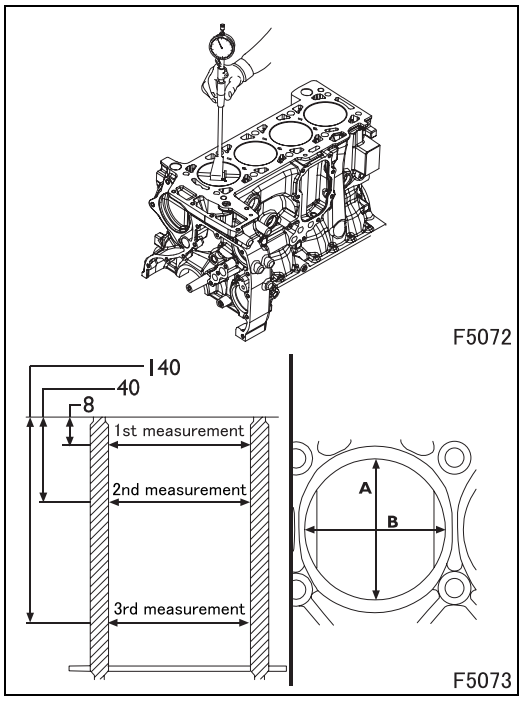

(4) Cylinder bore

[Inspection]

- Examine the surfaces of the cylinder bores; they must show no sign of meshing, scoring, out of roundness of the bores, taper or excessive wear.
- The inside diameter of the cylinder bores is checked, to ascertain the extent of out of roundness of the bores, taper and wear, using the bore meter fitted with a dial gauge previously reset on the ring gauge of the diameter of the cylinder bore or on a micrometer.
- The measurements must be made for each single cylinder at three different heights up the liner and on two planes at right angles to each other: one parallel to the longitudinal axis of the engine (B) and the perpendicular (A); the greatest wear is generally found on this last plane with the first measurement.
- On finding out of roundness of the bores, taper or wear, go ahead and bore/grind and finish the face of the cylinder bores. The refacing of the cylinder liners should be done in relation to the diameter of the pistons supplied as spare parts oversized by 0.4 mm {0.016 in.} of the nominal value and to the prescribed assembly clearance.

https://truckmanualshub.com/

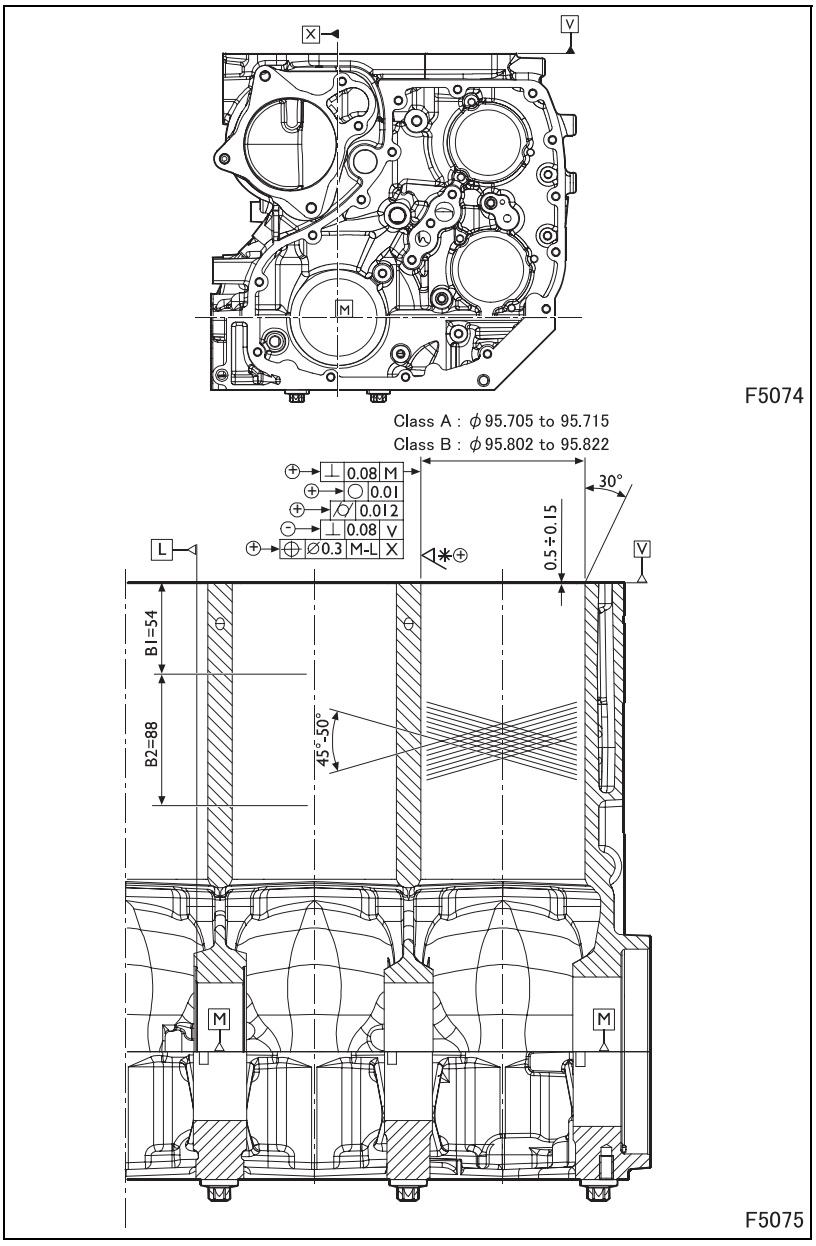

[Correction]

- When correcting, keep the following dimension.
  * Surface roughness parameters:
- Permissible surface porosity for machined cylinder
  - R1 = 4 to 10 µm
  - Rz = 3 to 8 µm
  - Ra = 0.25 to 0.6 µm
  - W1 ≤ 1.5 µm

ZONE B1

- Area of greatest mechanical stress, segment/liner contact: No.2 non-continuous porosities are permissible max. 0.5 × 0.5.

ZONE B2

- Surface involved in segment rubbing: No.2 non-continuous porosities are permissible max. 1 × 0.8.

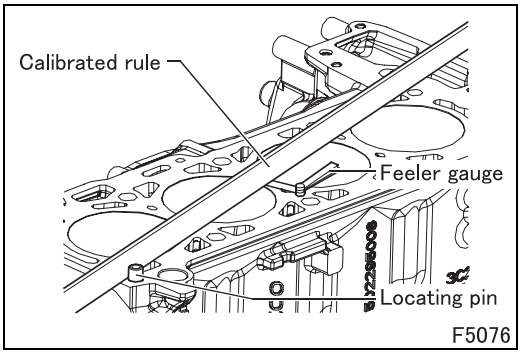

(5) Cylinder head mating surface

- See that the head mating surface, on the crankcase, has no deformation.
- This check can be made, after taking out the locating pin, with a surface plate spread with carbon black or with a calibrated rule and a feeler gauge. After ascertaining the areas of deformation, level the bearing surface with a grinding machine.

NOTE

- **The crankcase can only be surfaced after making sure that, on completing the work, the piston protrudes from the cylinder liner by no more than the prescribed value.**

https://truckmanualshub.com/

◆Installation procedure◆

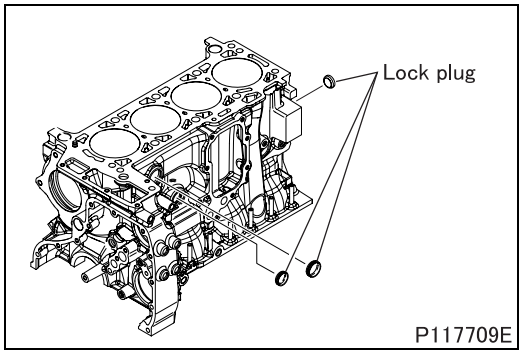

■ **Installation: Lock plug**

- Clean the lock plug mounting surface on the upper crankcase.
- Apply sealant to the lock plug. (Loctite 263)
- Install the lock plug on the upper crankcase.

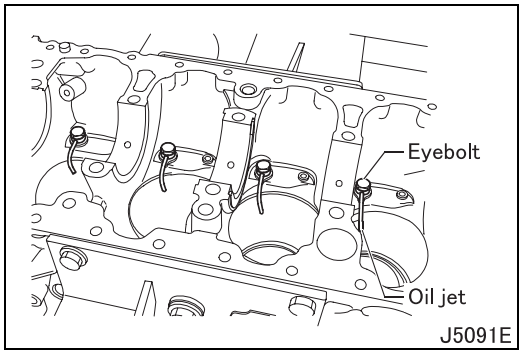

■ **Installation: Oil jet**

- Replace the eyebolt with a new one.
- Fit on the oil jet and tighten the eyebolt to the prescribed torque 25 N·m {18 ft.lbs, 2.5 kgf·m}.

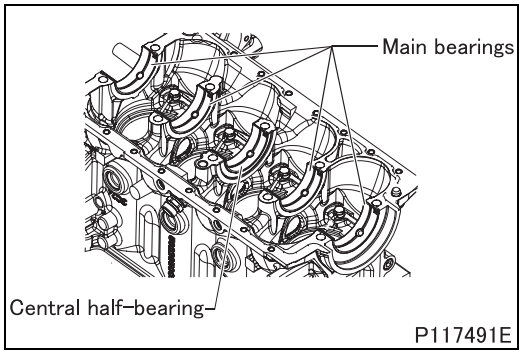

■ **Installation: Main bearing, central half-bearing**

- The main bearings are supplied as spare parts undersized on the inside diameter by 0.254 to 0.508 mm {0.0100 to 0.020 in.}.
- If the main bearings are reused, they need to be fitted back on in the same sequence and position found upon disassembly.
- Thoroughly clean the top main bearing shells and position them in the crankcase.

NOTE

- **The central half-bearing is fitted with thrust washers.**

NOTE

- **Do not do any altering of the bearings.**

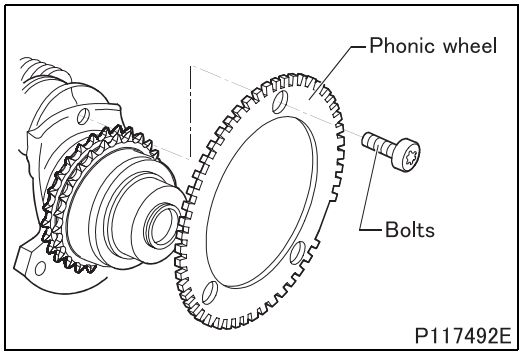

■ **Installation: Phonic wheel**

- Install the phonic wheel.
- Install the bolts and tighten them to the prescribed torque: 10 ± 1 N·m {7.4 ± 0.1 ft.lbs, 1.0 ± 0.1 kgf·m}.

https://truckmanualshub.com/

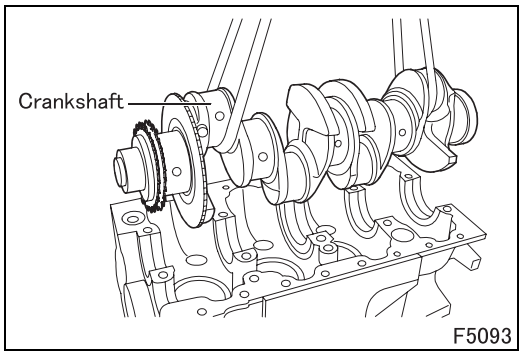

■ **Installation: Crankshaft**

- Install the crankshaft.

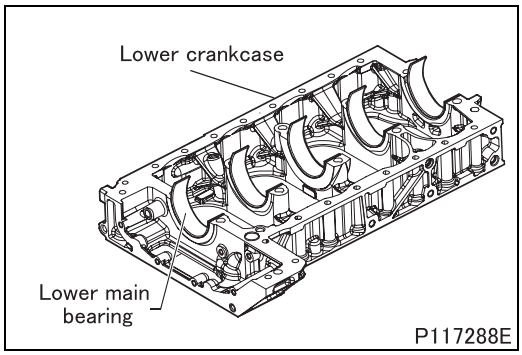

■ **Installation: Main bearing shell**

- Thoroughly clean the bottom main bearing shells and mount them in the lower crankcase.

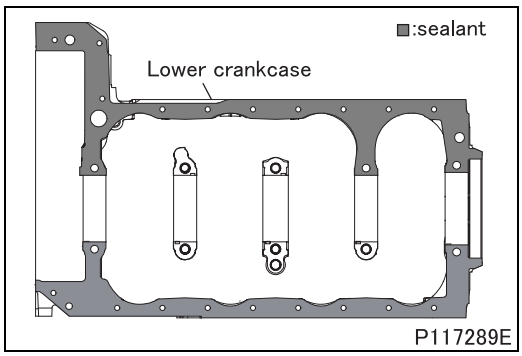

■ **Installation: Crankcase base**

- Thoroughly clean the crankcase/crankcase base mating surface.
- Apply, on base, sealant Loctite 510 as indicated in the scheme. The sealant must be applied evenly.

NOTE

- **Mount the crankcase base within 10 minutes of applying the sealant.**

https://truckmanualshub.com/

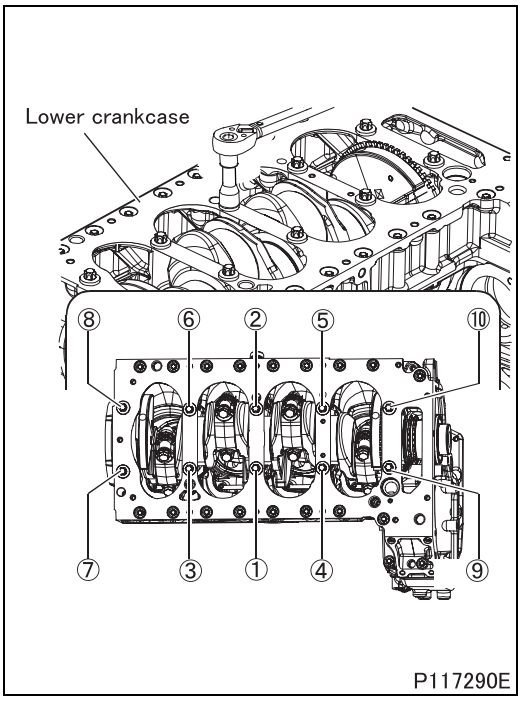

- Mount the lower crankcase and tighten the fixing screws in three stages, following the sequence shown in the figure.
  Step 1: With a torque wrench, to a torque of 50 N·m {37 ft.lbs, 5.1 kgf·m}.
  Step 2: Tighten to an angle of 60°.
  Step 3: Tighten to an angle of 60°.

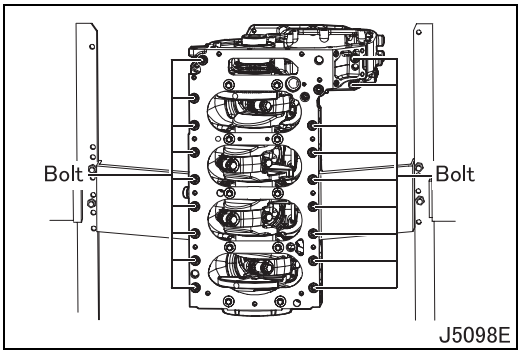

- Then tighten the outer bolts to a torque of 26 N·m {19 ft.lbs, 2.7 kgf·m}.

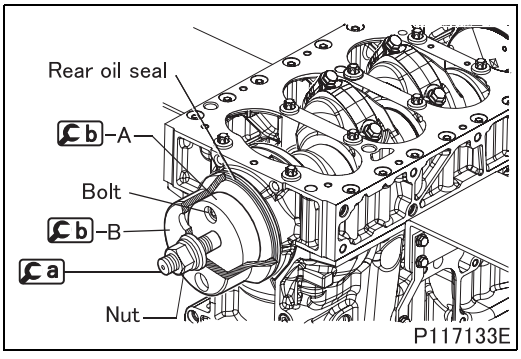

■ **Installation: Rear oil seal**

- Clean the mating surface of the rear oil seal.
- Apply engine oil to the rear of the crankshaft.
- Install part of b-A on the rear of the crankshaft, secure it with the bolt and install a new rear oil seal over it.
  Place b-A over b-B, screw in the nut and install the rear oil seal on the seat of the upper crankcase.

https://truckmanualshub.com/

FUSO

Group 12

Lubrication

MITSUBISHI FUSO TRUCK OF AMERICA, Inc.

Pub.No.00ELT0001-12

https://truckmanualshub.com/

INDEX

SPECIFICATIONS **12-2**

STRUCTURE AND OPERATION
1. **Lubrication System** **12-3**
2. **Oil Pump/Vacuum Unit** **12-4**
3. **Oil Filter** **12-6**
4. **Oil Cooler** **12-6**

TROUBLESHOOTING **12-7**

ON-VEHICLE INSPECTION AND ADJUSTMENT
1. **Oil Filter Replacement** **12-8**
2. **Engine Oil Replacement** **12-10**
3. **Inspection of Engine Oil Level** **12-12**
4. **Inspection of Engine Oil Leaks** **12-12**
5. **Oil Pressure Measurement** **12-13**

OIL PAN, OIL STRAINER **12-14**

OIL PUMP/VACUUM UNIT **12-17**

OIL FILTER, OIL COOLER **12-18**

https://truckmanualshub.com/

SPECIFICATIONS

Item			Specifications
Method of lubrication			Forced lubrication by oil pump
Oil filter			Element filter paper type
Oil cooler			Shell and plate type (multiple-plate type)
Engine oil	Classification	Viscosity	API classification CJ-4 or ACEA C2
	API CJ-4	Below 0°C (32°F)	10W-30
		Above –15°C (5°F)	15W-40
		Above 30°C (86°F)	40
	ACEA C2	Below 0°C (32°F)	SW-30
	Quantity	L {qts}	6.2 {6.5}
Regulator valve opening pressure		kPa {psi, kgf/cm^2}	440 {64, 4.5}

https://truckmanualshub.com/

1. Lubrication System

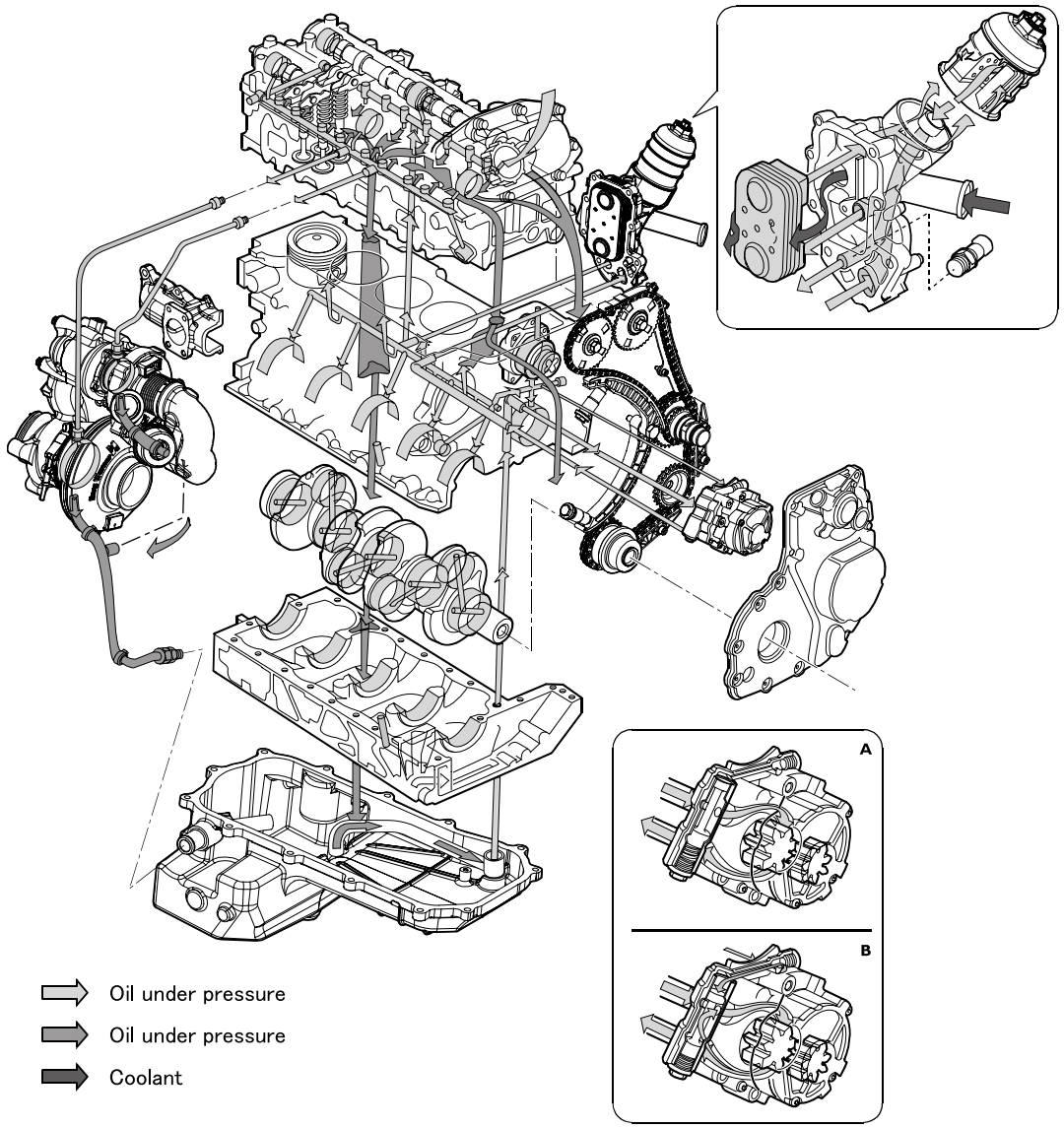

A. Pressure regulating valve closed – B. Pressure regulating valve open

P116571-1E

- The engine is lubricated by forced circulation performed by the following parts.
  - A gear oil pump with built-in vacuum pump.
  - A pressure relief valve integrated in the oil pump.
  - An oil cooler made up of five elements.
  - A double filtration oil filter with built-in safety valve.
- Engine oil is drawn up from the sump by the oil pump via the oil strainer and delivered under pressure to the oil cooler where it is cooled.
- The oil continues through the oil filter and goes to lubricate the relevant parts through ducts or pipes.
- At the end of the lubrication cycle, the oil returns to the oil pan by gravity. The oil filter can be bypassed by the safety valve built into it if it gets clogged.
  In addition, the lubricating oil feeds the chain hydraulic tightening devices for the control of the auxiliary elements and the timing system and the hydraulic tappet.

https://truckmanualshub.com/

2. Oil Pump/Vacuum Unit

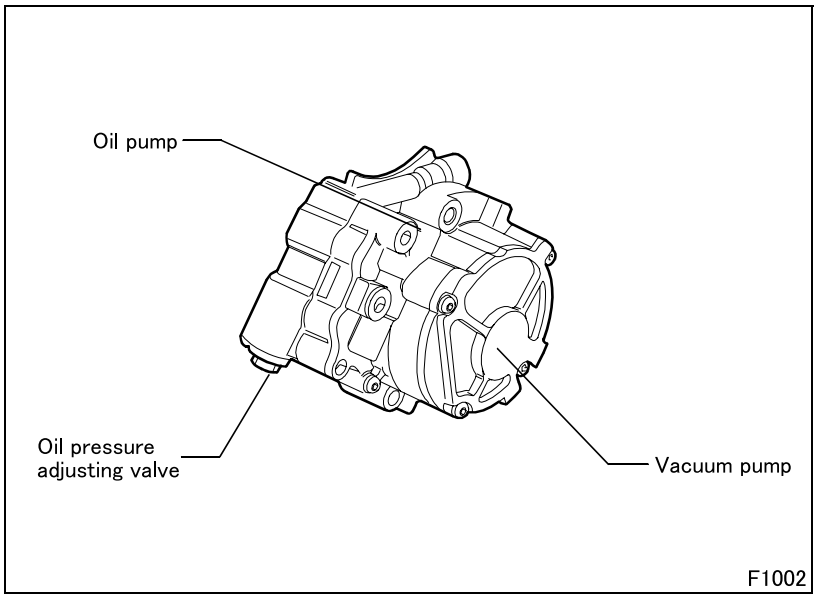

- The vacuum pump, with radial blades, is also incorporated in the oil pump. It is driven directly by the oil pump.

2.1 Cross section of the oil pump/vacuum unit

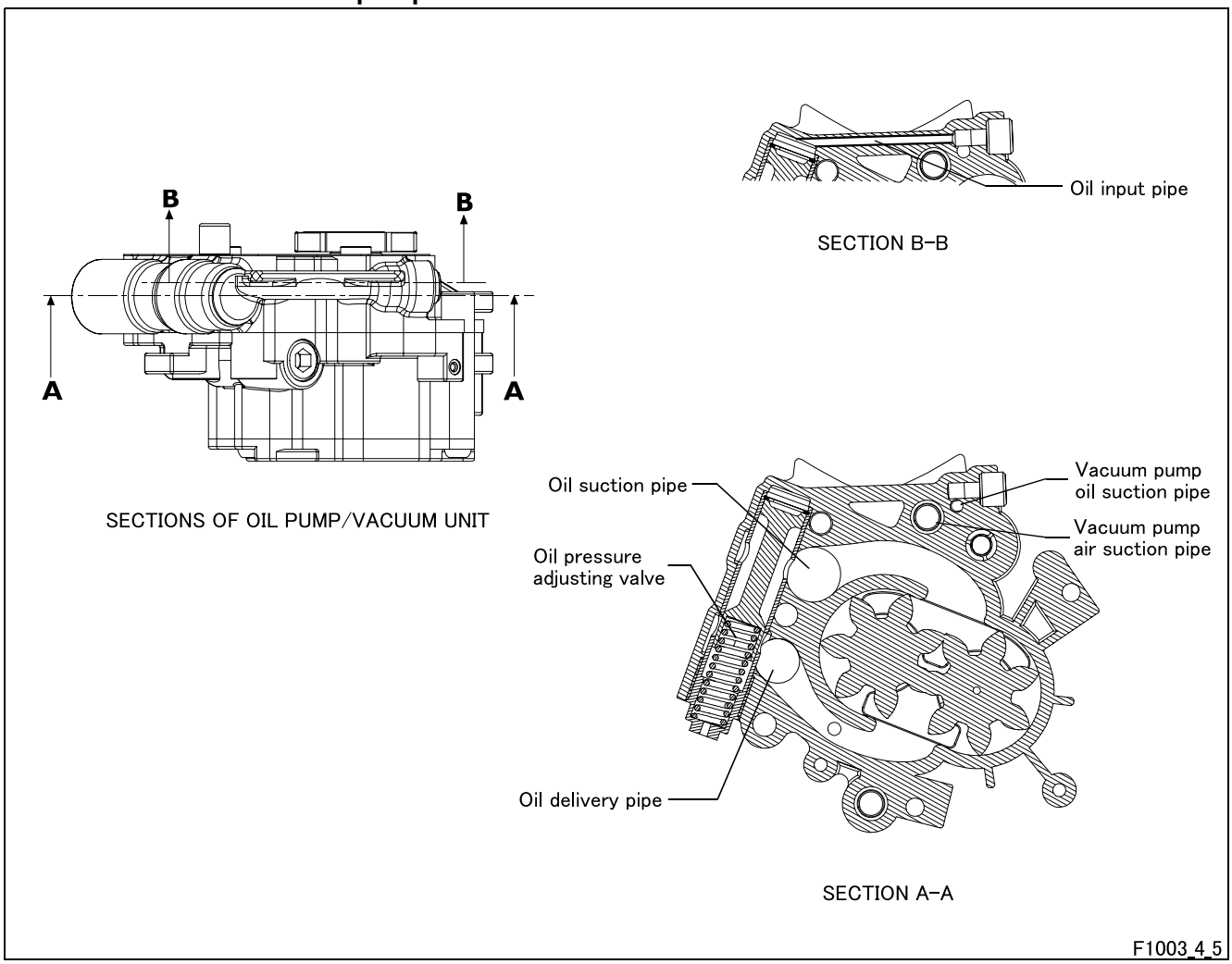

https://truckmanualshub.com/

2.2 Oil pressure adjusting valve

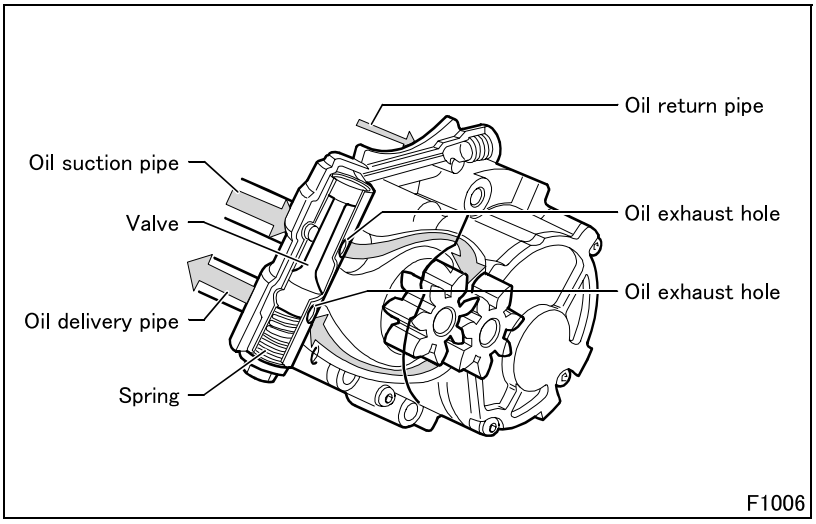

Pressure at opening start: 440 kPa {64 psi, 4.5 kgf/cm^2}

(1) Oil pressure adjusting valve closed

- If in pipe the oil pressure is below 440 kPa {64 psi, 4.5 kgf/cm^2}, the valve closes the holes.

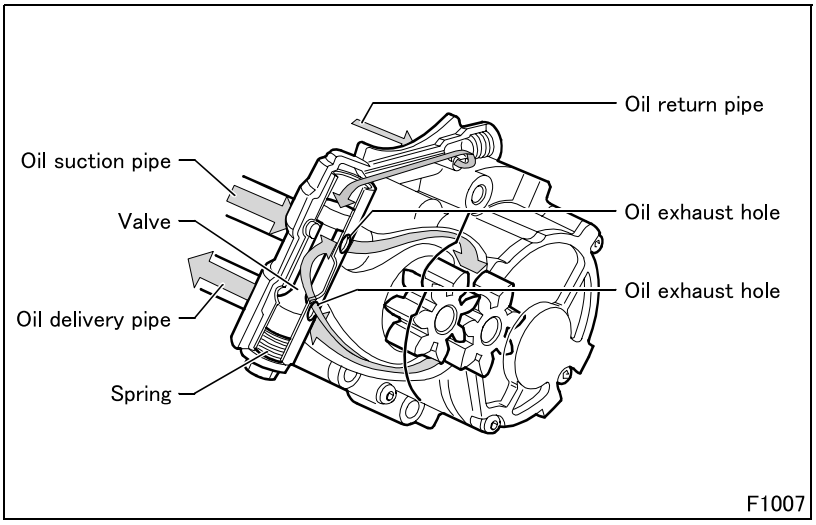

(2) Oil pressure adjusting valve open

- If in oil return pipe the oil pressure is equal or above 440 kPa {64 psi, 4.5 kgf/cm^2}, the valve, as a result of the pressure itself, wins through the spring reaction and goes down, thus opening communication between the delivery pipe and the suction pipe, through draining holes, and therefore the pressure drops.
  When the pressure falls below 440 kPa {64 psi, 4.5 kgf/cm^2}, the spring takes the valve to the initial position of closed valve.

https://truckmanualshub.com/

3. Oil Filter

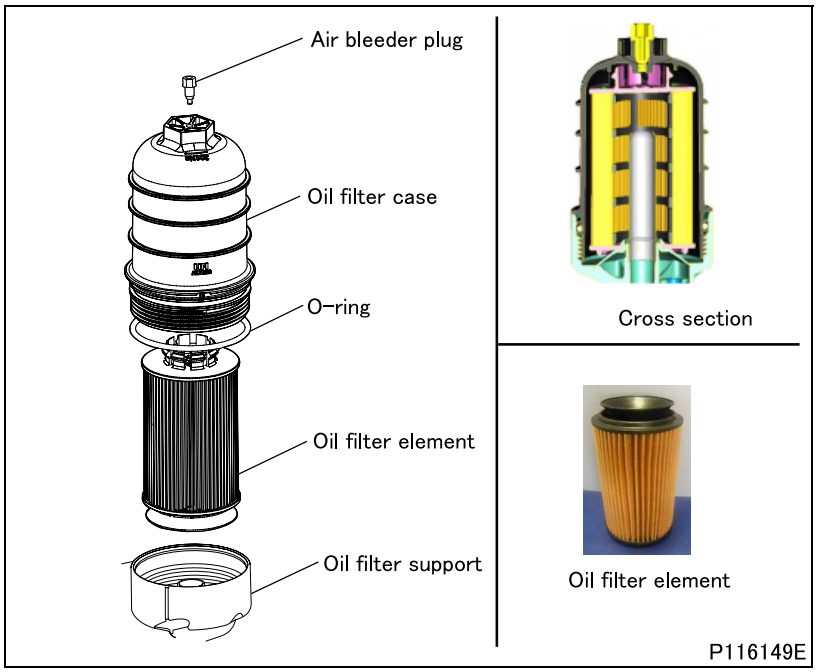

- Oil filter with built in by-pass valve – differential opening pressure 250 ± 20 kPa {36 ± 2.9 psi, 2.5 ± 0.2 kgf/cm^2}.

4. Oil Cooler

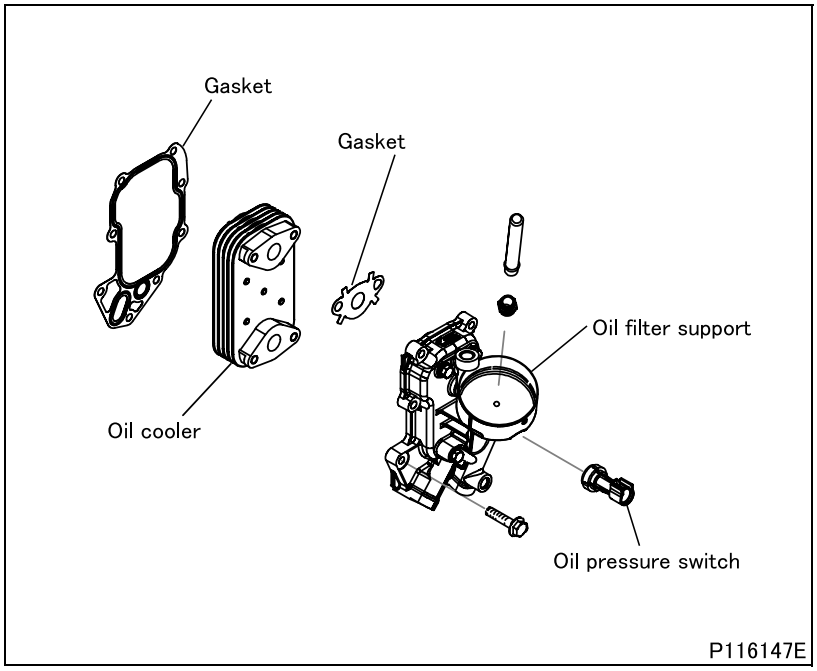

https://truckmanualshub.com/

Possible causes \ Symptoms		Engine is difficult to start	Overheating	Low oil pressure	Excessive oil consumption (oil leakage)	Reference Gr
Oil cooler	Incorrectly mounted element		O	O	O	
	Defective gasket		O	O	O	
	Clogged element		O	O		
	Damaged element		O	O	O	
	Weakened bypass valve spring		O			
	Weakened regulator valve spring			O		
Oil pump/ vacuum unit	Malfunctioning oil pump		O	O		
	Interference between oil pump gear and oil pump case and/or cover	O		O		
	Weakened relief valve spring			O		
Oil filter	Incorrect installation				O	
	Clogged element		O	O		
	Defective gasket			O	O	
Incorrectly mounted and/or clogged oil strainer			O	O		
Defective crankshaft front oil seal					O	Gr11
Defective crankshaft rear oil seal					O	
Incorrectly mounted timing chain/sprockets		O			O	
Defective piston cooling oil			O	O		
Oil working its way up into combustion chamber(s) through piston rings					O	
Oil working its way down into combustion chamber(s) through valves					O	
Oil viscosity too high		O				
Poor oil quality			O			
Deterioration of oil			O			
Fuel mixed with oil				O		

https://truckmanualshub.com/

ON-VEHICLE INSPECTION AND ADJUSTMENT

1. Oil Filter Replacement

WARNING ⚠

- **If engine oil is spilled, wipe it off carefully. Spilled oil may cause a fire.**
- **Be careful when handling hot engine oil, which may cause a burn.**

CAUTION ⚠

- **Use the specified type of engine oil. Otherwise, the diesel particulate filter may be prematurely clogged.**
- **Do not allow engine oil to adhere to the belt. Otherwise, the belt may become slippery, resulting in degraded cooling performance.**

Tightening torque (Unit: N·m {ft.lbs, kgf·m})

Mark	Parts to be tightened	Tightening torque	Remarks
–	Oil filter support	25 to 30 {18 to 22, 2.5 to 3.0}	–
–	Air bleeder plug	1.5 ± 0.6 {1.1 ± 0.4, 0.2 ± 0.1}	–

Lubricant and/or sealant

Mark	Points of application	Specified lubricant and/or sealant	Quantity
–	O-ring	Engine oil	As required

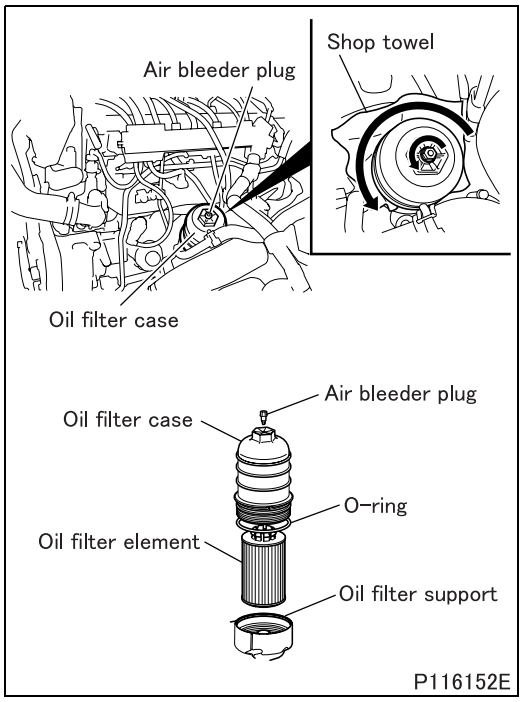

■ Removal: Oil filter element

- Warm up the engine if it is cold.
  Let the engine oil temperature rise to about 40°C {104°F}. (Run the engine at idle for about 20 min. to increase the engine oil temperature from about 0°C to 40°C {0°F to 104°F}.) Without warming up the engine, the engine oil will come out when the oil filter case is removed.
- Loosen the oil filter case. (Approx. 2.5 rotations.)
- Remove the air bleeder plug from the oil filter case. Wait for at least 5 minutes to drain the engine oil in the oil filter case.
- Remove the oil filter case.
  Wrap up the oil filter case with a shop towel when removing it so that oil will not spill out.

CAUTION ⚠

- **After removing the oil filter case, be careful not to allow foreign objects to enter the oil filter case or oil filter support.**

- Remove the O-ring from the oil filter case.
- Remove the oil filter element from the oil filter support.
- Clean the oil filter case, oil filter support surface that contacts the O-ring, and the O-ring groove on the filter case with a shop towel.

https://truckmanualshub.com/

■ **Installation: Oil filter element**

- Apply a thin coat of engine oil to a new O-ring and install the O-ring on the oil filter case.

CAUTION ⚠

- **Use the O-ring and air bleeder plug that came with a new oil filter element.**

- Install an oil filter element with its hole located on the bottom side.
- Install a new air bleeder plug on the oil filter case, then install the oil filter case on the oil filter support.
- After installing the oil filter case, check that there is no gap between the contact surfaces of the oil filter case and oil filter support.

- Following the procedure given in the section “Starting the engine after parking for a long period” (See later section.), start the engine and warm it up until the needle of the water temperature gauge begins to move.

- Stop the engine. After at least 10 minutes, check the engine oil level. (See later section.)
- Start the engine and check that oil is not leaking. (See later section.)
- If any abnormality is found, reinstall the oil filter.
- Stop the engine and check the engine oil level. (See later section.)
- Add engine oil if the oil level is too low.

- When the engine oil has been replaced, reset the inspection/service memory of the multi-information system. (See Chapter 6 “Multi-information system” in the Owner’s Manual.)

https://truckmanualshub.com/

2. Engine Oil Replacement

WARNING ⚠

- **If engine oil is spilled, wipe it off carefully. Spilled oil may cause a fire.**
- **Be careful when handling hot engine oil, which may cause a burn.**

CAUTION ⚠

- **Use the specified type of engine oil. Otherwise, the diesel particulate filter may be prematurely clogged.**
- **Do not allow engine oil to adhere to the belt. Otherwise, the belt may become slippery, resulting in degraded cooling performance.**
- **Make sure to reset the engine electronic control unit every time after refilling. Because the engine control unit calculates the engine oil life.**

Tightening torque (Unit: N·m {ft.lbs, kgf·m})

Mark	Parts to be tightened	Tightening torque	Remarks
–	Drain plug (oil pan)	20 {15, 2.0}	–

Lubricant and/or sealant

Mark	Points of application	Specified lubricant and/or sealant	Quantity
–	Oil pan	Engine oil	Approx. 6.2 L {6.5 qts}

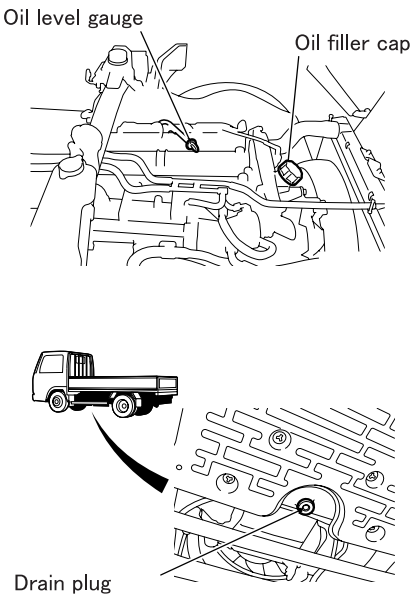

■ Draining: Engine oil

- Warm up the engine if it is cold.
  Let the engine oil temperature rise to about 40°C {104°F}. (Run the engine at idle for about 20 min. to increase the engine oil temperature from about 0°C to 40°C {0°F to 104°F}.) Without warming up the engine, you may not drain the engine oil from the oil filter.
- Remove the filler cap.

CAUTION ⚠

- **After removing the filler cap, be careful not to allow foreign objects to enter the engine case.**

- Remove the drain plug to drain the engine oil.

■ Refilling: Engine oil

- Install a new gasket on the drain plug, and then install the drain plug.
- Add new oil through the oil filler.

CAUTION ⚠

- **Use a jug when adding engine oil through the oil filler to prevent the oil from spilling on the belt or other components.**
- **If the oil has spilled on the belt, quickly wipe it off with a shop towel.**

https://truckmanualshub.com/

- Follow the procedure below to crank the engine, and then start the engine to warm it up until the needle of the water temperature gauge begins to move.

[Starting the engine after parking for a long period]

If the vehicle has not been used for more than 1 week, or when the engine oil or oil filter element has been replaced, follow the procedure below to crank the engine, then start the engine.

- Start the engine in the ordinary way. You don't have to wait for the indicator lamp to go off.
- Place the starter switch in the "START" position without pressing the accelerator pedal and crank the engine for about 15 seconds.
- If the engine has started, release the starter key and leave the accelerator pedal unpressed for about 15 seconds.
- Stop the engine. After at least 10 minutes, check the engine oil level.
- Start the engine and check that oil is not leaking.
- Add the engine oil if the oil level is too low.
- When the engine oil has been replaced, reset the inspection/service memory of the multi-information system. (See Chapter 6 "Multi-information system" in the Owner's Manual.)

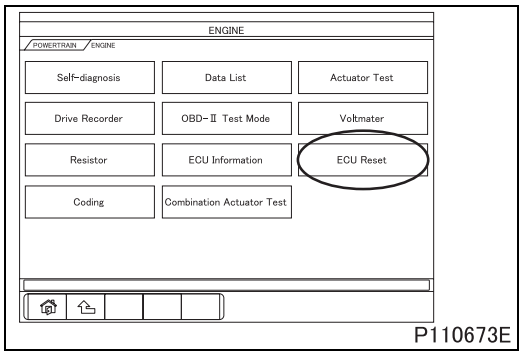

P110673E

■ Resetting the engine electronic control unit

<Resetting with Multi-Use Tester>

- Connect the Multi-Use Tester to the vehicle.
- Use the "Electronic control unit reset" button in the menu to reset the engine oil parameter in the engine electronic control unit.

<Resetting without Multi-Use Tester>

- Turn the starter switch to the "ON" position. Do not start the engine.
- Fully press and hold the accelerator pedal for more than 20 seconds.
- With the accelerator held in that position, press the brake pedal 6 times.

- If the electronic control unit resetting is not performed, the engine electronic control unit will keep counting the melting amount in the engine oil even after the engine oil has been replaced, causing a diagnosis code to be generated and a warning lamp (red) to light up. (See Gr13E.)

https://truckmanualshub.com/

3. Inspection of Engine Oil Level

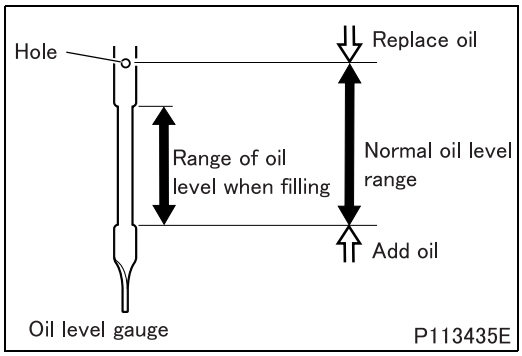

- Inspection should be performed in a level place.
- Warm up the engine until the needle of the water temperature gauge reaches close to the center of the gauge.
- Stop the engine. After at least 10 minutes, measure the engine oil level.
- If the measured oil level is higher than upper side of the hole, it indicates an increase in the oil amount due to such reason that some of the injected fuel has mixed into the engine oil during DPF regeneration. Replace the engine oil.

CAUTION ⚠

- **If the oil level is higher than the upper side of the hole, quality of the engine oil is reduced, which could lead to an engine failure or a sudden increase in the engine speed.**

- If the measured oil level is too low, add oil to a level within the specified oil level range for filling.
- If it is found the engine oil decreases too quickly in daily checks although the measured oil level was inside the normal oil level range, perform an inspection to check for the following causes.
  - Seizure between the piston ring and piston
  - Too much clearance between the piston and crankcase cylinder

4. Inspection of Engine Oil Leaks

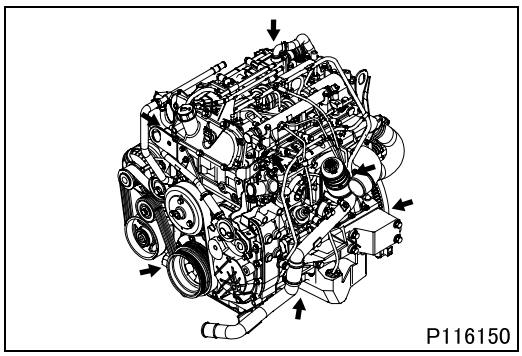

- Warm up the engine until the needle of the water temperature gauge reaches close to the center of the gauge.
- Visually check each part of the engine (oil pan, oil filter, cylinder head gasket, etc.) for oil leaks. If oil is leaking, replace the faulty component.

https://truckmanualshub.com/

5. Oil Pressure Measurement

Service standards

Location	Maintenance item		Standard value	Limit	Remedy
–	Oil pressure (oil temperature at 100 ± 5°C {212 ± 9°F})	No-load minimum speed	100 kPa {15 psi, 1.0 kgf/cm^2}	–	Inspect
		No-load maximum speed	450 kPa {65 psi, 4.6 kgf/cm^2}	–	

Tightening torque (Unit: N·m {ft.lbs, kgf·m})

Mark	Parts to be tightened	Tightening torque	Remarks
–	Oil pressure switch	25 {18, 2.5}	Sealant With cold engine

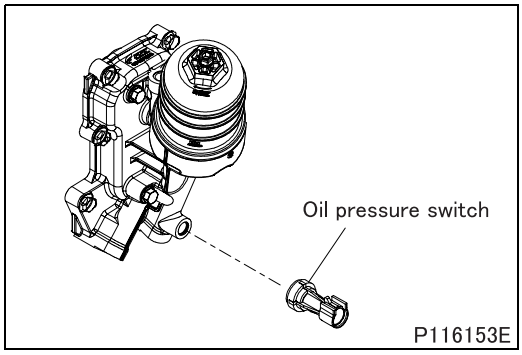

- Remove the oil pressure switch.

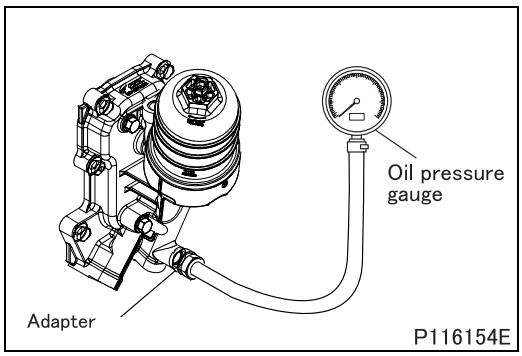

- Using an adapter, connect an oil pressure gauge to the oil pressure switch mounting hole.
- Warm up the engine until the oil temperature reaches 100 ± 5°C {212 ± 9°F}.
- Measure the oil pressure while running the engine at a minimum speed and then at maximum speed, both under no load.
- If the measurements are below the specified limits, overhaul the lubrication system.
- Tighten the engine oil pressure switch to the specified torque.

CAUTION ⚠

- **Reinstall the oil pressure switch only when the engine is cold.**

https://truckmanualshub.com/

OIL PAN, OIL STRAINER

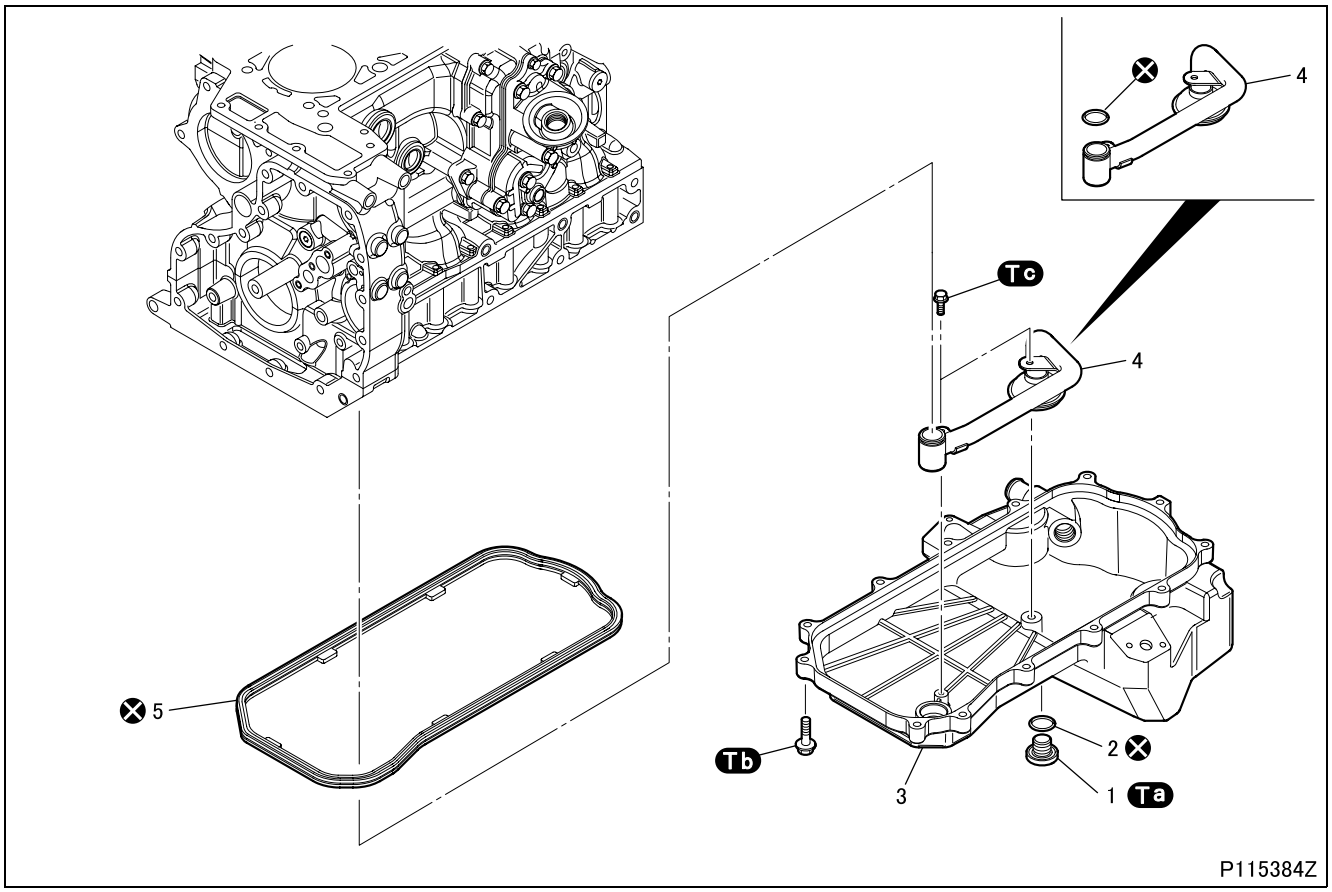

● **Removal sequence**

1 Oil drain plug
2 O-ring
3 Oil pan
4 Oil strainer
5 Gasket

⊗: Non-reusable parts

● **Installation sequence**

Follow the removal sequence in reverse.

Tightening torque (Unit: N·m {ft.lbs, kgf·m})

Mark	Parts to be tightened	Tightening torque	Remarks
Ta	Oil drain plug	20 {15, 2.0}	–
Tb	Bolt (oil pan mounting)	25 {18, 2.5}	–
Tc	Screw (oil strainer mounting)	10 {7.4, 1.0}	–

https://truckmanualshub.com/

◆Removal procedure◆

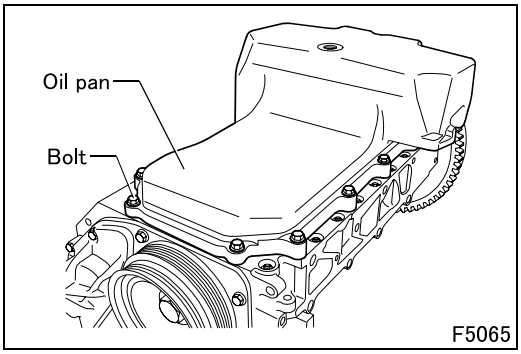

■ **Removal: Oil pan**

- Take out the bolts and remove the oil pan.

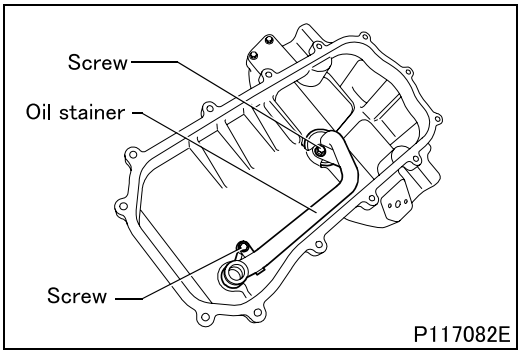

■ **Removal: Oil strainer**

- Unscrew and remove the fixing screws.
- Detach the oil strainer from the oil pan.

◆Installation procedure◆

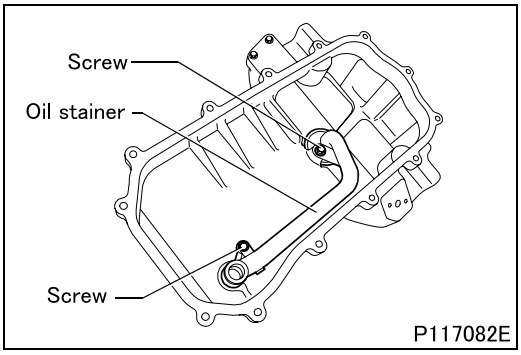

■ **Installation: Oil strainer**

- Mount the suction strainer together with the pipe.
- Screw down the fixing screws and tighten them to the prescribed torque 10 N·m {7.4 ft.lbs, 1.0 kgf·m}.

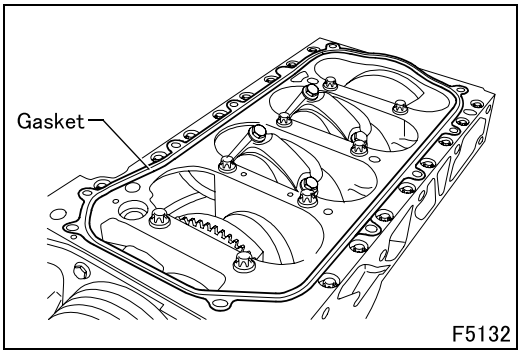

■ **Installation: Oil pan**

- Position the gasket on the engine block.

https://truckmanualshub.com/

OIL PAN, OIL STRAINER

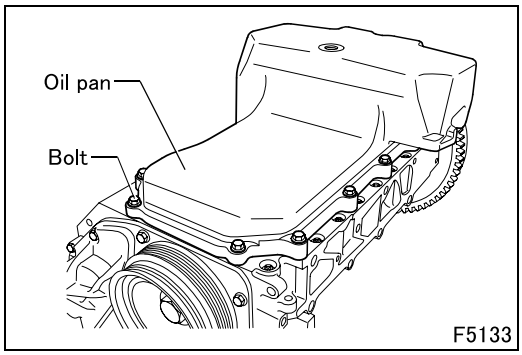

- Fit the oil pan and tighten the fixing bolts to a torque of 25 N·m {18 ft.lbs, 2.5 kgf·m}.
- Tighten the oil drain plug to a torque of 20 N·m {15 ft.lbs, 20 kgf·m}.

https://truckmanualshub.com/

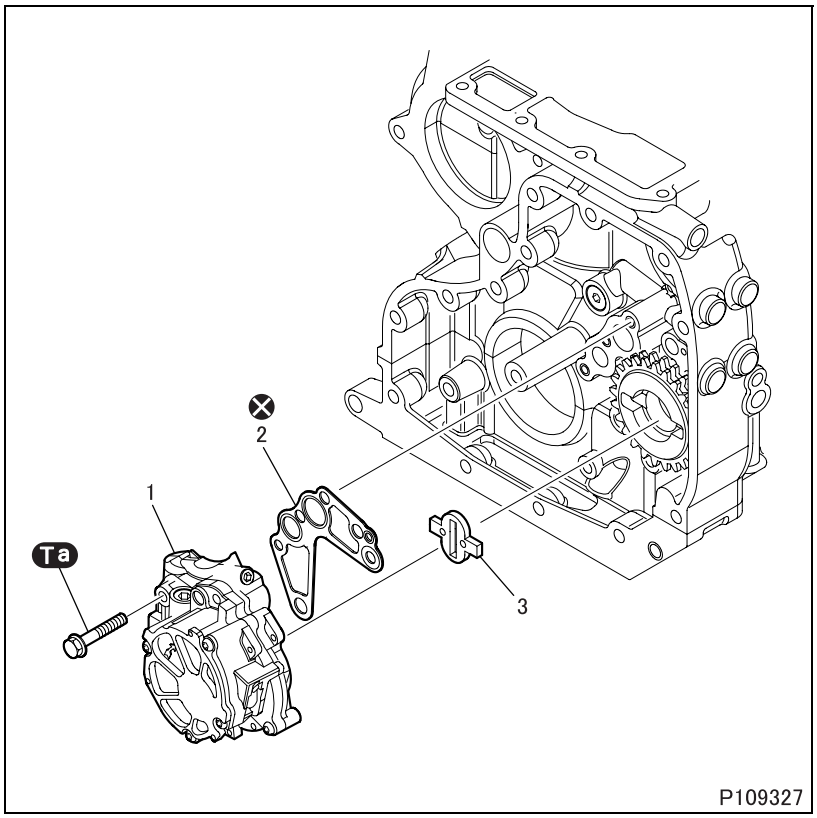

● **Removal sequence**

1 Oil pump/vacuum unit
2 Gasket
3 Coupling

⊗: Non-reusable parts

● **Installation sequence**

Follow the removal sequence in reverse.

Tightening torque (Unit: N·m {ft.lbs, kgf·m})

Mark	Parts to be tightened	Tightening torque	Remarks
Ta	Bolt (oil pump/vacuum unit mounting)	25 {18, 2.5}	–

◆Removal procedure◆

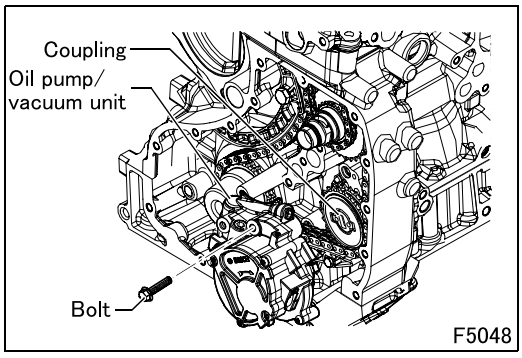

■ **Removal: Oil pump/vacuum unit**

- Remove the bolt and then remove the oil pump/vacuum unit.
- Remove the coupling.

◆Installation procedure◆

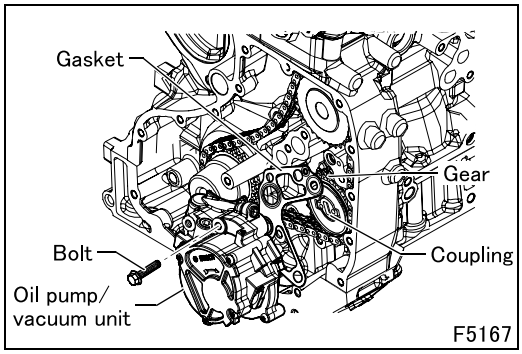

■ **Installation: Oil pump/vacuum unit**

- Position the coupling in the gear.
- Fit the oil pump/vacuum unit placing a new gasket in between.
- Screw in the bolts placing the oil pump/vacuum unit assembly in the end of travel position and check it is correctly fitted on the coupling.
- Tighten the bolts to the recommended torque 25 N·m {18 ft.lbs, 2.5 kgf·m}.

https://truckmanualshub.com/

OIL FILTER, OIL COOLER

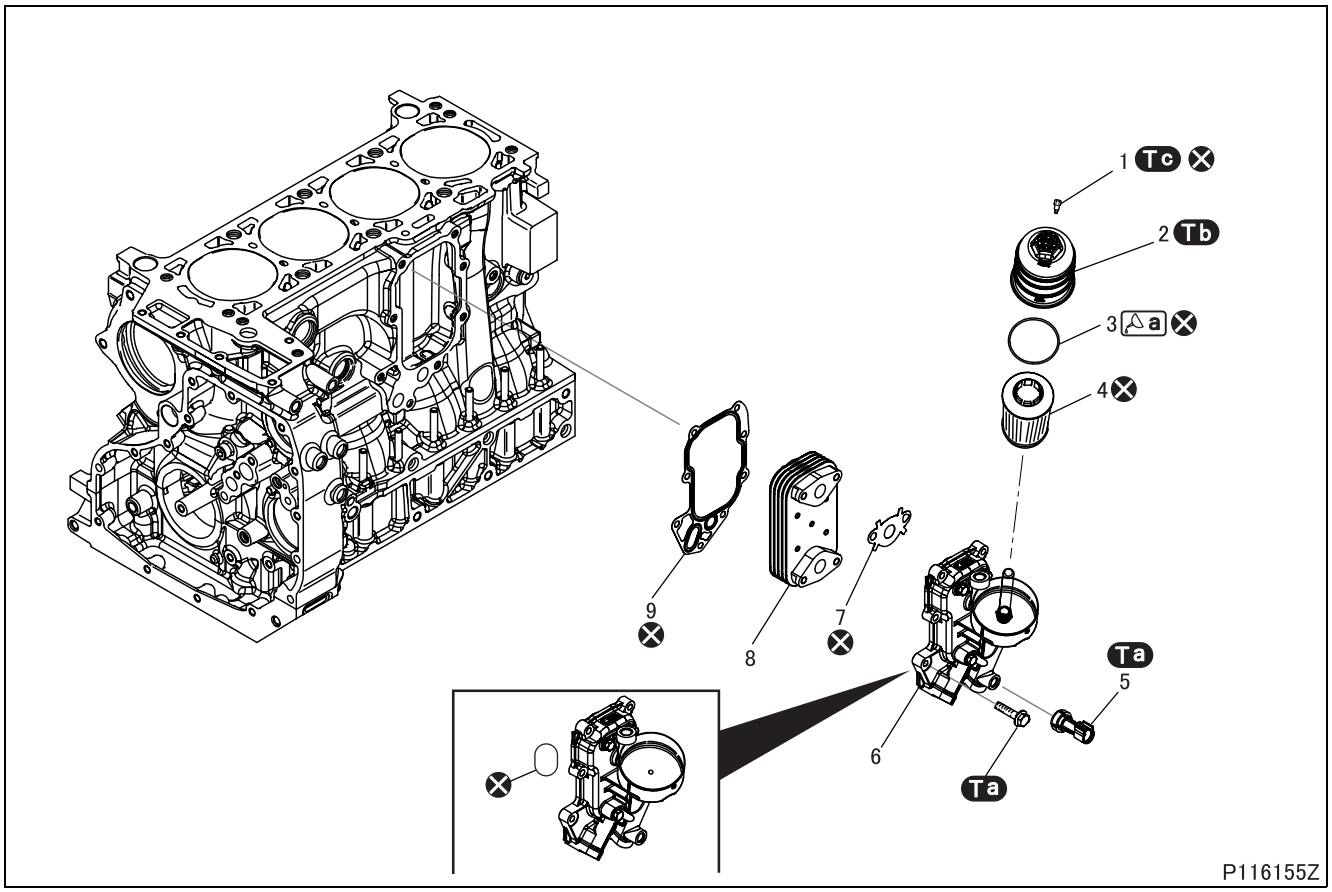

● **Disassembly sequence**

1 Air bleeder plug
2 Oil filter case
3 O-ring
4 Oil filter element
5 Oil pressure switch
6 Oil filter support
7 Gasket
8 Oil cooler
9 Gasket

⊗: Non-reusable parts

● **Assembly sequence**

Follow the disassembly sequence in reverse.

WARNING ⚠

- **Wipe up any spilled engine oil, as it can cause fires.**
- **To avoid any risk of burns, take care not to touch the engine oil when the engine is hot.**

CAUTION ⚠

- **Make sure not to put any engine oil on the belt when working on the oil filter. Belts soiled with oil may easily slip, resulting in deteriorated performance of the cooling system.**
- **Be sure to attach the gasket in the right direction shown in the figure. Otherwise, the oil holes will be covered.**
- **Do not reuse oil filters by washing them.**

https://truckmanualshub.com/

Tightening torque (Unit: N·m {ft.lbs, kgf·m})

Mark	Parts to be tightened	Tightening torque	Remarks
Ta	Bolt (oil filter support mounting)	25 {18, 2.5}	–
	Oil pressure sensor		
Tb	Oil filter case	25 to 30 {18 to 22, 2.5 to 3.0}	–
Tc	Air bleeder plug	1.5 ± 0.6 {1.1 ± 0.4, 0.2 ± 0.1}	–

Lubricant and/or sealant

Mark	Points of application	Specified lubricant and/or sealant	Quantity
a	O-ring	Engine oil	As required

◆Removal procedure◆

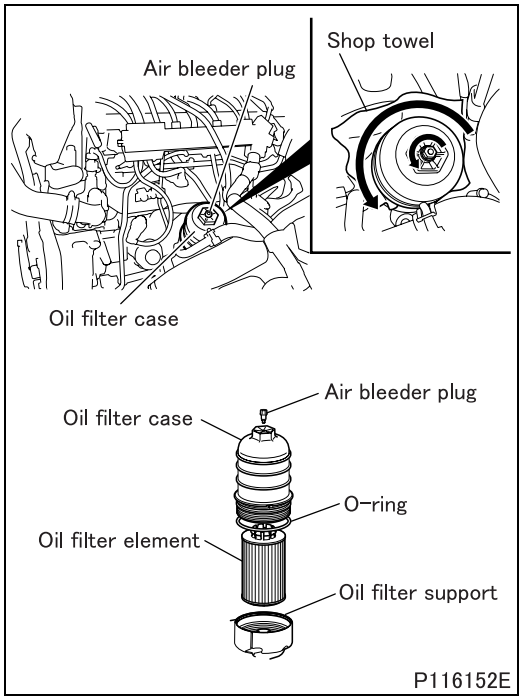

■ Removal: Oil filter element

- Warm up the engine if it is cold.
  Let the engine oil temperature rise to about 40°C {104°F}. (Run the engine at idle for about 20 min. to increase the engine oil temperature from about 0°C to 40°C {0°F to 104°F}.) Without warming up the engine, the engine oil will come out when the oil filter case is removed.
- Loosen the oil filter case. (Approx. 2.5 rotations.)
- Remove the air bleeder plug from the oil filter case. Wait for at least 5 minutes to drain the engine oil in the oil filter case.
- Remove the oil filter case.
  Wrap up the oil filter case with a rag when removing it so that oil will not spill out.

CAUTION ⚠

- **After removing the oil filter case, be careful not to allow foreign objects to enter the oil filter case.**

- Remove the O-ring from the oil filter case.
- Remove the oil filter element from the oil filter support.
- Clean the oil filter case, oil filter support surface that contacts the O-ring, and the O-ring groove on the filter case with a rag.

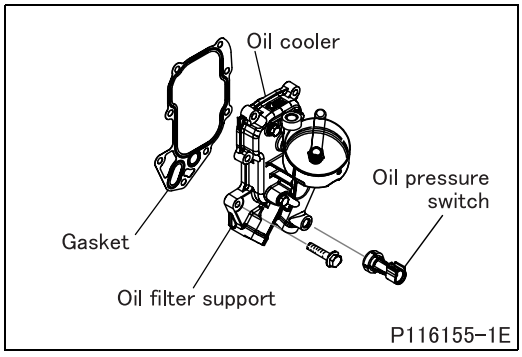

■ Removal: Oil cooler and oil cooler support

- Remove the oil cooler support together with the oil cooler and gasket.

https://truckmanualshub.com/

◆Installation procedure◆

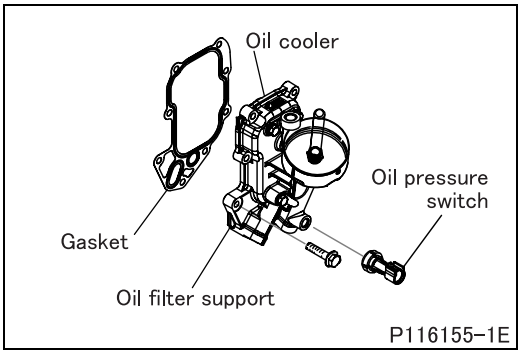

■ **Installation: Oil cooler support and oil cooler**

- Install the oil cooler together with a new gasket on the crankcase.
- Coat the oil pressure switch with sealant and install it.

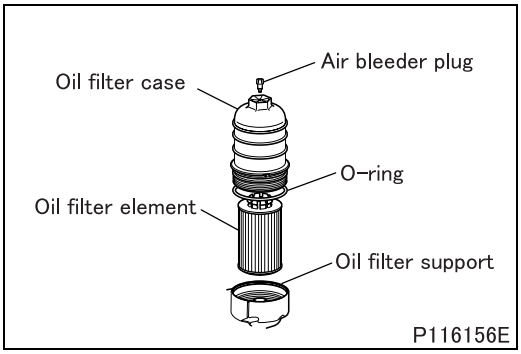

■ **Installation: Oil filter element**

- Apply a thin coat of engine oil to a new O-ring and install the O-ring on the oil filter case.

CAUTION ⚠

- **Use the O-ring and air bleeder plug that came with a new oil filter element.**

- Install an oil filter element with its hole located on the bottom side.
- Install a new air bleeder plug on the oil filter case, and then install the oil filter case on the oil filter support.

CAUTION ⚠

- **Use care not to tighten the air bleeder plug to a torque more than the specified. Otherwise, the air bleeder plug can be damaged.**

- Following the procedure given in the section “Starting the engine after parking for a long period,” start the engine and warm it up until the needle of the water temperature gauge begins to move.

- Stop the engine. After at least 10 minutes, check the engine oil level.
- Start the engine and check that oil is not leaking.
- If any abnormality is found, reinstall the oil filter.
- Stop the engine and check the engine oil level.
- Add engine oil if the oil level is too low.

- When the engine oil has been replaced, reset the inspection/service memory of the multi-information system. (See Chapter 6 “Multi-information system” in the Owner’s Manual.)

https://truckmanualshub.com/

FUSO

Group 13

Fuel and Engine Control

MITSUBISHI FUSO TRUCK OF AMERICA, Inc.

Pub.No.00ELT0001-13

https://truckmanualshub.com/

INDEX

SPECIFICATIONS 13-3

STRUCTURE AND OPERATION
1. High Pressure Electronic Injection System 13-4

TROUBLESHOOTING 13-12

ON-VEHICLE INSPECTION AND ADJUSTMENT
1. Inspecting and Adjusting No-load Minimum and Maximum Speeds 13-14
2. Air-bleeding of Fuel System 13-15
3. Fuel Filter Replacement 13-15
4. Fuel Hose Replacement 13-18

FUEL TANK, FUEL PUMP
<FE> 13-20
<FG> 13-22

FUEL FILTER 13-24

ACCELERATOR PEDAL 13-28

HIGH PRESSURE FUEL PUMP 13-30

COMMON RAIL, INJECTOR 13-34

https://truckmanualshub.com/

Fuels

- In cold regions, use diesel fuel with properties appropriate for the temperature predominant in the area.
- Use of a type of fuel other than the type indicated above will result in poor engine performance and could lead to serious damage to the engine. This also causes the warning lamp (red) to flash, which may result in limited engine power output or poor starting ability.
  If the warning lamp (red) flashes, have the vehicle inspected at an authorized dealer or distributor as soon as possible.

WARNING ⚠

- **Never use a mixture of diesel fuel with gasoline or alcohol or any fuel other than proper diesel fuel. Using other fuel could cause a fire or an explosion. If you accidentally use gasoline or alcohol when refueling the vehicle, remove all of it from the fuel system.**
- **The engine must be stopped when refueling. Never fail to put out your cigarette before refueling if you are smoking.**

CAUTION ⚠

- **Never use an alternative fuel or a mixture of diesel fuel and kerosene. Such fuel has inferior lubricating properties. Using it would cause a malfunction.**
- **Never add any antifreezing agent or other additive to the fuel, as a damaged fuel injection system could result.**

NOTE

- **If the vehicle runs out of fuel, air will enter the fuel system. Once air enters the system, you cannot start the engine even after refueling. The air must be bled out of the fuel system before the engine can be started. To bleed the fuel system, hold the starter switch in the "ON" position for 30 seconds and then return it to the "ACC" position. Fuel will then flow into the fuel system while forcing the air out. Now you can start the engine. There may be some instances where it takes 30 to 60 seconds to start the engine.**

https://truckmanualshub.com/

Item			Specifications
High pressure fuel pump	Manufacturer		Bosch
	Supply pump type		CP4.1
	Control method		Electronic
	Pressure regulator	Rated voltage V	12
	Max. common rail pressure MPa {psi, kgf/cm^2}		200 {28980, 2040}
Common rail	Manufacturer		Bosch
	Common rail pressure sensor supply voltage V		5
Injectors	Manufacturer		Bosch
	Injector type		Piezo
	Control method		Electrical
Engine electronic control unit	Manufacturer		Bosch
	Rated voltage V		12

https://truckmanualshub.com/

1. High Pressure Electronic Injection System

1.1 Over view

- The main characteristics of high pressure electronic injection system are:
  - High injection pressures available;
  - Pressures can be modulated irrespective of the speed of rotation and engine load;
  - Capacity to operate at very high speeds;
  - Injection control precision (injection duration and advance);
  - Lower consumption;
  - Lower emissions.

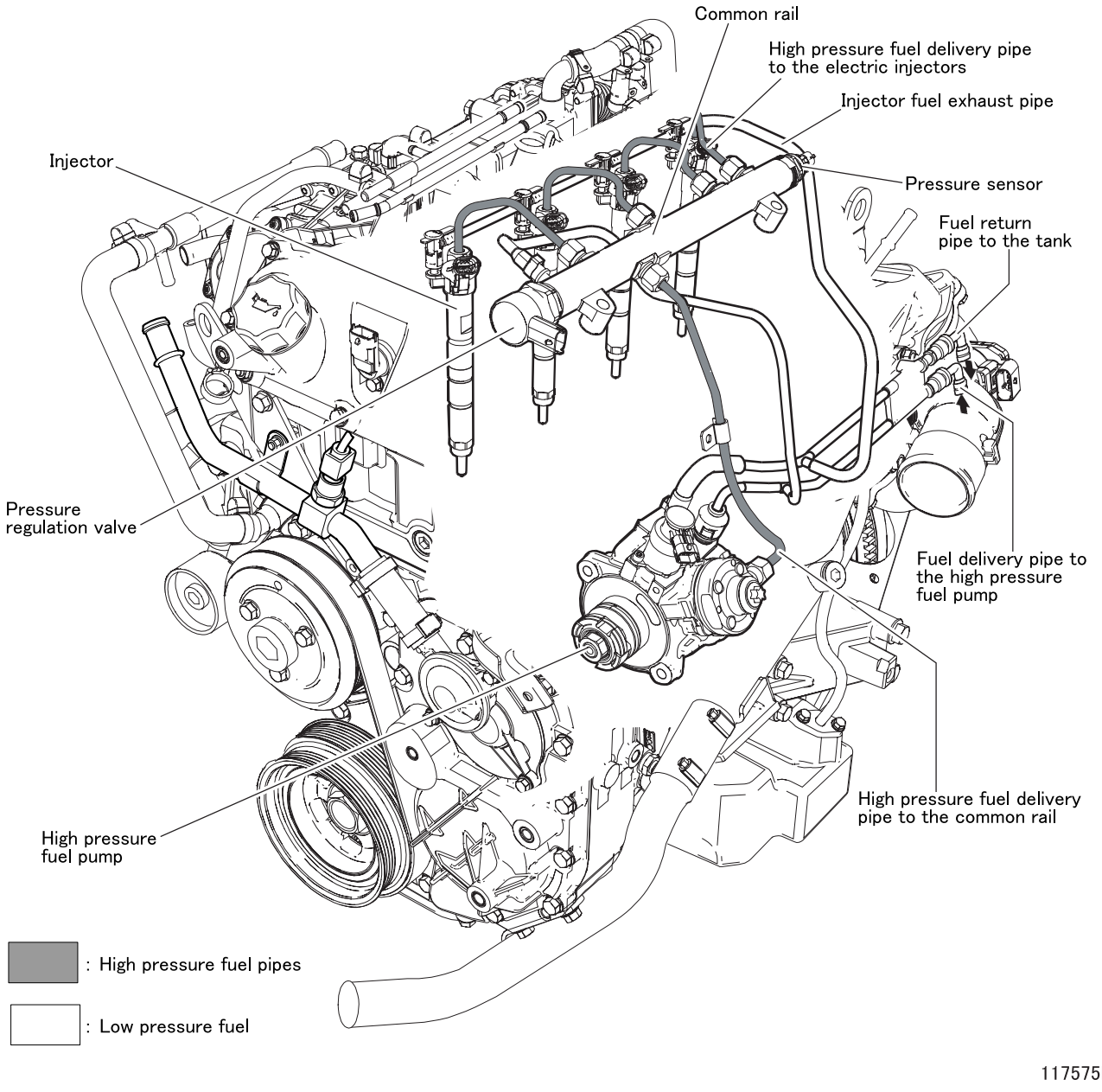

https://truckmanualshub.com/

- The main functions of the system are basically as follows:
  - Checking fuel temperature;
  - Checking engine coolant temperature;
  - Checking amount of fuel injected;
  - Checking idling speed;
  - Fuel cut-off when the accelerator pedal is released;
  - Checking cylinder balancing when idling;
  - Checking smokiness at exhaust on acceleration;
  - Checking exhaust gas recirculation (E.G.R.);
  - Checking top speed limit;
  - Checking glow plugs;
  - Checking activation of air-conditioning system (if any);
  - Checking auxiliary fuel pump;
  - Checking position of cylinders;
  - Checking main and pilot injection advance;
  - Checking closed cycle of injection pressure;
  - Checking turbocharging pressure;
  - Self-diagnosis;
  - Immobilizer electronic control unit;
  - Maximum torque limitation.

- The information the engine electronic control unit processes to regulate the amount of fuel to be injected comprises:
  - Engine speed;
  - Coolant temperature;
  - Turbocharging pressure;
  - Air temperature;
  - Intake air quantity;
  - Battery voltage;
  - Fuel pressure;
  - Position of throttle pedal.

https://truckmanualshub.com/

1.2 Functional diagram of hydraulic system

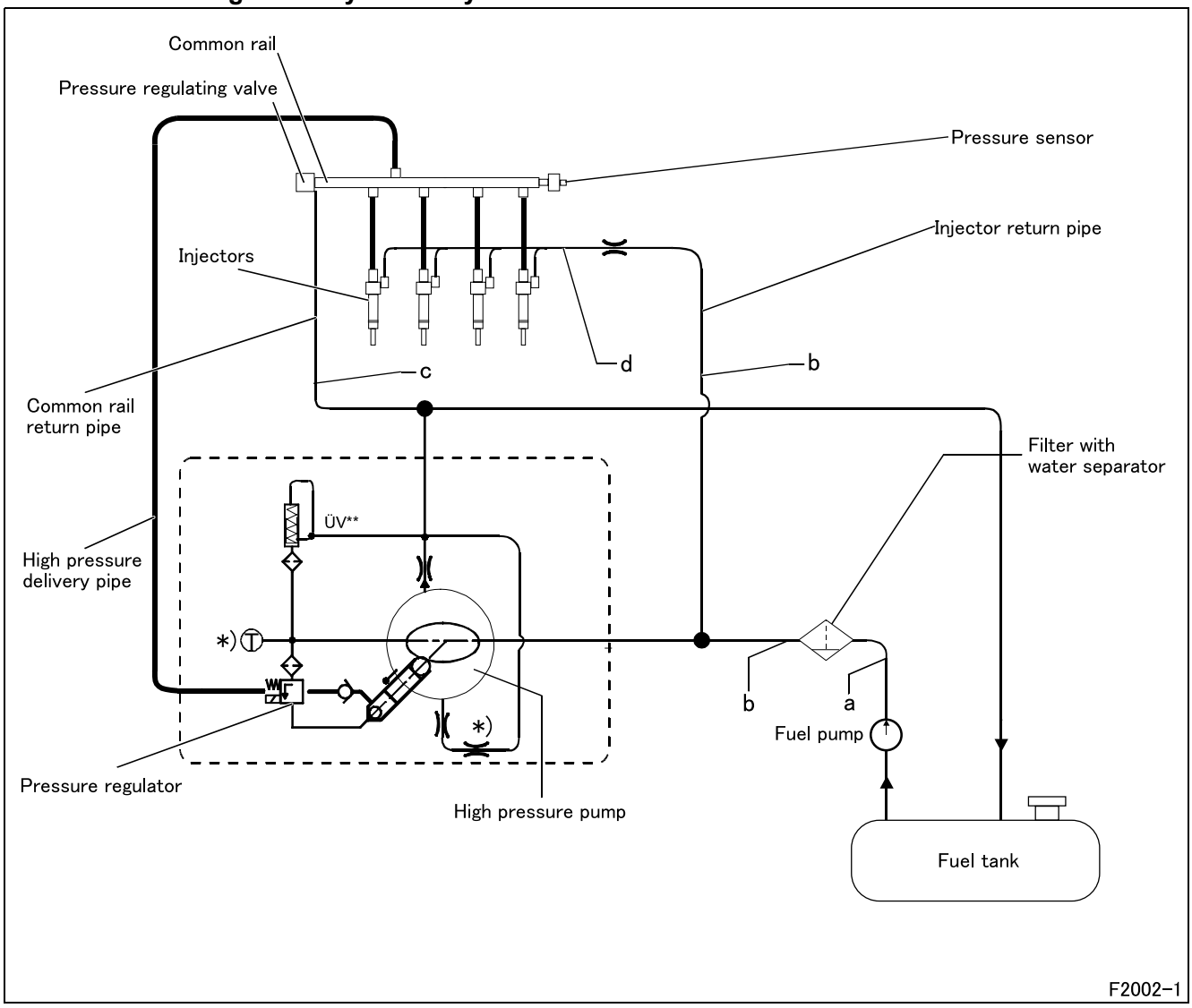

Pressures within the circuit:

a. 0.44 MPa {64 psi, 4.49 kgf/cm^2} (relative) ≤ p ≤ 0.58 MPa {84 psi, 5.91 kgf/cm^2} (relative)
b. 0.44 MPa {64 psi, 4.49 kgf/cm^2} (absolute) ≤ p ≤0.6 MPa {87 psi, 6.12 kgf/cm^2} (absolute)
c. p ≤ 0.2 MPa {29 psi, 2.04 kgf/cm^2} (absolute)
d. p ≥ 1.0 MPa {145 psi, 10.20 kgf/cm^2}

https://truckmanualshub.com/

- In this injection system, the pressure regulator, located upstream from the high pressure fuel pump, governs the flow of fuel needed in the low-pressure system. Afterwards, the high pressure fuel pump correctly supplies the common rail.
- This solution, pressurizing solely the necessary fuel, improves the energy efficiency and limits heating the fuel in the system.
- The pressure regulator valve fitted on the high pressure fuel pump has the function of keeping the pressure, at the pressure regulator inlet, constant at; irrespective of the efficiency of the fuel filter and of the system upstream. The action of the relief valve causes an increase in the flow of fuel in the high pressure fuel pump cooling circuit.
- The high pressure fuel pump continually keeps the fuel at the working pressure, irrespective of the timing and the cylinder that is to receive the injection and accumulates it in a duct common to all the injectors.
- At the injector inlet, there is therefore always fuel at the injection pressure calculated by the electronic control unit.
- When the piezoelectric actuator of the injector is energized by the electronic control unit, fuel flows in from the common rail and is injected into the cylinder.
- The hydraulic system is consists of a low-pressure fuel recirculation circuit and a high pressure circuit.
- The high pressure circuit is made up of the following pipes:
  - pipe connecting the high pressure fuel pump outlet to the common rail;
  - common rail;
  - pipes feeding the injectors from the common rail.
- The low-pressure circuit is made up of the following pipes:
  - fuel intake pipe from the tank to the filter;
  - pipe assembly made up of the following:
    - feed pipe from the fuel filter to the high pressure fuel pump;
    - fuel return pipe from the high pressure fuel pump to the tank;
    - fuel exhaust pipe from the injectors to the fuel return pipe to the tank.
- Because of the high performance of this hydraulic system, for reasons of safety it is necessary to:
  avoid connecting high pressure fuel pipe fittings without fully tightening the fittings;
  never disconnect the high pressure fuel pipes with the engine running (NEVER try bleeding, which is both pointless and dangerous).
- The integrity of the low-pressure circuit is also essential for the system to work properly; it is therefore necessary to avoid all manipulation and modifications and act only in the event of leakage.

https://truckmanualshub.com/

1.3 High pressure fuel pump

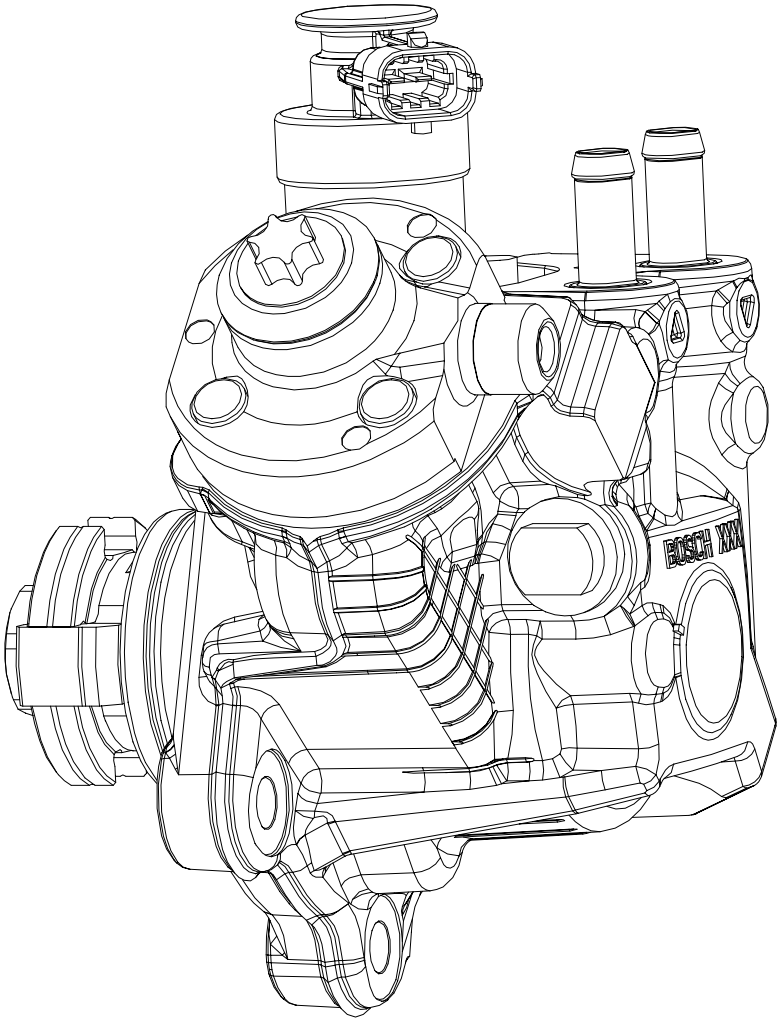

F2003

- A radial piston mechanical pump (CP 4.1) driven by distribution drive chain is used to produce a high level of operating pressure.
- The operating pressure is controlled in the following ways.
  - Electronically via a solenoid fixed to the pump body and controlled by the engine electronic control unit;
  - Via a pressure regulating valve mounted on the common rail.
- Fuel is supplied by the transfer pump located inside the high-pressure fuel pump body. The transfer pump is equipped with a pressure regulator that is controlled by the electronic control unit to meter the amount of fuel sent to the high-pressure fuel pump.

https://truckmanualshub.com/

1.4 Common rail

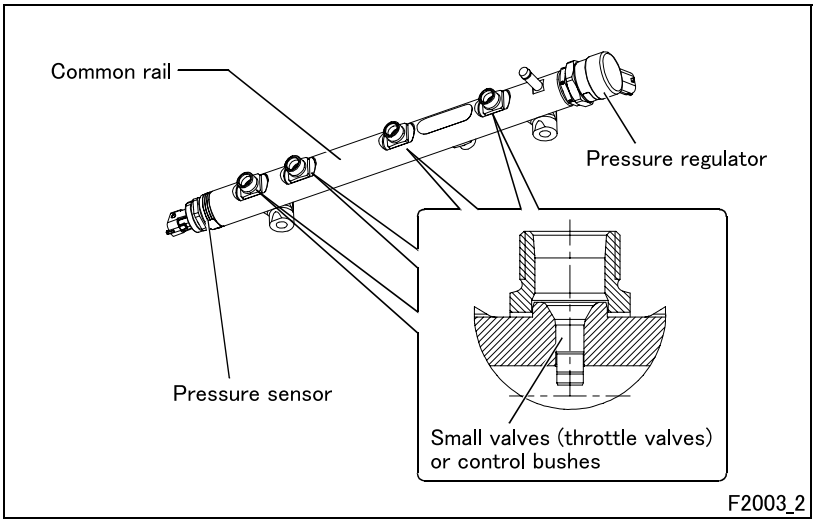

- The common rail is affixed to the cylinder head on the intake side.
- By its volume, it dampens fuel pressure oscillations caused by:
  - High pressure fuel pump operation
  - Injector opening.
- The following are installed on common rail:
  - A pressure sensor to measure the pressure of the fuel present inside the common rail. The fuel pressure sensor can affect the accuracy of the injector minimum flow correction, as the minimum flow depends on both the injection times and the actual pressure of the common rail.
  - A pressure regulator to control the operating pressure.
- Small valves (throttle valves) or control bushes, have been installed on the fuel delivery couplings, which control the fuel pressure waves generated by the high pressure fuel pump.
- Their function is to protect the injectors by reducing their wear over time.

1.5 Injectors

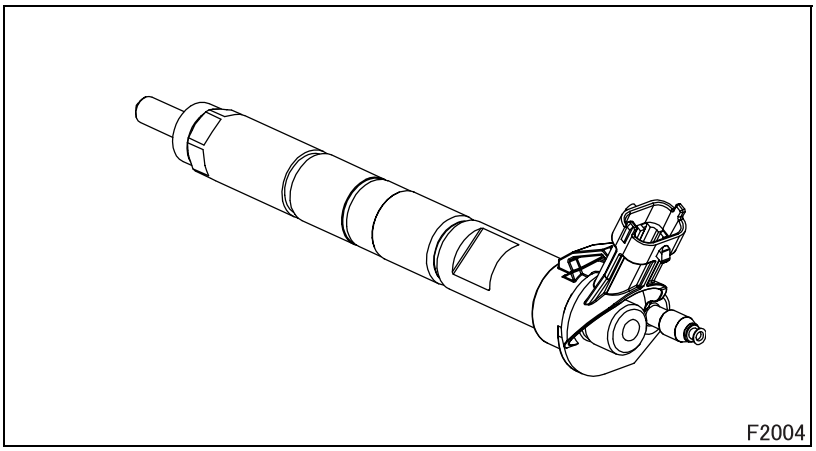

- The injectors are located on the cylinder head and receive the fuel under pressure from the common rail. They operate both the high pressure fuel supply and recirculation under atmospheric pressure of the excess fuel that has not been injected.
- The following are installed on the injector head:
  - A central access pipe for fuel under high pressure;
  - A lateral pipe for the recirculation of fuel under low pressure with built-in throttle;
  - The site for the electric connector that receives commands from the engine electronic control unit.
- The engine electronic control unit controls the piezoelectric actuator inside the injector.
- The piezoelectric actuator, due to reduced switching times, enables a very fast reaction to the commands sent from the electronic control unit, making injection capacity more flexible and increasing the number of injections per cycle.

https://truckmanualshub.com/

1.6 Fuel filter

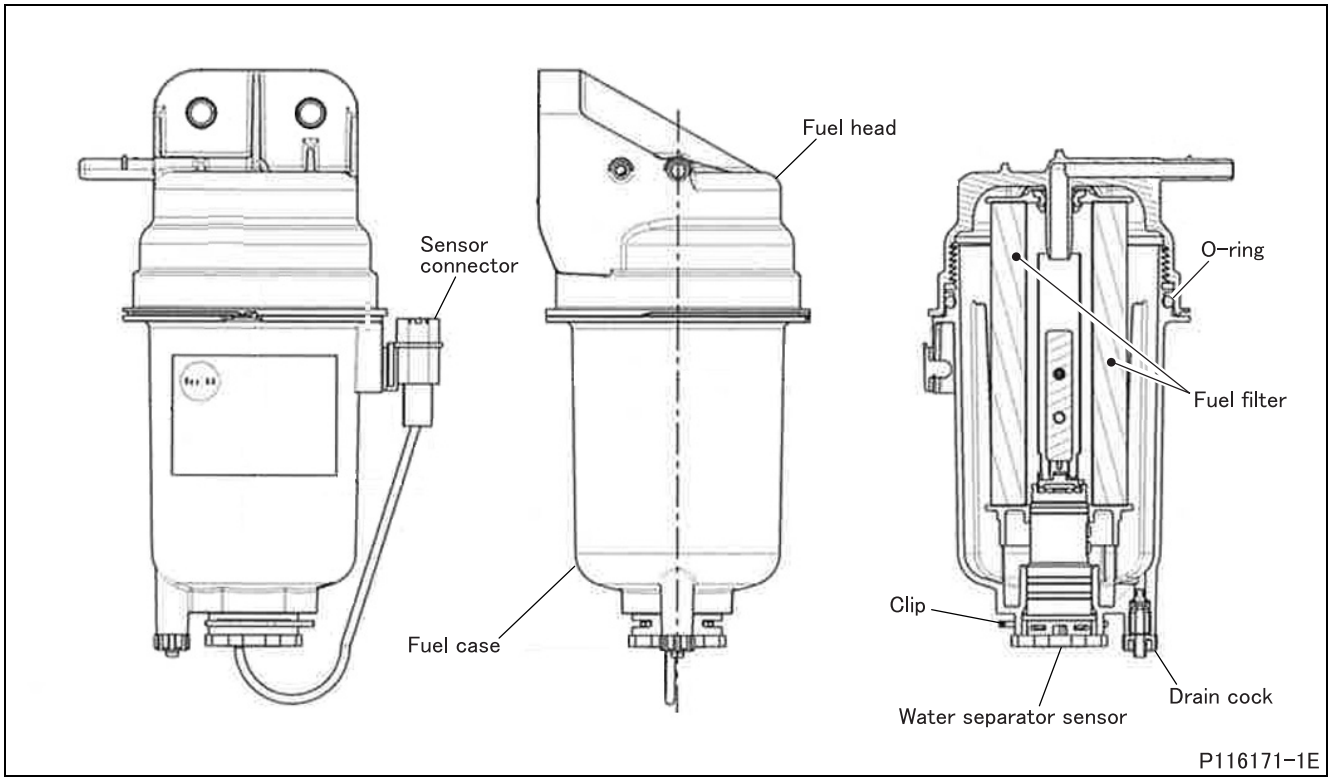

- Fuel filter is made up of a filtering cartridge with water separator, inside which an electronic unit is housed. Water accumulation capacity is equal to 140 cm^3 {8.5 cu.in.}. The electronic unit includes water separator sensor and fuel temperature sensor.

(1) Water presence sensor

Water presence sensor detects water present in the filter starting from 110 cm^3 {6.7 cu.in.} volume present. Water presence sensor provides values of:

- low voltage in presence of water: higher than 11.8 V
- high voltage in absence of water: lower than 3.9 V

Characteristics
12 V nominal voltage (8 V minimum – 16 V maximum)

(2) Fuel temperature sensor

Temperature range: –40 to +130°C {–104 to 266°F}

(3) Heater

Nominal voltage: 12 V
Maximum allowed voltage: 30 V
Nominal power: 250 W

https://truckmanualshub.com/

1.7 Fuel pump

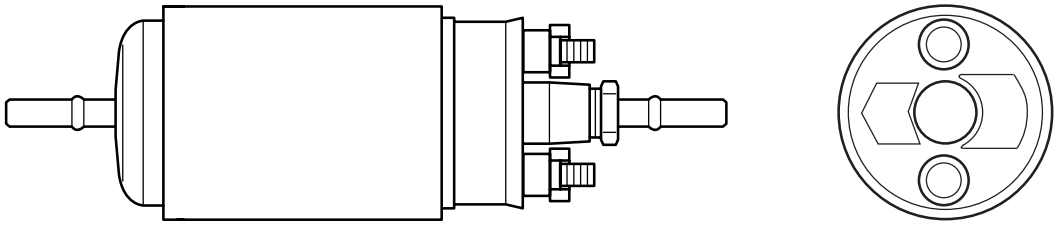

P118142

https://truckmanualshub.com/

Possible causes \ Symptoms		Engine will not start	Engine is difficult to start	Engine knocks	Engine output is unstable	Engine output is insufficient	Engine is idling unstably	Engine stalls soon after starting	Engine does not reach maximum speed	Engine does not stop	Fuel supply is insufficient	Engine warning lamp	Reference Gr
Electronic control fuel system faulty												O	
Feed supply pump	Defective feed pump	O	O		O	O		O				O	
	Defective sealing overpressure valve feed pump	O	O		O	O		O				O	
	Open or short circuit failure, poor contact of supply pump	O	O		O	O		O				O	
High pressure fuel pump	Defective high pressure fuel pump	O	O			O		O				O	
	Open circuit pressure regulator	O	O	O				O				O	
	Poor contact on pressure regulator connectors	O	O			O		O				O	
Incorrect injector fuel injection	Open or short circuit failure, poor contact of injector magnetic valve		O	O		O	O	O				O	
	Defective injector, defective injector magnetic valve, defective nozzle		O	O	O	O	O	O		O		O	
Clogged fuel filter			O		O		O	O				O	
No fuel in fuel tank		O											
Clogged fuel pipe and/or leaky pipe joints		O										O	
Air or water in fuel system		O			O		O	O					
Use of low quality fuel			O	O			O						
Open or short circuit failure, poor contact of common rail pressure sensor, defective sensor		O	O		O	O		O				O	
Pressure regulating valve in the rail blocked in open position		O	O			O						O	
Pressure regulating valve in the rail poor contact			O		O							O	
Fuel leakage from high pressure joint			O		O	O	O					O	
Engine control	Poorly adjusted accelerator pedal					O			O		O		
	Defective accelerator position sensor					O					O	O	
Cracked fuel pipe and/or hose		O	O			O					O		

- Engine electronic control unit enables power limitation power if common rail pressure is out some defined ranges.

https://truckmanualshub.com/

Symptoms / Possible causes	Engine will not start	Engine is difficult to start	Engine output is unstable	Engine output is insufficient	Engine maximum speed is too high	Engine is idling unstably	Engine stalls soon after starting	Engine does not reach maximum speed	Engine does not stop	Warning lamp illuminates	Engine warning lamp	Reference Gr
Oil viscosity unsuitable		O				O						
Defective cylinder head gasket		O				O						Gr11
Wear of and/or carbon deposits on valve and valve seat		O	O			O						
Distorted valve springs		O				O						
Worn or damaged piston rings		O		O	O	O			O			
Worn or damaged piston ring groove		O		O	O				O			
Worn piston and/or cylinder liner		O		O	O	O			O			
Poorly functioning cooling system		O				O						
Defective starter switch	O	O										Gr54
Defective glow plug		O										
Open-circuited, short-circuited or poorly connected engine speed sensor and/or camshaft timing sensor	O	O						O		O	O	
Open-circuited, short-circuited or poorly connected air temperature and pressure sensor			O	O				O		O	O	
Open-circuited, short-circuited or poorly connected water temperature sensor	O	O								O		
Blown fuse	O	O					O			O	O	Gr54

https://truckmanualshub.com/

ON-VEHICLE INSPECTION AND ADJUSTMENT

1. Inspecting and Adjusting No-load Minimum and Maximum Speeds

Service standards

Location	Maintenance item	Standard value	Limit	Remedy
–	No-load minimum speed (idle speed)	650 rpm	–	Inspect
–	No-load maximum speed	4200 ± 50 rpm	–	Inspect

[Preparation]

- Prepare the vehicle for inspection and adjustment as described below.
- Connect a tachometer or FUSO diagnostics. (Confirm this with the service data “Coolant Temperature” in FUSO diagnostics.)
- Warm-up the engine until the engine coolant temperature rises to 84 to 94°C {176 to 201°F}. (Confirm this with the service data “Coolant Temperature” in FUSO diagnostics.)
- Turn off all the lights and auxiliary equipment.
- Put the transmission into neutral.
- Turn the steering wheel to the neutral position.
- Set the rev counter.

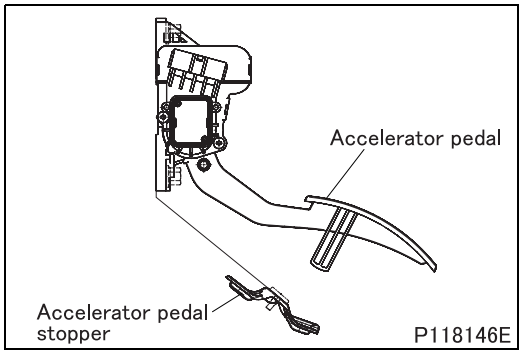

[Inspection]

(1) No-load minimum speed

- Measure the engine speed when the accelerator pedal is not depressed.
- If the measurement deviates from the standard range, check the accelerator pedal position sensor for malfunction. (See “ACCELERATOR PEDAL”.)
- If no abnormality is found in the accelerator pedal position sensor, check for fuel system diagnosis codes and inspect the fuel system.

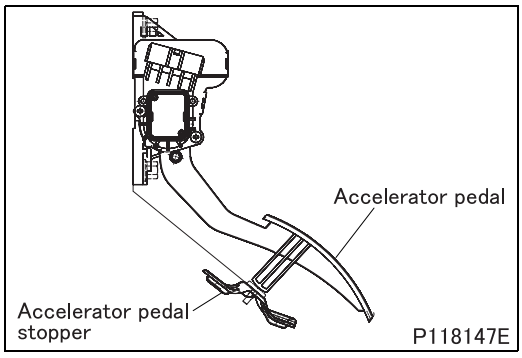

(2) No-load maximum speed

- Make sure the pedal’s stopper comes in contact with the stopper rubber when the pedal is depressed a full stroke.
- Press the accelerator pedal all the way.
- Measure the engine speed when the accelerator lever is in contact with the accelerator pedal stopper.
- If the measurement deviates from the standard range, check the accelerator pedal position sensor for malfunction. (See “ACCELERATOR PEDAL”.)
- If no abnormality is found in the accelerator pedal position sensor, check the fuel system diagnosis codes and inspect the fuel system.

https://truckmanualshub.com/

2. Air-bleeding of Fuel System

- If the vehicle runs out of fuel, air will enter the fuel system. Once air enters the system, you cannot start the engine even after refueling. The air must be bled out of the fuel system before the engine can be started. To bleed the fuel system, hold the starter switch in the “ON” position for 30 seconds and then return it to the “ACC” position. Fuel will then flow into the fuel system while forcing the air out. Now you can start the engine. There may be some instances where it takes 30 to 60 seconds to start the engine.

3. Fuel Filter Replacement

WARNING ⚠

- **The fuel is highly flammable. Keep it away from flames and other sources of heat.**
- **Carefully wipe up spilled fuel. Otherwise, it could cause a fire.**

Tightening torque (Unit: N·m {ft.lbs, kgf·m})

Mark	Parts to be tightened	Tightening torque	Remarks
–	Drain plug of filter case	1.5 ± 0.5 {1.1 ± 0.4, 0.15 ± 0.05}	–

Lubricant and/or sealant

Mark	Points of application	Specified lubricant and/or sealant	Quantity
–	O-ring	Engine oil	As required

Special tools

Mark	Tool name and shape	Part No.	Application
Ca	Filter wrench 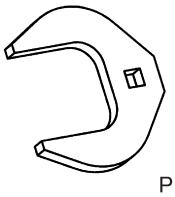 P116182	MH064193	Removal and installation of filter case

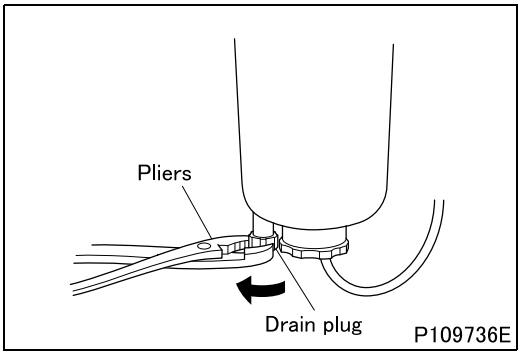

[Removal]

- Place a container below the fuel filter to catch fuel.
- Disconnect the fuel tube and turn the fuel filter drain plug in the illustrated direction with pliers or equivalent to loosen it. The fuel in the fuel filter will drain.
- After the fuel is drained, tighten the drain plug to the specified torque.

https://truckmanualshub.com/

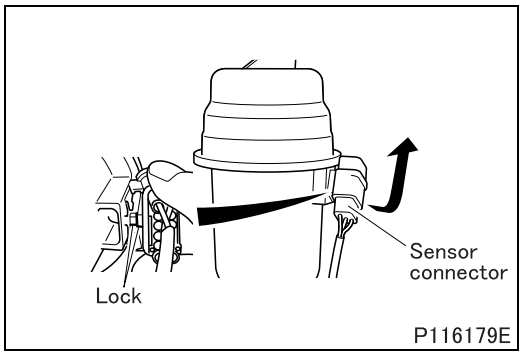

- Unlock the sensor connector by pulling its bottom toward you, then pull the connector straight upward to remove it.

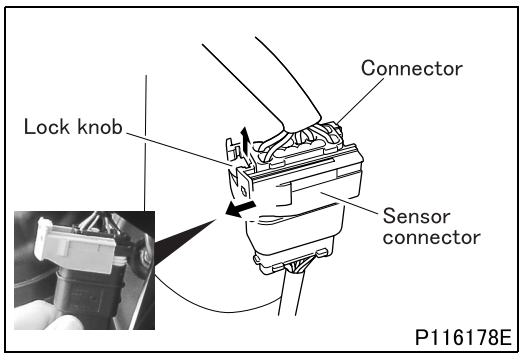

- Pull up the sensor connector's lock knob, then slide the upper half of the connector (in the direction of the arrow) to remove the connector.

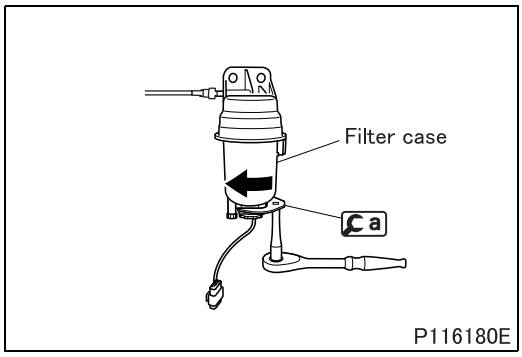

- Remove the filter case using a.

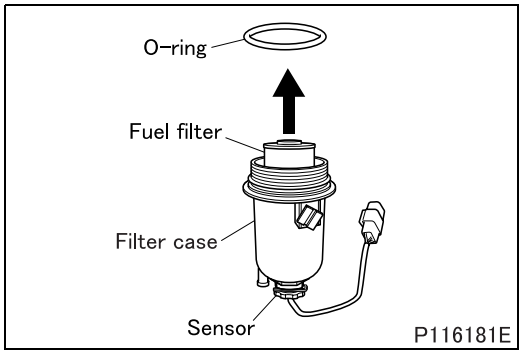

- Remove the fuel filter by pulling it straight upward.

CAUTION ⚠

- **Always keep the filter parallel with the filter case when removing and installing it. The sensor will be damaged if the filter is tilted during its installation or removal.**

- Remove the O-ring from the filter case.

https://truckmanualshub.com/

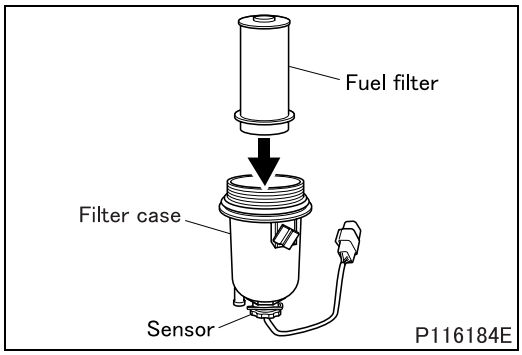

[Installation]

- Replace the fuel filter and O-ring with new ones.
- O-ring used should be the one supplied with a new fuel filter.
- Coat the O-ring with a thin film of [a] and install it on the filter case.
- Insert the fuel filter into the filter case straight downward.

CAUTION ⚠

- **Always keep the filter parallel with the filter case when removing and installing it. The sensor will be damaged if the filter is tilted during its installation or removal.**
- **Use of an unsuitable fuel filter causes engine trouble. Always use a genuine fuel filter.**
- **Take care not to allow foreign particles to enter the fuel filter and fuel tube. Otherwise, injection failure or other trouble could occur.**

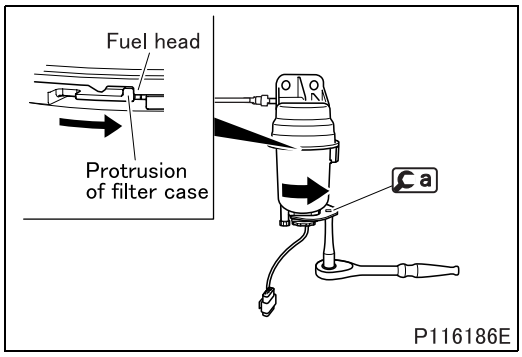

- Turn the filter case using [a] until it stops and check that the projection on the filter case is in contact with the filter head.

CAUTION ⚠

- **When installing the filter case, always make sure that the protrusion on it is in close contact with the filter head.**
- **Leaky or damaged filter case will result if it is turned insufficiently or excessively during the installation.**

■ Installation: Sensor connector

- To install the sensor connector, follow the removal procedure in reverse. (See "**■ Removal: Sensor connector**".)

■ Work after installation

- Bleed air out of the fuel system after installing the filter case. (See Air-bleeding of Fuel System.)
- Start the engine and confirm that fuel does not leak.
- If fuel leaks, remove and reinstall the fuel filter from the beginning.
- After replacement of the fuel filter, reset the maintenance record in the multi-information system. (See Chapter 6 "Multi-information system" of Owner's Manual.)

https://truckmanualshub.com/

4. Fuel Hose Replacement

Special tools

Mark	Tool name and shape	Part No.	Application
a	Fuel tube release tool 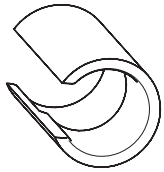 P116339	MH064211	Removal of fuel tube

◆Removal procedure◆

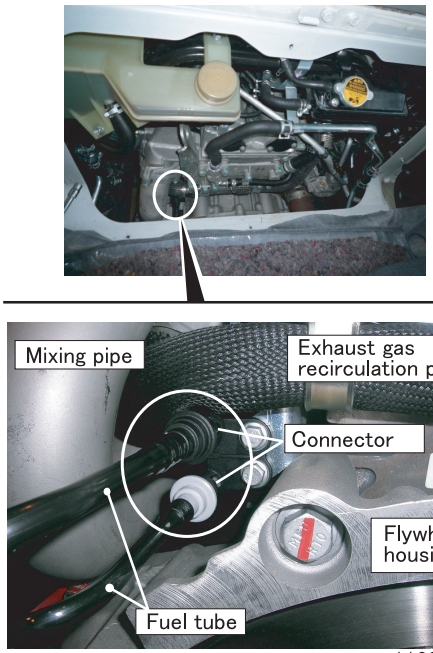

116340-1E

■ **Removal: Fuel tube**

- Disconnect the fuel tube at the connection to the engine using a.
- The connector has different diameters depending on whether it is outgoing to, or incoming from, the engine. Use a of the correct size according to the connector type.

https://truckmanualshub.com/

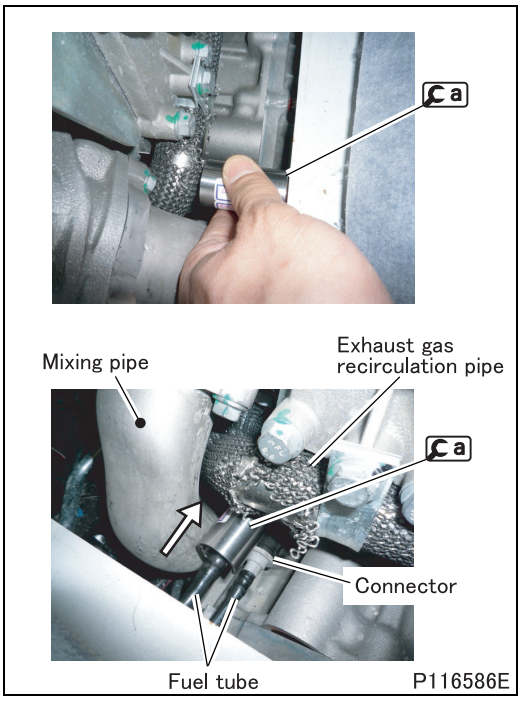

- Unlock the connector by pushing it in the direction of the arrow using a inserted from the connector's back side, then remove the fuel tube.
- Perform the same steps for the lower side. Depending on the vehicle specifications, the steps should be performed with the rear lid opened.

https://truckmanualshub.com/

FUEL TANK, FUEL PUMP <FE>

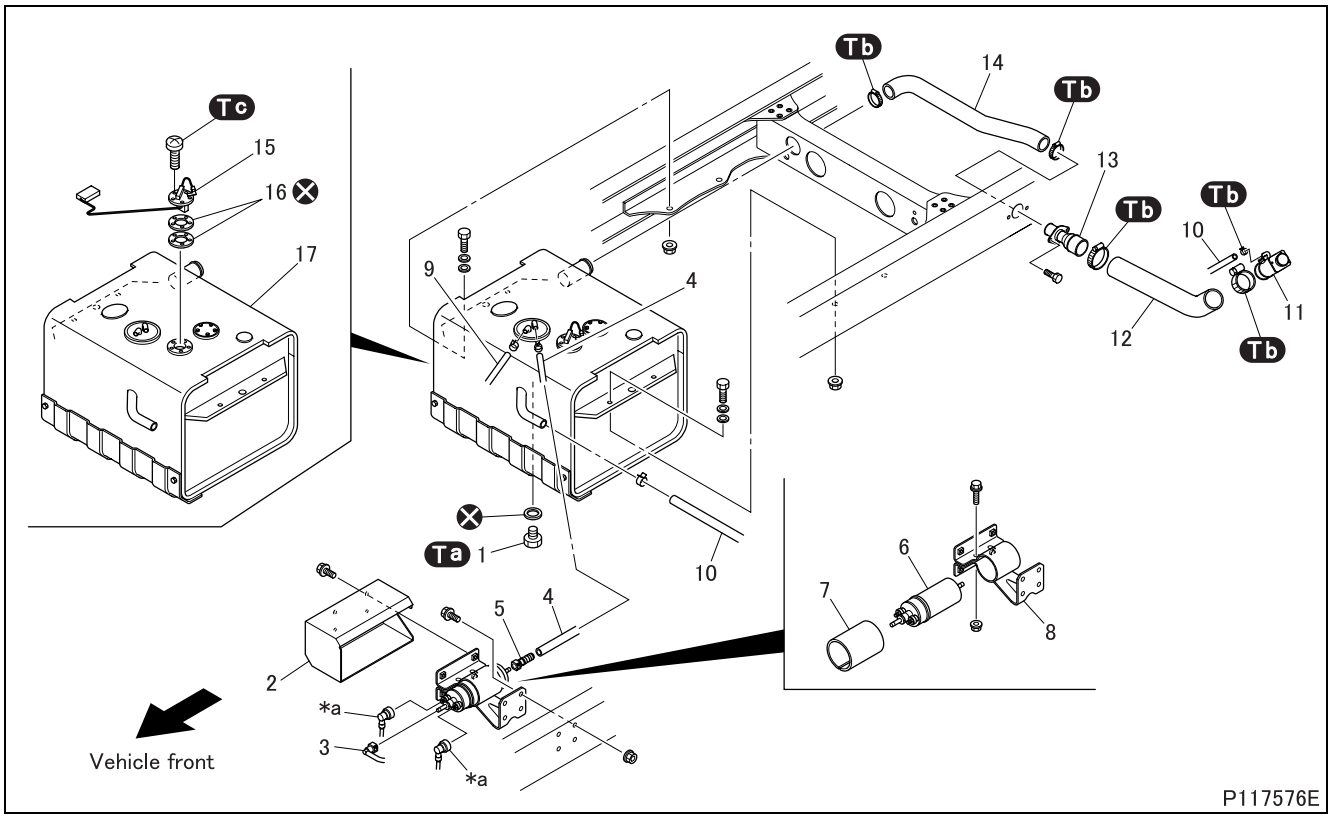

● **Removal sequence**

1 Drain plug
2 Fuel pump cover
3 Fuel tube
4 Suction hose
5 Connector
6 Fuel pump
7 Rubber
8 Fuel pump bracket
9 Return hose
10 Air vent tube
11 End filler
12 Fuel hose
13 Fuel pipe
14 Fuel hose
15 Fuel lever sensor
16 Gasket
17 Fuel tank

***a**: Harness connector
⊗: Non-reusable parts

DANGER ⚠

- **Do not allow any flames or sources of heat near the fuel tank and fuel pump, as it may explode.**

WARNING ⚠

- **Fuel is highly flammable. Keep it away from flames and sources of heat.**
- **To avoid risk of fire, wipe up any spilled fuel.**

● **Installation sequence**

Follow the removal sequence in reverse.

CAUTION ⚠

- **Install the air vent tube without deformation or slack because it causes difficult fuel refueling.**

https://truckmanualshub.com/

Tightening torque (Unit: N·m {ft.lbs, kgf·m})

Mark	Parts to be tightened	Tightening torque	Remarks
Ta	Drain plug	29.4 ± 4.9 {22 ± 3.6, 3.0 ± 0.5)	–
Tb	Clamp	3.9 ± 1.0 {2.9 ± 0.7, 0.4 ± 0.1)	–
Tc	Screw (fuel level sensor mounting)	1.0 to 2.5 {0.7 to 1.8, 0.1 to 0.25}	–

◆Installation procedure◆

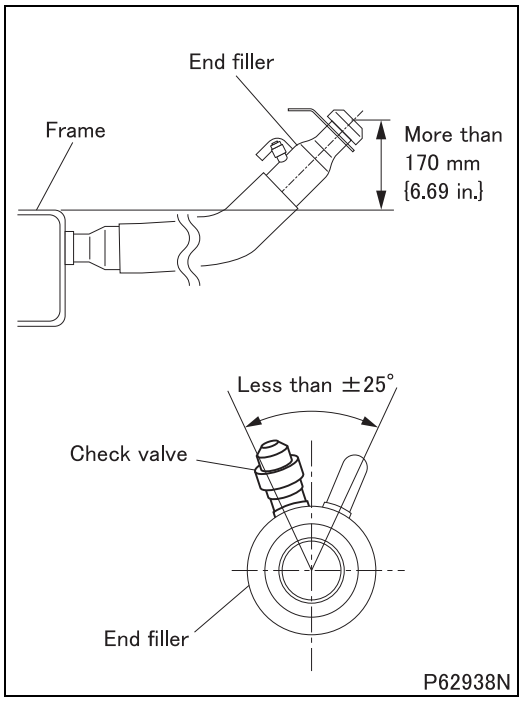

■ Installation: End filler

- Install the end filler so that the installing positions of the end filler mouth and the check valve are as illustrated.

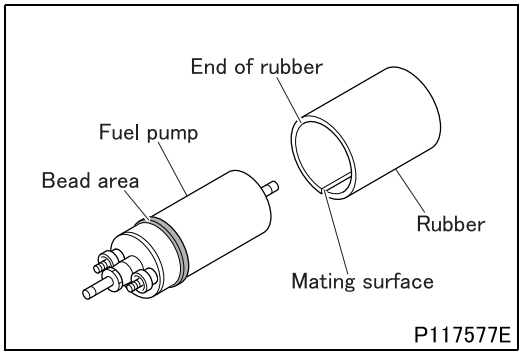

■ Installation: Rubber

- Install the rubber with its joint downward and the end in contact with the bead on the fuel pump.

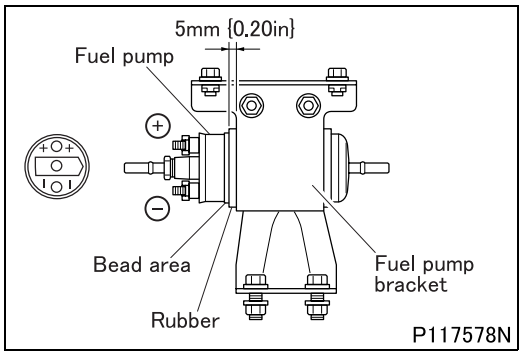

■ Installation: Fuel pump

- Install the fuel pump so that its bead is located relative to the fuel pump bracket in the dimension indicated in the illustration.

https://truckmanualshub.com/

FUEL TANK, FUEL PUMP <FG>

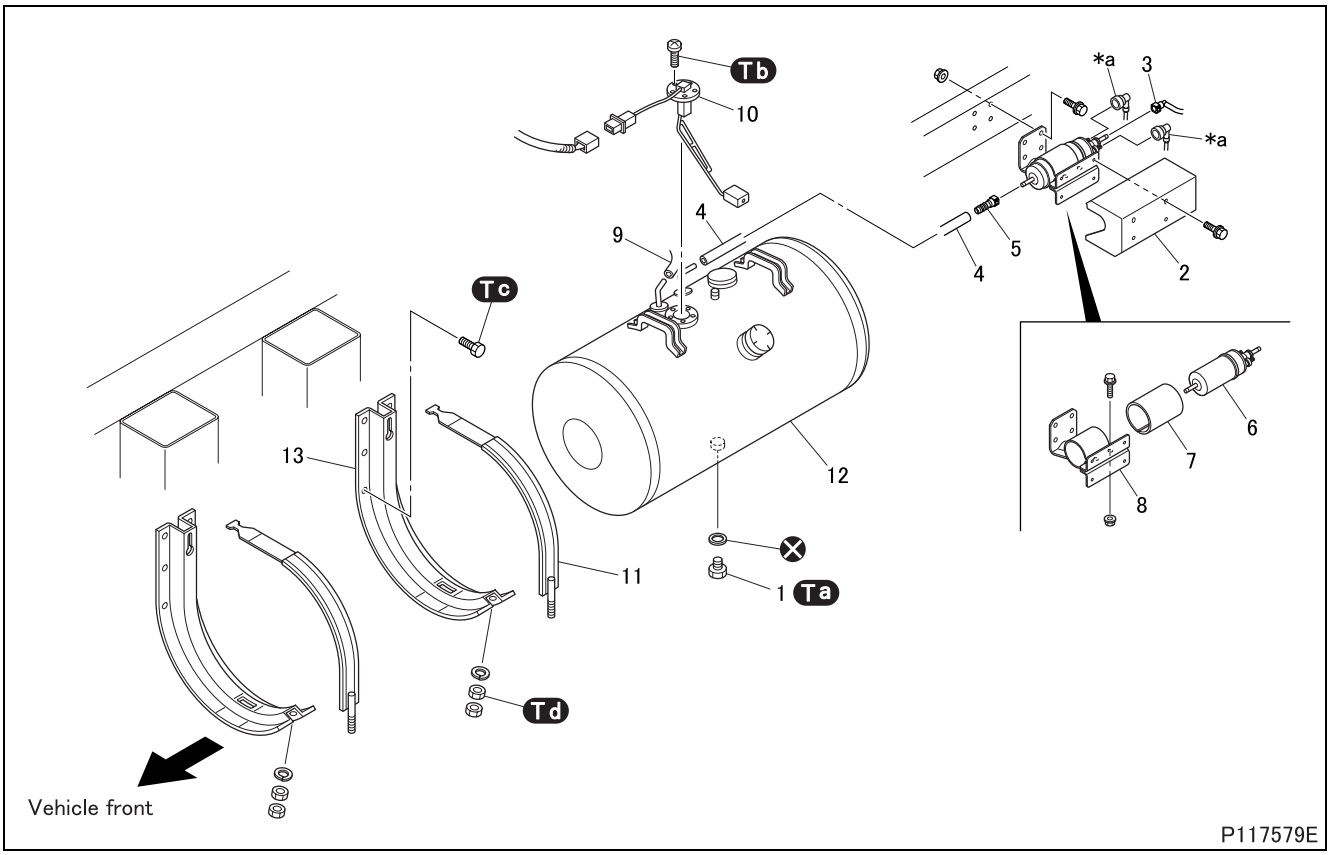

● **Removal sequence**

1 Drain plug
2 Fuel pump cover
3 Fuel tube
4 Suction hose
5 Connector
6 Fuel pump
7 Rubber
8 Fuel pump bracket
9 Return hose
10 Fuel level sensor
11 Fuel tank band
12 Fuel tank
13 Fuel tank bracket

***a**: Harness connector
⊗: Non-reusable parts

● **Installation sequence**

Follow the removal sequence in reverse.

DANGER ⚠

- **Do not allow any flames or sources of heat near the fuel tank, as it may explode.**

WARNING ⚠

- **Fuel is highly flammable. Keep it away from flames and sources of heat.**
- **To avoid risk of fire, wipe up any spilled fuel.**

Tightening torque (Unit: N·m {ft.lbs, kgf·m})

Mark	Parts to be tightened	Tightening torque	Remarks
Ta	Drain plug	49 to 88.2 {36 to 65, 5.0 to 9.0}	–
Tb	Screw (fuel level sensor mounting)	0.98 to 1.47 {0.72 to 10.8, 0.1 to 0.15}	–
Tc	Bolt (fuel tank bracket mounting)	90 to 110 {66 to 81, 9.2 to 11.0}	–
Td	Nut (fuel tank band mounting)	9 to 14 {6.6 to 10.0, 0.9 to 1.4}	–

https://truckmanualshub.com/

◆Installation procedure◆

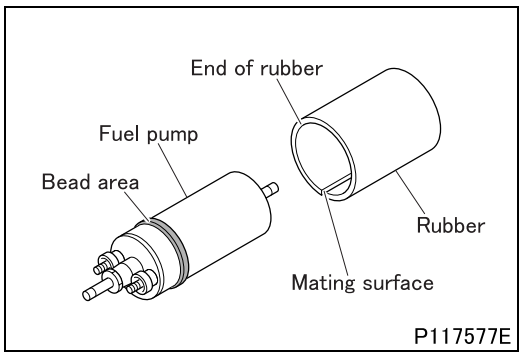

■ **Installation: Rubber**

- Install the rubber with its joint downward and the end in contact with the bead on the fuel pump.

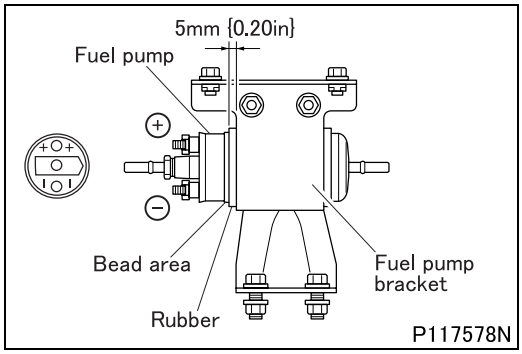

■ **Installation: Fuel pump**

- Install the fuel pump so that its bead is located relative to the fuel pump bracket in the dimension indicated in the illustration.

https://truckmanualshub.com/

FUEL FILTER

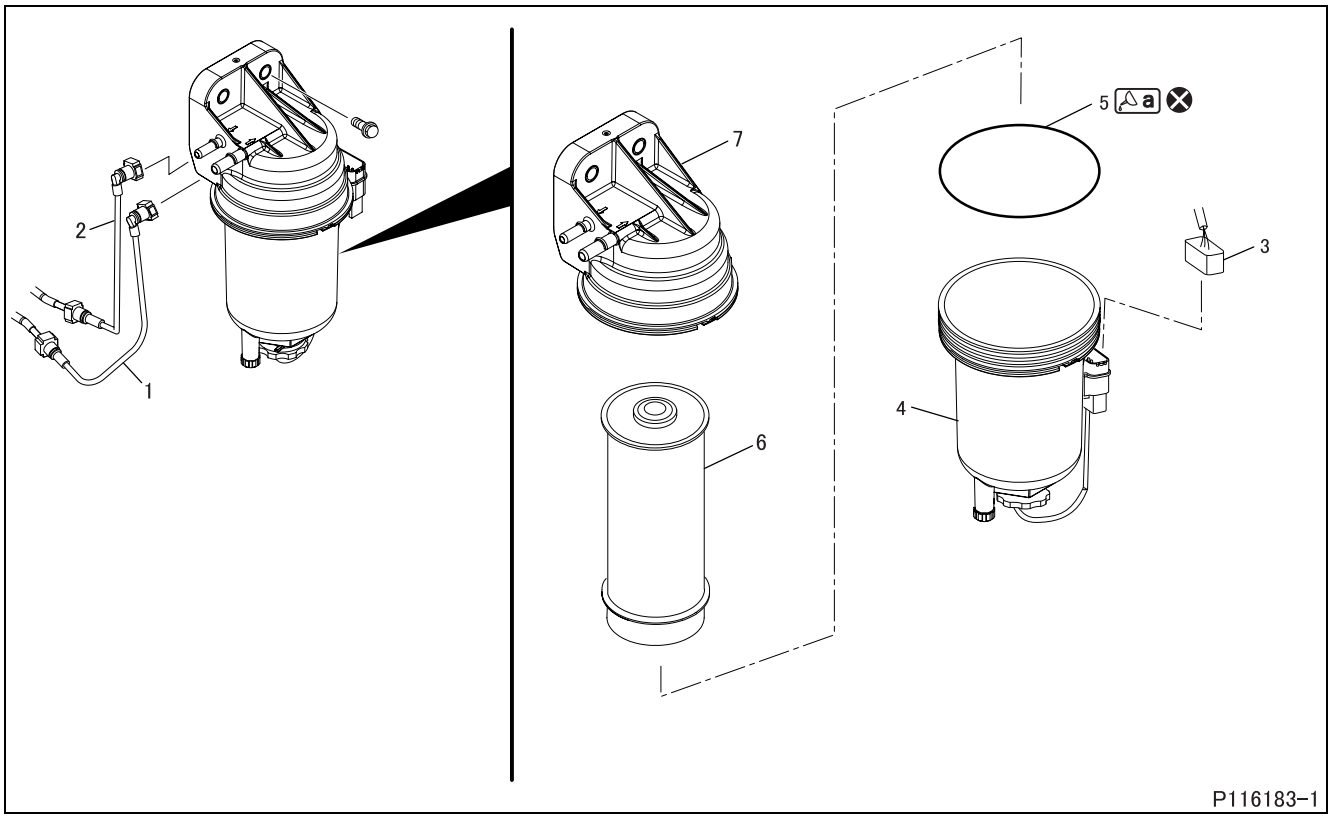

● **Disassembly sequence**

1 Fuel tube
2 Fuel tube
3 Sensor connector
4 Filter case
5 O-ring
6 Fuel filter
7 Fuel head

⊗: Non-reusable parts

WARNING ⚠

- **The fuel is highly flammable. Keep it away from flames and other sources of heat.**
- **Carefully wipe up spilled fuel. Otherwise, it could cause a fire.**

CAUTION ⚠

- **When disconnecting the fuel tube, put a shop towel to the connector. Fuel spouts out for a moment.**

● **Assembly sequence**

Follow the disassembly sequence in reverse.

Tightening torque (Unit: N·m {ft.lbs, kgf·m})

Mark	Parts to be tightened	Tightening torque	Remarks
Ta	Drain plug of filter case	1.5 ± 0.5 {1.1 ± 0.4, 0.15 ± 0.05}	–

Lubricant and/or sealant

Mark	Points of application	Specified lubricant and/or sealant	Quantity
a	O-ring	Engine oil	As required

https://truckmanualshub.com/

Special tools

Mark	Tool name and shape	Part No.	Application
ⓒa	Filter wrench 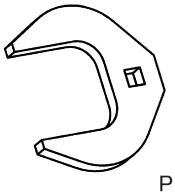 P116182	MH064193	Removal and installation of filter case

◆Work before removal◆

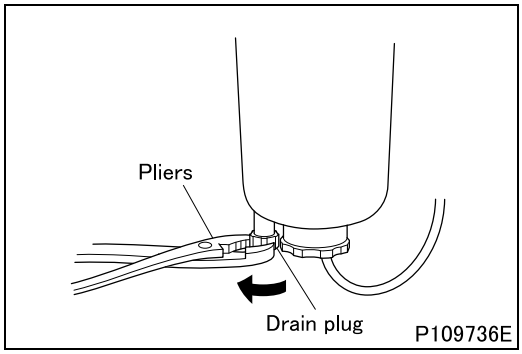

P109736E

■ **Removal: Fuel filter**

- Disconnect the fuel tube and turn the fuel filter drain plug in the illustrated direction with pliers or the like to loosen it. The fuel in the fuel filter will be drained. (The drain plug is not detached.)
- After the fuel is drained, tighten the drain plug to the specified torque.

CAUTION ⚠

- **If the fuel is drained before the fuel tube is disconnected, the fuel in the fuel tank will flow out. Be sure to disconnect the fuel tube first.**

◆Removal procedure◆

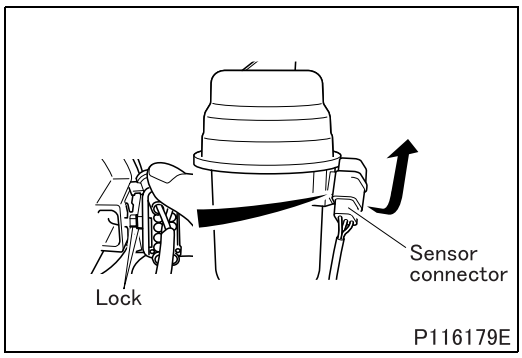

P116179E

■ **Removal: Sensor connector**

- Unlock the sensor connector by pulling its bottom toward you, then pull the connector straight upward to remove it.

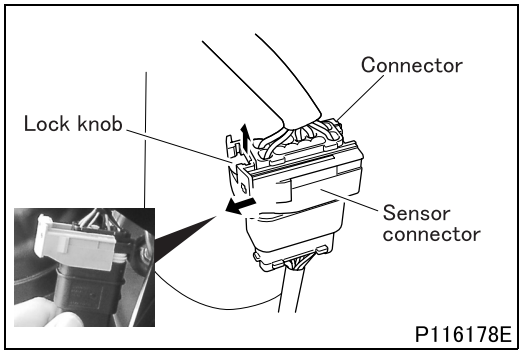

P116178E

- Pull up the sensor connector's lock knob, then slide the upper half of the connector (in the direction of the arrow) to remove the connector.

https://truckmanualshub.com/

FUEL FILTER

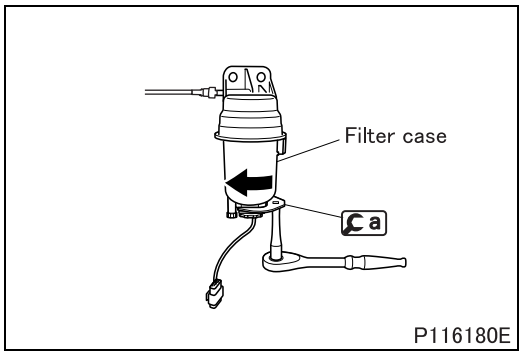

■ **Removal: Filter case**

- Remove the filter case using a.

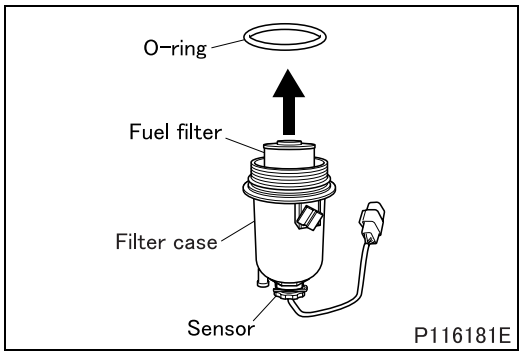

■ **Removal: Fuel filter**

- Remove the fuel filter by pulling it straight upward.

CAUTION ⚠

- **Always keep the filter parallel with the filter case when removing and installing it. The sensor will be damaged if the filter is tilted during its installation or removal.**

- Remove the O-ring from the filter case.

◆Installation procedure◆

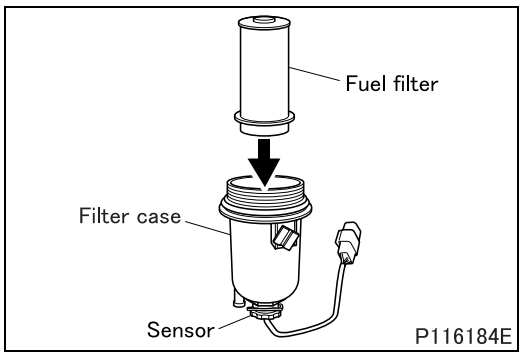

■ **Installation: Fuel filter**

- Replace the fuel filter and O-ring with a new one.
- O-ring used should be the one supplied with a new fuel filter.
- Coat the O-ring with a thin film of oil and install it on the filter case.
- Insert the fuel filter into the filter case straight downward.

CAUTION ⚠

- **Always keep the filter parallel with the filter case when removing and installing it. The sensor will be damaged if the filter is tilted during its installation or removal.**
- **Use of an unsuitable fuel filter causes engine trouble. Always use a genuine fuel filter.**
- **Take care not to allow foreign particles to enter the fuel filter and fuel tube. Otherwise, injection failure or other trouble could occur.**

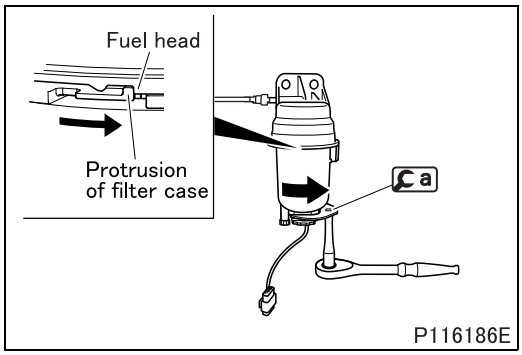

■ **Installation: Filter case**

- Turn the filter case using a until it stops and check that the protrusion on the filter case is in contact with the filter head.

CAUTION ⚠

- **When installing the filter case, always make sure that the projection on it is in close contact with the filter head.**
- **Leaky or damaged filter case will result if it is turned insufficiently or excessively during the installation.**

https://truckmanualshub.com/

■ **Installation: Sensor connector**

- To install the sensor connector, follow the removal procedure in reverse. (See "■ **Removal: Sensor connector**".)

■ **Work after installation**

- Bleed air out of the fuel system after installing the filter case. (See Air-bleeding of Fuel System.)
- Start the engine and check that fuel does not leak.
- If fuel leaks, remove and reinstall the fuel filter from the beginning.
- After replacement of the fuel filter, reset the maintenance record in the multi-information system. (See Chapter 6 "Multi-information system" of Owner's Manual.)

https://truckmanualshub.com/

ACCELERATOR PEDAL

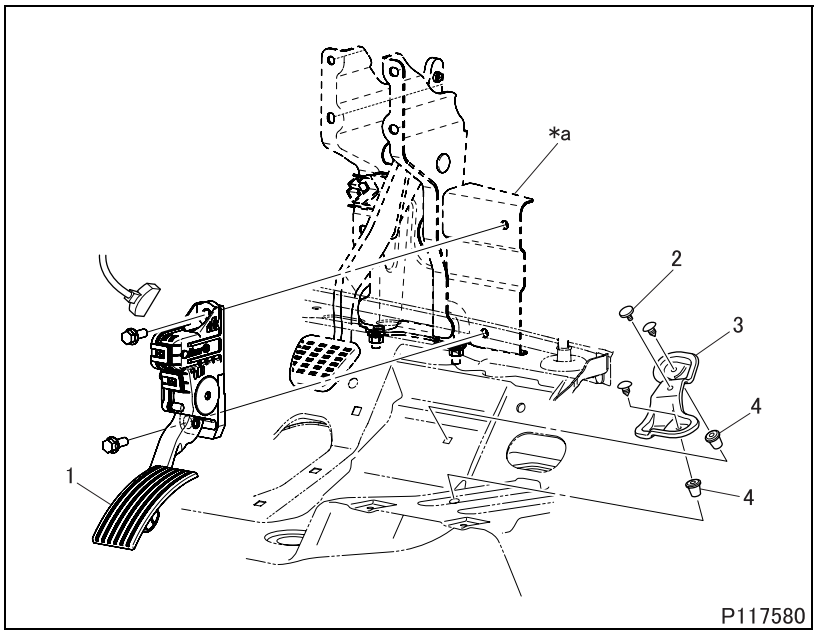

● **Removal sequence**

1 Accelerator pedal
(See Gr54.)
2 Stopper rubber
3 Accelerator pedal stopper
4 Grommet

***a**: Brake pedal assembly

● **Installation sequence**

Follow the removal sequence in reverse.

◆**Installation procedure**◆

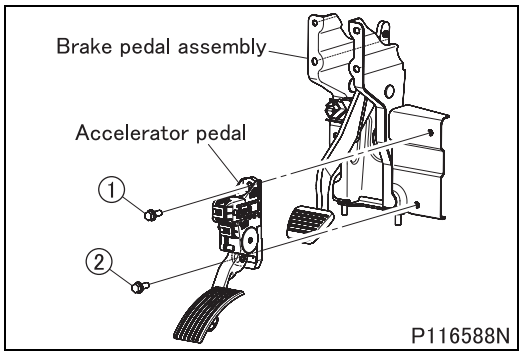

■ **Installation: Accelerator pedal**

- Install the accelerator pedal on the brake pedal assembly in the numbered sequence as shown in the illustration.

◆**Work after installation**◆

■ **Inspection: Accelerator pedal**

- Check the no-load minimum and maximum speeds and adjust them if necessary (see ON-VEHICLE INSPECTION AND ADJUSTMENT).
- Make sure the pedal moves smoothly.

https://truckmanualshub.com/

M E M O

https://truckmanualshub.com/

HIGH PRESSURE FUEL PUMP

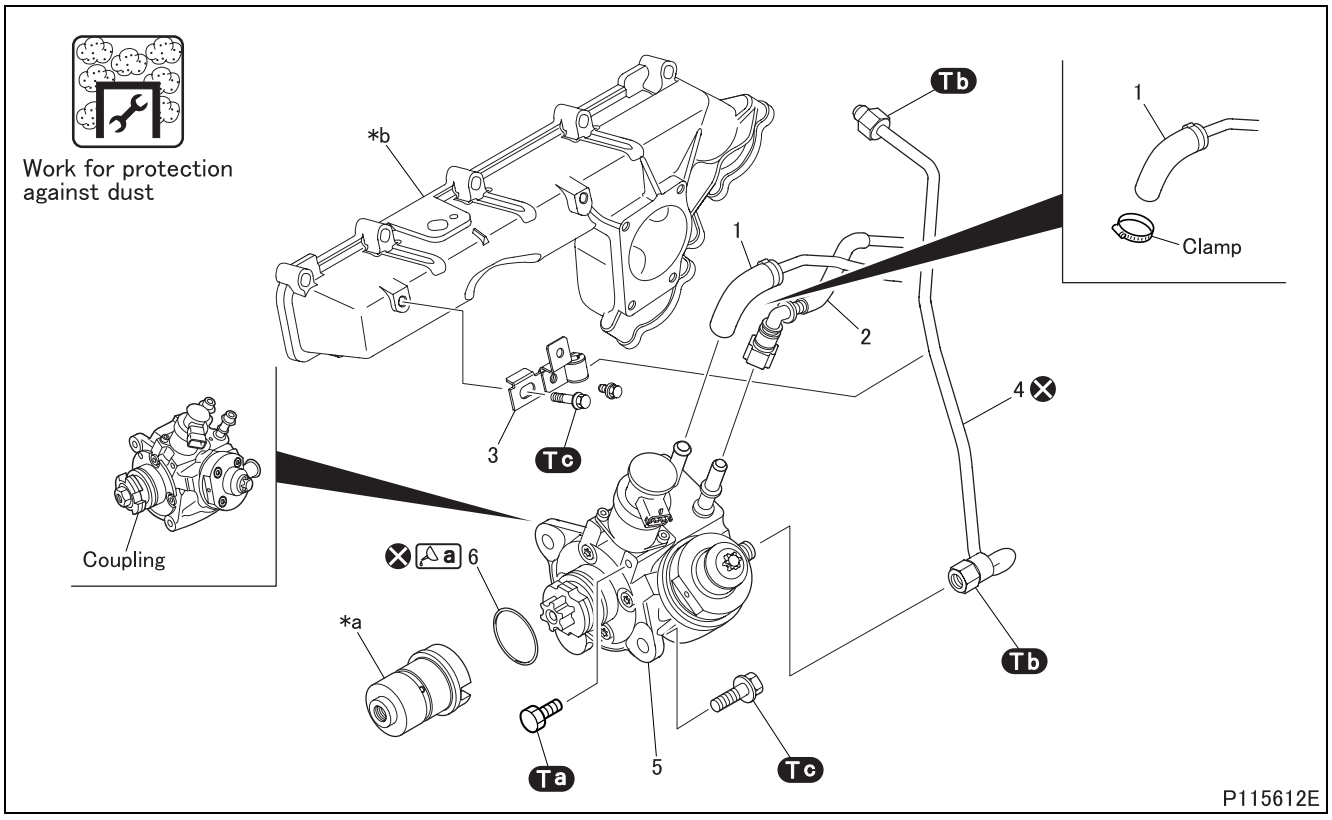

● **Removal sequence**

1 Low pressure fuel pipe
2 Low pressure fuel pipe
3 Bracket
4 High pressure fuel pipe
5 High pressure fuel pump
6 O-ring

***a**: Control shaft
***b**: Intake manifold
⊗: Non-reusable parts

: This work requires protection against dust.

- Dust entering the high-pressure fuel pump will seriously affect engine performance. Cap or cover every opening after removing a pipe or other component.

WARNING ⚠

- **Fuel is highly flammable. Do not handle it near flames or heat.**
- **Spilled fuel may catch fire and therefore, must be wiped off completely.**

CAUTION ⚠

- **Dirt and dust in the high pressure fuel pump can seriously reduce engine performance. To prevent this from happening, fully cover all openings after removing any pipes or hoses.**
- **The high pressure fuel pump is a non-disassembly component. When it has any problems, replace them.**

● **Installation sequence**

Follow the removal sequence in reverse.

https://truckmanualshub.com/

Tightening torque (Unit: N·m {ft.lbs, kgf·m})

Mark	Parts to be tightened	Tightening torque	Remarks
Ta	Bolt (high pressure fuel pump mounting)	10 {7.4, 1.0}	–
Tb	Union (high pressure fuel pipe mounting)	19 ± 2 {14.0 ± 1.5, 1.9 ± 0.2}	–
Tc	Bolt (high pressure fuel pump mounting)	25 {18.0, 2.5}	–

Lubricant and/or sealant

Mark	Points of application	Specified lubricant and/or sealant	Quantity
a	O-ring	Engine oil	As required

Special tools

Mark	Tool name and shape	Part No.	Application
a	Head, flare nut wrench (width across flats: 19 mm {0.75 in.}) 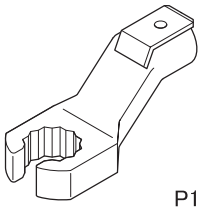 P110453	MH063982	Installation of high pressure fuel pipe
b	Head, flare nut wrench (width across flats: 18 mm {0.71 in.}) 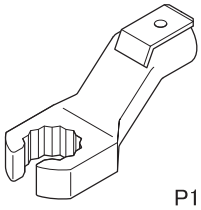 P110453	MH063983	

◆Removal procedure◆

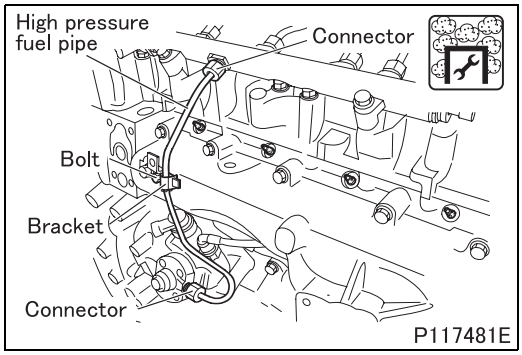

■ Removal: High pressure fuel pipe

: This work requires protection against dust.

- Unscrew the connector on the common rail.
- Unscrew the connector on the high pressure fuel pump.
- Undo and remove the bolt of the high pressure fuel pipe bracket. Remove the high pressure fuel pipe.

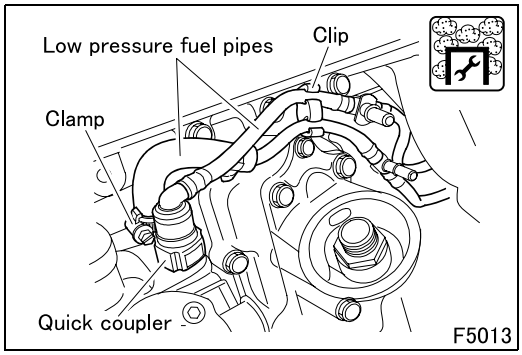

■ Removal: Low pressure fuel pipe

: This work requires protection against dust.

- To remove the low pressure fuel pipes from the high pressure fuel pump it is necessary to loosen the clamp, remove the quick coupler and detach the pipes from the clip.

https://truckmanualshub.com/

◆Installation procedure◆

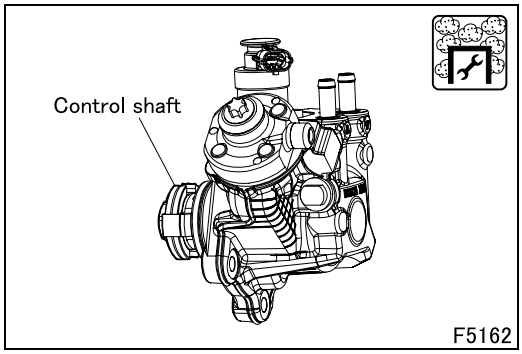

■ **Installation: High pressure fuel pump**

: This work requires protection against dust.

- The relative position between the control shaft and the pump axis is determined by the flange fitted on the high pressure fuel pump.

NOTE

- **If a new high pressure fuel pump is required it comes from Bosch in a stable balanced position (at BDC) with the flange installed.**

- If the high pressure fuel pump is not replaced, it should be placed in the stable balanced position (at BDC) turning the control shaft appropriately.

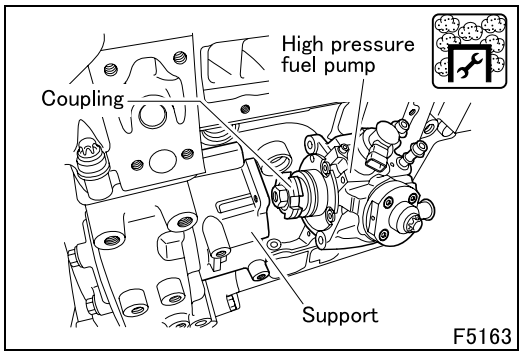

- Install the high pressure fuel pump so that the control shaft teeth mesh in the coupling.
- Rotate the high pressure fuel pump (keeping the shafts and the gears locked) so that the openings are aligned with the ones on the support.

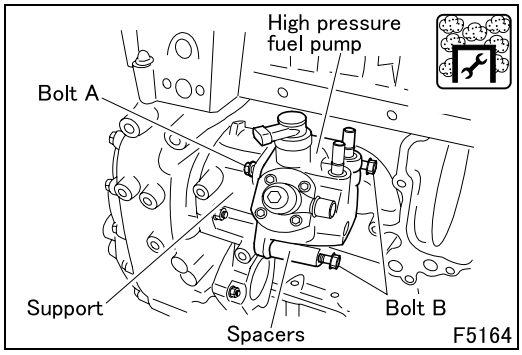

- Fully tighten the attaching bolt on the pump support side. Tighten the three attaching bolts complete with spacers in their seats. Tighten the three bolts to a torque of 25 N·m {18.0 ft.lbs, 2.5 kgf·m}.
- Tighten the bolt to a torque of 10 N·m {7.4 ft.lbs, 1.0 kgf·m}.

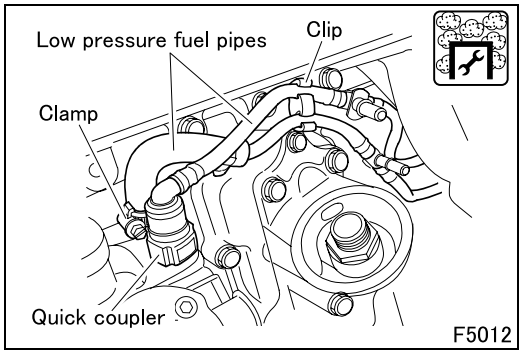

■ **Installation: Low pressure fuel pipe**

: This work requires protection against dust.

- Install the quick couplers to the high-pressure fuel pump, connect the low-pressure fuel pipes, and install the clamps.
- Secure the low-pressure fuel pipes by fitting them in the clips.

https://truckmanualshub.com/

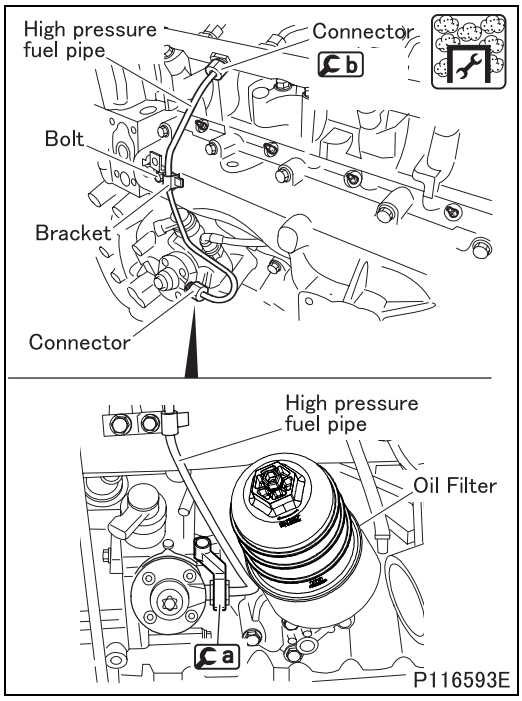

■ **Installation: High pressure fuel pump**

: This work requires protection against dust.

- Install the high pressure new fuel pipe.
- Secure the bracket to the intake manifold using of the bolt. Tighten the bolt to a torque of 25 N·m {18.0 ft.lbs, 2.5 kgf·m}.
- Screw the connector in the high pressure fuel pump and tighten it to a torque of 19 ± 2 N·m {14.0 ± 1.5 ft.lbs, 1.9 ± 0.2 kgf·m} using a.
- Screw the connector in the common rail and tighten it to a torque of 19 ± 2 N·m {14.0 ± 1.5 ft.lbs, 1.9 ± 0.2 kgf·m} using b.

https://truckmanualshub.com/

COMMON RAIL, INJECTOR

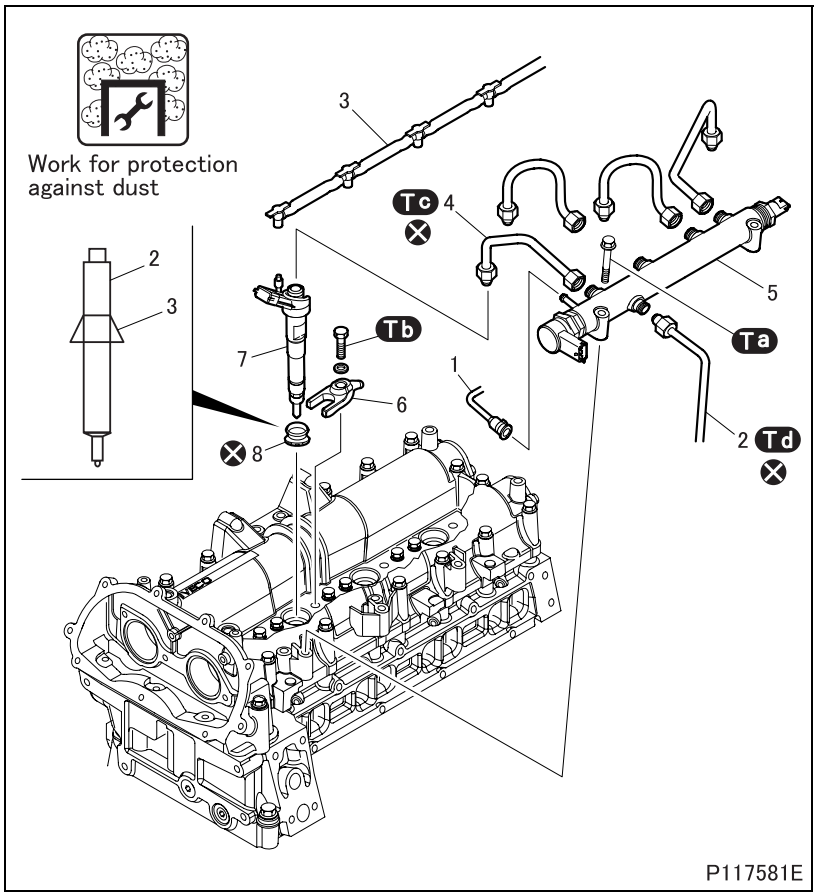

● **Removal sequence**

1. Fuel return pipe
2. High pressure fuel pipe (See high pressure fuel pump.)
3. Low pressure fuel return pipe
4. Fuel pipe
5. Common rail
6. Injector bracket
7. Injector
8. Dust guard

⊗: Non-reusable parts

: This work requires protection against dust.

- Dust entering the high-pressure fuel pump will seriously affect engine performance. Cap or cover every opening after removing a pipe or other component.

WARNING ⚠

- **Fuel is highly flammable. Do not handle it near flames or heat.**
- **Spilled fuel may catch fire and therefore, must be wiped off completely.**

CAUTION ⚠

- **It dust enters the common rail, the engine performance will be greatly affected. To prevent it, be sure to cover up openings left after pipes and other parts are removed. Also, wash eyebolts, gaskets, etc. in light oil to clear of dirt.**
- **The common rail and the injector are non-disassembly components. When they has any problems, replace them.**

NOTE

- **If an injector or common rail was replaced with a new component, the data must be written and reset in the engine electronic control unit. (See Gr13E.)**
- **For the data writing and resetting work, consult your nearest authorized dealer or distributor.**

● **Installation sequence**

Follow the removal sequence in reverse.

https://truckmanualshub.com/

Tightening torque (Unit: N·m {ft.lbs, kgf·m})

Mark	Parts to be tightened		Tightening torque	Remarks
Ta	Screw (common rail mounting)		28 {21, 2.8}	–
Tb	Screw (injector bracket mounting)		32 {24, 3.2}	–
Tc	Connector (fuel pipe mounting)	Injector side	25 ± 2 {18.0 ± 1.5, 2.5 ± 0.2}	–
		Common rail side	19 ± 2 {14.0 ± 1.5, 1.9 ± 0.2}	
Td	Connector (high pressure fuel pipe mounting)		19 ± 2 {14.0 ± 1.5, 1.9 ± 0.2}	–

Special tools

Mark	Tool name and shape	Part No.	Application
Ca	Head, flare nut wrench (width across flats: 18 mm {0.71 in.}) 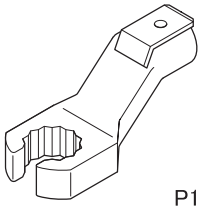 P110453	MH063983	Installation of fuel pipes
Cb	Socket wrench  P116185	MH064203	Removal and installation of fuel pipe <Four wheel drive>
Cc	Injector extractor 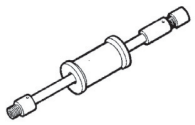 99340205	MH063990	Removal of injector

◆Removal procedure◆

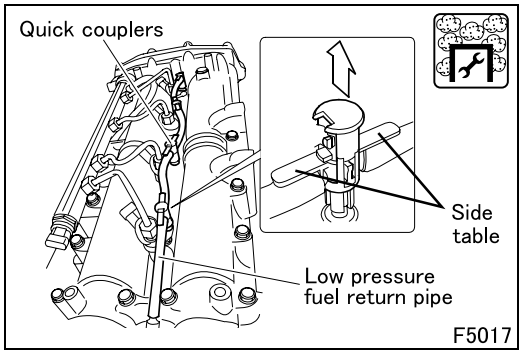

■ Removal: Low pressure fuel return pipe

: This work requires protection against dust.

- To remove the low pressure fuel return pipe from the injector, release the quick coupler.
- While holding down the side table of the quick coupler, pull up the central body as illustrated to remove the low pressure fuel return pipe.

https://truckmanualshub.com/

COMMON RAIL, INJECTOR

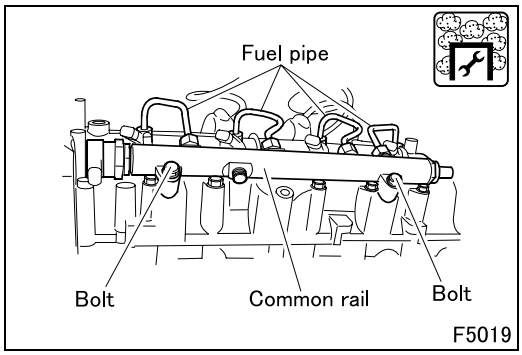

■ **Removal: Common rail, fuel pipe**

: This work requires protection against dust.

- Remove the injector side connectors using [b]. <Four wheel drive>
- Remove the common rail side connectors using [a].
- Unscrew and remove the bolts. Detach the common rail from the engine overhead.

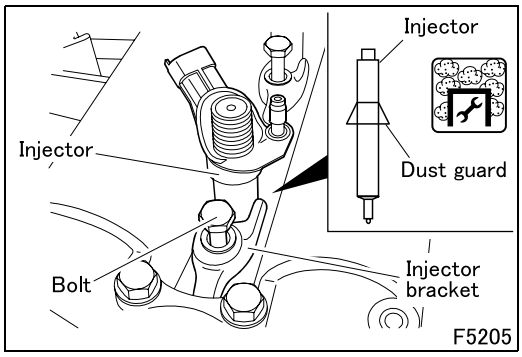

■ **Removal: Injector bracket**

- Remove the injector bracket.

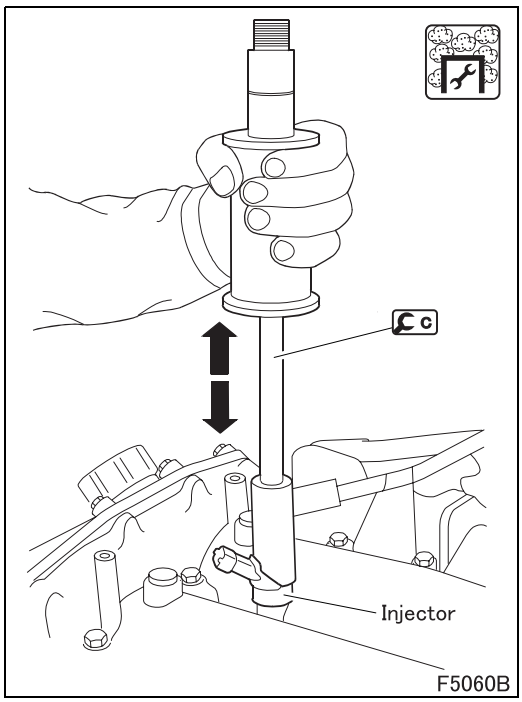

■ **Removal: Injector**

: This work requires protection against dust.

- Using [c], remove the injector from the engine overhead.

https://truckmanualshub.com/

◆Installation procedure◆

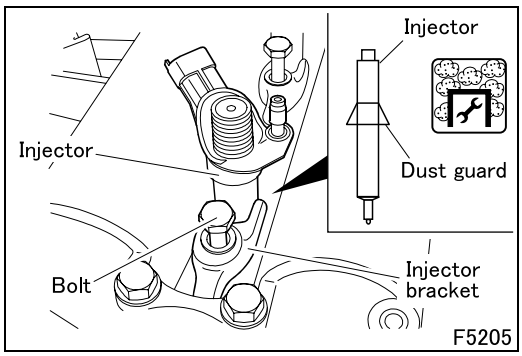

■ Installation: Injector, injector bracket

: This work requires protection against dust.

- Install a new dust guard on the injector.
- Install the injector on the engine overhead and loosely tighten the injector bracket bolt.
- After installing the fuel pipe and common rail, finally tighten the injector bracket bolt.

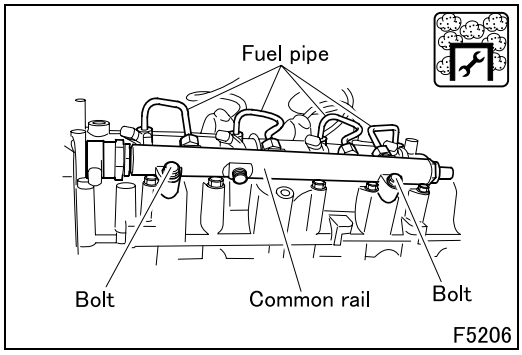

■ Installation: Common rail, fuel pipe

: This work requires protection against dust.

- Install the common rail on the engine overhead.
- Tighten the bolt to a torque of 28 N·m {21 ft.lbs, 2.8 kgf·m}.
- Connect the new fuel pipes to the injectors and to the common rail.

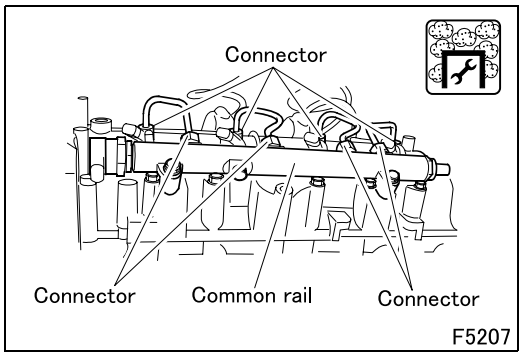

- Install the injector side connectors using [Cb]. <Four wheel drive>
  - Connector on the injector torque 25 ± 2 N·m {18.0 ± 1.5 ft.lbs, 2.5 ± 0.2 kgf·m}.
  - Install the common rail side connectors using [Ca].
  - Connector on the common rail torque 19 ± 2 N·m {14.0 ± 1.5 ft.lbs, 1.9 ± 0.2 kgf·m}.

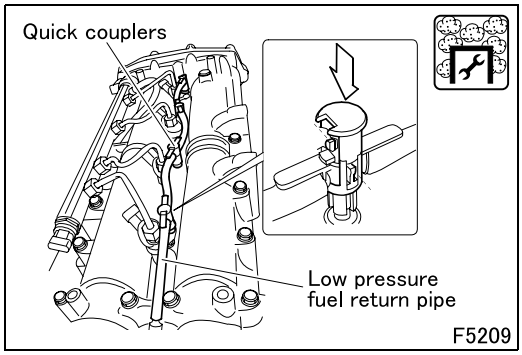

■ Installation: Low pressure fuel return pipe

: This work requires protection against dust.

- Install the low pressure fuel return pipe.
- Lower the central body of the quick coupler by pushing it in the direction of the arrow.

https://truckmanualshub.com/

FUSO

Group 13E

Common Rail System

MITSUBISHI FUSO TRUCK OF AMERICA, Inc.

Pub.No.00ELT0001-13E

https://truckmanualshub.com/

INDEX

SPECIFICATIONS 13E-2

STRUCTURE AND OPERATION
1. **High Pressure Electronic Injection System 13E-4**
2. **Engine Electronic Control System 13E-6**

TROUBLESHOOTING
1. **Inspections Based on Diagnosis codes 13E-22**
2. **FUSO Diagnostics Service Data (Actual values) 13E-800**
3. **FUSO Diagnostics Actuator Test (Actuations) 13E-807**
4. **ALTERATION AND RESET OF CODING DATA IN ENGINE ELECTRONIC CONTROL UNIT 13E-809**

INSPECTION OF ELECTRICAL EQUIPMENT 13E-812

INSTALLED LOCATIONS OF PARTS 13E-822

ELECTRIC CIRCUIT DIAGRAM 13E-852

https://truckmanualshub.com/

SPECIFICATIONS

Item			Specifications
High pressure pump	Manufacturer		Bosch
	Supply pump type		CP4.1
	Control method		Electronic
	Pressure regulator	Rated voltage V	12
	Max. common rail pressure MPa {psi, kgf/cm^2}		200 {28980, 2040}
Common rail	Manufacturer		Bosch
	Common rail pressure sensor supply voltage V		5
Injectors	Manufacturer		Bosch
	Injector type		Piezo
	Control method		Electrical
Engine electronic control unit	Manufacturer		Bosch
	Rated voltage V		12

https://truckmanualshub.com/

M E M O

https://truckmanualshub.com/

1. High Pressure Electronic Injection System

1.1 Over view

- The main characteristics of high pressure electronic injection system are:
  - High injection pressures available;
  - Pressures can be modulated irrespective of the speed of rotation and engine load;
  - Capacity to operate at very high speeds;
  - Injection control precision (injection duration and advance);
  - Lower consumption;
  - Lower emissions.

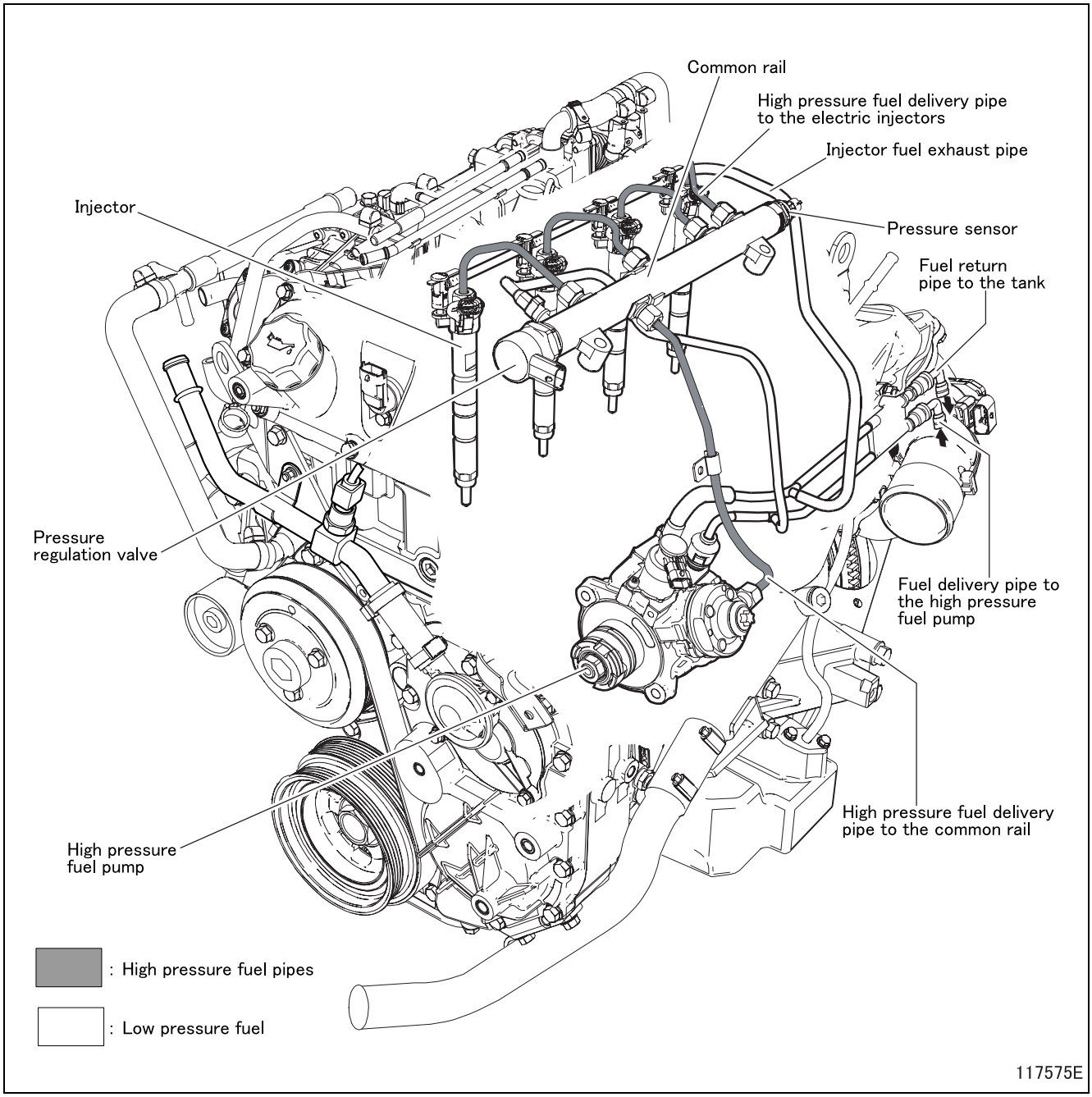

https://truckmanualshub.com/

- The main functions of the system are basically as follows:
  - Checking fuel temperature;
  - Checking engine coolant temperature;
  - Checking amount of fuel injected;
  - Checking idling speed;
  - Fuel cut-off when the accelerator pedal is released;
  - Checking cylinder balancing when idling;
  - Checking smokiness at exhaust on acceleration;
  - Checking exhaust gas recirculation (E.G.R.);
  - Checking top speed limit;
  - Checking glow plugs;
  - Checking activation of air-conditioning system (if any);
  - Checking auxiliary fuel pump;
  - Checking position of cylinders;
  - Checking main and pilot injection advance;
  - Checking closed cycle of injection pressure;
  - Checking turbocharging pressure;
  - Self-diagnosis;
  - Immobilizer electronic control unit;
  - Maximum torque limitation.

- The information the engine electronic control unit processes to regulate the amount of fuel to be injected comprises:
  - Engine speed;
  - Coolant temperature;
  - Turbocharging pressure;
  - Air temperature;
  - Intake air quantity;
  - Battery voltage;
  - Fuel pressure;
  - Position of throttle pedal.

https://truckmanualshub.com/

2. Engine Electronic Control System

2.1 System components

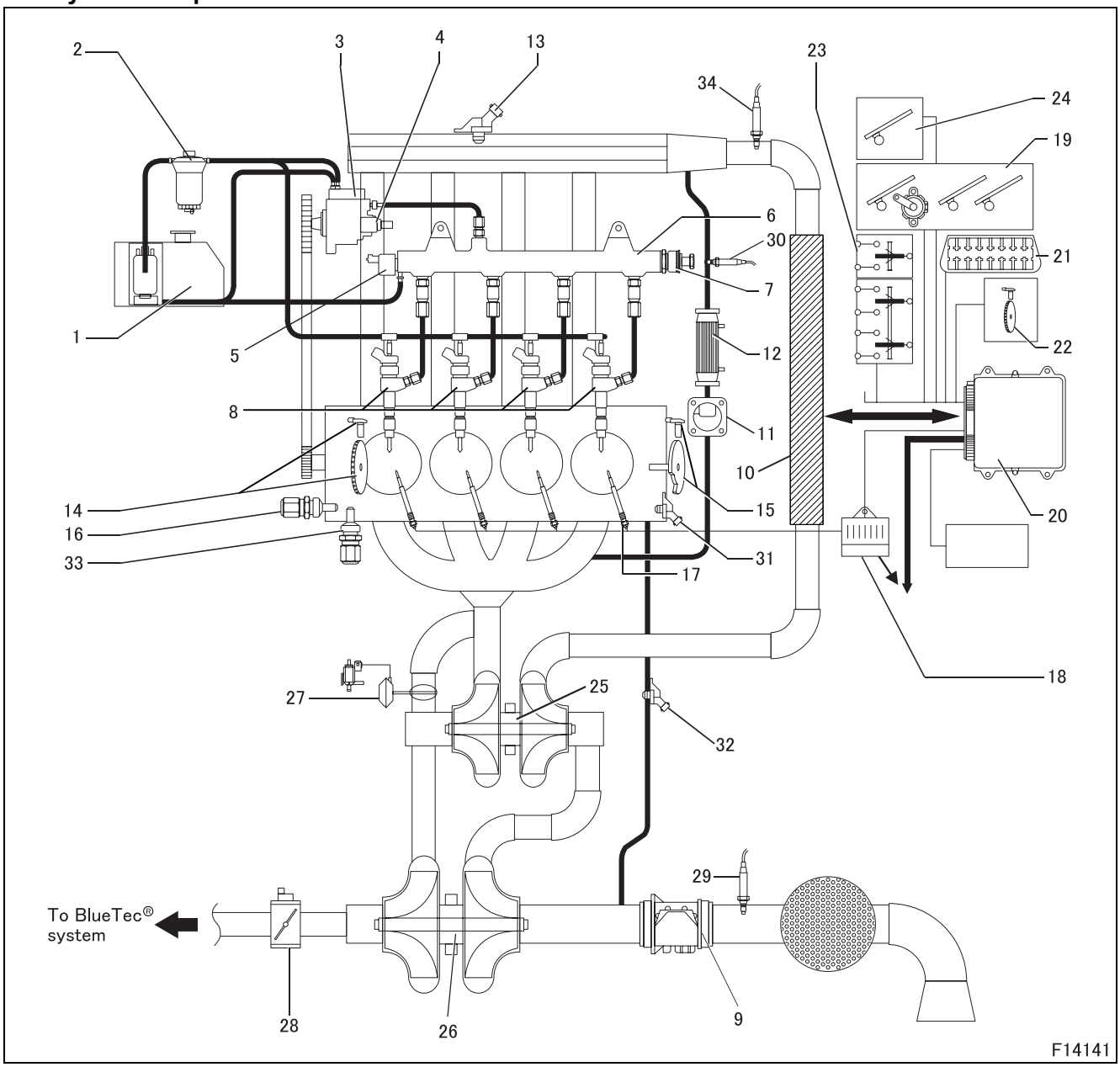

https://truckmanualshub.com/

No.	Parts name
1	Fuel tank with Fuel pump
2	Fuel filter (water separator sensor, fuel temperature sensor, fuel heater)
3	High pressure pump
4	FMU (fuel metering unit)
5	Pressure regulation valve
6	Common rail
7	Pressure sensor
8	Injectors
9	Air flow and intake air temperature sensor
10	Intercooler
11	EGR actuator
12	EGR cooler
13	Boost pressure and temperature sensor
14	Engine speed sensor
15	Camshaft timing sensor
16	Water temperature sensor
17	Glow plugs
18	Glow electronic control unit
19	Accelerator pedal
20	Engine electronic control unit
21	Diagnosis connector
22	Vehicle speed sensor
23	Transmission power take-off switch
24	Engine brake switch
25	High pressure turbocharger
26	Low pressure turbocharger
27	Turbo actuator
28	Exhaust brake valve
29	Humidity and intake air temperature sensor
30	EGR cooler outlet temperature sensor
31	Blow-by pressure sensor 1
32	Blow-by pressure sensor 2
33	Oil pressure switch
34	Intercooler outlet temperature sensor

https://truckmanualshub.com/

2.2 Electronic injection system particular features of engines EPA 10

- To observe emission limits EPA 10, engines EPA 10 have following features:
  - E.G.R. system present;
  - D.P.F. filter (solid particulate trap with constant regeneration) present;
  - New digital flow meter HFM7 (positioned after the air filter);
  - Air pressure sensor present (on the intake manifold after the intercooler);
  - Fuel electrical pump suitable to pressurize the circuit according to specifications Euro V;
  - Vehicle wiring harness for central unit EDC 17 new electrical scheme;
  - Exhaust brake valve present driven by EDC central unit (positioned on exhaust line).
- Constant regeneration particulate trap is mounted on engine exhaust. Through data processing (engine rpm's, H_2O temperature, oil temperature, lambda probe signal, etc.), the central unit calculates the quantity of particulate accumulated in filter and chooses to increase exhaust gas temperature (through post-injection) in order to burn particulate accumulated inside filter.
- Further, vehicles (for compliance with regulations EPA 10) differ from the ones of present production mainly in following components:
  - Fitting with catalytic converter DPF (Diesel Particulate Filter) provided with exhaust gas temperature sensors,
  - Differential pressure (Delta-p) sensor for detecting DPF catalyst particulate filter clogging,
  - Fuel electric pump with different characteristics for boosting fuel system pressurization,
  - Electrical wiring harness.
  - SCR

2.3 Fuel injection control

- The system calculates injection on the basis of the processing of the following parameters:
  - Engine rpm.
  - Engine coolant fluid temperature.
  - Intake air capacity.
  - Battery voltage.
  - Fuel pressure.
  - Accelerator pedal position.

- The fuel pressure in the common rail varies according to engine rpm and load operating conditions.
- The pre-injection is carried out to reduce the noise level.
- Pre-injection advance angles, the distance between pre-injection and main injection and advance angles of main injection vary according to the instantaneous engine operating conditions.

(1) Immobilizer recognition

- When the control unit receives the signal of the key "ON" it communicates with the immobilizer control unit to enable starting.

(2) Checking engine coolant temperature

- The engine electronic control unit, depending on the temperature:
  - Of the engine coolant, turbocharging air and fuel, operates the viscous fan and switches on the coolant temperature warning light.

https://truckmanualshub.com/

(3) Checking quantity of fuel injected

- According to the signals from the sensors and the mapped values, the engine electronic control unit:
  - Operates the pressure regulation valve;
  - Varies the “pilot” injection time;
  - Varies the “main” injection time;
  - Checking idling adjustment

- The engine electronic control unit processes the signals from the various sensors and regulates the amount of fuel injected:
  - It operates the pressure regulator;
  - It varies the injection times of the injectors.

(4) Checking smokiness at exhaust on acceleration

- With heavy acceleration, on the basis of the signals received from the air introduction meter and engine speed sensor, the engine electronic control unit determines the optimum amount of fuel to inject:
  - It operates the pressure regulator;
  - It varies the injector injection time.

(5) Checking exhaust gas recirculation

- Depending on the engine load and the signal from the accelerator pedal sensor, the engine electronic control control unit limits the amount of air taken in, actuating partial suction of the exhaust gases.

(6) Checking engine rotation balance during acceleration

- Regular progression is assured in all conditions by the control of the pressure regulator and the injector opening time.

(7) Glow plug control

- During:
  - Preglow.
  - Afterglow.
  - The injection centre times the heater starter (or glow plugs for the 4P10 Engine) according to engine temperature.

(8) Checking fuel pump

- Irrespective of the speed, the engine electronic control unit:
  - Supplies the auxiliary fuel pump with the key “ON”;
  - Cuts off auxiliary pump supply if the engine is not started up within a few seconds.

(9) Checking fuel heater

- It times operation of fuel heater in relation to ambient temperature.

(10) Checking cylinder position

- During each turn of the engine, the engine electronic control unit recognizes which cylinder is in the power stroke and operates the injection sequence for the appropriate cylinder.

(11) Checking pilot and main injection timing

- According to the signals from the various sensors, including the absolute pressure sensor built into the engine electronic control unit, the engine electronic control unit determines the optimum point of injection according to internal mapping.

https://truckmanualshub.com/

(12) Checking injection pressure closed cycle

- Depending on the engine load, determined by processing the signals from the various sensors, the engine electronic control unit operates the regulator to obtain optimum line pressure.

(13) Fuel supply

- The fuel supply is calculated in relation to:
  - Accelerator pedal position.
  - Engine speed.
  - Quantity of air introduced.
- The outcome may be corrected in relation to:
  - The water temperature.
- Or to avoid:
  - Noise.
  - Smoke.
  - Overloading.
  - Overheating.
  - Turbine over-revving.
- The delivery can be modified in the case of:
  - Action of external devices (ABS).
  - Serious trouble decreasing the load or stopping the engine.

- After determining the mass of air introduced by measuring its volume and temperature, the engine electronic control unit calculates the corresponding mass of fuel to inject into the relevant cylinder (mg per delivery) also taking into account the temperature of the diesel.
- The mass of fuel calculated in this way is first converted into volume (mm^3 per delivery) and then into degrees of throw, or duration of injection.

(14) Correcting flow rate according to water temperature

- A cold engine meets with greater resistance during operation: friction is high, the oil is still very viscous, and the various clearances are not yet optimized.
- In addition, the injected fuel tends to condense on the metal surfaces that are still cold.
  The fuel supply for a cold engine is therefore greater than for a warm one.

(15) De-rating

- In the event of the engine overheating, injection is modified, decreasing the delivery to a varying degree, in proportion to the temperature reached by the coolant.

(16) Turbine rpm setting

- Based on signals from the accelerator pedal position and intake manifold air temperature/pressure engine rpm sensors, the electronic centre processes the field-back signal to turbo actuator pilot electro valve opening.

(17) Injection timing electronic test

- The advance (start of delivery, expressed in degrees) may be different from one injection to the next, also differentiated from one cylinder to another. It is calculated, similarly to the delivery, in relation to the engine load (accelerator position, engine speed and air introduced).
- The advance is appropriately corrected:
  - In phases of acceleration;
  - According to the water temperature.
- And also to obtain:
  - Lower emissions, noise and overloading;
  - Better vehicle acceleration.
- An extremely high advance is set on starting, depending on the water temperature.
- Feedback from the start of delivery is supplied by the change in impedance of the injector solenoid valve.

https://truckmanualshub.com/

(18) Speed governor

- The electronic speed governor has both features of governors:
  - Idling and top speed.
  - All speeds.
- It is stable in ranges where conventional, mechanical governors are imprecise.
- Within certain thresholds the speed takes account of the battery voltage.

(19) Engine starting

- During the first few turns of the engine, the timing and cylinder no. 1 recognition signals (engine speed sensor and camshaft timing sensor) are synchronized.
- The accelerator pedal signal is ignored on starting. Starting delivery is set only according to water temperature, by a special map.

(20) Cold starting

- If even just one of the three temperature sensors (water, air or diesel) records a temperature lower than 10°C {50 °F}, the glow plugs are activated.
- On inserting the key contact, the glow plug indicator goes on and remains on for a period varying depending on temperature (air is heated by the pre-heating glow plugs that are located on cylinder head).
- Thereafter, the engine can be started up.
- When the motor is running this indicator light goes out, while the glow plugs continue to be powered for a certain length of time (variable) for post-heating.
- The pre-heating curve is also variable in relation to the battery voltage.

(21) Run up

- When the key makes contact, the engine electronic control unit transfers the information stored in memory when the engine was last stopped into the main memory (see After Run) and makes a diagnosis of the system.

(22) After run

- Whenever the engine is switched off with the key, the engine electronic control unit stays powered for about 30 seconds by the main relay.
- This makes it possible for the microprocessor to transfer some data from the main memory (volatile) to a non-volatile memory, which can be erased and written over (EEPROM), so as to make it available at the next start up (see Run Up).
- These data basically consist of:
  - Various settings (engine idling adjustment, etc.);
  - Settings of some components;
  - Fault memory.
- The process lasts a few seconds, typically from about 30 (depending on the amount of data to save), after which the engine electronic control unit sends a command to the main relay and makes it disconnect from the battery.

NOTE

- **It is extremely important for this procedure not to be broken off, for example by switching off the engine with the battery cut-out, or by disconnecting the battery cut-out before 20 seconds have passed since switching off the engine. If this happens, the functioning of the system is ensured, but repeated interruptions may damage the engine electronic control unit.**

(23) Cut-off

- This function cuts off fuel delivery when the vehicle is decelerating (accelerator pedal released).

(24) Cylinder balancing

- Individual cylinder balancing contributes to increasing comfort and handling.
- This function permits individual, customized control over the delivery of fuel and the start of delivery for each cylinder, even differently from one cylinder to another, to compensate for the hydraulic tolerances of the injector.

https://truckmanualshub.com/

- The differences in flow (delivery specifications) between the various injectors cannot be evaluated directly by the engine electronic control unit. Therefore, it is necessary to input particular data of each injector into the engine electronic control unit using FUSO diagnostics each time after injector replacement.

(25) Synchronisation search

- If there is no signal from the camshaft timing sensor, the engine electronic control unit is able to recognize the cylinders into which the fuel is to be injected.
- If this occurs when the engine is already running, the combustion sequence has already been acquired, so the engine electronic control unit continues with the sequence on which it has already been synchronized.
- If this occurs when the engine is at a standstill, the engine electronic control unit energizes a single solenoid valve. Within 2 turns of the crankshaft, injection will take place in that cylinder, so the engine electronic control unit just needs to get synchronized on the firing sequence and to start up the engine.

2.4 Actuators

- The injection system comprises three classes of actuators interlocked with the engine electronic control unit:
  - Injectors (see relevant heading);
  - Regulators (see relevant headings) requiring PWM control (Pulse Width Modulation):
    - For pressure;
    - EGR (Exhaust Gas Recirculation);
  - Actuators with continuous ON/OFF signal to:
    - Turn on/off air-conditioner compressor;
    - Electric supply pump.
    - Cruise control.

https://truckmanualshub.com/

2.5 Electric/electronic components

(1) Engine electrical control unit

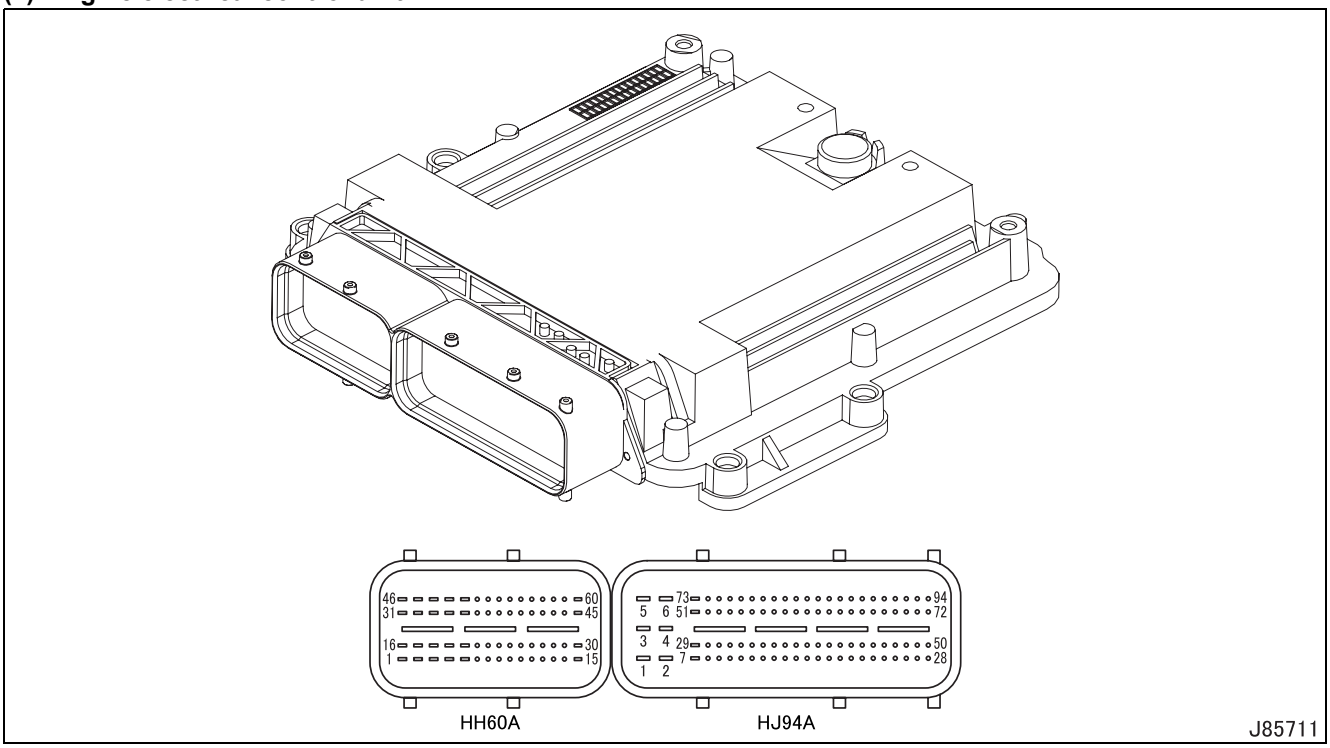

- The engine electronic control unit is of the “flash EPROM” type, i.e. it can be reprogrammed from the outside without acting on its hardware.
- The engine electronic control unit processes the signals from the sensors by applying software algorithms, and also controls the actuators (in particular, the electric injectors and the pressure regulator).
- The engine electronic control unit records, in the memory non-labile area, the information on the engine parameters originally set or acquired during engine operation.
- The injection control unit incorporates the atmospheric sensor, in order to further improve the injection system control.
- The engine electronic control unit is fitted to the left side of the engine compartment and is connected to the vehicle wiring by means of two connectors:
  - 60-pole connector “Engine side injection cable connector” for the components available on the engine;
  - 94-pole connector “Bonnet/cab cable connector” for the components on the vehicle.
- In addition to controlling the system functions described in the respective charter, the engine electronic control unit is interfaced with the other electronic systems found on the vehicle, such as ABS (Anti-lock Brake System), speed limiter, EGR (Exhaust Gas Recirculation), preheating plugs.
- On the vehicles equipped with DPF (Diesel Particulate Filter), the engine electronic control unit also controls the DPF regeneration system. In this case, after any of the operations below is carried out:
  - Replacing one or several injectors,
  - Replacing all the injectors,

  The engine electronic control unit shall be programmed again by means of the FUSO Diagnostics, and the replacement procedure for the concerned component shall be performed, in accordance with the indications of the diagnosis instruments.

https://truckmanualshub.com/

(2) FMU (fuel metering unit)

- The FMU (fuel metering unit) is mounted on the low-pressure circuit of the high pressure pump. The pressure regulator modulates the amount of fuel sent to the high-pressure circuit according to the commands received directly from the engine electronic control unit. The pressure regulator is mainly composed of the following components:
  - Connector.
  - Casing.
  - Solenoid.
  - Pre-load spring.
  - Hutter cylinder.
- When there is no signal, the pressure regulator is normally open, therefore with the pump providing maximum delivery.
- The engine electronic control unit, via the PWM (Pulse Width Modulation) signal, modulates the change in fuel flow rate in the high-pressure circuit by partially closing or opening the sections of passage of the fuel in the low-pressure circuit.

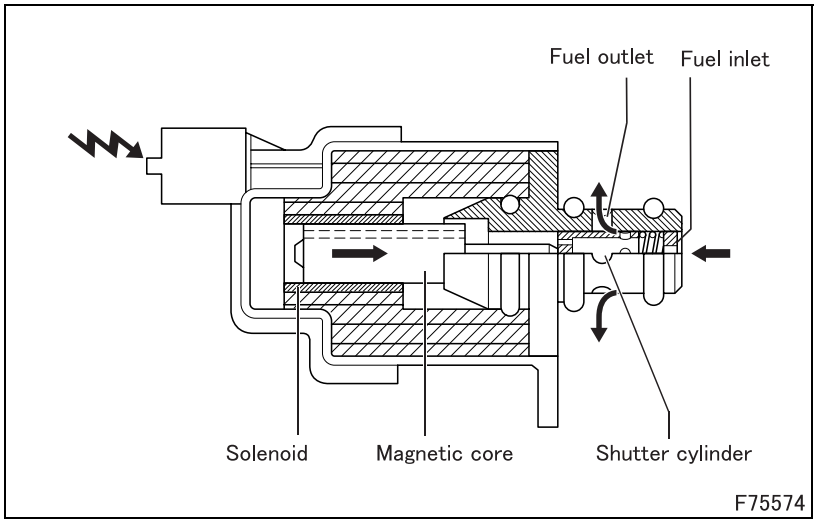

(2.1) Operation

- When the engine electronic control unit governs the FMU (fuel metering unit) (via PWM signal), the solenoid is energized that, in its turn, generates the movement of the magnetic core. The shift of the core causes the shutter cylinder to move axially, reducing the flow of fuel.

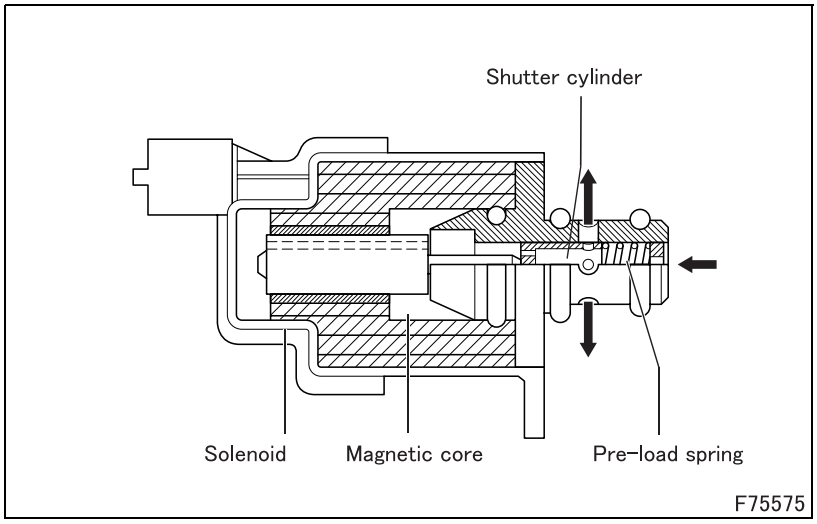

- When the solenoid is not energized, the magnetic core is pushed into the rest position by the pre-load spring. In this condition, the shutter cylinder is in such a position as to offer the fuel the maximum flow and pressure.

https://truckmanualshub.com/

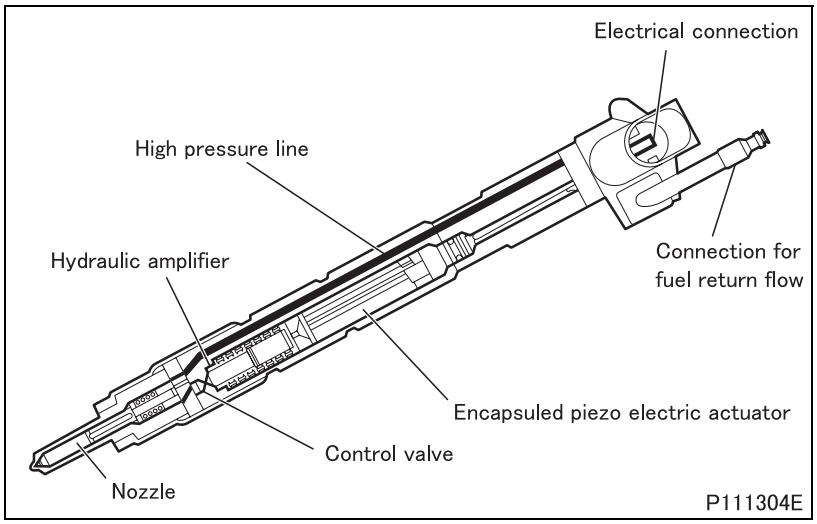

(3) Injector

- When the piezoelectric actuator is reached by an electrical load, commanded by the engine electronic control unit, it increases its length. The movement, amplified by the hydraulic amplifier, act mechanically on the control valve and it allows therefore the injection of the fuel present in the high pressure line. While stopping the electrical load, the actuator reacts elastically and again assumes its initial length.The springs add their contribution, winning the pressures that act in balancing on the whole surface of the components. The fuel in excess is than recirculated in the fuel circuit through the connection for fuel return flow.

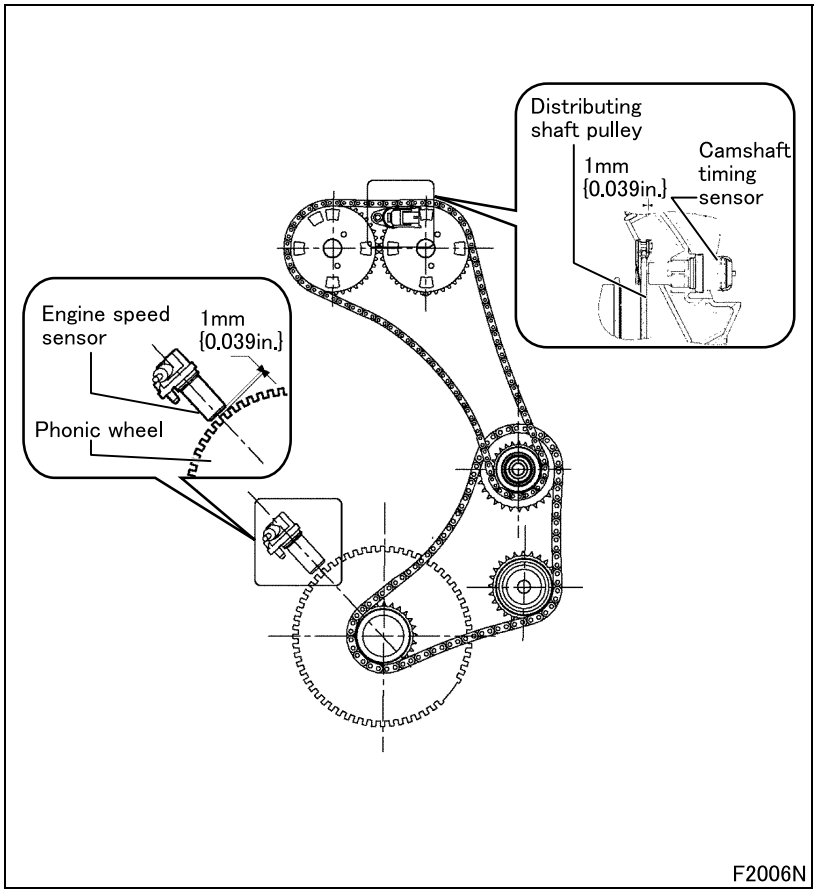

(4) Engine speed sensor

- It is an inductive sensor and is positioned on the phonic wheel fitted on the front end of the drive shaft.
- It generates the signals resulting from the magnetic flow lines which close through the teeth of the phonic wheel.
- The engine electronic control unit uses this signal to measure the speed of rotation of the engine, its angular position and to operate the electronic RPM counter.
- If this signal fails the RPM counter will not work.
- The sensor gap shall be as follows:
  - 1 ± 0.5 mm {0.039 ± 0.020 in.}, between distributing shaft pulley and phase sensor,
  - 1 mm {0.039 in.}, between phonic wheel and engine speed sensor.

https://truckmanualshub.com/

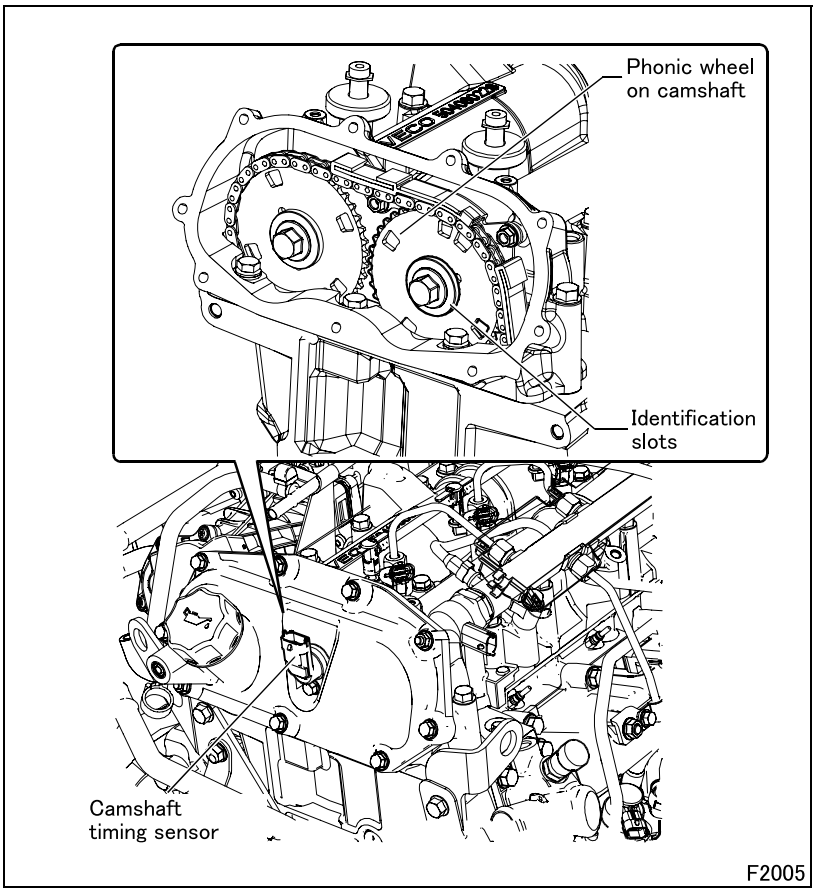

(5) Camshaft timing sensor

- It is an inductive sensor and is positioned on the camshaft gear of the suction valves.
- It generates the signals resulting from the magnetic flow lines which close through a slot on the gear itself.
- The signal generated by this sensor is used by the engine electronic control unit as a redundant signal to measure the different engine speeds.

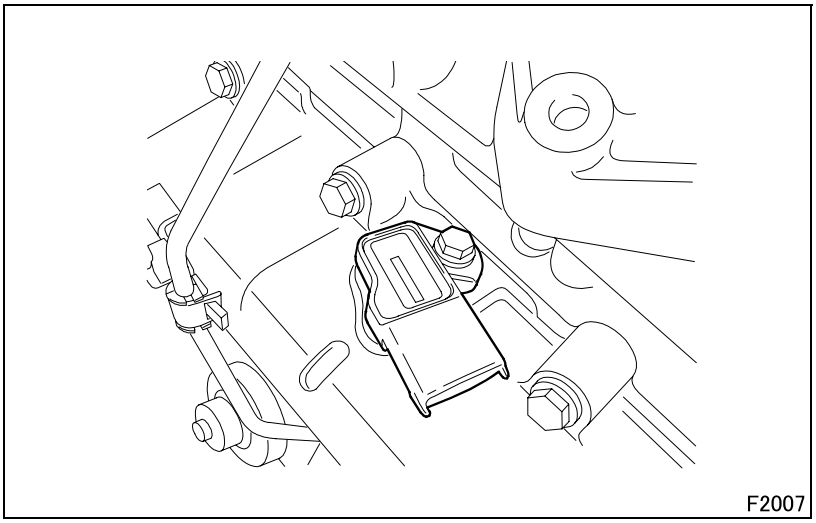

(6) Boost pressure and temperature sensor

- Positioned on the intake manifold, it measures the pressure of the turbocharging air introduced into the intake manifold.
- This value, together with that of the boost pressure and temperature sensor, makes it possible for the engine electronic control unit to calculate the exact quantity of air introduced into the cylinders so as to operate the injectors adjusting the fuel delivery, limiting harmful emissions, improving consumption and performance.
- The sensor contains an electronic temperature correction circuit to optimize the pressure measurement in relation to the temperature of the intake air.

https://truckmanualshub.com/

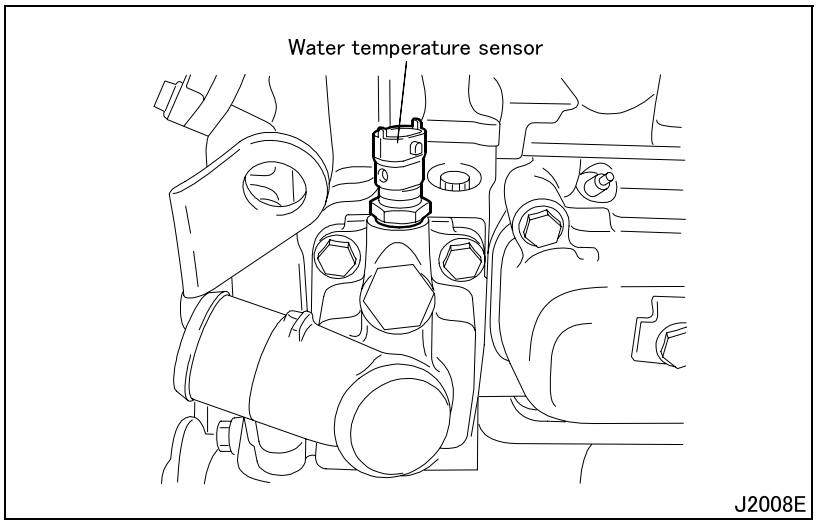

(7) Water temperature sensor

- When temperature sensor for engine control provides the engine electronic control unit with an index of the thermal status of the engine in order to determine corrections for the fuel delivery, injection pressure, exhaust gas recirculation injection advance when starting cold (if mounted) and warm-up.

(8) Atmospheric pressure sensor

- This is integrated in the engine electronic control unit. It provides a criterion of correction for the measurement of the air flow rate and to calculate the reference air flow rate to check the EGR.

https://truckmanualshub.com/

(9) Glow plug electronic control unit

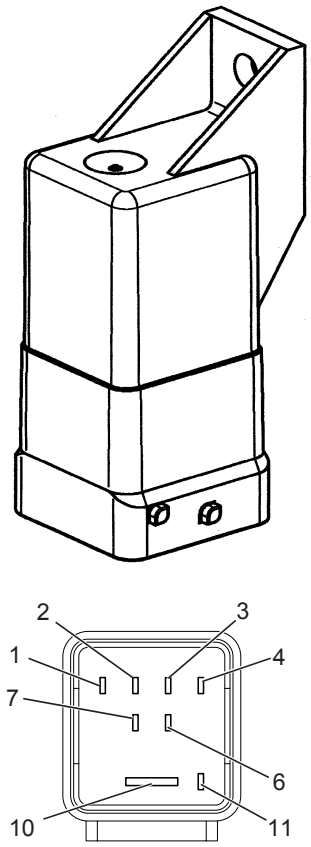

1	Connections glow plugs
2	Connections glow plugs
3	Connections glow plugs
4	Connections glow plugs
6	Ground
7	Start switch (+15)
10	Battery positive (+30)
11	Input: control signal from engine electronic control unit

13105E

- The glow electronic control unit is controlled by engine electronic control unit and has following functions:
  - Switch of 4 glow plugs, control signal from engine electronic control unit;
  - Reversible overcurrent cut-off (electronic safety fuse);
  - Recognition of one or several damaged glow plugs and overall defect diagnosis;
  - High voltage switch - off by engine electronic control unit;

(10) Glow plug

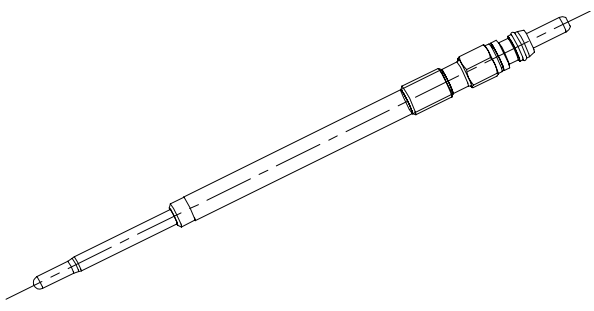

F2009

[CONTROL VALUES]

- With a constant supply voltage of 11 V:
  - Max. current drawn: 18 A.
  - In 5 sec: 11 ± 1.5 A.
  - In 30 sec: 6 ± 0.9 A.
  - Temperature after 7 sec.: 850°C. {1562°F}

https://truckmanualshub.com/

M E M O

https://truckmanualshub.com/

2.6 Electronic control unit connection diagram

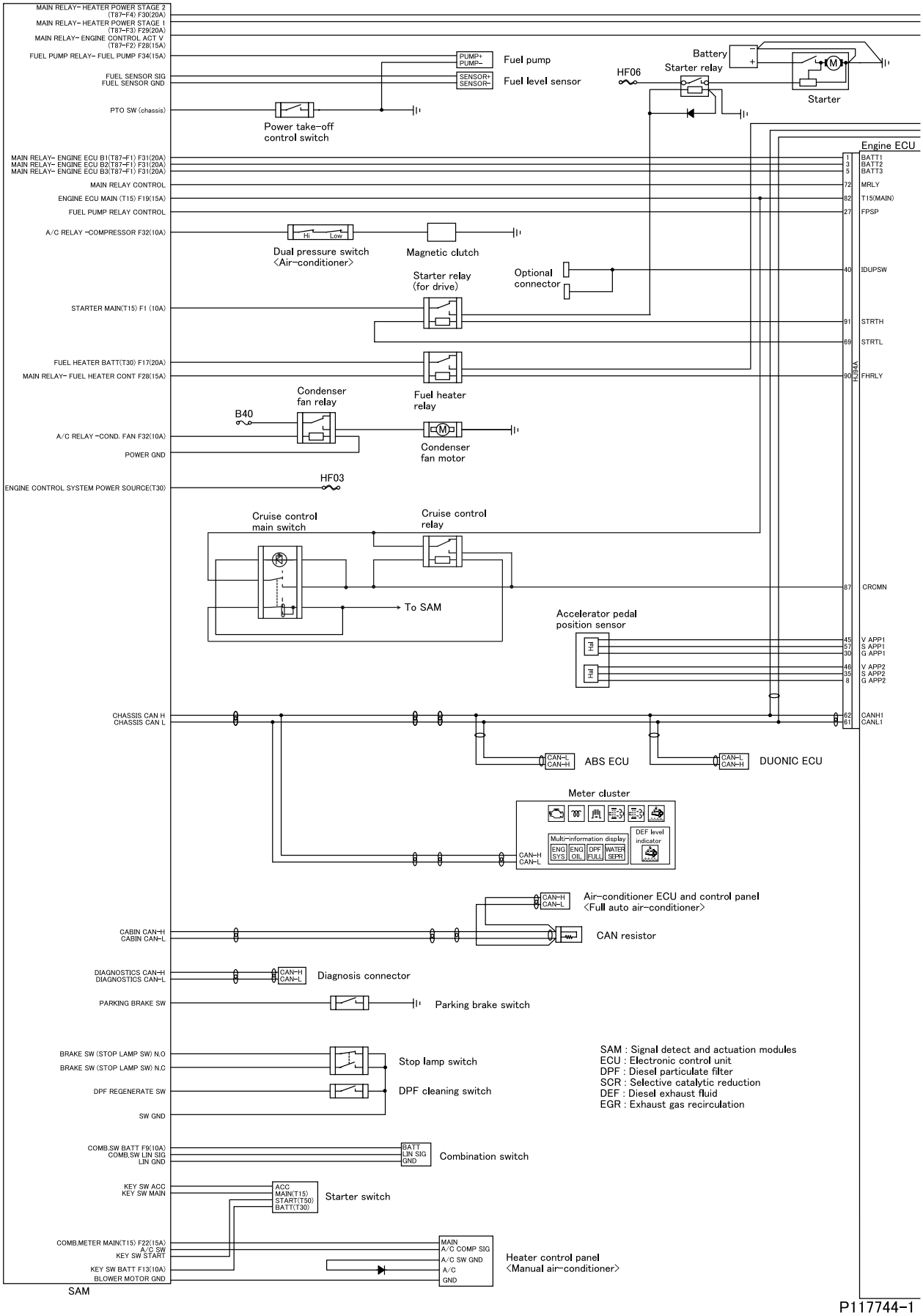

https://truckmanualshub.com/

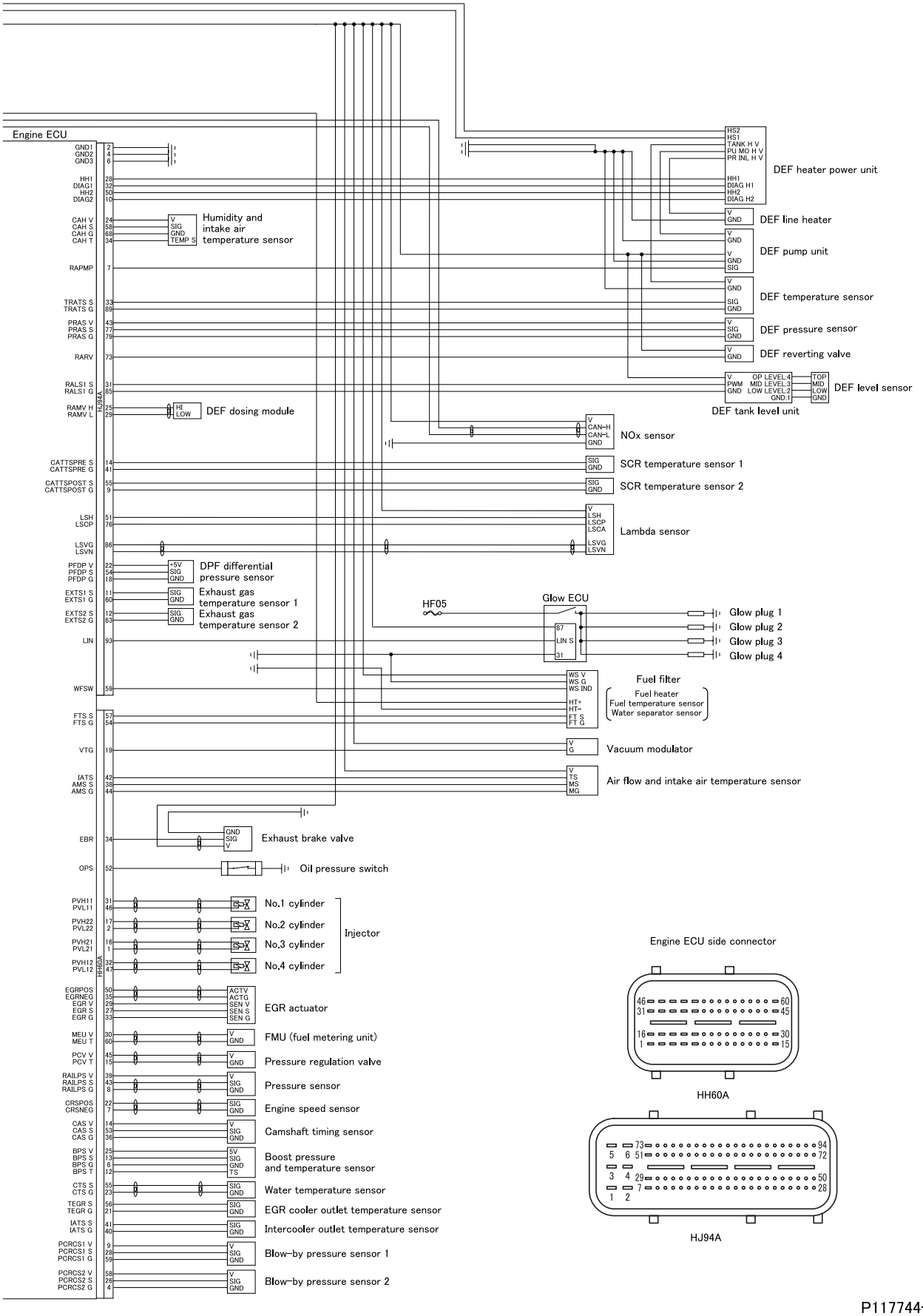

P117744-2

https://truckmanualshub.com/

1. Inspections Based on Diagnosis codes

- Since the FUSO diagnostics data are updated from time to time, descriptions or wording may not agree with the workshop manual. The FUSO diagnostics will have the latest data.

1.1 List of diagnosis code

Code	Message	Warning lamp indication			Fault diagnosis period
		ENG SYS (red)	ENG SYS (amber)		Validation
22-0	Signal Range Check (SRC) for 'Pressure sensor in crankcase' reports HIGH.	–	–	O	2DC
22-1	Signal Range Check (SRC) for 'Pressure sensor in crankcase' reports LOW.	–	–	O	2DC
22-16	The signal value of component 'Pressure sensor in crankcase' is too high.	–	–	O	2DC
22-18	The signal value of component 'Pressure sensor in crankcase' is too low.	–	–	O	2DC
27-15	EGR valve is too high. Position deviation above maximum positive limit.	–	–	O	2DC
27-17	EGR valve is too low. Position deviation below maximum negative limit.	–	–	O	2DC
30-0	Signal Range Check (SRC) for 'Pressure sensor in hose line of crankcase ventilation system' reports HIGH.	–	–	O	2DC
30-1	Signal Range Check (SRC) for 'Pressure sensor in hose line of crankcase ventilation system' reports LOW.	–	–	O	2DC
30-2	The value of component 'B37 (DPF differential pressure sensor)' is implausible. Value measured at ECM shut off.	–	–	O	2DC
30-15	The differential pressure between sensor in crankcase and sensor in hose line of crankcase ventilation system is above upper limit.	–	–	O	2DC
30-16	The signal value of component 'Pressure sensor in hose line of crankcase ventilation system' is too high.	–	–	O	2DC
30-17	The differential pressure between sensor in crankcase and sensor in hose line of crankcase ventilation system is above upper limit.: TOO HIGH	–	–	O	2DC
84-12	Vehicle speed is not plausible to engine speed and torque.	O	–	O	2DC
84-15	Vehicle speed sensor has a maximum threshold error.	O	–	O	2DC
91-2	Signal 'Value of accelerator pedal sensor' is implausible.	O	–	O	2DC
91-3	Signal Range Check High for Accelerator Pedal Position 1.	O	–	O	2DC
91-4	Signal Range Check Low for Accelerator Pedal position 1.	O	–	O	2DC
97-9	CAN timeout error while communicating with control unit 'ECM'	–	–	–	IMD
100-2	Component 'Oil pressure switch' has a mechanical defect.	–	–	–	IMD
100-31	The oil pressure is too low.	–	–	–	IMD
101-2	Engine stops in run-on mode. The value of component 'Pressure sensor in crankcase' is implausible.	–	–	O	2DC
102-0	Signal value of Boost pressure sensor is above maximum limit.	O	–	O	2DC
102-1	Signal value of Boost pressure sensor is below minimum limit.	O	–	O	2DC
102-15	Signal 'Boost pressure' of component 'Boost pressure sensor' is implausible. Data Valid But Above Normal Operational Range.	O	–	O	2DC
102-16	Signal value of Boost pressure sensor is above maximum limit.	O	–	O	2DC
102-17	Signal 'Boost pressure' of component 'Boost pressure sensor' is implausible. Data valid but below normal operational range	O	–	O	2DC
102-18	Signal value of Boost pressure sensor is below minimum limit.	O	–	O	2DC

https://truckmanualshub.com/

Code	Message	Warning lamp indication			Fault diagnosis period
		ENG SYS (red)	ENG SYS (amber)		Validation
105-0	Signal Range Check (SRC) for 'Boost temperature' reports HIGH.	–	–	O	2DC
105-1	Signal Range Check (SRC) for 'Boost temperature' reports LOW.	–	–	O	2DC
108-0	Signal Range Check (SRC) for 'Ambient pressure' reports HIGH.Data Valid But Above Normal Operational Range.	–	–	O	2DC
108-1	Signal Range Check (SRC) for 'Ambient pressure' reports LOW.Data valid but below normal operational range	–	–	O	2DC
108-16	Physical Signal of Ambient pressure sensor is above maximum limit.	–	–	O	2DC
108-18	Physical Signal of Ambient pressure sensor is below minimum limit.	–	–	O	2DC
110-0	Signal Range Check (SRC) for 'Coolant temperature' reports HIGH.	–	O	O	2DC
110-1	Signal Range Check (SRC) for 'Coolant temperature' reports LOW.	–	O	O	2DC
110-12	Absolute plausibility of coolant temperature sensor failed. Sensor is defect.	–	O	O	2DC
110-31	Dynamic plausibility of coolant temperature sensor failed. Sensor is defect.	–	O	O	2DC
111-1	The coolant level is too low.Data valid but below normal operational range	–	–	–	IMD
129-16	Fuel pressure control CPC:Fuel rail pressure exceeds maximal limit during rail press control "both devices". Data Valid But Above Normal Operational Range.	–	O	O	2DC
129-18	Fuel pressure control CPC:Fuel rail pressure below minimal threshold during rail press control "both devices".Data valid but below normal operational range	–	O	O	2DC
132-0	Air flow meterSignal Range Check (SRC) for 'raw value in HFM6 sensor' reports HIGH.Data Valid But Above Normal Operational Range.	O	–	O	2DC
132-1	Air flow meterSignal Range Check (SRC) for 'raw value in HFM6 sensor' reports LOW.Data valid but below normal operational range	O	–	O	2DC
132-2	Hardware error from air flow meter is detected for HFM sensor.	O	–	O	2DC
132-15	Air flow meterSignal Range Check (SRC) for 'corrected value in HFM6 sensor' reports HIGH.Data Valid But Above Normal Operational Range.	O	–	O	2DC
132-17	Air flow meterSignal Range Check (SRC) for 'corrected value in HFM6 sensor' reports LOW.Data valid but below normal operational range	O	–	O	2DC
132-18	Signal Range Check (SRC) for 'Air mass flow' reports Implausible data.	O	–	O	2DC
132-20	Air flow meterOffset drift high error for HFM sensor at engine stand still.	O	–	O	2DC
132-21	Air flow meterOffset drift low error for HFM sensor at engine stand still.	O	–	O	2DC
156-0	Sensor voltage of fuel pressure (Rail) sensor above upper limit.	O	–	O	2DC
156-1	Sensor voltage of fuel pressure (Rail) sensor below lower limit.	O	–	O	2DC
156-16	Sensor raw value of rail pressure sensor is above maximum offset.	O	–	O	2DC
156-18	Sensor raw value of rail pressure sensor is below minimum offset.	O	–	O	2DC
158-0	Signal Range Check (SRC) for 'Battery voltage' reports HIGH.	–	–	O	2DC
158-1	Signal Range Check (SRC) for 'Battery voltage' reports LOW.	–	–	O	2DC
171-0	Signal Range Check (SRC) for 'Ambient temperature' reports HIGH.	–	–	O	2DC
171-1	Signal Range Check (SRC) for 'Ambient temperature' reports LOW.	–	–	O	2DC

https://truckmanualshub.com/

Code	Message	Warning lamp indication			Fault diagnosis period
		ENG SYS (red)	ENG SYS (amber)		Validation
171-7	Component 'Environment sensor' has a plausibility error.Mechanical system not responding or out of adjustment	–	–	O	2DC
171-16	The current value for the 'Ambient temperature' component is too low.	–	–	O	2DC
172-0	Signal Range Check (SRC) for 'Intake air temperature' reports HIGH.	–	O	O	2DC
172-1	Signal Range Check (SRC) for 'Intake air temperature' reports LOW.	O	–	O	2DC
172-2	More than one inkate air temperature sensors have plausibility error.	–	–	O	2DC
174-0	Signal Range Check (SRC) for 'Fuel temperature' reports HIGH.	–	–	O	2DC
174-1	Signal Range Check (SRC) for 'Fuel temperature' reports LOW.	–	–	O	2DC
174-2	Component 'Fuel temperature sensor' has a plausibility error.	–	–	O	2DC
174-16	The fuel temperature is too high.	–	–	O	2DC
188-0	Engine speed exceeds the upper limit while HLSDem is active.	–	–	O	2DC
188-1	Engine speed falls below the lower limit while HLSDem is active.	–	–	O	2DC
190-3	Short circuit to battery error on the engine speed output power stage	–	–	–	IMD
190-4	Short circuit to ground error on the engine speed output power stage	–	–	–	IMD
190-5	No load error on the engine speed output power stage	–	–	–	IMD
190-12	Component 'Engine speed as PWM signal' has overtemperature.Bad intelligent device or component	–	–	–	IMD
251-2	External clock needs manually reset (summer/winter or time zone changed)	–	–	O	2DC
251-12	External clock (tachograph)is defect.	–	–	O	2DC
354-0	Signal value from Intake Air humidity Sensor above maximum limit	–	–	O	2DC
354-16	Probably water droplets on Intake Air humidity Sensor.	–	–	O	2DC
354-17	Signal Range Check (SRC) for 'Air humidity sensor' reports LOW.	–	–	O	2DC
354-18	Signal Range Check (SRC) for 'Induction Air Humidity' reports LOW.	–	–	O	2DC
354-31	Component 'Air humidity sensor' has a plausibility error.	–	–	O	2DC
355-31	DPF Lube Oil monitoring: Critical time for oil dilution exceeded	–	O	O	2DC
412-0	Signal Range Check (SRC) for 'Exhaust temperature downstream of exhaust gas recirculation cooler' reports HIGH.	–	–	O	2DC
412-1	Signal Range Check (SRC) for 'Exhaust temperature downstream of exhaust gas recirculation cooler' reports LOW.	–	–	O	2DC
412-2	Component 'Exhaust temperature downstream of exhaust gas recirculation cooler' has a plausibility error.	–	–	O	2DC
412-16	Component 'Temperature sensor 'Exhaust gas recirculation'' is thermally overloaded.	–	–	O	2DC
521-2	Signal error for Brake detected via CAN	–	–	O	2DC
521-12	Main and redundant brake switch state are different.	–	–	O	2DC
595-2	Irreversible fault path which indicates the invalid combination of cruise control keys pressed	–	–	–	IMD
595-31	Reversible fault path which indicates the invalid combination of cruise control keys pressed	–	–	–	IMD
598-2	Signal Error for Clutch pedal.	–	–	O	2DC
604-2	Plausibility error of neutral status signal of gear box	–	–	–	IMD
606-0	Overspeed of component 'engine protection' has occurred.	–	–	–	IMD

Code	Message	Warning lamp indication			Fault diagnosis period
		ENG SYS (red)	ENG SYS (amber)		Validation
636-2	Crankshaft signal disturbance from engine speed sensor.Data erratic, intermittent or incorrect	O	–	O	2DC
636-9	Crankshaft signal loss from engine speed sensor. Abnormal update rate	O	–	O	2DC
651-3	The fuel injector of cylinder 1 has a short circuit.	O	–	O	2DC
651-5	The fuel injector (cylinder 1) has an electrical fault or an open circuit.	O	–	O	2DC
651-6	The fuel injector of cylinder 1 has a short circuit between positive and ground.	O	–	O	2DC
652-3	The fuel injector of cylinder 3 has a short circuit.	O	–	O	2DC
652-5	The fuel injector (cylinder 3) has an electrical fault or an open circuit.	O	–	O	2DC
652-6	The fuel injector of cylinder 3 has a short circuit between positive and ground.	O	–	O	2DC
653-3	The fuel injector of cylinder 4 has a short circuit.	O	–	O	2DC
653-5	The fuel injector (cylinder 4) has an electrical fault or an open circuit.	O	–	O	2DC
653-6	The fuel injector of cylinder 4 has a short circuit between positive and ground.	O	–	O	2DC
654-3	The fuel injector of cylinder 2 has a short circuit.	O	–	O	2DC
654-5	The fuel injector (cylinder 2) has an electrical fault or an open circuit.	O	–	O	2DC
654-6	The fuel injector of cylinder 2 has a short circuit between positive and ground.	O	–	O	2DC
677-3	The starter relay has a short circuit to positive.	O	–	–	IMD
677-4	The starter relay has a short circuit to ground.	O	–	–	IMD
677-5	The starter relay has an open circuit.	O	–	–	IMD
723-2	Defect Fault Check for Signal of camshaft.Data erratic, intermittent or incorrect	–	O	O	2DC
723-9	Defect Fault Check for Signal of camshaft.No signal	–	O	O	2DC
723-31	Defect Fault Check for Signal of camshaft.Offset angle is exceeded.	O	–	O	2DC
917-9	CAN timeout fault	–	–	–	IMD
931-3	Component 'Presupply pump' has a short circuit to positive.	O	–	–	IMD
931-4	Component 'Presupply pump' has a short circuit to ground.	O	–	–	IMD
931-5	Presupply pumpCurrent below normal or Open circuit	O	–	–	IMD
931-12	Component 'Presupply pump' signals overtemperature.	O	–	–	IMD
959-9	CAN Timeout Error during CAN-receive-frame Time Date.	–	–	O	2DC
980-9	CAN Timeout Error during CAN-receive-frame PTO.	–	–	–	IMD
1074-3	The output for actuation of component 'Exhaust Flap' has a short circuit to positive.	–	O	O	2DC
1074-4	The exhaust flap has a short circuit to ground. / Component '10271-491' has a mechanical defect.	–	O	O	2DC
1074-5	The output for actuation of component 'Exhaust Flap' has an electrical fault or open circuit.	–	O	O	2DC
1074-12	Over temperature error on power stage for Exhaust Flap Actuator.	–	O	O	2DC
1076-3	Pressure control valve: Voltage above normal or shorted to high source	O	–	O	2DC
1076-4	Pressure control valve: Voltage below normal or shorted to low source	O	–	O	2DC
1076-5	Pressure control valve: Current below normal or Open circuit	O	–	O	2DC

https://truckmanualshub.com/

Code	Message	Warning lamp indication			Fault diagnosis period
		ENG SYS (red)	ENG SYS (amber)		Validation
1076-12	Pressure control valve: Overtemperature	O	–	O	2DC
1076-16	Pressure control valve: Learning factorHIGH	–	–	O	2DC
1076-18	Pressure control valve: Learning factorLOW	–	–	O	2DC
1127-15	Boost pressure control: Too Low Boost pressure in closed loop control - Data Valid But Above Normal Operating Range - Least Severe Level	O	–	O	2DC
1127-17	Too High Boost pressure in closed loop control.Data Valid But Above Normal Operational Range.	O	–	O	2DC
1136-2	SPI Error ECU temperature sensor (LM71).Data erratic, intermittent or incorrect	–	O	–	IMD
1136-16	Physical Signal ECU temperature is above maximum limit.Data Valid But Above Normal Operational Range.	–	–	–	IMD
1136-18	Physical Signal ECU temperature is below minimum limit.Data valid but below normal operational range	–	–	–	IMD
1172-2	Component 'Intake air temperature sensor 1' has a plausibility error.	–	O	O	2DC
1173-2	Component 'Intake air temperature sensor 2' has a plausibility error.	–	–	O	2DC
1174-2	Component 'Intake air temperature sensor 3' has a plausibility error.	–	–	O	2DC
1175-2	Signal Range Check (SRC) for 'Charge air temperature downstream of charge air cooler' reports Implausible data.	–	–	O	2DC
1213-2	Information from Instrument Cluster reports MIL internal circuit failure.	–	–	O	2DC
1254-31	Information: Torque limitation by too high NOx emissions.	–	–	–	IMD
1321-3	The starter relay has a short circuit to positive.	O	–	–	IMD
1321-4	The starter relay has a short circuit to ground.	O	–	–	IMD
1321-12	The starter relay has an over temperature error.	O	–	–	IMD
1322-12	Combustion misfiring has been detected.	–	–	O	2DC
1323-12	Combustion misfiring of cylinder 1 has been detected.	–	–	O	2DC
1324-12	Combustion misfiring of cylinder 3 has been detected.	–	–	O	2DC
1325-12	Combustion misfiring of cylinder 4 has been detected.	–	–	O	2DC
1326-12	Combustion misfiring of cylinder 2 has been detected.	–	–	O	2DC
1442-3	Component 'Fuel metering unit ' has a short circuit to positive.	–	O	O	2DC
1442-4	Component 'Fuel metering unit ' has a short circuit to ground.	–	O	O	2DC
1442-5	Fuel metering unit Current below normal or Open circuit	–	O	O	2DC
1442-12	Component 'Fuel metering unit ' signals overtemperature.	–	O	O	2DC
1485-7	Defect Fault Check for ECU Main relay.Mechanical system not responding or out of adjustment	–	–	O	2DC
1485-31	ECU Main relay has an Early Opening failure.	-	–	O	2DC
1623-19	Cardan speed: Received network data is in error	O	–	O	2DC
1624-19	Vehicle speed signal: Received network data is in error	O	–	O	2DC
1624-31	Vehicle speed source and HRWS replacement defect	O	–	O	2DC
1633-9	CAN Timeout Error during CAN-Transmit-Frame Cruise Control Parameters from ATM controller.	–	–	–	IMD
1636-0	Signal Range Check (SRC) for 'Air Flow Sensor' reports HIGH.	–	–	O	2DC
1636-1	Signal Range Check (SRC) for 'Air Flow Sensor' reports LOW.	–	–	O	2DC
1636-16	Component 'Charge air temperature sensor' is thermally overloaded.	–	–	O	2DC

Code	Message	Warning lamp indication			Fault diagnosis period
		ENG SYS (red)	ENG SYS (amber)		Validation
1675-2	ECU Key 16Defective switch T50-	–	–	–	IMD
1761-2	The value of component 'SCR Reagent tank level sensor' is implausible.Data erratic, intermittent or incorrect	–	–	O	2DC
1761-12	Defect Fault Check for SCR Reagent tank level sensor.Bad intelligent device or component	–	–	O	2DC
1761-31	SCR Reagent Tank level sensor has a monitoring error.	–	–	O	2DC
2623-3	Accelerator pedalAPP2:Voltage above normal or shorted to high source	O	–	O	2DC
2623-4	Accelerator pedalAPP2:Voltage below normal or shorted to low source	O	–	O	2DC
2630-2	The efficiency of the charge air cooler is not sufficient.	–	–	O	2DC
2791-0	Signal Range Check (SRC) for 'Sensor voltage EGR valve position ' reports HIGH.	O	–	O	2DC
2791-1	Signal Range Check (SRC) for 'Sensor voltage EGR valve position ' reports LOW.	O	–	O	2DC
2791-3	EGR Valve has a Short circuit to battery on Out1 of H-bridge.	O	–	O	2DC
2791-4	EGR Valve has a short circuit to ground on Out1 of H-bridge.	O	–	O	2DC
2791-5	EGR Valve has a Open Load of H-bridge.Current below normal or Open circuit	O	–	O	2DC
2791-7	EGR Valve is jammed in closed state.Mechanical system not responding or out of adjustment	O	–	O	2DC
2791-12	EGR Valve has Over temperature of H-bridge.Bad intelligent device or component	O	–	O	2DC
2791-16	Signal Range Check (SRC) for 'EGR valve position ' reports HIGH.	O	–	O	2DC
2791-18	Signal Range Check (SRC) for 'EGR valve position ' reports LOW.	O	–	O	2DC
2791-31	EGR Valve has a limited current.	–	–	O	2DC
2797-2	The DC/DC converter of Injector (Cylinder Bank 1) shuts off.	–	O	O	2DC
2797-3	Component 'charge switch of Injector (Cylinder Bank 0)' has a short circuit.	O	–	O	2DC
2797-6	The fuel injector (cylinder 0) has a short circuit.	O	–	O	2DC
2797-12	The DC/DC converter of Injector (Cylinder Bank 1) can not stop.	–	O	O	2DC
2797-31	ECM internal failure of Injector actuation (chip error).	O	–	O	2DC
2798-2	The DC/DC converter of Injector (Cylinder Bank 2) shuts off.	–	O	O	2DC
2798-3	Component 'charge switch of Injector (Cylinder Bank 1)' has a short circuit.	O	–	O	2DC
2798-6	The fuel injector (cylinder 1) has a short circuit.	O	–	O	2DC
2798-12	The DC/DC converter of Injector (Cylinder Bank 2) can not stop.	–	O	O	2DC
2900-2	CAN-receive-frame Electronic transmission control: Data erratic, intermittent or incorrect	–	–	–	IMD
2900-9	CAN timeout faulting-receive-frame Electronic transmission control Abnormal update rate	–	–	–	IMD
3031-0	Signal Range Check (SRC) for 'DEF tank temperature' reports HIGH.	–	–	O	2DC
3031-1	Signal Range Check (SRC) for 'DEF tank temperature' reports LOW.	–	–	O	2DC
3050-10	Pressure Oscillation too frequent Error.Abnormal Rate Of Change	–	–	O	2DC
3050-15	Pressurization after starting SCR Reagent Feeding is not possible.	–	–	O	2DC

https://truckmanualshub.com/

Code	Message	Warning lamp indication			Fault diagnosis period
		ENG SYS (red)	ENG SYS (amber)		Validation
3050-16	Signal Range Check (SRC) for 'DEF Pressure' reports HIGH (Second level).Data Valid But Above Normal Operational Range.	–	–	O	2DC
3050-18	Pressure release during SCR Reagent Feeding is not possible.	–	–	O	2DC
3050-31	The measured Lambda value of NOx sensor devices from LSU sensor.	–	–	O	2DC
3051-0	Signal Range Check (SRC) for 'DEF Pressure' reports LOW.	–	–	O	2DC
3051-16	Signal Range Check (SRC) for 'DEF Pressure' reports HIGH.	–	–	O	2DC
3058-0	Positive governor deviation of EGR Control above upper limit.	O	–	O	2DC
3058-1	Negative governor deviation of EGR Control below lower limit.	O	–	O	2DC
3058-16	Positive governor deviation of EGR Control above upper limit for regeneration.	O	–	O	IMD
3058-18	Negative governor deviation of EGR Control below lower limit for regeneration.	O	–	O	IMD
3058-31	EGR Valve spent too long time in transition mode 'Regeneration' to 'Normal Operation'.	–	–	–	IMD
3217-0	Signal Range Check (SRC) for 'O2 calibration' reports HIGH.	–	–	O	2DC
3217-1	Signal Range Check (SRC) for 'O2 calibration' reports LOW.	–	–	O	2DC
3217-16	O2 value above maximum threshold	–	–	O	2DC
3221-0	O2 Concentration at overrunHIGH	–	–	O	2DC
3221-1	O2 Concentration at overrunLOW	–	–	O	2DC
3232-5	Component 'NOx sensor' has an open circuit.	–	–	O	2DC
3232-6	Component 'NOx sensor' has a short circuit.Current above normal or grounded circuit	–	–	O	2DC
3234-2	Component 'NOx sensor' has an open circuit or short circuit.	–	–	O	2DC
3241-0	Defect Fault Check for Exhaust temperature upstream of oxidation catalytic converter.Signal value above maximum limit	–	O	O	2DC
3241-1	Defect Fault Check for Exhaust temperature upstream of oxidation catalytic converter.Signal value below minimum limit	–	O	O	2DC
3241-18	Signal Range Check (SRC) for 'Exhaust temperature downstream of oxidation catalytic converter' reports LOW.	–	O	O	2DC
3241-31	Plausibility check of component 'Exhaust temperature upstream of diesel oxidation catalytic converter 1' The received data are implausible.	–	O	O	2DC
3242-2	Plausibility check of component 'Exhaust temperature upstream of diesel oxidation catalytic converter 1' The received data are implausible.	–	O	O	2DC
3244-0	Signal Range Check (SRC) for 'Particle Filter Upstream Temperature' reports HIGH.	–	O	O	2DC
3244-1	Signal Range Check (SRC) for 'Particle Filter Upstream Temperature' reports LOW.	–	O	O	2DC
3244-2	Plausibility check of component 'Particle Filter Upstream Temperature Sensor 'Data erratic, intermittent or incorrect	–	O	O	2DC
3244-16	Signal Range Check (SRC) for 'Exhaust gas temperature upstream of diesel particulate filter (raw value)' reports HIGH.	–	O	O	2DC
3244-18	Signal Range Check (SRC) for 'Exhaust gas temperature upstream of diesel particulate filter (raw value)' reports LOW.	–	O	O	2DC
3245-31	Plausibility check of component 'Exhaust temperature downstream of diesel particular filter' The received data are implausible.	–	–	O	2DC

https://truckmanualshub.com/

Code	Message	Warning lamp indication			Fault diagnosis period
		ENG SYS (red)	ENG SYS (amber)		Validation
3246-2	Plausibility check of component 'Exhaust temperature upstream of diesel particulate filter' The received data are implausible.	–	–	O	2DC
3248-0	Signal Range Check (SRC) for 'temperature after SCR catalyst' reports HIGH.	–	–	O	2DC
3248-1	Signal Range Check (SRC) for 'temperature after SCR catalyst' reports LOW.	–	–	O	2DC
3248-16	Exhaust temperature downstream of SCR catalytic converter: Signal value above maximum limit	–	–	O	2DC
3248-18	Exhaust temperature downstream of SCR catalytic converter: Signal value below minimum limit	–	–	O	2DC
3251-18	The value of component 'B37 (DPF differential pressure sensor)' is implausible. The minimum pressure was not reached.	–	–	O	2DC
3253-16	Plausibility check of component 'B28/8 (DPF differential pressure sensor) 'Data Valid But Above Normal Operational Range.	–	–	O	2DC
3253-18	Hose Line connection check of component B28/8 (DPF differential pressure sensor).Data valid but below normal operational range	–	–	O	2DC
3285-2	The result of the dynamic test of component '{0}' is not plausible.	–	–	O	2DC
3285-17	Hose Line connection check of component Particle filter differential pressure sensor.Data valid but below normal operational range	–	–	O	2DC
3287-0	Signal Range Check (SRC) for 'B28/8 (DPF differential pressure sensor)' reports Signal value above maximum limit.	–	–	O	2DC
3287-1	Signal Range Check (SRC) for 'B28/8 (DPF differential pressure sensor)' reports Signal value below minimum limit.	–	–	O	2DC
3360-31	Cavity detected around SCR tank heater	–	–	–	IMD
3361-3	SCR dosing valve: Voltage above normal or shorted to high source	–	–	O	2DC
3361-4	SCR dosing valve: Voltage below normal or shorted to low source	–	–	O	2DC
3361-5	SCR dosing valve: Current below normal or Open circuit	–	–	O	2DC
3361-7	SCR dosing valve: Mechanical system not responding or out of adjustment	–	–	O	2DC
3361-12	SCR dosing valve: Overtemperature	–	–	O	2DC
3361-18	The emission value of the NOx sensor (raw value) is too high.	–	–	O	2DC
3362-0	SCR Reagent pump: DEF pump pressureHIGH	–	–	O	2DC
3362-1	SCR Reagent pump: DEF pump pressureLOW	–	–	O	2DC
3362-7	SCR reverting valve: Mechanical system not responding or out of adjustment	–	–	O	2DC
3363-0	SCR Reagent heating: DEF tank heater diagnostic signalHIGH	–	–	O	2DC
3363-1	SCR Reagent heating: DEF tank heater diagnostic signalLOW	–	–	O	2DC
3363-2	SCR Reagent heating: No load-Data erratic, intermittent or incorrect	–	–	O	2DC
3363-3	SCR Reagent heating: Voltage above normal or shorted to high source	–	–	O	2DC
3363-4	SCR Reagent heating: Voltage below normal or shorted to low source	–	–	O	2DC
3363-12	DEF tank heater is faulty.	–	–	O	2DC
3470-3	Component 'VTG Actuator' has a short circuit to positive.	O	–	O	2DC
3470-4	Component 'VTG Actuator' has a short circuit to ground.	O	–	O	2DC
3470-5	Component VTG Actuator has a current below normal or Open circuit.	O	–	O	2DC

https://truckmanualshub.com/

Code	Message	Warning lamp indication			Fault diagnosis period
		ENG SYS (red)	ENG SYS (amber)		Validation
3470-12	Component 'VTG Actuator' signals overtemperature.	O	–	O	2DC
3517-1	DEF tank levelData valid but below normal operational range	–	–	–	IMD
3597-0	ECU voltage supply: OVERVOLTAGE	-	O	O	2DC
3597-1	ECU voltage supply: UNDERVOLTAGE	-	O	O	2DC
3597-12	ECU power stage1:Supply for sensors: Accelerator pedal1,Camshaft,SCR reagent pressure, VGT speed, VGT actuator position	O	–	O	2DC
3598-12	ECU power stage2:Supply for sensors: Accelerator pedal2,Boost pressure, Fuel pressure, AC pressure	O	–	O	2DC
3599-12	ECU power stage3:Supply for sensors: DPF differential pressure, Oil pressure, EGR valve position, Air humidity sensor	O	–	O	2DC
3659-0	Corrected value of voltage for opening the injector 1 is out of valid range.	–	O	O	2DC
3659-6	The fuel injector (cylinder 1) has a short circuit to ground.	O	–	O	2DC
3659-15	Discharge time of injector 1 is out of valid range.	-	O	O	2DC
3659-16	The voltage for opening the injector 1 is out of valid range.	–	O	O	2DC
3660-0	Corrected value of voltage for opening the injector 3 is out of valid range.	–	O	O	2DC
3660-6	The fuel injector (cylinder 3) has a short circuit to ground.	O	–	O	2DC
3660-15	Discharge time of injector 3 is out of valid range.	–	O	O	2DC
3660-16	The voltage for opening the injector 3 is out of valid range.	–	O	O	2DC
3661-0	Corrected value of voltage for opening the injector 4 is out of valid range.	–	O	O	2DC
3661-6	The fuel injector (cylinder 4) has a short circuit to ground.	O	–	O	2DC
3661-15	Discharge time of injector 4 is out of valid range.	–	O	O	2DC
3661-16	The voltage for opening the injector 4 is out of valid range.	–	O	O	2DC
3662-0	Corrected value of voltage for opening the injector 2 is out of valid range.	–	O	O	2DC
3662-6	The fuel injector (cylinder 2) has a short circuit to ground.	O	–	O	2DC
3662-15	Discharge time of injector 2 is out of valid range.	–	O	O	2DC
3662-16	The voltage for opening the injector 2 is out of valid range.	–	O	O	2DC
3696-2	The signal value of component 'DPF emergency regeneration switch' is implausible.Data erratic, intermittent or incorrect	–	–	–	IMD
3701-2	Signal Range Check (SRC) for 'Flow resistance of diesel particulate filter' reports HIGH.	O	–	O	2DC
3702-2	Regeneration of the diesel particulate filter was aborted.	–	–	O	IMD
3719-16	The regeneration frequency of the diesel particulate filter is too high.	–	–	O	IMD
3726-16	DPF model regeneration request too high	O	–	O	2DC
3727-0	DPF model - number of maximum regenerations too high	O	–	O	2DC
4009-3	Component 'Fuel filter heater' has a short circuit to positive.	–	O	–	IMD
4009-4	Component 'Fuel filter heater' has a short circuit to ground.	–	O	–	IMD
4009-5	Component Fuel filter heater has a no load error.	–	O	–	IMD
4009-12	Component 'Fuel filter heater' signals overtemperature.	–	O	–	IMD
4094-2	DEF quality deviate from standard.Data erratic, intermittent or incorrect	–	-	O	2DC

https://truckmanualshub.com/

Code	Message	Warning lamp indication			Fault diagnosis period
		ENG SYS (red)	ENG SYS (amber)		Validation
520192-20	Air flow meter: AFS correction at low idle exceeds drift limitMaximum value	–	O	O	2DC
520192-21	Air flow meter: AFS correction at low idle exceeds drift limitMinimum value	–	O	O	2DC
520193-20	Air flow meter: AFS correction at load point exceeds drift limitMaximum value	–	O	O	2DC
520193-21	Air flow meter: AFS correction at load point exceeds drift limitMinimum value	–	O	O	2DC
520195-20	Air flow meter: Sensitivity drift error for HFM sensorHIGH	O	–	O	2DC
520195-21	The wiring of component Air flow meter is faulty./ Component Air flow meter has a mechanical defect.	O	–	O	2DC
520200-2	Faulty component 'Air conditioning' / Faulty component 'Air conditioning switch'	–	–	–	IMD
520200-12	Air conditioning: Plausibility error CAN input signals	–	–	–	IMD
520203-2	PassiveCAN bus error: NodeA	–	–	–	IMD
520203-31	CAN fault: The configuration is faulty./The CAN controller is defective./The control unit has an internal hardware fault.	–	–	–	IMD
520207-2	Plausibility check of component 'Coolant temperature' The received data are implausible.	–	O	O	2DC
520208-12	ECU internal: SPI and COM errors	–	O	–	IMD
520210-2	Combustion of cylinder: More than 1 not in equilibrium	–	–	O	2DC
520211-0	Combustion of cylinder1LOW	–	–	O	2DC
520211-1	Combustion of cylinder1HIGH	–	–	O	2DC
520212-0	Combustion of cylinder3LOW	–	–	O	2DC
520212-1	Combustion of cylinder3HIGH	–	–	O	2DC
520213-0	Combustion of cylinder4LOW	–	–	O	2DC
520213-1	Combustion of cylinder4HIGH	–	–	O	2DC
520214-0	Combustion of cylinder2LOW	–	–	O	2DC
520214-1	Combustion of cylinder2HIGH	–	–	O	2DC
520215-31	Torque limitation active-Cause: Turbo charger protection	–	–	–	IMD
520216-31	Torque limitation active-Cause: engine protection	–	–	–	IMD
520217-31	Torque limitation active-Cause: Injection system	–	–	–	IMD
520218-31	Torque limitation active-Cause: Engine brake	–	–	–	IMD
520219-31	Torque limitation active-Cause: Diesel particulate filter	–	–	–	IMD
520220-31	Information: Torque limitation by too high NOx emissions. Duration > 2 second.	–	–	–	IMD
520221-31	Torque limitation active-Cause: SCRCAT protection	–	–	–	IMD
520222-31	Torque limitation active-Cause: Smoke limitation	–	–	–	IMD
520225-9	CAN timeout fault. Error on transmission of CAN message	–	–	–	IMD
520227-9	Error on transmission of CAN message (CAN message 'VIN' from control unit 'SAM')	–	–	–	IMD
520228-9	Timeout error of CAN-Receive-Frame CGWC1.	–	–	–	IMD
520232-9	Timeout error of CAN-Receive-Frame Dashboard.	–	–	–	IMD
520233-9	Timeout error of CAN-Transmit-Frame DM1ELight message.	–	–	–	IMD
520237-2	Data length error for CAN Receive message EBC1.	–	–	–	IMD

https://truckmanualshub.com/

Code	Message	Warning lamp indication			Fault diagnosis period
		ENG SYS (red)	ENG SYS (amber)		Validation
520237-9	Timeout error of CAN-Receive-Frame Electronic Brake Controller.	–	–	–	IMD
520240-0	Value of NOx sensor is not appropriate.	–	–	–	None
520240-9	Timeout error of CAN-Transmit-Frame EDC to NOx Sensor.	–	–	O	2DC
520243-9	Timeout error of CAN-Transmit-Frame torque information.	–	–	–	IMD
520244-9	Timeout error of CAN-Transmit-Frame accelerator pedal information.	–	–	–	IMD
520246-9	Timeout error of CAN-Transmit-Frame friction, desired speed, estimated engine parasitic losses.	–	–	–	IMD
520247-9	Timeout error of CAN-Transmit-Frame information of Engine Fluid Level/Pressure.	–	–	–	IMD
520248-9	Timeout error of CAN-Transmit-Frame message proprietary with different switch and parameter values.	–	–	–	IMD
520249-9	Timeout error of CAN-Transmit-Frame message of DPF information.	–	–	–	IMD
520250-9	CAN timeout fault. Error on transmission of CAN message	–	–	O	2DC
520251-9	CAN timeout fault. Error on transmission of CAN message	–	–	–	IMD
520252-9	CAN timeout fault. Error on transmission of CAN message	–	–	–	IMD
520253-31	Engine shutoff Reception quality	–	–	–	IMD
520255-9	CAN timeout fault. Error on transmission of CAN message	–	–	–	IMD
520258-9	CAN timeout fault. Error on transmission of CAN message	–	–	–	IMD
520259-9	CAN timeout fault. Error on transmission of CAN message	–	–	–	IMD
520261-9	CAN timeout fault. Error on transmission of CAN message	–	–	–	IMD
520264-9	CAN timeout fault. Error on transmission of CAN message	–	–	–	IMD
520265-9	Faulty component 'Automatic engine start/stop' / CAN fault	–	–	–	IMD
520267-9	CAN timeout fault: CAN-Transmit-Frame Fuel consumption	–	–	–	IMD
520273-0	Component 'NOx sensor' has an open circuit.	–	–	O	2DC
520273-1	Component 'NOx sensor' has a short circuit.Error detected by sensor.	–	–	O	2DC
520276-9	CAN timeout fault: CAN-receive-frame Cruise control parameters from SAM interface	–	–	-	IMD
520278-9	CAN timeout fault: CAN-receive-frame IVECO proprietary message	–	–	–	IMD
520279-9	CAN timeout fault: CAN-receive-frame Ignition switch status	–	–	–	IMD
520280-9	CAN timeout fault: CAN-Transmit-Frame Shutdown	–	–	–	IMD
520281-9	CAN timeout fault: CAN-receive-frame Tachograph	O	–	O	2DC
520282-9	CAN timeout fault: CAN-Transmit-Frame DEF tank information	-	–	–	IMD
520286-9	CAN Timeout Error during CAN-Transmit-Frame Electronic Retarder Controller.	–	–	–	IMD
520288-9	CAN Timeout Error during CAN-receive-frame NOx sensor.	–	–	O	2DC
520297-9	CAN Active DFC TimeOut of Torque Speed Control TSC1AE.	–	O	–	IMD
520298-9	CAN Passive DFC TimeOut of Torque Speed Control TSC1AE.	–	O	–	IMD
520299-9	CAN Active DFC TimeOut of Torque Speed Control TSC1AR.	–	–	–	IMD
520300-9	CAN Passive DFC TimeOut of Torque Speed Control TSC1AR.	–	–	–	IMD
520309-9	CAN Active DFC TimeOut of Torque Speed Control TSC1TE.	–	–	–	IMD
520310-9	CAN Passive DFC TimeOut of Torque Speed Control TSC1TE.	–	–	–	IMD
520311-9	CAN Active DFC TimeOut of Torque Speed Control TSC1TR.	–	–	–	IMD
520312-9	CAN Passive DFC TimeOut of Torque Speed Control TSC1TR.	–	–	–	IMD

https://truckmanualshub.com/

Code	Message	Warning lamp indication			Fault diagnosis period
		ENG SYS (red)	ENG SYS (amber)		Validation
520317-9	CAN Timeout Error during CAN-Transmit-Frame to Cruise Control Vehicle Speed Information.	–	–	–	IMD
520323-9	CAN Timeout Error during CAN-Transmit-Frame to Electronic Brake Controller.	–	–	–	IMD
520325-2	Component 'ABS / ASR / ESP®/Electronic brake pressure control' has a configuration fault.	–	–	–	IMD
520325-9	Component 'Vehicle dynamics CAN bus' is faulty.	–	O	–	IMD
520327-12	ECU internalSPI and COM errorsCY320	–	O	O	2DC
520330-2	SCRTemperature sensorPlausibility error in the dynamic test	–	–	O	2DC
520336-31	There is an internal fault in control unit 'Combustion engine Control unit'.	–	–	O	2DC
520337-31	There is an internal fault in control unit 'Combustion engine Control unit'.	–	–	O	2DC
520338-31	There is an internal fault in control unit 'Combustion engine Control unit'.	–	–	O	2DC
520340-0	The efficiency of the exhaust gas recirculation cooler is not sufficient.	O	–	O	2DC
520344-1	EGR Valve has Under voltage of H-bridge.	O	–	O	2DC
520344-3	EGR Valve has a short circuit to ground on Out2 of H-bridge.	O	–	O	2DC
520344-4	EGR Valve has a short circuit to ground on Out2 of H-bridge.	O	–	O	2DC
520344-6	EGR Valve has short circuit or over load of H-bridge.	O	–	O	2DC
520344-7	EGR valveJammed open	O	–	O	2DC
520347-31	Injection cutoff demand for shutoff coordinator	O	–	–	IMD
520348-0	Signal Range Check (SRC) for 'Exhaust temperature upstream of oxidation catalytic converter' reports HIGH.	–	O	O	2DC
520352-0	Corrected energizing time of Zero Fuelling Calibration for injector 1 TOO HIGH	–	–	O	IMD
520352-1	Corrected energizing time of Zero Fuelling Calibration for injector 1 TOO LOW	–	–	O	IMD
520353-0	Corrected energizing time of Zero Fuelling Calibration for injector 3 TOO HIGH	–	–	O	IMD
520353-1	Corrected energizing time of Zero Fuelling Calibration for injector 3 TOO LOW	–	–	O	IMD
520354-0	Corrected energizing time of Zero Fuelling Calibration for injector 4 TOO HIGH	–	–	O	IMD
520354-1	Corrected energizing time of Zero Fuelling Calibration for injector 4 TOO LOW	–	–	O	IMD
520355-0	Corrected energizing time of Zero Fuelling Calibration for injector 2 TOO HIGH	–	–	O	IMD
520355-1	Corrected energizing time of Zero Fuelling Calibration for injector 2 TOO LOW	–	–	O	IMD
520357-0	A fault was detected during regeneration of the diesel particulate filter.The current value for the 'Exhaust temperature upstream of diesel particulate filter' component is too low.	–	–	O	IMD
520357-1	A fault was detected during regeneration of the diesel particulate filter.The current value of component 'Exhaust temperature upstream of diesel particulate filter' is too high.	–	–	O	IMD
520357-31	A fault was detected during regeneration of the diesel particulate filter.Regeneration takes too long.	–	–	O	IMD

https://truckmanualshub.com/

Code	Message	Warning lamp indication			Fault diagnosis period
		ENG SYS (red)	ENG SYS (amber)		Validation
520358-2	Exhaust Flap actuator has sticking valve or loose connection.	–	–	O	2DC
520359-2	Exhaust Flap actuator reports an error by a defined SCG duration of PWM wiring (X2 Error).	–	O	O	2DC
520360-2	Exhaust Flap actuator reports an error by a defined SCG duration of PWM wiring (X Error).	O	–	O	2DC
520361-2	Exhaust Flap actuator reports an error by a defined SCG duration of PWM wiring (Y2 Error).	–	O	O	2DC
520362-2	Exhaust Flap actuator reports an error by a defined SCG duration of PWM wiring (Y Error).	–	O	O	2DC
520364-2	More than one exhaust temperature sensors are defect.	–	–	O	2DC
520379-0	Corrected value of injection quantity is too high.	–	–	O	2DC
520379-1	Corrected value of injection quantity is too low.	–	–	O	2DC
520380-12	Component '10271-494' is faulty.	–	–	O	2DC
520380-31	NOx sensor: The power supply is faulty.	–	–	O	2DC
520382-31	Test internal resistance of component 'R9/1 (Cylinder 1 glow plug)'.: Implausible data	–	–	O	2DC
520383-31	Test internal resistance of component 'R9/3 (Cylinder 3 glow plug)'.: Implausible data	–	–	O	2DC
520384-31	Test internal resistance of component 'R9/4 (Cylinder 4 glow plug)'.: Implausible data	–	–	O	2DC
520385-31	Test internal resistance of component 'R9/2 (Cylinder 2 glow plug)'.: Implausible data	–	–	O	2DC
520386-9	Control unit GCU4 has LIN timeout error while receiving glow plug current information.	–	–	O	2DC
520387-9	Control unit GCU4 has LIN timeout error while receiving glow plug status information.	–	–	O	2DC
520388-9	Control unit GCU4 has LIN timeout error while receiving glow plug current information and status information.	–	–	O	2DC
520391-0	Component 'Glow Plugs' has detected an overvoltage.	–	–	O	2DC
520391-9	Engine control unit has LIN timeout error while receiving informations from control unit GCU4.	–	–	O	2DC
520391-12	Component 'Glow plug' is thermally overloaded.	–	–	O	2DC
520391-31	The Glow Plugs Control Unit could not be reset.	–	–	O	2DC
520392-1	Component 'Fuel pump' has detected an undervoltage.	–	–	O	2DC
520393-5	Component Y11 (Glow plug 1) has an Open Load error.	–	–	O	2DC
520393-6	The electric circuit of component 'Y11 (Glow plug 1)' is overloaded.	–	–	O	2DC
520393-31	Glow Plug control unit 4 has a Transistor failure for glow plug in cylinder 1.	–	–	O	2DC
520394-5	Component Y13 (Glow plug 3) has an Open Load error.	–	–	O	2DC
520394-6	The electric circuit of component 'Y13 (Glow plug 3)' is overloaded.	–	–	O	2DC
520394-31	Glow Plug control unit 4 has a Transistor failure for glow plug in cylinder 3.	–	–	O	2DC
520395-5	Component Y14 (Glow plug 4) has an Open Load error.	–	–	O	2DC
520395-6	The electric circuit of component 'Y14 (Glow plug 4)' is overloaded.	–	–	O	2DC
520395-31	Glow Plug control unit 4 has a Transistor failure for glow plug in cylinder 4.	–	–	O	2DC
520396-5	Component Y12 (Glow plug 2) has an Open Load error.	–	–	O	2DC

Code	Message	Warning lamp indication			Fault diagnosis period
		ENG SYS (red)	ENG SYS (amber)		Validation
520396-6	The electric circuit of component 'Y12 (Glow plug 2)' is overloaded.	–	–	O	2DC
520396-31	Glow Plug control unit 4 has a Transistor failure for glow plug in cylinder 2.	–	–	O	2DC
520397-31	Component 'Y11 (Glow plug 1)' has a short circuit.	–	–	O	2DC
520398-31	Component 'Y13 (Glow plug 3)' has a short circuit.	–	–	O	2DC
520399-31	Component 'Y14 (Glow plug 4)' has a short circuit.	–	–	O	2DC
520400-31	Component 'Y12 (Glow plug 2)' has a short circuit.	–	–	O	2DC
520401-31	The power supply of circuit 30 is not OK.	–	–	O	2DC
520418-0	Signal Range Check (SRC) for 'voltage of the piezo fuel injector actuator ' reports HIGH.	–	O	O	2DC
520418-1	Signal Range Check (SRC) for 'voltage of the piezo fuel injector actuator ' reports LOW.	–	O	O	2DC
520419-2	Injector Adjustment: IMA/ISA programming not correct for cyl 1.	–	–	O	2DC
520419-31	Injector Adjustment: IMA programming not correct for injector cyl 1.	–	–	O	2DC
520420-2	Injector Adjustment: IMA/ISA programming not correct for cyl 3.	–	–	O	2DC
520420-31	Injector Adjustment: IMA programming not correct for injector cyl 3.	–	–	O	2DC
520421-2	Injector Adjustment: IMA/ISA programming not correct for cyl 4.	–	–	O	2DC
520421-31	Injector Adjustment: IMA programming not correct for injector cyl 4.	–	–	O	2DC
520422-2	Injector Adjustment: IMA/ISA programming not correct for cyl 2.	–	–	O	2DC
520422-31	Injector Adjustment: IMA programming not correct for injector cyl 2.	–	–	O	2DC
520423-16	Signal Range Check (SRC) for 'Accelerator pedal position during Low Idle Accelerator pedal position Adjustment' reports HIGH.	–	–	–	IMD
520423-18	Signal Range Check (SRC) for 'Accelerator pedal position during Low Idle Accelerator pedal position Adjustment' reports LOW.	–	–	–	IMD
520424-0	Signal Range Check (SRC) for 'Accelerator Pedal position during Low Idle Speed Adjustment' reports HIGH.	–	–	–	IMD
520424-1	Signal Range Check (SRC) for 'Accelerator Pedal position during Low Idle Speed Adjustment' reports LOW.	–	–	–	IMD
520425-19	Communication malfunction with LIN bus (Default)	–	–	O	2DC
520426-5	Lambda sensor has an Open circuit at the Nernst cell pin.	–	–	O	2DC
520427-5	Lambda sensor has an Open circuit at pump current pin.	–	–	O	2DC
520428-5	Lambda sensor has an Open circuit at Virtual ground pin.	–	–	O	2DC
520429-18	The dynamic check of Lambda Sensor reports SLOW.	–	–	O	2DC
520431-2	Component Lambda Sensor Heater has an Open Load error.	–	–	O	2DC
520431-3	Lambda Sensor Heater has a SCB error.	–	–	O	2DC
520431-4	Lambda Sensor Heater has a SCG error.	–	–	O	2DC
520434-2	Diagnostic fault check to report SPI chip error of Lambda sensor.	–	–	O	2DC
520434-31	The low battery voltage of Lambda Sensor is detected by the SPI Chip.	–	–	O	2DC
520435-0	The temperature of Lambda Sensor heater exceeds the maximum limit.	–	–	O	2DC
520435-1	The temperature of Lambda Sensor heater exceeds the minimum limit.	–	–	O	2DC
520436-3	Lambda sensor Wiring has a Short Circuit to battery at Pump Cell (IA,IP), Nernst Cell (UN), or virtual ground (VG).	–	–	O	2DC

https://truckmanualshub.com/

Code	Message	Warning lamp indication			Fault diagnosis period
		ENG SYS (red)	ENG SYS (amber)		Validation
520436-4	Lambda sensor Wiring has a Short Circuit to ground at Pump Cell (IA,IP), Nernst Cell (UN), or virtual ground (VG).	–	–	O	2DC
520437-0	Fuel in Lube Oil has exceeded the Maximum limit.	–	O	O	2DC
520437-16	Fuel in Lube Oil has exceeded the warning limit.	–	–	–	IMD
520438-0	Soot in Lube Oil has exceeded the Maximum limit.	–	O	–	IMD
520439-31	The signal value of component 'analog/digital converter of accelerator pedal' is implausible.	O	–	O	2DC
520440-31	There is an internal control unit fault in the analog/digital converter.	O	–	O	2DC
520441-31	The voltage ratio of the analog/digital converter is not plausible.	O	–	O	2DC
520442-31	Diagnostic fault check to report errors in query-/response-communication.	O	–	O	2DC
520443-31	Diagnostic fault check to report SPI-communication Error.	O	–	O	2DC
520444-31	Diagnostic fault check to report multiple error while checking the complete ROM-memory.	O	–	O	2DC
520445-31	Communication timeout from CPU to Monitoring Module	O	–	O	2DC
520446-31	Error during Shut Off Path test due to defective injector or shut-off path.	O	–	O	2DC
520447-31	Internal error: Wrong set response time	O	–	O	2DC
520448-31	ECU internal: Too many SPI errors during shut off path test execution	O	–	O	2DC
520449-31	ECU internal: Diagnostic fault check to report Error in undervoltage monitoring.	O	–	O	2DC
520450-31	ECU internal: Diagnostic fault check to report Power stage supply not working correctly.	O	–	O	2DC
520451-31	ECU internal: OSTimeout in the shut off path test-Failed to set alarm task period	O	–	O	2DC
520452-31	ECU internal: Error during positive test	–	O	O	2DC
520453-31	ECU internal: Diagnostic fault check to report Timeout in the shut off path test.	O	–	O	2DC
520454-31	ECU internal: Diagnostic fault check to report Error in the overvoltage monitoring.	O	–	O	2DC
520455-31	ECU internal: Diagnostic fault check to report Accelerator pedal position error.	O	–	O	2DC
520456-31	ECU internal: Diagnostic fault check to report Engine speed error.	O	–	O	2DC
520457-31	ECU internal: Plausibility error of injection energizing time	O	–	O	2DC
520458-31	ECU internal: Plausibility error of energising angle start	O	–	O	2DC
520459-31	ECU internal: Diagnostic fault check to report Error due to implausible ZFC.	O	–	O	2DC
520461-31	ECU internal: Diagnostic fault check to report ICO demand error in the POI2 shut off.	O	–	O	2DC
520462-31	ECU internal: Plausibility error in POI3 efficiency	O	–	O	2DC
520463-31	ECU internal: Diagnostic fault check to report Error due to over run.	O	–	O	2DC
520464-31	ECU internal: Diagnostic fault check to report Error due to injection quantity correction.	O	–	O	2DC
520465-31	Actual value 'Rail pressure' is implausible.	O	–	O	2DC
520466-31	ECU internal: Diagnostic fault check to report Error due to torque comparison.	O	–	O	2DC

https://truckmanualshub.com/

Code	Message	Warning lamp indication			Fault diagnosis period
		ENG SYS (red)	ENG SYS (amber)		Validation
520469-31	ECU internal: Diagnosis of engine torque limit forced by ECU monitor level2	O	–	O	2DC
520486-12	Internal error: Diagnostic fault check to report "WDA active" due to errors in query-/response communication.	–	O	–	IMD
520487-12	Internal error: Diagnostic fault check to report "ABE active" due to undervoltage detection.	–	O	–	IMD
520488-12	Internal error: Diagnostic fault check to report "ABE active" due to overvoltage detection.	–	O	–	IMD
520489-12	Internal error: Diagnostic fault check to report "ABE or WDA active" due to an unknown reason.	–	O	–	IMD
520491-2	The function of component 'Oxidation catalytic converter' is not OK.	–	O	O	IMD
520495-12	The signal of circuit conversion maps of fuel quantity/torque is implausible.	–	–	–	IMD
520496-2	SCR Reagent pump has not defrosted within time.	–	–	–	IMD
520497-0	Signal Range Check (SRC) for 'PTO Accelerator pedal position' reports HIGH.	–	–	–	IMD
520497-1	Signal Range Check (SRC) for 'PTO Accelerator pedal position' reports LOW.	–	-	-	IMD
520499-20	The fuel pressure in the metering device is too low.	O	–	O	2DC
520500-0	Fuel rail pressure is too low in fast transient condition with MeUn Control.	O	–	O	2DC
520500-16	Fuel pressure is too high with MeUn on 0-delivery state.	O	–	O	2DC
520500-20	Fuel rail pressure is too low concerning the fuel feeding with MeUn Control.	–	O	O	2DC
520502-0	Fuel Rail pressure above maximum limit with MeUn Control.	O	–	O	2DC
520502-1	Fuel rail pressure below limit with MeUn Control	O	–	O	2DC
520503-15	Too low fuel rail pressure concerning PCV Control.	O	–	O	2DC
520503-16	Maximum rail pressure exceeded with PCV control.	O	–	O	2DC
520503-18	Minimum rail pressure not reached with PCV Control	O	–	O	2DC
520503-20	Too low fuel rail pressure with PCV control	O	–	O	2DC
520503-21	Too high fuel rail pressure with PCV Control	O	–	O	2DC
520505-31	SCR reagent tank level below first warning level.	–	O	–	IMD
520506-31	SCR reagent tank level below second warning level.	–	–	–	IMD
520509-2	Invalid dataset identifier	–	–	–	IMD
520510-2	Dataset switching error	–	–	–	IMD
520511-2	EEPROM codeword read error	–	–	–	IMD
520512-12	SW reset for all testers	–	–	–	IMD
520513-12	SW reset for manufacturer only	–	–	–	IMD
520514-12	SW reset invisibility	–	–	–	IMD
520530-0	Catalyst upstream temperature Signal range checkHIGH	–	–	O	2DC
520530-1	Catalyst upstream temperature Signal range checkLOW	–	–	O	2DC
520530-16	Exhaust temperature upstream of SCR catalytic converter: Signal value above maximum limit	–	–	O	2DC
520530-18	Exhaust temperature upstream of SCR catalytic converter: Signal value below minimum limit	–	–	O	2DC
520531-3	SCR dosing valve: Short circuit to positiveOn the high side switch	–	–	O	2DC

https://truckmanualshub.com/

Code	Message	Warning lamp indication			Fault diagnosis period
		ENG SYS (red)	ENG SYS (amber)		Validation
520531-4	Component DEF metering device has a short circuit to ground.	–	–	O	2DC
520532-4	DEF pressure line heater: Short circuit to ground	–	–	O	2DC
520532-5	DEF pressure line heater: Open circuit	–	–	O	2DC
520533-4	DEF supply module heater: Short circuit to ground	–	–	O	2DC
520533-5	DEF supply module heater: Open circuit	–	–	O	2DC
520534-6	SCR Reagent heating: Short circuitPressure line heater	–	–	O	2DC
520536-5	SCR Reagent heating: Tank open circuit error	–	–	O	2DC
520536-6	SCR Reagent heating: Tank short circuit error	–	–	O	2DC
520537-5	SCR Reagent heating: PTCShort circuit	–	–	O	2DC
520537-6	SCR Reagent heating: PTCOpen circuit	–	–	O	2DC
520538-0	SCR Reagent heating: DEF pressure line heaterSignal range checkHIGH	–	–	O	2DC
520538-1	SCR Reagent heating: DEF pressure line heaterSignal range checkLOW	–	–	O	2DC
520538-3	SCR Reagent heating: Pressure line heaterShort circuit to positive	–	–	O	2DC
520538-4	SCR Reagent heating: Pressure line heaterShort circuit to ground	–	–	O	2DC
520538-5	SCR Reagent heating: Pressure line heaterOpen circuit	–	–	O	2DC
520539-0	SCR reagent pressure: The pressure rise is too high.	–	–	O	2DC
520539-2	SCR Reagent pump: Motor speed deviation	–	–	–	IMD
520539-3	SCR Reagent pump: Output to DEF pump motor-Short circuit to positive	–	–	O	2DC
520539-4	SCR Reagent pump: Output to DEF pump motor-Short circuit to ground	–	–	O	2DC
520539-5	SCR Reagent pump: Output to DEF pump motor-Open circuit	–	–	O	2DC
520539-12	SCR Reagent pump: Output to DEF pump motor-Overtemperature	–	–	O	2DC
520540-3	Component 'SCR catalytic converter heating' has a short circuit to positive.	–	–	O	2DC
520540-4	Component 'SCR catalytic converter heating' has a short circuit to ground.	–	–	O	2DC
520540-5	Component SCR catalytic converter heating has a no load error.	–	–	O	2DC
520541-0	Component 'DEF' has a plausibility error.High temperature	–	–	O	2DC
520541-1	Component 'DEF' has a plausibility error.Low temperature	–	–	O	2DC
520544-9	CAN Timeout Error during CAN-Transmit-Frame to Transmission Control message TC1.	–	–	–	IMD
520549-31	Actual value 'Specified value of NOx concentration' is implausible.	–	–	O	2DC
520550-31	The emission value of the NOx sensor is implausibel.	–	–	–	IMD
520553-31	Warning Block 1 for SCR inducement ia activated. Data valid but above normal operational range.	–	–	–	IMD
520554-31	SCR Warning Block 2 is activated.	–	–	–	IMD
520555-31	SCR Warning Block 3 is activated.	O	–	–	IMD
520556-31	SCR Warning Block 4 is activated.	–	–	–	IMD
520558-31	SCR Inducement: Warning Block 6 activated.	-	O	–	IMD
520559-31	SCR Inducement: Warning Block 7 activated.	–	O	–	IMD
520560-31	SCR Inducement: Warning Block 8 activated.	–	O	–	IMD

https://truckmanualshub.com/

Code	Message	Warning lamp indication			Fault diagnosis period
		ENG SYS (red)	ENG SYS (amber)		Validation
520561-0	Engine start: The maximum number of operating cycles has been exceeded.	–	–	–	IMD
520562-31	Information: Torque limitation active Refilling fuel tank without refilling DEF tank.	–	–	–	None
520563-31	Information: Torque limitation active After a long parking time.	–	–	–	None
520564-31	Information: Torque limitation active Engine restart	–	–	–	None
520569-31	Component 'AMT' reports an implausible gear.	–	–	–	IMD
520570-31	Torque limitation activeOBD performance limiter group 111	–	–	–	IMD
520571-31	Torque limitation activeOBD performance limiter group 112	–	–	–	IMD
520572-31	Torque limitation activeOBD performance limiter group 121	–	–	–	IMD
520573-31	Torque limitation activeOBD performance limiter group 122	–	–	–	IMD
520574-31	Torque limitation activeOBD performance limiter group 211	–	–	–	IMD
520575-31	Torque limitation activeOBD performance limiter group 212	–	–	–	IMD
520576-31	Torque limitation activeOBD performance limiter group 221	–	–	–	IMD
520577-31	Torque limitation activeOBD performance limiter group 222	–	–	–	IMD
520578-31	Information: Torque limitation active The current value for the 'DEF content' component is too low.	–	–	–	IMD
520579-31	Component 'NOx sensor' has an open circuit or short circuit. / Component 'NOx sensor' has a mechanical defect.	–	–	–	None
520580-31	Component 'NOx sensor' has an open circuit or short circuit. / Component 'NOx sensor' has a mechanical defect.	–	–	–	None
520583-0	The HFM value at cold start is too high.	O	–	O	2DC
520583-1	The HFM value at cold start is too low.	O	–	O	2DC
520584-31	Regeneration was aborted due to a fault.	–	–	–	None
520586-31	Information error Monitor function of Nox level is aborted.	–	–	–	None
520588-12	The vehicle speed signal is missing. (The electrical fuse of component 'Instrument panel' is defective.)	O	–	O	2DC

IMD: Immediate
DC[Drive cycle]: “Start switch ON to start engine till starter switch OFF” constitutes 1 DC.

https://truckmanualshub.com/

1.2 Details of Diagnosis code

22-0: Signal Range Check (SRC) for 'Pressure sensor in crankcase' reports HIGH.

Generation condition		[Test Condition] • The signal range checks are only carried out if ADC has not reported a module error. Continuously.
		[Fault Detection] • The acquired raw voltage value CrCsP2_uRaw is above 3.17V
		[Defect Debouncing] • Defect condition exceeded cumulatively > 500.00ms • Failure is detected if active for 25% of the time
Fault healing		• The acquired raw voltage value CrCsP2_uRaw is below or equal to 3.17V.
System reaction		• Crankcase differential pressure is frozen at last valid value on preliminary failure and ramps, using slope 5kPa {0.7psi, 0.05kgf/cm^2}/s or 5kPa {0.7psi, 0.05kgf/cm^2}/s depending whether the measured value is above or below replacement value, to a fixed replacement value of 0kPa {0psi, 0kgf/cm^2} • Further reactions according FID (see FID's)
		• 1) FId / Freeze value of crankcase pressure 2 in case of error • 2) FId / Inhibit offset calculation for crankcase pressure 2 • 3) FId / Set replace value for crankcase pressure 2 when error is detected • 4) FId / Inhibit physical range check for crankcase pressure 2 • 5) FId / Inhibit crankcase ventilation monitoring
Failure cause		• Short circuit of sensor to external source or defective sensor
Failure repair		• Check wiring and sensor
Inspection procedure	Step1	Inspection procedure If one of diagnosis codes associated with A20 (SAM) is generated, make a system diagnosis according to the diagnosis code. Go to Step2
	Step2	Inspection procedure Turn the starter switch in OFF. Remove the connector of A4 (Combustion engine Control unit). Remove the connector of B58 (Blow-by gas pressure sensor 1). Check the circuit across B58.3/3 and A4.X1.60/9 for open or short circuit. Check the circuit across B58.3/2 and A4.X1.60/28 for open or short circuit. Check the circuit across B58.3/1 and A4.X1.60/59 for open or short circuit. Make a visual check on each connector. Is any abnormality recognized? No: Go to Step3 Yes: Go to Step7
	Step3	Inspection procedure Turn the starter switch in OFF. Replace component "B58 (Blow-by gas pressure sensor 1)". Reinstall all the removed connectors. Turn the starter switch in ON. Go to Step4
	Step4	Inspection procedure Turn the starter switch in OFF. Reinstall all the removed connectors. Erase fault memory and perform a test drive. Check if this diagnosis code has occurred. Are current fault codes present? No: Go to Step5 Yes: Go to Step6
	Step5	Inspection completed
	Step6	Inspection procedure Perform the operation start and replace A4 (Combustion engine Control unit). Go to Step5

https://truckmanualshub.com/

Inspection procedure	Step7	Inspection procedure Repair or replace electrical lines. Reinstall all the removed connectors. Erase fault memory and perform a test drive. Check if this diagnosis code has occurred. Are current fault codes present? No: Go to Step5 Yes: Go to Step3

22-1: Signal Range Check (SRC) for 'Pressure sensor in crankcase' reports LOW.

Generation condition		[Test Condition] • The signal range checks are only carried out if ADC has not reported a module error. Continuously.
		[Fault Detection] • The acquired raw voltage value CrCsP2_uRaw is below 640.00mV.
		[Defect Debouncing] • Defect condition exceeded cumulatively > 500.00ms • Failure is detected if active for 25% of the time
Fault healing		• The acquired raw voltage value CrCsP2_uRaw is above or equal to 640.00mV
System reaction		• Crankcase differential pressure is frozen at last valid value on preliminary failure and ramps, using slope 5kPa {0.7psi, 0.05kgf/cm^2}/s or 5kPa {0.7psi, 0.05kgf/cm^2}/s depending whether the measured value is above or below replacement value, to a fixed replacement value of 0kPa {0psi, 0kgf/cm^2} • Further reactions according FID (see FID's)
		• 1) FId / Freeze value of crankcase pressure 2 in case of error • 2) FId / Inhibit offset calculation for crankcase pressure 2 • 3) FId / Set replace value for crankcase pressure 2 when error is detected • 4) FId / Inhibit physical range check for crankcase pressure 2 • 5) FId / Inhibit crankcase ventilation monitoring
Failure cause		• Short circuit of sensor to ground or defective sensor
Failure repair		• Check wiring or replace sensor
Inspection procedure	Step1	Inspection procedure If one of diagnosis codes associated with A20 (SAM) is generated, make a system diagnosis according to the diagnosis code. Go to Step2
	Step2	Inspection procedure Turn the starter switch in OFF. Remove the connector of A4 (Combustion engine Control unit). Remove the connector of B58 (Blow-by gas pressure sensor 1). Check the circuit across B58.3/3 and A4.X1.60/9 for open or short circuit. Check the circuit across B58.3/2 and A4.X1.60/28 for open or short circuit. Check the circuit across B58.3/1 and A4.X1.60/59 for open or short circuit. Make a visual check on each connector. Is any abnormality recognized? No: Go to Step3 Yes: Go to Step7
	Step3	Inspection procedure Turn the starter switch in OFF. Replace component "B58 (Blow-by gas pressure sensor 1)". Reinstall all the removed connectors. Turn the starter switch in ON. Go to Step4
	Step4	Inspection procedure Turn the starter switch in OFF. Reinstall all the removed connectors. Erase fault memory and perform a test drive. Check if this diagnosis code has occurred. Are current fault codes present? No: Go to Step5 Yes: Go to Step6
	Step5	Inspection completed

https://truckmanualshub.com/

Inspection procedure	Step6	Inspection procedure Perform the operation start and replace A4 (Combustion engine Control unit). Go to Step5
	Step7	Inspection procedure Repair or replace electrical lines. Reinstall all the removed connectors. Erase fault memory and perform a test drive. Check if this diagnosis code has occurred. Are current fault codes present? No: Go to Step5 Yes: Go to Step3

22-16: The signal value of component 'Pressure sensor in crankcase' is too high.

Generation condition		[Test Condition] • If physical range check not inhibited by another failure (DINH_stFld.Fld_CrCsP2PhysRng is not inhibited)
		[Fault Detection] • The filtered pressure value CrCsP2_p is above 10kPa {1.5psi, 0.1kgf/cm^2}.
		[Defect Debouncing] • Defect condition exceeded cumulatively > 10.00s • Failure is detected if active for 25% of the time
Fault healing		• The filtered pressure value CrCsP2_p is below 10kPa {1.5psi, 0.1kgf/cm^2}.
System reaction		• None (only via inhibit handler)
		• 1) Fld / Inhibit offset calculation for crankcase pressure 2 • 2) Fld / Inhibit crankcase ventilation monitoring
Failure cause		• Inaccurate or defective crankcase differential pressure sensor, defect in the wiring
Failure repair		• Check wiring and the accuracy of the crankcase differential pressure sensor and replace it if necessary
Inspection procedure	Step1	Inspection procedure If one of diagnosis codes associated with A20 (SAM) is generated, make a system diagnosis according to the diagnosis code. Go to Step2
	Step2	Inspection procedure Turn the starter switch in OFF. Remove the connector of A4 (Combustion engine Control unit). Remove the connector of B58 (Blow-by gas pressure sensor 1). Check the circuit across B58.3/3 and A4.X1.60/9 for open or short circuit. Check the circuit across B58.3/2 and A4.X1.60/28 for open or short circuit. Check the circuit across B58.3/1 and A4.X1.60/59 for open or short circuit. Make a visual check on each connector. Is any abnormality recognized? No: Go to Step3 Yes: Go to Step7
	Step3	Inspection procedure Turn the starter switch in OFF. Replace component "B58 (Blow-by gas pressure sensor 1)". Reinstall all the removed connectors. Turn the starter switch in ON. Go to Step4
	Step4	Inspection procedure Turn the starter switch in OFF. Reinstall all the removed connectors. Erase fault memory and perform a test drive. Check if this diagnosis code has occurred. Are current fault codes present? No: Go to Step5 Yes: Go to Step6
	Step5	Inspection completed

https://truckmanualshub.com/

Inspection procedure	Step6	Inspection procedure Perform the operation start and replace A4 (Combustion engine Control unit). Go to Step5
	Step7	Inspection procedure Repair or replace electrical lines. Reinstall all the removed connectors. Erase fault memory and perform a test drive. Check if this diagnosis code has occurred. Are current fault codes present? No: Go to Step5 Yes: Go to Step3

22-18: The signal value of component 'Pressure sensor in crankcase' is too low.

Generation condition		[Test Condition] • If physical range check not inhibited by another failure (DINH_stFId.FId_CrCsP2PhysRng is not inhibited)
		[Fault Detection] • The filtered raw pressure value CrCsP2_p is below -2.1kPa {-0.3psi, -0.02kgf/cm^2}
		[Defect Debouncing] • Defect condition exceeded cumulatively > 10.00s • Failure is detected if active for 25% of the time
Fault healing		• The filtered raw pressure value CrCsP2_p is above -2.1kPa {-0.3psi, -0.02kgf/cm^2}
System reaction		• None (only via inhibit handler)
		• 1) FId / Inhibit offset calculation for crankcase pressure 2 • 2) FId / Inhibit crankcase ventilation monitoring
Failure cause		• Inaccurate or defective crankcase differential pressure sensor, defect in the wiring
Failure repair		• Check wiring and the accuracy of the crankcase differential pressure sensor and replace it if necessary. • Check also vacuum pump (vacuum breaker).
Inspection procedure	Step1	Inspection procedure If one of diagnosis codes associated with A20 (SAM) is generated, make a system diagnosis according to the diagnosis code. Go to Step2
	Step2	Inspection procedure Turn the starter switch in OFF. Remove the connector of A4 (Combustion engine Control unit). Remove the connector of B58 (Blow-by gas pressure sensor 1). Check the circuit across B58.3/3 and A4.X1.60/9 for open or short circuit. Check the circuit across B58.3/2 and A4.X1.60/28 for open or short circuit. Check the circuit across B58.3/1 and A4.X1.60/59 for open or short circuit. Make a visual check on each connector. Is any abnormality recognized? No: Go to Step3 Yes: Go to Step7
	Step3	Inspection procedure Turn the starter switch in OFF. Replace component "B58 (Blow-by gas pressure sensor 1)". Reinstall all the removed connectors. Turn the starter switch in ON. Go to Step4
	Step4	Inspection procedure Turn the starter switch in OFF. Reinstall all the removed connectors. Erase fault memory and perform a test drive. Check if this diagnosis code has occurred. Are current fault codes present? No: Go to Step5 Yes: Go to Step6
	Step5	Inspection completed

https://truckmanualshub.com/

Inspection procedure	Step6	Inspection procedure Perform the operation start and replace A4 (Combustion engine Control unit). Go to Step5
	Step7	Inspection procedure Repair or replace electrical lines. Reinstall all the removed connectors. Erase fault memory and perform a test drive. Check if this diagnosis code has occurred. Are current fault codes present? No: Go to Step5 Yes: Go to Step3

27-15: EGR valve is too high. Position deviation above maximum positive limit.

Generation condition		[Test Condition] • Continuously if monitoring is not disabled by FID_EGRVlvGovOn due to another failure (valve control in closed loop).
		[Fault Detection] • EGR valve position deviation > 10.00% (i.e. too high EGR flow) for a time longer than time from curve EGRVlv_tiDebGovDvtDef depending from governor position
		[Defect Debouncing] • Immediate
Fault healing		• EGR valve position deviation < 10.00%
System reaction		• Additional Release function becomes active a fast opening actuator is performed to try to unblock the actuator. • Further reactions according FID (see FID's)
		• 1) FId / Inhibit crankcase ventilation monitoring • 2) Fid / SCR Monitoring or DEF injection release not possible (according calibration of Release Masks) • 3) FId / Inhibit EGR cooler efficiency monitoring • 4) FId / Failure detection of physical range check of air flow meter (HFM/AFS) disabled (DFC_AFSPhysRngHi and DFC_AFSPhysRngLo) • 5) FID / Drift compensation of Air flow meter (HFM/AFS) disabled
Failure cause		• Desired EGR valve position can not be reached • EGR valve sticks • EGR valve position sensor mismatched
Failure repair		• No action needed, as long as failure "jammed valve is not detected"
Inspection procedure	Step1	Inspection procedure If one of diagnosis codes associated with A20 (SAM) is generated, make a system diagnosis according to the diagnosis code. Go to Step2
	Step2	Inspection procedure Turn the starter switch in ON. Execute the control "Control of exhaust gas recirculation". Turn the starter switch in OFF. Check the Mechanical fault at A14 (EGR valve). Can occurrence of a mechanical fault be confirmed? No: Go to Step3 Yes: Go to Step4
	Step3	Inspection procedure Turn the starter switch in OFF. Remove the connector of A4 (Combustion engine Control unit). Remove the connector of A14 (EGR valve). Check the circuit across A4.X1.60/50 and Y8.X7.5/2 for open or short circuit. Check the circuit across A4.X1.60/35 and Y8.X7.5/1 for open or short circuit. Check the circuit across A4.X1.60/29 and B21.X7.5/5 for open or short circuit. Check the circuit across A4.X1.60/27 and B21.X7.5/4 for open or short circuit. Check the circuit across A4.X1.60/33 and B21.X7.5/3 for open or short circuit. Make a visual check on each connector. Is any abnormality recognized? No: Go to Step4 Yes: Go to Step8

https://truckmanualshub.com/

Inspection procedure	Step4	Inspection procedure Turn the starter switch in OFF. Replace component “A14 (EGR valve)”. Reinstall all the removed connectors. Turn the starter switch in ON. Perform the learned value resetting procedure of A14 (EGR valve) which A4 (Combustion engine Control unit) learns. Go to Step5
	Step5	Inspection procedure Turn the starter switch in OFF. Reinstall all the removed connectors. Erase fault memory and perform a test drive. Check if this diagnosis code has occurred. Are current fault codes present? No: Go to Step7 Yes: Go to Step6
	Step6	Inspection procedure Perform the operation start and replace A4 (Combustion engine Control unit). Go to Step7
	Step7	Inspection completed
	Step8	Inspection procedure Repair or replace electrical lines. Reinstall all the removed connectors. Erase fault memory and perform a test drive. Check if this diagnosis code has occurred. Are current fault codes present? No: Go to Step7 Yes: Go to Step4

27-17: EGR valve is too low. Position deviation below maximum negative limit.

Generation condition		[Test Condition] • Continuously if monitoring is not disabled by FID_EGRVlvGovOn due to another failure (valve control in closed loop).
		[Fault Detection] • EGR valve position deviation < -10.00% (i.e. too low EGR flow) for a time longer than time from curve 4.00s at 0.00% depending from governor position
		[Defect Debouncing] • Immediate
Fault healing		• EGR valve position deviation > -10.00%
System reaction		• Additional Release function becomes active a fast opening actuator is performed to try to unblock the actuator. • Further reactions according FID (see FID’s)
		• 1) FId / Inhibit crankcase ventilation monitoring • 2) Fid / SCR Monitoring or DEF injection release not possible (according calibration of Release Masks) • 3) FId / Inhibit EGR cooler efficiency monitoring • 4) FId / Failure detection of physical range check of air flow meter (HFM/AFS) disabled (DFC_AFSPhysRngHi and DFC_AFSPhysRngLo) • 5) FID / Drift compensation of Air flow meter (HFM/AFS) disabled
Failure cause		• Desired EGR valve position can not be reached • EGR valve sticks • EGR valve position sensor mismatched
Failure repair		• No action needed, as long as failure “jammed valve is not detected”
Inspection procedure	Step1	Inspection procedure If one of diagnosis codes associated with A20 (SAM) is generated, make a system diagnosis according to the diagnosis code. Go to Step2

https://truckmanualshub.com/

Inspection procedure	Step2	Inspection procedure Turn the starter switch in ON. Execute the control “Control of exhaust gas recirculation”. Turn the starter switch in OFF. Check the Mechanical fault at A14 (EGR valve). Can occurrence of a mechanical fault be confirmed? No: Go to Step3 Yes: Go to Step4
	Step3	Inspection procedure Turn the starter switch in OFF. Remove the connector of A4 (Combustion engine Control unit). Remove the connector of A14 (EGR valve). Check the circuit across A4.X1.60/50 and Y8.X7.5/2 for open or short circuit. Check the circuit across A4.X1.60/35 and Y8.X7.5/1 for open or short circuit. Check the circuit across A4.X1.60/29 and B21.X7.5/5 for open or short circuit. Check the circuit across A4.X1.60/27 and B21.X7.5/4 for open or short circuit. Check the circuit across A4.X1.60/33 and B21.X7.5/3 for open or short circuit. Make a visual check on each connector. Is any abnormality recognized? No: Go to Step4 Yes: Go to Step8
	Step4	Inspection procedure Turn the starter switch in OFF. Replace component “A14 (EGR valve)”. Reinstall all the removed connectors. Turn the starter switch in ON. Perform the learned value resetting procedure of A14 (EGR valve) which A4 (Combustion engine Control unit) learns. Go to Step5
	Step5	Inspection procedure Turn the starter switch in OFF. Reinstall all the removed connectors. Erase fault memory and perform a test drive. Check if this diagnosis code has occurred. Are current fault codes present? No: Go to Step7 Yes: Go to Step6
	Step6	Inspection procedure Perform the operation start and replace A4 (Combustion engine Control unit). Go to Step7
	Step7	Inspection completed
	Step8	Inspection procedure Repair or replace electrical lines. Reinstall all the removed connectors. Erase fault memory and perform a test drive. Check if this diagnosis code has occurred. Are current fault codes present? No: Go to Step7 Yes: Go to Step4

30-0: Signal Range Check (SRC) for ‘Pressure sensor in hose line of crankcase ventilation system’ reports HIGH.

Generation condition	[Test Condition] • The signal range checks are only carried out if ADC has not reported a module error. Continuously.
	[Fault Detection] • The acquired raw voltage value CrCsP_uRaw is above 4.75V
	[Defect Debouncing] • Defect condition exceeded cumulatively > 500.00ms • Failure is detected if active for 25% of the time
Fault healing	• The acquired raw voltage value CrCsP_uRaw is below 4.75V

https://truckmanualshub.com/

System reaction		• Crankcase differential pressure is frozen at last valid value on preliminary failure and ramps, using slope 5kPa {0.7psi, 0.05kgf/cm^2}/s or 5kPa {0.7psi, 0.05kgf/cm^2}/s depending whether the measured value is above or below replacement value, to a fixed replacement value of 0kPa {0psi, 0kgf/cm^2} • Further reactions according FID (see FID's)
		• 1) FId / Crankcase pressure value frozen • 2) FId / Inhibit crankcase pressure offset calculation • 3) FId / Crankcase pressure value replaced by substitute value • 4) FId / Inhibit crankcase ventilation monitoring • 5) FId / Inhibit SRC of crankcase pressure
Failure cause		• Short circuit of sensor to external source or defective sensor
Failure repair		• Check wiring and sensor
Inspection procedure	Step1	Inspection procedure If one of diagnosis codes associated with A20 (SAM) is generated, make a system diagnosis according to the diagnosis code. Go to Step2
	Step2	Inspection procedure Turn the starter switch in OFF. Remove the connector of A4 (Combustion engine Control unit). Remove the connector of B59 (Blow-by gas pressure sensor 2). Check the circuit across B59.3/3 and A4.X1.60/58 for open or short circuit. Check the circuit across B59.3/2 and A4.X1.60/26 for open or short circuit. Check the circuit across B59.3/1 and A4.X1.60/4 for open or short circuit. Make a visual check on each connector. Is any abnormality recognized? No: Go to Step3 Yes: Go to Step7
	Step3	Inspection procedure Turn the starter switch in OFF. Replace component "B59 (Blow-by gas pressure sensor 2)". Reinstall all the removed connectors. Turn the starter switch in ON. Go to Step4
	Step4	Inspection procedure Turn the starter switch in OFF. Reinstall all the removed connectors. Erase fault memory and perform a test drive. Check if this diagnosis code has occurred. Are current fault codes present? No: Go to Step5 Yes: Go to Step6
	Step5	Inspection completed
	Step6	Inspection procedure Perform the operation start and replace A4 (Combustion engine Control unit). Go to Step5
	Step7	Inspection procedure Repair or replace electrical lines. Reinstall all the removed connectors. Erase fault memory and perform a test drive. Check if this diagnosis code has occurred. Are current fault codes present? No: Go to Step5 Yes: Go to Step3

https://truckmanualshub.com/

30-1: Signal Range Check (SRC) for 'Pressure sensor in hose line of crankcase ventilation system' reports LOW.

Generation condition		[Test Condition] • The signal range checks are only carried out if ADC has not reported a module error. Continuously.
		[Fault Detection] • The acquired raw voltage value CrCsP_uRaw is below 250.00mV.
		[Defect Debouncing] • Defect condition exceeded cumulatively > 500.00ms • Failure is detected if active for 25% of the time
Fault healing		• The acquired raw voltage value CrCsP_uRaw is above 250.00mV.
System reaction		• Crankcase differential pressure is frozen at last valid value on preliminary failure and ramps, using slope 5kPa {0.7psi, 0.05kgf/cm^2}/s or 5kPa {0.7psi, 0.05kgf/cm^2}/s depending whether the measured value is above or below replacement value, to a fixed replacement value of 0kPa {0psi, 0kgf/cm^2} • Further reactions according FID (see FID's)
		• 1) FId / Crankcase pressure value frozen • 2) FId / Inhibit crankcase pressure offset calculation • 3) FId / Crankcase pressure value replaced by substitute value • 4) FId / Inhibit crankcase ventilation monitoring • 5) FId / Inhibit SRC of crankcase pressure
Failure cause		• Short circuit of sensor to ground or defective sensor
Failure repair		• Check wiring or replace sensor
Inspection procedure	Step1	Inspection procedure If one of diagnosis codes associated with A20 (SAM) is generated, make a system diagnosis according to the diagnosis code. Go to Step2
	Step2	Inspection procedure Turn the starter switch in OFF. Remove the connector of A4 (Combustion engine Control unit). Remove the connector of B59 (Blow-by gas pressure sensor 2). Check the circuit across B59.3/3 and A4.X1.60/58 for open or short circuit. Check the circuit across B59.3/2 and A4.X1.60/26 for open or short circuit. Check the circuit across B59.3/1 and A4.X1.60/4 for open or short circuit. Make a visual check on each connector. Is any abnormality recognized? No: Go to Step3 Yes: Go to Step7
	Step3	Inspection procedure Turn the starter switch in OFF. Replace component "B59 (Blow-by gas pressure sensor 2)". Reinstall all the removed connectors. Turn the starter switch in ON. Go to Step4
	Step4	Inspection procedure Turn the starter switch in OFF. Reinstall all the removed connectors. Erase fault memory and perform a test drive. Check if this diagnosis code has occurred. Are current fault codes present? No: Go to Step5 Yes: Go to Step6
	Step5	Inspection completed
	Step6	Inspection procedure Perform the operation start and replace A4 (Combustion engine Control unit). Go to Step5

https://truckmanualshub.com/

Inspection procedure	Step7	Inspection procedure Repair or replace electrical lines. Reinstall all the removed connectors. Erase fault memory and perform a test drive. Check if this diagnosis code has occurred. Are current fault codes present? No: Go to Step5 Yes: Go to Step3

30-2: The value of component 'B37 (DPF differential pressure sensor)' is implausible. Value measured at ECM shut off.

Generation condition		[Test Condition] • During ECM after-run when engine is stopped
		[Fault Detection] • The absolute value of Crankcase pressure CrCsP_p is above 1.9kPa {0.3psi, 0.02kgf/cm^2}
		[Defect Debouncing] • Immediate
Fault healing		• The absolute value of Crankcase pressure CrCsP_p is below 1.9kPa {0.3psi, 0.02kgf/cm^2}.
System reaction		• None (only via Inhibit Handler)
		• 1) FId / Inhibit SRC of crankcase pressure • 2) FId / Inhibit crankcase ventilation monitoring
Failure cause		• Inaccurate or defective crankcase differential pressure sensor, defect in the wiring
Failure repair		• Check wiring and the accuracy of the crankcase differential pressure sensor and replace it if necessary
Inspection procedure	Step1	Inspection procedure If one of diagnosis codes associated with A20 (SAM) is generated, make a system diagnosis according to the diagnosis code. Go to Step2
	Step2	Inspection procedure Turn the starter switch in OFF. Remove the connector of A4 (Combustion engine Control unit). Remove the connector of B58 (Blow-by gas pressure sensor 1). Check the circuit across B58.3/3 and A4.X1.60/9 for open or short circuit. Check the circuit across B58.3/2 and A4.X1.60/28 for open or short circuit. Check the circuit across B58.3/1 and A4.X1.60/59 for open or short circuit. Make a visual check on each connector. Is any abnormality recognized? No: Go to Step3 Yes: Go to Step7
	Step3	Inspection procedure Turn the starter switch in OFF. Replace component "B58 (Blow-by gas pressure sensor 1)". Reinstall all the removed connectors. Turn the starter switch in ON. Go to Step4
	Step4	Inspection procedure Turn the starter switch in OFF. Reinstall all the removed connectors. Erase fault memory and perform a test drive. Check if this diagnosis code has occurred. Are current fault codes present? No: Go to Step5 Yes: Go to Step6
	Step5	Inspection completed
	Step6	Inspection procedure Perform the operation start and replace A4 (Combustion engine Control unit). Go to Step5

https://truckmanualshub.com/

Inspection procedure	Step7	Inspection procedure Repair or replace electrical lines. Reinstall all the removed connectors. Erase fault memory and perform a test drive. Check if this diagnosis code has occurred. Are current fault codes present? No: Go to Step5 Yes: Go to Step3

30-15: The differential pressure between sensor in crankcase and sensor in hose line of crankcase ventilation system is above upper limit.

Generation condition		[Test Condition] • If monitor not inhibited by another failure (FId_CrCsVMon not set) • Engine speed between 2000.00rpm and 3400.00rpm • Air mass between 300.00Kg/h and 600.00Kg/h • atmospheric pressure EnvP_p > 75kPa {11psi, 0.8kgf/cm^2}, low altitude • environmental temperature CrCsV_tAirEnv_mp > -40.04°C {-40.07°F} • coolant temperature CEngDsT_t between 59.96°C {139.93°F} and 119.96°C {247.93°F}
		[Fault Detection] • The differential crankcase pressure exceeds a limit depending on engine running parameters defined in map CrCsV_pDiffCrCsThres, for longer than 10.00s
		[Defect Debouncing] • Defect condition fulfilled continuously >5000.0 ms
Fault healing		• The differential crankcase pressure is below limit, for longer than 500.00ms
System reaction		• None
		• Disconnection in hose line between the crankcase and intake manifold
Failure cause		• Check blow-by duct
Failure repair		[Test Condition] • If monitor not inhibited by another failure (FId_CrCsVMon not set) • Engine speed between 2000.00rpm and 3400.00rpm • Air mass between 300.00Kg/h and 600.00Kg/h • atmospheric pressure EnvP_p > 75kPa {11psi, 0.8kgf/cm^2}, low altitude • environmental temperature CrCsV_tAirEnv_mp > -40.04°C {-40.07°F} • coolant temperature CEngDsT_t between 59.96°C {139.93°F} and 119.96°C {247.93°F}
Inspection procedure	Step1	Inspection procedure Inspect the suspected factors mentioned above sequentially to locate faulty parts. Repair or replace the faulty part as necessary.

30-16: The signal value of component 'Pressure sensor in hose line of crankcase ventilation system' is too high.

Generation condition	[Test Condition] • If physical range check not inhibited by another failure (Fid_CrCsPPhysRng not set)
	[Fault Detection] • The filtered pressure value CrCsP_p is above 1.9kPa {0.3psi, 0.02kgf/cm^2}.
	[Defect Debouncing] • Defect condition exceeded cumulatively > 10.00s • Failure is detected if active for 25% of the time
Fault healing	• The filtered pressure value CrCsP_p is below 1.9kPa {0.3psi, 0.02kgf/cm^2}.
System reaction	• None except FIds
	• 1) FId / Inhibit crankcase ventilation monitoring • 2) FId / Inhibit crankcase pressure offset calculation
Failure cause	• Inaccurate or defective crankcase differential pressure sensor, defect in the wiring
Failure repair	• Check wiring and the accuracy of the crankcase differential pressure sensor and replace it if necessary

https://truckmanualshub.com/

Inspection procedure	Step1	Inspection procedure If one of diagnosis codes associated with A20 (SAM) is generated, make a system diagnosis according to the diagnosis code. Go to Step2
	Step2	Inspection procedure Turn the starter switch in OFF. Remove the connector of A4 (Combustion engine Control unit). Remove the connector of B59 (Blow-by gas pressure sensor 2). Check the circuit across B59.3/3 and A4.X1.60/58 for open or short circuit. Check the circuit across B59.3/2 and A4.X1.60/26 for open or short circuit. Check the circuit across B59.3/1 and A4.X1.60/4 for open or short circuit. Make a visual check on each connector. Is any abnormality recognized? No: Go to Step3 Yes: Go to Step7
	Step3	Inspection procedure Turn the starter switch in OFF. Replace component “B59 (Blow-by gas pressure sensor 2)”. Reinstall all the removed connectors. Turn the starter switch in ON. Go to Step4
	Step4	Inspection procedure Turn the starter switch in OFF. Reinstall all the removed connectors. Erase fault memory and perform a test drive. Check if this diagnosis code has occurred. Are current fault codes present? No: Go to Step5 Yes: Go to Step6
	Step5	Inspection completed
	Step6	Inspection procedure Perform the operation start and replace A4 (Combustion engine Control unit). Go to Step5
	Step7	Inspection procedure Repair or replace electrical lines. Reinstall all the removed connectors. Erase fault memory and perform a test drive. Check if this diagnosis code has occurred. Are current fault codes present? No: Go to Step5 Yes: Go to Step3

30-17: The differential pressure between sensor in crankcase and sensor in hose line of crankcase ventilation system is above upper limit.: TOO HIGH

Generation condition	[Test Condition] • If monitor not inhibited by another failure (FId_CrCsVMon not set) • engine speed is between 2000.00rpm and 3400.00rpm • atmospheric pressure EnvP_p > 75kPa {11psi, 0.8kgf/cm^2}, low altitude • environmental temperature CrCsV_tAirEnv_mp > -40.04°C {-40.07°F} • engine coolant temperature CEngDsT_t is between 59.96°C {139.93°F} and 119.96°C {247.93°F} • The current actual torque ActMod_trqInr is between 100N·m {74lbs.ft, 10kgf·m} and 450N·m {330lbs.ft, 46kgf·m}
	[Fault Detection] • Differential crankcase pressure CrCsP_p is above reference value CrCsV_pDiffCrCsThres2_mp resulting from CrCsV_pDiffCrCsThres2_MAP, for at least 10.00s.
	[Defect Debouncing] • Defect condition fulfilled continuously >5000.0 ms
Fault healing	• Differential crankcase pressure in range
System reaction	• None (only inhibit handler)
	• Blocked blow-by valve or blocked blow-by oil filter

https://truckmanualshub.com/

Failure cause		• Check Blw-by valve and oil filter
Failure repair		[Test Condition] • If monitor not inhibited by another failure (FId_CrCsVMon not set) • engine speed is between 2000.00rpm and 3400.00rpm • atmospheric pressure EnvP_p > 75kPa {11psi, 0.8kgf/cm^2}, low altitude • environmental temperature CrCsV_tAirEnv_mp > -40.04°C {-40.07°F} • engine coolant temperature CEngDsT_t is between 59.96°C {139.93°F} and 119.96°C {247.93°F} • The current actual torque ActMod_trqInr is between 100N·m {74lbs.ft, 10kgf·m} and 450N·m {330lbs.ft, 46kgf·m}
Inspection procedure	Step1	Inspection procedure Inspect the suspected factors mentioned above sequentially to locate faulty parts. Repair or replace the faulty part as necessary.

84-12: Vehicle speed is not plausible to engine speed and torque.

Generation condition	[Test Condition] • Monitoring is active if the ECU is not in afterrun • Not inhibited by FID_VehVMon due to another failure. • Engine speed > 1750.00rpm and engine load > (Inner modelled torque) > 150N·m {110lbs.ft, 15kgf·m} longer than 5.00s
	[Fault Detection] • All conditions below fulfilled for at least 5.00s (i.e. debouncing starts only after this delay time!): • engine speed > 1750.00rpm • engine torque > 150N·m {110lbs.ft, 15kgf·m} • vehicle speed < 6km/h {3.73mph}
	[Defect Debouncing] • Defect condition exceeded cumulatively > 100.00ms • Failure is detected if active for 50% of the time
Fault healing	• As soon as vehicle speed > 6km/h {3.73mph}, independently on engine speed and load (“Reset” of a Flip-Flop)

https://truckmanualshub.com/

		• During error debouncing (100.00ms), the vehicle speed (VehV_v) and the acceleration (VehV_a) retain the last valid values. • After error debouncing, Vehicle speed is set to 0km/h {0mph} and Acceleration is set to 0 m/s2. • Further reactions according FID (see FID's)
System reaction		• 1) FId / Vehicle speed value (via CAN) frozen in case of preliminary failure detected • 2) FId / Vehicle speed value (via CAN) replaced by substitute value if failure is validated • 3) FId / Vehicle speed value (via HW) frozen in case of preliminary failure detected • 4) FId / Vehicle speed value (via HW) replaced by substitute value if failure is validated • 5) FId / Status of function identifier FId_EngDemTrqLimErr1 • 6) FId / Torque limitation 4 activated for power reduction • 7) FId / Engine speed Limitation 1 for HIgh/Low engine speed (HLS) control active • 8) Fid / Cruise control immediately shut off • 9) FId / Multiple state switch error, PTO disabled • 10) FId / Vehicle speed sensing error, Cruise control disabled • 11) FId / Release of OBD Performance Limiter at low vehicle speed inhibited due to a failure • 12) FId / Zero Fuel Calibration (ZFC) of injectors disabled • 13) FId / Plausibility Check Accelerator and brake pedal not released due to failure in vehicle speed evaluation • 14) FId / Inhibit Charged Air Cooler monitoring • 15) Fid / Crankshaft sensor diagnosis inhibited (due to vehicle speed implausibility, e.g. towed vehicle) • 17) FId / Drive away-set point idle speed calculation by High/Low engine speed control (HLS) inhibited • 18) FId / Underbraking disabled for High and Low engine speed control (HLS) (no special control parameters in case of Underbraking used) • 19) FId / High and Low engine speed demand control (HLS) disabled • 20) FId / Vehicle Speed signal defective, speed limiter blocked • 21) FId / Misfire Detection disabled • 22) FId / Closing of metering unit forced (full fuel feeding) • 23) FId / Tooth Angle Adaption (TAA) of crank speed sensor disabled • 24) FId / Vehicle speed signal evaluation defective • 25) Fid / Fix Substitution value (FE) for actual fuel economy status transmit to CAN Message FIEco • 26) FId / Status of Function Identifier for Wheel Based Vehicle Speed • 27) FId / Coolant thermostat diagnosis disabled • 28) FId / Use of the gear signal for the range check of particulate filter (DPF) is inhibited • 29) FId / Use of the vehicle speed for the range check of particulate filter (DPF) is inhibited • 30) FId / Vehicle speed sensor defective, PGNRQ can message invalid • 31) FId / Cooling fan speed set point calculation does not take into consideration vehicle speed (fix value Fans_vSubst_C used)
Failure cause		• Defective vehicle speed sensor. • Engine driven under load without PTO (i.e. external PTO) • In very cold situation possible due to "engine warming up at higher speed" and vehicle stand still (high torque request in case of "non liquid oil")
Failure repair		• Check vehicle speed sensor • Check if "external PTO" used • Check if failure occurred at very low engine temperature < -10°C {14°F})
Inspection procedure	Step1	Inspection procedure Inspect the suspected factors mentioned above sequentially to locate faulty parts. Repair or replace the faulty part as necessary.

https://truckmanualshub.com/

84-15: Vehicle speed sensor has a maximum threshold error.

Generation condition	[Test Condition] • Monitoring is active if the ECU is not in afterrun • Continuously if not inhibited by FID_VehVMon due to another failure.
	[Fault Detection] • The measured vehicle speed > 180km/h {111.85mph}.
	[Defect Debouncing] • Defect condition exceeded cumulatively > 1000.00ms • Failure is detected if active for 50% of the time
Fault healing	• The measured vehicle speed < 180km/h {111.85mph}.
System reaction	• During error debouncing (1000.00ms), the vehicle speed (VehV_v) and the acceleration (VehV_a) retain the last valid values. • After error debouncing, Vehicle speed is set to 0km/h {0mph} and Acceleration is set to 0 m/s2.
	• 1) FId / Vehicle speed monitoring inhibited • 2) FId / Vehicle speed value (via CAN) frozen in case of preliminary failure detected • 3) FId / Vehicle speed value (via CAN) replaced by substitute value if failure is validated • 4) FId / Vehicle speed value (via HW) frozen in case of preliminary failure detected • 5) FId / Vehicle speed value (via HW) replaced by substitute value if failure is validated • 6) FId / Status of function identifier FId_EngDemTrqLimErr1 • 7) FId / Torque limitation 4 activated for power reduction • 8) FId / Engine speed Limitation 1 for HIgh/Low engine speed (HLS) control active • 9) Fid / Cruise control immediately shut off • 10) FId / Multiple state switch error, PTO disabled • 11) FId / Vehicle speed sensing error, Cruise control disabled • 12) FId / Release of OBD Performance Limiter at low vehicle speed inhibited due to a failure • 13) FId / Zero Fuel Calibration (ZFC) of injectors disabled • 14) FId / Plausibility Check Accelerator and brake pedal not released due to failure in vehicle speed evaluation • 15) FId / Inhibit Charged Air Cooler monitoring • 16) Fid / Crankshaft sensor diagnosis inhibited (due to vehicle speed implausibility, e.g. towed vehicle) • 17) FId / Vehicle speed assumed by engine speed and load for calculation of total driven distance of vehicle • 18) FId / Drive away-set point idle speed calculation by High/Low engine speed control (HLS) inhibited • 19) FId / Underbraking disabled for High and Low engine speed control (HLS) (no special control parameters in case of Underbraking used) • 20) FId / High and Low engine speed demand control (HLS) disabled • 21) FId / Vehicle Speed signal defective, speed limiter blocked • 22) FId / Misfire Detection disabled • 23) FId / Closing of metering unit forced (full fuel feeding) • 24) FId / Tooth Angle Adaption (TAA) of crank speed sensor disabled • 25) FId / Vehicle speed signal evaluation defective • 26) Fid / Fix Substitution value (FE) for actual fuel economy status transmit to CAN Message FIEco • 27) FId / Status of Function Identifier for Wheel Based Vehicle Speed • 28) FId / Coolant thermostat diagnosis disabled • 29) FId / Use of the gear signal for the range check of particulate filter (DPF) is inhibited • 30) FId / Use of the vehicle speed for the range check of particulate filter (DPF) is inhibited • 31) FId / Vehicle speed sensor defective, PGNRQ can message invalid • 32) FId / Cooling fan speed set point calculation does not take into consideration vehicle speed (fix value Fans_vSubst_C used)
Failure cause	• Real overspeed, i.e. by engine tuning (??) • Incorrect speed evaluation (depending on signal source by Wheel Speed Information, Tachograph Output, disturbed CAN)
Failure repair	• Check measuring device and replace it if necessary. • No action in case of real vehicle overspeed or engine tuning

https://truckmanualshub.com/

Inspection procedure	Step1	Inspection procedure Inspect the suspected factors mentioned above sequentially to locate faulty parts. Repair or replace the faulty part as necessary.

91-2: Signal 'Value of accelerator pedal sensor' is implausible.

Generation condition		[Test Condition] • Continuously. • If input signals > 650.00mV. • Error is entered only if the signal path is not classified as defective (DINH_stFId.FId_APPSyncChk).
		[Fault Detection] • If the permitted maximum for the difference of both the input signals APP_uDiffMax_mp exceeds maximum value defined in applicable curve position dependent.
		[Defect Debouncing] • Defect condition exceeded cumulatively > 250.00ms • Failure is detected if active for 25% of the time
Fault healing		• error no more detected
System reaction		• None (Except FIds)
		• 1) FId / Increased engine speed because of accelerator pedal error • 2) FId / Synchronisation error of the acceleration pedal--> depending on other test results Signal of APP1 or APP2 used • 3) FId / Function Identifier provisional synchronisation error of the acceleration pedal • 4) FId / Limp home mode activated • 5) FId / Speed Demand by tester for diagnostic tests inhibited • 6) FId / Status of function identifier FId_EngDemTrqLimErr1 • 7) FId / Torque limitation 2 activated for power reduction • 8) FId / Engine speed Limitation 2 for HIgh/Low engine speed (HLS) control active • 9) FId / Single Injector shut off test inhibited • 10) FId / Run Up test inhibited • 11) FId / Set point test of Metering Unit (MeUn) of Common Rail disabled • 12) FId / Fuel rail pressure control valve (PCV) set point test inhibited • 13) FId / High pressure test inhibited • 14) FId / Rail Pressure set point test inhibited
Failure cause		• Wiring problem, aged or defective accelerator pedal
Failure repair		• Check wiring and accelerator pedal
Inspection procedure	Step1	Inspect or verify the following items. Repair or replace faulty items as necessary. If any other fault code has occurred, perform the diagnostics procedure for the fault code. Go to Step2
	Step2	Inspect or verify the following items. Repair or replace faulty items as necessary. If one of diagnosis codes associated with SAM ECU is generated, make a system diagnosis according to the diagnosis code. Go to Step3
	Step3	Inspection procedure Turn the starter switch in OFF. Remove the connector of A4 (Combustion engine Control unit). Remove the connector of B17 (Position sensor Accelerator pedal). Check the circuit across A4.X2.94/30 and B17.6/5 for open or short circuit. Check the circuit across A4.X2.94/57 and B17.6/4 for open or short circuit. Check the circuit across A4.X2.94/45 and B17.6/6 for open or short circuit. Check the circuit across A4.X2.94/8 and B17.6/2 for open or short circuit. Check the circuit across A4.X2.94/35 and B17.6/1 for open or short circuit. Check the circuit across A4.X2.94/46 and B17.6/3 for open or short circuit. Make a visual check on each connector. Is any abnormality recognized? No: Go to Step4 Yes: Go to Step8

https://truckmanualshub.com/

Inspection procedure	Step4	Inspection procedure Turn the starter switch in OFF. Replace component “B17 (Position sensor Accelerator pedal)”. Reinstall all the removed connectors. Turn the starter switch in ON. Go to Step5
	Step5	Inspection procedure Turn the starter switch in OFF. Reinstall all the removed connectors. Erase fault memory and perform a test drive. Check if this diagnosis code has occurred. Are current fault codes present? No: Go to Step6 Yes: Go to Step7
	Step6	Inspection completed
	Step7	Inspection procedure Perform the operation start and replace A4 (Combustion engine Control unit). Inspection completed
	Step8	Inspection procedure Turn the starter switch in OFF. Remove the connector of A4 (Combustion engine Control unit). Remove the connector of X17 (Intermediate connector). Check the circuit across A4.X2.94/45 and X16.16/1 for open or short circuit. Check the circuit across A4.X2.94/46 and X16.16/5 for open or short circuit. Check the circuit across A4.X2.94/57 and X16.16/3 for open or short circuit. Check the circuit across A4.X2.94/35 and X16.16/7 for open or short circuit. Check the circuit across A4.X2.94/30 and X16.16/3 for open or short circuit. Check the circuit across A4.X2.94/8 and X16.16/7 for open or short circuit. Make a visual check on each connector. Is any abnormality recognized? No: Go to Step9 Yes: Go to Step10
	Step9	Inspection procedure Repair or replace the harness across B17 (Position sensor Accelerator pedal) and X17 (Intermediate connector). Reinstall all the removed connectors. Erase fault memory and perform a test drive. Check if this diagnosis code has occurred. Are current fault codes present? No: Go to Step6 Yes: Go to Step4
	Step10	Inspection procedure Repair or replace the harness across A4 (Combustion engine Control unit) and X17 (Intermediate connector). Reinstall all the removed connectors. Erase fault memory and perform a test drive. Check if this diagnosis code has occurred. Are current fault codes present? No: Go to Step6 Yes: Go to Step4

91-3: Signal Range Check High for Accelerator Pedal Position 1.

Generation condition	[Test Condition] • Monitoring is active while the battery voltage is over 10.00V • Continuously.
	[Fault Detection] • If the signal exceeds the applicable threshold 4.80V, a signal range violation is detected. • Error is entered only if the signal path is not classified as defective (DINH_stFId.FId_APP1SigPath not set by another failure).
	[Defect Debouncing] • Defect condition exceeded cumulatively > 200.00ms • Failure is detected if active for 50% of the time

https://truckmanualshub.com/

Fault healing		• If the signal is below the applicable threshold 4.80V, the signal range violation is reset after the healing debouncing.
System reaction		• No substitute value is formed in the device driver. The read in signal is relayed unchanged to the layers above it.
		• 1) FId / SRC High on APP1 detected --> APP1 Signal not usable • 2) FId / Status of function identifier FId_EngDemTrqLimErr1 • 3) FId / Torque limitation 2 activated for power reduction • 4) FId / Engine speed Limitation 2 for HIgh/Low engine speed (HLS) control active
Failure cause		• Short circuit of wiring to external source or inside accelerator pedal
Failure repair		• Check wiring or replace accelerator pedal
Inspection procedure	Step1	Inspect or verify the following items. Repair or replace faulty items as necessary. If any other fault code has occurred, perform the diagnostics procedure for the fault code. Go to Step2
	Step2	Inspect or verify the following items. Repair or replace faulty items as necessary. If one of diagnosis codes associated with SAM ECU is generated, make a system diagnosis according to the diagnosis code. Go to Step3
	Step3	Inspection procedure Turn the starter switch in OFF. Remove the connector of A4 (Combustion engine Control unit). Remove the connector of B17 (Position sensor Accelerator pedal). Check the circuit across A4.X2.94/30 and B17.6/5 for open or short circuit. Check the circuit across A4.X2.94/57 and B17.6/4 for open or short circuit. Check the circuit across A4.X2.94/45 and B17.6/6 for open or short circuit. Check the circuit across A4.X2.94/8 and B17.6/2 for open or short circuit. Check the circuit across A4.X2.94/35 and B17.6/1 for open or short circuit. Check the circuit across A4.X2.94/46 and B17.6/3 for open or short circuit. Make a visual check on each connector. Is any abnormality recognized? No: Go to Step4 Yes: Go to Step8
	Step4	Inspection procedure Turn the starter switch in OFF. Replace component “B17 (Position sensor Accelerator pedal)”. Reinstall all the removed connectors. Turn the starter switch in ON. Go to Step5
	Step5	Inspection procedure Turn the starter switch in OFF. Reinstall all the removed connectors. Erase fault memory and perform a test drive. Check if this diagnosis code has occurred. Are current fault codes present? No: Go to Step7 Yes: Go to Step6
	Step6	Inspection procedure Perform the operation start and replace A4 (Combustion engine Control unit). Go to Step7
	Step7	Inspection completed

https://truckmanualshub.com/

Inspection procedure	Step8	Inspection procedure Turn the starter switch in OFF. Remove the connector of A4 (Combustion engine Control unit). Remove the connector of X17 (Intermediate connector). Check the circuit across A4.X2.94/45 and X16.16/1 for open or short circuit. Check the circuit across A4.X2.94/46 and X16.16/5 for open or short circuit. Check the circuit across A4.X2.94/57 and X16.16/3 for open or short circuit. Check the circuit across A4.X2.94/35 and X16.16/7 for open or short circuit. Check the circuit across A4.X2.94/30 and X16.16/3 for open or short circuit. Check the circuit across A4.X2.94/8 and X16.16/7 for open or short circuit. Make a visual check on each connector. Is any abnormality recognized? No: Go to Step9 Yes: Go to Step10
	Step9	Inspection procedure Repair or replace the harness across B17 (Position sensor Accelerator pedal) and X17 (Intermediate connector). Reinstall all the removed connectors. Erase fault memory and perform a test drive. Check if this diagnosis code has occurred. Are current fault codes present? No: Go to Step7 Yes: Go to Step4
	Step10	Inspection procedure Repair or replace the harness across A4 (Combustion engine Control unit) and X17 (Intermediate connector). Reinstall all the removed connectors. Erase fault memory and perform a test drive. Check if this diagnosis code has occurred. Are current fault codes present? No: Go to Step7 Yes: Go to Step4

91-4: Signal Range Check Low for Accelerator Pedal position 1.

Generation condition		[Test Condition] • Monitoring is active while the battery voltage is over 10.00V • Continuously.
		[Fault Detection] • If the signal is below the applicable threshold 550.00mV, a signal range violation is detected. • Error is entered only if the signal path is not classified as defective (DINH_stFId.FId_APP1SigPath not set by another failure).
		[Defect Debouncing] • Defect condition exceeded cumulatively > 200.00ms • Failure is detected if active for 50% of the time
Fault healing		• If the signal exceeds the applicable threshold 550.00mV, the signal range violation is reset after the healing debouncing.
System reaction		• No substitute value is formed in the device driver. The read in signal is relayed unchanged to the layers above it.
		• 1) FId / SRC High on APP1 detected --> APP1 Signal not usable • 2) FId / Status of function identifier FId_EngDemTrqLimErr1 • 3) FId / Torque limitation 2 activated for power reduction • 4) FId / Engine speed Limitation 2 for HIgh/Low engine speed (HLS) control active
Failure cause		• Short circuit to ground in wiring or in accelerator pedal
Failure repair		• Check wiring or replace accelerator pedal
Inspection procedure	Step1	Inspect or verify the following items. Repair or replace faulty items as necessary. If any other fault code has occurred, perform the diagnostics procedure for the fault code. Go to Step2

https://truckmanualshub.com/

Inspection procedure	Step2	Inspect or verify the following items. Repair or replace faulty items as necessary. If one of diagnosis codes associated with SAM ECU is generated, make a system diagnosis according to the diagnosis code. Go to Step3
	Step3	Inspection procedure Turn the starter switch in OFF. Remove the connector of A4 (Combustion engine Control unit). Remove the connector of B17 (Position sensor Accelerator pedal). Check the circuit across A4.X2.94/30 and B17.6/5 for open or short circuit. Check the circuit across A4.X2.94/57 and B17.6/4 for open or short circuit. Check the circuit across A4.X2.94/45 and B17.6/6 for open or short circuit. Check the circuit across A4.X2.94/8 and B17.6/2 for open or short circuit. Check the circuit across A4.X2.94/35 and B17.6/1 for open or short circuit. Check the circuit across A4.X2.94/46 and B17.6/3 for open or short circuit. Make a visual check on each connector. Is any abnormality recognized? No: Go to Step4 Yes: Go to Step8
	Step4	Inspection procedure Turn the starter switch in OFF. Replace component “B17 (Position sensor Accelerator pedal)”. Reinstall all the removed connectors. Turn the starter switch in ON. Go to Step5
	Step5	Inspection procedure Turn the starter switch in OFF. Reinstall all the removed connectors. Erase fault memory and perform a test drive. Check if this diagnosis code has occurred. Are current fault codes present? No: Go to Step7 Yes: Go to Step6
	Step6	Inspection procedure Perform the operation start and replace A4 (Combustion engine Control unit). Go to Step7
	Step7	Inspection completed
	Step8	Inspection procedure Turn the starter switch in OFF. Remove the connector of A4 (Combustion engine Control unit). Remove the connector of X17 (Intermediate connector). Check the circuit across A4.X2.94/45 and X16.16/1 for open or short circuit. Check the circuit across A4.X2.94/46 and X16.16/5 for open or short circuit. Check the circuit across A4.X2.94/57 and X16.16/2 for open or short circuit. Check the circuit across A4.X2.94/35 and X16.16/6 for open or short circuit. Check the circuit across A4.X2.94/30 and X16.16/2 for open or short circuit. Check the circuit across A4.X2.94/8 and X16.16/7 for open or short circuit. Make a visual check on each connector. Is any abnormality recognized? No: Go to Step9 Yes: Go to Step10
	Step9	Inspection procedure Repair or replace the harness across B17 (Position sensor Accelerator pedal) and X17 (Intermediate connector). Reinstall all the removed connectors. Erase fault memory and perform a test drive. Check if this diagnosis code has occurred. Are current fault codes present? No: Go to Step7 Yes: Go to Step4

https://truckmanualshub.com/

Inspection procedure	Step10	Inspection procedure Repair or replace the harness across A4 (Combustion engine Control unit) and X17 (Intermediate connector). Reinstall all the removed connectors. Erase fault memory and perform a test drive. Check if this diagnosis code has occurred. Are current fault codes present? No: Go to Step7 Yes: Go to Step4

97-9: CAN timeout error while communicating with control unit 'ECM'

Generation condition		[Test Condition] • Monitoring is active 2.00s after ECU initialization while engine isn't running yet, while the engine isn't cranking, 2.00s after engine startup, while the battery voltage is over 10.00V, as long as the battery voltage is over 10.00V and 2.00s after this threshold has been exceeded, if none of the CAN controllers is in bus-off state, 2.00s after last CAN controller is no more in bus-off state and if the ECU is not in afterrun • Continuously
		[Fault Detection] • Fault is detected if a Timeout of the WFI frame has occurred.
		[Defect Debouncing] • Defect condition fulfilled continuously >500.0 ms
Fault healing		• Message is acknowledged
System reaction		• None
		• Defective CAN controller, CAN cable disconnected or broken. Short circuit in wiring.
Failure cause		• Check the presence and correct connection of the EDC to the network, Check correct functioning of the CAN controller. Check wiring.
Failure repair		[Test Condition] • Monitoring is active 2.00s after ECU initialization while engine isn't running yet, while the engine isn't cranking, 2.00s after engine startup, while the battery voltage is over 10.00V, as long as the battery voltage is over 10.00V and 2.00s after this threshold has been exceeded, if none of the CAN controllers is in bus-off state, 2.00s after last CAN controller is no more in bus-off state and if the ECU is not in afterrun • Continuously
Inspection procedure	Step1	Inspection procedure Turn the starter switch in OFF. Remove all ECU connectors from the CAN communication line. Check CAN line for open circuit, short circuit to positive, short circuit to ground or short circuit to another electrical line. Is any abnormality recognized? No: Go to Step2 Yes: Go to Step5
	Step2	Inspection procedure Attach the connector of A20 (SAM). Check CAN line for open circuit, short circuit to positive, short circuit to ground or short circuit to another electrical line. Is any abnormality recognized? No: Go to Step3 Yes: Go to Step4
	Step3	Inspection procedure Turn the starter switch in OFF. Reinstall all the removed connectors. Erase fault memory and perform a test drive. If the diagnosis code has occurred even during the test drive, start the operation and then replace the A4 (Combustion engine Control unit). Inspection completed

https://truckmanualshub.com/

Inspection procedure	Step4	Inspection procedure Turn the starter switch in OFF. Reinstall all the removed connectors. Erase fault memory and perform a test drive. If the diagnosis code has occurred even during the test drive, start the operation and then replace the A20 (SAM). Inspection completed
	Step5	Inspection procedure Repair or replace electrical lines. Reinstall all the removed connectors. Turn the starter switch in ON. Inspection completed

100-2: Component 'Oil pressure switch' has a mechanical defect.

Generation condition		[Test Condition] • Monitoring is active while the battery voltage is over 10.00V, as long as the battery voltage is over 10.00V and 2.00s after this threshold has been exceeded, if none of the CAN controllers is in bus-off state and 2.00s after last CAN controller is no more in bus-off state • When engine is switched off (Epm_nEng == 0).
		[Fault Detection] • Oil pressure is present, digital oil pressure switch active (Oil_stPSwmp == TRUE)
		[Defect Debouncing] • Defect condition exceeded cumulatively > 15.00s • Failure is detected if active for 25% of the time
Fault healing		• Either oil pressure reduces (Oil_stPSwmp == FALSE) or engine is switched on.
System reaction		• None except FIDs
		• 1) FId / Inhibit Oil pressure measurement
Failure cause		• Oil pressure digital switch defective
Failure repair		• Check oil pressure digital switch
Inspection procedure	Step1	Inspection procedure Inspect the suspected factors mentioned above sequentially to locate faulty parts. Repair or replace the faulty part as necessary.

100-31: The oil pressure is too low.

Generation condition	[Test Condition] • Monitoring is active while the battery voltage is over 10.00V, as long as the battery voltage is over 10.00V and 2.00s after this threshold has been exceeded, if none of the CAN controllers is in bus-off state and 2.00s after last CAN controller is no more in bus-off state • When engine is running (engine speed Epm_nEng > 500.00rpm).
	[Fault Detection] • Oil pressure is not present, oil pressure digital switch not active (Oil_stPSwmp == FALSE)
	[Defect Debouncing] • Debounce time is oil temperature dependent, indicated value is valid if temperature > 60°C {140°F} (debounce longer at lower temperatures) Debouncing time is depend on coolant temperature and between 25.00s at -30.04°C {-22.07°F} and 4.00s at 79.96°C {175.93°F}.
Fault healing	• Either oil pressure increases (Oil_stPSwmp == TRUE) when engine is running (Epm_nEng > 500.00rpm).
System reaction	• None except FIDs
	• 1) FId / Inhibit Oil pressure measurement
Failure cause	• Low oil pressure or digital oil pressure switch blocked
Failure repair	• Check oil level and pressure, check oil pressure switch

https://truckmanualshub.com/

Inspection procedure	Step1	Inspection procedure Inspect the suspected factors mentioned above sequentially to locate faulty parts. Repair or replace the faulty part as necessary.

101-2: Engine stops in run-on mode. The value of component 'Pressure sensor in crankcase' is implausible.

Generation condition		[Test Condition] • During after-run
		[Fault Detection] • Absolute value of CrCsP2_p > 2.5kPa {0.4psi, 0.025kgf/cm^2} for at least 5.00s
		[Defect Debouncing] • Immediate
Fault healing		• Only possible at next afterrun if absolute value of • CrCsP2_p < 2.5kPa {0.4psi, 0.025kgf/cm^2} for at least 3.00s
System reaction		• None except FIDs
		• 1) FId / Inhibit physical range check for crankcase pressure 2 • 2) FId / Inhibit crankcase ventilation monitoring
Failure cause		• Inaccurate or defective crankcase differential pressure sensor
Failure repair		• Check sensor
Inspection procedure	Step1	Inspection procedure If one of diagnosis codes associated with A20 (SAM) is generated, make a system diagnosis according to the diagnosis code. Go to Step2
	Step2	Inspection procedure Turn the starter switch in OFF. Remove the connector of A4 (Combustion engine Control unit). Remove the connector of B58 (Blow-by gas pressure sensor 1). Check the circuit across B58.3/3 and A4.X1.60/9 for open or short circuit. Check the circuit across B58.3/2 and A4.X1.60/28 for open or short circuit. Check the circuit across B58.3/1 and A4.X1.60/59 for open or short circuit. Make a visual check on each connector. Is any abnormality recognized? No: Go to Step3 Yes: Go to Step7
	Step3	Inspection procedure Turn the starter switch in OFF. Replace component "B58 (Blow-by gas pressure sensor 1)". Reinstall all the removed connectors. Turn the starter switch in ON. Go to Step4
	Step4	Inspection procedure Turn the starter switch in OFF. Reinstall all the removed connectors. Erase fault memory and perform a test drive. Check if this diagnosis code has occurred. Are current fault codes present? No: Go to Step5 Yes: Go to Step6
	Step5	Inspection completed
	Step6	Inspection procedure Perform the operation start and replace A4 (Combustion engine Control unit). Go to Step5
	Step7	Inspection procedure Repair or replace electrical lines. Reinstall all the removed connectors. Erase fault memory and perform a test drive. Check if this diagnosis code has occurred. Are current fault codes present? No: Go to Step5 Yes: Go to Step3

https://truckmanualshub.com/

102-0: Signal value of Boost pressure sensor is above maximum limit.

Generation condition	[Test Condition] • The signal range checks are carried out if there is no ADC module and sensor supply error. Continuously.
	[Fault Detection] • The sensed raw voltage value boost pressure Air_uRawPIntkVUs is above 4.91V
	[Defect Debouncing] • Defect condition exceeded cumulatively > 500.00ms • Failure is detected if active for 50% of the time
Fault healing	• The sensed raw voltage value boost pressure Air_uRawPIntkVUs is below 4.91V
System reaction	• Boost pressure is frozen at last valid value on preliminary failure and ramps, using slope 80kPa {12psi, 0.8kgf/cm^2}/s or 80kPa {12psi, 0.8kgf/cm^2}/s depending whether the measured value is above or below replacement value, to a default value of 160kPa {23psi, 1.6kgf/cm^2} if failure is validated. • Further reactions according FID (see FID's)
	• 1) FId / Check of gain plausibility of air flow meter (HFM/AFS) at low idle disabled • 2) FId / Inhibit Charged Air Cooler monitoring • 3) FId / Reciprocal lambda signal replaced by substitute value for modelling • 4) FId / Calculation of Turbocharger Compressor Temperature inhibited • 5) Fid / Fix substitution value (FEh) of Boost pressure transmit to CAN Message INCON (Inlet/Exhaust condition) • 6) Fid / SCR Monitoring or DEF injection release not possible (according calibration of Release Masks) • 7) Fid / Reagent dosing quantity for SCR reduced (to DStgy_facUreaDesRed_C) • 8) FId / Status of function identifier FId_EngDemTrqLimErr1 • 9) FId / Torque limitation 2 activated for power reduction • 10) FId / Engine overheat protection active • 11) FId / Adaptation of the correction values of Fuel Mass Observer (FMO) inhibited (no correction of detected deviation between injected fuel and Lambda sensor signal) • 12) FId / Fuel Mass Observer (FMO) switched off (no monitoring of injected fuel by Lambda sensor) • 13) FId / Engine speed Limitation 2 for HIgh/Low engine speed (HLS) control active • 14) FId / The Adaptation of lambda Sensor disabled • 15) FId / The Difference Check between several Lambda Sensors is disabled • 16) FId / Dynamic Signal Monitoring of Lambda Sensor disabled • 17) FId / Electrical Open Load Check of Lambda Sensor disabled • 18) FId / O2 Signal of Lambda Sensor not valid • 19) FId / Signal Range Check of O2 Signal of lambda Sensor disabled • 20) FId / Plausibility Check of O2-Signal of Lambda Sensor (e.g. with HFM or Air calculation by Boost pressure) is disabled and last valid value taken • 21) FId / Correction of begin of Main injection 1 according deviation of air flow disabled • 22) FId / CLosed Loop Boost pressure governor shut off due to a System error • 23) FId / Inhibit DPF monitor • 24) FId / Inhibit plausibility test of the Intake Valve upstream air pressure sensor • 25) FId / Freeze Intake Valve upstream air pressure value at preliminary failure detection • 26) FId / Inhibit Physical range check for the sensed pressure, upstream of intake-valve • 27) FId / Replace Intake Valve upstream air pressure value with fix value • 28) FId / Zero Fuel Calibration (ZFC) of injectors disabled • 29) FId / Inhibit Charged Air Cooler monitoring • 30) FId / EGR switched off • 31) FId / Zero Fuel Calibration (ZFC) of injectors by Lambda Sensor signal disabled
Failure cause	• Short circuit of sensor to external source or defective sensor
Failure repair	• Check wiring or replace sensor

https://truckmanualshub.com/

Inspection procedure	Step1	Inspection procedure If one of diagnosis codes associated with SAM ECU is generated, make a system diagnosis according to the diagnosis code. Go to Step2
	Step2	Inspection procedure Turn the starter switch in OFF. Remove the connector of A4 (Combustion engine Control unit). Remove the connector of B19 (Pressure and temperature sensor Turbocharger). Check the circuit across B19.4/3 and A4.X1.60/25 for open or short circuit. Check the circuit across B19.4/2 and A4.X1.60/12 for open or short circuit. Check the circuit across B19.4/4 and A4.X1.60/13 for open or short circuit. Check the circuit across B19.4/1 and A4.X1.60/6 for open or short circuit. Make a visual check on each connector. Is any abnormality recognized? No: Go to Step3 Yes: Go to Step7
	Step3	Inspection procedure Turn the starter switch in OFF. Replace component “B19 (Pressure and temperature sensor Turbocharger)”. Reinstall all the removed connectors. Turn the starter switch in ON. Perform the learned value resetting procedure of B19 (Pressure and temperature sensor Turbocharger) which A4 (Combustion engine Control unit) learns. Perform learning of B19 (Pressure and temperature sensor Turbocharger) which A4 (Combustion engine Control unit) learns. Go to Step4
	Step4	Inspection procedure Turn the starter switch in OFF. Reinstall all the removed connectors. Erase fault memory and perform a test drive. Check if this diagnosis code has occurred. Are current fault codes present? No: Go to Step6 Yes: Go to Step5
	Step5	Inspection procedure Perform the operation start and replace A4 (Combustion engine Control unit). Go to Step6
	Step6	Inspection completed
	Step7	Inspection procedure Repair or replace electrical lines. Reinstall all the removed connectors. Erase fault memory and perform a test drive. Check if this diagnosis code has occurred. Are current fault codes present? No: Go to Step6 Yes: Go to Step3

102-1: Signal value of Boost pressure sensor is below minimum limit.

Generation condition	[Test Condition] • The signal range checks are carried out if there is no ADC module and sensor supply error. Continuously.
	[Fault Detection] • The sensed raw voltage value of boost pressure sensor Air_uRawPIntkVUs is below 178.40mV
	[Defect Debouncing] • Defect condition exceeded cumulatively > 500.00ms • Failure is detected if active for 50% of the time
Fault healing	• The sensed raw voltage value Air_uRawPIntkVUs is above 178.40mV

https://truckmanualshub.com/

System reaction		• Boost pressure is frozen at last valid value on preliminary failure and ramps, using slope 80kPa {12psi, 0.8kgf/cm^2}/s or 80kPa {12psi, 0.8kgf/cm^2}/s depending whether the measured value is above or below replacement value, to a default value of 160kPa {23psi, 1.6kgf/cm^2} if failure is validated. • Further reactions according FID (see FID's)
		• 1) FId / Check of gain plausibility of air flow meter (HFM/AFS) at low idle disabled • 2) FId / Inhibit Charged Air Cooler monitoring • 3) FId / Reciprocal lambda signal replaced by substitute value for modelling • 4) FId / Calculation of Turbocharger Compressor Temperature inhibited • 5) Fid / Fix substitution value (FEh) of Boost pressure transmit to CAN Message INCON (Inlet/Exhaust condition) • 6) Fid / SCR Monitoring or DEF injection release not possible (according calibration of Release Masks) • 7) Fid / Reagent dosing quantity for SCR reduced (to DStgy_facUreaDesRed_C) • 8) FId / Status of function identifier FId_EngDemTrqLimErr1 • 9) FId / Torque limitation 2 activated for power reduction • 10) FId / Engine overheat protection active • 11) FId / Adaptation of the correction values of Fuel Mass Observer (FMO) inhibited (no correction of detected deviation between injected fuel and Lambda sensor signal) • 12) FId / Fuel Mass Observer (FMO) switched off (no monitoring of injected fuel by Lambda sensor) • 13) FId / Engine speed Limitation 2 for HIgh/Low engine speed (HLS) control active • 14) FId / The Adaptation of lambda Sensor disabled • 15) FId / The Difference Check between several Lambda Sensors is disabled • 16) FId / Dynamic Signal Monitoring of Lambda Sensor disabled • 17) FId / Electrical Open Load Check of Lambda Sensor disabled • 18) FId / O2 Signal of Lambda Sensor not valid • 19) FId / Signal Range Check of O2 Signal of lambda Sensor disabled • 20) FId / Plausibility Check of O2-Signal of Lambda Sensor (e.g. with HFM or Air calculation by Boost pressure) is disabled and last valid value taken • 21) FId / Correction of begin of Main injection 1 according deviation of air flow disabled • 22) FId / CLosed Loop Boost pressure governor shut off due to a System error • 23) FId / Inhibit DPF monitor • 24) FId / Inhibit plausibility test of the Intake Valve upstream air pressure sensor • 25) FId / Freeze Intake Valve upstream air pressure value at preliminary failure detection • 26) FId / Inhibit Physical range check for the sensed pressure, upstream of intake-valve • 27) FId / Replace Intake Valve upstream air pressure value with fix value • 28) FId / Zero Fuel Calibration (ZFC) of injectors disabled • 29) FId / Inhibit Charged Air Cooler monitoring • 30) FId / EGR switched off • 31) FId / Zero Fuel Calibration (ZFC) of injectors by Lambda Sensor signal disabled
Failure cause		• Short circuit at wiring harness or inside the boost pressure sensor to ground or open circuit
Failure repair		• Check of wiring or replace boost pressure sensor
Inspection procedure	Step1	Inspection procedure If one of diagnosis codes associated with SAM ECU is generated, make a system diagnosis according to the diagnosis code. Go to Step2

https://truckmanualshub.com/

Inspection procedure	Step2	Inspection procedure Turn the starter switch in OFF. Remove the connector of A4 (Combustion engine Control unit). Remove the connector of B19 (Pressure and temperature sensor Turbocharger). Check the circuit across B19.4/3 and A4.X1.60/25 for open or short circuit. Check the circuit across B19.4/2 and A4.X1.60/12 for open or short circuit. Check the circuit across B19.4/4 and A4.X1.60/13 for open or short circuit. Check the circuit across B19.4/1 and A4.X1.60/6 for open or short circuit. Make a visual check on each connector. Is any abnormality recognized? No: Go to Step3 Yes: Go to Step7
	Step3	Inspection procedure Turn the starter switch in OFF. Replace component “B19 (Pressure and temperature sensor Turbocharger)”. Reinstall all the removed connectors. Turn the starter switch in ON. Perform the learned value resetting procedure of B19 (Pressure and temperature sensor Turbocharger) which A4 (Combustion engine Control unit) learns. Perform learning of B19 (Pressure and temperature sensor Turbocharger) which A4 (Combustion engine Control unit) learns. Go to Step4
	Step4	Inspection procedure Turn the starter switch in OFF. Reinstall all the removed connectors. Erase fault memory and perform a test drive. Check if this diagnosis code has occurred. Are current fault codes present? No: Go to Step6 Yes: Go to Step5
	Step5	Inspection procedure Perform the operation start and replace A4 (Combustion engine Control unit). Go to Step6
	Step6	Inspection completed
	Step7	Inspection procedure Repair or replace electrical lines. Reinstall all the removed connectors. Erase fault memory and perform a test drive. Check if this diagnosis code has occurred. Are current fault codes present? No: Go to Step6 Yes: Go to Step3

102-15: Signal 'Boost pressure' of component 'Boost pressure sensor' is implausible. Data Valid But Above Normal Operational Range.

Generation condition	[Test Condition] • Boost pressure sensor is reliable (FId_PIntkVUsEnvPPls not set) • Engine speed <660.00rpm • Throttle valve set point > 90.00% with no regeneration request • Fuel quantity < 7.00mg/hub
	[Fault Detection] • The difference between boost pressure minus environmental pressure (Air_pSensPIntkVUs - EnvP_pSens) > 7kPa {1.0psi, 0.07kgf/cm^2}
	[Defect Debouncing] • Defect condition exceeded cumulatively > 5.00s • Failure is detected if active for 50% of the time
Fault healing	• The difference between boost pressure minus environmental pressure (Air_pSensPIntkVUs - EnvP_pSens) < 7kPa {1.0psi, 0.07kgf/cm^2}

https://truckmanualshub.com/

System reaction		• None except FIds
		• 1) FId / EGR switched off • 2) FId / Deactivates NOx monitoring • 3) Fid/ SCR Monitoring or DEF injection release not possible (according calibration of Release Masks) • 4) Fid / Reagent dosing quantity for SCR reduced (to DStgy_facUreaDesRed_C) • 5) FId / Status of function identifier FId_EngDemTrqLimErr1 • 6) FId / Torque limitation 2 activated for power reduction • 7) FId / Adaptation of the correction values of Fuel Mass Observer (FMO) inhibited (no correction of detected deviation between injected fuel and Lambda sensor signal) • 8) FId / Fuel Mass Observer (FMO) switched off (no monitoring of injected fuel by Lambda sensor) • 9) FId / Engine speed Limitation 2 for HIgh/Low engine speed (HLS) control active • 10) FId / CLosed Loop Boost pressure governor shut off due to a System error • 11) FId / Inhibit DPF monitor • 12) FId / Particulate filter ((DPF) Regeneration inhibited • 13) FId / Service regeneration of Particulate filter ((DPF) inhibited (due to DPF failure) • 14) FId / Inhibit Charged Air Cooler monitoring • 15) FId / Calculation of Turbocharger Compressor Temperature inhibited • 16) FId / Zero Fuel Calibration (ZFC) of injectors by Lambda Sensor signal disabled
Failure cause		• Inaccurate or defective boost pressure sensor, defect in the wiring
Failure repair		• Check wiring and the accuracy of the boost pressure sensor and replace it if necessary
Inspection procedure	Step1	Inspection procedure If one of diagnosis codes associated with SAM ECU is generated, make a system diagnosis according to the diagnosis code. Go to Step2
	Step2	Inspection procedure Turn the starter switch in OFF. Remove the connector of A4 (Combustion engine Control unit). Remove the connector of B19 (Pressure and temperature sensor Turbocharger). Check the circuit across B19.4/3 and A4.X1.60/25 for open or short circuit. Check the circuit across B19.4/2 and A4.X1.60/12 for open or short circuit. Check the circuit across B19.4/4 and A4.X1.60/13 for open or short circuit. Check the circuit across B19.4/1 and A4.X1.60/6 for open or short circuit. Make a visual check on each connector. Is any abnormality recognized? No: Go to Step3 Yes: Go to Step7
	Step3	Inspection procedure Turn the starter switch in OFF. Replace component “B19 (Pressure and temperature sensor Turbocharger)”. Reinstall all the removed connectors. Turn the starter switch in ON. Perform the learned value resetting procedure of B19 (Pressure and temperature sensor Turbocharger) which A4 (Combustion engine Control unit) learns. Perform learning of B19 (Pressure and temperature sensor Turbocharger) which A4 (Combustion engine Control unit) learns. Go to Step4
	Step4	Inspection procedure Turn the starter switch in OFF. Reinstall all the removed connectors. Erase fault memory and perform a test drive. Check if this diagnosis code has occurred. Are current fault codes present? No: Go to Step5 Yes: Go to Step6
	Step5	Inspection completed

https://truckmanualshub.com/

Inspection procedure	Setp6	Inspection procedure Perform the operation start and replace A4 (Combustion engine Control unit). Inspection completed

102-16: Signal value of Boost pressure sensor is above maximum limit.

Generation condition	[Test Condition] • The signal range checks are carried out if there is no ADC module and sensor supply error. Continuously.
	[Fault Detection] • The sensed sensor signal Air_pSensPIntkVUs is above 340kPa {49psi, 3.5kgf/cm^2}
	[Defect Debouncing] • Defect condition exceeded cumulatively > 10.00s • Failure is detected if active for 50% of the time
Fault healing	• The sensed sensor signal Air_pSensPIntkVUs is below 340kPa {49psi, 3.5kgf/cm^2}
System reaction	• Boost pressure is frozen at last valid value on preliminary failure and ramps, using slope 80kPa {12psi, 0.8kgf/cm^2}/s or 80kPa {12psi, 0.8kgf/cm^2}/s depending whether the measured value is above or below replacement value, to a default value of 160kPa {23psi, 1.6kgf/cm^2} if failure is validated. • Further reactions according FID (see FID's)
	• 1) Fid / SCR Monitoring or DEF injection release not possible (according calibration of Release Masks) • 2) Fid / Reagent dosing quantity for SCR reduced (to DStgy_facUreaDesRed_C) • 3) Fid / The actual Boost pressure is corrected by a fix value (Air_pPCRDflPCACDs_C) instead by the actual boost temperature for the Boost pressure control • 4) FId / Inhibit plausibility test of the Intake Valve upstream air pressure sensor • 5) FId / Freeze Intake Valve upstream air pressure value at preliminary failure detection • 6) FId / Replace Intake Valve upstream air pressure value with fix value • 7) FId / EGR switched off • 8) FId / Inhibit Charged Air Cooler monitoring • 9) FId / Calculation of Turbocharger Compressor Temperature inhibited • 10) FId / Zero Fuel Calibration (ZFC) of injectors by Lambda Sensor signal disabled • 11) FId / Status of function identifier FId_EngDemTrqLimErr5 • 12) FId / Engine speed Limitation 2 for HIgh/Low engine speed (HLS) control active
Failure cause	• Inaccurate or defective boost pressure sensor, defect in the wiring
Failure repair	• Check wiring and the accuracy of the boost pressure sensor and replace it if necessary

https://truckmanualshub.com/

Inspection procedure	Step1	Inspection procedure If one of diagnosis codes associated with A20 (SAM) is generated, make a system diagnosis according to the diagnosis code. Go to Step2
	Step2	Inspection procedure Turn the starter switch in OFF. Remove the connector of A4 (Combustion engine Control unit). Remove the connector of B19 (Pressure and temperature sensor Turbocharger). Check the circuit across B19.4/3 and A4.X1.60/25 for open or short circuit. Check the circuit across B19.4/4 and A4.X1.60/13 for open or short circuit. Check the circuit across B19.4/2 and A4.X1.60/12 for open or short circuit. Check the circuit across B19.4/1 and A4.X1.60/6 for open or short circuit. Make a visual check on each connector. Is any abnormality recognized? No: Go to Step3 Yes: Go to Step7
	Step3	Inspection procedure Turn the starter switch in OFF. Replace component “B19 (Pressure and temperature sensor Turbocharger)”. Reinstall all the removed connectors. Turn the starter switch in ON. Perform the learned value resetting procedure of B19 (Pressure and temperature sensor Turbocharger) which A4 (Combustion engine Control unit) learns. Perform learning of B19 (Pressure and temperature sensor Turbocharger) which A4 (Combustion engine Control unit) learns. Go to Step4
	Step4	Inspection procedure Turn the starter switch in OFF. Reinstall all the removed connectors. Erase fault memory and perform a test drive. Check if this diagnosis code has occurred. Are current fault codes present? No: Go to Step5 Yes: Go to Step6
	Step5	Inspection completed
	Step6	Inspection procedure Perform the operation start and replace A4 (Combustion engine Control unit). Go to Step5
	Step7	Inspection procedure Repair or replace electrical lines. Reinstall all the removed connectors. Erase fault memory and perform a test drive. Check if this diagnosis code has occurred. Are current fault codes present? No: Go to Step5 Yes: Go to Step3

102-17: Signal 'Boost pressure' of component 'Boost pressure sensor' is implausible. Data valid but below normal operational range

Generation condition	[Test Condition] • Boost pressure sensor is reliable (FId_PIntkVUsEnvPPls not set) • Engine speed <660.00rpm • Throttle valve set point > 90.00% with no regeneration request • Fuel quantity < 7.00mg/hub
	[Fault Detection] • The difference between boost pressure minus environmental pressure (Air_pSensPIntkVUs - EnvP_pSens) < -7kPa {-1.0psi, -0.07kgf/cm^2}
	[Defect Debouncing] • Defect condition exceeded cumulatively > 5.00s • Failure is detected if active for 50% of the time
Fault healing	• The difference between boost pressure minus environmental pressure (Air_pSensPIntkVUs - EnvP_pSens) > -7kPa {-1.0psi, -0.07kgf/cm^2}

https://truckmanualshub.com/

System reaction		• None except FIds
		• 1) FId / EGR switched off • 2) FId / Deactivates NOx monitoring • 3) Fid/ SCR Monitoring or DEF injection release not possible (according calibration of Release Masks) • 4) Fid / Reagent dosing quantity for SCR reduced (to DStgy_facUreaDesRed_C) • 5) FId / Status of function identifier FId_EngDemTrqLimErr1 • 6) FId / Torque limitation 2 activated for power reduction • 7) FId / Adaptation of the correction values of Fuel Mass Observer (FMO) inhibited (no correction of detected deviation between injected fuel and Lambda sensor signal) • 8) FId / Fuel Mass Observer (FMO) switched off (no monitoring of injected fuel by Lambda sensor) • 9) FId / Engine speed Limitation 2 for HIgh/Low engine speed (HLS) control active • 10) FId / CLosed Loop Boost pressure governor shut off due to a System error • 11) FId / Inhibit DPF monitor • 12) FId / Particulate filter ((DPF) Regeneration inhibited • 13) FId / Service regeneration of Particulate filter ((DPF) inhibited (due to DPF failure) • 14) FId / Inhibit Charged Air Cooler monitoring • 15) FId / Calculation of Turbocharger Compressor Temperature inhibited • 16) FId / Zero Fuel Calibration (ZFC) of injectors by Lambda Sensor signal disabled
Failure cause		• Inaccurate or defective boost pressure sensor, defect in the wiring
Failure repair		• Check wiring and the accuracy of the boost pressure sensor and replace it if necessary
Inspection procedure	Step1	Inspection procedure If one of diagnosis codes associated with SAM ECU is generated, make a system diagnosis according to the diagnosis code. Go to Step2
	Step2	Inspection procedure Turn the starter switch in OFF. Remove the connector of A4 (Combustion engine Control unit). Remove the connector of B19 (Pressure and temperature sensor Turbocharger). Check the circuit across B19.4/3 and A4.X1.60/25 for open or short circuit. Check the circuit across B19.4/2 and A4.X1.60/12 for open or short circuit. Check the circuit across B19.4/4 and A4.X1.60/13 for open or short circuit. Check the circuit across B19.4/1 and A4.X1.60/6 for open or short circuit. Make a visual check on each connector. Is any abnormality recognized? No: Go to Step3 Yes: Go to Step7
	Step3	Inspection procedure Turn the starter switch in OFF. Replace component “B19 (Pressure and temperature sensor Turbocharger)”. Reinstall all the removed connectors. Turn the starter switch in ON. Perform the learned value resetting procedure of B19 (Pressure and temperature sensor Turbocharger) which A4 (Combustion engine Control unit) learns. Perform learning of B19 (Pressure and temperature sensor Turbocharger) which A4 (Combustion engine Control unit) learns. Go to Step4
	Step4	Inspection procedure Turn the starter switch in OFF. Reinstall all the removed connectors. Erase fault memory and perform a test drive. Check if this diagnosis code has occurred. Are current fault codes present? No: Go to Step5 Yes: Go to Step6
	Step5	Inspection completed

https://truckmanualshub.com/

Inspection procedure	Step6	Inspection procedure Perform the operation start and replace A4 (Combustion engine Control unit). Inspection completed
	Step7	Inspection procedure Repair or replace electrical lines. Reinstall all the removed connectors. Erase fault memory and perform a test drive. Check if this diagnosis code has occurred. Are current fault codes present? No: Go to Step5 Yes: Go to Step3

102-18: Signal value of Boost pressure sensor is below minimum limit.

Generation condition	[Test Condition] • The signal range checks are carried out if there is no ADC module and sensor supply error. Continuously.
	[Fault Detection] • The sensed sensor signal Air_pSensPIntkVUs is below 15kPa {2.2psi, 0.15kgf/cm^2}
	[Defect Debouncing] • Defect condition exceeded cumulatively > 10.00s • Failure is detected if active for 50% of the time
Fault healing	• The sensed sensor signal Air_pSensPIntkVUs is above 15kPa {2.2psi, 0.15kgf/cm^2}
System reaction	• Boost pressure is frozen at last valid value on preliminary failure and ramps, using slope 80kPa {12psi, 0.8kgf/cm^2}/s or 80kPa {12psi, 0.8kgf/cm^2}/s depending whether the measured value is above or below replacement value, to a default value of 160kPa {23psi, 1.6kgf/cm^2} if failure is validated. • Further reactions according FID (see FID's)
	• 1) Fid / SCR Monitoring or DEF injection release not possible (according calibration of Release Masks) • 2) Fid / Reagent dosing quantity for SCR reduced (to DStgy_facUreaDesRed_C) • 3) Fid / The actual Boost pressure is corrected by a fix value (Air_pPCRDflPCACDs_C) instead by the actual boost temperature for the Boost pressure control • 4) FId / Inhibit plausibility test of the Intake Valve upstream air pressure sensor • 5) FId / Freeze Intake Valve upstream air pressure value at preliminary failure detection • 6) FId / Replace Intake Valve upstream air pressure value with fix value • 7) FId / EGR switched off • 8) FId / Inhibit Charged Air Cooler monitoring • 9) FId / Calculation of Turbocharger Compressor Temperature inhibited • 10) FId / Zero Fuel Calibration (ZFC) of injectors by Lambda Sensor signal disabled • 11) FId / Status of function identifier FId_EngDemTrqLimErr5 • 12) FId / Engine speed Limitation 2 for HIgh/Low engine speed (HLS) control active
Failure cause	• Inaccurate or defective boost pressure sensor, defect in the wiring
Failure repair	• Check wiring and the accuracy of the boost pressure sensor and replace it if necessary

https://truckmanualshub.com/

Inspection procedure	Step1	Inspection procedure If one of diagnosis codes associated with A20 (SAM) is generated, make a system diagnosis according to the diagnosis code. Go to Step2
	Step2	Inspection procedure Turn the starter switch in OFF. Remove the connector of A4 (Combustion engine Control unit). Remove the connector of B19 (Pressure and temperature sensor Turbocharger). Check the circuit across B19.4/3 and A4.X1.60/25 for open or short circuit. Check the circuit across B19.4/4 and A4.X1.60/13 for open or short circuit. Check the circuit across B19.4/2 and A4.X1.60/12 for open or short circuit. Check the circuit across B19.4/1 and A4.X1.60/6 for open or short circuit. Make a visual check on each connector. Is any abnormality recognized? No: Go to Step3 Yes: Go to Step7
	Step3	Inspection procedure Turn the starter switch in OFF. Replace component “B19 (Pressure and temperature sensor Turbocharger)”. Reinstall all the removed connectors. Turn the starter switch in ON. Perform the learned value resetting procedure of B19 (Pressure and temperature sensor Turbocharger) which A4 (Combustion engine Control unit) learns. Perform learning of B19 (Pressure and temperature sensor Turbocharger) which A4 (Combustion engine Control unit) learns. Go to Step4
	Step4	Inspection procedure Turn the starter switch in OFF. Reinstall all the removed connectors. Erase fault memory and perform a test drive. Check if this diagnosis code has occurred. Are current fault codes present? No: Go to Step5 Yes: Go to Step6
	Step5	Inspection completed
	Step6	Inspection procedure Perform the operation start and replace A4 (Combustion engine Control unit). Go to Step5
	Step7	Inspection procedure Repair or replace electrical lines. Reinstall all the removed connectors. Erase fault memory and perform a test drive. Check if this diagnosis code has occurred. Are current fault codes present? No: Go to Step5 Yes: Go to Step3

105-0: Signal Range Check (SRC) for ‘Boost temperature’ reports HIGH.

Generation condition	[Test Condition] • ADC has not reported a module error (no failure “ADC...” active). • Continuous Monitoring
	[Fault Detection] • The sensor raw signal is above 3.23V.
	[Defect Debouncing] • Defect condition exceeded cumulatively > 500.00ms • Failure is detected if active for 50% of the time
Fault healing	• The sensor raw signal is below 3.23V.

https://truckmanualshub.com/

System reaction		• If there is no error in environment air temperature sensor module (FId_TCACDsModel not set) then the substitute value in case of error in Boost temperature is the sum of environmental air temperature and an offset -0.04°C {31.93°F}. • If there is an error in Environment Temperature sensor module, then the Boost temperature reaches the default value 29.96°C {85.93°F} via a ramp with the slopes 10.00K/s (ramping down) or 10.00K/s (ramping up). • Further reaction by FID (see FID)
		• 1) FId / Replacement value for start temperatures is used for modelling • 2) FId / Reciprocal lambda signal replaced by substitute value for modelling • 3) FId / Inhibit Charged Air Cooler monitoring • 4) FId / Fix substitution value (FEh) of Boost temperature transmit to CAN Message INCON (Inlet/Exhaust condition) • 5) Fid / Boost temperature not considered for engine start temperature evaluation • 6) FId / Adaptation of the correction values of Fuel Mass Observer (FMO) inhibited (no correction of detected deviation between injected fuel and Lambda sensor signal) • 7) FId / Fuel Mass Observer (FMO) switched off (no monitoring of injected fuel by Lambda sensor) • 8) FId / Correction of begin of Main injection 1 according deviation of air flow disabled • 9) FId / Use of the induction air temperature for the range check of particulate filter (DPF) is inhibited • 10) FId / Freeze the value of Exh_pPFltUs in case of a preliminary defect. • 11) FId / Boost temperature by model or fix value (temporary) • 12) FId / Boost temperature by model or fix value (permanent) • 13) Fid / Plausibility Check between Boost and second temperature disabled • 14) FId / Zero Fuel Calibration (ZFC) of injectors disabled • 15) FId / Detection of cooled down combustion chamber for Zero Fuel Calibration(ZFC) disabled • 16) FId / Inhibit Charged Air Cooler monitoring • 17) FId / Inhibit temperature sampling • 18) FId / Inhibit the Environment temperature plausibility check • 19) FId / Inhibit physical range check on the sensed value of the intake air temperature sensor.
Failure cause		• Sensor defective or short circuit to external source
Failure repair		• Check wiring or replace sensor
Inspection procedure	Step1	Inspection procedure If one of diagnosis codes associated with A20 (SAM) is generated, make a system diagnosis according to the diagnosis code. Go to Step2
	Step2	Inspection procedure Turn the starter switch in OFF. Remove the connector of A4 (Combustion engine Control unit). Remove the connector of B19 (Pressure and temperature sensor Turbocharger). Check the circuit across B19.4/3 and A4.X1.60/25 for open or short circuit. Check the circuit across B19.4/4 and A4.X1.60/13 for open or short circuit. Check the circuit across B19.4/2 and A4.X1.60/12 for open or short circuit. Check the circuit across B19.4/1 and A4.X1.60/6 for open or short circuit. Make a visual check on each connector. Is any abnormality recognized? No: Go to Step3 Yes: Go to Step7
	Step3	Inspection procedure Turn the starter switch in OFF. Replace component “B19 (Pressure and temperature sensor Turbocharger)”. Reinstall all the removed connectors. Turn the starter switch in ON. Perform the learned value resetting procedure of B19 (Pressure and temperature sensor Turbocharger) which A4 (Combustion engine Control unit) learns. Perform learning of B19 (Pressure and temperature sensor Turbocharger) which A4 (Combustion engine Control unit) learns. Go to Step4

https://truckmanualshub.com/

Inspection procedure	Step4	Inspection procedure Turn the starter switch in OFF. Reinstall all the removed connectors. Erase fault memory and perform a test drive. Check if this diagnosis code has occurred. Are current fault codes present? No: Go to Step5 Yes: Go to Step6
	Step5	Inspection completed
	Step6	Inspection procedure Perform the operation start and replace A4 (Combustion engine Control unit). Go to Step5
	Step7	Inspection procedure Repair or replace electrical lines. Reinstall all the removed connectors. Erase fault memory and perform a test drive. Check if this diagnosis code has occurred. Are current fault codes present? No: Go to Step5 Yes: Go to Step3

https://truckmanualshub.com/

105-1: Signal Range Check (SRC) for 'Boost temperature' reports LOW.

Generation condition	[Test Condition] • ADC has not reported a module error (no failure "ADC..." active). • Continuous Monitoring
	[Fault Detection] • The sensor raw signal is below 130.40mV.
	[Defect Debouncing] • Defect condition exceeded cumulatively > 500.00ms • Failure is detected if active for 50% of the time
Fault healing	• The sensor raw signal is above 130.40mV.
System reaction	• If there is no error in environment air temperature sensor module (FId_TCACDsModel not set) then the substitute value in case of error in Boost temperature is the sum of environmental air temperature and an offset -0.04°C {31.93°F}. • If there is an error in Environment Temperature sensor module, then the Boost temperature reaches the default value 29.96°C {85.93°F} via a ramp with the slopes 10.00K/s (ramping down) or 10.00K/s (ramping up). • Further reaction by FID (see FID)
	• 1) FId / Replacement value for start temperatures is used for modelling • 2) FId / Reciprocal lambda signal replaced by substitute value for modelling • 3) FId / Inhibit Charged Air Cooler monitoring • 4) FId / Fix substitution value (FEh) of Boost temperature transmit to CAN Message INCON (Inlet/Exhaust condition) • 5) Fid / Boost temperature not considered for engine start temperature evaluation • 6) FId / Adaptation of the correction values of Fuel Mass Observer (FMO) inhibited (no correction of detected deviation between injected fuel and Lambda sensor signal) • 7) FId / Fuel Mass Observer (FMO) switched off (no monitoring of injected fuel by Lambda sensor) • 8) FId / Correction of begin of Main injection 1 according deviation of air flow disabled • 9) FId / Use of the induction air temperature for the range check of particulate filter (DPF) is inhibited • 10) FId / Freeze the value of Exh_pPFltUs in case of a preliminary defect. • 11) FId / Boost temperature by model or fix value (temporary) • 12) FId / Boost temperature by model or fix value (permanent) • 13) Fid / Plausibility Check between Boost and second temperature disabled • 14) FId / Zero Fuel Calibration (ZFC) of injectors disabled • 15) FId / Detection of cooled down combustion chamber for Zero Fuel Calibration(ZFC) disabled • 16) FId / Inhibit Charged Air Cooler monitoring • 17) FId / Inhibit temperature sampling • 18) FId / Inhibit the Environment temperature plausibility check • 19) FId / Inhibit physical range check on the sensed value of the intake air temperature sensor.
Failure cause	• Sensor defective or short circuit to ground • Note: This failure can also be detected, if a very high boost temperature occured (> 350°C {662°F}) e.g. due to full flow of non cooled EGR or fire....
Failure repair	• Check wiring or replace sensor

https://truckmanualshub.com/

Inspection procedure	Step1	Inspect or verify the following items. Repair or replace faulty items as necessary. Check to see if EGR cooler is fully operational. For procedures, refer to the Shop Manual. Go to Step2
	Step2	Inspection procedure If one of diagnosis codes associated with A20 (SAM) is generated, make a system diagnosis according to the diagnosis code. Go to Step3
	Step3	Inspection procedure Turn the starter switch in OFF. Remove the connector of A4 (Combustion engine Control unit). Remove the connector of B19 (Pressure and temperature sensor Turbocharger). Check the circuit across B19.4/3 and A4.X1.60/25 for open or short circuit. Check the circuit across B19.4/4 and A4.X1.60/13 for open or short circuit. Check the circuit across B19.4/2 and A4.X1.60/12 for open or short circuit. Check the circuit across B19.4/1 and A4.X1.60/6 for open or short circuit. Make a visual check on each connector. Is any abnormality recognized? No: Go to Step4 Yes: Go to Step8
	Step4	Inspection procedure Turn the starter switch in OFF. Replace component “B19 (Pressure and temperature sensor Turbocharger)”. Reinstall all the removed connectors. Turn the starter switch in ON. Perform the learned value resetting procedure of B19 (Pressure and temperature sensor Turbocharger) which A4 (Combustion engine Control unit) learns. Perform learning of B19 (Pressure and temperature sensor Turbocharger) which A4 (Combustion engine Control unit) learns. Go to Step5
	Step5	Inspection procedure Turn the starter switch in OFF. Reinstall all the removed connectors. Erase fault memory and perform a test drive. Check if this diagnosis code has occurred. Are current fault codes present? No: Go to Step6 Yes: Go to Step7
	Step6	Inspection completed
	Step7	Inspection procedure Perform the operation start and replace A4 (Combustion engine Control unit). Go to Step6
	Step8	Inspection procedure Repair or replace electrical lines. Reinstall all the removed connectors. Erase fault memory and perform a test drive. Check if this diagnosis code has occurred. Are current fault codes present? No: Go to Step6 Yes: Go to Step4

https://truckmanualshub.com/

108-0: Signal Range Check (SRC) for 'Ambient pressure' reports HIGH.Data Valid But Above Normal Operational Range.

Generation condition		[Test Condition] • Monitoring is active while the battery voltage is over 10.00V and as long as the battery voltage is over 10.00V and 2.00s after this threshold has been exceeded • Continuously.
		[Fault Detection] • The sensed raw voltage value EnvP_uRaw is above 4.68V
		[Defect Debouncing] • Defect condition exceeded cumulatively > 800.00ms • Failure is detected if active for 50% of the time
Fault healing		• The sensed raw voltage value EnvP_uRaw is less than 4.68V
System reaction		• Env.pressure is frozen at last valid value on preliminary failure and jumps to fixed replacement value 95kPa {14psi, 1.0kgf/cm^2} if failure is validated. • Further reactions according FID (see FID's)
		• 1) FId / AC compressor shut off to protect AC compressor and Engine cooling system • 2) FId / Inhibit Charged Air Cooler monitoring • 3) Fid / Fix substitution value (FEh) of Boost pressure transmit to CAN Message INCON (Inlet/Exhaust condition) • 4) FId / Default value for Environmental pressure used • 5) FId / Env.pressure value (via HW pin), frozen if failure is preliminary detected • 6) FId / Environmental pressure value (via HW pin), replaced if failure is validated • 7) FId / The Adaptation of lambda Sensor disabled • 8) FId / The Difference Check between several Lambda Sensors is disabled • 9) FId / Electrical Open Load Check of Lambda Sensor disabled • 10) FId / The adaptation values for Lambda Sensor stored in EEPROM are reset to • 11) FId / O2 Signal of Lambda Sensor not valid • 12) FId / Signal Range Check of O2 Signal of lambda Sensor disabled • 13) FId / Plausibility Check of O2-Signal of Lambda Sensor (e.g. with HFM or Air calculation by Boost pressure) is disabled and last valid value taken • 14) FId / Pressure Compensation of O2-Signal can not be learnt - is taken from the curve (LSU_facPresComLean_CUR) • 15) Fid / Plausibility check Boost pressure with ambient pressure inhibited • 16) FId / Monitoring of particulate filter (DPF) by comparing the calculated flow resistance with measured pressure drop disabled • 17) FId / Monitoring for the destroyed particle filter (DPF) by minimal flow resistance disabled • 18) FId / Substitute calibration array is used to determinate the regeneration lock-out time of particulate filter (DPF) • 19) FId / Use of the environmental pressure for the range check of particulate filter (DPF) is inhibited • 20) FId / Friction torque due to particulate filter (DPF) flow resistance set to • 21) FId / Zero Fuel Calibration (ZFC) of injectors by Lambda Sensor signal disabled • 22) FId / Inhibit DPF efficiency monitor • 23) FId / Interrupt DPF efficiency monitor • 24) FId / Inhibit monitor for DPF frequent regeneration • 25) FId / Inhibit monitor for incomplete regeneration of the DPF • 26) FId / Calculation of Turbocharger Compressor Temperature inhibited • 27) FId / Inhibit DEF dosing valve plausibility check
Failure cause		• Ambient pressure sensor inside ECU is defect
Failure repair		• Replace ECU
Inspection procedure	Step1	Inspection procedure Erase fault memory and perform a test drive. If the diagnosis code has occurred even during the test drive, start the operation and then replace the A4 (Combustion engine Control unit). Inspection completed

https://truckmanualshub.com/

108-1: Signal Range Check (SRC) for 'Ambient pressure' reports LOW.Data valid but below normal operational range

Generation condition		[Test Condition] • Monitoring is active while the battery voltage is over 10.00V and as long as the battery voltage is over 10.00V and 2.00s after this threshold has been exceeded • Continuously.
		[Fault Detection] • The sensed raw voltage value EnvP_uRaw is less than 369.00mV
		[Defect Debouncing] • Defect condition exceeded cumulatively > 800.00ms • Failure is detected if active for 50% of the time
Fault healing		• The sensed raw voltage value EnvP_uRaw is above 369.00mV
System reaction		• Env.pressure is frozen at last valid value on preliminary failure and jumps to fixed replacement value 95kPa {14psi, 1.0kgf/cm^2} if failure is validated. • Further reactions according FID (see FID's)
		• 1) FId / AC compressor shut off to protect AC compressor and Engine cooling system • 2) FId / Inhibit Charged Air Cooler monitoring • 3) Fid / Fix substitution value (FEh) of Boost pressure transmit to CAN Message INCON (Inlet/Exhaust condition) • 4) FId / Default value for Environmental pressure used • 5) FId / Env.pressure value (via HW pin), frozen if failure is preliminary detected • 6) FId / Environmental pressure value (via HW pin), replaced if failure is validated • 7) FId / The Adaptation of lambda Sensor disabled • 8) FId / The Difference Check between several Lambda Sensors is disabled • 9) FId / Electrical Open Load Check of Lambda Sensor disabled • 10) FId / The adaptation values for Lambda Sensor stored in EEPROM are reset to • 11) FId / O2 Signal of Lambda Sensor not valid • 12) FId / Signal Range Check of O2 Signal of lambda Sensor disabled • 13) FId / Plausibility Check of O2-Signal of Lambda Sensor (e.g. with HFM or Air calculation by Boost pressure) is disabled and last valid value taken • 14) FId / Pressure Compensation of O2-Signal can not be learnt - is taken from the curve (LSU_facPresComLean_CUR) • 15) Fid / Plausibility check Boost pressure with ambient pressure inhibited • 16) FId / Monitoring of particulate filter (DPF) by comparing the calculated flow resistance with measured pressure drop disabled • 17) FId / Monitoring for the destroyed particle filter (DPF) by minimal flow resistance disabled • 18) FId / Substitute calibration array is used to determinate the regeneration lock-out time of particulate filter (DPF) • 19) FId / Use of the environmental pressure for the range check of particulate filter (DPF) is inhibited • 20) FId / Friction torque due to particulate filter (DPF) flow resistance set to • 21) FId / Zero Fuel Calibration (ZFC) of injectors by Lambda Sensor signal disabled • 22) FId / Inhibit DPF efficiency monitor • 23) FId / Interrupt DPF efficiency monitor • 24) FId / Inhibit monitor for DPF frequent regeneration • 25) FId / Inhibit monitor for incomplete regeneration of the DPF • 26) FId / Calculation of Turbocharger Compressor Temperature inhibited • 27) FId / Inhibit DEF dosing valve plausibility check
Failure cause		• Ambient pressure sensor inside ECU is defect
Failure repair		• Replace ECU
Inspection procedure	Step1	Inspection procedure Erase fault memory and perform a test drive. If the diagnosis code has occurred even during the test drive, start the operation and then replace the A4 (Combustion engine Control unit). Inspection completed

https://truckmanualshub.com/

108-16: Physical Signal of Ambient pressure sensor is above maximum limit.

Generation condition		[Test Condition] • Continuously
		[Fault Detection] • The sensed sensor signal for ambient pressure EnvP_pSens is above 110kPa {16psi, 1.1kgf/cm^2}
		[Defect Debouncing] • Defect condition exceeded cumulatively > 100.00ms • Failure is detected if active for 25% of the time
Fault healing		• The sensed sensor signal for ambient pressure EnvP_pSens is below 110kPa {16psi, 1.1kgf/cm^2}
System reaction		• Env.pressure is frozen at last valid value on preliminary failure and jumps to fixed replacement value 95kPa {14psi, 1.0kgf/cm^2} if failure is validated. • Further reactions according FID (see FID's)
		• 1) FId / Env.pressure value (via CAN), frozen if failure is preliminary detected • 2) FId / Env.pressure value (via CAN), replaced if failure is validated • 3) FId / Env.pressure value (via HW pin), frozen if failure is preliminary detected • 4) FId / Environmental pressure value (via HW pin), replaced if failure is validated • 5) FId / Fuel Balancing correction monitoring inhibited • 6) FId / Inhibit Charged Air Cooler monitoring • 7) FId / Calculation of Turbocharger Compressor Temperature inhibited • 8) FId / Inhibit DEF dosing valve plausibility check
Failure cause		• Ambient pressure sensor inside ECU is defect
Failure repair		• Replace ECU
Inspection procedure	Step1	Inspection procedure Erase fault memory and perform a test drive. If the diagnosis code has occurred even during the test drive, start the operation and then replace the A4 (Combustion engine Control unit). Inspection completed

108-18: Physical Signal of Ambient pressure sensor is below minimum limit.

Generation condition	[Test Condition] • Continuously
	[Fault Detection] • The sensed sensor signal for ambient pressure EnvP_pSens is below 50kPa {7.3psi, 0.5kgf/cm^2}
	[Defect Debouncing] • Defect condition exceeded cumulatively > 100.00ms • Failure is detected if active for 25% of the time
Fault healing	• The sensed sensor signal for ambient pressure EnvP_pSens is above 50kPa {7.3psi, 0.5kgf/cm^2}
System reaction	• Env.pressure is frozen at last valid value on preliminary failure and jumps to fixed replacement value 95kPa {14psi, 1.0kgf/cm^2} if failure is validated. • Further reactions according FID (see FID's)
	• 1) FId / Env.pressure value (via CAN), frozen if failure is preliminary detected • 2) FId / Env.pressure value (via CAN), replaced if failure is validated • 3) FId / Env.pressure value (via HW pin), frozen if failure is preliminary detected • 4) FId / Environmental pressure value (via HW pin), replaced if failure is validated • 5) FId / Fuel Balancing correction monitoring inhibited • 6) FId / Inhibit Charged Air Cooler monitoring • 7) FId / Calculation of Turbocharger Compressor Temperature inhibited • 8) FId / Inhibit DEF dosing valve plausibility check
Failure cause	• Ambient pressure sensor inside ECU is defect
Failure repair	• Replace ECU

https://truckmanualshub.com/

Inspection procedure	Step1	Inspection procedure Erase fault memory and perform a test drive. If the diagnosis code has occurred even during the test drive, start the operation and then replace the A4 (Combustion engine Control unit). Inspection completed

110-0: Signal Range Check (SRC) for 'Coolant temperature' reports HIGH.

Generation condition	[Test Condition] • Monitoring is active while the battery voltage is over 10.00V and as long as the battery voltage is over 10.00V and 2.00s after this threshold has been exceeded • Continuously
	[Fault Detection] • The sensor raw signal > 4.94V.
	[Defect Debouncing] • Defect condition exceeded cumulatively > 500.00ms • Failure is detected if active for 50% of the time
Fault healing	• The sensor raw signal < 4.94V.

https://truckmanualshub.com/

	• Failure detected at start: The Engine Coolant Temperature value jumps to the fixed replacement value 9.96°C {49.93°F}. As son as engine is in running condition, the temperature ramps to 79.96°C {175.93°F} with the slope 0.07K/s, i.e. 79.96°C {175.93°F} is reached 936.229402953135 sec after engine start. • Failure detected during engine running: • The Engine Coolant Temperature ramps to the fixed replacement value 79.96°C {175.93°F} (engine in running condition) with 1.00K/s (rising up) or 1.00K/s (rising down) • Further reactions according FID (see FID's)
System reaction	• 1) FId / Replacement value for start temperatures is used for modelling • 2) FId / Absolute and dynamic monitoring of Coolant temperature inhibited • 3) FId / Last Valid value for Coolant Temperature is frozen and used • 4) FId / Fixed Default value for Coolant Temperature is taken • 5) FId / Fan logic uses fuel or oil temperature instead of defective coolant temperature value • 6) Fid / Fix Substitution value instead of calculated Nominal friction of engine transmit to CAN (EEC3) • 7) FId / Coolant thermostat diagnosis disabled • 8) FId / Modelled Environmental temperature for Coolant Thermostat diagnosis not usable (only measured temp) • 9) FId / Dew Point detection for Lambda Sensor (LSU) not possible - LSU Heater switched on after a fix time • 10) FId / EGR cooling inactive • 11) Fid / Coolant temperature not considered for engine start temperature evaluation • 12) FId / Fan speed calculation uses oil temperature instead of coolant temperature • 13) FId / Default value for engine temperature transmitted via CAN • 14) FId / The Coolant Temperature can not be used for substitution of fuel temperature • 15) FId / Fix value (HLSDem_tDflSetPLo_C) taken instead of Engine temperature for minimum chose with Oil temperature for Start temperature evaluation for Hig/Low engine speed control (HLS) • 16) Fid / Calculation of the piezo actuator temperature disabled • 17) FId / Run Up test inhibited • 18) FId / Pressure Compensation of O2-Signal can not be learnt - is taken from the curve (LSU_facPresComLean_CUR) • 19) FId / Actuator test for Metering Unit (MeUn) of Common Rail disabled • 20) FId / Set point test of Metering Unit (MeUn) of Common Rail disabled • 21) FId / Misfire Detection disabled • 22) FId / Substitute reaction: violation of a running condition and the pcv test will not be executed • 23) FId / Fuel rail pressure control valve (PCV) set point test inhibited • 24) FId / Service regeneration of Particulate filter ((DPF) inhibited (due to DPF failure) • 25) FId / Pressure wave correction of cylinder specific fuel quantity (QWC) disabled (due to defective Coolant Temp Sensor) • 26) FId / High pressure test inhibited • 27) FId / Offset test of Rail pressure sensor disabled • 28) FId / Offset test of Rail pressure sensor only released, if this failure path is tested • 29) FId / Rail Pressure set point test inhibited • 30) FId / Electrical engine coolant heater switched off • 31) FId / Zero Fuel Calibration (ZFC) of injectors disabled • 32) FId / Inhibit Charged Air Cooler monitoring • 33) FId / Inhibit OxiCat passive monitor • 34) FId / Inhibit plaus.check engine coolant temperature at cold start • 35) Fid / SCR Monitoring or DEF injection release not possible (according calibration of Release Masks) • 36) FId / Inhibit physical range check engine coolant temperature • 37) FId / Inhibit EGR cooler efficiency monitoring • 38) FId / Calculation of Turbocharger Compressor Temperature inhibited
Failure cause	• Sensor defective or short circuit to external source
Failure repair	• Check wiring or replace sensor

https://truckmanualshub.com/

Inspection procedure	Step1	Inspection procedure Turn the starter switch in OFF. Remove the connector of A4 (Combustion engine Control unit). Check electrical line between pins A4.X1.60/55 and B39.2/1 for open circuit. Check electrical line between pins A4.X1.60/23 and B39.2/2 for open circuit. Check electrical line between pins A4.X1.60/55 and B39.2/1 for short circuit to positive. Check harness between A4 (Combustion engine Control unit) and B39 (Coolant temperature sensor) for short-circuit to another line. Is any abnormality recognized? No: Go to Step2 Yes: Go to Step6
	Step2	Inspection procedure Turn the starter switch in OFF. Replace component “B39 (Coolant temperature sensor)”. Reinstall all the removed connectors. Turn the starter switch in ON. Go to Step3
	Step3	Inspection procedure Turn the starter switch in OFF. Reinstall all the removed connectors. Erase fault memory and perform a test drive. Check if this diagnosis code has occurred. Are current fault codes present? No: Go to Step5 Yes: Go to Step4
	Step4	Inspection procedure Perform the operation start and replace A4 (Combustion engine Control unit). Go to Step5
	Step5	Inspection completed
	Step6	Inspection procedure Repair or replace electrical lines. Reinstall all the removed connectors. Turn the starter switch in ON. Go to Step7
	Step7	Inspection procedure Turn the starter switch in OFF. Reinstall all the removed connectors. Erase fault memory and perform a test drive. Check if this diagnosis code has occurred. Are current fault codes present? No: Go to Step5 Yes: Go to Step1

110-1: Signal Range Check (SRC) for ‘Coolant temperature’ reports LOW.

Generation condition	[Test Condition] • Monitoring is active while the battery voltage is over 10.00V and as long as the battery voltage is over 10.00V and 2.00s after this threshold has been exceeded • Continuously
	[Fault Detection] • The sensed signal < 232.20mV
	[Defect Debouncing] • Defect condition exceeded cumulatively > 500.00ms • Failure is detected if active for 50% of the time
Fault healing	• Sensor signal > 232.20mV

https://truckmanualshub.com/

	• Failure detected at start: The Engine Coolant Temperature value jumps to the fixed replacement value 9.96°C {49.93°F}. As son as engine is in running condition, the temperature ramps to 79.96°C {175.93°F} with the slope 0.07K/s, i.e. 79.96°C {175.93°F} is reached 936.229402953135 sec after engine start. • Failure detected during engine running: • The Engine Coolant Temperature ramps to the fixed replacement value 79.96°C {175.93°F} (engine in running condition) with 1.00K/s (rising up) or 1.00K/s (rising down) • Further reactions according FID (see FID's)
System reaction	• 1) FId / Replacement value for start temperatures is used for modelling • 2) FId / Absolute and dynamic monitoring of Coolant temperature inhibited • 3) FId / Last Valid value for Coolant Temperature is frozen and used • 4) FId / Fixed Default value for Coolant Temperature is taken • 5) FId / Fan logic uses fuel or oil temperature instead of defective coolant temperature value • 6) Fid / Fix Substitution value instead of calculated Nominal friction of engine transmit to CAN (EEC3) • 7) FId / Coolant thermostat diagnosis disabled • 8) FId / Modelled Environmental temperature for Coolant Thermostat diagnosis not usable (only measured temp) • 9) FId / Dew Point detection for Lambda Sensor (LSU) not possible - LSU Heater switched on after a fix time • 10) FId / EGR cooling inactive • 11) Fid / Coolant temperature not considered for engine start temperature evaluation • 12) FId / Fan speed calculation uses oil temperature instead of coolant temperature • 13) FId / Default value for engine temperature transmitted via CAN • 14) FId / The Coolant Temperature can not be used for substitution of fuel temperature • 15) FId / Fix value (HLSDem_tDflSetPLo_C) taken instead of Engine temperature for minimum chose with Oil temperature for Start temperature evaluation for Hig/Low engine speed control (HLS) • 16) Fid / Calculation of the piezo actuator temperature disabled • 17) FId / Run Up test inhibited • 18) FId / Pressure Compensation of O2-Signal can not be learnt - is taken from the curve (LSU_facPresComLean_CUR) • 19) FId / Actuator test for Metering Unit (MeUn) of Common Rail disabled • 20) FId / Set point test of Metering Unit (MeUn) of Common Rail disabled • 21) FId / Misfire Detection disabled • 22) FId / Substitute reaction: violation of a running condition and the pcv test will not be executed • 23) FId / Fuel rail pressure control valve (PCV) set point test inhibited • 24) FId / Service regeneration of Particulate filter ((DPF) inhibited (due to DPF failure) • 25) FId / Pressure wave correction of cylinder specific fuel quantity (QWC) disabled (due to defective Coolant Temp Sensor) • 26) FId / High pressure test inhibited • 27) FId / Offset test of Rail pressure sensor disabled • 28) FId / Offset test of Rail pressure sensor only released, if this failure path is tested • 29) FId / Rail Pressure set point test inhibited • 30) FId / Electrical engine coolant heater switched off • 31) FId / Zero Fuel Calibration (ZFC) of injectors disabled • 32) FId / Inhibit Charged Air Cooler monitoring • 33) FId / Inhibit OxiCat passive monitor • 34) FId / Inhibit plaus.check engine coolant temperature at cold start • 35) Fid / SCR Monitoring or DEF injection release not possible (according calibration of Release Masks) • 36) FId / Inhibit physical range check engine coolant temperature • 37) FId / Inhibit EGR cooler efficiency monitoring • 38) FId / Calculation of Turbocharger Compressor Temperature inhibited
Failure cause	• Sensor defective or short circuit to ground
Failure repair	• Check wiring or replace sensor

https://truckmanualshub.com/

Inspection procedure	Step1	Inspection procedure Turn the starter switch in OFF. Remove the connector of A4 (Combustion engine Control unit). Check electrical line between pins A4.X1.60/55 and B39.2/1 for open circuit. Check electrical line between pins A4.X1.60/23 and B39.2/2 for open circuit. Check electrical line between pins A4.X1.60/55 and B39.2/1 for short circuit to positive. Check harness between A4 (Combustion engine Control unit) and B39 (Coolant temperature sensor) for short-circuit to another line. Is any abnormality recognized? No: Go to Step2 Yes: Go to Step6
	Step2	Inspection procedure Turn the starter switch in OFF. Replace component “B39 (Coolant temperature sensor)”. Reinstall all the removed connectors. Turn the starter switch in ON. Go to Step3
	Step3	Inspection procedure Turn the starter switch in OFF. Reinstall all the removed connectors. Erase fault memory and perform a test drive. Check if this diagnosis code has occurred. Are current fault codes present? No: Go to Step5 Yes: Go to Step4
	Step4	Inspection procedure Perform the operation start and replace A4 (Combustion engine Control unit). Go to Step5
	Step5	Inspection completed
	Step6	Inspection procedure Repair or replace electrical lines. Reinstall all the removed connectors. Turn the starter switch in ON. Go to Step7
	Step7	Inspection procedure Turn the starter switch in OFF. Reinstall all the removed connectors. Erase fault memory and perform a test drive. Check if this diagnosis code has occurred. Are current fault codes present? No: Go to Step5 Yes: Go to Step1

110-12: Absolute plausibility of coolant temperature sensor failed. Sensor is defect.

Generation condition	[Test Condition] • Coolant temperature sensor working correctly. • Monitoring not disabled by FID_CEngDsTDynAbsTst due to another failure • Injection quantity > speed dependent curve (CEngDsT_qMinEnaAbsTst) • The monitoring is executed once per driving cycle.
	[Fault Detection] • The Coolant Temperature does not reach a minimal temperature (start temperature dependent CEngDsT_tMinAbsTst: 68.86°C {155.95°F} at -30.04°C {-22.07°F} to 68.86°C {155.95°F} at 59.96°C {139.93°F}) within a dedicated time from a calibration map (start temperature and current temperature dependant). • The timer is stopped as soon test conditions are not fulfilled and resumed, as soon as testing conditions are fulfilled again.
	[Defect Debouncing] • Immediate

https://truckmanualshub.com/

Fault healing		• No healing at this driving cycle possible. Healing at next driving cycle, if the Coolant Temperature reaches the minimal temperature (start temperature dependent CEngDsT_tMinAbsTst:68.86°C {155.95°F} at -30.04°C {-22.07°F} to 68.86°C {155.95°F} at 59.96°C {139.93°F}) within a dedicated time from a calibration map (start temperature and current temperature dependant). • The timer is stopped as soon test conditions are not fulfilled and resumed, as soon as testing conditions are fulfilled again.
System reaction		• Only according FID (see FID)
		• 1) FId / Last Valid value for Coolant Temperature is frozen and used • 2) FId / Fixed Default value for Coolant Temperature is taken • 3) FId / Inhibit Charged Air Cooler monitoring • 4) FId / Misfire Detection disabled • 5) FId / Inhibit OxiCat passive monitor • 6) Fid / SCR Monitoring or DEF injection release not possible (according calibration of Release Masks) • 7) FId / Inhibit physical range check engine coolant temperature • 8) FId / Inhibit EGR cooler efficiency monitoring • 9) FId / Calculation of Turbocharger Compressor Temperature inhibited
Failure cause		• Very cold ambient conditions and cabin heater(s) on full power (specially if additional heaters using coolant temperature installed in the vehicle) • Additional electrical resistance in the wiring (corroded connector) • Inaccurate sensor (although sensor does not exceed its signal range) • Engine thermostat blogged in open position
Failure repair		• Ensure that engine was not running in extreme ambient conditions. • Check wiring and connectors (corrosion) • Check accuracy of sensor, replacement of sensor • Check Thermostat functionality
Inspection procedure	Step1	Inspection procedure Turn the starter switch in OFF. Remove the connector of A4 (Combustion engine Control unit). Check electrical line between pins A4.X1.60/55 and B39.2/1 for open circuit. Check electrical line between pins A4.X1.60/23 and B39.2/2 for open circuit. Check electrical line between pins A4.X1.60/55 and B39.2/1 for short circuit to positive. Check harness between A4 (Combustion engine Control unit) and B39 (Coolant temperature sensor) for short-circuit to another line. Is any abnormality recognized? No: Go to Step2 Yes: Go to Step6
	Step2	Inspection procedure Turn the starter switch in OFF. Replace component “B39 (Coolant temperature sensor)”. Reinstall all the removed connectors. Turn the starter switch in ON. Go to Step3
	Step3	Inspection procedure Turn the starter switch in OFF. Reinstall all the removed connectors. Erase fault memory and perform a test drive. Check if this diagnosis code has occurred. Are current fault codes present? No: Go to Step5 Yes: Go to Step4
	Step4	Inspection procedure Perform the operation start and replace A4 (Combustion engine Control unit). Go to Step5
	Step5	Inspection completed
	Step6	Inspection procedure Repair or replace electrical lines. Reinstall all the removed connectors. Turn the starter switch in ON. Go to Step7

https://truckmanualshub.com/

Inspection procedure	Step7	Inspection procedure Turn the starter switch in OFF. Reinstall all the removed connectors. Erase fault memory and perform a test drive. Check if this diagnosis code has occurred. Are current fault codes present? No: Go to Step5 Yes: Go to Step1

110-31: Dynamic plausibility of coolant temperature sensor failed. Sensor is defect.

Generation condition		[Test Condition] • Coolant temperature sensor working correctly. • Monitoring not disabled by FID_CEngDsTDynAbsTst due to another failure • Engine start temperature < 39.96°C {103.93°F} • Injection quantity > speed dependent curve (CEngDsT_qMinEnaDynTst) • The monitoring is executed once per driving cycle.
		[Fault Detection] • The Coolant Temperature does not reach the minimal temperature rise (start temperature dependant between 0.70K at -30.04°C {-22.07°F} to 0.00K at 59.96°C {139.93°F}) within a dedicated time from a calibration map (start temperature and current temperature dependant) • The timer is stopped as soon test conditions are not fulfilled and resumed, as soon as testing conditions are fulfilled again.
		[Defect Debouncing] • Immediate
Fault healing		• No healing at this driving cycle possible. Healing at next driving cycle, if the Coolant Temperature exceeds the minimal temperature rise (start temperature dependant between 0.70K at -30.04°C {-22.07°F} and 0.00K at 59.96°C {139.93°F}) within a dedicated time from a calibration map (start temperature and current temperature). • The timer is stopped as soon test conditions are not fulfilled and resumed, as soon as testing conditions are fulfilled again.
System reaction		• Only according FID (see FID)
		• 1) FId / Last Valid value for Coolant Temperature is frozen and used • 2) FId / Fixed Default value for Coolant Temperature is taken • 3) FId / Inhibit Charged Air Cooler monitoring • 4) FId / Misfire Detection disabled • 5) FId / Inhibit OxiCat passive monitor • 6) Fid / SCR Monitoring or DEF injection release not possible (according calibration of Release Masks) • 7) FId / Inhibit physical range check engine coolant temperature • 8) FId / Inhibit EGR cooler efficiency monitoring • 9) FId / Calculation of Turbocharger Compressor Temperature inhibited
Failure cause		• Very cold ambient conditions and cabin heater(s) on full power (specially if additional heaters using coolant temperature installed in the vehicle) • Additional electrical resistance in the wiring (corroded connector) • Inaccurate sensor (although sensor does not exceed its signal range) • Engine thermostat blogged in open position
Failure repair		• Ensure that engine was not running in extreme ambient conditions. • Check wiring and connectors (corrosion) • Check accuracy of sensor, replacement of sensor • Check Thermostat functionality
Inspection procedure	Step1	Inspection procedure Turn the starter switch in OFF. Remove the connector of A4 (Combustion engine Control unit). Check electrical line between pins A4.X1.60/55 and B39.2/1 for open circuit. Check electrical line between pins A4.X1.60/23 and B39.2/2 for open circuit. Check electrical line between pins A4.X1.60/55 and B39.2/1 for short circuit to positive. Check harness between A4 (Combustion engine Control unit) and B39 (Coolant temperature sensor) for short-circuit to another line. Is any abnormality recognized? No: Go to Step2 Yes: Go to Step6

https://truckmanualshub.com/

Inspection procedure	Step2	Inspection procedure Turn the starter switch in OFF. Replace component “B39 (Coolant temperature sensor)”. Reinstall all the removed connectors. Turn the starter switch in ON. Go to Step3
	Step3	Inspection procedure Turn the starter switch in OFF. Reinstall all the removed connectors. Erase fault memory and perform a test drive. Check if this diagnosis code has occurred. Are current fault codes present? No: Go to Step5 Yes: Go to Step4
	Step4	Inspection procedure Perform the operation start and replace A4 (Combustion engine Control unit). Go to Step5
	Step5	Inspection completed
	Step6	Inspection procedure Repair or replace electrical lines. Reinstall all the removed connectors. Turn the starter switch in ON. Go to Step7
	Step7	Inspection procedure Turn the starter switch in OFF. Reinstall all the removed connectors. Erase fault memory and perform a test drive. Check if this diagnosis code has occurred. Are current fault codes present? No: Go to Step5 Yes: Go to Step1

111-1: The coolant level is too low.Data valid but below normal operational range

Generation condition	[Test Condition] • Monitoring is active 2.00s after ECU initialization while engine isn’t running yet, while the engine isn’t cranking, 2.00s after engine startup, while the battery voltage is over 10.00V, as long as the battery voltage is over 10.00V and 2.00s after this threshold has been exceeded, if none of the CAN controllers is in bus-off state, 2.00s after last CAN controller is no more in bus-off state and if the ECU is not in afterrun • Continuously
	[Fault Detection] • If the coolant level is low, i.e. if the message ClntLv_st is set for longer than 1000.00ms.
	[Defect Debouncing] • Defect condition exceeded cumulatively > 5.00s • Failure is detected if active for 25% of the time
Fault healing	• If the coolant level is within limit, i.e if the message ClntLv_st is reset for longer than 1000.00ms.
System reaction	• None
	• Coolant level low or switch not working correctly
Failure cause	• Check coolant level • If OK, check coolant switch.
Failure repair	[Test Condition] • Monitoring is active 2.00s after ECU initialization while engine isn’t running yet, while the engine isn’t cranking, 2.00s after engine startup, while the battery voltage is over 10.00V, as long as the battery voltage is over 10.00V and 2.00s after this threshold has been exceeded, if none of the CAN controllers is in bus-off state, 2.00s after last CAN controller is no more in bus-off state and if the ECU is not in afterrun • Continuously

https://truckmanualshub.com/

Inspection procedure	Step1	Inspection procedure Inspect the suspected factors mentioned above sequentially to locate faulty parts. Repair or replace the faulty part as necessary.

129-16: Fuel pressure control CPC: Fuel rail pressure exceeds maximal limit during rail press control “both devices”. Data Valid But Above Normal Operational Range.

Generation condition		[Test Condition] • Engine normal running • Fuel pressure control in mode “both devices” switching to “only PCV” or “only MeUn” (Rail_stCtlLoop = 16 or 17 or 18) • FID_RailTnkLo not set due to Failure FlSysTnkLo (see description of Fl-SysTnkLo)
		[Fault Detection] • The rail pressure > 215MPa {31180psi, 2190kgf/cm^2}
		[Defect Debouncing] • Defect condition fulfilled continuously >240.0 ms
Fault healing		• No Healing possible (disabled by Data set)
System reaction		• According FID (see FID’s)
		• 1) Fid / Reagent dosing quantity for SCR reduced (to DStgy_facUreaDesRed_C) • 2) FId / Fuel pressure control exclusively made by metering unit (MeUn) in current driving cycle • 3) FId / Zero Fuel Calibration (ZFC) of injectors disabled • 4) FId / Zero Fuel Calibration (ZFC) of injectors by Lambda Sensor signal disabled • 5) Fid / SCR Monitoring or DEF injection release not possible (according calibration of Release Masks) • 6) FId / Inhibit ISS, max number of engine starts exceeded
Failure cause		• Pressure control valve (PCV) stuck in closed position • Too high current to PCV (due to partial short circuit) • Metering Unit (MeUn) stuck if “full feeding position” • Metering Unit (MeUn) without current • Zero delivery throttle clogged or pressure after Zero delivery valve to high (due to clogged return tubes) • Pressure before gear pump too high due to clogged pressure control valve in low pressure cycle (if present)
Failure repair		• Check Pressure control valve (PCV), if opening (PWM = 0%) • Check metering Unit (MeUn), if closing (PWM = 100%) • Check electric wiring to PCV and MeUn • Check low pressure fuel tubes (return from CP to tank free?) • Check zero delivery valve for correct working
Inspection procedure	Step1	Inspect or verify the following items. Repair or replace faulty items as necessary. Component ‘Y29 (Pressure limiting valve in rail)’ is faulty. Faulty Y29 (Pressure limiting valve in rail) harness Component ‘Y10 (Pressure regulating valve in rail)’ is faulty. Faulty Y10 (Pressure regulating valve in rail) harness Plugged A41 (Electric fuel pump) Plugged Fuel return line For procedures, refer to the Shop Manual. Go to Step2
	Step2	Inspection procedure If one of diagnosis codes associated with SAM ECU is generated, make a system diagnosis according to the diagnosis code. Go to Step3

https://truckmanualshub.com/

Inspection procedure	Step3	Inspection procedure Turn the starter switch in OFF. Remove the connector of A4 (Combustion engine Control unit). Remove the connector of Y29 (Pressure limiting valve in rail). Check the circuit across B1.2/2[SIG] and A4.X1.60/45 for open or short circuit. Check the circuit across B1.1/2[GND] and A4.X1.60/15 for open or short circuit. Make a visual check on each connector. Is any abnormality recognized? No: Go to Step4 Yes: Go to Step9
	Step4	Inspection procedure Turn the starter switch in OFF. Replace component “Y29 (Pressure limiting valve in rail)”. Reinstall all the removed connectors. Turn the starter switch in ON. Perform the learned value resetting procedure of Y29 (Pressure limiting valve in rail) which A4 (Combustion engine Control unit) learns. Go to Step5
	Step5	Inspection procedure Turn the starter switch in OFF. Reinstall all the removed connectors. Erase fault memory and perform a test drive. Check if this diagnosis code has occurred. Are current fault codes present? No: Go to Step8 Yes: Go to Step6
	Step6	Inspect or verify the following items. Repair or replace faulty items as necessary. Component ‘Y29 (Pressure limiting valve in rail)’ is faulty. Faulty Y29 (Pressure limiting valve in rail) harness Component ‘Y10 (Pressure regulating valve in rail)’ is faulty. Faulty Y10 (Pressure regulating valve in rail) harness Plugged A41 (Electric fuel pump) Plugged Fuel return line For procedures, refer to the Shop Manual Go to Step7
	Step7	Inspection procedure Perform the operation start and replace A4 (Combustion engine Control unit). Go to Step8
	Step8	Inspection completed
	Step9	Inspection procedure Repair or replace electrical lines. Reinstall all the removed connectors. Erase fault memory and perform a test drive. Check if this diagnosis code has occurred. Are current fault codes present? No: Go to Step8 Yes: Go to Step4

129-18: Fuel pressure control CPC: Fuel rail pressure below minimal threshold during rail press control “both devices”.Data valid but below normal operational range

Generation condition	[Test Condition] • Engine normal running • Fuel pressure control in mode “both devices” switching to “only PCV” or “only MeUn” (Rail_stCtlLoop = 16 or 17 or 18) • FID_RailTnkLo not set due to Failure FlSysTnkLo (see description of FlSysTnkLo)
	[Fault Detection] • If the rail pressure RailP_pFlt < pressure threshold based on the engine speed. (from 12000kPa {1740psi, 120kgf/cm^2} at 600.00rpm over 12000kPa {1740psi, 120kgf/cm^2} at 1600.00rpm to 12000kPa {1740psi, 120kgf/cm^2} at 3600.00rpm)
	[Defect Debouncing] • Defect condition fulfilled continuously >300.0 ms

https://truckmanualshub.com/

Fault healing		• No Healing possible (disabled by Data set)
System reaction		• According FID (see FID's)
		• 1) Fid / Reagent dosing quantity for SCR reduced (to DStgy_facUreaDesRed_C) • 2) FId / Fuel pressure control exclusively made by metering unit (MeUn) in current driving cycle • 3) FId / Zero Fuel Calibration (ZFC) of injectors disabled • 4) FId / Zero Fuel Calibration (ZFC) of injectors by Lambda Sensor signal disabled • 5) Fid / SCR Monitoring or DEF injection release not possible (according calibration of Release Masks) • 6) FId / Inhibit ISS, max number of engine starts exceeded
Failure cause		• Possible faults in high pressure part. • injection nozzle stuck in open position, low efficiency of high pressure pump, internal leakage of injector, leaking pressure control valve, leaking high pressure part itself (tubing) • Too low pressure at High pressure pump inlet due clogged filter, leaking low pressure tubes, electric pre supply pump defective or gear pump defective
Failure repair		• Check low pressure system for clogging (specially fuel filter) • Check tubing between pre supply and gear pump • Check feeding of presupply pump (possibly low due to clogged tubes at tank outlet) • Check high pressure part for leakages (internal / external) • Check PCV for tightness in closed position (100% PWM) • Check High pressure pump for efficiency • Check injectors for tightness
Inspection procedure	Step1	Inspect or verify the following items. Repair or replace faulty items as necessary. Component 'Common rail' is faulty. Component 'Fuel injector' is stuck. Reduced pressure of Supply pump Fuel leakage of Fuel injector Fuel leakage of Y29 (Pressure limiting valve in rail) Fuel leakage of Fuel pipe Plugged Fuel filter module Component 'A41 (Electric fuel pump)' is faulty. For procedures, refer to the Shop Manual. Go to Step2
	Step2	Inspection procedure If one of diagnosis codes associated with SAM ECU is generated, make a system diagnosis according to the diagnosis code. Go to Step3
	Step3	Inspection procedure Turn the starter switch in OFF. Remove the connector of A4 (Combustion engine Control unit). Remove the connector of Y29 (Pressure limiting valve in rail). Check the circuit across B1.2/2[SIG] and A4.X1.60/45 for open or short circuit. Check the circuit across B1.1/2[GND] and A4.X1.60/15 for open or short circuit. Make a visual check on each connector. Is any abnormality recognized? No: Go to Step4 Yes: Go to Step9
	Step4	Inspection procedure Turn the starter switch in OFF. Replace component "Y29 (Pressure limiting valve in rail)". Reinstall all the removed connectors. Turn the starter switch in ON. Perform the learned value resetting procedure of Y29 (Pressure limiting valve in rail) which A4 (Combustion engine Control unit) learns. Go to Step5

https://truckmanualshub.com/

Inspection procedure	Step5	Inspection procedure Turn the starter switch in OFF. Reinstall all the removed connectors. Erase fault memory and perform a test drive. Check if this diagnosis code has occurred. Are current fault codes present? No: Go to Step8 Yes: Go to Step6
	Step6	Inspect or verify the following items. Repair or replace faulty items as necessary. Component 'Common rail' is faulty. Component 'Fuel injector' is stuck. Reduced pressure of Supply pump Fuel leakage of Fuel injector Fuel leakage of Y29 (Pressure limiting valve in rail) Fuel leakage of Fuel pipe Plugged Fuel filter module Component 'A41 (Electric fuel pump)' is faulty. For procedures, refer to the Shop Manual Go to Step7
	Step7	Inspection procedure Perform the operation start and replace A4 (Combustion engine Control unit). Go to Step8
	Step8	Inspection completed
	Step9	Inspection procedure Repair or replace electrical lines. Reinstall all the removed connectors. Erase fault memory and perform a test drive. Check if this diagnosis code has occurred. Are current fault codes present? No: Go to Step8 Yes: Go to Step4

132-0: Air flow meterSignal Range Check (SRC) for 'raw value in HFM6 sensor' reports HIGH.Data Valid But Above Normal Operational Range.

Generation condition	[Test Condition] • Monitoring is active while the engine isn't cranking, 2.00s after engine start-up and if the ECU is not in afterrun • The SRC High check of the raw air mass is released at the start of the driving cycle if: • Fid_AFSSRC is not set by another failure • engine speed between 0.00rpm and 5000.00rpm • Continuously.
	[Fault Detection] • Raw periodic signal of HFM > 833.35us
	[Defect Debouncing] • Defect condition exceeded cumulatively > 500.00ms • Failure is detected if active for 50% of the time
Fault healing	• Raw periodic signal of HFM < 833.35us

https://truckmanualshub.com/

		• No substitute function is active during defect debouncing. After the defect debouncing time has elapsed, switchover to the modelled replace value ASMod_dmIndAirRef or, if the model cannot be used because of another failure (FId_AFSSysErr present) a replacement value from a map depending on engine speed and pressure in the induction volume is used.
System reaction		• 1) FId / Air mass flow calculated by gas equation (boost pressure, boost temperature, engine speed) instead of measuring by air flow meter (HFM/AFS) • 2) FId / Freezes last value of measured air mass of air flow meter (HFM/AFS) • 3) FId / Physical range check on the sensed value of the intake air mass sensor.(HFM/AFS) • 4) FId / Offset plausibility check of air flow meter (HFM/AFS) at engine stand still disabled • 5) FId / Check of gain plausibility of air flow meter (HFM/AFS) at low idle disabled • 6) FId / EGR switched off • 7) FId / Deactivates NOx monitoring • 8) FId / Dew Point detection for Lambda Sensor (LSU) not possible - LSU Heater switched on after a fix time • 9) Fid / SCR Monitoring or DEF injection release not possible (according calibration of Release Masks) • 10) FId / Engine brake position in open loop (closed loop control for exhaust flow suppressed) • 11) FId / Adaptation of the correction values of Fuel Mass Observer (FMO) inhibited (no correction of detected deviation between injected fuel and Lambda sensor signal) • 12) FId / Fuel Mass Observer (FMO) switched off (no monitoring of injected fuel by Lambda sensor) • 13) FId / The Adaptation of lambda Sensor disabled • 14) FId / The Difference Check between several Lambda Sensors is disabled • 15) FId / Dynamic Signal Monitoring of Lambda Sensor disabled • 16) FId / Electrical Open Load Check of Lambda Sensor disabled • 17) FId / Plausibility Check of O2-Signal of Lambda Sensor (e.g. with HFM or Air calculation by Boost pressure) is disabled and last valid value taken • 18) FId / Monitoring of particulate filter (DPF) by comparing the calculated flow resistance with measured pressure drop disabled • 19) FId / Inhibit DPF monitor • 20) FId / Particulate filter ((DPF) Regeneration inhibited • 21) FId / Service regeneration of Particulate filter ((DPF) inhibited (due to DPF failure) • 22) FId / Zero Fuel Calibration (ZFC) of injectors by Lambda Sensor signal disabled • 23) FId / Status of function identifier FId_EngDemTrqLimErr5 • 24) FId / Engine speed Limitation 2 for HIgh/Low engine speed (HLS) control active
Failure cause		• Defect in wiring, defective air mass sensor
Failure repair		• Check wiring of the air mass sensor, replace air mass sensor
Inspection procedure	Step1	Inspect or verify the following items. Repair or replace faulty items as necessary. If one of diagnosis codes associated with A20 (SAM) is generated, make a system diagnosis according to the diagnosis code. Go to Step2
	Step2	Inspection procedure Turn the starter switch in OFF. Remove the connector of A4 (Combustion engine Control unit). Remove the connector of B18 (Air flow and intake air temperature sensor). Remove the connector of A20 (SAM). Check the circuit across A4.X1.60/42 and B18.4/3 for open or short circuit. Check the circuit across A4.X1.60/38 and B18.4/4 for open or short circuit. Check the circuit across A4.X1.60/44 and B18.4/2 for open or short circuit. Check the circuit across A20.X10.14/2 and B18.4/1 for open or short circuit. Make a visual check on each connector. Is any abnormality recognized? No: Go to Step3 Yes: Go to Step7

https://truckmanualshub.com/

Inspection procedure	Step3	Inspection procedure Turn the starter switch in OFF. Replace component “B18 (Air flow and intake air temperature sensor)”. Reinstall all the removed connectors. Turn the starter switch in ON. Perform the learned value resetting procedure of B18 (Air flow and intake air temperature sensor) which A4 (Combustion engine Control unit) learns. Go to Step4
	Step4	Inspection procedure Turn the starter switch in OFF. Reinstall all the removed connectors. Erase fault memory and perform a test drive. Check if this diagnosis code has occurred. Are current fault codes present? No: Go to Step6 Yes: Go to Step5
	Step5	Inspection procedure Perform the operation start and replace A4 (Combustion engine Control unit). Go to Step6
	Step6	Inspection completed
	Step7	Inspection procedure Turn the starter switch in OFF. Remove the connector of A4 (Combustion engine Control unit). Remove the connector of X39 (Intermediate connector). Remove the connector of A20 (SAM). Check the circuit across A4.X1.60/42 and X39.12/4 for open or short circuit. Check the circuit across A4.X1.60/38 and X39.12/5 for open or short circuit. Check the circuit across A4.X1.60/44 and X39.12/6 for open or short circuit. Make a visual check on each connector. Is any abnormality recognized? No: Go to Step8 Yes: Go to Step9
	Step8	Inspection procedure Repair or replace the harness across B18 (Air flow and intake air temperature sensor) and X39 (Intermediate connector). Reinstall all the removed connectors. Erase fault memory and perform a test drive. Check if this diagnosis code has occurred. Are current fault codes present? No: Go to Step6 Yes: Go to Step3
	Step9	Inspection procedure Repair or replace the harness across A4 (Combustion engine Control unit) and X39 (Intermediate connector). Reinstall all the removed connectors. Erase fault memory and perform a test drive. Check if this diagnosis code has occurred. Are current fault codes present? No: Go to Step6 Yes: Go to Step3

https://truckmanualshub.com/

132-1: Air flow meterSignal Range Check (SRC) for 'raw value in HFM6 sensor' reports LOW.Data valid but below normal operational range

Generation condition	[Test Condition] • Monitoring is active while the engine isn't cranking, 2.00s after engine start-up and if the ECU is not in afterrun • The SRC Low check of the raw air mass is released at the start of the driving cycle if • Fid_AFSSRC is not set by another failure • injected fuel is below an engine speed dependent fuel quantity (from 205.00mg/hub at 0.00rpm over 170.00mg/hub at 1000.00rpm and 135.00mg/hub at 2000.00rpm and 100.00mg/hub at 3000.00rpm and 65.00mg/hub at 4000.00rpm to 37.00mg/hub at 4800.00rpm) longer than 2.00s • After then continuously.
	[Fault Detection] • Raw periodic signal of HFM < 71.40us
	[Defect Debouncing] • Defect condition exceeded cumulatively > 600.00ms • Failure is detected if active for 50% of the time
Fault healing	• Raw periodic signal of HFM > 71.40us
System reaction	• No substitute function is active during defect debouncing. After the defect debouncing time has elapsed, switchover to the modelled replace value ASMod_dmIndAirRef or, if the model cannot be used because of another failure (FId_AFSSysErr present) a replacement value from a map depending on engine speed and pressure in the induction volume is used.
	• 1) FId / Air mass flow calculated by gas equation (boost pressure, boost temperature, engine speed) instead of measuring by air flow meter (HFM/AFS) • 2) FId / Freezes last value of measured air mass of air flow meter (HFM/AFS) • 3) FId / Physical range check on the sensed value of the intake air mass sensor.(HFM/AFS) • 4) FId / Offset plausibility check of air flow meter (HFM/AFS) at engine stand still disabled • 5) FId / Check of gain plausibility of air flow meter (HFM/AFS) at low idle disabled • 6) FId / EGR switched off • 7) FId / Deactivates NOx monitoring • 8) FId / Dew Point detection for Lambda Sensor (LSU) not possible - LSU Heater switched on after a fix time • 9) Fid / SCR Monitoring or DEF injection release not possible (according calibration of Release Masks) • 10) FId / Engine brake position in open loop (closed loop control for exhaust flow suppressed) • 11) FId / Adaptation of the correction values of Fuel Mass Observer (FMO) inhibited (no correction of detected deviation between injected fuel and Lambda sensor signal) • 12) FId / Fuel Mass Observer (FMO) switched off (no monitoring of injected fuel by Lambda sensor) • 13) FId / The Adaptation of lambda Sensor disabled • 14) FId / The Difference Check between several Lambda Sensors is disabled • 15) FId / Dynamic Signal Monitoring of Lambda Sensor disabled • 16) FId / Electrical Open Load Check of Lambda Sensor disabled • 17) FId / Plausibility Check of O2-Signal of Lambda Sensor (e.g. with HFM or Air calculation by Boost pressure) is disabled and last valid value taken • 18) FId / Monitoring of particulate filter (DPF) by comparing the calculated flow resistance with measured pressure drop disabled • 19) FId / Inhibit DPF monitor • 20) FId / Particulate filter ((DPF) Regeneration inhibited • 21) FId / Service regeneration of Particulate filter ((DPF) inhibited (due to DPF failure) • 22) FId / Zero Fuel Calibration (ZFC) of injectors by Lambda Sensor signal disabled • 23) FId / Status of function identifier FId_EngDemTrqLimErr5 • 24) FId / Engine speed Limitation 2 for HIgh/Low engine speed (HLS) control active

https://truckmanualshub.com/

Failure cause		• Defect in wiring, defective air mass sensor
Failure repair		• Check wiring of the air mass sensor, replace air mass sensor
Inspection procedure	Step1	Inspect or verify the following items. Repair or replace faulty items as necessary. If one of diagnosis codes associated with A20 (SAM) is generated, make a system diagnosis according to the diagnosis code. Go to Step2
	Step2	Inspection procedure Turn the starter switch in OFF. Remove the connector of A4 (Combustion engine Control unit). Remove the connector of B18 (Air flow and intake air temperature sensor). Remove the connector of A20 (SAM). Check the circuit across A4.X1.60/42 and B18.4/3 for open or short circuit. Check the circuit across A4.X1.60/38 and B18.4/4 for open or short circuit. Check the circuit across A4.X1.60/44 and B18.4/2 for open or short circuit. Check the circuit across A20.X10.14/2 and B18.4/1 for open or short circuit. Make a visual check on each connector. Is any abnormality recognized? No: Go to Step3 Yes: Go to Step7
	Step3	Inspection procedure Turn the starter switch in OFF. Replace component “B18 (Air flow and intake air temperature sensor)”. Reinstall all the removed connectors. Turn the starter switch in ON. Perform the learned value resetting procedure of B18 (Air flow and intake air temperature sensor) which A4 (Combustion engine Control unit) learns. Go to Step4
	Step4	Inspection procedure Turn the starter switch in OFF. Reinstall all the removed connectors. Erase fault memory and perform a test drive. Check if this diagnosis code has occurred. Are current fault codes present? No: Go to Step6 Yes: Go to Step5
	Step5	Inspection procedure Perform the operation start and replace A4 (Combustion engine Control unit). Go to Step6
	Step6	Inspection completed
	Step7	Inspection procedure Turn the starter switch in OFF. Remove the connector of A4 (Combustion engine Control unit). Remove the connector of X39 (Intermediate connector). Remove the connector of A20 (SAM). Check the circuit across A4.X1.60/42 and X39.12/4 for open or short circuit. Check the circuit across A4.X1.60/38 and X39.12/5 for open or short circuit. Check the circuit across A4.X1.60/44 and X39.12/6 for open or short circuit. Make a visual check on each connector. Is any abnormality recognized? No: Go to Step8 Yes: Go to Step9
	Step8	Inspection procedure Repair or replace the harness across B18 (Air flow and intake air temperature sensor) and X39 (Intermediate connector). Reinstall all the removed connectors. Erase fault memory and perform a test drive. Check if this diagnosis code has occurred. Are current fault codes present? No: Go to Step6 Yes: Go to Step3

https://truckmanualshub.com/

Inspection procedure	Step9	Inspection procedure Repair or replace the harness across A4 (Combustion engine Control unit) and X39 (Intermediate connector). Reinstall all the removed connectors. Erase fault memory and perform a test drive. Check if this diagnosis code has occurred. Are current fault codes present? No: Go to Step6 Yes: Go to Step3

132-2: Hardware error from air flow meter is detected for HFM sensor.

Generation condition	[Test Condition] • Monitoring is active while the engine isn't cranking, 2.00s after engine start-up and if the ECU is not in afterrun • Continuously
	[Fault Detection] • ECM Hardware detects a problem and the internal message (AFS_PwmResult.Pwmin_stSignal) > 0.
	[Defect Debouncing] • Defect condition exceeded cumulatively > 580.00ms • Failure is detected if active for 50% of the time
Fault healing	• Internal message (AFS_PwmResult.Pwmin_stSignal)) = 0
System reaction	• No substitute function is active during defect debouncing. After the defect debouncing time has elapsed, switchover to the modelled replace value ASMod_dmIndAirRef or, if the model cannot be used because of another failure (FId_AFSSysErr present) a replacement value from a map depending on engine speed and pressure in the induction volume is used.
	• 1) FId / Air mass flow calculated by gas equation (boost pressure, boost temperature, engine speed) instead of measuring by air flow meter (HFM/AFS) • 2) FId / Freezes last value of measured air mass of air flow meter (HFM/AFS) • 3) FId / Physical range check on the sensed value of the intake air mass sensor.(HFM/AFS) • 4) FId / Offset plausibility check of air flow meter (HFM/AFS) at engine stand still disabled • 5) FId / Check of gain plausibility of air flow meter (HFM/AFS) at low idle disabled • 6) FId / Signal range check SRC of air flow meter (HFM/AFS) disabled • 7) FId / EGR switched off • 8) FId / Deactivates NOx monitoring • 9) FId / Dew Point detection for Lambda Sensor (LSU) not possible - LSU Heater switched on after a fix time • 10) Fid / SCR Monitoring or DEF injection release not possible (according calibration of Release Masks) • 11) FId / Engine brake position in open loop (closed loop control for exhaust flow suppressed) • 12) FId / Adaptation of the correction values of Fuel Mass Observer (FMO) inhibited (no correction of detected deviation between injected fuel and Lambda sensor signal) • 13) FId / Fuel Mass Observer (FMO) switched off (no monitoring of injected fuel by Lambda sensor) • 14) FId / Monitoring of particulate filter (DPF) by comparing the calculated flow resistance with measured pressure drop disabled • 15) FId / Inhibit DPF monitor • 16) FId / Particulate filter ((DPF) Regeneration inhibited • 17) FId / Service regeneration of Particulate filter ((DPF) inhibited (due to DPF failure) • 18) FId / Zero Fuel Calibration (ZFC) of injectors by Lambda Sensor signal disabled • 19) FId / Status of function identifier FId_EngDemTrqLimErr5 • 20) FId / Engine speed Limitation 2 for HIgh/Low engine speed (HLS) control active
Failure cause	• Defect in wiring or defective air mass sensor
Failure repair	• Check wiring of the intake air mass sensor, replace air mass sensor

https://truckmanualshub.com/

Inspection procedure	Step1	Inspect or verify the following items. Repair or replace faulty items as necessary. If one of diagnosis codes associated with A20 (SAM) is generated, make a system diagnosis according to the diagnosis code. Go to Step2
	Step2	Inspection procedure Turn the starter switch in OFF. Remove the connector of A4 (Combustion engine Control unit). Remove the connector of B18 (Air flow and intake air temperature sensor). Remove the connector of A20 (SAM). Check the circuit across A4.X1.60/42 and B18.4/3 for open or short circuit. Check the circuit across A4.X1.60/38 and B18.4/4 for open or short circuit. Check the circuit across A4.X1.60/44 and B18.4/2 for open or short circuit. Check the circuit across A20.X10.14/2 and B18.4/1 for open or short circuit. Make a visual check on each connector. Is any abnormality recognized? No: Go to Step3 Yes: Go to Step7
	Step3	Inspection procedure Turn the starter switch in OFF. Replace component “B18 (Air flow and intake air temperature sensor)”. Reinstall all the removed connectors. Turn the starter switch in ON. Perform the learned value resetting procedure of B18 (Air flow and intake air temperature sensor) which A4 (Combustion engine Control unit) learns. Go to Step4
	Step4	Inspection procedure Turn the starter switch in OFF. Reinstall all the removed connectors. Erase fault memory and perform a test drive. Check if this diagnosis code has occurred. Are current fault codes present? No: Go to Step6 Yes: Go to Step5
	Step5	Inspection procedure Perform the operation start and replace A4 (Combustion engine Control unit). Go to Step6
	Step6	Inspection completed
	Step7	Inspection procedure Turn the starter switch in OFF. Remove the connector of A4 (Combustion engine Control unit). Remove the connector of X39. Remove the connector of A20 (SAM). Check the circuit across A4.X1.60/42 and X39.12/4 for open or short circuit. Check the circuit across A4.X1.60/38 and X39.12/5 for open or short circuit. Check the circuit across A4.X1.60/44 and X39.12/6 for open or short circuit. Make a visual check on each connector. Is any abnormality recognized? No: Go to Step8 Yes: Go to Step9
	Step8	Inspection procedure Repair or replace the harness across B18 (Air flow and intake air temperature sensor) and X39. Reinstall all the removed connectors. Erase fault memory and perform a test drive. Check if this diagnosis code has occurred. Are current fault codes present? No: Go to Step6 Yes: Go to Step3

https://truckmanualshub.com/

Inspection procedure	Step9	Inspection procedure Repair or replace the harness across A4 (Combustion engine Control unit) and X39. Reinstall all the removed connectors. Erase fault memory and perform a test drive. Check if this diagnosis code has occurred. Are current fault codes present? No: Go to Step6 Yes: Go to Step3

132-15: Air flow meterSignal Range Check (SRC) for 'corrected value in HFM6 sensor' reports HIGH.Data Valid But Above Normal Operational Range.

Generation condition	[Test Condition] • Monitoring is active while the engine isn't cranking, 2.00s after engine start-up and if the ECU is not in afterrun • The SRC High check of the corrected air mass is released at the start of the driving cycle if Fid_AFSSRC is not set by another failure (SRC for AFS inhibited) and engine speed is in range between 0.00rpm to 5000.00rpm • Continuously.
	[Fault Detection] • The corrected HFM signal > 666.60us
	[Defect Debouncing] • Defect condition exceeded cumulatively > 650.00ms • Failure is detected if active for 50% of the time
Fault healing	• Is the raw air mass value less than 666.60us?

https://truckmanualshub.com/

		• No substitute function is active during defect debouncing. After the defect debouncing time has elapsed, switchover to the modelled replace value ASMod_dmIndAirRef or, if the model cannot be used because of another failure (FId_AFSSysErr present) a replacement value from a map depending on engine speed and pressure in the induction volume is used.
System reaction		• 1) FId / Air mass flow calculated by gas equation (boost pressure, boost temperature, engine speed) instead of measuring by air flow meter (HFM/AFS) • 2) FId / Freezes last value of measured air mass of air flow meter (HFM/AFS) • 3) FId / Physical range check on the sensed value of the intake air mass sensor.(HFM/AFS) • 4) FId / Offset plausibility check of air flow meter (HFM/AFS) at engine stand still disabled • 5) FId / Check of gain plausibility of air flow meter (HFM/AFS) at low idle disabled • 6) FId / EGR switched off • 7) FId / Deactivates NOx monitoring • 8) FId / Dew Point detection for Lambda Sensor (LSU) not possible - LSU Heater switched on after a fix time • 9) Fid / SCR Monitoring or DEF injection release not possible (according calibration of Release Masks) • 10) FId / Engine brake position in open loop (closed loop control for exhaust flow suppressed) • 11) FId / Adaptation of the correction values of Fuel Mass Observer (FMO) inhibited (no correction of detected deviation between injected fuel and Lambda sensor signal) • 12) FId / Fuel Mass Observer (FMO) switched off (no monitoring of injected fuel by Lambda sensor) • 13) FId / The Adaptation of lambda Sensor disabled • 14) FId / The Difference Check between several Lambda Sensors is disabled • 15) FId / Dynamic Signal Monitoring of Lambda Sensor disabled • 16) FId / Electrical Open Load Check of Lambda Sensor disabled • 17) FId / Plausibility Check of O2-Signal of Lambda Sensor (e.g. with HFM or Air calculation by Boost pressure) is disabled and last valid value taken • 18) FId / Monitoring of particulate filter (DPF) by comparing the calculated flow resistance with measured pressure drop disabled • 19) FId / Inhibit DPF monitor • 20) FId / Particulate filter ((DPF) Regeneration inhibited • 21) FId / Service regeneration of Particulate filter ((DPF) inhibited (due to DPF failure) • 22) FId / Zero Fuel Calibration (ZFC) of injectors by Lambda Sensor signal disabled • 23) FId / Status of function identifier FId_EngDemTrqLimErr5 • 24) FId / Engine speed Limitation 2 for HIgh/Low engine speed (HLS) control active
Failure cause		• Defect in wiring, defective air mass sensor and/or the temperature sensor unit
Failure repair		• Check wiring of the air mass sensor, replace air mass sensor
Inspection procedure	Step1	Inspect or verify the following items. Repair or replace faulty items as necessary. If one of diagnosis codes associated with A20 (SAM) is generated, make a system diagnosis according to the diagnosis code. Go to Step2
	Step2	Inspection procedure Turn the starter switch in OFF. Remove the connector of A4 (Combustion engine Control unit). Remove the connector of B18 (Air flow and intake air temperature sensor). Remove the connector of A20 (SAM). Check the circuit across A4.X1.60/42 and B18.4/3 for open or short circuit. Check the circuit across A4.X1.60/38 and B18.4/4 for open or short circuit. Check the circuit across A4.X1.60/44 and B18.4/2 for open or short circuit. Check the circuit across A20.X10.14/2 and B18.4/1 for open or short circuit. Make a visual check on each connector. Is any abnormality recognized? No: Go to Step3 Yes: Go to Step7

https://truckmanualshub.com/

Inspection procedure	Step3	Inspection procedure Turn the starter switch in OFF. Replace component “B18 (Air flow and intake air temperature sensor)”. Reinstall all the removed connectors. Turn the starter switch in ON. Perform the learned value resetting procedure of B18 (Air flow and intake air temperature sensor) which A4 (Combustion engine Control unit) learns. Go to Step4
	Step4	Inspection procedure Turn the starter switch in OFF. Reinstall all the removed connectors. Erase fault memory and perform a test drive. Check if this diagnosis code has occurred. Are current fault codes present? No: Go to Step6 Yes: Go to Step5
	Step5	Inspection procedure Perform the operation start and replace A4 (Combustion engine Control unit). Go to Step6
	Step6	Inspection completed
	Step7	Inspection procedure Turn the starter switch in OFF. Remove the connector of A4 (Combustion engine Control unit). Remove the connector of X39 (Intermediate connector). Remove the connector of A20 (SAM). Check the circuit across A4.X1.60/42 and X39.12/4 for open or short circuit. Check the circuit across A4.X1.60/38 and X39.12/5 for open or short circuit. Check the circuit across A4.X1.60/44 and X39.12/6 for open or short circuit. Make a visual check on each connector. Is any abnormality recognized? No: Go to Step8 Yes: Go to Step9
	Step8	Inspection procedure Repair or replace the harness across B18 (Air flow and intake air temperature sensor) and X39 (Intermediate connector). Reinstall all the removed connectors. Erase fault memory and perform a test drive. Check if this diagnosis code has occurred. Are current fault codes present? No: Go to Step6 Yes: Go to Step3
	Step9	Inspection procedure Repair or replace the harness across A4 (Combustion engine Control unit) and X39 (Intermediate connector). Reinstall all the removed connectors. Erase fault memory and perform a test drive. Check if this diagnosis code has occurred. Are current fault codes present? No: Go to Step6 Yes: Go to Step3

https://truckmanualshub.com/

132-17: Air flow meterSignal Range Check (SRC) for 'corrected value in HFM6 sensor' reports LOW.Data valid but below normal operational range

Generation condition	[Test Condition] • Monitoring is active while the engine isn't cranking, 2.00s after engine start-up and if the ECU is not in afterrun • The SRC Low check of the corrected air mass is released at the start of the driving cycle if Fid_AFSSRC is not set by another failure (SRC for AFS inhibited) and injected fuel is below an engine speed dependent fuel quantity from an applied curve for longer than 2.00s • Continuously.
	[Fault Detection] • Corrected HFM periodic signal < 83.00us
	[Defect Debouncing] • Defect condition exceeded cumulatively > 650.00ms • Failure is detected if active for 50% of the time
Fault healing	• Corrected HFM periodic signal > 83.00us
System reaction	• No substitute function is active during defect debouncing. After the defect debouncing time has elapsed, switchover to the modelled replace value ASMod_dmIndAirRef or, if the model cannot be used because of another failure (FId_AFSSysErr present) a replacement value from a map depending on engine speed and pressure in the induction volume is used.
	• 1) FId / Air mass flow calculated by gas equation (boost pressure, boost temperature, engine speed) instead of measuring by air flow meter (HFM/AFS) • 2) FId / Freezes last value of measured air mass of air flow meter (HFM/AFS) • 3) FId / Physical range check on the sensed value of the intake air mass sensor.(HFM/AFS) • 4) FId / Offset plausibility check of air flow meter (HFM/AFS) at engine stand still disabled • 5) FId / Check of gain plausibility of air flow meter (HFM/AFS) at low idle disabled • 6) FId / EGR switched off • 7) FId / Deactivates NOx monitoring • 8) FId / Dew Point detection for Lambda Sensor (LSU) not possible - LSU Heater switched on after a fix time • 9) Fid / SCR Monitoring or DEF injection release not possible (according calibration of Release Masks) • 10) FId / Engine brake position in open loop (closed loop control for exhaust flow suppressed) • 11) FId / Adaptation of the correction values of Fuel Mass Observer (FMO) inhibited (no correction of detected deviation between injected fuel and Lambda sensor signal) • 12) FId / Fuel Mass Observer (FMO) switched off (no monitoring of injected fuel by Lambda sensor) • 13) FId / The Adaptation of lambda Sensor disabled • 14) FId / The Difference Check between several Lambda Sensors is disabled • 15) FId / Dynamic Signal Monitoring of Lambda Sensor disabled • 16) FId / Electrical Open Load Check of Lambda Sensor disabled • 17) FId / Plausibility Check of O2-Signal of Lambda Sensor (e.g. with HFM or Air calculation by Boost pressure) is disabled and last valid value taken • 18) FId / Monitoring of particulate filter (DPF) by comparing the calculated flow resistance with measured pressure drop disabled • 19) FId / Inhibit DPF monitor • 20) FId / Particulate filter ((DPF) Regeneration inhibited • 21) FId / Service regeneration of Particulate filter ((DPF) inhibited (due to DPF failure) • 22) FId / Zero Fuel Calibration (ZFC) of injectors by Lambda Sensor signal disabled • 23) FId / Status of function identifier FId_EngDemTrqLimErr5 • 24) FId / Engine speed Limitation 2 for HIgh/Low engine speed (HLS) control active
Failure cause	• Defect in wiring, defective air mass sensor and/or the temperature sensor unit

https://truckmanualshub.com/

Failure repair		• Check wiring of the air mass sensor, replace air mass sensor
Inspection procedure	Step1	Inspect or verify the following items. Repair or replace faulty items as necessary. If one of diagnosis codes associated with A20 (SAM) is generated, make a system diagnosis according to the diagnosis code. Go to Step2
	Step2	Inspection procedure Turn the starter switch in OFF. Remove the connector of A4 (Combustion engine Control unit). Remove the connector of B18 (Air flow and intake air temperature sensor). Remove the connector of A20 (SAM). Check the circuit across A4.X1.60/42 and B18.4/3 for open or short circuit. Check the circuit across A4.X1.60/38 and B18.4/4 for open or short circuit. Check the circuit across A4.X1.60/44 and B18.4/2 for open or short circuit. Check the circuit across A20.X10.14/2 and B18.4/1 for open or short circuit. Make a visual check on each connector. Is any abnormality recognized? No: Go to Step3 Yes: Go to Step7
	Step3	Inspection procedure Turn the starter switch in OFF. Replace component “B18 (Air flow and intake air temperature sensor)”. Reinstall all the removed connectors. Turn the starter switch in ON. Perform the learned value resetting procedure of B18 (Air flow and intake air temperature sensor) which A4 (Combustion engine Control unit) learns. Go to Step4
	Step4	Inspection procedure Turn the starter switch in OFF. Reinstall all the removed connectors. Erase fault memory and perform a test drive. Check if this diagnosis code has occurred. Are current fault codes present? No: Go to Step6 Yes: Go to Step5
	Step5	Inspection procedure Perform the operation start and replace A4 (Combustion engine Control unit). Go to Step6
	Step6	Inspection completed
	Step7	Inspection procedure Turn the starter switch in OFF. Remove the connector of A4 (Combustion engine Control unit). Remove the connector of X39 (Intermediate connector). Remove the connector of A20 (SAM). Check the circuit across A4.X1.60/42 and X39.12/4 for open or short circuit. Check the circuit across A4.X1.60/38 and X39.12/5 for open or short circuit. Check the circuit across A4.X1.60/44 and X39.12/6 for open or short circuit. Make a visual check on each connector. Is any abnormality recognized? No: Go to Step8 Yes: Go to Step9
	Step8	Inspection procedure Repair or replace the harness across B18 (Air flow and intake air temperature sensor) and X39 (Intermediate connector). Reinstall all the removed connectors. Erase fault memory and perform a test drive. Check if this diagnosis code has occurred. Are current fault codes present? No: Go to Step6 Yes: Go to Step3

https://truckmanualshub.com/

Inspection procedure	Step9	Inspection procedure Repair or replace the harness across A4 (Combustion engine Control unit) and X39 (Intermediate connector). Reinstall all the removed connectors. Erase fault memory and perform a test drive. Check if this diagnosis code has occurred. Are current fault codes present? No: Go to Step6 Yes: Go to Step3

132-18: Signal Range Check (SRC) for 'Air mass flow' reports Implausible data.

Generation condition		[Test Condition] • Monitoring is active 2.00s after ECU initialization while engine isn't running yet, while the engine isn't cranking, 2.00s after engine startup and if the ECU is not in afterrun • Test is performed only if there are no errors in AFS module (DINH_stFId.FId_AFSPhysRngChk not set by another failure). Continuously.
		[Fault Detection] • The air mass flow AFS_dm is below -10.00Kg/h
		[Defect Debouncing] • Defect condition exceeded cumulatively > 10.00s • Failure is detected if active for 50% of the time
Fault healing		• The air mass flow AFS_dm is above or equal to -10.00Kg/h
System reaction		• None (only via the inhibit handler)
		• 1) FId / Air mass flow calculated by gas equation (boost pressure, boost temperature, engine speed) instead of measuring by air flow meter (HFM/AFS) • 2) FId / Check of gain plausibility of air flow meter (HFM/AFS) at low idle disabled • 3) FId / EGR switched off • 4) FId / Monitoring of particulate filter (DPF) by comparing the calculated flow resistance with measured pressure drop disabled • 5) FId / Deactivates NOx monitoring • 6) FId / Replacement value for OxiCat temperature downstream used for modelling • 7) FId / Particulate filter ((DPF) Regeneration inhibited • 8) FId / Service regeneration of Particulate filter ((DPF) inhibited (due to DPF failure) • 9) FId / Reciprocal lambda signal replaced by substitute value for modelling • 10) FId / Dew Point detection for Lambda Sensor (LSU) not possible - LSU Heater switched on after a fix time • 11) Fid / SCR Monitoring or DEF injection release not possible (according calibration of Release Masks) • 12) FId / Adaptation of the correction values of Fuel Mass Observer (FMO) inhibited (no correction of detected deviation between injected fuel and Lambda sensor signal) • 13) FId / Fuel Mass Observer (FMO) switched off (no monitoring of injected fuel by Lambda sensor) • 14) FId / Correction of begin of Main injection 1 according deviation of air flow disabled • 15) FId / Inhibit DPF monitor • 16) FId / Zero Fuel Calibration (ZFC) of injectors by Lambda Sensor signal disabled • 17) FId / Status of function identifier FId_EngDemTrqLimErr5 • 18) FId / Engine speed Limitation 2 for HIgh/Low engine speed (HLS) control active
Failure cause		• Inaccurate or defective air mass sensor, or defect in the wiring of the HFM sensor
Failure repair		• Check wiring and the accuracy of the air mass sensor and replace it if necessary
Inspection procedure	Step1	Inspect or verify the following items. Repair or replace faulty items as necessary. If any other fault code has occurred, perform the diagnostics procedure for the fault code. Go to Step2

https://truckmanualshub.com/

Inspection procedure	Step2	Inspect or verify the following items. Repair or replace faulty items as necessary. If one of diagnosis codes associated with A20 (SAM) is generated, make a system diagnosis according to the diagnosis code. Go to Step3
	Step3	Inspection procedure Turn the starter switch in OFF. Remove the connector of A4 (Combustion engine Control unit). Remove the connector of B18 (Air flow and intake air temperature sensor). Remove the connector of A20 (SAM). Check the circuit across A4.X1.60/42 and B18.4/3 for open or short circuit. Check the circuit across A4.X1.60/38 and B18.4/4 for open or short circuit. Check the circuit across A4.X1.60/44 and B18.4/2 for open or short circuit. Check the circuit across A20.X10.14/2 and B18.4/1 for open or short circuit. Make a visual check on each connector. Is any abnormality recognized? No: Go to Step4 Yes: Go to Step8
	Step4	Inspection procedure Turn the starter switch in OFF. Replace component “B18 (Air flow and intake air temperature sensor)”. Reinstall all the removed connectors. Turn the starter switch in ON. Perform the learned value resetting procedure of B18 (Air flow and intake air temperature sensor) which A4 (Combustion engine Control unit) learns. Go to Step5
	Step5	Inspection procedure Turn the starter switch in OFF. Reinstall all the removed connectors. Erase fault memory and perform a test drive. Check if this diagnosis code has occurred. Are current fault codes present? No: Go to Step6 Yes: Go to Step7
	Step6	Inspection completed
	Step7	Inspection procedure Perform the operation start and replace A4 (Combustion engine Control unit). Go to Step6
	Step8	Inspection procedure Turn the starter switch in OFF. Remove the connector of A4 (Combustion engine Control unit). Remove the connector of X39 (Intermediate connector). Remove the connector of A20 (SAM). Check the circuit across A4.X1.60/42 and X39.12/4 for open or short circuit. Check the circuit across A4.X1.60/38 and X39.12/5 for open or short circuit. Check the circuit across A4.X1.60/44 and X39.12/6 for open or short circuit. Make a visual check on each connector. Is any abnormality recognized? No: Go to Step9 Yes: Go to Step10
	Step9	Inspection procedure Repair or replace the harness across B18 (Air flow and intake air temperature sensor) and X39 (Intermediate connector). Reinstall all the removed connectors. Erase fault memory and perform a test drive. Check if this diagnosis code has occurred. Are current fault codes present? No: Go to Step6 Yes: Go to Step4

https://truckmanualshub.com/

Inspection procedure	Step10	Inspection procedure Repair or replace the harness across A4 (Combustion engine Control unit) and X39 (Intermediate connector). Reinstall all the removed connectors. Erase fault memory and perform a test drive. Check if this diagnosis code has occurred. Are current fault codes present? No: Go to Step6 Yes: Go to Step4

132-20: Air flow meterOffset drift high error for HFM sensor at engine stand still.

Generation condition	[Test Condition] • Monitoring is active if the ECU is not in afterrun • The check is carried out at ECM start before engine cranking, 5.00s after turning key on, during a period of 300.00ms, if FId_AFSPlOffsDrft is not set by another failure. • Engine speed must be 0 during test.
	[Fault Detection] • periodic HFM signal > 606.00us.
	[Defect Debouncing] • Defect condition exceeded cumulatively > 100.00ms • Failure is detected if active for 50% of the time
Fault healing	• periodic HFM signal < 606.00us. • Healing is possible only during next driving cycle
System reaction	• None (only via the inhibit handler)
	• 1) FId / Replacement value for OxiCat temperature downstream used for modelling • 2) FId / Reciprocal lambda signal replaced by substitute value for modelling • 3) FId / EGR switched off • 4) FId / Dew Point detection for Lambda Sensor (LSU) not possible - LSU Heater switched on after a fix time • 5) Fid / SCR Monitoring or DEF injection release not possible (according calibration of Release Masks) • 6) FId / Engine brake position in open loop (closed loop control for exhaust flow suppressed) • 7) FId / Adaptation of the correction values of Fuel Mass Observer (FMO) inhibited (no correction of detected deviation between injected fuel and Lambda sensor signal) • 8) FId / Fuel Mass Observer (FMO) switched off (no monitoring of injected fuel by Lambda sensor) • 9) FId / Monitoring of particulate filter (DPF) by comparing the calculated flow resistance with measured pressure drop disabled • 10) FId / Inhibit DPF monitor • 11) FId / Monitoring for the destroyed particle filter (DPF) by minimal flow resistance disabled • 12) FId / Substitute calibration array is used to determinate the regeneration lock-out time of particulate filter (DPF) • 13) FId / Substitute parameter set of maximum values is used for the calculation of fuel consumption, operating hours and distance covered since the last successful regeneration of particulate filter (DPF) • 14) FId / Particulate filter ((DPF) Regeneration inhibited • 15) FId / Soot mass calculation of particulate filter (DPF) deactivated, only simulation is used. • 16) FId / Service regeneration of Particulate filter ((DPF) inhibited (due to DPF failure) • 17) FId / Friction torque due to particulate filter (DPF) flow resistance set to • 18) FId / Zero Fuel Calibration (ZFC) of injectors by Lambda Sensor signal disabled • 19) FId / Inhibit Charged Air Cooler monitoring • 20) FId / Status of function identifier FId_EngDemTrqLimErr5 • 21) FId / Engine speed Limitation 2 for HIgh/Low engine speed (HLS) control active
Failure cause	• Inaccurate or defective air mass sensor, or defect in the wiring of the HFM sensor.

https://truckmanualshub.com/

Failure repair		• Check wiring and the accuracy of the air mass sensor and replace it if necessary
Inspection procedure	Step1	Inspect or verify the following items. Repair or replace faulty items as necessary. If one of diagnosis codes associated with A20 (SAM) is generated, make a system diagnosis according to the diagnosis code. Go to Step2
	Step2	Inspection procedure Turn the starter switch in OFF. Remove the connector of A4 (Combustion engine Control unit). Remove the connector of B18 (Air flow and intake air temperature sensor). Remove the connector of A20 (SAM). Check the circuit across A4.X1.60/42 and B18.4/3 for open or short circuit. Check the circuit across A4.X1.60/38 and B18.4/4 for open or short circuit. Check the circuit across A4.X1.60/44 and B18.4/2 for open or short circuit. Check the circuit across A20.X10.14/2 and B18.4/1 for open or short circuit. Make a visual check on each connector. Is any abnormality recognized? No: Go to Step3 Yes: Go to Step7
	Step3	Inspection procedure Turn the starter switch in OFF. Replace component “B18 (Air flow and intake air temperature sensor)”. Reinstall all the removed connectors. Turn the starter switch in ON. Perform the learned value resetting procedure of B18 (Air flow and intake air temperature sensor) which A4 (Combustion engine Control unit) learns. Go to Step4
	Step4	Inspection procedure Turn the starter switch in OFF. Reinstall all the removed connectors. Erase fault memory and perform a test drive. Check if this diagnosis code has occurred. Are current fault codes present? No: Go to Step6 Yes: Go to Step5
	Step5	Inspection procedure Perform the operation start and replace A4 (Combustion engine Control unit). Go to Step6
	Step6	Inspection completed
	Step7	Inspection procedure Turn the starter switch in OFF. Remove the connector of A4 (Combustion engine Control unit). Remove the connector of X39 (Intermediate connector). Remove the connector of A20 (SAM). Check the circuit across A4.X1.60/42 and X39.12/4 for open or short circuit. Check the circuit across A4.X1.60/38 and X39.12/5 for open or short circuit. Check the circuit across A4.X1.60/44 and X39.12/6 for open or short circuit. Make a visual check on each connector. Is any abnormality recognized? No: Go to Step8 Yes: Go to Step9
	Step8	Inspection procedure Repair or replace the harness across B18 (Air flow and intake air temperature sensor) and X39 (Intermediate connector). Reinstall all the removed connectors. Erase fault memory and perform a test drive. Check if this diagnosis code has occurred. Are current fault codes present? No: Go to Step6 Yes: Go to Step3

https://truckmanualshub.com/

Inspection procedure	Step9	Inspection procedure Repair or replace the harness across A4 (Combustion engine Control unit) and X39 (Intermediate connector). Reinstall all the removed connectors. Erase fault memory and perform a test drive. Check if this diagnosis code has occurred. Are current fault codes present? No: Go to Step6 Yes: Go to Step3

132-21: Air flow meterOffset drift low error for HFM sensor at engine stand still.

Generation condition	[Test Condition] • Monitoring is active if the ECU is not in afterrun • The check is carried out at ECM start before engine cranking, 5.00s after turning key on, during a period of 300.00ms, if FId_AFSPlOffsDrft is not set by another failure. • Engine speed must be 0 during test.
	[Fault Detection] • Periodic HFM signal < 467.00us.
	[Defect Debouncing] • Defect condition exceeded cumulatively > 100.00ms • Failure is detected if active for 50% of the time
Fault healing	• Periodic HFM signal > 467.00us. • Healing is possible only during next driving cycle
System reaction	• None (only via the inhibit handler)
	• 1) FId / Replacement value for OxiCat temperature downstream used for modelling • 2) FId / Reciprocal lambda signal replaced by substitute value for modelling • 3) FId / EGR switched off • 4) FId / Dew Point detection for Lambda Sensor (LSU) not possible - LSU Heater switched on after a fix time • 5) Fid / SCR Monitoring or DEF injection release not possible (according calibration of Release Masks) • 6) FId / Engine brake position in open loop (closed loop control for exhaust flow suppressed) • 7) FId / Monitoring of particulate filter (DPF) by comparing the calculated flow resistance with measured pressure drop disabled • 8) FId / Inhibit DPF monitor • 9) FId / Monitoring for the destroyed particle filter (DPF) by minimal flow resistance disabled • 10) FId / Substitute calibration array is used to determinate the regeneration lock-out time of particulate filter (DPF) • 11) FId / Substitute parameter set of maximum values is used for the calculation of fuel consumption, operating hours and distance covered since the last successful regeneration of particulate filter (DPF) • 12) FId / Particulate filter ((DPF) Regeneration inhibited • 13) FId / Soot mass calculation of particulate filter (DPF) deactivated, only simulation is used. • 14) FId / Service regeneration of Particulate filter ((DPF) inhibited (due to DPF failure) • 15) FId / Friction torque due to particulate filter (DPF) flow resistance set to • 16) FId / Zero Fuel Calibration (ZFC) of injectors by Lambda Sensor signal disabled • 17) FId / Inhibit Charged Air Cooler monitoring • 18) FId / Status of function identifier FId_EngDemTrqLimErr5 • 19) FId / Engine speed Limitation 2 for HIgh/Low engine speed (HLS) control active
Failure cause	• Inaccurate or defective air mass sensor, or defect in the wiring of the HFM sensor.
Failure repair	• Check wiring and the accuracy of the air mass sensor and replace it if necessary

https://truckmanualshub.com/

Inspection procedure	Step1	Inspect or verify the following items. Repair or replace faulty items as necessary. If one of diagnosis codes associated with A20 (SAM) is generated, make a system diagnosis according to the diagnosis code. Go to Step2
	Step2	Inspection procedure Turn the starter switch in OFF. Remove the connector of A4 (Combustion engine Control unit). Remove the connector of B18 (Air flow and intake air temperature sensor). Remove the connector of A20 (SAM). Check the circuit across A4.X1.60/42 and B18.4/3 for open or short circuit. Check the circuit across A4.X1.60/38 and B18.4/4 for open or short circuit. Check the circuit across A4.X1.60/44 and B18.4/2 for open or short circuit. Check the circuit across A20.X10.14/2 and B18.4/1 for open or short circuit. Make a visual check on each connector. Is any abnormality recognized? No: Go to Step3 Yes: Go to Step7
	Step3	Inspection procedure Turn the starter switch in OFF. Replace component “B18 (Air flow and intake air temperature sensor)”. Reinstall all the removed connectors. Turn the starter switch in ON. Perform the learned value resetting procedure of B18 (Air flow and intake air temperature sensor) which A4 (Combustion engine Control unit) learns. Go to Step4
	Step4	Inspection procedure Turn the starter switch in OFF. Reinstall all the removed connectors. Erase fault memory and perform a test drive. Check if this diagnosis code has occurred. Are current fault codes present? No: Go to Step6 Yes: Go to Step5
	Step5	Inspection procedure Perform the operation start and replace A4 (Combustion engine Control unit). Go to Step6
	Step6	Inspection completed
	Step7	Inspection procedure Turn the starter switch in OFF. Remove the connector of A4 (Combustion engine Control unit). Remove the connector of X39 (Intermediate connector). Remove the connector of A20 (SAM). Check the circuit across A4.X1.60/42 and X39.12/4 for open or short circuit. Check the circuit across A4.X1.60/38 and X39.12/5 for open or short circuit. Check the circuit across A4.X1.60/44 and X39.12/6 for open or short circuit. Make a visual check on each connector. Is any abnormality recognized? No: Go to Step8 Yes: Go to Step9
	Step8	Inspection procedure Repair or replace the harness across B18 (Air flow and intake air temperature sensor) and X39 (Intermediate connector). Reinstall all the removed connectors. Erase fault memory and perform a test drive. Check if this diagnosis code has occurred. Are current fault codes present? No: Go to Step6 Yes: Go to Step3

https://truckmanualshub.com/

Inspection procedure	Step9	Inspection procedure Repair or replace the harness across A4 (Combustion engine Control unit) and X39 (Intermediate connector). Reinstall all the removed connectors. Erase fault memory and perform a test drive. Check if this diagnosis code has occurred. Are current fault codes present? No: Go to Step6 Yes: Go to Step3

156-0: Sensor voltage of fuel pressure (Rail) sensor above upper limit.

Generation condition	[Test Condition] • Monitoring is active while the battery voltage is over 10.00V • Monitoring not inhibited by FID_RailPSS due to another failure
	[Fault Detection] • The raw sensor voltage > 4.84V or the uncorrected raw sensor voltage > 4.90V
	[Defect Debouncing] • Defect condition exceeded cumulatively > 140.00ms • Failure is detected if active for 50% of the time
Fault healing	• The raw sensor voltage < 4.84V AND the uncorrected raw sensor voltage < 4.90V

https://truckmanualshub.com/

System reaction		• Only According FID (see FID's)
		• 1) Fid / Correction due to engine operating mode transitions inhibited • 2) Fid / SCR Monitoring or DEF injection release not possible (according calibration of Release Masks) • 3) Fid / Reagent dosing quantity for SCR reduced (to DStgy_facUreaDesRed_C) • 4) FId / Status of function identifier FId_EngDemTrqLimErr1 • 5) FId / Torque limitation 2 activated for power reduction • 6) FId / Calibration of actuation time for injectors executed • 7) FId / Engine speed Limitation 2 for HIgh/Low engine speed (HLS) control active • 8) FId / Analysis of engine starting problem disabled • 9) FId / Injector preparation before first energising disabled • 10) FId / Run Up test inhibited • 11) FId / Actuator test for Metering Unit (MeUn) of Common Rail disabled • 12) FId / Set point test of Metering Unit (MeUn) of Common Rail disabled • 13) FId / Substitute reaction: violation of a running condition and the pcv test will not be executed • 14) FId / Fuel rail pressure control valve (PCV) set point test inhibited • 15) FId / Inhibit DPF monitor • 16) FId / Pressure wave correction of cylinder specific fuel quantity (QWC) disabled • 17) FId / Closed loop Control of Fuel Rail pressure disabled (open loop control by pre control map for MeUn and PCV) • 18) FId / High pressure test inhibited • 19) FId / Offset test of Rail pressure sensor disabled • 20) FId / Offset test of Rail pressure sensor only released, if this failure path is tested • 21) FId / Default Rail Pressure value instead of measured pressure used • 22) FId / Accepted range of Fuel Rail pressure set point by fix min and max value instead of engine speed and load dependant limits • 23) FId / Rail Pressure set point test inhibited • 24) FId / Zero Fuel Calibration (ZFC) of injectors disabled • 25) FId / Zero Fuel Calibration (ZFC) of injectors by Lambda Sensor signal disabled • 26) FId / Monitoring of particulate filter (DPF) by comparing the calculated flow resistance with measured pressure drop disabled • 27) FId / Monitoring for the destroyed particle filter (DPF) by minimal flow resistance disabled • 28) FId / Inhibit DPF efficiency monitor • 29) FId / Interrupt DPF efficiency monitor • 30) FId / Inhibit monitor for DPF frequent regeneration • 31) Fid / SCR Monitoring or DEF injection release not possible (according calibration of Release Masks) • 32) FId / Inhibit monitor for incomplete regeneration of the DPF • 33) FId / Inhibit ISS, max number of engine starts exceeded
Failure cause		• Short circuit of wiring to external source or defective pressure sensor
Failure repair		• Check wiring and proper functioning of rail pressure sensor • Replace sensor if necessary and reset learning values in EEPROM / start New learning
Inspection procedure	Step1	Inspect or verify the following items. Repair or replace faulty items as necessary. If any other fault code has occurred, perform the diagnostics procedure for the fault code. Go to Step2
	Step2	Inspection procedure If one of diagnosis codes associated with SAM ECU is generated, make a system diagnosis according to the diagnosis code. Go to Step3

https://truckmanualshub.com/

Inspection procedure	Step3	Inspection procedure Turn the starter switch in OFF. Remove the connector of A4 (Combustion engine Control unit). Remove the connector of B51 (Rail pressure sensor). Check the circuit across B51.3/3 and A4.X1.60/39 for open or short circuit. Check the circuit across B51.3/2 and A4.X1.60/43 for open or short circuit. Check the circuit across B51.3/1 and A4.X1.60/8 for open or short circuit. Make a visual check on each connector. Is any abnormality recognized? No: Go to Step4 Yes: Go to Step8
	Step4	Inspection procedure Turn the starter switch in OFF. Replace component “B51 (Rail pressure sensor)”. Reinstall all the removed connectors. Turn the starter switch in ON. Perform the learned value resetting procedure of B51 (Rail pressure sensor) which A4 (Combustion engine Control unit) learns. Go to Step5
	Step5	Inspection procedure Turn the starter switch in OFF. Reinstall all the removed connectors. Erase fault memory and perform a test drive. Check if this diagnosis code has occurred. Are current fault codes present? No: Go to Step7 Yes: Go to Step6
	Step6	Inspection procedure Perform the operation start and replace A4 (Combustion engine Control unit). Go to Step7
	Step7	Inspection completed
	Step8	Inspection procedure Repair or replace electrical lines. Reinstall all the removed connectors. Erase fault memory and perform a test drive. Check if this diagnosis code has occurred. Are current fault codes present? No: Go to Step7 Yes: Go to Step4

156-1: Sensor voltage of fuel pressure (Rail) sensor below lower limit.

Generation condition	[Test Condition] • Monitoring is active while the battery voltage is over 10.00V • Monitoring not inhibited by FID_RailPSS due to another failure
	[Fault Detection] • The raw sensor voltage < 342.00mV
	[Defect Debouncing] • Defect condition exceeded cumulatively > 140.00ms • Failure is detected if active for 50% of the time
Fault healing	• The raw sensor voltage > 342.00mV

https://truckmanualshub.com/

System reaction		• Only According FID (see FID's)
		• 1) Fid / Correction due to engine operating mode transitions inhibited • 2) Fid / SCR Monitoring or DEF injection release not possible (according calibration of Release Masks) • 3) Fid / Reagent dosing quantity for SCR reduced (to DStgy_facUreaDesRed_C) • 4) FId / Status of function identifier FId_EngDemTrqLimErr1 • 5) FId / Torque limitation 2 activated for power reduction • 6) FId / Calibration of actuation time for injectors executed • 7) FId / Engine speed Limitation 2 for HIgh/Low engine speed (HLS) control active • 8) FId / Analysis of engine starting problem disabled • 9) FId / Injector preparation before first energising disabled • 10) FId / Run Up test inhibited • 11) FId / Actuator test for Metering Unit (MeUn) of Common Rail disabled • 12) FId / Set point test of Metering Unit (MeUn) of Common Rail disabled • 13) FId / Substitute reaction: violation of a running condition and the pcv test will not be executed • 14) FId / Fuel rail pressure control valve (PCV) set point test inhibited • 15) FId / Inhibit DPF monitor • 16) FId / Pressure wave correction of cylinder specific fuel quantity (QWC) disabled • 17) FId / Closed loop Control of Fuel Rail pressure disabled (open loop control by pre control map for MeUn and PCV) • 18) FId / High pressure test inhibited • 19) FId / Offset test of Rail pressure sensor disabled • 20) FId / Offset test of Rail pressure sensor only released, if this failure path is tested • 21) FId / Default Rail Pressure value instead of measured pressure used • 22) FId / Accepted range of Fuel Rail pressure set point by fix min and max value instead of engine speed and load dependant limits • 23) FId / Rail Pressure set point test inhibited • 24) FId / Zero Fuel Calibration (ZFC) of injectors disabled • 25) FId / Zero Fuel Calibration (ZFC) of injectors by Lambda Sensor signal disabled • 26) FId / Monitoring of particulate filter (DPF) by comparing the calculated flow resistance with measured pressure drop disabled • 27) FId / Monitoring for the destroyed particle filter (DPF) by minimal flow resistance disabled • 28) FId / Inhibit DPF efficiency monitor • 29) FId / Interrupt DPF efficiency monitor • 30) FId / Inhibit monitor for DPF frequent regeneration • 31) FId / Inhibit monitor for incomplete regeneration of the DPF • 32) FId / Inhibit ISS, max number of engine starts exceeded
Failure cause		• Short circuit of wiring to ground or defective pressure sensor
Failure repair		• Check wiring and proper functioning of rail pressure sensor • Replace sensor if necessary and reset learning values in EEPROM / start New learning
Inspection procedure	Step1	Inspect or verify the following items. Repair or replace faulty items as necessary. If any other fault code has occurred, perform the diagnostics procedure for the fault code. If one of diagnosis codes associated with A14 (EGR valve) is generated, make a system diagnosis according to the diagnosis code. Go to Step2
	Step2	Inspection procedure If one of diagnosis codes associated with SAM ECU is generated, make a system diagnosis according to the diagnosis code. Go to Step3

https://truckmanualshub.com/

Inspection procedure	Step3	Inspection procedure Turn the starter switch in OFF. Remove the connector of A4 (Combustion engine Control unit). Remove the connector of B51 (Rail pressure sensor). Check the circuit across B51.3/3 and A4.X1.60/39 for open or short circuit. Check the circuit across B51.3/2 and A4.X1.60/43 for open or short circuit. Check the circuit across B51.3/1 and A4.X1.60/8 for open or short circuit. Make a visual check on each connector. Is any abnormality recognized? No: Go to Step4 Yes: Go to Step8
	Step4	Inspection procedure Turn the starter switch in OFF. Replace component “B51 (Rail pressure sensor)”. Reinstall all the removed connectors. Turn the starter switch in ON. Perform the learned value resetting procedure of B51 (Rail pressure sensor) which A4 (Combustion engine Control unit) learns. Go to Step5
	Step5	Inspection procedure Turn the starter switch in OFF. Reinstall all the removed connectors. Erase fault memory and perform a test drive. Check if this diagnosis code has occurred. Are current fault codes present? No: Go to Step7 Yes: Go to Step6
	Step6	Inspection procedure Perform the operation start and replace A4 (Combustion engine Control unit). Go to Step7
	Step7	Inspection completed
	Step8	Inspection procedure Repair or replace electrical lines. Reinstall all the removed connectors. Erase fault memory and perform a test drive. Check if this diagnosis code has occurred. Are current fault codes present? No: Go to Step7 Yes: Go to Step4

156-16: Sensor raw value of rail pressure sensor is above maximum offset.

Generation condition	[Test Condition] • No electrical failure of sensor nor power stage active Monitoring carried out once a driving cycle during the after-run, if: • fuel temperature > 4.96°C {40.93°F} • waiting time depending on actual fuel Pressure at “Key 15 off” elapsed, to guarantee, that he fuel pressure is dropped to ambient pressure
	[Fault Detection] • At afterrun: The Voltage of rail pressure sensor > 609.00mV for 3.00-
	[Defect Debouncing] • immediately Defect condition fulfilled for at least at Afterrun: 3.00- times
Fault healing	• Healing only possible at afterrun of next driving cycle, if no failure detected.

https://truckmanualshub.com/

System reaction		• Only according FID (see FID's)
		• 1) Fid / Correction due to engine operating mode transitions inhibited • 2) Fid / Reagent dosing quantity for SCR reduced (to DStgy_facUreaDesRed_C) • 3) FId / Status of function identifier FId_EngDemTrqLimErr1 • 4) FId / Torque limitation 2 activated for power reduction • 5) FId / Calibration of actuation time for injectors executed • 6) FId / Engine speed Limitation 2 for HIgh/Low engine speed (HLS) control active • 7) FId / Injector preparation before first energising disabled • 8) FId / Pressure wave correction of cylinder specific fuel quantity (QWC) disabled • 9) FId / Closed loop Control of Fuel Rail pressure disabled (open loop control by pre control map for MeUn and PCV) • 10) FId / Default Rail Pressure value instead of measured pressure used • 11) FId / Accepted range of Fuel Rail pressure set point by fix min and max value instead of engine speed and load dependant limits • 12) FId / Zero Fuel Calibration (ZFC) of injectors disabled • 13) FId / Zero Fuel Calibration (ZFC) of injectors by Lambda Sensor signal disabled • 14) FId / Monitoring of particulate filter (DPF) by comparing the calculated flow resistance with measured pressure drop disabled • 15) FId / Monitoring for the destroyed particle filter (DPF) by minimal flow resistance disabled • 16) Fid / SCR Monitoring or DEF injection release not possible (according calibration of Release Masks) • 17) FId / Inhibit monitor for DPF frequent regeneration • 18) FId / Inhibit monitor for incomplete regeneration of the DPF • 19) FId / Inhibit ISS, max number of engine starts exceeded
Failure cause		• Rail pressure sensor inaccurate
Failure repair		• Ensure correct wiring and proper functioning of rail pressure sensor, • Replace sensor if necessary and reset learning values in EEPROM / start New learning
Inspection procedure	Step1	Inspect or verify the following items. Repair or replace faulty items as necessary. If any other fault code has occurred, perform the diagnostics procedure for the fault code. Go to Step2
	Step2	Inspection procedure If one of diagnosis codes associated with SAM ECU is generated, make a system diagnosis according to the diagnosis code. Go to Step3
	Step3	Inspection procedure Turn the starter switch in OFF. Remove the connector of A4 (Combustion engine Control unit). Remove the connector of B51 (Rail pressure sensor). Check the circuit across B51.3/3 and A4.X1.60/39 for open or short circuit. Check the circuit across B51.3/2 and A4.X1.60/43 for open or short circuit. Check the circuit across B51.3/1 and A4.X1.60/8 for open or short circuit. Make a visual check on each connector. Is any abnormality recognized? No: Go to Step4 Yes: Go to Step8
	Step4	Inspection procedure Turn the starter switch in OFF. Replace component "B51 (Rail pressure sensor)". Reinstall all the removed connectors. Turn the starter switch in ON. Perform the learned value resetting procedure of B51 (Rail pressure sensor) which A4 (Combustion engine Control unit) learns. Go to Step5

https://truckmanualshub.com/

Inspection procedure	Step5	Inspection procedure Turn the starter switch in OFF. Reinstall all the removed connectors. Erase fault memory and perform a test drive. Check if this diagnosis code has occurred. Are current fault codes present? No: Go to Step7 Yes: Go to Step6
	Step6	Inspection procedure Perform the operation start and replace A4 (Combustion engine Control unit). Go to Step7
	Step7	Inspection completed
	Step8	Inspection procedure Repair or replace electrical lines. Reinstall all the removed connectors. Erase fault memory and perform a test drive. Check if this diagnosis code has occurred. Are current fault codes present? No: Go to Step7 Yes: Go to Step4

156-18: Sensor raw value of rail pressure sensor is below minimum offset.

Generation condition	[Test Condition] • No electrical failure of sensor nor power stage active Monitoring carried out once a driving cycle during the after-run, if: • fuel temperature > 4.96°C {40.93°F} • waiting time depending on actual fuel pressure at “Key 15 off” elapsed, to guarantee, that he fuel pressure is dropped to ambient pressure
	[Fault Detection] • At afterrun: The Voltage of rail pressure sensor < 424.00mV for 3.00-
	[Defect Debouncing] • immediately Defect condition fulfilled continuously at Afterrun: 3.00-
Fault healing	• Healing only possible at afterrun of next driving cycle, if no failure detected.
System reaction	• Only according FID (see FID’s)
	• 1) Fid / Correction due to engine operating mode transitions inhibited • 2) Fid / Reagent dosing quantity for SCR reduced (to DStgy_facUreaDesRed_C) • 3) FId / Status of function identifier FId_EngDemTrqLimErr1 • 4) FId / Torque limitation 2 activated for power reduction • 5) FId / Calibration of actuation time for injectors executed • 6) FId / Engine speed Limitation 2 for HIgh/Low engine speed (HLS) control active • 7) FId / Injector preparation before first energising disabled • 8) FId / Pressure wave correction of cylinder specific fuel quantity (QWC) disabled • 9) FId / Closed loop Control of Fuel Rail pressure disabled (open loop control by pre control map for MeUn and PCV) • 10) FId / Default Rail Pressure value instead of measured pressure used • 11) FId / Accepted range of Fuel Rail pressure set point by fix min and max value instead of engine speed and load dependant limits • 12) FId / Zero Fuel Calibration (ZFC) of injectors disabled • 13) FId / Zero Fuel Calibration (ZFC) of injectors by Lambda Sensor signal disabled • 14) FId / Monitoring of particulate filter (DPF) by comparing the calculated flow resistance with measured pressure drop disabled • 15) FId / Monitoring for the destroyed particle filter (DPF) by minimal flow resistance disabled • 16) Fid / SCR Monitoring or DEF injection release not possible (according calibration of Release Masks) • 17) FId / Inhibit monitor for DPF frequent regeneration • 18) FId / Inhibit monitor for incomplete regeneration of the DPF • 19) FId / Inhibit ISS, max number of engine starts exceeded
Failure cause	• Rail pressure sensor inaccurate

https://truckmanualshub.com/

Failure repair		• Ensure correct wiring and proper functioning of rail pressure sensor, replace sensor • Replace sensor if necessary and reset learning values in EEPROM / start New learning
Inspection procedure	Step1	Inspect or verify the following items. Repair or replace faulty items as necessary. If any other fault code has occurred, perform the diagnostics procedure for the fault code. Go to Step2
	Step2	Inspection procedure If one of diagnosis codes associated with SAM ECU is generated, make a system diagnosis according to the diagnosis code. Go to Step3
	Step3	Inspection procedure Turn the starter switch in OFF. Remove the connector of A4 (Combustion engine Control unit). Remove the connector of B51 (Rail pressure sensor). Check the circuit across B51.3/3 and A4.X1.60/39 for open or short circuit. Check the circuit across B51.3/2 and A4.X1.60/43 for open or short circuit. Check the circuit across B51.3/1 and A4.X1.60/8 for open or short circuit. Make a visual check on each connector. Is any abnormality recognized? No: Go to Step4 Yes: Go to Step8
	Step4	Inspection procedure Turn the starter switch in OFF. Replace component “B51 (Rail pressure sensor)”. Reinstall all the removed connectors. Turn the starter switch in ON. Perform the learned value resetting procedure of B51 (Rail pressure sensor) which A4 (Combustion engine Control unit) learns. Go to Step5
	Step5	Inspection procedure Turn the starter switch in OFF. Reinstall all the removed connectors. Erase fault memory and perform a test drive. Check if this diagnosis code has occurred. Are current fault codes present? No: Go to Step7 Yes: Go to Step6
	Step6	Inspection procedure Perform the operation start and replace A4 (Combustion engine Control unit). Go to Step7
	Step7	Inspection completed
	Step8	Inspection procedure Repair or replace electrical lines. Reinstall all the removed connectors. Erase fault memory and perform a test drive. Check if this diagnosis code has occurred. Are current fault codes present? No: Go to Step7 Yes: Go to Step4

158-0: Signal Range Check (SRC) for ‘Battery voltage’ reports HIGH.

Generation condition	[Test Condition] • Continuously excepted when ECM is in pre drive mode (test phase immediately after ECM ignition) or monitoring is inhibited by FId_BattUSRC set by another failure.
	[Fault Detection] • The sensor raw signal BattU_uRaw (voltage) is above 2.31V.
	[Defect Debouncing] • Defect condition exceeded cumulatively > 1000.00ms • Failure is detected if active for 50% of the time

https://truckmanualshub.com/

Fault healing		• The sensor raw signal BattU_uRaw (voltage) is equal to or below 2.31V.
System reaction		• The sensed battery voltage value is used. • Further reactions according FID (see FID's)
		• 1) FId / Detected battery voltage error (via CAN) • 2) FId / The glow plug and the glow plug control lamp are switched off • 3) FId / Calibration of Lambda Sensor disabled due to invalid Voltage Signal on CJ125 Power stage • 4) FId / The Difference Check between several Lambda Sensors is disabled • 5) FId / Dynamic Signal Monitoring of Lambda Sensor disabled • 6) FId / Electrical Open Load Check of Lambda Sensor disabled • 7) FId / Plausibility Check of O2-Signal of Lambda Sensor (e.g. with HFM or Air calculation by Boost pressure) is disabled and last valid value taken • 8) FId / Use of the battery voltage for the range check of particulate filter (DPF) is inhibited • 9) FId / Service regeneration of Particulate filter ((DPF) inhibited (due to DPF failure)
Failure cause		• Alternator voltage governor defect
Failure repair		• Replace alternator governor device or alternator
Inspection procedure	Step1	Inspection procedure If one of diagnosis codes associated with SAM ECU is generated, make a system diagnosis according to the diagnosis code. Go to Step2
	Step2	Inspection procedure Turn the starter switch in OFF. Remove the connector of A4 (Combustion engine Control unit). Remove the connector of A20 (SAM). Check the circuit across A20.X10.14/7 and A4.X2.94/1 for open or short circuit. Check the circuit across A20.X10.14/10 and A4.X2.94/3 for open or short circuit. Check the circuit across A20.X10.14/9 and A4.X2.94/5 for open or short circuit. Make a visual check on each connector. Is any abnormality recognized? No: Go to Step3 Yes: Go to Step7
	Step3	Inspection procedure Turn the starter switch in OFF. Perform the operation start and replace A20 (SAM). Reinstall all the removed connectors. Turn the starter switch in ON. Perform the learned value resetting procedure of A20 (SAM) which A4 (Combustion engine Control unit) learns. Go to Step4
	Step4	Inspection procedure Turn the starter switch in OFF. Reinstall all the removed connectors. Erase fault memory and perform a test drive. Check if this diagnosis code has occurred. Are current fault codes present? No: Go to Step6 Yes: Go to Step5
	Step5	Inspection procedure Perform the operation start and replace A4 (Combustion engine Control unit). Go to Step6
	Step6	Inspection completed
	Step7	Inspection procedure Repair or replace electrical lines. Reinstall all the removed connectors. Erase fault memory and perform a test drive. Check if this diagnosis code has occurred. Are current fault codes present? No: Go to Step6 Yes: Go to Step3

https://truckmanualshub.com/

158-1: Signal Range Check (SRC) for 'Battery voltage' reports LOW.

Generation condition		[Test Condition] • Continuously excepted when ECM is in pre drive mode (test phase immediately after ECM ignition) or monitoring is inhibited by FId_BattUSRC set by another failure.
		[Fault Detection] • The sensor raw signal BattU_uRaw (voltage) is below 768.00mV.
		[Defect Debouncing] • Defect condition exceeded cumulatively > 1000.00ms • Failure is detected if active for 50% of the time
Fault healing		• The sensor raw signal BattU_uRaw (voltage) is equal to or above 768.00mV.
System reaction		• The sensed battery voltage value is used. • Further reactions according FID (see FID's)
		• 1) FId / Detected battery voltage error (via CAN) • 2) FId / The glow plug and the glow plug control lamp are switched off • 3) FId / Calibration of Lambda Sensor disabled due to invalid Voltage Signal on CJ125 Power stage • 4) FId / The Difference Check between several Lambda Sensors is disabled • 5) FId / Dynamic Signal Monitoring of Lambda Sensor disabled • 6) FId / Electrical Open Load Check of Lambda Sensor disabled • 7) FId / Plausibility Check of O2-Signal of Lambda Sensor (e.g. with HFM or Air calculation by Boost pressure) is disabled and last valid value taken • 8) FId / Use of the battery voltage for the range check of particulate filter (DPF) is inhibited • 9) FId / Service regeneration of Particulate filter ((DPF) inhibited (due to DPF failure)
Failure cause		• Battery defect, alternator defect, wiring problems (too high resistance) or ECU defect. Occurrence possible during cold start.
Failure repair		• Replace battery or alternator. Check ECU and wiring.
Inspection procedure	Step1	Inspection procedure Turn the starter switch in OFF. Remove the connector of A4 (Combustion engine Control unit). Remove the connector of A20 (SAM). Check the circuit across A20.X10.14/7 and A4.X2.94/1 for open or short circuit. Check the circuit across A20.X10.14/10 and A4.X2.94/3 for open or short circuit. Check the circuit across A20.X10.14/9 and A4.X2.94/5 for open or short circuit. Make a visual check on each connector. Is any abnormality recognized? No: Go to Step2 Yes: Go to Step6
	Step2	Inspection procedure Turn the starter switch in OFF. Perform the operation start and replace A20 (SAM). Reinstall all the removed connectors. Turn the starter switch in ON. Perform the learned value resetting procedure of A20 (SAM) which A4 (Combustion engine Control unit) learns. Go to Step3
	Step3	Inspection procedure Turn the starter switch in OFF. Reinstall all the removed connectors. Erase fault memory and perform a test drive. Check if this diagnosis code has occurred. Are current fault codes present? No: Go to Step5 Yes: Go to Step4
	Step4	Inspection procedure Perform the operation start and replace A4 (Combustion engine Control unit). Go to Step5
	Step5	Inspection completed

Inspection procedure	Step6	Inspection procedure Repair or replace electrical lines. Reinstall all the removed connectors. Erase fault memory and perform a test drive. Check if this diagnosis code has occurred. Are current fault codes present? No: Go to Step5 Yes: Go to Step2

171-0: Signal Range Check (SRC) for 'Ambient temperature' reports HIGH.

Generation condition		[Test Condition] • Continuously.
		[Fault Detection] • The sensed raw voltage value EnvT_uRaw is above 4.93V
		[Defect Debouncing] • Defect condition exceeded cumulatively > 2.00s • Failure is detected if active for 50% of the time
Fault healing		• The sensed raw voltage value EnvT_uRaw is less than 4.93V
System reaction		• Env.temperature is frozen at last valid value on preliminary failure and ramps to fixed replacement value 19.96°C {67.93°F} if failure is validated using slope 10.00K/s or 10.00K/s depending on whether the replacement value is above or below the current value • Further reactions according FID (see FID's)
		• 1) FId / Enable Shut-off conditioning in case of high environment temperature (engine overheating) or environmental temperature sensor is out of range • 2) FId / Inhibit Charged Air Cooler monitoring • 3) FId / Inhibit OxiCat passive monitor • 4) FId / Inhibit temperature sampling • 5) FId / Replacement value for start temperatures is used for modelling • 6) FId / Inhibit the Environment temperature plausibility check • 7) FId / Default value for Environmental temperature used • 8) FId / Coolant thermostat diagnosis disabled • 9) FId / Measured Environmental temperature for Coolant Thermostat diagnosis not usable (only modelled temp) • 10) Fid / SCR Monitoring or DEF injection release not possible (according calibration of Release Masks) • 11) Fid / Ambient temperature not considered for engine start temperature evaluation • 12) FId / Environmental temperature is frozen at last valid value • 13) FId / Environmental temperature replacement value is used • 14) Fid / Classification and duration of Environmental temperature for Trip recorder inhibited • 15) FId / The Adaptation of lambda Sensor disabled • 16) FId / The Difference Check between several Lambda Sensors is disabled • 17) FId / Dynamic Signal Monitoring of Lambda Sensor disabled • 18) FId / Electrical Open Load Check of Lambda Sensor disabled • 19) FId / Plausibility Check of O2-Signal of Lambda Sensor (e.g. with HFM or Air calculation by Boost pressure) is disabled and last valid value taken • 20) FId / Pressure Compensation of O2-Signal can not be learnt - is taken from the curve (LSU_facPresComLean_CUR) • 21) FId / Use of the induction air temperature for the range check of particulate filter (DPF) is inhibited • 22) FId / Freeze the value of Exh_pPFltUs in case of a preliminary defect. • 23) FId / Fuel driven engine coolant heater switched off • 24) FId / Inhibit Physical Range Check of environmental temperature sensor • 25) FId / Calculation of Turbocharger Compressor Temperature inhibited
Failure cause		• Sensor defective or short circuit in wiring to external source
Failure repair		• Check wiring or replace sensor
Inspection procedure	Step1	Inspection procedure If one of diagnosis codes associated with SAM ECU is generated, make a system diagnosis according to the diagnosis code. Go to Step2

https://truckmanualshub.com/

Inspection procedure	Step2	Inspection procedure Turn the starter switch in OFF. Remove the connector of A4 (Combustion engine Control unit). Remove the connector of B27 (Humidity and temperature sensor “Intake air”). Check the circuit across B27.4/3 and A4.X2.94/24 for open or short circuit. Check the circuit across B27.4/4 and A4.X2.94/58 for open or short circuit. Check the circuit across B27.4/2 and A4.X2.94/34 for open or short circuit. Check the circuit across B27.4/1 and A4.X2.94/68 for open or short circuit. Make a visual check on each connector. Is any abnormality recognized? No: Go to Step3 Yes: Go to Step7
	Step3	Inspection procedure Turn the starter switch in OFF. Replace component “B27 (Humidity and temperature sensor “Intake air”)”. Reinstall all the removed connectors. Turn the starter switch in ON. Go to Step4
	Step4	Inspection procedure Turn the starter switch in OFF. Reinstall all the removed connectors. Erase fault memory and perform a test drive. Check if this diagnosis code has occurred. Are current fault codes present? No: Go to Step6 Yes: Go to Step5
	Step5	Inspection procedure Perform the operation start and replace A4 (Combustion engine Control unit). Go to Step6
	Step6	Inspection completed
	Step7	Inspection procedure Repair or replace electrical lines. Reinstall all the removed connectors. Erase fault memory and perform a test drive. Check if this diagnosis code has occurred. Are current fault codes present? No: Go to Step6 Yes: Go to Step3

171-1: Signal Range Check (SRC) for ‘Ambient temperature’ reports LOW.

Generation condition	[Test Condition] • Continuously.
	[Fault Detection] • The sensed raw voltage value EnvT_uRaw is less than 322.60mV
	[Defect Debouncing] • Defect condition exceeded cumulatively > 2.00s • Failure is detected if active for 50% of the time
Fault healing	• The sensed raw voltage value EnvT_uRaw is above 322.60mV

https://truckmanualshub.com/

System reaction		• Env.temperature is frozen at last valid value on preliminary failure and ramps to fixed replacement value 19.96°C {67.93°F} if failure is validated using slope 10.00K/s or 10.00K/s depending on whether the replacement value is above or below the current value • Further reactions according FID (see FID's)
		• 1) FId / Enable Shut-off conditioning in case of high environment temperature (engine overheating) or environmental temperature sensor is out of range • 2) FId / Inhibit Charged Air Cooler monitoring • 3) FId / Inhibit OxiCat passive monitor • 4) FId / Inhibit temperature sampling • 5) FId / Replacement value for start temperatures is used for modelling • 6) FId / Inhibit the Environment temperature plausibility check • 7) FId / Default value for Environmental temperature used • 8) FId / Coolant thermostat diagnosis disabled • 9) FId / Measured Environmental temperature for Coolant Thermostat diagnosis not usable (only modelled temp) • 10) Fid / SCR Monitoring or DEF injection release not possible (according calibration of Release Masks) • 11) Fid / Ambient temperature not considered for engine start temperature evaluation • 12) FId / Environmental temperature is frozen at last valid value • 13) FId / Environmental temperature replacement value is used • 14) Fid / Classification and duration of Environmental temperature for Trip recorder inhibited • 15) FId / The Adaptation of lambda Sensor disabled • 16) FId / The Difference Check between several Lambda Sensors is disabled • 17) FId / Dynamic Signal Monitoring of Lambda Sensor disabled • 18) FId / Electrical Open Load Check of Lambda Sensor disabled • 19) FId / Plausibility Check of O2-Signal of Lambda Sensor (e.g. with HFM or Air calculation by Boost pressure) is disabled and last valid value taken • 20) FId / Pressure Compensation of O2-Signal can not be learnt - is taken from the curve (LSU_facPresComLean_CUR) • 21) FId / Use of the induction air temperature for the range check of particulate filter (DPF) is inhibited • 22) FId / Freeze the value of Exh_pPFltUs in case of a preliminary defect. • 23) FId / Fuel driven engine coolant heater switched off • 24) FId / Inhibit Physical Range Check of environmental temperature sensor • 25) FId / Calculation of Turbocharger Compressor Temperature inhibited
Failure cause		• Sensor defective or short circuit wiring to ground
Failure repair		• Check wiring or replace sensor
Inspection procedure	Step1	Inspection procedure If one of diagnosis codes associated with SAM ECU is generated, make a system diagnosis according to the diagnosis code. Go to Step2
	Step2	Inspection procedure Turn the starter switch in OFF. Remove the connector of A4 (Combustion engine Control unit). Remove the connector of B27 (Humidity and temperature sensor "Intake air"). Check the circuit across B27.4/3 and A4.X2.94/24 for open or short circuit. Check the circuit across B27.4/4 and A4.X2.94/58 for open or short circuit. Check the circuit across B27.4/2 and A4.X2.94/34 for open or short circuit. Check the circuit across B27.4/1 and A4.X2.94/68 for open or short circuit. Make a visual check on each connector. Is any abnormality recognized? No: Go to Step3 Yes: Go to Step7
	Step3	Inspection procedure Turn the starter switch in OFF. Replace component "B27 (Humidity and temperature sensor "Intake air")". Reinstall all the removed connectors. Turn the starter switch in ON. Go to Step4

https://truckmanualshub.com/

Inspection procedure	Step4	Inspection procedure Turn the starter switch in OFF. Reinstall all the removed connectors. Erase fault memory and perform a test drive. Check if this diagnosis code has occurred. Are current fault codes present? No: Go to Step6 Yes: Go to Step5
	Step5	Inspection procedure Perform the operation start and replace A4 (Combustion engine Control unit). Go to Step6
	Step6	Inspection completed
	Step7	Inspection procedure Repair or replace electrical lines. Reinstall all the removed connectors. Erase fault memory and perform a test drive. Check if this diagnosis code has occurred. Are current fault codes present? No: Go to Step6 Yes: Go to Step3

171-7: Component 'Environment sensor' has a plausibility error.Mechanical system not responding or out of adjustment

Generation condition		[Test Condition] • Monitoring is active 2.00s after ECU initialization while engine isn't running yet, while the engine isn't cranking, 2.00s after engine startup and if the ECU is not in afterrun • The function is not inhibited by another failure (FId_EnvTAmbTempMon is not set) • The vehicle speed VehV_v exceeds the threshold 40km/h {24.86mph} • The air mass flow AFS_dm exceeds the threshold 100.00Kg/h • The air temperature in HFM Air_tAFS is <49.96°C {121.93°F} and >-3549.94°C {-6357.89°F} OR the current selected air temperature EnvT_tEnvSel_mp <49.96°C {121.93°F} and >-3549.94°C {-6357.89°F}
		[Fault Detection] • If the absolute difference between the Air Mass Flow temperature Air_tAFS and Environment Temperature EnvT_tAir_mp exceeds 20.00K
		[Defect Debouncing] • Defect condition exceeded cumulatively > 30.00s • Failure is detected if active for 50% of the time
Fault healing		• Temperature difference in range
System reaction		• None Except FIDs
		• 1) FId / Inhibit Charged Air Cooler monitoring • 2) FId / Inhibit OxiCat passive monitor • 3) Fid / SCR Monitoring or DEF injection release not possible (according calibration of Release Masks) • 4) FId / Inhibit Physical Range Check of environmental temperature sensor
Failure cause		• Environment Temperature sensor or Air Mass Flow Temperature deviating
Failure repair		• Check both sensors
Inspection procedure	Step1	Inspect or verify the following items. Repair or replace faulty items as necessary. If any diagnosis code is generated, make a system diagnosis according to the diagnosis code. Go to Step2
	Step2	Inspection procedure If one of diagnosis codes associated with SAM ECU is generated, make a system diagnosis according to the diagnosis code. Go to Step3

https://truckmanualshub.com/

Inspection procedure	Step3	Inspection procedure Turn the starter switch in OFF. Remove the connector of A4 (Combustion engine Control unit). Remove the connector of B27 (Humidity and temperature sensor “Intake air”). Check the circuit across B27.4/3 and A4.X2.94/24 for open or short circuit. Check the circuit across B27.4/4 and A4.X2.94/58 for open or short circuit. Check the circuit across B27.4/2 and A4.X2.94/34 for open or short circuit. Check the circuit across B27.4/1 and A4.X2.94/68 for open or short circuit. Make a visual check on each connector. Is any abnormality recognized? No: Go to Step4 Yes: Go to Step8
	Step4	Inspection procedure Turn the starter switch in OFF. Replace component “B27 (Humidity and temperature sensor “Intake air”)”. Reinstall all the removed connectors. Turn the starter switch in ON. Go to Step5
	Step5	Inspection procedure Turn the starter switch in OFF. Reinstall all the removed connectors. Erase fault memory and perform a test drive. Check if this diagnosis code has occurred. Are current fault codes present? No: Go to Step7 Yes: Go to Step6
	Step6	Inspection procedure Perform the operation start and replace A4 (Combustion engine Control unit). Go to Step7
	Step7	Inspection completed
	Step8	Inspection procedure Repair or replace electrical lines. Reinstall all the removed connectors. Erase fault memory and perform a test drive. Check if this diagnosis code has occurred. Are current fault codes present? No: Go to Step7 Yes: Go to Step4

171-16: The current value for the ‘Ambient temperature’ component is too low.

Generation condition	[Test Condition] • Continuously if ADC module does not report an error for the sensor.
	[Fault Detection] • The sensed sensor signal for environmental temperature EnvT_tSens is above 99.96°C {211.93°F}
	[Defect Debouncing] • Defect condition exceeded cumulatively > 10.00s • Failure is detected if active for 50% of the time
Fault healing	• The sensed sensor signal for environmental temperature EnvT_tSens is below 99.96°C {211.93°F}

https://truckmanualshub.com/

		• Env.temperature is frozen at last valid value on preliminary failure and ramps to fixed replacement value 19.96°C {67.93°F} if failure is validated using slope 10.00K/s or 10.00K/s depending on whether the replacement value is above or below the current value • Further reactions according FID (see FID's)
System reaction		• 1) FId / Environmental temperature is frozen at last valid value • 2) FId / Environmental temperature replacement value is used • 3) FId / Environmental temperature is frozen at last valid value • 4) FId / Environmental temperature replacement value is used • 5) Fid / SCR Monitoring or DEF injection release not possible (according calibration of Release Masks) • 6) FId / Inhibit the Environment temperature plausibility check • 7) FId / Inhibit Charged Air Cooler monitoring • 8) FId / Calculation of Turbocharger Compressor Temperature inhibited • 9) FId / Inhibit OxiCat passive monitor
Failure cause		• Environment temperature sensor defective
Failure repair		• Check or replace temperature sensor
Inspection procedure	Step1	Inspection procedure If one of diagnosis codes associated with A20 (SAM) is generated, make a system diagnosis according to the diagnosis code. Go to Step2
	Step2	Inspection procedure Turn the starter switch in OFF. Remove the connector of A4 (Combustion engine Control unit). Remove the connector of B27 (Humidity and temperature sensor "Intake air"). Check the circuit across B27.4/1 and A4.X2.94/24 for open or short circuit. Check the circuit across B27.4/2 and A4.X2.94/58 for open or short circuit. Check the circuit across B27.4/4 and A4.X2.94/34 for open or short circuit. Check the circuit across B27.4/3 and A4.X2.94/68 for open or short circuit. Make a visual check on each connector. Is any abnormality recognized? No: Go to Step3 Yes: Go to Step7
	Step3	Inspection procedure Turn the starter switch in OFF. Replace component "B27 (Humidity and temperature sensor "Intake air")". Reinstall all the removed connectors. Turn the starter switch in ON. Perform learning of B27 (Humidity and temperature sensor "Intake air") which A4 (Combustion engine Control unit) learns. Go to Step4
	Step4	Inspection procedure Turn the starter switch in OFF. Reinstall all the removed connectors. Erase fault memory and perform a test drive. Check if this diagnosis code has occurred. Are current fault codes present? No: Go to Step5 Yes: Go to Step6
	Step5	Inspection completed
	Step6	Inspection procedure Perform the operation start and replace A4 (Combustion engine Control unit). Go to Step5
	Step7	Inspection procedure Repair or replace electrical lines. Reinstall all the removed connectors. Erase fault memory and perform a test drive. Check if this diagnosis code has occurred. Are current fault codes present? No: Go to Step5 Yes: Go to Step3

https://truckmanualshub.com/

172-0: Signal Range Check (SRC) for 'Intake air temperature' reports HIGH.

Generation condition		[Test Condition] • Monitoring is active while the battery voltage is over 10.00V and as long as the battery voltage is over 10.00V and 2.00s after this threshold has been exceeded • The signal range checks are only carried out if ADC has not reported a module error. Continuously.
		[Fault Detection] • The sensed raw voltage value Air_uRawTIntkVUs is above 4.94V
		[Defect Debouncing] • Defect condition exceeded cumulatively > 2.00s • Failure is detected if active for 25% of the time
Fault healing		• The sensed raw voltage value Air_uRawTIntkVUs is below 4.94V
System reaction		• Temperature ramps to fixed replacement value 29.96°C {85.93°F} using slope 10.00K/s or 10.00K/s depending on whether the replacement value is above or below the current value
		• 1) FId / Replacement value for start temperatures is used for modelling • 2) FId / Reciprocal lambda signal replaced by substitute value for modelling • 3) FId / Fix substitution value (FEh) of Boost temperature transmit to CAN Message INCON (Inlet/Exhaust condition) • 4) Fid / Boost temperature not considered for engine start temperature evaluation • 5) FId / Adaptation of the correction values of Fuel Mass Observer (FMO) inhibited (no correction of detected deviation between injected fuel and Lambda sensor signal) • 6) FId / Fuel Mass Observer (FMO) switched off (no monitoring of injected fuel by Lambda sensor) • 7) FId / Correction of begin of Main injection 1 according deviation of air flow disabled • 8) FId / Use of the induction air temperature for the range check of particulate filter (DPF) is inhibited • 9) FId / Freeze the value of Exh_pPFltUs in case of a preliminary defect. • 10) FId / Freeze air intake temperature if preliminary failure is detected • 11) FId / Replace air intake temperature with default value if failure is vaildated • 12) FId / Zero Fuel Calibration (ZFC) of injectors disabled • 13) FId / Detection of cooled down combustion chamber for Zero Fuel Calibration(ZFC) disabled • 14) FId / Inhibit temperature sampling • 15) Fid / SCR Monitoring or DEF injection release not possible (according calibration of Release Masks)
Failure cause		• Short circuit of sensor to external source or defective sensor
Failure repair		• Check wiring or replace sensor
Inspection procedure	Step1	Inspection procedure If one of diagnosis codes associated with SAM ECU is generated, make a system diagnosis according to the diagnosis code. Go to Step2
	Step2	Inspection procedure Turn the starter switch in OFF. Remove the connector of A4 (Combustion engine Control unit). Remove the connector of B19 (Pressure and temperature sensor Turbocharger). Check the circuit across B19.4/3 and A4.X1.60/25 for open or short circuit. Check the circuit across B19.4/2 and A4.X1.60/12 for open or short circuit. Check the circuit across B19.4/4 and A4.X1.60/13 for open or short circuit. Check the circuit across B19.4/1 and A4.X1.60/6 for open or short circuit. Make a visual check on each connector. Is any abnormality recognized? No: Go to Step3 Yes: Go to Step7

https://truckmanualshub.com/

Inspection procedure	Step3	Inspection procedure Turn the starter switch in OFF. Replace component “B19 (Pressure and temperature sensor Turbocharger)”. Reinstall all the removed connectors. Turn the starter switch in ON. Perform the learned value resetting procedure of B19 (Pressure and temperature sensor Turbocharger) which A4 (Combustion engine Control unit) learns. Perform learning of B19 (Pressure and temperature sensor Turbocharger) which A4 (Combustion engine Control unit) learns. Go to Step4
	Step4	Inspection procedure Turn the starter switch in OFF. Reinstall all the removed connectors. Erase fault memory and perform a test drive. Check if this diagnosis code has occurred. Are current fault codes present? No: Go to Step6 Yes: Go to Step5
	Step5	Inspection procedure Perform the operation start and replace A4 (Combustion engine Control unit). Go to Step6
	Step6	Inspection completed
	Step7	Inspection procedure Repair or replace electrical lines. Reinstall all the removed connectors. Erase fault memory and perform a test drive. Check if this diagnosis code has occurred. Are current fault codes present? No: Go to Step6 Yes: Go to Step3

172-1: Signal Range Check (SRC) for ‘Intake air temperature’ reports LOW.

Generation condition	[Test Condition] • Monitoring is active while the battery voltage is over 10.00V and as long as the battery voltage is over 10.00V and 2.00s after this threshold has been exceeded • The signal range checks are only carried out if ADC has not reported a module error. Continuously.
	[Fault Detection] • The sensed raw voltage value Air_uRawTIntkVUs is less than 295.60mV
	[Defect Debouncing] • Defect condition exceeded cumulatively > 2.00s • Failure is detected if active for 25% of the time
Fault healing	• The sensed raw voltage value Air_uRawTIntkVUs is above 295.60mV

https://truckmanualshub.com/

System reaction		• Temperature ramps to fixed replacement value 29.96°C {85.93°F} using slope 10.00K/s or 10.00K/s depending on whether the replacement value is above or below the current value
		• 1) FId / Replacement value for start temperatures is used for modelling • 2) FId / Reciprocal lambda signal replaced by substitute value for modelling • 3) FId / Fix substitution value (FEh) of Boost temperature transmit to CAN Message INCON (Inlet/Exhaust condition) • 4) Fid / Boost temperature not considered for engine start temperature evaluation • 5) FId / Adaptation of the correction values of Fuel Mass Observer (FMO) inhibited (no correction of detected deviation between injected fuel and Lambda sensor signal) • 6) FId / Fuel Mass Observer (FMO) switched off (no monitoring of injected fuel by Lambda sensor) • 7) FId / Correction of begin of Main injection 1 according deviation of air flow disabled • 8) FId / Use of the induction air temperature for the range check of particulate filter (DPF) is inhibited • 9) FId / Freeze the value of Exh_pPFltUs in case of a preliminary defect. • 10) FId / Freeze air intake temperature if preliminary failure is detected • 11) FId / Replace air intake temperature with default value if failure is vaildated • 12) FId / Zero Fuel Calibration (ZFC) of injectors disabled • 13) FId / Detection of cooled down combustion chamber for Zero Fuel Calibration(ZFC) disabled • 14) FId / Inhibit temperature sampling • 15) Fid / SCR Monitoring or DEF injection release not possible (according calibration of Release Masks) • 16) FId / Status of function identifier FId_EngDemTrqLimErr1 • 17) FId / Torque limitation 2 activated for power reduction • 18) FId / Engine speed Limitation 2 for HIgh/Low engine speed (HLS) control active
Failure cause		• Short circuit of sensor to ground or defective sensor
Failure repair		• Check wiring or replace sensor
Inspection procedure	Step1	Inspection procedure If one of diagnosis codes associated with SAM ECU is generated, make a system diagnosis according to the diagnosis code. Go to Step2
	Step2	Inspection procedure Turn the starter switch in OFF. Remove the connector of A4 (Combustion engine Control unit). Remove the connector of B19 (Pressure and temperature sensor Turbocharger). Check the circuit across B19.4/3 and A4.X1.60/25 for open or short circuit. Check the circuit across B19.4/2 and A4.X1.60/12 for open or short circuit. Check the circuit across B19.4/4 and A4.X1.60/13 for open or short circuit. Check the circuit across B19.4/1 and A4.X1.60/6 for open or short circuit. Make a visual check on each connector. Is any abnormality recognized? No: Go to Step3 Yes: Go to Step7
	Step3	Inspection procedure Turn the starter switch in OFF. Replace component “B19 (Pressure and temperature sensor Turbocharger)”. Reinstall all the removed connectors. Turn the starter switch in ON. Perform the learned value resetting procedure of B19 (Pressure and temperature sensor Turbocharger) which A4 (Combustion engine Control unit) learns. Perform learning of B19 (Pressure and temperature sensor Turbocharger) which A4 (Combustion engine Control unit) learns. Go to Step4

https://truckmanualshub.com/

Inspection procedure	Step4	Inspection procedure Turn the starter switch in OFF. Reinstall all the removed connectors. Erase fault memory and perform a test drive. Check if this diagnosis code has occurred. Are current fault codes present? No: Go to Step6 Yes: Go to Step5
	Step5	Inspection procedure Perform the operation start and replace A4 (Combustion engine Control unit). Go to Step6
	Step6	Inspection completed
	Step7	Inspection procedure Repair or replace electrical lines. Reinstall all the removed connectors. Erase fault memory and perform a test drive. Check if this diagnosis code has occurred. Are current fault codes present? No: Go to Step6 Yes: Go to Step3

172-2: More than one inkate air temperature sensors have plausibility error.

Generation condition		[Test Condition] • Once in a driving cycle at ECM start if an engine cold start has been detected: • monitoring not inhibited by another failure (FId_AirTMonPlausCSOk not set) • engine speed = 0 • Engine OFF time > 5.00h
		[Fault Detection] • If more than one sensor is deviating and it cannot be clearly identified which one.
		[Defect Debouncing] • Defect condition exceeded cumulatively > 500.00ms • Failure is detected if active for 50% of the time
Fault healing		• Temperature value measured for the considered sensor is plausible. Healing possible only at next plausible check (after ECM restart)
System reaction		• None except FIDs
		• 1) Fid / SCR Monitoring or DEF injection release not possible (according calibration of Release Masks) • 2) FId / Inhibit plausibility check of EGR Cooler Temperature Downstream • 3) FId / Inhibit Charged Air Cooler monitoring • 4) FId / Calculation of Turbocharger Compressor Temperature inhibited
Failure cause		• More than one temperature sensor considered for enhanced plausibility check is drifted
Failure repair		• Check all involved temperature sensor
Inspection procedure	Step1	Inspection procedure Inspect the suspected factors mentioned above sequentially to locate faulty parts. Repair or replace the faulty part as necessary.

174-0: Signal Range Check (SRC) for 'Fuel temperature' reports HIGH.

Generation condition	[Test Condition] • Monitoring is active as long as the battery voltage is over 10.00V and 2.00s after this threshold has been exceeded • Continuously
	[Fault Detection] • The sensor raw signal >4.94V.
	[Defect Debouncing] • Defect condition exceeded cumulatively > 2.00s • Failure is detected if active for 50% of the time
Fault healing	• The sensor raw signal <4.94V.

https://truckmanualshub.com/

System reaction		• The fuel temperature ramps (with slope 15.00K/s (rising) or 15.00K/s (dropping) to still actual Fuel temperature if this is not inhibited by the FID_FuelTFlSys due to another failure, • else Coolant Temperature if this is not Inhibited by FID_FuelTCTS due to another failure, • else fixed default value 64.96°C {148.93°F} • Further reactions according FID (see FID's)
		• 1) Fid / Fuel temperature not considered for engine start temperature evaluation • 2) FId / Default value for fuel temperature transmited via CAN • 3) FId / The actual evaluated Fuel temperature can not be used for substitution • 4) FId / Freeze fuel Temperature if preliminary failure detected • 5) FId / The replacement value for fuel temperature is used • 6) FId / Pressure wave correction of cylinder specific fuel quantity (QWC) disabled (due to defective fuel Temp Sensor) • 7) FId / Zero Fuel Calibration (ZFC) of injectors disabled • 8) FId / Fuel temperature plausibility error detected
Failure cause		• Sensor defective or short circuit to external source
Failure repair		• Check wiring or replace sensor
Inspection procedure	Step1	Inspection procedure Turn the starter switch in OFF. Remove the connector of B26 (Fuel temperature sensor). Make a visual check on each connector. Measure the resistance between B26 (Fuel temperature sensor) terminals to check for open-circuit. Special features If any visible damage is found, repair or replace the affected part and interrupt the inspection process. No abnormalities? No: Go to Step2 Yes: Go to Step3
	Step2	Inspection procedure Turn the starter switch in OFF. Replace component "B26 (Fuel temperature sensor)". Reinstall all the removed connectors. Erase fault memory and perform a test drive. If the diagnosis code has occurred even during the test drive, start the operation and then replace the A4 (Combustion engine Control unit). Inspection completed
	Step3	Inspection procedure Turn the starter switch in OFF. Remove the connector of A1 ECU. Check electrical line between pins A4.X1.60/57 and X45.12/2 for open circuit. Check electrical line between pins A4.X1.60/54 and X45.12/1 for open circuit. Check electrical line between pins A4.X1.60/57 and X45.12/2 for short circuit to positive. Is any abnormality recognized? Yes: Go to Step5
	Step4	Inspection procedure Turn the starter switch in OFF. Reinstall all the removed connectors. Erase fault memory and perform a test drive. If the diagnosis code has occurred even during the test drive, start the operation and then replace the A4 (Combustion engine Control unit). Inspection completed
	Step5	Inspection procedure Repair or replace electrical lines. Reinstall all the removed connectors. Erase fault memory and perform a test drive. If the diagnosis code has occurred even during the test drive, start the operation and then replace the A4 (Combustion engine Control unit). Inspection completed

https://truckmanualshub.com/

174-1: Signal Range Check (SRC) for 'Fuel temperature' reports LOW.

Generation condition		[Test Condition] • Monitoring is active as long as the battery voltage is over 10.00V and 2.00s after this threshold has been exceeded • Continuously
		[Fault Detection] • The sensor raw signal < 298.00mV.
		[Defect Debouncing] • Defect condition exceeded cumulatively > 2.00s • Failure is detected if active for 50% of the time
Fault healing		• The sensor raw signal > 298.00mV.
System reaction		• The fuel temperature ramps (with slope 15.00K/s (rising) or 15.00K/s (dropping) to still actual Fuel temperature if this is not inhibited by the FID_FuelTFlSys due to another failure, • else Coolant Temperature if this is not Inhibited by FID_FuelTCTS due to another failure, • else fixed default value 64.96°C {148.93°F} • Further reactions according FID (see FID's)
		• 1) Fid / Fuel temperature not considered for engine start temperature evaluation • 2) FId / Default value for fuel temperature transmited via CAN • 3) FId / The actual evaluated Fuel temperature can not be used for substitution • 4) FId / Freeze fuel Temperature if preliminary failure detected • 5) FId / The replacement value for fuel temperature is used • 6) FId / Pressure wave correction of cylinder specific fuel quantity (QWC) disabled (due to defective fuel Temp Sensor) • 7) FId / Zero Fuel Calibration (ZFC) of injectors disabled • 8) FId / Fuel temperature plausibility error detected
Failure cause		• Sensor defective or short circuit to ground
Failure repair		• Check wiring or replace sensor
Inspection procedure	Step1	Inspection procedure Turn the starter switch in OFF. Remove the connector of B26 (Fuel temperature sensor). Make a visual check on each connector. Measure the resistance between B26 (Fuel temperature sensor) and ground or each terminal to check for short-circuit and electrical leakage. Special features If any visible damage is found, repair or replace the affected part and interrupt the inspection process. No abnormalities? No: Go to Step2 Yes: Go to Step3
	Step2	Inspection procedure Turn the starter switch in OFF. Replace component "B26 (Fuel temperature sensor)". Reinstall all the removed connectors. Erase fault memory and perform a test drive. If the diagnosis code has occurred even during the test drive, start the operation and then replace the A4 (Combustion engine Control unit). Inspection completed
	Step3	Inspection procedure Turn the starter switch in OFF. Remove the connector of A1 ECU. Check harness between A4 (Combustion engine Control unit) and B26 (Fuel temperature sensor) for short-circuit to another line. Is any abnormality recognized? No: Go to Step4 Yes: Go to Step5

https://truckmanualshub.com/

Inspection procedure	Step4	Inspection procedure Turn the starter switch in OFF. Reinstall all the removed connectors. Erase fault memory and perform a test drive. If the diagnosis code has occurred even during the test drive, start the operation and then replace the A4 (Combustion engine Control unit). Inspection completed
	Step5	Inspection procedure Repair or replace electrical lines. Reinstall all the removed connectors. Erase fault memory and perform a test drive. If the diagnosis code has occurred even during the test drive, start the operation and then replace the A4 (Combustion engine Control unit). Inspection completed

174-2: Component 'Fuel temperature sensor' has a plausibility error.

Generation condition		[Test Condition] • Initial measured temperatures are frozen and evaluated if: • Engine off time > 5.00h. • Plausibility test not inhibited by FId set
		[Fault Detection] • Temperature difference > 150.00K at 100.00s OR Temperature difference > 150.00K at 100.00s and < 150.00K at 100.00s but no heater is active (AddHtr_stDet = 0) failure is detected • Temperature differences limits are applied in curves depending on engine OFF time.
		[Defect Debouncing] • Immediate
Fault healing		• Temperature difference is in range
System reaction		• None
Failure cause		• Fuel temperature sensor defective
Failure repair		• Check sensor
Inspection procedure	Step1	Inspection procedure Inspect the suspected factors mentioned above sequentially to locate faulty parts. Repair or replace the faulty part as necessary.

174-16: The fuel temperature is too high.

Generation condition	[Test Condition] • Continuously
	[Fault Detection] • The sensed sensor signal FuelT_tSens is above 99.96°C {211.93°F}
	[Defect Debouncing] • Defect condition exceeded cumulatively > 10.00s • Failure is detected if active for 50% of the time
Fault healing	• The sensed sensor signal FuelT_tSens is below 99.96°C {211.93°F}
System reaction	• The fuel temperature ramps (with slope 15.00K/s (rising) or 15.00K/s (dropping) to still actual Fuel temperature if this is not inhibited by the FID_FuelTFlSys due to another failure, • else Coolant Temperature if this is not inhibited by FID_FuelTCTS due to another failure, • else fixed default value 64.96°C {148.93°F} • Further reactions according FID (see FID's)
	• 1) FId / The Coolant Temperature can not be used for substitution of fuel temperature • 2) FId / The actual evaluated Fuel temperature can not be used for substitution • 3) FId / Freeze fuel Temperature if preliminary failure detected • 4) FId / The replacement value for fuel temperature is used • 5) FId / Fuel temperature plausibility error detected
Failure cause	• Fuel temperature sensor defective

https://truckmanualshub.com/

Failure repair		• Check or replace sensor
Inspection procedure	Step1	Inspection procedure Inspect the suspected factors mentioned above sequentially to locate faulty parts. Repair or replace the faulty part as necessary.

188-0: Engine speed exceeds the upper limit while HLSDem is active.

Generation condition		[Test Condition] • Following test conditions should be fulfilled: Error path not inhibited by FID, Engine in normal mode, Engine Temperature between 59.96°C {139.93°F} and 109.96°C {229.93°F}, HLS is currently active, Vehicle speed < 1km/h {0.62mph}, Torque demand from speed governor, Drive train is open grip < 0.01- and Engine speed > 50.00rpm • Monitoring is released: HLSDem_stMonRlsCon_mp is set
		[Fault Detection] • The maximum permitted limit HLSDem_nMonMax_mp for the engine speed Epm_nEng is exceeded. • Permitted speed is the minimum value between 1600.00rpm and idle speed increased by multiplied % factor 30.00%
		[Defect Debouncing] • Defect condition fulfilled continuously >2000.0 ms
Fault healing		• The maximum permitted limit HLSDem_nMonMax_mp for the engine speed Epm_nEng is not exceeded.
System reaction		• None
Failure cause		• Injection system problem, injectors deviation
Failure repair		• Replace Injectors
Inspection procedure	Step1	Inspection procedure Turn the starter switch in OFF. Remove the connector of A4 (Combustion engine Control unit). Remove the connector of Y15 (Fuel injector 1). Remove the connector of Y16 (Fuel injector 2). Remove the connector of Y17 (Fuel injector 3). Remove the connector of Y18 (Fuel injector 4). Check the circuit across Y15.2/1 and A4.X1.60/31 for open or short circuit. Check the circuit across Y15.2/2 and A4.X1.60/46 for open or short circuit. Check the circuit across Y16.2/1 and A4.X1.60/17 for open or short circuit. Check the circuit across Y16.2/2 and A4.X1.60/2 for open or short circuit. Check the circuit across Y17.2/1 and A4.X1.60/16 for open or short circuit. Check the circuit across Y17.2/2 and A4.X1.60/1 for open or short circuit. Check the circuit across Y18.2/1 and A4.X1.60/32 for open or short circuit. Check the circuit across Y18.2/2 and A4.X1.60/47 for open or short circuit. Make a visual check on each connector. Is any abnormality recognized? No: Go to Step2 Yes: Go to Step6
	Step2	Inspection procedure Reinstall all the removed connectors. Turn the starter switch in ON. Erase the fault code. Execute the control “Fuel injector”. Turn the starter switch in OFF. Replace the damaged Fuel injector. Perform the learned value resetting procedure of Fuel injector which A4 (Combustion engine Control unit) learns. Perform coding of Fuel injector which A4 (Combustion engine Control unit) learns. Go to Step3

https://truckmanualshub.com/

Inspection procedure	Step3	Inspection procedure Turn the starter switch in OFF. Reinstall all the removed connectors. Erase fault memory and perform a test drive. Check if this diagnosis code has occurred. Are current fault codes present? No: Go to Step4 Yes: Go to Step5
	Step4	Inspection completed
	Step5	Inspection procedure Perform the operation start and replace A4 (Combustion engine Control unit). Go to Step4
	Step6	Inspection procedure Repair or replace electrical lines. Reinstall all the removed connectors. Erase fault memory and perform a test drive. Check if this diagnosis code has occurred. Are current fault codes present? No: Go to Step4 Yes: Go to Step2

188-1: Engine speed falls below the lower limit while HLSDem is active.

Generation condition		[Test Condition] • Following test conditions should be fulfilled: Error path not inhibited by FID, Engine in normal mode, Engine Temperature between 59.96°C {139.93°F} and 109.96°C {229.93°F}, HLS is currently active, Vehicle speed < 1km/h {0.62mph}, Torque demand from speed governor, Drive train is open grip < 0.01- and Engine speed > 50.00rpm • Monitoring is released: HLSDem_stMonRlsCon_mp is set
		[Fault Detection] • The engine speed Epm_nEng is below the minimum permitted limit HLSDem_nMonMin_mp. • Permitted limit is the maximum value between 455.00rpm and idle speed set point decreased by % factor 30.00%
		[Defect Debouncing] • Defect condition fulfilled continuously >2000.0 ms
Fault healing		• The engine speed Epm_nEng is above the minimum permitted limit HLSDem_nMonMin_mp.
System reaction		• None
Failure cause		• Injection system problem, injectors deviation
Failure repair		• Replace Injectors
Inspection procedure	Step1	Inspection procedure Turn the starter switch in OFF. Remove the connector of A4 (Combustion engine Control unit). Remove the connector of Y15 (Fuel injector 1). Remove the connector of Y16 (Fuel injector 2). Remove the connector of Y17 (Fuel injector 3). Remove the connector of Y18 (Fuel injector 4). Check the circuit across Y15.2/1 and A4.X1.60/31 for open or short circuit. Check the circuit across Y15.2/2 and A4.X1.60/46 for open or short circuit. Check the circuit across Y16.2/1 and A4.X1.60/17 for open or short circuit. Check the circuit across Y16.2/2 and A4.X1.60/2 for open or short circuit. Check the circuit across Y17.2/1 and A4.X1.60/16 for open or short circuit. Check the circuit across Y17.2/2 and A4.X1.60/1 for open or short circuit. Check the circuit across Y18.2/1 and A4.X1.60/32 for open or short circuit. Check the circuit across Y18.2/2 and A4.X1.60/47 for open or short circuit. Make a visual check on each connector. Is any abnormality recognized? No: Go to Step2 Yes: Go to Step6

https://truckmanualshub.com/

Inspection procedure	Step2	Inspection procedure Reinstall all the removed connectors. Turn the starter switch in ON. Erase the fault code. Execute the control “Fuel injector”. Turn the starter switch in OFF. Replace the damaged Fuel injector. Perform the learned value resetting procedure of Fuel injector which A4 (Combustion engine Control unit) learns. Perform coding of Fuel injector which A4 (Combustion engine Control unit) learns. Go to Step3
	Step3	Inspection procedure Turn the starter switch in OFF. Reinstall all the removed connectors. Erase fault memory and perform a test drive. Check if this diagnosis code has occurred. Are current fault codes present? No: Go to Step4 Yes: Go to Step5
	Step4	Inspection completed
	Step5	Inspection procedure Perform the operation start and replace A4 (Combustion engine Control unit). Go to Step4
	Step6	Inspection procedure Repair or replace electrical lines. Reinstall all the removed connectors. Erase fault memory and perform a test drive. Check if this diagnosis code has occurred. Are current fault codes present? No: Go to Step4 Yes: Go to Step2

190-3: Short circuit to battery error on the engine speed output power stage

Generation condition		[Test Condition] • Monitoring is active while the battery voltage is over 10.00V and as long as the battery voltage is over 10.00V and 2.00s after this threshold has been exceeded • Monitoring only when the power stage is active.
		[Fault Detection] • Hardware reports a short circuit to battery (SCB) error on the power stage for PWM output of engine speed.
		[Defect Debouncing] • Defect condition exceeded cumulatively > 500.00ms • Failure is detected if active for 50% of the time
Fault healing		• To give the possibility for healing, an electric impulse is sent to power stage each 1000.00ms. Failure healed, if the power stage does not report an Short Circuit to Battery error.
System reaction		• The power stage is shut-off.
Failure cause		• Short circuit of wiring to external source or defective engine speed limiter
Failure repair		• Check of wiring or replace tachometer
Inspection procedure	Step1	Inspection procedure Turn the starter switch in OFF. Remove the connector of B22 (Rpm sensor Combustion engine). Make a visual check on each connector. Measure the resistance between B22 (Rpm sensor Combustion engine) terminals to check for open-circuit. Special features If any visible damage is found, repair or replace the affected part and interrupt the inspection process. No abnormalities? No: Go to Step2 Yes: Go to Step3

https://truckmanualshub.com/

Inspection procedure	Step2	Inspection procedure Turn the starter switch in OFF. Replace component “B22 (Rpm sensor Combustion engine)”. Reinstall all the removed connectors. Erase fault memory and perform a test drive. If the diagnosis code has occurred even during the test drive, start the operation and then replace the A4 (Combustion engine Control unit). Inspection completed
	Step3	Inspection procedure Turn the starter switch in OFF. Remove the connector of A1 ECU. Check electrical line between pins A4.X1.60/22 and B22.2/2 for open circuit. Check electrical line between pins A4.X1.60/7 and B22.2/1 for open circuit. Check electrical line between pins A4.X1.60/22 and B22.2/2 for short circuit to positive. Is any abnormality recognized? Yes: Go to Step5
	Step4	Inspection procedure Turn the starter switch in OFF. Reinstall all the removed connectors. Erase fault memory and perform a test drive. If the diagnosis code has occurred even during the test drive, start the operation and then replace the A4 (Combustion engine Control unit). Inspection completed
	Step5	Inspection procedure Repair or replace electrical lines. Reinstall all the removed connectors. Erase fault memory and perform a test drive. If the diagnosis code has occurred even during the test drive, start the operation and then replace the A4 (Combustion engine Control unit). Inspection completed

190-4: Short circuit to ground error on the engine speed output power stage

Generation condition		[Test Condition] • Monitoring is active while the battery voltage is over 10.00V and as long as the battery voltage is over 10.00V and 2.00s after this threshold has been exceeded • Monitoring only when the power stage is NOT active.
		[Fault Detection] • Hardware reports a short circuit to ground error on the PWM output power stage for the engine speed signal.
		[Defect Debouncing] • Defect condition exceeded cumulatively > 500.00ms • Failure is detected if active for 50% of the time
Fault healing		• Hardware does not report a short circuit to ground error on the PWM output power stage for the engine speed signal.
System reaction		• The power stage is shut-off.
Failure cause		• Short circuit of wiring to ground or defective tachometer
Failure repair		• Check of wiring or replace tachometer
Inspection procedure	Step1	Inspection procedure Turn the starter switch in OFF. Remove the connector of B22 (Rpm sensor Combustion engine). Make a visual check on each connector. Measure the resistance between B22 (Rpm sensor Combustion engine) and ground or each terminal to check for short-circuit and electrical leakage. Special features If any visible damage is found, repair or replace the affected part and interrupt the inspection process. No abnormalities? No: Go to Step2 Yes: Go to Step3

https://truckmanualshub.com/

Inspection procedure	Step2	Inspection procedure Turn the starter switch in OFF. Replace component “B22 (Rpm sensor Combustion engine)”. Reinstall all the removed connectors. Erase fault memory and perform a test drive. If the diagnosis code has occurred even during the test drive, start the operation and then replace the A4 (Combustion engine Control unit). Inspection completed
	Step3	Inspection procedure Turn the starter switch in OFF. Remove the connector of A1 ECU. Check harness between A4 (Combustion engine Control unit) and B22 (Rpm sensor Combustion engine) for short-circuit to another line. Is any abnormality recognized? No: Go to Step4 Yes: Go to Step5
	Step4	Inspection procedure Turn the starter switch in OFF. Reinstall all the removed connectors. Erase fault memory and perform a test drive. If the diagnosis code has occurred even during the test drive, start the operation and then replace the A4 (Combustion engine Control unit). Inspection completed
	Step5	Inspection procedure Repair or replace electrical lines. Reinstall all the removed connectors. Erase fault memory and perform a test drive. If the diagnosis code has occurred even during the test drive, start the operation and then replace the A4 (Combustion engine Control unit). Inspection completed

190-5: No load error on the engine speed output power stage

Generation condition		[Test Condition] • Monitoring is active while the battery voltage is over 10.00V and as long as the battery voltage is over 10.00V and 2.00s after this threshold has been exceeded • Monitoring only when the power stage is NOT active.
		[Fault Detection] • Hardware reports a “open load” (OL) error on the PWM output power stage for the Engine Speed.
		[Defect Debouncing] • Defect condition exceeded cumulatively > 500.00ms • Failure is detected if active for 50% of the time
Fault healing		• Hardware does not report a “open load” (OL) error.on the PWM output power stage for the Engine Speed.
System reaction		• The power stage is shut-off.
Failure cause		• Broken or disconnected wiring or defective tachometer
Failure repair		• Check of wiring or replace tachometer
Inspection procedure	Step1	Inspection procedure Turn the starter switch in OFF. Remove the connector of B22 (Rpm sensor Combustion engine). Make a visual check on each connector. Measure the resistance between B22 (Rpm sensor Combustion engine) terminals to check for open-circuit. Special features If any visible damage is found, repair or replace the affected part and interrupt the inspection process. No abnormalities? No: Go to Step2 Yes: Go to Step3

https://truckmanualshub.com/

Inspection procedure	Step2	Inspection procedure Turn the starter switch in OFF. Replace component “B22 (Rpm sensor Combustion engine)”. Reinstall all the removed connectors. Erase fault memory and perform a test drive. If the diagnosis code has occurred even during the test drive, start the operation and then replace the A4 (Combustion engine Control unit). Inspection completed
	Step3	Inspection procedure Turn the starter switch in OFF. Remove the connector of A1 ECU. Check electrical line between pins A4.X1.60/22 and B22.2/2 for open circuit. Check electrical line between pins A4.X1.60/7 and B22.2/1 for open circuit. Check electrical line between pins A4.X1.60/22 and B22.2/2 for short circuit to positive. Is any abnormality recognized? No: Go to Step4 Yes: Go to Step5
	Step4	Inspection procedure Turn the starter switch in OFF. Reinstall all the removed connectors. Erase fault memory and perform a test drive. If the diagnosis code has occurred even during the test drive, start the operation and then replace the A4 (Combustion engine Control unit). Inspection completed
	Step5	Inspection procedure Repair or replace electrical lines. Reinstall all the removed connectors. Erase fault memory and perform a test drive. If the diagnosis code has occurred even during the test drive, start the operation and then replace the A4 (Combustion engine Control unit). Inspection completed

190-12: Component ‘Engine speed as PWM signal’ has overtemperature.Bad intelligent device or component

Generation condition		[Test Condition] • Monitoring only when the power stage is active.
		[Fault Detection] • The hardware reports an over temperature (OT) error on the PWM output power stage for the Engine Speed.
		[Defect Debouncing] • Defect condition exceeded cumulatively > 550.00ms • Failure is detected if active for 25% of the time
Fault healing		• To give the possibility for healing, an electric impulse is sent to power stage each 3.00s. Failure healed, if the power stage does not report an OT error.
System reaction		• The power stage is shut-off.
Failure cause		• High battery voltage, high load and high ECU temperature, defective wiring, Tachometer or ECU
Failure repair		• Check load and output, check wiring, replace Tachometer or ECU
Inspection procedure	Step1	Inspection procedure Turn the starter switch in OFF. Remove the connector of B22 (Rpm sensor Combustion engine). Make a visual check on each connector. Measure the resistance between B22 (Rpm sensor Combustion engine) terminals to check for open-circuit. Special features If any visible damage is found, repair or replace the affected part and interrupt the inspection process. No abnormalities? No: Go to Step2 Yes: Go to Step3

https://truckmanualshub.com/

Inspection procedure	Step2	Inspection procedure Turn the starter switch in OFF. Replace component “B22 (Rpm sensor Combustion engine)”. Reinstall all the removed connectors. Erase fault memory and perform a test drive. If the diagnosis code has occurred even during the test drive, start the operation and then replace the A4 (Combustion engine Control unit). Inspection completed
	Step3	Inspection procedure Turn the starter switch in OFF. Remove the connector of A1 ECU. Check electrical line between pins A4.X1.60/22 and B22.2/2 for open circuit. Check electrical line between pins A4.X1.60/7 and B22.2/1 for open circuit. Check electrical line between pins A4.X1.60/22 and B22.2/2 for short circuit to positive. Is any abnormality recognized? No: Go to Step4 Yes: Go to Step5
	Step4	Inspection procedure Turn the starter switch in OFF. Reinstall all the removed connectors. Erase fault memory and perform a test drive. If the diagnosis code has occurred even during the test drive, start the operation and then replace the A4 (Combustion engine Control unit). Inspection completed
	Step5	Inspection procedure Repair or replace electrical lines. Reinstall all the removed connectors. Erase fault memory and perform a test drive. If the diagnosis code has occurred even during the test drive, start the operation and then replace the A4 (Combustion engine Control unit). Inspection completed

251-2: External clock needs manually reset (summer/winter or time zone changed)

Generation condition		[Test Condition] • Monitoring is active 2.00s after ECU initialization while engine isn’t running yet, while the engine isn’t cranking, 2.00s after engine startup, while the battery voltage is over 10.00V, as long as the battery voltage is over 10.00V and 2.00s after this threshold has been exceeded, if none of the CAN controllers is in bus-off state, 2.00s after last CAN controller is no more in bus-off state and if the ECU is not in afterrun • Once at ECU start
		[Fault Detection] • The time received via CAN < ECU absolute time,
		[Defect Debouncing] • Defect condition fulfilled continuously >1000.0 ms
Fault healing		• The time received via CAN >= ecu absolute time,
System reaction		• None except FIDs
		• 1) FId / Plausibilty check of temperature sensors at cold start not allowed • 2) FId / Inhibit temperature sampling • 3) FId / Inhibit plaus.check engine coolant temperature at cold start • 4) FId / Fuel temperature plausibility error detected • 5) FId / Inhibit plausibility check of EGR Cooler Temperature Downstream • 6) FId / Status of function identifier FID_UHCWrmStrtChk; Status des Funktions Identifiers FID_UHCWrmStrtChk
Failure cause		• Summer/winter time change or another time zone was entered
Failure repair		• No intervention necessary
Inspection procedure	Step1	Inspection procedure Inspect the suspected factors mentioned above sequentially to locate faulty parts. Repair or replace the faulty part as necessary.

https://truckmanualshub.com/

251-12: External clock (tachograph)is defect.

Generation condition		[Test Condition] • Monitoring is active 2.00s after ECU initialization while engine isn't running yet, while the engine isn't cranking, 2.00s after engine startup, while the battery voltage is over 10.00V, as long as the battery voltage is over 10.00V and 2.00s after this threshold has been exceeded, if none of the CAN controllers is in bus-off state, 2.00s after last CAN controller is no more in bus-off state and if the ECU is not in afterrun • Once per cycle at ECM on
		[Fault Detection] • Difference between the absolute ECU internal time and the external CAN time is outside of applicable range for at least 5.00- times (tested every 100.00s)
		[Defect Debouncing] • Immediate
Fault healing		• Difference between the absolute ECU internal time and the external CAN time is inside of applicable range for at least 5.00- times (tested every 100.00s). • Healing not possible in same cycle, only at next ECU ON.
System reaction		• None except FIDs
		• 1) FId / Plausibilty check of temperature sensors at cold start not allowed • 2) FId / Inhibit temperature sampling • 3) FId / Inhibit plaus.check engine coolant temperature at cold start • 4) FId / Fuel temperature plausibility error detected • 5) FId / Inhibit plausibility check of EGR Cooler Temperature Downstream • 6) FId / Status of function identifier FID_UHCWrmStrtChk; Status des Funktions Identifiers FID_UHCWrmStrtChk
Failure cause		• Defective external clock (Tachhograf)
Failure repair		• Check and replace tachograf
	Step1	Refer to the help menu for Nos. other than above. *1: M/T *2: DUONIC *3: ISS (With Lock brake) *4: ISS (Without Lock brake) *5: Lock brake (Without ISS) *6: Other than *3,*4,*5 *7: Full-automatic air conditioner *8: Auto leveling *9: Manual leveling Inspection procedure If one of diagnosis codes associated with A11 (Meter cluster) is generated, make a system diagnosis according to the diagnosis code. Go to step2
Inspection procedure	Step2	Refer to the help menu for Nos. other than above. *1: M/T *2: DUONIC *3: ISS (With Lock brake) *4: ISS (Without Lock brake) *5: Lock brake (Without ISS) *6: Other than *3,*4,*5 *7: Full-automatic air conditioner *8: Auto leveling *9: Manual leveling Inspection procedure Turn the starter switch in OFF. Remove all ECU connectors from the CAN communication line. Check CAN line for open circuit, short circuit to positive, short circuit to ground or short circuit to another electrical line. Is any abnormality recognized? No: Go to step3 Yes: Go to step8

https://truckmanualshub.com/

Inspection procedure	Step3	Inspection procedure Attach the connector of A20 (SAM). Check CAN line for open circuit, short circuit to positive, short circuit to ground or short circuit to another electrical line. Is any abnormality recognized? No: Go to step4 Yes: Go to step7
	Step4	Inspection procedure Attach the connector of A11 (Meter cluster). Check CAN line for open circuit, short circuit to positive, short circuit to ground or short circuit to another electrical line. Is any abnormality recognized? No: Go to step5 Yes: Go to step6
	Step5	Inspection procedure Turn the starter switch in OFF. Reinstall all the removed connectors. Erase fault memory and perform a test drive. If the diagnosis code has occurred even during the test drive, start the operation and then replace the A4 (Combustion engine Control unit). Inspection completed
	Step6	Inspection procedure Turn the starter switch in OFF. Reinstall all the removed connectors. Erase fault memory and perform a test drive. If the diagnosis code has occurred even during the test drive, start the operation and then replace the A11 (Meter cluster). Inspection completed
	Step7	Inspection procedure Turn the starter switch in OFF. Reinstall all the removed connectors. Erase fault memory and perform a test drive. If the diagnosis code has occurred even during the test drive, start the operation and then replace the A20 (SAM). Inspection completed
	Step8	Refer to the help menu for Nos. other than above. *1: M/T *2: DUONIC *3: ISS (With Lock brake) *4: ISS (Without Lock brake) *5: Lock brake (Without ISS) *6: Other than *3,*4,*5 *7: Full-automatic air conditioner *8: Auto leveling *9: Manual leveling Inspection procedure Repair or replace electrical lines. Reinstall all the removed connectors. Turn the starter switch in ON. Inspection completed

354-0: Signal value from Intake Air humidity Sensor above maximum limit

Generation condition	[Test Condition] • Monitoring is active while the battery voltage is over 10.00V and as long as the battery voltage is over 10.00V and 2.00s after this threshold has been exceeded • Monitoring not inhibited by FID_SSMonIndAH due to another failure. • Engine running since start > 8.00min • Engine temperature > 39.96°C {103.93°F} • SCR Dosing System ready for DEF Injection (including SCR temp > 299.96°C {571.93°F})
	[Fault Detection] • The Sensor Signal > 3.80V
	[Defect Debouncing] • Defect condition fulfilled continuously >500.0 ms

https://truckmanualshub.com/

Fault healing		• The Sensor Signal < 3.80V
System reaction		• According FID (see FID's) • Very Probably also Information Failure "IndAHSRCMax" stored and active. • Air humidity is frozen at last valid value on preliminary failure and ramps to fixed replacement value 50.00% if failure is validated using slope 3.00%/s or 3.00%/s depending on whether the replacement value is above or below the current value • Further reactions according FID (see FID's)
		• 1) FId / inhibited in case of Temporary defect associated with sensor, when the sensed value is from Hardware • 2) FId / inhibited in case of Permanent defect associated with sensor, when the sensed value is from Hardware • 3) Fid / SCR Monitoring or DEF injection release not possible (according calibration of Release Masks) • 4) FId / Air Humidity Sensor permanent Physical Range Check errors
Failure cause		• Sensor full with water droplets • Sensor defective or short circuit to external source
Failure repair		• Clean Sensor (dry it) • Check wiring or replace sensor
Inspection procedure	Step1	Inspection procedure If one of diagnosis codes associated with SAM ECU is generated, make a system diagnosis according to the diagnosis code. Go to Step2
Inspection procedure	Step2	Inspection procedure Turn the starter switch in OFF. Remove the connector of A4 (Combustion engine Control unit). Remove the connector of B27 (Humidity and temperature sensor "Intake air"). Check the circuit across B27.4/3 and A4.X2.94/24 for open or short circuit. Check the circuit across B27.4/4 and A4.X2.94/58 for open or short circuit. Check the circuit across B27.4/2 and A4.X2.94/34 for open or short circuit. Check the circuit across B27.4/1 and A4.X2.94/68 for open or short circuit. Make a visual check on each connector. Is any abnormality recognized? No: Go to Step3 Yes: Go to Step7
	Step3	Inspection procedure Turn the starter switch in OFF. Replace component "B27 (Humidity and temperature sensor "Intake air")". Reinstall all the removed connectors. Turn the starter switch in ON. Go to Step4
	Step4	Inspection procedure Turn the starter switch in OFF. Reinstall all the removed connectors. Erase fault memory and perform a test drive. Check if this diagnosis code has occurred. Are current fault codes present? No: Go to Step6 Yes: Go to Step5
	Step5	Inspection procedure Perform the operation start and replace A4 (Combustion engine Control unit). Go to Step6
	Step6	Inspection completed
	Step7	Inspection procedure Repair or replace electrical lines. Reinstall all the removed connectors. Erase fault memory and perform a test drive. Check if this diagnosis code has occurred. Are current fault codes present? No: Go to Step6 Yes: Go to Step3

https://truckmanualshub.com/

354-16: Probably water droplets on Intake Air humidity Sensor.

Generation condition		[Test Condition] • Monitoring is active while the battery voltage is over 10.00V and as long as the battery voltage is over 10.00V and 2.00s after this threshold has been exceeded • Continuously, if no sensor supply error is detected.
		[Fault Detection] • The sensed raw voltage value IndAH_uRaw > 3.80V
		[Defect Debouncing] • Defect condition fulfilled continuously >500.0 ms
Fault healing		• The sensed raw voltage value IndAH_uRaw < 3.80V
System reaction		• Possibly also failure “IndAHSRCMaxDly” active --> in this case please proceed according that failure. • Air humidity is frozen at last valid value on preliminary failure and ramps to fixed replacement value 50.00% if failure is validated using slope 3.00%/s or 3.00%/s depending on whether the replacement value is above or below the current value • Further reactions according FID (see FID’s)
		• 1) FId / inhibited in case of Temporary defect associated with sensor, when the sensed value is from Hardware • 2) FId / inhibited in case of Permanent defect associated with sensor, when the sensed value is from Hardware • 3) Fid / SCR Monitoring or DEF injection release not possible (according calibration of Release Masks) • 4) FId / Air Humidity Sensor permanent Physical Range Check errors
Failure cause		• Sensor full with water droplets or • Sensor defective or short circuit to external source
Failure repair		• NO action needed as long as the failure IndAHSRCMaxDly is not active. • If failure IndAHSRCMaxDly is not active, check duration of failure active: If a single duration lasts longer than ~10 min --> there is probably an electrical failure. --> Check wiring or replace sensor
Inspection procedure	Step1	Inspect or verify the following items. Repair or replace faulty items as necessary. If any diagnosis code is generated, make a system diagnosis according to the diagnosis code. Go to Step2
	Step2	Inspection procedure If one of diagnosis codes associated with SAM ECU is generated, make a system diagnosis according to the diagnosis code. Go to Step3
	Step3	Inspection procedure Turn the starter switch in OFF. Remove the connector of A4 (Combustion engine Control unit). Remove the connector of B27 (Humidity and temperature sensor “Intake air”). Check the circuit across B27.4/3 and A4.X2.94/24 for open or short circuit. Check the circuit across B27.4/4 and A4.X2.94/58 for open or short circuit. Check the circuit across B27.4/2 and A4.X2.94/34 for open or short circuit. Check the circuit across B27.4/1 and A4.X2.94/68 for open or short circuit. Make a visual check on each connector. Is any abnormality recognized? No: Go to Step4 Yes: Go to Step8
	Step4	Inspection procedure Turn the starter switch in OFF. Replace component “B27 (Humidity and temperature sensor “Intake air”)”. Reinstall all the removed connectors. Turn the starter switch in ON. Go to Step5

https://truckmanualshub.com/

Inspection procedure	Step5	Inspection procedure Turn the starter switch in OFF. Reinstall all the removed connectors. Erase fault memory and perform a test drive. Check if this diagnosis code has occurred. Are current fault codes present? No: Go to Step7 Yes: Go to Step6
	Step6	Inspection procedure Perform the operation start and replace A4 (Combustion engine Control unit). Go to Step7
	Step7	Inspection completed
	Step8	Inspection procedure Repair or replace electrical lines. Reinstall all the removed connectors. Erase fault memory and perform a test drive. Check if this diagnosis code has occurred. Are current fault codes present? No: Go to Step7 Yes: Go to Step4

354-17: Signal Range Check (SRC) for 'Air humidity sensor' reports LOW.

Generation condition		[Test Condition] • Monitoring is active while the battery voltage is over 10.00V and as long as the battery voltage is over 10.00V and 2.00s after this threshold has been exceeded • Continuously if no ADC failure is detected
		[Fault Detection] • The sensed sensor signal IndAH_rLin is less than -3.00%
		[Defect Debouncing] • Defect condition exceeded cumulatively > 10.00s • Failure is detected if active for 50% of the time
Fault healing		• Physical signal is in plausible range
System reaction		• Induction Air Humidity is frozen at last valid value on preliminary failure and ramps to fixed replacement value 50.00% if failure is validated using slope 3.00%/s or 3.00%/s depending on whether the replacement value is above or below the current value • Further reactions according FID (see FID's)
		• 1) Fid / SCR Monitoring or DEF injection release not possible (according calibration of Release Masks)
Failure cause		• Inaccurate or defective Induction Air Humidity sensor, or defect in its wiring
Failure repair		• Check wiring and the accuracy of Induction Air Humidity sensor and replace it if necessary
Inspection procedure	Step1	Inspection procedure If one of diagnosis codes associated with A20 (SAM) is generated, make a system diagnosis according to the diagnosis code. Go to Step2
	Step2	Inspection procedure Turn the starter switch in OFF. Remove the connector of A4 (Combustion engine Control unit). Remove the connector of B27 (Humidity and temperature sensor "Intake air"). Check the circuit across B27.4/1 and A4.X2.94/24 for open or short circuit. Check the circuit across B27.4/2 and A4.X2.94/58 for open or short circuit. Check the circuit across B27.4/4 and A4.X2.94/34 for open or short circuit. Check the circuit across B27.4/3 and A4.X2.94/68 for open or short circuit. Make a visual check on each connector. Is any abnormality recognized? No: Go to Step3 Yes: Go to Step7

https://truckmanualshub.com/

Inspection procedure	Step3	Inspection procedure Turn the starter switch in OFF. Replace component “B27 (Humidity and temperature sensor “Intake air”)”. Reinstall all the removed connectors. Turn the starter switch in ON. Perform learning of B27 (Humidity and temperature sensor “Intake air”) which A4 (Combustion engine Control unit) learns. Go to Step4
	Step4	Inspection procedure Turn the starter switch in OFF. Reinstall all the removed connectors. Erase fault memory and perform a test drive. Check if this diagnosis code has occurred. Are current fault codes present? No: Go to Step5 Yes: Go to Step6
	Step5	Inspection completed
	Step6	Inspection procedure Perform the operation start and replace A4 (Combustion engine Control unit). Go to Step5
	Step7	Inspection procedure Repair or replace electrical lines. Reinstall all the removed connectors. Erase fault memory and perform a test drive. Check if this diagnosis code has occurred. Are current fault codes present? No: Go to Step5 Yes: Go to Step3

354-18: Signal Range Check (SRC) for ‘Induction Air Humidity’ reports LOW.

Generation condition		[Test Condition] • Monitoring is active while the battery voltage is over 10.00V and as long as the battery voltage is over 10.00V and 2.00s after this threshold has been exceeded • Continuously, if no sensor supply error is detected.
		[Fault Detection] • The sensed raw voltage value IndAH_uRaw < 600.00mV
		[Defect Debouncing] • Defect condition fulfilled continuously >500.0 ms
Fault healing		• The sensed raw voltage value IndAH_uRaw > 600.00mV
System reaction		• Air humidity is frozen at last valid value on preliminary failure and ramps to fixed replacement value 50.00% if failure is validated using slope 3.00%/s or 3.00%/s depending on whether the replacement value is above or below the current value • Further reactions according FID (see FID’s)
		• 1) FId / inhibited in case of Temporary defect associated with sensor, when the sensed value is from Hardware • 2) FId / inhibited in case of Permanent defect associated with sensor, when the sensed value is from Hardware • 3) Fid / SCR Monitoring or DEF injection release not possible (according calibration of Release Masks) • 4) FId / Air Humidity Sensor permanent Physical Range Check errors
Failure cause		• Short circuit of wiring to ground or defective sensor
Failure repair		• Check wiring and sensor
Inspection procedure	Step1	Inspection procedure If one of diagnosis codes associated with SAM ECU is generated, make a system diagnosis according to the diagnosis code. Go to Step2

https://truckmanualshub.com/

Inspection procedure	Step2	Inspection procedure Turn the starter switch in OFF. Remove the connector of A4 (Combustion engine Control unit). Remove the connector of B27 (Humidity and temperature sensor “Intake air”). Check the circuit across B27.4/3 and A4.X2.94/24 for open or short circuit. Check the circuit across B27.4/4 and A4.X2.94/58 for open or short circuit. Check the circuit across B27.4/2 and A4.X2.94/34 for open or short circuit. Check the circuit across B27.4/1 and A4.X2.94/68 for open or short circuit. Make a visual check on each connector. Is any abnormality recognized? No: Go to Step3 Yes: Go to Step7
	Step3	Inspection procedure Turn the starter switch in OFF. Replace component “B27 (Humidity and temperature sensor “Intake air”)”. Reinstall all the removed connectors. Turn the starter switch in ON. Go to Step4
	Step4	Inspection procedure Turn the starter switch in OFF. Reinstall all the removed connectors. Erase fault memory and perform a test drive. Check if this diagnosis code has occurred. Are current fault codes present? No: Go to Step6 Yes: Go to Step5
	Step5	Inspection procedure Perform the operation start and replace A4 (Combustion engine Control unit). Go to Step6
	Step6	Inspection completed
	Step7	Inspection procedure Repair or replace electrical lines. Reinstall all the removed connectors. Erase fault memory and perform a test drive. Check if this diagnosis code has occurred. Are current fault codes present? No: Go to Step6 Yes: Go to Step3

354-31: Component ‘Air humidity sensor’ has a plausibility error.

Generation condition	[Test Condition] • Monitoring is active while the battery voltage is over 10.00V and as long as the battery voltage is over 10.00V and 2.00s after this threshold has been exceeded • Plausibility check not inhibited by another failure (Fid_IndAHPlaus not set) • vehicle speed VehV_v > -1.00km/h • change in temperature IndAH_dtOut_mp between 0.04°C {32.07°F}/s and 0.04°C {32.07°F}/s
	[Fault Detection] • If the change in relative humidity IndAH_drOut_mp is below 0.01%/s
	[Defect Debouncing] • Defect condition fulfilled continuously >10.0 ms
Fault healing	• If the change in relative humidity IndAH_drOut_mp is above 0.01%/s
System reaction	• None except FIDs
	• 1) Fid / SCR Monitoring or DEF injection release not possible (according calibration of Release Masks) • 2) FId / Air Humidity Sensor permanent Physical Range Check errors
Failure cause	• Humidity sensor dynamic compromised, value sticking
Failure repair	• Check and replace humidity sensor

https://truckmanualshub.com/

Inspection procedure	Step1	Inspection procedure If one of diagnosis codes associated with A20 (SAM) is generated, make a system diagnosis according to the diagnosis code. Go to Step2
	Step2	Inspection procedure Turn the starter switch in OFF. Remove the connector of A4 (Combustion engine Control unit). Remove the connector of B27 (Humidity and temperature sensor “Intake air”). Check the circuit across B27.4/1 and A4.X2.94/24 for open or short circuit. Check the circuit across B27.4/2 and A4.X2.94/58 for open or short circuit. Check the circuit across B27.4/4 and A4.X2.94/34 for open or short circuit. Check the circuit across B27.4/3 and A4.X2.94/68 for open or short circuit. Make a visual check on each connector. Is any abnormality recognized? No: Go to Step3 Yes: Go to Step7
	Step3	Inspection procedure Turn the starter switch in OFF. Replace component “B27 (Humidity and temperature sensor “Intake air”)”. Reinstall all the removed connectors. Turn the starter switch in ON. Perform learning of B27 (Humidity and temperature sensor “Intake air”) which A4 (Combustion engine Control unit) learns. Go to Step4
	Step4	Inspection procedure Turn the starter switch in OFF. Reinstall all the removed connectors. Erase fault memory and perform a test drive. Check if this diagnosis code has occurred. Are current fault codes present? No: Go to Step5 Yes: Go to Step6
	Step5	Inspection completed
	Step6	Inspection procedure Perform the operation start and replace A4 (Combustion engine Control unit). Go to Step5
	Step7	Inspection procedure Repair or replace electrical lines. Reinstall all the removed connectors. Erase fault memory and perform a test drive. Check if this diagnosis code has occurred. Are current fault codes present? No: Go to Step5 Yes: Go to Step3

355-31: DPF Lube Oil monitoring: Critical time for oil dilution exceeded

Generation condition	[Test Condition] • Continuously.
	[Fault Detection] • If the cumulative duration of particulate filter regeneration phases which causes oil dilution exceeds the maximum duration of 1.58d, the error for critical oil dilution time is detected.
	[Defect Debouncing] • None
Fault healing	• An independent healing is not possible. Once the oil has been changed, OilLft_tiRgnOilDil is set to ZERO using the dedicated UDS service “Routine Control ID =$245” for resetting the oil monitoring integrator.
System reaction	• Particulate Filter Regeneration measures are suppressed.
	• 1) FId / Particulate filter ((DPF) Regeneration inhibited
Failure cause	• Excessive engine running time under oil dilution conditions, due to retarded post injection for filter regeneration.

https://truckmanualshub.com/

Failure repair		• Replace engine oil and reset timer for oil dilution with tester using the dedicated UDS service “Routine Control ID =$245”
Inspection procedure	Step1	Inspection procedure Turn the starter switch in OFF. Replace component “Engine oil”. Perform the learned value resetting procedure of Engine oil which A4 (Combustion engine Control unit) learns. Erase fault memory and perform a test drive. If the diagnosis code has occurred even during the test drive, start the operation and then replace the A4 (Combustion engine Control unit). Inspection completed

412-0: Signal Range Check (SRC) for ‘Exhaust temperature downstream of exhaust gas recirculation cooler’ reports HIGH.

Generation condition		[Test Condition] • The signal range checks are carried out if there is no ADC module and sensor supply error. Continuously.
		[Fault Detection] • The Sensed raw voltage value Air_uRawTEGRClrDs is above 1.48V
		[Defect Debouncing] • Defect condition exceeded cumulatively > 500.00ms • Failure is detected if active for 50% of the time
Fault healing		• The Sensed raw voltage value Air_uRawTEGRClrDs is below 1.48V
System reaction		• EGR cooler downstream temperature is frozen at last valid value on preliminary failure and ramps, using slope 3300.00K/s or 3300.00K/s depending whether the measured value is above or below replacement value, to a default value of 40.96°C {105.73°F} if failure is validated. • Further reactions according FID (see FID’s)
		• 1) FId / Inhibit EGR cooler efficiency monitoring • 2) FId / Inhibit EGR cooler bypass valve • 3) FId / Freeze EGR Cooler Temperature Downstream value if preliminary failure is detected • 4) FId / Inhibit Physical Range Check of EGR Cooler Temperature Downstream • 5) FId / Replace EGR Cooler Temperature Downstream with default value if failure is vaildated • 6) FId / Inhibit plausibility check of EGR Cooler Temperature Downstream
Failure cause		• Short circuit of sensor to external source or defective sensor
Failure repair		• Check wiring or replace sensor
Inspection procedure	Step1	Inspection procedure Turn the starter switch in OFF. Remove the connector of A4 (Combustion engine Control unit). Check electrical line between pins A4.X1.60/56 and B60.2/1 for open circuit. Check electrical line between pins A4.X1.60/21 and B60.2/2 for open circuit. Check electrical line between pins A4.X1.60/56 and B60.2/1 for short circuit to positive. Check harness between A4 (Combustion engine Control unit) and B60 (EGR cooler outlet temperature sensor) for short-circuit to another line. Is any abnormality recognized? No: Go to Step2 Yes: Go to Step6
	Step2	Inspection procedure Turn the starter switch in OFF. Replace component “B60 (EGR cooler outlet temperature sensor)”. Reinstall all the removed connectors. Turn the starter switch in ON. Go to Step3

https://truckmanualshub.com/

Inspection procedure	Step3	Inspection procedure Turn the starter switch in OFF. Reinstall all the removed connectors. Erase fault memory and perform a test drive. Check if this diagnosis code has occurred. Are current fault codes present? No: Go to Step4 Yes: Go to Step5
	Step4	Inspection completed
	Step5	Inspection procedure Perform the operation start and replace A4 (Combustion engine Control unit). Go to Step4
	Step6	Inspection procedure Repair or replace electrical lines. Reinstall all the removed connectors. Turn the starter switch in ON. Go to Step7
	Step7	Inspection procedure Turn the starter switch in OFF. Reinstall all the removed connectors. Erase fault memory and perform a test drive. Check if this diagnosis code has occurred. Are current fault codes present? No: Go to Step4 Yes: Go to Step2

412-1: Signal Range Check (SRC) for 'Exhaust temperature downstream of exhaust gas recirculation cooler' reports LOW.

Generation condition	[Test Condition] • The signal range checks are carried out if there is no ADC module and sensor supply error. Continuously.
	[Fault Detection] • The Sensed raw voltage value Air_uRawTEGRClrDs is below 470.40mV
	[Defect Debouncing] • Defect condition exceeded cumulatively > 500.00ms • Failure is detected if active for 50% of the time
Fault healing	• The Sensed raw voltage value Air_uRawTEGRClrDs is above 470.40mV
System reaction	• EGR cooler downstream temperature is frozen at last valid value on preliminary failure and ramps, using slope 3300.00K/s or 3300.00K/s depending whether the measured value is above or below replacement value, to a default value of 40.96°C {105.73°F} if failure is validated. • Further reactions according FID (see FID's)
	• 1) FId / Inhibit EGR cooler efficiency monitoring • 2) FId / Inhibit EGR cooler bypass valve • 3) FId / Freeze EGR Cooler Temperature Downstream value if preliminary failure is detected • 4) FId / Inhibit Physical Range Check of EGR Cooler Temperature Downstream • 5) FId / Replace EGR Cooler Temperature Downstream with default value if failure is vaildated • 6) FId / Inhibit plausibility check of EGR Cooler Temperature Downstream
Failure cause	• Short circuit of sensor to ground or defective sensor
Failure repair	• Check wiring or replace sensor

https://truckmanualshub.com/

Inspection procedure	Step1	Inspection procedure Turn the starter switch in OFF. Remove the connector of A4 (Combustion engine Control unit). Check electrical line between pins A4.X1.60/56 and B60.2/1 for open circuit. Check electrical line between pins A4.X1.60/21 and B60.2/2 for open circuit. Check electrical line between pins A4.X1.60/56 and B60.2/1 for short circuit to positive. Check harness between A4 (Combustion engine Control unit) and B60 (EGR cooler outlet temperature sensor) for short-circuit to another line. Is any abnormality recognized? No: Go to Step2 Yes: Go to Step6
	Step2	Inspection procedure Turn the starter switch in OFF. Replace component “B60 (EGR cooler outlet temperature sensor)”. Reinstall all the removed connectors. Turn the starter switch in ON. Go to Step3
	Step3	Inspection procedure Turn the starter switch in OFF. Reinstall all the removed connectors. Erase fault memory and perform a test drive. Check if this diagnosis code has occurred. Are current fault codes present? No: Go to Step4 Yes: Go to Step5
	Step4	Inspection completed
	Step5	Inspection procedure Perform the operation start and replace A4 (Combustion engine Control unit). Go to Step4
	Step6	Inspection procedure Repair or replace electrical lines. Reinstall all the removed connectors. Turn the starter switch in ON. Go to Step7
	Step7	Inspection procedure Turn the starter switch in OFF. Reinstall all the removed connectors. Erase fault memory and perform a test drive. Check if this diagnosis code has occurred. Are current fault codes present? No: Go to Step4 Yes: Go to Step2

412-2: Component ‘Exhaust temperature downstream of exhaust gas recirculation cooler’ has a plausibility error.

Generation condition	[Test Condition] • Initial measured temperatures are frozen and evaluated if: • Engine off time > 5.00h. • Plausibility test not inhibited (FId_TEGRClrDsVDPlaus not set)
	[Fault Detection] • Temperature difference > 300.00K at 50.00s OR Temperature difference > 300.00K at 50.00s and < 300.00K at 50.00s but no heater is active (AddHtr_stDet = 0) failure is detected
	[Defect Debouncing] • Immediate
Fault healing	• Temperature difference is in range
System reaction	• None except FIDs
	• 1) FId / Inhibit EGR cooler efficiency monitoring
Failure cause	• EGR cooler downstream temperature sensor defective
Failure repair	• Check sensor

https://truckmanualshub.com/

Inspection procedure	Step1	Inspection procedure Turn the starter switch in OFF. Remove the connector of A4 (Combustion engine Control unit). Check electrical line between pins A4.X1.60/56 and B60.2/1 for open circuit. Check electrical line between pins A4.X1.60/21 and B60.2/2 for open circuit. Check electrical line between pins A4.X1.60/56 and B60.2/1 for short circuit to positive. Check harness between A4 (Combustion engine Control unit) and B60 (EGR cooler outlet temperature sensor) for short-circuit to another line. Is any abnormality recognized? No: Go to Step2 Yes: Go to Step6
	Step2	Inspection procedure Turn the starter switch in OFF. Replace component “B23 (Temperature sensor Exhaust system 1)”. Reinstall all the removed connectors. Turn the starter switch in ON. Go to Step3
	Step3	Inspection procedure Turn the starter switch in OFF. Replace component “B60 (EGR cooler outlet temperature sensor)”. Reinstall all the removed connectors. Turn the starter switch in ON. Are current fault codes present? No: Go to Step4 Yes: Go to Step5
	Step4	Inspection completed
	Step5	Inspection procedure Perform the operation start and replace A4 (Combustion engine Control unit). Go to Step4
	Step6	Inspection procedure Repair or replace electrical lines. Reinstall all the removed connectors. Turn the starter switch in ON. Go to Step7
	Step7	Inspection procedure Turn the starter switch in OFF. Reinstall all the removed connectors. Erase fault memory and perform a test drive. Check if this diagnosis code has occurred. Are current fault codes present? No: Go to Step4 Yes: Go to Step2

412-16: Component ‘Temperature sensor ‘Exhaust gas recirculation’’ is thermally overloaded.

Generation condition	[Test Condition] • The signal range checks are carried out if there is no ADC module and sensor supply error. Continuously.
	[Fault Detection] • The sensed sensor signal Air_tSensTEGRClrDs is above 749.96°C {1381.93°F}
	[Defect Debouncing] • Defect condition exceeded cumulatively > 10.00s • Failure is detected if active for 50% of the time
Fault healing	• The sensed sensor signal Air_tSensTEGRClrDs is below 749.96°C {1381.93°F}

https://truckmanualshub.com/

System reaction		• EGR cooler downstream temperature is frozen at last valid value on preliminary failure and ramps, using slope 3300.00K/s or 3300.00K/s depending whether the measured value is above or below replacement value, to a default value of 40.96°C {105.73°F} if failure is validated. • Further reactions according FID (see FID's)
		• 1) FId / Freeze EGR Cooler Temperature Downstream value if preliminary failure is detected • 2) FId / Replace EGR Cooler Temperature Downstream with default value if failure is vaildated • 3) FId / Inhibit EGR cooler efficiency monitoring
Failure cause		• Inaccurate or defective EGR cooler downstream temperature sensor, defect in the wiring
Failure repair		• Check wiring and the accuracy of the EGR cooler downstream temperature sensor and replace it if necessary
Inspection procedure	Step1	Inspection procedure Turn the starter switch in OFF. Remove the connector of A4 (Combustion engine Control unit). Check electrical line between pins A4.X1.60/56 and B60.2/1 for open circuit. Check electrical line between pins A4.X1.60/21 and B60.2/2 for open circuit. Check electrical line between pins A4.X1.60/56 and B60.2/1 for short circuit to positive. Check harness between A4 (Combustion engine Control unit) and B60 (EGR cooler outlet temperature sensor) for short-circuit to another line. Is any abnormality recognized? No: Go to Step2 Yes: Go to Step6
	Step2	Inspection procedure Turn the starter switch in OFF. Replace component "B60 (EGR cooler outlet temperature sensor)". Reinstall all the removed connectors. Turn the starter switch in ON. Go to Step3
	Step3	Inspection procedure Turn the starter switch in OFF. Reinstall all the removed connectors. Erase fault memory and perform a test drive. Check if this diagnosis code has occurred. Are current fault codes present? No: Go to Step4 Yes: Go to Step5
	Step4	Inspection completed
	Step5	Inspection procedure Perform the operation start and replace A4 (Combustion engine Control unit). Go to Step4
	Step6	Inspection procedure Repair or replace electrical lines. Reinstall all the removed connectors. Turn the starter switch in ON. Go to Step7
	Step7	Inspection procedure Turn the starter switch in OFF. Reinstall all the removed connectors. Erase fault memory and perform a test drive. Check if this diagnosis code has occurred. Are current fault codes present? No: Go to Step4 Yes: Go to Step2

https://truckmanualshub.com/

521-2: Signal error for Brake detected via CAN

Generation condition	[Test Condition] • Monitoring is active 2.00s after ECU initialization while engine isn't running yet, while the engine isn't cranking, 2.00s after engine startup, while the battery voltage is over 10.00V, as long as the battery voltage is over 10.00V and 2.00s after this t
	[Fault Detection] • CAN Message value = 0
	[Defect Debouncing] • infinite
Fault healing	• CAN Message Value >0
System reaction	• If an error is detected the cruise control can not be activated. • Further reactions according FID (see FID)
	• 1) FId / Brake status message to CAN: Break defective • 2) FId / Underbraking disabled for High and Low engine speed control (HLS) (no special control parameters in case of Underbraking used) • 3) FId / Single Injector shut off test inhibited • 4) FId / Run Up
Failure cause	• One of the brake switches has a short circuit. • The circuit has an open lead.
Failure repair	• Check the brake switches for short circuit • Check the wiring and the brake switches for open lead

https://truckmanualshub.com/

Inspection procedure	Step1	Inspect or verify the following items. Repair or replace faulty items as necessary. Check to see if S35 (Brake light Switches) is fully operational. Check the circuit across S35 (Brake light Switches) and A20 (SAM) for open or short circuit. For procedures, refer to the Shop Manual. Go to step2
	Step2	Refer to the help menu for Nos. other than above. *1: M/T *2: DUONIC *3: ISS (With Lock brake) *4: ISS (Without Lock brake) *5: Lock brake (Without ISS) *6: Other than *3,*4,*5 *7: Full-automatic air conditioner *8: Auto leveling *9: Manual leveling Inspection procedure Turn the starter switch in OFF. Remove all ECU connectors from the CAN communication line. Check CAN line for open circuit, short circuit to positive, short circuit to ground or short circuit to another electrical line. Is any abnormality recognized? No: Go to step3 Yes: Go to step
	Step3	Inspection procedure Attach the connector of A20 (SAM). Check CAN line for open circuit, short circuit to positive, short circuit to ground or short circuit to another electrical line. Is any abnormality recognized? No: Go to step4 Yes: Go to step
	Step4	Inspection procedure Turn the starter switch in OFF. Reinstall all the removed connectors. Erase fault memory and perform a test drive. If the diagnosis code has occurred even during the test drive, start the operation and then replace the A4 (Combustion engine Control unit). Inspection completed
	Step5	Inspection procedure Turn the starter switch in OFF. Reinstall all the removed connectors. Erase fault memory and perform a test drive. If the diagnosis code has occurred even during the test drive, start the operation and then replace the A20 (SAM). Inspection completed
	Step6	Refer to the help menu for Nos. other than above. *1: M/T *2: DUONIC *3: ISS (With Lock brake) *4: ISS (Without Lock brake) *5: Lock brake (Without ISS) *6: Other than *3,*4,*5 *7: Full-automatic air conditioner *8: Auto leveling *9: Manual leveling Inspection procedure Repair or replace electrical lines. Reinstall all the removed connectors. Turn the starter switch in ON. Inspection completed

https://truckmanualshub.com/

521-12: Main and redundant brake switch state are different.

Generation condition		[Test Condition] • Continuously, if the redundant brake contact is used and terminal 15 is on.
		[Fault Detection] • If the main brake contact Brk_stMn and the redundant brake contact Brk_stRed are not in the same state.
		[Defect Debouncing] • Defect condition fulfilled continuously > 30000.0 ms
Fault healing		• If the main brake contact and the redundant brake contact are in “brake” state.
System reaction		• If an error is detected the cruise control can not be activated. • Further reactions according FID (see FID)
		• 1) FId / Brake status message to CAN: Break defective • 2) FId / Underbraking disabled for High and Low engine speed control (HLS) (no special control parameters in case of Underbraking used) • 3) FId / Single Injector shut off test inhibited • 4) FId / Run Up test inhibited • 5) FId / Actuator test for Metering Unit (MeUn) of Common Rail disabled • 6) FId / Set point test of Metering Unit (MeUn) of Common Rail disabled • 7) FId / Substitute reaction: violation of a running condition and the pcv test will not be executed • 8) FId / Fuel rail pressure control valve (PCV) set point test inhibited • 9) FId / Service regeneration of Particulate filter ((DPF) inhibited (due to DPF failure) • 10) FId / High pressure test inhibited • 11) FId / Rail Pressure set point test inhibited • 12) FId / Tooth Angle Adaption (TAA) of crank speed sensor disabled • 13) Fid / Cruise control immediately shut off
Failure cause		• The adjustment of the brake switches is not good enough. • One of the brake switches has a short circuit. • The circuit has an open lead.
Failure repair		• Check the adjustment of the brake switches • Check the brake switches for short circuit • Check the wiring and the brake switches for open lead
Inspection procedure	Step1	Inspect or verify the following items. Repair or replace faulty items as necessary. Check to see if S35 (Brake light Switches) is fully operational. Check the circuit across S35 (Brake light Switches) and A20 (SAM) for open or short circuit. For procedures, refer to the Shop Manual. Go to step2
	Step2	Refer to the help menu for Nos. other than above. *1: M/T *2: DUONIC *3: ISS (With Lock brake) *4: ISS (Without Lock brake) *5: Lock brake (Without ISS) *6: Other than *3,*4,*5 *7: Full-automatic air conditioner *8: Auto leveling *9: Manual leveling Inspection procedure Turn the starter switch in OFF. Remove all ECU connectors from the CAN communication line. Check CAN line for open circuit, short circuit to positive, short circuit to ground or short circuit to another electrical line. Is any abnormality recognized? No: Go to step3 Yes: Go to step

https://truckmanualshub.com/

Inspection procedure	Step3	Inspection procedure Attach the connector of A20 (SAM). Check CAN line for open circuit, short circuit to positive, short circuit to ground or short circuit to another electrical line. Is any abnormality recognized? No: Go to step4 Yes: Go to step5
	Step4	Inspection procedure Turn the starter switch in OFF. Reinstall all the removed connectors. Erase fault memory and perform a test drive. If the diagnosis code has occurred even during the test drive, start the operation and then replace the A4 (Combustion engine Control unit). Inspection completed
	Step5	Inspection procedure Turn the starter switch in OFF. Reinstall all the removed connectors. Erase fault memory and perform a test drive. If the diagnosis code has occurred even during the test drive, start the operation and then replace the A20 (SAM). Inspection completed
	Step6	Refer to the help menu for Nos. other than above. *1: M/T *2: DUONIC *3: ISS (With Lock brake) *4: ISS (Without Lock brake) *5: Lock brake (Without ISS) *6: Other than *3,*4,*5 *7: Full-automatic air conditioner *8: Auto leveling *9: Manual leveling Inspection procedure Repair or replace electrical lines. Reinstall all the removed connectors. Turn the starter switch in ON. Inspection completed

595-2: Irreversible fault path which indicates the invalid combination of cruise control keys pressed

Generation condition	[Test Condition] • Monitoring is active 2.00s after ECU initialization while engine isn't running yet, while the engine isn't cranking, 2.00s after engine startup, while the battery voltage is over 10.00V, as long as the battery voltage is over 10.00V and 2.00s after this threshold has been exceeded, if none of the CAN controllers is in bus-off state, 2.00s after last CAN controller is no more in bus-off state and if the ECU is not in afterrun • Continuously
	[Fault Detection] • 2 Buttons pressed together (possible combinations): Resume + Down, Resume + Up and Up and Down
	[Defect Debouncing] • Defect condition exceeded cumulatively > 1000.00ms • Failure is detected if active for 25% of the time
Fault healing	• No Healing possible (irreversible failure)
System reaction	• Cruise control goes in mode "off" • Further reactions according FID (see FID's)
	• 1) FId / Cruise control unit goes into error state as long as the "switch off" button not active
Failure cause	• Failure in Cruise control module (switches) • Failure in wiring harness
Failure repair	• Check Cruise control unit • Check wiring harness

https://truckmanualshub.com/

Inspection procedure	Step1	Inspect or verify the following items. Repair or replace faulty items as necessary. If one of diagnosis codes associated with A20 (SAM) is generated, make a system diagnosis according to the diagnosis code. For procedures, refer to the Shop Manual. Go to step2
	Step2	Refer to the help menu for Nos. other than above. *1: M/T *2: DUONIC *3: ISS (With Lock brake) *4: ISS (Without Lock brake) *5: Lock brake (Without ISS) *6: Other than *3,*4,*5 *7: Full-automatic air conditioner *8: Auto leveling *9: Manual leveling Inspection procedure Turn the starter switch in OFF. Remove all ECU connectors from the CAN communication line. Check CAN line for open circuit, short circuit to positive, short circuit to ground or short circuit to another electrical line. Is any abnormality recognized? No: Go to step3 Yes: Go to step6
	Step3	Inspection procedure Attach the connector of A20 (SAM). Check CAN line for open circuit, short circuit to positive, short circuit to ground or short circuit to another electrical line. Is any abnormality recognized? No: Go to step4 Yes: Go to step5
	Step4	Inspection procedure Turn the starter switch in OFF. Reinstall all the removed connectors. Erase fault memory and perform a test drive. If the diagnosis code has occurred even during the test drive, start the operation and then replace the A4 (Combustion engine Control unit). Inspection completed
	Step5	Inspection procedure Turn the starter switch in OFF. Reinstall all the removed connectors. Erase fault memory and perform a test drive. If the diagnosis code has occurred even during the test drive, start the operation and then replace the A20 (SAM). Inspection completed
	Step6	Refer to the help menu for Nos. other than above. *1: M/T *2: DUONIC *3: ISS (With Lock brake) *4: ISS (Without Lock brake) *5: Lock brake (Without ISS) *6: Other than *3,*4,*5 *7: Full-automatic air conditioner *8: Auto leveling *9: Manual leveling Inspection procedure Repair or replace electrical lines. Reinstall all the removed connectors. Turn the starter switch in ON. Inspection completed

https://truckmanualshub.com/

595-31: Reversible fault path which indicates the invalid combination of cruise control keys pressed

Generation condition		[Test Condition] • Monitoring is active 2.00s after ECU initialization while engine isn't running yet, while the engine isn't cranking, 2.00s after engine startup, while the battery voltage is over 10.00V, as long as the battery voltage is over 10.00V and 2.00s after this threshold has been exceeded, if none of the CAN controllers is in bus-off state, 2.00s after last CAN controller is no more in bus-off state and if the ECU is not in afterrun • Continuously
		[Fault Detection] • One or more switches active for longer than 60.00s Down, Up and Resume
		[Defect Debouncing] • Defect condition exceeded cumulatively > 1000.00ms • Failure is detected if active for 25% of the time
Fault healing		• Cruise control request "logic"
System reaction		• Cruise control goes in mode "off" • Further reactions according FID (see FID's)
		• 1) FId / Cruise control unit goes into error state as long as the "switch off" button not active
Failure cause		• Failure in Cruise control module (switches) • Failure in wiring harness
Failure repair		• Check Cruise control unit • Check wiring harness
Inspection procedure	Step1	Inspect or verify the following items. Repair or replace faulty items as necessary. For procedures, refer to the Shop Manual. Go to step2
	Step2	Refer to the help menu for Nos. other than above. *1: M/T *2: DUONIC *3: ISS (With Lock brake) *4: ISS (Without Lock brake) *5: Lock brake (Without ISS) *6: Other than *3,*4,*5 *7: Full-automatic air conditioner *8: Auto leveling *9: Manual leveling Inspection procedure Turn the starter switch in OFF. Remove all ECU connectors from the CAN communication line. Check CAN line for open circuit, short circuit to positive, short circuit to ground or short circuit to another electrical line. Is any abnormality recognized? No: Go to step3 Yes: Go to step6
	Step3	Inspection procedure Attach the connector of A20 (SAM). Check CAN line for open circuit, short circuit to positive, short circuit to ground or short circuit to another electrical line. Is any abnormality recognized? No: Go to step4 Yes: Go to step5
	Step4	Inspection procedure Turn the starter switch in OFF. Reinstall all the removed connectors. Erase fault memory and perform a test drive. If the diagnosis code has occurred even during the test drive, start the operation and then replace the A4 (Combustion engine Control unit). Inspection completed

https://truckmanualshub.com/

Inspection procedure	Step5	Inspection procedure Turn the starter switch in OFF. Reinstall all the removed connectors. Erase fault memory and perform a test drive. If the diagnosis code has occurred even during the test drive, start the operation and then replace the A20 (SAM). Inspection completed
	Step6	Refer to the help menu for Nos. other than above. *1: M/T *2: DUONIC *3: ISS (With Lock brake) *4: ISS (Without Lock brake) *5: Lock brake (Without ISS) *6: Other than *3,*4,*5 *7: Full-automatic air conditioner *8: Auto leveling *9: Manual leveling Inspection procedure Repair or replace electrical lines. Reinstall all the removed connectors. Turn the starter switch in ON. Inspection completed

598-2: Signal Error for Clutch pedal.

Generation condition	[Test Condition] • Monitoring is active 2.00s after ECU initialization while engine isn't running yet, while the engine isn't cranking, 2.00s after engine startup, while the battery voltage is over 10.00V, as long as the battery voltage is over 10.00V and 2.00s after this threshold has been exceeded, if none of the CAN controllers is in bus-off state, 2.00s after last CAN controller is no more in bus-off state and if the ECU is not in afterrun • Continuously
	[Fault Detection] • If the clutch signal received by CAN reports a clutch defect (Com_stClth == 128, Bit 7 set).
	[Defect Debouncing] • Defect condition exceeded cumulatively > 2.00s • Failure is detected if active for 50% of the time
Fault healing	• If the clutch signal received by CAN does not report a clutch defect (Bit 7 of Com_stClth <128).
System reaction	• If a final error is detected or if error healing is active, the value of the output signal Clth_st is equal to the default value 128.00-. • Cruise Control cannot be activated
	• 1) FId / Replacement value for clutch state used, value via CAN defective • 2) Fid / Cruise control immediately shut off • 3) FId / Underbraking disabled for High and Low engine speed control (HLS) (no special control parameters in case of Underbraking used) • 4) FId / Single Injector shut off test inhibited • 5) FId / Run Up test inhibited • 6) FId / Actuator test for Metering Unit (MeUn) of Common Rail disabled • 7) FId / Set point test of Metering Unit (MeUn) of Common Rail disabled • 8) FId / Substitute reaction: violation of a running condition and the pcv test will not be executed • 9) FId / Fuel rail pressure control valve (PCV) set point test inhibited • 10) FId / Service regeneration of Particulate filter ((DPF) inhibited (due to DPF failure) • 11) FId / High pressure test inhibited • 12) FId / Rail Pressure set point test inhibited • 13) FId / Tooth Angle Adaption (TAA) of crank speed sensor disabled • 14) FId / Zero Fuel Calibration (ZFC) of injectors disabled • 15) FId / Misfire Detection disabled
Failure cause	• Clutch switch defective or problem on CAN communication with cutch switch
Failure repair	• Check clutch switch. Check CAN connection

https://truckmanualshub.com/

Inspection procedure	Step1	Inspection procedure Inspect the suspected factors mentioned above sequentially to locate faulty parts. Repair or replace the faulty part as necessary.

604-2: Plausibility error of neutral status signal of gear box

Generation condition		[Test Condition] • Monitoring is active 2.00s after ECU initialization while engine isn't running yet, while the engine isn't cranking, 2.00s after engine startup, while the battery voltage is over 10.00V, as long as the battery voltage is over 10.00V and 2.00s after this threshold has been exceeded, if none of the CAN controllers is in bus-off state, 2.00s after last CAN controller is no more in bus-off state and if the ECU is not in afterrun • Test is executed during after-run (Key 15 off)
		[Fault Detection] • Failure is detected if the vehicle speed during current driving cycle was > 80km/h {49.71mph} at least once and the total number of transitions in neutral status since system start is not > 1.00- at the end of driving cycle (Key 15 off)
		[Defect Debouncing] • Immediate.
Fault healing		• When the system detects more than 1.00- transitions in neutral state during a driving cycle after failed driving cycle.
System reaction		• None
Failure cause		• If the driver drive off, the vehicle speed get upper than 80km/h {49.71mph}, and he had not change the gear for more than 1.00- times (e.g. starting in 3rd gear downhilll). • The gearbox neutral position switch is defective.
Failure repair		• Driver mistake (no action required) (probability high if duration of failed driving cycle short) • Check the gearbox neutral position switch.
Inspection procedure	Step1	Inspection procedure Inspect the suspected factors mentioned above sequentially to locate faulty parts. Repair or replace the faulty part as necessary.

606-0: Overspeed of component 'engine protection' has occurred.

Generation condition		[Test Condition] • Continuously.
		[Fault Detection] • Engine speed exceeds threshold 4250.00rpm
		[Defect Debouncing] • Defect condition exceeded cumulatively > 3.00s • Failure is detected if active for 50% of the time
Fault healing		• Engine speed falls below threshold 4250.00rpm
System reaction		• None (an intervention in the engine shut-off coordinator would be critical)
Failure cause		• Engine overspeed has occurred
Failure repair		• No reactions necessary only if this fault/information status reoccurs frequently. In this case check driving conditions of vehicle, engine speed acquisition and injection system for quantity set point and actual value during fault recognition, check also for ECM errors.
Inspection procedure	Step1	Inspection procedure Inspect the suspected factors mentioned above sequentially to locate faulty parts. Repair or replace the faulty part as necessary.

https://truckmanualshub.com/

636-2: Crankshaft signal disturbance from engine speed sensor.Data erratic, intermittent or incorrect

Generation condition		[Test Condition] • Continuously if engine is running and speed > 650.00rpm and FId_EpmCrSDiag not set by another failure (diagnostic inhibited)
		[Fault Detection] • A disturbed crankshaft signal exists if the number of signal plausibility errors EpmCrS_ctErrSig reaches the threshold 80.00-.
		[Defect Debouncing] • Immediate
Fault healing		• No healing possible if limp home functionality activated. • Every crankshaft rotation without disturbances the counter EpmCrS_ctErrSig is decremented starting from 80.00-. The same time the healing counter EpmCrS_ctRevWaitDiag is decremented starting from 2.00-. If both counters reach zero, the error is healed.
System reaction		• With disturbed Crankshaft signal the engine speed is calculated with help of the camshaft speed signal. • The limp home with defect crankshaft is active, the angle calculation and synchronisation is done solely via camshaft signal.
		• 1) FId / Active surge dampener disabled • 2) FId / Active surge dampener in mode 2 disabled • 3) FId / Actuator protection at engine stand still disabled • 4) Fid / SCR Monitoring or DEF injection release not possible (according calibration of Release Masks) • 5) Fid / Reagent dosing quantity for SCR reduced (to DStgy_facUreaDesRed_C) • 6) FId / Status of function identifier FId_EngDemTrqLimErr1 • 7) FId / Torque limitation 2 activated for power reduction • 8) FId / Camshaft position adaption (learning of real position to the theoretical one) inhibited • 9) FId / Camshaft offset diagnosis inhibited (due camshaft or crankshaft signal errors) • 10) FId / Fuel quantity Balancing Control disabled (e.g. error in crankshaft speed signal) • 11) FId / Engine speed Limitation 2 for HIgh/Low engine speed (HLS) control active • 12) FId / Analysis of engine starting problem disabled • 13) FId / Offset test of Rail pressure sensor disabled • 14) FId / Offset test of Rail pressure sensor only released, if this failure path is tested • 15) FId / Switching to a Replacement value for the steering pump base and dynamic torque • 16) FId / Tooth Angle Adaption (TAA) of crank speed sensor disabled • 17) FId / Electrical engine coolant heater switched off • 18) FId / Zero Fuel Calibration (ZFC) of injectors disabled • 19) FId / Zero Fuel Calibration (ZFC) of injectors by Lambda Sensor signal disabled • 20) FId / Inhibit OxiCat passive monitor • 21) Fid / SCR Monitoring or DEF injection release not possible (according calibration of Release Masks) • 22) FId / Inhibit ISS, max number of engine starts exceeded
Failure cause		• High vibration of crank shaft signal sensor • Intermittent open circuit of sensor • Electrical disturbances due to damaged isolation of wiring harness • Electrical disturbances due external electromagnetic disturbances
Failure repair		• Check if sensor fixed correctly (should not be moveable) • Check wiring harness and contacts • Check if electrical lines with high electric performance are additionally installed (components not validated by the vehicle manufacturer)
Inspection procedure	Step1	Inspection procedure Inspect the suspected factors mentioned above sequentially to locate faulty parts. Repair or replace the faulty part as necessary.

https://truckmanualshub.com/

636-9: Crankshaft signal loss from engine speed sensor. Abnormal update rate

Generation condition	[Test Condition] • Continuously if engine is running and speed > 650.00rpm and Fld_EpmCrSDiag not set by another failure (diagnostic inhibited)
	[Fault Detection] • No crankshaft signal available for at least 2.00- camshaft revolutions. • Camshaft signal is tested and plausible.
	[Defect Debouncing] • Immediate
Fault healing	• No healing if limp home functionality is active • The healing is done as soon as Crankshaft gap is plausibly found.
System reaction	• With disturbed Crankshaft signal the engine speed is calculated with help of the camshaft speed signal. • The limp home with defect crankshaft is active, the angle calculation and synchronisation is done solely via camshaft signal.
	• 1) Fld / Active surge dampener disabled • 2) Fld / Active surge dampener in mode 2 disabled • 3) Fld / Actuator protection at engine stand still disabled • 4) Fid / SCR Monitoring or DEF injection release not possible (according calibration of Release Masks) • 5) Fid / Reagent dosing quantity for SCR reduced (to DStgy_facUreaDesRed_C) • 6) Fld / Status of function identifier Fld_EngDemTrqLimErr1 • 7) Fld / Torque limitation 2 activated for power reduction • 8) Fld / Camshaft position adaption (learning of real position to the theoretical one) inhibited • 9) Fld / Camshaft offset diagnosis inhibited (due camshaft or crankshaft signal errors) • 10) Fld / Fuel quantity Balancing Control disabled (e.g. error in crankshaft speed signal) • 11) Fld / Engine speed Limitation 2 for HIgh/Low engine speed (HLS) control active • 12) Fld / Analysis of engine starting problem disabled • 13) Fld / Offset test of Rail pressure sensor disabled • 14) Fld / Offset test of Rail pressure sensor only released, if this failure path is tested • 15) Fld / Switching to a Replacement value for the steering pump base and dynamic torque • 16) Fld / Tooth Angle Adaption (TAA) of crank speed sensor disabled • 17) Fld / Electrical engine coolant heater switched off • 18) Fld / Zero Fuel Calibration (ZFC) of injectors disabled • 19) Fld / Zero Fuel Calibration (ZFC) of injectors by Lambda Sensor signal disabled • 20) Fld / Inhibit OxiCat passive monitor • 21) Fid / SCR Monitoring or DEF injection release not possible (according calibration of Release Masks) • 22) Fld / Inhibit ISS, max number of engine starts exceeded
Failure cause	• Crank shaft speed sensor defect • Crank shaft speed sensor not mounted correctly • Crank shaft speed sensor not connected electrically, open circuit or short circuit.
Failure repair	• Check if crank shaft speed sensor mounted correctly • Check wiring harness to open/short circuit • Check crank shaft speed sensor for correct function and replace it if necessary

https://truckmanualshub.com/

Inspection procedure	Step1	Inspection procedure Turn the starter switch in OFF. Remove the connector of B22 (Rpm sensor Combustion engine). Make a visual check on each connector. Measure the resistance between B22 (Rpm sensor Combustion engine) and ground or each terminal to check for short-circuit and electrical leakage. Special features If any visible damage is found, repair or replace the affected part and interrupt the inspection process. No abnormalities? No: Go to Step2 Yes: Go to Step3
	Step2	Inspection procedure Turn the starter switch in OFF. Replace component “B22 (Rpm sensor Combustion engine)”. Reinstall all the removed connectors. Erase fault memory and perform a test drive. If the diagnosis code has occurred even during the test drive, start the operation and then replace the A4 (Combustion engine Control unit). Inspection completed
	Step3	Inspection procedure Turn the starter switch in OFF. Remove the connector of A1 ECU. Check harness between A4 (Combustion engine Control unit) and B22 (Rpm sensor Combustion engine) for short-circuit to another line. Is any abnormality recognized? No: Go to Step4 Yes: Go to Step5
	Step4	Inspection procedure Turn the starter switch in OFF. Reinstall all the removed connectors. Erase fault memory and perform a test drive. If the diagnosis code has occurred even during the test drive, start the operation and then replace the A4 (Combustion engine Control unit). Inspection completed
	Step5	Inspection procedure Repair or replace electrical lines. Reinstall all the removed connectors. Erase fault memory and perform a test drive. If the diagnosis code has occurred even during the test drive, start the operation and then replace the A4 (Combustion engine Control unit). Inspection completed

651-3: The fuel injector of cylinder 1 has a short circuit.

Generation condition	[Test Condition] • Continuously
	[Fault Detection] • If the measured pattern for the injector evaluation of cylinder 1 is equal to applied behaviour bit pattern for short circuit detection.
	[Defect Debouncing] • Defect condition exceeded cumulatively > 4.00 events • Failure is detected if active for 20% of events
Fault healing	• No Healing possible (disabled by Data set)

https://truckmanualshub.com/

System reaction		• None except FIDs.
		• 1) Fid / Reagent dosing quantity for SCR reduced (to DStgy_facUreaDesRed_C) • 2) FId / Fuel quantity Balancing Control disabled (e.g. error in crankshaft speed signal) • 3) FId / Adaptation of the correction values of Fuel Mass Observer (FMO) inhibited (no correction of detected deviation between injected fuel and Lambda sensor signal) • 4) FId / Fuel Mass Observer (FMO) switched off (no monitoring of injected fuel by Lambda sensor) • 5) FId / Injector bank shut off • 6) FId / Nominal Voltage Calibration NVC of injectors disabled • 7) FId / Redundant Engine shut off path not tested due to error debouncing of an injector • 8) FId / Redundant Engine shut off path not tested due to error of an injector • 9) FId / Redundant Engine shut off path test inhibited • 10) FId / Inhibit DPF monitor • 11) FId / Particulate filter ((DPF) Regeneration inhibited • 12) FId / Service regeneration of Particulate filter ((DPF) inhibited (due to DPF failure) • 13) FId / Particulate filter (DPF) regeneration not possible due to general system failure • 14) FId / Zero Fuel Calibration (ZFC) of injectors disabled • 15) FId / Zero Fuel Calibration (ZFC) of injectors by Lambda Sensor signal disabled • 16) FId / Misfire Detection disabled • 17) Fid / SCR Monitoring or DEF injection release not possible (according calibration of Release Masks) • 18) FId / Inhibit OxiCat passive monitor
Failure cause		• Short circuit in wiring or injector
Failure repair		• Check wiring, replace fuel injector of cylinder 1.
Inspection procedure	Step1	Inspection procedure Turn the starter switch in OFF. Remove the connector of A4 (Combustion engine Control unit). Remove the connector of Y15 (Fuel injector 1). If corresponding fault codes are also present on other components, check the common power supply and common ground point “ for open circuit and short circuit. Check the circuit across Y15.2/2 and A4.X1.60/46 for open or short circuit. Make a visual check on each connector. Is any abnormality recognized? No: Go to step2 Yes: Go to step6
	Step2	Inspection procedure Turn the starter switch in OFF. Replace component “Y15 (Fuel injector 1)”. Reinstall all the removed connectors. Turn the starter switch in ON. Erase the fault code. Perform the learned value resetting procedure of Y15 (Fuel injector 1) which A4 (Combustion engine Control unit) learns. Perform coding of Y15 (Fuel injector 1) which A4 (Combustion engine Control unit) learns. Go to step3
	Step3	Inspection procedure Turn the starter switch in OFF. Reinstall all the removed connectors. Erase fault memory and perform a test drive. Check if this diagnosis code has occurred. Are current fault codes present? No: Go to step4 Yes: Go to step5
	Step4	Inspection completed

https://truckmanualshub.com/

Inspection procedure	Step5	Inspection procedure Perform the operation start and replace A4 (Combustion engine Control unit). Inspection completed
	Step6	Inspection procedure Repair or replace electrical lines. Reinstall all the removed connectors. Erase fault memory and perform a test drive. Check if this diagnosis code has occurred. Are current fault codes present? No: Go to step4 Yes: Go to step2

651-5: The fuel injector (cylinder 1) has an electrical fault or an open circuit.

Generation condition		[Test Condition] • Continuously
		[Fault Detection] • If the measured pattern for the injector evaluation of cylinder 1 is equal to applied behaviour bit pattern for open load detection.
		[Defect Debouncing] • Defect condition exceeded cumulatively > 4.00 events • Failure is detected if active for 20% of events
Fault healing		• No Healing possible (disabled by Data set)
System reaction		• None except FIDs.
		• 1) Fid / Reagent dosing quantity for SCR reduced (to DStgy_facUreaDesRed_C) • 2) FId / Fuel quantity Balancing Control disabled (e.g. error in crankshaft speed signal) • 3) FId / Adaptation of the correction values of Fuel Mass Observer (FMO) inhibited (no correction of detected deviation between injected fuel and Lambda sensor signal) • 4) FId / Fuel Mass Observer (FMO) switched off (no monitoring of injected fuel by Lambda sensor) • 5) FId / Nominal Voltage Calibration NVC of injectors disabled • 6) FId / Redundant Engine shut off path not tested due to error debouncing of an injector • 7) FId / Redundant Engine shut off path not tested due to error of an injector • 8) FId / Redundant Engine shut off path test inhibited • 9) FId / Inhibit DPF monitor • 10) FId / Particulate filter ((DPF) Regeneration inhibited • 11) FId / Service regeneration of Particulate filter ((DPF) inhibited (due to DPF failure) • 12) FId / Zero Fuel Calibration (ZFC) of injectors disabled • 13) FId / Zero Fuel Calibration (ZFC) of injectors by Lambda Sensor signal disabled • 14) FId / Misfire Detection disabled • 15) FId / Inhibit OxiCat passive monitor • 16) Fid / SCR Monitoring or DEF injection release not possible (according calibration of Release Masks)
Failure cause		• Open load for injector of cylinder 1 is detected.
Failure repair		• Check wiring, replace fuel injector of cylinder 1.
Inspection procedure	Step1	Inspection procedure Turn the starter switch in OFF. Remove the connector of A4 (Combustion engine Control unit). Remove the connector of Y15 (Fuel injector 1). If corresponding fault codes are also present on other components, check the common power supply and common ground point ‘‘ for open circuit and short circuit. Check the circuit across Y15.2/2 and A4.X1.60/46 for open or short circuit. Make a visual check on each connector. Is any abnormality recognized? No: Go to step2 Yes: Go to step6

https://truckmanualshub.com/

Inspection procedure	Step2	Inspection procedure Turn the starter switch in OFF. Replace component “Y15 (Fuel injector 1)”. Reinstall all the removed connectors. Turn the starter switch in ON. Erase the fault code. Perform the learned value resetting procedure of Y15 (Fuel injector 1) which A4 (Combustion engine Control unit) learns. Perform coding of Y15 (Fuel injector 1) which A4 (Combustion engine Control unit) learns. Go to step3
	Step3	Inspection procedure Turn the starter switch in OFF. Reinstall all the removed connectors. Erase fault memory and perform a test drive. Check if this diagnosis code has occurred. Are current fault codes present? No: Go to step4 Yes: Go to step5
	Step4	Inspection completed
	Step5	Inspection procedure Perform the operation start and replace A4 (Combustion engine Control unit). Inspection completed
	Step6	Inspection procedure Repair or replace electrical lines. Reinstall all the removed connectors. Erase fault memory and perform a test drive. Check if this diagnosis code has occurred. Are current fault codes present? No: Go to step4 Yes: Go to step2

651-6: The fuel injector of cylinder 1 has a short circuit between positive and ground.

Generation condition	[Test Condition] • Continuously
	[Fault Detection] • If the measured pattern for the injector evaluation of cylinder 1 is equal to applied behaviour bit pattern for short circuit Highside/Lowside detection.
	[Defect Debouncing] • Defect condition exceeded cumulatively > 4.00 events • Failure is detected if active for 20% of events
Fault healing	• No Healing possible (disabled by Data set)

https://truckmanualshub.com/

		• None except FIDs.
System reaction		• 1) Fid / Reagent dosing quantity for SCR reduced (to DStgy_facUreaDesRed_C) • 2) FId / Fuel quantity Balancing Control disabled (e.g. error in crankshaft speed signal) • 3) FId / Adaptation of the correction values of Fuel Mass Observer (FMO) inhibited (no correction of detected deviation between injected fuel and Lambda sensor signal) • 4) FId / Fuel Mass Observer (FMO) switched off (no monitoring of injected fuel by Lambda sensor) • 5) FId / Cylinder 1 (firing order) shut off • 6) FId / Nominal Voltage Calibration NVC of injectors disabled • 7) FId / Redundant Engine shut off path not tested due to error debouncing of an injector • 8) FId / Redundant Engine shut off path not tested due to error of an injector • 9) FId / Redundant Engine shut off path test inhibited • 10) FId / Inhibit DPF monitor • 11) FId / Zero Fuel Calibration (ZFC) of injectors disabled • 12) FId / Zero Fuel Calibration (ZFC) of injectors by Lambda Sensor signal disabled • 13) FId / Misfire Detection disabled • 14) FId / Inhibit OxiCat passive monitor • 15) Fid / SCR Monitoring or DEF injection release not possible (according calibration of Release Masks)
Failure cause		• Short circuit in wiring or injector
Failure repair		• Check wiring, replace fuel injector of cylinder 1.
Inspection procedure	Step1	Inspection procedure Turn the starter switch in OFF. Remove the connector of A4 (Combustion engine Control unit). Remove the connector of Y15 (Fuel injector 1). If corresponding fault codes are also present on other components, check the common power supply and common ground point ‘‘ for open circuit and short circuit. Check the circuit across Y15.2/2 and A4.X1.60/46 for open or short circuit. Make a visual check on each connector. Is any abnormality recognized? No: Go to step2 Yes: Go to step6
	Step2	Inspection procedure Turn the starter switch in OFF. Replace component “Y15 (Fuel injector 1)”. Reinstall all the removed connectors. Turn the starter switch in ON. Erase the fault code. Perform the learned value resetting procedure of Y15 (Fuel injector 1) which A4 (Combustion engine Control unit) learns. Perform coding of Y15 (Fuel injector 1) which A4 (Combustion engine Control unit) learns. Go to step3
	Step3	Inspection procedure Turn the starter switch in OFF. Reinstall all the removed connectors. Erase fault memory and perform a test drive. Check if this diagnosis code has occurred. Are current fault codes present? No: Go to step4 Yes: Go to step5
	Step4	Inspection completed
	Step5	Inspection procedure Perform the operation start and replace A4 (Combustion engine Control unit). Inspection completed

https://truckmanualshub.com/

Inspection procedure	Step6	Inspection procedure Repair or replace electrical lines. Reinstall all the removed connectors. Erase fault memory and perform a test drive. Check if this diagnosis code has occurred. Are current fault codes present? No: Go to step4 Yes: Go to step2

652-3: The fuel injector of cylinder 3 has a short circuit.

Generation condition		[Test Condition] • Continuously
		[Fault Detection] • If the measured pattern for the injector evaluation of cylinder 3 is equal to applied behaviour bit pattern for short circuit detection.
		[Defect Debouncing] • Defect condition exceeded cumulatively > 4.00 events • Failure is detected if active for 20% of events
Fault healing		• No Healing possible (disabled by Data set)
System reaction		• None except FIDs.
		• 1) Fid / Reagent dosing quantity for SCR reduced (to DStgy_facUreaDesRed_C) • 2) FId / Fuel quantity Balancing Control disabled (e.g. error in crankshaft speed signal) • 3) FId / Adaptation of the correction values of Fuel Mass Observer (FMO) inhibited (no correction of detected deviation between injected fuel and Lambda sensor signal) • 4) FId / Fuel Mass Observer (FMO) switched off (no monitoring of injected fuel by Lambda sensor) • 5) FId / Injector bank 1 shut off • 6) FId / Nominal Voltage Calibration NVC of injectors disabled • 7) FId / Redundant Engine shut off path not tested due to error debouncing of an injector • 8) FId / Redundant Engine shut off path not tested due to error of an injector • 9) FId / Redundant Engine shut off path test inhibited • 10) FId / Inhibit DPF monitor • 11) FId / Particulate filter ((DPF) Regeneration inhibited • 12) FId / Service regeneration of Particulate filter ((DPF) inhibited (due to DPF failure) • 13) FId / Particulate filter (DPF) regeneration not possible due to general system failure • 14) FId / Zero Fuel Calibration (ZFC) of injectors disabled • 15) FId / Zero Fuel Calibration (ZFC) of injectors by Lambda Sensor signal disabled • 16) FId / Misfire Detection disabled • 17) Fid / SCR Monitoring or DEF injection release not possible (according calibration of Release Masks) • 18) FId / Inhibit OxiCat passive monitor
Failure cause		• Short circuit in wiring or injector
Failure repair		• Check wiring, replace fuel injector of cylinder 3.
Inspection procedure	Step1	Inspection procedure Turn the starter switch in OFF. Remove the connector of A4 (Combustion engine Control unit). Remove the connector of Y17 (Fuel injector 3). If corresponding fault codes are also present on other components, check the common power supply and common ground point “ for open circuit and short circuit. Check the circuit across Y17.2/2 and A4.X1.60/1 for open or short circuit. Make a visual check on each connector. Is any abnormality recognized? No: Go to step2 Yes: Go to step6

https://truckmanualshub.com/

Inspection procedure	Step2	Inspection procedure Turn the starter switch in OFF. Replace component “Y17 (Fuel injector 3)”. Reinstall all the removed connectors. Turn the starter switch in ON. Erase the fault code. Perform the learned value resetting procedure of Y17 (Fuel injector 3) which A4 (Combustion engine Control unit) learns. Perform coding of Y17 (Fuel injector 3) which A4 (Combustion engine Control unit) learns. Go to step3
	Step3	Inspection procedure Turn the starter switch in OFF. Reinstall all the removed connectors. Erase fault memory and perform a test drive. Check if this diagnosis code has occurred. Are current fault codes present? No: Go to step4 Yes: Go to step5
	Step4	Inspection completed
	Step5	Inspection procedure Perform the operation start and replace A4 (Combustion engine Control unit). Inspection completed
	Step6	Inspection procedure Repair or replace electrical lines. Reinstall all the removed connectors. Erase fault memory and perform a test drive. Check if this diagnosis code has occurred. Are current fault codes present? No: Go to step4 Yes: Go to step2

652-5: The fuel injector (cylinder 3) has an electrical fault or an open circuit.

Generation condition	[Test Condition] • Continuously
	[Fault Detection] • If the measured pattern for the injector evaluation of cylinder 3 is equal to applied behaviour bit pattern for open load detection.
	[Defect Debouncing] • Defect condition exceeded cumulatively > 4.00 events • Failure is detected if active for 20% of events
Fault healing	• No Healing possible (disabled by Data set)

https://truckmanualshub.com/

System reaction		• None except FIDs.
		• 1) Fid / Reagent dosing quantity for SCR reduced (to DStgy_facUreaDesRed_C) • 2) FId / Fuel quantity Balancing Control disabled (e.g. error in crankshaft speed signal) • 3) FId / Adaptation of the correction values of Fuel Mass Observer (FMO) inhibited (no correction of detected deviation between injected fuel and Lambda sensor signal) • 4) FId / Fuel Mass Observer (FMO) switched off (no monitoring of injected fuel by Lambda sensor) • 5) FId / Nominal Voltage Calibration NVC of injectors disabled • 6) FId / Redundant Engine shut off path not tested due to error debouncing of an injector • 7) FId / Redundant Engine shut off path not tested due to error of an injector • 8) FId / Redundant Engine shut off path test inhibited • 9) FId / Inhibit DPF monitor • 10) FId / Particulate filter ((DPF) Regeneration inhibited • 11) FId / Service regeneration of Particulate filter ((DPF) inhibited (due to DPF failure) • 12) FId / Zero Fuel Calibration (ZFC) of injectors disabled • 13) FId / Zero Fuel Calibration (ZFC) of injectors by Lambda Sensor signal disabled • 14) FId / Misfire Detection disabled • 15) FId / Inhibit OxiCat passive monitor • 16) Fid / SCR Monitoring or DEF injection release not possible (according calibration of Release Masks)
Failure cause		• Open load for injector of cylinder 3 is detected.
Failure repair		• Check wiring, replace fuel injector of cylinder 3.
Inspection procedure	Step1	Inspection procedure Turn the starter switch in OFF. Remove the connector of A4 (Combustion engine Control unit). Remove the connector of Y17 (Fuel injector 3). If corresponding fault codes are also present on other components, check the common power supply and common ground point “ for open circuit and short circuit. Check the circuit across Y17.2/2 and A4.X1.60/1 for open or short circuit. Make a visual check on each connector. Is any abnormality recognized? No: Go to step2 Yes: Go to step6
	Step2	Inspection procedure Turn the starter switch in OFF. Replace component “Y17 (Fuel injector 3)”. Reinstall all the removed connectors. Turn the starter switch in ON. Erase the fault code. Perform the learned value resetting procedure of Y17 (Fuel injector 3) which A4 (Combustion engine Control unit) learns. Perform coding of Y17 (Fuel injector 3) which A4 (Combustion engine Control unit) learns. Go to step3
	Step3	Inspection procedure Turn the starter switch in OFF. Reinstall all the removed connectors. Erase fault memory and perform a test drive. Check if this diagnosis code has occurred. Are current fault codes present? No: Go to step4 Yes: Go to step5
	Step4	Inspection completed
	Step5	Inspection procedure Perform the operation start and replace A4 (Combustion engine Control unit). Inspection completed

https://truckmanualshub.com/

Inspection procedure	Step6	Inspection procedure Repair or replace electrical lines. Reinstall all the removed connectors. Erase fault memory and perform a test drive. Check if this diagnosis code has occurred. Are current fault codes present? No: Go to step4 Yes: Go to step2

652-6: The fuel injector of cylinder 3 has a short circuit between positive and ground.

Generation condition		[Test Condition] • Continuously
		[Fault Detection] • If the measured pattern for the injector evaluation of cylinder 3 is equal to applied behaviour bit pattern for short circuit Highside/Lowside detection.
		[Defect Debouncing] • Defect condition exceeded cumulatively > 4.00 events • Failure is detected if active for 20% of events
Fault healing		• No Healing possible (disabled by Data set)
System reaction		• None except FIDs.
		• 1) Fid / Reagent dosing quantity for SCR reduced (to DStgy_facUreaDesRed_C) • 2) FId / Fuel quantity Balancing Control disabled (e.g. error in crankshaft speed signal) • 3) FId / Adaptation of the correction values of Fuel Mass Observer (FMO) inhibited (no correction of detected deviation between injected fuel and Lambda sensor signal) • 4) FId / Fuel Mass Observer (FMO) switched off (no monitoring of injected fuel by Lambda sensor) • 5) FId / Cylinder 2 (firing order) shut off • 6) FId / Nominal Voltage Calibration NVC of injectors disabled • 7) FId / Redundant Engine shut off path not tested due to error debouncing of an injector • 8) FId / Redundant Engine shut off path not tested due to error of an injector • 9) FId / Redundant Engine shut off path test inhibited • 10) FId / Inhibit DPF monitor • 11) FId / Zero Fuel Calibration (ZFC) of injectors disabled • 12) FId / Zero Fuel Calibration (ZFC) of injectors by Lambda Sensor signal disabled • 13) FId / Misfire Detection disabled • 14) FId / Inhibit OxiCat passive monitor • 15) Fid / SCR Monitoring or DEF injection release not possible (according calibration of Release Masks)
Failure cause		• Short circuit in wiring or injector
Failure repair		• Check wiring, replace fuel injector of cylinder 3.
Inspection procedure	Step1	Inspection procedure Turn the starter switch in OFF. Remove the connector of A4 (Combustion engine Control unit). Remove the connector of Y17 (Fuel injector 3). If corresponding fault codes are also present on other components, check the common power supply and common ground point “ for open circuit and short circuit. Check the circuit across Y17.2/2 and A4.X1.60/1 for open or short circuit. Make a visual check on each connector. Is any abnormality recognized? No: Go to step2 Yes: Go to step6

https://truckmanualshub.com/

Inspection procedure	Step2	Inspection procedure Turn the starter switch in OFF. Replace component “Y17 (Fuel injector 3)”. Reinstall all the removed connectors. Turn the starter switch in ON. Erase the fault code. Perform the learned value resetting procedure of Y17 (Fuel injector 3) which A4 (Combustion engine Control unit) learns. Perform coding of Y17 (Fuel injector 3) which A4 (Combustion engine Control unit) learns. Go to step3
	Step3	Inspection procedure Turn the starter switch in OFF. Reinstall all the removed connectors. Erase fault memory and perform a test drive. Check if this diagnosis code has occurred. Are current fault codes present? No: Go to step4 Yes: Go to step5
	Step4	Inspection completed
	Step5	Inspection procedure Perform the operation start and replace A4 (Combustion engine Control unit). Inspection completed
	Step6	Inspection procedure Repair or replace electrical lines. Reinstall all the removed connectors. Erase fault memory and perform a test drive. Check if this diagnosis code has occurred. Are current fault codes present? No: Go to step4 Yes: Go to step2

653-3: The fuel injector of cylinder 4 has a short circuit.

Generation condition	[Test Condition] • Continuously
	[Fault Detection] • If the measured pattern for the injector evaluation of cylinder 4 is equal to applied behaviour bit pattern for short circuit detection.
	[Defect Debouncing] • Defect condition exceeded cumulatively > 4.00 events • Failure is detected if active for 20% of events
Fault healing	• No Healing possible (disabled by Data set)

https://truckmanualshub.com/

		• None except FIDs.
System reaction		• 1) Fid / Reagent dosing quantity for SCR reduced (to DStgy_facUreaDesRed_C) • 2) FId / Fuel quantity Balancing Control disabled (e.g. error in crankshaft speed signal) • 3) FId / Adaptation of the correction values of Fuel Mass Observer (FMO) inhibited (no correction of detected deviation between injected fuel and Lambda sensor signal) • 4) FId / Fuel Mass Observer (FMO) switched off (no monitoring of injected fuel by Lambda sensor) • 5) FId / Injector bank shut off • 6) FId / Nominal Voltage Calibration NVC of injectors disabled • 7) FId / Redundant Engine shut off path not tested due to error debouncing of an injector • 8) FId / Redundant Engine shut off path not tested due to error of an injector • 9) FId / Redundant Engine shut off path test inhibited • 10) FId / Inhibit DPF monitor • 11) FId / Particulate filter ((DPF) Regeneration inhibited • 12) FId / Service regeneration of Particulate filter ((DPF) inhibited (due to DPF failure) • 13) FId / Particulate filter (DPF) regeneration not possible due to general system failure • 14) FId / Zero Fuel Calibration (ZFC) of injectors disabled • 15) FId / Zero Fuel Calibration (ZFC) of injectors by Lambda Sensor signal disabled • 16) FId / Misfire Detection disabled • 17) Fid / SCR Monitoring or DEF injection release not possible (according calibration of Release Masks) • 18) FId / Inhibit OxiCat passive monitor
Failure cause		• Short circuit in wiring or injector
Failure repair		• Check wiring, replace fuel injector of cylinder 4.
Inspection procedure	Step1	Inspection procedure Turn the starter switch in OFF. Remove the connector of A4 (Combustion engine Control unit). Remove the connector of Y18 (Fuel injector 4). If corresponding fault codes are also present on other components, check the common power supply and common ground point “ for open circuit and short circuit. Check the circuit across Y18.2/2 and A4.X1.60/47 for open or short circuit. Make a visual check on each connector. Is any abnormality recognized? No: Go to step2 Yes: Go to step6
	Step2	Inspection procedure Turn the starter switch in OFF. Replace component “Y18 (Fuel injector 4)”. Reinstall all the removed connectors. Turn the starter switch in ON. Erase the fault code. Perform the learned value resetting procedure of Y18 (Fuel injector 4) which A4 (Combustion engine Control unit) learns. Perform coding of Y18 (Fuel injector 4) which A4 (Combustion engine Control unit) learns. Go to step3
	Step3	Inspection procedure Turn the starter switch in OFF. Reinstall all the removed connectors. Erase fault memory and perform a test drive. Check if this diagnosis code has occurred. Are current fault codes present? No: Go to step4 Yes: Go to step5
	Step4	Inspection completed

https://truckmanualshub.com/

Inspection procedure	Step5	Inspection procedure Perform the operation start and replace A4 (Combustion engine Control unit). Inspection completed
	Step6	Inspection procedure Repair or replace electrical lines. Reinstall all the removed connectors. Erase fault memory and perform a test drive. Check if this diagnosis code has occurred. Are current fault codes present? No: Go to step4 Yes: Go to step2

653-5: The fuel injector (cylinder 4) has an electrical fault or an open circuit.

Generation condition		[Test Condition] • Continuously
		[Fault Detection] • If the measured pattern for the injector evaluation of cylinder 4 is equal to applied behaviour bit pattern for open load detection.
		[Defect Debouncing] • Defect condition exceeded cumulatively > 4.00 events • Failure is detected if active for 20% of events
Fault healing		• No Healing possible (disabled by Data set)
System reaction		• None except FIDs.
		• 1) Fid / Reagent dosing quantity for SCR reduced (to DStgy_facUreaDesRed_C) • 2) FId / Fuel quantity Balancing Control disabled (e.g. error in crankshaft speed signal) • 3) FId / Adaptation of the correction values of Fuel Mass Observer (FMO) inhibited (no correction of detected deviation between injected fuel and Lambda sensor signal) • 4) FId / Fuel Mass Observer (FMO) switched off (no monitoring of injected fuel by Lambda sensor) • 5) FId / Nominal Voltage Calibration NVC of injectors disabled • 6) FId / Redundant Engine shut off path not tested due to error debouncing of an injector • 7) FId / Redundant Engine shut off path not tested due to error of an injector • 8) FId / Redundant Engine shut off path test inhibited • 9) FId / Inhibit DPF monitor • 10) FId / Particulate filter ((DPF) Regeneration inhibited • 11) FId / Service regeneration of Particulate filter ((DPF) inhibited (due to DPF failure) • 12) FId / Zero Fuel Calibration (ZFC) of injectors disabled • 13) FId / Zero Fuel Calibration (ZFC) of injectors by Lambda Sensor signal disabled • 14) FId / Misfire Detection disabled • 15) FId / Inhibit OxiCat passive monitor • 16) Fid / SCR Monitoring or DEF injection release not possible (according calibration of Release Masks)
Failure cause		• Open load for injector of cylinder 4 is detected.
Failure repair		• Check wiring, replace fuel injector of cylinder 4.
Inspection procedure	Step1	Inspection procedure Turn the starter switch in OFF. Remove the connector of A4 (Combustion engine Control unit). Remove the connector of Y18 (Fuel injector 4). If corresponding fault codes are also present on other components, check the common power supply and common ground point ‘‘ for open circuit and short circuit. Check the circuit across Y18.2/2 and A4.X1.60/47 for open or short circuit. Make a visual check on each connector. Is any abnormality recognized? No: Go to step2 Yes: Go to step6

https://truckmanualshub.com/

Inspection procedure	Step2	Inspection procedure Turn the starter switch in OFF. Replace component “Y18 (Fuel injector 4)”. Reinstall all the removed connectors. Turn the starter switch in ON. Erase the fault code. Perform the learned value resetting procedure of Y18 (Fuel injector 4) which A4 (Combustion engine Control unit) learns. Perform coding of Y18 (Fuel injector 4) which A4 (Combustion engine Control unit) learns. Go to step3
	Step3	Inspection procedure Turn the starter switch in OFF. Reinstall all the removed connectors. Erase fault memory and perform a test drive. Check if this diagnosis code has occurred. Are current fault codes present? No: Go to step4 Yes: Go to step5
	Step4	Inspection completed
	Step5	Inspection procedure Perform the operation start and replace A4 (Combustion engine Control unit). Inspection completed
	Step6	Inspection procedure Repair or replace electrical lines. Reinstall all the removed connectors. Erase fault memory and perform a test drive. Check if this diagnosis code has occurred. Are current fault codes present? No: Go to step4 Yes: Go to step2

653-6: The fuel injector of cylinder 4 has a short circuit between positive and ground.

Generation condition	[Test Condition] • Continuously
	[Fault Detection] • If the measured pattern for the injector evaluation of cylinder 4 is equal to applied behaviour bit pattern for short circuit Highside/Lowside detection.
	[Defect Debouncing] • Defect condition exceeded cumulatively > 4.00 events • Failure is detected if active for 20% of events
Fault healing	• No Healing possible (disabled by Data set)

https://truckmanualshub.com/

System reaction		• None except FIDs.
		• 1) Fid / Reagent dosing quantity for SCR reduced (to DStgy_facUreaDesRed_C) • 2) FId / Fuel quantity Balancing Control disabled (e.g. error in crankshaft speed signal) • 3) FId / Adaptation of the correction values of Fuel Mass Observer (FMO) inhibited (no correction of detected deviation between injected fuel and Lambda sensor signal) • 4) FId / Fuel Mass Observer (FMO) switched off (no monitoring of injected fuel by Lambda sensor) • 5) FId / Cylinder 3 (firing order) shut off • 6) FId / Nominal Voltage Calibration NVC of injectors disabled • 7) FId / Redundant Engine shut off path not tested due to error debouncing of an injector • 8) FId / Redundant Engine shut off path not tested due to error of an injector • 9) FId / Redundant Engine shut off path test inhibited • 10) FId / Inhibit DPF monitor • 11) FId / Zero Fuel Calibration (ZFC) of injectors disabled • 12) FId / Zero Fuel Calibration (ZFC) of injectors by Lambda Sensor signal disabled • 13) FId / Misfire Detection disabled • 14) FId / Inhibit OxiCat passive monitor • 15) Fid / SCR Monitoring or DEF injection release not possible (according calibration of Release Masks)
Failure cause		• Short circuit in wiring or injector
Failure repair		• Check wiring, replace fuel injector of cylinder 4.
Inspection procedure	Step1	Inspection procedure Turn the starter switch in OFF. Remove the connector of A4 (Combustion engine Control unit). Remove the connector of Y18 (Fuel injector 4). If corresponding fault codes are also present on other components, check the common power supply and common ground point ‘‘ for open circuit and short circuit. Check the circuit across Y18.2/2 and A4.X1.60/47 for open or short circuit. Make a visual check on each connector. Is any abnormality recognized? No: Go to step2 Yes: Go to step6
	Step2	Inspection procedure Turn the starter switch in OFF. Replace component “Y18 (Fuel injector 4)”. Reinstall all the removed connectors. Turn the starter switch in ON. Erase the fault code. Perform the learned value resetting procedure of Y18 (Fuel injector 4) which A4 (Combustion engine Control unit) learns. Perform coding of Y18 (Fuel injector 4) which A4 (Combustion engine Control unit) learns. Go to step3
	Step3	Inspection procedure Turn the starter switch in OFF. Reinstall all the removed connectors. Erase fault memory and perform a test drive. Check if this diagnosis code has occurred. Are current fault codes present? No: Go to step4 Yes: Go to step5
	Step4	Inspection completed
	Step5	Inspection procedure Perform the operation start and replace A4 (Combustion engine Control unit). Inspection completed

https://truckmanualshub.com/

Inspection procedure	Step6	Inspection procedure Repair or replace electrical lines. Reinstall all the removed connectors. Erase fault memory and perform a test drive. Check if this diagnosis code has occurred. Are current fault codes present? No: Go to step4 Yes: Go to step2

654-3: The fuel injector of cylinder 2 has a short circuit.

Generation condition		[Test Condition] • Continuously
		[Fault Detection] • If the measured pattern for the injector evaluation of cylinder 2 is equal to applied behaviour bit pattern for short circuit detection.
		[Defect Debouncing] • Defect condition exceeded cumulatively > 4.00 events • Failure is detected if active for 20% of events
Fault healing		• No Healing possible (disabled by Data set)
System reaction		• None except FIDs.
		• 1) Fid / Reagent dosing quantity for SCR reduced (to DStgy_facUreaDesRed_C) • 2) FId / Fuel quantity Balancing Control disabled (e.g. error in crankshaft speed signal) • 3) FId / Adaptation of the correction values of Fuel Mass Observer (FMO) inhibited (no correction of detected deviation between injected fuel and Lambda sensor signal) • 4) FId / Fuel Mass Observer (FMO) switched off (no monitoring of injected fuel by Lambda sensor) • 5) FId / Injector bank 1 shut off • 6) FId / Nominal Voltage Calibration NVC of injectors disabled • 7) FId / Redundant Engine shut off path not tested due to error debouncing of an injector • 8) FId / Redundant Engine shut off path not tested due to error of an injector • 9) FId / Redundant Engine shut off path test inhibited • 10) FId / Inhibit DPF monitor • 11) FId / Particulate filter ((DPF) Regeneration inhibited • 12) FId / Service regeneration of Particulate filter ((DPF) inhibited (due to DPF failure) • 13) FId / Particulate filter (DPF) regeneration not possible due to general system failure • 14) FId / Zero Fuel Calibration (ZFC) of injectors disabled • 15) FId / Zero Fuel Calibration (ZFC) of injectors by Lambda Sensor signal disabled • 16) FId / Misfire Detection disabled • 17) Fid / SCR Monitoring or DEF injection release not possible (according calibration of Release Masks) • 18) FId / Inhibit OxiCat passive monitor
Failure cause		• Short circuit in wiring or injector
Failure repair		• Check wiring, replace fuel injector of cylinder 2.
Inspection procedure	Step1	Inspection procedure Turn the starter switch in OFF. Remove the connector of A4 (Combustion engine Control unit). Remove the connector of Y16 (Fuel injector 2). If corresponding fault codes are also present on other components, check the common power supply and common ground point “ for open circuit and short circuit. Check the circuit across Y16.2/2 and A4.X1.60/2 for open or short circuit. Make a visual check on each connector. Is any abnormality recognized? No: Go to step2 Yes: Go to step6

https://truckmanualshub.com/

Inspection procedure	Step2	Inspection procedure Turn the starter switch in OFF. Replace component “Y16 (Fuel injector 2)”. Reinstall all the removed connectors. Turn the starter switch in ON. Erase the fault code. Perform the learned value resetting procedure of Y16 (Fuel injector 2) which A4 (Combustion engine Control unit) learns. Perform coding of Y16 (Fuel injector 2) which A4 (Combustion engine Control unit) learns. Go to step3
	Step3	Inspection procedure Turn the starter switch in OFF. Reinstall all the removed connectors. Erase fault memory and perform a test drive. Check if this diagnosis code has occurred. Are current fault codes present? No: Go to step4 Yes: Go to step5
	Step4	Inspection completed
	Step5	Inspection procedure Perform the operation start and replace A4 (Combustion engine Control unit). Inspection completed
	Step6	Inspection procedure Repair or replace electrical lines. Reinstall all the removed connectors. Erase fault memory and perform a test drive. Check if this diagnosis code has occurred. Are current fault codes present? No: Go to step4 Yes: Go to step2

654-5: The fuel injector (cylinder 2) has an electrical fault or an open circuit.

Generation condition	[Test Condition] • Continuously
	[Fault Detection] • If the measured pattern for the injector evaluation of cylinder 2 is equal to applied behaviour bit pattern for open load detection.
	[Defect Debouncing] • Defect condition exceeded cumulatively > 4.00 events • Failure is detected if active for 20% of events
Fault healing	• No Healing possible (disabled by Data set)

https://truckmanualshub.com/

		• None except FIDs.
System reaction		• 1) Fid / Reagent dosing quantity for SCR reduced (to DStgy_facUreaDesRed_C) • 2) FId / Fuel quantity Balancing Control disabled (e.g. error in crankshaft speed signal) • 3) FId / Adaptation of the correction values of Fuel Mass Observer (FMO) inhibited (no correction of detected deviation between injected fuel and Lambda sensor signal) • 4) FId / Fuel Mass Observer (FMO) switched off (no monitoring of injected fuel by Lambda sensor) • 5) FId / Nominal Voltage Calibration NVC of injectors disabled • 6) FId / Redundant Engine shut off path not tested due to error debouncing of an injector • 7) FId / Redundant Engine shut off path not tested due to error of an injector • 8) FId / Redundant Engine shut off path test inhibited • 9) FId / Inhibit DPF monitor • 10) FId / Particulate filter ((DPF) Regeneration inhibited • 11) FId / Service regeneration of Particulate filter ((DPF) inhibited (due to DPF failure) • 12) FId / Zero Fuel Calibration (ZFC) of injectors disabled • 13) FId / Zero Fuel Calibration (ZFC) of injectors by Lambda Sensor signal disabled • 14) FId / Misfire Detection disabled • 15) FId / Inhibit OxiCat passive monitor • 16) Fid / SCR Monitoring or DEF injection release not possible (according calibration of Release Masks)
Failure cause		• Open load for injector of cylinder 2 is detected.
Failure repair		• Check wiring, replace fuel injector of cylinder 2.
Inspection procedure	Step1	Inspection procedure Turn the starter switch in OFF. Remove the connector of A4 (Combustion engine Control unit). Remove the connector of Y16 (Fuel injector 2). If corresponding fault codes are also present on other components, check the common power supply and common ground point ‘‘ for open circuit and short circuit. Check the circuit across Y16.2/2 and A4.X1.60/2 for open or short circuit. Make a visual check on each connector. Is any abnormality recognized? No: Go to step2 Yes: Go to step
	Step2	Inspection procedure Turn the starter switch in OFF. Replace component “Y16 (Fuel injector 2)”. Reinstall all the removed connectors. Turn the starter switch in ON. Erase the fault code. Perform the learned value resetting procedure of Y16 (Fuel injector 2) which A4 (Combustion engine Control unit) learns. Perform coding of Y16 (Fuel injector 2) which A4 (Combustion engine Control unit) learns. Go to step3
	Step3	Inspection procedure Turn the starter switch in OFF. Reinstall all the removed connectors. Erase fault memory and perform a test drive. Check if this diagnosis code has occurred. Are current fault codes present? No: Go to step4 Yes: Go to step5
	Step4	Inspection completed
	Step5	Inspection procedure Perform the operation start and replace A4 (Combustion engine Control unit). Inspection completed

https://truckmanualshub.com/

Inspection procedure	Step6	Inspection procedure Repair or replace electrical lines. Reinstall all the removed connectors. Erase fault memory and perform a test drive. Check if this diagnosis code has occurred. Are current fault codes present? No: Go to step4 Yes: Go to step2

654-6: The fuel injector of cylinder 2 has a short circuit between positive and ground.

Generation condition		[Test Condition] • Continuously
		[Fault Detection] • If the measured pattern for the injector evaluation of cylinder 2 is equal to applied behaviour bit pattern for short circuit Highside/Lowside detection.
		[Defect Debouncing] • Defect condition exceeded cumulatively > 4.00 events • Failure is detected if active for 20% of events
Fault healing		• No Healing possible (disabled by Data set)
System reaction		• None except FIDs.
		• 1) Fid / Reagent dosing quantity for SCR reduced (to DStgy_facUreaDesRed_C) • 2) FId / Fuel quantity Balancing Control disabled (e.g. error in crankshaft speed signal) • 3) FId / Adaptation of the correction values of Fuel Mass Observer (FMO) inhibited (no correction of detected deviation between injected fuel and Lambda sensor signal) • 4) FId / Fuel Mass Observer (FMO) switched off (no monitoring of injected fuel by Lambda sensor) • 5) FId / Cylinder 4 (firing order) shut off • 6) FId / Nominal Voltage Calibration NVC of injectors disabled • 7) FId / Redundant Engine shut off path not tested due to error debouncing of an injector • 8) FId / Redundant Engine shut off path not tested due to error of an injector • 9) FId / Redundant Engine shut off path test inhibited • 10) FId / Inhibit DPF monitor • 11) FId / Zero Fuel Calibration (ZFC) of injectors disabled • 12) FId / Zero Fuel Calibration (ZFC) of injectors by Lambda Sensor signal disabled • 13) FId / Misfire Detection disabled • 14) FId / Inhibit OxiCat passive monitor • 15) Fid / SCR Monitoring or DEF injection release not possible (according calibration of Release Masks)
Failure cause		• Short circuit in wiring or injector
Failure repair		• Check wiring, replace fuel injector of cylinder 2.
Inspection procedure	Step1	Inspection procedure Turn the starter switch in OFF. Remove the connector of A4 (Combustion engine Control unit). Remove the connector of Y16 (Fuel injector 2). If corresponding fault codes are also present on other components, check the common power supply and common ground point “ for open circuit and short circuit. Check the circuit across Y16.2/2 and A4.X1.60/2 for open or short circuit. Make a visual check on each connector. Is any abnormality recognized? No: Go to step2 Yes: Go to step6

https://truckmanualshub.com/

Inspection procedure	Step2	Inspection procedure Turn the starter switch in OFF. Replace component “Y16 (Fuel injector 2)”. Reinstall all the removed connectors. Turn the starter switch in ON. Erase the fault code. Perform the learned value resetting procedure of Y16 (Fuel injector 2) which A4 (Combustion engine Control unit) learns. Perform coding of Y16 (Fuel injector 2) which A4 (Combustion engine Control unit) learns. Go to step3
	Step3	Inspection procedure Turn the starter switch in OFF. Reinstall all the removed connectors. Erase fault memory and perform a test drive. Check if this diagnosis code has occurred. Are current fault codes present? No: Go to step4 Yes: Go to step5
	Step4	Inspection completed
	Step5	Inspection procedure Perform the operation start and replace A4 (Combustion engine Control unit). Inspection completed
	Step6	Inspection procedure Repair or replace electrical lines. Reinstall all the removed connectors. Erase fault memory and perform a test drive. Check if this diagnosis code has occurred. Are current fault codes present? No: Go to step4 Yes: Go to step2

677-3: The starter relay has a short circuit to positive.

Generation condition	[Test Condition] • Monitoring is active while the battery voltage is over 10.00V, as long as the battery voltage is over 10.00V and 2.00s after this threshold has been exceeded, if none of the CAN controllers is in bus-off state, 2.00s after last CAN controller is no more in bus-off state and if the ECU is not in afterrun • Monitoring only when the power stage is inactive. • ECU not in after-run, Battery voltage > 9.50V (switch off < 9.00V) and Test of redundant shut-off paths not active)
	[Fault Detection] • Hardware reports a Short Circuit to Battery error on HS power stage for the starter relay actuator.
	[Defect Debouncing] • Defect condition exceeded cumulatively > 200.00ms • Failure is detected if active for 25% of the time
Fault healing	• Hardware does not report a Short Circuit to Battery error on HS power stage for the starter relay actuator.
System reaction	• Power stage shut off. • Further reactions according FID (see FID’s)
	• 1) FId / Physical errors that could be detected when the Starter is in the Running state • 2) FId / Physical errors that could be detected when the Starter is in the Stopped state • 3) FId / Status of function identifier FId_EngDemTrqLimErr1 • 4) FId / Torque limitation 2 activated for power reduction • 5) FId / Engine speed Limitation 2 for HIgh/Low engine speed (HLS) control active • 6) FId / Inhibit ISS, max number of engine starts exceeded
Failure cause	• Short circuit of wiring to external source or defective HS starter relay
Failure repair	• Check of wiring or replacement of HS relay

https://truckmanualshub.com/

Inspection procedure	Step1	Inspect or verify the following items. Repair or replace faulty items as necessary. If one of diagnosis codes associated with A20 (SAM) is generated, make a system diagnosis according to the diagnosis code. Go to Step2
	Step2	Inspection procedure Turn the starter switch in OFF. Remove the connector of A4 (Combustion engine Control unit). Remove the connector of K21 (Safety relay). Check the circuit across A4.X2.94/91 and K21.5/3 for open or short circuit. Check the circuit across A4.X2.94/69 and K21.5/1 for open or short circuit. Make a visual check on each connector. Is any abnormality recognized? No: Go to Step3 Yes: Go to Step7
	Step3	Inspection procedure Turn the starter switch in OFF. Replace component “K21 (Safety relay)”. Reinstall all the removed connectors. Turn the starter switch in ON. Go to Step4
	Step4	Inspection procedure Turn the starter switch in OFF. Reinstall all the removed connectors. Erase fault memory and perform a test drive. Check if this diagnosis code has occurred. Are current fault codes present? No: Go to Step6 Yes: Go to Step5
	Step5	Inspection procedure Perform the operation start and replace A4 (Combustion engine Control unit). Go to Step6
	Step6	Inspection completed
	Step7	Inspection procedure Turn the starter switch in OFF. Remove the connector of A4 (Combustion engine Control unit). Remove the connector of X16 (Intermediate connector). Check the circuit across A4.X2.94/91 and X16.16/10 for open or short circuit. Check the circuit across A4.X2.94/69 and X16.16/11 for open or short circuit. Make a visual check on each connector. Is any abnormality recognized? No: Go to Step8 Yes: Go to Step9
	Step8	Inspection procedure Repair or replace the harness across K21 (Safety relay) and X16 (Intermediate connector). Reinstall all the removed connectors. Erase fault memory and perform a test drive. Check if this diagnosis code has occurred. Are current fault codes present? No: Go to Step6 Yes: Go to Step3
	Step9	Inspection procedure Repair or replace the harness across A4 (Combustion engine Control unit) and X16 (Intermediate connector). Reinstall all the removed connectors. Erase fault memory and perform a test drive. Check if this diagnosis code has occurred. Are current fault codes present? No: Go to Step6 Yes: Go to Step3

https://truckmanualshub.com/

677-4: The starter relay has a short circuit to ground.

Generation condition		[Test Condition] • Monitoring is active while the battery voltage is over 10.00V, as long as the battery voltage is over 10.00V and 2.00s after this threshold has been exceeded, if none of the CAN controllers is in bus-off state, 2.00s after last CAN controller is no more in bus-off state and if the ECU is not in afterrun • Monitoring continuously in ON and OFF state. • ECU not in after-run, Battery voltage > 9.50V (switch off < 9.00V) and Test of redundant shut-off paths not active)
		[Fault Detection] • Hardware reports a Short Circuit to Ground error on HS power stage for the starter relay actuator.
		[Defect Debouncing] • Defect condition exceeded cumulatively > 500.00ms • Failure is detected if active for 25% of the time
Fault healing		• Hardware does not report a Short Circuit to Ground error on HS power stage for the starter relay actuator.
System reaction		• Power stage shut off. • Further reactions according FID (see FID's)
		• 1) FId / Physical errors that could be detected when the Starter is in the Running state • 2) FId / Physical errors that could be detected when the Starter is in the Stopped state • 3) FId / Inhibit ISS, max number of engine starts exceeded
Failure cause		• Short circuit of wiring to ground or defective HS starter relay
Failure repair		• Check of wiring or replacement of HS starter relay
Inspection procedure	Step1	Inspect or verify the following items. Repair or replace faulty items as necessary. If one of diagnosis codes associated with A20 (SAM) is generated, make a system diagnosis according to the diagnosis code. Go to Step2
	Step2	Inspection procedure Turn the starter switch in OFF. Remove the connector of A4 (Combustion engine Control unit). Remove the connector of K21 (Safety relay). Check the circuit across A4.X2.94/91 and K21.5/3 for open or short circuit. Check the circuit across A4.X2.94/69 and K21.5/1 for open or short circuit. Make a visual check on each connector. Is any abnormality recognized? No: Go to Step3 Yes: Go to Step7
	Step3	Inspection procedure Turn the starter switch in OFF. Replace component "K21 (Safety relay)". Reinstall all the removed connectors. Turn the starter switch in ON. Go to Step4
	Step4	Inspection procedure Turn the starter switch in OFF. Reinstall all the removed connectors. Erase fault memory and perform a test drive. Check if this diagnosis code has occurred. Are current fault codes present? No: Go to Step6 Yes: Go to Step5
	Step5	Inspection procedure Perform the operation start and replace A4 (Combustion engine Control unit). Go to Step6
	Step6	Inspection completed

https://truckmanualshub.com/

Inspection procedure	Step7	Inspection procedure Turn the starter switch in OFF. Remove the connector of A4 (Combustion engine Control unit). Remove the connector of X16 (Intermediate connector). Check the circuit across A4.X2.94/91 and X16.16/10 for open or short circuit. Check the circuit across A4.X2.94/69 and X16.16/11 for open or short circuit. Make a visual check on each connector. Is any abnormality recognized? No: Go to Step8 Yes: Go to Step9
	Step8	Inspection procedure Repair or replace the harness across K21 (Safety relay) and X16 (Intermediate connector). Reinstall all the removed connectors. Erase fault memory and perform a test drive. Check if this diagnosis code has occurred. Are current fault codes present? No: Go to Step6 Yes: Go to Step3
	Step9	Inspection procedure Repair or replace the harness across A4 (Combustion engine Control unit) and X16 (Intermediate connector). Reinstall all the removed connectors. Erase fault memory and perform a test drive. Check if this diagnosis code has occurred. Are current fault codes present? No: Go to Step6 Yes: Go to Step3

677-5: The starter relay has an open circuit.

Generation condition		[Test Condition] • Monitoring is active while the battery voltage is over 10.00V, as long as the battery voltage is over 10.00V and 2.00s after this threshold has been exceeded, if none of the CAN controllers is in bus-off state, 2.00s after last CAN controller is no more in bus-off state and if the ECU is not in afterrun • Monitoring only when the power stage is inactive. • ECU not in after-run, Battery voltage > 9.50V (switch off < 9.00V) and Test of redundant shut-off paths not active)
		[Fault Detection] • Hardware reports an open load (OL) error on power stage for the LS starter relay actuator.
		[Defect Debouncing] • Defect condition exceeded cumulatively > 90.00ms • Failure is detected if active for 25% of the time
Fault healing		• Hardware does not report an open load (OL) error on power stage for the LS starter relay actuator.
System reaction		• Power stage shut off. • Further reactions according FID (see FID's)
		• 1) FId / Physical errors that could be detected when the Starter is in the Stopped state • 2) FId / Inhibit ISS, max number of engine starts exceeded
Failure cause		• Broken or disconnected wiring or defective LS starter relay
Failure repair		• Check of wiring or replacement of LS starter relay
Inspection procedure	Step1	Inspect or verify the following items. Repair or replace faulty items as necessary. If one of diagnosis codes associated with A20 (SAM) is generated, make a system diagnosis according to the diagnosis code. Go to Step2

https://truckmanualshub.com/

Inspection procedure	Step2	Inspection procedure Turn the starter switch in OFF. Remove the connector of A4 (Combustion engine Control unit). Remove the connector of K21 (Safety relay). Check the circuit across A4.X2.94/91 and K21.5/3 for open or short circuit. Check the circuit across A4.X2.94/69 and K21.5/1 for open or short circuit. Make a visual check on each connector. Is any abnormality recognized? No: Go to Step3 Yes: Go to Step7
	Step3	Inspection procedure Turn the starter switch in OFF. Replace component “K21 (Safety relay)”. Reinstall all the removed connectors. Turn the starter switch in ON. Go to Step4
	Step4	Inspection procedure Turn the starter switch in OFF. Reinstall all the removed connectors. Erase fault memory and perform a test drive. Check if this diagnosis code has occurred. Are current fault codes present? No: Go to Step6 Yes: Go to Step5
	Step5	Inspection procedure Perform the operation start and replace A4 (Combustion engine Control unit). Go to Step6
	Step6	Inspection completed
	Step7	Inspection procedure Turn the starter switch in OFF. Remove the connector of A4 (Combustion engine Control unit). Remove the connector of X16 (Intermediate connector). Check the circuit across A4.X2.94/91 and X16.16/10 for open or short circuit. Check the circuit across A4.X2.94/69 and X16.16/11 for open or short circuit. Make a visual check on each connector. Is any abnormality recognized? No: Go to Step8 Yes: Go to Step9
	Step8	Inspection procedure Repair or replace the harness across K21 (Safety relay) and X16 (Intermediate connector). Reinstall all the removed connectors. Erase fault memory and perform a test drive. Check if this diagnosis code has occurred. Are current fault codes present? No: Go to Step6 Yes: Go to Step3
	Step9	Inspection procedure Repair or replace the harness across A4 (Combustion engine Control unit) and X16 (Intermediate connector). Reinstall all the removed connectors. Erase fault memory and perform a test drive. Check if this diagnosis code has occurred. Are current fault codes present? No: Go to Step6 Yes: Go to Step3

https://truckmanualshub.com/

723-2: Defect Fault Check for Signal of camshaft.Data erratic, intermittent or incorrect

Generation condition		[Test Condition] • Diagnostics is active if engine is running and no error in the crankshaft speed sensor is present
		[Fault Detection] • If camshaft signal does not match pattern (edge distance, level) or not all expected camshaft edges detected during a engine revolution. Different monitoring strategies are active during synchronisation phase (engine start) and normal engine running.
		[Defect Debouncing] • Immediate
Fault healing		• If correct pattern is recognised.
System reaction		• If problem is detected at engine start, a redundant synchronisation of the angular system is performed using only the crankshaft increment signal and test injections to determine engine phase, if procedure fails the injection is aborted and the system waits for a restart. • See also FIDs list.
		• 1) FId / Camshaft position adaption (learning of real position to the theoretical one) inhibited • 2) FId / Camshaft offset diagnosis inhibited (due camshaft or crankshaft signal errors) • 3) FId / Fuel quantity Balancing Control disabled (e.g. error in crankshaft speed signal) • 4) FId / Offset test of Rail pressure sensor disabled • 5) FId / Offset test of Rail pressure sensor only released, if this failure path is tested • 6) FId / Tooth Angle Adaption (TAA) of crank speed sensor disabled • 7) FId / Inhibit ISS, max number of engine starts exceeded
Failure cause		• Cam Shaft speed signal not stable: • electrical intermittent open circuit • sensor not fixed correctly • electrical disturbances due to damaged isolation of wiring harness • electrical disturbances due to special electrical features
Failure repair		• Check wiring, sensor installation and proper functioning of camshaft phase sensor (evaluate raw signals) • Check if sensor fixed correctly (should not be moveable), check wiring harness and contacts, check if electrical lines with high electric performance are additionally installed (components not validated by the vehicle manufacturer).
Inspection procedure	Step1	Inspection procedure Inspect the suspected factors mentioned above sequentially to locate faulty parts. Repair or replace the faulty part as necessary.

723-9: Defect Fault Check for Signal of camshaft.No signal

Generation condition	[Test Condition] • Diagnostics is active if engine is running and no error in the crankshaft speed sensor is present
	[Fault Detection] • If crankshaft signal shows no errors and no camshaft edge is detected for at least 3.00- crankshaft gaps.
	[Defect Debouncing] • Immediate
Fault healing	• If at least one camshaft edge is detected since last crankshaft gap

https://truckmanualshub.com/

System reaction		• If problem is detected at engine start, a redundant synchronisation of the angular system is performed using only the crankshaft increment signal and test injections to determine engine phase, if procedure fails the injection is aborted and the system waits for a restart. • See also FIDs list.
		• 1) FId / Camshaft position adaption (learning of real position to the theoretical one) inhibited • 2) FId / Camshaft offset diagnosis inhibited (due camshaft or crankshaft signal errors) • 3) FId / Fuel quantity Balancing Control disabled (e.g. error in crankshaft speed signal) • 4) FId / Offset test of Rail pressure sensor disabled • 5) FId / Offset test of Rail pressure sensor only released, if this failure path is tested • 6) FId / Tooth Angle Adaption (TAA) of crank speed sensor disabled • 7) FId / Inhibit ISS, max number of engine starts exceeded
Failure cause		• Camshaft speed sensor defective • Wiring harness “open circuit” • Camshaft sensor not mounted
Failure repair		• Check if sensor mounted correctly • Check wiring harness • Check sensor functionality and replace it if necessary
Inspection procedure	Step1	Inspection procedure If one of diagnosis codes associated with SAM ECU is generated, make a system diagnosis according to the diagnosis code. Go to Step2
	Step2	Inspection procedure Turn the starter switch in OFF. Remove the connector of A4 (Combustion engine Control unit). Remove the connector of B35 (Position sensor Cylinder). Check the circuit across B35.3/3 and A4.X1.60/14 for open or short circuit. Check the circuit across B35.3/2 and A4.X1.60/53 for open or short circuit. Check the circuit across B35.3/1 and A4.X1.60/36 for open or short circuit. Make a visual check on each connector. Is any abnormality recognized? No: Go to Step3 Yes: Go to Step7
	Step3	Inspection procedure Turn the starter switch in OFF. Replace component “B35 (Position sensor Cylinder)”. Reinstall all the removed connectors. Go to Step4
	Step4	Inspection procedure Turn the starter switch in OFF. Reinstall all the removed connectors. Erase fault memory and perform a test drive. Check if this diagnosis code has occurred. Are current fault codes present? No: Go to Step6 Yes: Go to Step5
	Step5	Inspection procedure Perform the operation start and replace A4 (Combustion engine Control unit). Go to Step6
	Step6	Inspection completed
	Step7	Inspection procedure Repair or replace electrical lines. Reinstall all the removed connectors. Erase fault memory and perform a test drive. Check if this diagnosis code has occurred. Are current fault codes present? No: Go to Step6 Yes: Go to Step3

https://truckmanualshub.com/

723-31: Defect Fault Check for Signal of camshaft.Offset angle is exceeded.

Generation condition		[Test Condition] • Continuously when engine speed is detectable and no camshaft failures already detected
		[Fault Detection] • Offset between crankshaft signal and expected camshaft first edge <-10°C {14°F}rS OR > 10°C {50°F}rS for more than 4.00- consecutive cycles
		[Defect Debouncing] • Immediate
Fault healing		• Offset between crankshaft signal and expected camshaft first edge in range for at least 4.00- consecutive cycles.
System reaction		• If problem is detected at engine start, a redundant synchronisation of the angular system is performed using only the crankshaft increment signal and test injections to determine engine phase, if procedure fails the injection is aborted and the system waits for a restart. • See also FIDs list.
		• 1) FId / Status of function identifier FId_EngDemTrqLimErr1 • 2) FId / Torque limitation 3 activated for power reduction • 3) FId / Camshaft position adaption (learning of real position to the theoretical one) inhibited • 4) FId / Camshaft sensor diagnosis inhibited (due to sensor offset error) • 5) FId / Syncronisation between Cam and Crank shaft sensor not released and therefore fuel injection inhibited (--> no engine start) • 6) FId / Fuel quantity Balancing Control disabled (e.g. error in crankshaft speed signal) • 7) FId / Engine speed Limitation 3 for HIgh/Low engine speed (HLS) control active • 8) FId / Offset test of Rail pressure sensor disabled • 9) FId / Offset test of Rail pressure sensor only released, if this failure path is tested • 10) FId / Tooth Angle Adaption (TAA) of crank speed sensor disabled • 11) FId / Inhibit ISS, max number of engine starts exceeded
Failure cause		• Camshaft sensor position deviates form crankshaft position: • camshaft mal positioned (e.g. tooth belt: 1 tooth skipped) • camshaft position wheel mal positioned (if adjustable) • camshaft sensor position mal positioned (if adjustable) • crankshaft signal mal positioned (same as camshaft)
Failure repair		• Check correct positions of camshaft signal wheel and crankshaft signal wheel to piston position
Inspection procedure	Step1	Inspection procedure Inspect the suspected factors mentioned above sequentially to locate faulty parts. Repair or replace the faulty part as necessary.

917-9: CAN timeout fault

Generation condition	[Test Condition] • Monitoring is active 2.00s after ECU initialization while engine isn't running yet, while the engine isn't cranking, 2.00s after engine startup, while the battery voltage is over 10.00V, as long as the battery voltage is over 10.00V and 2.00s after this threshold has been exceeded, if none of the CAN controllers is in bus-off state, 2.00s after last CAN controller is no more in bus-off state and if the ECU is not in afterrun • Continuously
	[Fault Detection] • Timeout of HRVD message
	[Defect Debouncing] • Defect condition fulfilled continuously >500.0 ms
Fault healing	• If the HRVD message is received correct after the debouncing time the DFC is healed.
System reaction	• The default value for Vehicle distance is used: • Dspl_IMlgHiRes = 0.00m;

https://truckmanualshub.com/

Failure cause		• Defective CAN controller of Body Computer, under voltage of BC missing BC, CAN cable connecting the Body Computer is disconnected or broken. Short circuit in wiring.
Failure repair		• Check presence and correct connection of the Body Computer to the network, Check correct functioning of the BC CAN controller and its voltage supply. Check wiring.
Inspection procedure	Step1	Inspection procedure Inspect the suspected factors mentioned above sequentially to locate faulty parts. Repair or replace the faulty part as necessary.

931-3: Component 'Presupply pump' has a short circuit to positive.

Generation condition		[Test Condition] • Monitoring is active while the battery voltage is over 10.00V and as long as the battery voltage is over 10.00V and 2.00s after this threshold has been exceeded • Monitoring only active pressure supply pump activated.
		[Fault Detection] • The power stage hardware reports a "short circuit to battery" (SCB) error.
		[Defect Debouncing] • Defect condition exceeded cumulatively > 290.00ms • Failure is detected if active for 25% of the time
Fault healing		• To give the possibility for healing, an electric impulse is sent to power stage each 1000.00ms 20.00- times in actual driving cycle. Failure healed, if the power stage does not report an SCB error. Else no healing possible at this driving cycle.
System reaction		• Power stage shut-off, i.e. the engine probably stalls or witches off due to too low fuel pressure. • Further reactions according FID (see FID)
		• 1) FId / Status of function identifier FId_EngDemTrqLimErr1 • 2) FId / Torque limitation 2 activated for power reduction • 3) FId / Engine speed Limitation 2 for HIgh/Low engine speed (HLS) control active • 4) FId / Inhibit ISS, max number of engine starts exceeded
Failure cause		• Short circuit of wiring to external source or inside presupply pump
Failure repair		• Check of wiring or replace pre supply pump
Inspection procedure	Step1	Inspect or verify the following items. Repair or replace faulty items as necessary. If one of diagnosis codes associated with A20 (SAM) is generated, make a system diagnosis according to the diagnosis code. Go to Step2
	Step2	Inspection procedure Turn the starter switch in OFF. Remove the connector of A4 (Combustion engine Control unit). Remove the connector of A20 (SAM). Remove the connector of A41 (Electric fuel pump). Remove the connector of Ground. Check the circuit across A4.X2.94/27 and A20.X10.14/3 for open or short circuit. Check the circuit across A41.4/4 and A20.X10.14/13 for open or short circuit. Check the circuit across A41.4/3 and Ground for open or short circuit. Make a visual check on each connector. Is any abnormality recognized? No: Go to Step3 Yes: Go to Step9
	Step3	Inspection procedure Turn the starter switch in OFF. Replace component "A41 (Electric fuel pump)". Reinstall all the removed connectors. Go to Step4

https://truckmanualshub.com/

Inspection procedure	Step4	Inspection procedure Turn the starter switch in OFF. Reinstall all the removed connectors. Erase fault memory and perform a test drive. Check if this diagnosis code has occurred. Are current fault codes present? No: Go to Step8 Yes: Go to Step5
	Step5	Inspection procedure Turn the starter switch in OFF. Perform the operation start and replace A20 (SAM). Reinstall all the removed connectors. Turn the starter switch in ON. Go to Step6
	Step6	Inspection procedure Turn the starter switch in OFF. Reinstall all the removed connectors. Erase fault memory and perform a test drive. Check if this diagnosis code has occurred. Are current fault codes present? No: Go to Step8 Yes: Go to Step7
	Step7	Inspection procedure Perform the operation start and replace A4 (Combustion engine Control unit). Go to Step8
	Step8	Inspection completed
	Step9	Inspection procedure Turn the starter switch in OFF. Remove the connector of A4 (Combustion engine Control unit). Remove the connector of A20 (SAM). Remove the connector of X45 (Intermediate connector). Remove the connector of Ground. Check the circuit across A4.X2.94/27 and A20.X10.14/3 for open or short circuit. Check the circuit across X45.12/3 and Ground for open or short circuit. Check the circuit across X45.12/4 and A20.X10.14/13 for open or short circuit. Make a visual check on each connector. Is any abnormality recognized? No: Go to Step10 Yes: Go to Step11
	Step10	Inspection procedure Repair or replace the harness across A41 (Electric fuel pump) and X45 (Intermediate connector). Reinstall all the removed connectors. Erase fault memory and perform a test drive. Check if this diagnosis code has occurred. Are current fault codes present? No: Go to Step8 Yes: Go to Step3
	Step11	Inspection procedure Repair or replace the harness across A4 (Combustion engine Control unit) and X45 (Intermediate connector). Reinstall all the removed connectors. Erase fault memory and perform a test drive. Check if this diagnosis code has occurred. Are current fault codes present? No: Go to Step8 Yes: Go to Step3

https://truckmanualshub.com/

931-4: Component 'Presupply pump' has a short circuit to ground.

Generation condition		[Test Condition] • Monitoring is active while the battery voltage is over 10.00V and as long as the battery voltage is over 10.00V and 2.00s after this threshold has been exceeded • Monitoring only active pressure supply pump NOT activated, i.e. 30.00s after Key 15 "on" at engine stand still or after engine speed < 50.00rpm (i.e. after Key 15 off or engine stall)
		[Fault Detection] • The power stage hardware reports a "short circuit to ground" (SCG) error.
		[Defect Debouncing] • Defect condition exceeded cumulatively > 270.00ms • Failure is detected if active for 25% of the time
Fault healing		• The power stage does not report an "short to ground" (SCG) error.
System reaction		• Power stage shut-off, i.e. the engine probably stalls or witches off due to too low fuel pressure. • Further reactions according FID (see FID)
		• 1) FId / Status of function identifier FId_EngDemTrqLimErr1 • 2) FId / Torque limitation 2 activated for power reduction • 3) FId / Engine speed Limitation 2 for HIgh/Low engine speed (HLS) control active • 4) FId / Inhibit ISS, max number of engine starts exceeded
Failure cause		• Short circuit of wiring to ground or inside presupply pump
Failure repair		• Check of wiring or replace pre supply pump
Inspection procedure	Step1	Inspect or verify the following items. Repair or replace faulty items as necessary. If one of diagnosis codes associated with A20 (SAM) is generated, make a system diagnosis according to the diagnosis code. Go to Step2
	Step2	Inspection procedure Turn the starter switch in OFF. Remove the connector of A4 (Combustion engine Control unit). Remove the connector of A20 (SAM). Remove the connector of A41 (Electric fuel pump). Remove the connector of Ground. Check the circuit across A4.X2.94/27 and A20.X10.14/3 for open or short circuit. Check the circuit across A41.4/4 and A20.X10.14/13 for open or short circuit. Check the circuit across A41.4/3 and Ground for open or short circuit. Make a visual check on each connector. Is any abnormality recognized? No: Go to Step3 Yes: Go to Step9
	Step3	Inspection procedure Turn the starter switch in OFF. Replace component "A41 (Electric fuel pump)". Reinstall all the removed connectors. Go to Step4
	Step4	Inspection procedure Turn the starter switch in OFF. Reinstall all the removed connectors. Erase fault memory and perform a test drive. Check if this diagnosis code has occurred. Are current fault codes present? No: Go to Step8 Yes: Go to Step5
	Step5	Inspection procedure Turn the starter switch in OFF. Perform the operation start and replace A20 (SAM). Reinstall all the removed connectors. Turn the starter switch in ON. Go to Step6

https://truckmanualshub.com/

Inspection procedure	Step6	Inspection procedure Turn the starter switch in OFF. Reinstall all the removed connectors. Erase fault memory and perform a test drive. Check if this diagnosis code has occurred. Are current fault codes present? No: Go to Step8 Yes: Go to Step7
	Step7	Inspection procedure Perform the operation start and replace A4 (Combustion engine Control unit). Go to Step8
	Step8	Inspection completed
	Step9	Inspection procedure Turn the starter switch in OFF. Remove the connector of A4 (Combustion engine Control unit). Remove the connector of A20 (SAM). Remove the connector of X45 (Intermediate connector). Remove the connector of Ground. Check the circuit across A4.X2.94/27 and A20.X10.14/3 for open or short circuit. Check the circuit across X45.12/3 and Ground for open or short circuit. Check the circuit across X45.12/4 and A20.X10.14/13 for open or short circuit. Make a visual check on each connector. Is any abnormality recognized? No: Go to Step10 Yes: Go to Step11
	Step10	Inspection procedure Repair or replace the harness across A41 (Electric fuel pump) and X45 (Intermediate connector). Reinstall all the removed connectors. Erase fault memory and perform a test drive. Check if this diagnosis code has occurred. Are current fault codes present? No: Go to Step8 Yes: Go to Step3
	Step11	Inspection procedure Repair or replace the harness across A4 (Combustion engine Control unit) and X45 (Intermediate connector). Reinstall all the removed connectors. Erase fault memory and perform a test drive. Check if this diagnosis code has occurred. Are current fault codes present? No: Go to Step8 Yes: Go to Step3

931-5: Presupply pumpCurrent below normal or Open circuit

Generation condition	[Test Condition] • Monitoring only active pressure supply pump NOT activated, i.e. 30.00s after Key 15 “on” at engine stand still or after engine speed < 50.00rpm (i.e. after Key 15 off or engine stall)
	[Fault Detection] • The power stage hardware reports a “open load” (OL) error.
	[Defect Debouncing] • Defect condition exceeded cumulatively > 290.00ms • Failure is detected if active for 25% of the time
Fault healing	• The power stage does not report an “open load” (OL) error.
System reaction	• Power stage shut-off, i.e. the engine probably stalls or witches off due to too low fuel pressure. • Further reactions according FID (see FID)
	• 1) FId / Status of function identifier FId_EngDemTrqLimErr1 • 2) FId / Torque limitation 2 activated for power reduction • 3) FId / Engine speed Limitation 2 for HIgh/Low engine speed (HLS) control active • 4) FId / Inhibit ISS, max number of engine starts exceeded

https://truckmanualshub.com/

Failure cause		• Broken or disconnected wiring or defective presupply pump
Failure repair		• Check of wiring or replace pre supply pump
Inspection procedure	Step1	Inspect or verify the following items. Repair or replace faulty items as necessary. If one of diagnosis codes associated with A20 (SAM) is generated, make a system diagnosis according to the diagnosis code. Go to Step2
	Step2	Inspection procedure Turn the starter switch in OFF. Remove the connector of A4 (Combustion engine Control unit). Remove the connector of A20 (SAM). Remove the connector of A41 (Electric fuel pump). Remove the connector of Ground. Check the circuit across A4.X2.94/27 and A20.X10.14/3 for open or short circuit. Check the circuit across A41.4/4 and A20.X10.14/13 for open or short circuit. Check the circuit across A41.4/3 and Ground for open or short circuit. Make a visual check on each connector. Is any abnormality recognized? No: Go to Step3 Yes: Go to Step9
	Step3	Inspection procedure Turn the starter switch in OFF. Replace component “A41 (Electric fuel pump)”. Reinstall all the removed connectors. Go to Step4
	Step4	Inspection procedure Turn the starter switch in OFF. Reinstall all the removed connectors. Erase fault memory and perform a test drive. Check if this diagnosis code has occurred. Are current fault codes present? No: Go to Step8 Yes: Go to Step5
	Step5	Inspection procedure Turn the starter switch in OFF. Perform the operation start and replace A20 (SAM). Reinstall all the removed connectors. Turn the starter switch in ON. Go to Step6
	Step6	Inspection procedure Turn the starter switch in OFF. Reinstall all the removed connectors. Erase fault memory and perform a test drive. Check if this diagnosis code has occurred. Are current fault codes present? No: Go to Step8 Yes: Go to Step7
	Step7	Inspection procedure Perform the operation start and replace A4 (Combustion engine Control unit). Go to Step8
	Step8	Inspection completed

https://truckmanualshub.com/

Inspection procedure	Step9	Inspection procedure Turn the starter switch in OFF. Remove the connector of A4 (Combustion engine Control unit). Remove the connector of A20 (SAM). Remove the connector of X45 (Intermediate connector). Remove the connector of Ground. Check the circuit across A4.X2.94/27 and A20.X10.14/3 for open or short circuit. Check the circuit across X45.12/3 and Ground for open or short circuit. Check the circuit across X45.12/4 and A20.X10.14/13 for open or short circuit. Make a visual check on each connector. Is any abnormality recognized? No: Go to Step10 Yes: Go to Step11
	Step10	Inspection procedure Repair or replace the harness across A41 (Electric fuel pump) and X45 (Intermediate connector). Reinstall all the removed connectors. Erase fault memory and perform a test drive. Check if this diagnosis code has occurred. Are current fault codes present? No: Go to Step8 Yes: Go to Step3
	Step11	Inspection procedure Repair or replace the harness across A4 (Combustion engine Control unit) and X45 (Intermediate connector). Reinstall all the removed connectors. Erase fault memory and perform a test drive. Check if this diagnosis code has occurred. Are current fault codes present? No: Go to Step8 Yes: Go to Step3

931-12: Component ‘Presupply pump’ signals overtemperature.

Generation condition		[Test Condition] • Monitoring only active pressure supply pump activated.
		[Fault Detection] • The power stage detects an over temperature (OT) error.
		[Defect Debouncing] • Defect condition exceeded cumulatively > 270.00ms • Failure is detected if active for 25% of the time
Fault healing		• To give the possibility for healing, an electric impulse is sent to power stage each 1.00s 20.00- times in actual driving cycle. Failure healed, if the power stage does not report an OT error. Else no healing possible at this driving cycle.
System reaction		• Power stage shut-off, i.e. the engine probably stalls or witches off due to too low fuel pressure. • Further reactions according FID (see FID)
		• 1) FId / Status of function identifier FId_EngDemTrqLimErr1 • 2) FId / Torque limitation 2 activated for power reduction • 3) FId / Engine speed Limitation 2 for HIgh/Low engine speed (HLS) control active • 4) FId / Inhibit ISS, max number of engine starts exceeded
Failure cause		• High battery voltage, high temperature inside ECU, high load or wiring problem
Failure repair		• No reaction needed if failure isn’t present after short time, check load and output, check wiring, replace ECU
Inspection procedure	Step1	Inspect or verify the following items. Repair or replace faulty items as necessary. If one of diagnosis codes associated with A20 (SAM) is generated, make a system diagnosis according to the diagnosis code. Go to Step2

https://truckmanualshub.com/

Inspection procedure	Step2	Inspection procedure Turn the starter switch in OFF. Remove the connector of A4 (Combustion engine Control unit). Remove the connector of A20 (SAM). Remove the connector of A41 (Electric fuel pump). Remove the connector of Ground. Check the circuit across A4.X2.94/27 and A20.X10.14/3 for open or short circuit. Check the circuit across A41.4/4 and A20.X10.14/13 for open or short circuit. Check the circuit across A41.4/3 and Ground for open or short circuit. Make a visual check on each connector. Is any abnormality recognized? No: Go to Step3 Yes: Go to Step9
	Step3	Inspection procedure Turn the starter switch in OFF. Replace component “A41 (Electric fuel pump)”. Reinstall all the removed connectors. Go to Step4
	Step4	Inspection procedure Turn the starter switch in OFF. Reinstall all the removed connectors. Erase fault memory and perform a test drive. Check if this diagnosis code has occurred. Are current fault codes present? No: Go to Step8 Yes: Go to Step5
	Step5	Inspection procedure Turn the starter switch in OFF. Perform the operation start and replace A20 (SAM). Reinstall all the removed connectors. Turn the starter switch in ON. Go to Step6
	Step6	Inspection procedure Turn the starter switch in OFF. Reinstall all the removed connectors. Erase fault memory and perform a test drive. Check if this diagnosis code has occurred. Are current fault codes present? No: Go to Step8 Yes: Go to Step7
	Step7	Inspection procedure Perform the operation start and replace A4 (Combustion engine Control unit). Go to Step8
	Step8	Inspection completed
	Step9	Inspection procedure Turn the starter switch in OFF. Remove the connector of A4 (Combustion engine Control unit). Remove the connector of A20 (SAM). Remove the connector of X45 (Intermediate connector). Remove the connector of Ground. Check the circuit across A4.X2.94/27 and A20.X10.14/3 for open or short circuit. Check the circuit across X45.12/3 and Ground for open or short circuit. Check the circuit across X45.12/4 and A20.X10.14/13 for open or short circuit. Make a visual check on each connector. Is any abnormality recognized? No: Go to Step10 Yes: Go to Step11

https://truckmanualshub.com/

Inspection procedure	Step10	Inspection procedure Repair or replace the harness across A41 (Electric fuel pump) and X45 (Intermediate connector). Reinstall all the removed connectors. Erase fault memory and perform a test drive. Check if this diagnosis code has occurred. Are current fault codes present? No: Go to Step8 Yes: Go to Step3
	Step11	Inspection procedure Repair or replace the harness across A4 (Combustion engine Control unit) and X45 (Intermediate connector). Reinstall all the removed connectors. Erase fault memory and perform a test drive. Check if this diagnosis code has occurred. Are current fault codes present? No: Go to Step8 Yes: Go to Step3

959-9: CAN Timeout Error during CAN-receive-frame Time Date.

Generation condition	[Test Condition] • Monitoring is active while the battery voltage is over 10.00V, as long as the battery voltage is over 10.00V and 2.00s after this threshold has been exceeded, if none of the CAN controllers is in bus-off state, 2.00s after last CAN controller is no more in bus-off state and if the ECU is not in afterrun • Continuous
	[Fault Detection] • TimeDate message timeout detected
	[Defect Debouncing] • Defect condition fulfilled continuously >1000.0 ms
Fault healing	• TimeDate message received
System reaction	• Time/Date set to fix replacement value: • Year = 2240.00y • Month = 1.00mon • Day = 1.00d • Hour = 0.00h • Minutes = 0.00min • Seconds = 0.00s
	• 1) FId / Plausibilty check of temperature sensors at cold start not allowed • 2) FId / Inhibit temperature sampling • 3) FId / Inhibit plaus.check engine coolant temperature at cold start • 4) FId / Fuel temperature plausibility error detected • 5) FId / Inhibit plausibility check of EGR Cooler Temperature Downstream • 6) FId / Status of function identifier FID_UHCWrmStrtChk; Status des Functions Identifiers FID_UHCWrmStrtChk • 7) Fid / Substitute function for Time date receive frame
Failure cause	• Defective CAN controller of Tachograph or Instrument Cluster, CAN cable disconnected or broken. Short circuit in wiring.
Failure repair	• Check presence and correct connection of the Tachograph or of the Instrument Cluster to the network, Check correct functioning of the CAN controller. Check wiring.

https://truckmanualshub.com/

Inspection procedure	Step1	Refer to the help menu for Nos. other than above. *1: M/T *2: DUONIC *3: ISS (With Lock brake) *4: ISS (Without Lock brake) *5: Lock brake (Without ISS) *6: Other than *3,*4,*5 *7: Full-automatic air conditioner *8: Auto leveling *9: Manual leveling Inspection procedure If one of diagnosis codes associated with A11 (Meter cluster) is generated, make a system diagnosis according to the diagnosis code. Go to step2
	Step2	Refer to the help menu for Nos. other than above. *1: M/T *2: DUONIC *3: ISS (With Lock brake) *4: ISS (Without Lock brake) *5: Lock brake (Without ISS) *6: Other than *3,*4,*5 *7: Full-automatic air conditioner *8: Auto leveling *9: Manual leveling Inspection procedure Turn the starter switch in OFF. Remove all ECU connectors from the CAN communication line. Check CAN line for open circuit, short circuit to positive, short circuit to ground or short circuit to another electrical line. Is any abnormality recognized? No: Go to step3 Yes: Go to step8
	Step3	Inspection procedure Attach the connector of A20 (SAM). Check CAN line for open circuit, short circuit to positive, short circuit to ground or short circuit to another electrical line. Is any abnormality recognized? No: Go to step4 Yes: Go to step7
	Step4	Inspection procedure Attach the connector of A11 (Meter cluster). Check CAN line for open circuit, short circuit to positive, short circuit to ground or short circuit to another electrical line. Is any abnormality recognized? No: Go to step5 Yes: Go to step6
	Step5	Inspection procedure Turn the starter switch in OFF. Reinstall all the removed connectors. Erase fault memory and perform a test drive. If the diagnosis code has occurred even during the test drive, start the operation and then replace the A4 (Combustion engine Control unit). Inspection completed

https://truckmanualshub.com/

Inspection procedure	Step6	Inspection procedure Turn the starter switch in OFF. Reinstall all the removed connectors. Erase fault memory and perform a test drive. If the diagnosis code has occurred even during the test drive, start the operation and then replace the A11 (Meter cluster). Inspection completed
	Step7	Inspection procedure Turn the starter switch in OFF. Reinstall all the removed connectors. Erase fault memory and perform a test drive. If the diagnosis code has occurred even during the test drive, start the operation and then replace the A20 (SAM). Inspection completed
	Step8	Refer to the help menu for Nos. other than above. *1: M/T *2: DUONIC *3: ISS (With Lock brake) *4: ISS (Without Lock brake) *5: Lock brake (Without ISS) *6: Other than *3,*4,*5 *7: Full-automatic air conditioner *8: Auto leveling *9: Manual leveling Inspection procedure Repair or replace electrical lines. Reinstall all the removed connectors. Turn the starter switch in ON. Inspection completed

980-9: CAN Timeout Error during CAN-receive-frame PTO.

Generation condition	[Test Condition] • Monitoring is active 2.00s after ECU initialization while engine isn't running yet, while the engine isn't cranking, 2.00s after engine startup, while the battery voltage is over 10.00V, as long as the battery voltage is over 10.00V and 2.00s after this threshold has been exceeded, if none of the CAN controllers is in bus-off state, 2.00s after last CAN controller is no more in bus-off state and if the ECU is not in afterrun • Continuously
	[Fault Detection] • Timeout of RxPTO message is detected
	[Defect Debouncing] • Defect condition fulfilled continuously >500.0 ms
Fault healing	• If the RxPTO message is received correct, after the debouncing time the DFC is healed
System reaction	• Power takeoff switch status is set to default value 0.00-
Failure cause	• Defective CAN controller of SAM Interface or PTO, CAN cable connecting the interface is disconnected or broken. Short circuit in wiring.
Failure repair	• Check presence and correct connection of the SAM and PTO Interface to the network. Check wiring.

https://truckmanualshub.com/

Inspection procedure	Step1	Refer to the help menu for Nos. other than above. *1: M/T *2: DUONIC *3: ISS (With Lock brake) *4: ISS (Without Lock brake) *5: Lock brake (Without ISS) *6: Other than *3,*4,*5 *7: Full-automatic air conditioner *8: Auto leveling *9: Manual leveling Inspection procedure Turn the starter switch in OFF. Remove all ECU connectors from the CAN communication line. Check CAN line for open circuit, short circuit to positive, short circuit to ground or short circuit to another electrical line. Is any abnormality recognized? No: Go to step2 Yes: Go to step5
	Step2	Inspection procedure Attach the connector of A20 (SAM). Check CAN line for open circuit, short circuit to positive, short circuit to ground or short circuit to another electrical line. Is any abnormality recognized? No: Go to step3 Yes: Go to step4
	Step3	Inspection procedure Turn the starter switch in OFF. Reinstall all the removed connectors. Erase fault memory and perform a test drive. If the diagnosis code has occurred even during the test drive, start the operation and then replace the A4 (Combustion engine Control unit). Inspection completed
	Step4	Inspection procedure Turn the starter switch in OFF. Reinstall all the removed connectors. Erase fault memory and perform a test drive. If the diagnosis code has occurred even during the test drive, start the operation and then replace the A20 (SAM). Inspection completed
	Step5	Refer to the help menu for Nos. other than above. *1: M/T *2: DUONIC *3: ISS (With Lock brake) *4: ISS (Without Lock brake) *5: Lock brake (Without ISS) *6: Other than *3,*4,*5 *7: Full-automatic air conditioner *8: Auto leveling *9: Manual leveling Inspection procedure Repair or replace electrical lines. Reinstall all the removed connectors. Turn the starter switch in ON. Inspection completed

https://truckmanualshub.com/

1074-3: The output for actuation of component 'Exhaust Flap' has a short circuit to positive.

Generation condition		[Test Condition] • Monitoring is active while the battery voltage is over 10.00V and as long as the battery voltage is over 10.00V and 2.00s after this threshold has been exceeded • Monitoring only when the power stage is active.
		[Fault Detection] • Hardware reports a short circuit to battery (SCB) error on the power stage for the Exhaust Flap actuator.
		[Defect Debouncing] • Defect condition exceeded cumulatively > 10.00s • Failure is detected if active for 50% of the time
Fault healing		• To give the possibility for healing, an electric impulse is sent to power stage each 150.00ms. Failure healed, if the power stage does not report an SCB error.
System reaction		• Power stage is shut-off (Exhaust Flap in open position). • Further reactions according FID (see FID's)
		• 1) FId / Engine brake at fix position (EngBrk_rBrkDfl_C) • 2) FId / Particulate filter ((DPF) Regeneration inhibited • 3) FId / Service regeneration of Particulate filter ((DPF) inhibited (due to DPF failure) • 4) FId / Inhibit Charged Air Cooler monitoring
Failure cause		• Short circuit of wiring to external source or defective exhaust flap actuator
Failure repair		• Check of wiring or replace exhaust flap actuator
Inspection procedure	Step1	Inspect or verify the following items. Repair or replace faulty items as necessary. If any other fault code has occurred, perform the diagnostics procedure for the fault code. Go to Step2
	Step2	Inspection procedure Turn the starter switch in OFF. Remove the connector of A4 (Combustion engine Control unit). Remove the connector of Y9 (Engine brake Solenoid valve). Remove the connector of A20 (SAM). Remove the connector of Ground. Check the circuit across A4.X1.60/34 and Y9.3/1 for open or short circuit. Check the circuit across A20.X10.14/2 and Y9.3/3 for open or short circuit. Check the circuit across Ground and Y9.3/2 for open or short circuit. Make a visual check on each connector. Is any abnormality recognized? No: Go to Step3 Yes: Go to Step7
	Step3	Inspection procedure Turn the starter switch in OFF. Replace component "Y9 (Engine brake Solenoid valve)". Reinstall all the removed connectors. Turn the starter switch in ON. Go to Step4
	Step4	Inspection procedure Turn the starter switch in OFF. Reinstall all the removed connectors. Erase fault memory and perform a test drive. Check if this diagnosis code has occurred. Are current fault codes present? No: Go to Step6 Yes: Go to Step5
	Step5	Inspection procedure Perform the operation start and replace A4 (Combustion engine Control unit). Go to Step6
	Step6	Inspection completed

https://truckmanualshub.com/

Inspection procedure	Step7	Inspection procedure Turn the starter switch in OFF. Remove the connector of A4 (Combustion engine Control unit). Remove the connector of X39. Remove the connector of A20 (SAM). Remove the connector of Ground. Check the circuit across Ground and X39.12/8 for open or short circuit. Check the circuit across A20.X10.14/2 and X39.12/7 for open or short circuit. Make a visual check on each connector. Is any abnormality recognized? No: Go to Step8 Yes: Go to Step9
	Step8	Inspection procedure Repair or replace the harness across Y9 (Engine brake Solenoid valve) and X39. Reinstall all the removed connectors. Erase fault memory and perform a test drive. Check if this diagnosis code has occurred. Are current fault codes present? No: Go to Step6 Yes: Go to Step3
	Step9	Inspection procedure Repair or replace the harness across A20 (SAM) and X39. Repair or replace the harness across Ground and X39. Reinstall all the removed connectors. Erase fault memory and perform a test drive. Check if this diagnosis code has occurred. Are current fault codes present? No: Go to Step6 Yes: Go to Step3

1074-4: The exhaust flap has a short circuit to ground. / Component '10271-491' has a mechanical defect.

Generation condition		[Test Condition] • Monitoring is active while the battery voltage is over 10.00V and as long as the battery voltage is over 10.00V and 2.00s after this threshold has been exceeded • Monitoring only when the power stage is NOT active.
		[Fault Detection] • Hardware reports a short circuit to ground (SCG) error on the power stage for the Exhaust Flap Actuator.
		[Defect Debouncing] • Defect condition fulfilled continuously >40000.0 ms
Fault healing		• Hardware does not report a short circuit to ground (SCG) error on the power stage for the Exhaust Flap Actuator.
System reaction		• Power stage is shut-off Exhaust Flap Actuator in open position). • Further reactions according FID (see FID's)
		• 1) FId / Engine brake at fix position (EngBrk_rBrkDfl_C) • 2) FId / Particulate filter ((DPF) Regeneration inhibited • 3) FId / Service regeneration of Particulate filter ((DPF) inhibited (due to DPF failure) • 4) FId / Inhibit Charged Air Cooler monitoring
Failure cause		• Short circuit of wiring to ground or defective Exhaust Flap Actuator
Failure repair		• First Check wiring, if no short circuit found replace Exhaust Flap Actuator
Inspection procedure	Step1	Inspect or verify the following items. Repair or replace faulty items as necessary. If any other fault code has occurred, perform the diagnostics procedure for the fault code. Go to Step2

https://truckmanualshub.com/

Inspection procedure	Step2	Inspection procedure Turn the starter switch in OFF. Remove the connector of A4 (Combustion engine Control unit). Remove the connector of Y9 (Engine brake Solenoid valve). Remove the connector of A20 (SAM). Remove the connector of Ground. Check the circuit across A4.X1.60/34 and Y9.3/1 for open or short circuit. Check the circuit across A20.X10.14/2 and Y9.3/3 for open or short circuit. Check the circuit across Ground and Y9.3/2 for open or short circuit. Make a visual check on each connector. Is any abnormality recognized? No: Go to Step3 Yes: Go to Step7
	Step3	Inspection procedure Turn the starter switch in OFF. Replace component “Y9 (Engine brake Solenoid valve)”. Reinstall all the removed connectors. Turn the starter switch in ON. Go to Step4
	Step4	Inspection procedure Turn the starter switch in OFF. Reinstall all the removed connectors. Erase fault memory and perform a test drive. Check if this diagnosis code has occurred. Are current fault codes present? No: Go to Step5 Yes: Go to Step6
	Step5	Inspection completed
	Step6	Inspection procedure Perform the operation start and replace A4 (Combustion engine Control unit). Inspection completed
	Step7	Inspection procedure Turn the starter switch in OFF. Remove the connector of A4 (Combustion engine Control unit). Remove the connector of X39. Remove the connector of A20 (SAM). Remove the connector of Ground. Check the circuit across Ground and X39.12/8 for open or short circuit. Check the circuit across A20.X10.14/2 and X39.12/7 for open or short circuit. Make a visual check on each connector. Is any abnormality recognized? No: Go to Step8 Yes: Go to Step9
	Step8	Inspection procedure Repair or replace the harness across Y9 (Engine brake Solenoid valve) and X39. Reinstall all the removed connectors. Erase fault memory and perform a test drive. Check if this diagnosis code has occurred. Are current fault codes present? No: Go to Step5 Yes: Go to Step3
	Step9	Inspection procedure Repair or replace the harness across A20 (SAM) and X39. Repair or replace the harness across Ground and X39. Reinstall all the removed connectors. Erase fault memory and perform a test drive. Check if this diagnosis code has occurred. Are current fault codes present? No: Go to Step5 Yes: Go to Step3

https://truckmanualshub.com/

1074-5: The output for actuation of component 'Exhaust Flap' has an electrical fault or open circuit.

Generation condition		[Test Condition] • Monitoring is active while the battery voltage is over 10.00V and as long as the battery voltage is over 10.00V and 2.00s after this threshold has been exceeded • Monitoring only when the power stage is NOT active.
		[Fault Detection] • Hardware reports an open load (OL) error on power stage for the Exhaust Flap Actuator.
		[Defect Debouncing] • Defect condition exceeded cumulatively > 500.00ms • Failure is detected if active for 50% of the time
Fault healing		• Hardware does not report an open load (OL) error on power stage for the Exhaust Flap Actuator.
System reaction		• Power stage shut off (Throttle Valve Actuator in open position). • Further reactions according FID (see FID's)
		• 1) FId / Engine brake at fix position (EngBrk_rBrkDfl_C) • 2) FId / Particulate filter ((DPF) Regeneration inhibited • 3) FId / Service regeneration of Particulate filter ((DPF) inhibited (due to DPF failure) • 4) FId / Inhibit Charged Air Cooler monitoring
Failure cause		• Broken or disconnected wiring or defective Exhaust Flap Actuator
Failure repair		• Check of wiring, replace Exhaust Flap Actuator
Inspection procedure	Step1	Inspect or verify the following items. Repair or replace faulty items as necessary. If any other fault code has occurred, perform the diagnostics procedure for the fault code. Go to Step2
	Step2	Inspection procedure Turn the starter switch in OFF. Remove the connector of A4 (Combustion engine Control unit). Remove the connector of Y9 (Engine brake Solenoid valve). Remove the connector of A20 (SAM). Remove the connector of Ground. Check the circuit across A4.X1.60/34 and Y9.3/1 for open or short circuit. Check the circuit across A20.X10.14/2 and Y9.3/3 for open or short circuit. Check the circuit across Ground and Y9.3/2 for open or short circuit. Make a visual check on each connector. Is any abnormality recognized? No: Go to Step3 Yes: Go to Step7
	Step3	Inspection procedure Turn the starter switch in OFF. Replace component "Y9 (Engine brake Solenoid valve)". Reinstall all the removed connectors. Turn the starter switch in ON. Go to Step4
	Step4	Inspection procedure Turn the starter switch in OFF. Reinstall all the removed connectors. Erase fault memory and perform a test drive. Check if this diagnosis code has occurred. Are current fault codes present? No: Go to Step6 Yes: Go to Step5
	Step5	Inspection procedure Perform the operation start and replace A4 (Combustion engine Control unit). Go to Step6
	Step6	Inspection completed

https://truckmanualshub.com/

Inspection procedure	Step7	Inspection procedure Turn the starter switch in OFF. Remove the connector of A4 (Combustion engine Control unit). Remove the connector of X39. Remove the connector of A20 (SAM). Remove the connector of Ground. Check the circuit across Ground and X39.12/8 for open or short circuit. Check the circuit across A20.X10.14/2 and X39.12/7 for open or short circuit. Make a visual check on each connector. Is any abnormality recognized? No: Go to Step8 Yes: Go to Step9
	Step8	Inspection procedure Repair or replace the harness across Y9 (Engine brake Solenoid valve) and X39. Reinstall all the removed connectors. Erase fault memory and perform a test drive. Check if this diagnosis code has occurred. Are current fault codes present? No: Go to Step6 Yes: Go to Step3
	Step9	Inspection procedure Repair or replace the harness across A20 (SAM) and X39. Repair or replace the harness across Ground and X39. Reinstall all the removed connectors. Erase fault memory and perform a test drive. Check if this diagnosis code has occurred. Are current fault codes present? No: Go to Step6 Yes: Go to Step3

1074-12: Over temperature error on power stage for Exhaust Flap Actuator.

Generation condition		[Test Condition] • Monitoring is active while the battery voltage is over 10.00V and as long as the battery voltage is over 10.00V and 2.00s after this threshold has been exceeded • Monitoring only when the power stage is active.
		[Fault Detection] • Hardware reports an over temperature error (OT) on the power stage for the Exhaust Flap actuator.
		[Defect Debouncing] • Defect condition exceeded cumulatively > 1000.00ms • Failure is detected if active for 25% of the time
Fault healing		• To give the possibility for healing, an electric impulse is sent to power stage each 1.00s. Failure healed, if the power stage does not report an Over temperature error.
System reaction		• Power stage is shut-off (Exhaust Flap in open position). • Further reactions according FID (see FID's)
		• 1) FId / Inhibit Charged Air Cooler monitoring
Failure cause		• High battery voltage, high temperature inside ECU, high load or wiring problem
Failure repair		• Check load and output, check wiring, replace ECU
Inspection procedure	Step1	Inspect or verify the following items. Repair or replace faulty items as necessary. If any other fault code has occurred, perform the diagnostics procedure for the fault code. Go to Step2

https://truckmanualshub.com/

Inspection procedure	Step2	Inspection procedure Turn the starter switch in OFF. Remove the connector of A4 (Combustion engine Control unit). Remove the connector of Y9 (Engine brake Solenoid valve). Remove the connector of A20 (SAM). Remove the connector of Ground. Check the circuit across A4.X1.60/34 and Y9.3/1 for open or short circuit. Check the circuit across A20.X10.14/2 and Y9.3/3 for open or short circuit. Check the circuit across Ground and Y9.3/2 for open or short circuit. Make a visual check on each connector. Is any abnormality recognized? No: Go to Step3 Yes: Go to Step7
	Step3	Inspection procedure Turn the starter switch in OFF. Replace component “Y9 (Engine brake Solenoid valve)”. Reinstall all the removed connectors. Turn the starter switch in ON. Go to Step4
	Step4	Inspection procedure Turn the starter switch in OFF. Reinstall all the removed connectors. Erase fault memory and perform a test drive. Check if this diagnosis code has occurred. Are current fault codes present? No: Go to Step6 Yes: Go to Step5
	Step5	Inspection procedure Perform the operation start and replace A4 (Combustion engine Control unit). Go to Step6
	Step6	Inspection completed
	Step7	Inspection procedure Turn the starter switch in OFF. Remove the connector of A4 (Combustion engine Control unit). Remove the connector of X39. Remove the connector of A20 (SAM). Remove the connector of Ground. Check the circuit across Ground and X39.12/8 for open or short circuit. Check the circuit across A20.X10.14/2 and X39.12/7 for open or short circuit. Make a visual check on each connector. Is any abnormality recognized? No: Go to Step8 Yes: Go to Step9
	Step8	Inspection procedure Repair or replace the harness across Y9 (Engine brake Solenoid valve) and X39. Reinstall all the removed connectors. Erase fault memory and perform a test drive. Check if this diagnosis code has occurred. Are current fault codes present? No: Go to Step6 Yes: Go to Step3
	Step9	Inspection procedure Repair or replace the harness across A20 (SAM) and X39. Repair or replace the harness across Ground and X39. Reinstall all the removed connectors. Erase fault memory and perform a test drive. Check if this diagnosis code has occurred. Are current fault codes present? No: Go to Step6 Yes: Go to Step3

https://truckmanualshub.com/

1076-3: Pressure control valve: Voltage above normal or shorted to high source

Generation condition		[Test Condition] • Monitoring only when the power stage is active • Battery voltage > 9.50V (switch off < 9.00V)
		[Fault Detection] • Hardware reports a Short Circuit to Battery error on power stage for Pressure Control Valve Low Side
		[Defect Debouncing] • Defect condition exceeded cumulatively > 280.00ms • Failure is detected if active for 25% of the time
Fault healing		• No Healing possible (disabled by Data set)
System reaction		• Power stage shut off. • Further reactions according FID (see FID's)
		• 1) FId / Status of function identifier FId_EngDemTrqLimErr1 • 2) FId / Torque limitation 2 activated for power reduction • 3) FId / Reset Metering Unit adaption value • 4) FId / AD Channel of Fuel rail pressure defect / Open loop control of fuel pressure control valve • 5) FId / Substitute reaction: In the event of an error, a regeneration is prevented or a currently-running regeneration is interrupted. • 6) FId / Fuel pressure control exclusively made by pressure control valve (PCV) in current driving cycle • 7) FId / Monitoring of positive governor deviation of fuel rail pressure with Control by Metering Unit disabled • 8) FId / Monitoring of positive governor deviation of fuel rail pressure and Fuel delivery Set point with Control by Metering Unit released • 9) FId / Monitoring of negative governor deviation of fuel rail pressure at fuel delivery with Control by Metering Unit disabled • 10) FId / Monitoring of maximum rail pressure with Control by Metering Unit disabled • 11) FId / Closed loop control of fuel rail pressure by pressure control valve PCV disabled (control exclusively with metering unit MeUn) • 12) FId / Zero Fuel Calibration (ZFC) of injectors disabled • 13) FId / Zero Fuel Calibration (ZFC) of injectors by Lambda Sensor signal disabled • 14) FId / Status of function identifier FId_PFltLmp • 15) FId / Inhibit monitor for DPF frequent regeneration • 16) FId / Inhibit monitor for incomplete regeneration of the DPF • 17) FId / Inhibit ISS, max number of engine starts exceeded
Failure cause		• Short circuit of wiring to battery or inside Pressure Control Valve at Low Side
Failure repair		• Check of wiring, replace Pressure Control Valve
Inspection procedure	Step1	Inspection procedure Turn the starter switch in OFF. Remove the connector of A4 (Combustion engine Control unit). Remove the connector of Y29 (Pressure limiting valve in rail). Check the circuit across Y29.2/1 and A4.X1.60/45 for open or short circuit. Check the circuit across Y29.2/2 and A4.X1.60/15 for open or short circuit. Make a visual check on each connector. Is any abnormality recognized? No: Go to Step2 Yes: Go to Step6
	Step2	Inspection procedure Turn the starter switch in OFF. Replace component "Y29 (Pressure limiting valve in rail)". Reinstall all the removed connectors. Turn the starter switch in ON. Perform the learned value resetting procedure of Y29 (Pressure limiting valve in rail) which A4 (Combustion engine Control unit) learns. Go to Step3

https://truckmanualshub.com/

Inspection procedure	Step3	Inspection procedure Turn the starter switch in OFF. Reinstall all the removed connectors. Erase fault memory and perform a test drive. Check if this diagnosis code has occurred. Are current fault codes present? No: Go to Step5 Yes: Go to Step4
	Step4	Inspection procedure Perform the operation start and replace A4 (Combustion engine Control unit). Go to Step5
	Step5	Inspection completed
	Step6	Inspection procedure Repair or replace electrical lines. Reinstall all the removed connectors. Erase fault memory and perform a test drive. Check if this diagnosis code has occurred. Are current fault codes present? No: Go to Step5 Yes: Go to Step2

1076-4: Pressure control valve: Voltage below normal or shorted to low source

Generation condition	[Test Condition] • Battery voltage > 9.50V (switch off < 9.00V)
	[Fault Detection] • Hardware reports a Short Circuit to Ground error on power stage for Pressure Control Valve Low Side
	[Defect Debouncing] • Defect condition exceeded cumulatively > 220.00ms • Failure is detected if active for 25% of the time
Fault healing	• No Healing possible (disabled by Data set)
System reaction	• Power stage shut off. • Further reactions according FID (see FID's)
	• 1) FId / Energizing time for injectors forced to minimum (= no fuel injection = engine stop) • 2) FId / PreSupply Pump switched off • 3) FId / PreSupply Pump switched off • 4) FId / Fuel pressure set to minimum (= engine stop) • 5) FId / Inhibit ISS, max number of engine starts exceeded • 6) FId / Single Injector shut off test inhibited • 7) FId / AD Channel of Fuel rail pressure defect / Open loop control of fuel pressure control valve • 8) FId / Closing of metering unit forced (full fuel feeding) • 9) FId / Inhibit monitor for DPF frequent regeneration • 10) FId / Inhibit monitor for incomplete regeneration of the DPF
Failure cause	• Short circuit of wiring to ground or inside Pressure Control Valve at Low Side
Failure repair	• Check of wiring, replace Pressure Control Valve

https://truckmanualshub.com/

Inspection procedure	Step1	Inspection procedure Turn the starter switch in OFF. Remove the connector of A4 (Combustion engine Control unit). Remove the connector of Y29 (Pressure limiting valve in rail). Check the circuit across Y29.2/1 and A4.X1.60/45 for open or short circuit. Check the circuit across Y29.2/2 and A4.X1.60/15 for open or short circuit. Make a visual check on each connector. Is any abnormality recognized? No: Go to Step2 Yes: Go to Step6
	Step2	Inspection procedure Turn the starter switch in OFF. Replace component “Y29 (Pressure limiting valve in rail)”. Reinstall all the removed connectors. Turn the starter switch in ON. Perform the learned value resetting procedure of Y29 (Pressure limiting valve in rail) which A4 (Combustion engine Control unit) learns. Go to Step3
	Step3	Inspection procedure Turn the starter switch in OFF. Reinstall all the removed connectors. Erase fault memory and perform a test drive. Check if this diagnosis code has occurred. Are current fault codes present? No: Go to Step5 Yes: Go to Step4
	Step4	Inspection procedure Perform the operation start and replace A4 (Combustion engine Control unit). Go to Step5
	Step5	Inspection completed
	Step6	Inspection procedure Repair or replace electrical lines. Reinstall all the removed connectors. Erase fault memory and perform a test drive. Check if this diagnosis code has occurred. Are current fault codes present? No: Go to Step5 Yes: Go to Step2

1076-5: Pressure control valve: Current below normal or Open circuit

Generation condition	[Test Condition] • Monitoring is active while the battery voltage is over 10.00V • Monitoring only when the power stage is NOT active. • Battery voltage > 9.50V (switch off < 9.00V)
	[Fault Detection] • Hardware reports “open load” (OL) error
	[Defect Debouncing] • Defect condition exceeded cumulatively > 280.00ms • Failure is detected if active for 50% of the time
Fault healing	• No Healing possible (disabled by Data set)

https://truckmanualshub.com/

		• Power stage switched off, i.e. engine probably stops as no fuel pressure in rail is possible (valve in opened position without current) • Further reactions according FID (see FID's)
System reaction		• 1) FId / Energizing time for injectors forced to minimum (= no fuel injection = engine stop) • 2) FId / Fuel quantity set to (= engine stop) • 3) FId / PreSupply Pump switched off • 4) FId / Fuel pressure set to minimum (= engine stop) • 5) FId / Engine torque forced to (=engine stop) • 6) FId / AD Channel of Fuel rail pressure defect / Open loop control of fuel pressure control valve • 7) FId / Inhibit DPF efficiency monitor • 8) FId / Interrupt DPF efficiency monitor • 9) FId / Inhibit monitor for DPF frequent regeneration • 10) FId / Inhibit monitor for incomplete regeneration of the DPF • 11) FId / Inhibit ISS, max number of engine starts exceeded
Failure cause		• Broken or disconnected wiring or defective pressure control valve
Failure repair		• Check of wiring or replace relay or pressure control valve
Inspection procedure	Step1	Inspection procedure Turn the starter switch in OFF. Remove the connector of A4 (Combustion engine Control unit). Remove the connector of Y29 (Pressure limiting valve in rail). Check the circuit across Y29.2/1 and A4.X1.60/45 for open or short circuit. Check the circuit across Y29.2/2 and A4.X1.60/15 for open or short circuit. Make a visual check on each connector. Is any abnormality recognized? No: Go to Step2 Yes: Go to Step6
	Step2	Inspection procedure Turn the starter switch in OFF. Replace component "Y29 (Pressure limiting valve in rail)". Reinstall all the removed connectors. Turn the starter switch in ON. Perform the learned value resetting procedure of Y29 (Pressure limiting valve in rail) which A4 (Combustion engine Control unit) learns. Go to Step3
	Step3	Inspection procedure Turn the starter switch in OFF. Reinstall all the removed connectors. Erase fault memory and perform a test drive. Check if this diagnosis code has occurred. Are current fault codes present? No: Go to Step5 Yes: Go to Step4
	Step4	Inspection procedure Perform the operation start and replace A4 (Combustion engine Control unit). Go to Step5
	Step5	Inspection completed
	Step6	Inspection procedure Repair or replace electrical lines. Reinstall all the removed connectors. Erase fault memory and perform a test drive. Check if this diagnosis code has occurred. Are current fault codes present? No: Go to Step5 Yes: Go to Step2

https://truckmanualshub.com/

1076-12: Pressure control valve: Overtemperature

Generation condition		[Test Condition] • Monitoring is active while the battery voltage is over 10.00V • Monitoring only when the power stage is active. • Battery voltage > 9.50V (switch off < 9.00V)
		[Fault Detection] • Hardware reports “over temperature” (OT) error
		[Defect Debouncing] • Defect condition exceeded cumulatively > 280.00ms • Failure is detected if active for 50% of the time
Fault healing		• No Healing possible (disabled by Data set)
System reaction		• Power stage switched off, i.e. engine probably stops as no fuel pressure in rail is possible (valve in opened position without current) • Further reactions according FID (see FID’s)
		• 1) FId / Energizing time for injectors forced to minimum (= no fuel injection = engine stop) • 2) FId / Fuel quantity set to (= engine stop) • 3) FId / PreSupply Pump switched off • 4) FId / Fuel pressure set to minimum (= engine stop) • 5) FId / Engine torque forced to (=engine stop) • 6) FId / AD Channel of Fuel rail pressure defect / Open loop control of fuel pressure control valve • 7) FId / Inhibit DPF efficiency monitor • 8) FId / Interrupt DPF efficiency monitor • 9) FId / Inhibit monitor for DPF frequent regeneration • 10) FId / Inhibit monitor for incomplete regeneration of the DPF • 11) FId / Inhibit ISS, max number of engine starts exceeded
Failure cause		• Short circuit of wiring or internal failure of pressure control valve
Failure repair		• Check of wiring and pressure control valve.
Inspection procedure	Step1	Inspection procedure If one of diagnosis codes associated with SAM ECU is generated, make a system diagnosis according to the diagnosis code. Go to Step2
	Step2	Inspection procedure Turn the starter switch in OFF. Remove the connector of A4 (Combustion engine Control unit). Remove the connector of Y29 (Pressure limiting valve in rail). Check the circuit across Y29.2/1 and A4.X1.60/45 for open or short circuit. Check the circuit across Y29.2/2 and A4.X1.60/15 for open or short circuit. Make a visual check on each connector. Is any abnormality recognized? No: Go to Step3 Yes: Go to Step7
	Step3	Inspection procedure Turn the starter switch in OFF. Replace component “Y29 (Pressure limiting valve in rail)”. Reinstall all the removed connectors. Turn the starter switch in ON. Perform the learned value resetting procedure of Y29 (Pressure limiting valve in rail) which A4 (Combustion engine Control unit) learns. Go to Step4
	Step4	Inspection procedure Turn the starter switch in OFF. Reinstall all the removed connectors. Erase fault memory and perform a test drive. Check if this diagnosis code has occurred. Are current fault codes present? No: Go to Step6 Yes: Go to Step5
	Step5	Inspection procedure Perform the operation start and replace A4 (Combustion engine Control unit). Go to Step6
	Step6	Inspection completed

https://truckmanualshub.com/

	Step7	Inspection procedure Repair or replace electrical lines. Reinstall all the removed connectors. Erase fault memory and perform a test drive. Check if this diagnosis code has occurred. Are current fault codes present? No: Go to Step6 Yes: Go to Step3

1076-16: Pressure control valve: Learning factorHIGH

Generation condition		[Test Condition] • Adaptation was active, i.e.: • engine running • Fuel temperature between 4.96°C {40.93°F} and 69.96°C. • Fuel pressure between 50MPa {7250psi, 510kgf/cm^2} and 150MPa {21750psi, 1530kgf/cm^2} • The ratio desired / measured fuel pressure < 0.02- • The ratio desired / measured current to pressure control valve < 0.02- • all the above conditions must be fulfilled for 5.00- “tasks” to guarantee stable situation. • if all conditions fulfilled the desired and measured fuel pressures are averaged over 5.00- “tasks” • the adaptation factor is calculated comparing the averaged desired and measured pressure, which is stored in the EEPROM and used for the current calculation for pressure control valve.
		[Fault Detection] • The calculated adaptation factor > 1.30-
		[Defect Debouncing] • Immediate
Fault healing		• The calculated adaptation factor < 1.30-
System reaction		• Only according FID (see FID’s)
		• 1) FId / Inhibit ISS, max number of engine starts exceeded
Failure cause		• The actual pressure is higher for a certain current than according specification. This can be caused by an additional current through the pressure control valve (partial short circuit in wiring) which is not measured in ECU. • Fuel pressure control valve not OK.
Failure repair		• Check wiring and pressure control valve. • Replace pressure control valve and reset EEPROM learning datas resp. execute first learning with tester.
Inspection procedure	Step1	Inspection procedure If one of diagnosis codes associated with SAM ECU is generated, make a system diagnosis according to the diagnosis code. Go to Step2
	Step2	Inspection procedure Turn the starter switch in OFF. Remove the connector of A4 (Combustion engine Control unit). Remove the connector of Y29 (Pressure limiting valve in rail). Check the circuit across Y29.2/1 and A4.X1.60/45 for open or short circuit. Check the circuit across Y29.2/2 and A4.X1.60/15 for open or short circuit. Make a visual check on each connector. Is any abnormality recognized? No: Go to Step3 Yes: Go to Step7
	Step3	Inspection procedure Turn the starter switch in OFF. Replace component “Y29 (Pressure limiting valve in rail)”. Reinstall all the removed connectors. Turn the starter switch in ON. Perform the learned value resetting procedure of Y29 (Pressure limiting valve in rail) which A4 (Combustion engine Control unit) learns. Go to Step4

https://truckmanualshub.com/

Inspection procedure	Step4	Inspection procedure Turn the starter switch in OFF. Reinstall all the removed connectors. Erase fault memory and perform a test drive. Check if this diagnosis code has occurred. Are current fault codes present? No: Go to Step6 Yes: Go to Step5
	Step5	Inspection procedure Perform the operation start and replace A4 (Combustion engine Control unit). Go to Step6
	Step6	Inspection completed
	Step7	Inspection procedure Repair or replace electrical lines. Reinstall all the removed connectors. Erase fault memory and perform a test drive. Check if this diagnosis code has occurred. Are current fault codes present? No: Go to Step6 Yes: Go to Step3

1076-18: Pressure control valve: Learning factorLOW

Generation condition	[Test Condition] • Adaptation was active, i.e.: • engine running • Fuel temperature between 4.96°C {40.93°F} and 69.96°C. • Fuel pressure between 50MPa {7250psi, 510kgf/cm^2} and 150MPa {21750psi, 1530kgf/cm^2} • The ratio desired / measured fuel pressure < 0.02- • The ratio desired / measured current to pressure control valve < 0.02- • all the above conditions must be fulfilled for 5.00- “tasks” to guarantee stable situation. • if all conditions fulfilled the desired and measured fuel pressures are averaged over 5.00- “tasks” • the adaptation factor is calculated comparing the averaged desired and measured pressure, which is stored in the EEPROM and used for the current calculation for pressure control valve.
	[Fault Detection] • The calculated adaptation < 0.70-
	[Defect Debouncing] • Immediate
Fault healing	• The calculated adaptation factor >0.70-
System reaction	• Only according FID (see FID’s)
	• 1) FId / Inhibit ISS, max number of engine starts exceeded
Failure cause	• The actual pressure is lower for a certain current than according specification. This can be caused by a “current loss” by the wiring (partial short circuit in wiring) which does not go through the pressure control valve. • Fuel pressure control valve not OK.
Failure repair	• Check wiring and pressure control valve. • Replace pressure control valve and reset EEPROM learning datas resp. execute first learning with tester.

https://truckmanualshub.com/

Inspection procedure	Step1	Inspection procedure If one of diagnosis codes associated with SAM ECU is generated, make a system diagnosis according to the diagnosis code. Go to Step2
	Step2	Inspection procedure Turn the starter switch in OFF. Remove the connector of A4 (Combustion engine Control unit). Remove the connector of Y29 (Pressure limiting valve in rail). Check the circuit across Y29.2/1 and A4.X1.60/45 for open or short circuit. Check the circuit across Y29.2/2 and A4.X1.60/15 for open or short circuit. Make a visual check on each connector. Is any abnormality recognized? No: Go to Step3 Yes: Go to Step7
	Step3	Inspection procedure Turn the starter switch in OFF. Replace component “Y29 (Pressure limiting valve in rail)”. Reinstall all the removed connectors. Turn the starter switch in ON. Perform the learned value resetting procedure of Y29 (Pressure limiting valve in rail) which A4 (Combustion engine Control unit) learns. Go to Step4
	Step4	Inspection procedure Turn the starter switch in OFF. Reinstall all the removed connectors. Erase fault memory and perform a test drive. Check if this diagnosis code has occurred. Are current fault codes present? No: Go to Step6 Yes: Go to Step5
	Step5	Inspection procedure Perform the operation start and replace A4 (Combustion engine Control unit). Go to Step6
	Step6	Inspection completed
	Step7	Inspection procedure Repair or replace electrical lines. Reinstall all the removed connectors. Erase fault memory and perform a test drive. Check if this diagnosis code has occurred. Are current fault codes present? No: Go to Step6 Yes: Go to Step3

https://truckmanualshub.com/

1127-15: Boost pressure control: Too Low Boost pressure in closed loop control - Data Valid But Above Normal Operating Range - Least Severe Level

Generation condition	[Test Condition] • Continuous monitoring if each of following conditions are fulfilled: • The engine is in the working range 3 or 4 of the closed-loop boost-pressure control, i.e. engine speed > 1250.00rpm and engine load > 26.00mg/hub • The system is not in cold start condition, i.e. the engine is running longer than starting temperature dependant time if engine speed is between 0.00rpm and 800.00rpm (no cold start condition recognised at engine speed > 800.00rpm) • The Clutch is not activated longer than 3.00s at engine load > 6.00mg/hub • The engine brake is not activated • The closed loop control is not switched off due to detected permanent control deviation, limited VGT actuator functionality (FID_PCRCmpActv or FID_PCR)) or turbocharger hysteresis • The closed loop control is not switched of by FID (FID_PCR_GovDev) due to another failure
	[Fault Detection] • The actually measured boost pressure is lower than the desired pressure an the difference is higher than an engine speed and load dependant max allowed value.
	[Defect Debouncing] • Defect condition fulfilled continuously >5000.0 ms
Fault healing	• No Healing possible (disabled by Data set)
System reaction	• No direct reaction at engine speed < 2750.00rpm OR engine load < 33.00mg/hub • At engine speed > 2750.00rpm and engine load > 33.00mg/hub the system switches to “open loop control” • Generally reduced power possible due to too low Boost pressure (smoke limitation active) or by FID (see FID’s)
	• 1) FId / Air mass flow calculated by gas equation (boost pressure, boost temperature, engine speed) instead of measuring by air flow meter (HFM/AFS) • 2) FId / EGR switched off • 3) FId / Deactivates NOx monitoring • 4) FId / Reciprocal lambda signal replaced by substitute value for modelling • 5) FId / Status of function identifier FId_EngDemTrqLimErr1 • 6) FId / Torque limitation 2 activated for power reduction • 7) FId / Adaptation of the correction values of Fuel Mass Observer (FMO) inhibited (no correction of detected deviation between injected fuel and Lambda sensor signal) • 8) FId / Fuel Mass Observer (FMO) switched off (no monitoring of injected fuel by Lambda sensor) • 9) FId / Engine speed Limitation 2 for HIgh/Low engine speed (HLS) control active • 10) FId / The Adaptation of lambda Sensor disabled • 11) FId / The Difference Check between several Lambda Sensors is disabled • 12) FId / Dynamic Signal Monitoring of Lambda Sensor disabled • 13) FId / Electrical Open Load Check of Lambda Sensor disabled • 14) FId / O2 Signal of Lambda Sensor not valid • 15) FId / Monitoring of Boost pressure deviation disabled • 16) FId / Inhibit DPF monitor • 17) FId / Particulate filter ((DPF) Regeneration inhibited • 18) FId / Service regeneration of Particulate filter ((DPF) inhibited (due to DPF failure) • 19) FId / Zero Fuel Calibration (ZFC) of injectors disabled • 20) Fid / SCR Monitoring or DEF injection release not possible (according calibration of Release Masks) • 21) FId / Inhibit Charged Air Cooler monitoring • 22) FId / Inhibit EGR cooler efficiency monitoring • 23) FId / Calculation of Turbocharger Compressor Temperature inhibited • 24) FId / Inhibit monitor for DPF frequent regeneration • 25) FId / Inhibit monitor for incomplete regeneration of the DPF • 26) FId / Zero Fuel Calibration (ZFC) of injectors by Lambda Sensor signal disabled

https://truckmanualshub.com/

Failure cause		• Mechanically blocked boost pressure actuator • Electrical defect in actuator • In case of VTG control by pressure or vacuum: No sub pressure at VTG actuator • Foreign matter in the intake duct (deposits etc.). • Leakage in air system (e.g. tube compressor - Intercooler or intercooler - manifold) • Boost pressure sensor measures wrong values • EGR tube or EGR cooler clogged partially (reason: exhaust flap closes to reach desired air flow) • EGR valve does not open fully (reason: exhaust flap closes to reach desired air flow)
Failure repair		• Check mechanical and electrical functionality of the actuator for VTG • If present: Check system of sub pressure • Ensure that the EGR actuators are functioning correctly • Check intake duct to deposits and/or leakages • Check Boost pressure sensor • Check EGR system (tube clogged, correct EGr valve function)
Inspection procedure	Step1	Inspect or verify the following items. Repair or replace faulty items as necessary. Component ‘Y21 (Actuator in turbocharger)’ is faulty. Component ‘Y21 (Actuator in turbocharger)’ is stuck. Plugged Piping for Y21 (Actuator in turbocharger) Negative pressure of Y21 (Actuator in turbocharger) Damage of Intake system Plugged Intake system Plugged Piping for EGR Plugged EGR cooler Component ‘A14 (EGR valve)’ is stuck. Inspect the suspected factors mentioned above sequentially to locate faulty parts. Repair or replace the faulty part as necessary. For procedures, refer to the Shop Manual Go to Step2
	Step2	Inspect or verify the following items. Repair or replace faulty items as necessary. If any other fault code has occurred, perform the diagnostics procedure for the fault code. Go to Step3
	Step3	Inspection procedure If one of diagnosis codes associated with SAM ECU is generated, make a system diagnosis according to the diagnosis code. Go to Step4
	Step4	Inspection procedure Turn the starter switch in OFF. Remove the connector of A4 (Combustion engine Control unit). Remove the connector of B19 (Pressure and temperature sensor Turbocharger). Check the circuit across B19.4/3 and A4.X1.60/25 for open or short circuit. Check the circuit across B19.4/2 and A4.X1.60/12 for open or short circuit. Check the circuit across B19.4/4 and A4.X1.60/13 for open or short circuit. Check the circuit across B19.4/1 and A4.X1.60/6 for open or short circuit. Make a visual check on each connector. Is any abnormality recognized? No: Go to Step5 Yes: Go to Step9
	Step5	Inspection procedure Turn the starter switch in OFF. Replace component “B19 (Pressure and temperature sensor Turbocharger)”. Reinstall all the removed connectors. Turn the starter switch in ON. Perform the learned value resetting procedure of B19 (Pressure and temperature sensor Turbocharger) which A4 (Combustion engine Control unit) learns. Perform learning of B19 (Pressure and temperature sensor Turbocharger) which A4 (Combustion engine Control unit) learns. Go to Step6

https://truckmanualshub.com/

Inspection procedure	Step6	Inspection procedure Turn the starter switch in OFF. Reinstall all the removed connectors. Erase fault memory and perform a test drive. Check if this diagnosis code has occurred. Are current fault codes present? No: Go to Step8 Yes: Go to Step7
	Step7	Inspection procedure Perform the operation start and replace A4 (Combustion engine Control unit). Go to Step8
	Step8	Inspection completed
	Step9	Inspection procedure Repair or replace electrical lines. Reinstall all the removed connectors. Erase fault memory and perform a test drive. Check if this diagnosis code has occurred. Are current fault codes present? No: Go to Step8 Yes: Go to Step5

1127-17: Too High Boost pressure in closed loop control.Data Valid But Above Normal Operational Range.

Generation condition	[Test Condition] • Continuous monitoring if each of following conditions are fulfilled: • The engine is in the working range 3 or 4 of the closed-loop boost-pressure control, i.e. engine speed > 1250.00rpm and engine load > 26.00mg/hub • The system is not in cold start condition, i.e. the engine is running longer than starting temperature dependant time if engine speed is between 0.00rpm and 800.00rpm (no cold start condition recognised at engine speed > 800.00rpm) • The Clutch is not activated longer than 3.00s at engine load > 6.00mg/hub • The engine brake is not activated • The closed loop control is not switched off due to detected permanent control deviation, limited VGT actuator functionality (FID_PCRCmpActv or FID_PCR)) or turbocharger hysteresis • The closed loop control is not switched of by FID (FID_PCR_GovDev) due to another failure
	[Fault Detection] • The actually measured boost pressure is higher than the desired pressure an the difference is higher than an engine speed and load dependant max allowed value.
	[Defect Debouncing] • Defect condition fulfilled continuously >5000.0 ms
Fault healing	• No Healing possible (disabled by Data set)

https://truckmanualshub.com/

System reaction		• No direct reaction at engine speed < 2750.00rpm OR engine load < 33.00mg/hub • At engine speed > 2750.00rpm and engine load > 33.00mg/hub the system switches to “open loop control” • Probably power reduction to protect VGT against overspeed (see FID)
		• 1) FId / EGR switched off • 2) FId / Deactivates NOx monitoring • 3) FId / Status of function identifier FId_EngDemTrqLimErr1 • 4) FId / Torque limitation 2 activated for power reduction • 5) FId / Adaptation of the correction values of Fuel Mass Observer (FMO) inhibited (no correction of detected deviation between injected fuel and Lambda sensor signal) • 6) FId / Fuel Mass Observer (FMO) switched off (no monitoring of injected fuel by Lambda sensor) • 7) FId / Engine speed Limitation 2 for HIgh/Low engine speed (HLS) control active • 8) FId / The Adaptation of lambda Sensor disabled • 9) FId / The Difference Check between several Lambda Sensors is disabled • 10) FId / Dynamic Signal Monitoring of Lambda Sensor disabled • 11) FId / Electrical Open Load Check of Lambda Sensor disabled • 12) FId / O2 Signal of Lambda Sensor not valid • 13) Fid / Plausibility check Boost pressure with ambient pressure inhibited • 14) FId / Monitoring of Boost pressure deviation disabled • 15) FId / Inhibit DPF monitor • 16) FId / Particulate filter ((DPF) Regeneration inhibited • 17) FId / Service regeneration of Particulate filter ((DPF) inhibited (due to DPF failure) • 18) FId / Zero Fuel Calibration (ZFC) of injectors disabled • 19) Fid / SCR Monitoring or DEF injection release not possible (according calibration of Release Masks) • 20) FId / Inhibit Charged Air Cooler monitoring • 21) FId / Inhibit EGR cooler efficiency monitoring • 22) FId / Calculation of Turbocharger Compressor Temperature inhibited • 23) FId / Inhibit monitor for DPF frequent regeneration • 24) FId / Inhibit monitor for incomplete regeneration of the DPF • 25) FId / Zero Fuel Calibration (ZFC) of injectors by Lambda Sensor signal disabled
Failure cause		• Mechanically blocked boost pressure actuator • Electrical defect in actuator • Boost pressure sensor measures too high values
Failure repair		• Check mechanical and electrical functionality of the actuator • If there is not failure detected in VGT, check Boost pressure sensor
Inspection procedure	Step1	Inspect or verify the following items. Repair or replace faulty items as necessary. Component ‘Y21 (Actuator in turbocharger)’ is faulty. Inspect the suspected factors mentioned above sequentially to locate faulty parts. Repair or replace the faulty part as necessary. For procedures, refer to the Shop Manual. Go to Step2
	Step2	Inspect or verify the following items. Repair or replace faulty items as necessary. If any other fault code has occurred, perform the diagnostics procedure for the fault code. Go to Step3
	Step3	Inspection procedure If one of diagnosis codes associated with SAM ECU is generated, make a system diagnosis according to the diagnosis code. Go to Step4

https://truckmanualshub.com/

Inspection procedure	Step4	Inspection procedure Turn the starter switch in OFF. Remove the connector of A4 (Combustion engine Control unit). Remove the connector of B19 (Pressure and temperature sensor Turbocharger). Check the circuit across B19.4/3 and A4.X1.60/25 for open or short circuit. Check the circuit across B19.4/2 and A4.X1.60/12 for open or short circuit. Check the circuit across B19.4/4 and A4.X1.60/13 for open or short circuit. Check the circuit across B19.4/1 and A4.X1.60/6 for open or short circuit. Make a visual check on each connector. Is any abnormality recognized? No: Go to Step5 Yes: Go to Step9
	Step5	Inspection procedure Turn the starter switch in OFF. Replace component “B19 (Pressure and temperature sensor Turbocharger)”. Reinstall all the removed connectors. Turn the starter switch in ON. Perform the learned value resetting procedure of B19 (Pressure and temperature sensor Turbocharger) which A4 (Combustion engine Control unit) learns. Perform learning of B19 (Pressure and temperature sensor Turbocharger) which A4 (Combustion engine Control unit) learns. Go to Step6
	Step6	Inspection procedure Turn the starter switch in OFF. Reinstall all the removed connectors. Erase fault memory and perform a test drive. Check if this diagnosis code has occurred. Are current fault codes present? No: Go to Step8 Yes: Go to Step7
	Step7	Inspection procedure Perform the operation start and replace A4 (Combustion engine Control unit). Go to Step8
	Step8	Inspection completed
	Step9	Inspection procedure Repair or replace electrical lines. Reinstall all the removed connectors. Erase fault memory and perform a test drive. Check if this diagnosis code has occurred. Are current fault codes present? No: Go to Step8 Yes: Go to Step5

1136-2: SPI Error ECU temperature sensor (LM71).Data erratic, intermittent or incorrect

Generation condition	[Test Condition] • Continuously
	[Fault Detection] • When error message sent from sensor is detected (TECU_numSPI, bit 0 or 1 NOT set).
	[Defect Debouncing] • Defect condition exceeded cumulatively > 50.00 events • Failure is detected if active for 50% of events
Fault healing	• When correct message sent from sensor is detected (TECU_numSPI, bit 0 AND bit 1 set).

https://truckmanualshub.com/

System reaction		• Temperature is frozen at last valid value during failure debouncing and ramps to 40.96°C {105.73°F} if failure is validated using slope 3.00K/s (downwards) or 3.00K/s (upwards) • Further reactions according FID (see FID's)
		• 1) Fid / Classification and duration of intake air temperature for Trip recorder inhibited • 2) FId / The ECU temperature is set to and thermal management of ECU disabled • 3) FId / Freeze ECU temperature value if preliminary failure is detected • 4) FId / Replace ECU temperature with default value if failure is validated
Failure cause		• Temperature sensor defective (inside ECM)
Failure repair		• Replace ECM
Inspection procedure	Step1	Inspection procedure Erase fault memory and perform a test drive. If the diagnosis code has occurred even during the test drive, start the operation and then replace the A4 (Combustion engine Control unit). Inspection completed

1136-16: Physical Signal ECU temperature is above maximum limit.Data Valid But Above Normal Operational Range.

Generation condition		[Test Condition] • Range check is not inhibited by another failure (FId_TECUPhysRng is not set)
		[Fault Detection] • The sensed sensor signal TECU_tSens is above 129.96°C {265.93°F}
		[Defect Debouncing] • Defect condition exceeded cumulatively > 1000.00ms • Failure is detected if active for 25% of the time
Fault healing		• The sensed sensor signal TECU_tSens is below 129.96°C {265.93°F}
System reaction		• Temperature is frozen at last valid value on preliminary failure and ramps to fixed replacement value 40.96°C {105.73°F} if failure is validated using slope 3.00K/s or 3.00K/s depending on whether the replacement value is above or below the current value • Further reactions according FID (see FID's)
		• 1) FId / The ECU temperature is set to and thermal management of ECU disabled
Failure cause		• Inaccurate or defective temperature sensor, defect in the wiring
Failure repair		• Check wiring and the accuracy of the temperature sensor and replace it if necessary
Inspection procedure	Step1	Inspection procedure Erase fault memory and perform a test drive. If the diagnosis code has occurred even during the test drive, start the operation and then replace the A4 (Combustion engine Control unit). Inspection completed

1136-18: Physical Signal ECU temperature is below minimum limit.Data valid but below normal operational range

Generation condition		[Test Condition] • Range check is not inhibited by another failure (FId_TECUPhysRng is not set)
		[Fault Detection] • The sensed sensor signal TECU_tSens is below -40.04°C {-40.07°F}
		[Defect Debouncing] • Defect condition exceeded cumulatively > 1000.00ms • Failure is detected if active for 25% of the time
Fault healing		• The sensed sensor signal TECU_tSens is above -40.04°C {-40.07°F}

https://truckmanualshub.com/

System reaction		• Temperature is frozen at last valid value on preliminary failure and ramps to fixed replacement value 40.96°C {105.73°F} if failure is validated using slope 3.00K/s or 3.00K/s depending on whether the replacement value is above or below the current value • Further reactions according FID (see FID's)
		• 1) FId / The ECU temperature is set to and thermal management of ECU disabled
Failure cause		• Inaccurate or defective temperature sensor, defect in the wiring
Failure repair		• Check wiring and the accuracy of the temperature sensor and replace it if necessary
Inspection procedure	Step1	Inspection procedure Erase fault memory and perform a test drive. If the diagnosis code has occurred even during the test drive, start the operation and then replace the A4 (Combustion engine Control unit). Inspection completed

1172-2: Component 'Intake air temperature sensor 1' has a plausibility error.

Generation condition		[Test Condition] • Once in a driving cycle at ECM start if an engine cold start has been detected: • monitoring not inhibited by another failure (FId_AirTMonPlausCSOk not set) • engine speed = 0 • Engine OFF time > 5.00h
		[Fault Detection] • The value of temperature sensor at ECM start configured here is compared with to all other temperature values used for the plausibility check using a map with limit differences depending on engine Off time (Air_tDiffPlausMax_MAP). • If it is identified as deviating from normal value the fault is set.
		[Defect Debouncing] • Defect condition exceeded cumulatively > 500.00ms • Failure is detected if active for 50% of the time
Fault healing		• Temperature value measured for the considered sensor is plausible. Healing possible only at next plausible check (after ECM restart)
System reaction		• None except FIDs
		• 1) Fid / SCR Monitoring or DEF injection release not possible (according calibration of Release Masks) • 2) FId / Inhibit Charged Air Cooler monitoring • 3) FId / Calculation of Turbocharger Compressor Temperature inhibited
Failure cause		• The temperature sensor is drifted
Failure repair		• Check temperature sensor
Inspection procedure	Step1	Inspection procedure Inspect the suspected factors mentioned above sequentially to locate faulty parts. Repair or replace the faulty part as necessary.

1173-2: Component 'Intake air temperature sensor 2' has a plausibility error.

Generation condition		[Test Condition] • Once in a driving cycle at ECM start if an engine cold start has been detected: • monitoring not inhibited by another failure (FId_AirTMonPlausCSOk not set) • engine speed = 0 • Engine OFF time > 5.00h
		[Fault Detection] • The value of temperature sensor at ECM start configured here is compared with to all other temperature values used for the plausibility check using a map with limit differences depending on engine Off time (Air_tDiffPlausMax_MAP). • If it is identified as deviating from normal value the fault is set.
		[Defect Debouncing] • Defect condition exceeded cumulatively > 500.00ms • Failure is detected if active for 50% of the time

https://truckmanualshub.com/

Fault healing		• Temperature value measured for the considered sensor is plausible. Healing possible only at next plausible check (after ECM restart)
System reaction		• None except FIDs
		• 1) FId / Inhibit Charged Air Cooler monitoring • 2) FId / Calculation of Turbocharger Compressor Temperature inhibited
Failure cause		• The temperature sensor is drifted
Failure repair		• Check temperature sensor
Inspection procedure	Step1	Inspection procedure Inspect the suspected factors mentioned above sequentially to locate faulty parts. Repair or replace the faulty part as necessary.

1174-2: Component 'Intake air temperature sensor 3' has a plausibility error.

Generation condition		[Test Condition] • Once in a driving cycle at ECM start if an engine cold start has been detected: • monitoring not inhibited by another failure (FId_AirTMonPlausCSOk not set) • engine speed = 0 • Engine OFF time > 5.00h
		[Fault Detection] • The value of temperature sensor at ECM start configured here is compared with to all other temperature values used for the plausibility check using a map with limit differences depending on engine Off time (Air_tDiffPlausMax_MAP). • If it is identified as deviating from normal value the fault is set.
		[Defect Debouncing] • Defect condition exceeded cumulatively > 500.00ms • Failure is detected if active for 50% of the time
Fault healing		• Temperature value measured for the considered sensor is plausible. Healing possible only at next plausible check (after ECM restart)
System reaction		• None except FIDs
		• 1) Fid / SCR Monitoring or DEF injection release not possible (according calibration of Release Masks) • 2) FId / Inhibit Charged Air Cooler monitoring • 3) FId / Calculation of Turbocharger Compressor Temperature inhibited
Failure cause		• The temperature sensor is drifted
Failure repair		• Check temperature sensor
Inspection procedure	Step1	Inspection procedure Inspect the suspected factors mentioned above sequentially to locate faulty parts. Repair or replace the faulty part as necessary.

https://truckmanualshub.com/

1175-2: Signal Range Check (SRC) for 'Charge air temperature downstream of charge air cooler' reports Implausible data.

Generation condition		[Test Condition] • Once in a driving cycle at ECM start if an engine cold start has been detected: • monitoring not inhibited by another failure (FId_AirTMonPlausCSOk not set) • engine speed = 0 • Engine OFF time > 5.00h
		[Fault Detection] • The value of temperature sensor at ECM start configured here is compared with to all other temperature values used for the plausibility check using a map with limit differences depending on engine Off time (Air_tDiffPlausMax_MAP). • If it is identified as deviating from normal value the fault is set.
		[Defect Debouncing] • Defect condition exceeded cumulatively > 500.00ms • Failure is detected if active for 50% of the time
Fault healing		• Temperature value measured for the considered sensor is plausible. Healing possible only at next plausible check (after ECM restart)
System reaction		• None except FIDs
		• 1) FId / Inhibit plausibility check of EGR Cooler Temperature Downstream • 2) FId / Inhibit plausibility check of EGR Cooler Temperature Downstream • 3) FId / Inhibit Charged Air Cooler monitoring • 4) FId / Calculation of Turbocharger Compressor Temperature inhibited
Failure cause		• The temperature sensor is drifted
Failure repair		• Check temperature sensor
Inspection procedure	Step1	Inspection procedure Inspect the suspected factors mentioned above sequentially to locate faulty parts. Repair or replace the faulty part as necessary.

1213-2: Information from Instrument Cluster reports MIL internal circuit failure.

Generation condition	[Test Condition] • Monitoring is active while the battery voltage is over 10.00V, as long as the battery voltage is over 10.00V and 2.00s after this threshold has been exceeded, if none of the CAN controllers is in bus-off state, 2.00s after last CAN controller is no more in bus-off state and if the ECU is not in afterrun • Continuously
	[Fault Detection] • If the MIL lamp is switched on due to internal circuit failure in the instrument panel which is sent via CAN from the instrument cluster ECU (Com_stSPNDM1IC_mp = 1)
	[Defect Debouncing] • Defect condition fulfilled continuously >500.0 ms
Fault healing	• MIL lamp intact (Com_stSPNDM1IC_mp = 0)
System reaction	• Com_stICMILReq is set to applicable replacement value • 0.00-
Failure cause	• Defective Instrument Cluster
Failure repair	• Check Instrument Cluster

https://truckmanualshub.com/

Inspection procedure	Step1	Refer to the help menu for Nos. other than above. *1: M/T *2: DUONIC *3: ISS (With Lock brake) *4: ISS (Without Lock brake) *5: Lock brake (Without ISS) *6: Other than *3,*4,*5 *7: Full-automatic air conditioner *8: Auto leveling *9: Manual leveling Inspection procedure If one of diagnosis codes associated with A11 (Meter cluster) is generated, make a system diagnosis according to the diagnosis code. Go to step2
	Step2	Refer to the help menu for Nos. other than above. *1: M/T *2: DUONIC *3: ISS (With Lock brake) *4: ISS (Without Lock brake) *5: Lock brake (Without ISS) *6: Other than *3,*4,*5 *7: Full-automatic air conditioner *8: Auto leveling *9: Manual leveling Inspection procedure Turn the starter switch in OFF. Remove all ECU connectors from the CAN communication line. Check CAN line for open circuit, short circuit to positive, short circuit to ground or short circuit to another electrical line. Is any abnormality recognized? No: Go to step3 Yes: Go to step8
	Step3	Inspection procedure Attach the connector of A20 (SAM). Check CAN line for open circuit, short circuit to positive, short circuit to ground or short circuit to another electrical line. Is any abnormality recognized? No: Go to step4 Yes: Go to step7
	Step4	Inspection procedure Attach the connector of A11 (Meter cluster). Check CAN line for open circuit, short circuit to positive, short circuit to ground or short circuit to another electrical line. Is any abnormality recognized? No: Go to step5 Yes: Go to step6
	Step5	Inspection procedure Turn the starter switch in OFF. Reinstall all the removed connectors. Erase fault memory and perform a test drive. If the diagnosis code has occurred even during the test drive, start the operation and then replace the A4 (Combustion engine Control unit). Inspection completed
	Step6	Inspection procedure Turn the starter switch in OFF. Reinstall all the removed connectors. Erase fault memory and perform a test drive. If the diagnosis code has occurred even during the test drive, start the operation and then replace the A11 (Meter cluster). Inspection completed

https://truckmanualshub.com/

Inspection procedure	Step7	Inspection procedure Turn the starter switch in OFF. Reinstall all the removed connectors. Erase fault memory and perform a test drive. If the diagnosis code has occurred even during the test drive, start the operation and then replace the A20 (SAM). Inspection completed
	Step8	Refer to the help menu for Nos. other than above. *1: M/T *2: DUONIC *3: ISS (With Lock brake) *4: ISS (Without Lock brake) *5: Lock brake (Without ISS) *6: Other than *3,*4,*5 *7: Full-automatic air conditioner *8: Auto leveling *9: Manual leveling Inspection procedure Repair or replace electrical lines. Reinstall all the removed connectors. Turn the starter switch in ON. Inspection completed

1254-31: Information: Torque limitation by too high NOx emissions.

Generation condition		[Test Condition] • Monitoring is active if the ECU is not in afterrun • Continuous monitoring
		[Fault Detection] • The OBD performance limitation is activated, if there is a failure active, which causes high NOx emissions for a certain time (24855.13d, 0.00s, 0.00s or 24855.13d depending on the failure). The performance limiter is activated immediately within 5.00min or 5.00min (depending on limitation).
		[Defect Debouncing] • Defect condition exceeded cumulatively > 500.00ms • Failure is detected if active for 50% of the time
Fault healing		• If the failure which caused the high NOx disappears, the performance limiter is released within 5.00s or 5.00s (depending on limitation) immediately.
System reaction		• Reduced power due OBD performance limiter 1 or 2 active
Failure cause		• Active power reduction due to the OBD performance limiter because of too high NOx emissions
Failure repair		• Check which failure activated the performance limitation (FID_CoVehPrfmLim%%OBD with %%=11,12,21 or 22) and perform troubleshooting on the basis of this defect. • Note: The OBD performance limiter can be disabled with service tester at maximum 3.00- times for 60.00min each time, to give the possibility to drive also a fully loaded vehicle to the next repair station.
Inspection procedure	Step1	Inspection procedure Inspect the suspected factors mentioned above sequentially to locate faulty parts. Repair or replace the faulty part as necessary.

https://truckmanualshub.com/

1321-3: The starter relay has a short circuit to positive.

Generation condition		[Test Condition] • Monitoring is active while the battery voltage is over 10.00V, as long as the battery voltage is over 10.00V and 2.00s after this threshold has been exceeded, if none of the CAN controllers is in bus-off state, 2.00s after last CAN controller is no more in bus-off state and if the ECU is not in afterrun • Monitoring only when the power stage is active. • ECU not in after-run, Battery voltage > 9.50V (switch off < 9.00V) and Test of redundant shut-off paths not active)
		[Fault Detection] • Hardware reports a Short Circuit to Battery error on LS power stage for the starter relay actuator.
		[Defect Debouncing] • Defect condition exceeded cumulatively > 200.00ms • Failure is detected if active for 25% of the time
Fault healing		• To give the possibility for healing, an electric impulse is sent to power stage each 1000.00ms 5.00- times in actual driving cycle. Failure healed, if the power stage does not report a Short Circuit to Battery error. Else no healing possible at this driving cycle.
System reaction		• Power stage shut off. • Further reactions according FID (see FID's)
		• 1) FId / Physical errors that could be detected when the Starter is in the Running state • 2) FId / Inhibit ISS, max number of engine starts exceeded
Failure cause		• Short circuit of wiring to external source or defective LS starter relay
Failure repair		• Check of wiring or replacement of LS starter relay
Inspection procedure	Step1	Inspect or verify the following items. Repair or replace faulty items as necessary. If one of diagnosis codes associated with A20 (SAM) is generated, make a system diagnosis according to the diagnosis code. Go to Step2
	Step2	Inspection procedure Turn the starter switch in OFF. Remove the connector of A4 (Combustion engine Control unit). Remove the connector of K21 (Safety relay). Check the circuit across A4.X2.94/91 and K21.5/3 for open or short circuit. Check the circuit across A4.X2.94/69 and K21.5/1 for open or short circuit. Make a visual check on each connector. Is any abnormality recognized? No: Go to Step3 Yes: Go to Step7
	Step3	Inspection procedure Turn the starter switch in OFF. Replace component "K21 (Safety relay)". Reinstall all the removed connectors. Turn the starter switch in ON. Go to Step4

https://truckmanualshub.com/

Inspection procedure	Step4	Inspection procedure Turn the starter switch in OFF. Reinstall all the removed connectors. Erase fault memory and perform a test drive. Check if this diagnosis code has occurred. Are current fault codes present? No: Go to Step6 Yes: Go to Step5
	Step5	Inspection procedure Perform the operation start and replace A4 (Combustion engine Control unit). Go to Step6
	Step6	Inspection completed
	Step7	Inspection procedure Turn the starter switch in OFF. Remove the connector of A4 (Combustion engine Control unit). Remove the connector of X16 (Intermediate connector). Check the circuit across A4.X2.94/91 and X16.16/10 for open or short circuit. Check the circuit across A4.X2.94/69 and X16.16/11 for open or short circuit. Make a visual check on each connector. Is any abnormality recognized? No: Go to Step8 Yes: Go to Step9
	Step8	Inspection procedure Repair or replace the harness across K21 (Safety relay) and X16 (Intermediate connector). Reinstall all the removed connectors. Erase fault memory and perform a test drive. Check if this diagnosis code has occurred. Are current fault codes present? No: Go to Step6 Yes: Go to Step3
	Step9	Inspection procedure Repair or replace the harness across A4 (Combustion engine Control unit) and X16 (Intermediate connector). Reinstall all the removed connectors. Erase fault memory and perform a test drive. Check if this diagnosis code has occurred. Are current fault codes present? No: Go to Step6 Yes: Go to Step3

1321-4: The starter relay has a short circuit to ground.

Generation condition	[Test Condition] • Monitoring is active while the battery voltage is over 10.00V, as long as the battery voltage is over 10.00V and 2.00s after this threshold has been exceeded, if none of the CAN controllers is in bus-off state, 2.00s after last CAN controller is no more in bus-off state and if the ECU is not in afterrun • Monitoring only when the power stage is inactive. • ECU not in after-run, Battery voltage > 9.50V (switch off < 9.00V) and Test of redundant shut-off paths not active)
	[Fault Detection] • Hardware reports a Short Circuit to Ground error on LS power stage for the starter relay actuator.
	[Defect Debouncing] • Defect condition exceeded cumulatively > 90.00ms • Failure is detected if active for 25% of the time
Fault healing	• Hardware does not report a Short Circuit to Ground error on LS power stage for the starter relay actuator.

https://truckmanualshub.com/

System reaction		• Power stage shut off. • Further reactions according FID (see FID's)
		• 1) FId / Physical errors that could be detected when the Starter is in the Stopped state • 2) FId / Status of function identifier FId_EngDemTrqLimErr1 • 3) FId / Torque limitation 2 activated for power reduction • 4) FId / Engine speed Limitation 2 for HIgh/Low engine speed (HLS) control active • 5) FId / Inhibit ISS, max number of engine starts exceeded
Failure cause		• Short circuit of wiring to ground or defective LS starter relay
Failure repair		• Check of wiring or replacement of LS starter relay
Inspection procedure	Step1	Inspect or verify the following items. Repair or replace faulty items as necessary. If one of diagnosis codes associated with A20 (SAM) is generated, make a system diagnosis according to the diagnosis code. Go to Step2
	Step2	Inspection procedure Turn the starter switch in OFF. Remove the connector of A4 (Combustion engine Control unit). Remove the connector of K21 (Safety relay). Check the circuit across A4.X2.94/91 and K21.5/3 for open or short circuit. Check the circuit across A4.X2.94/69 and K21.5/1 for open or short circuit. Make a visual check on each connector. Is any abnormality recognized? No: Go to Step3 Yes: Go to Step7
	Step3	Inspection procedure Turn the starter switch in OFF. Replace component "K21 (Safety relay)". Reinstall all the removed connectors. Turn the starter switch in ON. Go to Step4
	Step4	Inspection procedure Turn the starter switch in OFF. Reinstall all the removed connectors. Erase fault memory and perform a test drive. Check if this diagnosis code has occurred. Are current fault codes present? No: Go to Step6 Yes: Go to Step5
	Step5	Inspection procedure Perform the operation start and replace A4 (Combustion engine Control unit). Go to Step6
	Step6	Inspection completed
	Step7	Inspection procedure Turn the starter switch in OFF. Remove the connector of A4 (Combustion engine Control unit). Remove the connector of X16 (Intermediate connector). Check the circuit across A4.X2.94/91 and X16.16/10 for open or short circuit. Check the circuit across A4.X2.94/69 and X16.16/11 for open or short circuit. Make a visual check on each connector. Is any abnormality recognized? No: Go to Step8 Yes: Go to Step9
	Step8	Inspection procedure Repair or replace the harness across K21 (Safety relay) and X16 (Intermediate connector). Reinstall all the removed connectors. Erase fault memory and perform a test drive. Check if this diagnosis code has occurred. Are current fault codes present? No: Go to Step6 Yes: Go to Step3

https://truckmanualshub.com/

Inspection procedure	Step9	Inspection procedure Repair or replace the harness across A4 (Combustion engine Control unit) and X16 (Intermediate connector). Reinstall all the removed connectors. Erase fault memory and perform a test drive. Check if this diagnosis code has occurred. Are current fault codes present? No: Go to Step6 Yes: Go to Step3

1321-12: The starter relay has an over temperature error.

Generation condition		[Test Condition] • Monitoring is active while the battery voltage is over 10.00V, as long as the battery voltage is over 10.00V and 2.00s after this threshold has been exceeded, if none of the CAN controllers is in bus-off state, 2.00s after last CAN controller is no more in bus-off state and if the ECU is not in afterrun • Monitoring only when the power stage is active. • ECU not in after-run, Battery voltage > 9.50V (switch off < 9.00V) and Test of redundant shut-off paths not active)
		[Fault Detection] • Hardware reports an excess temperature (OT) error on the LS power stage for starter relay actuator.
		[Defect Debouncing] • Defect condition exceeded cumulatively > 200.00ms • Failure is detected if active for 25% of the time
Fault healing		• To give the possibility for healing, an electric impulse is sent to power stage each 1.00s 5.00- times in actual driving cycle. Failure healed, if the power stage does not report an OT error. Else no healing possible at this driving cycle.
System reaction		• Power stage shut off. • Further reactions according FID (see FID's)
		• 1) FId / Physical errors that could be detected when the Starter is in the Running state • 2) FId / Inhibit ISS, max number of engine starts exceeded
Failure cause		• High battery voltage, high temperature inside ECU, high load or wiring problem
Failure repair		• Check battery voltage, wiring, power stage and LS starter relay
Inspection procedure	Step1	Inspect or verify the following items. Repair or replace faulty items as necessary. If one of diagnosis codes associated with A20 (SAM) is generated, make a system diagnosis according to the diagnosis code. Go to Step2
	Step2	Inspection procedure Turn the starter switch in OFF. Remove the connector of A4 (Combustion engine Control unit). Remove the connector of K21 (Safety relay). Check the circuit across A4.X2.94/91 and K21.5/3 for open or short circuit. Check the circuit across A4.X2.94/69 and K21.5/1 for open or short circuit. Make a visual check on each connector. Is any abnormality recognized? No: Go to Step3 Yes: Go to Step7
	Step3	Inspection procedure Turn the starter switch in OFF. Replace component "K21 (Safety relay)". Reinstall all the removed connectors. Turn the starter switch in ON. Go to Step4

https://truckmanualshub.com/

Inspection procedure	Step4	Inspection procedure Turn the starter switch in OFF. Reinstall all the removed connectors. Erase fault memory and perform a test drive. Check if this diagnosis code has occurred. Are current fault codes present? No: Go to Step6 Yes: Go to Step5
	Step5	Inspection procedure Perform the operation start and replace A4 (Combustion engine Control unit). Go to Step6
	Step6	Inspection completed
	Step7	Inspection procedure Turn the starter switch in OFF. Remove the connector of A4 (Combustion engine Control unit). Remove the connector of X16 (Intermediate connector). Check the circuit across A4.X2.94/91 and X16.16/10 for open or short circuit. Check the circuit across A4.X2.94/69 and X16.16/11 for open or short circuit. Make a visual check on each connector. Is any abnormality recognized? No: Go to Step8 Yes: Go to Step9
	Step8	Inspection procedure Repair or replace the harness across K21 (Safety relay) and X16 (Intermediate connector). Reinstall all the removed connectors. Erase fault memory and perform a test drive. Check if this diagnosis code has occurred. Are current fault codes present? No: Go to Step6 Yes: Go to Step3
	Step9	Inspection procedure Repair or replace the harness across A4 (Combustion engine Control unit) and X16 (Intermediate connector). Reinstall all the removed connectors. Erase fault memory and perform a test drive. Check if this diagnosis code has occurred. Are current fault codes present? No: Go to Step6 Yes: Go to Step3

1322-12: Combustion misfiring has been detected.

Generation condition	[Test Condition] • By Data set MisfDet_stMonCondPatMsk: Monitoring not inhibited by FId_MisfDet due to another failure, Engine speed between 500.00rpm and 1100.00rpm, Fuel Quantity between 2.00mg/hub and 40.00mg/hub, Engine temperature > 19.96°C {67.93°F}, vehicle speed < 3km/h {1.9mph}, Engine running, Engine in running since start > 5.00s, Wheel slip < 1.00-, Wheel slip constant since 1000.00ms and Failure memory erased by Scan tool
	[Fault Detection] • A Cylinder is misfiring, when within a test frame of 25.00- blocks each composed of 12.00- evaluated engine rotations-i.e. totally 300 engine revolutions -, at least 120.00- misfires are detected. If more than 1 cylinder has misfiring, this failure path is set.
	[Defect Debouncing] • > 120.00- misfires
Fault healing	• No defect detection

https://truckmanualshub.com/

System reaction		• Irregular engine running • According FID (see FID's) • If less than 1.00- cylinders show misfiring: Failure paths of the defective cylinders also stored.
		• 1) FId / Inhibit OxiCat passive monitor • 2) FId / Inhibit DPF efficiency monitor • 3) FId / Interrupt DPF efficiency monitor • 4) FId / Inhibit monitor for DPF frequent regeneration • 5) FId / Inhibit monitor for incomplete regeneration of the DPF • 6) FId / Inhibit ISS, max number of engine starts exceeded
Failure cause		• Severe loss of compression or fuel injection failure
Failure repair		• If Failure Path for Misfiring of single cylinders are also stored: check the dedicated cylinders. • If no Failure path of Misfiring of single cylidner is stored (this means more than 1.00- show misfiring): check all cylinders for correct injection and or compression.
Inspection procedure	Step1	Inspect or verify the following items. Repair or replace faulty items as necessary. Check for possible misfire when the engine is in idle state. Check for damaged cylinder. For procedures, refer to the Shop Manual. Go to Step2
	Step2	Inspect or verify the following items. Repair or replace faulty items as necessary. If any other fault code has occurred, perform the diagnostics procedure for the fault code. Go to Step3
	Step3	Inspection procedure Turn the starter switch in OFF. Remove the connector of A4 (Combustion engine Control unit). Remove the connector of Y15 (Fuel injector 1). Remove the connector of Y16 (Fuel injector 2). Remove the connector of Y17 (Fuel injector 3). Remove the connector of Y18 (Fuel injector 4). Check the circuit across Y15.2/1 and A4.X1.60/31 for open or short circuit. Check the circuit across Y15.2/2 and A4.X1.60/46 for open or short circuit. Check the circuit across Y16.2/1 and A4.X1.60/17 for open or short circuit. Check the circuit across Y16.2/2 and A4.X1.60/2 for open or short circuit. Check the circuit across Y17.2/1 and A4.X1.60/16 for open or short circuit. Check the circuit across Y17.2/2 and A4.X1.60/1 for open or short circuit. Check the circuit across Y18.2/1 and A4.X1.60/32 for open or short circuit. Check the circuit across Y18.2/2 and A4.X1.60/47 for open or short circuit. Make a visual check on each connector. Is any abnormality recognized? No: Go to Step4 Yes: Go to Step8
	Step4	Inspection procedure Reinstall all the removed connectors. Turn the starter switch in ON. Erase the fault code. Execute the control "Fuel injector". Turn the starter switch in OFF. Replace the damaged Fuel injector. Perform the learned value resetting procedure of Fuel injector which A4 (Combustion engine Control unit) learns. Perform coding of Fuel injector which A4 (Combustion engine Control unit) learns. Go to Step5

https://truckmanualshub.com/

Inspection procedure	Step5	Inspection procedure Turn the starter switch in OFF. Reinstall all the removed connectors. Erase fault memory and perform a test drive. Check if this diagnosis code has occurred. Are current fault codes present? No: Go to Step6 Yes: Go to Step7
	Step6	Inspection completed
	Step7	Inspection procedure Perform the operation start and replace A4 (Combustion engine Control unit). Go to Step6
	Step8	Inspection procedure Repair or replace electrical lines. Reinstall all the removed connectors. Erase fault memory and perform a test drive. Check if this diagnosis code has occurred. Are current fault codes present? No: Go to Step6 Yes: Go to Step4

1323-12: Combustion misfiring of cylinder 1 has been detected.

Generation condition		[Test Condition] • By Data set MisfDet_stMonCondPatMsk: Monitoring not inhibited by FId_MisfDet due to another failure, Engine speed between 500.00rpm and 1100.00rpm, Fuel Quantity between 2.00mg/hub and 40.00mg/hub, Engine temperature > 19.96°C {67.93°F}, vehicle speed < 3km/h {1.9mph}, Engine running, Engine in running since start > 5.00s, Wheel slip < 1.00-, Wheel slip constant since 1000.00ms and Failure memory erased by Scan tool
		[Fault Detection] • Cylinder 1 is misfiring, when within a test frame of 25.00- blocks each composed of 12.00- evaluated engine rotations -i.e. totally 300 engine revolutions -, at least 120.00- misfires are detected of cylinder 1.
		[Defect Debouncing] • 120.00- misfires
Fault healing		• A test frame with no defect detection for cylinder 1 is concluded.
System reaction		• Irregular engine running or idle • Only according FID (see FID's)
		• 1) FId / Inhibit OxiCat passive monitor • 2) FId / Inhibit DPF efficiency monitor • 3) FId / Interrupt DPF efficiency monitor • 4) FId / Inhibit monitor for DPF frequent regeneration • 5) FId / Inhibit monitor for incomplete regeneration of the DPF • 6) FId / Inhibit ISS, max number of engine starts exceeded
Failure cause		• Severe loss of compression or fuel injection failure
Failure repair		• Check the sealing of the combustion chamber (piston ring, cylinder head.), look for injection failures of cylinder 1
Inspection procedure	Step1	Inspect or verify the following items. Repair or replace faulty items as necessary. Check for possible misfire when the engine is in idle state. Check for damaged cylinder. For procedures, refer to the Shop Manual. Go to Step2
	Step2	Inspect or verify the following items. Repair or replace faulty items as necessary. If any other fault code has occurred, perform the diagnostics procedure for the fault code. Go to Step3

Inspection procedure	Step3	Inspection procedure Turn the starter switch in OFF. Replace component “Y15 (Fuel injector 1)”. Reinstall all the removed connectors. Turn the starter switch in ON. Erase the fault code. Perform the learned value resetting procedure of Y15 (Fuel injector 1) which A4 (Combustion engine Control unit) learns. Perform coding of Fuel injector which A4 (Combustion engine Control unit) learns. Go to Step4
	Step4	Inspection procedure Turn the starter switch in OFF. Reinstall all the removed connectors. Erase fault memory and perform a test drive. Check if this diagnosis code has occurred. Are current fault codes present? No: Go to Step5 Yes: Go to Step6
	Step5	Inspection completed
	Step6	Inspect or verify the following items. Repair or replace faulty items as necessary. Check for possible misfire when the engine is in idle state. Check for damaged cylinder. For procedures, refer to the Shop Manual. Go to Step7
	Step7	Inspection procedure Perform the operation start and replace A4 (Combustion engine Control unit). Go to Step5

1324-12: Combustion misfiring of cylinder 3 has been detected.

Generation condition		[Test Condition] • By Data set MisfDet_stMonCondPatMsk: Monitoring not inhibited by FId_MisfDet due to another failure, Engine speed between 500.00rpm and 1100.00rpm, Fuel Quantity between 2.00mg/hub and 40.00mg/hub, Engine temperature > 19.96°C {67.93°F}, vehicle speed < 3km/h {1.9mph}, Engine running, Engine in running since start > 5.00s, Wheel slip < 1.00-, Wheel slip constant since 1000.00ms and Failure memory erased by Scan tool
		[Fault Detection] • Cylinder 3 is misfiring, when within a test frame of 25.00- blocks each composed of 12.00- evaluated engine rotations -i.e. totally 300 engine revolutions -, at least 120.00- misfires are detected of cylinder 3.
		[Defect Debouncing] • 120.00- misfires
Fault healing		• A test frame with no defect detection for cylinder 3 is concluded.
System reaction		• Irregular engine running or idle • Only according FID (see FID’s)
		• 1) FId / Inhibit OxiCat passive monitor • 2) FId / Inhibit DPF efficiency monitor • 3) FId / Interrupt DPF efficiency monitor • 4) FId / Inhibit monitor for DPF frequent regeneration • 5) FId / Inhibit monitor for incomplete regeneration of the DPF • 6) FId / Inhibit ISS, max number of engine starts exceeded
Failure cause		• Severe loss of compression or fuel injection failure
Failure repair		• Check the sealing of the combustion chamber (piston ring, cylinder head.), look for injection failures of cylinder 3
Inspection procedure	Step1	Inspect or verify the following items. Repair or replace faulty items as necessary. Check for possible misfire when the engine is in idle state. Check for damaged cylinder. For procedures, refer to the Shop Manual. Go to Step2

https://truckmanualshub.com/

Inspection procedure	Step2	Inspect or verify the following items. Repair or replace faulty items as necessary. If any other fault code has occurred, perform the diagnostics procedure for the fault code. Go to Step3
	Step3	Inspection procedure Turn the starter switch in OFF. Replace component “Y17 (Fuel injector 3)”. Reinstall all the removed connectors. Turn the starter switch in ON. Erase the fault code. Perform the learned value resetting procedure of Y17 (Fuel injector 3) which A4 (Combustion engine Control unit) learns. Perform coding of Fuel injector which A4 (Combustion engine Control unit) learns. Go to Step4
	Step4	Inspection procedure Turn the starter switch in OFF. Reinstall all the removed connectors. Erase fault memory and perform a test drive. Check if this diagnosis code has occurred. Are current fault codes present? No: Go to Step5 Yes: Go to Step6
	Step5	Inspection completed
	Step6	Inspect or verify the following items. Repair or replace faulty items as necessary. Check for possible misfire when the engine is in idle state. Check for damaged cylinder. For procedures, refer to the Shop Manual. Go to Step7
	Step7	Inspection procedure Perform the operation start and replace A4 (Combustion engine Control unit). Go to Step5

1325-12: Combustion misfiring of cylinder 4 has been detected.

Generation condition	[Test Condition] • By Data set MisfDet_stMonCondPatMsk: Monitoring not inhibited by FId_MisfDet due to another failure, Engine speed between 500.00rpm and 1100.00rpm, Fuel Quantity between 2.00mg/hub and 40.00mg/hub, Engine temperature > 19.96°C {67.93°F}, vehicle speed < 3km/h {1.9mph}, Engine running, Engine in running since start > 5.00s, Wheel slip < 1.00-, Wheel slip constant since 1000.00ms and Failure memory erased by Scan tool
	[Fault Detection] • Cylinder 4 is misfiring, when within a test frame of 25.00- blocks each composed of 12.00- evaluated engine rotations -i.e. totally 300 engine revolutions -, at least 120.00- misfires are detected of cylinder 4.
	[Defect Debouncing] • 120.00- misfires
Fault healing	• A test frame with no defect detection for cylinder 4 is concluded.
System reaction	• Irregular engine running or idle • Only according FID (see FID’s)
	• 1) FId / Inhibit OxiCat passive monitor • 2) FId / Inhibit DPF efficiency monitor • 3) FId / Interrupt DPF efficiency monitor • 4) FId / Inhibit monitor for DPF frequent regeneration • 5) FId / Inhibit monitor for incomplete regeneration of the DPF • 6) FId / Inhibit ISS, max number of engine starts exceeded
Failure cause	• Severe loss of compression or fuel injection failure
Failure repair	• Check the sealing of the combustion chamber (piston ring, cylinder head.), look for injection failures of cylinder 4

https://truckmanualshub.com/

Inspection procedure	Step1	Inspect or verify the following items. Repair or replace faulty items as necessary. Check for possible misfire when the engine is in idle state. Check for damaged cylinder. For procedures, refer to the Shop Manual. Go to Step2
	Step2	Inspect or verify the following items. Repair or replace faulty items as necessary. If any other fault code has occurred, perform the diagnostics procedure for the fault code. Go to Step3
	Step3	Inspection procedure Turn the starter switch in OFF. Replace component “Y18 (Fuel injector 4)”. Reinstall all the removed connectors. Turn the starter switch in ON. Erase the fault code. Perform the learned value resetting procedure of Y18 (Fuel injector 4) which A4 (Combustion engine Control unit) learns. Perform coding of Fuel injector which A4 (Combustion engine Control unit) learns. Go to Step4
	Step4	Inspection procedure Turn the starter switch in OFF. Reinstall all the removed connectors. Erase fault memory and perform a test drive. Check if this diagnosis code has occurred. Are current fault codes present? No: Go to Step5 Yes: Go to Step6
	Step5	Inspection completed
	Step6	Inspect or verify the following items. Repair or replace faulty items as necessary. Check for possible misfire when the engine is in idle state. Check for damaged cylinder. For procedures, refer to the Shop Manual. Go to Step7
	Step7	Inspection procedure Perform the operation start and replace A4 (Combustion engine Control unit). Go to Step5

1326-12: Combustion misfiring of cylinder 2 has been detected.

Generation condition	[Test Condition] • By Data set MisfDet_stMonCondPatMsk: Monitoring not inhibited by FId_MisfDet due to another failure, Engine speed between 500.00rpm and 1100.00rpm, Fuel Quantity between 2.00mg/hub and 40.00mg/hub, Engine temperature > 19.96°C {67.93°F}, vehicle speed < 3km/h {1.9mph}, Engine running, Engine in running since start > 5.00s, Wheel slip < 1.00-, Wheel slip constant since 1000.00ms and Failure memory erased by Scan tool
	[Fault Detection] • Cylinder 2 is misfiring, when within a test frame of 25.00- blocks each composed of 12.00- evaluated engine rotations -i.e. totally 300 engine revolutions -, at least 120.00- misfires are detected of cylinder 2.
	[Defect Debouncing] • 120.00- misfires
Fault healing	• A test frame with no defect detection for cylinder 2 is concluded.

https://truckmanualshub.com/

		• Irregular engine running or idle • Only according FID (see FID's)
System reaction		• 1) FId / Inhibit OxiCat passive monitor • 2) FId / Inhibit DPF efficiency monitor • 3) FId / Interrupt DPF efficiency monitor • 4) FId / Inhibit monitor for DPF frequent regeneration • 5) FId / Inhibit monitor for incomplete regeneration of the DPF • 6) FId / Inhibit ISS, max number of engine starts exceeded
Failure cause		• Severe loss of compression or fuel injection failure
Failure repair		• Check the sealing of the combustion chamber (piston ring, cylinder head.), look for injection failures of cylinder 2
Inspection procedure	Step1	Inspect or verify the following items. Repair or replace faulty items as necessary. Check for possible misfire when the engine is in idle state. Check for damaged cylinder. For procedures, refer to the Shop Manual. Go to Step2
	Step2	Inspect or verify the following items. Repair or replace faulty items as necessary. If any other fault code has occurred, perform the diagnostics procedure for the fault code. Go to Step3
	Step3	Inspection procedure Turn the starter switch in OFF. Replace component "Y16 (Fuel injector 2)". Reinstall all the removed connectors. Turn the starter switch in ON. Erase the fault code. Perform the learned value resetting procedure of Y16 (Fuel injector 2) which A4 (Combustion engine Control unit) learns. Perform coding of Fuel injector which A4 (Combustion engine Control unit) learns. Go to Step4
	Step4	Inspection procedure Turn the starter switch in OFF. Reinstall all the removed connectors. Erase fault memory and perform a test drive. Check if this diagnosis code has occurred. Are current fault codes present? No: Go to Step5 Yes: Go to Step6
	Step5	Inspection completed
	Step6	Inspect or verify the following items. Repair or replace faulty items as necessary. Check for possible misfire when the engine is in idle state. Check for damaged cylinder. For procedures, refer to the Shop Manual. Go to Step7
	Step7	Inspection procedure Perform the operation start and replace A4 (Combustion engine Control unit). Go to Step5

https://truckmanualshub.com/

1442-3: Component 'Fuel metering unit' has a short circuit to positive.

Generation condition		[Test Condition] • Monitoring is active 2.00s after ECU initialization while engine isn't running yet and while the engine isn't cranking • Monitoring only when the power stage is active • Battery voltage > 9.50V (switch off < 9.00V)
		[Fault Detection] • Hardware reports a Short Circuit to Battery error on power stage for Metering Unit at Low Side
		[Defect Debouncing] • Defect condition exceeded cumulatively > 220.00ms • Failure is detected if active for 25% of the time
Fault healing		• To give the possibility for healing, an electric impulse is sent to power stage each 200.00ms Hardware does not reports a Short Circuit to Battery error on power stage for Metering Unit Low Side
System reaction		• Power stage shut off. • Further reactions according FID (see FID's)
		• 1) FId / Reset Metering Unit adaption value • 2) FId / I Part of current governor of Metering Unit (MeUn) of Common Rail frozen • 3) FId / Check if continuous SCB or SCG or intermittent contact of Metering Unit (MeUn) of Common Rail active • 4) FId / Rotation function of Metering Unit (MeUn) of Common Rail in After-run disabled • 5) FId / Interrupt DPF efficiency monitor • 6) FId / Inhibit monitor for DPF frequent regeneration • 7) FId / Substitute reaction: In the event of an error, a regeneration is prevented or a currently-running regeneration is interrupted. • 8) FId / Inhibit monitor for incomplete regeneration of the DPF • 9) FId / Fuel pressure control exclusively made by metering unit (MeUn) in current driving cycle • 10) FId / Closed loop control of Fuel Rail pressure by metering unit MeUn disabled (control exclusively by pressure control valve) • 11) FId / Fuel flow at maximum delivery volume because of Metering Unit failure • 12) FId / Monitoring of positive deviation of fuel rail pressure (too low pressure) disabled • 13) FId / Status of function identifier FId_PFltLmp • 14) FId / Inhibit ISS, max number of engine starts exceeded
Failure cause		• Short circuit of wiring to battery or inside Metering Unit at Low Side
Failure repair		• Check of wiring, replace Metering Unit
Inspection procedure	Step1	Inspection procedure Turn the starter switch in OFF. Remove the connector of A4 (Combustion engine Control unit). Remove the connector of Y10 (Pressure regulating valve in rail). Check the circuit across Y10.2/1 and A4.X1.60/30 for open or short circuit. Check the circuit across Y10.2/2 and A4.X1.60/60 for open or short circuit. Make a visual check on each connector. Is any abnormality recognized? No: Go to Step2 Yes: Go to Step6
	Step2	Inspection procedure Turn the starter switch in OFF. Replace component "Y10 (Pressure regulating valve in rail)". Reinstall all the removed connectors. Turn the starter switch in ON. Go to Step3

https://truckmanualshub.com/

Inspection procedure	Step3	Inspection procedure Turn the starter switch in OFF. Reinstall all the removed connectors. Erase fault memory and perform a test drive. Check if this diagnosis code has occurred. Are current fault codes present? No: Go to Step5 Yes: Go to Step4
	Step4	Inspection procedure Perform the operation start and replace A4 (Combustion engine Control unit). Go to Step5
	Step5	Inspection completed
	Step6	Inspection procedure Repair or replace electrical lines. Reinstall all the removed connectors. Erase fault memory and perform a test drive. Check if this diagnosis code has occurred. Are current fault codes present? No: Go to Step5 Yes: Go to Step2

1442-4: Component 'Fuel metering unit' has a short circuit to ground.

Generation condition	[Test Condition] • Battery voltage > 9.50V (switch off < 9.00V)
	[Fault Detection] • Hardware reports a Short Circuit to Ground error on power stage for Metering Unit Low Side
	[Defect Debouncing] • Defect condition exceeded cumulatively > 280.00ms • Failure is detected if active for 25% of the time
Fault healing	• No Healing possible (disabled by Data set)
System reaction	• None except FIDs
	• 1) FId / Reset Metering Unit adaption value • 2) FId / I Part of current governor of Metering Unit (MeUn) of Common Rail frozen • 3) FId / Check if continuous SCB or SCG or intermittent contact of Metering Unit (MeUn) of Common Rail active • 4) FId / Rotation function of Metering Unit (MeUn) of Common Rail in After-run disabled • 5) FId / Interrupt DPF efficiency monitor • 6) FId / Inhibit monitor for DPF frequent regeneration • 7) FId / Substitute reaction: In the event of an error, a regeneration is prevented or a currently-running regeneration is interrupted. • 8) FId / Inhibit monitor for incomplete regeneration of the DPF • 9) FId / Fuel pressure control exclusively made by metering unit (MeUn) in current driving cycle • 10) FId / Closed loop control of Fuel Rail pressure by metering unit MeUn disabled (control exclusively by pressure control valve) • 11) FId / Fuel flow at maximum delivery volume because of Metering Unit failure • 12) FId / Monitoring of positive deviation of fuel rail pressure (too low pressure) disabled • 13) FId / Status of function identifier FId_PFltLmp • 14) FId / Inhibit ISS, max number of engine starts exceeded
Failure cause	• Short circuit of wiring to ground or inside Metering Unit at Low Side
Failure repair	• Check of wiring, replace Metering Unit

https://truckmanualshub.com/

Inspection procedure	Step1	Inspection procedure Turn the starter switch in OFF. Remove the connector of A4 (Combustion engine Control unit). Remove the connector of Y10 (Pressure regulating valve in rail). Check the circuit across Y10.2/1 and A4.X1.60/30 for open or short circuit. Check the circuit across Y10.2/2 and A4.X1.60/60 for open or short circuit. Make a visual check on each connector. Is any abnormality recognized? No: Go to Step2 Yes: Go to Step6
	Step2	Inspection procedure Turn the starter switch in OFF. Replace component “Y10 (Pressure regulating valve in rail)”. Reinstall all the removed connectors. Turn the starter switch in ON. Go to Step3
	Step3	Inspection procedure Turn the starter switch in OFF. Reinstall all the removed connectors. Erase fault memory and perform a test drive. Check if this diagnosis code has occurred. Are current fault codes present? No: Go to Step5 Yes: Go to Step4
	Step4	Inspection procedure Perform the operation start and replace A4 (Combustion engine Control unit). Go to Step5
	Step5	Inspection completed
	Step6	Inspection procedure Repair or replace electrical lines. Reinstall all the removed connectors. Erase fault memory and perform a test drive. Check if this diagnosis code has occurred. Are current fault codes present? No: Go to Step5 Yes: Go to Step2

1442-5: Fuel metering unit Current below normal or Open circuit

Generation condition	[Test Condition] • Monitoring is active while the battery voltage is over 10.00V • Monitoring only when the power stage is NOT active. • Battery voltage > 9.50V (switch off < 9.00V)
	[Fault Detection] • Hardware reports “open load” (OL) error
	[Defect Debouncing] • Defect condition exceeded cumulatively > 220.00ms • Failure is detected if active for 25% of the time
Fault healing	• Failure healed, if the power stage does not report an OL error.

https://truckmanualshub.com/

		• Power stage switched off, i.e.Full quantity is delivered to common rail, which can lead to an overshoot of fuel pressure (which can lead to open the mechanical pressure limiting valve, if present), or -in case of SCB on the MeUN - engine stops (no fuel delivery) • Further reactions according FID (see FID's)
System reaction		• 1) FId / I Part of current governor of Metering Unit (MeUn) of Common Rail frozen • 2) FId / Check if continuous SCB or SCG or intermittent contact of Metering Unit (MeUn) of Common Rail active • 3) FId / Rotation function of Metering Unit (MeUn) of Common Rail in After-run disabled • 4) FId / Fuel pressure control exclusively made by metering unit (MeUn) in current driving cycle • 5) FId / Closed loop control of Fuel Rail pressure by metering unit MeUn disabled (control exclusively by pressure control valve) • 6) FId / Fuel flow at maximum delivery volume because of Metering Unit failure • 7) FId / Monitoring of positive deviation of fuel rail pressure (too low pressure) disabled • 8) FId / Monitoring of positive deviation (too low pressure) combined with set value of pressure control valve enabled • 9) FId / Inhibit DPF efficiency monitor • 10) FId / Interrupt DPF efficiency monitor • 11) FId / Zero Fuel Calibration (ZFC) of injectors disabled • 12) FId / Zero Fuel Calibration (ZFC) of injectors by Lambda Sensor signal disabled • 13) FId / Inhibit monitor for DPF frequent regeneration • 14) FId / Inhibit monitor for incomplete regeneration of the DPF • 15) FId / Inhibit ISS, max number of engine starts exceeded
Failure cause		• Broken or disconnected wiring, defective metering unit
Failure repair		• Check of wiring or metering unit
Inspection procedure	Step1	Inspection procedure Turn the starter switch in OFF. Remove the connector of A4 (Combustion engine Control unit). Remove the connector of Y10 (Pressure regulating valve in rail). Check the circuit across Y10.2/1 and A4.X1.60/30 for open or short circuit. Check the circuit across Y10.2/2 and A4.X1.60/60 for open or short circuit. Make a visual check on each connector. Is any abnormality recognized? No: Go to Step2 Yes: Go to Step6
	Step2	Inspection procedure Turn the starter switch in OFF. Replace component "Y10 (Pressure regulating valve in rail)". Reinstall all the removed connectors. Turn the starter switch in ON. Go to Step3
	Step3	Inspection procedure Turn the starter switch in OFF. Reinstall all the removed connectors. Erase fault memory and perform a test drive. Check if this diagnosis code has occurred. Are current fault codes present? No: Go to Step5 Yes: Go to Step4
	Step4	Inspection procedure Perform the operation start and replace A4 (Combustion engine Control unit). Go to Step5
	Step5	Inspection completed

https://truckmanualshub.com/

Inspection procedure	Step6	Inspection procedure Repair or replace electrical lines. Reinstall all the removed connectors. Erase fault memory and perform a test drive. Check if this diagnosis code has occurred. Are current fault codes present? No: Go to Step5 Yes: Go to Step2

1442-12: Component 'Fuel metering unit' signals overtemperature.

Generation condition		[Test Condition] • Monitoring is active while the battery voltage is over 10.00V • Monitoring only when the power stage is active. • Battery voltage > 9.50V (switch off < 9.00V)
		[Fault Detection] • Hardware reports "overtemperature" (OT) error
		[Defect Debouncing] • Defect condition exceeded cumulatively > 220.00ms • Failure is detected if active for 25% of the time
Fault healing		• To give the possibility for healing, an electric impulse is sent to power stage each 0.20s. Failure healed, if the power stage does not report an OT error.
System reaction		• Power stage switched off, i.e.Full quantity is delivered to common rail, which can lead to an overshoot of fuel pressure (which can lead to open the mechanical pressure limiting valve, if present) • Further reactions according FID (see FID's)
		• 1) FId / I Part of current governor of Metering Unit (MeUn) of Common Rail frozen • 2) FId / Rotation function of Metering Unit (MeUn) of Common Rail in After-run disabled • 3) FId / Fuel pressure control exclusively made by metering unit (MeUn) in current driving cycle • 4) FId / Closed loop control of Fuel Rail pressure by metering unit MeUn disabled (control exclusively by pressure control valve) • 5) FId / Monitoring of positive deviation of fuel rail pressure (too low pressure) disabled • 6) FId / Monitoring of positive deviation (too low pressure) combined with set value of pressure control valve enabled • 7) FId / Inhibit DPF efficiency monitor • 8) FId / Zero Fuel Calibration (ZFC) of injectors disabled • 9) FId / Interrupt DPF efficiency monitor • 10) FId / Inhibit monitor for DPF frequent regeneration • 11) FId / Inhibit monitor for incomplete regeneration of the DPF • 12) FId / Inhibit ISS, max number of engine starts exceeded
Failure cause		• High battery voltage, high temperature inside ECU, high load or wiring problem
Failure repair		• Check of wiring or metering unit
Inspection procedure	Step1	Inspection procedure If one of diagnosis codes associated with SAM ECU is generated, make a system diagnosis according to the diagnosis code. Go to Step2
	Step2	Inspection procedure Turn the starter switch in OFF. Remove the connector of A4 (Combustion engine Control unit). Remove the connector of Y10 (Pressure regulating valve in rail). Check the circuit across Y10.2/1 and A4.X1.60/30 for open or short circuit. Check the circuit across Y10 and A4.X1.60/60 for open or short circuit. Make a visual check on each connector. Is any abnormality recognized? No: Go to Step3 Yes: Go to Step7

https://truckmanualshub.com/

Inspection procedure	Step3	Inspection procedure Turn the starter switch in OFF. Replace component “Y10 (Pressure regulating valve in rail)”. Reinstall all the removed connectors. Turn the starter switch in ON. Go to Step4
	Step4	Inspection procedure Turn the starter switch in OFF. Reinstall all the removed connectors. Erase fault memory and perform a test drive. Check if this diagnosis code has occurred. Are current fault codes present? No: Go to Step6 Yes: Go to Step5
	Step5	Inspection procedure Perform the operation start and replace A4 (Combustion engine Control unit). Go to Step6
	Step6	Inspection completed
	Step7	Inspection procedure Repair or replace electrical lines. Reinstall all the removed connectors. Erase fault memory and perform a test drive. Check if this diagnosis code has occurred. Are current fault codes present? No: Go to Step6 Yes: Go to Step3

1485-7: Defect Fault Check for ECU Main relay.Mechanical system not responding or out of adjustment

Generation condition		[Test Condition] • Once per driving cycle after the After-run.
		[Fault Detection] • Supply voltage not sinking 500.00ms after “shut off request” by ECU.
		[Defect Debouncing] • Immediate
Fault healing		• Proper opening of main relay in the coming driving cycles(without any abnormal delay after the request from System Control module).
System reaction		• The ECU is not disconnected from the battery voltage (except the vehicle is equipped with a “main electrical switch”), therefore an empty battery after a long stand still period is possible.
Failure cause		• Main relay has a short circuit or is mechanically stuck in closed position
Failure repair		• Check wiring or replace main relay
Inspection procedure	Step1	Inspection procedure If one of diagnosis codes associated with SAM ECU is generated, make a system diagnosis according to the diagnosis code. Go to Step2
	Step2	Inspection procedure Turn the starter switch in OFF. Remove the connector of A4 (Combustion engine Control unit). Remove the connector of A20 (SAM). Check the circuit across A4.X2.94/72 and A20.X9.14/5 for open or short circuit. Open or short circuit in the harness across A4.X2.94/82 and A20.X9.14/4 Make a visual check on each connector. Is any abnormality recognized? No: Go to Step3 Yes: Go to Step7
	Step3	Inspection procedure Turn the starter switch in OFF. Perform the operation start and replace A20 (SAM). Reinstall all the removed connectors. Turn the starter switch in ON. Go to Step4

https://truckmanualshub.com/

Inspection procedure	Step4	Inspection procedure Turn the starter switch in OFF. Reinstall all the removed connectors. Erase fault memory and perform a test drive. Check if this diagnosis code has occurred. Are current fault codes present? No: Go to Step6 Yes: Go to Step5
	Step5	Inspection procedure Perform the operation start and replace A4 (Combustion engine Control unit). Go to Step6
	Step6	Inspection completed
	Step7	Inspection procedure Repair or replace electrical lines. Reinstall all the removed connectors. Erase fault memory and perform a test drive. Check if this diagnosis code has occurred. Are current fault codes present? No: Go to Step6 Yes: Go to Step3

1485-31: ECU Main relay has an Early Opening failure.

Generation condition		[Test Condition] • Once at ECU initialisation.
		[Fault Detection] • If the bit in the EEPROM is detected as “set” directly after system start.
		[Defect Debouncing] • After 3.0 consecutive starts
Fault healing		• The bit is reset to 0 at the end of next afterrun, if closing of Main relay correct, i.e. healing at next start, if bit = 0.
System reaction		• New failures are not stored in the failure memory (and not visible to the tester) • Failure validation according driving cycles does not work (failure remains in “pending” state) • Failure healing not working (failure remains in “validated” or “healed” state) • Further reaction according FID (see FID’s)
Failure cause		• The Main Relay is switched off directly by Key 15 instead of the request of ECU: • in case vehicle equipped with “main electrical switch”: engine stopped by “main switch” instead of Key 15 OR Main switch disconnected before afterrun finished. • due to wrong wiring to the Main Relay (direct contact to the battery missing or wiring ECU to Main relay) • due to internal defect of ECU
Failure repair		• In case of vehicle equipped with “main electrical switch”: inform driver of correct engine shut off by Key 15. • In case of vehicle equipped with electronic “main electrical switch”: check electronic of main switch for correct working (if opens after afterrun finished) • Check wiring harness between main Relay and battery • Check wiring harness between ECU and Main Relay • Check ECU
Inspection procedure	Step1	Inspection procedure If one of diagnosis codes associated with SAM ECU is generated, make a system diagnosis according to the diagnosis code. Go to Step2

https://truckmanualshub.com/

Inspection procedure	Step2	Inspection procedure Turn the starter switch in OFF. Remove the connector of A4 (Combustion engine Control unit). Remove the connector of A20 (SAM). Check the circuit across A4.X2.94/72 and A20.X9.14/5 for open or short circuit. Open or short circuit in the harness across A4.X2.94/82 and A20.X9.14/4 Make a visual check on each connector. Is any abnormality recognized? No: Go to Step3 Yes: Go to Step7
	Step3	Inspection procedure Turn the starter switch in OFF. Perform the operation start and replace A20 (SAM). Reinstall all the removed connectors. Turn the starter switch in ON. Go to Step4
	Step4	Inspection procedure Turn the starter switch in OFF. Reinstall all the removed connectors. Erase fault memory and perform a test drive. Check if this diagnosis code has occurred. Are current fault codes present? No: Go to Step6 Yes: Go to Step5
	Step5	Inspection procedure Perform the operation start and replace A4 (Combustion engine Control unit). Go to Step6
	Step6	Inspection completed
	Step7	Inspection procedure Repair or replace electrical lines. Reinstall all the removed connectors. Erase fault memory and perform a test drive. Check if this diagnosis code has occurred. Are current fault codes present? No: Go to Step6 Yes: Go to Step3

1623-19: Cardan speed: Received network data is in error

Generation condition	[Test Condition] • Monitoring is active 2.00s after ECU initialization while engine isn't running yet, while the engine isn't cranking, 2.00s after engine startup, while the battery voltage is over 10.00V, as long as the battery voltage is over 10.00V and 2.00s after this threshold has been exceeded and if the ECU is not in after-run • Continuously
	[Fault Detection] • Value of Com_nSpd is equal to VEHV_V_CANERR (0x7FFF) or Com_nTCO1CdrSPre is equal VEHV_V_CANERR (0x7FFF) or (Com_nCdrs is equal to 0RPM and Com_vVeh is less than 10km/h {6.2mph})
	[Defect Debouncing] • Defect condition exceeded cumulatively > 500.00ms • Failure is detected if active for 50% of the time
Fault healing	• Plausible cardan speed received

https://truckmanualshub.com/

System reaction		• None
		• 1) FId / Vehicle speed monitoring inhibited • 2) FId / Vehicle speed value (via CAN) replaced by substitute value if failure is validated • 3) FId / Status of function identifier FId_EngDemTrqLimErr1 • 4) FId / Torque limitation 4 activated for power reduction • 5) FId / Engine speed Limitation 1 for HIgh/Low engine speed (HLS) control active • 6) Fid / Cruise control immediately shut off • 7) FId / Multiple state switch error, PTO disabled • 8) FId / Vehicle speed sensing error, Cruise control disabled • 9) FId / Release of OBD Performance Limiter at low vehicle speed inhibited due to a failure • 10) FId / Zero Fuel Calibration (ZFC) of injectors disabled • 11) FId / Plausibility Check Accelerator and brake pedal not released due to failure in vehicle speed evaluation • 12) FId / Inhibit Charged Air Cooler monitoring • 13) Fid / Crankshaft sensor diagnosis inhibited (due to vehicle speed implausibility, e.g. towed vehicle) • 14) FId / Vehicle speed assumed by engine speed and load for calculation of total driven distance of vehicle • 15) FId / Drive away-set point idle speed calculation by High/Low engine speed control (HLS) inhibited • 16) FId / Underbraking disabled for High and Low engine speed control (HLS) (no special control parameters in case of Underbraking used) • 17) FId / High and Low engine speed demand control (HLS) disabled • 18) FId / Single Injector shut off test inhibited • 19) FId / Compression test inhibited • 20) FId / Run up test which is used in diagnostic scheduler of DSM • 21) FId / Vehicle Speed signal defective, speed limiter blocked • 22) FId / Actuator test for Metering Unit (MeUn) of Common Rail disabled • 23) FId / Set point test of Metering Unit (MeUn) of Common Rail disabled • 24) FId / Misfire Detection disabled • 25) FId / Fuel rail pressure control valve (PCV) set point test inhibited • 26) FId / High pressure test inhibited • 27) FId / Closing of metering unit forced (full fuel feeding) • 28) FId / Rail Pressure set point test inhibited • 29) FId / Tooth Angle Adaption (TAA) of crank speed sensor disabled • 30) FId / Vehicle speed signal evaluation defective • 31) Fid / Fix Substitution value (FE) for actual fuel economy status transmit to CAN Message FIEco • 32) FId / Status of Function Identifier for Wheel Based Vehicle Speed • 33) FId / Coolant thermostat diagnosis disabled • 34) FId / Use of the gear signal for the range check of particulate filter (DPF) is inhibited • 35) FId / Use of the vehicle speed for the range check of particulate filter (DPF) is inhibited • 36) FId / Vehicle speed sensor defective, PGNRQ can message invalid • 37) FId / Cooling fan speed set point calculation does not take into consideration vehicle speed (fix value Fans_vSubst_C used)
Failure cause		• Sensor connected via CAN announces not valid signal
Failure repair		• Check sensor
Inspection procedure	Step1	Inspection procedure Perform a diagnosis on the A28 (DUONIC Control unit) side system.

https://truckmanualshub.com/

1624-19: Vehicle speed signal: Received network data is in error

Generation condition	[Test Condition] • Monitoring is active 2.00s after ECU initialization while engine isn't running yet, while the engine isn't cranking, 2.00s after engine startup, while the battery voltage is over 10.00V, as long as the battery voltage is over 10.00V and 2.00s after this threshold has been exceeded and if the ECU is not in after-run • Continuously
	[Fault Detection] • The CAN message for vehicle speed reports an error: • Com_vVeh == 0x3FFF • or the message for cardan shaft speed reports an error Com_nCdrS == 0x3FFF
	[Defect Debouncing] • Defect condition exceeded cumulatively > 500.00ms • Failure is detected if active for 50% of the time
Fault healing	• The CAN message for vehicle speed and cardan shaft speed reports a valid value
System reaction	• None except FIDs. • Replacement value veh.speed = 0km/h {0mph} • Replacement value cardan shaft speed = 0.00rpm
	• 1) FId / Vehicle speed monitoring inhibited • 2) FId / Vehicle speed value (via CAN) frozen in case of preliminary failure detected • 3) FId / Vehicle speed value (via CAN) replaced by substitute value if failure is validated • 4) FId / Status of function identifier FId_EngDemTrqLimErr1 • 5) FId / Torque limitation 4 activated for power reduction • 6) FId / Engine speed Limitation 1 for HIgh/Low engine speed (HLS) control active • 7) Fid / Cruise control immediately shut off • 8) FId / Multiple state switch error, PTO disabled • 9) FId / Vehicle speed sensing error, Cruise control disabled • 10) FId / Release of OBD Performance Limiter at low vehicle speed inhibited due to a failure • 11) FId / Zero Fuel Calibration (ZFC) of injectors disabled • 12) FId / Plausibility Check Accelerator and brake pedal not released due to failure in vehicle speed evaluation • 13) FId / Inhibit Charged Air Cooler monitoring • 14) Fid / Crankshaft sensor diagnosis inhibited (due to vehicle speed implausibility, e.g. towed vehicle) • 15) FId / Vehicle speed assumed by engine speed and load for calculation of total driven distance of vehicle • 16) FId / Drive away-set point idle speed calculation by High/Low engine speed control (HLS) inhibited • 17) FId / Underbraking disabled for High and Low engine speed control (HLS) (no special control parameters in case of Underbraking used) • 18) FId / High and Low engine speed demand control (HLS) disabled • 19) FId / Vehicle Speed signal defective, speed limiter blocked • 20) FId / Misfire Detection disabled • 21) FId / Closing of metering unit forced (full fuel feeding) • 22) FId / Tooth Angle Adaption (TAA) of crank speed sensor disabled • 23) FId / Vehicle speed signal evaluation defective • 24) Fid / Fix Substitution value (FE) for actual fuel economy status transmit to CAN Message FIEco • 25) FId / Status of Function Identifier for Wheel Based Vehicle Speed • 26) FId / Coolant thermostat diagnosis disabled • 27) FId / Use of the gear signal for the range check of particulate filter (DPF) is inhibited • 28) FId / Use of the vehicle speed for the range check of particulate filter (DPF) is inhibited • 29) FId / Vehicle speed sensor defective, PGNRQ can message invalid • 30) FId / Cooling fan speed set point calculation does not take into consideration vehicle speed (fix value Fans_vSubst_C used)
Failure cause	• Defective or incorrect functioning of vehicle speed measuring device
Failure repair	• Check speed measuring device for proper functioning

https://truckmanualshub.com/

Inspection procedure	Step1	Inspection procedure Perform a diagnosis on the A28 (DUONIC Control unit) side system.

1624-31: Vehicle speed source and HRWS replacement defect

Generation condition	[Test Condition] • Monitoring is active 2.00s after ECU initialization while engine isn't running yet, while the engine isn't cranking, 2.00s after engine startup, while the battery voltage is over 10.00V, as long as the battery voltage is over 10.00V and 2.00s after this threshold has been exceeded and if the ECU is not in after-run • Signal source is CAN (1.00- = CONNECT_CAN(1))
	[Fault Detection] • (Com_vFrntLWhlSpd is equal to VEHV_V_CANERR (0x7FFF) and Com_vFrntRWhlSpd is equal VEHV_V_CANERR (0x7FFF)) and (Com_vRearLWhlSpd is equal VEHV_V_CANERR (0x7FFF) and Com_vRearRWhlSpd is equal to VEHV_V_CANERR (0x7FFF)) or DINH_stFId.FId_HRWSTO is inhibited
	[Defect Debouncing] • Defect condition exceeded cumulatively > 500.00ms • Failure is detected if active for 50% of the time
Fault healing	• Valid wheel speed signal received
System reaction	• None except FIDs
	• 1) FId / Vehicle speed monitoring inhibited • 2) FId / Vehicle speed value (via CAN) frozen in case of preliminary failure detected • 3) FId / Vehicle speed value (via CAN) replaced by substitute value if failure is validated • 4) FId / Status of function identifier FId_EngDemTrqLimErr1 • 5) FId / Torque limitation 4 activated for power reduction • 6) FId / Engine speed Limitation 1 for HIgh/Low engine speed (HLS) control active • 7) Fid / Cruise control immediately shut off • 8) FId / Multiple state switch error, PTO disabled • 9) FId / Vehicle speed sensing error, Cruise control disabled • 10) FId / Release of OBD Performance Limiter at low vehicle speed inhibited due to a failure • 11) FId / Zero Fuel Calibration (ZFC) of injectors disabled • 12) FId / Plausibility Check Accelerator and brake pedal not released due to failure in vehicle speed evaluation • 13) FId / Inhibit Charged Air Cooler monitoring • 14) Fid / Crankshaft sensor diagnosis inhibited (due to vehicle speed implausibility, e.g. towed vehicle) • 15) FId / Vehicle speed assumed by engine speed and load for calculation of total driven distance of vehicle • 16) FId / Drive away-set point idle speed calculation by High/Low engine speed control (HLS) inhibited • 17) FId / Underbraking disabled for High and Low engine speed control (HLS) (no special control parameters in case of Underbraking used) • 18) FId / High and Low engine speed demand control (HLS) disabled • 19) FId / Vehicle Speed signal defective, speed limiter blocked • 20) FId / Misfire Detection disabled • 21) FId / Closing of metering unit forced (full fuel feeding) • 22) FId / Tooth Angle Adaption (TAA) of crank speed sensor disabled • 23) FId / Vehicle speed signal evaluation defective • 24) Fid / Fix Substitution value (FE) for actual fuel economy status to CAN Message FIEco • 25) FId / Status of Function Identifier for Wheel Based Vehicle Speed • 26) FId / Coolant thermostat diagnosis disabled • 27) FId / Use of the gear signal for the range check of particulate filter (DPF) is inhibited • 28) FId / Use of the vehicle speed for the range check of particulate filter (DPF) is inhibited • 29) FId / Vehicle speed sensor defective, PGNRQ can message invalid • 30) FId / Cooling fan speed set point calculation does not take into consideration vehicle speed (fix value Fans_vSubst_C used)
Failure cause	• Wheel speed sensor defective

https://truckmanualshub.com/

Failure repair		• Check wheel speed sensor
Inspection procedure	Step1	Inspection procedure Perform a diagnosis on the A1 (Antilock brake system Control unit) side system.

1633-9: CAN Timeout Error during CAN-Transmit-Frame Cruise Control Parameters from ATM controller.

Generation condition		[Test Condition] • Monitoring is active 2.00s after ECU initialization while engine isn't running yet, while the engine isn't cranking, 2.00s after engine startup, while the battery voltage is over 10.00V, as long as the battery voltage is over 10.00V and 2.00s after this threshold has been exceeded, if none of the CAN controllers is in bus-off state, 2.00s after last CAN controller is no more in bus-off state and if the ECU is not in afterrun • Continuously
		[Fault Detection] • Timeout of CCVSTM message is detected
		[Defect Debouncing] • Defect condition fulfilled continuously >500.0 ms
Fault healing		• If the CCVSTM message is received correct, after the debouncing time the DFC is healed
System reaction		• Cruise control is inhibited
Failure cause		• Defective CAN controller of AMT, CAN cable disconnected or broken. Short circuit in wiring.
Failure repair		• Check presence and correct connection of the AMT to the network, Check correct functioning of the CAN controller. Check wiring.
Inspection procedure	Step1	Refer to the help menu for Nos. other than above. *1: M/T *2: DUONIC *3: ISS (With Lock brake) *4: ISS (Without Lock brake) *5: Lock brake (Without ISS) *6: Other than *3,*4,*5 *7: Full-automatic air conditioner *8: Auto leveling *9: Manual leveling Inspection procedure If one of diagnosis codes associated with A28 (DUONIC Control unit) is generated, make a system diagnosis according to the diagnosis code. Go to step2
	Step2	Refer to the help menu for Nos. other than above. *1: M/T *2: DUONIC *3: ISS (With Lock brake) *4: ISS (Without Lock brake) *5: Lock brake (Without ISS) *6: Other than *3,*4,*5 *7: Full-automatic air conditioner *8: Auto leveling *9: Manual leveling Inspection procedure Turn the starter switch in OFF. Remove all ECU connectors from the CAN communication line. Check CAN line for open circuit, short circuit to positive, short circuit to ground or short circuit to another electrical line. Is any abnormality recognized? No: Go to step3 Yes: Go to step8

https://truckmanualshub.com/

Inspection procedure	Step3	Inspection procedure Attach the connector of A20 (SAM). Check CAN line for open circuit, short circuit to positive, short circuit to ground or short circuit to another electrical line. Is any abnormality recognized? No: Go to step4 Yes: Go to step7
	Step4	Inspection procedure Attach the connector of A28 (DUONIC Control unit). Check CAN line for open circuit, short circuit to positive, short circuit to ground or short circuit to another electrical line. Is any abnormality recognized? No: Go to step5 Yes: Go to step6
	Step5	Inspection procedure Turn the starter switch in OFF. Reinstall all the removed connectors. Erase fault memory and perform a test drive. If the diagnosis code has occurred even during the test drive, start the operation and then replace the A4 (Combustion engine Control unit). Inspection completed
	Step6	Inspection procedure Turn the starter switch in OFF. Reinstall all the removed connectors. Erase fault memory and perform a test drive. If the diagnosis code has occurred even during the test drive, start the operation and then replace the A28 (DUONIC Control unit). Inspection completed
	Step7	Inspection procedure Turn the starter switch in OFF. Reinstall all the removed connectors. Erase fault memory and perform a test drive. If the diagnosis code has occurred even during the test drive, start the operation and then replace the A20 (SAM). Inspection completed
	Step8	Refer to the help menu for Nos. other than above. *1: M/T *2: DUONIC *3: ISS (With Lock brake) *4: ISS (Without Lock brake) *5: Lock brake (Without ISS) *6: Other than *3,*4,*5 *7: Full-automatic air conditioner *8: Auto leveling *9: Manual leveling Inspection procedure Repair or replace electrical lines. Reinstall all the removed connectors. Turn the starter switch in ON. Inspection completed

1636-0: Signal Range Check (SRC) for 'Air Flow Sensor' reports HIGH.

Generation condition	[Test Condition] • Monitoring is active while the battery voltage is over 10.00V and as long as the battery voltage is over 10.00V and 2.00s after this threshold has been exceeded • The signal range checks are only carried out if ADC has not reported a module error. Continuously.
	[Fault Detection] • The sensor raw signal Air_uRawTAFS (voltage) is above 4.93V
	[Defect Debouncing] • Defect condition exceeded cumulatively > 500.00ms • Failure is detected if active for 50% of the time
Fault healing	• The sensor raw signal Air_uRawTAFS (voltage) is below or equal to 4.93V

https://truckmanualshub.com/

System reaction		• Temperature ramps to fixed replacement value 29.96°C {85.93°F} using slope 3.00K/s or 3.00K/s depending on whether the replacement value is above or below the current value • Further reactions according FID (see FID's)
		• 1) FId / Freeze last valid value if failure is preliminary set • 2) FId / Inhibit physical range check on the sensed value of the intake air temperature sensor. • 3) FId / Set replacement value if failure is validated • 4) FId / Inhibit temperature sampling • 5) FId / Inhibit Charged Air Cooler monitoring • 6) FId / Calculation of Turbocharger Compressor Temperature inhibited
Failure cause		• Short circuit of sensor to external source or defective sensor
Failure repair		• Check wiring or replace sensor
Inspection procedure	Step1	Inspect or verify the following items. Repair or replace faulty items as necessary. If one of diagnosis codes associated with A20 (SAM) is generated, make a system diagnosis according to the diagnosis code. Go to Step2
	Step2	Inspection procedure Turn the starter switch in OFF. Remove the connector of A4 (Combustion engine Control unit). Remove the connector of B18 (Air flow and intake air temperature sensor). Remove the connector of A20 (SAM). Check the circuit across A4.X1.60/42 and B18.4/3 for open or short circuit. Check the circuit across A4.X1.60/38 and B18.4/4 for open or short circuit. Check the circuit across A4.X1.60/44 and B18.4/2 for open or short circuit. Check the circuit across A20.X10.14/2 and B18.4/1 for open or short circuit. Make a visual check on each connector. Is any abnormality recognized? No: Go to Step3 Yes: Go to Step7
	Step3	Inspection procedure Turn the starter switch in OFF. Replace component "B18 (Air flow and intake air temperature sensor)". Reinstall all the removed connectors. Turn the starter switch in ON. Perform the learned value resetting procedure of B18 (Air flow and intake air temperature sensor) which A4 (Combustion engine Control unit) learns. Go to Step4
	Step4	Inspection procedure Turn the starter switch in OFF. Reinstall all the removed connectors. Erase fault memory and perform a test drive. Check if this diagnosis code has occurred. Are current fault codes present? No: Go to Step6 Yes: Go to Step5
	Step5	Inspection procedure Perform the operation start and replace A4 (Combustion engine Control unit). Go to Step6
	Step6	Inspection completed
	Step7	Inspection procedure Turn the starter switch in OFF. Remove the connector of A4 (Combustion engine Control unit). Remove the connector of X39 (Intermediate connector). Remove the connector of A20 (SAM). Check the circuit across A4.X1.60/42 and X39.12/4 for open or short circuit. Check the circuit across A4.X1.60/38 and X39.12/5 for open or short circuit. Check the circuit across A4.X1.60/44 and X39.12/6 for open or short circuit. Make a visual check on each connector. Is any abnormality recognized? No: Go to Step8 Yes: Go to Step9

Inspection procedure	Step8	Inspection procedure Repair or replace the harness across B18 (Air flow and intake air temperature sensor) and X39 (Intermediate connector). Reinstall all the removed connectors. Erase fault memory and perform a test drive. Check if this diagnosis code has occurred. Are current fault codes present? No: Go to Step6 Yes: Go to Step3
	Step9	Inspection procedure Repair or replace the harness across A4 (Combustion engine Control unit) and X39 (Intermediate connector). Reinstall all the removed connectors. Erase fault memory and perform a test drive. Check if this diagnosis code has occurred. Are current fault codes present? No: Go to Step6 Yes: Go to Step3

1636-1: Signal Range Check (SRC) for 'Air Flow Sensor' reports LOW.

Generation condition		[Test Condition] • Monitoring is active while the battery voltage is over 10.00V and as long as the battery voltage is over 10.00V and 2.00s after this threshold has been exceeded • The signal range checks are only carried out if ADC has not reported a module error. Continuously.
		[Fault Detection] • The sensor raw signal Air_uRawTAFS (voltage) is below 295.40mV
		[Defect Debouncing] • Defect condition exceeded cumulatively > 2.00s • Failure is detected if active for 50% of the time
Fault healing		• The sensor raw signal Air_uRawTAFS (voltage) is above or equal to 295.40mV
System reaction		• Temperature ramps to fixed replacement value 29.96°C {85.93°F} using slope 3.00K/s or 3.00K/s depending on whether the replacement value is above or below the current value • Further reactions according FID (see FID's)
		• 1) FId / Freeze last valid value if failure is preliminary set • 2) FId / Inhibit physical range check on the sensed value of the intake air temperature sensor. • 3) FId / Set replacement value if failure is validated • 4) FId / Inhibit temperature sampling • 5) FId / Inhibit Charged Air Cooler monitoring • 6) FId / Calculation of Turbocharger Compressor Temperature inhibited
Failure cause		• Short circuit of sensor to ground or defective sensor
Failure repair		• Check wiring or replace sensor
Inspection procedure	Step1	Inspect or verify the following items. Repair or replace faulty items as necessary. If one of diagnosis codes associated with A20 (SAM) is generated, make a system diagnosis according to the diagnosis code. Go to Step2
	Step2	Inspection procedure Turn the starter switch in OFF. Remove the connector of A4 (Combustion engine Control unit). Remove the connector of B18 (Air flow and intake air temperature sensor). Remove the connector of A20 (SAM). Check the circuit across A4.X1.60/42 and B18.4/3 for open or short circuit. Check the circuit across A4.X1.60/38 and B18.4/4 for open or short circuit. Check the circuit across A4.X1.60/44 and B18.4/2 for open or short circuit. Check the circuit across A20.X10.14/2 and B18.4/1 for open or short circuit. Make a visual check on each connector. Is any abnormality recognized? No: Go to Step3 Yes: Go to Step7

https://truckmanualshub.com/

Inspection procedure	Step3	Inspection procedure Turn the starter switch in OFF. Replace component “B18 (Air flow and intake air temperature sensor)”. Reinstall all the removed connectors. Turn the starter switch in ON. Perform the learned value resetting procedure of B18 (Air flow and intake air temperature sensor) which A4 (Combustion engine Control unit) learns. Go to Step4
	Step4	Inspection procedure Turn the starter switch in OFF. Reinstall all the removed connectors. Erase fault memory and perform a test drive. Check if this diagnosis code has occurred. Are current fault codes present? No: Go to Step6 Yes: Go to Step5
	Step5	Inspection procedure Perform the operation start and replace A4 (Combustion engine Control unit). Go to Step6
	Step6	Inspection completed
	Step7	Inspection procedure Turn the starter switch in OFF. Remove the connector of A4 (Combustion engine Control unit). Remove the connector of X39 (Intermediate connector). Remove the connector of A20 (SAM). Check the circuit across A4.X1.60/42 and X39.12/4 for open or short circuit. Check the circuit across A4.X1.60/38 and X39.12/5 for open or short circuit. Check the circuit across A4.X1.60/44 and X39.12/6 for open or short circuit. Make a visual check on each connector. Is any abnormality recognized? No: Go to Step8 Yes: Go to Step9
	Step8	Inspection procedure Repair or replace the harness across B18 (Air flow and intake air temperature sensor) and X39 (Intermediate connector). Reinstall all the removed connectors. Erase fault memory and perform a test drive. Check if this diagnosis code has occurred. Are current fault codes present? No: Go to Step6 Yes: Go to Step3
	Step9	Inspection procedure Repair or replace the harness across A4 (Combustion engine Control unit) and X39 (Intermediate connector). Reinstall all the removed connectors. Erase fault memory and perform a test drive. Check if this diagnosis code has occurred. Are current fault codes present? No: Go to Step6 Yes: Go to Step3

1636-16: Component ‘Charge air temperature sensor’ is thermally overloaded.

Generation condition	[Test Condition] • Signal is tested if FId_TAFSPhysRng is not inhibited by another failure. • Continuously.
	[Fault Detection] • The sensed sensor signal Air_tSensTAFS is greater than 99.96°C {211.93°F}
	[Defect Debouncing] • Defect condition exceeded cumulatively > 10.00s • Failure is detected if active for 50% of the time
Fault healing	• The sensed sensor signal Air_tSensTAFS is below 99.96°C {211.93°F}

https://truckmanualshub.com/

System reaction		• Temperature ramps to fixed replacement value 29.96°C {85.93°F} using slope 3.00K/s or 3.00K/s depending on whether the replacement value is above or below the current value • Further reactions according FID (see FID's)
		• 1) FId / Freeze last valid value if failure is preliminary set • 2) FId / Set replacement value if failure is validated • 3) FId / Inhibit Charged Air Cooler monitoring • 4) FId / Calculation of Turbocharger Compressor Temperature inhibited
Failure cause		• Inaccurate or defective air temperature sensor, defect in the wiring
Failure repair		• Check wiring and the accuracy of the air temperature sensor and replace it if necessary
Inspection procedure	Step1	Inspect or verify the following items. Repair or replace faulty items as necessary. If any other fault code has occurred, perform the diagnostics procedure for the fault code. Go to Step2
	Step2	Inspect or verify the following items. Repair or replace faulty items as necessary. If one of diagnosis codes associated with A20 (SAM) is generated, make a system diagnosis according to the diagnosis code. Go to Step3
	Step3	Inspection procedure Turn the starter switch in OFF. Remove the connector of A4 (Combustion engine Control unit). Remove the connector of B18 (Air flow and intake air temperature sensor). Remove the connector of A20 (SAM). Check the circuit across A4.X1.60/42 and B18.4/3 for open or short circuit. Check the circuit across A4.X1.60/38 and B18.4/4 for open or short circuit. Check the circuit across A4.X1.60/44 and B18.4/2 for open or short circuit. Check the circuit across A20.X10.14/2 and B18.4/1 for open or short circuit. Make a visual check on each connector. Is any abnormality recognized? No: Go to Step4 Yes: Go to Step8
	Step4	Inspection procedure Turn the starter switch in OFF. Replace component "B18 (Air flow and intake air temperature sensor)". Reinstall all the removed connectors. Turn the starter switch in ON. Perform the learned value resetting procedure of B18 (Air flow and intake air temperature sensor) which A4 (Combustion engine Control unit) learns. Go to Step5
	Step5	Inspection procedure Turn the starter switch in OFF. Reinstall all the removed connectors. Erase fault memory and perform a test drive. Check if this diagnosis code has occurred. Are current fault codes present? No: Go to Step6 Yes: Go to Step7
	Step6	Inspection completed
	Step7	Inspection procedure Perform the operation start and replace A4 (Combustion engine Control unit). Go to Step6

https://truckmanualshub.com/

Inspection procedure	Step8	Inspection procedure Turn the starter switch in OFF. Remove the connector of A4 (Combustion engine Control unit). Remove the connector of X39 (Intermediate connector). Remove the connector of A20 (SAM). Check the circuit across A4.X1.60/42 and X39.12/4 for open or short circuit. Check the circuit across A4.X1.60/38 and X39.12/5 for open or short circuit. Check the circuit across A4.X1.60/44 and X39.12/6 for open or short circuit. Make a visual check on each connector. Is any abnormality recognized? No: Go to Step9 Yes: Go to Step10
	Step9	Inspection procedure Repair or replace the harness across B18 (Air flow and intake air temperature sensor) and X39 (Intermediate connector). Reinstall all the removed connectors. Erase fault memory and perform a test drive. Check if this diagnosis code has occurred. Are current fault codes present? No: Go to Step6 Yes: Go to Step4
	Step10	Inspection procedure Repair or replace the harness across A4 (Combustion engine Control unit) and X39 (Intermediate connector). Reinstall all the removed connectors. Erase fault memory and perform a test drive. Check if this diagnosis code has occurred. Are current fault codes present? No: Go to Step6 Yes: Go to Step4

1675-2: ECU Key 16Defective switch T50-

Generation condition		[Test Condition] • Continuously
		[Fault Detection] • The debounced signal is high (T50_st == 1) for a period longer than debounce time
		[Defect Debouncing] • Defect condition exceeded cumulatively > 30.00s • Failure is detected if active for 50% of the time
Fault healing		• The debounced signal is low (T50_st == 0) for a period longer than debounce time
System reaction		• None
Failure cause		• Too long cranking request, short circuit in ignition key module or in wiring
Failure repair		• Check ignition key module and wiring
Inspection procedure	Step1	Inspect or verify the following items. Repair or replace faulty items as necessary. If one of diagnosis codes associated with A20 (SAM) is generated, make a system diagnosis according to the diagnosis code. Go to Step2
	Step2	Inspection procedure Turn the starter switch in OFF. Remove the connector of A4 (Combustion engine Control unit). Remove the connector of K21 (Safety relay). Check the circuit across A4.X2.94/91 and K21.5/3 for open or short circuit. Check the circuit across A4.X2.94/69 and K21.5/1 for open or short circuit. Make a visual check on each connector. Is any abnormality recognized? No: Go to Step3 Yes: Go to Step7

https://truckmanualshub.com/

Inspection procedure	Step3	Inspection procedure Turn the starter switch in OFF. Replace component “K21 (Safety relay)”. Reinstall all the removed connectors. Turn the starter switch in ON. Go to Step4
	Step4	Inspection procedure Turn the starter switch in OFF. Reinstall all the removed connectors. Erase fault memory and perform a test drive. Check if this diagnosis code has occurred. Are current fault codes present? No: Go to Step6 Yes: Go to Step5
	Step5	Inspection procedure Perform the operation start and replace A4 (Combustion engine Control unit). Go to Step6
	Step6	Inspection completed
	Step7	Inspection procedure Turn the starter switch in OFF. Remove the connector of A4 (Combustion engine Control unit). Remove the connector of X16 (Intermediate connector). Check the circuit across A4.X2.94/91 and X16.16/10 for open or short circuit. Check the circuit across A4.X2.94/69 and X16.16/11 for open or short circuit. Make a visual check on each connector. Is any abnormality recognized? No: Go to Step8 Yes: Go to Step9
	Step8	Inspection procedure Repair or replace the harness across K21 (Safety relay) and X16 (Intermediate connector). Reinstall all the removed connectors. Erase fault memory and perform a test drive. Check if this diagnosis code has occurred. Are current fault codes present? No: Go to Step6 Yes: Go to Step3
	Step9	Inspection procedure Repair or replace the harness across A4 (Combustion engine Control unit) and X16 (Intermediate connector). Reinstall all the removed connectors. Erase fault memory and perform a test drive. Check if this diagnosis code has occurred. Are current fault codes present? No: Go to Step6 Yes: Go to Step3

1761-2: The value of component ‘SCR Reagent tank level sensor’ is implausible.Data erratic, intermittent or incorrect

Generation condition	[Test Condition] • Monitoring is active while the battery voltage is over 10.00V and as long as the battery voltage is over 10.00V and 2.00s after this threshold has been exceeded • Continuously if the DEF tank content is not frozen (UHC_stCTL==1)
	[Fault Detection] • The Level < 38.00%.
	[Defect Debouncing] • Defect condition fulfilled continuously >3000.0 ms
Fault healing	• The Level > 38.00%.
System reaction	• Only according FID (see FID’s)
	• 1) FId / Freeze DEF tank level if preliminary failure detected • 2) FId / Set replacement value for DEF Tank Level if confirmed failure detected

https://truckmanualshub.com/

Failure cause		• DEF Level Sensor defect
Failure repair		• Check and Replace Sensor
Inspection procedure	Step1	Inspect or verify the following items. Repair or replace faulty items as necessary. If one of diagnosis codes associated with A20 (SAM) is generated, make a system diagnosis according to the diagnosis code. Go to Step2
	Step2	Inspection procedure Turn the starter switch in OFF. Remove the connector of A4 (Combustion engine Control unit). Remove the connector of A19 (DEF fill level sensor). Remove the connector of A20 (SAM). Check the circuit across A4.X2.94/85 and A19.X1.3/2 for open or short circuit. Check the circuit across A4.X2.94/31 and A19.X1.3/1 for open or short circuit. Check the circuit across A20.X10.14/2 and A19.X1.3/3 for open or short circuit. Make a visual check on each connector. Is any abnormality recognized? No: Go to Step3 Yes: Go to Step9
	Step3	Inspection procedure Turn the starter switch in OFF. Replace component “A19 (DEF fill level sensor)”. Reinstall all the removed connectors. Go to Step4
	Step4	Inspection procedure Turn the starter switch in OFF. Reinstall all the removed connectors. Erase fault memory and perform a test drive. Check if this diagnosis code has occurred. Are current fault codes present? No: Go to Step8 Yes: Go to Step5
	Step5	Inspection procedure Turn the starter switch in OFF. Replace component “A40 (DEF tank)”. Reinstall all the removed connectors. Turn the starter switch in ON. Perform the learned value resetting procedure of A40 (DEF tank) which A4 (Combustion engine Control unit) learns. Go to Step6
	Step6	Inspection procedure Turn the starter switch in OFF. Reinstall all the removed connectors. Erase fault memory and perform a test drive. Check if this diagnosis code has occurred. Are current fault codes present? No: Go to Step8 Yes: Go to Step7
	Step7	Inspection procedure Perform the operation start and replace A4 (Combustion engine Control unit). Go to Step8
	Step8	Inspection completed
	Step9	Inspection procedure Turn the starter switch in OFF. Remove the connector of A4 (Combustion engine Control unit). Remove the connector of X19 (Intermediate connector). Remove the connector of A20 (SAM). Repair or replace the harness across A20.X10.14/2 and X19.16/8. Repair or replace the harness across A4.X2.94/31 and X19.16/16. Repair or replace the harness across A4.X2.94/85 and X19.16/15. Make a visual check on each connector. Is any abnormality recognized? No: Go to Step10 Yes: Go to Step11

https://truckmanualshub.com/

Inspection procedure	Step10	Inspection procedure Repair or replace the harness across A19 (Def fill level sensor) and X19 (Intermediate connector). Reinstall all the removed connectors. Erase fault memory and perform a test drive. Check if this diagnosis code has occurred. Are current fault codes present? No: Go to Step8 Yes: Go to Step3
	Step11	Inspection procedure Repair or replace the harness across A4 (Combustion engine Control unit) and X19 (Intermediate connector). Repair or replace the harness across A20 (SAM) and X19 (Intermediate connector). Reinstall all the removed connectors. Erase fault memory and perform a test drive. Check if this diagnosis code has occurred. Are current fault codes present? No: Go to Step8 Yes: Go to Step3

1761-12: Defect Fault Check for SCR Reagent tank level sensor.Bad intelligent device or component

Generation condition		[Test Condition] • Monitoring is active while the battery voltage is over 10.00V and as long as the battery voltage is over 10.00V and 2.00s after this threshold has been exceeded • Continuously if the tank content is not frozen (UHC_stCTL==1)
		[Fault Detection] • The Level between 38.00% and 48.00%.
		[Defect Debouncing] • Defect condition fulfilled continuously >2000.0 ms
Fault healing		• No Healing possible (disabled by Data set)
System reaction		• According FID (see FID's)
		• 1) FId / Freeze DEF tank level if preliminary failure detected • 2) FId / Set replacement value for DEF Tank Level if confirmed failure detected
Failure cause		• Sensor Defect
Failure repair		• Check Sensor and replace it if not OK
Inspection procedure	Step1	Inspect or verify the following items. Repair or replace faulty items as necessary. If one of diagnosis codes associated with A20 (SAM) is generated, make a system diagnosis according to the diagnosis code. Go to Step2
	Step2	Inspection procedure Turn the starter switch in OFF. Remove the connector of A4 (Combustion engine Control unit). Remove the connector of A19 (DEF fill level sensor). Remove the connector of A20 (SAM). Check the circuit across A4.X2.94/85 and A19.X1.3/2 for open or short circuit. Check the circuit across A4.X2.94/31 and A19.X1.3/1 for open or short circuit. Check the circuit across A20.X10.14/2 and A19.X1.3/3 for open or short circuit. Make a visual check on each connector. Is any abnormality recognized? No: Go to Step3 Yes: Go to Step9
	Step3	Inspection procedure Turn the starter switch in OFF. Replace component "A19 (DEF fill level sensor)". Reinstall all the removed connectors. Go to Step4

https://truckmanualshub.com/

Inspection procedure	Step4	Inspection procedure Turn the starter switch in OFF. Reinstall all the removed connectors. Erase fault memory and perform a test drive. Check if this diagnosis code has occurred. Are current fault codes present? No: Go to Step8 Yes: Go to Step5
	Step5	Inspection procedure Turn the starter switch in OFF. Replace component “A40 (DEF tank)”. Reinstall all the removed connectors. Turn the starter switch in ON. Perform the learned value resetting procedure of A40 (DEF tank) which A4 (Combustion engine Control unit) learns. Go to Step6
	Step6	Inspection procedure Turn the starter switch in OFF. Reinstall all the removed connectors. Erase fault memory and perform a test drive. Check if this diagnosis code has occurred. Are current fault codes present? No: Go to Step8 Yes: Go to Step7
	Step7	Inspection procedure Perform the operation start and replace A4 (Combustion engine Control unit). Go to Step8
	Step8	Inspection completed
	Step9	Inspection procedure Turn the starter switch in OFF. Remove the connector of A4 (Combustion engine Control unit). Remove the connector of X19 (Intermediate connector). Remove the connector of A20 (SAM). Repair or replace the harness across A20.X10.14/2 and X19.16/8. Repair or replace the harness across A4.X2.94/31 and X19.16/16. Repair or replace the harness across A4.X2.94/85 and X19.16/15. Make a visual check on each connector. Is any abnormality recognized? No: Go to Step10 Yes: Go to Step11
	Step10	Inspection procedure Repair or replace the harness across A19 (DEF fill level sensor) and X19 (Intermediate connector). Reinstall all the removed connectors. Erase fault memory and perform a test drive. Check if this diagnosis code has occurred. Are current fault codes present? No: Go to Step8 Yes: Go to Step3
	Step11	Inspection procedure Repair or replace the harness across A4 (Combustion engine Control unit) and X19 (Intermediate connector). Repair or replace the harness across A20 (SAM) and X19 (Intermediate connector). Reinstall all the removed connectors. Erase fault memory and perform a test drive. Check if this diagnosis code has occurred. Are current fault codes present? No: Go to Step8 Yes: Go to Step3

https://truckmanualshub.com/

1761-31: SCR Reagent Tank level sensor has a monitoring error.

Generation condition		[Test Condition] • Monitoring is active while the battery voltage is over 10.00V and as long as the battery voltage is over 10.00V and 2.00s after this threshold has been exceeded • continuously, it DEF tank not frozen.
		[Fault Detection] • No Signal change between “all sensor wet” and “all sensors dry” within 100.00s. • OR • Raw PWM Signal not between 15.00% and 85.00%.
		[Defect Debouncing] • Defect condition fulfilled continuously >2000.0 ms
Fault healing		• Signal change between “all sensor wet” and “all sensors dry” within 100.00s. • AND • Raw PWM Signal between 15.00% and 85.00%.
System reaction		• According FID (see FID’s)
		• 1) FId / Freeze DEF tank level if preliminary failure detected • 2) FId / Set replacement value for DEF Tank Level if confirmed failure detected • 3) FId / Status of function Identifier FID_UTnkLvlPlausErr
Failure cause		• Sensor Supply defect • Wiring harness defect • Sensor defect
Failure repair		• Check wiring harness • Check Sensor
Inspection procedure	Step1	Inspect or verify the following items. Repair or replace faulty items as necessary. If one of diagnosis codes associated with A20 (SAM) is generated, make a system diagnosis according to the diagnosis code. Go to Step2
	Step2	Inspection procedure Turn the starter switch in OFF. Remove the connector of A4 (Combustion engine Control unit). Remove the connector of A19 (DEF fill level sensor). Remove the connector of A20 (SAM). Check the circuit across A4.X2.94/85 and A19.X1.3/2 for open or short circuit. Check the circuit across A4.X2.94/31 and A19.X1.3/1 for open or short circuit. Check the circuit across A20.X10.14/2 and A19.X1.3/3 for open or short circuit. Make a visual check on each connector. Is any abnormality recognized? No: Go to Step3 Yes: Go to Step9
	Step3	Inspection procedure Turn the starter switch in OFF. Replace component “A19 (DEF fill level sensor)”. Reinstall all the removed connectors. Go to Step4
	Step4	Inspection procedure Turn the starter switch in OFF. Reinstall all the removed connectors. Erase fault memory and perform a test drive. Check if this diagnosis code has occurred. Are current fault codes present? No: Go to Step8 Yes: Go to Step5

https://truckmanualshub.com/

Inspection procedure	Step5	Inspection procedure Turn the starter switch in OFF. Replace component “A40 (DEF tank)”. Reinstall all the removed connectors. Turn the starter switch in ON. Perform the learned value resetting procedure of A40 (DEF tank) which A4 (Combustion engine Control unit) learns. Go to Step6
	Step6	Inspection procedure Turn the starter switch in OFF. Reinstall all the removed connectors. Erase fault memory and perform a test drive. Check if this diagnosis code has occurred. Are current fault codes present? No: Go to Step8 Yes: Go to Step7
	Step7	Inspection procedure Perform the operation start and replace A4 (Combustion engine Control unit). Go to Step8
	Step8	Inspection completed
	Step9	Inspection procedure Turn the starter switch in OFF. Remove the connector of A4 (Combustion engine Control unit). Remove the connector of X19 (Intermediate connector). Remove the connector of A20 (SAM). Repair or replace the harness across A20.X10.14/2 and X19.16/8. Repair or replace the harness across A4.X2.94/31 and X19.16/16. Repair or replace the harness across A4.X2.94/85 and X19.16/15. Make a visual check on each connector. Is any abnormality recognized? No: Go to Step10 Yes: Go to Step11
	Step10	Inspection procedure Repair or replace the harness across A19 (DEF fill level sensor) and X19 (Intermediate connector). Reinstall all the removed connectors. Erase fault memory and perform a test drive. Check if this diagnosis code has occurred. Are current fault codes present? No: Go to Step8 Yes: Go to Step3
	Step11	Inspection procedure Repair or replace the harness across A4 (Combustion engine Control unit) and X19 (Intermediate connector). Repair or replace the harness across A20 (SAM) and X19 (Intermediate connector). Reinstall all the removed connectors. Erase fault memory and perform a test drive. Check if this diagnosis code has occurred. Are current fault codes present? No: Go to Step8 Yes: Go to Step3

2623-3: Accelerator pedalAPP2: Voltage above normal or shorted to high source

Generation condition	[Test Condition] • Monitoring is active while the battery voltage is over 10.00V • Continuously.
	[Fault Detection] • If the signal exceeds the applicable threshold 3.70V, a signal range violation is detected. • Error is entered only if the signal path is not classified as defective (DINH_stFId.FId_APP2SigPath not set by another failure).
	[Defect Debouncing] • Defect condition exceeded cumulatively > 200.00ms • Failure is detected if active for 50% of the time

https://truckmanualshub.com/

Fault healing		• If the signal is below the applicable threshold 3.70V, the signal range violation is reset after the healing debouncing.
System reaction		• No substitute value is formed in the device driver. The read in signal is relayed unchanged to the layers above it.
		• 1) FId / SRC high on APP2 detected --> APP2 Signal not useable • 2) FId / Status of function identifier FId_EngDemTrqLimErr1 • 3) FId / Torque limitation 2 activated for power reduction • 4) FId / Engine speed Limitation 2 for HIgh/Low engine speed (HLS) control active
Failure cause		• Short circuit of wiring to external source or inside accelerator pedal
Failure repair		• Check wiring and accelerator pedal
Inspection procedure	Step1	Inspect or verify the following items. Repair or replace faulty items as necessary. If any other fault code has occurred, perform the diagnostics procedure for the fault code. Go to Step2
	Step2	Inspect or verify the following items. Repair or replace faulty items as necessary. If one of diagnosis codes associated with SAM ECU is generated, make a system diagnosis according to the diagnosis code. Go to Step3
	Step3	Inspection procedure Turn the starter switch in OFF. Remove the connector of A4 (Combustion engine Control unit). Remove the connector of B17 (Position sensor Accelerator pedal). Check the circuit across A4.X2.94/30 and B17.6/5 for open or short circuit. Check the circuit across A4.X2.94/57 and B17.6/4 for open or short circuit. Check the circuit across A4.X2.94/45 and B17.6/6 for open or short circuit. Check the circuit across A4.X2.94/8 and B17.6/2 for open or short circuit. Check the circuit across A4.X2.94/35 and B17.6/1 for open or short circuit. Check the circuit across A4.X2.94/46 and B17.6/3 for open or short circuit. Make a visual check on each connector. Is any abnormality recognized? No: Go to Step4 Yes: Go to Step8
	Step4	Inspection procedure Turn the starter switch in OFF. Replace component “B17 (Position sensor Accelerator pedal)”. Reinstall all the removed connectors. Turn the starter switch in ON. Go to Step5
	Step5	Inspection procedure Turn the starter switch in OFF. Reinstall all the removed connectors. Erase fault memory and perform a test drive. Check if this diagnosis code has occurred. Are current fault codes present? No: Go to Step7 Yes: Go to Step6
	Step6	Inspection procedure Perform the operation start and replace A4 (Combustion engine Control unit). Go to Step7
	Step7	Inspection completed

https://truckmanualshub.com/

Inspection procedure	Step8	Inspection procedure Turn the starter switch in OFF. Remove the connector of A4 (Combustion engine Control unit). Remove the connector of X17 (Intermediate connector). Check the circuit across A4.X2.94/45 and X16.16/1 for open or short circuit. Check the circuit across A4.X2.94/46 and X16.16/5 for open or short circuit. Check the circuit across A4.X2.94/57 and X16.16/2 for open or short circuit. Check the circuit across A4.X2.94/35 and X16.16/6 for open or short circuit. Check the circuit across A4.X2.94/30 and X16.16/2 for open or short circuit. Check the circuit across A4.X2.94/8 and X16.16/7 for open or short circuit. Make a visual check on each connector. Is any abnormality recognized? No: Go to Step9 Yes: Go to Step10
	Step9	Inspection procedure Repair or replace the harness across B17 (Position sensor Accelerator pedal) and X17 (Intermediate connector). Reinstall all the removed connectors. Erase fault memory and perform a test drive. Check if this diagnosis code has occurred. Are current fault codes present? No: Go to Step7 Yes: Go to Step4
	Step10	Inspection procedure Repair or replace the harness across A4 (Combustion engine Control unit) and X17 (Intermediate connector). Reinstall all the removed connectors. Erase fault memory and perform a test drive. Check if this diagnosis code has occurred. Are current fault codes present? No: Go to Step7 Yes: Go to Step4

2623-4: Accelerator pedalAPP2: Voltage below normal or shorted to low source

Generation condition		[Test Condition] • Monitoring is active while the battery voltage is over 10.00V • Continuously.
		[Fault Detection] • If the signal is below the applicable threshold 270.00mV, a signal range violation is detected. • Error is entered only if the signal path is not classified as defective (DINH_stFId.FId_APP1SigPath not set by another failure).
		[Defect Debouncing] • Defect condition exceeded cumulatively > 200.00ms • Failure is detected if active for 50% of the time
Fault healing		• If the signal exceeds the applicable threshold 270.00mV, the signal range violation is reset after the healing debouncing.
System reaction		• No substitute value is formed in the device driver. The read in signal is relayed unchanged to the layers above it.
		• 1) FId / SRC high on APP2 detected --> APP2 Signal not useable • 2) FId / Status of function identifier FId_EngDemTrqLimErr1 • 3) FId / Torque limitation 2 activated for power reduction • 4) FId / Engine speed Limitation 2 for HIgh/Low engine speed (HLS) control active
Failure cause		• Short circuit to ground in wiring or in accelerator pedal
Failure repair		• Check wiring or replace accelerator pedal
Inspection procedure	Step1	Inspect or verify the following items. Repair or replace faulty items as necessary. If any other fault code has occurred, perform the diagnostics procedure for the fault code. Go to Step2

https://truckmanualshub.com/

Inspection procedure	Step2	Inspect or verify the following items. Repair or replace faulty items as necessary. If one of diagnosis codes associated with SAM ECU is generated, make a system diagnosis according to the diagnosis code. Go to Step3
	Step3	Inspection procedure Turn the starter switch in OFF. Remove the connector of A4 (Combustion engine Control unit). Remove the connector of B17 (Position sensor Accelerator pedal). Check the circuit across A4.X2.94/30 and B17.6/5 for open or short circuit. Check the circuit across A4.X2.94/57 and B17.6/4 for open or short circuit. Check the circuit across A4.X2.94/45 and B17.6/6 for open or short circuit. Check the circuit across A4.X2.94/8 and B17.6/2 for open or short circuit. Check the circuit across A4.X2.94/35 and B17.6/1 for open or short circuit. Check the circuit across A4.X2.94/46 and B17.6/3 for open or short circuit. Make a visual check on each connector. Is any abnormality recognized? No: Go to Step4 Yes: Go to Step8
	Step4	Inspection procedure Turn the starter switch in OFF. Replace component “B17 (Position sensor Accelerator pedal)”. Reinstall all the removed connectors. Turn the starter switch in ON. Go to Step5
	Step5	Inspection procedure Turn the starter switch in OFF. Reinstall all the removed connectors. Erase fault memory and perform a test drive. Check if this diagnosis code has occurred. Are current fault codes present? No: Go to Step7 Yes: Go to Step6
	Step6	Inspection procedure Perform the operation start and replace A4 (Combustion engine Control unit). Go to Step7
	Step7	Inspection completed
	Step8	Inspection procedure Turn the starter switch in OFF. Remove the connector of A4 (Combustion engine Control unit). Remove the connector of X17 (Intermediate connector). Check the circuit across A4.X2.94/45 and X16.16/1 for open or short circuit. Check the circuit across A4.X2.94/46 and X16.16/5 for open or short circuit. Check the circuit across A4.X2.94/57 and X16.16/2 for open or short circuit. Check the circuit across A4.X2.94/35 and X16.16/6 for open or short circuit. Check the circuit across A4.X2.94/30 and X16.16/2 for open or short circuit. Check the circuit across A4.X2.94/8 and X16.16/7 for open or short circuit. Make a visual check on each connector. Is any abnormality recognized? No: Go to Step9 Yes: Go to Step10
	Step9	Inspection procedure Repair or replace the harness across B17 (Position sensor Accelerator pedal) and X17 (Intermediate connector). Reinstall all the removed connectors. Erase fault memory and perform a test drive. Check if this diagnosis code has occurred. Are current fault codes present? No: Go to Step7 Yes: Go to Step4

https://truckmanualshub.com/

Inspection procedure	Step10	Inspection procedure Repair or replace the harness across A4 (Combustion engine Control unit) and X17 (Intermediate connector). Reinstall all the removed connectors. Erase fault memory and perform a test drive. Check if this diagnosis code has occurred. Are current fault codes present? No: Go to Step7 Yes: Go to Step4

2630-2: The efficiency of the charge air cooler is not sufficient.

Generation condition		[Test Condition] • fnrFunctionMaskDescription(31.00-; Monitoring of the charge-air cooler is only carried out if; vehicle speed > 40km/h {24.86mph}; air mass flow is within the thresholds CACIg_dmThresHi_mp and 75.00Kg/h; engine temperature > 47.96°C {118.33°F}; pressure ratio at the compressor CACIg_rPres_mp > 1.25-; Exhaust flap ExhFlpLp_rActr is within the thresholds 110.00% • and 90.00%; control value of the cooler bypass valve CABVlv_r is within the thresholds 399.99% and 0.00%; release time of monitoring < 3.67min)
		[Fault Detection] • The calculated cooler efficiency CACIg_etaFlt_mp is below the threshold value CACIg_etaThres_mp based on fix value 0.50- plus a temperature dependent correction from curve 0.00- at 18.96°C {66.13°F}
		[Defect Debouncing] • Monitoring release time > 3.67min
Fault healing		• The calculated cooler efficiency CACIg_etaFlt_mp is above the threshold value CACIg_etaThres_mp based on fix value 0.50- plus a temperature dependent correction from curve 0.00- at 18.96°C {66.13°F}
System reaction		• None
Failure cause		• Charge air-cooler defective
Failure repair		• Check charge-air cooler
Inspection procedure	Step1	Inspection procedure Inspect the suspected factors mentioned above sequentially to locate faulty parts. Repair or replace the faulty part as necessary.

2791-0: Signal Range Check (SRC) for 'Sensor voltage EGR valve position' reports HIGH.

Generation condition	[Test Condition] • Monitoring is active while the battery voltage is over 10.00V and as long as the battery voltage is over 10.00V and 2.00s after this threshold has been exceeded • Monitoring not inhibited by FId_EGRVlvSSpMon set by another failure. • Continuously.
	[Fault Detection] • The sensor raw signal EGRVlv_uRaw (voltage) is above 4.80V
	[Defect Debouncing] • Defect condition exceeded cumulatively > 500.00ms • Failure is detected if active for 50% of the time
Fault healing	• The sensor raw signal EGRVlv_uRaw (voltage) is less than or equal to 4.80V

https://truckmanualshub.com/

System reaction		• EGR valve position is frozen at last valid value on preliminary failure and ramps, using slope 1000.00%/s or 1000.00%/s depending whether the measured value is above or below replacement value, to a default value of 0.00% if failure is validated. • Further reactions according FID (see FID's)
		• 1) FId / EGR switched off • 2) FId / Deactivates NOx monitoring • 3) FId / Afterrun Functions suppressed (partially monitoring and learning in afterrun) • 4) Fid / SCR Monitoring or DEF injection release not possible (according calibration of Release Masks) • 5) FId / Last valid value for EGR Valve position is frozen • 6) FId / EGR valve closed loop governor and monitoring shut off • 7) FId / EGR Valve offset learning inhibited • 8) FId / Adaptation of the correction values of Fuel Mass Observer (FMO) inhibited (no correction of detected deviation between injected fuel and Lambda sensor signal) • 9) FId / Fuel Mass Observer (FMO) switched off (no monitoring of injected fuel by Lambda sensor) • 10) FId / Inhibit DPF monitor • 11) FId / Particulate filter ((DPF) Regeneration inhibited • 12) FId / Service regeneration of Particulate filter ((DPF) inhibited (due to DPF failure) • 13) FId / Zero Fuel Calibration (ZFC) of injectors by Lambda Sensor signal disabled • 14) FId / Failure detection of physical range check of air flow meter (HFM/AFS) disabled (DFC_AFSPhysRngHi and DFC_AFSPhysRngLo) • 15) FID / Drift compensation of Air flow meter (HFM/AFS) disabled • 16) FId / Inhibit EGR cooler efficiency monitoring • 17) FId / Status of function identifier FId_EngDemTrqLimErr5 • 18) FId / Engine speed Limitation 2 for HIgh/Low engine speed (HLS) control active
Failure cause		• Short circuit of wiring to external source or defective EGR valve position sensor
Failure repair		• Check of wiring or replace EGR valve position sensor
Inspection procedure	Step1	Inspection procedure If one of diagnosis codes associated with A20 (SAM) is generated, make a system diagnosis according to the diagnosis code. Go to Step2
	Step2	Inspection procedure Turn the starter switch in ON. Execute the control "Control of exhaust gas recirculation". Turn the starter switch in OFF. Check the Mechanical fault at A14 (EGR valve). Can occurrence of a mechanical fault be confirmed? No: Go to Step3 Yes: Go to Step4
	Step3	Inspection procedure Turn the starter switch in OFF. Remove the connector of A4 (Combustion engine Control unit). Remove the connector of A14 (EGR valve). Check the circuit across A4.X1.60/50 and Y8.X7.5/2 for open or short circuit. Check the circuit across A4.X1.60/35 and Y8.X7.5/1 for open or short circuit. Check the circuit across A4.X1.60/29 and B21.X7.5/5 for open or short circuit. Check the circuit across A4.X1.60/27 and B21.X7.5/4 for open or short circuit. Check the circuit across A4.X1.60/33 and B21.X7.5/3 for open or short circuit. Make a visual check on each connector. Is any abnormality recognized? No: Go to Step4 Yes: Go to Step8

https://truckmanualshub.com/

Inspection procedure	Step4	Inspection procedure Turn the starter switch in OFF. Replace component “A14 (EGR valve)”. Reinstall all the removed connectors. Turn the starter switch in ON. Perform the learned value resetting procedure of A14 (EGR valve) which A4 (Combustion engine Control unit) learns. Go to Step5
	Step5	Inspection procedure Turn the starter switch in OFF. Reinstall all the removed connectors. Erase fault memory and perform a test drive. Check if this diagnosis code has occurred. Are current fault codes present? No: Go to Step7 Yes: Go to Step6
	Step6	Inspection procedure Perform the operation start and replace A4 (Combustion engine Control unit). Go to Step7
	Step7	Inspection completed
	Step8	Inspection procedure Repair or replace electrical lines. Reinstall all the removed connectors. Erase fault memory and perform a test drive. Check if this diagnosis code has occurred. Are current fault codes present? No: Go to Step7 Yes: Go to Step4

2791-1: Signal Range Check (SRC) for ‘Sensor voltage EGR valve position’ reports LOW.

Generation condition	[Test Condition] • Monitoring is active while the battery voltage is over 10.00V and as long as the battery voltage is over 10.00V and 2.00s after this threshold has been exceeded • Monitoring not inhibited by FId_EGRVlvSSpMon set by another failure. • Continuously.
	[Fault Detection] • The sensor raw signal EGRVlv_uRaw (voltage) is below 200.00mV
	[Defect Debouncing] • Defect condition exceeded cumulatively > 500.00ms • Failure is detected if active for 50% of the time
Fault healing	• The sensor raw signal EGRVlv_uRaw (voltage) is above or equal to 200.00mV

https://truckmanualshub.com/

System reaction		• EGR valve position is frozen at last valid value on preliminary failure and ramps, using slope 1000.00%/s or 1000.00%/s depending whether the measured value is above or below replacement value, to a default value of 0.00% if failure is validated. • Further reactions according FID (see FID's)
		• 1) FId / EGR switched off • 2) FId / Deactivates NOx monitoring • 3) FId / Afterrun Functions suppressed (partially monitoring and learning in afterrun) • 4) Fid / SCR Monitoring or DEF injection release not possible (according calibration of Release Masks) • 5) FId / Last valid value for EGR Valve position is frozen • 6) FId / EGR valve closed loop governor and monitoring shut off • 7) FId / EGR Valve offset learning inhibited • 8) FId / Fixed replacement value for EGR Valve position is used if failure validated • 9) FId / Inhibit DPF monitor • 10) FId / Particulate filter ((DPF) Regeneration inhibited • 11) FId / Service regeneration of Particulate filter ((DPF) inhibited (due to DPF failure) • 12) FId / Inhibit EGR cooler efficiency monitoring • 13) FId / Zero Fuel Calibration (ZFC) of injectors by Lambda Sensor signal disabled • 14) FId / Status of function identifier FId_EngDemTrqLimErr5 • 15) FId / Engine speed Limitation 2 for HIgh/Low engine speed (HLS) control active • 16) FId / Failure detection of physical range check of air flow meter (HFM/AFS) disabled (DFC_AFSPhysRngHi and DFC_AFSPhysRngLo) • 17) FID / Drift compensation of Air flow meter (HFM/AFS) disabled
Failure cause		• Short circuit of wiring to ground or defective EGR valve position sensor
Failure repair		• Check of wiring or replace EGR valve position sensor
Inspection procedure	Step1	Inspection procedure If one of diagnosis codes associated with A20 (SAM) is generated, make a system diagnosis according to the diagnosis code. Go to Step2
	Step2	Inspection procedure Turn the starter switch in ON. Execute the control "Control of exhaust gas recirculation". Turn the starter switch in OFF. Check the Mechanical fault at A14 (EGR valve). Can occurrence of a mechanical fault be confirmed? No: Go to Step3 Yes: Go to Step4
	Step3	Inspection procedure Turn the starter switch in OFF. Remove the connector of A4 (Combustion engine Control unit). Remove the connector of A14 (EGR valve). Check the circuit across A4.X1.60/50 and Y8.X7.5/2 for open or short circuit. Check the circuit across A4.X1.60/35 and Y8.X7.5/1 for open or short circuit. Check the circuit across A4.X1.60/29 and B21.X7.5/5 for open or short circuit. Check the circuit across A4.X1.60/27 and B21.X7.5/4 for open or short circuit. Check the circuit across A4.X1.60/33 and B21.X7.5/3 for open or short circuit. Make a visual check on each connector. Is any abnormality recognized? No: Go to Step4 Yes: Go to Step8
	Step4	Inspection procedure Turn the starter switch in OFF. Replace component "A14 (EGR valve)". Reinstall all the removed connectors. Turn the starter switch in ON. Perform the learned value resetting procedure of A14 (EGR valve) which A4 (Combustion engine Control unit) learns. Go to Step5

https://truckmanualshub.com/

Inspection procedure	Step5	Inspection procedure Turn the starter switch in OFF. Reinstall all the removed connectors. Erase fault memory and perform a test drive. Check if this diagnosis code has occurred. Are current fault codes present? No: Go to Step7 Yes: Go to Step6
	Step6	Inspection procedure Perform the operation start and replace A4 (Combustion engine Control unit). Go to Step7
	Step7	Inspection completed
	Step8	Inspection procedure Repair or replace electrical lines. Reinstall all the removed connectors. Erase fault memory and perform a test drive. Check if this diagnosis code has occurred. Are current fault codes present? No: Go to Step7 Yes: Go to Step4

2791-3: EGR Valve has a Short circuit to battery on Out1 of H-bridge.

Generation condition	[Test Condition] • Monitoring is active while the battery voltage is over 10.00V and as long as the battery voltage is over 10.00V and 2.00s after this threshold has been exceeded • Open Load diagnosis not active
	[Fault Detection] • Short Circuit to Battery at Out1 of TLE7209/CJ230 error
	[Defect Debouncing] • Defect condition exceeded cumulatively > 300.00ms • Failure is detected if active for 50% of the time
Fault healing	• To give the possibility for healing, the power stage is enabled each 150.00ms during defect recognition and 300.00ms after definitive failure recognition. • Healing if Hardware does not report “short circuit to battery” (SCB) failure.
System reaction	• Power stage is switched off by disabling the TLE7209/CJ230 chip and the PWM output set to -10.00%. • Further reaction according FID (see FID’s)
	• 1) FId / Failure detection of physical range check of air flow meter (HFM/AFS) disabled (DFC_AFSPhysRngHi and DFC_AFSPhysRngLo) • 2) FId / EGR switched off • 3) FId / Deactivates NOx monitoring • 4) FId / Afterrun Functions suppressed (partially monitoring and learning in afterrun) • 5) Fid / SCR Monitoring or DEF injection release not possible (according calibration of Release Masks) • 6) FId / EGR valve closed loop governor and monitoring shut off • 7) FId / Adaptation of the correction values of Fuel Mass Observer (FMO) inhibited (no correction of detected deviation between injected fuel and Lambda sensor signal) • 8) FId / Fuel Mass Observer (FMO) switched off (no monitoring of injected fuel by Lambda sensor) • 9) Fid / Plausibility check Boost pressure with ambient pressure inhibited • 10) Fid / Boost pressure pre control correction depending on EGR disabled • 11) FId / Inhibit DPF monitor • 12) FId / Particulate filter ((DPF) Regeneration inhibited • 13) FId / Service regeneration of Particulate filter ((DPF) inhibited (due to DPF failure) • 14) FId / Inhibit EGR cooler efficiency monitoring • 15) FId / Zero Fuel Calibration (ZFC) of injectors by Lambda Sensor signal disabled • 16) FId / Status of function identifier FId_EngDemTrqLimErr5 • 17) FId / Engine speed Limitation 2 for HIgh/Low engine speed (HLS) control active • 18) FID / Drift compensation of Air flow meter (HFM/AFS) disabled

https://truckmanualshub.com/

Failure cause		• Short circuit of wiring to external source
Failure repair		• Check of wiring
Inspection procedure	Step1	Inspection procedure If one of diagnosis codes associated with A20 (SAM) is generated, make a system diagnosis according to the diagnosis code. Go to Step2
	Step2	Inspection procedure Turn the starter switch in ON. Execute the control “Control of exhaust gas recirculation”. Turn the starter switch in OFF. Check the Mechanical fault at A14 (EGR valve). Can occurrence of a mechanical fault be confirmed? No: Go to Step3 Yes: Go to Step4
	Step3	Inspection procedure Turn the starter switch in OFF. Remove the connector of A4 (Combustion engine Control unit). Remove the connector of A14 (EGR valve). Check the circuit across A4.X1.60/50 and Y8.X7.5/2 for open or short circuit. Check the circuit across A4.X1.60/35 and Y8.X7.5/1 for open or short circuit. Check the circuit across A4.X1.60/29 and B21.X7.5/5 for open or short circuit. Check the circuit across A4.X1.60/27 and B21.X7.5/4 for open or short circuit. Check the circuit across A4.X1.60/33 and B21.X7.5/3 for open or short circuit. Make a visual check on each connector. Is any abnormality recognized? No: Go to Step4 Yes: Go to Step8
	Step4	Inspection procedure Turn the starter switch in OFF. Replace component “A14 (EGR valve)”. Reinstall all the removed connectors. Turn the starter switch in ON. Perform the learned value resetting procedure of A14 (EGR valve) which A4 (Combustion engine Control unit) learns. Go to Step5
	Step5	Inspection procedure Turn the starter switch in OFF. Reinstall all the removed connectors. Erase fault memory and perform a test drive. Check if this diagnosis code has occurred. Are current fault codes present? No: Go to Step7 Yes: Go to Step6
	Step6	Inspection procedure Perform the operation start and replace A4 (Combustion engine Control unit). Go to Step7
	Step7	Inspection completed
	Step8	Inspection procedure Repair or replace electrical lines. Reinstall all the removed connectors. Erase fault memory and perform a test drive. Check if this diagnosis code has occurred. Are current fault codes present No: Go to Step7 Yes: Go to Step4

https://truckmanualshub.com/

2791-4: EGR Valve has a short circuit to ground on Out1 of H-bridge.

Generation condition		[Test Condition] • Monitoring is active while the battery voltage is over 10.00V and as long as the battery voltage is over 10.00V and 2.00s after this threshold has been exceeded • Open Load diagnosis not active
		[Fault Detection] • Short Circuit to Ground at Out1 of TLE7209/CJ230 error
		[Defect Debouncing] • Defect condition exceeded cumulatively > 300.00ms • Failure is detected if active for 50% of the time
Fault healing		• To give the possibility for healing, the power stage is enabled each 150.00ms during defect recognition and 300.00ms after definitive failure recognition. • Healing if Hardware does not report “short circuit to battery” (SCG) failure.
System reaction		• Power stage is switched off by disabling the TLE7209/CJ230 chip and the PWM output set to -10.00%. • Further reaction according FID (see FID’s)
		• 1) FId / Failure detection of physical range check of air flow meter (HFM/AFS) disabled (DFC_AFSPhysRngHi and DFC_AFSPhysRngLo) • 2) FId / EGR switched off • 3) FId / Deactivates NOx monitoring • 4) FId / Afterrun Functions suppressed (partially monitoring and learning in afterrun) • 5) Fid / SCR Monitoring or DEF injection release not possible (according calibration of Release Masks) • 6) FId / EGR valve closed loop governor and monitoring shut off • 7) FId / Adaptation of the correction values of Fuel Mass Observer (FMO) inhibited (no correction of detected deviation between injected fuel and Lambda sensor signal) • 8) FId / Fuel Mass Observer (FMO) switched off (no monitoring of injected fuel by Lambda sensor) • 9) Fid / Plausibility check Boost pressure with ambient pressure inhibited • 10) Fid / Boost pressure pre control correction depending on EGR disabled • 11) FId / Inhibit DPF monitor • 12) FId / Particulate filter ((DPF) Regeneration inhibited • 13) FId / Service regeneration of Particulate filter ((DPF) inhibited (due to DPF failure) • 14) FId / Inhibit EGR cooler efficiency monitoring • 15) FId / Zero Fuel Calibration (ZFC) of injectors by Lambda Sensor signal disabled • 16) FId / Status of function identifier FId_EngDemTrqLimErr5 • 17) FId / Engine speed Limitation 2 for HIgh/Low engine speed (HLS) control active • 18) FID / Drift compensation of Air flow meter (HFM/AFS) disabled
Failure cause		• Short circuit of wiring to ground
Failure repair		• Check of wiring
Inspection procedure	Step1	Inspection procedure If one of diagnosis codes associated with A20 (SAM) is generated, make a system diagnosis according to the diagnosis code. Go to Step2
	Step2	Inspection procedure Turn the starter switch in ON. Execute the control “Control of exhaust gas recirculation”. Turn the starter switch in OFF. Check the Mechanical fault at A14 (EGR valve). Can occurrence of a mechanical fault be confirmed? No: Go to Step3 Yes: Go to Step4

https://truckmanualshub.com/

Inspection procedure	Step3	Inspection procedure Turn the starter switch in OFF. Remove the connector of A4 (Combustion engine Control unit). Remove the connector of A14 (EGR valve). Check the circuit across A4.X1.60/50 and Y8.X7.5/2 for open or short circuit. Check the circuit across A4.X1.60/35 and Y8.X7.5/1 for open or short circuit. Check the circuit across A4.X1.60/29 and B21.X7.5/5 for open or short circuit. Check the circuit across A4.X1.60/27 and B21.X7.5/4 for open or short circuit. Check the circuit across A4.X1.60/33 and B21.X7.5/3 for open or short circuit. Make a visual check on each connector. Is any abnormality recognized? No: Go to Step4 Yes: Go to Step8
	Step4	Inspection procedure Turn the starter switch in OFF. Replace component “A14 (EGR valve)”. Reinstall all the removed connectors. Turn the starter switch in ON. Perform the learned value resetting procedure of A14 (EGR valve) which A4 (Combustion engine Control unit) learns. Go to Step5
	Step5	Inspection procedure Turn the starter switch in OFF. Reinstall all the removed connectors. Erase fault memory and perform a test drive. Check if this diagnosis code has occurred. Are current fault codes present? No: Go to Step7 Yes: Go to Step6
	Step6	Inspection procedure Perform the operation start and replace A4 (Combustion engine Control unit). Go to Step7
	Step7	Inspection completed
	Step8	Inspection procedure Repair or replace electrical lines. Reinstall all the removed connectors. Erase fault memory and perform a test drive. Check if this diagnosis code has occurred. Are current fault codes present? No: Go to Step7 Yes: Go to Step4

2791-5: EGR Valve has a Open Load of H-bridge.Current below normal or Open circuit

Generation condition	[Test Condition] • Monitoring is active while the battery voltage is over 10.00V and as long as the battery voltage is over 10.00V and 2.00s after this threshold has been exceeded • Monitoring is carried out only once a driving cycle, in following conditions: • During After-run • During normal operation: only if Jammed valve error (EGRVlvJamVlv) active. • Testing is carried out for 610.00ms (system start or during engine running) or 1000.00ms (in after-run). During Testing the power stage is switched off
	[Fault Detection] • Hardware reports an “open load” (OL) error
	[Defect Debouncing] • Defect condition exceeded cumulatively > 200.00ms • Failure is detected if active for 50% of the time
Fault healing	• Test is repeated until Hardware does no more report an “open load” error. In afterrun the test time is limited to 1000.00ms.

https://truckmanualshub.com/

System reaction		• Power stage is switched off by disabling the TLE7209/CJ230 chip --> EGR Valve actuation “off” • Further reaction according FID (see FID’s)
		• 1) FId / EGR switched off • 2) FId / Deactivates NOx monitoring • 3) FId / Afterrun Functions suppressed (partially monitoring and learning in afterrun) • 4) Fid / SCR Monitoring or DEF injection release not possible (according calibration of Release Masks) • 5) FId / EGR valve closed loop governor and monitoring shut off • 6) FId / Adaptation of the correction values of Fuel Mass Observer (FMO) inhibited (no correction of detected deviation between injected fuel and Lambda sensor signal) • 7) FId / Fuel Mass Observer (FMO) switched off (no monitoring of injected fuel by Lambda sensor) • 8) Fid / Plausibility check Boost pressure with ambient pressure inhibited • 9) Fid / Boost pressure pre control correction depending on EGR disabled • 10) FId / Inhibit DPF monitor • 11) FId / Particulate filter ((DPF) Regeneration inhibited • 12) FId / Service regeneration of Particulate filter ((DPF) inhibited (due to DPF failure) • 13) FId / Zero Fuel Calibration (ZFC) of injectors by Lambda Sensor signal disabled • 14) FId / Failure detection of physical range check of air flow meter (HFM/AFS) disabled (DFC_AFSPhysRngHi and DFC_AFSPhysRngLo) • 15) FID / Drift compensation of Air flow meter (HFM/AFS) disabled • 16) FId / Inhibit EGR cooler efficiency monitoring • 17) FId / Status of function identifier FId_EngDemTrqLimErr5 • 18) FId / Engine speed Limitation 2 for HIgh/Low engine speed (HLS) control active
Failure cause		• Electrical problem of the EGR valve actuator: broken wiring harness, no contact of connector, internal broken line in actuator
Failure repair		• Check wiring harness on open circuit • Check EGR valve actuator on open circuit
Inspection procedure	Step1	Inspection procedure If one of diagnosis codes associated with A20 (SAM) is generated, make a system diagnosis according to the diagnosis code. Go to Step2
	Step2	Inspection procedure Turn the starter switch in ON. Execute the control “Control of exhaust gas recirculation”. Turn the starter switch in OFF. Check the Mechanical fault at A14 (EGR valve). Can occurrence of a mechanical fault be confirmed? No: Go to Step3 Yes: Go to Step4
	Step3	Inspection procedure Turn the starter switch in OFF. Remove the connector of A4 (Combustion engine Control unit). Remove the connector of A14 (EGR valve). Check the circuit across A4.X1.60/50 and Y8.X7.5/2 for open or short circuit. Check the circuit across A4.X1.60/35 and Y8.X7.5/1 for open or short circuit. Check the circuit across A4.X1.60/29 and B21.X7.5/5 for open or short circuit. Check the circuit across A4.X1.60/27 and B21.X7.5/4 for open or short circuit. Check the circuit across A4.X1.60/33 and B21.X7.5/3 for open or short circuit. Make a visual check on each connector. Is any abnormality recognized? No: Go to Step4 Yes: Go to Step8

https://truckmanualshub.com/

Inspection procedure	Step4	Inspection procedure Turn the starter switch in OFF. Replace component “A14 (EGR valve)”. Reinstall all the removed connectors. Turn the starter switch in ON. Perform the learned value resetting procedure of A14 (EGR valve) which A4 (Combustion engine Control unit) learns. Go to Step5
	Step5	Inspection procedure Turn the starter switch in OFF. Reinstall all the removed connectors. Erase fault memory and perform a test drive. Check if this diagnosis code has occurred. Are current fault codes present? No: Go to Step7 Yes: Go to Step6
	Step6	Inspection procedure Perform the operation start and replace A4 (Combustion engine Control unit). Go to Step7
	Step7	Inspection completed
	Step8	Inspection procedure Repair or replace electrical lines. Reinstall all the removed connectors. Erase fault memory and perform a test drive. Check if this diagnosis code has occurred. Are current fault codes present? No: Go to Step7 Yes: Go to Step4

2791-7: EGR Valve is jammed in closed state.Mechanical system not responding or out of adjustment

Generation condition	[Test Condition] • After a governor deviation is detected
	[Fault Detection] • Jammed valve in closed state is detected if: • If permanent control deviation exist for a time greater than 300.00ms • Valve release attempts have failed (5.00- trials) • EGR actuator position is > 15.00%
	[Defect Debouncing] • 300.00ms after last release trial
Fault healing	• Healing not possible in same driving cycle, when fault condition don’t subsists (governor deviation healed or release succeeds)
System reaction	• Timer for repeated release function becomes active and the governor is shutoff.
	• 1) FId / Failure detection of physical range check of air flow meter (HFM/AFS) disabled (DFC_AFSPhysRngHi and DFC_AFSPhysRngLo) • 2) FId / EGR switched off • 3) FId / Deactivates NOx monitoring • 4) FId / Afterrun Functions suppressed (partially monitoring and learning in afterrun) • 5) Fid / Plausibility check Boost pressure with ambient pressure inhibited • 6) Fid / Boost pressure pre control correction depending on EGR disabled • 7) FId / Particulate filter ((DPF) Regeneration inhibited • 8) FId / Service regeneration of Particulate filter ((DPF) inhibited (due to DPF failure) • 9) Fid / SCR Monitoring or DEF injection release not possible (according calibration of Release Masks) • 10) FId / Inhibit EGR cooler efficiency monitoring • 11) FId / Zero Fuel Calibration (ZFC) of injectors by Lambda Sensor signal disabled • 12) FID / Drift compensation of Air flow meter (HFM/AFS) disabled • 13) FId / Status of function identifier FId_EngDemTrqLimErr5 • 14) FId / Engine speed Limitation 2 for HIgh/Low engine speed (HLS) control active

https://truckmanualshub.com/

Failure cause		• EGR valve can not be opened as desired within expected time • EGR valve blocked mechanically • EGR valve sticks • EGR valve position sensor mismatched
Failure repair		• Check Functionality of EGR valve and the corresponding position
Inspection procedure	Step1	Inspection procedure If one of diagnosis codes associated with A20 (SAM) is generated, make a system diagnosis according to the diagnosis code. Go to Step2
	Step2	Inspection procedure Turn the starter switch in ON. Execute the control “Control of exhaust gas recirculation”. Turn the starter switch in OFF. Check the Mechanical fault at A14 (EGR valve). Can occurrence of a mechanical fault be confirmed? No: Go to Step3 Yes: Go to Step4
	Step3	Inspection procedure Turn the starter switch in OFF. Remove the connector of A4 (Combustion engine Control unit). Remove the connector of A14 (EGR valve). Check the circuit across A4.X1.60/50 and Y8.X7.5/2 for open or short circuit. Check the circuit across A4.X1.60/35 and Y8.X7.5/1 for open or short circuit. Check the circuit across A4.X1.60/29 and B21.X7.5/5 for open or short circuit. Check the circuit across A4.X1.60/27 and B21.X7.5/4 for open or short circuit. Check the circuit across A4.X1.60/33 and B21.X7.5/3 for open or short circuit. Make a visual check on each connector. Is any abnormality recognized? No: Go to Step4 Yes: Go to Step8
	Step4	Inspection procedure Turn the starter switch in OFF. Replace component “A14 (EGR valve)”. Reinstall all the removed connectors. Turn the starter switch in ON. Perform the learned value resetting procedure of A14 (EGR valve) which A4 (Combustion engine Control unit) learns. Go to Step5
	Step5	Inspection procedure Turn the starter switch in OFF. Reinstall all the removed connectors. Erase fault memory and perform a test drive. Check if this diagnosis code has occurred. Are current fault codes present? No: Go to Step7 Yes: Go to Step6
	Step6	Inspection procedure Perform the operation start and replace A4 (Combustion engine Control unit). Go to Step7
	Step7	Inspection completed
	Step8	Inspection procedure Repair or replace electrical lines. Reinstall all the removed connectors. Erase fault memory and perform a test drive. Check if this diagnosis code has occurred. Are current fault codes present? No: Go to Step7 Yes: Go to Step4

https://truckmanualshub.com/

2791-12: EGR Valve has Over temperature of H-bridge.Bad intelligent device or component

Generation condition		[Test Condition] • Monitoring only when the power stage is active. • If open load monitoring not active. • If the plausible test for short circuit overload not active.
		[Fault Detection] • Over Temperature of TLE7209/CJ230 error
		[Defect Debouncing] • Defect condition exceeded cumulatively > 500.00ms • Failure is detected if active for 50% of the time
Fault healing		• To give the possibility for healing, the power stage is enabled each 150.00ms during defect recognition and 300.00ms after definitive failure recognition. • Healing if Hardware does not report “Over temperature” failure.
System reaction		• Power stage is switched off by disabling the TLE7209/CJ230 chip and the PWM output set to 0%. • Further reaction according FID (see FID’s)
		• 1) FId / Failure detection of physical range check of air flow meter (HFM/AFS) disabled (DFC_AFSPhysRngHi and DFC_AFSPhysRngLo) • 2) FId / EGR switched off • 3) FId / Deactivates NOx monitoring • 4) FId / Afterrun Functions suppressed (partially monitoring and learning in afterrun) • 5) Fid / SCR Monitoring or DEF injection release not possible (according calibration of Release Masks) • 6) FId / EGR valve closed loop governor and monitoring shut off • 7) FId / Adaptation of the correction values of Fuel Mass Observer (FMO) inhibited (no correction of detected deviation between injected fuel and Lambda sensor signal) • 8) FId / Fuel Mass Observer (FMO) switched off (no monitoring of injected fuel by Lambda sensor) • 9) Fid / Plausibility check Boost pressure with ambient pressure inhibited • 10) Fid / Boost pressure pre control correction depending on EGR disabled • 11) FId / Inhibit DPF monitor • 12) FId / Particulate filter ((DPF) Regeneration inhibited • 13) FId / Service regeneration of Particulate filter ((DPF) inhibited (due to DPF failure) • 14) FId / Inhibit EGR cooler efficiency monitoring • 15) FId / Zero Fuel Calibration (ZFC) of injectors by Lambda Sensor signal disabled • 16) FId / Status of function identifier FId_EngDemTrqLimErr5 • 17) FId / Engine speed Limitation 2 for HIgh/Low engine speed (HLS) control active • 18) FID / Drift compensation of Air flow meter (HFM/AFS) disabled
Failure cause		• High battery voltage, high temperature inside ECU, high load or wiring problem
Failure repair		• No reaction needed if failure isn’t present again after short time, check load and output, check wiring, replace ECU
Inspection procedure	Step1	Inspection procedure If one of diagnosis codes associated with A20 (SAM) is generated, make a system diagnosis according to the diagnosis code. Go to Step2
	Step2	Inspection procedure Turn the starter switch in ON. Execute the control “Control of exhaust gas recirculation”. Turn the starter switch in OFF. Check the Mechanical fault at A14 (EGR valve). Can occurrence of a mechanical fault be confirmed? No: Go to Step3 Yes: Go to Step4

https://truckmanualshub.com/

Inspection procedure	Step3	Inspection procedure Turn the starter switch in OFF. Remove the connector of A4 (Combustion engine Control unit). Remove the connector of A14 (EGR valve). Check the circuit across A4.X1.60/50 and Y8.X7.5/2 for open or short circuit. Check the circuit across A4.X1.60/35 and Y8.X7.5/1 for open or short circuit. Check the circuit across A4.X1.60/29 and B21.X7.5/5 for open or short circuit. Check the circuit across A4.X1.60/27 and B21.X7.5/4 for open or short circuit. Check the circuit across A4.X1.60/33 and B21.X7.5/3 for open or short circuit. Make a visual check on each connector. Is any abnormality recognized? No: Go to Step4 Yes: Go to Step8
	Step4	Inspection procedure Turn the starter switch in OFF. Replace component “A14 (EGR valve)”. Reinstall all the removed connectors. Turn the starter switch in ON. Perform the learned value resetting procedure of A14 (EGR valve) which A4 (Combustion engine Control unit) learns. Go to Step5
	Step5	Inspection procedure Turn the starter switch in OFF. Reinstall all the removed connectors. Erase fault memory and perform a test drive. Check if this diagnosis code has occurred. Are current fault codes present? No: Go to Step7 Yes: Go to Step6
	Step6	Inspection procedure Perform the operation start and replace A4 (Combustion engine Control unit). Go to Step7
	Step7	Inspection completed
	Step8	Inspection procedure Repair or replace electrical lines. Reinstall all the removed connectors. Erase fault memory and perform a test drive. Check if this diagnosis code has occurred. Are current fault codes present? No: Go to Step7 Yes: Go to Step4

2791-16: Signal Range Check (SRC) for ‘EGR valve position’ reports HIGH.

Generation condition	[Test Condition] • Monitoring is active while the battery voltage is over 10.00V and as long as the battery voltage is over 10.00V and 2.00s after this threshold has been exceeded • Every time the actuator is at fully open or fully closed position.
	[Fault Detection] • If in open position 4.60V < sensed position voltage < 4.80V or in closed position 1000.00mV < sensed position voltage < 4.80V
	[Defect Debouncing] • Defect condition exceeded cumulatively > 500.00ms • Failure is detected if active for 50% of the time
Fault healing	• Position in range

https://truckmanualshub.com/

System reaction		• None except FIds
		• 1) FId / EGR switched off • 2) FId / Deactivates NOx monitoring • 3) FId / Afterrun Functions suppressed (partially monitoring and learning in afterrun) • 4) Fid / SCR Monitoring or DEF injection release not possible (according calibration of Release Masks) • 5) FId / Adaptation of the correction values of Fuel Mass Observer (FMO) inhibited (no correction of detected deviation between injected fuel and Lambda sensor signal) • 6) FId / Fuel Mass Observer (FMO) switched off (no monitoring of injected fuel by Lambda sensor) • 7) FId / Inhibit DPF monitor • 8) FId / Particulate filter ((DPF) Regeneration inhibited • 9) FId / Service regeneration of Particulate filter ((DPF) inhibited (due to DPF failure) • 10) FId / Inhibit EGR cooler efficiency monitoring • 11) FId / Zero Fuel Calibration (ZFC) of injectors by Lambda Sensor signal disabled • 12) FId / Status of function identifier FId_EngDemTrqLimErr5 • 13) FId / Engine speed Limitation 2 for HIgh/Low engine speed (HLS) control active • 14) FId / Failure detection of physical range check of air flow meter (HFM/AFS) disabled (DFC_AFSPhysRngHi and DFC_AFSPhysRngLo) • 15) FID / Drift compensation of Air flow meter (HFM/AFS) disabled
Failure cause		• EGR valve position sensor gives higher values than maximum due to electrical problems (“short circuit”) or position sensor mismatch
Failure repair		• Check wiring harness • Check EGR valve position sensor electrically • Check correct position in closed (0%) and fully opened (100%) position
Inspection procedure	Step1	Inspection procedure If one of diagnosis codes associated with A20 (SAM) is generated, make a system diagnosis according to the diagnosis code. Go to Step2
	Step2	Inspection procedure Turn the starter switch in ON. Execute the control “Control of exhaust gas recirculation”. Turn the starter switch in OFF. Check the Mechanical fault at A14 (EGR valve). Can occurrence of a mechanical fault be confirmed? No: Go to Step3 Yes: Go to Step4
	Step3	Inspection procedure Turn the starter switch in OFF. Remove the connector of A4 (Combustion engine Control unit). Remove the connector of A14 (EGR valve). Check the circuit across A4.X1.60/50 and Y8.X7.5/2 for open or short circuit. Check the circuit across A4.X1.60/35 and Y8.X7.5/1 for open or short circuit. Check the circuit across A4.X1.60/29 and B21.X7.5/5 for open or short circuit. Check the circuit across A4.X1.60/27 and B21.X7.5/4 for open or short circuit. Check the circuit across A4.X1.60/33 and B21.X7.5/3 for open or short circuit. Make a visual check on each connector. Is any abnormality recognized? No: Go to Step4 Yes: Go to Step8
	Step4	Inspection procedure Turn the starter switch in OFF. Replace component “A14 (EGR valve)”. Reinstall all the removed connectors. Turn the starter switch in ON. Perform the learned value resetting procedure of A14 (EGR valve) which A4 (Combustion engine Control unit) learns. Go to Step5

https://truckmanualshub.com/

Inspection procedure	Step5	Inspection procedure Turn the starter switch in OFF. Reinstall all the removed connectors. Erase fault memory and perform a test drive. Check if this diagnosis code has occurred. Are current fault codes present? No: Go to Step7 Yes: Go to Step6
	Step6	Inspection procedure Perform the operation start and replace A4 (Combustion engine Control unit). Go to Step7
	Step7	Inspection completed
	Step8	Inspection procedure Repair or replace electrical lines. Reinstall all the removed connectors. Erase fault memory and perform a test drive. Check if this diagnosis code has occurred. Are current fault codes present? No: Go to Step7 Yes: Go to Step4

2791-18: Signal Range Check (SRC) for 'EGR valve position' reports LOW.

Generation condition	[Test Condition] • Monitoring is active while the battery voltage is over 10.00V and as long as the battery voltage is over 10.00V and 2.00s after this threshold has been exceeded • Every time the actuator is at fully open or fully closed position.
	[Fault Detection] • If in open position 4.00V > sensed position voltage > 200.00mV or in closed position 400.00mV > sensed position voltage Y 200.00mV
	[Defect Debouncing] • Defect condition exceeded cumulatively > 500.00ms • Failure is detected if active for 50% of the time
Fault healing	• Position in range
System reaction	• None except FIds
	• 1) FId / EGR switched off • 2) FId / Deactivates NOx monitoring • 3) FId / Afterrun Functions suppressed (partially monitoring and learning in afterrun) • 4) Fid / SCR Monitoring or DEF injection release not possible (according calibration of Release Masks) • 5) FId / Adaptation of the correction values of Fuel Mass Observer (FMO) inhibited (no correction of detected deviation between injected fuel and Lambda sensor signal) • 6) FId / Fuel Mass Observer (FMO) switched off (no monitoring of injected fuel by Lambda sensor) • 7) FId / Inhibit DPF monitor • 8) FId / Particulate filter ((DPF) Regeneration inhibited • 9) FId / Service regeneration of Particulate filter ((DPF) inhibited (due to DPF failure) • 10) FId / Inhibit EGR cooler efficiency monitoring • 11) FId / Zero Fuel Calibration (ZFC) of injectors by Lambda Sensor signal disabled • 12) FId / Status of function identifier FId_EngDemTrqLimErr5 • 13) FId / Engine speed Limitation 2 for HIgh/Low engine speed (HLS) control active • 14) FId / Failure detection of physical range check of air flow meter (HFM/AFS) disabled (DFC_AFSPhysRngHi and DFC_AFSPhysRngLo) • 15) FID / Drift compensation of Air flow meter (HFM/AFS) disabled
Failure cause	• EGR valve position sensor gives lower values than minimum due to electrical problems ("short circuit") or position sensor mismatch
Failure repair	• Check wiring harness • Check EGR valve position sensor electrically • Check correct position in closed (0%) and fully opened (100%) position

https://truckmanualshub.com/

Inspection procedure	Step1	Inspection procedure If one of diagnosis codes associated with A20 (SAM) is generated, make a system diagnosis according to the diagnosis code. Go to Step2
	Step2	Inspection procedure Turn the starter switch in ON. Execute the control “Control of exhaust gas recirculation”. Turn the starter switch in OFF. Check the Mechanical fault at A14 (EGR valve). Can occurrence of a mechanical fault be confirmed? No: Go to Step3 Yes: Go to Step4
	Step3	Inspection procedure Turn the starter switch in OFF. Remove the connector of A4 (Combustion engine Control unit). Remove the connector of A14 (EGR valve). Check the circuit across A4.X1.60/50 and Y8.X7.5/2 for open or short circuit. Check the circuit across A4.X1.60/35 and Y8.X7.5/1 for open or short circuit. Check the circuit across A4.X1.60/29 and B21.X7.5/5 for open or short circuit. Check the circuit across A4.X1.60/27 and B21.X7.5/4 for open or short circuit. Check the circuit across A4.X1.60/33 and B21.X7.5/3 for open or short circuit. Make a visual check on each connector. Is any abnormality recognized? No: Go to Step4 Yes: Go to Step8
	Step4	Inspection procedure Turn the starter switch in OFF. Replace component “A14 (EGR valve)”. Reinstall all the removed connectors. Turn the starter switch in ON. Perform the learned value resetting procedure of A14 (EGR valve) which A4 (Combustion engine Control unit) learns. Go to Step5
	Step5	Inspection procedure Turn the starter switch in OFF. Reinstall all the removed connectors. Erase fault memory and perform a test drive. Check if this diagnosis code has occurred. Are current fault codes present? No: Go to Step7 Yes: Go to Step6
	Step6	Inspection procedure Perform the operation start and replace A4 (Combustion engine Control unit). Go to Step7
	Step7	Inspection completed
	Step8	Inspection procedure Repair or replace electrical lines. Reinstall all the removed connectors. Erase fault memory and perform a test drive. Check if this diagnosis code has occurred. Are current fault codes present? No: Go to Step7 Yes: Go to Step4

2791-31: EGR Valve has a limited current.

Generation condition	[Test Condition] • Continuously
	[Fault Detection] • If actuator current is set at its limit value, of 1.76 A for longer than debounce time.
	[Defect Debouncing] • Defect condition exceeded cumulatively > 20.00s • Failure is detected if active for 50% of the time

https://truckmanualshub.com/

Fault healing		• If actuator current is below its limit value, of 1.76 A for longer than debounce time.
System reaction		• None excepted Fids
		• 1) FId / Afterrun Functions suppressed (partially monitoring and learning in afterrun) • 2) FId / Inhibit DPF monitor • 3) Fid / SCR Monitoring or DEF injection release not possible (according calibration of Release Masks) • 4) FId / Failure detection of physical range check of air flow meter (HFM/AFS) disabled (DFC_AFSPhysRngHi and DFC_AFSPhysRngLo) • 5) FID / Drift compensation of Air flow meter (HFM/AFS) disabled
Failure cause		• EGR Valve actuation current is higher than allowed to reach the desired position: possibly electrical problem inside EGR Valve actuator or wiring harness (“short” circuit) or mechanical sticking of valve
Failure repair		• Check EGR valve electric circuit • Check mechanical EGR valve functionality
Inspection procedure	Step1	Inspection procedure If one of diagnosis codes associated with A20 (SAM) is generated, make a system diagnosis according to the diagnosis code. Go to Step2
	Step2	Inspection procedure Turn the starter switch in ON. Execute the control “Control of exhaust gas recirculation”. Turn the starter switch in OFF. Check the Mechanical fault at A14 (EGR valve). Can occurrence of a mechanical fault be confirmed? No: Go to Step3 Yes: Go to Step4
	Step3	Inspection procedure Turn the starter switch in OFF. Remove the connector of A4 (Combustion engine Control unit). Remove the connector of A14 (EGR valve). Check the circuit across A4.X1.60/50 and Y8.X7.5/2 for open or short circuit. Check the circuit across A4.X1.60/35 and Y8.X7.5/1 for open or short circuit. Check the circuit across A4.X1.60/29 and B21.X7.5/5 for open or short circuit. Check the circuit across A4.X1.60/27 and B21.X7.5/4 for open or short circuit. Check the circuit across A4.X1.60/33 and B21.X7.5/3 for open or short circuit. Make a visual check on each connector. Is any abnormality recognized? No: Go to Step4 Yes: Go to Step8
	Step4	Inspection procedure Turn the starter switch in OFF. Replace component “A14 (EGR valve)”. Reinstall all the removed connectors. Turn the starter switch in ON. Perform the learned value resetting procedure of A14 (EGR valve) which A4 (Combustion engine Control unit) learns. Go to Step5
	Step5	Inspection procedure Turn the starter switch in OFF. Reinstall all the removed connectors. Erase fault memory and perform a test drive. Check if this diagnosis code has occurred. Are current fault codes present? No: Go to Step7 Yes: Go to Step6
	Step6	Inspection procedure Perform the operation start and replace A4 (Combustion engine Control unit). Go to Step7
	Step7	Inspection completed

https://truckmanualshub.com/

Inspection procedure	Step8	Inspection procedure Repair or replace electrical lines. Reinstall all the removed connectors. Erase fault memory and perform a test drive. Check if this diagnosis code has occurred. Are current fault codes present? No: Go to Step7 Yes: Go to Step4

2797-2: The DC/DC converter of Injector (Cylinder Bank 1) shuts off.

Generation condition		[Test Condition] • Continuously.
		[Fault Detection] • Buffer capacitor of bank 0 cannot be charged
		[Defect Debouncing] • Immediate
Fault healing		• None
System reaction		• Shut-off of Bank 0 • See FIds list for further reaction
		• 1) Fid / Reagent dosing quantity for SCR reduced (to DStgy_facUreaDesRed_C) • 2) FId / Injector bank shut off • 3) FId / Redundant Engine shut off path not tested due to error debouncing of an injector • 4) FId / Redundant Engine shut off path not tested due to error of an injector • 5) FId / Redundant Engine shut off path test inhibited • 6) FId / Inhibit DPF monitor • 7) FId / Misfire Detection disabled • 8) FId / Inhibit OxiCat passive monitor • 9) Fid / SCR Monitoring or DEF injection release not possible (according calibration of Release Masks)
Failure cause		• Buffer capacitor cannot be charged, problem can be located in the capacitor or the power stage itself.
Failure repair		• Check presence of other failures connected to injector supply (short circuit), check capacitor, replace ECM if power stage is responsible.
Inspection procedure	Step1	Inspect or verify the following items. Repair or replace faulty items as necessary. If one of diagnosis codes associated with Fuel injector is generated, make a system diagnosis according to the diagnosis code. Go to Step2
	Step2	Inspection procedure Turn the starter switch in OFF. Reinstall all the removed connectors. Erase fault memory and perform a test drive. If the diagnosis code has occurred even during the test drive, start the operation and then replace the A4 (Combustion engine Control unit). Inspection completed

2797-3: Component 'charge switch of Injector (Cylinder Bank 0)' has a short circuit.

Generation condition	[Test Condition] • When system is switched on, after the buffer capacitor is loaded.
	[Fault Detection] • If the measured pattern for the evaluation of injector bank 0 is equal to applied behaviour bit pattern for short circuit error detection.
	[Defect Debouncing] • Defect condition exceeded cumulatively > 4.00 events • Failure is detected if active for 50% of events
Fault healing	• No Healing possible (disabled by Data set)

https://truckmanualshub.com/

		• None except FIDs.
System reaction		• 1) FId / Fuel quantity set to (= engine stop) • 2) FId / Fuel pressure set to minimum (= engine stop) • 3) FId / Engine torque forced to (=engine stop) • 4) Fid / Reagent dosing quantity for SCR reduced (to DStgy_facUreaDesRed_C) • 5) FId / Adaptation of the correction values of Fuel Mass Observer (FMO) inhibited (no correction of detected deviation between injected fuel and Lambda sensor signal) • 6) FId / Fuel Mass Observer (FMO) switched off (no monitoring of injected fuel by Lambda sensor) • 7) FId / Nominal Voltage Calibration NVC of injectors disabled • 8) FId / Redundant Engine shut off path not tested due to error debouncing of an injector • 9) FId / Redundant Engine shut off path not tested due to error of an injector • 10) FId / Redundant Engine shut off path test inhibited • 11) FId / Inhibit DPF monitor • 12) FId / Misfire Detection disabled • 13) FId / Inhibit OxiCat passive monitor • 14) FId / Shut Off Injector Bank 1 • 15) Fid / SCR Monitoring or DEF injection release not possible (according calibration of Release Masks)
Failure cause		• Short circuit in wiring or injector connected to bank 0
Failure repair		• Check the wiring and injectors connected to bank 0.
Inspection procedure	Step1	Inspection procedure Turn the starter switch in OFF. Remove the connector of A4 (Combustion engine Control unit). Remove the connector of Y15 (Fuel injector 1). Remove the connector of Y18 (Fuel injector 4). Check the circuit across Y15.2/1 and A4.X1.60/31 for open or short circuit. Check the circuit across Y15.2/2 and A4.X1.60/46 for open or short circuit. Check the circuit across Y18.2/1 and A4.X1.60/32 for open or short circuit. Check the circuit across Y18.2/2 and A4.X1.60/47 for open or short circuit. Make a visual check on each connector. Is any abnormality recognized? No: Go to Step2 Yes: Go to Step6
	Step2	Inspection procedure Reinstall all the removed connectors. Turn the starter switch in ON. Erase the fault code. Execute the control “Fuel injector”. Turn the starter switch in OFF. Replace the damaged Fuel injector. Perform the learned value resetting procedure of Fuel injector which A4 (Combustion engine Control unit) learns. Perform coding of Fuel injector which A4 (Combustion engine Control unit) learns. Go to Step3
	Step3	Inspection procedure Turn the starter switch in OFF. Reinstall all the removed connectors. Erase fault memory and perform a test drive. Check if this diagnosis code has occurred. Are current fault codes present? No: Go to Step5 Yes: Go to Step4
	Step4	Inspection procedure Perform the operation start and replace A4 (Combustion engine Control unit). Go to Step5
	Step5	Inspection completed

https://truckmanualshub.com/

Inspection procedure	Step6	Inspection procedure Repair or replace electrical lines. Reinstall all the removed connectors. Erase fault memory and perform a test drive. Check if this diagnosis code has occurred. Are current fault codes present? No: Go to Step5 Yes: Go to Step2

2797-6: The fuel injector (cylinder 0) has a short circuit.

Generation condition		[Test Condition] • Continuously.
		[Fault Detection] • If the measured pattern for the evaluation of injector bank 0 is equal to applied behaviour bit pattern for short circuit error detection.
		[Defect Debouncing] • Defect condition exceeded cumulatively > 4.00 events • Failure is detected if active for 20% of events
Fault healing		• No Healing possible (disabled by Data set)
System reaction		• None except FIDs.
		• 1) Fid / Reagent dosing quantity for SCR reduced (to DStgy_facUreaDesRed_C) • 2) FId / Fuel quantity Balancing Control disabled (e.g. error in crankshaft speed signal) • 3) FId / Adaptation of the correction values of Fuel Mass Observer (FMO) inhibited (no correction of detected deviation between injected fuel and Lambda sensor signal) • 4) FId / Fuel Mass Observer (FMO) switched off (no monitoring of injected fuel by Lambda sensor) • 5) FId / Injector bank shut off • 6) FId / Nominal Voltage Calibration NVC of injectors disabled • 7) FId / Redundant Engine shut off path not tested due to error debouncing of an injector • 8) FId / Redundant Engine shut off path not tested due to error of an injector • 9) FId / Redundant Engine shut off path test inhibited • 10) FId / Inhibit DPF monitor • 11) FId / Particulate filter (DPF) regeneration not possible due to general system failure • 12) FId / Zero Fuel Calibration (ZFC) of injectors disabled • 13) FId / Zero Fuel Calibration (ZFC) of injectors by Lambda Sensor signal disabled • 14) FId / Misfire Detection disabled • 15) FId / Inhibit OxiCat passive monitor • 16) Fid / SCR Monitoring or DEF injection release not possible (according calibration of Release Masks)
Failure cause		• Short circuit in wiring or injector connected to bank 0
Failure repair		• Check the wiring and injectors connected to bank 0.
Inspection procedure	Step1	Inspection procedure Turn the starter switch in OFF. Remove the connector of A4 (Combustion engine Control unit). Remove the connector of Y15 (Fuel injector 1). Remove the connector of Y18 (Fuel injector 4). Check the circuit across Y15.2/1 and A4.X1.60/31 for open or short circuit. Check the circuit across Y15.2/2 and A4.X1.60/46 for open or short circuit. Check the circuit across Y18.2/1 and A4.X1.60/32 for open or short circuit. Check the circuit across Y18.2/2 and A4.X1.60/47 for open or short circuit. Make a visual check on each connector. Is any abnormality recognized? No: Go to step2 Yes: Go to step6

https://truckmanualshub.com/

Inspection procedure	Step2	Inspection procedure Reinstall all the removed connectors. Turn the starter switch in ON. Erase the fault code. Execute the control “Fuel injector”. Turn the starter switch in OFF. Replace the damaged Fuel injector. Perform the learned value resetting procedure of Fuel injector which A4 (Combustion engine Control unit) learns. Perform coding of Fuel injector which A4 (Combustion engine Control unit) learns. Go to step3
	Step3	Inspection procedure Turn the starter switch in OFF. Reinstall all the removed connectors. Erase fault memory and perform a test drive. Check if this diagnosis code has occurred. Are current fault codes present? No: Go to step4 Yes: Go to step5
	Step4	Inspection completed
	Step5	Inspection procedure Perform the operation start and replace A4 (Combustion engine Control unit). Inspection completed
	Step6	Inspection procedure Repair or replace electrical lines. Reinstall all the removed connectors. Erase fault memory and perform a test drive. Check if this diagnosis code has occurred. Are current fault codes present? No: Go to step4 Yes: Go to step2

2797-12: The DC/DC converter of Injector (Cylinder Bank 1) can not stop.

Generation condition		[Test Condition] • Each time that an attempt is made to switch off a DC/DC converter.
		[Fault Detection] • The bank DC/DC converter cannot be switched off.
		[Defect Debouncing] • Defect condition exceeded cumulatively > 10.00 events • Failure is detected if active for 25% of events
Fault healing		• No Healing possible (disabled by Data set)
System reaction		• None except FIDs
		• 1) Fid / Reagent dosing quantity for SCR reduced (to DStgy_facUreaDesRed_C) • 2) FId / Injector bank shut off • 3) FId / Misfire Detection disabled • 4) FId / Inhibit OxiCat passive monitor • 5) Fid / SCR Monitoring or DEF injection release not possible (according calibration of Release Masks)
Failure cause		• DC/DC converter cannot be shut off
Failure repair		• Check presence of other failures connected to injector supply (short circuit), check capacitor, replace ECM if power stage is responsible.
Inspection procedure	Step1	Inspect or verify the following items. Repair or replace faulty items as necessary. If one of diagnosis codes associated with Fuel injector is generated, make a system diagnosis according to the diagnosis code. Go to Step2

https://truckmanualshub.com/

Inspection procedure	Step2	Inspection procedure Turn the starter switch in OFF. Reinstall all the removed connectors. Erase fault memory and perform a test drive. If the diagnosis code has occurred even during the test drive, start the operation and then replace the A4 (Combustion engine Control unit). Inspection completed

2797-31: ECM internal failure of Injector actuation (chip error).

Generation condition		[Test Condition] • Continuously.
		[Fault Detection] • If the measured pattern for the chip evaluation IVDia_stErrClctChp_mp contents one of the following situation (in Dataset by IVDia_stDFCChp): max charging time exceeded, Differential current in piezo shunt exceeded, Cyl 1 not plausible, Cyl 2 not plausible, Cyl 3 not plausible, Cyl 4 not plausible and Cyl 5 not plausible
		[Defect Debouncing] • Defect condition exceeded cumulatively > 10.00 events • Failure is detected if active for 50% of events
Fault healing		• as soon as the error is detected.
System reaction		• None except FIDs.
		• 1) Fid / Reagent dosing quantity for SCR reduced (to DStgy_facUreaDesRed_C) • 2) FId / Nominal Voltage Calibration NVC of injectors disabled • 3) FId / Redundant Engine shut off path not tested due to error debouncing of an injector • 4) FId / Redundant Engine shut off path not tested due to error of an injector • 5) FId / Redundant Engine shut off path test inhibited • 6) FId / Misfire Detection disabled • 7) FId / Inhibit OxiCat passive monitor • 8) Fid / SCR Monitoring or DEF injection release not possible (according calibration of Release Masks)
Failure cause		• Defective ECM
Failure repair		• Replace ECM
Inspection procedure	Step1	Inspection procedure Erase fault memory and perform a test drive. If the diagnosis code has occurred even during the test drive, start the operation and then replace the A4 (Combustion engine Control unit). Inspection completed

2798-2: The DC/DC converter of Injector (Cylinder Bank 2) shuts off.

Generation condition	[Test Condition] • Continuously
	[Fault Detection] • Buffer capacitor of bank 1 cannot be charged
	[Defect Debouncing] • Immediate
Fault healing	• None

https://truckmanualshub.com/

		• Shut-off of Bank 1 • See FIds list for further reaction
System reaction		• 1) Fid / Reagent dosing quantity for SCR reduced (to DStgy_facUreaDesRed_C) • 2) FId / Injector bank 1 shut off • 3) FId / Redundant Engine shut off path not tested due to error debouncing of an injector • 4) FId / Redundant Engine shut off path not tested due to error of an injector • 5) FId / Redundant Engine shut off path test inhibited • 6) FId / Inhibit DPF monitor • 7) FId / Misfire Detection disabled • 8) FId / Inhibit OxiCat passive monitor • 9) Fid / SCR Monitoring or DEF injection release not possible (according calibration of Release Masks)
Failure cause		• Buffer capacitor cannot be charged, problem can be located in the capacitor or the power stage itself.
Failure repair		• Check presence of other failures connected to injector supply (short circuit), check capacitor, replace ECM if power stage is responsible.
Inspection procedure	Step1	Inspect or verify the following items. Repair or replace faulty items as necessary. If one of diagnosis codes associated with Fuel injector is generated, make a system diagnosis according to the diagnosis code. Go to Step2
	Step2	Inspection procedure Turn the starter switch in OFF. Reinstall all the removed connectors. Erase fault memory and perform a test drive. If the diagnosis code has occurred even during the test drive, start the operation and then replace the A4 (Combustion engine Control unit). Inspection completed

2798-3: Component ‘charge switch of Injector (Cylinder Bank 1)’ has a short circuit.

Generation condition	[Test Condition] • When system is switched on, after the buffer capacitor is loaded.
	[Fault Detection] • If the measured pattern for the evaluation of injector bank 1 is equal to applied behaviour bit pattern for short circuit error detection.
	[Defect Debouncing] • Defect condition exceeded cumulatively > 4.00 events • Failure is detected if active for 50% of events
Fault healing	• No Healing possible (disabled by Data set)
System reaction	• None except FIDs.
	• 1) FId / Fuel quantity set to (= engine stop) • 2) FId / Fuel pressure set to minimum (= engine stop) • 3) FId / Engine torque forced to (=engine stop) • 4) Fid / Reagent dosing quantity for SCR reduced (to DStgy_facUreaDesRed_C) • 5) FId / Adaptation of the correction values of Fuel Mass Observer (FMO) inhibited (no correction of detected deviation between injected fuel and Lambda sensor signal) • 6) FId / Fuel Mass Observer (FMO) switched off (no monitoring of injected fuel by Lambda sensor) • 7) FId / Nominal Voltage Calibration NVC of injectors disabled • 8) FId / Redundant Engine shut off path not tested due to error debouncing of an injector • 9) FId / Redundant Engine shut off path not tested due to error of an injector • 10) FId / Redundant Engine shut off path test inhibited • 11) FId / Inhibit DPF monitor • 12) FId / Misfire Detection disabled • 13) FId / Inhibit OxiCat passive monitor • 14) FId / Shut Off Injector Bank 2 • 15) Fid / SCR Monitoring or DEF injection release not possible (according calibration of Release Masks)

https://truckmanualshub.com/

Failure cause		• Short circuit in wiring or injector connected to bank 1
Failure repair		• Check the wiring and injectors connected to bank 1
Inspection procedure	Step1	Inspection procedure Turn the starter switch in OFF. Remove the connector of A4 (Combustion engine Control unit). Remove the connector of Y16 (Fuel injector 2). Remove the connector of Y17 (Fuel injector 3). Check the circuit across Y16.2/1 and A4.X1.60/17 for open or short circuit. Check the circuit across Y16.2/2 and A4.X1.60/2 for open or short circuit. Check the circuit across Y17.2/1 and A4.X1.60/16 for open or short circuit. Check the circuit across Y17.2/2 and A4.X1.60/1 for open or short circuit. Make a visual check on each connector. Is any abnormality recognized? No: Go to Step2 Yes: Go to Step6
	Step2	Inspection procedure Reinstall all the removed connectors. Turn the starter switch in ON. Erase the fault code. Execute the control “Fuel injector”. Turn the starter switch in OFF. Replace the damaged Fuel injector. Perform the learned value resetting procedure of Fuel injector which A4 (Combustion engine Control unit) learns. Perform coding of Fuel injector which A4 (Combustion engine Control unit) learns. Go to Step3
	Step3	Inspection procedure Turn the starter switch in OFF. Reinstall all the removed connectors. Erase fault memory and perform a test drive. Check if this diagnosis code has occurred. Are current fault codes present? No: Go to Step5 Yes: Go to Step4
	Step4	Inspection procedure Perform the operation start and replace A4 (Combustion engine Control unit). Go to Step5
	Step5	Inspection completed
	Step6	Inspection procedure Repair or replace electrical lines. Reinstall all the removed connectors. Erase fault memory and perform a test drive. Check if this diagnosis code has occurred. Are current fault codes present? No: Go to Step5 Yes: Go to Step2

2798-6: The fuel injector (cylinder 1) has a short circuit.

Generation condition	[Test Condition] • Continuously.
	[Fault Detection] • If the measured pattern for the evaluation of injector bank 1 is equal to applied behaviour bit pattern for short circuit error detection.
	[Defect Debouncing] • Defect condition exceeded cumulatively > 4.00 events • Failure is detected if active for 20% of events
Fault healing	• No Healing possible (disabled by Data set)

https://truckmanualshub.com/

		• None except FIDs.
System reaction		• 1) Fid / Reagent dosing quantity for SCR reduced (to DStgy_facUreaDesRed_C) • 2) FId / Fuel quantity Balancing Control disabled (e.g. error in crankshaft speed signal) • 3) FId / Adaptation of the correction values of Fuel Mass Observer (FMO) inhibited (no correction of detected deviation between injected fuel and Lambda sensor signal) • 4) FId / Fuel Mass Observer (FMO) switched off (no monitoring of injected fuel by Lambda sensor) • 5) FId / Injector bank 1 shut off • 6) FId / Nominal Voltage Calibration NVC of injectors disabled • 7) FId / Redundant Engine shut off path not tested due to error debouncing of an injector • 8) FId / Redundant Engine shut off path not tested due to error of an injector • 9) FId / Redundant Engine shut off path test inhibited • 10) FId / Inhibit DPF monitor • 11) FId / Particulate filter (DPF) regeneration not possible due to general system failure • 12) FId / Zero Fuel Calibration (ZFC) of injectors disabled • 13) FId / Zero Fuel Calibration (ZFC) of injectors by Lambda Sensor signal disabled • 14) FId / Misfire Detection disabled • 15) FId / Inhibit OxiCat passive monitor • 16) Fid / SCR Monitoring or DEF injection release not possible (according calibration of Release Masks)
Failure cause		• Short circuit in wiring or injector connected to bank 1.
Failure repair		• Check the wiring and injectors.
Inspection procedure	Step1	Inspection procedure Turn the starter switch in OFF. Remove the connector of A4 (Combustion engine Control unit). Remove the connector of Y16 (Fuel injector 2). Remove the connector of Y17 (Fuel injector 3). Check the circuit across Y16.2/1 and A4.X1.60/17 for open or short circuit. Check the circuit across Y16.2/2 and A4.X1.60/2 for open or short circuit. Check the circuit across Y17.2/1 and A4.X1.60/16 for open or short circuit. Check the circuit across Y17.2/2 and A4.X1.60/1 for open or short circuit. Make a visual check on each connector. Is any abnormality recognized? No: Go to Step2 Yes: Go to Step6
	Step2	Inspection procedure Reinstall all the removed connectors. Turn the starter switch in ON. Erase the fault code. Execute the control “Fuel injector”. Turn the starter switch in OFF. Replace the damaged Fuel injector. Perform the learned value resetting procedure of Fuel injector which A4 (Combustion engine Control unit) learns. Perform coding of Fuel injector which A4 (Combustion engine Control unit) learns. Go to Step3
	Step3	Inspection procedure Turn the starter switch in OFF. Reinstall all the removed connectors. Erase fault memory and perform a test drive. Check if this diagnosis code has occurred. Are current fault codes present? No: Go to Step5 Yes: Go to Step4
	Step4	Inspection procedure Perform the operation start and replace A4 (Combustion engine Control unit). Go to Step5
	Step5	Inspection completed

https://truckmanualshub.com/

Inspection procedure	Step6	Inspection procedure Repair or replace electrical lines. Reinstall all the removed connectors. Erase fault memory and perform a test drive. Check if this diagnosis code has occurred. Are current fault codes present? No: Go to Step5 Yes: Go to Step2

2798-12: The DC/DC converter of Injector (Cylinder Bank 2) can not stop.

Generation condition		[Test Condition] • Each time that an attempt is made to switch off a DC/DC converter.
		[Fault Detection] • The bank DC/DC converter cannot be switched off.
		[Defect Debouncing] • Defect condition exceeded cumulatively > 10.00 events • Failure is detected if active for 25% of events
Fault healing		• No Healing possible (disabled by Data set)
System reaction		• None except FIDs
		• 1) Fid / Reagent dosing quantity for SCR reduced (to DStgy_facUreaDesRed_C) • 2) FId / Injector bank 1 shut off • 3) FId / Misfire Detection disabled • 4) FId / Inhibit OxiCat passive monitor • 5) Fid / SCR Monitoring or DEF injection release not possible (according calibration of Release Masks)
Failure cause		• DC/DC converter cannot be shut off
Failure repair		• Check presence of other failures connected to injector supply (short circuit), check capacitor, replace ECM if power stage is responsible.
Inspection procedure	Step1	Inspect or verify the following items. Repair or replace faulty items as necessary. If one of diagnosis codes associated with Fuel injector is generated, make a system diagnosis according to the diagnosis code. Go to Step2
	Step2	Inspection procedure Turn the starter switch in OFF. Reinstall all the removed connectors. Erase fault memory and perform a test drive. If the diagnosis code has occurred even during the test drive, start the operation and then replace the A4 (Combustion engine Control unit). Inspection completed

2900-2: CAN-receive-frame Electronic transmission control: Data erratic, intermittent or incorrect

Generation condition	[Test Condition] • Monitoring is active 2.00s after ECU initialization while engine isn't running yet, while the engine isn't cranking, 2.00s after engine startup, while the battery voltage is over 10.00V, as long as the battery voltage is over 10.00V and 2.00s after this threshold has been exceeded, if none of the CAN controllers is in bus-off state, 2.00s after last CAN controller is no more in bus-off state and if the ECU is not in afterrun • Continuously
	[Fault Detection] • Data length of the ETC7 is not equal to the specified data length in the CAN-DLC.
	[Defect Debouncing] • Defect condition fulfilled continuously >500.0 ms
Fault healing	• Correct message data length
System reaction	• When there is an error in the reception of the frame, the value of Transmission engine crank enable is replaced by default value Com_stCrnkDsbl = 0.00-
Failure cause	• Wrong CAN configuration in Transmission Controller ECU

https://truckmanualshub.com/

Failure repair		• Check CAN configuration in Transmission Controller ECU
Inspection procedure	Step1	Inspection procedure Perform a diagnosis on the A28 (DUONIC Control unit) side system.

2900-9: CAN timeout fault: CAN-receive-frame Electronic transmission control Abnormal update rate

Generation condition		[Test Condition] • Monitoring is active 2.00s after ECU initialization while engine isn't running yet, while the engine isn't cranking, 2.00s after engine startup, while the battery voltage is over 10.00V, as long as the battery voltage is over 10.00V and 2.00s after this threshold has been exceeded, if none of the CAN controllers is in bus-off state, 2.00s after last CAN controller is no more in bus-off state and if the ECU is not in afterrun • Continuously
		[Fault Detection] • Fault is detected if a time out of ETC7 message occurs.
		[Defect Debouncing] • Defect condition fulfilled continuously >500.0 ms
Fault healing		• When the frame is received, the time out error is cleared.
System reaction		• The value of 'Transmission engine crank enable' • Com_stCrnkDsbl is set to default value 0.00-
Failure cause		• Defective CAN controller of Gearbox Control Unit, under voltage of ETC, missing ETC, CAN cable connecting the ETC is disconnected or broken. Short circuit in wiring.
Failure repair		• Check presence and correct connection of the ETC to the network, check correct functioning of the ETC CAN controller and its voltage supply. Check wiring.
Inspection procedure	Step1	Refer to the help menu for Nos. other than above. *1: M/T *2: DUONIC *3: ISS (With Lock brake) *4: ISS (Without Lock brake) *5: Lock brake (Without ISS) *6: Other than *3,*4,*5 *7: Full-automatic air conditioner *8: Auto leveling *9: Manual leveling Inspection procedure If one of diagnosis codes associated with A28 (DUONIC Control unit) is generated, make a system diagnosis according to the diagnosis code. Go to step2
	Step2	Refer to the help menu for Nos. other than above. *1: M/T *2: DUONIC *3: ISS (With Lock brake) *4: ISS (Without Lock brake) *5: Lock brake (Without ISS) *6: Other than *3,*4,*5 *7: Full-automatic air conditioner *8: Auto leveling *9: Manual leveling Inspection procedure Turn the starter switch in OFF. Remove all ECU connectors from the CAN communication line. Check CAN line for open circuit, short circuit to positive, short circuit to ground or short circuit to another electrical line. Is any abnormality recognized? No: Go to step3 Yes: Go to step8

https://truckmanualshub.com/

Inspection procedure	Step3	Inspection procedure Attach the connector of A20 (SAM). Check CAN line for open circuit, short circuit to positive, short circuit to ground or short circuit to another electrical line. Is any abnormality recognized? No: Go to step4 Yes: Go to step7
	Step4	Inspection procedure Attach the connector of A28 (DUONIC Control unit). Check CAN line for open circuit, short circuit to positive, short circuit to ground or short circuit to another electrical line. Is any abnormality recognized? No: Go to step5 Yes: Go to step6
	Step5	Inspection procedure Turn the starter switch in OFF. Reinstall all the removed connectors. Erase fault memory and perform a test drive. If the diagnosis code has occurred even during the test drive, start the operation and then replace the A4 (Combustion engine Control unit). Inspection completed
	Step6	Inspection procedure Turn the starter switch in OFF. Reinstall all the removed connectors. Erase fault memory and perform a test drive. If the diagnosis code has occurred even during the test drive, start the operation and then replace the A28 (DUONIC Control unit). Inspection completed
	Step7	Inspection procedure Turn the starter switch in OFF. Reinstall all the removed connectors. Erase fault memory and perform a test drive. If the diagnosis code has occurred even during the test drive, start the operation and then replace the A20 (SAM). Inspection completed
	Step8	Refer to the help menu for Nos. other than above. *1: M/T *2: DUONIC *3: ISS (With Lock brake) *4: ISS (Without Lock brake) *5: Lock brake (Without ISS) *6: Other than *3,*4,*5 *7: Full-automatic air conditioner *8: Auto leveling *9: Manual leveling Inspection procedure Repair or replace electrical lines. Reinstall all the removed connectors. Turn the starter switch in ON. Inspection completed

https://truckmanualshub.com/

3031-0: Signal Range Check (SRC) for 'DEF tank temperature' reports HIGH.

Generation condition		[Test Condition] • Monitoring is active while the battery voltage is over 10.00V and as long as the battery voltage is over 10.00V and 2.00s after this threshold has been exceeded • Continuously if the ADC module does not report any error.
		[Fault Detection] • The Sensed raw voltage value SCR_uRawUTnkT is higher than 3.12V
		[Defect Debouncing] • Defect condition exceeded cumulatively > 500.00ms • Failure is detected if active for 50% of the time
Fault healing		• No Healing possible (disabled by Data set)
System reaction		• DEF Tank temperature is frozen at last valid value on preliminary failure and ramps to fixed replacement value 19.96°C {67.93°F} if failure is validated using slope 3300.00K/s or 3300.00K/s depending on whether the replacement value is above or below the current value • Further reactions according FID (see FID's)
		• 1) FId / Freeze DEF tank temperature value if preliminary failure is detected • 2) FId / Replace DEF tank temperature with default value if failure is validated • 3) FId / Inhibit physical range check of DEF temperature • 4) FId / Tank heating not released • 5) FId / Inhibit Monitoring of Tank Heater Circuit • 6) FId / Disable the sending of TESTING signal for heater Tank
Failure cause		• Sensor defective or short circuit in wiring to external source
Failure repair		• Check wiring or replace sensor
Inspection procedure	Step1	Inspect or verify the following items. Repair or replace faulty items as necessary. If one of diagnosis codes associated with A20 (SAM) is generated, make a system diagnosis according to the diagnosis code. Go to Step2
	Step2	Inspection procedure Turn the starter switch in OFF. Remove the connector of A4 (Combustion engine Control unit). Remove the connector of B36 (DEF temperature sensor). Check the circuit across A4.X2.94/89 and B36.4/4 for open or short circuit. Check the circuit across A4.X2.94/33 and B36.4/3 for open or short circuit. Make a visual check on each connector. Is any abnormality recognized? No: Go to Step3 Yes: Go to Step7
	Step3	Inspection procedure Turn the starter switch in OFF. Replace component "A40 (DEF tank)". Reinstall all the removed connectors. Turn the starter switch in ON. Perform the learned value resetting procedure of A40 (DEF tank) which A4 (Combustion engine Control unit) learns. Go to Step4
	Step4	Inspection procedure Turn the starter switch in OFF. Reinstall all the removed connectors. Erase fault memory and perform a test drive. Check if this diagnosis code has occurred. Are current fault codes present? No: Go to Step6 Yes: Go to Step5
	Step5	Inspection procedure Perform the operation start and replace A4 (Combustion engine Control unit). Go to Step6
	Step6	Inspection completed

https://truckmanualshub.com/

Inspection procedure	Step7	Inspection procedure Turn the starter switch in OFF. Remove the connector of A4 (Combustion engine Control unit). Remove the connector of X19 (Intermediate connector). Check the circuit across A4.X2.94/33 and X19.16/6 for open or short circuit. Check the circuit across A4.X2.94/89 and X19.16/5 for open or short circuit. Make a visual check on each connector. Is any abnormality recognized? No: Go to Step8 Yes: Go to Step9
	Step8	Inspection procedure Repair or replace the harness across B36 (DEF temperature sensor) and X19 (Intermediate connector). Reinstall all the removed connectors. Erase fault memory and perform a test drive. Check if this diagnosis code has occurred. Are current fault codes present? No: Go to Step6 Yes: Go to Step3
	Step9	Inspection procedure Repair or replace the harness across A4 (Combustion engine Control unit) and X19 (Intermediate connector). Reinstall all the removed connectors. Erase fault memory and perform a test drive. Check if this diagnosis code has occurred. Are current fault codes present? No: Go to Step6 Yes: Go to Step3

3031-1: Signal Range Check (SRC) for 'DEF tank temperature' reports LOW.

Generation condition	[Test Condition] • Monitoring is active while the battery voltage is over 10.00V and as long as the battery voltage is over 10.00V and 2.00s after this threshold has been exceeded • Continuously if the ADC module does not report any error.
	[Fault Detection] • The Sensed raw voltage value SCR_uRawUTnkT is below 165.00mV
	[Defect Debouncing] • Defect condition exceeded cumulatively > 500.00ms • Failure is detected if active for 50% of the time
Fault healing	• No Healing possible (disabled by Data set)
System reaction	• DEF Tank temperature is frozen at last valid value on preliminary failure and ramps to fixed replacement value 19.96°C {67.93°F} if failure is validated using slope 3300.00K/s or 3300.00K/s depending on whether the replacement value is above or below the current value • Further reactions according FID (see FID's)
	• 1) FId / Freeze DEF tank temperature value if preliminary failure is detected • 2) FId / Replace DEF tank temperature with default value if failure is validated • 3) FId / Inhibit physical range check of DEF temperature • 4) FId / Tank heating not released • 5) FId / Inhibit Monitoring of Tank Heater Circuit • 6) FId / Disable the sending of TESTING signal for heater Tank
Failure cause	• Short circuit of sensor to battery or defective sensor
Failure repair	• Check wiring or replace sensor

https://truckmanualshub.com/

Inspection procedure	Step1	Inspect or verify the following items. Repair or replace faulty items as necessary. If one of diagnosis codes associated with A20 (SAM) is generated, make a system diagnosis according to the diagnosis code. Go to Step2
	Step2	Inspection procedure Turn the starter switch in OFF. Remove the connector of A4 (Combustion engine Control unit). Remove the connector of B36 (DEF temperature sensor). Check the circuit across A4.X2.94/89 and B36.4/4 for open or short circuit. Check the circuit across A4.X2.94/33 and B36.4/3 for open or short circuit. Make a visual check on each connector. Is any abnormality recognized? No: Go to Step3 Yes: Go to Step7
	Step3	Inspection procedure Turn the starter switch in OFF. Replace component “A40 (DEF tank)”. Reinstall all the removed connectors. Turn the starter switch in ON. Perform the learned value resetting procedure of A40 (DEF tank) which A4 (Combustion engine Control unit) learns. Go to Step4
	Step4	Inspection procedure Turn the starter switch in OFF. Reinstall all the removed connectors. Erase fault memory and perform a test drive. Check if this diagnosis code has occurred. Are current fault codes present? No: Go to Step6 Yes: Go to Step5
	Step5	Inspection procedure Perform the operation start and replace A4 (Combustion engine Control unit). Go to Step6
	Step6	Inspection completed
	Step7	Inspection procedure Turn the starter switch in OFF. Remove the connector of A4 (Combustion engine Control unit). Remove the connector of X19. Check the circuit across A4.X2.94/33 and X19.16/6 for open or short circuit. Check the circuit across A4.X2.94/89 and X19.16/5 for open or short circuit. Make a visual check on each connector. Is any abnormality recognized? No: Go to Step8 Yes: Go to Step9
	Step8	Inspection procedure Repair or replace the harness across B36 (DEF temperature sensor) and X19. Reinstall all the removed connectors. Erase fault memory and perform a test drive. Check if this diagnosis code has occurred. Are current fault codes present? No: Go to Step6 Yes: Go to Step3
	Step9	Inspection procedure Repair or replace the harness across A4 (Combustion engine Control unit) and X19. Reinstall all the removed connectors. Erase fault memory and perform a test drive. Check if this diagnosis code has occurred. Are current fault codes present? No: Go to Step6 Yes: Go to Step3

https://truckmanualshub.com/

3050-10: Pressure Oscillation too frequent Error.Abnormal Rate Of Change

Generation condition		[Test Condition] • Continuously
		[Fault Detection] • After every system start a timer is started, if the duration between system start and Pressure Oscillation detection is smaller than 60.00min an error will be set.
		[Defect Debouncing] • Defect condition fulfilled continuously >10.0 ms
Fault healing		• This error will be healed if duration between system start and pressure oscillation detection > 60.00min
System reaction		• None
Failure cause		• Open item, should be checked with Bosch, probably too rigid pipes or excessive system vibrations
Failure repair		• See fault cause (probable cause non conformity of pipes)
Inspection procedure	Step1	Inspection procedure Turn the starter switch in OFF. Remove the connector of A4 (Combustion engine Control unit). Remove the connector of B30 (DEF pressure sensor). Check the circuit across A4.X2.94/79 and B30.3/3 for open or short circuit. Check the circuit across A4.X2.94/77 and B30.3/2 for open or short circuit. Check the circuit across A4.X2.94/43 and B30.3/1 for open or short circuit. Make a visual check on each connector. Is any abnormality recognized? No: Go to Step2 Yes: Go to Step6
	Step2	Inspection procedure Turn the starter switch in OFF. Replace component “A40 (DEF tank)”. Reinstall all the removed connectors. Turn the starter switch in ON. Perform the learned value resetting procedure of A40 (DEF tank) which A4 (Combustion engine Control unit) learns. Go to Step3
	Step3	Inspection procedure Turn the starter switch in OFF. Reinstall all the removed connectors. Erase fault memory and perform a test drive. Check if this diagnosis code has occurred. Are current fault codes present? No: Go to Step5 Yes: Go to Step4
	Step4	Inspection procedure Perform the operation start and replace A4 (Combustion engine Control unit). Go to Step5
	Step5	Inspection completed
	Step6	Inspection procedure Turn the starter switch in OFF. Remove the connector of A4 (Combustion engine Control unit). Remove the connector of X19. Check the circuit across A4.X2.94/43 and X19.16/12 for open or short circuit. Check the circuit across A4.X2.94/77 and X19.16/11 for open or short circuit. Check the circuit across A4.X2.94/79 and X19.16/11 for open or short circuit. Make a visual check on each connector. Is any abnormality recognized? No: Go to Step7 Yes: Go to Step8

https://truckmanualshub.com/

Inspection procedure	Step7	Inspection procedure Repair or replace the harness across B30 (DEF pressure sensor) and X19. Reinstall all the removed connectors. Erase fault memory and perform a test drive. Check if this diagnosis code has occurred. Are current fault codes present? No: Go to Step5 Yes: Go to Step2
	Step8	Inspection procedure Repair or replace the harness across A4 (Combustion engine Control unit) and X19. Reinstall all the removed connectors. Erase fault memory and perform a test drive. Check if this diagnosis code has occurred. Are current fault codes present? No: Go to Step5 Yes: Go to Step2

3050-15: Pressurisation after starting SCR Reagent Feeding is not possible.

Generation condition	[Test Condition] • During system start up (refilling - pressure build up) • Refilling not inhibited by FID_ReFl due to another failure. • Pressure build up not inhibited by FID_PresBuildUp due to another failure. • System Ventilation not inhibited by FId_Vtln due to another failure.
	[Fault Detection] • If the DEF pressure does not reach 350kPa {51psi, 3.6kgf/cm^2} within 10.00s after 1.00- “pressure build up” cycles.
	[Defect Debouncing] • Defect condition exceeded cumulatively > 1.00 events • Failure is detected if active for 50% of events
Fault healing	• Healing only possible at next system start, if the DEF pressure reaches 350kPa {51psi, 3.6kgf/cm^2} within 1.00- “pressure build up” cycles.
System reaction	• System goes into “stand-By” mode --> no pressurisation and no dosing possible. • Possibly power reduction to protect dosing valve against overheating, as no cooling by injection possible. • Further reactions according FID (see FID’s)
	• 1) Fid / Reagent dosing for SCR inhibited • 2) FId / Service regeneration of Particulate filter ((DPF) inhibited (due to DPF failure) • 3) FId / SCR Monitoring or DEF injection release not possible (according calibration of Release Masks)
Failure cause	• DEF level too low (suction of air) • Suction tube leaky • Leakage in the DEF system outside or internal (i.e. back flow into tank, leakage into pump housing, external leakage). • Dosing valve blocked open. • Pump not delivering enough. • Reverting valve blocked open. • DEF pressure sensor shows too low values.

https://truckmanualshub.com/

Failure repair		• Check, if enough DEF was in tank when failure occurred (ambient conditions) • Check if pump can reach enough pressure with tester: set system under normal pressure (500kPa {73psi, 5.1kgf/cm^2}): • check if there is an external leakage (visible check) • if 500kPa {73psi, 5.1kgf/cm^2} reachable: open dosing valve fully for ~3 sec, if pressure drops < 420kPa {61psi, 4.3kgf/cm^2} --> pump not delivering enough or internal leakage --> check tubing for correct connection (suction tube!), replace pump module. If pressure remains stable --> system seems to be OK • if 500kPa {73psi, 5.1kgf/cm^2} not reachable: pump not delivering enough or internal leakage or dosing valve blocked open or reverting valve blocked open --> check tubing for correct connection (suction tube!), check dosing valve, replace pump module • Check dosing valve and reverting valve: Set pump speed to ~20% and actuate reverse valve --> pressure must drop down (< 80kPa {12psi, 0.8kgf/cm^2} absolute) - if OK: open dosing valve --> pressure must rise to ~100kPa {15psi, 1.0kgf/cm^2} absolute (=ambient) • If no depressurisation detected: reverting valve blocked closed or dosing valve open. • If there was a depressurisation before actuating the reverting valve --> reverting valve blocked closed.
Inspection procedure	Step1	Inspect or verify the following items. Repair or replace faulty items as necessary. If amount of DEF in DEF tank is not sufficient, add DEF. If DEF is leaking from A18 (DEF delivery pump), repair or replace If DEF is leaking from Y7 (DEF metering device), repair or replace If DEF is leaking from DEF tube, repair or replace For procedures, refer to the Shop Manual. Go to Step2
	Step2	Inspect or verify the following items. Repair or replace faulty items as necessary. If one of diagnosis codes associated with A18 (DEF delivery pump) is generated, make a system diagnosis according to the diagnosis code. If one of diagnosis codes associated with Y7 (DEF metering device) is generated, make a system diagnosis according to the diagnosis code. If one of diagnosis codes associated with B30 (DEF pressure sensor) is generated, make a system diagnosis according to the diagnosis code. If one of diagnosis codes associated with Y20 (DEF switchover valve) is generated, make a system diagnosis according to the diagnosis code. Go to Step3
	Step3	Inspect or verify the following items. Repair or replace faulty items as necessary. If one of diagnosis codes associated with A20 (SAM) is generated, make a system diagnosis according to the diagnosis code. Go to Step4
	Step4	Inspection procedure Remove Y7 (DEF metering device) from Exhaust pipe. Turn the starter switch in ON. Perform control and make sure that appropriate DEF can be added. Is any abnormality recognized? No: Go to Step5 Yes: Go to Step9
	Step5	Inspection procedure Turn the starter switch in OFF. Replace component “A40 (DEF tank)”. Reinstall all the removed connectors. Turn the starter switch in ON. Perform the learned value resetting procedure of A40 (DEF tank) which A4 (Combustion engine Control unit) learns. Go to Step6

https://truckmanualshub.com/

Inspection procedure	Step6	Inspection procedure Turn the starter switch in OFF. Reinstall all the removed connectors. Erase fault memory and perform a test drive. Check if this diagnosis code has occurred. Are current fault codes present? No: Go to Step8 Yes: Go to Step7
	Step7	Inspection procedure Perform the operation start and replace A4 (Combustion engine Control unit). Go to Step8
	Step8	Inspection completed
	Step9	Inspection procedure Turn the starter switch in OFF. Remove DEF tube from A18 (DEF delivery pump). Remove Y7 (DEF metering device) from DEF tube. Check the Clogging or Breaks at DEF tube. Is any abnormality recognized? No: Go to Step10 Yes: Go to Step11
	Step10	Inspection procedure Turn the starter switch in OFF. Replace component “Y7 (DEF metering device)”. Mount DEF tube on A18 (DEF delivery pump). Mount DEF tube on Y7 (DEF metering device). Mount Y7 (DEF metering device) on Exhaust pipe. Reinstall all the removed connectors. Turn the starter switch in ON. Erase fault memory and perform a test drive. Check if this diagnosis code has occurred. Is any abnormality recognized? No: Go to Step8 Yes: Go to Step5
	Step11	Inspection procedure Turn the starter switch in OFF. Replace component “DEF tube”. Mount DEF tube on A18 (DEF delivery pump). Mount DEF tube on Y7 (DEF metering device). Mount Y7 (DEF metering device) on Exhaust pipe. Reinstall all the removed connectors. Turn the starter switch in ON. Erase fault memory and perform a test drive. Check if this diagnosis code has occurred. Is any abnormality recognized? No: Go to Step8 Yes: Go to Step5

3050-16: Signal Range Check (SRC) for ‘DEF Pressure’ reports HIGH (Second level).Data Valid But Above Normal Operational Range.

Generation condition	[Test Condition] • Continuously
	[Fault Detection] • DEF pressure > 750kPa {110psi, 7.6kgf/cm^2}
	[Defect Debouncing] • Defect condition exceeded cumulatively > 1.00 events • Failure is detected if active for 50% of events
Fault healing	• No Healing possible (disabled by Data set)

https://truckmanualshub.com/

		• System goes into Stand-By state (= no dosing). • As soon as failure healed (i.e. DEF pressure < 750kPa {110psi, 7.6kgf/cm^2} for 65535.00- times) the system tries to start up --> possibly “toggling behaviour as stand-by - pressure build up - normal operation - stand-by....”.
System reaction		• 1) Fid / The DEF Dosing system goes into Error mode instead of Afterrun • 2) Fid / Reagent dosing for SCR inhibited • 3) DEF dosing inhibited --> Dosing system goes to error state • 4) Fid / DEF dosing system does not enter in pressure control mode (i.e. will not inject DEF) • 5) Pressure control of reagent dosing system inhibited --> dosing system goes into error state • 6) Pressure reduction procedure 1 of reagent dosing system activated (pressure reduction by open dosing valve and pump speed =) • 7) FId / Release of the SCRMon function/no emergency shut-off with emptying • 8) FId / Service regeneration of Particulate filter ((DPF) inhibited (due to DPF failure) • 9) Fid / SCR Monitoring or DEF injection release not possible (according calibration of Release Masks) • 10) FId / Inhibit reverting valve plausibility check
Failure cause		• DEF level too low (suction of air) • Back flow into tank clogged • Pump control not OK (e.g. pump is running on max due to electric failure). • DEF pressure sensor shows too high values.
Failure repair		• Check if DEF level was OK when failure occurred (see ambient conditions). • Check if back flow line into tank is open (with test: adjust system to normal pressure (500kPa {73psi, 5.1kgf/cm^2}) and check, if pressure is constant, if not, stop pump --> pressure must drop down (=system emptying through back flow line)).
Inspection procedure	Step1	Inspection procedure Inspect the suspected factors mentioned above sequentially to locate faulty parts. Repair or replace the faulty part as necessary.

3050-18: Pressure release during SCR Reagent Feeding is not possible.

Generation condition	[Test Condition] • System in the PRESSUREREDUCTION state (after a failure of DEF pressure during system start up or normal operation OR at system stop by Key 15) • Pressure reduction not inhibited by FID_PresRdc due to another failure.
	[Fault Detection] • The DEF pressure does not drop down to 50kPa {7.3psi, 0.5kgf/cm^2} within 5.50s.
	[Defect Debouncing] • Defect condition exceeded cumulatively > 1.00 events • Failure is detected if active for 50% of events
Fault healing	• No healing in this driving cycle.
System reaction	• System goes into “Stand-By” state --> no evacuation of dosing system (risk of freezing¨) • Possibly also failure “SCRPODPlausURevVlv” stored.
	• 1) Fid / Reagent dosing for SCR inhibited • 2) Fid / The DEF dosing System goes in Error mode after Emptying • 3) Fid / DEF dosing system does not enter in pressure control mode (i.e. will not inject DEF) • 4) Fid / SCR Monitoring or DEF injection release not possible (according calibration of Release Masks)
Failure cause	• Reverse valve does not work (blocked closed). • Back flow tube into tank clogged. • DEF pressure sensor stuck.
Failure repair	• Check if Back flow tube free. • Check if Reverse valve works with tester: set DEF pressure to 500kPa {73psi, 5.1kgf/cm^2} (dosing valve closed) - wait until pressure stable - actuate reverse valve --> if pressure does not drop down --> reverse valve does not work.

https://truckmanualshub.com/

Inspection procedure	Step1	Inspection procedure Inspect the suspected factors mentioned above sequentially to locate faulty parts. Repair or replace the faulty part as necessary.

3050-31: The measured Lambda value of NOx sensor devices from LSU sensor.

Generation condition		[Test Condition] • NOx sensor is ready • No DPF regeneration active • FId_DStgyMonLambda not set by another failure
		[Fault Detection] • DStgy_rLambdaRecDevFlt_mp outside applicable DStgy_rO2AdapFlt_mp dependent curves • window (between -0.05- at 0.00- and 0.05- at 0.00-)
		[Defect Debouncing] • Defect condition fulfilled continuously >60000.0 ms
Fault healing		• Lambda deviation in limits
System reaction		• None except FIDs
		• 1) FId / Require NOx sensor plausibility test • 2) FId / failure in a component for determination of NOx estimation • 3) Fid / SCR Monitoring or DEF injection release not possible (according calibration of Release Masks)
Failure cause		• Lambda sensor or NOx sensor measurement deviating
Failure repair		• If no LSU failures present NOx sensor probably defective. • If also NOx plausibility failure is present NOx sensor defective, replace NOx sensor. • If other LSU failure are presents, check LSU problems first.
Inspection procedure	Step1	Inspect or verify the following items. Repair or replace faulty items as necessary. If one of diagnosis codes associated with B29 (Oxygen sensor) is generated, make a system diagnosis according to the diagnosis code. Go to Step2
	Step2	Inspect or verify the following items. Repair or replace faulty items as necessary. If one of diagnosis codes associated with A20 (SAM) is generated, make a system diagnosis according to the diagnosis code. Go to Step3
	Step3	Inspection procedure Turn the starter switch in OFF. Remove the connector of A4 (Combustion engine Control unit). Remove the connector of B29 (Oxygen sensor). Remove the connector of A20 (SAM). Check the circuit across A4.X2.94/62 and B31.5/4 for open or short circuit. Check the circuit across A4.X2.94/61 and B31.5/3 for open or short circuit. Check the circuit across A20.X10.14/2 and B31.5/1 for open or short circuit. Check the circuit across B31.5/2 and Ground for open or short circuit. Make a visual check on each connector. Is any abnormality recognized? No: Go to Step4 Yes: Go to Step8
	Step4	Inspection procedure Turn the starter switch in OFF. Replace component “B29 (Oxygen sensor)”. Reinstall all the removed connectors. Turn the starter switch in ON. Go to Step5
	Step5	Inspection procedure Turn the starter switch in OFF. Reinstall all the removed connectors. Erase fault memory and perform a test drive. Check if this diagnosis code has occurred. Are current fault codes present? No: Go to Step7 Yes: Go to Step6

Inspection procedure	Step6	Inspection procedure Perform the operation start and replace A4 (Combustion engine Control unit). Go to Step7
	Step7	Inspection completed
	Step8	Inspection procedure Turn the starter switch in OFF. Remove the connector of A4 (Combustion engine Control unit). Remove the connector of X42 (Intermediate connector). Remove the connector of A20 (SAM). Check the circuit across A4.X2.94/62 and X42.8/3 for open or short circuit. Check the circuit across A4.X2.94/61 and X42.8/2 for open or short circuit. Check the circuit across A20.X10.14/2 and X42.8/4 for open or short circuit. Check the circuit across X42.8/1 and Ground for open or short circuit. Make a visual check on each connector. Is any abnormality recognized? No: Go to Step9 Yes: Go to Step10
	Step9	Inspection procedure Repair or replace the harness across B29 (Oxygen sensor) and X42 (Intermediate connector). Reinstall all the removed connectors. Erase fault memory and perform a test drive. Check if this diagnosis code has occurred. Are current fault codes present? No: Go to Step7 Yes: Go to Step4
	Step10	Inspection procedure Repair or replace the harness across A4 (Combustion engine Control unit) and X42 (Intermediate connector). Reinstall all the removed connectors. Erase fault memory and perform a test drive. Check if this diagnosis code has occurred. Are current fault codes present? No: Go to Step7 Yes: Go to Step4

3051-0: Signal Range Check (SRC) for 'DEF Pressure' reports LOW.

Generation condition	[Test Condition] • Dosing system in normal operation ("metering control") and DEF pressure > 200kPa {29psi, 2.0kgf/cm^2} since 7.00s. • Monitoring not inhibited by FID_MetCtl due to another failure.
	[Fault Detection] • DEF pressure drops below 400kPa {58psi, 4.1kgf/cm^2} (but not below 200kPa {29psi, 2.0kgf/cm^2}) and does no more reach or exceed 420kPa {61psi, 4.3kgf/cm^2} during 10.00s.
	[Defect Debouncing] • Immediate
Fault healing	• DEF pressure > 420kPa {61psi, 4.3kgf/cm^2} after the system was depressurised and restarted again.
System reaction	• System goes into "pressure reduction" state and restarts with "pressure build up", i.e. no DEF injection. • Further reaction according FID (see FID's)
	• 1) Fid / Reagent dosing for SCR inhibited • 2) Fid / SCR Monitoring or DEF injection release not possible (according calibration of Release Masks) • 3) FId / Inhibit reverting valve plausibility check
Failure cause	• DEF level too low (suction of air) • Leakage in the DEF system outside or internal (i.e. back flow into tank, leakage into pump housing, external leakage). • Pump not delivering enough. • Reverting valve blocked "open" (occurrence during normal operation - low probability) • DEF pressure sensor shows too low values.

https://truckmanualshub.com/

Failure repair		• Check, if enough DEF was in tank when failure occurred (ambient conditions) • Check if pump can reach enough pressure with tester: set system under normal pressure (500kPa {73psi, 5.1kgf/cm^2}): • check if there is an external leakage (visible check) • if 500kPa {73psi, 5.1kgf/cm^2} reachable: open dosing valve fully for ~3 sec, if pressure drops < 420kPa {61psi, 4.3kgf/cm^2} --> pump not delivering enough or internal leakage --> replace pump module. If pressure remains stable --> system seems to be OK • if 500kPa {73psi, 5.1kgf/cm^2} not reachable: pump not delivering enough or internal leakage or reverting valve blocked open--> replace pump module
Inspection procedure	Step1	Inspection procedure Inspect the suspected factors mentioned above sequentially to locate faulty parts. Repair or replace the faulty part as necessary.

3051-16: Signal Range Check (SRC) for 'DEF Pressure' reports HIGH.

Generation condition		[Test Condition] • Dosing system in normal operation ("metering control") and monitoring not inhibited by FID_MetCtl due to another failure.
		[Fault Detection] • DEF pressure exceeds 650kPa {94psi, 6.6kgf/cm^2} and does no more drop below 600kPa {87psi, 6.1kgf/cm^2} during 60.00s.
		[Defect Debouncing] • Immediate
Fault healing		• DEF pressure remains < 650kPa {94psi, 6.6kgf/cm^2} after the system was depressurised and restarted again.
System reaction		• System goes into "pressure reduction" state and restarts with "pressure build up", i.e. no DEF injection. • If the DEF pressure exceeded 750kPa {110psi, 7.6kgf/cm^2}, then also the failure "SCRMonOvrPresErr" will be stored. • Further reaction according FID (see FID's)
		• 1) Fid / Reagent dosing for SCR inhibited • 2) Fid / SCR Monitoring or DEF injection release not possible (according calibration of Release Masks) • 3) FId / Inhibit reverting valve plausibility check
Failure cause		• DEF level too low (suction of air) • Back flow into tank clogged • Pump control not OK (e.g. pump is running on max due to electric failure). • DEF pressure sensor shows too high values.
Failure repair		• Check if DEF level was OK when failure occurred (see ambient conditions). • Check if back flow line into tank is open (with test: adjust system to normal pressure (500kPa {73psi, 5.1kgf/cm^2}) and check, if pressure is constant, if not, stop pump --> pressure must drop down (=system emptying through back flow line)).
Inspection procedure	Step1	Inspection procedure Inspect the suspected factors mentioned above sequentially to locate faulty parts. Repair or replace the faulty part as necessary.

3058-0: Positive governor deviation of EGR Control above upper limit.

Generation condition	[Test Condition] • Monitoring is active if the ECU is not in afterrun • The check is carried out every 20ms if the EGR closed control loop is switched on, (AirCtl_swtGovEna = 1) and no other system error is present. • No DPF regeneration is active.
	[Fault Detection] • The limit for the maximum permissible positive control deviation of the exhaust-gas recirculation control has been exceeded. • Limit is applied in a map AirCtl_mMaxDvt_MAP depending on fuel quantity and engine speed.
	[Defect Debouncing] • Defect condition fulfilled continuously >5000.0 ms

https://truckmanualshub.com/

Fault healing		• When the error is present in DFC_AirCtlGovDvtMax, to allow healing the closed control loop is restored in a speed/fuelling range between 600.00rpm and 600.00rpm / 0.00mg/hub and 10.00mg/hub • If the engine is running in this area and at the same time deviation is below the limit for the maximum permissible positive control deviation of the exhaust-gas recirculation failure is healed.
System reaction		• The exhaust-gas recirculation control is shut off and constant default values are output.
		• 1) FId / Check of gain plausibility of air flow meter (HFM/AFS) at low idle disabled • 2) FId / Enables healing of governor deviation in case of active governor deviation of Air (EGR) control • 3) FId / Inhibit ISS, max number of engine starts exceeded • 4) Fid / SCR Monitoring or DEF injection release not possible (according calibration of Release Masks) • 5) FId / Adaptation of the correction values of Fuel Mass Observer (FMO) inhibited (no correction of detected deviation between injected fuel and Lambda sensor signal) • 6) FId / Fuel Mass Observer (FMO) switched off (no monitoring of injected fuel by Lambda sensor) • 7) FId / The Adaptation of lambda Sensor disabled • 8) FId / The Difference Check between several Lambda Sensors is disabled • 9) FId / Dynamic Signal Monitoring of Lambda Sensor disabled • 10) FId / Electrical Open Load Check of Lambda Sensor disabled • 11) FId / O2 Signal of Lambda Sensor not valid • 12) FId / Signal Range Check of O2 Signal of lambda Sensor disabled • 13) FId / Plausibility Check of O2-Signal of Lambda Sensor (e.g. with HFM or Air calculation by Boost pressure) is disabled and last valid value taken • 14) FId / Correction of begin of Main injection 1 according deviation of air flow disabled • 15) FId / Inhibit DPF monitor • 16) FId / Particulate filter ((DPF) Regeneration inhibited • 17) FId / Service regeneration of Particulate filter ((DPF) inhibited (due to DPF failure) • 18) FId / Zero Fuel Calibration (ZFC) of injectors disabled • 19) FId / Inhibit EGR cooler efficiency monitoring • 20) FId / Monitoring for the destroyed particle filter (DPF) by minimal flow resistance disabled • 21) FId / Monitoring of particulate filter (DPF) by comparing the calculated flow resistance with measured pressure drop disabled • 22) FId / Status of function identifier FId_EngDemTrqLimErr5 • 23) FId / Engine speed Limitation 2 for HIgh/Low engine speed (HLS) control active
Failure cause		• Defective air mass flow sensor, leakage in the air duct, electrical or mechanical defect in EGR actuators or defect in wiring of EGR actuators
Failure repair		• Check air mass flow sensor, air duct, EGR actuators and their wiring
Inspection procedure	Step1	Inspect or verify the following items. Repair or replace faulty items as necessary. Component ‘A14 (EGR valve)’ is faulty. Component ‘Y8 (Exhaust gas recirculation actuator)’ is faulty. Damage of Intake system For procedures, refer to the Shop Manual. Go to Step2
	Step2	Inspect or verify the following items. Repair or replace faulty items as necessary. If one of diagnosis codes associated with A14 (EGR valve) is generated, make a system diagnosis according to the diagnosis code. If one of diagnosis codes associated with Y8 (Exhaust gas recirculation actuator) is generated, make a system diagnosis according to the diagnosis code. Go to Step3
	Step3	Inspect or verify the following items. Repair or replace faulty items as necessary. If one of diagnosis codes associated with A20 (SAM) is generated, make a system diagnosis according to the diagnosis code. Go to Step4

https://truckmanualshub.com/

Inspection procedure	Step4	Inspection procedure Turn the starter switch in OFF. Remove the connector of A4 (Combustion engine Control unit). Remove the connector of B18 (Air flow and intake air temperature sensor). Remove the connector of A20 (SAM). Check the circuit across A4.X1.60/42 and B18.4/3 for open or short circuit. Check the circuit across A4.X1.60/38 and B18.4/4 for open or short circuit. Check the circuit across A4.X1.60/44 and B18.4/2 for open or short circuit. Check the circuit across A20.X10.14/2 and B18.4/1 for open or short circuit. Make a visual check on each connector. Is any abnormality recognized? No: Go to Step5 Yes: Go to Step10
	Step5	Inspection procedure Turn the starter switch in OFF. Replace component “B18 (Air flow and intake air temperature sensor)”. Reinstall all the removed connectors. Turn the starter switch in ON. Perform the learned value resetting procedure of B18 (Air flow and intake air temperature sensor) which A4 (Combustion engine Control unit) learns. Go to Step6
	Step6	Inspection procedure Turn the starter switch in OFF. Reinstall all the removed connectors. Erase fault memory and perform a test drive. Check if this diagnosis code has occurred. Are current fault codes present? No: Go to Step9 Yes: Go to Step7
	Step7	Inspect or verify the following items. Repair or replace faulty items as necessary. Component ‘A14 (EGR valve)’ is faulty. Component ‘Y8 (Exhaust gas recirculation actuator)’ is faulty. Damage of Intake system For procedures, refer to the Shop Manual. Go to Step8
	Step8	Inspection procedure Perform the operation start and replace A4 (Combustion engine Control unit). Go to Step9
	Step9	Inspection completed
	Step10	Inspection procedure Turn the starter switch in OFF. Remove the connector of A4 (Combustion engine Control unit). Remove the connector of X39 (Intermediate connector). Remove the connector of A20 (SAM). Check the circuit across A4.X1.60/42 and X39.12/4 for open or short circuit. Check the circuit across A4.X1.60/38 and X39.12/5 for open or short circuit. Check the circuit across A4.X1.60/44 and X39.12/6 for open or short circuit. Make a visual check on each connector. Is any abnormality recognized? No: Go to Step11 Yes: Go to Step12
	Step11	Inspection procedure Repair or replace the harness across B18 (Air flow and intake air temperature sensor) and X39 (Intermediate connector). Reinstall all the removed connectors. Erase fault memory and perform a test drive. Check if this diagnosis code has occurred. Are current fault codes present? No: Go to Step9 Yes: Go to Step5

https://truckmanualshub.com/

Inspection procedure	Step12	Inspection procedure Repair or replace the harness across A4 (Combustion engine Control unit) and X39 (Intermediate connector). Reinstall all the removed connectors. Erase fault memory and perform a test drive. Check if this diagnosis code has occurred. Are current fault codes present? No: Go to Step9 Yes: Go to Step5

3058-1: Negative governor deviation of EGR Control below lower limit.

Generation condition	[Test Condition] • Monitoring is active if the ECU is not in afterrun • The check is carried out every 20ms if the EGR closed control loop is switched on, (AirCtl_swtGovEna = 1) and no other system error is present. • No DPF regeneration is active.
	[Fault Detection] • The limit for the maximum permissible negative control deviation of the exhaust-gas recirculation control has been exceeded. • Limit is applied in a map AirCtl_mMinDvt_MAP depending on fuel quantity and engine speed.
	[Defect Debouncing] • Defect condition fulfilled continuously >6000.0 ms
Fault healing	• When the error is present in DFC_AirCtlGovDvtMin, to allow healing the closed control loop is restored in a speed/fuelling range between 600.00rpm and 600.00rpm / 0.00mg/hub and 10.00mg/hub • If the engine is running in this area and at the same time deviation is below the limit for the maximum permissible positive control deviation of the exhaust-gas recirculation failure is healed.
System reaction	• The exhaust-gas recirculation control is shut off and constant default values are output.
	• 1) FId / Enables healing of governor deviation in case of active governor deviation of Air (EGR) control • 2) FId / Inhibit ISS, max number of engine starts exceeded • 3) Fid / SCR Monitoring or DEF injection release not possible (according calibration of Release Masks) • 4) FId / Adaptation of the correction values of Fuel Mass Observer (FMO) inhibited (no correction of detected deviation between injected fuel and Lambda sensor signal) • 5) FId / Fuel Mass Observer (FMO) switched off (no monitoring of injected fuel by Lambda sensor) • 6) FId / The Adaptation of lambda Sensor disabled • 7) FId / The Difference Check between several Lambda Sensors is disabled • 8) FId / Dynamic Signal Monitoring of Lambda Sensor disabled • 9) FId / Electrical Open Load Check of Lambda Sensor disabled • 10) FId / O2 Signal of Lambda Sensor not valid • 11) FId / Signal Range Check of O2 Signal of lambda Sensor disabled • 12) FId / Plausibility Check of O2-Signal of Lambda Sensor (e.g. with HFM or Air calculation by Boost pressure) is disabled and last valid value taken • 13) FId / Correction of begin of Main injection 1 according deviation of air flow disabled • 14) FId / Inhibit DPF monitor • 15) FId / Particulate filter ((DPF) Regeneration inhibited • 16) FId / Service regeneration of Particulate filter ((DPF) inhibited (due to DPF failure) • 17) FId / Zero Fuel Calibration (ZFC) of injectors disabled • 18) FId / Inhibit EGR cooler efficiency monitoring • 19) FId / Monitoring for the destroyed particle filter (DPF) by minimal flow resistance disabled • 20) FId / Monitoring of particulate filter (DPF) by comparing the calculated flow resistance with measured pressure drop disabled • 21) FId / Status of function identifier FId_EngDemTrqLimErr5 • 22) FId / Engine speed Limitation 2 for HIgh/Low engine speed (HLS) control active
Failure cause	• Defective air mass flow sensor, obstruction or leackage in air duct, electrical or mechanical defect in EGR actuators or defect in wiring of EGR actuators

https://truckmanualshub.com/

Failure repair		• Check air mass flow sensor, air duct, EGR actuators and their wiring
Inspection procedure	Step1	Inspect or verify the following items. Repair or replace faulty items as necessary. Component 'A14 (EGR valve)' is faulty. If one of diagnosis codes associated with Y8 (Exhaust gas recirculation actuator) is generated, make a system diagnosis according to the diagnosis code. Damage of Intake system Plugged Intake system For procedures, refer to the Shop Manual. Go to Step2
	Step2	Inspect or verify the following items. Repair or replace faulty items as necessary. If one of diagnosis codes associated with A14 (EGR valve) is generated, make a system diagnosis according to the diagnosis code. Go to Step3
	Step3	Inspect or verify the following items. Repair or replace faulty items as necessary. If one of diagnosis codes associated with A20 (SAM) is generated, make a system diagnosis according to the diagnosis code. Go to Step4
	Step4	Inspection procedure Turn the starter switch in OFF. Remove the connector of A4 (Combustion engine Control unit). Remove the connector of B18 (Air flow and intake air temperature sensor). Remove the connector of A20 (SAM). Check the circuit across A4.X1.60/42 and B18.4/3 for open or short circuit. Check the circuit across A4.X1.60/38 and B18.4/4 for open or short circuit. Check the circuit across A4.X1.60/44 and B18.4/2 for open or short circuit. Check the circuit across A20.X10.14/2 and B18.4/1 for open or short circuit. Make a visual check on each connector. Is any abnormality recognized? No: Go to Step5 Yes: Go to Step10
	Step5	Inspection procedure Turn the starter switch in OFF. Replace component "B18 (Air flow and intake air temperature sensor)". Reinstall all the removed connectors. Turn the starter switch in ON. Perform the learned value resetting procedure of B18 (Air flow and intake air temperature sensor) which A4 (Combustion engine Control unit) learns. Go to Step6
	Step6	Inspection procedure Turn the starter switch in OFF. Reinstall all the removed connectors. Erase fault memory and perform a test drive. Check if this diagnosis code has occurred. Are current fault codes present? No: Go to Step9 Yes: Go to Step7
	Step7	Inspect or verify the following items. Repair or replace faulty items as necessary. Component 'A14 (EGR valve)' is faulty. If one of diagnosis codes associated with Y8 (Exhaust gas recirculation actuator) is generated, make a system diagnosis according to the diagnosis code. Damage of Intake system Plugged Intake system For procedures, refer to the Shop Manual. Go to Step8
	Step8	Inspection procedure Perform the operation start and replace A4 (Combustion engine Control unit). Go to Step9
	Step9	Inspection completed

https://truckmanualshub.com/

Inspection procedure	Step10	Inspection procedure Turn the starter switch in OFF. Remove the connector of A4 (Combustion engine Control unit). Remove the connector of X39 (Intermediate connector). Remove the connector of A20 (SAM). Check the circuit across A4.X1.60/42 and X39.12/4 for open or short circuit. Check the circuit across A4.X1.60/38 and X39.12/5 for open or short circuit. Check the circuit across A4.X1.60/44 and X39.12/6 for open or short circuit. Make a visual check on each connector. Is any abnormality recognized? No: Go to Step11 Yes: Go to Step12
	Step11	Inspection procedure Repair or replace the harness across B18 (Air flow and intake air temperature sensor) and X39 (Intermediate connector). Reinstall all the removed connectors. Erase fault memory and perform a test drive. Check if this diagnosis code has occurred. Are current fault codes present? No: Go to Step9 Yes: Go to Step5
	Step12	Inspection procedure Repair or replace the harness across A4 (Combustion engine Control unit) and X39 (Intermediate connector). Reinstall all the removed connectors. Erase fault memory and perform a test drive. Check if this diagnosis code has occurred. Are current fault codes present? No: Go to Step9 Yes: Go to Step5

3058-16: Positive governor deviation of EGR Control above upper limit for regeneration.

Generation condition	[Test Condition] • Monitoring is active if the ECU is not in afterrun • The check is carried out every 20ms if the EGR closed control loop is switched on, (AirCtl_swtGovEna = 1) and no other system error is present. • DPF regeneration is active.
	[Fault Detection] • The limit for the maximum permissible positive control deviation of the exhaust-gas recirculation control has been exceeded. • Limit is applied in a map AirCtl_mMaxDvtRgn_MAP depending on fuel quantity and engine speed.
	[Defect Debouncing] • Defect condition fulfilled continuously >5000.0 ms
Fault healing	• When the error is present in DFC_AirCtlGovDvtEOMMax, to allow healing the closed control loop is restored in a speed/fuelling range between 600.00rpm and 600.00rpm / 0.00mg/hub and 10.00mg/hub • If the engine is running in this area and at the same time deviation is below the limit for the maximum permissible positive control deviation of the exhaust-gas recirculation failure is healed.

https://truckmanualshub.com/

System reaction		• The exhaust-gas recirculation control is shut off and constant default values are output.
		• 1) FId / EGR switched off • 2) FId / Particulate filter ((DPF) Regeneration inhibited • 3) FId / Service regeneration of Particulate filter ((DPF) inhibited (due to DPF failure) • 4) FId / Inhibit EGR cooler efficiency monitoring • 5) Fid / SCR Monitoring or DEF injection release not possible (according calibration of Release Masks) • 6) FId / Adaptation of the correction values of Fuel Mass Observer (FMO) inhibited (no correction of detected deviation between injected fuel and Lambda sensor signal) • 7) FId / Monitoring of particulate filter (DPF) by comparing the calculated flow resistance with measured pressure drop disabled • 8) FId / Monitoring for the destroyed particle filter (DPF) by minimal flow resistance disabled • 9) FId / Zero Fuel Calibration (ZFC) of injectors by Lambda Sensor signal disabled • 10) FId / Status of function identifier FId_EngDemTrqLimErr5 • 11) FId / Engine speed Limitation 2 for HIgh/Low engine speed (HLS) control active
Failure cause		• Defective air mass flow sensor, leakage in the air duct, electrical or mechanical defect in EGR actuators or defect in wiring of EGR actuators
Failure repair		• Check air mass flow sensor, air duct, EGR actuators and their wiring
Inspection procedure	Step1	Inspect or verify the following items. Repair or replace faulty items as necessary. Component ‘A14 (EGR valve)’ is faulty. Component ‘Y8 (Exhaust gas recirculation actuator)’ is faulty. Damage of Intake system For procedures, refer to the Shop Manual.
	Step2	Inspect or verify the following items. Repair or replace faulty items as necessary. If one of diagnosis codes associated with A14 (EGR valve) is generated, make a system diagnosis according to the diagnosis code. If one of diagnosis codes associated with Y8 (Exhaust gas recirculation actuator) is generated, make a system diagnosis according to the diagnosis code. Go to Step3
	Step3	Inspect or verify the following items. Repair or replace faulty items as necessary. If one of diagnosis codes associated with A20 (SAM) is generated, make a system diagnosis according to the diagnosis code. Go to Step4
	Step4	Inspection procedure Turn the starter switch in OFF. Remove the connector of A4 (Combustion engine Control unit). Remove the connector of B18 (Air flow and intake air temperature sensor). Remove the connector of A20 (SAM). Check the circuit across A4.X1.60/42 and B18.4/3 for open or short circuit. Check the circuit across A4.X1.60/38 and B18.4/4 for open or short circuit. Check the circuit across A4.X1.60/44 and B18.4/2 for open or short circuit. Check the circuit across A20.X10.14/2 and B18.4/1 for open or short circuit. Make a visual check on each connector. Is any abnormality recognized? No: Go to Step5 Yes: Go to Step10
	Step5	Inspection procedure Turn the starter switch in OFF. Replace component “B18 (Air flow and intake air temperature sensor)”. Reinstall all the removed connectors. Turn the starter switch in ON. Perform the learned value resetting procedure of B18 (Air flow and intake air temperature sensor) which A4 (Combustion engine Control unit) learns. Go to Step6

https://truckmanualshub.com/

Inspection procedure	Step6	Inspection procedure Turn the starter switch in OFF. Reinstall all the removed connectors. Erase fault memory and perform a test drive. Check if this diagnosis code has occurred. Are current fault codes present? No: Go to Step9 Yes: Go to Step7
	Step7	Inspect or verify the following items. Repair or replace faulty items as necessary. Component 'A14 (EGR valve)' is faulty. Component 'Y8 (Exhaust gas recirculation actuator)' is faulty. Damage of Intake system For procedures, refer to the Shop Manual. Go to Step8
	Step8	Inspection procedure Perform the operation start and replace A4 (Combustion engine Control unit). Go to Step9
	Step9	Inspection completed
	Step10	Inspection procedure Turn the starter switch in OFF. Remove the connector of A4 (Combustion engine Control unit). Remove the connector of X39 (Intermediate connector). Remove the connector of A20 (SAM). Check the circuit across A4.X1.60/42 and X39.12/4 for open or short circuit. Check the circuit across A4.X1.60/38 and X39.12/5 for open or short circuit. Check the circuit across A4.X1.60/44 and X39.12/6 for open or short circuit. Make a visual check on each connector. Is any abnormality recognized? No: Go to Step11 Yes: Go to Step12
	Step11	Inspection procedure Repair or replace the harness across B18 (Air flow and intake air temperature sensor) and X39 (Intermediate connector). Reinstall all the removed connectors. Erase fault memory and perform a test drive. Check if this diagnosis code has occurred. Are current fault codes present? No: Go to Step9 Yes: Go to Step5
	Step12	Inspection procedure Repair or replace the harness across A4 (Combustion engine Control unit) and X39 (Intermediate connector). Reinstall all the removed connectors. Erase fault memory and perform a test drive. Check if this diagnosis code has occurred. Are current fault codes present? No: Go to Step9 Yes: Go to Step5

3058-18: Negative governor deviation of EGR Control below lower limit for regeneration.

Generation condition	[Test Condition] • Monitoring is active if the ECU is not in afterrun • The check is carried out every 20ms if the EGR closed control loop is switched on, (AirCtl_swtGovEna = 1) and no other system error is present. • DPF regeneration is active.
	[Fault Detection] • The limit for the maximum permissible negative control deviation of the exhaust-gas recirculation control has been exceeded. • Limit is applied in a map AirCtl_mMinDvtRgn_MAP depending on fuel quantity and engine speed.
	[Defect Debouncing] • Defect condition fulfilled continuously >10000.0 ms

https://truckmanualshub.com/

Fault healing		• When the error is present in DFC_AirCtlGovDvtEOMMin, to allow healing the closed control loop is restored in a speed/fuelling range between 600.00rpm and 600.00rpm / 0.00mg/hub and 10.00mg/hub • If the engine is running in this area and at the same time deviation is below the limit for the maximum permissible positive control deviation of the exhaust-gas recirculation failure is healed.
System reaction		• The exhaust-gas recirculation control is shut off and constant default values are output.
		• 1) FId / EGR switched off • 2) FId / Adaptation of the correction values of Fuel Mass Observer (FMO) inhibited (no correction of detected deviation between injected fuel and Lambda sensor signal) • 3) FId / Fuel Mass Observer (FMO) switched off (no monitoring of injected fuel by Lambda sensor) • 4) FId / Particulate filter ((DPF) Regeneration inhibited • 5) FId / Service regeneration of Particulate filter ((DPF) inhibited (due to DPF failure) • 6) FId / Inhibit EGR cooler efficiency monitoring • 7) Fid / SCR Monitoring or DEF injection release not possible (according calibration of Release Masks) • 8) FId / Monitoring of particulate filter (DPF) by comparing the calculated flow resistance with measured pressure drop disabled • 9) FId / Monitoring for the destroyed particle filter (DPF) by minimal flow resistance disabled • 10) FId / Zero Fuel Calibration (ZFC) of injectors by Lambda Sensor signal disabled • 11) FId / Status of function identifier FId_EngDemTrqLimErr5 • 12) FId / Engine speed Limitation 2 for HIgh/Low engine speed (HLS) control active
Failure cause		• Defective air mass flow sensor, obstruction or leakage in air duct, electrical or mechanical defect in EGR actuators or defect in wiring of EGR actuators
Failure repair		• Check air mass flow sensor, air duct, EGR actuators and their wiring
Inspection procedure	Step1	Inspect or verify the following items. Repair or replace faulty items as necessary. Component ‘A14 (EGR valve)’ is faulty. Component ‘Y8 (Exhaust gas recirculation actuator)’ is faulty. Damage of Intake system Plugged Intake system For procedures, refer to the Shop Manual.
	Step2	Inspect or verify the following items. Repair or replace faulty items as necessary. If one of diagnosis codes associated with A14 (EGR valve) is generated, make a system diagnosis according to the diagnosis code. If one of diagnosis codes associated with Y8 (Exhaust gas recirculation actuator) is generated, make a system diagnosis according to the diagnosis code. Go to Step3
	Step3	Inspect or verify the following items. Repair or replace faulty items as necessary. If one of diagnosis codes associated with A20 (SAM) is generated, make a system diagnosis according to the diagnosis code. Go to Step4
	Step4	Inspection procedure Turn the starter switch in OFF. Remove the connector of A4 (Combustion engine Control unit). Remove the connector of B18 (Air flow and intake air temperature sensor). Remove the connector of A20 (SAM). Check the circuit across A4.X1.60/42 and B18.4/3 for open or short circuit. Check the circuit across A4.X1.60/38 and B18.4/4 for open or short circuit. Check the circuit across A4.X1.60/44 and B18.4/2 for open or short circuit. Check the circuit across A20.X10.14/2 and B18.4/1 for open or short circuit. Make a visual check on each connector. Is any abnormality recognized? No: Go to Step5 Yes: Go to Step10

https://truckmanualshub.com/

Inspection procedure	Step5	Inspection procedure Turn the starter switch in OFF. Replace component “B18 (Air flow and intake air temperature sensor)”. Reinstall all the removed connectors. Turn the starter switch in ON. Perform the learned value resetting procedure of B18 (Air flow and intake air temperature sensor) which A4 (Combustion engine Control unit) learns. Go to Step6
	Step6	Inspection procedure Turn the starter switch in OFF. Reinstall all the removed connectors. Erase fault memory and perform a test drive. Check if this diagnosis code has occurred. Are current fault codes present? No: Go to Step9 Yes: Go to Step7
	Step7	Inspect or verify the following items. Repair or replace faulty items as necessary. Component ‘A14 (EGR valve)’ is faulty. Component ‘Y8 (Exhaust gas recirculation actuator)’ is faulty. Damage of Intake system Plugged Intake system For procedures, refer to the Shop Manual. Go to Step8
	Step8	Inspection procedure Perform the operation start and replace A4 (Combustion engine Control unit). Go to Step9
	Step9	Inspection completed
	Step10	Inspection procedure Turn the starter switch in OFF. Remove the connector of A4 (Combustion engine Control unit). Remove the connector of X39 (Intermediate connector). Remove the connector of A20 (SAM). Check the circuit across A4.X1.60/42 and X39.12/4 for open or short circuit. Check the circuit across A4.X1.60/38 and X39.12/5 for open or short circuit. Check the circuit across A4.X1.60/44 and X39.12/6 for open or short circuit. Make a visual check on each connector. Is any abnormality recognized? No: Go to Step11 Yes: Go to Step12
	Step11	Inspection procedure Repair or replace the harness across B18 (Air flow and intake air temperature sensor) and X39 (Intermediate connector). Reinstall all the removed connectors. Erase fault memory and perform a test drive. Check if this diagnosis code has occurred. Are current fault codes present? No: Go to Step9 Yes: Go to Step5
	Step12	Inspection procedure Repair or replace the harness across A4 (Combustion engine Control unit) and X39 (Intermediate connector). Reinstall all the removed connectors. Erase fault memory and perform a test drive. Check if this diagnosis code has occurred. Are current fault codes present? No: Go to Step9 Yes: Go to Step5

https://truckmanualshub.com/

3058-31: EGR Valve spent too long time in transition mode ‘Regeneration’ to ‘Normal Operation’.

Generation condition		[Test Condition] • Monitoring is active if the ECU is not in afterrun • During transition from regeneration too normal mode.
		[Fault Detection] • The Output of the Air Controller does not reach 50.00% within 30.00s
		[Defect Debouncing] • Immediate
Fault healing		• No healing possible in the same driving cycle
System reaction		• None
Failure cause		• Defect in the EGR actuators (EGR- and throttle valve) • Calibration error (wrong layout of the open loop EGR control during transition from Regeneration to normal mode)
Failure repair		• Check for errors of the EGR actuators (correct installation, wiring, electrical connectors, jammed actuator) • Contact Help desk.
Inspection procedure	Step1	Inspection procedure If one of diagnosis codes associated with A20 (SAM) is generated, make a system diagnosis according to the diagnosis code. Go to Step2
	Step2	Inspection procedure Turn the starter switch in ON. Execute the control “Control of exhaust gas recirculation”. Turn the starter switch in OFF. Check the Mechanical fault at A14 (EGR valve). Can occurrence of a mechanical fault be confirmed? No: Go to Step3 Yes: Go to Step4
	Step3	Inspection procedure Turn the starter switch in OFF. Remove the connector of A4 (Combustion engine Control unit). Remove the connector of A14 (EGR valve). Check the circuit across A4.X1.60/50 and Y8.X7.5/2 for open or short circuit. Check the circuit across A4.X1.60/35 and Y8.X7.5/1 for open or short circuit. Check the circuit across A4.X1.60/29 and B21.X7.5/5 for open or short circuit. Check the circuit across A4.X1.60/27 and B21.X7.5/4 for open or short circuit. Check the circuit across A4.X1.60/33 and B21.X7.5/3 for open or short circuit. Make a visual check on each connector. Is any abnormality recognized? No: Go to Step4 Yes: Go to Step8
	Step4	Inspection procedure Turn the starter switch in OFF. Replace component “A14 (EGR valve)”. Reinstall all the removed connectors. Turn the starter switch in ON. Perform the learned value resetting procedure of A14 (EGR valve) which A4 (Combustion engine Control unit) learns. Go to Step5
	Step5	Inspection procedure Turn the starter switch in OFF. Reinstall all the removed connectors. Erase fault memory and perform a test drive. Check if this diagnosis code has occurred. Are current fault codes present? No: Go to Step7 Yes: Go to Step6
	Step6	Inspection procedure Perform the operation start and replace A4 (Combustion engine Control unit). Go to Step7
	Step7	Inspection completed

Inspection procedure	Step8	Inspection procedure Repair or replace electrical lines. Reinstall all the removed connectors. Erase fault memory and perform a test drive. Check if this diagnosis code has occurred. Are current fault codes present? No: Go to Step7 Yes: Go to Step4

3217-0: Signal Range Check (SRC) for 'O2 calibration' reports HIGH.

Generation condition	[Test Condition] • Continuously when following conditions fulfilled: • The calibration is active. • No Error of LSU • FId_LSUO2Clb0 is not active due to another failure Engine in operating range 1 (speed between 300.00rpm and 1200.00rpm and load between 2.00mg/hub and 20.00mg/hub)
	[Fault Detection] • The analogic signal for the O2 ratio exceeds during the calibration 200.00mV
	[Defect Debouncing] • Defect condition exceeded cumulatively > 10.00 events • Failure is detected if active for 50% of events
Fault healing	• The analogic signal for the O2 ratio is below 200.00mV during the calibration
System reaction	• Last valid value of O2 Calibration is taken and no further calibration is made. • Further reactions according FID (see FID)
	• 1) FId / Adaptation of the correction values of Fuel Mass Observer (FMO) inhibited (no correction of detected deviation between injected fuel and Lambda sensor signal) • 2) FId / Fuel Mass Observer (FMO) switched off (no monitoring of injected fuel by Lambda sensor) • 3) FId / The Adaptation of lambda Sensor disabled • 4) FId / The Difference Check between several Lambda Sensors is disabled • 5) FId / Dynamic Signal Monitoring of Lambda Sensor disabled • 6) FId / Heater Coupling Check of lambda Sensor disabled • 7) FId / Electrical Open Load Check of Lambda Sensor disabled • 8) FId / Shunting Detection of Lambda Sensor disabled • 9) FId / The adaptation values for Lambda Sensor stored in EEPROM are reset to • 10) FId / O2 Measurement of Lambda sensor not valid • 11) FId / Plausibility Check of O2-Signal of Lambda Sensor (e.g. with HFM or Air calculation by Boost pressure) is disabled and last valid value taken
Failure cause	• Defect in wiring of lambda sensor, inaccurate or defective lambda sensor, problems with EGR actuators or injection system
Failure repair	• Check wiring and accuracy of lambda sensor, check functioning of injection system and EGR actuators, if necessary replace lambda sensor (and reset all learning values in EEPROM with tester) • Note for EURO OBD application: this failure activates a Performance limitation due to legislation. Therefore after repair following procedure must be done, otherwise there is the risk that performance limiter gets active, although the failure is repaired: • 1) clear memory with tester • 2) if performance limiter active: disable it with tester • 3) drive the vehicle ~20min in engine speed range >1600rpm with constant periods of ~5 sec and more than 5 motoring phases > 10sec (highest gear) • 4) check with "OBD scan tool" Service $01 (or Readiness state) that "comprehensive components" are "ready" • 5) if not: repeat the procedure

https://truckmanualshub.com/

Inspection procedure	Step1	Inspect or verify the following items. Repair or replace faulty items as necessary. If one of diagnosis codes associated with Fuel injector is generated, make a system diagnosis according to the diagnosis code. If one of diagnosis codes associated with A14 (EGR valve) is generated, make a system diagnosis according to the diagnosis code. Go to Step2
	Step2	Inspection procedure If one of diagnosis codes associated with A20 (SAM) is generated, make a system diagnosis according to the diagnosis code. Go to Step3
	Step3	Inspection procedure Turn the starter switch in OFF. Remove the connector of A4 (Combustion engine Control unit). Remove the connector of B29 (Oxygen sensor). Remove the connector of A20 (SAM). Check the circuit across B29.6/6 and A4.X2.94/78 for open or short circuit. Check the circuit across B29.6/1 and A4.X2.94/76 for open or short circuit. Check the circuit across B29.6/3 and A4.X2.94/51 for open or short circuit. Check the circuit across B29.6/2 and A4.X2.94/86 for open or short circuit. Check the circuit across B29.6/4 and A20.X10.14/2 for open or short circuit. Make a visual check on each connector. Is any abnormality recognized? No: Go to Step4 Yes: Go to Step8
	Step4	Inspection procedure Turn the starter switch in OFF. Replace component “B29 (Oxygen sensor)”. Reinstall all the removed connectors. Turn the starter switch in ON. Perform the learned value resetting procedure of B29 (Oxygen sensor) which A4 (Combustion engine Control unit) learns. Go to Step5
	Step5	Inspection procedure Turn the starter switch in OFF. Reinstall all the removed connectors. Erase fault memory and perform a test drive. Check if this diagnosis code has occurred. Are current fault codes present? No: Go to Step7 Yes: Go to Step6
	Step6	Inspection procedure Perform the operation start and replace A4 (Combustion engine Control unit). Go to Step7
	Step7	Inspection completed
	Step8	Inspection procedure Repair or replace electrical lines. Reinstall all the removed connectors. Erase fault memory and perform a test drive. Check if this diagnosis code has occurred. Are current fault codes present? No: Go to Step7 Yes: Go to Step4

https://truckmanualshub.com/

3217-1: Signal Range Check (SRC) for 'O2 calibration' reports LOW.

Generation condition		[Test Condition] • Continuously when following conditions fulfilled: • The calibration is active. • No Error of LSU • FId_LSUO2Clb0 is not active due to another failure Engine in operating range 1 (speed between 300.00rpm and 1200.00rpm and load between 2.00mg/hub and 20.00mg/hub)
		[Fault Detection] • The analogic signal for the O2 is below -200.00mV during the calibration
		[Defect Debouncing] • Defect condition exceeded cumulatively > 10.00 events • Failure is detected if active for 50% of events
Fault healing		• No defect is detected The analogic signal for the O2 exceeds -200.00mV during the calibration
System reaction		• Last valid value of O2 Calibration is taken and no further calibration is made. • Further reactions according FID (see FID)
		• 1) FId / Adaptation of the correction values of Fuel Mass Observer (FMO) inhibited (no correction of detected deviation between injected fuel and Lambda sensor signal) • 2) FId / Fuel Mass Observer (FMO) switched off (no monitoring of injected fuel by Lambda sensor) • 3) FId / The Adaptation of lambda Sensor disabled • 4) FId / The Difference Check between several Lambda Sensors is disabled • 5) FId / Dynamic Signal Monitoring of Lambda Sensor disabled • 6) FId / Heater Coupling Check of lambda Sensor disabled • 7) FId / Electrical Open Load Check of Lambda Sensor disabled • 8) FId / Shunting Detection of Lambda Sensor disabled • 9) FId / The adaptation values for Lambda Sensor stored in EEPROM are reset to • 10) FId / O2 Measurement of Lambda sensor not valid • 11) FId / Plausibility Check of O2-Signal of Lambda Sensor (e.g. with HFM or Air calculation by Boost pressure) is disabled and last valid value taken
Failure cause		• Defect in wiring of lambda sensor, inaccurate or defective lambda sensor, problems with EGR actuators or injection system
Failure repair		• Check wiring and accuracy of lambda sensor, check functioning of injection system and EGR actuators, if necessary replace lambda sensor (and reset all learning values in EEPROM with tester) • Note for EURO OBD application: this failure activates a Performance limitation due to legislation. Therefore after repair following procedure must be done, otherwise there is the risk that performance limiter gets active, although the failure is repaired: • 1) clear memory with tester • 2) if performance limiter active: disable it with tester • 3) drive the vehicle ~20min in engine speed range >1600rpm with constant periods of ~5 sec and more than 5 motoring phases > 10sec (highest gear) • 4) check with "OBD scan tool" Service $01 (or Readiness state) that "comprehensive components" are "ready" • 5) if not: repeat the procedure
Inspection procedure	Step1	Inspect or verify the following items. Repair or replace faulty items as necessary. If one of diagnosis codes associated with Fuel injector is generated, make a system diagnosis according to the diagnosis code. If one of diagnosis codes associated with A14 (EGR valve) is generated, make a system diagnosis according to the diagnosis code. Go to Step2
	Step2	Inspection procedure If one of diagnosis codes associated with A20 (SAM) is generated, make a system diagnosis according to the diagnosis code. Go to Step3

https://truckmanualshub.com/

Inspection procedure	Step3	Inspection procedure Turn the starter switch in OFF. Remove the connector of A4 (Combustion engine Control unit). Remove the connector of B29 (Oxygen sensor). Remove the connector of A20 (SAM). Check the circuit across B29.6/6 and A4.X2.94/78 for open or short circuit. Check the circuit across B29.6/1 and A4.X2.94/76 for open or short circuit. Check the circuit across B29.6/3 and A4.X2.94/51 for open or short circuit. Check the circuit across B29.6/2 and A4.X2.94/86 for open or short circuit. Check the circuit across B29.6/4 and A20.X10.14/2 for open or short circuit. Make a visual check on each connector. Is any abnormality recognized? No: Go to Step4 Yes: Go to Step8
	Step4	Inspection procedure Turn the starter switch in OFF. Replace component “B29 (Oxygen sensor)”. Reinstall all the removed connectors. Turn the starter switch in ON. Perform the learned value resetting procedure of B29 (Oxygen sensor) which A4 (Combustion engine Control unit) learns. Go to Step5
	Step5	Inspection procedure Turn the starter switch in OFF. Reinstall all the removed connectors. Erase fault memory and perform a test drive. Check if this diagnosis code has occurred. Are current fault codes present? No: Go to Step7 Yes: Go to Step6
	Step6	Inspection procedure Perform the operation start and replace A4 (Combustion engine Control unit). Go to Step7
	Step7	Inspection completed
	Step8	Inspection procedure Repair or replace electrical lines. Reinstall all the removed connectors. Erase fault memory and perform a test drive. Check if this diagnosis code has occurred. Are current fault codes present? No: Go to Step7 Yes: Go to Step4

3217-16: O2 value above maximum threshold

Generation condition	[Test Condition] • Continuously if all following conditions fulfilled: • LSU not in calibration mode • LSU not in a failure mode • Exhaust gas pressure < 160kPa {23psi, 1.6kgf/cm^2} • Monitoring not inhibit by FID_LSUO2SRC0 due to another failure
	[Fault Detection] • The analogic signal for the O2 ratio is higher than or equal 3.20V
	[Defect Debouncing] • Defect condition exceeded cumulatively > 2.00s • Failure is detected if active for 50% of the time
Fault healing	• Healing is only possible in overrun (engine in motoring phase) and the signal is below 3.20V

https://truckmanualshub.com/

		• Last valid O2 signal frozen • Further reactions according FID (See FID)
System reaction		• 1) FId / Adaptation of the correction values of Fuel Mass Observer (FMO) inhibited (no correction of detected deviation between injected fuel and Lambda sensor signal) • 2) FId / Fuel Mass Observer (FMO) switched off (no monitoring of injected fuel by Lambda sensor) • 3) FId / The Adaptation of lambda Sensor disabled • 4) FId / The Difference Check between several Lambda Sensors is disabled • 5) FId / Dynamic Signal Monitoring of Lambda Sensor disabled • 6) FId / Heater Coupling Check of lambda Sensor disabled • 7) FId / Electrical Open Load Check of Lambda Sensor disabled • 8) FId / Shunting Detection of Lambda Sensor disabled • 9) FId / The adaptation values for Lambda Sensor stored in EEPROM are reset to • 10) FId / O2 Measurement of Lambda sensor not valid • 11) FId / O2 Calibration disabled (last valid calibration value fixed) • 12) FId / Plausibility Check of O2-Signal of Lambda Sensor (e.g. with HFM or Air calculation by Boost pressure) is disabled and last valid value taken • 13) FId / Open Load Check for the Virtual Ground (VG) and Nernst Cell (UN) of Lambda Sensor disabled
Failure cause		• Defect in wiring (open circuit at line IA (Pump Cell)), Excessive drifting in O2 concentration during overrun, Defective lambda sensor, • Short circuit to external source
Failure repair		• Reset the Calibration factor and measure the O2 signal in overrun phase. Let the system learn (see failure LSU_O2ClbMin or Max: testing conditions are equal to learning condition) and read the voltage at motoring (O2 content = 20.95%). If the signal still > 3.20V --> replace sensor (and reset all learning values in EEPROM with tester) • Check entire wiring • Note for EURO OBD application: this failure activates a Performance limitation due to legislation. Therefore after repair following procedure must be done, otherwise there is the risk that performance limiter gets active, although the failure is repaired: • 1) clear memory with tester • 2) if performance limiter active: disable it with tester • 3) drive the vehicle ~20min in engine speed range >1600rpm with constant periods of ~5 sec and more than 5 motoring phases > 10sec (highest gear) • 4) check with “OBD scan tool” Service $01 (or Readiness state) that “comprehensive components” are “ready” • 5) if not: repeat the procedure
Inspection procedure	Step1	Inspection procedure If one of diagnosis codes associated with A20 (SAM) is generated, make a system diagnosis according to the diagnosis code. Go to Step2
	Step2	Inspection procedure Perform the learned value resetting procedure of B29 (Oxygen sensor) which A4 (Combustion engine Control unit) learns. Go to Step3
	Step3	Inspection procedure Turn the starter switch in OFF. Reinstall all the removed connectors. Erase fault memory and perform a test drive. Check if this diagnosis code has occurred. Are current fault codes present? No: Go to Step8 Yes: Go to Step4

https://truckmanualshub.com/

Inspection procedure	Step4	Inspection procedure Turn the starter switch in OFF. Remove the connector of A4 (Combustion engine Control unit). Remove the connector of B29 (Oxygen sensor). Remove the connector of A20 (SAM). Check the circuit across B29.6/6 and A4.X2.94/78 for open or short circuit. Check the circuit across B29.6/1 and A4.X2.94/76 for open or short circuit. Check the circuit across B29.6/3 and A4.X2.94/51 for open or short circuit. Check the circuit across B29.6/2 and A4.X2.94/86 for open or short circuit. Check the circuit across B29.6/4 and A20.X10.14/2 for open or short circuit. Make a visual check on each connector. Is any abnormality recognized? No: Go to Step5 Yes: Go to Step9
	Step5	Inspection procedure Turn the starter switch in OFF. Replace component “B29 (Oxygen sensor)”. Reinstall all the removed connectors. Turn the starter switch in ON. Perform the learned value resetting procedure of B29 (Oxygen sensor) which A4 (Combustion engine Control unit) learns. Go to Step6
	Step6	Inspection procedure Turn the starter switch in OFF. Reinstall all the removed connectors. Erase fault memory and perform a test drive. Check if this diagnosis code has occurred. Are current fault codes present? No: Go to Step8 Yes: Go to Step7
	Step7	Inspection procedure Perform the operation start and replace A4 (Combustion engine Control unit). Go to Step8
	Step8	Inspection completed
	Step9	Inspection procedure Repair or replace electrical lines. Reinstall all the removed connectors. Erase fault memory and perform a test drive. Check if this diagnosis code has occurred. No occurrence? No: Go to Step8 Yes: Go to Step5

https://truckmanualshub.com/

3221-0: O2 Concentration at overrunHIGH

Generation condition		[Test Condition] • Lambda sensor working in normal condition (no learning or calibration mode active) and O2 signal valid • Monitoring not inhibited by FID_LSUPlausChk0 due to another failure • Fuel level > 0.00l • Battery Voltage > 10.70V • By Data set via Bit Mask LSU_stOpMMonEnaMsk: engine in normal operation • Engine in steady state, i.e. the variation of calculated O2 concentration (by air flow and fuel injection) < 0.01- during 1.50s • Engine in overrun condition (engine speed between 1000.00rpm and 4000.00rpm and engine load between -10.00mg/hub and 0.20mg/hub and Air flow between 50.00mg/Hub and 1500.00mg/Hub) • Air mass passed through engine while all conditions above are fulfilled >= 150.00g • By Data set via Bit Mask LSU_stMskEGROvrn: EGR off due engine in normal operation and overrun
		[Fault Detection] • The measured and Temperature compensated, pressure compensated and (incl Temperature)) O2-concentration is higher than the calculated (and filtered by 0.30s) by more than 0.04- (0.21 corresponds to air with 21% O2
		[Defect Debouncing] • Defect condition exceeded cumulatively > 100.00 events • Failure is detected if active for 50% of events
Fault healing		• The measured and Temperature compensated, pressure compensated and (incl Temperature)) O2-concentration is NOT higher than the calculated (and filtered by 0.30s) by more than 0.04- (0.21 corresponds to air with 21% O2
System reaction		• Only according FID (See FID)
		• 1) FId / Adaptation of the correction values of Fuel Mass Observer (FMO) inhibited (no correction of detected deviation between injected fuel and Lambda sensor signal) • 2) FId / Fuel Mass Observer (FMO) switched off (no monitoring of injected fuel by Lambda sensor) • 3) FId / The Adaptation of lambda Sensor disabled • 4) FId / The Difference Check between several Lambda Sensors is disabled • 5) FId / O2 Signal of Lambda Sensor not valid
Failure cause		• Leakage or blockage in exhaust gas system, defect in wiring of lambda sensor, inaccurate lambda or air flow sensor, problems in injection system (e.g. blockage in injectors)
Failure repair		• Check exhaust gas system, check wiring of lambda sensor, check accuracy of lambda and air flow sensor, reset all learning factors of LSU in EEPROM and recheck the accuracy of LSU, check injection system, if necessary replace lambda sensor (and reset all learning values in EEPROM with tester) • Note for EURO OBD application: this failure activates a Performance limitation due to legislation. Therefore after repair following procedure must be done, otherwise there is the risk that performance limiter gets active, although the failure is repaired: • 1) clear memory with tester • 2) if performance limiter active: disable it with tester • 3) drive the vehicle ~20min in engine speed range >1600rpm with constant periods of ~5 sec and more than 5 motoring phases > 10sec (highest gear) • 4) check with “OBD scan tool” Service $01 (or Readiness state) that “comprehensive components” are “ready” • 5) if not: repeat the procedure
Inspection procedure	Step1	Inspect or verify the following items. Repair or replace faulty items as necessary. If Exhaust system fault has occurred, check the system in question. For procedures, refer to the Shop Manual. Go to Step2

https://truckmanualshub.com/

Inspection procedure	Step2	Inspect or verify the following items. Repair or replace faulty items as necessary. If one of diagnosis codes associated with Fuel injector is generated, make a system diagnosis according to the diagnosis code. If one of diagnosis codes associated with B18 (Air flow and intake air temperature sensor) is generated, make a system diagnosis according to the diagnosis code. Go to Step3
	Step3	Inspection procedure If one of diagnosis codes associated with A20 (SAM) is generated, make a system diagnosis according to the diagnosis code. Go to Step4
	Step4	Inspection procedure Perform the learned value resetting procedure of B29 (Oxygen sensor) which A4 (Combustion engine Control unit) learns. Go to Step5
	Step5	Inspection procedure Turn the starter switch in OFF. Reinstall all the removed connectors. Erase fault memory and perform a test drive. Check if this diagnosis code has occurred. Are current fault codes present? No: Go to Step10 Yes: Go to Step6
	Step6	Inspection procedure Turn the starter switch in OFF. Remove the connector of A4 (Combustion engine Control unit). Remove the connector of B29 (Oxygen sensor). Remove the connector of A20 (SAM). Check the circuit across B29.6/6 and A4.X2.94/78 for open or short circuit. Check the circuit across B29.6/1 and A4.X2.94/76 for open or short circuit. Check the circuit across B29.6/3 and A4.X2.94/51 for open or short circuit. Check the circuit across B29.6/2 and A4.X2.94/86 for open or short circuit. Check the circuit across B29.6/4 and A20.X10.14/2 for open or short circuit. Make a visual check on each connector. Is any abnormality recognized? No: Go to Step7 Yes: Go to Step11
	Step7	Inspection procedure Turn the starter switch in OFF. Replace component “B29 (Oxygen sensor)”. Reinstall all the removed connectors. Turn the starter switch in ON. Perform the learned value resetting procedure of B29 (Oxygen sensor) which A4 (Combustion engine Control unit) learns. Go to Step8
	Step8	Inspection procedure Turn the starter switch in OFF. Reinstall all the removed connectors. Erase fault memory and perform a test drive. Check if this diagnosis code has occurred. Are current fault codes present? No: Go to Step10 Yes: Go to Step9
	Step9	Inspection procedure Perform the operation start and replace A4 (Combustion engine Control unit). Go to Step10
	Step10	Inspection completed

Inspection procedure	Step11	Inspection procedure Repair or replace electrical lines. Reinstall all the removed connectors. Erase fault memory and perform a test drive. Check if this diagnosis code has occurred. No occurrence? No: Go to Step10 Yes: Go to Step7

3221-1: O2 Concentration at overrunLOW

Generation condition	[Test Condition] • Lambda sensor working in normal condition (no learning or calibration mode active) and O2 signal valid • Monitoring not inhibited by FID_LSUPlausChk0 due to another failure • Fuel level > 0.00l • Battery Voltage > 10.70V • By Data set via Bit Mask LSU_stOpMMonEnaMsk: engine in normal operation • Engine in steady state, i.e. the variation of calculated O2 concentration (by air flow and fuel injection) < 0.01- during 1.50s • Engine in overrun condition (engine speed between 1000.00rpm and 4000.00rpm and engine load between -10.00mg/hub and 0.20mg/hub and Air flow between 50.00mg/Hub and 1500.00mg/Hub) • Air mass passed through engine while all conditions above are fulfilled >= 150.00g • By Data set via Bit Mask LSU_stMskEGROvrn: EGR off due engine in normal operation and overrun
	[Fault Detection] • The measured and Temperature compensated, pressure compensated and (incl Temperature)) O2-concentration is lower than the calculated (and filtered by 0.30s) by more than 0.05- (0.21 corresponds to air with 21% O2.
	[Defect Debouncing] • Defect condition exceeded cumulatively > 100.00 events • Failure is detected if active for 50% of events
Fault healing	• The measured and Temperature compensated, pressure compensated and (incl Temperature)) O2-concentration is NOT lower than the calculated (and filtered by 0.30s) by more than 0.05- (0.21 corresponds to air with 21% O2.
System reaction	• Only according FID (See FID)
	• 1) FId / Adaptation of the correction values of Fuel Mass Observer (FMO) inhibited (no correction of detected deviation between injected fuel and Lambda sensor signal) • 2) FId / Fuel Mass Observer (FMO) switched off (no monitoring of injected fuel by Lambda sensor) • 3) FId / The Adaptation of lambda Sensor disabled • 4) FId / The Difference Check between several Lambda Sensors is disabled • 5) FId / O2 Signal of Lambda Sensor not valid
Failure cause	• Leakage or blockage in exhaust gas system, defect in wiring of lambda sensor, inaccurate lambda or air flow sensor, problems in injection system (e.g. leaky injectors)
Failure repair	• Check exhaust gas system, check wiring of lambda sensor, check accuracy of lambda and air flow sensor, reset all learning factors of LSU in EEPROM and recheck the accuracy of LSU, check injection system, if necessary replace lambda sensor (and reset all learning values in EEPROM with tester) • Note for EURO OBD application: this failure activates a Performance limitation due to legislation. Therefore after repair following procedure must be done, otherwise there is the risk that performance limiter gets active, although the failure is repaired: • 1) clear memory with tester • 2) if performance limiter active: disable it with tester • 3) drive the vehicle ~20min in engine speed range >1600rpm with constant periods of ~5 sec and more than 5 motoring phases > 10sec (highest gear) • 4) check with “OBD scan tool” Service $01 (or Readiness state) that “comprehensive components” are “ready” • 5) if not: repeat the procedure

https://truckmanualshub.com/

Inspection procedure	Step1	Inspect or verify the following items. Repair or replace faulty items as necessary. If Exhaust system fault has occurred, check the system in question. For procedures, refer to the Shop Manual. Go to Step2
	Step2	Inspect or verify the following items. Repair or replace faulty items as necessary. If one of diagnosis codes associated with Fuel injector is generated, make a system diagnosis according to the diagnosis code. If one of diagnosis codes associated with B18 (Air flow and intake air temperature sensor) is generated, make a system diagnosis according to the diagnosis code. Go to Step3
	Step3	Inspection procedure If one of diagnosis codes associated with A20 (SAM) is generated, make a system diagnosis according to the diagnosis code. Go to Step4
	Step4	Inspection procedure Perform the learned value resetting procedure of B29 (Oxygen sensor) which A4 (Combustion engine Control unit) learns. Go to Step5
	Step5	Inspection procedure Turn the starter switch in OFF. Reinstall all the removed connectors. Erase fault memory and perform a test drive. Check if this diagnosis code has occurred. Are current fault codes present? No: Go to Step10 Yes: Go to Step6
	Step6	Inspection procedure Turn the starter switch in OFF. Remove the connector of A4 (Combustion engine Control unit). Remove the connector of B29 (Oxygen sensor). Remove the connector of A20 (SAM). Check the circuit across B29.6/6 and A4.X2.94/78 for open or short circuit. Check the circuit across B29.6/1 and A4.X2.94/76 for open or short circuit. Check the circuit across B29.6/3 and A4.X2.94/51 for open or short circuit. Check the circuit across B29.6/2 and A4.X2.94/86 for open or short circuit. Check the circuit across B29.6/4 and A20.X10.14/2 for open or short circuit. Make a visual check on each connector. Is any abnormality recognized? No: Go to Step7 Yes: Go to Step11
	Step7	Inspection procedure Turn the starter switch in OFF. Replace component “B29 (Oxygen sensor)”. Reinstall all the removed connectors. Turn the starter switch in ON. Perform the learned value resetting procedure of B29 (Oxygen sensor) which A4 (Combustion engine Control unit) learns. Go to Step8
	Step8	Inspection procedure Turn the starter switch in OFF. Reinstall all the removed connectors. Erase fault memory and perform a test drive. Check if this diagnosis code has occurred. Are current fault codes present? No: Go to Step10 Yes: Go to Step9
	Step9	Inspection procedure Perform the operation start and replace A4 (Combustion engine Control unit). Go to Step10
	Step10	Inspection completed

https://truckmanualshub.com/

Inspection procedure	Step11	Inspection procedure Repair or replace electrical lines. Reinstall all the removed connectors. Erase fault memory and perform a test drive. Check if this diagnosis code has occurred. No occurrence? No: Go to Step10 Yes: Go to Step7

3232-5: Component 'NOx sensor' has an open circuit.

Generation condition		[Test Condition] • Monitoring is active 2.00s after ECU initialization while engine isn't running yet, while the engine isn't cranking, 2.00s after engine startup, while the battery voltage is over 10.00V, as long as the battery voltage is over 10.00V and 2.00s after this t
		[Fault Detection] • If NOx sensor has detected Heater open wire fault Com_stBytNOxSens[0]==1
		[Defect Debouncing] • Defect condition fulfilled continuously > 2000.0 ms
Fault healing		• If NOx sensor does not send the Message "Open wire"
System reaction		• The NOx sensor does not get ready for measurement --> SCR Dosing can not work in closed loop control and no NOx monitoring possible • According FID (see FID's)
		• 1) Fid/ NOx Sensor not working correctly --> System monitoring with NOx sensor inhibited • 2) Fid/ SCR Monitoring or DEF injection release not possible (according calibration of Release Masks)
Failure cause		• Wiring defect • NOx Sensor defect
Failure repair		• Check wiring (specially heating wires) • Check NOx Sensor
Inspection procedure	Step1	Inspect or verify the following items. Repair or replace faulty items as necessary. If one of diagnosis codes associated with A20 (SAM) is generated, make a system diagnosis according to the diagnosis code. Go to Step2
	Step2	Inspection procedure Turn the starter switch in OFF. Remove the connector of A4 (Combustion engine Control unit). Remove the connector of B29 (Oxygen sensor). Remove the connector of A20 (SAM). Check the circuit across A4.X2.94/62 and B31.5/4 for open or short circuit. Check the circuit across A4.X2.94/61 and B31.5/3 for open or short circuit. Check the circuit across A20.X10.14/2 and B31.5/1 for open or short circuit. Check the circuit across B31.5/2 and Ground for open or short circuit. Make a visual check on each connector. Is any abnormality recognized? No: Go to Step3 Yes: Go to Step7
	Step3	Inspection procedure Turn the starter switch in OFF. Replace component "B29 (Oxygen sensor)". Reinstall all the removed connectors. Turn the starter switch in ON. Go to Step4

https://truckmanualshub.com/

Inspection procedure	Step4	Inspection procedure Turn the starter switch in OFF. Reinstall all the removed connectors. Erase fault memory and perform a test drive. Check if this diagnosis code has occurred. Are current fault codes present? No: Go to Step6 Yes: Go to Step5
	Step5	Inspection procedure Perform the operation start and replace A4 (Combustion engine Control unit). Go to Step6
	Step6	Inspection completed
	Step7	Inspection procedure Turn the starter switch in OFF. Remove the connector of A4 (Combustion engine Control unit). Remove the connector of X42 (Intermediate connector). Remove the connector of A20 (SAM). Check the circuit across A4.X2.94/62 and X42.8/3 for open or short circuit. Check the circuit across A4.X2.94/61 and X42.8/2 for open or short circuit. Check the circuit across A20.X10.14/2 and X42.8/4 for open or short circuit. Check the circuit across X42.8/1 and Ground for open or short circuit. Make a visual check on each connector. Is any abnormality recognized? No: Go to Step8 Yes: Go to Step9
	Step8	Inspection procedure Repair or replace the harness across B29 (Oxygen sensor) and X42 (Intermediate connector). Reinstall all the removed connectors. Erase fault memory and perform a test drive. Check if this diagnosis code has occurred. Are current fault codes present? No: Go to Step6 Yes: Go to Step3
	Step9	Inspection procedure Repair or replace the harness across A4 (Combustion engine Control unit) and X42 (Intermediate connector). Reinstall all the removed connectors. Erase fault memory and perform a test drive. Check if this diagnosis code has occurred. Are current fault codes present? No: Go to Step6 Yes: Go to Step3

3232-6: Component ‘NOx sensor’ has a short circuit.Current above normal or grounded circuit

Generation condition	[Test Condition] • Monitoring is active 2.00s after ECU initialization while engine isn’t running yet, while the engine isn’t cranking, 2.00s after engine startup, while the battery voltage is over 10.00V, as long as the battery voltage is over 10.00V and 2.00s after this t
	[Fault Detection] • If NOx sensor has detected Heater short circuit fault Com_stBytNOxSens[4]==1
	[Defect Debouncing] • Defect condition fulfilled continuously > 2000.0 ms
Fault healing	• If the Sensor does not send the message “short circuit” detected
System reaction	• The NOx sensor does not get ready for measurement --> SCR Dosing can not work in closed loop control and no NOx monitoring possible • According FID (see FID’s)
	• 1) Fid/ NOx Sensor not working correctly --> System monitoring with NOx sensor inhibited • 2) Fid/ SCR Monitoring or DEF injection release not possible (according calibration of Release Masks)

https://truckmanualshub.com/

Failure cause		• Wiring harness has short circuit • NOx Sensor defect
Failure repair		• Check wiring harness • Check Sensor
Inspection procedure	Step1	Inspect or verify the following items. Repair or replace faulty items as necessary. If one of diagnosis codes associated with A20 (SAM) is generated, make a system diagnosis according to the diagnosis code. Go to Step2
	Step2	Inspection procedure Turn the starter switch in OFF. Remove the connector of A4 (Combustion engine Control unit). Remove the connector of B29 (Oxygen sensor). Remove the connector of A20 (SAM). Check the circuit across A4.X2.94/62 and B31.5/4 for open or short circuit. Check the circuit across A4.X2.94/61 and B31.5/3 for open or short circuit. Check the circuit across A20.X10.14/2 and B31.5/1 for open or short circuit. Check the circuit across B31.5/2 and Ground for open or short circuit. Make a visual check on each connector. Is any abnormality recognized? No: Go to Step3 Yes: Go to Step7
	Step3	Inspection procedure Turn the starter switch in OFF. Replace component “B29 (Oxygen sensor)”. Reinstall all the removed connectors. Turn the starter switch in ON. Go to Step4
	Step4	Inspection procedure Turn the starter switch in OFF. Reinstall all the removed connectors. Erase fault memory and perform a test drive. Check if this diagnosis code has occurred. Are current fault codes present? No: Go to Step6 Yes: Go to Step5
	Step5	Inspection procedure Perform the operation start and replace A4 (Combustion engine Control unit). Go to Step6
	Step6	Inspection completed
	Step7	Inspection procedure Turn the starter switch in OFF. Remove the connector of A4 (Combustion engine Control unit). Remove the connector of X42 (Intermediate connector). Remove the connector of A20 (SAM). Check the circuit across A4.X2.94/62 and X42.8/3 for open or short circuit. Check the circuit across A4.X2.94/61 and X42.8/2 for open or short circuit. Check the circuit across A20.X10.14/2 and X42.8/4 for open or short circuit. Check the circuit across X42.8/1 and Ground for open or short circuit. Make a visual check on each connector. Is any abnormality recognized? No: Go to Step8 Yes: Go to Step9
	Step8	Inspection procedure Repair or replace the harness across B29 (Oxygen sensor) and X42 (Intermediate connector). Reinstall all the removed connectors. Erase fault memory and perform a test drive. Check if this diagnosis code has occurred. Are current fault codes present? No: Go to Step6 Yes: Go to Step3

https://truckmanualshub.com/

Inspection procedure	Step9	Inspection procedure Repair or replace the harness across A4 (Combustion engine Control unit) and X42 (Intermediate connector). Reinstall all the removed connectors. Erase fault memory and perform a test drive. Check if this diagnosis code has occurred. Are current fault codes present? No: Go to Step6 Yes: Go to Step3

3234-2: Component 'NOx sensor' has an open circuit or short circuit.

Generation condition		[Test Condition] • Monitoring is active 2.00s after ECU initialization while engine isn't running yet, while the engine isn't cranking, 2.00s after engine startup, while the battery voltage is over 10.00V, as long as the battery voltage is over 10.00V and 2.00s after this threshold has been exceeded, if none of the CAN controllers is in bus-off state, 2.00s after last CAN controller is no more in bus-off state and if the ECU is not in afterrun continuously
		[Fault Detection] • The NOx Sensor sends the message "Lambda signal not plausible" (Bits 2-3 = 00) OR "NOx signal not plausible (bits 4-5=00)
		[Defect Debouncing] • Defect condition fulfilled continuously > 240000.0 ms
Fault healing		• The NOx Sensor sends the message "Lambda signal plausible" (Bits 2-3 = 01) AND "NOx signal plausible (bits 4-5=01)
System reaction		• According FID (see FID's) • Usually the NOx signal is set to FFFF by the Sensor itself which causes a fix NOx concentration of 1.20-.
		• 1) Fid/ NOx Sensor not working correctly --> System monitoring with NOx sensor inhibited • 2) Fid/ SCR Monitoring or DEF injection release not possible (according calibration of Release Masks)
Failure cause		• Short Circuit or Open wire in wiring harness • Defective NOx Sensor
Failure repair		• Check wiring harness • Check NOx Sensor • Note for EURO OBD application: this failure activates a Performance limitation due to legislation. Therefore after repair following procedure must be done, otherwise there is the risk tha performance limiter gets active, although the failure is repaired: • 1) clear memory with tester • 2) if performance limiter active: disable it with tester • 3) drive the vehicle ~20min in engine speed range >1600rpm with constant periods of ~5 sec and more than 5 motoring phases > 10sec (highest gear) • 4) check with "OBD scan tool" Service $01 (or Readinsess state) that "comprehensive components" are "ready" • 5) if not: repeat the procedure
Inspection procedure	Step1	Inspect or verify the following items. Repair or replace faulty items as necessary. If one of diagnosis codes associated with A20 (SAM) is generated, make a system diagnosis according to the diagnosis code. Go to Step2

https://truckmanualshub.com/

Inspection procedure	Step2	Inspection procedure Turn the starter switch in OFF. Remove the connector of A4 (Combustion engine Control unit). Remove the connector of B29 (Oxygen sensor). Remove the connector of A20 (SAM). Check the circuit across A4.X2.94/62 and B31.5/4 for open or short circuit. Check the circuit across A4.X2.94/61 and B31.5/3 for open or short circuit. Check the circuit across A20.X10.14/2 and B31.5/1 for open or short circuit. Check the circuit across B31.5/2 and Ground for open or short circuit. Make a visual check on each connector. Is any abnormality recognized? No: Go to Step3 Yes: Go to Step7
	Step3	Inspection procedure Turn the starter switch in OFF. Replace component “B29 (Oxygen sensor)”. Reinstall all the removed connectors. Turn the starter switch in ON. Go to Step4 Inspection procedure Turn the starter switch in OFF. Reinstall all the removed connectors. Erase fault memory and perform a test drive. Check if this diagnosis code has occurred. Are current fault codes present? No: Go to Step5 Yes: Go to Step6
	Step5	Inspection completed
	Step6	Inspection procedure Perform the operation start and replace A4 (Combustion engine Control unit). Inspection completed
	Step7	Inspection procedure Turn the starter switch in OFF. Remove the connector of A4 (Combustion engine Control unit). Remove the connector of X42 (Intermediate connector). Remove the connector of A20 (SAM). Check the circuit across A4.X2.94/62 and X42.8/3 for open or short circuit. Check the circuit across A4.X2.94/61 and X42.8/2 for open or short circuit. Check the circuit across A20.X10.14/2 and X42.8/4 for open or short circuit. Check the circuit across X42.8/1 and Ground for open or short circuit. Make a visual check on each connector. Is any abnormality recognized? No: Go to Step8 Yes: Go to Step9
	Step8	Inspection procedure Repair or replace the harness across B29 (Oxygen sensor) and X42 (Intermediate connector). Reinstall all the removed connectors. Erase fault memory and perform a test drive. Check if this diagnosis code has occurred. Are current fault codes present? No: Go to Step5 Yes: Go to Step3
	Step9	Inspection procedure Repair or replace the harness across A4 (Combustion engine Control unit) and X42 (Intermediate connector). Reinstall all the removed connectors. Erase fault memory and perform a test drive. Check if this diagnosis code has occurred. Are current fault codes present? No: Go to Step5 Yes: Go to Step3

https://truckmanualshub.com/

3241-0: Defect Fault Check for Exhaust temperature upstream of oxidation catalytic converter.Signal value above maximum limit

Generation condition	[Test Condition] • Monitoring is active while the battery voltage is over 10.00V and as long as the battery voltage is over 10.00V and 2.00s after this threshold has been exceeded • The signal range checks are only carried out if ADC has not reported a module error. Continuously.
	[Fault Detection] • The sensed raw voltage value Exh_uRawTOxiCatUs is above 4.00V
	[Defect Debouncing] • Defect condition exceeded cumulatively > 1000.00ms • Failure is detected if active for 50% of the time
Fault healing	• The sensed raw voltage value Exh_uRawTOxiCatUs is below 4.00V
System reaction	• Oxidation Catalyser temperature is frozen at last valid value on preliminary failure and ramps, using slope 300.00K/s or 300.00K/s depending whether the measured value is above or below replacement value, to a fixed replacement value of 79.96°C {175.93°F} • Further reactions according FID (see FID's)
	• 1) FId / Particulate filter ((DPF) Regeneration inhibited • 2) FId / Service regeneration of Particulate filter ((DPF) inhibited (due to DPF failure) • 3) FId / Temperature OxiCat upstream defective • 4) FId / Freeze OxiCat Upstream temperature if preliminary failure is detected • 5) FId / Function Identifier to inhibit plausibility check for the sensed temperature upstream of Oxi-catalyst • 6) FId / Replace OxiCat Upstream temperature with default value if failure is validated • 7) FId / Inhibit OxiCat passive monitor • 8) FId / Plausibilty check of temperature sensors at cold start not allowed • 9) FId / Physical signal range check of temperature sensor 1 inhibited • 10) Fid / SCR Monitoring or DEF injection release not possible (according calibration of Release Masks) • 11) FId / Inhibit Physical Range Check of sensed temperature upstream of OxiCat
Failure cause	• Short circuit of sensor to external source or defective sensor
Failure repair	• Check wiring and sensor

https://truckmanualshub.com/

Inspection procedure	Step1	Inspection procedure Turn the starter switch in OFF. Remove the connector of A4 (Combustion engine Control unit). Check electrical line between pins A4.X2.94/11 and B23.2/1 for open circuit. Check electrical line between pins A4.X2.94/60 and B23.2/2 for open circuit. Check electrical line between pins A4.X2.94/11 and B23.2/1 for short circuit to positive. Check harness between A4 (Combustion engine Control unit) and B23 (Temperature sensor Exhaust system 1) for short-circuit to another line. Is any abnormality recognized? No: Go to Step2 Yes: Go to Step6
	Step2	Inspection procedure Turn the starter switch in OFF. Replace component “B23 (Temperature sensor Exhaust system 1)”. Reinstall all the removed connectors. Turn the starter switch in ON. Go to Step3
	Step3	Inspection procedure Turn the starter switch in OFF. Reinstall all the removed connectors. Erase fault memory and perform a test drive. Check if this diagnosis code has occurred. Are current fault codes present? No: Go to Step5 Yes: Go to Step4
	Step4	Inspection procedure Perform the operation start and replace A4 (Combustion engine Control unit). Go to Step5
	Step5	Inspection completed
	Step6	Inspection procedure Repair or replace electrical lines. Reinstall all the removed connectors. Turn the starter switch in ON. Go to Step7
	Step7	Inspection procedure Turn the starter switch in OFF. Reinstall all the removed connectors. Erase fault memory and perform a test drive. Check if this diagnosis code has occurred. Are current fault codes present? No: Go to Step5 Yes: Go to Step1

3241-1: Defect Fault Check for Exhaust temperature upstream of oxidation catalytic converter.Signal value below minimum limit

Generation condition	[Test Condition] • Monitoring is active while the battery voltage is over 10.00V and as long as the battery voltage is over 10.00V and 2.00s after this threshold has been exceeded • The signal range checks are only carried out if ADC has not reported a module error. Continuously.
	[Fault Detection] • The sensed raw voltage value Exh_uRawTOxiCatUs is below 500.00mV
	[Defect Debouncing] • Defect condition exceeded cumulatively > 1000.00ms • Failure is detected if active for 50% of the time
Fault healing	• The sensed raw voltage value Exh_uRawTOxiCatUs is above 500.00mV

https://truckmanualshub.com/

		• Oxidation Catalyser temperature is frozen at last valid value on preliminary failure and ramps, using slope 300.00K/s or 300.00K/s depending whether the measured value is above or below replacement value, to a fixed replacement value of 79.96°C {175.93°F} • Further reactions according FID (see FID's)
System reaction		• 1) FId / Particulate filter ((DPF) Regeneration inhibited • 2) FId / Service regeneration of Particulate filter ((DPF) inhibited (due to DPF failure) • 3) FId / Temperature OxiCat upstream defective • 4) FId / Freeze OxiCat Upstream temperature if preliminary failure is detected • 5) FId / Function Identifier to inhibit plausibility check for the sensed temperature upstream of Oxi-catalyst • 6) FId / Replace OxiCat Upstream temperature with default value if failure is validated • 7) FId / Inhibit OxiCat passive monitor • 8) FId / Plausibilty check of temperature sensors at cold start not allowed • 9) FId / Physical signal range check of temperature sensor 1 inhibited • 10) Fid / SCR Monitoring or DEF injection release not possible (according calibration of Release Masks) • 11) FId / Inhibit Physical Range Check of sensed temperature upstream of OxiCat
Failure cause		• Short circuit of sensor to ground or defective sensor
Failure repair		• Check wiring or replace sensor
Inspection procedure	Step1	Inspection procedure Turn the starter switch in OFF. Remove the connector of A4 (Combustion engine Control unit). Check electrical line between pins A4.X2.94/11 and B23.2/1 for open circuit. Check electrical line between pins A4.X2.94/60 and B23.2/2 for open circuit. Check electrical line between pins A4.X2.94/11 and B23.2/1 for short circuit to positive. Check harness between A4 (Combustion engine Control unit) and B23 (Temperature sensor Exhaust system 1) for short-circuit to another line. Is any abnormality recognized? No: Go to Step2 Yes: Go to Step6
	Step2	Inspection procedure Turn the starter switch in OFF. Replace component "B23 (Temperature sensor Exhaust system 1)". Reinstall all the removed connectors. Turn the starter switch in ON. Go to Step3
	Step3	Inspection procedure Turn the starter switch in OFF. Reinstall all the removed connectors. Erase fault memory and perform a test drive. Check if this diagnosis code has occurred. Are current fault codes present? No: Go to Step5 Yes: Go to Step4
	Step4	Inspection procedure Perform the operation start and replace A4 (Combustion engine Control unit). Go to Step5
	Step5	Inspection completed
	Step6	Inspection procedure Repair or replace electrical lines. Reinstall all the removed connectors. Turn the starter switch in ON. Go to Step7

https://truckmanualshub.com/

Inspection procedure	Step7	Inspection procedure Turn the starter switch in OFF. Reinstall all the removed connectors. Erase fault memory and perform a test drive. Check if this diagnosis code has occurred. Are current fault codes present? No: Go to Step5 Yes: Go to Step1

3241-18: Signal Range Check (SRC) for 'Exhaust temperature downstream of oxidation catalytic converter' reports LOW.

Generation condition		[Test Condition] • Continuously if ADC is not reporting an electrical problem on the sensor
		[Fault Detection] • The sensed sensor signal Exh_tSensTOxiCatUs is below -45.04°C {-49.07°F}
		[Defect Debouncing] • Defect condition exceeded cumulatively > 10.00s • Failure is detected if active for 50% of the time
Fault healing		• The sensed sensor signal Exh_tSensTOxiCatUs is above -45.04°C {-49.07°F}
System reaction		• Oxidation Catalyser temperature is frozen at last valid value on preliminary failure and ramps, using slope 300.00K/s or 300.00K/s depending whether the measured value is above or below replacement value, to a fixed replacement value of 79.96°C {175.93°F} • Further reactions according FID (see FID's)
		• 1) FId / Particulate filter ((DPF) Regeneration inhibited • 2) FId / Service regeneration of Particulate filter ((DPF) inhibited (due to DPF failure) • 3) FId / Temperature OxiCat upstream defective • 4) FId / Freeze OxiCat Upstream temperature if preliminary failure is detected • 5) FId / Function Identifier to inhibit plausibility check for the sensed temperature upstream of Oxi-catalyst • 6) FId / Replace OxiCat Upstream temperature with default value if failure is validated • 7) FId / Inhibit OxiCat passive monitor • 8) Fid / SCR Monitoring or DEF injection release not possible (according calibration of Release Masks)
Failure cause		• Inaccurate or defective temperature sensor, defect in the wiring
Failure repair		• Check wiring and the accuracy of the temperature sensor and replace it if necessary
Inspection procedure	Step1	Inspection procedure Turn the starter switch in OFF. Remove the connector of A4 (Combustion engine Control unit). Check electrical line between pins A4.X2.94/11 and B23.2/1 for open circuit. Check electrical line between pins A4.X2.94/60 and B23.2/2 for open circuit. Check electrical line between pins A4.X2.94/11 and B23.2/1 for short circuit to positive. Check harness between A4 (Combustion engine Control unit) and B23 (Temperature sensor Exhaust system 1) for short-circuit to another line. Is any abnormality recognized? No: Go to Step2 Yes: Go to Step6
	Step2	Inspection procedure Turn the starter switch in OFF. Replace component "B23 (Temperature sensor Exhaust system 1)". Reinstall all the removed connectors. Turn the starter switch in ON. Go to Step3

https://truckmanualshub.com/

Inspection procedure	Step3	Inspection procedure Turn the starter switch in OFF. Reinstall all the removed connectors. Erase fault memory and perform a test drive. Check if this diagnosis code has occurred. Are current fault codes present? No: Go to Step4 Yes: Go to Step5
	Step4	Inspection completed
	Step5	Inspection procedure Perform the operation start and replace A4 (Combustion engine Control unit). Go to Step4
	Step6	Inspection procedure Repair or replace electrical lines. Reinstall all the removed connectors. Turn the starter switch in ON. Go to Step7
	Step7	Inspection procedure Turn the starter switch in OFF. Reinstall all the removed connectors. Erase fault memory and perform a test drive. Check if this diagnosis code has occurred. Are current fault codes present? No: Go to Step4 Yes: Go to Step2

3241-31: Plausibility check of component 'Exhaust temperature upstream of diesel oxidation catalytic converter 1' The received data are implausible.

Generation condition	[Test Condition] • once in a driving cycle if following conditions are true: • monitoring not disabled by FID_ExhTMonPlausTemp due to another failure. • Not in high altitude (ambient pressure > 50kPa {7.3psi, 0.5kgf/cm^2} • The time since last engine stop > 5.00h (time usually taken via CAN from tachograph). • In case the timer or the CAN transmission is defective, the monitoring is inhibited (by FID_ExhTMonPlausTemp)
	[Fault Detection] • Exhaust Temperature Sensor before Oxicat deviates from Exhaust Temperature Sensor after Oxicat (if available) and Exhaust Temperature Sensor before DPF (if available) and Exhaust Temperature Sensor after DPF (if available) and Exhaust Temperature Sensor after DPF (if available) and Exhaust Temperature Sensor after DPF (if available)
	[Defect Debouncing] • Defect condition exceeded cumulatively > 1000.00ms • Failure is detected if active for 50% of the time
Fault healing	• Healing only possible at next driving cycle and the test condition released: Healing if all temperatures are similar
System reaction	• Only according FID (see FID)
	• 1) FId / Inhibit OxiCat passive monitor • 2) Fid / SCR Monitoring or DEF injection release not possible (according calibration of Release Masks) • 3) FId / Particulate filter ((DPF) Regeneration inhibited • 4) FId / Service regeneration of Particulate filter ((DPF) inhibited (due to DPF failure) • 5) FId / Monitoring of particulate filter (DPF) by comparing the calculated flow resistance with measured pressure drop disabled • 6) FId / Monitoring for the destroyed particle filter (DPF) by minimal flow resistance disabled • 7) FId / Inhibit DPF efficiency monitor • 8) FId / Interrupt DPF efficiency monitor
Failure cause	• Exhaust Temperature Sensor before Oxicat measures wrong values

https://truckmanualshub.com/

Failure repair		• Note: Too fast ambient temperature change, e.g. vehicle (and dedicated temperature sensor) exposed to sun shine after very cold night, or if the sensor is in a “warm air stream” (e.g. by additional engines like a cooling compressor for a cold compartment which runs also during vehicle stand still, or an external source like a “exhaust stream” of a building climatisation) can cause this failure, if the ambient of this sensor is not equal to the “normal” ambient! --> in this case no action needed! • Check wiring and connectors for correct contact (corrosion). • Check sensor and replace it if necessary
Inspection procedure	Step1	Inspect or verify the following items. Repair or replace faulty items as necessary. If this diagnosis code has occurred during operation in an environment which was often exposed to sudden temperature change, investigate the driving conditions at that time because it may have been temporary. For procedures, refer to the Shop Manual. Go to Step2
	Step2	Inspection procedure Turn the starter switch in OFF. Remove the connector of A4 (Combustion engine Control unit). Check electrical line between pins A4.X2.94/11 and B23.2/1 for open circuit. Check electrical line between pins A4.X2.94/60 and B23.2/2 for open circuit. Check electrical line between pins A4.X2.94/11 and B23.2/1 for short circuit to positive. Check harness between A4 (Combustion engine Control unit) and B23 (Temperature sensor Exhaust system 1) for short-circuit to another line. Is any abnormality recognized? No: Go to Step3 Yes: Go to Step7
	Step3	Inspection procedure Turn the starter switch in OFF. Replace component “B23 (Temperature sensor Exhaust system 1)”. Reinstall all the removed connectors. Turn the starter switch in ON. Go to Step4
	Step4	Inspection procedure Turn the starter switch in OFF. Reinstall all the removed connectors. Erase fault memory and perform a test drive. Check if this diagnosis code has occurred. Are current fault codes present? No: Go to Step5 Yes: Go to Step6
	Step5	Inspection completed
	Step6	Inspection procedure Perform the operation start and replace A4 (Combustion engine Control unit). Go to Step5
	Step7	Inspection procedure Repair or replace electrical lines. Reinstall all the removed connectors. Turn the starter switch in ON. Go to Step8
	Step8	Inspection procedure Turn the starter switch in OFF. Reinstall all the removed connectors. Erase fault memory and perform a test drive. Check if this diagnosis code has occurred. Are current fault codes present? No: Go to Step5 Yes: Go to Step3

https://truckmanualshub.com/

3242-2: Plausibility check of component 'Exhaust temperature upstream of diesel oxidation catalytic converter 1' The received data are implausible.

Generation condition		[Test Condition] • once in a driving cycle if following conditions are true: • monitoring not disabled by FID_ExhTMonPlausTemp due to another failure. • Not in high altitude (ambient pressure > 50kPa {7.3psi, 0.5kgf/cm^2} • The time since last engine stop > 5.00h (time usually taken via CAN from tachograph). • In case the timer or the CAN transmission is defective, the monitoring is inhibited (by FID_ExhTMonPlausTemp)
		[Fault Detection] • Exhaust Temperature Sensor after Oxicat deviates from Exhaust Temperature Sensor before Oxicat (if available) and Exhaust Temperature Sensor before DPF (if available) and Exhaust Temperature Sensor after DPF (if available) and Exhaust Temperature Sensor after DPF (if available) and Exhaust Temperature Sensor after DPF (if available)
		[Defect Debouncing] • Defect condition exceeded cumulatively > 1000.00ms • Failure is detected if active for 50% of the time
Fault healing		• Healing only possible at next driving cycle and the test condition released: Healing if all temperatures are similar
System reaction		• Only according FID (see FID)
		• 1) FId / Inhibit OxiCat passive monitor • 2) Fid / SCR Monitoring or DEF injection release not possible (according calibration of Release Masks) • 3) FId / Particulate filter ((DPF) Regeneration inhibited • 4) FId / Service regeneration of Particulate filter ((DPF) inhibited (due to DPF failure) • 5) FId / Monitoring of particulate filter (DPF) by comparing the calculated flow resistance with measured pressure drop disabled • 6) FId / Monitoring for the destroyed particle filter (DPF) by minimal flow resistance disabled • 7) FId / Inhibit DPF efficiency monitor • 8) FId / Interrupt DPF efficiency monitor
Failure cause		• Exhaust Temperature Sensor after Oxicat measures wrong values
Failure repair		• Note: Too fast ambient temperature change, e.g. vehicle (and dedicated temperature sensor) exposed to sun shine after very cold night, or if the sensor is in a "warm air stream" (e.g. by additional engines like a cooling compressor for a cold compartment which runs also during vehicle stand still, or an external source like a "exhaust stream" of a building climatisation) can cause this failure, if the ambient of this sensor is not equal to the "normal" ambient! --> in this case no action needed! • Check wiring and connectors for correct contact (corrosion). • Check sensor and replace it if necessary
Inspection procedure	Step1	Inspect or verify the following items. Repair or replace faulty items as necessary. If this diagnosis code has occurred during operation in an environment which was often exposed to sudden temperature change, investigate the driving conditions at that time because it may have been temporary. For procedures, refer to the Shop Manual. Go to Step2
	Step2	Inspection procedure Turn the starter switch in OFF. Remove the connector of A4 (Combustion engine Control unit). Check electrical line between pins A4.X2.94/12 and B24.2/1 for open circuit. Check electrical line between pins A4.X2.94/63 and B24.2/2 for open circuit. Check electrical line between pins A4.X2.94/12 and B24.2/1 for short circuit to positive. Check harness between A4 (Combustion engine Control unit) and B24 (Temperature sensor Exhaust system 2) for short-circuit to another line. Is any abnormality recognized? No: Go to Step3 Yes: Go to Step7

https://truckmanualshub.com/

Inspection procedure	Step3	Inspection procedure Turn the starter switch in OFF. Replace component “B24 (Temperature sensor Exhaust system 2)”. Reinstall all the removed connectors. Turn the starter switch in ON. Go to Step4
	Step4	Inspection procedure Turn the starter switch in OFF. Reinstall all the removed connectors. Erase fault memory and perform a test drive. Check if this diagnosis code has occurred. Are current fault codes present? No: Go to Step5 Yes: Go to Step6
	Step5	Inspection completed
	Step6	Inspection procedure Perform the operation start and replace A4 (Combustion engine Control unit). Go to Step5
	Step7	Inspection procedure Repair or replace electrical lines. Reinstall all the removed connectors. Turn the starter switch in ON. Go to Step8
	Step8	Inspection procedure Turn the starter switch in OFF. Reinstall all the removed connectors. Erase fault memory and perform a test drive. Check if this diagnosis code has occurred. Are current fault codes present? No: Go to Step5 Yes: Go to Step3

3244-0: Signal Range Check (SRC) for ‘Particle Filter Upstream Temperature’ reports HIGH.

Generation condition	[Test Condition] • The signal range checks are only carried out if ADC has not reported a module error. Continuously.
	[Fault Detection] • The sensed raw voltage value Exh_uRawTPFItUs is above 4.00V
	[Defect Debouncing] • Defect condition exceeded cumulatively > 1000.00ms • Failure is detected if active for 50% of the time
Fault healing	• The sensed raw voltage value Exh_uRawTPFItUs is below 4.00V

https://truckmanualshub.com/

System reaction		• DPF temperature upstream is frozen at last valid value on preliminary failure and ramps, using slope 300.00K/s or 300.00K/s depending whether the measured value is above or below replacement value, to a fixed replacement value of 99.96°C {211.93°F} • Further reactions according FID (see FID's)
		• 1) FId / Monitoring of particulate filter (DPF) by comparing the calculated flow resistance with measured pressure drop disabled • 2) FId / Particulate filter ((DPF) Regeneration inhibited • 3) FId / Service regeneration of Particulate filter ((DPF) inhibited (due to DPF failure) • 4) FId / Freeze DPF Temperature upstream if preliminary failure is detected • 5) FId / Inhibit the plausibility check for DPF upstream temperature with model • 6) FId / Inhibit Physical Range Check of sensed DPF Temperature upstream • 7) FId / Replace DPF Temperature upstream with default value if failure is validated • 8) FId / Inhibit DPF upstream Temperature sensor adaption • 9) FId / Plausibilty check of temperature sensors at cold start not allowed • 10) FId / Physical signal range check of temperature sensor 2 inhibited • 11) FId / Inhibit OxiCat passive monitor • 12) Fid / SCR Monitoring or DEF injection release not possible (according calibration of Release Masks) • 13) FId / Engine protection DPF regeneration inhibited due to faulty input signals • 14) FId / Monitoring for the destroyed particle filter (DPF) by minimal flow resistance disabled
Failure cause		• Short circuit of sensor to external source or defective sensor
Failure repair		• Check wiring and sensor
Inspection procedure	Step1	Inspection procedure Turn the starter switch in OFF. Remove the connector of A4 (Combustion engine Control unit). Check electrical line between pins A4.X2.94/12 and B24.2/1 for open circuit. Check electrical line between pins A4.X2.94/63 and B24.2/2 for open circuit. Check electrical line between pins A4.X2.94/12 and B24.2/1 for short circuit to positive. Check harness between A4 (Combustion engine Control unit) and B24 (Temperature sensor Exhaust system 2) for short-circuit to another line. Is any abnormality recognized? No: Go to Step2 Yes: Go to Step6
	Step2	Inspection procedure Turn the starter switch in OFF. Replace component "B24 (Temperature sensor Exhaust system 2)". Reinstall all the removed connectors. Turn the starter switch in ON. Go to Step3
	Step3	Inspection procedure Turn the starter switch in OFF. Reinstall all the removed connectors. Erase fault memory and perform a test drive. Check if this diagnosis code has occurred. Are current fault codes present? No: Go to Step5 Yes: Go to Step4
	Step4	Inspection procedure Perform the operation start and replace A4 (Combustion engine Control unit). Go to Step5
	Step5	Inspection completed
	Step6	Inspection procedure Repair or replace electrical lines. Reinstall all the removed connectors. Turn the starter switch in ON. Go to Step7

https://truckmanualshub.com/

Inspection procedure	Step7	Inspection procedure Turn the starter switch in OFF. Reinstall all the removed connectors. Erase fault memory and perform a test drive. Check if this diagnosis code has occurred. Are current fault codes present? No: Go to Step5 Yes: Go to Step1

3244-1: Signal Range Check (SRC) for 'Particle Filter Upstream Temperature' reports LOW.

Generation condition		[Test Condition] • The signal range checks are only carried out if ADC has not reported a module error. Continuously.
		[Fault Detection] • The sensed raw voltage value Exh_uRawTPFltUs is below 500.00mV
		[Defect Debouncing] • Defect condition exceeded cumulatively > 1000.00ms • Failure is detected if active for 50% of the time
Fault healing		• The sensed raw voltage value Exh_uRawTPFltUs is above 500.00mV
System reaction		• DPF temperature upstream is frozen at last valid value on preliminary failure and ramps, using slope 300.00K/s or 300.00K/s depending whether the measured value is above or below replacement value, to a fixed replacement value of 99.96°C {211.93°F} • Further reactions according FID (see FID's)
		• 1) FId / Monitoring of particulate filter (DPF) by comparing the calculated flow resistance with measured pressure drop disabled • 2) FId / Particulate filter ((DPF) Regeneration inhibited • 3) FId / Service regeneration of Particulate filter ((DPF) inhibited (due to DPF failure) • 4) FId / Freeze DPF Temperature upstream if preliminary failure is detected • 5) FId / Inhibit the plausibility check for DPF upstream temperature with model • 6) FId / Inhibit Physical Range Check of sensed DPF Temperature upstream • 7) FId / Replace DPF Temperature upstream with default value if failure is validated • 8) FId / Inhibit DPF upstream Temperature sensor adaption • 9) FId / Plausibilty check of temperature sensors at cold start not allowed • 10) FId / Physical signal range check of temperature sensor 2 inhibited • 11) FId / Inhibit OxiCat passive monitor • 12) Fid / SCR Monitoring or DEF injection release not possible (according calibration of Release Masks) • 13) FId / Engine protection DPF regeneration inhibited due to faulty input signals • 14) FId / Monitoring for the destroyed particle filter (DPF) by minimal flow resistance disabled
Failure cause		• Short circuit of sensor to ground or defective sensor
Failure repair		• Check wiring or replace sensor
Inspection procedure	Step1	Inspection procedure Turn the starter switch in OFF. Remove the connector of A4 (Combustion engine Control unit). Check electrical line between pins A4.X2.94/12 and B24.2/1 for open circuit. Check electrical line between pins A4.X2.94/63 and B24.2/2 for open circuit. Check electrical line between pins A4.X2.94/12 and B24.2/1 for short circuit to positive. Check harness between A4 (Combustion engine Control unit) and B24 (Temperature sensor Exhaust system 2) for short-circuit to another line. Is any abnormality recognized? No: Go to Step2 Yes: Go to Step6

https://truckmanualshub.com/

Inspection procedure	Step2	Inspection procedure Turn the starter switch in OFF. Replace component “B24 (Temperature sensor Exhaust system 2)”. Reinstall all the removed connectors. Turn the starter switch in ON. Go to Step3
	Step3	Inspection procedure Turn the starter switch in OFF. Reinstall all the removed connectors. Erase fault memory and perform a test drive. Check if this diagnosis code has occurred. Are current fault codes present? No: Go to Step5 Yes: Go to Step4
	Step4	Inspection procedure Perform the operation start and replace A4 (Combustion engine Control unit). Go to Step5
	Step5	Inspection completed
	Step6	Inspection procedure Repair or replace electrical lines. Reinstall all the removed connectors. Turn the starter switch in ON. Go to Step7
	Step7	Inspection procedure Turn the starter switch in OFF. Reinstall all the removed connectors. Erase fault memory and perform a test drive. Check if this diagnosis code has occurred. Are current fault codes present? No: Go to Step5 Yes: Go to Step1

3244-2: Plausibility check of component ‘Particle Filter Upstream Temperature Sensor’Data erratic, intermittent or incorrect

Generation condition	[Test Condition] • FId_TPFltUsNpl is not inhibited by another failure • 6.67min time has elapsed since the change of engine to normal running state • 6.67min time has elapsed since the plausibility check inhibition due to DPF regeneration state. • The examination takes place continuously.
	[Fault Detection] • An error is detected if the difference between the temperature upstream of Exh_tPFltUs, and the modelled • Exhaust Temperature after Oxicat higher than +/- the (calculated) temperature dependant limit (curves) (Exh_tDiffPosTOxiCatUs/ Exh_tDiffNegTOxiCatUs).
	[Defect Debouncing] • Defect condition exceeded cumulatively > 15.00s • Failure is detected if active for 50% of the time
Fault healing	• Temperature difference from model is in range

https://truckmanualshub.com/

System reaction		• None (only via Inhibit Handler)
		• 1) FId / Monitoring of particulate filter (DPF) by comparing the calculated flow resistance with measured pressure drop disabled • 2) FId / Particulate filter ((DPF) Regeneration inhibited • 3) FId / Service regeneration of Particulate filter ((DPF) inhibited (due to DPF failure) • 4) FId / Inhibit DPF upstream Temperature sensor adaption • 5) FId / Inhibit OxiCat passive monitor • 6) Fid / SCR Monitoring or DEF injection release not possible (according calibration of Release Masks) • 7) FId / Engine protection DPF regeneration inhibited due to faulty input signals • 8) FId / Monitoring for the destroyed particle filter (DPF) by minimal flow resistance disabled • 9) FId / Zero Fuel Calibration (ZFC) of injectors by Lambda Sensor signal disabled • 10) FId / The Adaptation of lambda Sensor disabled
Failure cause		• An abnormal heating of the exhaust system has occurred or DPF upstream temperature sensor is inaccurate.
Failure repair		• Let engine cool down before restarting and check sensor accuracy. • If the real exhaust temperature really differs from the calculated one due to a failure in the engine like: • wrong injection pressure, • wrong injection begin • wrong EGR rate • the engine system should be checked.
Inspection procedure	Step1	Inspection procedure Inspect the suspected factors mentioned above sequentially to locate faulty parts. Repair or replace the faulty part as necessary.

3244-16: Signal Range Check (SRC) for 'Exhaust gas temperature upstream of diesel particulate filter (raw value)' reports HIGH.

Generation condition	[Test Condition] • Continuously if ADC is not reporting an electrical problem on the sensor
	[Fault Detection] • The sensed sensor signal Exh_tSensTPFltUs is above 999.96°C {1831.93°F}
	[Defect Debouncing] • Defect condition exceeded cumulatively > 10.00s • Failure is detected if active for 50% of the time
Fault healing	• The sensed sensor signal Exh_tSensTPFltUs is below 999.96°C {1831.93°F}

https://truckmanualshub.com/

System reaction		• DPF temperature upstream is frozen at last valid value on preliminary failure and ramps, using slope 300.00K/s or 300.00K/s depending whether the measured value is above or below replacement value, to a fixed replacement value of 99.96°C {211.93°F} • Further reactions according FID (see FID's)
		• 1) FId / Monitoring of particulate filter (DPF) by comparing the calculated flow resistance with measured pressure drop disabled • 2) FId / Particulate filter ((DPF) Regeneration inhibited • 3) FId / Service regeneration of Particulate filter ((DPF) inhibited (due to DPF failure) • 4) FId / Freeze DPF Temperature upstream if preliminary failure is detected • 5) FId / Inhibit the plausibility check for DPF upstream temperature with model • 6) FId / Replace DPF Temperature upstream with default value if failure is validated • 7) FId / Inhibit DPF upstream Temperature sensor adaption • 8) FId / Inhibit OxiCat passive monitor • 9) Fid / SCR Monitoring or DEF injection release not possible (according calibration of Release Masks) • 10) FId / Engine protection DPF regeneration inhibited due to faulty input signals • 11) FId / Monitoring for the destroyed particle filter (DPF) by minimal flow resistance disabled • 12) FId / Zero Fuel Calibration (ZFC) of injectors by Lambda Sensor signal disabled • 13) FId / The Adaptation of lambda Sensor disabled
Failure cause		• Inaccurate or defective temperature sensor, defect in the wiring
Failure repair		• Check wiring and the accuracy of the temperature sensor and replace it if necessary
Inspection procedure	Step1	Inspection procedure Turn the starter switch in OFF. Remove the connector of A4 (Combustion engine Control unit). Check electrical line between pins A4.X2.94/12 and B24.2/1 for open circuit. Check electrical line between pins A4.X2.94/63 and B24.2/2 for open circuit. Check electrical line between pins A4.X2.94/12 and B24.2/1 for short circuit to positive. Check harness between A4 (Combustion engine Control unit) and B24 (Temperature sensor Exhaust system 2) for short-circuit to another line. Is any abnormality recognized? No: Go to Step2 Yes: Go to Step6
	Step2	Inspection procedure Turn the starter switch in OFF. Replace component "B24 (Temperature sensor Exhaust system 2)". Reinstall all the removed connectors. Turn the starter switch in ON. Go to Step3
	Step3	Inspection procedure Turn the starter switch in OFF. Reinstall all the removed connectors. Erase fault memory and perform a test drive. Check if this diagnosis code has occurred. Are current fault codes present? No: Go to Step4 Yes: Go to Step5
	Step4	Inspection completed
	Step5	Inspection procedure Perform the operation start and replace A4 (Combustion engine Control unit). Go to Step4
	Step6	Inspection procedure Repair or replace electrical lines. Reinstall all the removed connectors. Turn the starter switch in ON. Go to Step7

https://truckmanualshub.com/

Inspection procedure	Step7	Inspection procedure Turn the starter switch in OFF. Reinstall all the removed connectors. Erase fault memory and perform a test drive. Check if this diagnosis code has occurred. Are current fault codes present? No: Go to Step4 Yes: Go to Step2

3244-18: Signal Range Check (SRC) for 'Exhaust gas temperature upstream of diesel particulate filter (raw value)' reports LOW.

Generation condition	[Test Condition] • Continuously if ADC is not reporting an electrical problem on the sensor
	[Fault Detection] • The sensed sensor signal Exh_tSensTPFltUs is below -45.04°C {-49.07°F}
	[Defect Debouncing] • Defect condition exceeded cumulatively > 10.00s • Failure is detected if active for 50% of the time
Fault healing	• The sensed sensor signal Exh_tSensTPFltUs is above -45.04°C {-49.07°F}
System reaction	• DPF temperature upstream is frozen at last valid value on preliminary failure and ramps, using slope 300.00K/s or 300.00K/s depending whether the measured value is above or below replacement value, to a fixed replacement value of 99.96°C {211.93°F} • Further reactions according FID (see FID's)
	• 1) FId / Monitoring of particulate filter (DPF) by comparing the calculated flow resistance with measured pressure drop disabled • 2) FId / Particulate filter ((DPF) Regeneration inhibited • 3) FId / Service regeneration of Particulate filter ((DPF) inhibited (due to DPF failure) • 4) FId / Freeze DPF Temperature upstream if preliminary failure is detected • 5) FId / Inhibit the plausibility check for DPF upstream temperature with model • 6) FId / Replace DPF Temperature upstream with default value if failure is validated • 7) FId / Inhibit DPF upstream Temperature sensor adaption • 8) FId / Inhibit OxiCat passive monitor • 9) Fid / SCR Monitoring or DEF injection release not possible (according calibration of Release Masks) • 10) FId / Engine protection DPF regeneration inhibited due to faulty input signals • 11) FId / Monitoring for the destroyed particle filter (DPF) by minimal flow resistance disabled • 12) FId / Zero Fuel Calibration (ZFC) of injectors by Lambda Sensor signal disabled • 13) FId / The Adaptation of lambda Sensor disabled
Failure cause	• Inaccurate or defective temperature sensor, defect in the wiring
Failure repair	• Check wiring and the accuracy of the air temperature sensor and replace it if necessary

https://truckmanualshub.com/

Inspection procedure	Step1	Inspection procedure Turn the starter switch in OFF. Remove the connector of A4 (Combustion engine Control unit). Check electrical line between pins A4.X2.94/12 and B24.2/1 for open circuit. Check electrical line between pins A4.X2.94/63 and B24.2/2 for open circuit. Check electrical line between pins A4.X2.94/12 and B24.2/1 for short circuit to positive. Check harness between A4 (Combustion engine Control unit) and B24 (Temperature sensor Exhaust system 2) for short-circuit to another line. Is any abnormality recognized? No: Go to Step2 Yes: Go to Step6
	Step2	Inspection procedure Turn the starter switch in OFF. Replace component “B24 (Temperature sensor Exhaust system 2)”. Reinstall all the removed connectors. Turn the starter switch in ON. Go to Step3
	Step3	Inspection procedure Turn the starter switch in OFF. Reinstall all the removed connectors. Erase fault memory and perform a test drive. Check if this diagnosis code has occurred. Are current fault codes present? No: Go to Step4 Yes: Go to Step5
	Step4	Inspection completed
	Step5	Inspection procedure Perform the operation start and replace A4 (Combustion engine Control unit). Go to Step4
	Step6	Inspection procedure Repair or replace electrical lines. Reinstall all the removed connectors. Turn the starter switch in ON. Go to Step7
	Step7	Inspection procedure Turn the starter switch in OFF. Reinstall all the removed connectors. Erase fault memory and perform a test drive. Check if this diagnosis code has occurred. Are current fault codes present? No: Go to Step4 Yes: Go to Step2

3245-31: Plausibility check of component ‘Exhaust temperature downstream of diesel particular filter’ The received data are implausible.

Generation condition	[Test Condition] • once in a driving cycle if following conditions are true: • monitoring not disabled by FID_ExhTMonPlausTemp due to another failure. • Not in high altitude (ambient pressure > 50kPa {7.3psi, 0.5kgf/cm^2} • The time since last engine stop > 5.00h (time usually taken via CAN from tachograph). • In case the timer or the CAN transmission is defective, the monitoring is inhibited (by FID_ExhTMonPlausTemp)
	[Fault Detection] • Exhaust Temperature Sensor after DPF deviates from Exhaust Temperature Sensor before Oxicat (if available) and Exhaust Temperature Sensor after Oxicat (if available) and Exhaust Temperature Sensor before DPF (if available) and Exhaust Temperature Sensor after DPF (if available) and Exhaust Temperature Sensor after DPF (if available)
	[Defect Debouncing] • Defect condition exceeded cumulatively > 1000.00ms • Failure is detected if active for 50% of the time

https://truckmanualshub.com/

Fault healing		• Healing only possible at next driving cycle and the test condition released: Healing if all temperatures are similar
System reaction		• Only according FID (see FID)
		• 1) Fid / Reagent dosing for SCR inhibited
Failure cause		• Exhaust Temperature Sensor after DPF measures wrong values
Failure repair		• Note: Too fast ambient temperature change, e.g. vehicle (and dedicated temperature sensor) exposed to sun shine after very cold night, or if the sensor is in a “warm air stream” (e.g. by additional engines like a cooling compressor for a cold compartment which runs also during vehicle stand still, or an external source like a “exhaust stream” of a building climatisation) can cause this failure, if the ambient of this sensor is not equal to the “normal” ambient! --> in this case no action needed! • Check wiring and connectors for correct contact (corrosion). • Check sensor and replace it if necessary
Inspection procedure	Step1	Inspect or verify the following items. Repair or replace faulty items as necessary. If this diagnosis code has occurred during operation in an environment which was often exposed to sudden temperature change, investigate the driving conditions at that time because it may have been temporary. For procedures, refer to the Shop Manual. Go to Step2
	Step2	Inspect or verify the following items. Repair or replace faulty items as necessary. If one of diagnosis codes associated with A20 (SAM) is generated, make a system diagnosis according to the diagnosis code. Go to Step3
	Step3	Inspection procedure Turn the starter switch in OFF. Remove the connector of A4 (Combustion engine Control unit). Remove the connector of B32 (Temperature sensor “SCR catalytic converter” 2). Check the circuit across A4.X2.94/55 and B32.2/1 for open or short circuit. Check the circuit across A4.X2.94/9 and B32.2/2 for open or short circuit. Make a visual check on each connector. Is any abnormality recognized? No: Go to Step4 Yes: Go to Step8
	Step4	Inspection procedure Turn the starter switch in OFF. Replace component “B32 (Temperature sensor “SCR catalytic converter” 2)”. Reinstall all the removed connectors. Turn the starter switch in ON. Go to Step5
	Step5	Inspection procedure Turn the starter switch in OFF. Reinstall all the removed connectors. Erase fault memory and perform a test drive. Check if this diagnosis code has occurred. Are current fault codes present? No: Go to Step6 Yes: Go to Step7
	Step6	Inspection completed
	Step7	Inspection procedure Perform the operation start and replace A4 (Combustion engine Control unit). Go to Step6

https://truckmanualshub.com/

Inspection procedure	Step8	Inspection procedure Turn the starter switch in OFF. Remove the connector of A4 (Combustion engine Control unit). Remove the connector of X42 (Intermediate connector). Check the circuit across A4.X2.94/55 and X42.8/6 for open or short circuit. Check the circuit across A4.X2.94/9 and X42.8/5 for open or short circuit. Make a visual check on each connector. Is any abnormality recognized? No: Go to Step9 Yes: Go to Step10
	Step9	Inspection procedure Repair or replace the harness across B32 (Temperature sensor “SCR catalytic converter” 2) and X42 (Intermediate connector). Reinstall all the removed connectors. Erase fault memory and perform a test drive. Check if this diagnosis code has occurred. Are current fault codes present? No: Go to Step6 Yes: Go to Step4
	Step10	Inspection procedure Repair or replace the harness across A4 (Combustion engine Control unit) and X42 (Intermediate connector). Reinstall all the removed connectors. Erase fault memory and perform a test drive. Check if this diagnosis code has occurred. Are current fault codes present? No: Go to Step6 Yes: Go to Step4

3246-2: Plausibility check of component ‘Exhaust temperature upstream of diesel particulate filter’ The received data are implausible.

Generation condition	[Test Condition] • once in a driving cycle if following conditions are true: • monitoring not disabled by FID_ExhTMonPlausTemp due to another failure. • Not in high altitude (ambient pressure > 50kPa {7.3psi, 0.5kgf/cm^2} • The time since last engine stop > 5.00h (time usually taken via CAN from tachograph). • In case the timer or the CAN transmission is defective, the monitoring is inhibited (by FID_ExhTMonPlausTemp)
	[Fault Detection] • Exhaust Temperature Sensor before DPF deviates from Exhaust Temperature Sensor before Oxicat (if available) and Exhaust Temperature Sensor after Oxicat (if available) and Exhaust Temperature Sensor after DPF (if available) and Exhaust Temperature Sensor after DPF (if available) and Exhaust Temperature Sensor after DPF (if available)
	[Defect Debouncing] • Defect condition exceeded cumulatively > 1000.00ms • Failure is detected if active for 50% of the time
Fault healing	• Healing only possible at next driving cycle and the test condition released: Healing if all temperatures are similar
System reaction	• Only according FID (see FID)
	• 1) FId / Monitoring of particulate filter (DPF) by comparing the calculated flow resistance with measured pressure drop disabled • 2) FId / Monitoring for the destroyed particle filter (DPF) by minimal flow resistance disabled • 3) FId / Inhibit DPF efficiency monitor • 4) FId / Interrupt DPF efficiency monitor • 5) FId / Inhibit monitor for DPF frequent regeneration • 6) Fid / Reagent dosing for SCR inhibited • 7) FId / Inhibit OxiCat passive monitor • 8) FId / Inhibit monitor for incomplete regeneration of the DPF
Failure cause	• Exhaust Temperature Sensor before DPF measures wrong values

https://truckmanualshub.com/

Failure repair		• Note: Too fast ambient temperature change, e.g. vehicle (and dedicated temperature sensor) exposed to sun shine after very cold night, or if the sensor is in a “warm air stream” (e.g. by additional engines like a cooling compressor for a cold compartment which runs also during vehicle stand still, or an external source like a “exhaust stream” of a building climatisation) can cause this failure, if the ambient of this sensor is not equal to the “normal” ambient! --> in this case no action needed! • Check wiring and connectors for correct contact (corrosion). • Check sensor and replace it if necessary
Inspection procedure	Step1	Inspect or verify the following items. Repair or replace faulty items as necessary. If this diagnosis code has occurred during operation in an environment which was often exposed to sudden temperature change, investigate the driving conditions at that time because it may have been temporary. For procedures, refer to the Shop Manual. Go to Step2
	Step2	Inspection procedure Turn the starter switch in OFF. Remove the connector of A4 (Combustion engine Control unit). Check electrical line between pins A4.X2.94/12 and B24.2/1 for open circuit. Check electrical line between pins A4.X2.94/63 and B24.2/2 for open circuit. Check electrical line between pins A4.X2.94/12 and B24.2/1 for short circuit to positive. Check harness between A4 (Combustion engine Control unit) and B24 (Temperature sensor Exhaust system 2) for short-circuit to another line. Is any abnormality recognized? No: Go to Step3 Yes: Go to Step7
	Step3	Inspection procedure Turn the starter switch in OFF. Replace component “B24 (Temperature sensor Exhaust system 2)”. Reinstall all the removed connectors. Turn the starter switch in ON. Go to Step4
	Step4	Inspection procedure Turn the starter switch in OFF. Reinstall all the removed connectors. Erase fault memory and perform a test drive. Check if this diagnosis code has occurred. Are current fault codes present? No: Go to Step5 Yes: Go to Step6
	Step5	Inspection completed
	Step6	Inspection procedure Perform the operation start and replace A4 (Combustion engine Control unit). Go to Step5
	Step7	Inspection procedure Repair or replace electrical lines. Reinstall all the removed connectors. Turn the starter switch in ON. Go to Step8
	Step8	Inspection procedure Turn the starter switch in OFF. Reinstall all the removed connectors. Erase fault memory and perform a test drive. Check if this diagnosis code has occurred. Are current fault codes present? No: Go to Step5 Yes: Go to Step3

https://truckmanualshub.com/

3248-0: Signal Range Check (SRC) for 'temperature after SCR catalyst' reports HIGH.

Generation condition		[Test Condition] • Monitoring is active while the battery voltage is over 10.00V and as long as the battery voltage is over 10.00V and 2.00s after this threshold has been exceeded • Continuously if the ADC module does not report any error.
		[Fault Detection] • The Sensed raw voltage value SCR_uRawUCatDsT is above 4.00V
		[Defect Debouncing] • Defect condition exceeded cumulatively > 700.00ms • Failure is detected if active for 50% of the time
Fault healing		• The Sensed raw voltage value SCR_uRawUCatDsT is below 4.00V
System reaction		• DEF catalyst downstream temperature is frozen at last valid value on preliminary failure and ramps to fixed replacement value 26.96°C {80.53°F} if failure is validated using slope 3300.00K/s or 3300.00K/s depending on whether the replacement value is above or below the current value • Further reactions according FID (see FID's)
		• 1) FId / Replace Cat Downstream temperature with default value if failure is validated • 2) FId / Plausibilty check of temperature sensors at cold start not allowed • 3) Fid / Reagent dosing for SCR inhibited • 4) FId / Physical signal range check of temperature sensor 4 inhibited • 5) Fid / SCR Monitoring or DEF injection release not possible (according calibration of Release Masks) • 6) FId / Inhibit Physical Range Check of sensed Catalyst Downstream temperature
Failure cause		• Sensor defective or short circuit in wiring to external source
Failure repair		• Check wiring or replace sensor
Inspection procedure	Step1	Inspect or verify the following items. Repair or replace faulty items as necessary. If any other fault code has occurred, perform the diagnostics procedure for the fault code. Go to Step2
	Step2	Inspect or verify the following items. Repair or replace faulty items as necessary. If one of diagnosis codes associated with SAM ECU is generated, make a system diagnosis according to the diagnosis code. Go to Step3
	Step3	Inspection procedure Turn the starter switch in OFF. Remove the connector of A4 (Combustion engine Control unit). Remove the connector of B32 (Temperature sensor "SCR catalytic converter" 2). Check the circuit across A4.X2.94/55 and B32.2/1 for open or short circuit. Check the circuit across A4.X2.94/9 and B32.2/2 for open or short circuit. Make a visual check on each connector. Is any abnormality recognized? No: Go to Step4 Yes: Go to Step8
	Step4	Inspection procedure Turn the starter switch in OFF. Replace component "B32 (Temperature sensor "SCR catalytic converter" 2)". Reinstall all the removed connectors. Turn the starter switch in ON. Go to Step5
	Step5	Inspection procedure Turn the starter switch in OFF. Reinstall all the removed connectors. Erase fault memory and perform a test drive. Check if this diagnosis code has occurred. Are current fault codes present? No: Go to Step7 Yes: Go to Step6

https://truckmanualshub.com/

Inspection procedure	Step6	Inspection procedure Perform the operation start and replace A4 (Combustion engine Control unit). Go to Step7
	Step7	Inspection completed
	Step8	Inspection procedure Turn the starter switch in OFF. Remove the connector of A4 (Combustion engine Control unit). Remove the connector of X42 (Intermediate connector). Check the circuit across A4.X2.94/55 and X42.8/6 for open or short circuit. Check the circuit across A4.X2.94/9 and X42.8/5 for open or short circuit. Make a visual check on each connector. Is any abnormality recognized? No: Go to Step9 Yes: Go to Step10
	Step9	Inspection procedure Repair or replace the harness across B32 (Temperature sensor “SCR catalytic converter” 2) and X42 (Intermediate connector). Reinstall all the removed connectors. Erase fault memory and perform a test drive. Check if this diagnosis code has occurred. Are current fault codes present? No: Go to Step7 Yes: Go to Step4
	Step10	Inspection procedure Repair or replace the harness across A4 (Combustion engine Control unit) and X42 (Intermediate connector). Reinstall all the removed connectors. Erase fault memory and perform a test drive. Check if this diagnosis code has occurred. Are current fault codes present? No: Go to Step7 Yes: Go to Step4

3248-1: Signal Range Check (SRC) for ‘temperature after SCR catalyst’ reports LOW.

Generation condition	[Test Condition] • Monitoring is active while the battery voltage is over 10.00V and as long as the battery voltage is over 10.00V and 2.00s after this threshold has been exceeded • Continuously if the ADC module does not report any error.
	[Fault Detection] • The Sensed raw voltage value SCR_uRawUCatDsT is below 500.00mV
	[Defect Debouncing] • Defect condition exceeded cumulatively > 700.00ms • Failure is detected if active for 50% of the time
Fault healing	• The Sensed raw voltage value SCR_uRawUCatDsT is above 500.00mV
System reaction	• DEF catalyst downstream temperature is frozen at last valid value on preliminary failure and ramps to fixed replacement value 26.96°C {80.53°F} if failure is validated using slope 3300.00K/s or 3300.00K/s depending on whether the replacement value is above or below the current value • Further reactions according FID (see FID’s)
	• 1) FId / Replace Cat Downstream temperature with default value if failure is validated • 2) FId / Plausibilty check of temperature sensors at cold start not allowed • 3) Fid / Reagent dosing for SCR inhibited • 4) FId / Physical signal range check of temperature sensor 4 inhibited • 5) Fid / SCR Monitoring or DEF injection release not possible (according calibration of Release Masks) • 6) FId / Inhibit Physical Range Check of sensed Catalyst Downstream temperature
Failure cause	• Sensor defective or short circuit in wiring to ground
Failure repair	• Check wiring or replace sensor

https://truckmanualshub.com/

Inspection procedure	Step1	Inspect or verify the following items. Repair or replace faulty items as necessary. If any other fault code has occurred, perform the diagnostics procedure for the fault code. Go to Step2
	Step2	Inspect or verify the following items. Repair or replace faulty items as necessary. If one of diagnosis codes associated with SAM ECU is generated, make a system diagnosis according to the diagnosis code. Go to Step3
	Step3	Inspection procedure Turn the starter switch in OFF. Remove the connector of A4 (Combustion engine Control unit). Remove the connector of B32 (Temperature sensor “SCR catalytic converter” 2). Check the circuit across A4.X2.94/55 and B32.2/1 for open or short circuit. Check the circuit across A4.X2.94/9 and B32.2/2 for open or short circuit. Make a visual check on each connector. Is any abnormality recognized? No: Go to Step4 Yes: Go to Step8
	Step4	Inspection procedure Turn the starter switch in OFF. Replace component “B32 (Temperature sensor “SCR catalytic converter” 2)”. Reinstall all the removed connectors. Turn the starter switch in ON. Go to Step5
	Step5	Inspection procedure Turn the starter switch in OFF. Reinstall all the removed connectors. Erase fault memory and perform a test drive. Check if this diagnosis code has occurred. Are current fault codes present? No: Go to Step7 Yes: Go to Step6
	Step6	Inspection procedure Perform the operation start and replace A4 (Combustion engine Control unit). Go to Step7
	Step7	Inspection completed
	Step8	Inspection procedure Turn the starter switch in OFF. Remove the connector of A4 (Combustion engine Control unit). Remove the connector of X42 (Intermediate connector). Check the circuit across A4.X2.94/55 and X42.8/6 for open or short circuit. Check the circuit across A4.X2.94/9 and X42.8/5 for open or short circuit. Make a visual check on each connector. Is any abnormality recognized? No: Go to Step9 Yes: Go to Step10
	Step9	Inspection procedure Repair or replace the harness across B32 (Temperature sensor “SCR catalytic converter” 2) and X42 (Intermediate connector). Reinstall all the removed connectors. Erase fault memory and perform a test drive. Check if this diagnosis code has occurred. Are current fault codes present? No: Go to Step7 Yes: Go to Step4

https://truckmanualshub.com/

Inspection procedure	Step10	Inspection procedure Repair or replace the harness across A4 (Combustion engine Control unit) and X42 (Intermediate connector). Reinstall all the removed connectors. Erase fault memory and perform a test drive. Check if this diagnosis code has occurred. Are current fault codes present? No: Go to Step7 Yes: Go to Step4

3248-16: Exhaust temperature downstream of SCR catalytic converter: Signal value above maximum limit

Generation condition		[Test Condition] • Monitoring is active while the battery voltage is over 10.00V and as long as the battery voltage is over 10.00V and 2.00s after this threshold has been exceeded • continuously if analogic Digital Converter module doesn't report any error and the Signal Range Check error for the catalyst downstream temperature sensor is not set
		[Fault Detection] • The sensed sensor signal SCR_tSensUCatDsT is above 999.96°C {1831.93°F}
		[Defect Debouncing] • Defect condition exceeded cumulatively > 10.00s • Failure is detected if active for 50% of the time
Fault healing		• The sensed sensor signal SCR_tSensUCatDsT is below 999.96°C {1831.93°F}
System reaction		• DEF catalyst downstream temperature is frozen at last valid value on preliminary failure and ramps to fixed replacement value 26.96°C {80.53°F} if failure is validated using slope 3300.00K/s or 3300.00K/s depending on whether the replacement value is above or below the current value • Further reactions according FID (see FID's)
		• 1) FId / Freeze Cat Downstream temperature if preliminary failure is detected • 2) FId / Replace Cat Downstream temperature with default value if failure is validated • 3) Fid / Reagent dosing for SCR inhibited • 4) Fid / SCR Monitoring or DEF injection release not possible (according calibration of Release Masks)
Failure cause		• DEF Catalyst temperature downstream sensor drifted or not correctly mounted • Partial short circuit on wiring harness or sensor
Failure repair		• Check sensor • Check wiring
Inspection procedure	Step1	Inspect or verify the following items. Repair or replace faulty items as necessary. If one of diagnosis codes associated with A20 (SAM) is generated, make a system diagnosis according to the diagnosis code. Go to Step2

https://truckmanualshub.com/

Inspection procedure	Step2	Inspection procedure Turn the starter switch in OFF. Remove the connector of A4 (Combustion engine Control unit). Remove the connector of B32 (Temperature sensor “SCR catalytic converter” 2). Check the circuit across A4.X2.94/55 and B32.2/1 for open or short circuit. Check the circuit across A4.X2.94/9 and B32.2/2 for open or short circuit. Make a visual check on each connector. Is any abnormality recognized? No: Go to Step3 Yes: Go to Step
	Step3	Inspection procedure Turn the starter switch in OFF. Replace component “B32 (Temperature sensor “SCR catalytic converter” 2)”. Reinstall all the removed connectors. Turn the starter switch in ON. Go to Step4
	Step4	Inspection procedure Turn the starter switch in OFF. Reinstall all the removed connectors. Erase fault memory and perform a test drive. Check if this diagnosis code has occurred. Are current fault codes present? No: Go to Step5 Yes: Go to Step6
	Step5	Inspection completed
	Step6	Inspection procedure Perform the operation start and replace A4 (Combustion engine Control unit). Go to Step5
	Step7	Inspection procedure Turn the starter switch in OFF. Remove the connector of A4 (Combustion engine Control unit). Remove the connector of X42 (Intermediate connector). Check the circuit across A4.X2.94/55 and X42.8/6 for open or short circuit. Check the circuit across A4.X2.94/9 and X42.8/5 for open or short circuit. Make a visual check on each connector. Is any abnormality recognized? No: Go to Step8 Yes: Go to Step9
	Step8	Inspection procedure Repair or replace the harness across B32 (Temperature sensor “SCR catalytic converter” 2) and X42 (Intermediate connector). Reinstall all the removed connectors. Erase fault memory and perform a test drive. Check if this diagnosis code has occurred. Are current fault codes present? No: Go to Step5 Yes: Go to Step3
	Step9	Inspection procedure Repair or replace the harness across A4 (Combustion engine Control unit) and X42 (Intermediate connector). Reinstall all the removed connectors. Erase fault memory and perform a test drive. Check if this diagnosis code has occurred. Are current fault codes present? No: Go to Step5 Yes: Go to Step3

https://truckmanualshub.com/

3248-18: Exhaust temperature downstream of SCR catalytic converter: Signal value below minimum limit

Generation condition		[Test Condition] • Monitoring is active while the battery voltage is over 10.00V and as long as the battery voltage is over 10.00V and 2.00s after this threshold has been exceeded • continuously if analogic Digital Converter module doesn't report any error and the Signal Range Check error for the DEF tank temperature sensor is not set
		[Fault Detection] • The sensed sensor signal SCR_tSensUCatDsT is below -45.04°C {-49.07°F}.
		[Defect Debouncing] • Defect condition exceeded cumulatively > 10.00s • Failure is detected if active for 50% of the time
Fault healing		• The sensed sensor signal SCR_tSensUCatDsT is above -45.04°C {-49.07°F}.
System reaction		• DEF catalyst downstream temperature is frozen at last valid value on preliminary failure and ramps to fixed replacement value 26.96°C {80.53°F} if failure is validated using slope 3300.00K/s or 3300.00K/s depending on whether the replacement value is above or below the current value • Further reactions according FID (see FID's)
		• 1) FId / Freeze Cat Downstream temperature if preliminary failure is detected • 2) FId / Replace Cat Downstream temperature with default value if failure is validated • 3) Fid / Reagent dosing for SCR inhibited • 4) Fid / SCR Monitoring or DEF injection release not possible (according calibration of Release Masks)
Failure cause		• DEF Catalyst temperature downstream sensor drifted or not correctly mounted • Partial short circuit on wiring harness or sensor
Failure repair		• Check sensor • Check wiring
Inspection procedure	Step1	Inspect or verify the following items. Repair or replace faulty items as necessary. If one of diagnosis codes associated with A20 (SAM) is generated, make a system diagnosis according to the diagnosis code. Go to Step2
	Step2	Inspection procedure Turn the starter switch in OFF. Remove the connector of A4 (Combustion engine Control unit). Remove the connector of B32 (Temperature sensor "SCR catalytic converter" 2). Check the circuit across A4.X2.94/55 and B32.2/1 for open or short circuit. Check the circuit across A4.X2.94/9 and B32.2/2 for open or short circuit. Make a visual check on each connector. Is any abnormality recognized? No: Go to Step3 Yes: Go to Step
	Step3	Inspection procedure Turn the starter switch in OFF. Replace component "B32 (Temperature sensor "SCR catalytic converter" 2)". Reinstall all the removed connectors. Turn the starter switch in ON. Go to Step4
	Step4	Inspection procedure Turn the starter switch in OFF. Reinstall all the removed connectors. Erase fault memory and perform a test drive. Check if this diagnosis code has occurred. Are current fault codes present? No: Go to Step5 Yes: Go to Step6
	Step5	Inspection completed

https://truckmanualshub.com/

Inspection procedure	Step6	Inspection procedure Perform the operation start and replace A4 (Combustion engine Control unit). Go to Step5
	Step7	Inspection procedure Turn the starter switch in OFF. Remove the connector of A4 (Combustion engine Control unit). Remove the connector of X42 (Intermediate connector). Check the circuit across A4.X2.94/55 and X42.8/6 for open or short circuit. Check the circuit across A4.X2.94/9 and X42.8/5 for open or short circuit. Make a visual check on each connector. Is any abnormality recognized? No: Go to Step8 Yes: Go to Step9
	Step8	Inspection procedure Repair or replace the harness across B32 (Temperature sensor “SCR catalytic converter” 2) and X42 (Intermediate connector). Reinstall all the removed connectors. Erase fault memory and perform a test drive. Check if this diagnosis code has occurred. Are current fault codes present? No: Go to Step5 Yes: Go to Step3
	Step9	Inspection procedure Repair or replace the harness across A4 (Combustion engine Control unit) and X42 (Intermediate connector). Reinstall all the removed connectors. Erase fault memory and perform a test drive. Check if this diagnosis code has occurred. Are current fault codes present? No: Go to Step5 Yes: Go to Step3

3251-18: The value of component ‘B37 (DPF differential pressure sensor)’ is implausible. The minimum pressure was not reached.

Generation condition	[Test Condition] • The check is carried out continuously in the 100 ms interval if not inhibited by DINH_stFId.FId_PFltChar due to another failure. • There is no pending regeneration • The volume flow ASMod_dvolPFltEG lies above the threshold 500.00m^3/h
	[Fault Detection] • A failure is detected if the particulate filter differential pressure is below the monitoring threshold PFlt_pDiffCharMonMin_mp stored in the map PFlt_pDiffCharMonMin_MAP depending on the simulated soot mass and the exhaust volume flow.
	[Defect Debouncing] • Defect condition fulfilled continuously >5000.0 ms
Fault healing	• No Healing possible (disabled by Data set)

https://truckmanualshub.com/

System reaction		• None (only via inhibit handler)
		• 1) FId / Pressure Compensation of O2-Signal can not be learnt - is taken from the curve (LSU_facPresComLean_CUR) • 2) FId / Substitute calibration array is used to determinate the regeneration lock-out time of particulate filter (DPF) • 3) FId / Substitute parameter set of maximum values is used for the calculation of fuel consumption, operating hours and distance covered since the last successful regeneration of particulate filter (DPF) • 4) FId / Engine protection DPF regeneration inhibited due to faulty input signals • 5) FId / Zero Fuel Calibration (ZFC) of injectors by Lambda Sensor signal disabled • 6) FId / Monitoring for the destroyed particle filter (DPF) by minimal flow resistance disabled • 7) FId / Inhibit DPF efficiency monitor • 8) FId / Interrupt DPF efficiency monitor • 9) FId / Inhibit monitor for DPF frequent regeneration • 10) FId / Inhibit monitor for incomplete regeneration of the DPF
Failure cause		• Filter is not installed or has an internal breakthrough
Failure repair		• Check filter for proper installation and function (no black smoke at exhaust pipe)
Inspection procedure	Step1	Inspection procedure Inspect the suspected factors mentioned above sequentially to locate faulty parts. Repair or replace the faulty part as necessary.

3253-16: Plausibility check of component 'B28/8 (DPF differential pressure sensor)' Data Valid But Above Normal Operational Range.

Generation condition	[Test Condition] • Condition is tested during ECM after-run 2.00s, after turning key off.
	[Fault Detection] • The adapted raw differential pressure value Exh_pRawAdapPPFltDiff is above the tolerance limit 2.5kPa {0.4psi, 0.025kgf/cm^2}
	[Defect Debouncing] • Defect condition exceeded cumulatively > 100.00ms • Failure is detected if active for 50% of the time
Fault healing	• The error is healed if the adapted raw pressure value is below the tolerance limit 2.5kPa {0.4psi, 0.025kgf/cm^2}

https://truckmanualshub.com/

System reaction		• None (Only via inhibit handler)
		• 1) FId / The Adaptation of lambda Sensor disabled • 2) FId / The adaptation values for Lambda Sensor stored in EEPROM are reset to • 3) FId / O2 Signal of Lambda Sensor not valid • 4) FId / Signal Range Check of O2 Signal of lambda Sensor disabled • 5) FId / Plausibility Check of O2-Signal of Lambda Sensor (e.g. with HFM or Air calculation by Boost pressure) is disabled and last valid value taken • 6) FId / Pressure Compensation of O2-Signal can not be learnt - is taken from the curve (LSU_facPresComLean_CUR) • 7) FId / Monitoring of particulate filter (DPF) by comparing the calculated flow resistance with measured pressure drop disabled • 8) FId / Monitoring for the destroyed particle filter (DPF) by minimal flow resistance disabled • 9) FId / Substitute calibration array is used to determinate the regeneration lock-out time of particulate filter (DPF) • 10) FId / Soot mass calculation of particulate filter (DPF) deactivated, only simulation is used. • 11) FId / Function inhibitor for frozen sensor detection. • 12) FId / Friction torque due to particulate filter (DPF) flow resistance set to • 13) FId / Zero Fuel Calibration (ZFC) of injectors by Lambda Sensor signal disabled • 14) FId / Inhibit DPF efficiency monitor • 15) FId / Interrupt DPF efficiency monitor • 16) FId / Inhibit monitor for DPF frequent regeneration • 17) FId / Inhibit monitor for incomplete regeneration of the DPF • 18) FId / Engine protection DPF regeneration inhibited due to faulty input signals
Failure cause		• Differential pressure sensor is inaccurate.
Failure repair		• Check accuracy of differential pressure sensor.
Inspection procedure	Step1	Inspection procedure If one of diagnosis codes associated with SAM ECU is generated, make a system diagnosis according to the diagnosis code. Go to Step2
	Step2	Inspection procedure Turn the starter switch in OFF. Remove the connector of A4 (Combustion engine Control unit). Remove the connector of B37 (DPF differential pressure sensor). Check the circuit across B37.3/1 and A4.X2.94/22 for open or short circuit. Check the circuit across B37.3/3 and A4.X2.94/54 for open or short circuit. Check the circuit across B37.3/2 and A4.X2.94/18 for open or short circuit. Make a visual check on each connector. Is any abnormality recognized? No: Go to Step3 Yes: Go to Step7
	Step3	Inspection procedure Turn the starter switch in OFF. Replace component “B37 (DPF differential pressure sensor)”. Reinstall all the removed connectors. Turn the starter switch in ON. Perform the learned value resetting procedure of B37 (DPF differential pressure sensor) which A4 (Combustion engine Control unit) learns. Go to Step4
	Step4	Inspection procedure Turn the starter switch in OFF. Reinstall all the removed connectors. Erase fault memory and perform a test drive. Check if this diagnosis code has occurred. Are current fault codes present? No: Go to Step6 Yes: Go to Step5
	Step5	Inspection procedure Perform the operation start and replace A4 (Combustion engine Control unit). Go to Step6
	Step6	Inspection completed

Inspection procedure	Step7	Inspection procedure Repair or replace electrical lines. Reinstall all the removed connectors. Erase fault memory and perform a test drive. Check if this diagnosis code has occurred. Are current fault codes present? No: Go to Step6 Yes: Go to Step3

3253-18: Hose Line connection check of component B28/8 (DPF differential pressure sensor).Data valid but below normal operational range

Generation condition		[Test Condition] • Condition is tested during ECM after-run, 2.00s after turning key off, if pressure sensor was tested and no failure was detected • and pressure sensor offset compensation is completed • ie Exh_stOfsCalcDnePPFltDiff_mp is set.
		[Fault Detection] • An error is detected if minimal steady differential pressure corrected with offset compensation (Exh_pMinStyPPFltDiff - Exh_pOfsValActMidPPFltDiff) is below -10kPa {-1.5psi, -0.1kgf/cm^2}. • Steady differential pressure is determined every time differential pressure variation is < 20kPa {2.9psi, 0.2kgf/cm^2} in a time window > 5.00s
		[Defect Debouncing] • Defect condition exceeded cumulatively > 10.00ms • Failure is detected if active for 50% of the time
Fault healing		• Healing takes place if minimal steady differential pressure corrected with offset compensation is above -10kPa {-1.5psi, -0.1kgf/cm^2}. • Healing can only happen in the next afterrun.
System reaction		• None (Only via inhibit handler)
		• 1) FId / Pressure Compensation of O2-Signal can not be learnt - is taken from the curve (LSU_facPresComLean_CUR) • 2) FId / Monitoring of particulate filter (DPF) by comparing the calculated flow resistance with measured pressure drop disabled • 3) FId / Substitute calibration array is used to determinate the regeneration lock-out time of particulate filter (DPF) • 4) FId / Substitute parameter set of maximum values is used for the calculation of fuel consumption, operating hours and distance covered since the last successful regeneration of particulate filter (DPF) • 5) FId / Engine protection DPF regeneration inhibited due to faulty input signals • 6) FId / Soot mass calculation of particulate filter (DPF) deactivated, only simulation is used. • 7) FId / Zero Fuel Calibration (ZFC) of injectors by Lambda Sensor signal disabled • 8) FId / Monitoring for the destroyed particle filter (DPF) by minimal flow resistance disabled • 9) FId / Inhibit monitor for DPF frequent regeneration • 10) FId / Inhibit monitor for incomplete regeneration of the DPF
Failure cause		• Differential pressure sensor of filter upside down, hose lines crossed
Failure repair		• Check differential pressure sensor mounting and hose lines. • Reset offset drift compensation for diff.pressure sensor using dedicated UDS Routine Control Service (ID $0253)
Inspection procedure	Step1	Inspection procedure Inspect the suspected factors mentioned above sequentially to locate faulty parts. Repair or replace the faulty part as necessary.

https://truckmanualshub.com/

3285-2: The result of the dynamic test of component '{0}' is not plausible.

Generation condition		[Test Condition] • Continuously
		[Fault Detection] • This error is set when the volume flow signal Exh_dvolFltPPFltDiff_mp and the differential pressure Exh_p-FltPPFltDiff does not have plausible behaviour. This means, the change of differential pressure • Exh_dpFltPPFltDiff_mp is smaller than the positive minimum value (Exh_dpPosDefPPFltDiff_mp) or greater than the negative minimum value (Exh_dpNegDefPPFltDiff_mp).
		[Defect Debouncing] • Defect condition exceeded cumulatively > 900.00ms • Failure is detected if active for 50% of the time
Fault healing		• When the change of differential pressure is greater than or equal to the positive minimum value or smaller than or equal to the negative minimum value healing takes place.
System reaction		• This is a Signal Range Check (SRC). In case of a failure shall the OBD lamp be activated.
		• 1) FId / DPF differential pressure defective • 2) FId / Monitoring of particulate filter (DPF) by comparing the calculated flow resistance with measured pressure drop disabled • 3) FId / Monitoring for the destroyed particle filter (DPF) by minimal flow resistance disabled • 4) FId / Inhibit monitor for DPF frequent regeneration • 5) FId / Inhibit monitor for incomplete regeneration of the DPF • 6) FId / Engine protection DPF regeneration inhibited due to faulty input signals • 7) FId / Trigger substitute function for PPFltDiff output in case of temporary SRC errors in particle-filter differential pressure. • 8) FId / Trigger substitute function for PPFltDiff output in case of permanent SRC errors in particle-filter differential pressure sensor.
Failure cause		• Dynamic plausibility check of the DPF differential pressure sensor. Possibly Pressure sensor failure, connection tubes or filter substrate.
Failure repair		• Please check differential pressure sensor as well as connection tubes. If failure remains, check particulate filter substrate if missing.
Inspection procedure	Step1	Inspect or verify the following items. Repair or replace faulty items as necessary. Pressure hose of B37 (DPF differential pressure sensor) Ceramic filter of Diesel particulate filter muffler Check DPF differential pressure hose; repair or replace it if there is a problem.Check DPF; repair or replace it if there is a problem.If DPF differential pressure hose has been corrected or replaced, perform the learned value resetting procedure of B37 (DPF differential pressure sensor) learned by A4 (Combustion engine Control unit).For procedures, refer to the Shop Manual. Go to Step2
	Step2	Inspection procedure If one of diagnosis codes associated with SAM ECU is generated, make a system diagnosis according to the diagnosis code. Go to Step3
	Step3	Inspection procedure Turn the starter switch in OFF. Remove the connector of A4 (Combustion engine Control unit). Remove the connector of B37 (DPF differential pressure sensor). Check the circuit across B37.3/1 and A4.X2.94/22 for open or short circuit. Check the circuit across B37.3/3 and A4.X2.94/54 for open or short circuit. Check the circuit across B37.3/2 and A4.X2.94/18 for open or short circuit. Make a visual check on each connector. Is any abnormality recognized? No: Go to Step4 Yes: Go to Step8

https://truckmanualshub.com/

Inspection procedure	Step4	Inspection procedure Turn the starter switch in OFF. Replace component “B37 (DPF differential pressure sensor)”. Reinstall all the removed connectors. Turn the starter switch in ON. Perform the learned value resetting procedure of B37 (DPF differential pressure sensor) which A4 (Combustion engine Control unit) learns. Go to Step5
	Step5	Inspection procedure Turn the starter switch in OFF. Reinstall all the removed connectors. Erase fault memory and perform a test drive. Check if this diagnosis code has occurred. Are current fault codes present? No: Go to Step7 Yes: Go to Step6
	Step6	Inspection procedure Perform the operation start and replace A4 (Combustion engine Control unit). Go to Step7
	Step7	Inspection completed
	Step8	Inspection procedure Repair or replace electrical lines. Reinstall all the removed connectors. Erase fault memory and perform a test drive. Check if this diagnosis code has occurred. Are current fault codes present? No: Go to Step7 Yes: Go to Step4

3285-17: Hose Line connection check of component Particle filter differential pressure sensor.Data valid but below normal operational range

Generation condition	[Test Condition] • if monitoring not inhibited by another failure (FId_PPFltDiffHsLnChk is not set)
	[Fault Detection] • If the filtered differential pressure signal Exh_pFltPPFltDiff is below the minimum value -2.5kPa {-0.4psi, -0.025kgf/cm^2}.
	[Defect Debouncing] • Defect condition exceeded cumulatively > 1000.00ms • Failure is detected if active for 50% of the time
Fault healing	• No Healing possible (disabled by Data set)
System reaction	• None except FIds
	• 1) FId / DPF differential pressure defective • 2) FId / Monitoring of particulate filter (DPF) by comparing the calculated flow resistance with measured pressure drop disabled • 3) FId / Monitoring for the destroyed particle filter (DPF) by minimal flow resistance disabled • 4) FId / Inhibit monitor for DPF frequent regeneration • 5) FId / Inhibit monitor for incomplete regeneration of the DPF • 6) FId / Engine protection DPF regeneration inhibited due to faulty input signals
Failure cause	• Hose connection upstream from the particle filter detached or completely blocked. • Atmospheric pressure is constantly present at the pressure connection upstream from the particle filter.
Failure repair	• Check mounting, check hose line

https://truckmanualshub.com/

Inspection procedure	Step1	Inspect or verify the following items. Repair or replace faulty items as necessary. Pressure hose of B37 (DPF differential pressure sensor) Check DPF differential pressure hose; repair or replace it if there is a problem. If DPF differential pressure hose has been corrected or replaced, perform the learned value resetting procedure of B37 (DPF differential pressure sensor) learned by A4 (Combustion engine Control unit). For procedures, refer to the Shop Manual. Go to Step2
	Step2	Inspection procedure If one of diagnosis codes associated with SAM ECU is generated, make a system diagnosis according to the diagnosis code. Go to Step3
	Step3	Inspection procedure Turn the starter switch in OFF. Remove the connector of A4 (Combustion engine Control unit). Remove the connector of B37 (DPF differential pressure sensor). Check the circuit across B37.3/1 and A4.X2.94/22 for open or short circuit. Check the circuit across B37.3/3 and A4.X2.94/54 for open or short circuit. Check the circuit across B37.3/2 and A4.X2.94/18 for open or short circuit. Make a visual check on each connector. Is any abnormality recognized? No: Go to Step4 Yes: Go to Step8
	Step4	Inspection procedure Turn the starter switch in OFF. Replace component “B37 (DPF differential pressure sensor)”. Reinstall all the removed connectors. Turn the starter switch in ON. Perform the learned value resetting procedure of B37 (DPF differential pressure sensor) which A4 (Combustion engine Control unit) learns. Go to Step5
	Step5	Inspection procedure Turn the starter switch in OFF. Reinstall all the removed connectors. Erase fault memory and perform a test drive. Check if this diagnosis code has occurred. Are current fault codes present? No: Go to Step7 Yes: Go to Step6
	Step6	Inspection procedure Perform the operation start and replace A4 (Combustion engine Control unit). Go to Step7
	Step7	Inspection completed
	Step8	Inspection procedure Repair or replace electrical lines. Reinstall all the removed connectors. Erase fault memory and perform a test drive. Check if this diagnosis code has occurred. Are current fault codes present? No: Go to Step7 Yes: Go to Step4

3287-0: Signal Range Check (SRC) for ‘B28/8 (DPF differential pressure sensor)’ reports Signal value above maximum limit.

Generation condition	[Test Condition] • ADC has not reported a module error (no failure “ADC...” active). Continuous Monitoring
	[Fault Detection] • The sensed raw voltage value Exh_uRawPPFltDiff is above 4.65V
	[Defect Debouncing] • Defect condition exceeded cumulatively > 1.80s • Failure is detected if active for 50% of the time

https://truckmanualshub.com/

Fault healing		• The sensed raw voltage value Exh_uRawPPFltDiff is below 4.65V
System reaction		• DPF differential pressure is frozen at last valid value on preliminary failure and ramps, using slope 10.001kPa {1.5psi, 0.1kgf/cm^2}/s or 10.001kPa {1.5psi, 0.1kgf/cm^2}/s depending whether the measured value is above or below replacement value, to a default value of -0.1kPa {-0.015psi, -0.001kgf/cm^2} if failure is validated. • Further reactions according FID (see FID's)
		• 1) FId / Inhibit enhanced SRC for particle filter differential pressure • 2) FId / Trigger substitute function for PPFltDiff output in case of temporary SRC errors in particle-filter differential pressure. • 3) FId / Trigger substitute function for PPFltDiff output in case of permanent SRC errors in particle-filter differential pressure sensor. • 4) FId / Engine protection DPF regeneration inhibited due to faulty input signals • 5) FId / Inhibit plausibility check for DPF differential pressure • 6) FId / The Adaptation of lambda Sensor disabled • 7) FId / Monitoring of particulate filter (DPF) by comparing the calculated flow resistance with measured pressure drop disabled • 8) FId / The adaptation values for Lambda Sensor stored in EEPROM are reset to • 9) FId / O2 Signal of Lambda Sensor not valid • 10) FId / Signal Range Check of O2 Signal of lambda Sensor disabled • 11) FId / Pressure Compensation of O2-Signal can not be learnt - is taken from the curve (LSU_facPresComLean_CUR) • 12) FId / Inhibit monitor for DPF frequent regeneration • 13) FId / Inhibit monitor for incomplete regeneration of the DPF
Failure cause		• Short circuit of sensor to external source or defective sensor
Failure repair		• Check wiring or replace sensor
Inspection procedure	Step1	Inspection procedure If one of diagnosis codes associated with SAM ECU is generated, make a system diagnosis according to the diagnosis code. Go to Step2
	Step2	Inspection procedure Turn the starter switch in OFF. Remove the connector of A4 (Combustion engine Control unit). Remove the connector of B37 (DPF differential pressure sensor). Check the circuit across B37.3/1 and A4.X2.94/22 for open or short circuit. Check the circuit across B37.3/3 and A4.X2.94/54 for open or short circuit. Check the circuit across B37.3/2 and A4.X2.94/18 for open or short circuit. Make a visual check on each connector. Is any abnormality recognized? No: Go to Step3 Yes: Go to Step7
	Step3	Inspection procedure Turn the starter switch in OFF. Replace component "B37 (DPF differential pressure sensor)". Reinstall all the removed connectors. Turn the starter switch in ON. Perform the learned value resetting procedure of B37 (DPF differential pressure sensor) which A4 (Combustion engine Control unit) learns. Go to Step4
	Step4	Inspection procedure Turn the starter switch in OFF. Reinstall all the removed connectors. Erase fault memory and perform a test drive. Check if this diagnosis code has occurred. Are current fault codes present? No: Go to Step6 Yes: Go to Step5
	Step5	Inspection procedure Perform the operation start and replace A4 (Combustion engine Control unit). Go to Step6
	Step6	Inspection completed

https://truckmanualshub.com/

Inspection procedure	Step7	Inspection procedure Repair or replace electrical lines. Reinstall all the removed connectors. Erase fault memory and perform a test drive. Check if this diagnosis code has occurred. Are current fault codes present? No: Go to Step6 Yes: Go to Step3

3287-1: Signal Range Check (SRC) for 'B28/8 (DPF differential pressure sensor)' reports Signal value below minimum limit.

Generation condition		[Test Condition] • ADC has not reported a module error (no failure "ADC..." active). Continuous Monitoring
		[Fault Detection] • The sensed raw voltage value Exh_uRawPPFltDiff is below 200.40mV
		[Defect Debouncing] • Defect condition exceeded cumulatively > 1.80s • Failure is detected if active for 50% of the time
Fault healing		• The sensed raw voltage value Exh_uRawPPFltDiff is above 200.40mV
System reaction		• DPF differential pressure is frozen at last valid value on preliminary failure and ramps, using slope 10.001kPa {1.5psi, 0.1kgf/cm^2}/s or 10.001kPa {1.5psi, 0.1kgf/cm^2}/s depending whether the measured value is above or below replacement value, to a default value of -0.1kPa {-0.015psi, -0.001kgf/cm^2} if failure is validated. • Further reactions according FID (see FID's)
		• 1) FId / Inhibit enhanced SRC for particle filter differential pressure • 2) FId / Trigger substitute function for PPFltDiff output in case of temporary SRC errors in particle-filter differential pressure. • 3) FId / Trigger substitute function for PPFltDiff output in case of permanent SRC errors in particle-filter differential pressure sensor. • 4) FId / Engine protection DPF regeneration inhibited due to faulty input signals • 5) FId / Inhibit plausibility check for DPF differential pressure • 6) FId / The Adaptation of lambda Sensor disabled • 7) FId / Monitoring of particulate filter (DPF) by comparing the calculated flow resistance with measured pressure drop disabled • 8) FId / The adaptation values for Lambda Sensor stored in EEPROM are reset to • 9) FId / O2 Signal of Lambda Sensor not valid • 10) FId / Signal Range Check of O2 Signal of lambda Sensor disabled • 11) FId / Pressure Compensation of O2-Signal can not be learnt - is taken from the curve (LSU_facPresComLean_CUR) • 12) FId / Inhibit monitor for DPF frequent regeneration • 13) FId / Inhibit monitor for incomplete regeneration of the DPF
Failure cause		• Short circuit of wiring to ground or defective sensor
Failure repair		• Check wiring or replace sensor
Inspection procedure	Step1	Inspection procedure If one of diagnosis codes associated with SAM ECU is generated, make a system diagnosis according to the diagnosis code. Go to Step2
	Step2	Inspection procedure Turn the starter switch in OFF. Remove the connector of A4 (Combustion engine Control unit). Remove the connector of B37 (DPF differential pressure sensor). Check the circuit across B37.3/1 and A4.X2.94/22 for open or short circuit. Check the circuit across B37.3/3 and A4.X2.94/54 for open or short circuit. Check the circuit across B37.3/2 and A4.X2.94/18 for open or short circuit. Make a visual check on each connector. Is any abnormality recognized? No: Go to Step3 Yes: Go to Step7

https://truckmanualshub.com/

Inspection procedure	Step3	Inspection procedure Turn the starter switch in OFF. Replace component “B37 (DPF differential pressure sensor)”. Reinstall all the removed connectors. Turn the starter switch in ON. Perform the learned value resetting procedure of B37 (DPF differential pressure sensor) which A4 (Combustion engine Control unit) learns. Go to Step4
	Step4	Inspection procedure Turn the starter switch in OFF. Reinstall all the removed connectors. Erase fault memory and perform a test drive. Check if this diagnosis code has occurred. Are current fault codes present? No: Go to Step6 Yes: Go to Step5
	Step5	Inspection procedure Perform the operation start and replace A4 (Combustion engine Control unit). Go to Step6
	Step6	Inspection completed
	Step7	Inspection procedure Repair or replace electrical lines. Reinstall all the removed connectors. Erase fault memory and perform a test drive. Check if this diagnosis code has occurred. Are current fault codes present? No: Go to Step6 Yes: Go to Step3

3360-31: Cavity detected around SCR tank heater

Generation condition		[Test Condition] • Monitoring is active while the battery voltage is over 10.00V and as long as the battery voltage is over 10.00V and 2.00s after this threshold has been exceeded • tank heater was activated longer than an applicable time threshold 20.00s • Cavity check not inhibited by another failure (FId_UHCCavChkCalcRls is not set) • Tank temperature < 1.96°C {35.53°F}
		[Fault Detection] • A cavity will be detected if the present, filtered heater current UHC_iHtrTnkCavChkFlt_mp is less than the current threshold UHC_iCavChkLrnThresAvrgCor_mp. calculated from the learned current threshold UHC_iCavChkLrnThres_mp corrected by a • factor from the battery voltage based curve UHC_facBattUCavChkFltThres. • Cavity is detected longer than the debouncing time 60.00s,
		[Defect Debouncing] • Defect condition fulfilled continuously >50.0 ms
Fault healing		• No cavity detected
System reaction		• DEF dosing inhibited.
Failure cause		• During tank defrosting, DEF consumption is higher than DEF quantity that can be defrosted by tank heater.
Failure repair		• No repair intervention necessary.
Inspection procedure	Step1	Inspection procedure Inspect the suspected factors mentioned above sequentially to locate faulty parts. Repair or replace the faulty part as necessary.

https://truckmanualshub.com/

3361-3: SCR dosing valve: Voltage above normal or shorted to high source

Generation condition		[Test Condition] • Monitoring is active while the battery voltage is over 10.00V and as long as the battery voltage is over 10.00V and 2.00s after this threshold has been exceeded • Monitoring only when the power stage is active. • ECU not in pre drive condition, Battery voltage > 9.50V (switch off < 9.00V), Battery voltage < 16.00V (switch off > 16.50V) and Battery voltage correction factor between 0.80- (switch off < 0.78-) and 1.56- (switch off > 1.65-)
		[Fault Detection] • Hardware reports a short circuit to battery (SCB) error on the power stage for the DEF dosing Valve Actuator.
		[Defect Debouncing] • Defect condition exceeded cumulatively > 1.80s • Failure is detected if active for 50% of the time
Fault healing		• To give the possibility for healing, an electric impulse is sent to power stage each 1000.00ms 5.00- times in actual driving cycle. Failure healed, if the power stage does not report a SCB error. Else no healing possible at this driving cycle.
System reaction		• Power stage is shut-off DEF dosing valve actuator in closed position). • Further reactions according FID (see FID's)
		• 1) Fid / Reagent dosing for SCR inhibited • 2) FId / Release of the SCRMon function/no emergency shut-off with emptying • 3) FId / Service regeneration of Particulate filter ((DPF) inhibited (due to DPF failure) • 4) Fid / SCR Monitoring or DEF injection release not possible (according calibration of Release Masks) • 5) FId / Inhibit DEF dosing valve plausibility check • 6) FId / Inhibit Physical Range Check of Tank Heater raw voltage
Failure cause		• Short circuit of wiring (Ground wire) to external source or inside DEF Dosing Valve Actuator
Failure repair		• Check of wiring or replace DEF Dosing Valve Actuator
Inspection procedure	Step1	Inspection procedure Turn the starter switch in OFF. Remove the connector of A4 (Combustion engine Control unit). Remove the connector of Y7 (DEF metering device). Check the circuit across Y7.2/1 and A4.X2.94/25 for open or short circuit. Check the circuit across Y7.2/2 and A4.X2.94/29 for open or short circuit. Make a visual check on each connector. Is any abnormality recognized? No: Go to Step2 Yes: Go to Step6
	Step2	Inspection procedure Turn the starter switch in OFF. Replace component "Y7 (DEF metering device)". Reinstall all the removed connectors. Turn the starter switch in ON. Perform the learned value resetting procedure of Y7 (DEF metering device) which A4 (Combustion engine Control unit) learns. Go to Step3
	Step3	Inspection procedure Turn the starter switch in OFF. Reinstall all the removed connectors. Erase fault memory and perform a test drive. Check if this diagnosis code has occurred. Are current fault codes present? No: Go to Step5 Yes: Go to Step4
	Step4	Inspection procedure Perform the operation start and replace A4 (Combustion engine Control unit). Go to Step5
	Step5	Inspection completed

https://truckmanualshub.com/

Inspection procedure	Step6	Inspection procedure Repair or replace electrical lines. Reinstall all the removed connectors. Erase fault memory and perform a test drive. Check if this diagnosis code has occurred. Are current fault codes present? No: Go to Step5 Yes: Go to Step2

3361-4: SCR dosing valve: Voltage below normal or shorted to low source

Generation condition		[Test Condition] • Monitoring is active while the battery voltage is over 10.00V and as long as the battery voltage is over 10.00V and 2.00s after this threshold has been exceeded • Monitoring only when the power stage is NOT active. • ECU not in pre drive condition, Battery voltage > 9.50V (switch off < 9.00V), Battery voltage < 16.00V (switch off > 16.50V) and Battery voltage correction factor between 0.80- (switch off < 0.78-) and 1.56- (switch off > 1.65-)
		[Fault Detection] • Hardware reports a short circuit to ground (SCG) error on the power stage for the DEF dosing Valve Actuator.
		[Defect Debouncing] • Defect condition exceeded cumulatively > 2.00s • Failure is detected if active for 50% of the time
Fault healing		• Hardware does not report a short circuit to ground (SCG) error on the power stage for the DEF dosing Valve Actuator.
System reaction		• Power stage is shut-off DEF dosing valve actuator in closed position). • Further reactions according FID (see FID's)
		• 1) Fid / Reagent dosing for SCR inhibited • 2) FId / Release of the SCRMon function/no emergency shut-off with emptying • 3) Fid / The DEF dosing System goes in Error mode after Emptying • 4) FId / Release of the SCRMon function/no emergency shut-off without emptying • 5) Fid / The DEF dosing system is forced to evacuate with fully opened Dosing valve • 6) FId / Service regeneration of Particulate filter ((DPF) inhibited (due to DPF failure) • 7) Fid / SCR Monitoring or DEF injection release not possible (according calibration of Release Masks) • 8) FId / Inhibit DEF dosing valve plausibility check • 9) FId / Inhibit Physical Range Check of Tank Heater raw voltage
Failure cause		• Short circuit of wiring (Ground Wire) to ground or inside DEF Dosing Valve Actuator
Failure repair		• Check of wiring or replace DEF Dosing Valve Actuator
Inspection procedure	Step1	Inspection procedure Turn the starter switch in OFF. Remove the connector of A4 (Combustion engine Control unit). Remove the connector of Y7 (DEF metering device). Check the circuit across Y7.2/1 and A4.X2.94/25 for open or short circuit. Check the circuit across Y7.2/2 and A4.X2.94/29 for open or short circuit. Make a visual check on each connector. Is any abnormality recognized? No: Go to Step2 Yes: Go to Step6
	Step2	Inspection procedure Turn the starter switch in OFF. Replace component "Y7 (DEF metering device)". Reinstall all the removed connectors. Turn the starter switch in ON. Perform the learned value resetting procedure of Y7 (DEF metering device) which A4 (Combustion engine Control unit) learns. Go to Step3

https://truckmanualshub.com/

Inspection procedure	Step3	Inspection procedure Turn the starter switch in OFF. Reinstall all the removed connectors. Erase fault memory and perform a test drive. Check if this diagnosis code has occurred. Are current fault codes present? No: Go to Step5 Yes: Go to Step4
	Step4	Inspection procedure Perform the operation start and replace A4 (Combustion engine Control unit). Go to Step5
	Step5	Inspection completed
	Step6	Inspection procedure Repair or replace electrical lines. Reinstall all the removed connectors. Erase fault memory and perform a test drive. Check if this diagnosis code has occurred. Are current fault codes present? No: Go to Step5 Yes: Go to Step2

3361-5: SCR dosing valve: Current below normal or Open circuit

Generation condition		[Test Condition] • Monitoring is active while the battery voltage is over 10.00V and as long as the battery voltage is over 10.00V and 2.00s after this threshold has been exceeded • Monitoring only when the power stage is not active. • ECU not in pre drive condition, Battery voltage > 9.50V (switch off < 9.00V), Battery voltage < 16.00V (switch off > 16.50V) and Battery voltage correction factor between 0.80- (switch off < 0.78-) and 1.56- (switch off > 1.65-)
		[Fault Detection] • Hardware reports an open load (OL) error on power stage for the DEF dosing Valve Actuator.
		[Defect Debouncing] • Defect condition exceeded cumulatively > 1.80s • Failure is detected if active for 50% of the time
Fault healing		• Hardware does not report an open load (OL) error on power stage for the DEF dosing Valve Actuator.
System reaction		• Power stage is shut-off DEF dosing valve actuator in closed position). • Further reactions according FID (see FID's)
		• 1) Fid / Reagent dosing for SCR inhibited • 2) Fid / SCR Monitoring or DEF injection release not possible (according calibration of Release Masks) • 3) FId / Release of the SCRMon function/no emergency shut-off with emptying • 4) FId / Service regeneration of Particulate filter ((DPF) inhibited (due to DPF failure) • 5) FId / Inhibit DEF dosing valve plausibility check • 6) FId / Inhibit Physical Range Check of Tank Heater raw voltage
Failure cause		• Broken or disconnected wiring or defective DEF Dosing Valve Actuator
Failure repair		• Check of wiring, replace DEF Dosing Valve Actuator
Inspection procedure	Step1	Inspection procedure Turn the starter switch in OFF. Remove the connector of A4 (Combustion engine Control unit). Remove the connector of Y7 (DEF metering device). Check the circuit across Y7.2/1 and A4.X2.94/25 for open or short circuit. Check the circuit across Y7.2/2 and A4.X2.94/29 for open or short circuit. Make a visual check on each connector. Is any abnormality recognized? No: Go to Step2 Yes: Go to Step6

https://truckmanualshub.com/

Inspection procedure	Step2	Inspection procedure Turn the starter switch in OFF. Replace component “Y7 (DEF metering device)”. Reinstall all the removed connectors. Turn the starter switch in ON. Perform the learned value resetting procedure of Y7 (DEF metering device) which A4 (Combustion engine Control unit) learns. Go to Step3
	Step3	Inspection procedure Turn the starter switch in OFF. Reinstall all the removed connectors. Erase fault memory and perform a test drive. Check if this diagnosis code has occurred. Are current fault codes present? No: Go to Step5 Yes: Go to Step4
	Step4	Inspection procedure Perform the operation start and replace A4 (Combustion engine Control unit). Go to Step5
	Step5	Inspection completed
	Step6	Inspection procedure Repair or replace electrical lines. Reinstall all the removed connectors. Erase fault memory and perform a test drive. Check if this diagnosis code has occurred. Are current fault codes present? No: Go to Step5 Yes: Go to Step2

3361-7: SCR dosing valve: Mechanical system not responding or out of adjustment

Generation condition	[Test Condition] • Monitoring not inhibited by FID_SCRPODPlausUDosVlv due to another failure. • The System must be ready for DEF injection (State “Pressure Control” / Sub state “Metering control”) • Ambient pressure between 74kPa {11psi, 0.8kgf/cm^2} and 130kPa {19psi, 1.3kgf/cm^2}. • Battery Voltage between 10.00V and 16.00V. • DEF pressure between 0kPa {0psi, 0kgf/cm^2} and 1MPa {145psi, 10kgf/cm^2}. • Coil temperature of DEF injection valve between -0.04°C {31.93°F} and 119.96°C {247.93°F}.
	[Fault Detection] • The Dosing valve driver reports an opening error “stNoOpnErr” because no BIP was detected during 10.00- injection cycles.
	[Defect Debouncing] • Defect condition exceeded cumulatively > 150.00 events • Failure is detected if active for 50% of events
Fault healing	• No Healing possible (disabled by Data set)
System reaction	• System switches off: Pump OFF, 4/2 Valve opens (to empty the system) • Possibly power reduction to prevent overheating of dosing valve (as it can not be cooled by DEF injection) • Further reactions according FID (see FID’s)
	• 1) FId / Reagent dosing for SCR inhibited • 2) FId / Release of the SCRMon function/no emergency shut-off with emptying • 3) FId / Service regeneration of Particulate filter ((DPF) inhibited (due to DPF failure) • 4) FId / SCR Monitoring or DEF injection release not possible (according calibration of Release Masks)
Failure cause	• Dosing valve blocked mechanically (or frozen)
Failure repair	• Check if dosing valve opens. • Check if tube between pump and dosing valve is free.

https://truckmanualshub.com/

Inspection procedure	Step1	Inspection procedure Inspect the suspected factors mentioned above sequentially to locate faulty parts. Repair or replace the faulty part as necessary.

3361-12: SCR dosing valve: Overtemperature

Generation condition		[Test Condition] • Monitoring only when the power stage is active. • ECU not in pre drive condition, Battery voltage > 9.50V (switch off < 9.00V), Battery voltage < 16.00V (switch off > 16.50V) and Battery voltage correction factor between 0.80- (switch off < 0.78-) and 1.56- (switch off > 1.65-)
		[Fault Detection] • Hardware reports an excess temperature (OT) error on the power stage for the DEF dosing Valve Actuator.
		[Defect Debouncing] • Defect condition exceeded cumulatively > 2.00s • Failure is detected if active for 50% of the time
Fault healing		• To give the possibility for healing, an electric impulse is sent to power stage each 5.00s 5.00- times in actual driving cycle. Failure healed, if the power stage does not report an OT error. Else no healing possible at this driving cycle.
System reaction		• Power stage is shut-off DEF dosing valve actuator in closed position). • Further reactions according FID (see FID's)
		• 1) Fid / Reagent dosing for SCR inhibited • 2) FId / Release of the SCRMon function/no emergency shut-off with emptying • 3) FId / Service regeneration of Particulate filter ((DPF) inhibited (due to DPF failure) • 4) Fid / SCR Monitoring or DEF injection release not possible (according calibration of Release Masks) • 5) FId / Inhibit DEF dosing valve plausibility check • 6) FId / Inhibit Physical Range Check of Tank Heater raw voltage
Failure cause		• High battery voltage, high ECU temperature and high load or defective wiring, power stage or DEF Dosing Valve Actuator defective
Failure repair		• Check battery voltage, wiring, power stage and DEF Dosing Valve Actuator.
Inspection procedure	Step1	Inspection procedure If one of diagnosis codes associated with SAM ECU is generated, make a system diagnosis according to the diagnosis code. Go to Step2
	Step2	Inspection procedure Turn the starter switch in OFF. Remove the connector of A4 (Combustion engine Control unit). Remove the connector of Y7 (DEF metering device). Check the circuit across Y7.2/1 and A4.X2.94/25 for open or short circuit. Check the circuit across Y7.2/2 and A4.X2.94/29 for open or short circuit. Make a visual check on each connector. Is any abnormality recognized? No: Go to Step3 Yes: Go to Step7
	Step3	Inspection procedure Turn the starter switch in OFF. Replace component "Y7 (DEF metering device)". Reinstall all the removed connectors. Turn the starter switch in ON. Perform the learned value resetting procedure of Y7 (DEF metering device) which A4 (Combustion engine Control unit) learns. Go to Step4
	Step4	Inspection procedure Turn the starter switch in OFF. Reinstall all the removed connectors. Erase fault memory and perform a test drive. Check if this diagnosis code has occurred. Are current fault codes present? No: Go to Step6 Yes: Go to Step5

https://truckmanualshub.com/

Inspection procedure	Step5	Inspection procedure Perform the operation start and replace A4 (Combustion engine Control unit). Go to Step6
	Step6	Inspection completed
	Step7	Inspection procedure Repair or replace electrical lines. Reinstall all the removed connectors. Erase fault memory and perform a test drive. Check if this diagnosis code has occurred. Are current fault codes present? No: Go to Step6 Yes: Go to Step3

3361-18: The emission value of the NOx sensor (raw value) is too high.

Generation condition	[Test Condition] • Monitoring is active 2.00s after ECU initialization while engine isn't running yet, while the engine isn't cranking, 2.00s after engine startup and if the ECU is not in afterrun • NOx Sensor Ready and Reagent Dosing released for at least 1000.00ms, i.e.:, Engine Temperature evaluation not inhibited by FDI_DStgyCengDsT due to another failure, Engine temperature > 39.96°C {103.93°F}, Expected SCR efficiency > 0.30-, NOx Sensor released by FID_DStgyStatNOxSens, Dosing system Ready for Reagent injection, No DPF Regeneration active and SCR Monitoring not inhibited by FID_DStgyMon due to another failure • Fuel Injection quantity in a range defined by 2 curves engine speed dependent (DStgy_qCatEffLimMin DStgy_qCatEffLimMax) • Ambient Temperature between -100.04°C {-148.07°F} and 99.96°C {211.93°F} • Engine Temperature between 59.96°C {139.93°F} and 111.96°C {233.53°F} • Ambient pressure > 75kPa {11psi, 0.8kgf/cm^2}, i.e. not in too high altitude
	[Fault Detection] • SCR efficiency ratio "expected/measured" Filtered value > defined threshold, failure is detected
	[Defect Debouncing] • Defect condition fulfilled continuously >100000.0 ms
Fault healing	• SCR efficiency ratio "expected/measured" Filtered value < defined threshold failure is healed
System reaction	• According FID (see FID's) • European Heavy Duty application: One or more Long Time Failures OBD-GenFaultLct stored, which can not be erased by tester during 400 days.
	• 1) FId / Require NOx sensor plausibility test • 2) FId / failure in a component for determination of NOx estimation
Failure cause	• Reagent with too low DEF concentration (<<32%) • Too low or no Reagent injection • Wrong NOx measurement (NOx Sensor measures too high values) • Engine NOx raw emissions higher than expected (humidity sensor measures too humid air, injection timing anticipated, fuel pressure sensor measures too low fuel pressure.)
Failure repair	• Check Reagent, if correct concentration • Check Dosing quantity of SCR system • Check if engine raw emissions are OK (e.g. drive vehicle at constant speed without Reagent injection and compare measured with estimated NOx with tester), if not check: • NOx Sensor • Humidity Sensor • Fuel pressure sensor • Injection timing • If OK, repeat test WITH Reagent dosing and check Closed Loop Control parameter: if continuously < 0.7 or > 1.3 --> risk of NH3 slip due to system problem.

https://truckmanualshub.com/

Inspection procedure	Step1	Inspect or verify the following items. Repair or replace faulty items as necessary. Check that the DEF concentration is appropriate and, if the concentration is not appropriate, replace DEF. Perform control and make sure that appropriate DEF can be added. For procedures, refer to the Shop Manual Go to Step2
	Step2	Inspect or verify the following items. Repair or replace faulty items as necessary. If one of diagnosis codes associated with B27 (Humidity and temperature sensor “Intake air”) is generated, make a system diagnosis according to the diagnosis code. If one of diagnosis codes associated with Fuel injector is generated, make a system diagnosis according to the diagnosis code. If one of diagnosis codes associated with B51 (Rail pressure sensor) is generated, make a system diagnosis according to the diagnosis code. Go to Step3
	Step3	Inspect or verify the following items. Repair or replace faulty items as necessary. If one of diagnosis codes associated with A20 (SAM) is generated, make a system diagnosis according to the diagnosis code. Go to Step4
	Step4	Inspection procedure Turn the starter switch in OFF. Remove the connector of A4 (Combustion engine Control unit). Remove the connector of B29 (Oxygen sensor). Remove the connector of A20 (SAM). Check the circuit across A4.X2.94/62 and B31.5/4 for open or short circuit. Check the circuit across A4.X2.94/61 and B31.5/3 for open or short circuit. Check the circuit across A20.X10.14/2 and B31.5/1 for open or short circuit. Check the circuit across B31.5/2 and Ground for open or short circuit. Make a visual check on each connector. Is any abnormality recognized? No: Go to Step5 Yes: Go to Step9
	Step5	Inspection procedure Turn the starter switch in OFF. Replace component “B29 (Oxygen sensor)”. Reinstall all the removed connectors. Turn the starter switch in ON. Go to Step6
	Step6	Inspection procedure Turn the starter switch in OFF. Reinstall all the removed connectors. Erase fault memory and perform a test drive. Check if this diagnosis code has occurred. Are current fault codes present? No: Go to Step8 Yes: Go to Step7
	Step7	Inspection procedure Perform the operation start and replace A4 (Combustion engine Control unit). Go to Step8
	Step8	Inspection completed
	Step9	Inspection procedure Turn the starter switch in OFF. Remove the connector of A4 (Combustion engine Control unit). Remove the connector of X42 (Intermediate connector). Remove the connector of A20 (SAM). Check the circuit across A4.X2.94/62 and X42.8/3 for open or short circuit. Check the circuit across A4.X2.94/61 and X42.8/2 for open or short circuit. Check the circuit across A20.X10.14/2 and X42.8/4 for open or short circuit. Check the circuit across X42.8/1 and Ground for open or short circuit. Make a visual check on each connector. Is any abnormality recognized? No: Go to Step10 Yes: Go to Step11

https://truckmanualshub.com/

Inspection procedure	Step10	Inspection procedure Repair or replace the harness across B29 (Oxygen sensor) and X42 (Intermediate connector). Reinstall all the removed connectors. Erase fault memory and perform a test drive. Check if this diagnosis code has occurred. Are current fault codes present? No: Go to Step8 Yes: Go to Step5
	Step11	Inspection procedure Repair or replace the harness across A4 (Combustion engine Control unit) and X42 (Intermediate connector). Reinstall all the removed connectors. Erase fault memory and perform a test drive. Check if this diagnosis code has occurred. Are current fault codes present? No: Go to Step8 Yes: Go to Step5

3362-0: SCR Reagent pump: DEF pump pressureHIGH

Generation condition	[Test Condition] • Monitoring is active while the battery voltage is over 10.00V and as long as the battery voltage is over 10.00V and 2.00s after this threshold has been exceeded • ECU Hardware does not report an ADC failure.
	[Fault Detection] • The Sensed raw voltage value > 2.82V
	[Defect Debouncing] • Defect condition exceeded cumulatively > 300.00ms • Failure is detected if active for 50% of the time
Fault healing	• No Healing possible (disabled by Data set)
System reaction	• According FID (see FID's) and • Value is frozen at the last valid value during debouncing. After debouncing it ramps with 330kPa {48psi, 3.4kgf/cm^2}/s (upwards) or 330kPa {48psi, 3.4kgf/cm^2}/s (downwards) to replacement value 200kPa {29psi, 2.0kgf/cm^2}. • After healing signal ramps from 200kPa {29psi, 2.0kgf/cm^2} to actual value with same slopes.
	• 1) Fid / Reagent dosing for SCR inhibited • 2) FId / Freeze abs.DEF pressure value if preliminary failure detected • 3) FId / Function Identifier to determine, when the sensed value is to be replaced with a default when the signal source is ADC FId_RplValAbsUPmpP • 4) FId / Release of the SCRMon function/no emergency shut-off with emptying • 5) FId / Inhibit Physical Range Check of Pump Module Pressure Sensor • 6) Fid / SCR Monitoring or DEF injection release not possible (according calibration of Release Masks) • 7) FId / Service regeneration of Particulate filter ((DPF) inhibited (due to DPF failure) • 8) FId / Inhibit DEF dosing valve plausibility check • 9) FId / Inhibit reverting valve plausibility check • 10) Pressure reduction of reagent dosing system inhibited
Failure cause	• Short circuit of sensor to external source or defective sensor
Failure repair	• Check wiring and sensor

https://truckmanualshub.com/

Inspection procedure	Step1	Inspection procedure Turn the starter switch in OFF. Remove the connector of A4 (Combustion engine Control unit). Remove the connector of B30 (DEF pressure sensor). Check the circuit across A4.X2.94/79 and B30.3/3 for open or short circuit. Check the circuit across A4.X2.94/77 and B30.3/2 for open or short circuit. Check the circuit across A4.X2.94/43 and B30.3/1 for open or short circuit. Make a visual check on each connector. Is any abnormality recognized? No: Go to Step2 Yes: Go to Step6
	Step2	Inspection procedure Turn the starter switch in OFF. Replace component “A40 (DEF tank)”. Reinstall all the removed connectors. Turn the starter switch in ON. Perform the learned value resetting procedure of A40 (DEF tank) which A4 (Combustion engine Control unit) learns. Go to Step3
	Step3	Inspection procedure Turn the starter switch in OFF. Reinstall all the removed connectors. Erase fault memory and perform a test drive. Check if this diagnosis code has occurred. Are current fault codes present? No: Go to Step5 Yes: Go to Step4
	Step4	Inspection procedure Perform the operation start and replace A4 (Combustion engine Control unit). Go to Step5
	Step5	Inspection completed
	Step6	Inspection procedure Turn the starter switch in OFF. Remove the connector of A4 (Combustion engine Control unit). Remove the connector of X19. Check the circuit across A4.X2.94/43 and X19.16/12 for open or short circuit. Check the circuit across A4.X2.94/77 and X19.16/11 for open or short circuit. Check the circuit across A4.X2.94/79 and X19.16/11 for open or short circuit. Make a visual check on each connector. Is any abnormality recognized? No: Go to Step7 Yes: Go to Step8
	Step7	Inspection procedure Repair or replace the harness across B30 (DEF pressure sensor) and X19. Reinstall all the removed connectors. Erase fault memory and perform a test drive. Check if this diagnosis code has occurred. Are current fault codes present? No: Go to Step5 Yes: Go to Step2
	Step8	Inspection procedure Repair or replace the harness across A4 (Combustion engine Control unit) and X19. Reinstall all the removed connectors. Erase fault memory and perform a test drive. Check if this diagnosis code has occurred. Are current fault codes present? No: Go to Step5 Yes: Go to Step2

https://truckmanualshub.com/

3362-1: SCR Reagent pump: DEF pump pressureLOW

Generation condition		[Test Condition] • Monitoring is active while the battery voltage is over 10.00V and as long as the battery voltage is over 10.00V and 2.00s after this threshold has been exceeded • ECU Hardware does not report an ADC failure.
		[Fault Detection] • The Sensed raw voltage value < 230.00mV
		[Defect Debouncing] • Defect condition exceeded cumulatively > 300.00ms • Failure is detected if active for 50% of the time
Fault healing		• No Healing possible (disabled by Data set)
System reaction		• According FID (see FID's) and • Value is frozen at the last valid value during debouncing. After debouncing it ramps with 330kPa {48psi, 3.4kgf/cm^2}/s (upwards) or 330kPa {48psi, 3.4kgf/cm^2}/s (downwards) to replacement value 200kPa {29psi, 2.0kgf/cm^2}. • After healing signal ramps from 200kPa {29psi, 2.0kgf/cm^2} to actual value with same slopes.
		• 1) Fid / Reagent dosing for SCR inhibited • 2) FId / Freeze abs.DEF pressure value if preliminary failure detected • 3) FId / Function Identifier to determine, when the sensed value is to be replaced with a default when the signal source is ADC FId_RplValAbsUPmpP • 4) FId / Release of the SCRMon function/no emergency shut-off with emptying • 5) FId / Inhibit Physical Range Check of Pump Module Pressure Sensor • 6) Fid / SCR Monitoring or DEF injection release not possible (according calibration of Release Masks) • 7) FId / Service regeneration of Particulate filter ((DPF) inhibited (due to DPF failure) • 8) FId / Inhibit DEF dosing valve plausibility check • 9) FId / Inhibit reverting valve plausibility check • 10) Pressure reduction of reagent dosing system inhibited
Failure cause		• Short circuit of sensor to ground or defective sensor
Failure repair		• Check wiring or replace sensor
Inspection procedure	Step1	Inspection procedure Turn the starter switch in OFF. Remove the connector of A4 (Combustion engine Control unit). Remove the connector of B30 (DEF pressure sensor). Check the circuit across A4.X2.94/79 and B30.3/3 for open or short circuit. Check the circuit across A4.X2.94/77 and B30.3/2 for open or short circuit. Check the circuit across A4.X2.94/43 and B30.3/1 for open or short circuit. Make a visual check on each connector. Is any abnormality recognized? No: Go to Step2 Yes: Go to Step6
	Step2	Inspection procedure Turn the starter switch in OFF. Replace component "A40 (DEF tank)". Reinstall all the removed connectors. Turn the starter switch in ON. Perform the learned value resetting procedure of A40 (DEF tank) which A4 (Combustion engine Control unit) learns. Go to Step3
	Step3	Inspection procedure Turn the starter switch in OFF. Reinstall all the removed connectors. Erase fault memory and perform a test drive. Check if this diagnosis code has occurred. Are current fault codes present? No: Go to Step5 Yes: Go to Step4

https://truckmanualshub.com/

Inspection procedure	Step4	Inspection procedure Perform the operation start and replace A4 (Combustion engine Control unit). Go to Step5
	Step5	Inspection completed
	Step6	Inspection procedure Turn the starter switch in OFF. Remove the connector of A4 (Combustion engine Control unit). Remove the connector of X19. Check the circuit across A4.X2.94/43 and X19.16/12 for open or short circuit. Check the circuit across A4.X2.94/77 and X19.16/11 for open or short circuit. Check the circuit across A4.X2.94/79 and X19.16/11 for open or short circuit. Make a visual check on each connector. Is any abnormality recognized? No: Go to Step7 Yes: Go to Step8
	Step7	Inspection procedure Repair or replace the harness across B30 (DEF pressure sensor) and X19. Reinstall all the removed connectors. Erase fault memory and perform a test drive. Check if this diagnosis code has occurred. Are current fault codes present? No: Go to Step5 Yes: Go to Step2
	Step8	Inspection procedure Repair or replace the harness across A4 (Combustion engine Control unit) and X19. Reinstall all the removed connectors. Erase fault memory and perform a test drive. Check if this diagnosis code has occurred. Are current fault codes present? No: Go to Step5 Yes: Go to Step2

3362-7: SCR reverting valve: Mechanical system not responding or out of adjustment

Generation condition	[Test Condition] • Monitoring not inhibited by FID_SCRPODPlausURevVlv due to another failure. • System entered into PRESSUREREDUCTION state (reverting valve actuated, pump set to 15.00% and dosing valve fully closed) with DEF pressure > 400kPa {58psi, 4.1kgf/cm^2}.
	[Fault Detection] • The DEF pressure drop down is < 300kPa {44psi, 3.1kgf/cm^2} during “pressure reduction” phase, i.e. within 5.50s
	[Defect Debouncing] • Defect condition exceeded cumulatively > 1.00 events • Failure is detected if active for 50% of events
Fault healing	• No healing at this driving cycle.
System reaction	• During afterrun pump OFF, open UDV temporarily. • Further reaction according FID (see FID’s)
	• 1) Fid / The DEF dosing System goes in Error mode after Emptying
Failure cause	• Reverse valve does not work (blocked closed). • Back flow tube into tank clogged. • DEF pressure sensor stuck.
Failure repair	• Check if Back flow tube free. • Check if Reverse valve works with tester: set DEF pressure to 500kPa {73psi, 5.1kgf/cm^2} (dosing valve closed) - wait until pressure stable - actuate reverse valve --> if pressure does not drop down --> reverse valve does not work.

https://truckmanualshub.com/

Inspection procedure	Step1	Inspect or verify the following items. Repair or replace faulty items as necessary. Component 'Y20 (DEF switchover valve)' is stuck. Plugged A40 (DEF tank) Component 'B30 (DEFpressure sensor)' is faulty. For procedures, refer to the Shop Manual. Go to Step2
	Step2	Inspect or verify the following items. Repair or replace faulty items as necessary. If any other fault code has occurred, perform the diagnostics procedure for the fault code. Go to Step3
	Step3	Inspect or verify the following items. Repair or replace faulty items as necessary. If one of diagnosis codes associated with A20 (SAM) is generated, make a system diagnosis according to the diagnosis code. Go to Step4
	Step4	Inspection procedure Turn the starter switch in OFF. Remove the connector of A4 (Combustion engine Control unit). Remove the connector of Y20 (DEF switchover valve). Remove the connector of A20 (SAM). Check the circuit across A20.X10.14/2 and Y20.2/1 for open or short circuit. Check the circuit across A4.X2.94/73 and Y20.2/2 for open or short circuit. Make a visual check on each connector. Is any abnormality recognized? No: Go to Step5 Yes: Go to Step10
	Step5	Inspection procedure Turn the starter switch in OFF. Replace component "A40 (DEF tank)". Reinstall all the removed connectors. Turn the starter switch in ON. Perform the learned value resetting procedure of A40 (DEF tank) which A4 (Combustion engine Control unit) learns. Go to Step6
	Step6	Inspection procedure Turn the starter switch in OFF. Reinstall all the removed connectors. Erase fault memory and perform a test drive. Check if this diagnosis code has occurred. Are current fault codes present? No: Go to Step9 Yes: Go to Step7
	Step7	Inspect or verify the following items. Repair or replace faulty items as necessary. Component 'Y20 (DEF switchover valve)' is stuck. Plugged A40 (DEF tank) Component 'B30 (DEF pressure sensor)' is faulty. For procedures, refer to the Shop Manual. Go to Step8
	Step8	Inspection procedure Perform the operation start and replace A4 (Combustion engine Control unit). Go to Step9
	Step9	Inspection completed

https://truckmanualshub.com/

Inspection procedure	Step10	Inspection procedure Turn the starter switch in OFF. Remove the connector of A4 (Combustion engine Control unit). Remove the connector of X19 (Intermediate connector). Remove the connector of A20 (SAM). Check the circuit across A4.X2.94/73 and X19.16/9 for open or short circuit. Check the circuit across A20.X10.14/2 and X19.16/8 for open or short circuit. Make a visual check on each connector. Is any abnormality recognized? No: Go to Step11 Yes: Go to Step12
	Step11	Inspection procedure Repair or replace the harness across Y20 (DEFswitchover valve) and X19 (Intermediate connector). Reinstall all the removed connectors. Erase fault memory and perform a test drive. Check if this diagnosis code has occurred. Are current fault codes present? No: Go to Step9 Yes: Go to Step5
	Step12	Inspection procedure Repair or replace the harness across A4 (Combustion engine Control unit) and X19 (Intermediate connector). Reinstall all the removed connectors. Erase fault memory and perform a test drive. Check if this diagnosis code has occurred. Are current fault codes present? No: Go to Step9 Yes: Go to Step5

3363-0: SCR Reagent heating: DEF tank heater diagnostic signalHIGH

Generation condition	[Test Condition] • Monitoring is active while the battery voltage is over 10.00V and as long as the battery voltage is over 10.00V and 2.00s after this threshold has been exceeded • Continuously, if ADC module does not report any error.
	[Fault Detection] • The Sensed raw voltage > 3.20V
	[Defect Debouncing] • Defect condition exceeded cumulatively > 50.00ms • Failure is detected if active for 50% of the time
Fault healing	• No Healing possible (disabled by Data set)
System reaction	• Raw voltage is frozen at last valid value on preliminary failure and ramps to fixed replacement value 41.00uA if failure is validated using slope 3300.00K/s or 3300.00K/s depending on whether the replacement value is above or below the current value • Further reactions according FID (see FID's)
	• 1) FId / Inhibit Monitoring of Tank Heater Circuit • 2) FId / Disable the sending of TESTING signal for heater Tank • 3) FId / Tank heating not released • 4) FId / Freeze DEF tank heater raw voltage if preliminary failure is detected • 5) FId / Inhibit Physical Range Check of Tank Heater raw voltage • 6) FId / Replace DEF tank heater raw voltage with default value if failure is validated
Failure cause	• Wiring harness (short circuit) • Relay defect • DEF Tank heater element defect
Failure repair	• Check Wiring harness (short circuit) • Check Relay • Check DEF Tank heater element

https://truckmanualshub.com/

Inspection procedure	Step1	Inspection procedure If one of diagnosis codes associated with SAM ECU is generated, make a system diagnosis according to the diagnosis code. Go to Step2
	Step2	Inspection procedure Turn the starter switch in OFF. Remove the connector of A4 (Combustion engine Control unit). Remove the connector of R3 (DEF heater power unit). Remove the connector of R5 (DEF tank heater). Remove the connector of A20 (SAM). Remove the connector of Ground. Check the circuit across A4.X2.94/28 and R3.X2.4/4 for open or short circuit. Check the circuit across A4.X2.94/32 and R3.X2.4/3 for open or short circuit. Check the circuit across A4.X2.94/50 and R3.X2.4/2 for open or short circuit. Check the circuit across A4.X2.94/10 and R3.X2.4/1 for open or short circuit. Check the circuit across R3.X1.5/4 and B36.4/2 for open or short circuit. Check the circuit across R3.X1.5/3 and A20.X10.14/4 for open or short circuit. Check the circuit across R3.X1.5/5 and A20.X10.14/6 for open or short circuit. Check the circuit across B36.4/1 and Ground for open or short circuit. Make a visual check on each connector. Is any abnormality recognized? No: Go to Step3 Yes: Go to Step11
	Step3	Inspection procedure Turn the starter switch in OFF. Replace component “R5 (DEF tank heater)”. Reinstall all the removed connectors. Turn the starter switch in ON. Go to Step4
	Step4	Inspection procedure Turn the starter switch in OFF. Reinstall all the removed connectors. Erase fault memory and perform a test drive. Check if this diagnosis code has occurred. Are current fault codes present? No: Go to Step10 Yes: Go to Step5
	Step5	Inspection procedure Turn the starter switch in OFF. Replace component “R3 (DEF heater power unit)”. Reinstall all the removed connectors. Go to Step6
	Step6	Inspection procedure Turn the starter switch in OFF. Reinstall all the removed connectors. Erase fault memory and perform a test drive. Check if this diagnosis code has occurred. Are current fault codes present? No: Go to Step10 Yes: Go to Step7
	Step7	Inspection procedure Turn the starter switch in OFF. Replace component “A40 (DEF tank)”. Reinstall all the removed connectors. Turn the starter switch in ON. Perform the learned value resetting procedure of A40 (DEF tank) which A4 (Combustion engine Control unit) learns. Go to Step8
	Step8	Inspection procedure Turn the starter switch in OFF. Reinstall all the removed connectors. Erase fault memory and perform a test drive. Check if this diagnosis code has occurred. Are current fault codes present? No: Go to Step6 Yes: Go to Step9

https://truckmanualshub.com/

Inspection procedure	Step9	Inspection procedure Perform the operation start and replace A4 (Combustion engine Control unit). Go to Step10
	Step10	Inspection completed
	Step11	Inspection procedure Turn the starter switch in OFF. Remove the connector of A4 (Combustion engine Control unit). Remove the connector of X19 (Intermediate connector). Remove the connector of X41 (Intermediate connector). Remove the connector of A20 (SAM). Remove the connector of Ground. Check the circuit across A4.X2.94/28 and X19.16/4 for open or short circuit. Check the circuit across A4.X2.94/32 and X19.16/3 for open or short circuit. Check the circuit across A4.X2.94/50 and X19.16/1 for open or short circuit. Check the circuit across A4.X2.94/10 and X19.16/2 for open or short circuit. Check the circuit across X41.4/3 and Ground for open or short circuit. Check the circuit across X41.4/2 and A20.X10.14/4 for open or short circuit. Check the circuit across X41.4/1 and A20.X10.14/6 for open or short circuit. Make a visual check on each connector. Is any abnormality recognized? No: Go to Step12 Yes: Go to Step13
	Step12	Inspection procedure Repair or replace the harness across R3 (DEF heater power unit) and X19 (Intermediate connector). Repair or replace the harness across R3 (DEF heater power unit) and X19 (Intermediate connector). Repair or replace the harness across R3 (DEF heater power unit) and R5 (DEF tank heater). Reinstall all the removed connectors. Erase fault memory and perform a test drive. Check if this diagnosis code has occurred. Are current fault codes present? No: Go to Step10 Yes: Go to Step3
	Step13	Inspection procedure Repair or replace the harness across A4 (Combustion engine Control unit) and X19 (Intermediate connector). Repair or replace the harness across A20 (SAM) and X41 (Intermediate connector). Repair or replace the harness across Ground and X41 (Intermediate connector). Reinstall all the removed connectors. Erase fault memory and perform a test drive. Check if this diagnosis code has occurred. Are current fault codes present? No: Go to Step10 Yes: Go to Step3

3363-1: SCR Reagent heating: DEF tank heater diagnostic signalLOW

Generation condition	[Test Condition] • Monitoring is active while the battery voltage is over 10.00V and as long as the battery voltage is over 10.00V and 2.00s after this threshold has been exceeded • Continuously, if ADC module does not report any error.
	[Fault Detection] • The Sensed raw voltage < 0.00mV
	[Defect Debouncing] • Defect condition exceeded cumulatively > 500.00ms • Failure is detected if active for 50% of the time
Fault healing	• The sensed raw voltage value > 0.00mV

https://truckmanualshub.com/

System reaction		• Raw voltage is frozen at last valid value on preliminary failure and ramps to fixed replacement value 41.00uA if failure is validated using slope 3300.00K/s or 3300.00K/s depending on whether the replacement value is above or below the current value • Further reactions according FID (see FID's)
		• 1) FId / Freeze DEF tank heater raw voltage if preliminary failure is detected • 2) FId / Inhibit Physical Range Check of Tank Heater raw voltage • 3) FId / Replace DEF tank heater raw voltage with default value if failure is validated
Failure cause		• Wiring harness (short circuit) • Relay defect • DEF Tank heater element defect
Failure repair		• Check Wiring harness (short circuit) • Check Relay • Check DEF Tank heater element
Inspection procedure	Step1	Inspection procedure If one of diagnosis codes associated with SAM ECU is generated, make a system diagnosis according to the diagnosis code. Go to Step2
	Step2	Inspection procedure Turn the starter switch in OFF. Remove the connector of A4 (Combustion engine Control unit). Remove the connector of R3 (DEF heater power unit). Remove the connector of R5 (DEF tank heater). Remove the connector of A20 (SAM). Remove the connector of Ground. Check the circuit across A4.X2.94/28 and R3.X2.4/4 for open or short circuit. Check the circuit across A4.X2.94/32 and R3.X2.4/3 for open or short circuit. Check the circuit across A4.X2.94/50 and R3.X2.4/2 for open or short circuit. Check the circuit across A4.X2.94/10 and R3.X2.4/1 for open or short circuit. Check the circuit across R3.X1.5/4 and B36.4/2 for open or short circuit. Check the circuit across R3.X1.5/3 and A20.X10.14/4 for open or short circuit. Check the circuit across R3.X1.5/5 and A20.X10.14/6 for open or short circuit. Check the circuit across B36.4/1 and Ground for open or short circuit. Make a visual check on each connector. Is any abnormality recognized? No: Go to Step3 Yes: Go to Step11
	Step3	Inspection procedure Turn the starter switch in OFF. Replace component "R5 (DEF tank heater)". Reinstall all the removed connectors. Turn the starter switch in ON. Go to Step4
	Step4	Inspection procedure Turn the starter switch in OFF. Reinstall all the removed connectors. Erase fault memory and perform a test drive. Check if this diagnosis code has occurred. Are current fault codes present? No: Go to Step10 Yes: Go to Step5
	Step5	Inspection procedure Turn the starter switch in OFF. Replace component "R3 (DEF heater power unit)". Reinstall all the removed connectors. Go to Step6
	Step6	Inspection procedure Turn the starter switch in OFF. Reinstall all the removed connectors. Erase fault memory and perform a test drive. Check if this diagnosis code has occurred. Are current fault codes present? No: Go to Step10 Yes: Go to Step7

https://truckmanualshub.com/

Inspection procedure	Step7	Inspection procedure Turn the starter switch in OFF. Replace component “A40 (DEF tank)”. Reinstall all the removed connectors. Turn the starter switch in ON. Perform the learned value resetting procedure of A40 (DEF tank) which A4 (Combustion engine Control unit) learns. Go to Step8
	Step8	Inspection procedure Turn the starter switch in OFF. Reinstall all the removed connectors. Erase fault memory and perform a test drive. Check if this diagnosis code has occurred. Are current fault codes present? No: Go to Step6 Yes: Go to Step9
	Step9	Inspection procedure Perform the operation start and replace A4 (Combustion engine Control unit). Go to Step10
	Step10	Inspection completed
	Step11	Inspection procedure Turn the starter switch in OFF. Remove the connector of A4 (Combustion engine Control unit). Remove the connector of X19 (Intermediate connector). Remove the connector of X41 (Intermediate connector). Remove the connector of A20 (SAM). Remove the connector of Ground. Check the circuit across A4.X2.94/28 and X19.16/4 for open or short circuit. Check the circuit across A4.X2.94/32 and X19.16/3 for open or short circuit. Check the circuit across A4.X2.94/50 and X19.16/1 for open or short circuit. Check the circuit across A4.X2.94/10 and X19.16/2 for open or short circuit. Check the circuit across X41.4/3 and Ground for open or short circuit. Check the circuit across X41.4/2 and A20.X10.14/4 for open or short circuit. Check the circuit across X41.4/1 and A20.X10.14/6 for open or short circuit. Make a visual check on each connector. Is any abnormality recognized? No: Go to Step12 Yes: Go to Step13
	Step12	Inspection procedure Repair or replace the harness across R3 (DEF heater power unit) and X19 (Intermediate connector). Repair or replace the harness across R3 (DEF heater power unit) and X19 (Intermediate connector). Repair or replace the harness across R3 (DEF heater power unit) and R5 (DEF tank heater). Reinstall all the removed connectors. Erase fault memory and perform a test drive. Check if this diagnosis code has occurred. Are current fault codes present? No: Go to Step10 Yes: Go to Step3
	Step13	Inspection procedure Repair or replace the harness across A4 (Combustion engine Control unit) and X19 (Intermediate connector). Repair or replace the harness across A20 (SAM) and X41 (Intermediate connector). Repair or replace the harness across Ground and X41 (Intermediate connector). Reinstall all the removed connectors. Erase fault memory and perform a test drive. Check if this diagnosis code has occurred. Are current fault codes present? No: Go to Step10 Yes: Go to Step3

https://truckmanualshub.com/

3363-2: SCR Reagent heating: No load-Data erratic, intermittent or incorrect

Generation condition	[Test Condition] • Monitoring is active while the battery voltage is over 10.00V and as long as the battery voltage is over 10.00V and 2.00s after this threshold has been exceeded • Monitoring only when the power stage is NOT active. • ECU not in pre drive condition, Battery voltage > 9.50V (switch off < 9.00V), Battery voltage < 16.00V (switch off > 16.50V) and Battery voltage correction factor between 0.80- (switch off < 0.78-) and 1.56- (switch off > 1.65-) • Power stage not switched off, i.e. ECU not in pre drive condition, Battery voltage > 9.50V (switch off < 9.00V) and Battery voltage < 16.00V (switch off > 16.50V)
	[Fault Detection] • Hardware reports an Open Load (OL) error on the power stage for the power stage of DEF Tank heater
	[Defect Debouncing] • Defect condition exceeded cumulatively > 500.00ms • Failure is detected if active for 50% of the time
Fault healing	• Hardware does not report an Open Load (OL) error on the power stage for the power stage of DEF Tank heater
System reaction	• Power stage is shut off. • Further reactions according FID (see FID's)
	• 1) FId / Function Identifier to inhibit the check for response of DEF tank heater in case of heater and temperature sensor errors. • 2) FId / Disable the sending of TESTING signal for heater Tank • 3) FId / Tank heating not released
Failure cause	• Broken or disconnected wiring or defective DEF Tank Heater
Failure repair	• Check of wiring, replace DEF Tank Heater

https://truckmanualshub.com/

Inspection procedure	Step1	Inspection procedure If one of diagnosis codes associated with SAM ECU is generated, make a system diagnosis according to the diagnosis code. Go to Step2
	Step2	Inspection procedure Turn the starter switch in OFF. Remove the connector of A4 (Combustion engine Control unit). Remove the connector of R3 (DEF heater power unit). Remove the connector of R5 (DEF tank heater). Remove the connector of A20 (SAM). Remove the connector of Ground. Check the circuit across A4.X2.94/28 and R3.X2.4/4 for open or short circuit. Check the circuit across A4.X2.94/32 and R3.X2.4/3 for open or short circuit. Check the circuit across A4.X2.94/50 and R3.X2.4/2 for open or short circuit. Check the circuit across A4.X2.94/10 and R3.X2.4/1 for open or short circuit. Check the circuit across R3.X1.5/4 and B36.4/2 for open or short circuit. Check the circuit across R3.X1.5/3 and A20.X10.14/4 for open or short circuit. Check the circuit across R3.X1.5/5 and A20.X10.14/6 for open or short circuit. Check the circuit across B36.4/1 and Ground for open or short circuit. Make a visual check on each connector. Is any abnormality recognized? No: Go to Step3 Yes: Go to Step11
	Step3	Inspection procedure Turn the starter switch in OFF. Replace component “R5 (DEF tank heater)”. Reinstall all the removed connectors. Turn the starter switch in ON. Go to Step4
	Step4	Inspection procedure Turn the starter switch in OFF. Reinstall all the removed connectors. Erase fault memory and perform a test drive. Check if this diagnosis code has occurred. Are current fault codes present? No: Go to Step10 Yes: Go to Step5
	Step5	Inspection procedure Turn the starter switch in OFF. Replace component “R3 (DEF heater power unit)”. Reinstall all the removed connectors. Go to Step6
	Step6	Inspection procedure Turn the starter switch in OFF. Reinstall all the removed connectors. Erase fault memory and perform a test drive. Check if this diagnosis code has occurred. Are current fault codes present? No: Go to Step10 Yes: Go to Step7

https://truckmanualshub.com/

Inspection procedure	Step7	Inspection procedure Turn the starter switch in OFF. Replace component “A40 (DEF tank)”. Reinstall all the removed connectors. Turn the starter switch in ON. Perform the learned value resetting procedure of A40 (DEF tank) which A4 (Combustion engine Control unit) learns. Go to Step8
	Step8	Inspection procedure Turn the starter switch in OFF. Reinstall all the removed connectors. Erase fault memory and perform a test drive. Check if this diagnosis code has occurred. Are current fault codes present? No: Go to Step6 Yes: Go to Step9
	Step9	Inspection procedure Perform the operation start and replace A4 (Combustion engine Control unit). Go to Step10
	Step10	Inspection completed
	Step11	Inspection procedure Turn the starter switch in OFF. Remove the connector of A4 (Combustion engine Control unit). Remove the connector of X19 (Intermediate connector). Remove the connector of X41 (Intermediate connector). Remove the connector of A20 (SAM). Remove the connector of Ground. Check the circuit across A4.X2.94/28 and X19.16/4 for open or short circuit. Check the circuit across A4.X2.94/32 and X19.16/3 for open or short circuit. Check the circuit across A4.X2.94/50 and X19.16/1 for open or short circuit. Check the circuit across A4.X2.94/10 and X19.16/2 for open or short circuit. Check the circuit across X41.4/3 and Ground for open or short circuit. Check the circuit across X41.4/2 and A20.X10.14/4 for open or short circuit. Check the circuit across X41.4/1 and A20.X10.14/6 for open or short circuit. Make a visual check on each connector. Is any abnormality recognized? No: Go to Step12 Yes: Go to Step13
	Step12	Inspection procedure Repair or replace the harness across R3 (DEF heater power unit) and X19 (Intermediate connector). Repair or replace the harness across R3 (DEF heater power unit) and X19 (Intermediate connector). Repair or replace the harness across R3 (DEF heater power unit) and R5 (DEF tank heater). Reinstall all the removed connectors. Erase fault memory and perform a test drive. Check if this diagnosis code has occurred. Are current fault codes present? No: Go to Step10 Yes: Go to Step3
	Step13	Inspection procedure Repair or replace the harness across A4 (Combustion engine Control unit) and X19 (Intermediate connector). Repair or replace the harness across A20 (SAM) and X41 (Intermediate connector). Repair or replace the harness across Ground and X41 (Intermediate connector). Reinstall all the removed connectors. Erase fault memory and perform a test drive. Check if this diagnosis code has occurred. Are current fault codes present? No: Go to Step10 Yes: Go to Step3

https://truckmanualshub.com/

3363-3: SCR Reagent heating: Voltage above normal or shorted to high source

Generation condition		[Test Condition] • Monitoring is active while the battery voltage is over 10.00V and as long as the battery voltage is over 10.00V and 2.00s after this threshold has been exceeded • Monitoring only when the power stage is active. • ECU not in pre drive condition, Battery voltage > 9.50V (switch off < 9.00V), Battery voltage < 16.00V (switch off > 16.50V) and Battery voltage correction factor between 0.80- (switch off < 0.78-) and 1.56- (switch off > 1.65-) • Power stage not switched off, i.e. ECU not in pre drive condition, Battery voltage > 9.50V (switch off < 9.00V) and Battery voltage < 16.00V (switch off > 16.50V)
		[Fault Detection] • Hardware reports a short circuit to battery (SCB) error on the power stage for the power stage of DEF Tank heater
		[Defect Debouncing] • Defect condition exceeded cumulatively > 100.00ms • Failure is detected if active for 50% of the time
Fault healing		• To give the possibility for healing, an electric impulse is sent to power stage each 1000.00ms 5.00- times in actual driving cycle. Failure healed, if the power stage does not report an SCB error. Else no healing possible at this driving cycle.
System reaction		• Power stage is shut off. • Test impulse is sent to power stage via SPI. • Further reactions according FID (see FID's)
		• 1) Fid / Function Identifier to inhibit the check for response of DEF tank heater in case of heater and temperature sensor errors. • 2) FId / Disable the sending of TESTING signal for heater Tank • 3) FId / Tank heating not released
Failure cause		• Short circuit of wiring to external source or inside DEF Tank Heater
Failure repair		• Check of wiring, replace DEF Tank Heater
Inspection procedure	Step1	Inspection procedure If one of diagnosis codes associated with SAM ECU is generated, make a system diagnosis according to the diagnosis code. Go to Step2
	Step2	Inspection procedure Turn the starter switch in OFF. Remove the connector of A4 (Combustion engine Control unit). Remove the connector of R3 (DEF heater power unit). Remove the connector of R5 (DEF tank heater). Remove the connector of A20 (SAM). Remove the connector of Ground. Check the circuit across A4.X2.94/28 and R3.X2.4/4 for open or short circuit. Check the circuit across A4.X2.94/32 and R3.X2.4/3 for open or short circuit. Check the circuit across A4.X2.94/50 and R3.X2.4/2 for open or short circuit. Check the circuit across A4.X2.94/10 and R3.X2.4/1 for open or short circuit. Check the circuit across R3.X1.5/4 and B36.4/2 for open or short circuit. Check the circuit across R3.X1.5/3 and A20.X10.14/4 for open or short circuit. Check the circuit across R3.X1.5/5 and A20.X10.14/6 for open or short circuit. Check the circuit across B36.4/1 and Ground for open or short circuit. Make a visual check on each connector. Is any abnormality recognized? No: Go to Step3 Yes: Go to Step11
	Step3	Inspection procedure Turn the starter switch in OFF. Replace component "R5 (DEF tank heater)". Reinstall all the removed connectors. Turn the starter switch in ON. Go to Step4

https://truckmanualshub.com/

Inspection procedure	Step4	Inspection procedure Turn the starter switch in OFF. Reinstall all the removed connectors. Erase fault memory and perform a test drive. Check if this diagnosis code has occurred. Are current fault codes present? No: Go to Step10 Yes: Go to Step5
	Step5	Inspection procedure Turn the starter switch in OFF. Replace component “R3 (DEF heater power unit)”. Reinstall all the removed connectors. Go to Step6
	Step6	Inspection procedure Turn the starter switch in OFF. Reinstall all the removed connectors. Erase fault memory and perform a test drive. Check if this diagnosis code has occurred. Are current fault codes present? No: Go to Step10 Yes: Go to Step7
	Step7	Inspection procedure Turn the starter switch in OFF. Replace component “A40 (DEF tank)”. Reinstall all the removed connectors. Turn the starter switch in ON. Perform the learned value resetting procedure of A40 (DEF tank) which A4 (Combustion engine Control unit) learns. Go to Step8
	Step8	Inspection procedure Turn the starter switch in OFF. Reinstall all the removed connectors. Erase fault memory and perform a test drive. Check if this diagnosis code has occurred. Are current fault codes present? No: Go to Step6 Yes: Go to Step9
	Step9	Inspection procedure Perform the operation start and replace A4 (Combustion engine Control unit). Go to Step10
	Step10	Inspection completed
	Step11	Inspection procedure Turn the starter switch in OFF. Remove the connector of A4 (Combustion engine Control unit). Remove the connector of X19 (Intermediate connector). Remove the connector of X41 (Intermediate connector). Remove the connector of A20 (SAM). Remove the connector of Ground. Check the circuit across A4.X2.94/28 and X19.16/4 for open or short circuit. Check the circuit across A4.X2.94/32 and X19.16/3 for open or short circuit. Check the circuit across A4.X2.94/50 and X19.16/1 for open or short circuit. Check the circuit across A4.X2.94/10 and X19.16/2 for open or short circuit. Check the circuit across X41.4/3 and Ground for open or short circuit. Check the circuit across X41.4/2 and A20.X10.14/4 for open or short circuit. Check the circuit across X41.4/1 and A20.X10.14/6 for open or short circuit. Make a visual check on each connector. Is any abnormality recognized? No: Go to Step12 Yes: Go to Step13

https://truckmanualshub.com/

Inspection procedure	Step12	Inspection procedure Repair or replace the harness across R3 (DEF heater power unit) and X19 (Intermediate connector). Repair or replace the harness across R3 (DEF heater power unit) and X19 (Intermediate connector). Repair or replace the harness across R3 (DEF heater power unit) and R5 (DEF tank heater). Reinstall all the removed connectors. Erase fault memory and perform a test drive. Check if this diagnosis code has occurred. Are current fault codes present? No: Go to Step10 Yes: Go to Step3
	Step13	Inspection procedure Repair or replace the harness across A4 (Combustion engine Control unit) and X19 (Intermediate connector). Repair or replace the harness across A20 (SAM) and X41 (Intermediate connector). Repair or replace the harness across Ground and X41 (Intermediate connector). Reinstall all the removed connectors. Erase fault memory and perform a test drive. Check if this diagnosis code has occurred. Are current fault codes present? No: Go to Step10 Yes: Go to Step3

3363-4: SCR Reagent heating: Voltage below normal or shorted to low source

Generation condition		[Test Condition] • Monitoring is active while the battery voltage is over 10.00V and as long as the battery voltage is over 10.00V and 2.00s after this threshold has been exceeded • Monitoring only when the power stage is NOT active. • ECU not in pre drive condition, Battery voltage > 9.50V (switch off < 9.00V), Battery voltage < 16.00V (switch off > 16.50V) and Battery voltage correction factor between 0.80- (switch off < 0.78-) and 1.56- (switch off > 1.65-) • Power stage not switched off, i.e. ECU not in pre drive condition, Battery voltage > 9.50V (switch off < 9.00V) and Battery voltage < 16.00V (switch off > 16.50V)
		[Fault Detection] • Hardware reports a short circuit to ground (SCG) error on the power stage for the power stage of DEF Tank heater
		[Defect Debouncing] • Defect condition exceeded immediately
Fault healing		• Hardware does not report a short circuit to ground (SCG) error on the power stage for the power stage of DEF Tank heater
System reaction		• Power stage is shut off. • Further reactions according FID (see FID's)
		• 1) FId / Function Identifier to inhibit the check for response of DEF tank heater in case of heater and temperature sensor errors. • 2) FId / Inhibit Monitoring of Tank Heater Circuit • 3) FId / Disable the sending of TESTING signal for heater Tank • 4) FId / Tank heating not released
Failure cause		• Short circuit of wiring to ground or inside DEF Tank Heater
Failure repair		• Check of wiring, replace DEF Tank Heater
Inspection procedure	Step1	Inspection procedure If one of diagnosis codes associated with SAM ECU is generated, make a system diagnosis according to the diagnosis code. Go to Step2

https://truckmanualshub.com/

Inspection procedure	Step2	Inspection procedure Turn the starter switch in OFF. Remove the connector of A4 (Combustion engine Control unit). Remove the connector of R3 (DEF heater power unit). Remove the connector of R5 (DEF tank heater). Remove the connector of A20 (SAM). Remove the connector of Ground. Check the circuit across A4.X2.94/28 and R3.X2.4/4 for open or short circuit. Check the circuit across A4.X2.94/32 and R3.X2.4/3 for open or short circuit. Check the circuit across A4.X2.94/50 and R3.X2.4/2 for open or short circuit. Check the circuit across A4.X2.94/10 and R3.X2.4/1 for open or short circuit. Check the circuit across R3.X1.5/4 and B36.4/2 for open or short circuit. Check the circuit across R3.X1.5/3 and A20.X10.14/4 for open or short circuit. Check the circuit across R3.X1.5/5 and A20.X10.14/6 for open or short circuit. Check the circuit across B36.4/1 and Ground for open or short circuit. Make a visual check on each connector. Is any abnormality recognized? No: Go to Step3 Yes: Go to Step11
	Step3	Inspection procedure Turn the starter switch in OFF. Replace component “R5 (DEF tank heater)”. Reinstall all the removed connectors. Turn the starter switch in ON. Go to Step4
	Step4	Inspection procedure Turn the starter switch in OFF. Reinstall all the removed connectors. Erase fault memory and perform a test drive. Check if this diagnosis code has occurred. Are current fault codes present? No: Go to Step10 Yes: Go to Step5
	Step5	Inspection procedure Turn the starter switch in OFF. Replace component “R3 (DEF heater power unit)”. Reinstall all the removed connectors. Go to Step6
	Step6	Inspection procedure Turn the starter switch in OFF. Reinstall all the removed connectors. Erase fault memory and perform a test drive. Check if this diagnosis code has occurred. Are current fault codes present? No: Go to Step10 Yes: Go to Step7
	Step7	Inspection procedure Turn the starter switch in OFF. Replace component “A40 (DEF tank)”. Reinstall all the removed connectors. Turn the starter switch in ON. Perform the learned value resetting procedure of A40 (DEF tank) which A4 (Combustion engine Control unit) learns. Go to Step8
	Step8	Inspection procedure Turn the starter switch in OFF. Reinstall all the removed connectors. Erase fault memory and perform a test drive. Check if this diagnosis code has occurred. Are current fault codes present? No: Go to Step6 Yes: Go to Step9
	Step9	Inspection procedure Perform the operation start and replace A4 (Combustion engine Control unit). Go to Step10

https://truckmanualshub.com/

Inspection procedure	Step10	Inspection completed
	Step11	Inspection procedure Turn the starter switch in OFF. Remove the connector of A4 (Combustion engine Control unit). Remove the connector of X19 (Intermediate connector). Remove the connector of X41 (Intermediate connector). Remove the connector of A20 (SAM). Remove the connector of Ground. Check the circuit across A4.X2.94/28 and X19.16/4 for open or short circuit. Check the circuit across A4.X2.94/32 and X19.16/3 for open or short circuit. Check the circuit across A4.X2.94/50 and X19.16/1 for open or short circuit. Check the circuit across A4.X2.94/10 and X19.16/2 for open or short circuit. Check the circuit across X41.4/3 and Ground for open or short circuit. Check the circuit across X41.4/2 and A20.X10.14/4 for open or short circuit. Check the circuit across X41.4/1 and A20.X10.14/6 for open or short circuit. Make a visual check on each connector. Is any abnormality recognized? No: Go to Step12 Yes: Go to Step13
	Step12	Inspection procedure Repair or replace the harness across R3 (DEF heater power unit) and X19 (Intermediate connector). Repair or replace the harness across R3 (DEF heater power unit) and X19 (Intermediate connector). Repair or replace the harness across R3 (DEF heater power unit) and R5 (DEF tank heater). Reinstall all the removed connectors. Erase fault memory and perform a test drive. Check if this diagnosis code has occurred. Are current fault codes present? No: Go to Step10 Yes: Go to Step3
	Step13	Inspection procedure Repair or replace the harness across A4 (Combustion engine Control unit) and X19 (Intermediate connector). Repair or replace the harness across A20 (SAM) and X41 (Intermediate connector). Repair or replace the harness across Ground and X41 (Intermediate connector). Reinstall all the removed connectors. Erase fault memory and perform a test drive. Check if this diagnosis code has occurred. Are current fault codes present? No: Go to Step10 Yes: Go to Step3

https://truckmanualshub.com/

3363-12: DEF tank heater is faulty.

Generation condition		[Test Condition] • Monitoring not inhibited by FID_SCRPODRplValUTnkT due to another failure. • Tank heater active • Vehicle speed VehV_v > 10km/h {6.2mph} • Remaining DEF tank content UDC_rRdcAgRmn > 31.99% • Internal release delay 60.00s has expired • DEF tank temperature is outside of range -17.04°C {1.33°F} and -8.04°C {17.53°F}
		[Fault Detection] • DEF temperature does not increase by • 1.96°C {35.53°F} at -32.04°C {-25.67°F} • 1.96°C {35.53°F} at -20.04°C {-4.07°F} • 0.96°C {33.73°F} at -12.04°C {10.33°F} • 0.96°C {33.73°F} at -2.04°C {28.33°F} • within • 15.00min at -32.04°C {-25.67°F} • 48.00min at -20.04°C {-4.07°F} • 60.00min at -12.04°C {10.33°F} • 60.00min at -2.04°C {28.33°F}
		[Defect Debouncing] • Immediate
Fault healing		• Healing of fault is only possible over a new fault free heating cycle at new driving cycle
System reaction		• None
Failure cause		• Heater in “air bubble” with frozen DEF --> check ambient conditions, if failure happened at temp < -10°{14°F} --> possible reason. • Tank heater defect • Wiring harness defect
Failure repair		• Check tank heater • Check wiring harness
Inspection procedure	Step1	Inspection procedure If one of diagnosis codes associated with SAM ECU is generated, make a system diagnosis according to the diagnosis code. If this fault code occurs under conditions of -10°C {14°F} or less, the fault may be transient; check the environment where the fault code occurs. Go to Step2
	Step2	Inspection procedure Turn the starter switch in OFF. Remove the connector of A4 (Combustion engine Control unit). Remove the connector of R3 (DEF heater power unit). Remove the connector of R2 (DEF line heater). Remove the connector of A18 (DEF delivery pump). Remove the connector of A20 (SAM). Remove the connector of Ground. Check the circuit across A4.X2.94/28 and R3.X2.4/4 for open or short circuit. Check the circuit across A4.X2.94/32 and R3.X2.4/3 for open or short circuit. Check the circuit across A4.X2.94/50 and R3.X2.4/2 for open or short circuit. Check the circuit across A4.X2.94/10 and R3.X2.4/1 for open or short circuit. Check the circuit across R3.X1.5/1 and R2.2/1 for open or short circuit. Check the circuit across R3.X1.5/2 and A18.5/2 for open or short circuit. Check the circuit across R3.X1.5/3 and A20.X10.14/4 for open or short circuit. Check the circuit across R3.X1.5/5 and A20.X10.14/6 for open or short circuit. Check the circuit across R2.2/2 and Ground for open or short circuit. Check the circuit across A18.5/1 and Ground for open or short circuit. Make a visual check on each connector. Is any abnormality recognized?
	Step3	Inspection procedure Turn the starter switch in OFF. Replace component “R2 (DEF line heater)”. Reinstall all the removed connectors. Turn the starter switch in ON. Go to Step4

https://truckmanualshub.com/

Inspection procedure	Step4	Inspection procedure Turn the starter switch in OFF. Reinstall all the removed connectors. Erase fault memory and perform a test drive. Check if this diagnosis code has occurred. Are current fault codes present? No: Go to Step10 Yes: Go to Step5
	Step5	Inspection procedure Turn the starter switch in OFF. Replace component “R3 (DEF heater power unit)”. Reinstall all the removed connectors. Go to Step6
	Step6	Inspection procedure Turn the starter switch in OFF. Reinstall all the removed connectors. Erase fault memory and perform a test drive. Check if this diagnosis code has occurred. Are current fault codes present? No: Go to Step10 Yes: Go to Step7
	Step7	Inspection procedure Turn the starter switch in OFF. Replace component “A40 (DEF tank)”. Reinstall all the removed connectors. Turn the starter switch in ON. Perform the learned value resetting procedure of A40 (DEF tank) which A4 (Combustion engine Control unit) learns. Go to Step8
	Step8	Inspection procedure Turn the starter switch in OFF. Reinstall all the removed connectors. Erase fault memory and perform a test drive. Check if this diagnosis code has occurred. Are current fault codes present? No: Go to Step6 Yes: Go to Step9
	Step9	Inspection procedure Perform the operation start and replace A4 (Combustion engine Control unit). Go to Step10
	Step10	Inspection completed
	Step11	Inspection procedure Turn the starter switch in OFF. Remove the connector of A4 (Combustion engine Control unit). Remove the connector of X19 (Intermediate connector). Remove the connector of X41 (Intermediate connector). Remove the connector of A20 (SAM). Remove the connector of Ground. Check the circuit across A4.X2.94/28 and X19.16/4 for open or short circuit. Check the circuit across A4.X2.94/32 and X19.16/3 for open or short circuit. Check the circuit across A4.X2.94/50 and X19.16/1 for open or short circuit. Check the circuit across A4.X2.94/10 and X19.16/2 for open or short circuit. Check the circuit across X41.4/3 and Ground for open or short circuit. Check the circuit across X41.4/4 and Ground for open or short circuit. Check the circuit across X41.4/1 and A20.X10.14/4 for open or short circuit. Check the circuit across X41.4/2 and A20.X10.14/6 for open or short circuit. Make a visual check on each connector. Is any abnormality recognized? No: Go to Step12 Yes: Go to Step13

https://truckmanualshub.com/

Inspection procedure	Step12	Inspection procedure Repair or replace the harness across R3 (DEF heater power unit) and X19 (Intermediate connector). Repair or replace the harness across R3 (DEF heater power unit) and X19 (Intermediate connector). Repair or replace the harness across R3 (DEF heater power unit) and A18 (DEF delivery pump). Repair or replace the harness across R3 (DEF heater power unit) and R2 (DEF line heater). Reinstall all the removed connectors. Erase fault memory and perform a test drive. Check if this diagnosis code has occurred. Are current fault codes present? No: Go to Step10 Yes: Go to Step3
	Step13	Inspection procedure Repair or replace the harness across A4 (Combustion engine Control unit) and X19 (Intermediate connector). Repair or replace the harness across A20 (SAM) and X41 (Intermediate connector). Repair or replace the harness across Ground and X41 (Intermediate connector). Reinstall all the removed connectors. Erase fault memory and perform a test drive. Check if this diagnosis code has occurred. Are current fault codes present? No: Go to Step10 Yes: Go to Step3

3470-3: Component ‘VTG Actuator’ has a short circuit to positive.

Generation condition	[Test Condition] • Monitoring is active while the battery voltage is over 10.00V and as long as the battery voltage is over 10.00V and 2.00s after this threshold has been exceeded • Monitoring only when the power stage is active.
	[Fault Detection] • Hardware reports “short circuit to battery” (SCB) error
	[Defect Debouncing] • Defect condition exceeded cumulatively > 480.00ms • Failure is detected if active for 50% of the time
Fault healing	• To give the possibility for healing, an electric impulse is sent to power stage each 250.00ms. Failure healed, if the power stage does not report an SCB error.

https://truckmanualshub.com/

		• Power stage shut off (VGT actuator in open position). • Further reactions according FID (see FID's)
System reaction		• 1) FId / EGR switched off • 2) FId / Deactivates NOx monitoring • 3) Fid / SCR Monitoring or DEF injection release not possible (according calibration of Release Masks) • 4) Fid / Reagent dosing quantity for SCR reduced (to DStgy_facUreaDesRed_C) • 5) FId / Status of function identifier FId_EngDemTrqLimErr1 • 6) FId / Torque limitation 2 activated for power reduction • 7) FId / Engine speed Limitation 2 for HIgh/Low engine speed (HLS) control active • 8) FId / The Adaptation of lambda Sensor disabled • 9) FId / The Difference Check between several Lambda Sensors is disabled • 10) FId / Dynamic Signal Monitoring of Lambda Sensor disabled • 11) FId / Electrical Open Load Check of Lambda Sensor disabled • 12) FId / Signal Range Check of O2 Signal of lambda Sensor disabled • 13) FId / Plausibility Check of O2-Signal of Lambda Sensor (e.g. with HFM or Air calculation by Boost pressure) is disabled and last valid value taken • 14) Fid / Plausibility check Boost pressure with ambient pressure inhibited • 15) FId / CLosed Loop Boost pressure governor shut off due to a Sytem error • 16) FId / Inhibit DPF monitor • 17) FId / Particulate filter ((DPF) Regeneration inhibited • 18) FId / Service regeneration of Particulate filter ((DPF) inhibited (due to DPF failure) • 19) FId / PI controller of VGT position bypassed and only Pre Control map used (open loop control) • 20) FId / Offset learning of VGT position sensor at Afterrun disabled • 21) FId / Inhibit Charged Air Cooler monitoring • 22) FId / Zero Fuel Calibration (ZFC) of injectors by Lambda Sensor signal disabled
Failure cause		• Short circuit of wiring to external source or inside PWM actuator
Failure repair		• Check of wiring, replace PWM actuator
Inspection procedure	Step1	Inspection procedure If one of diagnosis codes associated with SAM ECU is generated, make a system diagnosis according to the diagnosis code. Go to Step2
	Step2	Inspection procedure Turn the starter switch in OFF. Remove the connector of A4 (Combustion engine Control unit). Remove the connector of Y21 (Actuator in turbocharger). Remove the connector of A20 (SAM). Check the circuit across Y21.2/2 and A20.X10.14/2 for open or short circuit. Check the circuit across Y21.2/1 and A4.X1.60/19 for open or short circuit. Make a visual check on each connector. Is any abnormality recognized? No: Go to Step3 Yes: Go to Step7
	Step3	Inspection procedure Turn the starter switch in OFF. Replace component "Y21 (Actuator in turbocharger)". Reinstall all the removed connectors. Turn the starter switch in ON. Perform the learned value resetting procedure of Turbocharger which A1 ECU learns. Go to Step4
	Step4	Inspection procedure Turn the starter switch in OFF. Reinstall all the removed connectors. Erase fault memory and perform a test drive. Check if this diagnosis code has occurred. Are current fault codes present? No: Go to Step6 Yes: Go to Step5

https://truckmanualshub.com/

Inspection procedure	Step5	Inspection procedure Perform the operation start and replace A4 (Combustion engine Control unit). Go to Step6
	Step6	Inspection completed
	Step7	Inspection procedure Repair or replace electrical lines. Reinstall all the removed connectors. Erase fault memory and perform a test drive. Check if this diagnosis code has occurred. Are current fault codes present? No: Go to Step6 Yes: Go to Step3

3470-4: Component 'VTG Actuator' has a short circuit to ground.

Generation condition	[Test Condition] • Monitoring is active while the battery voltage is over 10.00V and as long as the battery voltage is over 10.00V and 2.00s after this threshold has been exceeded • Monitoring only when the power stage is NOT active.
	[Fault Detection] • Hardware reports "short to ground" (SCG) error
	[Defect Debouncing] • Defect condition exceeded cumulatively > 480.00ms • Failure is detected if active for 50% of the time
Fault healing	• To give the possibility for healing, an electric impulse is sent to power stage each 250.00ms. Failure healed, if the power stage does not report an SCG error.
System reaction	• Power stage shut off (VGT actuator in open position). • Further reactions according FID (see FID's)
	• 1) FId / EGR switched off • 2) FId / Deactivates NOx monitoring • 3) Fid / SCR Monitoring or DEF injection release not possible (according calibration of Release Masks) • 4) Fid / Reagent dosing quantity for SCR reduced (to DStgy_facUreaDesRed_C) • 5) FId / Status of function identifier FId_EngDemTrqLimErr1 • 6) FId / Torque limitation 2 activated for power reduction • 7) FId / Engine speed Limitation 2 for HIgh/Low engine speed (HLS) control active • 8) FId / The Adaptation of lambda Sensor disabled • 9) FId / The Difference Check between several Lambda Sensors is disabled • 10) FId / Dynamic Signal Monitoring of Lambda Sensor disabled • 11) FId / Electrical Open Load Check of Lambda Sensor disabled • 12) FId / O2 Signal of Lambda Sensor not valid • 13) FId / Signal Range Check of O2 Signal of lambda Sensor disabled • 14) FId / Plausibility Check of O2-Signal of Lambda Sensor (e.g. with HFM or Air calculation by Boost pressure) is disabled and last valid value taken • 15) Fid / Plausibility check Boost pressure with ambient pressure inhibited • 16) FId / CLosed Loop Boost pressure governor shut off due to a Sytem error • 17) FId / Inhibit DPF monitor • 18) FId / Particulate filter ((DPF) Regeneration inhibited • 19) FId / Service regeneration of Particulate filter ((DPF) inhibited (due to DPF failure) • 20) FId / PI controller of VGT position bypassed and only Pre Control map used (open loop control) • 21) FId / Offset learning of VGT position sensor at Afterrun disabled • 22) FId / Inhibit Charged Air Cooler monitoring • 23) FId / Zero Fuel Calibration (ZFC) of injectors by Lambda Sensor signal disabled
Failure cause	• Short circuit of wiring to ground or inside PWM
Failure repair	• Check of wiring, replace PWM actuator

https://truckmanualshub.com/

Inspection procedure	Step1	Inspection procedure If one of diagnosis codes associated with SAM ECU is generated, make a system diagnosis according to the diagnosis code. Go to Step2
	Step2	Inspection procedure Turn the starter switch in OFF. Remove the connector of A4 (Combustion engine Control unit). Remove the connector of Y21 (Actuator in turbocharger). Remove the connector of A20 (SAM). Check the circuit across Y21.2/2 and A20.X10.14/2 for open or short circuit. Check the circuit across Y21.2/1 and A4.X1.60/19 for open or short circuit. Make a visual check on each connector. Is any abnormality recognized? No: Go to Step3 Yes: Go to Step7
	Step3	Inspection procedure Turn the starter switch in OFF. Replace component “Y21 (Actuator in turbocharger)”. Reinstall all the removed connectors. Turn the starter switch in ON. Perform the learned value resetting procedure of Turbocharger which A1 ECU learns. Go to Step4
	Step4	Inspection procedure Turn the starter switch in OFF. Reinstall all the removed connectors. Erase fault memory and perform a test drive. Check if this diagnosis code has occurred. Are current fault codes present? No: Go to Step6 Yes: Go to Step5
	Step5	Inspection procedure Perform the operation start and replace A4 (Combustion engine Control unit). Go to Step6
	Step6	Inspection completed
	Step7	Inspection procedure Repair or replace electrical lines. Reinstall all the removed connectors. Erase fault memory and perform a test drive. Check if this diagnosis code has occurred. Are current fault codes present? No: Go to Step6 Yes: Go to Step3

3470-5: Component VTG Actuator has a current below normal or Open circuit.

Generation condition	[Test Condition] • Monitoring is active while the battery voltage is over 10.00V and as long as the battery voltage is over 10.00V and 2.00s after this threshold has been exceeded • Monitoring only when the power stage is NOT active. • Open load diagnosis can be asked by another failure activating Fld_TrbChOpnLd.
	[Fault Detection] • Hardware reports “open load” (OL) error
	[Defect Debouncing] • Defect condition exceeded cumulatively > 480.00ms • Failure is detected if active for 50% of the time
Fault healing	• To give the possibility for healing, an electric impulse is sent to power stage each 250.00ms. Failure healed, if the power stage does not report an OL error.

https://truckmanualshub.com/

		• Power stage shut off (VGT actuator in open position). • Further reactions according FID (see FID's)
System reaction		• 1) FId / EGR switched off • 2) FId / Deactivates NOx monitoring • 3) Fid / SCR Monitoring or DEF injection release not possible (according calibration of Release Masks) • 4) Fid / Reagent dosing quantity for SCR reduced (to DStgy_facUreaDesRed_C) • 5) FId / Status of function identifier FId_EngDemTrqLimErr1 • 6) FId / Torque limitation 2 activated for power reduction • 7) FId / Engine speed Limitation 2 for HIgh/Low engine speed (HLS) control active • 8) FId / The Adaptation of lambda Sensor disabled • 9) FId / The Difference Check between several Lambda Sensors is disabled • 10) FId / Dynamic Signal Monitoring of Lambda Sensor disabled • 11) FId / Electrical Open Load Check of Lambda Sensor disabled • 12) FId / O2 Signal of Lambda Sensor not valid • 13) FId / Signal Range Check of O2 Signal of lambda Sensor disabled • 14) FId / Plausibility Check of O2-Signal of Lambda Sensor (e.g. with HFM or Air calculation by Boost pressure) is disabled and last valid value taken • 15) Fid / Plausibility check Boost pressure with ambient pressure inhibited • 16) FId / CLosed Loop Boost pressure governor shut off due to a Sytem error • 17) FId / Inhibit DPF monitor • 18) FId / Particulate filter ((DPF) Regeneration inhibited • 19) FId / Service regeneration of Particulate filter ((DPF) inhibited (due to DPF failure) • 20) FId / PI controller of VGT position bypassed and only Pre Control map used (open loop control) • 21) FId / Offset learning of VGT position sensor at Afterrun disabled • 22) FId / Inhibit Charged Air Cooler monitoring • 23) FId / Zero Fuel Calibration (ZFC) of injectors by Lambda Sensor signal disabled
Failure cause		• Broken or disconnected wiring, defective PWM actuator
Failure repair		• Check of wiring, replace PWM actuator
Inspection procedure	Step1	Inspection procedure If one of diagnosis codes associated with SAM ECU is generated, make a system diagnosis according to the diagnosis code. Go to Step2
	Step2	Inspection procedure Turn the starter switch in OFF. Remove the connector of A4 (Combustion engine Control unit). Remove the connector of Y21 (Actuator in turbocharger). Remove the connector of A20 (SAM). Check the circuit across Y21.2/2 and A20.X10.14/2 for open or short circuit. Check the circuit across Y21.2/1 and A4.X1.60/19 for open or short circuit. Make a visual check on each connector. Is any abnormality recognized? No: Go to Step3 Yes: Go to Step7
	Step3	Inspection procedure Turn the starter switch in OFF. Replace component "Y21 (Actuator in turbocharger)". Reinstall all the removed connectors. Turn the starter switch in ON. Perform the learned value resetting procedure of Turbocharger which A1 ECU learns. Go to Step4
	Step4	Inspection procedure Turn the starter switch in OFF. Reinstall all the removed connectors. Erase fault memory and perform a test drive. Check if this diagnosis code has occurred. Are current fault codes present? No: Go to Step6 Yes: Go to Step5

https://truckmanualshub.com/

Inspection procedure	Step5	Inspection procedure Perform the operation start and replace A4 (Combustion engine Control unit). Go to Step6
	Step6	Inspection completed
	Step7	Inspection procedure Repair or replace electrical lines. Reinstall all the removed connectors. Erase fault memory and perform a test drive. Check if this diagnosis code has occurred. Are current fault codes present? No: Go to Step6 Yes: Go to Step3

3470-12: Component 'VTG Actuator' signals overtemperature.

Generation condition		[Test Condition] • Monitoring only when the power stage is active.
		[Fault Detection] • Hardware reports "over temperature" (OT) error
		[Defect Debouncing] • Defect condition exceeded cumulatively > 500.00ms • Failure is detected if active for 50% of the time
Fault healing		• To give the possibility for healing, an electric impulse is sent to power stage each 0.25s. Failure healed, if the power stage does not report an OT error.
System reaction		• Power stage shut off (VGT actuator in open position). • Further reactions according FID (see FID's)
		• 1) FId / EGR switched off • 2) FId / Deactivates NOx monitoring • 3) Fid / SCR Monitoring or DEF injection release not possible (according calibration of Release Masks) • 4) Fid / Reagent dosing quantity for SCR reduced (to DStgy_facUreaDesRed_C) • 5) FId / Status of function identifier FId_EngDemTrqLimErr1 • 6) FId / Torque limitation 2 activated for power reduction • 7) FId / Engine speed Limitation 2 for HIgh/Low engine speed (HLS) control active • 8) FId / The Adaptation of lambda Sensor disabled • 9) FId / The Difference Check between several Lambda Sensors is disabled • 10) FId / Dynamic Signal Monitoring of Lambda Sensor disabled • 11) FId / Electrical Open Load Check of Lambda Sensor disabled • 12) FId / Signal Range Check of O2 Signal of lambda Sensor disabled • 13) FId / Plausibility Check of O2-Signal of Lambda Sensor (e.g. with HFM or Air calculation by Boost pressure) is disabled and last valid value taken • 14) Fid / Plausibility check Boost pressure with ambient pressure inhibited • 15) FId / Inhibit DPF monitor • 16) FId / Particulate filter ((DPF) Regeneration inhibited • 17) FId / Service regeneration of Particulate filter ((DPF) inhibited (due to DPF failure) • 18) FId / CLosed Loop Boost pressure governor shut off due to a Sytem error • 19) FId / Inhibit Charged Air Cooler monitoring • 20) FId / Zero Fuel Calibration (ZFC) of injectors by Lambda Sensor signal disabled
Failure cause		• High battery voltage, high ECU temperature and high load or defective wiring, power stage or VGT actuator
Failure repair		• Check wiring, power stage and VGT actuator
Inspection procedure	Step1	Inspect or verify the following items. Repair or replace faulty items as necessary. If any other fault code has occurred, perform the diagnostics procedure for the fault code. Go to Step2

https://truckmanualshub.com/

Inspection procedure	Step2	Inspection procedure If one of diagnosis codes associated with SAM ECU is generated, make a system diagnosis according to the diagnosis code. Go to Step3
	Step3	Inspection procedure Turn the starter switch in OFF. Remove the connector of A4 (Combustion engine Control unit). Remove the connector of Y21 (Actuator in turbocharger). Remove the connector of A20 (SAM). Check the circuit across Y21.2/2 and A20.X10.14/2 for open or short circuit. Check the circuit across Y21.2/1 and A4.X1.60/19 for open or short circuit. Make a visual check on each connector. Is any abnormality recognized? No: Go to Step4 Yes: Go to Step8
	Step4	Inspection procedure Turn the starter switch in OFF. Replace component “Y21 (Actuator in turbocharger)”. Reinstall all the removed connectors. Turn the starter switch in ON. Perform the learned value resetting procedure of Turbocharger which A1 ECU learns. Go to Step5
	Step5	Inspection procedure Turn the starter switch in OFF. Reinstall all the removed connectors. Erase fault memory and perform a test drive. Check if this diagnosis code has occurred. Are current fault codes present? No: Go to Step7 Yes: Go to Step6
	Step6	Inspection procedure Perform the operation start and replace A4 (Combustion engine Control unit). Go to Step7
	Step7	Inspection completed
	Step8	Inspection procedure Turn the starter switch in OFF. Remove the connector of A4 (Combustion engine Control unit). Remove the connector of Y21 (Actuator in turbocharger). Remove the connector of A20 (SAM). Check the circuit across Y21.2/2 and A20.X10.14/2 for open or short circuit. Check the circuit across Y21.2/1 and A4.X1.60/19 for open or short circuit. Make a visual check on each connector. Is any abnormality recognized? No: Go to Step7 Yes: Go to Step4

3517-1: DEF tank levelData valid but below normal operational range

Generation condition	[Test Condition] • Continuously
	[Fault Detection] • If the calculation of the tank level reaches a value of 0 (= EMPTY), an error message will be issued.
	[Defect Debouncing] • Defect condition fulfilled continuously > 500.0 ms
Fault healing	• Calculated Tank level > 0
System reaction	• None except FIDs
	• 1) FId / Reagent dosing for SCR inhibited
Failure cause	• Tank is empty
Failure repair	• Refill DEF tank

https://truckmanualshub.com/

Inspection procedure	Step1	Inspection procedure Inspect the suspected factors mentioned above sequentially to locate faulty parts. Repair or replace the faulty part as necessary.

3597-0: ECU voltage supply: OVERVOLTAGE

Generation condition		[Test Condition] • Continuously
		[Fault Detection] • If voltage supply exceeds internal maximal limit
		[Defect Debouncing] • Defect condition fulfilled continuously >500.0 ms
Fault healing		• Voltage supply below maximal limit
System reaction		• None
Failure cause		• Excessive voltage supply of a CJ945 component: High battery voltage, defective wiring, internal defect of the ECM
Failure repair		• Check the battery for correct voltage supply, check wiring. If defect remains replace ECM (internal defect)
Inspection procedure	Step1	Inspection procedure If one of diagnosis codes associated with SAM ECU is generated, make a system diagnosis according to the diagnosis code. Go to Step2
	Step2	Inspection procedure Turn the starter switch in OFF. Remove the connector of A4 (Combustion engine Control unit). Remove the connector of A20 (SAM). Check the circuit across A20.X10.14/7 and A4.X2.94/1 for open or short circuit. Check the circuit across A20.X10.14/10 and A4.X2.94/3 for open or short circuit. Check the circuit across A20.X10.14/9 and A4.X2.94/5 for open or short circuit. Make a visual check on each connector. Is any abnormality recognized? No: Go to Step3 Yes: Go to Step7
	Step3	Inspection procedure Turn the starter switch in OFF. Perform the operation start and replace A20 (SAM). Reinstall all the removed connectors. Turn the starter switch in ON. Perform the learned value resetting procedure of A20 (SAM) which A4 (Combustion engine Control unit) learns. Go to Step4
	Step4	Inspection procedure Turn the starter switch in OFF. Reinstall all the removed connectors. Erase fault memory and perform a test drive. Check if this diagnosis code has occurred. Are current fault codes present? No: Go to Step6 Yes: Go to Step5
	Step5	Inspection procedure Perform the operation start and replace A4 (Combustion engine Control unit). Go to Step6
	Step6	Inspection completed
	Step7	Inspection procedure Repair or replace electrical lines. Reinstall all the removed connectors. Erase fault memory and perform a test drive. Check if this diagnosis code has occurred. Are current fault codes present? No: Go to Step6 Yes: Go to Step3

https://truckmanualshub.com/

3597-1: ECU voltage supply: UNDERVOLTAGE

Generation condition		[Test Condition] • Continuously
		[Fault Detection] • If voltage supply below internal minimal limit
		[Defect Debouncing] • Defect condition fulfilled continuously >500.0 ms
Fault healing		• Voltage supply above minimal limit
System reaction		• None
Failure cause		• Insufficient voltage supply of a CJ945 component: Low battery voltage, defective wiring, internal defect of the ECM
Failure repair		• Check the battery for sufficient voltage supply, check wiring. If defect remains replace ECM (internal defect)
Inspection procedure	Step1	Inspection procedure If one of diagnosis codes associated with SAM ECU is generated, make a system diagnosis according to the diagnosis code. Go to Step2
	Step2	Inspection procedure Turn the starter switch in OFF. Remove the connector of A4 (Combustion engine Control unit). Remove the connector of A20 (SAM). Check the circuit across A20.X10.14/7 and A4.X2.94/1 for open or short circuit. Check the circuit across A20.X10.14/10 and A4.X2.94/3 for open or short circuit. Check the circuit across A20.X10.14/9 and A4.X2.94/5 for open or short circuit. Make a visual check on each connector. Is any abnormality recognized? No: Go to Step3 Yes: Go to Step7
	Step3	Inspection procedure Turn the starter switch in OFF. Perform the operation start and replace A20 (SAM). Reinstall all the removed connectors. Turn the starter switch in ON. Perform the learned value resetting procedure of A20 (SAM) which A4 (Combustion engine Control unit) learns. Go to Step4
	Step4	Inspection procedure Turn the starter switch in OFF. Reinstall all the removed connectors. Erase fault memory and perform a test drive. Check if this diagnosis code has occurred. Are current fault codes present? No: Go to Step6 Yes: Go to Step5
	Step5	Inspection procedure Perform the operation start and replace A4 (Combustion engine Control unit). Go to Step6
	Step6	Inspection completed
	Step7	Inspection procedure Repair or replace electrical lines. Reinstall all the removed connectors. Erase fault memory and perform a test drive. Check if this diagnosis code has occurred. Are current fault codes present? No: Go to Step6 Yes: Go to Step3

https://truckmanualshub.com/

3597-12: ECU power stage1: Supply for sensors: Accelerator pedal1, Camshaft, SCR reagent pressure,VGT speed, VGT actuator position

Generation condition	[Test Condition] • Continuously.
	[Fault Detection] • The sensor supply voltage is monitored by an HW comparator. If the sensor supply voltage lies outside of the switching thresholds, a fault is output. The detection thresholds are defined by the hardware and cannot be calibrated.
	[Defect Debouncing] • Defect condition fulfilled continuously >100.0 ms
Fault healing	• The supply voltage must lie within the thresholds.
System reaction	• None except FIDs
	• 1) FId / Limited engine speed because of accelerator pedal error • 2) FId / Increased engine speed because of accelerator pedal error • 3) FId / Final defect of acceleration pedal signal 1 detected - APP1 Signal not useable • 4) FId / Provisional defect of acceleration pedal signal 1 detected - APP1 Signal frozen until final defect or healing detected • 5) FId / Electr Signal range check SRC for Accelerator Pedal 1 APP1 disabled • 6) FId / Preceding provisional errors in the signal chain of acceleration pedal signal 1 detected • 7) FId / SRC High on APP1 detected --> APP1 Signal not useable • 8) FId / Synchronisation check of acceleration pedal disabled • 9) Fid / SCR Monitoring or DEF injection release not possible (according calibration of Release Masks) • 10) FId / Status of function identifier FId_EngDemTrqLimErr1 • 11) FId / Torque limitation 2 activated for power reduction • 12) FId / Cam Shaft signal for engine speed sensing not used (back up mode w.o. Cam Shaft signal) • 13) FId / Camshaft position adaption (learning of real position to the theoretical one) inhibited • 14) FId / Camshaft sensor diagnosis inhibited (due to sensor supply error) • 15) FId / Camshaft offset diagnosis inhibited (due camshaft or crankshaft signal errors) • 16) FId / Fuel quantity Balancing Control disabled (e.g. error in crankshaft speed signal) • 17) FId / Adaptation of the correction values of Fuel Mass Observer (FMO) inhibited (no correction of detected deviation between injected fuel and Lambda sensor signal) • 18) FId / Fuel Mass Observer (FMO) switched off (no monitoring of injected fuel by Lambda sensor) • 19) FId / Freeze abs.DEF pressure value if preliminary failure detected • 20) FId / Engine speed Limitation 2 for HIgh/Low engine speed (HLS) control active • 21) FId / Single Injector shut off test inhibited • 22) FId / Run Up test inhibited • 23) FId / Set point test of Metering Unit (MeUn) of Common Rail disabled • 24) FId / CLosed Loop Boost pressure governor shut off due to a System error • 25) FId / Fuel rail pressure control valve (PCV) set point test inhibited • 26) Pressure control of reagent dosing system inhibited --> dosing system goes into error state • 27) Plausibilty Check (-Drift) of DEF pressure sensor inhibited • 28) FId / High pressure test inhibited • 29) FId / Offset test of Rail pressure sensor disabled • 30) FId / Offset test of Rail pressure sensor only released, if this failure path is tested • 31) FId / Rail Pressure set point test inhibited • 32) FId / Function Identifier to determine, when the sensed value is to be replaced with a default when the signal source is ADC FId_RplValAbsUPmpP • 33) FId / Release of the SCRMon function/no emergency shut-off with emptying • 34) FId / Monitoring of DEF pressure inhibited (sensor supply error) • 35) FId / VGT Position is frozen to last valid value

https://truckmanualshub.com/

System reaction		• 36) FId / PI controller of VGT position bypassed and only Pre Control map used (open loop control) • 37) FId / Offset learning of VGT position sensor at Afterrun disabled • 38) FId / VGT Position is set to default value (TrbCh_TransStg.Dfl_C) • 39) FId / Electric signal range check for VGT position sensor disabled • 40) FId / Inhibit temperature plausibility check • 41) FId / Zero Fuel Calibration (ZFC) of injectors disabled • 42) FId / Zero Fuel Calibration (ZFC) of injectors by Lambda Sensor signal disabled • 43) FId / Inhibit Charged Air Cooler monitoring • 44) FId / Inhibit OxiCat passive monitor • 45) FId / Monitoring of particulate filter (DPF) by comparing the calculated flow resistance with measured pressure drop disabled • 46) FId / Monitoring for the destroyed particle filter (DPF) by minimal flow resistance disabled • 47) FId / Inhibit DPF efficiency monitor • 48) FId / Interrupt DPF efficiency monitor • 49) FId / Inhibit monitor for DPF frequent regeneration • 50) FId / Inhibit monitor for incomplete regeneration of the DPF • 51) FId / Inhibit EGR cooler efficiency monitoring • 52) FId / Inhibit reverting valve plausibility check • 53) FId / Inhibit Physical Range Check of Pump Module Pressure Sensor
Failure cause		• Excessive battery voltage, defect in wiring harness, electrical failure in connected sensors or in the ECM
Failure repair		• Check battery voltage, check wiring for correct voltage supply of the connected sensor and the ECM. • Replace ECM
Inspection procedure	Step1	Inspect or verify the following items. Repair or replace faulty items as necessary. If one of diagnosis codes associated with B38 (Position sensor Turbocharger) is generated, make a system diagnosis according to the diagnosis code. If one of diagnosis codes associated with B35 (Position sensor Cylinder) is generated, make a system diagnosis according to the diagnosis code. If one of diagnosis codes associated with B30 (DEF pressure sensor) is generated, make a system diagnosis according to the diagnosis code. If one of diagnosis codes associated with B17 (Position sensor Accelerator pedal) is generated, make a system diagnosis according to the diagnosis code. If one of diagnosis codes associated with B58 (Blow-by gas pressure sensor 1) is generated, make a system diagnosis according to the diagnosis code. Go to Step2
	Step2	Inspection procedure If one of diagnosis codes associated with A20 (SAM) is generated, make a system diagnosis according to the diagnosis code. Go to Step3
	Step3	Inspection procedure Perform the operation start and replace A4 (Combustion engine Control unit). Inspection completed

3598-12: ECU power stage2: Supply for sensors: Accelerator pedal2, Boost pressure, Fuel pressure, AC pressure

Generation condition	[Test Condition] • Continuously.
	[Fault Detection] • The sensor supply voltage is monitored by an HW comparator. If the sensor supply voltage lies outside of the switching thresholds, a fault is output. The detection thresholds are defined by the hardware and cannot be calibrated.
	[Defect Debouncing] • Defect condition fulfilled continuously >100.0 ms
Fault healing	• The supply voltage lies within the thresholds.

https://truckmanualshub.com/

System reaction	• None except FIDs
	• 1) FId / Limited engine speed because of accelerator pedal error • 2) FId / Increased engine speed because of accelerator pedal error • 3) FId / AC compressor shut off to protect AC compressor and Engine cooling system • 4) FId / Replacement value for AC pressure signal • 5) FId / Check of gain plausibility of air flow meter (HFM/AFS) at low idle disabled • 6) FId / Freeze last valid value of compressor coolant pressure in case of preliminary failure detected • 7) FId / Set replacement value for AC coolant pressure when failure is validated • 8) FId / EGR switched off • 9) FId / Final defect of acceleration pedal signal 2 detected --> APP2 Signal not useable • 10) FId / Provisional defect of acceleration pedal signal 2 detected - APP2 Signal frozen until final defect or healing detected • 11) FId / Electr Signal range check SRC for Accelerator Pedal 2 APP2 disabled • 12) FId / Preceding provisional errors in the signal chain of acceleration pedal signal 2 detected • 13) FId / SRC high on APP2 detected --> APP2 Signal not useable • 14) FId / Accelerator Pedal 2 (APP2) frozen during active NTP (no-load test pulse) monitoring • 15) FId / Synchronisation check of acceleration pedal disabled • 16) FId / Deactivates NOx monitoring • 17) FId / Reciprocal lambda signal replaced by substitute value for modelling • 18) FId / Inhibit EGR cooler efficiency monitoring • 19) FId / Replacement value for temperature downstream Turbocharger used for modelling • 20) Fid / Correction due to engine operating mode transitions inhibited • 21) FId / Fix substitution value (FEh) of Boost Pressure transmit to CAN Message INCON (Inlet/Exhaust condition) • 22) Fid / Fix substitution value (FEh) of Boost pressure transmit to CAN Message INCON (Inlet/Exhaust condition) • 23) Fid / SCR Monitoring or DEF injection release not possible (according calibration of Release Masks) • 24) FId / Status of function identifier FId_EngDemTrqLimErr1 • 25) FId / Torque limitation 2 activated for power reduction • 26) FId / Engine overheat protection active • 27) FId / Adaptation of the correction values of Fuel Mass Observer (FMO) inhibited (no correction of detected deviation between injected fuel and Lambda sensor signal) • 28) FId / Fuel Mass Observer (FMO) switched off (no monitoring of injected fuel by Lambda sensor) • 29) FId / Freeze abs.DEF pressure value if preliminary failure detected • 30) FId / Engine speed Limitation 2 for HIgh/Low engine speed (HLS) control active • 31) FId / Single Injector shut off test inhibited • 32) FId / Analysis of engine starting problem disabled • 33) FId / Injector preparation before first energising disabled • 34) FId / Run Up test inhibited • 35) FId / The Adaptation of lambda Sensor disabled • 36) FId / The Difference Check between several Lambda Sensors is disabled • 37) FId / Dynamic Signal Monitoring of Lambda Sensor disabled • 38) FId / Electrical Open Load Check of Lambda Sensor disabled • 39) FId / O2 Signal of Lambda Sensor not valid • 40) FId / Signal Range Check of O2 Signal of lambda Sensor disabled • 41) FId / Plausibility Check of O2-Signal of Lambda Sensor (e.g. with HFM or Air calculation by Boost pressure) is disabled and last valid value taken • 42) FId / Set point test of Metering Unit (MeUn) of Common Rail disabled • 43) FId / Correction of begin of Main injection 1 according deviation of air flow disabled • 44) Fid / The actual Boost pressure is corrected by a fix value (Air_pPCRDflPCACDs_C) instead by the actual boost temperature for the Boost pressure control • 45) FId / CLosed Loop Boost pressure governor shut off due to a System error

https://truckmanualshub.com/

System reaction		• 46) FId / Fuel rail pressure control valve (PCV) set point test inhibited • 47) FId / Particulate filter ((DPF) Regeneration inhibited • 48) FId / Service regeneration of Particulate filter ((DPF) inhibited (due to DPF failure) • 49) FId / Inhibit plausibility test of the Intake Valve upstream air pressure sensor • 50) FId / Freeze Intake Valve upstream air pressure value at preliminary failure detection • 51) FId / Replace Intake Valve upstream air pressure value with fix value • 52) FId / PTO Accelerator pedal position frozen to last valid value during debouncing of preliminary failure • 53) FId / PTO Accelerator pedal position set to fix value in case of final defect • 54) FId / PTO Engine speed adjustment resistor voltage set to a fix replacement value • 55) Plausibilty Check (-Drift) of DEF pressure sensor inhibited • 56) FId / Pressure wave correction of cylinder specific fuel quantity (QWC) disabled • 57) FId / Closed loop Control of Fuel Rail pressure disabled (open loop control by pre control map for MeUn and PCV) • 58) FId / High pressure test inhibited • 59) FId / Offset test of Rail pressure sensor disabled • 60) FId / Offset test of Rail pressure sensor only released, if this failure path is tested • 61) FId / Stop reading railpressure sensor values and set an default sensor pressure value / disable electric monitoring of rail pressure sensor • 62) FId / Default Rail Pressure value instead of measured pressure used • 63) FId / Accepted range of Fuel Rail pressure set point by fix min and max value instead of engine speed and load dependant limits • 64) FId / Rail Pressure set point test inhibited • 65) FId / Function Identifier to determine, when the sensed value is to be replaced with a default when the signal source is ADC FId_RplValAbsUPmpP • 66) FId / Inhibit SRC and signal acquisition of Air Pressure Upstream Intake Valve signal • 67) FId / Monitoring of DEF pressure inhibited (sensor supply error) • 68) FId / Inhibit temperature plausibility check • 69) FId / Zero Fuel Calibration (ZFC) of injectors disabled • 70) FId / Zero Fuel Calibration (ZFC) of injectors by Lambda Sensor signal disabled • 71) FId / Inhibit Charged Air Cooler monitoring • 72) FId / Misfire Detection disabled • 73) FId / Inhibit OxiCat passive monitor • 74) FId / Monitoring of particulate filter (DPF) by comparing the calculated flow resistance with measured pressure drop disabled • 75) FId / Monitoring for the destroyed particle filter (DPF) by minimal flow resistance disabled • 76) FId / Inhibit DPF efficiency monitor • 77) FId / Interrupt DPF efficiency monitor • 78) FId / Inhibit monitor for DPF frequent regeneration • 79) FId / Inhibit monitor for incomplete regeneration of the DPF
Failure cause		• Excessive battery voltage, defect in wiring harness, electrical failure in connected sensors or in the ECM
Failure repair		• Check battery voltage, check wiring for correct voltage supply of the connected sensor and the ECM. • Replace ECM
Inspection procedure	Step1	Inspect or verify the following items. Repair or replace faulty items as necessary. If one of diagnosis codes associated with B19 (Pressure and temperature sensor Turbocharger) is generated, make a system diagnosis according to the diagnosis code. If one of diagnosis codes associated with B51 (Rail pressure sensor) is generated, make a system diagnosis according to the diagnosis code. If one of diagnosis codes associated with B17 (Position sensor Accelerator pedal) is generated, make a system diagnosis according to the diagnosis code. If one of diagnosis codes associated with B33 (PTO load sensor) is generated, make a system diagnosis according to the diagnosis code. Go to Step2

https://truckmanualshub.com/

Inspection procedure	Step2	Inspection procedure If one of diagnosis codes associated with A20 (SAM) is generated, make a system diagnosis according to the diagnosis code. Go to Step3
	Step3	Inspection procedure Perform the operation start and replace A4 (Combustion engine Control unit). Inspection completed

3599-12: ECU power stage3: Supply for sensors: DPF differential pressure, Oil pressure, EGR valve position, Air humidity sensor

Generation condition	[Test Condition] • Continuously.
	[Fault Detection] • The sensor supply voltage is monitored by an HW comparator. If the sensor supply voltage lies outside of the switching thresholds, a fault is output. The detection thresholds are defined by the hardware and cannot be calibrated.
	[Defect Debouncing] • Defect condition fulfilled continuously >100.0 ms
Fault healing	• The supply voltage lies within the thresholds.

https://truckmanualshub.com/

		• None except FIDs
System reaction		• 1) FId / EGR switched off • 2) FId / Deactivates NOx monitoring • 3) FId / Inhibit Oil pressure measurement • 4) FId / Oil pressure sensor defective • 5) FId / DPF differential pressure defective • 6) Fid / SCR Monitoring or DEF injection release not possible (according calibration of Release Masks) • 7) FId / Last valid value for EGR Valve position is frozen • 8) FId / EGR Valve offset learning inhibited • 9) FId / Fixed replacement value for EGR Valve position is used if failure validated • 10) FId / Power stage monitoring for EGR Valve inhibited • 11) FId / inhibited in case of Temporary defect associated with sensor, when the sensed value is from Hardware • 12) FId / inhibited in case of Permanent defect associated with sensor, when the sensed value is from Hardware • 13) FId / Freeze last valid value for oil pressure if preliminary failure is detected • 14) FId / Plausibility check oil pressure sensor inhibited • 15) FId / Replace oil pressure value if failure is validated • 16) FId / Oil pressure sensor supply error active • 17) FId / Monitoring of particulate filter (DPF) by comparing the calculated flow resistance with measured pressure drop disabled • 18) FId / Monitoring for the destroyed particle filter (DPF) by minimal flow resistance disabled • 19) FId / Particulate filter ((DPF) Regeneration inhibited • 20) FId / Service regeneration of Particulate filter ((DPF) inhibited (due to DPF failure) • 21) FId / Inhibit dynamic check of differential pressure across particle filter • 22) FId / Inhibit enhanced SRC for particle filter differential pressure • 23) FId / Trigger substitute function for PPFltDiff output in case of temporary SRC errors in particle-filter differential pressure. • 24) FId / Inhibit plausibility check for DPF differential pressure • 25) FId / Trigger substitute function for PPFltDiff output in case of permanent SRC errors in particle-filter differential pressure sensor. • 26) FId / Signal range check monitoring for air humidity inhibited, sensor supply error • 27) FId / Inhibit Charged Air Cooler monitoring • 28) FId / Inhibit OxiCat passive monitor • 29) FId / Inhibit DPF efficiency monitor • 30) FId / Interrupt DPF efficiency monitor • 31) FId / Inhibit monitor for DPF frequent regeneration • 32) FId / Inhibit monitor for incomplete regeneration of the DPF • 33) FId / Inhibit EGR cooler efficiency monitoring • 34) FId / Status of function identifier FId_EngDemTrqLimErr5 • 35) FId / Engine speed Limitation 2 for HIgh/Low engine speed (HLS) control active
Failure cause		• Excessive battery voltage, defect in wiring harness, electrical failure in connected sensors or in the ECM
Failure repair		• Check battery voltage, check wiring for correct voltage supply of the connected sensor and the ECM. • Replace ECM
Inspection procedure	Step1	Inspect or verify the following items. Repair or replace faulty items as necessary. If one of diagnosis codes associated with A14 (EGR valve) is generated, make a system diagnosis according to the diagnosis code. If one of diagnosis codes associated with B27 (Humidity and temperature sensor “Intake air”) is generated, make a system diagnosis according to the diagnosis code. If one of diagnosis codes associated with B37 (DPF differential pressure sensor) is generated, make a system diagnosis according to the diagnosis code. If one of diagnosis codes associated with S11 (Oil pressure switch) is generated, make a system diagnosis according to the diagnosis code. If one of diagnosis codes associated with B59 (Blow-by gas pressure sensor 2) is generated, make a system diagnosis according to the diagnosis code. Go to Step2

https://truckmanualshub.com/

Inspection procedure	Step2	Inspection procedure If one of diagnosis codes associated with A20 (SAM) is generated, make a system diagnosis according to the diagnosis code. Go to Step3
	Step3	Inspection procedure Perform the operation start and replace A4 (Combustion engine Control unit). Inspection completed

3659-0: Corrected value of voltage for opening the injector 1 is out of valid range.

Generation condition		[Test Condition] • Continuous
		[Fault Detection] • Opening voltage corrected by learned factor (NVC) and temperature compensation is out of fuel pressure dependant range.
		[Defect Debouncing] • Defect condition exceeded cumulatively > 5000.00 events • Failure is detected if active for 50% of events
Fault healing		• Opening voltage corrected by learned factor (NVC) and temperature compensation is within fuel pressure dependant range.
System reaction		• Possibly irregular engine running due to non equilibrated injection quantity. • Possibly too high emissions (possibly failure recognition if applied) • Further reaction according FID (see FID's)
		• 1) Fid / Reagent dosing quantity for SCR reduced (to DStgy_facUreaDesRed_C) • 2) FId / Adaptation of the correction values of Fuel Mass Observer (FMO) inhibited (no correction of detected deviation between injected fuel and Lambda sensor signal) • 3) FId / Fuel Mass Observer (FMO) switched off (no monitoring of injected fuel by Lambda sensor) • 4) FId / Misfire Detection disabled • 5) FId / Inhibit OxiCat passive monitor • 6) Fid / SCR Monitoring or DEF injection release not possible (according calibration of Release Masks)
Failure cause		• Additional resistances in the wiring of injectors (connectors) • Electric part of injectors • ECU internal defect (Injector power stage / Booster)
Failure repair		• Check wiring • Check injectors, replace them if necessary • Replace ECU
Inspection procedure	Step1	Inspection procedure Turn the starter switch in OFF. Remove the connector of A4 (Combustion engine Control unit). Remove the connector of Y15 (Fuel injector 1). If corresponding fault codes are also present on other components, check the common power supply and common ground point " for open circuit and short circuit. Check the circuit across Y15.2/2 and A4.X1.60/46 for open or short circuit. Make a visual check on each connector. Is any abnormality recognized? No: Go to Step2 Yes: Go to Step6
	Step2	Inspection procedure Turn the starter switch in OFF. Replace component "Y15 (Fuel injector 1)". Reinstall all the removed connectors. Turn the starter switch in ON. Erase the fault code. Perform the learned value resetting procedure of Y15 (Fuel injector 1) which A4 (Combustion engine Control unit) learns. Perform coding of Y15 (Fuel injector 1) which A4 (Combustion engine Control unit) learns. Go to Step3

https://truckmanualshub.com/

Inspection procedure	Step3	Inspection procedure Turn the starter switch in OFF. Reinstall all the removed connectors. Erase fault memory and perform a test drive. Check if this diagnosis code has occurred. Are current fault codes present? No: Go to Step4 Yes: Go to Step5
	Step4	Inspection completed
	Step5	Inspection procedure Perform the operation start and replace A4 (Combustion engine Control unit). Go to Step4
	Step6	Inspection procedure Repair or replace electrical lines. Reinstall all the removed connectors. Erase fault memory and perform a test drive. Check if this diagnosis code has occurred. Are current fault codes present? No: Go to Step4 Yes: Go to Step2

3659-6: The fuel injector (cylinder 1) has a short circuit to ground.

Generation condition	[Test Condition] • Continuously
	[Fault Detection] • If the measured pattern for the injector evaluation of cylinder 1 is equal to applied behaviour bit pattern for general short circuit error detection.
	[Defect Debouncing] • Defect condition exceeded cumulatively > 4.00 events • Failure is detected if active for 20% of events
Fault healing	• No Healing possible (disabled by Data set)
System reaction	• None except FIDs.
	• 1) Fid / Reagent dosing quantity for SCR reduced (to DStgy_facUreaDesRed_C) • 2) FId / Fuel quantity Balancing Control disabled (e.g. error in crankshaft speed signal) • 3) FId / Adaptation of the correction values of Fuel Mass Observer (FMO) inhibited (no correction of detected deviation between injected fuel and Lambda sensor signal) • 4) FId / Fuel Mass Observer (FMO) switched off (no monitoring of injected fuel by Lambda sensor) • 5) FId / Cylinder 1 (firing order) shut off • 6) FId / Nominal Voltage Calibration NVC of injectors disabled • 7) FId / Redundant Engine shut off path not tested due to error debouncing of an injector • 8) FId / Redundant Engine shut off path not tested due to error of an injector • 9) FId / Redundant Engine shut off path test inhibited • 10) FId / Particulate filter ((DPF) Regeneration inhibited • 11) FId / Service regeneration of Particulate filter ((DPF) inhibited (due to DPF failure) • 12) FId / Zero Fuel Calibration (ZFC) of injectors disabled • 13) FId / Zero Fuel Calibration (ZFC) of injectors by Lambda Sensor signal disabled • 14) Fid / SCR Monitoring or DEF injection release not possible (according calibration of Release Masks) • 15) FId / Misfire Detection disabled • 16) FId / Inhibit OxiCat passive monitor
Failure cause	• Short circuit in wiring or injector
Failure repair	• Check wiring, replace fuel injector of cylinder 1.

https://truckmanualshub.com/

Inspection procedure	Step1	Inspection procedure Turn the starter switch in OFF. Remove the connector of A4 (Combustion engine Control unit). Remove the connector of Y15 (Fuel injector 1). If corresponding fault codes are also present on other components, check the common power supply and common ground point ‘‘ for open circuit and short circuit. Check the circuit across Y15.2/2 and A4.X1.60/46 for open or short circuit. Make a visual check on each connector. Is any abnormality recognized? No: Go to step2 Yes: Go to step6
	Step2	Inspection procedure Turn the starter switch in OFF. Replace component “Y15 (Fuel injector 1)”. Reinstall all the removed connectors. Turn the starter switch in ON. Erase the fault code. Perform the learned value resetting procedure of Y15 (Fuel injector 1) which A4 (Combustion engine Control unit) learns. Perform coding of Y15 (Fuel injector 1) which A4 (Combustion engine Control unit) learns. Go to step3
	Step3	Inspection procedure Turn the starter switch in OFF. Reinstall all the removed connectors. Erase fault memory and perform a test drive. Check if this diagnosis code has occurred. Are current fault codes present? No: Go to step4 Yes: Go to step5
	Step4	Inspection completed
	Step5	Inspection procedure Perform the operation start and replace A4 (Combustion engine Control unit). Inspection completed
	Step6	Inspection procedure Repair or replace electrical lines. Reinstall all the removed connectors. Erase fault memory and perform a test drive. Check if this diagnosis code has occurred. Are current fault codes present? No: Go to step4 Yes: Go to step2

3659-15: Discharge time of injector 1 is out of valid range.

Generation condition	[Test Condition] • Continuously
	[Fault Detection] • Discharge time difference to the nominal value >= 60.00us
	[Defect Debouncing] • Defect condition exceeded cumulatively > 5000.00 events • Failure is detected if active for 50% of events
Fault healing	• Discharge time difference to the nominal value < 60.00us

https://truckmanualshub.com/

		• Possibly irregular engine running due to non equilibrated injection quantity. • Possibly too high emissions (possibly failure recognition if applied) • Only according FID (see FID's)
System reaction		• 1) Fid / Reagent dosing quantity for SCR reduced (to DStgy_facUreaDesRed_C) • 2) FId / Adaptation of the correction values of Fuel Mass Observer (FMO) inhibited (no correction of detected deviation between injected fuel and Lambda sensor signal) • 3) FId / Fuel Mass Observer (FMO) switched off (no monitoring of injected fuel by Lambda sensor) • 4) FId / Misfire Detection disabled • 5) FId / Inhibit OxiCat passive monitor • 6) Fid / SCR Monitoring or DEF injection release not possible (according calibration of Release Masks)
Failure cause		• Additional resistances in the wiring of injectors (connectors) • Electric part of injectors • ECU internal defect (Injector power stage / Booster)
Failure repair		• Check wiring • Check injectors, replace them if necessary • Replace ECU
Inspection procedure	Step1	Inspection procedure Turn the starter switch in OFF. Remove the connector of A4 (Combustion engine Control unit). Remove the connector of Y15 (Fuel injector 1). If corresponding fault codes are also present on other components, check the common power supply and common ground point " for open circuit and short circuit. Check the circuit across Y15.2/2 and A4.X1.60/46 for open or short circuit. Make a visual check on each connector. Is any abnormality recognized? No: Go to Step2 Yes: Go to Step6
	Step2	Inspection procedure Turn the starter switch in OFF. Replace component "Y15 (Fuel injector 1)". Reinstall all the removed connectors. Turn the starter switch in ON. Erase the fault code. Perform the learned value resetting procedure of Y15 (Fuel injector 1) which A4 (Combustion engine Control unit) learns. Perform coding of Y15 (Fuel injector 1) which A4 (Combustion engine Control unit) learns. Go to Step3
	Step3	Inspection procedure Turn the starter switch in OFF. Reinstall all the removed connectors. Erase fault memory and perform a test drive. Check if this diagnosis code has occurred. Are current fault codes present? No: Go to Step4 Yes: Go to Step5
	Step4	Inspection completed
	Step5	Inspection procedure Perform the operation start and replace A4 (Combustion engine Control unit). Go to Step4
	Step6	Inspection procedure Repair or replace electrical lines. Reinstall all the removed connectors. Erase fault memory and perform a test drive. Check if this diagnosis code has occurred. Are current fault codes present? No: Go to Step4 Yes: Go to Step2

https://truckmanualshub.com/

3659-16: The voltage for opening the injector 1 is out of valid range.

Generation condition		[Test Condition] • Continuously
		[Fault Detection] • Difference of the actual voltage from the required one >= 20.00V
		[Defect Debouncing] • Defect condition exceeded cumulatively > 5000.00 events • Failure is detected if active for 50% of events
Fault healing		• Difference of the actual voltage from the required one < 20.00V
System reaction		• Possibly irregular engine running due to non equilibrated injection quantity. • Possibly too high emissions (possibly failure recognition if applied) • Further reaction according FID (see FID's)
		• 1) Fid / Reagent dosing quantity for SCR reduced (to DStgy_facUreaDesRed_C) • 2) FId / Adaptation of the correction values of Fuel Mass Observer (FMO) inhibited (no correction of detected deviation between injected fuel and Lambda sensor signal) • 3) FId / Fuel Mass Observer (FMO) switched off (no monitoring of injected fuel by Lambda sensor) • 4) FId / Misfire Detection disabled • 5) FId / Inhibit OxiCat passive monitor • 6) Fid / SCR Monitoring or DEF injection release not possible (according calibration of Release Masks)
Failure cause		• Additional resistances in the wiring of injectors (connectors) • Electric part of injectors • ECU internal defect (Injector power stage / Booster)
Failure repair		• Check wiring • Check injectors, replace them if necessary • Replace ECU
Inspection procedure	Step1	Inspection procedure Turn the starter switch in OFF. Remove the connector of A4 (Combustion engine Control unit). Remove the connector of Y15 (Fuel injector 1). If corresponding fault codes are also present on other components, check the common power supply and common ground point " for open circuit and short circuit. Check the circuit across Y15.2/2 and A4.X1.60/46 for open or short circuit. Make a visual check on each connector. Is any abnormality recognized? No: Go to Step2 Yes: Go to Step6
	Step2	Inspection procedure Repair or replace electrical lines. Reinstall all the removed connectors. Erase fault memory and perform a test drive. Check if this diagnosis code has occurred. Are current fault codes present? Go to Step3
	Step3	Inspection procedure Turn the starter switch in OFF. Replace component "Y15 (Fuel injector 1)". Reinstall all the removed connectors. Turn the starter switch in ON. Erase the fault code. Perform the learned value resetting procedure of Y15 (Fuel injector 1) which A4 (Combustion engine Control unit) learns. Perform coding of Y15 (Fuel injector 1) which A4 (Combustion engine Control unit) learns. No: Go to Step4 Yes: Go to Step5
	Step4	Inspection completed

https://truckmanualshub.com/

Inspection procedure	Step5	Inspection procedure Perform the operation start and replace A4 (Combustion engine Control unit). Go to Step4
	Step6	Inspection procedure Repair or replace electrical lines. Reinstall all the removed connectors. Erase fault memory and perform a test drive. Check if this diagnosis code has occurred. Are current fault codes present? No: Go to Step4 Yes: Go to Step2

3660-0: Corrected value of voltage for opening the injector 3 is out of valid range.

Generation condition		[Test Condition] • Continuous
		[Fault Detection] • Opening voltage corrected by learned factor (NVC) and temperature compensation is out of fuel pressure dependant range.
		[Defect Debouncing] • Defect condition exceeded cumulatively > 5000.00 events • Failure is detected if active for 50% of events
Fault healing		• Opening voltage corrected by learned factor (NVC) and temperature compensation is within fuel pressure dependant range.
System reaction		• Possibly irregular engine running due to non equilibrated injection quantity. • Possibly too high emissions (possibly failure recognition if applied) • Further reaction according FID (see FID's)
		• 1) Fid / Reagent dosing quantity for SCR reduced (to DStgy_facUreaDesRed_C) • 2) FId / Adaptation of the correction values of Fuel Mass Observer (FMO) inhibited (no correction of detected deviation between injected fuel and Lambda sensor signal) • 3) FId / Fuel Mass Observer (FMO) switched off (no monitoring of injected fuel by Lambda sensor) • 4) FId / Misfire Detection disabled • 5) FId / Inhibit OxiCat passive monitor • 6) Fid / SCR Monitoring or DEF injection release not possible (according calibration of Release Masks)
Failure cause		• Additional resistances in the wiring of injectors (connectors) • Electric part of injectors • ECU internal defect (Injector power stage / Booster)
Failure repair		• Check wiring • Check injectors, replace them if necessary • Replace ECU
Inspection procedure	Step1	Inspection procedure Turn the starter switch in OFF. Remove the connector of A4 (Combustion engine Control unit). Remove the connector of Y17 (Fuel injector 3). If corresponding fault codes are also present on other components, check the common power supply and common ground point '' for open circuit and short circuit. Check the circuit across Y17.2/2 and A4.X1.60/1 for open or short circuit. Make a visual check on each connector. Is any abnormality recognized? No: Go to Step2 Yes: Go to Step6

https://truckmanualshub.com/

Inspection procedure	Step2	Inspection procedure Turn the starter switch in OFF. Replace component “Y17 (Fuel injector 3)”. Reinstall all the removed connectors. Turn the starter switch in ON. Erase the fault code. Perform the learned value resetting procedure of Y17 (Fuel injector 3) which A4 (Combustion engine Control unit) learns. Perform coding of Y17 (Fuel injector 3) which A4 (Combustion engine Control unit) learns. Go to Step3
	Step3	Inspection procedure Turn the starter switch in OFF. Reinstall all the removed connectors. Erase fault memory and perform a test drive. Check if this diagnosis code has occurred. Are current fault codes present? No: Go to Step4 Yes: Go to Step5
	Step4	Inspection completed
	Step5	Inspection procedure Perform the operation start and replace A4 (Combustion engine Control unit). Go to Step4
	Step6	Inspection procedure Repair or replace electrical lines. Reinstall all the removed connectors. Erase fault memory and perform a test drive. Check if this diagnosis code has occurred. Are current fault codes present? No: Go to Step4 Yes: Go to Step2

3660-6: The fuel injector (cylinder 3) has a short circuit to ground.

Generation condition	[Test Condition] • Continuously
	[Fault Detection] • If the measured pattern for the injector evaluation of cylinder 3 is equal to applied behaviour bit pattern for general short circuit error detection.
	[Defect Debouncing] • Defect condition exceeded cumulatively > 4.00 events • Failure is detected if active for 20% of events
Fault healing	• No Healing possible (disabled by Data set)

https://truckmanualshub.com/

		• None except FIDs.
System reaction		• 1) Fid / Reagent dosing quantity for SCR reduced (to DStgy_facUreaDesRed_C) • 2) FId / Fuel quantity Balancing Control disabled (e.g. error in crankshaft speed signal) • 3) FId / Adaptation of the correction values of Fuel Mass Observer (FMO) inhibited (no correction of detected deviation between injected fuel and Lambda sensor signal) • 4) FId / Fuel Mass Observer (FMO) switched off (no monitoring of injected fuel by Lambda sensor) • 5) FId / Cylinder 2 (firing order) shut off • 6) FId / Nominal Voltage Calibration NVC of injectors disabled • 7) FId / Redundant Engine shut off path not tested due to error debouncing of an injector • 8) FId / Redundant Engine shut off path not tested due to error of an injector • 9) FId / Redundant Engine shut off path test inhibited • 10) FId / Particulate filter ((DPF) Regeneration inhibited • 11) FId / Service regeneration of Particulate filter ((DPF) inhibited (due to DPF failure) • 12) FId / Zero Fuel Calibration (ZFC) of injectors disabled • 13) FId / Zero Fuel Calibration (ZFC) of injectors by Lambda Sensor signal disabled • 14) Fid / SCR Monitoring or DEF injection release not possible (according calibration of Release Masks) • 15) FId / Misfire Detection disabled • 16) FId / Inhibit OxiCat passive monitor
Failure cause		• Short circuit in wiring or injector
Failure repair		• Check wiring, replace fuel injector of cylinder 3.
Inspection procedure	Step1	Inspection procedure Turn the starter switch in OFF. Remove the connector of A4 (Combustion engine Control unit). Remove the connector of Y17 (Fuel injector 3). If corresponding fault codes are also present on other components, check the common power supply and common ground point “ for open circuit and short circuit. Check the circuit across Y17.2/2 and A4.X1.60/1 for open or short circuit. Make a visual check on each connector. Is any abnormality recognized? No: Go to step2 Yes: Go to step6
	Step2	Inspection procedure Turn the starter switch in OFF. Replace component “Y17 (Fuel injector 3)”. Reinstall all the removed connectors. Turn the starter switch in ON. Erase the fault code. Perform the learned value resetting procedure of Y17 (Fuel injector 3) which A4 (Combustion engine Control unit) learns. Perform coding of Y17 (Fuel injector 3) which A4 (Combustion engine Control unit) learns. Go to step3
	Step3	Inspection procedure Turn the starter switch in OFF. Reinstall all the removed connectors. Erase fault memory and perform a test drive. Check if this diagnosis code has occurred. Are current fault codes present? No: Go to step4 Yes: Go to step5
	Step4	Inspection completed
	Step5	Inspection procedure Perform the operation start and replace A4 (Combustion engine Control unit). Inspection completed

https://truckmanualshub.com/

Inspection procedure	Step6	Inspection procedure Repair or replace electrical lines. Reinstall all the removed connectors. Erase fault memory and perform a test drive. Check if this diagnosis code has occurred. Are current fault codes present? No: Go to step4 Yes: Go to step2

3660-15: Discharge time of injector 3 is out of valid range.

Generation condition		[Test Condition] • Continuously
		[Fault Detection] • Discharge time difference to the nominal value >= 60.00us
		[Defect Debouncing] • Defect condition exceeded cumulatively > 5000.00 events • Failure is detected if active for 50% of events
Fault healing		• Discharge time difference to the nominal value < 60.00us
System reaction		• Possibly irregular engine running due to non equilibrated injection quantity. • Possibly too high emissions (possibly failure recognition if applied) • Only according FID (see FID's)
		• 1) Fid / Reagent dosing quantity for SCR reduced (to DStgy_facUreaDesRed_C) • 2) FId / Adaptation of the correction values of Fuel Mass Observer (FMO) inhibited (no correction of detected deviation between injected fuel and Lambda sensor signal) • 3) FId / Fuel Mass Observer (FMO) switched off (no monitoring of injected fuel by Lambda sensor) • 4) FId / Misfire Detection disabled • 5) FId / Inhibit OxiCat passive monitor • 6) Fid / SCR Monitoring or DEF injection release not possible (according calibration of Release Masks)
Failure cause		• Additional resistances in the wiring of injectors (connectors) • Electric part of injectors • ECU internal defect (Injector power stage / Booster)
Failure repair		• Check wiring • Check injectors, replace them if necessary • Replace ECU
Inspection procedure	Step1	Inspection procedure Turn the starter switch in OFF. Remove the connector of A4 (Combustion engine Control unit). Remove the connector of Y17 (Fuel injector 3). If corresponding fault codes are also present on other components, check the common power supply and common ground point '' for open circuit and short circuit. Check the circuit across Y17.2/2 and A4.X1.60/1 for open or short circuit. Make a visual check on each connector. Is any abnormality recognized? No: Go to Step2 Yes: Go to Step6
	Step2	Inspection procedure Turn the starter switch in OFF. Replace component "Y17 (Fuel injector 3)". Reinstall all the removed connectors. Turn the starter switch in ON. Erase the fault code. Perform the learned value resetting procedure of Y17 (Fuel injector 3) which A4 (Combustion engine Control unit) learns. Perform coding of Y17 (Fuel injector 3) which A4 (Combustion engine Control unit) learns. Go to Step3

https://truckmanualshub.com/

Inspection procedure	Step3	Inspection procedure Turn the starter switch in OFF. Reinstall all the removed connectors. Erase fault memory and perform a test drive. Check if this diagnosis code has occurred. Are current fault codes present? No: Go to Step4 Yes: Go to Step5
	Step4	Inspection completed
	Step5	Inspection procedure Perform the operation start and replace A4 (Combustion engine Control unit). Go to Step4
	Step6	Inspection procedure Repair or replace electrical lines. Reinstall all the removed connectors. Erase fault memory and perform a test drive. Check if this diagnosis code has occurred. Are current fault codes present? No: Go to Step4 Yes: Go to Step2

3660-16: The voltage for opening the injector 3 is out of valid range.

Generation condition		[Test Condition] • Continuously
		[Fault Detection] • Difference of the actual voltage from the required one >= 20.00V
		[Defect Debouncing] • Defect condition exceeded cumulatively > 5000.00 events • Failure is detected if active for 50% of events
Fault healing		• Difference of the actual voltage from the required one < 20.00V
System reaction		• Possibly irregular engine running due to non equilibrated injection quantity. • Possibly too high emissions (possibly failure recognition if applied) • Further reaction according FID (see FID's)
		• 1) Fid / Reagent dosing quantity for SCR reduced (to DStgy_facUreaDesRed_C) • 2) FId / Adaptation of the correction values of Fuel Mass Observer (FMO) inhibited (no correction of detected deviation between injected fuel and Lambda sensor signal) • 3) FId / Fuel Mass Observer (FMO) switched off (no monitoring of injected fuel by Lambda sensor) • 4) FId / Misfire Detection disabled • 5) FId / Inhibit OxiCat passive monitor • 6) Fid / SCR Monitoring or DEF injection release not possible (according calibration of Release Masks)
Failure cause		• Additional resistances in the wiring of injectors (connectors) • Electric part of injectors • ECU internal defect (Injector power stage / Booster)
Failure repair		• Check wiring • Check injectors, replace them if necessary • Replace ECU
Inspection procedure	Step1	Inspection procedure Turn the starter switch in OFF. Remove the connector of A4 (Combustion engine Control unit). Remove the connector of Y17 (Fuel injector 3). If corresponding fault codes are also present on other components, check the common power supply and common ground point " for open circuit and short circuit. Check the circuit across Y17.2/2 and A4.X1.60/1 for open or short circuit. Make a visual check on each connector. Is any abnormality recognized? No: Go to Step2 Yes: Go to Step6

https://truckmanualshub.com/

Inspection procedure	Step2	Inspection procedure Turn the starter switch in OFF. Replace component “Y17 (Fuel injector 3)”. Reinstall all the removed connectors. Turn the starter switch in ON. Erase the fault code. Perform the learned value resetting procedure of Y17 (Fuel injector 3) which A4 (Combustion engine Control unit) learns. Perform coding of Y17 (Fuel injector 3) which A4 (Combustion engine Control unit) learns. Go to Step3
	Step3	Inspection procedure Turn the starter switch in OFF. Reinstall all the removed connectors. Erase fault memory and perform a test drive. Check if this diagnosis code has occurred. Are current fault codes present? No: Go to Step4 Yes: Go to Step5
	Step4	Inspection completed
	Step5	Inspection procedure Perform the operation start and replace A4 (Combustion engine Control unit). Go to Step4
	Step6	Inspection procedure Repair or replace electrical lines. Reinstall all the removed connectors. Erase fault memory and perform a test drive. Check if this diagnosis code has occurred. Are current fault codes present? No: Go to Step4 Yes: Go to Step2

3661-0: Corrected value of voltage for opening the injector 4 is out of valid range.

Generation condition	[Test Condition] • Continuous
	[Fault Detection] • Opening voltage corrected by learned factor (NVC) and temperature compensation is out of fuel pressure dependant range.
	[Defect Debouncing] • Defect condition exceeded cumulatively > 5000.00 events • Failure is detected if active for 50% of events
Fault healing	• Opening voltage corrected by learned factor (NVC) and temperature compensation is within fuel pressure dependant range.
System reaction	• Possibly irregular engine running due to non equilibrated injection quantity. • Possibly too high emissions (possibly failure recognition if applied) • Further reaction according FID (see FID’s)
	• 1) FId / Reagent dosing quantity for SCR reduced (to DStgy_facUreaDesRed_C) • 2) FId / Adaptation of the correction values of Fuel Mass Observer (FMO) inhibited (no correction of detected deviation between injected fuel and Lambda sensor signal) • 3) FId / Fuel Mass Observer (FMO) switched off (no monitoring of injected fuel by Lambda sensor) • 4) FId / Misfire Detection disabled • 5) FId / Inhibit OxiCat passive monitor • 6) Fid / SCR Monitoring or DEF injection release not possible (according calibration of Release Masks)
Failure cause	• Additional resistances in the wiring of injectors (connectors) • Electric part of injectors • ECU internal defect (Injector power stage / Booster)
Failure repair	• Check wiring • Check injectors, replace them if necessary • Replace ECU

https://truckmanualshub.com/

Inspection procedure	Step1	Inspection procedure Turn the starter switch in OFF. Remove the connector of A4 (Combustion engine Control unit). Remove the connector of Y18 (Fuel injector 4). If corresponding fault codes are also present on other components, check the common power supply and common ground point ‘‘ for open circuit and short circuit. Check the circuit across Y18.2/2 and A4.X1.60/47 for open or short circuit. Make a visual check on each connector. Is any abnormality recognized? No: Go to Step2 Yes: Go to Step6
	Step2	Inspection procedure Turn the starter switch in OFF. Replace component “Y18 (Fuel injector 4)”. Reinstall all the removed connectors. Turn the starter switch in ON. Erase the fault code. Perform the learned value resetting procedure of Y18 (Fuel injector 4) which A4 (Combustion engine Control unit) learns. Perform coding of Y18 (Fuel injector 4) which A4 (Combustion engine Control unit) learns. Go to Step3
	Step3	Inspection procedure Turn the starter switch in OFF. Reinstall all the removed connectors. Erase fault memory and perform a test drive. Check if this diagnosis code has occurred. Are current fault codes present? No: Go to Step4 Yes: Go to Step5
	Step4	Inspection completed
	Step5	Inspection procedure Perform the operation start and replace A4 (Combustion engine Control unit). Go to Step4
	Step6	Inspection procedure Repair or replace electrical lines. Reinstall all the removed connectors. Erase fault memory and perform a test drive. Check if this diagnosis code has occurred. Are current fault codes present? No: Go to Step4 Yes: Go to Step2

3661-6: The fuel injector (cylinder 4) has a short circuit to ground.

Generation condition	[Test Condition] • Continuously
	[Fault Detection] • If the measured pattern for the injector evaluation of cylinder 4 is equal to applied behaviour bit pattern for general short circuit error detection.
	[Defect Debouncing] • Defect condition exceeded cumulatively > 4.00 events • Failure is detected if active for 20% of events
Fault healing	• No Healing possible (disabled by Data set)

https://truckmanualshub.com/

		• None except FIDs.
System reaction		• 1) Fid / Reagent dosing quantity for SCR reduced (to DStgy_facUreaDesRed_C) • 2) FId / Fuel quantity Balancing Control disabled (e.g. error in crankshaft speed signal) • 3) FId / Adaptation of the correction values of Fuel Mass Observer (FMO) inhibited (no correction of detected deviation between injected fuel and Lambda sensor signal) • 4) FId / Fuel Mass Observer (FMO) switched off (no monitoring of injected fuel by Lambda sensor) • 5) FId / Cylinder 3 (firing order) shut off • 6) FId / Nominal Voltage Calibration NVC of injectors disabled • 7) FId / Redundant Engine shut off path not tested due to error debouncing of an injector • 8) FId / Redundant Engine shut off path not tested due to error of an injector • 9) FId / Redundant Engine shut off path test inhibited • 10) FId / Particulate filter ((DPF) Regeneration inhibited • 11) FId / Service regeneration of Particulate filter ((DPF) inhibited (due to DPF failure) • 12) FId / Zero Fuel Calibration (ZFC) of injectors disabled • 13) FId / Zero Fuel Calibration (ZFC) of injectors by Lambda Sensor signal disabled • 14) Fid / SCR Monitoring or DEF injection release not possible (according calibration of Release Masks) • 15) FId / Misfire Detection disabled • 16) FId / Inhibit OxiCat passive monitor
Failure cause		• Short circuit in wiring or injector
Failure repair		• Check wiring, replace fuel injector of cylinder 4.
Inspection procedure	Step1	Inspection procedure Turn the starter switch in OFF. Remove the connector of A4 (Combustion engine Control unit). Remove the connector of Y18 (Fuel injector 4). If corresponding fault codes are also present on other components, check the common power supply and common ground point “ for open circuit and short circuit. Check the circuit across Y18.2/2 and A4.X1.60/47 for open or short circuit. Make a visual check on each connector. Is any abnormality recognized? No: Go to step2 Yes: Go to step6
	Step2	Inspection procedure Turn the starter switch in OFF. Replace component “Y18 (Fuel injector 4)”. Reinstall all the removed connectors. Turn the starter switch in ON. Erase the fault code. Perform the learned value resetting procedure of Y18 (Fuel injector 4) which A4 (Combustion engine Control unit) learns. Perform coding of Y18 (Fuel injector 4) which A4 (Combustion engine Control unit) learns. Go to step3
	Step3	Inspection procedure Turn the starter switch in OFF. Reinstall all the removed connectors. Erase fault memory and perform a test drive. Check if this diagnosis code has occurred. Are current fault codes present? No: Go to step4 Yes: Go to step5
	Step4	Inspection completed
	Step5	Inspection procedure Perform the operation start and replace A4 (Combustion engine Control unit). Inspection completed

https://truckmanualshub.com/

Inspection procedure	Step6	Inspection procedure Repair or replace electrical lines. Reinstall all the removed connectors. Erase fault memory and perform a test drive. Check if this diagnosis code has occurred. Are current fault codes present? No: Go to step4 Yes: Go to step2

3661-15: Discharge time of injector 4 is out of valid range.

Generation condition		[Test Condition] • Continuously
		[Fault Detection] • Discharge time difference to the nominal value >= 60.00us
		[Defect Debouncing] • Defect condition exceeded cumulatively > 5000.00 events • Failure is detected if active for 50% of events
Fault healing		• Discharge time difference to the nominal value < 60.00us
System reaction		• Possibly irregular engine running due to non equilibrated injection quantity. • Possibly too high emissions (possibly failure recognition if applied) • Only according FID (see FID's)
		• 1) Fid / Reagent dosing quantity for SCR reduced (to DStgy_facUreaDesRed_C) • 2) FId / Adaptation of the correction values of Fuel Mass Observer (FMO) inhibited (no correction of detected deviation between injected fuel and Lambda sensor signal) • 3) FId / Fuel Mass Observer (FMO) switched off (no monitoring of injected fuel by Lambda sensor) • 4) FId / Misfire Detection disabled • 5) FId / Inhibit OxiCat passive monitor • 6) Fid / SCR Monitoring or DEF injection release not possible (according calibration of Release Masks)
Failure cause		• Additional resistances in the wiring of injectors (connectors) • Electric part of injectors • ECU internal defect (Injector power stage / Booster)
Failure repair		• Check wiring • Check injectors, replace them if necessary • Replace ECU
Inspection procedure	Step1	Inspection procedure Turn the starter switch in OFF. Remove the connector of A4 (Combustion engine Control unit). Remove the connector of Y18 (Fuel injector 4). If corresponding fault codes are also present on other components, check the common power supply and common ground point " for open circuit and short circuit. Check the circuit across Y18.2/2 and A4.X1.60/47 for open or short circuit. Make a visual check on each connector. Is any abnormality recognized? No: Go to Step2 Yes: Go to Step6
	Step2	Inspection procedure Turn the starter switch in OFF. Replace component "Y18 (Fuel injector 4)". Reinstall all the removed connectors. Turn the starter switch in ON. Erase the fault code. Perform the learned value resetting procedure of Y18 (Fuel injector 4) which A4 (Combustion engine Control unit) learns. Perform coding of Y18 (Fuel injector 4) which A4 (Combustion engine Control unit) learns. Go to Step3

https://truckmanualshub.com/

Inspection procedure	Step3	Inspection procedure Turn the starter switch in OFF. Reinstall all the removed connectors. Erase fault memory and perform a test drive. Check if this diagnosis code has occurred. Are current fault codes present? No: Go to Step4 Yes: Go to Step5
	Step4	Inspection completed
	Step5	Inspection procedure Perform the operation start and replace A4 (Combustion engine Control unit). Go to Step4
	Step6	Inspection procedure Repair or replace electrical lines. Reinstall all the removed connectors. Erase fault memory and perform a test drive. Check if this diagnosis code has occurred. Are current fault codes present? No: Go to Step4 Yes: Go to Step2

3661-16: The voltage for opening the injector 4 is out of valid range.

Generation condition		[Test Condition] • Continuously
		[Fault Detection] • Difference of the actual voltage from the required one >= 20.00V
		[Defect Debouncing] • Defect condition exceeded cumulatively > 5000.00 events • Failure is detected if active for 50% of events
Fault healing		• Difference of the actual voltage from the required one < 20.00V
System reaction		• Possibly irregular engine running due to non equilibrated injection quantity. • Possibly too high emissions (possibly failure recognition if applied) • Further reaction according FID (see FID's)
		• 1) Fid / Reagent dosing quantity for SCR reduced (to DStgy_facUreaDesRed_C) • 2) FId / Adaptation of the correction values of Fuel Mass Observer (FMO) inhibited (no correction of detected deviation between injected fuel and Lambda sensor signal) • 3) FId / Fuel Mass Observer (FMO) switched off (no monitoring of injected fuel by Lambda sensor) • 4) FId / Misfire Detection disabled • 5) FId / Inhibit OxiCat passive monitor • 6) Fid / SCR Monitoring or DEF injection release not possible (according calibration of Release Masks)
Failure cause		• Additional resistances in the wiring of injectors (connectors) • Electric part of injectors • ECU internal defect (Injector power stage / Booster)
Failure repair		• Check wiring • Check injectors, replace them if necessary • Replace ECU
Inspection procedure	Step1	Inspection procedure Turn the starter switch in OFF. Remove the connector of A4 (Combustion engine Control unit). Remove the connector of Y18 (Fuel injector 4). If corresponding fault codes are also present on other components, check the common power supply and common ground point " for open circuit and short circuit. Check the circuit across Y18.2/2 and A4.X1.60/47 for open or short circuit. Make a visual check on each connector. Is any abnormality recognized? No: Go to Step2 Yes: Go to Step6

https://truckmanualshub.com/

Inspection procedure	Step2	Inspection procedure Turn the starter switch in OFF. Replace component “Y18 (Fuel injector 4)”. Reinstall all the removed connectors. Turn the starter switch in ON. Erase the fault code. Perform the learned value resetting procedure of Y18 (Fuel injector 4) which A4 (Combustion engine Control unit) learns. Perform coding of Y18 (Fuel injector 4) which A4 (Combustion engine Control unit) learns. Go to Step3
	Step3	Inspection procedure Turn the starter switch in OFF. Reinstall all the removed connectors. Erase fault memory and perform a test drive. Check if this diagnosis code has occurred. Are current fault codes present? No: Go to Step4 Yes: Go to Step5
	Step4	Inspection completed
	Step5	Inspection procedure Perform the operation start and replace A4 (Combustion engine Control unit). Go to Step4
	Step6	Inspection procedure Repair or replace electrical lines. Reinstall all the removed connectors. Erase fault memory and perform a test drive. Check if this diagnosis code has occurred. Are current fault codes present? No: Go to Step4 Yes: Go to Step2

3662-0: Corrected value of voltage for opening the injector 2 is out of valid range.

Generation condition	[Test Condition] • Continuous
	[Fault Detection] • Opening voltage corrected by learned factor (NVC) and temperature compensation is out of fuel pressure dependant range.
	[Defect Debouncing] • Defect condition exceeded cumulatively > 5000.00 events • Failure is detected if active for 50% of events
Fault healing	• Opening voltage corrected by learned factor (NVC) and temperature compensation is within fuel pressure dependant range.
System reaction	• Possibly irregular engine running due to non equilibrated injection quantity. • Possibly too high emissions (possibly failure recognition if applied) • Further reaction according FID (see FID’s)
	• 1) FId / Reagent dosing quantity for SCR reduced (to DStgy_facUreaDesRed_C) • 2) FId / Adaptation of the correction values of Fuel Mass Observer (FMO) inhibited (no correction of detected deviation between injected fuel and Lambda sensor signal) • 3) FId / Fuel Mass Observer (FMO) switched off (no monitoring of injected fuel by Lambda sensor) • 4) FId / Misfire Detection disabled • 5) FId / Inhibit OxiCat passive monitor • 6) Fid / SCR Monitoring or DEF injection release not possible (according calibration of Release Masks)
Failure cause	• Additional resistances in the wiring of injectors (connectors) • Electric part of injectors • ECU internal defect (Injector power stage / Booster)
Failure repair	• Check wiring • Check injectors, replace them if necessary • Replace ECU

https://truckmanualshub.com/

Inspection procedure	Step1	Inspection procedure Turn the starter switch in OFF. Remove the connector of A4 (Combustion engine Control unit). Remove the connector of Y16 (Fuel injector 2). If corresponding fault codes are also present on other components, check the common power supply and common ground point ‘‘ for open circuit and short circuit. Check the circuit across Y16.2/2 and A4.X1.60/2 for open or short circuit. Make a visual check on each connector. Is any abnormality recognized? No: Go to Step2 Yes: Go to Step6
	Step2	Inspection procedure Turn the starter switch in OFF. Replace component “Y16 (Fuel injector 2)”. Reinstall all the removed connectors. Turn the starter switch in ON. Erase the fault code. Perform the learned value resetting procedure of Y16 (Fuel injector 2) which A4 (Combustion engine Control unit) learns. Perform coding of Y16 (Fuel injector 2) which A4 (Combustion engine Control unit) learns. Go to Step3
	Step3	Inspection procedure Turn the starter switch in OFF. Reinstall all the removed connectors. Erase fault memory and perform a test drive. Check if this diagnosis code has occurred. Are current fault codes present? No: Go to Step4 Yes: Go to Step5
	Step4	Inspection completed
	Step5	Inspection procedure Perform the operation start and replace A4 (Combustion engine Control unit). Go to Step4
	Step6	Inspection procedure Repair or replace electrical lines. Reinstall all the removed connectors. Erase fault memory and perform a test drive. Check if this diagnosis code has occurred. Are current fault codes present? No: Go to Step4 Yes: Go to Step2

3662-6: The fuel injector (cylinder 2) has a short circuit to ground.

Generation condition	[Test Condition] • Continuously
	[Fault Detection] • If the measured pattern for the injector evaluation of cylinder 2 is equal to applied behaviour bit pattern for general short circuit error detection.
	[Defect Debouncing] • Defect condition exceeded cumulatively > 4.00 events • Failure is detected if active for 20% of events
Fault healing	• No Healing possible (disabled by Data set)

https://truckmanualshub.com/

System reaction		• None except FIDs.
		• 1) Fid / Reagent dosing quantity for SCR reduced (to DStgy_facUreaDesRed_C) • 2) FId / Fuel quantity Balancing Control disabled (e.g. error in crankshaft speed signal) • 3) FId / Adaptation of the correction values of Fuel Mass Observer (FMO) inhibited (no correction of detected deviation between injected fuel and Lambda sensor signal) • 4) FId / Fuel Mass Observer (FMO) switched off (no monitoring of injected fuel by Lambda sensor) • 5) FId / Cylinder 4 (firing order) shut off • 6) FId / Nominal Voltage Calibration NVC of injectors disabled • 7) FId / Redundant Engine shut off path not tested due to error debouncing of an injector • 8) FId / Redundant Engine shut off path not tested due to error of an injector • 9) FId / Redundant Engine shut off path test inhibited • 10) FId / Particulate filter ((DPF) Regeneration inhibited • 11) FId / Service regeneration of Particulate filter ((DPF) inhibited (due to DPF failure) • 12) FId / Zero Fuel Calibration (ZFC) of injectors disabled • 13) FId / Zero Fuel Calibration (ZFC) of injectors by Lambda Sensor signal disabled • 14) Fid / SCR Monitoring or DEF injection release not possible (according calibration of Release Masks) • 15) FId / Misfire Detection disabled • 16) FId / Inhibit OxiCat passive monitor
Failure cause		• Short circuit in wiring or injector
Failure repair		• Check wiring, replace fuel injector of cylinder 2.
Inspection procedure	Step1	Inspection procedure Turn the starter switch in OFF. Remove the connector of A4 (Combustion engine Control unit). Remove the connector of Y16 (Fuel injector 2). If corresponding fault codes are also present on other components, check the common power supply and common ground point “ for open circuit and short circuit. Check the circuit across Y16.2/2 and A4.X1.60/2 for open or short circuit. Make a visual check on each connector. Is any abnormality recognized? No: Go to step2 Yes: Go to step6
	Step2	Inspection procedure Turn the starter switch in OFF. Replace component “Y16 (Fuel injector 2)”. Reinstall all the removed connectors. Turn the starter switch in ON. Erase the fault code. Perform the learned value resetting procedure of Y16 (Fuel injector 2) which A4 (Combustion engine Control unit) learns. Perform coding of Y16 (Fuel injector 2) which A4 (Combustion engine Control unit) learns. Go to step3
	Step3	Inspection procedure Turn the starter switch in OFF. Reinstall all the removed connectors. Erase fault memory and perform a test drive. Check if this diagnosis code has occurred. Are current fault codes present? No: Go to step4 Yes: Go to step5
	Step4	Inspection completed
	Step5	Inspection procedure Perform the operation start and replace A4 (Combustion engine Control unit). Inspection completed

https://truckmanualshub.com/

Inspection procedure	Step6	Inspection procedure Repair or replace electrical lines. Reinstall all the removed connectors. Erase fault memory and perform a test drive. Check if this diagnosis code has occurred. Are current fault codes present? No: Go to step4 Yes: Go to step2

3662-15: Discharge time of injector 2 is out of valid range.

Generation condition		[Test Condition] • Continuously
		[Fault Detection] • Discharge time difference to the nominal value >= 60.00us
		[Defect Debouncing] • Defect condition exceeded cumulatively > 5000.00 events • Failure is detected if active for 50% of events
Fault healing		• Discharge time difference to the nominal value < 60.00us
System reaction		• Possibly irregular engine running due to non equilibrated injection quantity. • Possibly too high emissions (possibly failure recognition if applied) • Only according FID (see FID's)
		• 1) Fid / Reagent dosing quantity for SCR reduced (to DStgy_facUreaDesRed_C) • 2) FId / Adaptation of the correction values of Fuel Mass Observer (FMO) inhibited (no correction of detected deviation between injected fuel and Lambda sensor signal) • 3) FId / Fuel Mass Observer (FMO) switched off (no monitoring of injected fuel by Lambda sensor) • 4) FId / Misfire Detection disabled • 5) FId / Inhibit OxiCat passive monitor • 6) Fid / SCR Monitoring or DEF injection release not possible (according calibration of Release Masks)
Failure cause		• Additional resistances in the wiring of injectors (connectors) • Electric part of injectors • ECU internal defect (Injector power stage / Booster)
Failure repair		• Check wiring • Check injectors, replace them if necessary • Replace ECU
Inspection procedure	Step1	Inspection procedure Turn the starter switch in OFF. Remove the connector of A4 (Combustion engine Control unit). Remove the connector of Y16 (Fuel injector 2). If corresponding fault codes are also present on other components, check the common power supply and common ground point '' for open circuit and short circuit. Check the circuit across Y16.2/2 and A4.X1.60/2 for open or short circuit. Make a visual check on each connector. Is any abnormality recognized? No: Go to Step2 Yes: Go to Step6
	Step2	Inspection procedure Turn the starter switch in OFF. Replace component "Y16 (Fuel injector 2)". Reinstall all the removed connectors. Turn the starter switch in ON. Erase the fault code. Perform the learned value resetting procedure of Y16 (Fuel injector 2) which A4 (Combustion engine Control unit) learns. Perform coding of Y16 (Fuel injector 2) which A4 (Combustion engine Control unit) learns. Go to Step3

https://truckmanualshub.com/

Inspection procedure	Step3	Inspection procedure Turn the starter switch in OFF. Reinstall all the removed connectors. Erase fault memory and perform a test drive. Check if this diagnosis code has occurred. Are current fault codes present? No: Go to Step4 Yes: Go to Step5
	Step4	Inspection completed
	Step5	Inspection procedure Perform the operation start and replace A4 (Combustion engine Control unit). Go to Step4
	Step6	Inspection procedure Repair or replace electrical lines. Reinstall all the removed connectors. Erase fault memory and perform a test drive. Check if this diagnosis code has occurred. Are current fault codes present? No: Go to Step4 Yes: Go to Step2

3662-16: The voltage for opening the injector 2 is out of valid range.

Generation condition		[Test Condition] • Continuously
		[Fault Detection] • Difference of the actual voltage from the required one >= 20.00V
		[Defect Debouncing] • Defect condition exceeded cumulatively > 5000.00 events • Failure is detected if active for 50% of events
Fault healing		• Difference of the actual voltage from the required one < 20.00V
System reaction		• Possibly irregular engine running due to non equilibrated injection quantity. • Possibly too high emissions (possibly failure recognition if applied) • Further reaction according FID (see FID's)
		• 1) Fid / Reagent dosing quantity for SCR reduced (to DStgy_facUreaDesRed_C) • 2) FId / Adaptation of the correction values of Fuel Mass Observer (FMO) inhibited (no correction of detected deviation between injected fuel and Lambda sensor signal) • 3) FId / Fuel Mass Observer (FMO) switched off (no monitoring of injected fuel by Lambda sensor) • 4) FId / Misfire Detection disabled • 5) FId / Inhibit OxiCat passive monitor • 6) Fid / SCR Monitoring or DEF injection release not possible (according calibration of Release Masks)
Failure cause		• Additional resistances in the wiring of injectors (connectors) • Electric part of injectors • ECU internal defect (Injector power stage / Booster)
Failure repair		• Check wiring • Check injectors, replace them if necessary • Replace ECU
Inspection procedure	Step1	Inspection procedure Turn the starter switch in OFF. Remove the connector of A4 (Combustion engine Control unit). Remove the connector of Y16 (Fuel injector 2). If corresponding fault codes are also present on other components, check the common power supply and common ground point " for open circuit and short circuit. Check the circuit across Y16.2/2 and A4.X1.60/2 for open or short circuit. Make a visual check on each connector. Is any abnormality recognized? No: Go to Step2 Yes: Go to Step6

https://truckmanualshub.com/

Inspection procedure	Step2	Inspection procedure Turn the starter switch in OFF. Replace component “Y16 (Fuel injector 2)”. Reinstall all the removed connectors. Turn the starter switch in ON. Erase the fault code. Perform the learned value resetting procedure of Y16 (Fuel injector 2) which A4 (Combustion engine Control unit) learns. Perform coding of Y16 (Fuel injector 2) which A4 (Combustion engine Control unit) learns. Go to Step3
	Step3	Inspection procedure Turn the starter switch in OFF. Reinstall all the removed connectors. Erase fault memory and perform a test drive. Check if this diagnosis code has occurred. Are current fault codes present? No: Go to Step4 Yes: Go to Step5
	Step4	Inspection completed
	Step5	Inspection procedure Perform the operation start and replace A4 (Combustion engine Control unit). Go to Step4
	Step6	Inspection procedure Repair or replace electrical lines. Reinstall all the removed connectors. Erase fault memory and perform a test drive. Check if this diagnosis code has occurred. Are current fault codes present? No: Go to Step4 Yes: Go to Step2

3696-2: The signal value of component ‘DPF emergency regeneration switch’ is implausible.Data erratic, intermittent or incorrect

Generation condition	[Test Condition] • Continuously
	[Fault Detection] • Terminal 15 is ON AND • Emergency regeneration switch is pressed AND • switch plausibility not inhibited (error detected in T15 or vehicle speed monitoring) AND • vehicle speed > 2km/h {1.2mph}
	[Defect Debouncing] • Defect condition exceeded cumulatively > 60.00s • Failure is detected if active for 50% of the time
Fault healing	• switch detected as plausible
System reaction	• None
Failure cause	• Emergency regeneration switch pressed at high vehicle speed or switch defective
Failure repair	• Check emergency regeneration switch

https://truckmanualshub.com/

Inspection procedure	Step1	Refer to the help menu for Nos. other than above. *1: M/T *2: DUONIC *3: ISS (With Lock brake) *4: ISS (Without Lock brake) *5: Lock brake (Without ISS) *6: Other than *3,*4,*5 *7: Full-automatic air conditioner *8: Auto leveling *9: Manual leveling Inspection procedure Turn the starter switch in OFF. Remove all ECU connectors from the CAN communication line. Check CAN line for open circuit, short circuit to positive, short circuit to ground or short circuit to another electrical line. Is any abnormality recognized? No: Go to step2 Yes: Go to step5
	Step2	Inspection procedure Attach the connector of A20 (SAM). Check CAN line for open circuit, short circuit to positive, short circuit to ground or short circuit to another electrical line. Is any abnormality recognized? No: Go to step3 Yes: Go to step4
	Step3	Inspection procedure Turn the starter switch in OFF. Reinstall all the removed connectors. Erase fault memory and perform a test drive. If the diagnosis code has occurred even during the test drive, start the operation and then replace the A4 (Combustion engine Control unit). Inspection completed
	Step4	Inspection procedure Turn the starter switch in OFF. Reinstall all the removed connectors. Erase fault memory and perform a test drive. If the diagnosis code has occurred even during the test drive, start the operation and then replace the A20 (SAM). Inspection completed
	Step5	Refer to the help menu for Nos. other than above. *1: M/T *2: DUONIC *3: ISS (With Lock brake) *4: ISS (Without Lock brake) *5: Lock brake (Without ISS) *6: Other than *3,*4,*5 *7: Full-automatic air conditioner *8: Auto leveling *9: Manual leveling Inspection procedure Repair or replace electrical lines. Reinstall all the removed connectors. Turn the starter switch in ON. Inspection completed

3701-2: Signal Range Check (SRC) for 'Flow resistance of diesel particulate filter' reports HIGH.

Generation condition	[Test Condition] • The check is carried out continuously.
	[Fault Detection] • Pressure drop over filter higher than a exhaust flow dependant limit (from 6kPa {0.9psi, 0.06kgf/cm^2} at 0.00m^3/h over 40.2kPa {5.8psi, 0.4kgf/cm^2} at 800.00m^3/h to 105.1kPa {15psi, 1.1kgf/cm^2} at 2000.00m^3/h).
	[Defect Debouncing] • Defect condition fulfilled continuously >15000.0 ms
Fault healing	• No Healing possible (disabled by Data set)

https://truckmanualshub.com/

System reaction		• None (only via inhibit handler)
		• 1) FId / Status of function identifier FId_EngDemTrqLimErr1 • 2) FId / Torque limitation 2 activated for power reduction • 3) FId / Engine speed Limitation 2 for HIgh/Low engine speed (HLS) control active • 4) FId / Pressure Compensation of O2-Signal can not be learnt - is taken from the curve (LSU_facPresComLean_CUR) • 5) FId / Inhibit DPF monitor • 6) FId / Substitute calibration array is used to determinate the regeneration lock-out time of particulate filter (DPF)
Failure cause		• DPF is clogged. • Filter regeneration was not successful or not possible.
Failure repair		• Launch service regeneration via tester and check filter and exhaust system.
Inspection procedure	Step1	Inspection procedure Inspect the suspected factors mentioned above sequentially to locate faulty parts. Repair or replace the faulty part as necessary.

3702-2: Regeneration of the diesel particulate filter was aborted.

Generation condition	[Test Condition] • The exhaust-gas volume flow ASMod_dvolPFltEG > 300.00m^3/h. • The temperature of DPF ASMod_tPFltSurfSim < 399.96°C {751.93°F}. • For DPF load detection, the calculation from the differential pressure is active, and not the simulation (PFltLd_stSimOn). • Successful regeneration has been completed, driving distance since regeneration < 15.00km
	[Fault Detection] • Error counter is incriminated if the measured soot mass PFlt_mSotMeasNoCompl_mp > PFlt_mSotNoComplMax_mp stored in the curve • PFlt_mSotNoComplMax depending on the continuously simulated soot mass PFlt_mSotSimNoCompl_mp.
	[Defect Debouncing] • Defect condition fulfilled continuously >1.00 events
Fault healing	• No Healing possible (disabled by Data set)
System reaction	• None except FIDs
	• 1) FId / Inhibit monitor for DPF frequent regeneration
Failure cause	• Real ash load too high or some restriction upstream OxiCat or differential pressure measuring wrong (rear hose clogged)
Failure repair	• Check exhaust for restrictions, check differential pressure sensor for gain failure, perform manual regeneration,

https://truckmanualshub.com/

Inspection procedure	Step1	Inspect or verify the following items. Repair or replace faulty items as necessary. If any abnormalities are found on DPF differential pressure hose, recheck it closely and replace as necessary. Check DPF differential pressure hose for clogging, and remedy it if any restriction is found. Check for the correct connection of DPF differential pressure hose; if not correct, rectify the connection. If DPF differential pressure hose has been corrected or replaced, perform the learned value resetting procedure of B37 (DPF differential pressure sensor) learned by A4 (Combustion engine Control unit). Check Exhaust system for clogging, and remedy it if any restriction is found. If this diagnosis code has occurred again even after conducting DPF regeneration, clean or replace DPF. If DPF has been corrected or replaced, perform the learned value resetting procedure of DPF learned by A4 (Combustion engine Control unit). For procedures, refer to the Shop Manual. Go to Step2
	Step2	Inspection procedure If one of diagnosis codes associated with A20 (SAM) is generated, make a system diagnosis according to the diagnosis code. Go to Step3
	Step3	Inspection procedure Turn the starter switch in OFF. Remove the connector of A4 (Combustion engine Control unit). Remove the connector of B37 (DPF differential pressure sensor). Check the circuit across B37.3/1 and A4.X2.94/22 for open or short circuit. Check the circuit across B37.3/3 and A4.X2.94/54 for open or short circuit. Check the circuit across B37.3/2 and A4.X2.94/18 for open or short circuit. Make a visual check on each connector. Is any abnormality recognized? No: Go to Step4 Yes: Go to Step8
	Step4	Inspection procedure Turn the starter switch in OFF. Replace component “B37 (DPF differential pressure sensor)”. Reinstall all the removed connectors. Turn the starter switch in ON. Perform the learned value resetting procedure of B37 (DPF differential pressure sensor) which A4 (Combustion engine Control unit) learns. Go to Step5
	Step5	Inspection procedure Turn the starter switch in OFF. Reinstall all the removed connectors. Erase fault memory and perform a test drive. Check if this diagnosis code has occurred. Are current fault codes present? No: Go to Step6 Yes: Go to Step7
	Step6	Inspection completed
	Step7	Inspection procedure Perform the operation start and replace A4 (Combustion engine Control unit). Go to Step6
	Step8	Inspection procedure Repair or replace electrical lines. Reinstall all the removed connectors. Erase fault memory and perform a test drive. Check if this diagnosis code has occurred. Are current fault codes present? No: Go to Step6 Yes: Go to Step4

https://truckmanualshub.com/

3719-16: The regeneration frequency of the diesel particulate filter is too high.

Generation condition		[Test Condition] • Monitor not inhibited by another failure (FId_PFltFreq is not set) • Soot mass value PFltLd_mSot is greater than the limiting value for monitoring PFlt_mSotSimTotRgnFreq_mp • after a successful regeneration or an interrupted. • The soot mass limiting value PFlt_mSotThresRgnFreq_mp for monitoring for too frequent particulate filter regeneration depends on the emissions (NMHC, CO, NOx) during DPF regeneration (Ki factors) and ash volume PFltLd_volAsh.
		[Fault Detection] • Soot mass value from the particulate filter load calculation PFltLd_mSot > limiting value for monitoring PFlt_mSotSimTotRgnFreq_mp
		[Defect Debouncing] • Defect condition fulfilled continuously >1.00 events
Fault healing		• No Healing possible (disabled by Data set)
System reaction		• None except FIDs
		• 1) FId / Inhibit monitor for incomplete regeneration of the DPF
Failure cause		• Leakage of injectors (high soot) • Too low air flow (leakage in intake air system) • or differential pressure not measure correctly (rear hose line clogged). • Modelled soot not calculated correctly (EGR, air flow mass, DPF upstream temperature)
Failure repair		• Check differential pressure, check other sensor involved in soot modelling (if DTC is present) • Check leakage in intake system, check injectors • Perform service regeneration if needed
Inspection procedure	Step1	Inspection procedure Inspect the suspected factors mentioned above sequentially to locate faulty parts. Repair or replace the faulty part as necessary.

3726-16: DPF model regeneration request too high

Generation condition		[Test Condition] • The check is carried out continuously.
		[Fault Detection] • If the regeneration mode request number > 4.00- i.e. collected soot mass > 65.00g
		[Defect Debouncing] • Defect condition fulfilled continuously >100.0 ms
Fault healing		• If the regeneration mode request number < 4.00-
System reaction		• Only by FID (see FID's)
		• 1) FId / Status of function identifier FId_EngDemTrqLimErr1 • 2) FId / Torque limitation 2 activated for power reduction • 3) FId / Engine speed Limitation 2 for HIgh/Low engine speed (HLS) control active • 4) FId / Inhibit DPF monitor
Failure cause		• Special ambient conditions and vehicle use which does not allow correct DPF regeneration due to too low exhaust temperatures • Temperature sensor before Oxicat and/or before DPF shows too low temperature • Oxicat does not work correctly (bad HC burning) - in this case also a further dedicated failure should be stored and the vehicle shows blue smoke and strong odour.
Failure repair		• Service regeneration should be performed to reduce soot mass in the filter • If Service regeneration fails: see troubleshooting there.
Inspection procedure	Step1	Inspection procedure Inspect the suspected factors mentioned above sequentially to locate faulty parts. Repair or replace the faulty part as necessary.

https://truckmanualshub.com/

3727-0: DPF model - number of maximum regenerations too high

Generation condition		[Test Condition] • A DPF regeneration requested.
		[Fault Detection] • Number of locked regenerations > 2.00-
		[Defect Debouncing] • Immediate
Fault healing		• If the requested regeneration mode < 1.00-, i.e. the regeneration is at least partially successful, the counter for locked regeneration is set to 0 and failure healed.
System reaction		• Probably high fuel consumption due to long time of regeneration (post injection active!) • Oil exchange request (due to Oil dilution) can be activated earlier due to long time post injection. • DPF can be overloaded due to “failed” regeneration --> possibly damaged at real regeneration. • Further reactions according FID (see FID’s)
		• 1) FId / Status of function identifier FId_EngDemTrqLimErr1 • 2) FId / Torque limitation 2 activated for power reduction • 3) FId / Engine speed Limitation 2 for HIgh/Low engine speed (HLS) control active
Failure cause		• Special ambient conditions or vehicle use (city cycle) which lead to too low DPF temperature for real regeneration. • Temperature sensor before Oxicat or before DPF show too low temperature, so system dose not detect real regeneration. • Oxicat does not work correctly, i.e. the temperature increase is too low (should be shown by a additionally stored dedicated failure)
Failure repair		• Check temperature sensor before Oxicat and before DPF for correct measuring • Check Oxicat • Check DPF
Inspection procedure	Step1	Inspection procedure Inspect the suspected factors mentioned above sequentially to locate faulty parts. Repair or replace the faulty part as necessary.

4009-3: Component ‘Fuel filter heater’ has a short circuit to positive.

Generation condition	[Test Condition] • Monitoring is active while the battery voltage is over 10.00V, as long as the battery voltage is over 10.00V and 2.00s after this threshold has been exceeded, if none of the CAN controllers is in bus-off state and 2.00s after last CAN controller is no more in bus-off state • Monitoring only active if power stage actuated, i.e. filter heating active, i.e. Fuel temp < -3.04°C {26.53°F} (switch off at > 4.96°C {40.93°F}) AND engine NOT cranking AND engine speed > 5.00rpm • Battery voltage > 9.50V (switch off < 9.00V) and Test of redundant shut-off paths not active)
	[Fault Detection] • The power stage hardware reports a “short circuit to battery” (SCB) error.
	[Defect Debouncing] • Defect condition exceeded cumulatively > 500.00ms • Failure is detected if active for 25% of the time
Fault healing	• To give the possibility for healing, an electric impulse is sent to power stage each 1000.00ms 5.00- times in actual driving cycle. Failure healed, if the power stage does not report a “short to battery” (SCB) error. Else no healing possible at this driving cycle.
System reaction	• Power stage is shut-off, i.e no fuel heating possible.
Failure cause	• Short circuit of wiring to external source or inside fuel filter heater
Failure repair	• Check of wiring, replace fuel filter heater

https://truckmanualshub.com/

Inspection procedure	Step1	Inspect or verify the following items. Repair or replace faulty items as necessary. If one of diagnosis codes associated with A20 (SAM) is generated, make a system diagnosis according to the diagnosis code. Go to Step2
	Step2	Inspection procedure Turn the starter switch in OFF. Remove the connector of A4 (Combustion engine Control unit). Remove the connector of K30 (Fuel heater relay). Remove the connector of A20 (SAM). Check the circuit across A20.X2.14/4 and K30.5/3 for open or short circuit. Check the circuit across A4.X2.94/90 and K30.5/1 for open or short circuit. Check the circuit across K30.5/5 and A20.X1.18/5 for open or short circuit. Make a visual check on each connector. Is any abnormality recognized? No: Go to Step3 Yes: Go to Step8
	Step3	Inspection procedure Turn the starter switch in OFF. Replace component “K30 (Fuel heater relay)”. Reinstall all the removed connectors. Turn the starter switch in ON. Go to Step4
	Step4	Inspect or verify the following items. Repair or replace faulty items as necessary. Go to Step5
	Step5	Inspection procedure Turn the starter switch in OFF. Reinstall all the removed connectors. Erase fault memory and perform a test drive. Check if this diagnosis code has occurred. Are current fault codes present? No: Go to Step7 Yes: Go to Step6
	Step6	Inspection procedure Perform the operation start and replace A4 (Combustion engine Control unit). Go to Step7
	Step7	Inspection completed

https://truckmanualshub.com/

Inspection procedure	Step8	Inspection procedure Turn the starter switch in OFF. Remove the connector of A4 (Combustion engine Control unit). Remove the connector of X43 (Intermediate connector). Check the circuit across A4.X2.94/90 and X43.2/2 for open or short circuit. Make a visual check on each connector. Is any abnormality recognized? No: Go to Step9 Yes: Go to Step10
	Step9	Inspection procedure Repair or replace the harness across K30 (Fuel heater relay) and X43 (Intermediate connector). Repair or replace the harness across K30 (Fuel heater relay) and A20 (SAM). Reinstall all the removed connectors. Erase fault memory and perform a test drive. Check if this diagnosis code has occurred. Are current fault codes present? No: Go to Step7 Yes: Go to Step3
	Step10	Inspection procedure Repair or replace the harness across A4 (Combustion engine Control unit) and X43 (Intermediate connector). Reinstall all the removed connectors. Erase fault memory and perform a test drive. Check if this diagnosis code has occurred. Are current fault codes present? No: Go to Step7 Yes: Go to Step3

4009-4: Component 'Fuel filter heater' has a short circuit to ground.

Generation condition		[Test Condition] • Monitoring is active while the battery voltage is over 10.00V, as long as the battery voltage is over 10.00V and 2.00s after this threshold has been exceeded, if none of the CAN controllers is in bus-off state and 2.00s after last CAN controller is no more in bus-off state • Monitoring only active if power stage NOT actuated, i.e. filter heating NOT active, i.e. Fuel temp > 4.96°C {40.93°F} or engine cranking or engine speed < 5.00rpm • Battery voltage > 9.50V (switch off < 9.00V) and Test of redundant shut-off paths not active)
		[Fault Detection] • The power stage hardware reports a "short circuit to ground" (SCG) error.
		[Defect Debouncing] • Defect condition exceeded cumulatively > 500.00ms • Failure is detected if active for 25% of the time
Fault healing		• To give the possibility for healing, an electric impulse is sent to power stage each 1000.00ms 5.00- times in actual driving cycle. Failure healed, if the power stage does not report an "short to ground" (SCG) error. Else no healing possible at this driving cycle.
System reaction		• Power stage is shut-off, i.e no fuel heating possible.
Failure cause		• Short circuit of wiring to ground or inside fuel filter heater
Failure repair		• Check of wiring, replace fuel filter heater
Inspection procedure	Step1	Inspect or verify the following items. Repair or replace faulty items as necessary. If one of diagnosis codes associated with A20 (SAM) is generated, make a system diagnosis according to the diagnosis code. Go to Step2

https://truckmanualshub.com/

Inspection procedure	Step2	Inspection procedure Turn the starter switch in OFF. Remove the connector of A4 (Combustion engine Control unit). Remove the connector of K30 (Fuel heater relay). Remove the connector of A20 (SAM). Check the circuit across A20.X2.14/4 and K30.5/3 for open or short circuit. Check the circuit across A4.X2.94/90 and K30.5/1 for open or short circuit. Check the circuit across K30.5/5 and A20.X1.18/5 for open or short circuit. Make a visual check on each connector. Is any abnormality recognized? No: Go to Step3 Yes: Go to Step8
	Step3	Inspection procedure Turn the starter switch in OFF. Replace component “K30 (Fuel heater relay)”. Reinstall all the removed connectors. Turn the starter switch in ON. Go to Step4
	Step4	Inspect or verify the following items. Repair or replace faulty items as necessary. Go to Step5
	Step5	Inspection procedure Turn the starter switch in OFF. Reinstall all the removed connectors. Erase fault memory and perform a test drive. Check if this diagnosis code has occurred. Are current fault codes present? No: Go to Step7 Yes: Go to Step6
	Step6	Inspection procedure Perform the operation start and replace A4 (Combustion engine Control unit). Go to Step7
	Step7	Inspection completed
	Step8	Inspection procedure Turn the starter switch in OFF. Remove the connector of A4 (Combustion engine Control unit). Remove the connector of X43 (Intermediate connector). Check the circuit across A4.X2.94/90 and X43.2/2 for open or short circuit. Make a visual check on each connector. Is any abnormality recognized? No: Go to Step9 Yes: Go to Step10
	Step9	Inspection procedure Repair or replace the harness across K30 (Fuel heater relay) and X43 (Intermediate connector). Repair or replace the harness across K30 (Fuel heater relay) and A20 (SAM). Reinstall all the removed connectors. Erase fault memory and perform a test drive. Check if this diagnosis code has occurred. Are current fault codes present? No: Go to Step7 Yes: Go to Step3
	Step10	Inspection procedure Repair or replace the harness across A4 (Combustion engine Control unit) and X43 (Intermediate connector). Reinstall all the removed connectors. Erase fault memory and perform a test drive. Check if this diagnosis code has occurred. Are current fault codes present? No: Go to Step7 Yes: Go to Step3

https://truckmanualshub.com/

4009-5: Component Fuel filter heater has a no load error.

Generation condition		[Test Condition] • Monitoring is active while the battery voltage is over 10.00V, as long as the battery voltage is over 10.00V and 2.00s after this threshold has been exceeded, if none of the CAN controllers is in bus-off state and 2.00s after last CAN controller is no more in bus-off state • Monitoring only active if power stage NOT actuated, i.e. filter heating NOT active, i.e. Fuel temp > 4.96°C {40.93°F} or engine cranking or engine speed < 5.00rpm • Battery voltage > 9.50V (switch off < 9.00V) and Test of redundant shut-off paths not active)
		[Fault Detection] • The power stage hardware reports a “no load” (OL) error.
		[Defect Debouncing] • Defect condition exceeded cumulatively > 500.00ms • Failure is detected if active for 25% of the time
Fault healing		• To give the possibility for healing, an electric impulse is sent to power stage each 1000.00ms 5.00- times in actual driving cycle. Failure healed, if the power stage does not report an “open load” (OL) error. Else no healing possible at this driving cycle.
System reaction		• Power stage is shut-off, i.e no fuel heating possible.
Failure cause		• Broken or disconnected wiring or defective fuel filter heater.
Failure repair		• Check of wiring or replace fuel filter heater
Inspection procedure	Step1	Inspect or verify the following items. Repair or replace faulty items as necessary. If one of diagnosis codes associated with A20 (SAM) is generated, make a system diagnosis according to the diagnosis code. Go to Step2
	Step2	Inspection procedure Turn the starter switch in OFF. Remove the connector of A4 (Combustion engine Control unit). Remove the connector of K30 (Fuel heater relay). Remove the connector of A20 (SAM). Check the circuit across A20.X2.14/4 and K30.5/3 for open or short circuit. Check the circuit across A4.X2.94/90 and K30.5/1 for open or short circuit. Check the circuit across K30.5/5 and A20.X1.18/5 for open or short circuit. Make a visual check on each connector. Is any abnormality recognized? No: Go to Step3 Yes: Go to Step8
	Step3	Inspection procedure Turn the starter switch in OFF. Replace component “K30 (Fuel heater relay)”. Reinstall all the removed connectors. Turn the starter switch in ON. Go to Step4
	Step4	Inspect or verify the following items. Repair or replace faulty items as necessary. Go to Step5
	Step5	Inspection procedure Turn the starter switch in OFF. Reinstall all the removed connectors. Erase fault memory and perform a test drive. Check if this diagnosis code has occurred. Are current fault codes present? No: Go to Step7 Yes: Go to Step6
	Step6	Inspection procedure Perform the operation start and replace A4 (Combustion engine Control unit). Go to Step7
	Step7	Inspection completed

https://truckmanualshub.com/

Inspection procedure	Step8	Inspection procedure Turn the starter switch in OFF. Remove the connector of A4 (Combustion engine Control unit). Remove the connector of X43 (Intermediate connector). Check the circuit across A4.X2.94/90 and X43.2/2 for open or short circuit. Make a visual check on each connector. Is any abnormality recognized? No: Go to Step9 Yes: Go to Step10
	Step9	Inspection procedure Repair or replace the harness across K30 (Fuel heater relay) and X43 (Intermediate connector). Repair or replace the harness across K30 (Fuel heater relay) and A20 (SAM). Reinstall all the removed connectors. Erase fault memory and perform a test drive. Check if this diagnosis code has occurred. Are current fault codes present? No: Go to Step7 Yes: Go to Step3
	Step10	Inspection procedure Repair or replace the harness across A4 (Combustion engine Control unit) and X43 (Intermediate connector). Reinstall all the removed connectors. Erase fault memory and perform a test drive. Check if this diagnosis code has occurred. Are current fault codes present? No: Go to Step7 Yes: Go to Step3

4009-12: Component 'Fuel filter heater' signals overtemperature.

Generation condition		[Test Condition] • Monitoring is active while the battery voltage is over 10.00V, as long as the battery voltage is over 10.00V and 2.00s after this threshold has been exceeded, if none of the CAN controllers is in bus-off state and 2.00s after last CAN controller is no more in bus-off state • Monitoring only active if power stage actuated, i.e. filter heating active, i.e. Fuel temp < -3.04°C {26.53°F} (switch off at > 4.96°C {40.93°F}) AND engine NOT cranking AND engine speed > 5.00rpm • Battery voltage > 9.50V (switch off < 9.00V) and Test of redundant shut-off paths not active)
		[Fault Detection] • Hardware reports an over temperature error (OT) on the power stage for the Fuel Filter heater.
		[Defect Debouncing] • Defect condition exceeded cumulatively > 510.00ms • Failure is detected if active for 25% of the time
Fault healing		• To give the possibility for healing, an electric impulse is sent to power stage each 1.00s 5.00- times in actual driving cycle. Failure healed, if the power stage does not report an "short to ground" (SCG) error. Else no healing possible at this driving cycle.
System reaction		• Power stage is shut-off (Exhaust Flap in open position).
Failure cause		• High battery voltage, high temperature inside ECU, high load or wiring problem
Failure repair		• Check load and output, check wiring, replace ECU
Inspection procedure	Step1	Inspect or verify the following items. Repair or replace faulty items as necessary. If one of diagnosis codes associated with A20 (SAM) is generated, make a system diagnosis according to the diagnosis code. Go to Step2

https://truckmanualshub.com/

Inspection procedure	Step2	Inspection procedure Turn the starter switch in OFF. Remove the connector of A4 (Combustion engine Control unit). Remove the connector of K30 (Fuel heater relay). Remove the connector of A20 (SAM). Check the circuit across A20.X2.14/4 and K30.5/3 for open or short circuit. Check the circuit across A4.X2.94/90 and K30.5/1 for open or short circuit. Check the circuit across K30.5/5 and A20.X1.18/5 for open or short circuit. Make a visual check on each connector. Is any abnormality recognized? No: Go to Step3 Yes: Go to Step8
	Step3	Inspection procedure Turn the starter switch in OFF. Replace component “K30 (Fuel heater relay)”. Reinstall all the removed connectors. Turn the starter switch in ON. Go to Step4
	Step4	Inspect or verify the following items. Repair or replace faulty items as necessary. Go to Step5
	Step5	Inspection procedure Turn the starter switch in OFF. Reinstall all the removed connectors. Erase fault memory and perform a test drive. Check if this diagnosis code has occurred. Are current fault codes present? No: Go to Step7 Yes: Go to Step6
	Step6	Inspection procedure Perform the operation start and replace A4 (Combustion engine Control unit). Go to Step7
	Step7	Inspection completed
	Step8	Inspection procedure Turn the starter switch in OFF. Remove the connector of A4 (Combustion engine Control unit). Remove the connector of X43 (Intermediate connector). Check the circuit across A4.X2.94/90 and X43.2/2 for open or short circuit. Make a visual check on each connector. Is any abnormality recognized? No: Go to Step9 Yes: Go to Step10
	Step9	Inspection procedure Repair or replace the harness across K30 (Fuel heater relay) and X43 (Intermediate connector). Repair or replace the harness across K30 (Fuel heater relay) and A20 (SAM). Reinstall all the removed connectors. Erase fault memory and perform a test drive. Check if this diagnosis code has occurred. Are current fault codes present? No: Go to Step7 Yes: Go to Step3
	Step10	Inspection procedure Repair or replace the harness across A4 (Combustion engine Control unit) and X43 (Intermediate connector). Reinstall all the removed connectors. Erase fault memory and perform a test drive. Check if this diagnosis code has occurred. Are current fault codes present? No: Go to Step7 Yes: Go to Step3

https://truckmanualshub.com/

4094-2: DEF quality deviate from standard.Data erratic, intermittent or incorrect

Generation condition		[Test Condition] • DEF tank refill is detected (current level > older stored level)
		[Fault Detection] • To detect this failure following conditions must be fulfilled: • after 10.00min (running time with active injection) the difference between stored and actual factor value > -262144.00- • after 20.00min (running time with active injection) the difference between stored and actual factor value > -262144.00- • the FID (FId_SCRCtlUrQlActActv) is activated via a failure (e.g. NOx Level monitoring)
		[Defect Debouncing] • Defect condition fulfilled continuously >500.0 ms
Fault healing		• the failure with activates the FID (FId_SCRCtlUrQlActActv) is healed
System reaction		• None except FIDs
		• 1) FId / Function Identifier to trigger Moderate Warning level for Status Block 3
Failure cause		• DEF quality deviating from standard
Failure repair		• Check DEF quality in the tank
Inspection procedure	Step1	Inspection procedure Inspect the suspected factors mentioned above sequentially to locate faulty parts. Repair or replace the faulty part as necessary.

520192-20: Air flow meter: AFS correction at low idle exceeds drift limitMaximum value

Generation condition	[Test Condition] • Monitoring is active if the ECU is not in afterrun • Continuously
	[Fault Detection] • The new learned correction factor is compared to the old one, its variation is limited at 0.03- • The calculated and limited correction factor at low-idle (AFS_facIdlAdjVal_mp) for the current driving cycle exceeds 0.16-
	[Defect Debouncing] • None
Fault healing	• No healing possible in the current driving cycle. • The new learned correction factor lies below the limit 0.16-
System reaction	• None (except Fids).
	• 1) Fid / SCR Monitoring or DEF injection release not possible (according calibration of Release Masks) • 2) FId / Monitoring of particulate filter (DPF) by comparing the calculated flow resistance with measured pressure drop disabled • 3) FId / Inhibit DPF monitor • 4) FId / Zero Fuel Calibration (ZFC) of injectors by Lambda Sensor signal disabled • 5) FId / Particulate filter ((DPF) Regeneration inhibited • 6) FId / Service regeneration of Particulate filter ((DPF) inhibited (due to DPF failure) • 7) FId / Inhibit Charged Air Cooler monitoring
Failure cause	• Fouling or blockage of the air mass sensor, inaccurate sensor due to ageing, leakage or obstruction in the intake duct, jammed EGR actuator, defective VTG/WG
Failure repair	• Clean sensor and check intake system, replace air mass sensor if necessary, check EGR actuators and boost pressure actuator. • Reinitialize drift compensation values using UDS service Routine Control (Id $0242)

https://truckmanualshub.com/

Inspection procedure	Step1	Inspect or verify the following items. Repair or replace faulty items as necessary. If Intake system fault has occurred, check the system in question. If EGR system fault has occurred, check the system in question. If Turbocharger system fault has occurred, check the system in question. For procedures, refer to the Shop Manual.
	Step2	Inspect or verify the following items. Repair or replace faulty items as necessary. If one of diagnosis codes associated with EGR system is generated, make a system diagnosis according to the diagnosis code. If one of diagnosis codes associated with Turbocharger system is generated, make a system diagnosis according to the diagnosis code. Go to Step3
	Step3	Inspect or verify the following items. Repair or replace faulty items as necessary. If one of diagnosis codes associated with A20 (SAM) is generated, make a system diagnosis according to the diagnosis code. Go to Step4
	Step4	Inspection procedure Turn the starter switch in OFF. Remove the connector of A4 (Combustion engine Control unit). Remove the connector of B18 (Air flow and intake air temperature sensor). Remove the connector of A20 (SAM). Check the circuit across A4.X1.60/42 and B18.4/3 for open or short circuit. Check the circuit across A4.X1.60/38 and B18.4/4 for open or short circuit. Check the circuit across A4.X1.60/44 and B18.4/2 for open or short circuit. Check the circuit across A20.X10.14/2 and B18.4/1 for open or short circuit. Make a visual check on each connector. Is any abnormality recognized? No: Go to Step5 Yes: Go to Step10
	Step5	Inspection procedure Turn the starter switch in OFF. Replace component “B18 (Air flow and intake air temperature sensor)”. Reinstall all the removed connectors. Turn the starter switch in ON. Perform the learned value resetting procedure of B18 (Air flow and intake air temperature sensor) which A4 (Combustion engine Control unit) learns. Go to Step6
	Step6	Inspection procedure Turn the starter switch in OFF. Reinstall all the removed connectors. Erase fault memory and perform a test drive. Check if this diagnosis code has occurred. Are current fault codes present? No: Go to Step9 Yes: Go to Step7
	Step7	Inspect or verify the following items. Repair or replace faulty items as necessary. If Intake system fault has occurred, check the system in question. If EGR system fault has occurred, check the system in question. If Turbocharger system fault has occurred, check the system in question. For procedures, refer to the Shop Manual. Go to Step8
	Step8	Inspection procedure Perform the operation start and replace A4 (Combustion engine Control unit). Go to Step9
	Step9	Inspection completed

https://truckmanualshub.com/

Inspection procedure	Step10	Inspection procedure Turn the starter switch in OFF. Remove the connector of A4 (Combustion engine Control unit). Remove the connector of X39 (Intermediate connector). Remove the connector of A20 (SAM). Check the circuit across A4.X1.60/42 and X39.12/4 for open or short circuit. Check the circuit across A4.X1.60/38 and X39.12/5 for open or short circuit. Check the circuit across A4.X1.60/44 and X39.12/6 for open or short circuit. Make a visual check on each connector. Is any abnormality recognized? No: Go to Step11 Yes: Go to Step12
	Step11	Inspection procedure Repair or replace the harness across B18 (Air flow and intake air temperature sensor) and X39 (Intermediate connector). Reinstall all the removed connectors. Erase fault memory and perform a test drive. Check if this diagnosis code has occurred. Are current fault codes present? No: Go to Step9 Yes: Go to Step5
	Step12	Inspection procedure Repair or replace the harness across A4 (Combustion engine Control unit) and X39 (Intermediate connector). Reinstall all the removed connectors. Erase fault memory and perform a test drive. Check if this diagnosis code has occurred. Are current fault codes present? No: Go to Step9 Yes: Go to Step5

520192-21: Air flow meter: AFS correction at low idle exceeds drift limitMinimum value

Generation condition	[Test Condition] • Monitoring is active if the ECU is not in afterrun • Continuously
	[Fault Detection] • The new learned correction factor is compared to the old one, its variation is limited at 0.03- • The calculated and limited correction factor at low-idle (AFS_facIdlAdjVal_mp) for the current driving cycle is below -0.16-
	[Defect Debouncing] • None
Fault healing	• No healing possible in the current driving cycle. • The new learned correction factor lies above the limit -0.16-
System reaction	• None (except Fids).
	• 1) Fid / SCR Monitoring or DEF injection release not possible (according calibration of Release Masks) • 2) FId / Monitoring of particulate filter (DPF) by comparing the calculated flow resistance with measured pressure drop disabled • 3) FId / Inhibit DPF monitor • 4) FId / Zero Fuel Calibration (ZFC) of injectors by Lambda Sensor signal disabled • 5) FId / Particulate filter ((DPF) Regeneration inhibited • 6) FId / Service regeneration of Particulate filter ((DPF) inhibited (due to DPF failure) • 7) FId / Inhibit Charged Air Cooler monitoring
Failure cause	• Fouling or blockage of the air mass sensor, inaccurate sensor due to ageing, leakage or obstruction in the intake duct, jammed EGR actuator, defective VTG/WG
Failure repair	• Clean sensor and check intake system, replace air mass sensor if necessary, check EGR actuators and boost pressure actuator • Reinitialize drift compensation values using UDS service Routine Control (Id $0242)

https://truckmanualshub.com/

Inspection procedure	Step1	Inspect or verify the following items. Repair or replace faulty items as necessary. If Intake system fault has occurred, check the system in question. If EGR system fault has occurred, check the system in question. If Turbocharger system fault has occurred, check the system in question. For procedures, refer to the Shop Manual.
	Step2	Inspect or verify the following items. Repair or replace faulty items as necessary. If one of diagnosis codes associated with EGR system is generated, make a system diagnosis according to the diagnosis code. If one of diagnosis codes associated with Turbocharger system is generated, make a system diagnosis according to the diagnosis code. Go to Step3
	Step3	Inspect or verify the following items. Repair or replace faulty items as necessary. If one of diagnosis codes associated with A20 (SAM) is generated, make a system diagnosis according to the diagnosis code. Go to Step4
	Step4	Inspection procedure Turn the starter switch in OFF. Remove the connector of A4 (Combustion engine Control unit). Remove the connector of B18 (Air flow and intake air temperature sensor). Remove the connector of A20 (SAM). Check the circuit across A4.X1.60/42 and B18.4/3 for open or short circuit. Check the circuit across A4.X1.60/38 and B18.4/4 for open or short circuit. Check the circuit across A4.X1.60/44 and B18.4/2 for open or short circuit. Check the circuit across A20.X10.14/2 and B18.4/1 for open or short circuit. Make a visual check on each connector. Is any abnormality recognized? No: Go to Step5 Yes: Go to Step10
	Step5	Inspection procedure Turn the starter switch in OFF. Replace component “B18 (Air flow and intake air temperature sensor)”. Reinstall all the removed connectors. Turn the starter switch in ON. Perform the learned value resetting procedure of B18 (Air flow and intake air temperature sensor) which A4 (Combustion engine Control unit) learns. Go to Step6
	Step6	Inspection procedure Turn the starter switch in OFF. Reinstall all the removed connectors. Erase fault memory and perform a test drive. Check if this diagnosis code has occurred. Are current fault codes present? No: Go to Step9 Yes: Go to Step7
	Step7	Inspect or verify the following items. Repair or replace faulty items as necessary. If Intake system fault has occurred, check the system in question. If EGR system fault has occurred, check the system in question. If Turbocharger system fault has occurred, check the system in question. For procedures, refer to the Shop Manual. Go to Step8
	Step8	Inspection procedure Perform the operation start and replace A4 (Combustion engine Control unit). Go to Step9
	Step9	Inspection completed

https://truckmanualshub.com/

Inspection procedure	Step10	Inspection procedure Turn the starter switch in OFF. Remove the connector of A4 (Combustion engine Control unit). Remove the connector of X39 (Intermediate connector). Remove the connector of A20 (SAM). Check the circuit across A4.X1.60/42 and X39.12/4 for open or short circuit. Check the circuit across A4.X1.60/38 and X39.12/5 for open or short circuit. Check the circuit across A4.X1.60/44 and X39.12/6 for open or short circuit. Make a visual check on each connector. Is any abnormality recognized? No: Go to Step11 Yes: Go to Step12
	Step11	Inspection procedure Repair or replace the harness across B18 (Air flow and intake air temperature sensor) and X39 (Intermediate connector). Reinstall all the removed connectors. Erase fault memory and perform a test drive. Check if this diagnosis code has occurred. Are current fault codes present? No: Go to Step9 Yes: Go to Step5
	Step12	Inspection procedure Repair or replace the harness across A4 (Combustion engine Control unit) and X39 (Intermediate connector). Reinstall all the removed connectors. Erase fault memory and perform a test drive. Check if this diagnosis code has occurred. Are current fault codes present? No: Go to Step9 Yes: Go to Step5

520193-20: Air flow meter: AFS correction at load point exceeds drift limitMaximum value

Generation condition	[Test Condition] • Monitoring is active if the ECU is not in afterrun • Continuously
	[Fault Detection] • If following release conditions: • vehicle speed between -1.00km/h and 150km/h {93.2mph} • induction pressure Air_pCACDs is between 100kPa {15psi, 1.0kgf/cm^2} and 3277kPa {475psi, 33kgf/cm^2} • Engine speed Epm_nEng and injection quantity InjCtl_qCurr are within the quantity/engine speed window applied via curves AFS_qWinLdAdjThresHi and AFS_qWinLdAdjThresLo. • driving point almost stationary • no drift compensation already carried out in current driving cycle • The new learned correction factor under load condition is compared to the old one, its variation is limited at 0.03- • The calculated and limited correction factor (AFS_facLdAdjVal_mp) for the current driving cycle exceeds 0.16-
	[Defect Debouncing] • None
Fault healing	• No healing possible in the current driving cycle. • The new learned correction factor lies below the limit 0.16-
System reaction	• None (except Fids).
	• 1) Fid / SCR Monitoring or DEF injection release not possible (according calibration of Release Masks) • 2) FId / Monitoring of particulate filter (DPF) by comparing the calculated flow resistance with measured pressure drop disabled • 3) FId / Inhibit DPF monitor • 4) FId / Zero Fuel Calibration (ZFC) of injectors by Lambda Sensor signal disabled • 5) FId / Particulate filter ((DPF) Regeneration inhibited • 6) FId / Service regeneration of Particulate filter ((DPF) inhibited (due to DPF failure) • 7) FId / Inhibit Charged Air Cooler monitoring

https://truckmanualshub.com/

Failure cause		• Fouling or blockage of the air mass sensor, inaccurate sensor due to ageing, leakage or obstruction in the intake duct, jammed EGR actuator, defective VTG/WG
Failure repair		• Clean sensor and check intake system, replace air mass sensor if necessary, check EGR actuators and boost pressure actuator. • Reinitialize drift compensation values using UDS service Routine Control (Id $0242)
Inspection procedure	Step1	Inspect or verify the following items. Repair or replace faulty items as necessary. If Intake system fault has occurred, check the system in question. If EGR system fault has occurred, check the system in question. If Turbocharger system fault has occurred, check the system in question. For procedures, refer to the Shop Manual.
	Step2	Inspect or verify the following items. Repair or replace faulty items as necessary. If one of diagnosis codes associated with EGR system is generated, make a system diagnosis according to the diagnosis code. If one of diagnosis codes associated with Turbocharger system is generated, make a system diagnosis according to the diagnosis code. Go to Step3
	Step3	Inspect or verify the following items. Repair or replace faulty items as necessary. If one of diagnosis codes associated with A20 (SAM) is generated, make a system diagnosis according to the diagnosis code. Go to Step4
	Step4	Inspection procedure Turn the starter switch in OFF. Remove the connector of A4 (Combustion engine Control unit). Remove the connector of B18 (Air flow and intake air temperature sensor). Remove the connector of A20 (SAM). Check the circuit across A4.X1.60/42 and B18.4/3 for open or short circuit. Check the circuit across A4.X1.60/38 and B18.4/4 for open or short circuit. Check the circuit across A4.X1.60/44 and B18.4/2 for open or short circuit. Check the circuit across A20.X10.14/2 and B18.4/1 for open or short circuit. Make a visual check on each connector. Is any abnormality recognized? No: Go to Step5 Yes: Go to Step10
	Step5	Inspection procedure Turn the starter switch in OFF. Replace component “B18 (Air flow and intake air temperature sensor)”. Reinstall all the removed connectors. Turn the starter switch in ON. Perform the learned value resetting procedure of B18 (Air flow and intake air temperature sensor) which A4 (Combustion engine Control unit) learns. Go to Step6
	Step6	Inspection procedure Turn the starter switch in OFF. Reinstall all the removed connectors. Erase fault memory and perform a test drive. Check if this diagnosis code has occurred. Are current fault codes present? No: Go to Step9 Yes: Go to Step7
	Step7	Inspect or verify the following items. Repair or replace faulty items as necessary. If Intake system fault has occurred, check the system in question. If EGR system fault has occurred, check the system in question. If Turbocharger system fault has occurred, check the system in question. For procedures, refer to the Shop Manual. Go to Step8
	Step8	Inspection procedure Perform the operation start and replace A4 (Combustion engine Control unit). Go to Step9

https://truckmanualshub.com/

Inspection procedure	Step9	Inspection completed
	Step10	Inspection procedure Turn the starter switch in OFF. Remove the connector of A4 (Combustion engine Control unit). Remove the connector of X39 (Intermediate connector). Remove the connector of A20 (SAM). Check the circuit across A4.X1.60/42 and X39.12/4 for open or short circuit. Check the circuit across A4.X1.60/38 and X39.12/5 for open or short circuit. Check the circuit across A4.X1.60/44 and X39.12/6 for open or short circuit. Make a visual check on each connector. Is any abnormality recognized? No: Go to Step11 Yes: Go to Step12
	Step11	Inspection procedure Repair or replace the harness across B18 (Air flow and intake air temperature sensor) and X39 (Intermediate connector). Reinstall all the removed connectors. Erase fault memory and perform a test drive. Check if this diagnosis code has occurred. Are current fault codes present? No: Go to Step9 Yes: Go to Step5
	Step12	Inspection procedure Repair or replace the harness across A4 (Combustion engine Control unit) and X39 (Intermediate connector). Reinstall all the removed connectors. Erase fault memory and perform a test drive. Check if this diagnosis code has occurred. Are current fault codes present? No: Go to Step9 Yes: Go to Step5

https://truckmanualshub.com/

520193-21: Air flow meter: AFS correction at load point exceeds drift limitMinimum value

Generation condition	[Test Condition] • Monitoring is active if the ECU is not in afterrun • Continuously
	[Fault Detection] • If following release conditions: • vehicle speed between -1.00km/h and 150km/h {93.2mph} • induction pressure Air_pCACDs is between 100kPa {15psi, 1.0kgf/cm^2} and 3277kPa {475psi, 33kgf/cm^2} • Engine speed Epm_nEng and injection quantity InjCtl_qCurr are within the quantity/engine speed window applied via curves AFS_qWinLdAdjThresHi and AFS_qWinLdAdjThresLo. • driving point almost stationary • no drift compensation already carried out in current driving cycle • The new learned correction factor under load condition is compared to the old one, its variation is limited at 0.03- • The calculated and limited correction factor (AFS_facLdAdjVal_mp) for the current driving cycle is lower than -0.16-
	[Defect Debouncing] • None
Fault healing	• No healing possible in the current driving cycle. • The new learned correction factor lies above the limit -0.16-
System reaction	• None (except Fids).
	• 1) Fid / SCR Monitoring or DEF injection release not possible (according calibration of Release Masks) • 2) FId / Monitoring of particulate filter (DPF) by comparing the calculated flow resistance with measured pressure drop disabled • 3) FId / Inhibit DPF monitor • 4) FId / Zero Fuel Calibration (ZFC) of injectors by Lambda Sensor signal disabled • 5) FId / Particulate filter ((DPF) Regeneration inhibited • 6) FId / Service regeneration of Particulate filter ((DPF) inhibited (due to DPF failure) • 7) FId / Inhibit Charged Air Cooler monitoring
Failure cause	• Fouling or blockage of the air mass sensor, inaccurate sensor due to ageing, leakage or obstruction in the intake duct, jammed EGR actuator, defective VTG/WG
Failure repair	• Clean sensor and check intake system, replace air mass sensor if necessary, check EGR actuators and boost pressure actuator. • Reinitialize drift compensation values using UDS service Routine Control (Id $0242)

https://truckmanualshub.com/

Inspection procedure	Step1	Inspect or verify the following items. Repair or replace faulty items as necessary. If Intake system fault has occurred, check the system in question. If EGR system fault has occurred, check the system in question. If Turbocharger system fault has occurred, check the system in question. For procedures, refer to the Shop Manual.
	Step2	Inspect or verify the following items. Repair or replace faulty items as necessary. If one of diagnosis codes associated with EGR system is generated, make a system diagnosis according to the diagnosis code. If one of diagnosis codes associated with Turbocharger system is generated, make a system diagnosis according to the diagnosis code. Go to Step3
	Step3	Inspect or verify the following items. Repair or replace faulty items as necessary. If one of diagnosis codes associated with A20 (SAM) is generated, make a system diagnosis according to the diagnosis code. Go to Step4
	Step4	Inspection procedure Turn the starter switch in OFF. Remove the connector of A4 (Combustion engine Control unit). Remove the connector of B18 (Air flow and intake air temperature sensor). Remove the connector of A20 (SAM). Check the circuit across A4.X1.60/42 and B18.4/3 for open or short circuit. Check the circuit across A4.X1.60/38 and B18.4/4 for open or short circuit. Check the circuit across A4.X1.60/44 and B18.4/2 for open or short circuit. Check the circuit across A20.X10.14/2 and B18.4/1 for open or short circuit. Make a visual check on each connector. Is any abnormality recognized? No: Go to Step5 Yes: Go to Step10
	Step5	Inspection procedure Turn the starter switch in OFF. Replace component “B18 (Air flow and intake air temperature sensor)”. Reinstall all the removed connectors. Turn the starter switch in ON. Perform the learned value resetting procedure of B18 (Air flow and intake air temperature sensor) which A4 (Combustion engine Control unit) learns. Go to Step6
	Step6	Inspection procedure Turn the starter switch in OFF. Reinstall all the removed connectors. Erase fault memory and perform a test drive. Check if this diagnosis code has occurred. Are current fault codes present? No: Go to Step9 Yes: Go to Step7
	Step7	Inspect or verify the following items. Repair or replace faulty items as necessary. If Intake system fault has occurred, check the system in question. If EGR system fault has occurred, check the system in question. If Turbocharger system fault has occurred, check the system in question. For procedures, refer to the Shop Manual. Go to Step8
	Step8	Inspection procedure Perform the operation start and replace A4 (Combustion engine Control unit). Go to Step9

https://truckmanualshub.com/

Inspection procedure	Step9	Inspection completed
	Step10	Inspection procedure Turn the starter switch in OFF. Remove the connector of A4 (Combustion engine Control unit). Remove the connector of X39 (Intermediate connector). Remove the connector of A20 (SAM). Check the circuit across A4.X1.60/42 and X39.12/4 for open or short circuit. Check the circuit across A4.X1.60/38 and X39.12/5 for open or short circuit. Check the circuit across A4.X1.60/44 and X39.12/6 for open or short circuit. Make a visual check on each connector. Is any abnormality recognized? No: Go to Step11 Yes: Go to Step12
	Step11	Inspection procedure Repair or replace the harness across B18 (Air flow and intake air temperature sensor) and X39 (Intermediate connector). Reinstall all the removed connectors. Erase fault memory and perform a test drive. Check if this diagnosis code has occurred. Are current fault codes present? No: Go to Step9 Yes: Go to Step5
	Step12	Inspection procedure Repair or replace the harness across A4 (Combustion engine Control unit) and X39 (Intermediate connector). Reinstall all the removed connectors. Erase fault memory and perform a test drive. Check if this diagnosis code has occurred. Are current fault codes present? No: Go to Step9 Yes: Go to Step5

https://truckmanualshub.com/

520195-20: Air flow meter: Sensitivity drift error for HFM sensorHIGH

Generation condition	[Test Condition] • Monitoring is active while the engine isn't cranking, 2.00s after engine start-up and if the ECU is not in afterrun • Drift test not inhibited by FID_AFSActrTst by tester intervention or by FID_AFSPlSetyDrft due to another failure. • Operation not in high altitude, i.e ambient pressure > 80kPa {12psi, 0.8kgf/cm^2}. • Engine in normal operation since at least 6.00s. • Engine temperature between 68.46°C {155.23°F} and 111.96°C {233.53°F} • Engine in steady state, i.e. the Boost air temperature variation between -1000°C {-1768°F}/s and 1000°C {1832°F}/s • Fuel injection quantity < 100.00mg/hub and engine speed between 620.00rpm and 840.00rpm. • Boost pressure < 104kPa {15psi, 1.1kgf/cm^2} • If available EGR throttle valve open, i.e. between -10.00% and 105.00% resp. the exhaust break flap position between 98.00% and 105.00% longer than 2.00s. • If available, throttle for variable swirl control between -10.00% and 110.00%. • EGR valve closed, i.e. between 105.00% and 98.00% since at least 2.00s: this is normally only the case during drift compensation learning at idle or at high engine speed, each once per driving cycle! Drift compensation is released and EGR valve closed for 13.00s (idle) resp. for 1.70s (high load), if all following conditions are met in addition to the above mentioned conditions for at least 1000.00ms: • Boost air temperature between -3549.94°C {-6357.89°F} and 3003.56°C {5438.41°F}. • Ambient temperature between -0.04°C {31.93°F} and 39.96°C {103.93°F}. • The engine is running in normal state since at least 14.00min. • Drift compensation not inhibited by FID_AFSAdjRls due to another failure • ambient pressure > 81kPa {12psi, 0.8kgf/cm^2} • And for correction at idle: • Difference between boost pressure and ambient pressure <3277kPa {475psi, 33kgf/cm^2} (i.e no boost pressure) • Injection quantity between 2.50mg/hub and 25.00mg/hub. • Engine speed between 600.00rpm and 850.00rpm. • no drift correction at idle executed this driving cycle. And for correction at High Load: • Vehicle speed between -1.00km/h and 150km/h {93.2mph} • Boost pressure between 100kPa {15psi, 1.0kgf/cm^2} and 3277kPa {475psi, 33kgf/cm^2}. • Fuel injection quantity between engine speed dependant limits: • between 100.00mg/hub at 2250.00rpm and 100.00mg/hub at 2250.00rpm • between 55.00mg/hub at 2900.00rpm and 100.00mg/hub at 2750.00rpm • between 47.07mg/hub at 3500.00rpm and 72.00mg/hub at 3500.00rpm • between 0.00mg/hub at 4000.00rpm and 0.00mg/hub at 4000.00rpm • Engine steady state, i.e. variation of boost pressure (filtered by 500.00ms)< 49.997kPa {7.2psi, 0.5kgf/cm^2}/s, of fuel injection (filtered by 2.00s) < 4.00(mg/stroke)/s and engine speed (filtered by 999.99ms) < 180.00rpm/s • No drift compensation under load executed this driving cycle.
	[Fault Detection] • The ratio (filtered by 299.99ms) of measured air mass flow divided by modelled air mass flow > value from engine temperature dependent curve, i.e. the measured air flow is too high
	[Defect Debouncing] • Debounce time engine temperature dependent
Fault healing	• The ratio (filtered by 299.99ms) of measured air mass flow divided by modelled air mass flow < value from engine temperature dependent curve, i.e. the measured air flow is in range

https://truckmanualshub.com/

		• No substitute function is active during defect debouncing. After the defect debouncing time has elapsed, switchover to the modelled replace value ASMod_dmIndAirRef or, if the model cannot be used because of another failure (FId_AFSSysErr present) a replacement value from a map depending on engine speed and pressure in the induction volume is used.
System reaction		• 1) FId / Air mass flow calculated by gas equation (boost pressure, boost temperature, engine speed) instead of measuring by air flow meter (HFM/AFS) • 2) FId / EGR switched off • 3) FId / Inhibit ISS, max number of engine starts exceeded • 4) FId / Deactivates NOx monitoring • 5) FId / Replacement value for OxiCat temperature downstream used for modelling • 6) FId / Particulate filter ((DPF) Regeneration inhibited • 7) FId / Service regeneration of Particulate filter ((DPF) inhibited (due to DPF failure) • 8) FId / Dynamic soot mass flow correction for particulate filter (DPF) inhibited • 9) FId / Reciprocal lambda signal replaced by substitute value for modelling • 10) FId / Dew Point detection for Lambda Sensor (LSU) not possible - LSU Heater switched on after a fix time • 11) Fid / SCR Monitoring or DEF injection release not possible (according calibration of Release Masks) • 12) FId / Adaptation of the correction values of Fuel Mass Observer (FMO) inhibited (no correction of detected deviation between injected fuel and Lambda sensor signal) • 13) FId / Fuel Mass Observer (FMO) switched off (no monitoring of injected fuel by Lambda sensor) • 14) FId / The Adaptation of lambda Sensor disabled • 15) FId / The Difference Check between several Lambda Sensors is disabled • 16) FId / Dynamic Signal Monitoring of Lambda Sensor disabled • 17) FId / Electrical Open Load Check of Lambda Sensor disabled • 18) FId / Plausibility Check of O2-Signal of Lambda Sensor (e.g. with HFM or Air calculation by Boost pressure) is disabled and last valid value taken • 19) FId / Correction of begin of Main injection 1 according deviation of air flow disabled • 20) FId / Monitoring of particulate filter (DPF) by comparing the calculated flow resistance with measured pressure drop disabled • 21) FId / Inhibit DPF monitor • 22) FId / Monitoring for the destroyed particle filter (DPF) by minimal flow resistance disabled • 23) FId / Substitute calibration array is used to determinate the regeneration lock-out time of particulate filter (DPF) • 24) FId / Substitute parameter set of maximum values is used for the calculation of fuel consumption, operating hours and distance covered since the last successful regeneration of particulate filter (DPF) • 25) FId / Soot mass calculation of particulate filter (DPF) deactivated, only simulation is used. • 26) FId / Friction torque due to particulate filter (DPF) flow resistance set to • 27) FId / Zero Fuel Calibration (ZFC) of injectors by Lambda Sensor signal disabled • 28) FId / Status of function identifier FId_EngDemTrqLimErr5 • 29) FId / Engine speed Limitation 2 for HIgh/Low engine speed (HLS) control active
Failure cause		• Defect in wiring, inaccurate or defective air mass sensor, leakage or obstruction in the intake duct, defective VTG/WG
Failure repair		• Check wiring of the intake air mass sensor and its accuracy and replace it if necessary, check intake duct and boost pressure actuator. • Reset HFM learning drift correction factors using UDS service Routine Control (Id $0242)
Inspection procedure	Step1	Inspect or verify the following items. Repair or replace faulty items as necessary. If Intake system fault has occurred, check the system in question. If Turbocharger system fault has occurred, check the system in question. For procedures, refer to the Shop Manual.

https://truckmanualshub.com/

Inspection procedure	Step2	Inspect or verify the following items. Repair or replace faulty items as necessary. If any other fault code has occurred, perform the diagnostics procedure for the fault code. Go to Step3
	Step3	Inspect or verify the following items. Repair or replace faulty items as necessary. If one of diagnosis codes associated with A20 (SAM) is generated, make a system diagnosis according to the diagnosis code. Go to Step4
	Step4	Inspection procedure Turn the starter switch in OFF. Remove the connector of A4 (Combustion engine Control unit). Remove the connector of B18 (Air flow and intake air temperature sensor). Remove the connector of A20 (SAM). Check the circuit across A4.X1.60/42 and B18.4/3 for open or short circuit. Check the circuit across A4.X1.60/38 and B18.4/4 for open or short circuit. Check the circuit across A4.X1.60/44 and B18.4/2 for open or short circuit. Check the circuit across A20.X10.14/2 and B18.4/1 for open or short circuit. Make a visual check on each connector. Is any abnormality recognized? No: Go to Step5 Yes: Go to Step10
	Step5	Inspection procedure Turn the starter switch in OFF. Replace component “B18 (Air flow and intake air temperature sensor)”. Reinstall all the removed connectors. Turn the starter switch in ON. Perform the learned value resetting procedure of B18 (Air flow and intake air temperature sensor) which A4 (Combustion engine Control unit) learns. Go to Step6
	Step6	Inspection procedure Turn the starter switch in OFF. Reinstall all the removed connectors. Erase fault memory and perform a test drive. Check if this diagnosis code has occurred. Are current fault codes present? No: Go to Step9 Yes: Go to Step7
	Step7	Inspect or verify the following items. Repair or replace faulty items as necessary. If Intake system fault has occurred, check the system in question. If Turbocharger system fault has occurred, check the system in question. For procedures, refer to the Shop Manual. Go to Step8
	Step8	Inspection procedure Perform the operation start and replace A4 (Combustion engine Control unit). Go to Step9
	Step9	Inspection completed
	Step10	Inspection procedure Turn the starter switch in OFF. Remove the connector of A4 (Combustion engine Control unit). Remove the connector of X39. Remove the connector of A20 (SAM). Check the circuit across A4.X1.60/42 and X39.12/4 for open or short circuit. Check the circuit across A4.X1.60/38 and X39.12/5 for open or short circuit. Check the circuit across A4.X1.60/44 and X39.12/6 for open or short circuit. Make a visual check on each connector. Is any abnormality recognized? No: Go to Step11 Yes: Go to Step12

https://truckmanualshub.com/

Inspection procedure	Step11	Inspection procedure Repair or replace the harness across B18 (Air flow and intake air temperature sensor) and X39. Reinstall all the removed connectors. Erase fault memory and perform a test drive. Check if this diagnosis code has occurred. Are current fault codes present? No: Go to Step9 Yes: Go to Step5
	Step12	Inspection procedure Repair or replace the harness across A4 (Combustion engine Control unit) and X39. Reinstall all the removed connectors. Erase fault memory and perform a test drive. Check if this diagnosis code has occurred. Are current fault codes present? No: Go to Step9 Yes: Go to Step5

https://truckmanualshub.com/

520195-21: The wiring of component Air flow meter is faulty./ Component Air flow meter has a mechanical defect.

Generation condition	[Test Condition] • Monitoring is active while the engine isn't cranking, 2.00s after engine start-up and if the ECU is not in afterrun • Drift test not inhibited by FID_AFSActrTst by tester intervention or by FID_AFSPlSetyDrft due to another failure. • Operation not in high altitude, i.e ambient pressure > 80kPa {12psi, 0.8kgf/cm^2}. • Engine in normal operation since at least 6.00s. • Engine temperature between 68.46°C {155.23°F} and 111.96°C {233.53°F} • Engine in steady state, i.e. the Boost air temperature variation between -1000°C {-1768°F}/s and 1000°C {1832°F}/s • Fuel injection quantity < 100.00mg/hub and engine speed between 620.00rpm and 840.00rpm. • Boost pressure > 80kPa {12psi, 0.8kgf/cm^2} • If available EGR throttle valve open, i.e. between -10.00% and 105.00% resp. the exhaust break flap position between 98.00% and 105.00% longer than 2.00s. • If available, throttle for variable swirl control between -10.00% and 110.00%. • EGR valve closed, i.e. between 98.00% and 105.00% since at least 2.00s: this is normally only the case during drift compensation learning at idle or at high engine speed, each once per driving cycle! Drift compensation is released and EGR valve closed for 13.00s (idle) resp. for 1.70s (high load), if all following conditions are met in addition to the above mentioned conditions for at least 1000.00ms: • Boost air temperature between -3549.94°C {-6357.89°F} and 3003.56°C {5438.41°F}. • Ambient temperature between -0.04°C {31.93°F} and 39.96°C {103.93°F}. • The engine is running in normal state since at least 14.00min. • Drift compensation not inhibited by FID_AFSAdjRls due to another failure • ambient pressure > 81kPa {12psi, 0.8kgf/cm^2} • And for correction at idle: • Difference between boost pressure and ambient pressure < 3277kPa {475psi, 33kgf/cm^2} (i.e no boost pressure) • Injection quantity between 2.50mg/hub and 25.00mg/hub. • Engine speed between 600.00rpm and 850.00rpm. • no drift correction at idle executed this driving cycle. And for correction at High Load: • Vehicle speed between -1.00km/h and 150km/h {93.2mph} • Boost pressure between 100kPa {15psi, 1.0kgf/cm^2} and 3277kPa {475psi, 33kgf/cm^2}. • Fuel injection quantity between engine speed dependant limits: • between 100.00mg/hub at 2250.00rpm and 100.00mg/hub at 2250.00rpm • between 55.00mg/hub at 2900.00rpm and 100.00mg/hub at 2750.00rpm • between 47.07mg/hub at 3500.00rpm and 72.00mg/hub at 3500.00rpm • between 0.00mg/hub at 4000.00rpm and 0.00mg/hub at 4000.00rpm • Engine steady state, i.e. variation of boost pressure (filtered by 500.00ms)< 49.997kPa {7.2psi, 0.5kgf/cm^2}/s, of fuel injection (filtered by 2.00s) < 4.00(mg/stroke)/s and engine speed (filtered by 999.99ms) < 180.00rpm/s • No drift compensation under load executed this driving cycle.
	[Fault Detection] • The ratio (filtered by 299.99ms) of measured air mass flow divided by modelled air mass flow < engine temperature dependent curve, i.e. the measured air flow is too low
	[Defect Debouncing] • Debounce time engine temperature dependent
Fault healing	• The ratio (filtered by 299.99ms) of measured air mass flow divided by modelled air mass flow > value from engine temperature dependent curve, i.e. the measured air flow is in range

https://truckmanualshub.com/

		• No substitute function is active during defect debouncing. After the defect debouncing time has elapsed, switchover to the modelled replace value ASMod_dmIndAirRef or, if the model cannot be used because of another failure (FId_AFSSysErr present) a replacement value from a map depending on engine speed and pressure in the induction volume is used.
System reaction		• 1) FId / Air mass flow calculated by gas equation (boost pressure, boost temperature, engine speed) instead of measuring by air flow meter (HFM/AFS) • 2) FId / EGR switched off • 3) FId / Inhibit ISS, max number of engine starts exceeded • 4) FId / Deactivates NOx monitoring • 5) FId / Replacement value for OxiCat temperature downstream used for modelling • 6) FId / Particulate filter ((DPF) Regeneration inhibited • 7) FId / Service regeneration of Particulate filter ((DPF) inhibited (due to DPF failure) • 8) FId / Dynamic soot mass flow correction for particulate filter (DPF) inhibited • 9) FId / Reciprocal lambda signal replaced by substitute value for modelling • 10) FId / Dew Point detection for Lambda Sensor (LSU) not possible - LSU Heater switched on after a fix time • 11) Fid / SCR Monitoring or DEF injection release not possible (according calibration of Release Masks) • 12) FId / Adaptation of the correction values of Fuel Mass Observer (FMO) inhibited (no correction of detected deviation between injected fuel and Lambda sensor signal) • 13) FId / Fuel Mass Observer (FMO) switched off (no monitoring of injected fuel by Lambda sensor) • 14) FId / The Adaptation of lambda Sensor disabled • 15) FId / The Difference Check between several Lambda Sensors is disabled • 16) FId / Dynamic Signal Monitoring of Lambda Sensor disabled • 17) FId / Electrical Open Load Check of Lambda Sensor disabled • 18) FId / Plausibility Check of O2-Signal of Lambda Sensor (e.g. with HFM or Air calculation by Boost pressure) is disabled and last valid value taken • 19) FId / Correction of begin of Main injection 1 according deviation of air flow disabled • 20) FId / Monitoring of particulate filter (DPF) by comparing the calculated flow resistance with measured pressure drop disabled • 21) FId / Inhibit DPF monitor • 22) FId / Monitoring for the destroyed particle filter (DPF) by minimal flow resistance disabled • 23) FId / Substitute calibration array is used to determinate the regeneration lock-out time of particulate filter (DPF) • 24) FId / Substitute parameter set of maximum values is used for the calculation of fuel consumption, operating hours and distance covered since the last successful regeneration of particulate filter (DPF) • 25) FId / Soot mass calculation of particulate filter (DPF) deactivated, only simulation is used. • 26) FId / Friction torque due to particulate filter (DPF) flow resistance set to • 27) FId / Zero Fuel Calibration (ZFC) of injectors by Lambda Sensor signal disabled • 28) FId / Status of function identifier FId_EngDemTrqLimErr5 • 29) FId / Engine speed Limitation 2 for HIgh/Low engine speed (HLS) control active
Failure cause		• Defect in wiring, inaccurate or defective air mass sensor, leakage or obstruction in the intake duct, jammed EGR actuator, defective VTG/WG
Failure repair		• Check wiring of the intake air mass sensor and its accuracy and replace it if necessary, check intake duct, EGR actuators and boost pressure actuator. • Reset HFM learning drift correction factors using UDS service Routine Control (Id $0242)
Inspection procedure	Step1	Inspect or verify the following items. Repair or replace faulty items as necessary. If Intake system fault has occurred, check the system in question. If Turbocharger system fault has occurred, check the system in question. For procedures, refer to the Shop Manual.

https://truckmanualshub.com/

Inspection procedure	Step2	Inspect or verify the following items. Repair or replace faulty items as necessary. If any other fault code has occurred, perform the diagnostics procedure for the fault code. Go to Step3
	Step3	Inspect or verify the following items. Repair or replace faulty items as necessary. If one of diagnosis codes associated with A20 (SAM) is generated, make a system diagnosis according to the diagnosis code. Go to Step4
	Step4	Inspection procedure Turn the starter switch in OFF. Remove the connector of A4 (Combustion engine Control unit). Remove the connector of B18 (Air flow and intake air temperature sensor). Remove the connector of A20 (SAM). Check the circuit across A4.X1.60/42 and B18.4/3 for open or short circuit. Check the circuit across A4.X1.60/38 and B18.4/4 for open or short circuit. Check the circuit across A4.X1.60/44 and B18.4/2 for open or short circuit. Check the circuit across A20.X10.14/2 and B18.4/1 for open or short circuit. Make a visual check on each connector. Is any abnormality recognized? No: Go to Step5 Yes: Go to Step10
	Step5	Inspection procedure Turn the starter switch in OFF. Replace component “B18 (Air flow and intake air temperature sensor)”. Reinstall all the removed connectors. Turn the starter switch in ON. Perform the learned value resetting procedure of B18 (Air flow and intake air temperature sensor) which A4 (Combustion engine Control unit) learns. Go to Step6
	Step6	Inspection procedure Turn the starter switch in OFF. Reinstall all the removed connectors. Erase fault memory and perform a test drive. Check if this diagnosis code has occurred. Are current fault codes present? No: Go to Step9 Yes: Go to Step7
	Step7	Inspect or verify the following items. Repair or replace faulty items as necessary. If Intake system fault has occurred, check the system in question. If Turbocharger system fault has occurred, check the system in question. For procedures, refer to the Shop Manual. Go to Step8
	Step8	Inspection procedure Perform the operation start and replace A4 (Combustion engine Control unit). Go to Step9
	Step9	Inspection completed
	Step10	Inspection procedure Turn the starter switch in OFF. Remove the connector of A4 (Combustion engine Control unit). Remove the connector of X39 (Intermediate connector). Remove the connector of A20 (SAM). Check the circuit across A4.X1.60/42 and X39.12/4 for open or short circuit. Check the circuit across A4.X1.60/38 and X39.12/5 for open or short circuit. Check the circuit across A4.X1.60/44 and X39.12/6 for open or short circuit. Make a visual check on each connector. Is any abnormality recognized? No: Go to Step11 Yes: Go to Step12

https://truckmanualshub.com/

Inspection procedure	Step11	Inspection procedure Repair or replace the harness across B18 (Air flow and intake air temperature sensor) and X39 (Intermediate connector). Reinstall all the removed connectors. Erase fault memory and perform a test drive. Check if this diagnosis code has occurred. Are current fault codes present? No: Go to Step9 Yes: Go to Step5
	Step12	Inspection procedure Repair or replace the harness across A4 (Combustion engine Control unit) and X39 (Intermediate connector). Reinstall all the removed connectors. Erase fault memory and perform a test drive. Check if this diagnosis code has occurred. Are current fault codes present? No: Go to Step9 Yes: Go to Step5

520200-2: Faulty component 'Air conditioning' / Faulty component 'Air conditioning switch'

Generation condition		[Test Condition] • Monitoring is active 2.00s after ECU initialization while engine isn't running yet, while the engine isn't cranking, 2.00s after engine startup, while the battery voltage is over 10.00V, as long as the battery voltage is over 10.00V and 2.00s after this threshold has been exceeded, if none of the CAN controllers is in bus-off state, 2.00s after last CAN controller is no more in bus-off state and if the ECU is not in afterrun • Continuously
		[Fault Detection] • If A/C signal is not received via CAN.
		[Defect Debouncing] • Defect condition exceeded cumulatively > 500.00ms • Failure is detected if active for 25% of the time
Fault healing		• If A/C signal is received via CAN
System reaction		• AirC_stSwtPrsis set to the default value 0.00- A/C switch is set at value not present, all monitorings for Air conditioner are shut off • Further reaction see FIDs
		• 1) FId / Set replacement value for AC presence (not present)
Failure cause		• A/C defective, A/C supply defective
Failure repair		• Check A/C supply, check A/C module
Inspection procedure	Step1	Inspection procedure Inspect the suspected factors mentioned above sequentially to locate faulty parts. Repair or replace the faulty part as necessary.

520200-12: Air conditioning: Plausibility error CAN input signals

Generation condition	[Test Condition] • Monitoring is active 2.00s after ECU initialization while engine isn't running yet, while the engine isn't cranking, 2.00s after engine startup, while the battery voltage is over 10.00V, as long as the battery voltage is over 10.00V and 2.00s after this threshold has been exceeded, if none of the CAN controllers is in bus-off state, 2.00s after last CAN controller is no more in bus-off state and if the ECU is not in afterrun • Continuously.
	[Fault Detection] • If A/C signal received via CAN is not plausible (Com_stAC==2).
	[Defect Debouncing] • Defect condition exceeded cumulatively > 500.00ms • Failure is detected if active for 25% of the time
Fault healing	• If A/C signal received via CAN is plausible (Com_stAC==1)

https://truckmanualshub.com/

System reaction		• A/C switch is set at value not present, all monitorings for Air conditioner are shut off • Further reaction see FIDs
		• 1) FId / Set replacement value for AC presence (not present)
Failure cause		• CAN Timeout in message Com_stAC, A/C supply defective, CAN connection problem
Failure repair		• Check presence and correct connection of the A/C, • check A/C voltage supply, check wiring
Inspection procedure	Step1	Inspect or verify the following items. Repair or replace faulty items as necessary. If one of diagnosis codes associated with A7 (Air Conditioning electronic control unit & control panel) is generated, make a system diagnosis according to the diagnosis code. For procedures, refer to the Shop Manual. Go to step2
	Step2	Refer to the help menu for Nos. other than above. *1: M/T *2: DUONIC *3: ISS (With Lock brake) *4: ISS (Without Lock brake) *5: Lock brake (Without ISS) *6: Other than *3,*4,*5 *7: Full-automatic air conditioner *8: Auto leveling *9: Manual leveling Inspection procedure Turn the starter switch in OFF. Remove all ECU connectors from the CAN communication line. Check CAN line for open circuit, short circuit to positive, short circuit to ground or short circuit to another electrical line. Is any abnormality recognized? No: Go to step3 Yes: Go to step6
	Step3	Inspection procedure Attach the connector of A20 (SAM). Check CAN line for open circuit, short circuit to positive, short circuit to ground or short circuit to another electrical line. Is any abnormality recognized? No: Go to step4 Yes: Go to step5
	Step4	Inspection procedure Turn the starter switch in OFF. Reinstall all the removed connectors. Erase fault memory and perform a test drive. If the diagnosis code has occurred even during the test drive, start the operation and then replace the A4 (Combustion engine Control unit). Inspection completed
	Step5	Inspection procedure Turn the starter switch in OFF. Reinstall all the removed connectors. Erase fault memory and perform a test drive. If the diagnosis code has occurred even during the test drive, start the operation and then replace the A20 (SAM). Inspection completed

https://truckmanualshub.com/

Inspection procedure	Step6	Refer to the help menu for Nos. other than above. *1: M/T *2: DUONIC *3: ISS (With Lock brake) *4: ISS (Without Lock brake) *5: Lock brake (Without ISS) *6: Other than *3,*4,*5 *7: Full-automatic air conditioner *8: Auto leveling *9: Manual leveling Inspection procedure Repair or replace electrical lines. Reinstall all the removed connectors. Turn the starter switch in ON. Inspection completed

520203-2: PassiveCAN bus error: NodeA

Generation condition		[Test Condition] • Monitoring is active 2.00s after ECU initialization while engine isn't running yet, while the engine isn't cranking, 2.00s after engine startup, while the battery voltage is over 10.00V, as long as the battery voltage is over 10.00V and 2.00s after this threshold has been exceeded and if the ECU is not in after-run • Continuously
		[Fault Detection] • Bus Off at node A is detected
		[Defect Debouncing] • Defect condition fulfilled continuously > 40.0 ms
Fault healing		• To give the possibility for healing, controller is reinitialized every 50.00ms
System reaction		• None
Failure cause		• Wrong configuration of CAN timing (Prescaler, synchronization jump width, sampling, propagation and phase segments), bad termination resistors, defective network connection and contacts or defective CAN controller with erroneous messages.
Failure repair		• Check timing configuration with hardware compatibility, check termination resistors and network connection and contacts. Short circuits to external source, ground or CAN High to Low.Monitor CAN communication for erroneous behaviour of a participant.
Inspection procedure	Step1	Refer to the help menu for Nos. other than above. *1: M/T *2: DUONIC *3: ISS (With Lock brake) *4: ISS (Without Lock brake) *5: Lock brake (Without ISS) *6: Other than *3,*4,*5 *7: Full-automatic air conditioner *8: Auto leveling *9: Manual leveling Inspection procedure Turn the starter switch in OFF. Remove all ECU connectors from the CAN communication line. Check CAN line for open circuit, short circuit to positive, short circuit to ground or short circuit to another electrical line. Is any abnormality recognized? No: Go to step2 Yes: Go to step5

https://truckmanualshub.com/

Inspection procedure	Step2	Inspection procedure Attach the connector of A20 (SAM). Check CAN line for open circuit, short circuit to positive, short circuit to ground or short circuit to another electrical line. Is any abnormality recognized? No: Go to step3 Yes: Go to step4
	Step3	Inspection procedure Turn the starter switch in OFF. Reinstall all the removed connectors. Erase fault memory and perform a test drive. If the diagnosis code has occurred even during the test drive, start the operation and then replace the A4 (Combustion engine Control unit). Inspection completed
	Step4	Inspection procedure Turn the starter switch in OFF. Reinstall all the removed connectors. Erase fault memory and perform a test drive. If the diagnosis code has occurred even during the test drive, start the operation and then replace the A20 (SAM). Inspection completed
	Step5	Refer to the help menu for Nos. other than above. *1: M/T *2: DUONIC *3: ISS (With Lock brake) *4: ISS (Without Lock brake) *5: Lock brake (Without ISS) *6: Other than *3,*4,*5 *7: Full-automatic air conditioner *8: Auto leveling *9: Manual leveling Inspection procedure Repair or replace electrical lines. Reinstall all the removed connectors. Turn the starter switch in ON. Inspection completed

520203-31: CAN fault: The configuration is faulty./The CAN controller is defective./The control unit has an internal hardware fault.

Generation condition	[Test Condition] • Monitoring is active 2.00s after ECU initialization while engine isn't running yet, while the engine isn't cranking, 2.00s after engine startup, while the battery voltage is over 10.00V, as long as the battery voltage is over 10.00V and 2.00s after this threshold has been exceeded and if the ECU is not in afterrun • Continuously.
	[Fault Detection] • Bus Off at node A is detected
	[Defect Debouncing] • Defect condition fulfilled continuously > 40.0 ms
Fault healing	• To give the possibility for healing, controller is reinitialized every 50.00ms
System reaction	• None except Fids
	• 1) FId / Release stand alone mode in monitoring
Failure cause	• Wrong configuration of CAN timing (Prescaler, synchronization jump width, sampling, propagation and phase segments), bad termination resistors, defective network connection and contacts or defective CAN controller with erroneous messages.
Failure repair	• Check timing configuration with hardware compatibility, check termination resistors and network connection and contacts. Short circuits to external source, ground or CAN High to Low.Monitor CAN communication for erroneous behaviour of a participant.

https://truckmanualshub.com/

Inspection procedure	Step1	Refer to the help menu for Nos. other than above. *1: M/T *2: DUONIC *3: ISS (With Lock brake) *4: ISS (Without Lock brake) *5: Lock brake (Without ISS) *6: Other than *3,*4,*5 *7: Full-automatic air conditioner *8: Auto leveling *9: Manual leveling Inspection procedure Turn the starter switch in OFF. Remove all ECU connectors from the CAN communication line. Check CAN line for open circuit, short circuit to positive, short circuit to ground or short circuit to another electrical line. Is any abnormality recognized? No: Go to step2 Yes: Go to step
	Step2	Inspection procedure Attach the connector of A20 (SAM). Check CAN line for open circuit, short circuit to positive, short circuit to ground or short circuit to another electrical line. Is any abnormality recognized? No: Go to step3 Yes: Go to step4
	Step3	Inspection procedure Turn the starter switch in OFF. Reinstall all the removed connectors. Erase fault memory and perform a test drive. If the diagnosis code has occurred even during the test drive, start the operation and then replace the A4 (Combustion engine Control unit). Inspection completed
	Step4	Inspection procedure Turn the starter switch in OFF. Reinstall all the removed connectors. Erase fault memory and perform a test drive. If the diagnosis code has occurred even during the test drive, start the operation and then replace the A20 (SAM). Inspection completed
	Step5	Refer to the help menu for Nos. other than above. *1: M/T *2: DUONIC *3: ISS (With Lock brake) *4: ISS (Without Lock brake) *5: Lock brake (Without ISS) *6: Other than *3,*4,*5 *7: Full-automatic air conditioner *8: Auto leveling *9: Manual leveling Inspection procedure Repair or replace electrical lines. Reinstall all the removed connectors. Turn the starter switch in ON. Inspection completed

https://truckmanualshub.com/

520207-2: Plausibility check of component 'Coolant temperature' The received data are implausible.

Generation condition		[Test Condition] • Initial measured temperatures are frozen and evaluated if: • Engine off time > 5.00h. • Plausibility test not inhibited by FId set
		[Fault Detection] • Temperature difference > 150.00K at 100.00s OR Temperature difference > 150.00K at 100.00s and < 150.00K at 100.00s but no heater is active (AddHtr_stDet = 0) failure is detected • Temperature differences limits are applied in curves depending on engine OFF time.
		[Defect Debouncing] • Immediate
Fault healing		• Temperature difference is in range
System reaction		• None except FIDs
		• 1) FId / Inhibit Charged Air Cooler monitoring • 2) FId / Misfire Detection disabled • 3) FId / Inhibit OxiCat passive monitor • 4) Fid / SCR Monitoring or DEF injection release not possible (according calibration of Release Masks) • 5) FId / Inhibit physical range check engine coolant temperature • 6) FId / Inhibit EGR cooler efficiency monitoring • 7) FId / Calculation of Turbocharger Compressor Temperature inhibited
Failure cause		• Coolant temperature sensor drifted
Failure repair		• Check sensor
Inspection procedure	Step1	Inspection procedure Turn the starter switch in OFF. Remove the connector of A4 (Combustion engine Control unit). Check electrical line between pins A4.X1.60/55 and B39.2/1 for open circuit. Check electrical line between pins A4.X1.60/23 and B39.2/2 for open circuit. Check electrical line between pins A4.X1.60/55 and B39.2/1 for short circuit to positive. Check harness between A4 (Combustion engine Control unit) and B39 (Coolant temperature sensor) for short-circuit to another line. Is any abnormality recognized? No: Go to Step2 Yes: Go to Step6
	Step2	Inspection procedure Turn the starter switch in OFF. Replace component "B39 (Coolant temperature sensor)". Reinstall all the removed connectors. Turn the starter switch in ON. Go to Step3
	Step3	Inspection procedure Turn the starter switch in OFF. Reinstall all the removed connectors. Erase fault memory and perform a test drive. Check if this diagnosis code has occurred. Are current fault codes present? No: Go to Step4 Yes: Go to Step5
	Step4	Inspection completed
	Step5	Inspection procedure Perform the operation start and replace A4 (Combustion engine Control unit). Go to Step4
	Step6	Inspection procedure Repair or replace electrical lines. Reinstall all the removed connectors. Turn the starter switch in ON. Go to Step7

https://truckmanualshub.com/

Inspection procedure	Step7	Inspection procedure Turn the starter switch in OFF. Reinstall all the removed connectors. Erase fault memory and perform a test drive. Check if this diagnosis code has occurred. Are current fault codes present? No: Go to Step4 Yes: Go to Step2

520208-12: ECU internal: SPI and COM errors

Generation condition		[Test Condition] • Continuously
		[Fault Detection] • Communication disturbances detected between processor and CJ945 Chip
		[Defect Debouncing] • Defect condition fulfilled continuously >500.0 ms
Fault healing		• No communication disturbance detected
System reaction		• None except FIDs
		• 1) FId / Substitution function for the Digital Input/Output module of ECU activated (due to Cj945 error)
Failure cause		• Electric disturbances, internal defect of the ECU leading to a SPI bus communication error
Failure repair		• Replace ECU if failure remains present
Inspection procedure	Step1	Inspection procedure Erase fault memory and perform a test drive. If the diagnosis code has occurred even during the test drive, start the operation and then replace the A4 (Combustion engine Control unit). Inspection completed

520210-2: Combustion of cylinder: More than 1 not in equilibrium

Generation condition	[Test Condition] • Monitoring not inhibited by FID_CmbMon due to another failure • Fuel balancing not inhibited by FID_FBC due to another failure • Engine in normal running state since > 30.00s • Engine temperature > 49.96°C {121.93°F} • Fuel balancing active i.e.: • engine speed between -100.00rpm and 2500.00rpm and fuel quantity between • 2.00mg/hub and an engine speed dependant upper limit (50.00mg/hub at 800.00rpm)
	[Fault Detection] • The FBC integrator values of more than 1 cylinder are higher or lower than +/- 0.98- times the limitation quantity, which is dependant on the actual fuel quantity (from 0.00mg/hub at 1.50mg/hub over 0.50mg/hub at 2.00mg/hub and 5.00mg/hub at 7.50mg/hub to 6.00mg/hub at 60.00mg/hub) • OR • The FBC integrator value of 1 cylinder is higher or lower than +/- 0.98- times the limitation quantity, which is dependant on the actual fuel quantity (from 0.00mg/hub at 1.50mg/hub over 0.50mg/hub at 2.00mg/hub and 5.00mg/hub at 7.50mg/hub to 6.00mg/hub at 60.00mg/hub) AND the FBC integrator of at least one further cylinder is outside the tolerance of +/- 4.00mg/hub
	[Defect Debouncing] • Defect condition fulfilled continuously >1.00 events
Fault healing	• The FBC integrator values for all cylinders incl cylinder 1 are within the normal range of +/- 4.00mg/hub • OR • only one cylinder is out of range, i.e. a failure CmbMonMin or CmbMonMax of a dedicated cylinder detected (see description of those failures)

https://truckmanualshub.com/

System reaction		• Possibly irregular idling or driving (specially at lower load range) • Only according FID (see FID's)
		• 1) Fid / Reagent dosing quantity for SCR reduced (to DStgy_facUreaDesRed_C) • 2) Fid / SCR Monitoring or DEF injection release not possible (according calibration of Release Masks) • 3) FId / Inhibit ISS, max number of engine starts exceeded
Failure cause		• non balanced cylinders possibly due to problem of one or more injectors.
Failure repair		• try to identify the irregular cylinders by the deviations at failure recognition (snap shot): the 2 extreme cylinders have probably a problem. • check regularity of combustion (idle test or run up test)
Inspection procedure	Step1	Inspection procedure Turn the starter switch in OFF. Remove the connector of A4 (Combustion engine Control unit). Remove the connector of Y15 (Fuel injector 1). Remove the connector of Y16 (Fuel injector 2). Remove the connector of Y17 (Fuel injector 3). Remove the connector of Y18 (Fuel injector 4). Check the circuit across Y15.2/1 and A4.X1.60/31 for open or short circuit. Check the circuit across Y15.2/2 and A4.X1.60/46 for open or short circuit. Check the circuit across Y16.2/1 and A4.X1.60/17 for open or short circuit. Check the circuit across Y16.2/2 and A4.X1.60/2 for open or short circuit. Check the circuit across Y17.2/1 and A4.X1.60/16 for open or short circuit. Check the circuit across Y17.2/2 and A4.X1.60/1 for open or short circuit. Check the circuit across Y18.2/1 and A4.X1.60/32 for open or short circuit. Check the circuit across Y18.2/2 and A4.X1.60/47 for open or short circuit. Make a visual check on each connector. Is any abnormality recognized? No: Go to Step2 Yes: Go to Step6
	Step2	Inspection procedure Reinstall all the removed connectors. Turn the starter switch in ON. Erase the fault code. Execute the control "Fuel injector". Turn the starter switch in OFF. Replace the damaged Fuel injector. Perform the learned value resetting procedure of Fuel injector which A4 (Combustion engine Control unit) learns. Perform coding of Fuel injector which A4 (Combustion engine Control unit) learns. Go to Step3
	Step3	Inspection procedure Turn the starter switch in OFF. Reinstall all the removed connectors. Erase fault memory and perform a test drive. Check if this diagnosis code has occurred. Are current fault codes present? No: Go to Step5 Yes: Go to Step4
	Step4	Inspection procedure Perform the operation start and replace A4 (Combustion engine Control unit). Go to Step5
	Step5	Inspection completed
	Step6	Inspection procedure Repair or replace electrical lines. Reinstall all the removed connectors. Erase fault memory and perform a test drive. Check if this diagnosis code has occurred. Are current fault codes present? No: Go to Step5 Yes: Go to Step2

https://truckmanualshub.com/

520211-0: Combustion of cylinder1LOW

Generation condition		[Test Condition] • Monitoring not inhibited by FID_CmbMon due to another failure • Fuel balancing not inhibited by FID_FBC due to another failure • Engine in normal running state since > 30.00s • Engine temperature > 49.96°C {121.93°F} • Fuel balancing active i.e.: • engine speed between -100.00rpm and 2500.00rpm and fuel quantity between • 2.00mg/hub and an engine speed dependant upper limit (50.00mg/hub at 800.00rpm)
		[Fault Detection] • The FBC integrator values for all other cylinders are within the normal range of +/- 4.00mg/hub and the one for the cylinder no 1 (FBC_qDvtCyl[0]) higher than 0.98- times the limitation quantity, which is dependant on the actual fuel quantity (from 0.00mg/hub at 1.50mg/hub over 0.50mg/hub at 2.00mg/hub and 5.00mg/hub at 7.50mg/hub to 6.00mg/hub at 60.00mg/hub).
		[Defect Debouncing] • Defect condition fulfilled continuously >1.00 events
Fault healing		• The FBC integrator values for all cylinders incl cylinder 1 are within the normal range of +/- 4.00mg/hub.
System reaction		• Possibly irregular idling or driving (specially at lower load range) • Only according FID (see FID's)
		• 1) Fid / Reagent dosing quantity for SCR reduced (to DStgy_facUreaDesRed_C) • 2) Fid / SCR Monitoring or DEF injection release not possible (according calibration of Release Masks) • 3) FId / Inhibit ISS, max number of engine starts exceeded
Failure cause		• injector of cylinder 1 has too low fuel quantity or the cylinder itself is defect (no compression/misfiring)
Failure repair		• check regularity of combustion (idle test or run up test) and replace injector if necessary
Inspection procedure	Step1	Inspect or verify the following items. Repair or replace faulty items as necessary. Check for possible misfire when the engine is in idle state. Check for damaged cylinder. For procedures, refer to the Shop Manual.
	Step2	Inspect or verify the following items. Repair or replace faulty items as necessary. If any other fault code has occurred, perform the diagnostics procedure for the fault code. Go to Step3
	Step3	Inspection procedure Turn the starter switch in OFF. Replace component "Y15 (Fuel injector 1)". Reinstall all the removed connectors. Turn the starter switch in ON. Erase the fault code. Perform the learned value resetting procedure of Y15 (Fuel injector 1) which A4 (Combustion engine Control unit) learns. Perform coding of Fuel injector which A4 (Combustion engine Control unit) learns. Go to Step4
	Step4	Inspection procedure Turn the starter switch in OFF. Reinstall all the removed connectors. Erase fault memory and perform a test drive. Check if this diagnosis code has occurred. Are current fault codes present? No: Go to Step7 Yes: Go to Step5

https://truckmanualshub.com/

Inspection procedure	Step5	Inspect or verify the following items. Repair or replace faulty items as necessary. Check for possible misfire when the engine is in idle state. Check for damaged cylinder. For procedures, refer to the Shop Manual.
	Step6	Inspection procedure Perform the operation start and replace A4 (Combustion engine Control unit). Go to Step7
	Step7	Inspection completed

520211-1: Combustion of cylinder1HIGH

Generation condition		[Test Condition] • Monitoring not inhibited by FID_CmbMon due to another failure • Fuel balancing not inhibited by FID_FBC due to another failure • Engine in normal running state since > 30.00s • Engine temperature > 49.96°C {121.93°F} • Fuel balancing active i.e.: • engine speed between -100.00rpm and 2500.00rpm and fuel quantity between • 2.00mg/hub and an engine speed dependant upper limit (50.00mg/hub at 800.00rpm)
		[Fault Detection] • The FBC integrator values for all other cylinders are within the normal range of +/- 4.00mg/hub and the one for the cylinder no 1 (FBC_qDvtCyl[0]) lower than -0.98- times the limitation quantity, which is dependant on the actual fuel quantity (from 0.00mg/hub at 1.50mg/hub over 0.50mg/hub at 2.00mg/hub and 5.00mg/hub at 7.50mg/hub to 6.00mg/hub at 60.00mg/hub).
		[Defect Debouncing] • Defect condition fulfilled continuously >1.00 events
Fault healing		• The FBC integrator values for all cylinders incl cylinder 1 are within the normal range of +/- 4.00mg/hub.
System reaction		• Possibly irregular idling or driving (specially at lower load range) • Only according FID (see FID's)
		• 1) Fid / Reagent dosing quantity for SCR reduced (to DStgy_facUreaDesRed_C) • 2) Fid / SCR Monitoring or DEF injection release not possible (according calibration of Release Masks) • 3) FId / Inhibit ISS, max number of engine starts exceeded
Failure cause		• injector of cylinder 1 has too high fuel quantity (open locked injector)
Failure repair		• check regularity of combustion (idle test or run up test) and replace injector if necessary
Inspection procedure	Step1	Inspect or verify the following items. Repair or replace faulty items as necessary. Check for run-up engine speed. For procedures, refer to the Shop Manual. Go to Step2
	Step2	Inspect or verify the following items. Repair or replace faulty items as necessary. If any other fault code has occurred, perform the diagnostics procedure for the fault code. Go to Step3
	Step3	Inspection procedure Turn the starter switch in OFF. Replace component "Y15 (Fuel injector 1)". Reinstall all the removed connectors. Turn the starter switch in ON. Erase the fault code. Perform the learned value resetting procedure of Y15 (Fuel injector 1) which A4 (Combustion engine Control unit) learns. Perform coding of Fuel injector which A4 (Combustion engine Control unit) learns. Go to Step4

https://truckmanualshub.com/

Inspection procedure	Step4	Inspection procedure Turn the starter switch in OFF. Reinstall all the removed connectors. Erase fault memory and perform a test drive. Check if this diagnosis code has occurred. Are current fault codes present? No: Go to Step7 Yes: Go to Step5
	Step5	Inspect or verify the following items. Repair or replace faulty items as necessary. Check for run-up engine speed. For procedures, refer to the Shop Manual. Go to Step6
	Step6	Inspection procedure Perform the operation start and replace A4 (Combustion engine Control unit). Go to Step7
	Step7	Inspection completed

520212-0: Combustion of cylinder3LOW

Generation condition		[Test Condition] • Monitoring not inhibited by FID_CmbMon due to another failure • Fuel balancing not inhibited by FID_FBC due to another failure • Engine in normal running state since > 30.00s • Engine temperature > 49.96°C {121.93°F} • Fuel balancing active i.e.: • engine speed between -100.00rpm and 2500.00rpm and fuel quantity between • 2.00mg/hub and an engine speed dependant upper limit (50.00mg/hub at 800.00rpm)
		[Fault Detection] • The FBC integrator values for all other cylinders are within the normal range of +/- 4.00mg/hub and the one for the cylinder no 3 (FBC_qDvtCyl[1]) higher than 0.98- times the limitation quantity, which is dependant on the actual fuel quantity (from 0.00mg/hub at 1.50mg/hub over 0.50mg/hub at 2.00mg/hub and 5.00mg/hub at 7.50mg/hub to 6.00mg/hub at 60.00mg/hub).
		[Defect Debouncing] • Defect condition fulfilled continuously >1.00 events
Fault healing		• The FBC integrator values for all cylinders incl cylinder 3 are within the normal range of +/- 4.00mg/hub.
System reaction		• Possibly irregular idling or driving (specially at lower load range) • Only according FID (see FID's)
		• 1) Fid / Reagent dosing quantity for SCR reduced (to DStgy_facUreaDesRed_C) • 2) Fid / SCR Monitoring or DEF injection release not possible (according calibration of Release Masks) • 3) FId / Inhibit ISS, max number of engine starts exceeded
Failure cause		• injector of cylinder 3 has too low fuel quantity or the cylinder itself is defect (no compression/misfiring)
Failure repair		• check regularity of combustion (idle test or run up test) and replace injector if necessary
Inspection procedure	Step1	Inspect or verify the following items. Repair or replace faulty items as necessary. Check for possible misfire when the engine is in idle state. Check for damaged cylinder. For procedures, refer to the Shop Manual.
	Step2	Inspect or verify the following items. Repair or replace faulty items as necessary. If any other fault code has occurred, perform the diagnostics procedure for the fault code. Go to Step3

https://truckmanualshub.com/

Inspection procedure	Step3	Inspection procedure Turn the starter switch in OFF. Replace component “Y17 (Fuel injector 3)”. Reinstall all the removed connectors. Turn the starter switch in ON. Erase the fault code. Perform the learned value resetting procedure of Y17 (Fuel injector 3) which A14 (EGR valve) learns. Perform coding of Fuel injector which A14 (EGR valve) learns. Go to Step4
	Step4	Inspection procedure Turn the starter switch in OFF. Reinstall all the removed connectors. Erase fault memory and perform a test drive. Check if this diagnosis code has occurred. Are current fault codes present? No: Go to Step7 Yes: Go to Step5
	Step5	Inspect or verify the following items. Repair or replace faulty items as necessary. Check for possible misfire when the engine is in idle state. Check for damaged cylinder. For procedures, refer to the Shop Manual.
	Step6	Inspection procedure Perform the operation start and replace A14 (EGR valve). Go to Step7
	Step7	Inspection completed

520212-1: Combustion of cylinder3HIGH

Generation condition	[Test Condition] • Monitoring not inhibited by FID_CmbMon due to another failure • Fuel balancing not inhibited by FID_FBC due to another failure • Engine in normal running state since > 30.00s • Engine temperature > 49.96°C {121.93°F} • Fuel balancing active i.e.: • engine speed between -100.00rpm and 2500.00rpm and fuel quantity between • 2.00mg/hub and an engine speed dependant upper limit (50.00mg/hub at 800.00rpm)
	[Fault Detection] • The FBC integrator values for all other cylinders are within the normal range of +/- 4.00mg/hub and the one for the cylinder no 3 (FBC_qDvtCyl[1]) lower than -0.98- times the limitation quantity, which is dependant on the actual fuel quantity (from 0.00mg/hub at 1.50mg/hub over 0.50mg/hub at 2.00mg/hub and 5.00mg/hub at 7.50mg/hub to 6.00mg/hub at 60.00mg/hub).
	[Defect Debouncing] • Defect condition fulfilled continuously >1.00 events
Fault healing	• The FBC integrator values for all cylinders incl cylinder 3 are within the normal range of +/- 4.00mg/hub.
System reaction	• Possibly irregular idling or driving (specially at lower load range) • Only according FID (see FID’s)
	• 1) Fid / Reagent dosing quantity for SCR reduced (to DStgy_facUreaDesRed_C) • 2) Fid / SCR Monitoring or DEF injection release not possible (according calibration of Release Masks) • 3) FId / Inhibit ISS, max number of engine starts exceeded
Failure cause	• injector of cylinder 3 has too high fuel quantity (open locked injector)
Failure repair	• check regularity of combustion (idle test or run up test) and replace injector if necessary

https://truckmanualshub.com/

Inspection procedure	Step1	Inspect or verify the following items. Repair or replace faulty items as necessary. Check for run-up engine speed. For procedures, refer to the Shop Manual. Go to Step2
	Step2	Inspect or verify the following items. Repair or replace faulty items as necessary. If any other fault code has occurred, perform the diagnostics procedure for the fault code. Go to Step3
	Step3	Inspection procedure Turn the starter switch in OFF. Replace component “Y17 (Fuel injector 3)”. Reinstall all the removed connectors. Turn the starter switch in ON. Erase the fault code. Perform the learned value resetting procedure of Y17 (Fuel injector 3) which A4 (Combustion engine Control unit) learns. Perform coding of Fuel injector which A4 (Combustion engine Control unit) learns. Go to Step4
	Step4	Inspection procedure Turn the starter switch in OFF. Reinstall all the removed connectors. Erase fault memory and perform a test drive. Check if this diagnosis code has occurred. Are current fault codes present? No: Go to Step7 Yes: Go to Step5
	Step5	Inspect or verify the following items. Repair or replace faulty items as necessary. Check for run-up engine speed. For procedures, refer to the Shop Manual. Go to Step6
	Step6	Inspection procedure Perform the operation start and replace A4 (Combustion engine Control unit). Go to Step7
	Step7	Inspection completed

520213-0: Combustion of cylinder4LOW

Generation condition	[Test Condition] • Monitoring not inhibited by FID_CmbMon due to another failure • Fuel balancing not inhibited by FID_FBC due to another failure • Engine in normal running state since > 30.00s • Engine temperature > 49.96°C {121.93°F} • Fuel balancing active i.e.: • engine speed between -100.00rpm and 2500.00rpm and fuel quantity between • 2.00mg/hub and an engine speed dependant upper limit (50.00mg/hub at 800.00rpm)
	[Fault Detection] • The FBC integrator values for all other cylinders are within the normal range of +/- 4.00mg/hub and the one for the cylinder no 4 (FBC_qDvtCyl[2]) higher than 0.98- times the limitation quantity, which is dependant on the actual fuel quantity (from 0.00mg/hub at 1.50mg/hub over 0.50mg/hub at 2.00mg/hub and 5.00mg/hub at 7.50mg/hub to 6.00mg/hub at 60.00mg/hub).
	[Defect Debouncing] • Defect condition fulfilled continuously >1.00 events
Fault healing	• The FBC integrator values for all cylinders incl cylinder 4 are within the normal range of +/- 4.00mg/hub.

https://truckmanualshub.com/

System reaction		• Possibly irregular idling or driving (specially at lower load range) • Only according FID (see FID's)
		• 1) Fid / Reagent dosing quantity for SCR reduced (to DStgy_facUreaDesRed_C) • 2) Fid / SCR Monitoring or DEF injection release not possible (according calibration of Release Masks) • 3) FId / Inhibit ISS, max number of engine starts exceeded
Failure cause		• injector of cylinder 4 has too low fuel quantity or the cylinder itself is defect (no compression/misfiring)
Failure repair		• check regularity of combustion (idle test or run up test) and replace injector if necessary
Inspection procedure	Step1	Inspect or verify the following items. Repair or replace faulty items as necessary. Check for possible misfire when the engine is in idle state. Check for damaged cylinder. For procedures, refer to the Shop Manual.
	Step2	Inspect or verify the following items. Repair or replace faulty items as necessary. If any other fault code has occurred, perform the diagnostics procedure for the fault code. Go to Step3
	Step3	Inspection procedure Turn the starter switch in OFF. Replace component "Y18 (Fuel injector 4)". Reinstall all the removed connectors. Turn the starter switch in ON. Erase the fault code. Perform the learned value resetting procedure of Y18 (Fuel injector 4) which A4 (Combustion engine Control unit) learns. Perform coding of Fuel injector which A4 (Combustion engine Control unit) learns. Go to Step4
	Step4	Inspection procedure Turn the starter switch in OFF. Reinstall all the removed connectors. Erase fault memory and perform a test drive. Check if this diagnosis code has occurred. Are current fault codes present? No: Go to Step7 Yes: Go to Step5
	Step5	Inspect or verify the following items. Repair or replace faulty items as necessary. Check for possible misfire when the engine is in idle state. Check for damaged cylinder. For procedures, refer to the Shop Manual.
	Step6	Inspection procedure Perform the operation start and replace A4 (Combustion engine Control unit). Go to Step7
	Step7	Inspection completed

https://truckmanualshub.com/

520213-1: Combustion of cylinder4HIGH

Generation condition		[Test Condition] • Monitoring not inhibited by FID_CmbMon due to another failure • Fuel balancing not inhibited by FID_FBC due to another failure • Engine in normal running state since > 30.00s • Engine temperature > 49.96°C {121.93°F} • Fuel balancing active i.e.: • engine speed between -100.00rpm and 2500.00rpm and fuel quantity between • 2.00mg/hub and an engine speed dependant upper limit (50.00mg/hub at 800.00rpm)
		[Fault Detection] • The FBC integrator values for all other cylinders are within the normal range of +/- 4.00mg/hub and the one for the cylinder no 4 (FBC_qDvtCyl[2]) lower than -0.98- times the limitation quantity, which is dependant on the actual fuel quantity (from 0.00mg/hub at 1.50mg/hub over 0.50mg/hub at 2.00mg/hub and 5.00mg/hub at 7.50mg/hub to 6.00mg/hub at 60.00mg/hub).
		[Defect Debouncing] • Defect condition fulfilled continuously >1.00 events
Fault healing		• The FBC integrator values for all cylinders incl cylinder 4 are within the normal range of +/- 4.00mg/hub.
System reaction		• Possibly irregular idling or driving (specially at lower load range) • Only according FID (see FID's)
		• 1) Fid / Reagent dosing quantity for SCR reduced (to DStgy_facUreaDesRed_C) • 2) Fid / SCR Monitoring or DEF injection release not possible (according calibration of Release Masks) • 3) FId / Inhibit ISS, max number of engine starts exceeded
Failure cause		• injector of cylinder 4 has too high fuel quantity (open locked injector)
Failure repair		• check regularity of combustion (idle test or run up test) and replace injector if necessary
Inspection procedure	Step1	Inspect or verify the following items. Repair or replace faulty items as necessary. Check for run-up engine speed. For procedures, refer to the Shop Manual. Go to Step2
	Step2	Inspect or verify the following items. Repair or replace faulty items as necessary. If any other fault code has occurred, perform the diagnostics procedure for the fault code. Go to Step3
	Step3	Inspection procedure Turn the starter switch in OFF. Replace component "Y18 (Fuel injector 4)". Reinstall all the removed connectors. Turn the starter switch in ON. Erase the fault code. Perform the learned value resetting procedure of Y18 (Fuel injector 4) which A4 (Combustion engine Control unit) learns. Perform coding of Fuel injector which A4 (Combustion engine Control unit) learns. Go to Step4
	Step4	Inspection procedure Turn the starter switch in OFF. Reinstall all the removed connectors. Erase fault memory and perform a test drive. Check if this diagnosis code has occurred. Are current fault codes present? No: Go to Step7 Yes: Go to Step5

https://truckmanualshub.com/

Inspection procedure	Step5	Inspect or verify the following items. Repair or replace faulty items as necessary. Check for run-up engine speed. For procedures, refer to the Shop Manual. Go to Step6
	Step6	Inspection procedure Perform the operation start and replace A4 (Combustion engine Control unit). Go to Step7
	Step7	Inspection completed

520214-0: Combustion of cylinder2LOW

Generation condition		[Test Condition] • Monitoring not inhibited by FID_CmbMon due to another failure • Fuel balancing not inhibited by FID_FBC due to another failure • Engine in normal running state since > 30.00s • Engine temperature > 49.96°C {121.93°F} • Fuel balancing active i.e.: • engine speed between -100.00rpm and 2500.00rpm and fuel quantity between • 2.00mg/hub and an engine speed dependant upper limit (50.00mg/hub at 800.00rpm)
		[Fault Detection] • The FBC integrator values for all other cylinders are within the normal range of +/- 4.00mg/hub and the one for the cylinder no 2 (FBC_qDvtCyl[3]) higher than 0.98- times the limitation quantity, which is dependant on the actual fuel quantity (from 0.00mg/hub at 1.50mg/hub over 0.50mg/hub at 2.00mg/hub and 5.00mg/hub at 7.50mg/hub to 6.00mg/hub at 60.00mg/hub).
		[Defect Debouncing] • Defect condition fulfilled continuously >1.00 events
Fault healing		• The FBC integrator values for all cylinders incl cylinder 2 are within the normal range of +/- 4.00mg/hub.
System reaction		• Possibly irregular idling or driving (specially at lower load range) • Only according FID (see FID's)
		• 1) Fid / Reagent dosing quantity for SCR reduced (to DStgy_facUreaDesRed_C) • 2) Fid / SCR Monitoring or DEF injection release not possible (according calibration of Release Masks) • 3) FId / Inhibit ISS, max number of engine starts exceeded
Failure cause		• injector of cylinder 2 has too low fuel quantity or the cylinder itself is defect (no compression/misfiring)
Failure repair		• check regularity of combustion (idle test or run up test) and replace injector if necessary
Inspection procedure	Step1	Inspect or verify the following items. Repair or replace faulty items as necessary. Check for possible misfire when the engine is in idle state. Check for damaged cylinder. For procedures, refer to the Shop Manual.
	Step2	Inspect or verify the following items. Repair or replace faulty items as necessary. If any other fault code has occurred, perform the diagnostics procedure for the fault code. Go to Step3
	Step3	Inspection procedure Turn the starter switch in OFF. Replace component "Y16 (Fuel injector 2)". Reinstall all the removed connectors. Turn the starter switch in ON. Erase the fault code. Perform the learned value resetting procedure of Y16 (Fuel injector 2) which A4 (Combustion engine Control unit) learns. Perform coding of Fuel injector which A4 (Combustion engine Control unit) learns. Go to Step4

https://truckmanualshub.com/

Inspection procedure	Step4	Inspection procedure Turn the starter switch in OFF. Reinstall all the removed connectors. Erase fault memory and perform a test drive. Check if this diagnosis code has occurred. Are current fault codes present? No: Go to Step7 Yes: Go to Step5
	Step5	Inspect or verify the following items. Repair or replace faulty items as necessary. Check for possible misfire when the engine is in idle state. Check for damaged cylinder. For procedures, refer to the Shop Manual.
	Step6	Inspection procedure Perform the operation start and replace A4 (Combustion engine Control unit). Go to Step7
	Step7	Inspection completed

520214-1: Combustion of cylinder2HIGH

Generation condition		[Test Condition] • Monitoring not inhibited by FID_CmbMon due to another failure • Fuel balancing not inhibited by FID_FBC due to another failure • Engine in normal running state since > 30.00s • Engine temperature > 49.96°C {121.93°F} • Fuel balancing active i.e.: • engine speed between -100.00rpm and 2500.00rpm and fuel quantity between • 2.00mg/hub and an engine speed dependant upper limit (50.00mg/hub at 800.00rpm)
		[Fault Detection] • The FBC integrator values for all other cylinders are within the normal range of +/- 4.00mg/hub and the one for the cylinder no 2 (FBC_qDvtCyl[3]) lower than -0.98- times the limitation quantity, which is dependant on the actual fuel quantity (from 0.00mg/hub at 1.50mg/hub over 0.50mg/hub at 2.00mg/hub and 5.00mg/hub at 7.50mg/hub to 6.00mg/hub at 60.00mg/hub).
		[Defect Debouncing] • Defect condition fulfilled continuously >1.00 events
Fault healing		• The FBC integrator values for all cylinders incl cylinder 2 are within the normal range of +/- 4.00mg/hub.
System reaction		• Possibly irregular idling or driving (specially at lower load range) • Only according FID (see FID's)
		• 1) Fid / Reagent dosing quantity for SCR reduced (to DStgy_facUreaDesRed_C) • 2) Fid / SCR Monitoring or DEF injection release not possible (according calibration of Release Masks) • 3) FId / Inhibit ISS, max number of engine starts exceeded
Failure cause		• injector of cylinder 2 has too high fuel quantity (open locked injector)
Failure repair		• check regularity of combustion (idle test or run up test) and replace injector if necessary
Inspection procedure	Step1	Inspect or verify the following items. Repair or replace faulty items as necessary. Check for run-up engine speed. For procedures, refer to the Shop Manual. Go to Step2
	Step2	Inspect or verify the following items. Repair or replace faulty items as necessary. If any other fault code has occurred, perform the diagnostics procedure for the fault code. Go to Step3

https://truckmanualshub.com/

Inspection procedure	Step3	Inspection procedure Turn the starter switch in OFF. Replace component “Y16 (Fuel injector 2)”. Reinstall all the removed connectors. Turn the starter switch in ON. Erase the fault code. Perform the learned value resetting procedure of Y16 (Fuel injector 2) which A4 (Combustion engine Control unit) learns. Perform coding of Fuel injector which A4 (Combustion engine Control unit) learns. Go to Step4
	Step4	Inspection procedure Turn the starter switch in OFF. Reinstall all the removed connectors. Erase fault memory and perform a test drive. Check if this diagnosis code has occurred. Are current fault codes present? No: Go to Step7 Yes: Go to Step5
	Step5	Inspect or verify the following items. Repair or replace faulty items as necessary. Check for run-up engine speed. For procedures, refer to the Shop Manual. Go to Step6
	Step6	Inspection procedure Perform the operation start and replace A4 (Combustion engine Control unit). Go to Step7
	Step7	Inspection completed

520215-31: Torque limitation active-Cause: Turbo charger protection

Generation condition		[Test Condition] • Monitoring is active 2.00s after ECU initialization while engine isn’t running yet, while the engine isn’t cranking, 2.00s after engine startup and if the ECU is not in afterrun • Engine speed > 750.00rpm
		[Fault Detection] • A Power reduction > 130.00% or an engine speed limitation > 130.00% is asked by the VGT to protect it against overspeed at high altitude.
		[Defect Debouncing] • Defect condition exceeded cumulatively > 2.00s • Failure is detected if active for 50% of the time
Fault healing		• Performance/engine speed limitation no more active • OR • engine speed < 750.00rpm
System reaction		• None
Failure cause		• Active power reduction > 2.00s due to turbo charger protection
Failure repair		• No actions necessary due to this failure alone. If power reduction occurred due to actual defect, the failure triggering the torque limitation should also be in the failure memory. Follow troubleshooting of this root error.
Inspection procedure	Step1	Inspection procedure Inspect the suspected factors mentioned above sequentially to locate faulty parts. Repair or replace the faulty part as necessary.

https://truckmanualshub.com/

520216-31: Torque limitation active-Cause: engine protection

Generation condition		[Test Condition] • Monitoring is active 2.00s after ECU initialization while engine isn't running yet, while the engine isn't cranking, 2.00s after engine startup and if the ECU is not in afterrun • Engine Overheat protection not disabled by FID_EngPrtOvhtPrv due to another failure. • Engine speed > 750.00rpm
		[Fault Detection] • A Power reduction > 130.00% or an engine speed limitation > 130.00% is asked by the engine to protect it against overload depending on engine speed.
		[Defect Debouncing] • Defect condition exceeded cumulatively > 2.00s • Failure is detected if active for 50% of the time
Fault healing		• Performance/engine speed limitation no more active • OR • engine speed < 750.00rpm
System reaction		• None
Failure cause		• Active power reduction > 2.00s due to engine mechanics protection
Failure repair		• No actions necessary due to this failure alone. If power reduction occurred due to actual defect, the failure triggering the torque limitation should also be in the failure memory. Follow troubleshooting of this root error.
Inspection procedure	Step1	Inspection procedure Inspect the suspected factors mentioned above sequentially to locate faulty parts. Repair or replace the faulty part as necessary.

520217-31: Torque limitation active-Cause: Injection system

Generation condition		[Test Condition] • Monitoring is active 2.00s after ECU initialization while engine isn't running yet, while the engine isn't cranking, 2.00s after engine startup and if the ECU is not in afterrun • Engine speed > 750.00rpm
		[Fault Detection] • A Power reduction > 130.00% or an engine speed limitation > 130.00% is asked by High pressure fuel pump depending on engine speed and actual fuel pressure.
		[Defect Debouncing] • Defect condition exceeded cumulatively > 2.00s • Failure is detected if active for 50% of the time
Fault healing		• Performance/engine speed limitation no more active • OR • engine speed < 750.00rpm
System reaction		• None
Failure cause		• Active power reduction > 2.00s due to high pressure fuel pump protection
Failure repair		• No actions necessary due to this failure alone. If power reduction occurred due to actual defect, the failure triggering the torque limitation should also be in the failure memory. Follow troubleshooting of this root error.
Inspection procedure	Step1	Inspection procedure Inspect the suspected factors mentioned above sequentially to locate faulty parts. Repair or replace the faulty part as necessary.

https://truckmanualshub.com/

520218-31: Torque limitation active-Cause: Engine brake

Generation condition		[Test Condition] • Monitoring is active 2.00s after ECU initialization while engine isn't running yet, while the engine isn't cranking, 2.00s after engine startup and if the ECU is not in afterrun • Engine speed > 750.00rpm
		[Fault Detection] • A Power reduction > 130.00% or an engine speed limitation > 130.00% after engine brake release. • After engine brake release, the torque ramps up from 0 to desired torque with a slope of 2000000N·m {1475100lbs.ft, 203940kgf·m}/s. If the limited torque corrected by 2.5N·m {1.8lbs.ft, 0.25kgf·m} is lower than 130.00% of max torque, the failure is set.
		[Defect Debouncing] • Defect condition exceeded cumulatively > 2.00s • Failure is detected if active for 50% of the time
Fault healing		• Performance/engine speed limitation no more active • OR • engine speed < 750.00rpm
System reaction		• None
Failure cause		• Active power reduction > 2.00s due to torque rise limitation after engine brake release.
Failure repair		• No actions necessary due to this failure alone. If power reduction occurred due to actual defect, the failure triggering the torque limitation should also be in the failure memory. Follow troubleshooting of this root error.
Inspection procedure	Step1	Inspection procedure Inspect the suspected factors mentioned above sequentially to locate faulty parts. Repair or replace the faulty part as necessary.

520219-31: Torque limitation active-Cause: Diesel particulate filter

Generation condition		[Test Condition] • Monitoring is active 2.00s after ECU initialization while engine isn't running yet, while the engine isn't cranking, 2.00s after engine startup and if the ECU is not in afterrun • Engine speed > 750.00rpm
		[Fault Detection] • A Power reduction > 130.00% or an engine speed limitation > 130.00% due to particulate filter protection. • The particulate filter protection limits the calculated pressure drop over filter (= Flow resistance * Exhaust gas flow), which is depending on collected soot mass, by curve EngDem_trqLimPDiff.
		[Defect Debouncing] • Defect condition exceeded cumulatively > 5.00s • Failure is detected if active for 50% of the time
Fault healing		• Performance/engine speed limitation no more active • OR • engine speed < 750.00rpm
System reaction		• None
Failure cause		• Active power reduction > 5.00s due to torque limitation for pressure drop limitation over particulate filter.
Failure repair		• No actions necessary due to this failure alone. If power reduction occurred due to actual defect, the failure triggering the torque limitation should also be in the failure memory. Follow troubleshooting of this root error.
Inspection procedure	Step1	Inspection procedure Inspect the suspected factors mentioned above sequentially to locate faulty parts. Repair or replace the faulty part as necessary.

https://truckmanualshub.com/

520220-31: Information: Torque limitation by too high NOx emissions. Duration > 2 second.

Generation condition		[Test Condition] • Monitoring is active 2.00s after ECU initialization while engine isn't running yet, while the engine isn't cranking, 2.00s after engine startup and if the ECU is not in afterrun • Engine speed > 750.00rpm
		[Fault Detection] • A Power reduction > 130.00% or an engine speed limitation > 130.00% due to OBD performance limitation. • The OBD performance limitation is activated it there is a failure active, which causes high NOx emissions for a certain time (24855.13d, 0.00s, 0.00s or 24855.13d depending on the failure). • The performance limiter is activated immediately within 5.00min or 5.00min (depending on limitation). • If the failure which caused the high NOx disappears, the performance limiter is released within 5.00s or 5.00s (depending on limitation) immediately.
		[Defect Debouncing] • Defect condition exceeded cumulatively > 2.00s • Failure is detected if active for 50% of the time
Fault healing		• Performance/engine speed limitation no more active • OR • engine speed < 750.00rpm
System reaction		• None
Failure cause		• Active power reduction due to the OBD performance limiter because of too high NOx emissions
Failure repair		• No actions necessary due to this failure alone. If powerreduction occurred due to actual defect, the failure triggering the torque limitation should also be in the failure memory. Follow troubleshooting of this root error.
Inspection procedure	Step1	Inspection procedure Inspect the suspected factors mentioned above sequentially to locate faulty parts. Repair or replace the faulty part as necessary.

520221-31: Torque limitation active-Cause: SCRCAT protection

Generation condition		[Test Condition] • Monitoring is active 2.00s after ECU initialization while engine isn't running yet, while the engine isn't cranking, 2.00s after engine startup and if the ECU is not in afterrun • Engine speed > 750.00rpm
		[Fault Detection] • A Power reduction > 130.00% is asked by the SCR to protect it against too high temperature.
		[Defect Debouncing] • Defect condition exceeded cumulatively > 5.00s • Failure is detected if active for 50% of the time
Fault healing		• Performance/engine speed limitation no more active • OR • engine speed < 750.00rpm
System reaction		• None
Failure cause		• Active power reduction due to excessive temperatures in the SCR catalyst
Failure repair		• No actions necessary due to this failure alone. If power reduction occurred due to actual defect, the failure triggering the torque limitation should also be in the failure memory. Follow troubleshooting of this root error.
Inspection procedure	Step1	Inspection procedure Inspect the suspected factors mentioned above sequentially to locate faulty parts. Repair or replace the faulty part as necessary.

https://truckmanualshub.com/

520222-31: Torque limitation active-Cause: Smoke limitation

Generation condition		[Test Condition] • Monitoring is active 2.00s after ECU initialization while engine isn't running yet, while the engine isn't cranking, 2.00s after engine startup and if the ECU is not in afterrun • Engine speed > 750.00rpm
		[Fault Detection] • A Power reduction > 130.00% or an engine speed limitation > 130.00% due to smoke limitation. • Depending on engine speed and actual air mass flow a minimal lambda is calculated by a map. The actual fuel mass is limited to this minimal allowed lambda. The limited fuel mass is calculated as maximum possible torque.
		[Defect Debouncing] • Defect condition exceeded cumulatively > 5.00s • Failure is detected if active for 50% of the time
Fault healing		• Performance/engine speed limitation no more active • OR • engine speed < 750.00rpm
System reaction		• None
Failure cause		• Active power reduction due to smoke limitation with unexpected long duration > 5.00s • If no other failure stored concerning EGR or Boost pressure control: • operation in extreme high altitude (>1800 m, i.e ambient pressure < 78kPa {11psi, 0.8kgf/cm^2}) • sticking of VGT or EGR actuator or engine brake flap (if available) • turbocharger with slow response (bad efficiency) • wrong signal of HFM (or boost pressure sensor if HFM not available)
Failure repair		• No actions necessary due to this failure alone. If power reduction occurred due to actual defect, the failure triggering the torque limitation should also be in the failure memory. Follow troubleshooting of this root error. • If no failure stored in memory concerning EGR or Boost pressure control: • if failure occurred at high altitude > 1800m (ambient pressure < 78kPa {11psi, 0.8kgf/cm^2}): no action needed. • check actuators of EGR, Boost pressure and exhaust flap control for sticking. • Check turbocharger for correct efficiency • Check HFM and Boost pressure sensor for correct measuring values
Inspection procedure	Step1	Inspection procedure Inspect the suspected factors mentioned above sequentially to locate faulty parts. Repair or replace the faulty part as necessary.

520225-9: CAN timeout fault. Error on transmission of CAN message

Generation condition	[Test Condition] • Monitoring is active 2.00s after ECU initialization while engine isn't running yet, while the engine isn't cranking, 2.00s after engine startup, while the battery voltage is over 10.00V, as long as the battery voltage is over 10.00V and 2.00s after this threshold has been exceeded, if none of the CAN controllers is in bus-off state, 2.00s after last CAN controller is no more in bus-off state and if the ECU is not in afterrun • Continuously
	[Fault Detection] • Timeout for transmit frame ComAmbCon is detected
	[Defect Debouncing] • Defect condition fulfilled continuously >500.0 ms
Fault healing	• Message is transmitted
System reaction	• None
Failure cause	• Defective CAN Controller within Chassis CAN, CAN Cables disconnected or broken. Short circuit in wiring.
Failure repair	• Check the installation and the proper connection of the Engine Control Unit to the CAN vehicle network. • Check correct operating conditions of the CAN controller. • Check the vehicle wirings.

https://truckmanualshub.com/

Inspection procedure	Step1	Refer to the help menu for Nos. other than above. *1: M/T *2: DUONIC *3: ISS (With Lock brake) *4: ISS (Without Lock brake) *5: Lock brake (Without ISS) *6: Other than *3,*4,*5 *7: Full-automatic air conditioner *8: Auto leveling *9: Manual leveling Inspection procedure Turn the starter switch in OFF. Remove all ECU connectors from the CAN communication line. Check CAN line for open circuit, short circuit to positive, short circuit to ground or short circuit to another electrical line. Is any abnormality recognized? No: Go to step2 Yes: Go to step5
	Step2	Inspection procedure Attach the connector of A20 (SAM). Check CAN line for open circuit, short circuit to positive, short circuit to ground or short circuit to another electrical line. Is any abnormality recognized? No: Go to step3 Yes: Go to step4
	Step3	Inspection procedure Turn the starter switch in OFF. Reinstall all the removed connectors. Erase fault memory and perform a test drive. If the diagnosis code has occurred even during the test drive, start the operation and then replace the A4 (Combustion engine Control unit). Inspection completed
	Step4	Inspection procedure Turn the starter switch in OFF. Reinstall all the removed connectors. Erase fault memory and perform a test drive. If the diagnosis code has occurred even during the test drive, start the operation and then replace the A20 (SAM). Inspection completed
	Step5	Refer to the help menu for Nos. other than above. *1: M/T *2: DUONIC *3: ISS (With Lock brake) *4: ISS (Without Lock brake) *5: Lock brake (Without ISS) *6: Other than *3,*4,*5 *7: Full-automatic air conditioner *8: Auto leveling *9: Manual leveling Inspection procedure Repair or replace electrical lines. Reinstall all the removed connectors. Turn the starter switch in ON. Inspection completed

https://truckmanualshub.com/

520227-9: Error on transmission of CAN message (CAN message 'VIN' from control unit 'SAM')

Generation condition		[Test Condition] • Monitoring is active 2.00s after ECU initialization while engine isn't running yet, while the engine isn't cranking, 2.00s after engine startup, while the battery voltage is over 10.00V, as long as the battery voltage is over 10.00V and 2.00s after this threshold has been exceeded, if none of the CAN controllers is in bus-off state, 2.00s after last CAN controller is no more in bus-off state and if the ECU is not in afterrun • Continuous
		[Fault Detection] • Time out while receiving CAN Frame CGW_GVC9.
		[Defect Debouncing] • Defect condition fulfilled continuously >500.0 ms
Fault healing		• As soon as the frame is received, the time out error is cleared.
System reaction		• When there is an error in the reception of the frame, then VIN counter signal will have previous valid value Vehicle Identification Number [0-16] will have previous valid value.
		• CAN bus overload or disturbed, frame could not be received.
Failure cause		• Check the installation and the proper connection of the SAM Module (Central Gateway or Body Computer) to the CAN vehicle network. • Check correct operating conditions of the CAN controller. • Check the vehicle wirings.
Failure repair		•
Inspection procedure	Step1	Inspection procedure Turn the starter switch in OFF. Remove all ECU connectors from the CAN communication line. Check CAN line for open circuit, short circuit to positive, short circuit to ground or short circuit to another electrical line. Is any abnormality recognized? No: Go to Step2 Yes: Go to Step5
	Step2	Inspection procedure Attach the connector of A20 (SAM). Check CAN line for open circuit, short circuit to positive, short circuit to ground or short circuit to another electrical line. Is any abnormality recognized? No: Go to Step3 Yes: Go to Step4
	Step3	Inspection procedure Turn the starter switch in OFF. Reinstall all the removed connectors. Erase fault memory and perform a test drive. If the diagnosis code has occurred even during the test drive, start the operation and then replace the A4 (Combustion engine Control unit). Inspection completed
	Step4	Inspection procedure Turn the starter switch in OFF. Reinstall all the removed connectors. Erase fault memory and perform a test drive. If the diagnosis code has occurred even during the test drive, start the operation and then replace the A20 (SAM). Inspection completed
	Step5	Inspection procedure Repair or replace electrical lines. Reinstall all the removed connectors. Turn the starter switch in ON. Inspection completed

https://truckmanualshub.com/

520228-9: Timeout error of CAN-Receive-Frame CGWC1.

Generation condition		[Test Condition] • Monitoring is active 2.00s after ECU initialization while engine isn't running yet, while the engine isn't cranking, 2.00s after engine startup, while the battery voltage is over 10.00V, as long as the battery voltage is over 10.00V and 2.00s after this threshold has been exceeded, if none of the CAN controllers is in bus-off state, 2.00s after last CAN controller is no more in bus-off state and if the ECU is not in afterrun • Continuously
		[Fault Detection] • Fault is detected if a time out of CGWC1 message happens.
		[Defect Debouncing] • Defect condition fulfilled continuously >500.0 ms
Fault healing		• When the frame is received, the time out error will be cleared.
System reaction		• Default value for self heal cycle information is used 100.00-
Failure cause		• CAN bus overload or disturbed, frame could not be received.
Failure repair		• Check CAN bus wiring. A defect could cause error frames which lead to high bus load or send the CAN controller to "bus off" state.
Inspection procedure	Step1	Refer to the help menu for Nos. other than above. *1: M/T *2: DUONIC *3: ISS (With Lock brake) *4: ISS (Without Lock brake) *5: Lock brake (Without ISS) *6: Other than *3,*4,*5 *7: Full-automatic air conditioner *8: Auto leveling *9: Manual leveling Inspection procedure Turn the starter switch in OFF. Remove all ECU connectors from the CAN communication line. Check CAN line for open circuit, short circuit to positive, short circuit to ground or short circuit to another electrical line. Is any abnormality recognized? No: Go to step2 Yes: Go to step5
	Step2	Inspection procedure Attach the connector of A20 (SAM). Check CAN line for open circuit, short circuit to positive, short circuit to ground or short circuit to another electrical line. Is any abnormality recognized? No: Go to step3 Yes: Go to step4
	Step3	Inspection procedure Turn the starter switch in OFF. Reinstall all the removed connectors. Erase fault memory and perform a test drive. If the diagnosis code has occurred even during the test drive, start the operation and then replace the A4 (Combustion engine Control unit). Inspection completed
	Step4	Inspection procedure Turn the starter switch in OFF. Reinstall all the removed connectors. Erase fault memory and perform a test drive. If the diagnosis code has occurred even during the test drive, start the operation and then replace the A20 (SAM). Inspection completed

https://truckmanualshub.com/

Inspection procedure	Step5	Refer to the help menu for Nos. other than above. *1: M/T *2: DUONIC *3: ISS (With Lock brake) *4: ISS (Without Lock brake) *5: Lock brake (Without ISS) *6: Other than *3,*4,*5 *7: Full-automatic air conditioner *8: Auto leveling *9: Manual leveling Inspection procedure Repair or replace electrical lines. Reinstall all the removed connectors. Turn the starter switch in ON. Inspection completed

520232-9: Timeout error of CAN-Receive-Frame Dashboard.

Generation condition		[Test Condition] • Monitoring is active 2.00s after ECU initialization while engine isn't running yet, while the engine isn't cranking, 2.00s after engine startup, while the battery voltage is over 10.00V, as long as the battery voltage is over 10.00V and 2.00s after this threshold has been exceeded, if none of the CAN controllers is in bus-off state, 2.00s after last CAN controller is no more in bus-off state and if the ECU is not in afterrun • Continuously.
		[Fault Detection] • Timeout of DashDspl message
		[Defect Debouncing] • Defect condition fulfilled continuously >500.0 ms
Fault healing		• If the DashDspl message is received correct after the debouncing time the DFC is healed.
System reaction		• The default value for tank level is used: • Fl_rTnkQnt = 5.00%;
Failure cause		• Defective CAN controller of Vehicle Control Module or Body controller, under voltage of VCM or Body controller, missing VCM or Body controller, CAN cable connecting the VCM or the Body controller is disconnected or broken. Short circuit in wiring.
Failure repair		• Check presence and correct connection of the VCM or Body Controller to the network, Check correct functioning of the VCM or Body Controller CAN controller and its voltage supply. Check wiring.
Inspection procedure	Step1	Refer to the help menu for Nos. other than above. *1: M/T *2: DUONIC *3: ISS (With Lock brake) *4: ISS (Without Lock brake) *5: Lock brake (Without ISS) *6: Other than *3,*4,*5 *7: Full-automatic air conditioner *8: Auto leveling *9: Manual leveling Inspection procedure Turn the starter switch in OFF. Remove all ECU connectors from the CAN communication line. Check CAN line for open circuit, short circuit to positive, short circuit to ground or short circuit to another electrical line. Is any abnormality recognized? No: Go to step2 Yes: Go to step5

https://truckmanualshub.com/

Inspection procedure	Step2	Inspection procedure Attach the connector of A20 (SAM). Check CAN line for open circuit, short circuit to positive, short circuit to ground or short circuit to another electrical line. Is any abnormality recognized? No: Go to step3 Yes: Go to step4
	Step3	Inspection procedure Turn the starter switch in OFF. Reinstall all the removed connectors. Erase fault memory and perform a test drive. If the diagnosis code has occurred even during the test drive, start the operation and then replace the A4 (Combustion engine Control unit). Inspection completed
	Step4	Inspection procedure Turn the starter switch in OFF. Reinstall all the removed connectors. Erase fault memory and perform a test drive. If the diagnosis code has occurred even during the test drive, start the operation and then replace the A20 (SAM). Inspection completed
	Step5	Refer to the help menu for Nos. other than above. *1: M/T *2: DUONIC *3: ISS (With Lock brake) *4: ISS (Without Lock brake) *5: Lock brake (Without ISS) *6: Other than *3,*4,*5 *7: Full-automatic air conditioner *8: Auto leveling *9: Manual leveling Inspection procedure Repair or replace electrical lines. Reinstall all the removed connectors. Turn the starter switch in ON. Inspection completed

520233-9: Timeout error of CAN-Transmit-Frame DM1ELight message.

Generation condition	[Test Condition] • Monitoring is active 2.00s after ECU initialization while engine isn't running yet, while the engine isn't cranking, 2.00s after engine startup, while the battery voltage is over 10.00V, as long as the battery voltage is over 10.00V and 2.00s after this threshold has been exceeded, if none of the CAN controllers is in bus-off state, 2.00s after last CAN controller is no more in bus-off state and if the ECU is not in afterrun • Continuously
	[Fault Detection] • Timeout of DM1ELight message is detected
	[Defect Debouncing] • Defect condition fulfilled continuously >500.00 events
Fault healing	• If the DM1ELight message is transmitted correctly
System reaction	• None
Failure cause	• Defective CAN Controller within Chassis CAN, CAN Cables disconnected or broken. Short circuit in wiring.
Failure repair	• Check the installation and the proper connection of the Engine Control Unit and the Instrument Cluster to the CAN vehicle network. • Check correct operating conditions of the CAN controller. • Check the vehicle wirings.

https://truckmanualshub.com/

Inspection procedure	Step1	Refer to the help menu for Nos. other than above. *1: M/T *2: DUONIC *3: ISS (With Lock brake) *4: ISS (Without Lock brake) *5: Lock brake (Without ISS) *6: Other than *3,*4,*5 *7: Full-automatic air conditioner *8: Auto leveling *9: Manual leveling Inspection procedure Turn the starter switch in OFF. Remove all ECU connectors from the CAN communication line. Check CAN line for open circuit, short circuit to positive, short circuit to ground or short circuit to another electrical line. Is any abnormality recognized? No: Go to step2 Yes: Go to step5
	Step2	Inspection procedure Attach the connector of A20 (SAM). Check CAN line for open circuit, short circuit to positive, short circuit to ground or short circuit to another electrical line. Is any abnormality recognized? No: Go to step3 Yes: Go to step4
	Step3	Inspection procedure Turn the starter switch in OFF. Reinstall all the removed connectors. Erase fault memory and perform a test drive. If the diagnosis code has occurred even during the test drive, start the operation and then replace the A4 (Combustion engine Control unit). Inspection completed
	Step4	Inspection procedure Turn the starter switch in OFF. Reinstall all the removed connectors. Erase fault memory and perform a test drive. If the diagnosis code has occurred even during the test drive, start the operation and then replace the A20 (SAM). Inspection completed
	Step5	Refer to the help menu for Nos. other than above. *1: M/T *2: DUONIC *3: ISS (With Lock brake) *4: ISS (Without Lock brake) *5: Lock brake (Without ISS) *6: Other than *3,*4,*5 *7: Full-automatic air conditioner *8: Auto leveling *9: Manual leveling Inspection procedure Repair or replace electrical lines. Reinstall all the removed connectors. Turn the starter switch in ON. Inspection completed

https://truckmanualshub.com/

520237-2: Data length error for CAN Receive message EBC1.

Generation condition		[Test Condition] • Monitoring is active 2.00s after ECU initialization while engine isn't running yet, while the engine isn't cranking, 2.00s after engine startup, while the battery voltage is over 10.00V, as long as the battery voltage is over 10.00V and 2.00s after this threshold has been exceeded, if none of the CAN controllers is in bus-off state, 2.00s after last CAN controller is no more in bus-off state and if the ECU is not in afterrun • Continuously
		[Fault Detection] • Fault is detected when the data length of the EBC1 is not equal to the specified data length in the CANDLC.
		[Defect Debouncing] • Defect condition fulfilled continuously >500.0 ms
Fault healing		• Data length of the EBC1 is equal to the specified data length in the CANDLC.
System reaction		• n case of wrong data size, the default values are used: • Brake status StbIntv_stEBSBrkSwt = 3.00- (applied to FALSE) • ABS status StbIntv_stABSEngCtl = 3.00- (applied to FALSE) • ASR engine status StbIntv_stTCSEngCtl = 3.00- (applied to FALSE) • ASR brake status StbIntv_stTCSBrkCtl = 3.00- (applied to FALSE) • Engine shut off demand Com_stEngShOffEBC1 = 3.00- (applied to FALSE) • Driver information Com_stDrvInfo = 3.00- (applied to FALSE)
		• 1) FId / Disable CAN messages EBC1,HRWS,VDC1,WS
Failure cause		• Defective CAN controller of Electronic Brake Controller, wrong configuration of the EBC
Failure repair		• Check presence and correct connection of the EBC to the network, Check correct functioning of the CAN controller. Check wiring. Check EBC configuration
Inspection procedure	Step1	Inspection procedure Perform a diagnosis on the A28 (DUONIC Control unit) side system.

520237-9: Timeout error of CAN-Receive-Frame Electronic Brake Controller.

Generation condition	[Test Condition] • Monitoring is active 2.00s after ECU initialization while engine isn't running yet, while the engine isn't cranking, 2.00s after engine startup, while the battery voltage is over 10.00V, as long as the battery voltage is over 10.00V and 2.00s after this threshold has been exceeded, if none of the CAN controllers is in bus-off state, 2.00s after last CAN controller is no more in bus-off state and if the ECU is not in afterrun • continuously
	[Fault Detection] • Timeout of Electronic Brake Controller 1 message
	[Defect Debouncing] • Defect condition fulfilled continuously >500.0 ms
Fault healing	• If the EBC1 message is received correct after the debouncing time the DFC is healed
System reaction	• All state considered as not active, by calibration. • The default values are used: • ASR engine control not active (StbIntv_stTCSEngCtl = 3.00- = 0) • ASR brake control not active (StbIntv_stTCSBrkCtl = 3.00- = 0) • ABS not active (StbIntv_stABSEngCtl = 3.00- = 0) • Brake pedal not pressed (StbIntv_stEBSBrkSwt = 3.00- = 0) NOT USED BY FUSO • Engine shut off demand not active (Com_stEngShOffEBC1 = 3.00- = 0) NOT USED BY FUSO
Failure cause	• Defective CAN controller of ABS / ASR / ESP, CAN cable disconnected or broken. Short circuit in wiring.
Failure repair	• Check presence and correct connection of the ABS / ASR / ESP to the network, Check correct functioning of the CAN controller. Check wiring.

https://truckmanualshub.com/

Inspection procedure	Step1	Refer to the help menu for Nos. other than above. *1: M/T *2: DUONIC *3: ISS (With Lock brake) *4: ISS (Without Lock brake) *5: Lock brake (Without ISS) *6: Other than *3,*4,*5 *7: Full-automatic air conditioner *8: Auto leveling *9: Manual leveling Inspection procedure If one of diagnosis codes associated with A1 (Antilock brake system Control unit) is generated, make a system diagnosis according to the diagnosis code. Go to step2
	Step2	Refer to the help menu for Nos. other than above. *1: M/T *2: DUONIC *3: ISS (With Lock brake) *4: ISS (Without Lock brake) *5: Lock brake (Without ISS) *6: Other than *3,*4,*5 *7: Full-automatic air conditioner *8: Auto leveling *9: Manual leveling Inspection procedure Turn the starter switch in OFF. Remove all ECU connectors from the CAN communication line. Check CAN line for open circuit, short circuit to positive, short circuit to ground or short circuit to another electrical line. Is any abnormality recognized? No: Go to step3 Yes: Go to step8
	Step3	Inspection procedure Attach the connector of A20 (SAM). Check CAN line for open circuit, short circuit to positive, short circuit to ground or short circuit to another electrical line. Is any abnormality recognized? No: Go to step4 Yes: Go to step7
	Step4	Inspection procedure Attach the connector of A1 (Antilock brake system Control unit). Check CAN line for open circuit, short circuit to positive, short circuit to ground or short circuit to another electrical line. Is any abnormality recognized? No: Go to step5 Yes: Go to step6
	Step5	Inspection procedure Turn the starter switch in OFF. Reinstall all the removed connectors. Erase fault memory and perform a test drive. If the diagnosis code has occurred even during the test drive, start the operation and then replace the A4 (Combustion engine Control unit). Inspection completed
	Step6	Inspection procedure Turn the starter switch in OFF. Reinstall all the removed connectors. Erase fault memory and perform a test drive. If the diagnosis code has occurred even during the test drive, start the operation and then replace the A1 (Antilock brake system Control unit). Inspection completed

https://truckmanualshub.com/

Inspection procedure	Step7	Inspection procedure Turn the starter switch in OFF. Reinstall all the removed connectors. Erase fault memory and perform a test drive. If the diagnosis code has occurred even during the test drive, start the operation and then replace the A20 (SAM). Inspection completed
	Step8	Refer to the help menu for Nos. other than above. *1: M/T *2: DUONIC *3: ISS (With Lock brake) *4: ISS (Without Lock brake) *5: Lock brake (Without ISS) *6: Other than *3,*4,*5 *7: Full-automatic air conditioner *8: Auto leveling *9: Manual leveling Inspection procedure Repair or replace electrical lines. Reinstall all the removed connectors. Turn the starter switch in ON. Inspection completed

520240-0: Value of NOx sensor is not appropriate.

Generation condition		[Test Condition] • Continuous
		[Fault Detection] • Dew Point detection reached
		[Defect Debouncing] • Defect condition fulfilled continuously >10.0 ms
Fault healing		• Dew point never reached
System reaction		• None except FIDs
		• 1) Fid / Nox sensor defective • 2) Fid/ NOx Sensor not working correctly --> System monitoring with NOx sensor inhibited
Failure cause		• No failure, Dew pont reached!!
Failure repair		• No intervention
Inspection procedure	Step1	Inspection procedure Inspect the suspected factors mentioned above sequentially to locate faulty parts. Repair or replace the faulty part as necessary.

520240-9: Timeout error of CAN-Transmit-Frame EDC to NOx Sensor.

Generation condition	[Test Condition] • Monitoring is active 2.00s after ECU initialization while engine isn't running yet, while the engine isn't cranking, 2.00s after engine startup, while the battery voltage is over 10.00V, as long as the battery voltage is over 10.00V and 2.00s after this threshold has been exceeded, if none of the CAN controllers is in bus-off state, 2.00s after last CAN controller is no more in bus-off state and if the ECU is not in afterrun • Continuously
	[Fault Detection] • Time out for EDC2NOx CAN message is detected
	[Defect Debouncing] • Defect condition fulfilled continuously > 500.0 ms
Fault healing	• Time out for EDC2NOx CAN message no more detected

https://truckmanualshub.com/

System reaction		• In case of timeout, the NOx sensor continues to use the previously received dew point status, or the initial one in case no message has been received at all.
		• 1) Fid/ NOx Sensor not working correctly --> System monitoring with NOx sensor inhibited • 2) Fid/ SCR Monitoring or DEF injection release not possible (according calibration of Release Masks)
Failure cause		• Defective CAN controller of EDC, CAN cable disconnected or broken. Short circuit in wiring.
Failure repair		• Check presence and correct connection of the EDC to the network, Check correct functioning of the CAN controller. Check wiring.
Inspection procedure	Step1	Refer to the help menu for Nos. other than above. *1: M/T *2: DUONIC *3: ISS (With Lock brake) *4: ISS (Without Lock brake) *5: Lock brake (Without ISS) *6: Other than *3,*4,*5 *7: Full-automatic air conditioner *8: Auto leveling *9: Manual leveling Inspection procedure If one of diagnosis codes associated with B31 (NOx sensor) is generated, make a system diagnosis according to the diagnosis code. Go to step2
	Step2	Refer to the help menu for Nos. other than above. *1: M/T *2: DUONIC *3: ISS (With Lock brake) *4: ISS (Without Lock brake) *5: Lock brake (Without ISS) *6: Other than *3,*4,*5 *7: Full-automatic air conditioner *8: Auto leveling *9: Manual leveling Inspection procedure Turn the starter switch in OFF. Remove all ECU connectors from the CAN communication line. Check CAN line for open circuit, short circuit to positive, short circuit to ground or short circuit to another electrical line. Is any abnormality recognized? No: Go to step3 Yes: Go to step8
	Step3	Inspection procedure Attach the connector of A20 (SAM). Check CAN line for open circuit, short circuit to positive, short circuit to ground or short circuit to another electrical line. Is any abnormality recognized? No: Go to step4 Yes: Go to step7
	Step4	Inspection procedure Attach the connector of B31 (NOx sensor). Check CAN line for open circuit, short circuit to positive, short circuit to ground or short circuit to another electrical line. Is any abnormality recognized? No: Go to step5 Yes: Go to step6
	Step5	Inspection procedure Turn the starter switch in OFF. Reinstall all the removed connectors. Erase fault memory and perform a test drive. If the diagnosis code has occurred even during the test drive, start the operation and then replace the A4 (Combustion engine Control unit). Inspection completed

https://truckmanualshub.com/

Inspection procedure	Step6	Inspection procedure Turn the starter switch in OFF. Reinstall all the removed connectors. Erase fault memory and perform a test drive. If the diagnosis code has occurred even during the test drive, start the operation and then replace the B31 (NOx sensor). Inspection completed
	Step7	Inspection procedure Turn the starter switch in OFF. Reinstall all the removed connectors. Erase fault memory and perform a test drive. If the diagnosis code has occurred even during the test drive, start the operation and then replace the A20 (SAM). Inspection completed
	Step8	Refer to the help menu for Nos. other than above. *1: M/T *2: DUONIC *3: ISS (With Lock brake) *4: ISS (Without Lock brake) *5: Lock brake (Without ISS) *6: Other than *3,*4,*5 *7: Full-automatic air conditioner *8: Auto leveling *9: Manual leveling Inspection procedure Repair or replace electrical lines. Reinstall all the removed connectors. Turn the starter switch in ON. Inspection completed

520243-9: Timeout error of CAN-Transmit-Frame torque information.

Generation condition	[Test Condition] • Monitoring is active 2.00s after ECU initialization while engine isn't running yet, while the engine isn't cranking, 2.00s after engine startup, while the battery voltage is over 10.00V, as long as the battery voltage is over 10.00V and 2.00s after this threshold has been exceeded, if none of the CAN controllers is in bus-off state, 2.00s after last CAN controller is no more in bus-off state and if the ECU is not in afterrun • Continuously
	[Fault Detection] • Message timeout is detected
	[Defect Debouncing] • Defect condition fulfilled continuously > 500.0 ms
Fault healing	• Message is acknowledged
System reaction	• None
Failure cause	• Defective CAN controller, CAN cable disconnected or broken. Short circuit in wiring.
Failure repair	• Check the presence and correct connection of the EDC to the network, Check correct functioning of the CAN controller. Check wiring.

https://truckmanualshub.com/

Inspection procedure	Step1	Refer to the help menu for Nos. other than above. *1: M/T *2: DUONIC *3: ISS (With Lock brake) *4: ISS (Without Lock brake) *5: Lock brake (Without ISS) *6: Other than *3,*4,*5 *7: Full-automatic air conditioner *8: Auto leveling *9: Manual leveling Inspection procedure Turn the starter switch in OFF. Remove all ECU connectors from the CAN communication line. Check CAN line for open circuit, short circuit to positive, short circuit to ground or short circuit to another electrical line. Is any abnormality recognized? No: Go to step2 Yes: Go to step5
	Step2	Inspection procedure Attach the connector of A20 (SAM). Check CAN line for open circuit, short circuit to positive, short circuit to ground or short circuit to another electrical line. Is any abnormality recognized? No: Go to step3 Yes: Go to step4
	Step3	Inspection procedure Turn the starter switch in OFF. Reinstall all the removed connectors. Erase fault memory and perform a test drive. If the diagnosis code has occurred even during the test drive, start the operation and then replace the A4 (Combustion engine Control unit). Inspection completed
	Step4	Inspection procedure Turn the starter switch in OFF. Reinstall all the removed connectors. Erase fault memory and perform a test drive. If the diagnosis code has occurred even during the test drive, start the operation and then replace the A20 (SAM). Inspection completed
	Step5	Refer to the help menu for Nos. other than above. *1: M/T *2: DUONIC *3: ISS (With Lock brake) *4: ISS (Without Lock brake) *5: Lock brake (Without ISS) *6: Other than *3,*4,*5 *7: Full-automatic air conditioner *8: Auto leveling *9: Manual leveling Inspection procedure Repair or replace electrical lines. Reinstall all the removed connectors. Turn the starter switch in ON. Inspection completed

https://truckmanualshub.com/

520244-9: Timeout error of CAN-Transmit-Frame accelerator pedal information.

Generation condition		[Test Condition] • Monitoring is active 2.00s after ECU initialization while engine isn't running yet, while the engine isn't cranking, 2.00s after engine startup, while the battery voltage is over 10.00V, as long as the battery voltage is over 10.00V and 2.00s after this threshold has been exceeded, if none of the CAN controllers is in bus-off state, 2.00s after last CAN controller is no more in bus-off state and if the ECU is not in afterrun • Continuously
		[Fault Detection] • Message timeout is detected
		[Defect Debouncing] • Defect condition fulfilled continuously > 500.0 ms
Fault healing		• Message is acknowledged
System reaction		• None
Failure cause		• Defective CAN controller, CAN cable disconnected or broken. Short circuit in wiring.
Failure repair		• Check the presence and correct connection of the EDC to the network, Check correct functioning of the CAN controller. Check wiring.
Inspection procedure	Step1	Refer to the help menu for Nos. other than above. *1: M/T *2: DUONIC *3: ISS (With Lock brake) *4: ISS (Without Lock brake) *5: Lock brake (Without ISS) *6: Other than *3,*4,*5 *7: Full-automatic air conditioner *8: Auto leveling *9: Manual leveling Inspection procedure Turn the starter switch in OFF. Remove all ECU connectors from the CAN communication line. Check CAN line for open circuit, short circuit to positive, short circuit to ground or short circuit to another electrical line. Is any abnormality recognized? No: Go to step2 Yes: Go to step5
	Step2	Inspection procedure Attach the connector of A20 (SAM). Check CAN line for open circuit, short circuit to positive, short circuit to ground or short circuit to another electrical line. Is any abnormality recognized? No: Go to step3 Yes: Go to step4
	Step3	Inspection procedure Turn the starter switch in OFF. Reinstall all the removed connectors. Erase fault memory and perform a test drive. If the diagnosis code has occurred even during the test drive, start the operation and then replace the A4 (Combustion engine Control unit). Inspection completed
	Step4	Inspection procedure Turn the starter switch in OFF. Reinstall all the removed connectors. Erase fault memory and perform a test drive. If the diagnosis code has occurred even during the test drive, start the operation and then replace the A20 (SAM). Inspection completed

https://truckmanualshub.com/

Inspection procedure	Step5	Refer to the help menu for Nos. other than above. *1: M/T *2: DUONIC *3: ISS (With Lock brake) *4: ISS (Without Lock brake) *5: Lock brake (Without ISS) *6: Other than *3,*4,*5 *7: Full-automatic air conditioner *8: Auto leveling *9: Manual leveling Inspection procedure Repair or replace electrical lines. Reinstall all the removed connectors. Turn the starter switch in ON. Inspection completed

520246-9: Timeout error of CAN-Transmit-Frame friction, desired speed, estimated engine parasitic losses.

Generation condition		[Test Condition] • Monitoring is active 2.00s after ECU initialization while engine isn't running yet, while the engine isn't cranking, 2.00s after engine startup, while the battery voltage is over 10.00V, as long as the battery voltage is over 10.00V and 2.00s after this threshold has been exceeded, if none of the CAN controllers is in bus-off state, 2.00s after last CAN controller is no more in bus-off state and if the ECU is not in afterrun • Continuously
		[Fault Detection] • Message timeout is detected
		[Defect Debouncing] • Defect condition fulfilled continuously > 500.0 ms
Fault healing		• Message is acknowledged
System reaction		• None
Failure cause		• Defective CAN controller, CAN cable disconnected or broken. Short circuit in wiring.
Failure repair		• Check the presence and correct connection of the EDC to the network, Check correct functioning of the CAN controller. Check wiring.
Inspection procedure	Step1	Refer to the help menu for Nos. other than above. *1: M/T *2: DUONIC *3: ISS (With Lock brake) *4: ISS (Without Lock brake) *5: Lock brake (Without ISS) *6: Other than *3,*4,*5 *7: Full-automatic air conditioner *8: Auto leveling *9: Manual leveling Inspection procedure Turn the starter switch in OFF. Remove all ECU connectors from the CAN communication line. Check CAN line for open circuit, short circuit to positive, short circuit to ground or short circuit to another electrical line. Is any abnormality recognized? Noogie to step2 Yes: Go to step5
	Step2	Inspection procedure Attach the connector of A20 (SAM). Check CAN line for open circuit, short circuit to positive, short circuit to ground or short circuit to another electrical line. Is any abnormality recognized? No: Go to step3 Yes: Go to step4

https://truckmanualshub.com/

Inspection procedure	Step3	Inspection procedure Turn the starter switch in OFF. Reinstall all the removed connectors. Erase fault memory and perform a test drive. If the diagnosis code has occurred even during the test drive, start the operation and then replace the A4 (Combustion engine Control unit). Inspection completed
	Step4	Inspection procedure Turn the starter switch in OFF. Reinstall all the removed connectors. Erase fault memory and perform a test drive. If the diagnosis code has occurred even during the test drive, start the operation and then replace the A20 (SAM). Inspection completed
	Step5	Refer to the help menu for Nos. other than above. *1: M/T *2: DUONIC *3: ISS (With Lock brake) *4: ISS (Without Lock brake) *5: Lock brake (Without ISS) *6: Other than *3,*4,*5 *7: Full-automatic air conditioner *8: Auto leveling *9: Manual leveling Inspection procedure Repair or replace electrical lines. Reinstall all the removed connectors. Turn the starter switch in ON. Inspection completed

520247-9: Timeout error of CAN-Transmit-Frame information of Engine Fluid Level/Pressure.

Generation condition	[Test Condition] • Monitoring is active 2.00s after ECU initialization while engine isn't running yet, while the engine isn't cranking, 2.00s after engine startup, while the battery voltage is over 10.00V, as long as the battery voltage is over 10.00V and 2.00s after this threshold has been exceeded, if none of the CAN controllers is in bus-off state, 2.00s after last CAN controller is no more in bus-off state and if the ECU is not in afterrun • Continuously
	[Fault Detection] • Time out of CAN Frame EFL_P1
	[Defect Debouncing] • Defect condition fulfilled continuously >500.0 ms
Fault healing	• Message is acknowledged
System reaction	• None
Failure cause	• Defective CAN controller, CAN cable disconnected or broken. Short circuit in wiring.
Failure repair	• Check the presence and correct connection of the EDC to the network, Check correct functioning of the CAN controller. Check wiring.

https://truckmanualshub.com/

Inspection procedure	Step1	Refer to the help menu for Nos. other than above. *1: M/T *2: DUONIC *3: ISS (With Lock brake) *4: ISS (Without Lock brake) *5: Lock brake (Without ISS) *6: Other than *3,*4,*5 *7: Full-automatic air conditioner *8: Auto leveling *9: Manual leveling Inspection procedure Turn the starter switch in OFF. Remove all ECU connectors from the CAN communication line. Check CAN line for open circuit, short circuit to positive, short circuit to ground or short circuit to another electrical line. Is any abnormality recognized? No: Go to step2 Yes: Go to step5
	Step2	Inspection procedure Attach the connector of A20 (SAM). Check CAN line for open circuit, short circuit to positive, short circuit to ground or short circuit to another electrical line. Is any abnormality recognized? No: Go to step3 Yes: Go to step4
	Step3	Inspection procedure Turn the starter switch in OFF. Reinstall all the removed connectors. Erase fault memory and perform a test drive. If the diagnosis code has occurred even during the test drive, start the operation and then replace the A4 (Combustion engine Control unit). Inspection completed
	Step4	Inspection procedure Turn the starter switch in OFF. Reinstall all the removed connectors. Erase fault memory and perform a test drive. If the diagnosis code has occurred even during the test drive, start the operation and then replace the A20 (SAM). Inspection completed
	Step5	Refer to the help menu for Nos. other than above. *1: M/T *2: DUONIC *3: ISS (With Lock brake) *4: ISS (Without Lock brake) *5: Lock brake (Without ISS) *6: Other than *3,*4,*5 *7: Full-automatic air conditioner *8: Auto leveling *9: Manual leveling Inspection procedure Repair or replace electrical lines. Reinstall all the removed connectors. Turn the starter switch in ON. Inspection completed

https://truckmanualshub.com/

520248-9: Timeout error of CAN-Transmit-Frame message proprietary with different switch and parameter values.

Generation condition		[Test Condition] • Monitoring is active 2.00s after ECU initialization while engine isn't running yet, while the engine isn't cranking, 2.00s after engine startup, while the battery voltage is over 10.00V, as long as the battery voltage is over 10.00V and 2.00s after this threshold has been exceeded, if none of the CAN controllers is in bus-off state, 2.00s after last CAN controller is no more in bus-off state and if the ECU is not in afterrun • Continuously
		[Fault Detection] • Message timeout is detected
		[Defect Debouncing] • Defect condition fulfilled continuously >500.0 ms
Fault healing		• Time out error is healed once the frame is transmitted.
System reaction		• None
Failure cause		• Defective CAN controller, CAN cable disconnected or broken. Short circuit in wiring.
Failure repair		• Check the presence and correct connection of the EDC to the network, Check correct functioning of the CAN controller. Check wiring.
Inspection procedure	Step1	Refer to the help menu for Nos. other than above. *1: M/T *2: DUONIC *3: ISS (With Lock brake) *4: ISS (Without Lock brake) *5: Lock brake (Without ISS) *6: Other than *3,*4,*5 *7: Full-automatic air conditioner *8: Auto leveling *9: Manual leveling Inspection procedure Turn the starter switch in OFF. Remove all ECU connectors from the CAN communication line. Check CAN line for open circuit, short circuit to positive, short circuit to ground or short circuit to another electrical line. Is any abnormality recognized? No: Go to step2 Yes: Go to step5
	Step2	Inspection procedure Attach the connector of A20 (SAM). Check CAN line for open circuit, short circuit to positive, short circuit to ground or short circuit to another electrical line. Is any abnormality recognized? No: Go to step3 Yes: Go to step4
	Step3	Inspection procedure Turn the starter switch in OFF. Reinstall all the removed connectors. Erase fault memory and perform a test drive. If the diagnosis code has occurred even during the test drive, start the operation and then replace the A4 (Combustion engine Control unit). Inspection completed
	Step4	Inspection procedure Turn the starter switch in OFF. Reinstall all the removed connectors. Erase fault memory and perform a test drive. If the diagnosis code has occurred even during the test drive, start the operation and then replace the A20 (SAM). Inspection completed

https://truckmanualshub.com/

Inspection procedure	Step5	Refer to the help menu for Nos. other than above. *1: M/T *2: DUONIC *3: ISS (With Lock brake) *4: ISS (Without Lock brake) *5: Lock brake (Without ISS) *6: Other than *3,*4,*5 *7: Full-automatic air conditioner *8: Auto leveling *9: Manual leveling Inspection procedure Repair or replace electrical lines. Reinstall all the removed connectors. Turn the starter switch in ON. Inspection completed

520249-9: Timeout error of CAN-Transmit-Frame message of DPF information.

Generation condition		[Test Condition] • Monitoring is active 2.00s after ECU initialization while engine isn't running yet, while the engine isn't cranking, 2.00s after engine startup, while the battery voltage is over 10.00V, as long as the battery voltage is over 10.00V and 2.00s after this threshold has been exceeded, if none of the CAN controllers is in bus-off state, 2.00s after last CAN controller is no more in bus-off state and if the ECU is not in afterrun • Continuously
		[Fault Detection] • TimeOut of ENG05 Message
		[Defect Debouncing] • Defect condition fulfilled continuously >500.0 ms
Fault healing		• Time out error is healed once the frame is transmitted.
System reaction		• None
Failure cause		• Defective CAN controller, CAN cable disconnected or broken. Short circuit in wiring.
Failure repair		• Check the presence and correct connection of the EDC to the network, Check correct functioning of the CAN controller. Check wiring.
Inspection procedure	Step1	Refer to the help menu for Nos. other than above. *1: M/T *2: DUONIC *3: ISS (With Lock brake) *4: ISS (Without Lock brake) *5: Lock brake (Without ISS) *6: Other than *3,*4,*5 *7: Full-automatic air conditioner *8: Auto leveling *9: Manual leveling Inspection procedure Turn the starter switch in OFF. Remove all ECU connectors from the CAN communication line. Check CAN line for open circuit, short circuit to positive, short circuit to ground or short circuit to another electrical line. Is any abnormality recognized? No: Go to step2 Yes: Go to step5
	Step2	Inspection procedure Attach the connector of A20 (SAM). Check CAN line for open circuit, short circuit to positive, short circuit to ground or short circuit to another electrical line. Is any abnormality recognized? No: Go to step3 Yes: Go to step4

https://truckmanualshub.com/

Inspection procedure	Step3	Inspection procedure Turn the starter switch in OFF. Reinstall all the removed connectors. Erase fault memory and perform a test drive. If the diagnosis code has occurred even during the test drive, start the operation and then replace the A4 (Combustion engine Control unit). Inspection completed
	Step4	Inspection procedure Turn the starter switch in OFF. Reinstall all the removed connectors. Erase fault memory and perform a test drive. If the diagnosis code has occurred even during the test drive, start the operation and then replace the A20 (SAM). Inspection completed
	Step5	Refer to the help menu for Nos. other than above. *1: M/T *2: DUONIC *3: ISS (With Lock brake) *4: ISS (Without Lock brake) *5: Lock brake (Without ISS) *6: Other than *3,*4,*5 *7: Full-automatic air conditioner *8: Auto leveling *9: Manual leveling Inspection procedure Repair or replace electrical lines. Reinstall all the removed connectors. Turn the starter switch in ON. Inspection completed

520250-9: CAN timeout fault. Error on transmission of CAN message

Generation condition	[Test Condition] • Monitoring is active 2.00s after ECU initialization while engine isn't running yet, while the engine isn't cranking, 2.00s after engine startup, while the battery voltage is over 10.00V, as long as the battery voltage is over 10.00V and 2.00s after this threshold has been exceeded, if none of the CAN controllers is in bus-off state, 2.00s after last CAN controller is no more in bus-off state and if the ECU is not in afterrun • Continuously
	[Fault Detection] • Message timeout is detected
	[Defect Debouncing] • Defect condition fulfilled continuously >500.0 ms
Fault healing	• Time out error is healed once the frame is transmitted.
System reaction	• None
Failure cause	• Defective CAN controller, CAN cable disconnected or broken. Short circuit in wiring.
Failure repair	• Check the presence and correct connection of the EDC to the network, Check correct functioning of the CAN controller. Check wiring.

https://truckmanualshub.com/

Inspection procedure	Step1	Refer to the help menu for Nos. other than above. *1: M/T *2: DUONIC *3: ISS (With Lock brake) *4: ISS (Without Lock brake) *5: Lock brake (Without ISS) *6: Other than *3,*4,*5 *7: Full-automatic air conditioner *8: Auto leveling *9: Manual leveling Inspection procedure Turn the starter switch in OFF. Remove all ECU connectors from the CAN communication line. Check CAN line for open circuit, short circuit to positive, short circuit to ground or short circuit to another electrical line. Is any abnormality recognized? No: Go to step2 Yes: Go to step5
	Step2	Inspection procedure Attach the connector of A20 (SAM). Check CAN line for open circuit, short circuit to positive, short circuit to ground or short circuit to another electrical line. Is any abnormality recognized? No: Go to step3 Yes: Go to step4
	Step3	Inspection procedure Turn the starter switch in OFF. Reinstall all the removed connectors. Erase fault memory and perform a test drive. If the diagnosis code has occurred even during the test drive, start the operation and then replace the A4 (Combustion engine Control unit). Inspection completed
	Step4	Inspection procedure Turn the starter switch in OFF. Reinstall all the removed connectors. Erase fault memory and perform a test drive. If the diagnosis code has occurred even during the test drive, start the operation and then replace the A20 (SAM). Inspection completed
	Step5	Refer to the help menu for Nos. other than above. *1: M/T *2: DUONIC *3: ISS (With Lock brake) *4: ISS (Without Lock brake) *5: Lock brake (Without ISS) *6: Other than *3,*4,*5 *7: Full-automatic air conditioner *8: Auto leveling *9: Manual leveling Inspection procedure Repair or replace electrical lines. Reinstall all the removed connectors. Turn the starter switch in ON. Inspection completed

https://truckmanualshub.com/

520251-9: CAN timeout fault. Error on transmission of CAN message

Generation condition		[Test Condition] • Monitoring is active 2.00s after ECU initialization while engine isn't running yet, while the engine isn't cranking, 2.00s after engine startup, while the battery voltage is over 10.00V, as long as the battery voltage is over 10.00V and 2.00s after this threshold has been exceeded, if none of the CAN controllers is in bus-off state, 2.00s after last CAN controller is no more in bus-off state and if the ECU is not in afterrun • Continuously
		[Fault Detection] • Time out for EngRetCfgBAM message is detected
		[Defect Debouncing] • Defect condition fulfilled continuously > 500.0 ms
Fault healing		• Time out for EngRetCfgBAM message no more detected
System reaction		• None
Failure cause		• Defective CAN controller of EDC, CAN cable disconnected or broken. Short circuit in wiring.
Failure repair		• Check presence and correct connection of the EDC to the network, Check correct functioning of the CAN controller. Check wiring.
Inspection procedure	Step1	Refer to the help menu for Nos. other than above. *1: M/T *2: DUONIC *3: ISS (With Lock brake) *4: ISS (Without Lock brake) *5: Lock brake (Without ISS) *6: Other than *3,*4,*5 *7: Full-automatic air conditioner *8: Auto leveling *9: Manual leveling Inspection procedure Turn the starter switch in OFF. Remove all ECU connectors from the CAN communication line. Check CAN line for open circuit, short circuit to positive, short circuit to ground or short circuit to another electrical line. Is any abnormality recognized? No: Go to step2 Yes: Go to step5
	Step2	Inspection procedure Attach the connector of A20 (SAM). Check CAN line for open circuit, short circuit to positive, short circuit to ground or short circuit to another electrical line. Is any abnormality recognized? No: Go to step3 Yes: Go to step4
	Step3	Inspection procedure Turn the starter switch in OFF. Reinstall all the removed connectors. Erase fault memory and perform a test drive. If the diagnosis code has occurred even during the test drive, start the operation and then replace the A4 (Combustion engine Control unit). Inspection completed
	Step4	Inspection procedure Turn the starter switch in OFF. Reinstall all the removed connectors. Erase fault memory and perform a test drive. If the diagnosis code has occurred even during the test drive, start the operation and then replace the A20 (SAM). Inspection completed

https://truckmanualshub.com/

Inspection procedure	Step5	Refer to the help menu for Nos. other than above. *1: M/T *2: DUONIC *3: ISS (With Lock brake) *4: ISS (Without Lock brake) *5: Lock brake (Without ISS) *6: Other than *3,*4,*5 *7: Full-automatic air conditioner *8: Auto leveling *9: Manual leveling Inspection procedure Repair or replace electrical lines. Reinstall all the removed connectors. Turn the starter switch in ON. Inspection completed

520252-9: CAN timeout fault. Error on transmission of CAN message

Generation condition		[Test Condition] • Monitoring is active 2.00s after ECU initialization while engine isn't running yet, while the engine isn't cranking, 2.00s after engine startup, while the battery voltage is over 10.00V, as long as the battery voltage is over 10.00V and 2.00s after this threshold has been exceeded, if none of the CAN controllers is in bus-off state, 2.00s after last CAN controller is no more in bus-off state and if the ECU is not in afterrun • Continuously
		[Fault Detection] • Time out for EngRetCfgPAC message is detected
		[Defect Debouncing] • Defect condition fulfilled continuously > 500.0 ms
Fault healing		• Time out for EngRetCfgPAC message no more detected
System reaction		• None
Failure cause		• Defective CAN controller of EDC, CAN cable disconnected or broken. Short circuit in wiring.
Failure repair		• Check presence and correct connection of the EDC to the network, Check correct functioning of the CAN controller. Check wiring.
Inspection procedure	Step1	Refer to the help menu for Nos. other than above. *1: M/T *2: DUONIC *3: ISS (With Lock brake) *4: ISS (Without Lock brake) *5: Lock brake (Without ISS) *6: Other than *3,*4,*5 *7: Full-automatic air conditioner *8: Auto leveling *9: Manual leveling Inspection procedure Turn the starter switch in OFF. Remove all ECU connectors from the CAN communication line. Check CAN line for open circuit, short circuit to positive, short circuit to ground or short circuit to another electrical line. Is any abnormality recognized? No: Go to step2 Yes: Go to step5
	Step2	Inspection procedure Attach the connector of A20 (SAM). Check CAN line for open circuit, short circuit to positive, short circuit to ground or short circuit to another electrical line. Is any abnormality recognized? No: Go to step3 Yes: Go to step4

https://truckmanualshub.com/

Inspection procedure	Step3	Inspection procedure Turn the starter switch in OFF. Reinstall all the removed connectors. Erase fault memory and perform a test drive. If the diagnosis code has occurred even during the test drive, start the operation and then replace the A4 (Combustion engine Control unit). Inspection completed
	Step4	Inspection procedure Turn the starter switch in OFF. Reinstall all the removed connectors. Erase fault memory and perform a test drive. If the diagnosis code has occurred even during the test drive, start the operation and then replace the A20 (SAM). Inspection completed
	Step5	Refer to the help menu for Nos. other than above. *1: M/T *2: DUONIC *3: ISS (With Lock brake) *4: ISS (Without Lock brake) *5: Lock brake (Without ISS) *6: Other than *3,*4,*5 *7: Full-automatic air conditioner *8: Auto leveling *9: Manual leveling Inspection procedure Repair or replace electrical lines. Reinstall all the removed connectors. Turn the starter switch in ON. Inspection completed

520253-31: Engine shutoff Reception quality

Generation condition		[Test Condition] • Monitoring is active 2.00s after ECU initialization while engine isn't running yet, while the engine isn't cranking, 2.00s after engine startup, while the battery voltage is over 10.00V, as long as the battery voltage is over 10.00V and 2.00s after this threshold has been exceeded, if none of the CAN controllers is in bus-off state, 2.00s after last CAN controller is no more in bus-off state and if the ECU is not in afterrun • Continuously
		[Fault Detection] • External shut off request by Electronic Brake Controller 1 message. • This DFC does not describe a failure, but simply record an external engine shut off request.
		[Defect Debouncing] • infinite
Fault healing		• Com_stEngShOffEBC1 = 0
System reaction		• Engine is shut off, further reactions see FId list.
Failure cause		• An Engine Shut off request was activated by another failure
Failure repair		• Check failure source for engine shut off (Fid_EngShOff)
Inspection procedure	Step1	Inspection procedure Inspect the suspected factors mentioned above sequentially to locate faulty parts. Repair or replace the faulty part as necessary.

https://truckmanualshub.com/

520255-9: CAN timeout fault. Error on transmission of CAN message

Generation condition		[Test Condition] • Monitoring is active 2.00s after ECU initialization while engine isn't running yet, while the engine isn't cranking, 2.00s after engine startup, while the battery voltage is over 10.00V, as long as the battery voltage is over 10.00V and 2.00s after this threshold has been exceeded, if none of the CAN controllers is in bus-off state, 2.00s after last CAN controller is no more in bus-off state and if the ECU is not in afterrun • Continuously
		[Fault Detection] • Fault is detected if a Time out of the EngTemp frame has occurred.
		[Defect Debouncing] • Defect condition fulfilled continuously > 500.0 ms
Fault healing		• Message is acknowledged
System reaction		• None
Failure cause		• Defective CAN controller, CAN cable disconnected or broken. Short circuit in wiring.
Failure repair		• Check the presence and correct connection of the EDC to the network, Check correct functioning of the CAN controller. Check wiring.
Inspection procedure	Step1	Refer to the help menu for Nos. other than above. *1: M/T *2: DUONIC *3: ISS (With Lock brake) *4: ISS (Without Lock brake) *5: Lock brake (Without ISS) *6: Other than *3,*4,*5 *7: Full-automatic air conditioner *8: Auto leveling *9: Manual leveling Inspection procedure Turn the starter switch in OFF. Remove all ECU connectors from the CAN communication line. Check CAN line for open circuit, short circuit to positive, short circuit to ground or short circuit to another electrical line. Is any abnormality recognized? No: Go to step2 Yes: Go to step5
	Step2	Inspection procedure Attach the connector of A20 (SAM). Check CAN line for open circuit, short circuit to positive, short circuit to ground or short circuit to another electrical line. Is any abnormality recognized? No: Go to step3 Yes: Go to step4
	Step3	Inspection procedure Turn the starter switch in OFF. Reinstall all the removed connectors. Erase fault memory and perform a test drive. If the diagnosis code has occurred even during the test drive, start the operation and then replace the A4 (Combustion engine Control unit). Inspection completed
	Step4	Inspection procedure Turn the starter switch in OFF. Reinstall all the removed connectors. Erase fault memory and perform a test drive. If the diagnosis code has occurred even during the test drive, start the operation and then replace the A20 (SAM). Inspection completed

https://truckmanualshub.com/

Inspection procedure	Step5	Refer to the help menu for Nos. other than above. *1: M/T *2: DUONIC *3: ISS (With Lock brake) *4: ISS (Without Lock brake) *5: Lock brake (Without ISS) *6: Other than *3,*4,*5 *7: Full-automatic air conditioner *8: Auto leveling *9: Manual leveling Inspection procedure Repair or replace electrical lines. Reinstall all the removed connectors. Turn the starter switch in ON. Inspection completed

520258-9: CAN timeout fault. Error on transmission of CAN message

Generation condition		[Test Condition] • Monitoring is active 2.00s after ECU initialization while engine isn't running yet, while the engine isn't cranking, 2.00s after engine startup, while the battery voltage is over 10.00V, as long as the battery voltage is over 10.00V and 2.00s after this threshold has been exceeded, if none of the CAN controllers is in bus-off state, 2.00s after last CAN controller is no more in bus-off state and if the ECU is not in afterrun • Continuously
		[Fault Detection] • Fault is detected if a time out of ETC1 message occurs.
		[Defect Debouncing] • Defect condition fulfilled continuously >500.0 ms
Fault healing		• When the frame is received, the time out error is cleared.
System reaction		• Switch to default values: • Driveline Engaged status 1.00- (0=disengaged) • Torque Converter Lockup Status to 0.00- (0=disengaged) • Shift in Process status to 0.00- (0= not active) • Gearbox output speed = 0 • momentary engine overspeed to 0x00
		• 1) Fld / Disable CAN messages ETC1,ETC2
Failure cause		• Defective CAN controller of Gearbox Control Unit, under voltage of ETC, missing ETC, CAN cable connecting the ETC is disconnected or broken. Short circuit in wiring.
Failure repair		• Check presence and correct connection of the ETC to the network, check correct functioning of the ETC CAN controller and its voltage supply. Check wiring.
Inspection procedure	Step1	Refer to the help menu for Nos. other than above. *1: M/T *2: DUONIC *3: ISS (With Lock brake) *4: ISS (Without Lock brake) *5: Lock brake (Without ISS) *6: Other than *3,*4,*5 *7: Full-automatic air conditioner *8: Auto leveling *9: Manual leveling Inspection procedure If one of diagnosis codes associated with A28 (DUONIC Control unit) is generated, make a system diagnosis according to the diagnosis code. Go to step2

https://truckmanualshub.com/

Inspection procedure	Step2	Refer to the help menu for Nos. other than above. *1: M/T *2: DUONIC *3: ISS (With Lock brake) *4: ISS (Without Lock brake) *5: Lock brake (Without ISS) *6: Other than *3,*4,*5 *7: Full-automatic air conditioner *8: Auto leveling *9: Manual leveling Inspection procedure Turn the starter switch in OFF. Remove all ECU connectors from the CAN communication line. Check CAN line for open circuit, short circuit to positive, short circuit to ground or short circuit to another electrical line. Is any abnormality recognized? No: Go to step3 Yes: Go to step8
	Step3	Inspection procedure Attach the connector of A20 (SAM). Check CAN line for open circuit, short circuit to positive, short circuit to ground or short circuit to another electrical line. Is any abnormality recognized? No: Go to step4 Yes: Go to step7
	Step4	Inspection procedure Attach the connector of A28 (DUONIC Control unit). Check CAN line for open circuit, short circuit to positive, short circuit to ground or short circuit to another electrical line. Is any abnormality recognized? No: Go to step5 Yes: Go to step6
	Step5	Inspection procedure Turn the starter switch in OFF. Reinstall all the removed connectors. Erase fault memory and perform a test drive. If the diagnosis code has occurred even during the test drive, start the operation and then replace the A4 (Combustion engine Control unit). Inspection completed
	Step6	Inspection procedure Turn the starter switch in OFF. Reinstall all the removed connectors. Erase fault memory and perform a test drive. If the diagnosis code has occurred even during the test drive, start the operation and then replace the A28 (DUONIC Control unit). Inspection completed
	Step7	Inspection procedure Turn the starter switch in OFF. Reinstall all the removed connectors. Erase fault memory and perform a test drive. If the diagnosis code has occurred even during the test drive, start the operation and then replace the A20 (SAM). Inspection completed

https://truckmanualshub.com/

Inspection procedure	Step8	Refer to the help menu for Nos. other than above. *1: M/T *2: DUONIC *3: ISS (With Lock brake) *4: ISS (Without Lock brake) *5: Lock brake (Without ISS) *6: Other than *3,*4,*5 *7: Full-automatic air conditioner *8: Auto leveling *9: Manual leveling Inspection procedure Repair or replace electrical lines. Reinstall all the removed connectors. Turn the starter switch in ON. Inspection completed

520259-9: CAN timeout fault. Error on transmission of CAN message

Generation condition		[Test Condition] • Monitoring is active 2.00s after ECU initialization while engine isn't running yet, while the engine isn't cranking, 2.00s after engine startup, while the battery voltage is over 10.00V, as long as the battery voltage is over 10.00V and 2.00s after this threshold has been exceeded, if none of the CAN controllers is in bus-off state, 2.00s after last CAN controller is no more in bus-off state and if the ECU is not in afterrun • Continuously
		[Fault Detection] • Fault is detected if a time out of ETC2 message occurs.
		[Defect Debouncing] • Defect condition fulfilled continuously >500.0 ms
Fault healing		• When the frame is received, the time out error is cleared.
System reaction		• Switch to default values: • Selected Gear Gbx_numGearTrgt is set to 0.00- • Actual Gear Ratio Gbx_rTrqTra is set to 0.00- • Current Gear Gbx_numGear is set to 1.00-
Failure cause		• Defective CAN controller of Gearbox Control Unit, under voltage of ETC, missing ETC, CAN cable connecting the ETC is disconnected or broken. Short circuit in wiring.
Failure repair		• Check presence and correct connection of the ETC to the network, check correct functioning of the ETC CAN controller and its voltage supply. Check wiring.
Inspection procedure	Step1	Refer to the help menu for Nos. other than above. *1: M/T *2: DUONIC *3: ISS (With Lock brake) *4: ISS (Without Lock brake) *5: Lock brake (Without ISS) *6: Other than *3,*4,*5 *7: Full-automatic air conditioner *8: Auto leveling *9: Manual leveling Inspection procedure If one of diagnosis codes associated with A28 (DUONIC Control unit) is generated, make a system diagnosis according to the diagnosis code. Go to step2

https://truckmanualshub.com/

Inspection procedure	Step2	Refer to the help menu for Nos. other than above. *1: M/T *2: DUONIC *3: ISS (With Lock brake) *4: ISS (Without Lock brake) *5: Lock brake (Without ISS) *6: Other than *3,*4,*5 *7: Full-automatic air conditioner *8: Auto leveling *9: Manual leveling Inspection procedure Turn the starter switch in OFF. Remove all ECU connectors from the CAN communication line. Check CAN line for open circuit, short circuit to positive, short circuit to ground or short circuit to another electrical line. Is any abnormality recognized? No: Go to step3 Yes: Go to step8
	Step3	Inspection procedure Attach the connector of A20 (SAM). Check CAN line for open circuit, short circuit to positive, short circuit to ground or short circuit to another electrical line. Is any abnormality recognized? No: Go to step4 Yes: Go to step7
	Step4	Inspection procedure Attach the connector of A28 (DUONIC Control unit). Check CAN line for open circuit, short circuit to positive, short circuit to ground or short circuit to another electrical line. Is any abnormality recognized? No: Go to step5 Yes: Go to step6
	Step5	Inspection procedure Turn the starter switch in OFF. Reinstall all the removed connectors. Erase fault memory and perform a test drive. If the diagnosis code has occurred even during the test drive, start the operation and then replace the A4 (Combustion engine Control unit). Inspection completed
	Step6	Inspection procedure Turn the starter switch in OFF. Reinstall all the removed connectors. Erase fault memory and perform a test drive. If the diagnosis code has occurred even during the test drive, start the operation and then replace the A28 (DUONIC Control unit). Inspection completed
	Step7	Inspection procedure Turn the starter switch in OFF. Reinstall all the removed connectors. Erase fault memory and perform a test drive. If the diagnosis code has occurred even during the test drive, start the operation and then replace the A20 (SAM). Inspection completed

https://truckmanualshub.com/

Inspection procedure	Step8	Refer to the help menu for Nos. other than above. *1: M/T *2: DUONIC *3: ISS (With Lock brake) *4: ISS (Without Lock brake) *5: Lock brake (Without ISS) *6: Other than *3,*4,*5 *7: Full-automatic air conditioner *8: Auto leveling *9: Manual leveling Inspection procedure Repair or replace electrical lines. Reinstall all the removed connectors. Turn the starter switch in ON. Inspection completed

520261-9: CAN timeout fault. Error on transmission of CAN message

Generation condition		[Test Condition] • Monitoring is active 2.00s after ECU initialization while engine isn't running yet, while the engine isn't cranking, 2.00s after engine startup, while the battery voltage is over 10.00V, as long as the battery voltage is over 10.00V and 2.00s after this threshold has been exceeded, if none of the CAN controllers is in bus-off state, 2.00s after last CAN controller is no more in bus-off state and if the ECU is not in afterrun • Continuously
		[Fault Detection] • FlEco message timeout detected
		[Defect Debouncing] • Defect condition fulfilled continuously > 500.0 ms
Fault healing		• No timeout detected
System reaction		• None
Failure cause		• Defective CAN controller, CAN cable disconnected or broken. Short circuit in wiring.
Failure repair		• Check the presence and correct connection of the EDC to the network, Check correct functioning of the CAN controller. Check wiring.
Inspection procedure	Step1	Refer to the help menu for Nos. other than above. *1: M/T *2: DUONIC *3: ISS (With Lock brake) *4: ISS (Without Lock brake) *5: Lock brake (Without ISS) *6: Other than *3,*4,*5 *7: Full-automatic air conditioner *8: Auto leveling *9: Manual leveling Inspection procedure Turn the starter switch in OFF. Remove all ECU connectors from the CAN communication line. Check CAN line for open circuit, short circuit to positive, short circuit to ground or short circuit to another electrical line. Is any abnormality recognized? No: Go to step2 Yes: Go to step5
	Step2	Inspection procedure Attach the connector of A20 (SAM). Check CAN line for open circuit, short circuit to positive, short circuit to ground or short circuit to another electrical line. Is any abnormality recognized? No: Go to step3 Yes: Go to step4

https://truckmanualshub.com/

Inspection procedure	Step3	Inspection procedure Turn the starter switch in OFF. Reinstall all the removed connectors. Erase fault memory and perform a test drive. If the diagnosis code has occurred even during the test drive, start the operation and then replace the A4 (Combustion engine Control unit). Inspection completed
	Step4	Inspection procedure Turn the starter switch in OFF. Reinstall all the removed connectors. Erase fault memory and perform a test drive. If the diagnosis code has occurred even during the test drive, start the operation and then replace the A20 (SAM). Inspection completed
	Step5	Refer to the help menu for Nos. other than above. *1: M/T *2: DUONIC *3: ISS (With Lock brake) *4: ISS (Without Lock brake) *5: Lock brake (Without ISS) *6: Other than *3,*4,*5 *7: Full-automatic air conditioner *8: Auto leveling *9: Manual leveling Inspection procedure Repair or replace electrical lines. Reinstall all the removed connectors. Turn the starter switch in ON. Inspection completed

520264-9: CAN timeout fault. Error on transmission of CAN message

Generation condition	[Test Condition] • Monitoring is active 2.00s after ECU initialization while engine isn't running yet, while the engine isn't cranking, 2.00s after engine startup, while the battery voltage is over 10.00V, as long as the battery voltage is over 10.00V and 2.00s after this threshold has been exceeded, if none of the CAN controllers is in bus-off state, 2.00s after last CAN controller is no more in bus-off state and if the ECU is not in afterrun • Continuously
	[Fault Detection] • Timeout of INOMAT03 message
	[Defect Debouncing] • Defect condition fulfilled continuously >500.0 ms
Fault healing	• If the INOMAT03 message is received correct after the debouncing time the DFC is healed
System reaction	• The value of 'Idle up cancel switch', • Com_stGbxIdlUp is set to replacement value 0.00- (0==Idle up permitted, 1==Idle Up prohibited)
Failure cause	• Defective CAN controller of gearbox, CAN cable connecting the gearbox is disconnected or broken. Short circuit in wiring.
Failure repair	• Check correct connection of the gearbox to the network, check correct functioning of the gearbox CAN controller and its voltage supply. Check wiring.

https://truckmanualshub.com/

Inspection procedure	Step1	Refer to the help menu for Nos. other than above. *1: M/T *2: DUONIC *3: ISS (With Lock brake) *4: ISS (Without Lock brake) *5: Lock brake (Without ISS) *6: Other than *3,*4,*5 *7: Full-automatic air conditioner *8: Auto leveling *9: Manual leveling Inspection procedure If one of diagnosis codes associated with A28 (DUONIC Control unit) is generated, make a system diagnosis according to the diagnosis code. Go to step2
	Step2	Refer to the help menu for Nos. other than above. *1: M/T *2: DUONIC *3: ISS (With Lock brake) *4: ISS (Without Lock brake) *5: Lock brake (Without ISS) *6: Other than *3,*4,*5 *7: Full-automatic air conditioner *8: Auto leveling *9: Manual leveling Inspection procedure Turn the starter switch in OFF. Remove all ECU connectors from the CAN communication line. Check CAN line for open circuit, short circuit to positive, short circuit to ground or short circuit to another electrical line. Is any abnormality recognized? No: Go to step3 Yes: Go to step8
	Step3	Inspection procedure Attach the connector of A20 (SAM). Check CAN line for open circuit, short circuit to positive, short circuit to ground or short circuit to another electrical line. Is any abnormality recognized? No: Go to step4 Yes: Go to step7
	Step4	Inspection procedure Attach the connector of A28 (DUONIC Control unit). Check CAN line for open circuit, short circuit to positive, short circuit to ground or short circuit to another electrical line. Is any abnormality recognized? No: Go to step5 Yes: Go to step6
	Step5	Inspection procedure Turn the starter switch in OFF. Reinstall all the removed connectors. Erase fault memory and perform a test drive. If the diagnosis code has occurred even during the test drive, start the operation and then replace the A4 (Combustion engine Control unit). Inspection completed
	Step6	Inspection procedure Turn the starter switch in OFF. Reinstall all the removed connectors. Erase fault memory and perform a test drive. If the diagnosis code has occurred even during the test drive, start the operation and then replace the A28 (DUONIC Control unit). Inspection completed

https://truckmanualshub.com/

Inspection procedure	Step7	Inspection procedure Turn the starter switch in OFF. Reinstall all the removed connectors. Erase fault memory and perform a test drive. If the diagnosis code has occurred even during the test drive, start the operation and then replace the A20 (SAM). Inspection completed
	Step8	Refer to the help menu for Nos. other than above. *1: M/T *2: DUONIC *3: ISS (With Lock brake) *4: ISS (Without Lock brake) *5: Lock brake (Without ISS) *6: Other than *3,*4,*5 *7: Full-automatic air conditioner *8: Auto leveling *9: Manual leveling Inspection procedure Repair or replace electrical lines. Reinstall all the removed connectors. Turn the starter switch in ON. Inspection completed

520265-9: Faulty component 'Automatic engine start/stop' / CAN fault

Generation condition		[Test Condition] • Monitoring is active 2.00s after ECU initialization while engine isn't running yet, while the engine isn't cranking, 2.00s after engine startup, while the battery voltage is over 10.00V, as long as the battery voltage is over 10.00V and 2.00s after this threshold has been exceeded, if none of the CAN controllers is in bus-off state, 2.00s after last CAN controller is no more in bus-off state and if the ECU is not in afterrun • Continuously
		[Fault Detection] • Fault is detected if a time out of ISS01 message occurs. The message was missing for more than 1 s.
		[Defect Debouncing] • Defect condition fulfilled continuously >500.0 ms
Fault healing		• As soon as the message is again received, the time out error is cleared.
System reaction		• When there is an error in the reception of the frame, the value of Automatic engine stop demand switch status to • inactive status (Frm_stISSStopDemDfl<>1) • Automatic engine start demand switch status to inactive status (Frm_stISSStrtDemDfl<>1) • ISS release demand switch status to • active status (Frm_stISSRlsDemDfl==1) • Override control mode priority switches to lowest priority (invalid signal, Frm_stISSPrioDfl==0)
Failure cause		• CAN bus failure or idle start stop controller failure.
Failure repair		• Check CAN Bus and idle start stop controller.
Inspection procedure	Step1	Inspection procedure Perform a diagnosis on the A13 (Automatic engine start/stop Control unit) side system.

https://truckmanualshub.com/

520267-9: CAN timeout fault: CAN-Transmit-Frame Fuel consumption

Generation condition		[Test Condition] • Monitoring is active 2.00s after ECU initialization while engine isn't running yet, while the engine isn't cranking, 2.00s after engine startup, while the battery voltage is over 10.00V, as long as the battery voltage is over 10.00V and 2.00s after this threshold has been exceeded, if none of the CAN controllers is in bus-off state, 2.00s after last CAN controller is no more in bus-off state and if the ECU is not in afterrun • Continuously
		[Fault Detection] • Timeout of LFC message transmission.
		[Defect Debouncing] • Defect condition fulfilled continuously >500.00 events
Fault healing		• No timeout detected
System reaction		• None
Failure cause		• Defective CAN controller, CAN cable disconnected or broken. Short circuit in wiring.
Failure repair		• Check the presence and correct connection of the EDC to the network, Check correct functioning of the CAN controller. Check wiring.
Inspection procedure	Step1	Refer to the help menu for Nos. other than above. *1: M/T *2: DUONIC *3: ISS (With Lock brake) *4: ISS (Without Lock brake) *5: Lock brake (Without ISS) *6: Other than *3,*4,*5 *7: Full-automatic air conditioner *8: Auto leveling *9: Manual leveling Inspection procedure Turn the starter switch in OFF. Remove all ECU connectors from the CAN communication line. Check CAN line for open circuit, short circuit to positive, short circuit to ground or short circuit to another electrical line. Is any abnormality recognized? No: Go to step2 Yes: Go to step5
	Step2	Inspection procedure Attach the connector of A20 (SAM). Check CAN line for open circuit, short circuit to positive, short circuit to ground or short circuit to another electrical line. Is any abnormality recognized? No: Go to step3 Yes: Go to step4
	Step3	Inspection procedure Turn the starter switch in OFF. Reinstall all the removed connectors. Erase fault memory and perform a test drive. If the diagnosis code has occurred even during the test drive, start the operation and then replace the A4 (Combustion engine Control unit). Inspection completed
	Step4	Inspection procedure Turn the starter switch in OFF. Reinstall all the removed connectors. Erase fault memory and perform a test drive. If the diagnosis code has occurred even during the test drive, start the operation and then replace the A20 (SAM). Inspection completed

https://truckmanualshub.com/

Inspection procedure	Step5	Refer to the help menu for Nos. other than above. *1: M/T *2: DUONIC *3: ISS (With Lock brake) *4: ISS (Without Lock brake) *5: Lock brake (Without ISS) *6: Other than *3,*4,*5 *7: Full-automatic air conditioner *8: Auto leveling *9: Manual leveling Inspection procedure Repair or replace electrical lines. Reinstall all the removed connectors. Turn the starter switch in ON. Inspection completed

520273-0: Component 'NOx sensor' has an open circuit.

Generation condition	[Test Condition] • Monitoring is active 2.00s after ECU initialization while engine isn't running yet, while the engine isn't cranking, 2.00s after engine startup, while the battery voltage is over 10.00V, as long as the battery voltage is over 10.00V and 2.00s after this t
	[Fault Detection] • If NOx sensor has detected open wire fault Com_stBytNOxSens[1]==1 (open wire NOx), or Com_stBytNOxSens[2]==1 (open wire linear Lambda), or Com_stBytNOxSens[3]==1 (open wire binary Lambda)
	[Defect Debouncing] • Defect condition fulfilled continuously >2000.0 ms
Fault healing	• Failure not detected (bit are not set)
System reaction	• NOx value not available. • Further reactions see FIDs
	• 1) Fid/ NOx Sensor not working correctly --> System monitoring with NOx sensor inhibited • 2) Fid/ SCR Monitoring or DEF injection release not possible (according calibration of Release Masks)
Failure cause	• Wiring defect • NOx Sensor defect
Failure repair	• Check wiring • Check NOx Sensor

https://truckmanualshub.com/

Inspection procedure	Step1	Inspect or verify the following items. Repair or replace faulty items as necessary. If one of diagnosis codes associated with A20 (SAM) is generated, make a system diagnosis according to the diagnosis code. Go to Step2
	Step2	Inspection procedure Turn the starter switch in OFF. Remove the connector of A4 (Combustion engine Control unit). Remove the connector of B29 (Oxygen sensor). Remove the connector of A20 (SAM). Check the circuit across A4.X2.94/62 and B31.5/4 for open or short circuit. Check the circuit across A4.X2.94/61 and B31.5/3 for open or short circuit. Check the circuit across A20.X10.14/2 and B31.5/1 for open or short circuit. Check the circuit across B31.5/2 and Ground for open or short circuit. Make a visual check on each connector. Is any abnormality recognized? No: Go to Step3 Yes: Go to Step7
	Step3	Inspection procedure Turn the starter switch in OFF. Replace component “B29 (Oxygen sensor)”. Reinstall all the removed connectors. Turn the starter switch in ON. Go to Step4
	Step4	Inspection procedure Turn the starter switch in OFF. Reinstall all the removed connectors. Erase fault memory and perform a test drive. Check if this diagnosis code has occurred. Are current fault codes present? No: Go to Step6 Yes: Go to Step5
	Step5	Inspection procedure Perform the operation start and replace A4 (Combustion engine Control unit). Go to Step6
	Step6	Inspection completed

https://truckmanualshub.com/

Inspection procedure	Step7	Inspection procedure Turn the starter switch in OFF. Remove the connector of A4 (Combustion engine Control unit). Remove the connector of X42 (Intermediate connector). Remove the connector of A20 (SAM). Check the circuit across A4.X2.94/62 and X42.8/3 for open or short circuit. Check the circuit across A4.X2.94/61 and X42.8/2 for open or short circuit. Check the circuit across A20.X10.14/2 and X42.8/4 for open or short circuit. Check the circuit across X42.8/1 and Ground for open or short circuit. Make a visual check on each connector. Is any abnormality recognized? No: Go to Step8 Yes: Go to Step9
	Step8	Inspection procedure Repair or replace the harness across B29 (Oxygen sensor) and X42 (Intermediate connector). Reinstall all the removed connectors. Erase fault memory and perform a test drive. Check if this diagnosis code has occurred. Are current fault codes present? No: Go to Step6 Yes: Go to Step3
	Step9	Inspection procedure Repair or replace the harness across A4 (Combustion engine Control unit) and X42 (Intermediate connector). Reinstall all the removed connectors. Erase fault memory and perform a test drive. Check if this diagnosis code has occurred. Are current fault codes present? No: Go to Step6 Yes: Go to Step3

520273-1: Component 'NOx sensor' has a short circuit.Error detected by sensor.

Generation condition		[Test Condition] • Monitoring is active 2.00s after ECU initialization while engine isn't running yet, while the engine isn't cranking, 2.00s after engine startup, while the battery voltage is over 10.00V, as long as the battery voltage is over 10.00V and 2.00s after this t
		[Fault Detection] • If NOx sensor has detected short circuit fault Com_stBytNOxSens[5]==1 (short NOx), or Com_stBytNOxSens[6]==1 (short linear Lambda), or Com_stBytNOxSens[7]==1 (short binary Lambda)
		[Defect Debouncing] • Defect condition fulfilled continuously >2000.0 ms
Fault healing		• Failure not detected (bit are not set)
System reaction		• NOx value not available. • Further reactions see FIDs
		• 1) Fid/ NOx Sensor not working correctly --> System monitoring with NOx sensor inhibited • 2) Fid/ SCR Monitoring or DEF injection release not possible (according calibration of Release Masks)
Failure cause		• Wiring defect • NOx Sensor defect
Failure repair		• Check wiring • Check NOx Sensor
Inspection procedure	Step1	Inspect or verify the following items. Repair or replace faulty items as necessary. If one of diagnosis codes associated with A20 (SAM) is generated, make a system diagnosis according to the diagnosis code. Go to Step2

https://truckmanualshub.com/

Inspection procedure	Step2	Inspection procedure Turn the starter switch in OFF. Remove the connector of A4 (Combustion engine Control unit). Remove the connector of B29 (Oxygen sensor). Remove the connector of A20 (SAM). Check the circuit across A4.X2.94/62 and B31.5/4 for open or short circuit. Check the circuit across A4.X2.94/61 and B31.5/3 for open or short circuit. Check the circuit across A20.X10.14/2 and B31.5/1 for open or short circuit. Check the circuit across B31.5/2 and Ground for open or short circuit. Make a visual check on each connector. Is any abnormality recognized? No: Go to Step3 Yes: Go to Step7
	Step3	Inspection procedure Turn the starter switch in OFF. Replace component “B29 (Oxygen sensor)”. Reinstall all the removed connectors. Turn the starter switch in ON. Go to Step4
	Step4	Inspection procedure Turn the starter switch in OFF. Reinstall all the removed connectors. Erase fault memory and perform a test drive. Check if this diagnosis code has occurred. Are current fault codes present? No: Go to Step6 Yes: Go to Step5
	Step5	Inspection procedure Perform the operation start and replace A4 (Combustion engine Control unit). Go to Step6
	Step6	Inspection completed
	Step7	Inspection procedure Turn the starter switch in OFF. Remove the connector of A4 (Combustion engine Control unit). Remove the connector of X42 (Intermediate connector). Remove the connector of A20 (SAM). Check the circuit across A4.X2.94/62 and X42.8/3 for open or short circuit. Check the circuit across A4.X2.94/61 and X42.8/2 for open or short circuit. Check the circuit across A20.X10.14/2 and X42.8/4 for open or short circuit. Check the circuit across X42.8/1 and Ground for open or short circuit. Make a visual check on each connector. Is any abnormality recognized? No: Go to Step8 Yes: Go to Step9
	Step8	Inspection procedure Repair or replace the harness across B29 (Oxygen sensor) and X42 (Intermediate connector). Reinstall all the removed connectors. Erase fault memory and perform a test drive. Check if this diagnosis code has occurred. Are current fault codes present? No: Go to Step6 Yes: Go to Step3
	Step9	Inspection procedure Repair or replace the harness across A4 (Combustion engine Control unit) and X42 (Intermediate connector). Reinstall all the removed connectors. Erase fault memory and perform a test drive. Check if this diagnosis code has occurred. Are current fault codes present? No: Go to Step6 Yes: Go to Step3

https://truckmanualshub.com/

520276-9: CAN timeout fault: CAN-receive-frame Cruise control parameters from SAM interface

Generation condition		[Test Condition] • Monitoring is active 2.00s after ECU initialization while engine isn't running yet, while the engine isn't cranking, 2.00s after engine startup, while the battery voltage is over 10.00V, as long as the battery voltage is over 10.00V and 2.00s after this threshold has been exceeded, if none of the CAN controllers is in bus-off state, 2.00s after last CAN controller is no more in bus-off state and if the ECU is not in afterrun • Continuously
		[Fault Detection] • Timeout of CCVSSAM message is detected
		[Defect Debouncing] • Defect condition fulfilled continuously >500.0 ms
Fault healing		• Timeout of CCVSSAM message no more detected
System reaction		• When there is an error in the reception of the frame • Parking Brake switch status is set to 0.00- (0= not actuated,1=actuated,2=error,3=not available) • Cruise control pause status is set to 1.00- (0= not in pause,1=in pause,2=error,3=not available) • Brake switch status is set to 0.00- (0= not depressed,1=depressed,2=error,3=not available) • Clutch switch status is set to 192.00- (0= not actuated,1=actuated,2=error,3=not available)
Failure cause		• Defective CAN controller, CAN cable disconnected or broken. Short circuit in wiring.
Failure repair		• Check the installation and the proper connection of the SAM ECU to the CAN vehicle network. Check correct functioning of the CAN controller. Check wiring.
Inspection procedure	Step1	Refer to the help menu for Nos. other than above. *1: M/T *2: DUONIC *3: ISS (With Lock brake) *4: ISS (Without Lock brake) *5: Lock brake (Without ISS) *6: Other than *3,*4,*5 *7: Full-automatic air conditioner *8: Auto leveling *9: Manual leveling Inspection procedure Turn the starter switch in OFF. Remove all ECU connectors from the CAN communication line. Check CAN line for open circuit, short circuit to positive, short circuit to ground or short circuit to another electrical line. Is any abnormality recognized? No: Go to step2 Yes: Go to step5
	Step2	Inspection procedure Attach the connector of A20 (SAM). Check CAN line for open circuit, short circuit to positive, short circuit to ground or short circuit to another electrical line. Is any abnormality recognized? No: Go to step3 Yes: Go to step4
	Step3	Inspection procedure Turn the starter switch in OFF. Reinstall all the removed connectors. Erase fault memory and perform a test drive. If the diagnosis code has occurred even during the test drive, start the operation and then replace the A4 (Combustion engine Control unit). Inspection completed

https://truckmanualshub.com/

Inspection procedure	Step4	Inspection procedure Turn the starter switch in OFF. Reinstall all the removed connectors. Erase fault memory and perform a test drive. If the diagnosis code has occurred even during the test drive, start the operation and then replace the A20 (SAM). Inspection completed
	Step5	Refer to the help menu for Nos. other than above. *1: M/T *2: DUONIC *3: ISS (With Lock brake) *4: ISS (Without Lock brake) *5: Lock brake (Without ISS) *6: Other than *3,*4,*5 *7: Full-automatic air conditioner *8: Auto leveling *9: Manual leveling Inspection procedure Repair or replace electrical lines. Reinstall all the removed connectors. Turn the starter switch in ON. Inspection completed

520278-9: CAN timeout fault: CAN-receive-frame IVECO proprietary message

Generation condition	[Test Condition] • Monitoring is active 2.00s after ECU initialization while engine isn't running yet, while the engine isn't cranking, 2.00s after engine startup, while the battery voltage is over 10.00V, as long as the battery voltage is over 10.00V and 2.00s after this threshold has been exceeded, if none of the CAN controllers is in bus-off state, 2.00s after last CAN controller is no more in bus-off state and if the ECU is not in afterrun • Continuous
	[Fault Detection] • Timeout for SAM01 message is detected
	[Defect Debouncing] • Defect condition fulfilled continuously >500.0 ms
Fault healing	• timeout no more detected
System reaction	• When there is an error in the reception of the frame • A/C Magnet Clutch Status is set to 0.00- • DPF Switch Status is set to 0.00- • Exhaust Brake Information Status is set to 0.00- and 0.00- • Brake Switch 2 Status is set to 1.00- • Dump Lever Control Status is set to 0.00-
Failure cause	• Defective CAN controller, CAN cable disconnected or broken. Short circuit in wiring.
Failure repair	• Check the installation and the proper connection of the SAM ECU to the CAN vehicle network. Check correct functioning of the CAN controller. Check wiring.

https://truckmanualshub.com/

Inspection procedure	Step1	Refer to the help menu for Nos. other than above. *1: M/T *2: DUONIC *3: ISS (With Lock brake) *4: ISS (Without Lock brake) *5: Lock brake (Without ISS) *6: Other than *3,*4,*5 *7: Full-automatic air conditioner *8: Auto leveling *9: Manual leveling Inspection procedure Turn the starter switch in OFF. Remove all ECU connectors from the CAN communication line. Check CAN line for open circuit, short circuit to positive, short circuit to ground or short circuit to another electrical line. Is any abnormality recognized? No: Go to step2 Yes: Go to step5
	Step2	Inspection procedure Attach the connector of A20 (SAM). Check CAN line for open circuit, short circuit to positive, short circuit to ground or short circuit to another electrical line. Is any abnormality recognized? No: Go to step3 Yes: Go to step4
	Step3	Inspection procedure Turn the starter switch in OFF. Reinstall all the removed connectors. Erase fault memory and perform a test drive. If the diagnosis code has occurred even during the test drive, start the operation and then replace the A4 (Combustion engine Control unit). Inspection completed
	Step4	Inspection procedure Turn the starter switch in OFF. Reinstall all the removed connectors. Erase fault memory and perform a test drive. If the diagnosis code has occurred even during the test drive, start the operation and then replace the A20 (SAM). Inspection completed
	Step5	Refer to the help menu for Nos. other than above. *1: M/T *2: DUONIC *3: ISS (With Lock brake) *4: ISS (Without Lock brake) *5: Lock brake (Without ISS) *6: Other than *3,*4,*5 *7: Full-automatic air conditioner *8: Auto leveling *9: Manual leveling Inspection procedure Repair or replace electrical lines. Reinstall all the removed connectors. Turn the starter switch in ON. Inspection completed

520279-9: CAN timeout fault: CAN-receive-frame Ignition switch status

Generation condition	[Test Condition] • Monitoring is active while the battery voltage is over 10.00V, as long as the battery voltage is over 10.00V and 2.00s after this threshold has been exceeded, if none of the CAN controllers is in bus-off state, 2.00s after last CAN controller is no more in bus-off state and if the ECU is not in afterrun • Continuous
	[Fault Detection] • Timeout for SCAC2 message is detected
	[Defect Debouncing] • Defect condition fulfilled continuously >500.0 ms

https://truckmanualshub.com/

Fault healing		• timeout no more detected
System reaction		• When there is an error in the reception of the frame • Ignition switch status is set to “crank demand not active” status (Frm_stCrnkEnblSCAC2<>1)
		• 1) FId / Disable CAN messages EBC1,HRWS,VDC1,WS
Failure cause		• Defective CAN controller, CAN cable disconnected or broken. Short circuit in wiring.
Failure repair		• Check the installation and the proper connection of the SAM ECU to the CAN vehicle network. Check correct functioning of the CAN controller. Check wiring.
Inspection procedure	Step1	Refer to the help menu for Nos. other than above. *1: M/T *2: DUONIC *3: ISS (With Lock brake) *4: ISS (Without Lock brake) *5: Lock brake (Without ISS) *6: Other than *3,*4,*5 *7: Full-automatic air conditioner *8: Auto leveling *9: Manual leveling Inspection procedure Turn the starter switch in OFF. Remove all ECU connectors from the CAN communication line. Check CAN line for open circuit, short circuit to positive, short circuit to ground or short circuit to another electrical line. Is any abnormality recognized? No: Go to step2 Yes: Go to step5
	Step2	Inspection procedure Attach the connector of A20 (SAM). Check CAN line for open circuit, short circuit to positive, short circuit to ground or short circuit to another electrical line. Is any abnormality recognized? No: Go to step3 Yes: Go to step4
	Step3	Inspection procedure Turn the starter switch in OFF. Reinstall all the removed connectors. Erase fault memory and perform a test drive. If the diagnosis code has occurred even during the test drive, start the operation and then replace the A4 (Combustion engine Control unit). Inspection completed
	Step4	Inspection procedure Turn the starter switch in OFF. Reinstall all the removed connectors. Erase fault memory and perform a test drive. If the diagnosis code has occurred even during the test drive, start the operation and then replace the A20 (SAM). Inspection completed
	Step5	Refer to the help menu for Nos. other than above. *1: M/T *2: DUONIC *3: ISS (With Lock brake) *4: ISS (Without Lock brake) *5: Lock brake (Without ISS) *6: Other than *3,*4,*5 *7: Full-automatic air conditioner *8: Auto leveling *9: Manual leveling Inspection procedure Repair or replace electrical lines. Reinstall all the removed connectors. Turn the starter switch in ON. Inspection completed

https://truckmanualshub.com/

520280-9: CAN timeout fault: CAN-Transmit-Frame Shutdown

Generation condition		[Test Condition] • Monitoring is active 2.00s after ECU initialization while engine isn't running yet, while the engine isn't cranking, 2.00s after engine startup, while the battery voltage is over 10.00V, as long as the battery voltage is over 10.00V and 2.00s after this threshold has been exceeded, if none of the CAN controllers is in bus-off state, 2.00s after last CAN controller is no more in bus-off state and if the ECU is not in afterrun • Continuously
		[Fault Detection] • Timeout for ShutDwn message is detected
		[Defect Debouncing] • Defect condition fulfilled continuously > 500.0 ms
Fault healing		• Message is transmitted
System reaction		• None
Failure cause		• Defective CAN Controller within Chassis CAN, CAN Cables disconnected or broken. Short circuit in wiring.
Failure repair		• Check the installation and the proper connection of the Engine Control Unit to the CAN vehicle network. • Check correct operating conditions of the CAN controller. • Check the vehicle wirings.
Inspection procedure	Step1	Refer to the help menu for Nos. other than above. *1: M/T *2: DUONIC *3: ISS (With Lock brake) *4: ISS (Without Lock brake) *5: Lock brake (Without ISS) *6: Other than *3,*4,*5 *7: Full-automatic air conditioner *8: Auto leveling *9: Manual leveling Inspection procedure Turn the starter switch in OFF. Remove all ECU connectors from the CAN communication line. Check CAN line for open circuit, short circuit to positive, short circuit to ground or short circuit to another electrical line. Is any abnormality recognized? No: Go to step2 Yes: Go to step5
	Step2	Inspection procedure Attach the connector of A20 (SAM). Check CAN line for open circuit, short circuit to positive, short circuit to ground or short circuit to another electrical line. Is any abnormality recognized? No: Go to step3 Yes: Go to step4
	Step3	Inspection procedure Turn the starter switch in OFF. Reinstall all the removed connectors. Erase fault memory and perform a test drive. If the diagnosis code has occurred even during the test drive, start the operation and then replace the A4 (Combustion engine Control unit). Inspection completed
	Step4	Inspection procedure Turn the starter switch in OFF. Reinstall all the removed connectors. Erase fault memory and perform a test drive. If the diagnosis code has occurred even during the test drive, start the operation and then replace the A20 (SAM). Inspection completed

https://truckmanualshub.com/

Inspection procedure	Step5	Refer to the help menu for Nos. other than above. *1: M/T *2: DUONIC *3: ISS (With Lock brake) *4: ISS (Without Lock brake) *5: Lock brake (Without ISS) *6: Other than *3,*4,*5 *7: Full-automatic air conditioner *8: Auto leveling *9: Manual leveling Inspection procedure Repair or replace electrical lines. Reinstall all the removed connectors. Turn the starter switch in ON. Inspection completed

520281-9: CAN timeout fault: CAN-receive-frame Tachograph

Generation condition	[Test Condition] • Monitoring is active 2.00s after ECU initialization while engine isn't running yet, while the engine isn't cranking, 2.00s after engine startup, while the battery voltage is over 10.00V, as long as the battery voltage is over 10.00V and 2.00s after this threshold has been exceeded, if none of the CAN controllers is in bus-off state, 2.00s after last CAN controller is no more in bus-off state and if the ECU is not in afterrun • Continuously
	[Fault Detection] • Fault is detected if a time out of the message occurs.
	[Defect Debouncing] • Defect condition fulfilled continuously >500.0 ms
Fault healing	• When the frame is received, the time out error is cleared
System reaction	• The default values are used: • the calculated speed of the transmission output shaft (Com_nTCO1CdrS) is replaced by value = 0 • The tachograph vehicle speed (Com_vTCO1Spd) is replaced by value = 0
	• 1) FId / Vehicle speed signal evaluation defective • 2) FId / Disable CAN messages BC2EDC1,BC2EDC2,WM2EDC,DasDispl • 3) FId / Status of function identifier FId_EngDemTrqLimErr1 • 4) FId / Torque limitation 4 activated for power reduction • 5) FId / Underbraking disabled for High and Low engine speed control (HLS) (no special control parameters in case of Underbraking used) • 6) FId / High and Low engine speed demand control (HLS) disabled • 7) FId / Multiple state switch error, PTO disabled • 8) FId / Use of the gear signal for the range check of particulate filter (DPF) is inhibited • 9) FId / Use of the vehicle speed for the range check of particulate filter (DPF) is inhibited • 10) FId / Vehicle speed sensor defective, PGNRQ can message invalid • 11) FId / Closing of metering unit forced (full fuel feeding) • 12) FId / Tooth Angle Adaption (TAA) of crank speed sensor disabled • 13) FId / Zero Fuel Calibration (ZFC) of injectors disabled • 14) FId / Engine speed Limitation 1 for HIgh/Low engine speed (HLS) control active • 15) FId / Run Up test inhibited • 16) FId / Status of function identifier FID_UHCWrmStrtChk; Status des Funktions Identifiers FID_UHCWrmStrtChk • 17) FId / Plausibilty check of temperature sensors at cold start not allowed • 18) FId / Inhibit temperature sampling • 19) FId / Inhibit plaus.check engine coolant temperature at cold start • 20) FId / Fuel temperature plausibility error detected • 21) FId / Inhibit plausibility check of EGR Cooler Temperature Downstream • 22) FId / Vehicle speed value (via CAN) replaced by substitute value if failure is validated
Failure cause	• Defective CAN controller of Tachograph or Instrument Cluster, CAN cable disconnected or broken. Short circuit in wiring.

https://truckmanualshub.com/

Failure repair		• Check presence and correct connection of the Tachograph or of the Instrument Cluster to the network, Check correct functioning of the CAN controller. Check wiring.
Inspection procedure	Step1	Refer to the help menu for Nos. other than above. *1: M/T *2: DUONIC *3: ISS (With Lock brake) *4: ISS (Without Lock brake) *5: Lock brake (Without ISS) *6: Other than *3,*4,*5 *7: Full-automatic air conditioner *8: Auto leveling *9: Manual leveling Inspection procedure If one of diagnosis codes associated with A11 (Meter cluster) is generated, make a system diagnosis according to the diagnosis code. Go to step2
	Step2	Refer to the help menu for Nos. other than above. *1: M/T *2: DUONIC *3: ISS (With Lock brake) *4: ISS (Without Lock brake) *5: Lock brake (Without ISS) *6: Other than *3,*4,*5 *7: Full-automatic air conditioner *8: Auto leveling *9: Manual leveling Inspection procedure Turn the starter switch in OFF. Remove all ECU connectors from the CAN communication line. Check CAN line for open circuit, short circuit to positive, short circuit to ground or short circuit to another electrical line. Is any abnormality recognized? No: Go to step3 Yes: Go to step8
	Step3	Inspection procedure Attach the connector of A20 (SAM). Check CAN line for open circuit, short circuit to positive, short circuit to ground or short circuit to another electrical line. Is any abnormality recognized? No: Go to step4 Yes: Go to step7
	Step4	Inspection procedure Attach the connector of A11 (Meter cluster). Check CAN line for open circuit, short circuit to positive, short circuit to ground or short circuit to another electrical line. Is any abnormality recognized? No: Go to step5 Yes: Go to step6
	Step5	Inspection procedure Turn the starter switch in OFF. Reinstall all the removed connectors. Erase fault memory and perform a test drive. If the diagnosis code has occurred even during the test drive, start the operation and then replace the A4 (Combustion engine Control unit). Inspection completed
	Step6	Inspection procedure Turn the starter switch in OFF. Reinstall all the removed connectors. Erase fault memory and perform a test drive. If the diagnosis code has occurred even during the test drive, start the operation and then replace the A11 (Meter cluster). Inspection completed

https://truckmanualshub.com/

Inspection procedure	Step7	Inspection procedure Turn the starter switch in OFF. Reinstall all the removed connectors. Erase fault memory and perform a test drive. If the diagnosis code has occurred even during the test drive, start the operation and then replace the A20 (SAM). Inspection completed
	Step8	Refer to the help menu for Nos. other than above. *1: M/T *2: DUONIC *3: ISS (With Lock brake) *4: ISS (Without Lock brake) *5: Lock brake (Without ISS) *6: Other than *3,*4,*5 *7: Full-automatic air conditioner *8: Auto leveling *9: Manual leveling Inspection procedure Repair or replace electrical lines. Reinstall all the removed connectors. Turn the starter switch in ON. Inspection completed

520282-9: CAN timeout fault: CAN-Transmit-Frame DEF tank information

Generation condition		[Test Condition] • Monitoring is active 2.00s after ECU initialization while engine isn't running yet, while the engine isn't cranking, 2.00s after engine startup, while the battery voltage is over 10.00V, as long as the battery voltage is over 10.00V and 2.00s after this threshold has been exceeded, if none of the CAN controllers is in bus-off state, 2.00s after last CAN controller is no more in bus-off state and if the ECU is not in afterrun • Continuously
		[Fault Detection] • Timeout for TI1 message is detected
		[Defect Debouncing] • Defect condition fulfilled continuously > 500.0 ms
Fault healing		• Message is acknowledged
System reaction		• None
Failure cause		• Defective CAN Controller within Chassis CAN, CAN Cables disconnected or broken. Short circuit in wiring.
Failure repair		• Check the installation and the proper connection of the Engine Control Unit to the CAN vehicle network. • Check correct operating conditions of the CAN controller. • Check the vehicle wirings.
Inspection procedure	Step1	Refer to the help menu for Nos. other than above. *1: M/T *2: DUONIC *3: ISS (With Lock brake) *4: ISS (Without Lock brake) *5: Lock brake (Without ISS) *6: Other than *3,*4,*5 *7: Full-automatic air conditioner *8: Auto leveling *9: Manual leveling Inspection procedure Turn the starter switch in OFF. Remove all ECU connectors from the CAN communication line. Check CAN line for open circuit, short circuit to positive, short circuit to ground or short circuit to another electrical line. Is any abnormality recognized? No: Go to step2 Yes: Go to step5

https://truckmanualshub.com/

Inspection procedure	Step2	Inspection procedure Attach the connector of A20 (SAM). Check CAN line for open circuit, short circuit to positive, short circuit to ground or short circuit to another electrical line. Is any abnormality recognized? No: Go to step3 Yes: Go to step4
	Step3	Inspection procedure Turn the starter switch in OFF. Reinstall all the removed connectors. Erase fault memory and perform a test drive. If the diagnosis code has occurred even during the test drive, start the operation and then replace the A4 (Combustion engine Control unit). Inspection completed
	Step4	Inspection procedure Turn the starter switch in OFF. Reinstall all the removed connectors. Erase fault memory and perform a test drive. If the diagnosis code has occurred even during the test drive, start the operation and then replace the A20 (SAM). Inspection completed
	Step5	Refer to the help menu for Nos. other than above. *1: M/T *2: DUONIC *3: ISS (With Lock brake) *4: ISS (Without Lock brake) *5: Lock brake (Without ISS) *6: Other than *3,*4,*5 *7: Full-automatic air conditioner *8: Auto leveling *9: Manual leveling Inspection procedure Repair or replace electrical lines. Reinstall all the removed connectors. Turn the starter switch in ON. Inspection completed

520286-9: CAN Timeout Error during CAN-Transmit-Frame Electronic Retarder Controller.

Generation condition	[Test Condition] • Monitoring is active 2.00s after ECU initialization while engine isn't running yet, while the engine isn't cranking, 2.00s after engine startup, while the battery voltage is over 10.00V, as long as the battery voltage is over 10.00V and 2.00s after this threshold has been exceeded, if none of the CAN controllers is in bus-off state, 2.00s after last CAN controller is no more in bus-off state and if the ECU is not in afterrun • Continuously
	[Fault Detection] • Fault is detected if a Timeout of the ERC1 frame has occurred.
	[Defect Debouncing] • Defect condition fulfilled continuously > 500.0 ms
Fault healing	• Message is acknowledged
System reaction	• None
Failure cause	• Defective CAN controller, CAN cable disconnected or broken. Short circuit in wiring.
Failure repair	• Check the presence and correct connection of the EDC to the network, Check correct functioning of the CAN controller. Check wiring.

https://truckmanualshub.com/

Inspection procedure	Step1	Refer to the help menu for Nos. other than above. *1: M/T *2: DUONIC *3: ISS (With Lock brake) *4: ISS (Without Lock brake) *5: Lock brake (Without ISS) *6: Other than *3,*4,*5 *7: Full-automatic air conditioner *8: Auto leveling *9: Manual leveling Inspection procedure Turn the starter switch in OFF. Remove all ECU connectors from the CAN communication line. Check CAN line for open circuit, short circuit to positive, short circuit to ground or short circuit to another electrical line. Is any abnormality recognized? No: Go to step2 Yes: Go to step5
	Step2	Inspection procedure Attach the connector of A20 (SAM). Check CAN line for open circuit, short circuit to positive, short circuit to ground or short circuit to another electrical line. Is any abnormality recognized? No: Go to step3 Yes: Go to step4
	Step3	Inspection procedure Turn the starter switch in OFF. Reinstall all the removed connectors. Erase fault memory and perform a test drive. If the diagnosis code has occurred even during the test drive, start the operation and then replace the A4 (Combustion engine Control unit). Inspection completed
	Step4	Inspection procedure Turn the starter switch in OFF. Reinstall all the removed connectors. Erase fault memory and perform a test drive. If the diagnosis code has occurred even during the test drive, start the operation and then replace the A20 (SAM). Inspection completed
	Step5	Refer to the help menu for Nos. other than above. *1: M/T *2: DUONIC *3: ISS (With Lock brake) *4: ISS (Without Lock brake) *5: Lock brake (Without ISS) *6: Other than *3,*4,*5 *7: Full-automatic air conditioner *8: Auto leveling *9: Manual leveling Inspection procedure Repair or replace electrical lines. Reinstall all the removed connectors. Turn the starter switch in ON. Inspection completed

520288-9: CAN Timeout Error during CAN-receive-frame NOx sensor.

Generation condition	[Test Condition] • Monitoring is active 2.00s after ECU initialization while engine isn't running yet, while the engine isn't cranking, 2.00s after engine startup, while the battery voltage is over 10.00V, as long as the battery voltage is over 10.00V and 2.00s after this t
	[Fault Detection] • Timeout of NOxSens message.
	[Defect Debouncing] • Defect condition fulfilled continuously >500.0 ms

https://truckmanualshub.com/

Fault healing		• If the NOxSens message is received correct after the debouncing time the DFC is healed.
System reaction		• NOX value reset to default value 1.20-
		• 1) Fid/ SCR Monitoring or DEF injection release not possible (according calibration of Release Masks)
Failure cause		• Defective CAN controller of NOx Sensor, undervoltage of NOx Sensor, missing NOx Sensor, CAN cable connecting the NOx Sensor is disconnected or broken. Short circuit in wiring.
Failure repair		• Check presence and correct connection of the NOx Sensor to the network, Check correct functioning of the NOx Sensor CAN controller and its voltage supply. Check wiring.
Inspection procedure	Step1	Refer to the help menu for Nos. other than above. *1: M/T *2: DUONIC *3: ISS (With Lock brake) *4: ISS (Without Lock brake) *5: Lock brake (Without ISS) *6: Other than *3,*4,*5 *7: Full-automatic air conditioner *8: Auto leveling *9: Manual leveling Inspection procedure If one of diagnosis codes associated with B31 (NOx sensor) is generated, make a system diagnosis according to the diagnosis code. Go to step2
	Step2	Refer to the help menu for Nos. other than above. *1: M/T *2: DUONIC *3: ISS (With Lock brake) *4: ISS (Without Lock brake) *5: Lock brake (Without ISS) *6: Other than *3,*4,*5 *7: Full-automatic air conditioner *8: Auto leveling *9: Manual leveling Inspection procedure Turn the starter switch in OFF. Remove all ECU connectors from the CAN communication line. Check CAN line for open circuit, short circuit to positive, short circuit to ground or short circuit to another electrical line. Is any abnormality recognized? No: Go to step3 Yes: Go to step8
	Step3	Inspection procedure Attach the connector of A20 (SAM). Check CAN line for open circuit, short circuit to positive, short circuit to ground or short circuit to another electrical line. Is any abnormality recognized? No: Go to step4 Yes: Go to step7
	Step4	Inspection procedure Attach the connector of B31 (NOx sensor). Check CAN line for open circuit, short circuit to positive, short circuit to ground or short circuit to another electrical line. Is any abnormality recognized? No: Go to step5 Yes: Go to step6
	Step5	Inspection procedure Turn the starter switch in OFF. Reinstall all the removed connectors. Erase fault memory and perform a test drive. If the diagnosis code has occurred even during the test drive, start the operation and then replace the A4 (Combustion engine Control unit). Inspection completed

https://truckmanualshub.com/

Inspection procedure	Step6	Inspection procedure Turn the starter switch in OFF. Reinstall all the removed connectors. Erase fault memory and perform a test drive. If the diagnosis code has occurred even during the test drive, replace the B31 (NOx sensor). Inspection completed
	Step7	Inspection procedure Turn the starter switch in OFF. Reinstall all the removed connectors. Erase fault memory and perform a test drive. If the diagnosis code has occurred even during the test drive, start the operation and then replace the A20 (SAM). Inspection completed
	Step8	Refer to the help menu for Nos. other than above. *1: M/T *2: DUONIC *3: ISS (With Lock brake) *4: ISS (Without Lock brake) *5: Lock brake (Without ISS) *6: Other than *3,*4,*5 *7: Full-automatic air conditioner *8: Auto leveling *9: Manual leveling Inspection procedure Repair or replace electrical lines. Reinstall all the removed connectors. Turn the starter switch in ON. Inspection completed

520297-9: CAN Active DFC TimeOut of Torque Speed Control TSC1AE.

Generation condition	[Test Condition] • Monitoring is active 2.00s after ECU initialization while engine isn't running yet, while the engine isn't cranking, 2.00s after engine startup, while the battery voltage is over 10.00V, as long as the battery voltage is over 10.00V and 2.00s after this threshold has been exceeded, if none of the CAN controllers is in bus-off state, 2.00s after last CAN controller is no more in bus-off state and if the ECU is not in afterrun • Continuous
	[Fault Detection] • Timeout of TSC1_AE message.
	[Defect Debouncing] • Defect condition fulfilled continuously >500.0 ms
Fault healing	• If the TSC1_AE message is received correct after the debouncing time the DFC is healed.
System reaction	• Speed/torque control from ABS/ASR deactivated. • The default values are used: • Override control is disabled, no transmission control (TSC_stATCEngMode = 0x00); • Transient Optimized for driveline disengaged • and non-lockup conditions (TSC_stATCEngSpdCond = 0x00); • Low priority for override control is activated (TSC_stATCEngPrio = 0x03); • Desired speed set at 0 (TSC_nATCEngDes = 0x00); • Desired torque set at 0 (TSC_trqATCEngDes = 0x00);
	• 1) FId / Disable CAN messages HRVD,TImeDate
Failure cause	• Defective CAN controller of ABS / ASR / ESP, CAN cable disconnected or broken. Short circuit in wiring.
Failure repair	• Check presence and correct connection of the ABS / ASR / ESP to the network, Check correct functioning of the CAN controller. Check wiring.

https://truckmanualshub.com/

Inspection procedure	Step1	Refer to the help menu for Nos. other than above. *1: M/T *2: DUONIC *3: ISS (With Lock brake) *4: ISS (Without Lock brake) *5: Lock brake (Without ISS) *6: Other than *3,*4,*5 *7: Full-automatic air conditioner *8: Auto leveling *9: Manual leveling Inspection procedure If one of diagnosis codes associated with A1 (Antilock brake system Control unit) is generated, make a system diagnosis according to the diagnosis code. Go to step2
	Step2	Refer to the help menu for Nos. other than above. *1: M/T *2: DUONIC *3: ISS (With Lock brake) *4: ISS (Without Lock brake) *5: Lock brake (Without ISS) *6: Other than *3,*4,*5 *7: Full-automatic air conditioner *8: Auto leveling *9: Manual leveling Inspection procedure Turn the starter switch in OFF. Remove all ECU connectors from the CAN communication line. Check CAN line for open circuit, short circuit to positive, short circuit to ground or short circuit to another electrical line. Is any abnormality recognized? No: Go to step3 Yes: Go to step8
	Step3	Inspection procedure Attach the connector of A20 (SAM). Check CAN line for open circuit, short circuit to positive, short circuit to ground or short circuit to another electrical line. Is any abnormality recognized? No: Go to step4 Yes: Go to step7
	Step4	Inspection procedure Attach the connector of A1 (Antilock brake system Control unit). Check CAN line for open circuit, short circuit to positive, short circuit to ground or short circuit to another electrical line. Is any abnormality recognized? No: Go to step5 Yes: Go to step6
	Step5	Inspection procedure Turn the starter switch in OFF. Reinstall all the removed connectors. Erase fault memory and perform a test drive. If the diagnosis code has occurred even during the test drive, start the operation and then replace the A4 (Combustion engine Control unit). Inspection completed
	Step6	Inspection procedure Turn the starter switch in OFF. Reinstall all the removed connectors. Erase fault memory and perform a test drive. If the diagnosis code has occurred even during the test drive, start the operation and then replace the A1 (Antilock brake system Control unit). Inspection completed
	Step7	Inspection procedure Turn the starter switch in OFF. Reinstall all the removed connectors. Erase fault memory and perform a test drive. If the diagnosis code has occurred even during the test drive, start the operation and then replace the A20 (SAM). Inspection completed

https://truckmanualshub.com/

Inspection procedure	Step8	Refer to the help menu for Nos. other than above. *1: M/T *2: DUONIC *3: ISS (With Lock brake) *4: ISS (Without Lock brake) *5: Lock brake (Without ISS) *6: Other than *3,*4,*5 *7: Full-automatic air conditioner *8: Auto leveling *9: Manual leveling Inspection procedure Repair or replace electrical lines. Reinstall all the removed connectors. Turn the starter switch in ON. Inspection completed

520298-9: CAN Passive DFC TimeOut of Torque Speed Control TSC1AE.

Generation condition		[Test Condition] • Monitoring is active 2.00s after ECU initialization while engine isn't running yet, while the engine isn't cranking, 2.00s after engine startup, while the battery voltage is over 10.00V, as long as the battery voltage is over 10.00V and 2.00s after this threshold has been exceeded, if none of the CAN controllers is in bus-off state, 2.00s after last CAN controller is no more in bus-off state and if the ECU is not in afterrun • Continuously
		[Fault Detection] • Timeout of TSC1_AE message.
		[Defect Debouncing] • Defect condition fulfilled continuously >500.0 ms
Fault healing		• If the TSC1_AE message is received correct after the debouncing time the DFC is healed.
System reaction		• Speed/torque control from ABS/ASR deactivated. • The default values are used: • Override control is disabled, no transmission control (TSC_stATCEngMode = 0x00); • Transient Optimized for driveline disengaged • and non-lockup conditions (TSC_stATCEngSpdCond = 0x00); • Low priority for override control is activated (TSC_stATCEngPrio = 0x03); • Desired speed set at 0 (TSC_nATCEngDes = 0x00); • Desired torque set at 0 (TSC_trqATCEngDes = 0x00);
		• 1) FId / Disable CAN messages HRVD,TImeDate
Failure cause		• Defective CAN controller of ABS / ASR / ESP, CAN cable disconnected or broken. Short circuit in wiring.
Failure repair		• Check presence and correct connection of the ABS / ASR / ESP to the network, Check correct functioning of the CAN controller. Check wiring.
Inspection procedure	Step1	Refer to the help menu for Nos. other than above. *1: M/T *2: DUONIC *3: ISS (With Lock brake) *4: ISS (Without Lock brake) *5: Lock brake (Without ISS) *6: Other than *3,*4,*5 *7: Full-automatic air conditioner *8: Auto leveling *9: Manual leveling Inspection procedure If one of diagnosis codes associated with A1 (Antilock brake system Control unit) is generated, make a system diagnosis according to the diagnosis code. Go to step2

https://truckmanualshub.com/

Inspection procedure	Step2	Refer to the help menu for Nos. other than above. *1: M/T *2: DUONIC *3: ISS (With Lock brake) *4: ISS (Without Lock brake) *5: Lock brake (Without ISS) *6: Other than *3,*4,*5 *7: Full-automatic air conditioner *8: Auto leveling *9: Manual leveling Inspection procedure Turn the starter switch in OFF. Remove all ECU connectors from the CAN communication line. Check CAN line for open circuit, short circuit to positive, short circuit to ground or short circuit to another electrical line. Is any abnormality recognized? No: Go to step3 Yes: Go to step8
	Step3	Inspection procedure Attach the connector of A20 (SAM). Check CAN line for open circuit, short circuit to positive, short circuit to ground or short circuit to another electrical line. Is any abnormality recognized? No: Go to step4 Yes: Go to step7
	Step4	Inspection procedure Attach the connector of A1 (Antilock brake system Control unit). Check CAN line for open circuit, short circuit to positive, short circuit to ground or short circuit to another electrical line. Is any abnormality recognized? No: Go to step5 Yes: Go to step6
	Step5	Inspection procedure Turn the starter switch in OFF. Reinstall all the removed connectors. Erase fault memory and perform a test drive. If the diagnosis code has occurred even during the test drive, start the operation and then replace the A4 (Combustion engine Control unit). Inspection completed
	Step6	Inspection procedure Turn the starter switch in OFF. Reinstall all the removed connectors. Erase fault memory and perform a test drive. If the diagnosis code has occurred even during the test drive, start the operation and then replace the A1 (Antilock brake system Control unit). Inspection completed
	Step7	Inspection procedure Turn the starter switch in OFF. Reinstall all the removed connectors. Erase fault memory and perform a test drive. If the diagnosis code has occurred even during the test drive, start the operation and then replace the A20 (SAM). Inspection completed

https://truckmanualshub.com/

Inspection procedure	Step8	Refer to the help menu for Nos. other than above. *1: M/T *2: DUONIC *3: ISS (With Lock brake) *4: ISS (Without Lock brake) *5: Lock brake (Without ISS) *6: Other than *3,*4,*5 *7: Full-automatic air conditioner *8: Auto leveling *9: Manual leveling Inspection procedure Repair or replace electrical lines. Reinstall all the removed connectors. Turn the starter switch in ON. Inspection completed

520299-9: CAN Active DFC TimeOut of Torque Speed Control TSC1AR.

Generation condition		[Test Condition] • Monitoring is active 2.00s after ECU initialization while engine isn't running yet, while the engine isn't cranking, 2.00s after engine startup, while the battery voltage is over 10.00V, as long as the battery voltage is over 10.00V and 2.00s after this threshold has been exceeded, if none of the CAN controllers is in bus-off state, 2.00s after last CAN controller is no more in bus-off state and if the ECU is not in afterrun • Continuously
		[Fault Detection] • Timeout of TSC1_AR message.
		[Defect Debouncing] • Defect condition fulfilled continuously >500.0 ms
Fault healing		• If the TSC1_AR message is received correct after the debouncing time the DFC is healed.
System reaction		• The retarder functionality is deactivated • The default values are used: • Override control is disabled, no transmission control (TSC_stATCRtdrMode = 0x00); • Low priority for override control is activated (TSC_stATCRtdrPrio = 0x03); • Desired torque set at 0 (TSC_trqATCRtdrDes = 0x00);
Failure cause		• Defective CAN controller of ABS / ASR / ESP, CAN cable disconnected or broken. Short circuit in wiring.
Failure repair		• Check presence and correct connection of the ABS / ASR / ESP to the network, Check correct functioning of the CAN controller. Check wiring.
Inspection procedure	Step1	Refer to the help menu for Nos. other than above. *1: M/T *2: DUONIC *3: ISS (With Lock brake) *4: ISS (Without Lock brake) *5: Lock brake (Without ISS) *6: Other than *3,*4,*5 *7: Full-automatic air conditioner *8: Auto leveling *9: Manual leveling Inspection procedure If one of diagnosis codes associated with A1 (Antilock brake system Control unit) is generated, make a system diagnosis according to the diagnosis code. Go to step2

https://truckmanualshub.com/

Inspection procedure	Step2	Refer to the help menu for Nos. other than above. *1: M/T *2: DUONIC *3: ISS (With Lock brake) *4: ISS (Without Lock brake) *5: Lock brake (Without ISS) *6: Other than *3,*4,*5 *7: Full-automatic air conditioner *8: Auto leveling *9: Manual leveling Inspection procedure Turn the starter switch in OFF. Remove all ECU connectors from the CAN communication line. Check CAN line for open circuit, short circuit to positive, short circuit to ground or short circuit to another electrical line. Is any abnormality recognized? No: Go to step3 Yes: Go to step8
	Step3	Inspection procedure Attach the connector of A20 (SAM). Check CAN line for open circuit, short circuit to positive, short circuit to ground or short circuit to another electrical line. Is any abnormality recognized? No: Go to step4 Yes: Go to step7
	Step4	Inspection procedure Attach the connector of A1 (Antilock brake system Control unit). Check CAN line for open circuit, short circuit to positive, short circuit to ground or short circuit to another electrical line. Is any abnormality recognized? No: Go to step5 Yes: Go to step6
	Step5	Inspection procedure Turn the starter switch in OFF. Reinstall all the removed connectors. Erase fault memory and perform a test drive. If the diagnosis code has occurred even during the test drive, start the operation and then replace the A4 (Combustion engine Control unit). Inspection completed
	Step6	Inspection procedure Turn the starter switch in OFF. Reinstall all the removed connectors. Erase fault memory and perform a test drive. If the diagnosis code has occurred even during the test drive, start the operation and then replace the A1 (Antilock brake system Control unit). Inspection completed
	Step7	Inspection procedure Turn the starter switch in OFF. Reinstall all the removed connectors. Erase fault memory and perform a test drive. If the diagnosis code has occurred even during the test drive, start the operation and then replace the A20 (SAM). Inspection completed

https://truckmanualshub.com/

Inspection procedure	Step8	Refer to the help menu for Nos. other than above. *1: M/T *2: DUONIC *3: ISS (With Lock brake) *4: ISS (Without Lock brake) *5: Lock brake (Without ISS) *6: Other than *3,*4,*5 *7: Full-automatic air conditioner *8: Auto leveling *9: Manual leveling Inspection procedure Repair or replace electrical lines. Reinstall all the removed connectors. Turn the starter switch in ON. Inspection completed

520300-9: CAN Passive DFC TimeOut of Torque Speed Control TSC1AR.

Generation condition		[Test Condition] • Monitoring is active 2.00s after ECU initialization while engine isn't running yet, while the engine isn't cranking, 2.00s after engine startup, while the battery voltage is over 10.00V, as long as the battery voltage is over 10.00V and 2.00s after this threshold has been exceeded, if none of the CAN controllers is in bus-off state, 2.00s after last CAN controller is no more in bus-off state and if the ECU is not in afterrun • Continuously
		[Fault Detection] • Timeout of TSC1_AR message.
		[Defect Debouncing] • Defect condition fulfilled continuously >500.0 ms
Fault healing		• If the TSC1_AR message is received correct after the debouncing time the DFC is healed.
System reaction		• The default values are used: • TSC_stATCRtdrMode = COM_TSC1MODE_DISBL(0x00); • TSC_stATCRtdrPrio = COM_TSC1PRIO_LOW(0x03); • TSC_trqATCRtdrDes = 0x00;
Failure cause		• Defective CAN controller of ABS / ASR / ESP, CAN cable disconnected or broken. Short circuit in wiring.
Failure repair		• Check presence and correct connection of the ABS / ASR / ESP to the network, Check correct functioning of the CAN controller. Check wiring.
Inspection procedure	Step1	Refer to the help menu for Nos. other than above. *1: M/T *2: DUONIC *3: ISS (With Lock brake) *4: ISS (Without Lock brake) *5: Lock brake (Without ISS) *6: Other than *3,*4,*5 *7: Full-automatic air conditioner *8: Auto leveling *9: Manual leveling Inspection procedure If one of diagnosis codes associated with A1 (Antilock brake system Control unit) is generated, make a system diagnosis according to the diagnosis code. Go to step2

https://truckmanualshub.com/

Inspection procedure	Step2	Refer to the help menu for Nos. other than above. *1: M/T *2: DUONIC *3: ISS (With Lock brake) *4: ISS (Without Lock brake) *5: Lock brake (Without ISS) *6: Other than *3,*4,*5 *7: Full-automatic air conditioner *8: Auto leveling *9: Manual leveling Inspection procedure Turn the starter switch in OFF. Remove all ECU connectors from the CAN communication line. Check CAN line for open circuit, short circuit to positive, short circuit to ground or short circuit to another electrical line. Is any abnormality recognized? No: Go to step3 Yes: Go to step8
	Step3	Inspection procedure Attach the connector of A20 (SAM). Check CAN line for open circuit, short circuit to positive, short circuit to ground or short circuit to another electrical line. Is any abnormality recognized? No: Go to step4 Yes: Go to step7
	Step4	Inspection procedure Attach the connector of A1 (Antilock brake system Control unit). Check CAN line for open circuit, short circuit to positive, short circuit to ground or short circuit to another electrical line. Is any abnormality recognized? No: Go to step5 Yes: Go to step6
	Step5	Inspection procedure Turn the starter switch in OFF. Reinstall all the removed connectors. Erase fault memory and perform a test drive. If the diagnosis code has occurred even during the test drive, start the operation and then replace the A4 (Combustion engine Control unit). Inspection completed
	Step6	Inspection procedure Turn the starter switch in OFF. Reinstall all the removed connectors. Erase fault memory and perform a test drive. If the diagnosis code has occurred even during the test drive, start the operation and then replace the A1 (Antilock brake system Control unit). Inspection completed
	Step7	Inspection procedure Turn the starter switch in OFF. Reinstall all the removed connectors. Erase fault memory and perform a test drive. If the diagnosis code has occurred even during the test drive, start the operation and then replace the A20 (SAM). Inspection completed

https://truckmanualshub.com/

Inspection procedure	Step8	Refer to the help menu for Nos. other than above. *1: M/T *2: DUONIC *3: ISS (With Lock brake) *4: ISS (Without Lock brake) *5: Lock brake (Without ISS) *6: Other than *3,*4,*5 *7: Full-automatic air conditioner *8: Auto leveling *9: Manual leveling Inspection procedure Repair or replace electrical lines. Reinstall all the removed connectors. Turn the starter switch in ON. Inspection completed

520309-9: CAN Active DFC TimeOut of Torque Speed Control TSC1TE.

Generation condition		[Test Condition] • Monitoring is active 2.00s after ECU initialization while engine isn't running yet, while the engine isn't cranking, 2.00s after engine startup, while the battery voltage is over 10.00V, as long as the battery voltage is over 10.00V and 2.00s after this threshold has been exceeded, if none of the CAN controllers is in bus-off state, 2.00s after last CAN controller is no more in bus-off state and if the ECU is not in afterrun • Continuously
		[Fault Detection] • Timeout of TSC1_TE message
		[Defect Debouncing] • Defect condition fulfilled continuously >500.0 ms
Fault healing		• If the TSC1_TE message is received correct after the debouncing time the DFC is healed.
System reaction		• Speed/torque control from Gearbox deactivated. • The default values are used: • Override control is disabled, no transmission control • (TSC_stTraEngMode = 0x00); • Transient Optimized for driveline disengaged • (TSC_stTraEngSpdCond = 0x00); • Low priority for override control is activated • (TSC_stTraEngPrio = 0x03); • Desired speed set at 0: TSC_nTraEngDes = 0x00; • Desired torque set at 0: TSC_trqTraEngDes = 0x00;
		• 1) FId / Disable CAN messages ETC1,ETC2
Failure cause		• Defective CAN controller of Transmission Controller, CAN cable disconnected or broken. Short circuit in wiring.
Failure repair		• Check presence and correct connection of the Transmission Controller to the network, Check correct functioning of the CAN controller. Check wiring.
Inspection procedure	Step1	Refer to the help menu for Nos. other than above. *1: M/T *2: DUONIC *3: ISS (With Lock brake) *4: ISS (Without Lock brake) *5: Lock brake (Without ISS) *6: Other than *3,*4,*5 *7: Full-automatic air conditioner *8: Auto leveling *9: Manual leveling Inspection procedure If one of diagnosis codes associated with A28 (DUONIC Control unit) is generated, make a system diagnosis according to the diagnosis code. Go to step2

https://truckmanualshub.com/

Inspection procedure	Step2	Refer to the help menu for Nos. other than above. *1: M/T *2: DUONIC *3: ISS (With Lock brake) *4: ISS (Without Lock brake) *5: Lock brake (Without ISS) *6: Other than *3,*4,*5 *7: Full-automatic air conditioner *8: Auto leveling *9: Manual leveling Inspection procedure Turn the starter switch in OFF. Remove all ECU connectors from the CAN communication line. Check CAN line for open circuit, short circuit to positive, short circuit to ground or short circuit to another electrical line. Is any abnormality recognized? No: Go to step3 Yes: Go to step8
	Step3	Inspection procedure Attach the connector of A20 (SAM). Check CAN line for open circuit, short circuit to positive, short circuit to ground or short circuit to another electrical line. Is any abnormality recognized? No: Go to step4 Yes: Go to step7
	Step4	Inspection procedure Attach the connector of A28 (DUONIC Control unit). Check CAN line for open circuit, short circuit to positive, short circuit to ground or short circuit to another electrical line. Is any abnormality recognized? No: Go to step5 Yes: Go to step6
	Step5	Inspection procedure Turn the starter switch in OFF. Reinstall all the removed connectors. Erase fault memory and perform a test drive. If the diagnosis code has occurred even during the test drive, start the operation and then replace the A4 (Combustion engine Control unit). Inspection completed
	Step6	Inspection procedure Turn the starter switch in OFF. Reinstall all the removed connectors. Erase fault memory and perform a test drive. If the diagnosis code has occurred even during the test drive, start the operation and then replace the A28 (DUONIC Control unit). Inspection completed
	Step7	Inspection procedure Turn the starter switch in OFF. Reinstall all the removed connectors. Erase fault memory and perform a test drive. If the diagnosis code has occurred even during the test drive, start the operation and then replace the A20 (SAM). Inspection completed

https://truckmanualshub.com/

Inspection procedure	Step8	Refer to the help menu for Nos. other than above. *1: M/T *2: DUONIC *3: ISS (With Lock brake) *4: ISS (Without Lock brake) *5: Lock brake (Without ISS) *6: Other than *3,*4,*5 *7: Full-automatic air conditioner *8: Auto leveling *9: Manual leveling Inspection procedure Repair or replace electrical lines. Reinstall all the removed connectors. Turn the starter switch in ON. Inspection completed

520310-9: CAN Passive DFC TimeOut of Torque Speed Control TSC1TE.

Generation condition		[Test Condition] • Monitoring is active 2.00s after ECU initialization while engine isn't running yet, while the engine isn't cranking, 2.00s after engine startup, while the battery voltage is over 10.00V, as long as the battery voltage is over 10.00V and 2.00s after this threshold has been exceeded, if none of the CAN controllers is in bus-off state, 2.00s after last CAN controller is no more in bus-off state and if the ECU is not in afterrun • Continuously
		[Fault Detection] • Timeout of TSC1_TE message.
		[Defect Debouncing] • Defect condition fulfilled continuously >500.0 ms
Fault healing		• If the TSC1_TE message is received correct after the debouncing time the DFC is healed.
System reaction		• Speed/torque control from Gearbox deactivated. • The default values are used: • Override control is disabled, no transmission control • (TSC_stTraEngMode = 0x00); • Transient Optimized for driveline disengaged • (TSC_stTraEngSpdCond = 0x00); • Low priority for override control is activated • (TSC_stTraEngPrio = 0x03); • Desired speed set at 0: TSC_nTraEngDes = 0x00; • Desired torque set at 0: TSC_trqTraEngDes = 0x00;
		• 1) FId / Disable CAN messages ETC1,ETC2
Failure cause		• Defective CAN controller of Transmission Controller, CAN cable disconnected or broken. Short circuit in wiring.
Failure repair		• Check presence and correct connection of the Transmission Controller to the network, Check correct functioning of the CAN controller. Check wiring.
Inspection procedure	Step1	Refer to the help menu for Nos. other than above. *1: M/T *2: DUONIC *3: ISS (With Lock brake) *4: ISS (Without Lock brake) *5: Lock brake (Without ISS) *6: Other than *3,*4,*5 *7: Full-automatic air conditioner *8: Auto leveling *9: Manual leveling Inspection procedure If one of diagnosis codes associated with A28 (DUONIC Control unit) is generated, make a system diagnosis according to the diagnosis code. Go to step2

https://truckmanualshub.com/

Inspection procedure	Step2	Refer to the help menu for Nos. other than above. *1: M/T *2: DUONIC *3: ISS (With Lock brake) *4: ISS (Without Lock brake) *5: Lock brake (Without ISS) *6: Other than *3,*4,*5 *7: Full-automatic air conditioner *8: Auto leveling *9: Manual leveling Inspection procedure Turn the starter switch in OFF. Remove all ECU connectors from the CAN communication line. Check CAN line for open circuit, short circuit to positive, short circuit to ground or short circuit to another electrical line. Is any abnormality recognized? No: Go to step3 Yes: Go to step8
	Step3	Inspection procedure Attach the connector of A20 (SAM). Check CAN line for open circuit, short circuit to positive, short circuit to ground or short circuit to another electrical line. Is any abnormality recognized? No: Go to step4 Yes: Go to step7
	Step4	Inspection procedure Attach the connector of A28 (DUONIC Control unit). Check CAN line for open circuit, short circuit to positive, short circuit to ground or short circuit to another electrical line. Is any abnormality recognized? No: Go to step5 Yes: Go to step6
	Step5	Inspection procedure Turn the starter switch in OFF. Reinstall all the removed connectors. Erase fault memory and perform a test drive. If the diagnosis code has occurred even during the test drive, start the operation and then replace the A4 (Combustion engine Control unit). Inspection completed
	Step6	Inspection procedure Turn the starter switch in OFF. Reinstall all the removed connectors. Erase fault memory and perform a test drive. If the diagnosis code has occurred even during the test drive, start the operation and then replace the A28 (DUONIC Control unit). Inspection completed
	Step7	Inspection procedure Turn the starter switch in OFF. Reinstall all the removed connectors. Erase fault memory and perform a test drive. If the diagnosis code has occurred even during the test drive, start the operation and then replace the A20 (SAM). Inspection completed

https://truckmanualshub.com/

Inspection procedure	Step8	Refer to the help menu for Nos. other than above. *1: M/T *2: DUONIC *3: ISS (With Lock brake) *4: ISS (Without Lock brake) *5: Lock brake (Without ISS) *6: Other than *3,*4,*5 *7: Full-automatic air conditioner *8: Auto leveling *9: Manual leveling Inspection procedure Repair or replace electrical lines. Reinstall all the removed connectors. Turn the starter switch in ON. Inspection completed

520311-9: CAN Active DFC TimeOut of Torque Speed Control TSC1TR.

Generation condition		[Test Condition] • Monitoring is active 2.00s after ECU initialization while engine isn't running yet, while the engine isn't cranking, 2.00s after engine startup, while the battery voltage is over 10.00V, as long as the battery voltage is over 10.00V and 2.00s after this threshold has been exceeded, if none of the CAN controllers is in bus-off state, 2.00s after last CAN controller is no more in bus-off state and if the ECU is not in afterrun • Continuously
		[Fault Detection] • Timeout of TSC1_TR message.
		[Defect Debouncing] • Defect condition fulfilled continuously >500.0 ms
Fault healing		• If the TSC1_TR message is received correct after the debouncing time the DFC is healed.
System reaction		• Speed/torque control from Gearbox deactivated. • The default values are used: • Override control is disabled, no transmission control • (TSC_stTraRtdrMode = 0x00); • Low priority for override control is activated • (TSC_stTraRtdrPrio = 0x03); • Desired torque set at 0: TSC_trqTraRtdrDes = 0x00;
Failure cause		• Defective CAN controller of Transmission Controller, CAN cable disconnected or broken. Short circuit in wiring.
Failure repair		• Check presence and correct connection of the Transmission Controller to the network, Check correct functioning of the CAN controller. Check wiring.
Inspection procedure	Step1	Refer to the help menu for Nos. other than above. *1: M/T *2: DUONIC *3: ISS (With Lock brake) *4: ISS (Without Lock brake) *5: Lock brake (Without ISS) *6: Other than *3,*4,*5 *7: Full-automatic air conditioner *8: Auto leveling *9: Manual leveling Inspection procedure If one of diagnosis codes associated with A28 (DUONIC Control unit) is generated, make a system diagnosis according to the diagnosis code. Go to step2

https://truckmanualshub.com/

Inspection procedure	Step2	Refer to the help menu for Nos. other than above. *1: M/T *2: DUONIC *3: ISS (With Lock brake) *4: ISS (Without Lock brake) *5: Lock brake (Without ISS) *6: Other than *3,*4,*5 *7: Full-automatic air conditioner *8: Auto leveling *9: Manual leveling Inspection procedure Turn the starter switch in OFF. Remove all ECU connectors from the CAN communication line. Check CAN line for open circuit, short circuit to positive, short circuit to ground or short circuit to another electrical line. Is any abnormality recognized? No: Go to step3 Yes: Go to step8
	Step3	Inspection procedure Attach the connector of A20 (SAM). Check CAN line for open circuit, short circuit to positive, short circuit to ground or short circuit to another electrical line. Is any abnormality recognized? No: Go to step4 Yes: Go to step7
	Step4	Inspection procedure Attach the connector of A28 (DUONIC Control unit). Check CAN line for open circuit, short circuit to positive, short circuit to ground or short circuit to another electrical line. Is any abnormality recognized? No: Go to step5 Yes: Go to step6
	Step5	Inspection procedure Turn the starter switch in OFF. Reinstall all the removed connectors. Erase fault memory and perform a test drive. If the diagnosis code has occurred even during the test drive, start the operation and then replace the A4 (Combustion engine Control unit). Inspection completed
	Step6	Inspection procedure Turn the starter switch in OFF. Reinstall all the removed connectors. Erase fault memory and perform a test drive. If the diagnosis code has occurred even during the test drive, start the operation and then replace the A28 (DUONIC Control unit). Inspection completed
	Step7	Inspection procedure Turn the starter switch in OFF. Reinstall all the removed connectors. Erase fault memory and perform a test drive. If the diagnosis code has occurred even during the test drive, start the operation and then replace the A20 (SAM). Inspection completed

https://truckmanualshub.com/

Inspection procedure	Step8	Refer to the help menu for Nos. other than above. *1: M/T *2: DUONIC *3: ISS (With Lock brake) *4: ISS (Without Lock brake) *5: Lock brake (Without ISS) *6: Other than *3,*4,*5 *7: Full-automatic air conditioner *8: Auto leveling *9: Manual leveling Inspection procedure Repair or replace electrical lines. Reinstall all the removed connectors. Turn the starter switch in ON. Inspection completed

520312-9: CAN Passive DFC TimeOut of Torque Speed Control TSC1TR.

Generation condition		[Test Condition] • Monitoring is active 2.00s after ECU initialization while engine isn't running yet, while the engine isn't cranking, 2.00s after engine startup, while the battery voltage is over 10.00V, as long as the battery voltage is over 10.00V and 2.00s after this threshold has been exceeded, if none of the CAN controllers is in bus-off state, 2.00s after last CAN controller is no more in bus-off state and if the ECU is not in afterrun • Continuously
		[Fault Detection] • Timeout of TSC1_TR message.
		[Defect Debouncing] • Defect condition fulfilled continuously >500.0 ms
Fault healing		• If the TSC1_TR message is received correct after the debouncing time the DFC is healed.
System reaction		• Speed/torque control from Gearbox deactivated. • The default values are used: • Override control is disabled, no transmission control • (TSC_stTraRtdrMode = 0x00); • Low priority for override control is activated • (TSC_stTraRtdrPrio = 0x03); • Desired torque set at 0: TSC_trqTraRtdrDes = 0x00;
Failure cause		• Defective CAN controller of Transmission Controller, CAN cable disconnected or broken. Short circuit in wiring.
Failure repair		• Check presence and correct connection of the Transmission Controller to the network, Check correct functioning of the CAN controller. Check wiring.
Inspection procedure	Step1	Refer to the help menu for Nos. other than above. *1: M/T *2: DUONIC *3: ISS (With Lock brake) *4: ISS (Without Lock brake) *5: Lock brake (Without ISS) *6: Other than *3,*4,*5 *7: Full-automatic air conditioner *8: Auto leveling *9: Manual leveling Inspection procedure If one of diagnosis codes associated with A28 (DUONIC Control unit) is generated, make a system diagnosis according to the diagnosis code. Go to step2

https://truckmanualshub.com/

Inspection procedure	Step2	Refer to the help menu for Nos. other than above. *1: M/T *2: DUONIC *3: ISS (With Lock brake) *4: ISS (Without Lock brake) *5: Lock brake (Without ISS) *6: Other than *3,*4,*5 *7: Full-automatic air conditioner *8: Auto leveling *9: Manual leveling Inspection procedure Turn the starter switch in OFF. Remove all ECU connectors from the CAN communication line. Check CAN line for open circuit, short circuit to positive, short circuit to ground or short circuit to another electrical line. Is any abnormality recognized? No: Go to step3 Yes: Go to step8
	Step3	Inspection procedure Attach the connector of A20 (SAM). Check CAN line for open circuit, short circuit to positive, short circuit to ground or short circuit to another electrical line. Is any abnormality recognized? No: Go to step4 Yes: Go to step7
	Step4	Inspection procedure Attach the connector of A28 (DUONIC Control unit). Check CAN line for open circuit, short circuit to positive, short circuit to ground or short circuit to another electrical line. Is any abnormality recognized? No: Go to step5 Yes: Go to step6
	Step5	Inspection procedure Turn the starter switch in OFF. Reinstall all the removed connectors. Erase fault memory and perform a test drive. If the diagnosis code has occurred even during the test drive, start the operation and then replace the A4 (Combustion engine Control unit). Inspection completed
	Step6	Inspection procedure Turn the starter switch in OFF. Reinstall all the removed connectors. Erase fault memory and perform a test drive. If the diagnosis code has occurred even during the test drive, start the operation and then replace the A28 (DUONIC Control unit). Inspection completed
	Step7	Inspection procedure Turn the starter switch in OFF. Reinstall all the removed connectors. Erase fault memory and perform a test drive. If the diagnosis code has occurred even during the test drive, start the operation and then replace the A20 (SAM). Inspection completed

https://truckmanualshub.com/

Inspection procedure	Step8	Refer to the help menu for Nos. other than above. *1: M/T *2: DUONIC *3: ISS (With Lock brake) *4: ISS (Without Lock brake) *5: Lock brake (Without ISS) *6: Other than *3,*4,*5 *7: Full-automatic air conditioner *8: Auto leveling *9: Manual leveling Inspection procedure Repair or replace electrical lines. Reinstall all the removed connectors. Turn the starter switch in ON. Inspection completed

520317-9: CAN Timeout Error during CAN-Transmit-Frame to Cruise Control Vehicle Speed Information.

Generation condition		[Test Condition] • Monitoring is active 2.00s after ECU initialization while engine isn't running yet, while the engine isn't cranking, 2.00s after engine startup, while the battery voltage is over 10.00V, as long as the battery voltage is over 10.00V and 2.00s after this threshold has been exceeded, if none of the CAN controllers is in bus-off state, 2.00s after last CAN controller is no more in bus-off state and if the ECU is not in afterrun • Continuously
		[Fault Detection] • Timeout of transmitted Cruise Control Vehicle Speed information message
		[Defect Debouncing] • Defect condition fulfilled continuously >500.0 ms
Fault healing		• If the TxCCVS message is transmitted correct after the debouncing time the DFC is healed
System reaction		• None
Failure cause		• Defective CAN controller, CAN cable disconnected or broken. Short circuit in wiring.
Failure repair		• Check the presence and correct connection of the EDC to the network, Check correct functioning of the CAN controller. Check wiring.
Inspection procedure	Step1	Refer to the help menu for Nos. other than above. *1: M/T *2: DUONIC *3: ISS (With Lock brake) *4: ISS (Without Lock brake) *5: Lock brake (Without ISS) *6: Other than *3,*4,*5 *7: Full-automatic air conditioner *8: Auto leveling *9: Manual leveling Inspection procedure Turn the starter switch in OFF. Remove all ECU connectors from the CAN communication line. Check CAN line for open circuit, short circuit to positive, short circuit to ground or short circuit to another electrical line. Is any abnormality recognized? No: Go to step2 Yes: Go to step5

https://truckmanualshub.com/

Inspection procedure	Step2	Inspection procedure Attach the connector of A20 (SAM). Check CAN line for open circuit, short circuit to positive, short circuit to ground or short circuit to another electrical line. Is any abnormality recognized? No: Go to step3 Yes: Go to step4
	Step3	Inspection procedure Turn the starter switch in OFF. Reinstall all the removed connectors. Erase fault memory and perform a test drive. If the diagnosis code has occurred even during the test drive, start the operation and then replace the A4 (Combustion engine Control unit). Inspection completed
	Step4	Inspection procedure Turn the starter switch in OFF. Reinstall all the removed connectors. Erase fault memory and perform a test drive. If the diagnosis code has occurred even during the test drive, start the operation and then replace the A20 (SAM). Inspection completed
	Step5	Refer to the help menu for Nos. other than above. *1: M/T *2: DUONIC *3: ISS (With Lock brake) *4: ISS (Without Lock brake) *5: Lock brake (Without ISS) *6: Other than *3,*4,*5 *7: Full-automatic air conditioner *8: Auto leveling *9: Manual leveling Inspection procedure Repair or replace electrical lines. Reinstall all the removed connectors. Turn the starter switch in ON. Inspection completed

https://truckmanualshub.com/

520323-9: CAN Timeout Error during CAN-Transmit-Frame to Electronic Brake Controller.

Generation condition		[Test Condition] • Monitoring is active 2.00s after ECU initialization while engine isn't running yet, while the engine isn't cranking, 2.00s after engine startup, while the battery voltage is over 10.00V, as long as the battery voltage is over 10.00V and 2.00s after this threshold has been exceeded, if none of the CAN controllers is in bus-off state, 2.00s after last CAN controller is no more in bus-off state and if the ECU is not in afterrun • Continuously
		[Fault Detection] • Timeout of transmitted Electronic Brake Controller 1 message
		[Defect Debouncing] • Defect condition fulfilled continuously >500.0 ms
Fault healing		• If the EBC1 message is transmitted correct after the debouncing time the DFC is healed
System reaction		• None
Failure cause		• Defective CAN controller, CAN cable disconnected or broken. Short circuit in wiring.
Failure repair		• Check the presence and correct connection of the EDC to the network, Check correct functioning of the CAN controller. Check wiring.
Inspection procedure	Step1	Refer to the help menu for Nos. other than above. *1: M/T *2: DUONIC *3: ISS (With Lock brake) *4: ISS (Without Lock brake) *5: Lock brake (Without ISS) *6: Other than *3,*4,*5 *7: Full-automatic air conditioner *8: Auto leveling *9: Manual leveling Inspection procedure Turn the starter switch in OFF. Remove all ECU connectors from the CAN communication line. Check CAN line for open circuit, short circuit to positive, short circuit to ground or short circuit to another electrical line. Is any abnormality recognized? No: Go to step2 Yes: Go to step5
	Step2	Inspection procedure Attach the connector of A20 (SAM). Check CAN line for open circuit, short circuit to positive, short circuit to ground or short circuit to another electrical line. Is any abnormality recognized? No: Go to step3 Yes: Go to step4
	Step3	Inspection procedure Turn the starter switch in OFF. Reinstall all the removed connectors. Erase fault memory and perform a test drive. If the diagnosis code has occurred even during the test drive, start the operation and then replace the A4 (Combustion engine Control unit). Inspection completed
	Step4	Inspection procedure Turn the starter switch in OFF. Reinstall all the removed connectors. Erase fault memory and perform a test drive. If the diagnosis code has occurred even during the test drive, start the operation and then replace the A20 (SAM). Inspection completed

https://truckmanualshub.com/

Inspection procedure	Step5	Refer to the help menu for Nos. other than above. *1: M/T *2: DUONIC *3: ISS (With Lock brake) *4: ISS (Without Lock brake) *5: Lock brake (Without ISS) *6: Other than *3,*4,*5 *7: Full-automatic air conditioner *8: Auto leveling *9: Manual leveling Inspection procedure Repair or replace electrical lines. Reinstall all the removed connectors. Turn the starter switch in ON. Inspection completed

520325-2: Component 'ABS / ASR / ESP®/Electronic brake pressure control' has a configuration fault.

Generation condition		[Test Condition] • Monitoring is active 2.00s after ECU initialization while engine isn't running yet, while the engine isn't cranking, 2.00s after engine startup, while the battery voltage is over 10.00V, as long as the battery voltage is over 10.00V and 2.00s after this threshold has been exceeded, if none of the CAN controllers is in bus-off state, 2.00s after last CAN controller is no more in bus-off state and if the ECU is not in afterrun • Continuously
		[Fault Detection] • Data length of the VDC1 is not equal to the specified data length in the CAN-DLC.
		[Defect Debouncing] • Defect condition fulfilled continuously >500.0 ms
Fault healing		• Data length is correct
System reaction		• The default values are used: • Status of VDC lamp: • StbIntv_stLampActv = 3.00- • Status VDC operativity: • StbIntv_stESPActv = 3.00- • Status brake light request: • StbIntv_stBrkLghtReq = 3.00- • Status roll over prevention engine control: • StbIntv_stRolOvrPrvEng =3.00- • Status roll over prevention brake control: • StbIntv_stRolOvrPrvBrk = 3.00- • Status YC brake control: • StbIntv_stYawCtlEng = 3.00- • Status YC engine control: • StbIntv_stYawCtlBrk = 3.00-
		• 1) FId / Disable CAN messages EBC1,HRWS,VDC1,WS
Failure cause		• Wrong CAN configuration in the ABS/ASR/ESP/EBS
Failure repair		• Check CAN configuration in the ABS/ASR/ESP/EBS
Inspection procedure	Step1	Inspection procedure Perform a diagnosis on the A1 (Antilock brake system Control unit) side system.

https://truckmanualshub.com/

520325-9: Component 'Vehicle dynamics CAN bus' is faulty.

Generation condition		[Test Condition] • Monitoring is active 2.00s after ECU initialization while engine isn't running yet, while the engine isn't cranking, 2.00s after engine startup, while the battery voltage is over 10.00V, as long as the battery voltage is over 10.00V and 2.00s after this threshold has been exceeded, if none of the CAN controllers is in bus-off state, 2.00s after last CAN controller is no more in bus-off state and if the ECU is not in afterrun • Continuously
		[Fault Detection] • Fault is detected if a time out of the message occurs.
		[Defect Debouncing] • Defect condition fulfilled continuously >500.0 ms
Fault healing		• If the VDC1 message is received correct, after the debouncing time the DFC is healed
System reaction		• The default values are used: • Status of VDC lamp: • StbIntv_stLampActv = 3.00- • Status VDC operativity: • StbIntv_stESPActv = 3.00- • Status brake light request: • StbIntv_stBrkLghtReq = 3.00- • Status roll over prevention engine control: • StbIntv_stRolOvrPrvEng =3.00- • Status roll over prevention brake control: • StbIntv_stRolOvrPrvBrk = 3.00- • Status YC brake control: • StbIntv_stYawCtlEng = 3.00- • Status YC engine control: • StbIntv_stYawCtlBrk = 3.00-
Failure cause		• Defective CAN controller of Vehicle Dynamics Control Unit, under voltage of VDCU, missing VDCU, CAN cable connecting the VDCU is disconnected or broken. Short circuit in wiring.
Failure repair		• Check presence and correct connection of the VDCU to the network, check correct functioning of the VDCU CAN controller and its voltage supply. Check wiring.
Inspection procedure	Step1	Inspection procedure Inspect the suspected factors mentioned above sequentially to locate faulty parts. Repair or replace the faulty part as necessary.

520327-12: ECU internalSPI and COM errorsCY320

Generation condition		[Test Condition] • Continuously
		[Fault Detection] • Communication disturbances detected between processor and CY320 (data incorrect or a data transfer is not possible).
		[Defect Debouncing] • Defect condition fulfilled continuously >500.0 ms
Fault healing		• Communication correctly restored
System reaction		• None
Failure cause		• ECM internal failure
Failure repair		• Replace ECM
Inspection procedure	Step1	Inspection procedure Erase fault memory and perform a test drive. If the diagnosis code has occurred even during the test drive, start the operation and then replace the A4 (Combustion engine Control unit). Inspection completed

https://truckmanualshub.com/

520330-2: SCRTemperature sensorPlausibility error in the dynamic test

Generation condition		[Test Condition] • Monitoring is active if the ECU is not in afterrun • Following conditions fulfilled: Engine temperature > 39.96°C {103.93°F}, Exhaust Temperature before SCR > 299.96°C {571.93°F}, NOx Sensor released by FID_DStgyStatNOxSens and Engine Break not active • Exhaust flow > 65.00Kg/h (actual Temperature Difference set to 0, if exhaust flow < 65.00Kg/h)
		[Fault Detection] • The Difference (averaged from 3.43min at 0.00Kg/h over 37.54min at 417.40Kg/h to 24.00min at 650.00Kg/h] “Temperature before - after SCR” > exhaust flow dependant limit (from 137.96°C {280.33°F} at 0.00Kg/h over 130.76°C {267.37°F} at 200.00Kg/h to 110.96°C {231.73°F} at 600.00Kg/h)
		[Defect Debouncing] • Defect condition fulfilled continuously >300000.0 ms
Fault healing		• The “long time” Difference “Temperature before - after SCR” < exhaust flow dependant limit (from 137.96°C {280.33°F} at 0.00Kg/h over 130.76°C {267.37°F} at 200.00Kg/h to 110.96°C {231.73°F} at 600.00Kg/h)
System reaction		• According FID (see FID’s)
		• 1) Fid / Reagent dosing for SCR inhibited • 2) Fid / SCR Monitoring or DEF injection release not possible (according calibration of Release Masks)
Failure cause		• One of the SCR Temperature sensors defective • One of the SCR Temperature sensors with corroded connector or defect wiring harness • One of both SCR Temperature sensors not mounted correctly (e.g. not in exhaust flow due to mounting problems) • Temperature increase over SCR due to oil or fuel in exhaust (exothermic reaction): If temperature after SCR much higher than before SCR
Failure repair		• Check the SCR temperature sensors for correct mounting (sensor in exhaust flow, not covered by insulation of SCR housing etc.), correct connectors (no corrosion) and wiring (correct insulation, not broken). • Check temperature sensors and replace them if necessary. • If problem not solved and the temperature measurement OK: Check if there is oil or fuel in the exhaust system (by turbocharger, possibly defective Oxicat etc..)
Inspection procedure	Step1	Inspection procedure Inspect the suspected factors mentioned above sequentially to locate faulty parts. Repair or replace the faulty part as necessary.

520336-31: There is an internal fault in control unit ‘Combustion engine Control unit’.

Generation condition	[Test Condition] • Whenever an erase operation is started.
	[Fault Detection] • If sector erase (Flash memory) cannot be performed or successfully completed, an error will be registered.
	[Defect Debouncing] • Immediate
Fault healing	• None
System reaction	• None except FIDs
	• 1) FId / Inhibit DPF efficiency monitor • 2) FId / Interrupt DPF efficiency monitor • 3) FId / Inhibit monitor for DPF frequent regeneration • 4) FId / Inhibit monitor for incomplete regeneration of the DPF
Failure cause	• Wrong programming/flashing of the ECM, internal defect of the ECM.
Failure repair	• Try to flash the ECM correctly with a proper dataset, if defect persists: replace ECM.

https://truckmanualshub.com/

Inspection procedure	Step1	Inspection procedure Erase fault memory and perform a test drive. If the diagnosis code has occurred even during the test drive, start the operation and then replace the A4 (Combustion engine Control unit). Inspection completed

520337-31: There is an internal fault in control unit 'Combustion engine Control unit'.

Generation condition		[Test Condition] • At every read access to memory media.
		[Fault Detection] • If at least three memory blocks cannot be read, an error will be registered.
		[Defect Debouncing] • Immediate
Fault healing		• None
System reaction		• For defect Blocks, Replace-Values could be delivered (if provided)
		• 1) Fid / Trip recorder not updated due to EEPROM error • 2) FId / Inhibit DPF efficiency monitor • 3) FId / Interrupt DPF efficiency monitor • 4) FId / Inhibit monitor for DPF frequent regeneration • 5) FId / Inhibit monitor for incomplete regeneration of the DPF
Failure cause		• Wrong programming/flashing of the ECM, internal defect of the ECM.
Failure repair		• Try to flash the ECM correctly with a proper dataset, if defect persists: replace ECM.
Inspection procedure	Step1	Inspection procedure Erase fault memory and perform a test drive. If the diagnosis code has occurred even during the test drive, start the operation and then replace the A4 (Combustion engine Control unit). Inspection completed

520338-31: There is an internal fault in control unit 'Combustion engine Control unit'.

Generation condition		[Test Condition] • At every write access to memory media.
		[Fault Detection] • If one memory block cannot be written more than 3 times, an error will be registered
		[Defect Debouncing] • Immediate
Fault healing		• None
System reaction		• None except FIDs
		• 1) FId / Inhibit DPF efficiency monitor • 2) FId / Interrupt DPF efficiency monitor • 3) FId / Inhibit monitor for DPF frequent regeneration • 4) FId / Inhibit monitor for incomplete regeneration of the DPF
Failure cause		• Wrong programming/flashing of the ECM, internal defect of the ECM.
Failure repair		• Try to flash the ECM correctly with a proper dataset, if defect persists: replace ECM.
Inspection procedure	Step1	Inspection procedure Erase fault memory and perform a test drive. If the diagnosis code has occurred even during the test drive, start the operation and then replace the A4 (Combustion engine Control unit). Inspection completed

https://truckmanualshub.com/

520340-0: The efficiency of the exhaust gas recirculation cooler is not sufficient.

Generation condition		[Test Condition] • Following release conditions are considered: stationary engine operating mode is detected, EGR mass flow ASMod_dmEGRDs lies within the thresholds 200.00Kg/h and 30.00Kg/h and A switch-off case not be pending for closed-loop EGR control (AirCtl_stMon = 0; engine temperature EngDa_tEng • lies within the thresholds 111.96°C {233.53°F} and 47.96°C {118.33°F}; average engine speed Epm_nEng lies within the thresholds 3500.00rpm and 2500.00rpm; injection quantity InjCtl_qCurr lies within the thresholds 100.00mg/hub and • 35.00mg/hub; engine operating in normal mode (no regeneration))
		[Fault Detection] • If the measured value EGRClg_tSens_mp is greater than the calculated value EGRClg_tMon_mp, then the EGR cooler is defective. • EGRClg_tMon_mp takes all sensor and system tolerances into account. and depends on the engine speed and the injection quantity.
		[Defect Debouncing] • Defect condition exceeded cumulatively > 1.00 events • Failure is detected if active for 50% of events
Fault healing		• No Healing possible (disabled by Data set)
System reaction		• None except FIDs
		• 1) FId / EGR switched off • 2) FId / Zero Fuel Calibration (ZFC) of injectors by Lambda Sensor signal disabled • 3) FId / Status of function identifier FId_EngDemTrqLimErr5 • 4) FId / Engine speed Limitation 2 for HIgh/Low engine speed (HLS) control active • 5) Fid / SCR Monitoring or DEF injection release not possible (according calibration of Release Masks)
Failure cause		• EGR cooler efficiency low
Failure repair		• Check EGR cooler
Inspection procedure	Step1	Inspection procedure Inspect the suspected factors mentioned above sequentially to locate faulty parts. Repair or replace the faulty part as necessary.

https://truckmanualshub.com/

520344-1: EGR Valve has Under voltage of H-bridge.

Generation condition	[Test Condition] • Monitoring is active while the battery voltage is over 10.00V and as long as the battery voltage is over 10.00V and 2.00s after this threshold has been exceeded • Open Load diagnosis not active • Plausibility Check for Short Circuit Overload not active
	[Fault Detection] • Hardware reports Under Voltage error
	[Defect Debouncing] • Defect condition exceeded cumulatively > 500.00ms • Failure is detected if active for 50% of the time
Fault healing	• Hardware does not report Under Voltage error
System reaction	• Only according FID (see FID's)
	• 1) FId / Failure detection of physical range check of air flow meter (HFM/AFS) disabled (DFC_AFSPhysRngHi and DFC_AFSPhysRngLo) • 2) FId / EGR switched off • 3) FId / Deactivates NOx monitoring • 4) FId / Afterrun Functions suppressed (partially monitoring and learning in afterrun) • 5) Fid / SCR Monitoring or DEF injection release not possible (according calibration of Release Masks) • 6) FId / EGR valve closed loop governor and monitoring shut off • 7) FId / Adaptation of the correction values of Fuel Mass Observer (FMO) inhibited (no correction of detected deviation between injected fuel and Lambda sensor signal) • 8) FId / Fuel Mass Observer (FMO) switched off (no monitoring of injected fuel by Lambda sensor) • 9) Fid / Plausibility check Boost pressure with ambient pressure inhibited • 10) Fid / Boost pressure pre control correction depending on EGR disabled • 11) FId / Inhibit DPF monitor • 12) FId / Particulate filter ((DPF) Regeneration inhibited • 13) FId / Service regeneration of Particulate filter ((DPF) inhibited (due to DPF failure) • 14) FId / Inhibit EGR cooler efficiency monitoring • 15) FId / Zero Fuel Calibration (ZFC) of injectors by Lambda Sensor signal disabled • 16) FId / Status of function identifier FId_EngDemTrqLimErr5 • 17) FId / Engine speed Limitation 2 for HIgh/Low engine speed (HLS) control active • 18) FID / Drift compensation of Air flow meter (HFM/AFS) disabled
Failure cause	• Too high Voltage fluctuations in system • internal failure of ECU
Failure repair	• Check electrical system of vehicle • Replace ECU

https://truckmanualshub.com/

Inspection procedure	Step1	Inspection procedure If one of diagnosis codes associated with A20 (SAM) is generated, make a system diagnosis according to the diagnosis code. Go to Step2
	Step2	Inspection procedure Turn the starter switch in ON. Execute the control “Control of exhaust gas recirculation”. Turn the starter switch in OFF. Check the Mechanical fault at A14 (EGR valve). Can occurrence of a mechanical fault be confirmed? No: Go to Step3 Yes: Go to Step4
	Step3	Inspection procedure Turn the starter switch in OFF. Remove the connector of A4 (Combustion engine Control unit). Remove the connector of A14 (EGR valve). Check the circuit across A4.X1.60/50 and Y8.X7.5/2 for open or short circuit. Check the circuit across A4.X1.60/35 and Y8.X7.5/1 for open or short circuit. Check the circuit across A4.X1.60/29 and B21.X7.5/5 for open or short circuit. Check the circuit across A4.X1.60/27 and B21.X7.5/4 for open or short circuit. Check the circuit across A4.X1.60/33 and B21.X7.5/3 for open or short circuit. Make a visual check on each connector. Is any abnormality recognized? No: Go to Step4 Yes: Go to Step8
	Step4	Inspection procedure Turn the starter switch in OFF. Replace component “A14 (EGR valve)”. Reinstall all the removed connectors. Turn the starter switch in ON. Perform the learned value resetting procedure of A14 (EGR valve) which A4 (Combustion engine Control unit) learns. Go to Step5
	Step5	Inspection procedure Turn the starter switch in OFF. Reinstall all the removed connectors. Erase fault memory and perform a test drive. Check if this diagnosis code has occurred. Are current fault codes present? No: Go to Step7 Yes: Go to Step6
	Step6	Inspection procedure Perform the operation start and replace A4 (Combustion engine Control unit). Go to Step7
	Step7	Inspection completed
	Step8	Inspection procedure Repair or replace electrical lines. Reinstall all the removed connectors. Erase fault memory and perform a test drive. Check if this diagnosis code has occurred. Are current fault codes present? No: Go to Step7 Yes: Go to Step4

https://truckmanualshub.com/

520344-3: EGR Valve has a short circuit to ground on Out2 of H-bridge.

Generation condition	[Test Condition] • Monitoring is active while the battery voltage is over 10.00V and as long as the battery voltage is over 10.00V and 2.00s after this threshold has been exceeded • Open Load diagnosis not active
	[Fault Detection] • Short Circuit to Battery at Out2 of TLE7209/CJ230 error
	[Defect Debouncing] • Defect condition exceeded cumulatively > 300.00ms • Failure is detected if active for 50% of the time
Fault healing	• To give the possibility for healing, the power stage is enabled each 150.00ms during defect recognition and 300.00ms after definitive failure recognition. • Healing if Hardware does not report “short circuit to battery” (SCB) failure.
System reaction	• Power stage is switched off by disabling the TLE7209/CJ230 chip and the PWM output set to -10.00%. • Further reaction according FID (see FID’s)
	• 1) FId / Failure detection of physical range check of air flow meter (HFM/AFS) disabled (DFC_AFSPhysRngHi and DFC_AFSPhysRngLo) • 2) FId / EGR switched off • 3) FId / Deactivates NOx monitoring • 4) FId / Afterrun Functions suppressed (partially monitoring and learning in afterrun) • 5) Fid / SCR Monitoring or DEF injection release not possible (according calibration of Release Masks) • 6) FId / EGR valve closed loop governor and monitoring shut off • 7) FId / Adaptation of the correction values of Fuel Mass Observer (FMO) inhibited (no correction of detected deviation between injected fuel and Lambda sensor signal) • 8) FId / Fuel Mass Observer (FMO) switched off (no monitoring of injected fuel by Lambda sensor) • 9) Fid / Plausibility check Boost pressure with ambient pressure inhibited • 10) Fid / Boost pressure pre control correction depending on EGR disabled • 11) FId / Inhibit DPF monitor • 12) FId / Particulate filter ((DPF) Regeneration inhibited • 13) FId / Service regeneration of Particulate filter ((DPF) inhibited (due to DPF failure) • 14) FId / Inhibit EGR cooler efficiency monitoring • 15) FId / Zero Fuel Calibration (ZFC) of injectors by Lambda Sensor signal disabled • 16) FId / Status of function identifier FId_EngDemTrqLimErr5 • 17) FId / Engine speed Limitation 2 for HIgh/Low engine speed (HLS) control active • 18) FID / Drift compensation of Air flow meter (HFM/AFS) disabled
Failure cause	• Short circuit of wiring to external source
Failure repair	• Check of wiring

https://truckmanualshub.com/

Inspection procedure	Step1	Inspection procedure If one of diagnosis codes associated with A20 (SAM) is generated, make a system diagnosis according to the diagnosis code. Go to Step2
	Step2	Inspection procedure Turn the starter switch in ON. Execute the control “Control of exhaust gas recirculation”. Turn the starter switch in OFF. Check the Mechanical fault at A14 (EGR valve). Can occurrence of a mechanical fault be confirmed? No: Go to Step3 Yes: Go to Step4
	Step3	Inspection procedure Turn the starter switch in OFF. Remove the connector of A4 (Combustion engine Control unit). Remove the connector of A14 (EGR valve). Check the circuit across A4.X1.60/50 and Y8.X7.5/2 for open or short circuit. Check the circuit across A4.X1.60/35 and Y8.X7.5/1 for open or short circuit. Check the circuit across A4.X1.60/29 and B21.X7.5/5 for open or short circuit. Check the circuit across A4.X1.60/27 and B21.X7.5/4 for open or short circuit. Check the circuit across A4.X1.60/33 and B21.X7.5/3 for open or short circuit. Make a visual check on each connector. Is any abnormality recognized? No: Go to Step4 Yes: Go to Step8
	Step4	Inspection procedure Turn the starter switch in OFF. Replace component “A14 (EGR valve)”. Reinstall all the removed connectors. Turn the starter switch in ON. Perform the learned value resetting procedure of A14 (EGR valve) which A4 (Combustion engine Control unit) learns. Go to Step5
	Step5	Inspection procedure Turn the starter switch in OFF. Reinstall all the removed connectors. Erase fault memory and perform a test drive. Check if this diagnosis code has occurred. Are current fault codes present? No: Go to Step7 Yes: Go to Step6
	Step6	Inspection procedure Perform the operation start and replace A4 (Combustion engine Control unit). Go to Step7
	Step7	Inspection completed
	Step8	Inspection procedure Repair or replace electrical lines. Reinstall all the removed connectors. Erase fault memory and perform a test drive. Check if this diagnosis code has occurred. Are current fault codes present? No: Go to Step7 Yes: Go to Step4

https://truckmanualshub.com/

520344-4: EGR Valve has a short circuit to ground on Out2 of H-bridge.

Generation condition	[Test Condition] • Monitoring is active while the battery voltage is over 10.00V and as long as the battery voltage is over 10.00V and 2.00s after this threshold has been exceeded • Open Load diagnosis not active
	[Fault Detection] • Short Circuit to Ground at Out2 of TLE7209/CJ230 error
	[Defect Debouncing] • Defect condition exceeded cumulatively > 300.00ms • Failure is detected if active for 50% of the time
Fault healing	• To give the possibility for healing, the power stage is enabled each 150.00ms during defect recognition and 300.00ms after definitive failure recognition. • Healing if Hardware does not report “short circuit to battery” (SCG) failure.
System reaction	• Power stage is switched off by disabling the TLE7209/CJ230 chip and the PWM output set to -10.00%. • Further reaction according FID (see FID’s)
	• 1) FId / Failure detection of physical range check of air flow meter (HFM/AFS) disabled (DFC_AFSPhysRngHi and DFC_AFSPhysRngLo) • 2) FId / EGR switched off • 3) FId / Deactivates NOx monitoring • 4) FId / Afterrun Functions suppressed (partially monitoring and learning in afterrun) • 5) Fid / SCR Monitoring or DEF injection release not possible (according calibration of Release Masks) • 6) FId / EGR valve closed loop governor and monitoring shut off • 7) FId / Adaptation of the correction values of Fuel Mass Observer (FMO) inhibited (no correction of detected deviation between injected fuel and Lambda sensor signal) • 8) FId / Fuel Mass Observer (FMO) switched off (no monitoring of injected fuel by Lambda sensor) • 9) Fid / Plausibility check Boost pressure with ambient pressure inhibited • 10) Fid / Boost pressure pre control correction depending on EGR disabled • 11) FId / Inhibit DPF monitor • 12) FId / Particulate filter ((DPF) Regeneration inhibited • 13) FId / Service regeneration of Particulate filter ((DPF) inhibited (due to DPF failure) • 14) FId / Inhibit EGR cooler efficiency monitoring • 15) FId / Zero Fuel Calibration (ZFC) of injectors by Lambda Sensor signal disabled • 16) FId / Status of function identifier FId_EngDemTrqLimErr5 • 17) FId / Engine speed Limitation 2 for HIgh/Low engine speed (HLS) control active • 18) FID / Drift compensation of Air flow meter (HFM/AFS) disabled
Failure cause	• Short circuit of wiring to ground
Failure repair	• Check of wiring

https://truckmanualshub.com/

Inspection procedure	Step1	Inspection procedure If one of diagnosis codes associated with A20 (SAM) is generated, make a system diagnosis according to the diagnosis code. Go to Step2
	Step2	Inspection procedure Turn the starter switch in ON. Execute the control “Control of exhaust gas recirculation”. Turn the starter switch in OFF. Check the Mechanical fault at A14 (EGR valve). Can occurrence of a mechanical fault be confirmed? No: Go to Step3 Yes: Go to Step4
	Step3	Inspection procedure Turn the starter switch in OFF. Remove the connector of A4 (Combustion engine Control unit). Remove the connector of A14 (EGR valve). Check the circuit across A4.X1.60/50 and Y8.X7.5/2 for open or short circuit. Check the circuit across A4.X1.60/35 and Y8.X7.5/1 for open or short circuit. Check the circuit across A4.X1.60/29 and B21.X7.5/5 for open or short circuit. Check the circuit across A4.X1.60/27 and B21.X7.5/4 for open or short circuit. Check the circuit across A4.X1.60/33 and B21.X7.5/3 for open or short circuit. Make a visual check on each connector. Is any abnormality recognized? No: Go to Step4 Yes: Go to Step8
	Step4	Inspection procedure Turn the starter switch in OFF. Replace component “A14 (EGR valve)”. Reinstall all the removed connectors. Turn the starter switch in ON. Perform the learned value resetting procedure of A14 (EGR valve) which A4 (Combustion engine Control unit) learns. Go to Step5
	Step5	Inspection procedure Turn the starter switch in OFF. Reinstall all the removed connectors. Erase fault memory and perform a test drive. Check if this diagnosis code has occurred. Are current fault codes present? No: Go to Step7 Yes: Go to Step6
	Step6	Inspection procedure Perform the operation start and replace A4 (Combustion engine Control unit). Go to Step7
	Step7	Inspection completed
	Step8	Inspection procedure Repair or replace electrical lines. Reinstall all the removed connectors. Erase fault memory and perform a test drive. Check if this diagnosis code has occurred. Are current fault codes present? No: Go to Step7 Yes: Go to Step4

https://truckmanualshub.com/

520344-6: EGR Valve has short circuit or over load of H-bridge.

Generation condition	[Test Condition] • Monitoring is active while the battery voltage is over 10.00V and as long as the battery voltage is over 10.00V and 2.00s after this threshold has been exceeded • Open Load diagnosis not active • Failure “Short Circuit to Battery” (SCB) or “short circuit to Ground” (SCG) detected.
	[Fault Detection] • Short Circuit over Load error. • In case of short-circuit-to-ground error, the High side switches are closed with -0.01%. If there is no more short-circuit-to-ground error then it is detected as short-circuit-over-load error. • In case of short-circuit-to-battery error, low side switches are closed with 0.00%. If there is no more short-circuit-to-battery error then it is detected as short-circuit-over-load error. • If short-circuit overload error is detected, then the pre-existing SCG/SCB error is healed.
	[Defect Debouncing] • Defect condition exceeded cumulatively > 300.00ms • Failure is detected if active for 50% of the time
Fault healing	• To give the possibility for healing, the power stage is enabled each 150.00ms during defect recognition and 300.00ms after definitive failure recognition. • Healing if Hardware does not report “short circuit Overload” failure.
System reaction	• Power stage is switched off by disabling the TLE7209/CJ230 chip and the PWM output set to -10.00%. • Further reaction according FID (see FID’s)
	• 1) FId / Failure detection of physical range check of air flow meter (HFM/AFS) disabled (DFC_AFSPhysRngHi and DFC_AFSPhysRngLo) • 2) FId / EGR switched off • 3) FId / Deactivates NOx monitoring • 4) FId / Afterrun Functions suppressed (partially monitoring and learning in afterrun) • 5) Fid / SCR Monitoring or DEF injection release not possible (according calibration of Release Masks) • 6) FId / EGR valve closed loop governor and monitoring shut off • 7) FId / Adaptation of the correction values of Fuel Mass Observer (FMO) inhibited (no correction of detected deviation between injected fuel and Lambda sensor signal) • 8) FId / Fuel Mass Observer (FMO) switched off (no monitoring of injected fuel by Lambda sensor) • 9) Fid / Plausibility check Boost pressure with ambient pressure inhibited • 10) Fid / Boost pressure pre control correction depending on EGR disabled • 11) FId / Inhibit DPF monitor • 12) FId / Particulate filter ((DPF) Regeneration inhibited • 13) FId / Service regeneration of Particulate filter ((DPF) inhibited (due to DPF failure) • 14) FId / Inhibit EGR cooler efficiency monitoring • 15) FId / Zero Fuel Calibration (ZFC) of injectors by Lambda Sensor signal disabled • 16) FId / Status of function identifier FId_EngDemTrqLimErr5 • 17) FId / Engine speed Limitation 2 for HIgh/Low engine speed (HLS) control active • 18) FID / Drift compensation of Air flow meter (HFM/AFS) disabled
Failure cause	• Short circuit of wiring
Failure repair	• Check of wiring

https://truckmanualshub.com/

Inspection procedure	Step1	Inspection procedure If one of diagnosis codes associated with A20 (SAM) is generated, make a system diagnosis according to the diagnosis code. Go to Step2
	Step2	Inspection procedure Turn the starter switch in ON. Execute the control “Control of exhaust gas recirculation”. Turn the starter switch in OFF. Check the Mechanical fault at A14 (EGR valve). Can occurrence of a mechanical fault be confirmed? No: Go to Step3 Yes: Go to Step4
	Step3	Inspection procedure Turn the starter switch in OFF. Remove the connector of A4 (Combustion engine Control unit). Remove the connector of A14 (EGR valve). Check the circuit across A4.X1.60/50 and Y8.X7.5/2 for open or short circuit. Check the circuit across A4.X1.60/35 and Y8.X7.5/1 for open or short circuit. Check the circuit across A4.X1.60/29 and B21.X7.5/5 for open or short circuit. Check the circuit across A4.X1.60/27 and B21.X7.5/4 for open or short circuit. Check the circuit across A4.X1.60/33 and B21.X7.5/3 for open or short circuit. Make a visual check on each connector. Is any abnormality recognized? No: Go to Step4 Yes: Go to Step8
	Step4	Inspection procedure Turn the starter switch in OFF. Replace component “A14 (EGR valve)”. Reinstall all the removed connectors. Turn the starter switch in ON. Perform the learned value resetting procedure of A14 (EGR valve) which A4 (Combustion engine Control unit) learns. Go to Step5
	Step5	Inspection procedure Turn the starter switch in OFF. Reinstall all the removed connectors. Erase fault memory and perform a test drive. Check if this diagnosis code has occurred. Are current fault codes present? No: Go to Step7 Yes: Go to Step6
	Step6	Inspection procedure Perform the operation start and replace A4 (Combustion engine Control unit). Go to Step7
	Step7	Inspection completed
	Step8	Inspection procedure Repair or replace electrical lines. Reinstall all the removed connectors. Erase fault memory and perform a test drive. Check if this diagnosis code has occurred. Are current fault codes present? No: Go to Step7 Yes: Go to Step4

https://truckmanualshub.com/

520344-7: EGR valveJammed open

Generation condition	[Test Condition] • After a governor deviation is detected
	[Fault Detection] • Jammed valve in open state is detected if: • If permanent control deviation exist for a time greater than 300.00ms • Valve release attempts have failed (5.00- trials) • EGR actuator position is <= 15.00%
	[Defect Debouncing] • 300.00ms after last release trial
Fault healing	• Healing not possible in same driving cycle, when fault condition don't subsists (governor deviation healed or release succeeds)
System reaction	• Timer for repeated release function becomes active and the governor is shutoff.
	• 1) FId / Failure detection of physical range check of air flow meter (HFM/AFS) disabled (DFC_AFSPhysRngHi and DFC_AFSPhysRngLo) • 2) FId / EGR switched off • 3) FId / Deactivates NOx monitoring • 4) FId / Afterrun Functions suppressed (partially monitoring and learning in afterrun) • 5) Fid / Plausibility check Boost pressure with ambient pressure inhibited • 6) Fid / Boost pressure pre control correction depending on EGR disabled • 7) FId / Particulate filter ((DPF) Regeneration inhibited • 8) FId / Service regeneration of Particulate filter ((DPF) inhibited (due to DPF failure) • 9) Fid / SCR Monitoring or DEF injection release not possible (according calibration of Release Masks) • 10) FId / Inhibit EGR cooler efficiency monitoring • 11) FId / Zero Fuel Calibration (ZFC) of injectors by Lambda Sensor signal disabled • 12) FID / Drift compensation of Air flow meter (HFM/AFS) disabled • 13) FId / Status of function identifier FId_EngDemTrqLimErr5 • 14) FId / Engine speed Limitation 2 for HIgh/Low engine speed (HLS) control active
Failure cause	• EGR valve can not be closed as desired within expected time • EGR valve blocked mechanically • EGR valve sticks • EGR valve position sensor mismatched
Failure repair	• Check Functionality of EGR valve and the corresponding position

https://truckmanualshub.com/

Inspection procedure	Step1	Inspection procedure If one of diagnosis codes associated with A20 (SAM) is generated, make a system diagnosis according to the diagnosis code. Go to Step2
	Step2	Inspection procedure Turn the starter switch in ON. Execute the control “Control of exhaust gas recirculation”. Turn the starter switch in OFF. Check the Mechanical fault at A14 (EGR valve). Can occurrence of a mechanical fault be confirmed? No: Go to Step3 Yes: Go to Step4
	Step3	Inspection procedure Turn the starter switch in OFF. Remove the connector of A4 (Combustion engine Control unit). Remove the connector of A14 (EGR valve). Check the circuit across A4.X1.60/50 and Y8.X7.5/2 for open or short circuit. Check the circuit across A4.X1.60/35 and Y8.X7.5/1 for open or short circuit. Check the circuit across A4.X1.60/29 and B21.X7.5/5 for open or short circuit. Check the circuit across A4.X1.60/27 and B21.X7.5/4 for open or short circuit. Check the circuit across A4.X1.60/33 and B21.X7.5/3 for open or short circuit. Make a visual check on each connector. Is any abnormality recognized? No: Go to Step4 Yes: Go to Step8
	Step4	Inspection procedure Turn the starter switch in OFF. Replace component “A14 (EGR valve)”. Reinstall all the removed connectors. Turn the starter switch in ON. Perform the learned value resetting procedure of A14 (EGR valve) which A4 (Combustion engine Control unit) learns. Go to Step5
	Step5	Inspection procedure Turn the starter switch in OFF. Reinstall all the removed connectors. Erase fault memory and perform a test drive. Check if this diagnosis code has occurred. Are current fault codes present? No: Go to Step7 Yes: Go to Step6
	Step6	Inspection procedure Perform the operation start and replace A4 (Combustion engine Control unit). Go to Step7
	Step7	Inspection completed
	Step8	Inspection procedure Repair or replace electrical lines. Reinstall all the removed connectors. Erase fault memory and perform a test drive. Check if this diagnosis code has occurred. Are current fault codes present? No: Go to Step7 Yes: Go to Step4

520347-31: Injection cutoff demand for shutoff coordinator

Generation condition	[Test Condition] • Continuously.
	[Fault Detection] • If engine speed Epm_nEng > 1600.00rpm.
	[Defect Debouncing] • Immediate.
Fault healing	• If engine speed Epm_nEng < 1600.00rpm.

https://truckmanualshub.com/

System reaction		• If threshold of 1500.00rpm is reached try to limit speed increase by reducing fuel injection, if a second threshold of 1600.00rpm is reached, cut injection off.
		• 1) FId / Fuel quantity set to (= engine stop) • 2) FId / Engine torque forced to (=engine stop)
Failure cause		• Another failure requested engine speed limitation. • This failure path should always appear in failure memory with another lead failure from ECM monitoring level (level 2)
Failure repair		• No action, this is only an information path
Inspection procedure	Step1	Inspection procedure Inspect the suspected factors mentioned above sequentially to locate faulty parts. Repair or replace the faulty part as necessary.

520348-0: Signal Range Check (SRC) for 'Exhaust temperature upstream of oxidation catalytic converter' reports HIGH.

Generation condition		[Test Condition] • Monitoring is active while the battery voltage is over 10.00V • Monitoring not inhibited by FId_EnhSRCT1ExhTMon due to another failure
		[Fault Detection] • Exhaust Temperature before Oxicat > 649.96°C {1201.93°F}
		[Defect Debouncing] • Defect condition exceeded cumulatively > 5.00s • Failure is detected if active for 50% of the time
Fault healing		• Measured temperature < 649.96°C {1201.93°F}
System reaction		• Only by FID (see FID's)
		• 1) FId / Monitoring of particulate filter (DPF) by comparing the calculated flow resistance with measured pressure drop disabled • 2) FId / Monitoring for the destroyed particle filter (DPF) by minimal flow resistance disabled • 3) FId / Substitute calibration array is used to determinate the regeneration lock-out time of particulate filter (DPF) • 4) FId / Integrators of the soot mass simulation of particulate filter (DPF) are initialized with the value of the residual soot mass calculation after a successful regeneration • 5) FId / Substitute parameter set of maximum values is used for the calculation of fuel consumption, operating hours and distance covered since the last successful regeneration of particulate filter (DPF) • 6) FId / Particulate filter ((DPF) Regeneration inhibited • 7) FId / Service regeneration of Particulate filter ((DPF) inhibited (due to DPF failure) • 8) FId / Inhibit DPF upstream Temperature sensor adaption • 9) FId / Inhibit OxiCat passive monitor • 10) FId / Engine protection DPF regeneration inhibited due to faulty input signals
Failure cause		• Exhaust Temperature Sensor before Oxicat measures wrong values or interchanged with Temperature before Oxicat
Failure repair		• Check wiring and connectors for correct contact (corrosion). • Check sensor and replace it if necessary
Inspection procedure	Step1	Inspect or verify the following items. Repair or replace faulty items as necessary. Incorrect assembly of B28 (Temperature sensor "SCR catalytic converter" 1), B32 (Temperature sensor "SCR catalytic converter" 2) For procedures, refer to the Shop Manual. Go to Step2
	Step2	Inspect or verify the following items. Repair or replace faulty items as necessary. If any other fault code has occurred, perform the diagnostics procedure for the fault code. Go to Step3

https://truckmanualshub.com/

Inspection procedure	Step3	Inspect or verify the following items. Repair or replace faulty items as necessary. If one of diagnosis codes associated with SAM ECU is generated, make a system diagnosis according to the diagnosis code. Go to Step4
	Step4	Inspection procedure Turn the starter switch in OFF. Remove the connector of A4 (Combustion engine Control unit). Remove the connector of B32 (Temperature sensor “SCR catalytic converter” 2). Check the circuit across A4.X2.94/55 and B32.2/1 for open or short circuit. Check the circuit across A4.X2.94/9 and B32.2/2 for open or short circuit. Make a visual check on each connector. Is any abnormality recognized? No: Go to Step5 Yes: Go to Step10
	Step5	Inspection procedure Turn the starter switch in OFF. Replace component “B32 (Temperature sensor “SCR catalytic converter” 2)”. Reinstall all the removed connectors. Turn the starter switch in ON. Go to Step6
	Step6	Inspection procedure Turn the starter switch in OFF. Reinstall all the removed connectors. Erase fault memory and perform a test drive. Check if this diagnosis code has occurred. Are current fault codes present? No: Go to Step9 Yes: Go to Step7
	Step7	Inspect or verify the following items. Repair or replace faulty items as necessary. Incorrect assembly of B28 (Temperature sensor “SCR catalytic converter” 1), B32 (Temperature sensor “SCR catalytic converter” 2) For procedures, refer to the Shop Manual. Go to Step8
	Step8	Inspection procedure Perform the operation start and replace A4 (Combustion engine Control unit). Go to Step9
	Step9	Inspection completed
	Step10	Inspection procedure Turn the starter switch in OFF. Remove the connector of A4 (Combustion engine Control unit). Remove the connector of X42 (Intermediate connector). Check the circuit across A4.X2.94/55 and X42.8/8 for open or short circuit. Check the circuit across A4.X2.94/9 and X42.8/7 for open or short circuit. Make a visual check on each connector. Is any abnormality recognized? No: Go to Step11 Yes: Go to Step12
	Step11	Inspection procedure Repair or replace the harness across B32 (Temperature sensor “SCR catalytic converter” 2) and X42 (Intermediate connector). Reinstall all the removed connectors. Erase fault memory and perform a test drive. Check if this diagnosis code has occurred. Are current fault codes present? No: Go to Step9 Yes: Go to Step5

https://truckmanualshub.com/

Inspection procedure	Step12	Inspection procedure Repair or replace the harness across A4 (Combustion engine Control unit) and X42 (Intermediate connector). Reinstall all the removed connectors. Erase fault memory and perform a test drive. Check if this diagnosis code has occurred. Are current fault codes present? No: Go to Step9 Yes: Go to Step5

520352-0: Corrected energizing time of Zero Fuelling Calibration for injector 1 TOO HIGH

Generation condition	[Test Condition] • Zero fuel calibration not inhibited by FId_ZFCClbActv or ZFCPCLClbActv due to other failures • Intake air temperature > -8.04°C {17.53°F} • Fuel temperature between -0.04°C {31.93°F} and 79.96°C {175.93°F}. • Engine temperature > 62.96°C {145.33°F} • System Voltage > 10.00V • Air conditioner: pressure < 2MPa {290psi, 20kgf/cm^2} • Accelerator Pedal Position < 0.01% • Clutch not pressed • System in overrun, but not longer than a time, which is dependant on intake air temperature (from 0.00ms at -8.04°C {17.53°F} over 10000.00ms at 9.96°C {49.93°F} and 25000.00ms at 39.96°C {103.93°F} to 25000.00ms at 106.86°C {224.35°F}), but longer than 0.00ms. • Engine speed between (1000.00rpm - 30.00rpm) and (2000.00rpm + 30.00rpm) • Vehicle speed > threshold depending on fuel pressure set point: • At set point 0 35MPa {5080psi, 355kgf/cm^2} > 0km/h {0mph} • At set point 0 60MPa {8700psi, 610kgf/cm^2} > 0km/h {0mph} • At set point 0 80MPa {11600psi, 815kgf/cm^2} > 0km/h {0mph} • At set point 0 100MPa {14500psi, 1020kgf/cm^2} > 0km/h {0mph} • At set point 0 130MPa {18850psi, 1330kgf/cm^2} > 0km/h {0mph} • At set point 0 160MPa {23200psi, 1630kgf/cm^2} > 0km/h {0mph} • Rail pressure must be reached since 300.00ms • If 1.00- learning cycles were executed successfully, a minimal distance > 1000.00km has to be driven, before next learning cycles starts (this time only for 5.00- learning cycles). No gear change occurring • The sensor wheel adaptation must be executed correctly
	[Fault Detection] • If the energising time of the corrected “zero quantity”, exceeds the maximum energising time in at least one of the calibration points for cylinder 1: • (382.00us-20.40us) at pressure set point 35MPa {5080psi, 355kgf/cm^2} • (301.20us-14.40us) at pressure set point 60MPa {8700psi, 610kgf/cm^2} • (272.40us-11.20us) at pressure set point 80MPa {11600psi, 815kgf/cm^2} • (248.00us-10.00us) at pressure set point 100MPa {14500psi, 1020kgf/cm^2} • (223.20us-9.20us) at pressure set point 130MPa {18850psi, 1330kgf/cm^2} • (208.00us-8.80us) at pressure set point 160MPa {23200psi, 1630kgf/cm^2}
	[Defect Debouncing] • Defect condition fulfilled continuously >1.00 ms
Fault healing	• If the energising time of the corrected “zero quantity” are all below maximum value for cylinder 1
System reaction	• None except FIDs
	• 1) FId / Inhibit OxiCat passive monitor • 2) FId / Inhibit DPF efficiency monitor • 3) FId / Interrupt DPF efficiency monitor • 4) FId / Inhibit monitor for DPF frequent regeneration • 5) FId / Inhibit monitor for incomplete regeneration of the DPF • 6) Fid / SCR Monitoring or DEF injection release not possible (according calibration of Release Masks)
Failure cause	• Clogged nozzles in the injector of cylinder 1, mechanical defect partially jamming the valve lift, implausible lambda signal
Failure repair	• Check injector of cylinder 1 for blocked nozzles and jammed valve needle, check lambda sensor for plausible signals, replace injector if necessary

https://truckmanualshub.com/

Inspection procedure	Step1	Inspect or verify the following items. Repair or replace faulty items as necessary. If any other fault code has occurred, perform the diagnostics procedure for the fault code. Go to step2
	Step2	Inspection procedure Turn the starter switch in OFF. Remove the connector of A4 (Combustion engine Control unit). Remove the connector of Y15 (Fuel injector 1). If corresponding fault codes are also present on other components, check the common power supply and common ground point “ for open circuit and short circuit. Check the circuit across Y15.2/2 and A4.X1.60/46 for open or short circuit. Make a visual check on each connector. Is any abnormality recognized? No: Go to step3 Yes: Go to step7
	Step3	Inspection procedure Turn the starter switch in OFF. Replace component “Y15 (Fuel injector 1)”. Reinstall all the removed connectors. Turn the starter switch in ON. Erase the fault code. Perform the learned value resetting procedure of Y15 (Fuel injector 1) which A4 (Combustion engine Control unit) learns. Perform coding of Y15 (Fuel injector 1) which A4 (Combustion engine Control unit) learns. Go to step4
	Step4	Inspection procedure Turn the starter switch in OFF. Reinstall all the removed connectors. Erase fault memory and perform a test drive. Check if this diagnosis code has occurred. Are current fault codes present? No: Go to step5 Yes: Go to step6
	Step5	Inspection completed
	Step6	Inspection procedure Perform the operation start and replace A4 (Combustion engine Control unit). Inspection completed
	Step7	Inspection procedure Repair or replace electrical lines. Reinstall all the removed connectors. Erase fault memory and perform a test drive. Check if this diagnosis code has occurred. Are current fault codes present? No: Go to step5 Yes: Go to step3

https://truckmanualshub.com/

520352-1: Corrected energizing time of Zero Fuelling Calibration for injector 1 TOO LOW

Generation condition		[Test Condition] • Zero fuel calibration not inhibited by FId_ZFCClbActv or ZFCPCLClbActv due to other failures • Intake air temperature > -8.04°C {17.53°F} • Fuel temperature between -0.04°C {31.93°F} and 79.96°C {175.93°F}. • Engine temperature > 62.96°C {145.33°F} • System Voltage > 10.00V • Air conditioner: pressure < 2MPa {290psi, 20kgf/cm^2} • Accelerator Pedal Position < 0.01% • Clutch not pressed • System in overrun, but not longer than a time, which is dependant on intake air temperature (from 0.00ms at -8.04°C {17.53°F} over 10000.00ms at 9.96°C {49.93°F} and 25000.00ms at 39.96°C {103.93°F} to 25000.00ms at 106.86°C {224.35°F}), but longer than 0.00ms. • Engine speed between (1000.00rpm - 30.00rpm) and (2000.00rpm + 30.00rpm) • Vehicle speed > threshold depending on fuel pressure set point: • At set point 0 35MPa {5080psi, 355kgf/cm^2} > 0km/h {0mph} • At set point 0 60MPa {8700psi, 610kgf/cm^2} > 0km/h {0mph} • At set point 0 80MPa {11600psi, 815kgf/cm^2} > 0km/h {0mph} • At set point 0 100MPa {14500psi, 1020kgf/cm^2} > 0km/h {0mph} • At set point 0 130MPa {18850psi, 1330kgf/cm^2} > 0km/h {0mph} • At set point 0 160MPa {23200psi, 1630kgf/cm^2} > 0km/h {0mph} • Rail pressure must be reached since 300.00ms • If 1.00- learning cycles were executed successfully, a minimal distance > 1000.00km has to be driven, before next learning cycles starts (this time only for 5.00- learning cycles). No gear change occurring • The sensor wheel adaptation must be executed correctly
		[Fault Detection] • If the energising time of the corrected “zero quantity”, is below the minimum energising time in at least one of the calibration points for cylinder 1: • (129.60us+20.40us) at pressure set point 35MPa {5080psi, 355kgf/cm^2} • (107.20us+14.40us) at pressure set point 60MPa {8700psi, 610kgf/cm^2} • (107.20us+11.20us) at pressure set point 80MPa {11600psi, 815kgf/cm^2} • (107.20us+10.00us) at pressure set point 100MPa {14500psi, 1020kgf/cm^2} • (107.20us+9.20us) at pressure set point 130MPa {18850psi, 1330kgf/cm^2} • (107.20us+8.80us) at pressure set point 160MPa {23200psi, 1630kgf/cm^2}
		[Defect Debouncing] • Defect condition fulfilled continuously >1.00 ms
Fault healing		• If the energising time of the corrected “zero quantity”, are all above minimum for value for cylinder 1
System reaction		• None except FIDs
		• 1) FId / Inhibit OxiCat passive monitor • 2) FId / Inhibit DPF efficiency monitor • 3) FId / Interrupt DPF efficiency monitor • 4) FId / Inhibit monitor for DPF frequent regeneration • 5) FId / Inhibit monitor for incomplete regeneration of the DPF • 6) Fid / SCR Monitoring or DEF injection release not possible (according calibration of Release Masks)
Failure cause		• Defective injector of cylinder 1, the injector could be jammed and cannot close entirely, implausible lambda signal
Failure repair		• Check injector of cylinder 1 for proper functioning, check lambda sensor for plausible signals, replace injector if necessary
Inspection procedure	Step1	Inspect or verify the following items. Repair or replace faulty items as necessary. If any other fault code has occurred, perform the diagnostics procedure for the fault code. Go to step2

https://truckmanualshub.com/

Inspection procedure	Step2	Inspection procedure Turn the starter switch in OFF. Remove the connector of A4 (Combustion engine Control unit). Remove the connector of Y15 (Fuel injector 1). If corresponding fault codes are also present on other components, check the common power supply and common ground point ‘‘ for open circuit and short circuit. Check the circuit across Y15.2/2 and A4.X1.60/46 for open or short circuit. Make a visual check on each connector. Is any abnormality recognized? No: Go to step3 Yes: Go to step7
	Step3	Inspection procedure Turn the starter switch in OFF. Replace component “Y15 (Fuel injector 1)”. Reinstall all the removed connectors. Turn the starter switch in ON. Erase the fault code. Perform the learned value resetting procedure of Y15 (Fuel injector 1) which A4 (Combustion engine Control unit) learns. Perform coding of Y15 (Fuel injector 1) which A4 (Combustion engine Control unit) learns. Go to step4
	Step4	Inspection procedure Turn the starter switch in OFF. Reinstall all the removed connectors. Erase fault memory and perform a test drive. Check if this diagnosis code has occurred. Are current fault codes present? No: Go to step5 Yes: Go to step6
	Step5	Inspection completed
	Step6	Inspection procedure Perform the operation start and replace A4 (Combustion engine Control unit). Inspection completed
	Step7	Inspection procedure Repair or replace electrical lines. Reinstall all the removed connectors. Erase fault memory and perform a test drive. Check if this diagnosis code has occurred. Are current fault codes present? No: Go to step5 Yes: Go to step3

https://truckmanualshub.com/

520353-0: Corrected energizing time of Zero Fuelling Calibration for injector 3 TOO HIGH

Generation condition		[Test Condition] • Zero fuel calibration not inhibited by FId_ZFCClbActv or ZFCPCLClbActv due to other failures • Intake air temperature > -8.04°C {17.53°F} • Fuel temperature between -0.04°C {31.93°F} and 79.96°C {175.93°F}. • Engine temperature > 62.96°C {145.33°F} • System Voltage > 10.00V • Air conditioner: pressure < 2MPa {290psi, 20kgf/cm^2} • Accelerator Pedal Position < 0.01% • Clutch not pressed • System in overrun, but not longer than a time, which is dependant on intake air temperature (from 0.00ms at -8.04°C {17.53°F} over 10000.00ms at 9.96°C {49.93°F} and 25000.00ms at 39.96°C {103.93°F} to 25000.00ms at 106.86°C {224.35°F}), but longer than 0.00ms. • Engine speed between (1000.00rpm - 30.00rpm) and (2000.00rpm + 30.00rpm) • Vehicle speed > threshold depending on fuel pressure set point: • At set point 0 35MPa {5080psi, 355kgf/cm^2} > 0km/h {0mph} • At set point 0 60MPa {8700psi, 610kgf/cm^2} > 0km/h {0mph} • At set point 0 80MPa {11600psi, 815kgf/cm^2} > 0km/h {0mph} • At set point 0 100MPa {14500psi, 1020kgf/cm^2} > 0km/h {0mph} • At set point 0 130MPa {18850psi, 1330kgf/cm^2} > 0km/h {0mph} • At set point 0 160MPa {23200psi, 1630kgf/cm^2} > 0km/h {0mph} • Rail pressure must be reached since 300.00ms • If 1.00- learning cycles were executed successfully, a minimal distance > 1000.00km has to be driven, before next learning cycles starts (this time only for 5.00- learning cycles). No gear change occurring • The sensor wheel adaptation must be executed correctly
		[Fault Detection] • If the energising time of the corrected “zero quantity”, exceeds the maximum energising time in at least one of the calibration points for cylinder 3: • (382.00us-20.40us) at pressure set point 35MPa {5080psi, 355kgf/cm^2} • (301.20us-14.40us) at pressure set point 60MPa {8700psi, 610kgf/cm^2} • (272.40us-11.20us) at pressure set point 80MPa {11600psi, 815kgf/cm^2} • (248.00us-10.00us) at pressure set point 100MPa {14500psi, 1020kgf/cm^2} • (223.20us-9.20us) at pressure set point 130MPa {18850psi, 1330kgf/cm^2} • (208.00us-8.80us) at pressure set point 160MPa {23200psi, 1630kgf/cm^2}
		[Defect Debouncing] • Defect condition fulfilled continuously >1.00 ms
Fault healing		• If the energising time of the corrected “zero quantity” are all below maximum value for cylinder 3
System reaction		• None except FIDs
		• 1) FId / Inhibit OxiCat passive monitor • 2) FId / Inhibit DPF efficiency monitor • 3) FId / Interrupt DPF efficiency monitor • 4) FId / Inhibit monitor for DPF frequent regeneration • 5) FId / Inhibit monitor for incomplete regeneration of the DPF • 6) Fid / SCR Monitoring or DEF injection release not possible (according calibration of Release Masks)
Failure cause		• Clogged nozzles in the injector of cylinder 3, mechanical defect partially jamming the valve lift, implausible lambda signal
Failure repair		• Check injector of cylinder 3 for blocked nozzles and jammed valve needle, check lambda sensor for plausible signals, replace injector if necessary
Inspection procedure	Step1	Inspect or verify the following items. Repair or replace faulty items as necessary. If any other fault code has occurred, perform the diagnostics procedure for the fault code. Go to step2

https://truckmanualshub.com/

Inspection procedure	Step2	Inspection procedure Turn the starter switch in OFF. Remove the connector of A4 (Combustion engine Control unit). Remove the connector of Y17 (Fuel injector 3). If corresponding fault codes are also present on other components, check the common power supply and common ground point ‘‘ for open circuit and short circuit. Check the circuit across Y17.2/2 and A4.X1.60/1 for open or short circuit. Make a visual check on each connector. Is any abnormality recognized? No: Go to step3 Yes: Go to step7
	Step3	Inspection procedure Turn the starter switch in OFF. Replace component “Y17 (Fuel injector 3)”. Reinstall all the removed connectors. Turn the starter switch in ON. Erase the fault code. Perform the learned value resetting procedure of Y17 (Fuel injector 3) which A4 (Combustion engine Control unit) learns. Perform coding of Y17 (Fuel injector 3) which A4 (Combustion engine Control unit) learns. Go to step4
	Step4	Inspection procedure Turn the starter switch in OFF. Reinstall all the removed connectors. Erase fault memory and perform a test drive. Check if this diagnosis code has occurred. Are current fault codes present? No: Go to step5 Yes: Go to step6
	Step5	Inspection completed
	Step6	Inspection procedure Perform the operation start and replace A4 (Combustion engine Control unit). Inspection completed
	Step7	Inspection procedure Repair or replace electrical lines. Reinstall all the removed connectors. Erase fault memory and perform a test drive. Check if this diagnosis code has occurred. Are current fault codes present? No: Go to step5 Yes: Go to step3

https://truckmanualshub.com/

520353-1: Corrected energizing time of Zero Fuelling Calibration for injector 3 TOO LOW

Generation condition		[Test Condition] • Zero fuel calibration not inhibited by FId_ZFCClbActv or ZFCPCLClbActv due to other failures • Intake air temperature > -8.04°C {17.53°F} • Fuel temperature between -0.04°C {31.93°F} and 79.96°C {175.93°F}. • Engine temperature > 62.96°C {145.33°F} • System Voltage > 10.00V • Air conditioner: pressure < 2MPa {290psi, 20kgf/cm^2} • Accelerator Pedal Position < 0.01% • Clutch not pressed • System in overrun, but not longer than a time, which is dependant on intake air temperature (from 0.00ms at -8.04°C {17.53°F} over 10000.00ms at 9.96°C {49.93°F} and 25000.00ms at 39.96°C {103.93°F} to 25000.00ms at 106.86°C {224.35°F}), but longer than 0.00ms. • Engine speed between (1000.00rpm - 30.00rpm) and (2000.00rpm + 30.00rpm) • Vehicle speed > threshold depending on fuel pressure set point: • At set point 0 35MPa {5080psi, 355kgf/cm^2} > 0km/h {0mph} • At set point 0 60MPa {8700psi, 610kgf/cm^2} > 0km/h {0mph} • At set point 0 80MPa {11600psi, 815kgf/cm^2} > 0km/h {0mph} • At set point 0 100MPa {14500psi, 1020kgf/cm^2} > 0km/h {0mph} • At set point 0 130MPa {18850psi, 1330kgf/cm^2} > 0km/h {0mph} • At set point 0 160MPa {23200psi, 1630kgf/cm^2} > 0km/h {0mph} • Rail pressure must be reached since 300.00ms • If 1.00- learning cycles were executed successfully, a minimal distance > 1000.00km has to be driven, before next learning cycles starts (this time only for 5.00- learning cycles). No gear change occurring • The sensor wheel adaptation must be executed correctly
		[Fault Detection] • If the energising time of the corrected “zero quantity”, is below the minimum energising time in at least one of the calibration points for cylinder 3: • (129.60us+20.40us) at pressure set point 35MPa {5080psi, 355kgf/cm^2} • (107.20us+14.40us) at pressure set point 60MPa {8700psi, 610kgf/cm^2} • (107.20us+11.20us) at pressure set point 80MPa {11600psi, 815kgf/cm^2} • (107.20us+10.00us) at pressure set point 100MPa {14500psi, 1020kgf/cm^2} • (107.20us+9.20us) at pressure set point 130MPa {18850psi, 1330kgf/cm^2} • (107.20us+8.80us) at pressure set point 160MPa {23200psi, 1630kgf/cm^2}
		[Defect Debouncing] • Defect condition fulfilled continuously >1.00 ms
Fault healing		• If the energising time of the corrected “zero quantity”, are all above minimum for value for cylinder 3
System reaction		• None except FIDs
		• 1) FId / Inhibit OxiCat passive monitor • 2) FId / Inhibit DPF efficiency monitor • 3) FId / Interrupt DPF efficiency monitor • 4) FId / Inhibit monitor for DPF frequent regeneration • 5) FId / Inhibit monitor for incomplete regeneration of the DPF • 6) Fid / SCR Monitoring or DEF injection release not possible (according calibration of Release Masks)
Failure cause		• Defective injector of cylinder 3, the injector could be jammed and cannot close entirely, implausible lambda signal
Failure repair		• Check injector of cylinder 3 for proper functioning, check lambda sensor for plausible signals, replace injector if necessary
Inspection procedure	Step1	Inspect or verify the following items. Repair or replace faulty items as necessary. If any other fault code has occurred, perform the diagnostics procedure for the fault code. Go to step2

https://truckmanualshub.com/

Inspection procedure	Step2	Inspection procedure Turn the starter switch in OFF. Remove the connector of A4 (Combustion engine Control unit). Remove the connector of Y17 (Fuel injector 3). If corresponding fault codes are also present on other components, check the common power supply and common ground point ‘‘ for open circuit and short circuit. Check the circuit across Y17.2/2 and A4.X1.60/1 for open or short circuit. Make a visual check on each connector. Is any abnormality recognized? No: Go to step3 Yes: Go to step7
	Step3	Inspection procedure Turn the starter switch in OFF. Replace component “Y17 (Fuel injector 3)”. Reinstall all the removed connectors. Turn the starter switch in ON. Erase the fault code. Perform the learned value resetting procedure of Y17 (Fuel injector 3) which A4 (Combustion engine Control unit) learns. Perform coding of Y17 (Fuel injector 3) which A4 (Combustion engine Control unit) learns. Go to step4
	Step4	Inspection procedure Turn the starter switch in OFF. Reinstall all the removed connectors. Erase fault memory and perform a test drive. Check if this diagnosis code has occurred. Are current fault codes present? No: Go to step5 Yes: Go to step6
	Step5	Inspection completed
	Step6	Inspection procedure Perform the operation start and replace A4 (Combustion engine Control unit). Inspection completed
	Step7	Inspection procedure Repair or replace electrical lines. Reinstall all the removed connectors. Erase fault memory and perform a test drive. Check if this diagnosis code has occurred. Are current fault codes present? No: Go to step5 Yes: Go to step3

https://truckmanualshub.com/

520354-0: Corrected energizing time of Zero Fuelling Calibration for injector 4 TOO HIGH

Generation condition		[Test Condition] • Zero fuel calibration not inhibited by FId_ZFCClbActv or ZFCPCLClbActv due to other failures • Intake air temperature > -8.04°C {17.53°F} • Fuel temperature between -0.04°C {31.93°F} and 79.96°C {175.93°F}. • Engine temperature > 62.96°C {145.33°F} • System Voltage > 10.00V • Air conditioner: pressure < 2MPa {290psi, 20kgf/cm^2} • Accelerator Pedal Position < 0.01% • Clutch not pressed • System in overrun, but not longer than a time, which is dependant on intake air temperature (from 0.00ms at -8.04°C {17.53°F} over 10000.00ms at 9.96°C {49.93°F} and 25000.00ms at 39.96°C {103.93°F} to 25000.00ms at 106.86°C {224.35°F}), but longer than 0.00ms. • Engine speed between (1000.00rpm - 30.00rpm) and (2000.00rpm + 30.00rpm) • Vehicle speed > threshold depending on fuel pressure set point: • At set point 0 35MPa {5080psi, 355kgf/cm^2} > 0km/h {0mph} • At set point 0 60MPa {8700psi, 610kgf/cm^2} > 0km/h {0mph} • At set point 0 80MPa {11600psi, 815kgf/cm^2} > 0km/h {0mph} • At set point 0 100MPa {14500psi, 1020kgf/cm^2} > 0km/h {0mph} • At set point 0 130MPa {18850psi, 1330kgf/cm^2} > 0km/h {0mph} • At set point 0 160MPa {23200psi, 1630kgf/cm^2} > 0km/h {0mph} • Rail pressure must be reached since 300.00ms • If 1.00- learning cycles were executed successfully, a minimal distance > 1000.00km has to be driven, before next learning cycles starts (this time only for 5.00- learning cycles). No gear change occurring • The sensor wheel adaptation must be executed correctly
		[Fault Detection] • If the energising time of the corrected “zero quantity”, exceeds the maximum energising time in at least one of the calibration points for cylinder 4: • (382.00us-20.40us) at pressure set point 35MPa {5080psi, 355kgf/cm^2} • (301.20us-14.40us) at pressure set point 60MPa {8700psi, 610kgf/cm^2} • (272.40us-11.20us) at pressure set point 80MPa {11600psi, 815kgf/cm^2} • (248.00us-10.00us) at pressure set point 100MPa {14500psi, 1020kgf/cm^2} • (223.20us-9.20us) at pressure set point 130MPa {18850psi, 1330kgf/cm^2} • (208.00us-8.80us) at pressure set point 160MPa {23200psi, 1630kgf/cm^2}
		[Defect Debouncing] • Defect condition fulfilled continuously >1.00 ms
Fault healing		• If the energising time of the corrected “zero quantity” are all below maximum value for cylinder 4
System reaction		• None except FIDs
		• 1) FId / Inhibit OxiCat passive monitor • 2) FId / Inhibit DPF efficiency monitor • 3) FId / Interrupt DPF efficiency monitor • 4) FId / Inhibit monitor for DPF frequent regeneration • 5) FId / Inhibit monitor for incomplete regeneration of the DPF • 6) Fid / SCR Monitoring or DEF injection release not possible (according calibration of Release Masks)
Failure cause		• Clogged nozzles in the injector of cylinder 4, mechanical defect partially jamming the valve lift, implausible lambda signal
Failure repair		• Check injector of cylinder 4 for blocked nozzles and jammed valve needle, check lambda sensor for plausible signals, replace injector if necessary
Inspection procedure	Step1	Inspect or verify the following items. Repair or replace faulty items as necessary. If any other fault code has occurred, perform the diagnostics procedure for the fault code. Go to step2

https://truckmanualshub.com/

Inspection procedure	Step2	Inspection procedure Turn the starter switch in OFF. Remove the connector of A4 (Combustion engine Control unit). Remove the connector of Y18 (Fuel injector 4). If corresponding fault codes are also present on other components, check the common power supply and common ground point ‘‘ for open circuit and short circuit. Check the circuit across Y18.2/2 and A4.X1.60/47 for open or short circuit. Make a visual check on each connector. Is any abnormality recognized? No: Go to step3 Yes: Go to step7
	Step3	Inspection procedure Turn the starter switch in OFF. Replace component “Y18 (Fuel injector 4)”. Reinstall all the removed connectors. Turn the starter switch in ON. Erase the fault code. Perform the learned value resetting procedure of Y18 (Fuel injector 4) which A4 (Combustion engine Control unit) learns. Perform coding of Y18 (Fuel injector 4) which A4 (Combustion engine Control unit) learns. Go to step4
	Step4	Inspection procedure Turn the starter switch in OFF. Reinstall all the removed connectors. Erase fault memory and perform a test drive. Check if this diagnosis code has occurred. Are current fault codes present? No: Go to step5 Yes: Go to step6
	Step5	Inspection completed
	Step6	Inspection procedure Perform the operation start and replace A4 (Combustion engine Control unit). Inspection completed
	Step7	Inspection procedure Repair or replace electrical lines. Reinstall all the removed connectors. Erase fault memory and perform a test drive. Check if this diagnosis code has occurred. Are current fault codes present? No: Go to step5 Yes: Go to step3

https://truckmanualshub.com/

520354-1: Corrected energizing time of Zero Fuelling Calibration for injector 4 TOO LOW

Generation condition		[Test Condition] • Zero fuel calibration not inhibited by FId_ZFCClbActv or ZFCPCLClbActv due to other failures • Intake air temperature > -8.04°C {17.53°F} • Fuel temperature between -0.04°C {31.93°F} and 79.96°C {175.93°F}. • Engine temperature > 62.96°C {145.33°F} • System Voltage > 10.00V • Air conditioner: pressure < 2MPa {290psi, 20kgf/cm^2} • Accelerator Pedal Position < 0.01% • Clutch not pressed • System in overrun, but not longer than a time, which is dependant on intake air temperature (from 0.00ms at -8.04°C {17.53°F} over 10000.00ms at 9.96°C {49.93°F} and 25000.00ms at 39.96°C {103.93°F} to 25000.00ms at 106.86°C {224.35°F}), but longer than 0.00ms. • Engine speed between (1000.00rpm - 30.00rpm) and (2000.00rpm + 30.00rpm) • Vehicle speed > threshold depending on fuel pressure set point: • At set point 0 35MPa {5080psi, 355kgf/cm^2} > 0km/h {0mph} • At set point 0 60MPa {8700psi, 610kgf/cm^2} > 0km/h {0mph} • At set point 0 80MPa {11600psi, 815kgf/cm^2} > 0km/h {0mph} • At set point 0 100MPa {14500psi, 1020kgf/cm^2} > 0km/h {0mph} • At set point 0 130MPa {18850psi, 1330kgf/cm^2} > 0km/h {0mph} • At set point 0 160MPa {23200psi, 1630kgf/cm^2} > 0km/h {0mph} • Rail pressure must be reached since 300.00ms • If 1.00- learning cycles were executed successfully, a minimal distance > 1000.00km has to be driven, before next learning cycles starts (this time only for 5.00- learning cycles). No gear change occurring • The sensor wheel adaptation must be executed correctly
		[Fault Detection] • If the energising time of the corrected “zero quantity”, is below the minimum energising time in at least one of the calibration points for cylinder 4: • (129.60us+20.40us) at pressure set point 35MPa {5080psi, 355kgf/cm^2} • (107.20us+14.40us) at pressure set point 60MPa {8700psi, 610kgf/cm^2} • (107.20us+11.20us) at pressure set point 80MPa {11600psi, 815kgf/cm^2} • (107.20us+10.00us) at pressure set point 100MPa {14500psi, 1020kgf/cm^2} • (107.20us+9.20us) at pressure set point 130MPa {18850psi, 1330kgf/cm^2} • (107.20us+8.80us) at pressure set point 160MPa {23200psi, 1630kgf/cm^2}
		[Defect Debouncing] • Defect condition fulfilled continuously >1.00 ms
Fault healing		• If the energising time of the corrected “zero quantity”, are all above minimum for value for cylinder 4
System reaction		• None except FIDs
		• 1) FId / Inhibit OxiCat passive monitor • 2) FId / Inhibit DPF efficiency monitor • 3) FId / Interrupt DPF efficiency monitor • 4) FId / Inhibit monitor for DPF frequent regeneration • 5) FId / Inhibit monitor for incomplete regeneration of the DPF • 6) Fid / SCR Monitoring or DEF injection release not possible (according calibration of Release Masks)
Failure cause		• Defective injector of cylinder 4, the injector could be jammed and cannot close entirely, implausible lambda signal
Failure repair		• Check injector of cylinder 4 for proper functioning, check lambda sensor for plausible signals, replace injector if necessary
Inspection procedure	Step1	Inspect or verify the following items. Repair or replace faulty items as necessary. If any other fault code has occurred, perform the diagnostics procedure for the fault code. Go to step2

https://truckmanualshub.com/

Inspection procedure	Step2	Inspection procedure Turn the starter switch in OFF. Remove the connector of A4 (Combustion engine Control unit). Remove the connector of Y18 (Fuel injector 4). If corresponding fault codes are also present on other components, check the common power supply and common ground point ‘‘ for open circuit and short circuit. Check the circuit across Y18.2/2 and A4.X1.60/47 for open or short circuit. Make a visual check on each connector. Is any abnormality recognized? No: Go to step3 Yes: Go to step7
	Step3	Inspection procedure Turn the starter switch in OFF. Replace component “Y18 (Fuel injector 4)”. Reinstall all the removed connectors. Turn the starter switch in ON. Erase the fault code. Perform the learned value resetting procedure of Y18 (Fuel injector 4) which A4 (Combustion engine Control unit) learns. Perform coding of Y18 (Fuel injector 4) which A4 (Combustion engine Control unit) learns. Go to step4
	Step4	Inspection procedure Turn the starter switch in OFF. Reinstall all the removed connectors. Erase fault memory and perform a test drive. Check if this diagnosis code has occurred. Are current fault codes present? No: Go to step5 Yes: Go to step6
	Step5	Inspection completed
	Step6	Inspection procedure Perform the operation start and replace A4 (Combustion engine Control unit). Inspection completed
	Step7	Inspection procedure Repair or replace electrical lines. Reinstall all the removed connectors. Erase fault memory and perform a test drive. Check if this diagnosis code has occurred. Are current fault codes present? No: Go to step5 Yes: Go to step3

https://truckmanualshub.com/

520355-0: Corrected energizing time of Zero Fuelling Calibration for injector 2 TOO HIGH

Generation condition		[Test Condition] • Zero fuel calibration not inhibited by FId_ZFCClbActv or ZFCPCLClbActv due to other failures • Intake air temperature > -8.04°C {17.53°F} • Fuel temperature between -0.04°C {31.93°F} and 79.96°C {175.93°F}. • Engine temperature > 62.96°C {145.33°F} • System Voltage > 10.00V • Air conditioner: pressure < 2MPa {290psi, 20kgf/cm^2} • Accelerator Pedal Position < 0.01% • Clutch not pressed • System in overrun, but not longer than a time, which is dependant on intake air temperature (from 0.00ms at -8.04°C {17.53°F} over 10000.00ms at 9.96°C {49.93°F} and 25000.00ms at 39.96°C {103.93°F} to 25000.00ms at 106.86°C {224.35°F}), but longer than 0.00ms. • Engine speed between (1000.00rpm - 30.00rpm) and (2000.00rpm + 30.00rpm) • Vehicle speed > threshold depending on fuel pressure set point: • At set point 0 35MPa {5080psi, 355kgf/cm^2} > 0km/h {0mph} • At set point 0 60MPa {8700psi, 610kgf/cm^2} > 0km/h {0mph} • At set point 0 80MPa {11600psi, 815kgf/cm^2} > 0km/h {0mph} • At set point 0 100MPa {14500psi, 1020kgf/cm^2} > 0km/h {0mph} • At set point 0 130MPa {18850psi, 1330kgf/cm^2} > 0km/h {0mph} • At set point 0 160MPa {23200psi, 1630kgf/cm^2} > 0km/h {0mph} • Rail pressure must be reached since 300.00ms • If 1.00- learning cycles were executed successfully, a minimal distance > 1000.00km has to be driven, before next learning cycles starts (this time only for 5.00- learning cycles). No gear change occurring • The sensor wheel adaptation must be executed correctly
		[Fault Detection] • If the energising time of the corrected “zero quantity”, exceeds the maximum energising time in at least one of the calibration points for cylinder 2: • (382.00us-20.40us) at pressure set point 35MPa {5080psi, 355kgf/cm^2} • (301.20us-14.40us) at pressure set point 60MPa {8700psi, 610kgf/cm^2} • (272.40us-11.20us) at pressure set point 80MPa {11600psi, 815kgf/cm^2} • (248.00us-10.00us) at pressure set point 100MPa {14500psi, 1020kgf/cm^2} • (223.20us-9.20us) at pressure set point 130MPa {18850psi, 1330kgf/cm^2} • (208.00us-8.80us) at pressure set point 160MPa {23200psi, 1630kgf/cm^2}
		[Defect Debouncing] • Defect condition fulfilled continuously >1.00 ms
Fault healing		• If the energising time of the corrected “zero quantity” are all below maximum value for cylinder 2
System reaction		• None except FIDs
		• 1) FId / Inhibit OxiCat passive monitor • 2) FId / Inhibit DPF efficiency monitor • 3) FId / Interrupt DPF efficiency monitor • 4) FId / Inhibit monitor for DPF frequent regeneration • 5) FId / Inhibit monitor for incomplete regeneration of the DPF • 6) Fid / SCR Monitoring or DEF injection release not possible (according calibration of Release Masks)
Failure cause		• Clogged nozzles in the injector of cylinder 2, mechanical defect partially jamming the valve lift, implausible lambda signal
Failure repair		• Check injector of cylinder 2 for blocked nozzles and jammed valve needle, check lambda sensor for plausible signals, replace injector if necessary
Inspection procedure	Step1	Inspect or verify the following items. Repair or replace faulty items as necessary. If any other fault code has occurred, perform the diagnostics procedure for the fault code. Go to step2

https://truckmanualshub.com/

Inspection procedure	Step2	Inspection procedure Turn the starter switch in OFF. Remove the connector of A4 (Combustion engine Control unit). Remove the connector of Y16 (Fuel injector 2). If corresponding fault codes are also present on other components, check the common power supply and common ground point ‘‘ for open circuit and short circuit. Check the circuit across Y16.2/2 and A4.X1.60/2 for open or short circuit. Make a visual check on each connector. Is any abnormality recognized? No: Go to step3 Yes: Go to step7
	Step3	Inspection procedure Turn the starter switch in OFF. Replace component “Y16 (Fuel injector 2)”. Reinstall all the removed connectors. Turn the starter switch in ON. Erase the fault code. Perform the learned value resetting procedure of Y16 (Fuel injector 2) which A4 (Combustion engine Control unit) learns. Perform coding of Y16 (Fuel injector 2) which A4 (Combustion engine Control unit) learns. Go to step4
	Step4	Inspection procedure Turn the starter switch in OFF. Reinstall all the removed connectors. Erase fault memory and perform a test drive. Check if this diagnosis code has occurred. Are current fault codes present? No: Go to step5 Yes: Go to step6
	Step5	Inspection completed
	Step6	Inspection procedure Perform the operation start and replace A4 (Combustion engine Control unit). Inspection completed
	Step7	Inspection procedure Repair or replace electrical lines. Reinstall all the removed connectors. Erase fault memory and perform a test drive. Check if this diagnosis code has occurred. Are current fault codes present? No: Go to step5 Yes: Go to step3

https://truckmanualshub.com/

520355-1: Corrected energizing time of Zero Fuelling Calibration for injector 2 TOO LOW

Generation condition		[Test Condition] • Zero fuel calibration not inhibited by FId_ZFCClbActv or ZFCPCLClbActv due to other failures • Intake air temperature > -8.04°C {17.53°F} • Fuel temperature between -0.04°C {31.93°F} and 79.96°C {175.93°F}. • Engine temperature > 62.96°C {145.33°F} • System Voltage > 10.00V • Air conditioner: pressure < 2MPa {290psi, 20kgf/cm^2} • Accelerator Pedal Position < 0.01% • Clutch not pressed • System in overrun, but not longer than a time, which is dependant on intake air temperature (from 0.00ms at -8.04°C {17.53°F} over 10000.00ms at 9.96°C {49.93°F} and 25000.00ms at 39.96°C {103.93°F} to 25000.00ms at 106.86°C {224.35°F}), but longer than 0.00ms. • Engine speed between (1000.00rpm - 30.00rpm) and (2000.00rpm + 30.00rpm) • Vehicle speed > threshold depending on fuel pressure set point: • At set point 0 35MPa {5080psi, 355kgf/cm^2} > 0km/h {0mph} • At set point 0 60MPa {8700psi, 610kgf/cm^2} > 0km/h {0mph} • At set point 0 80MPa {11600psi, 815kgf/cm^2} > 0km/h {0mph} • At set point 0 100MPa {14500psi, 1020kgf/cm^2} > 0km/h {0mph} • At set point 0 130MPa {18850psi, 1330kgf/cm^2} > 0km/h {0mph} • At set point 0 160MPa {23200psi, 1630kgf/cm^2} > 0km/h {0mph} • Rail pressure must be reached since 300.00ms • If 1.00- learning cycles were executed successfully, a minimal distance > 1000.00km has to be driven, before next learning cycles starts (this time only for 5.00- learning cycles). No gear change occurring • The sensor wheel adaptation must be executed correctly
		[Fault Detection] • If the energising time of the corrected “zero quantity”, is below the minimum energising time in at least one of the calibration points for cylinder 2: • (129.60us+20.40us) at pressure set point 35MPa {5080psi, 355kgf/cm^2} • (107.20us+14.40us) at pressure set point 60MPa {8700psi, 610kgf/cm^2} • (107.20us+11.20us) at pressure set point 80MPa {11600psi, 815kgf/cm^2} • (107.20us+10.00us) at pressure set point 100MPa {14500psi, 1020kgf/cm^2} • (107.20us+9.20us) at pressure set point 130MPa {18850psi, 1330kgf/cm^2} • (107.20us+8.80us) at pressure set point 160MPa {23200psi, 1630kgf/cm^2}
		[Defect Debouncing] • Defect condition fulfilled continuously >1.00 ms
Fault healing		• If the energising time of the corrected “zero quantity”, are all above minimum for value for cylinder 2
System reaction		• None except FIDs
		• 1) FId / Inhibit OxiCat passive monitor • 2) FId / Inhibit DPF efficiency monitor • 3) FId / Interrupt DPF efficiency monitor • 4) FId / Inhibit monitor for DPF frequent regeneration • 5) FId / Inhibit monitor for incomplete regeneration of the DPF • 6) Fid / SCR Monitoring or DEF injection release not possible (according calibration of Release Masks)
Failure cause		• Defective injector of cylinder 2, the injector could be jammed and cannot close entirely, implausible lambda signal
Failure repair		• Check injector of cylinder 2 for proper functioning, check lambda sensor for plausible signals, replace injector if necessary
Inspection procedure	Step1	Inspect or verify the following items. Repair or replace faulty items as necessary. If any other fault code has occurred, perform the diagnostics procedure for the fault code. Go to step2

https://truckmanualshub.com/

Inspection procedure	Step2	Inspection procedure Turn the starter switch in OFF. Remove the connector of A4 (Combustion engine Control unit). Remove the connector of Y16 (Fuel injector 2). If corresponding fault codes are also present on other components, check the common power supply and common ground point ‘‘ for open circuit and short circuit. Check the circuit across Y16.2/2 and A4.X1.60/2 for open or short circuit. Make a visual check on each connector. Is any abnormality recognized? No: Go to step3 Yes: Go to step7
	Step3	Inspection procedure Turn the starter switch in OFF. Replace component “Y16 (Fuel injector 2)”. Reinstall all the removed connectors. Turn the starter switch in ON. Erase the fault code. Perform the learned value resetting procedure of Y16 (Fuel injector 2) which A4 (Combustion engine Control unit) learns. Perform coding of Y16 (Fuel injector 2) which A4 (Combustion engine Control unit) learns. Go to step4
	Step4	Inspection procedure Turn the starter switch in OFF. Reinstall all the removed connectors. Erase fault memory and perform a test drive. Check if this diagnosis code has occurred. Are current fault codes present? No: Go to step5 Yes: Go to step6
	Step5	Inspection completed
	Step6	Inspection procedure Perform the operation start and replace A4 (Combustion engine Control unit). Inspection completed
	Step7	Inspection procedure Repair or replace electrical lines. Reinstall all the removed connectors. Erase fault memory and perform a test drive. Check if this diagnosis code has occurred. Are current fault codes present? No: Go to step5 Yes: Go to step3

520357-0: A fault was detected during regeneration of the diesel particulate filter.The current value for the ‘Exhaust temperature upstream of diesel particulate filter’ component is too low.

Generation condition	[Test Condition] • Engine speed and load within a specified range (by calibration) for more than 0.00s. • Engine in “steady state condition, i.e. the variation of the exhaust temperature < 30.00K since 10.00s. • Regeneration and outer control loop active, i.e. the Adapted DPF upstream temperature in interval between 561.96°C {1043.53°F} and 699.96°C {1291.93°F} but at least 149.96°C {301.93°F} (to guarantee burning of fuel) for at least 1.50s resp. not longer than 0.00s outside this range.
	[Fault Detection] • If the controller is on maximum output and the Temperature after Oxicat is lower than the desired one by more than an engine speed and load dependant threshold, but at least > 0.00K.
	[Defect Debouncing] • Defect condition fulfilled continuously > 30000.0 ms
Fault healing	• No Healing possible (disabled by Data set)

https://truckmanualshub.com/

System reaction		• According FID (see FID's)
		• 1) FId / Inhibit OxiCat passive monitor
Failure cause		• Difficult ambient conditions resp vehicle use (demanded temperature can not reached due to ambient conditions) • Problems with temperature measurement after Oxicat (sensor defect or sensors before/after Oxicat interchanged) • Oxicat defective (does not burn fuel) • Problems with injection system (too low post injection quantity)
Failure repair		• Check Temperature sensors • Check Oxicat (execute service regeneration --> does tempa fter Oxicat increase with activated Post injection?) • Check injection system
Inspection procedure	Step1	Inspect or verify the following items. Repair or replace faulty items as necessary. If this diagnosis code has occurred during operation in an extremely low temperature environment, investigate the driving conditions at that time because it may have been temporary. Check the installation condition of B23 (Temperature sensor Exhaust system 1) and B24 (Temperature sensor 'Exhaust system' 2) If proper temperature can not be attained even after conducting DPF regeneration, faulty DPF is suspected. Repair or replace the DPF. If one of diagnosis codes associated with {0} is generated, make a system diagnosis according to the diagnosis code. For procedures, refer to the Shop Manual Go to Step2
	Step2	Inspection procedure Turn the starter switch in OFF. Remove the connector of A4 (Combustion engine Control unit). Check electrical line between pins A4.X2.94/12 and B24.2/1 for open circuit. Check electrical line between pins A4.X2.94/63 and B24.2/2 for open circuit. Check electrical line between pins A4.X2.94/12 and B24.2/1 for short circuit to positive. Check harness between A4 (Combustion engine Control unit) and B24 (Temperature sensor Exhaust system 2) for short-circuit to another line. Is any abnormality recognized? No: Go to Step3 Yes: Go to Step7
	Step3	Inspection procedure Turn the starter switch in OFF. Replace component "B24 (Temperature sensor Exhaust system 2)". Reinstall all the removed connectors. Turn the starter switch in ON. Go to Step4
	Step4	Inspection procedure Turn the starter switch in OFF. Reinstall all the removed connectors. Erase fault memory and perform a test drive. Check if this diagnosis code has occurred. Are current fault codes present? No: Go to Step5 Yes: Go to Step6
	Step5	Inspection completed
	Step6	Inspection procedure Perform the operation start and replace A4 (Combustion engine Control unit). Go to Step5
	Step7	Inspection procedure Repair or replace electrical lines. Reinstall all the removed connectors. Turn the starter switch in ON. Go to Step8

https://truckmanualshub.com/

Inspection procedure	Step8	Inspection procedure Turn the starter switch in OFF. Reinstall all the removed connectors. Erase fault memory and perform a test drive. Check if this diagnosis code has occurred. Are current fault codes present? No: Go to Step5 Yes: Go to Step3

520357-1: A fault was detected during regeneration of the diesel particulate filter.The current value of component 'Exhaust temperature upstream of diesel particulate filter' is too high.

Generation condition		[Test Condition] • Engine speed and load within a specified range (by calibration) for more than 0.00s. • Engine in "steady state condition, i.e. the variation of the exhaust temperature < 30.00K since 10.00s. • Regeneration and outer control loop active, i.e. the Adapted DPF upstream temperature in interval between 561.96°C {1043.53°F} and 699.96°C {1291.93°F} but at least 149.96°C {301.93°F} (to guarantee burning of fuel) for at least 1.50s resp. not longer than 0.00s outside this range.
		[Fault Detection] • If the controller is on minimum output and the Temperature after Oxicat is higher than desired by more than an engine speed and load dependant threshold, but at least > 0.00 °K.
		[Defect Debouncing] • Defect condition fulfilled continuously > 30000.0 ms
Fault healing		• No Healing possible (disabled by Data set)
System reaction		• According FID (see FID's)
		• 1) FId / Inhibit OxiCat passive monitor
Failure cause		• Problems with temperature measurement after Oxicat (sensor measures much too high temp) • Problems with injection system (too high post injection quantity)
Failure repair		• Check Temperature sensors • Check Oxicat (execute service regeneration --> does tempa fter Oxicat increase with activated Post injection?) • Check injection system
Inspection procedure	Step1	Inspect or verify the following items. Repair or replace faulty items as necessary. If proper temperature can not be attained even after conducting DPF regeneration, faulty DPF is suspected. Repair or replace the DPF. If one of diagnosis codes associated with {0} is generated, make a system diagnosis according to the diagnosis code. For procedures, refer to the Shop Manual. Go to Step2
	Step2	Inspection procedure Turn the starter switch in OFF. Remove the connector of A4 (Combustion engine Control unit). Check electrical line between pins A4.X2.94/12 and B24.2/1 for open circuit. Check electrical line between pins A4.X2.94/63 and B24.2/2 for open circuit. Check electrical line between pins A4.X2.94/12 and B24.2/1 for short circuit to positive. Check harness between A4 (Combustion engine Control unit) and B24 (Temperature sensor Exhaust system 2) for short-circuit to another line. Is any abnormality recognized? No: Go to Step3 Yes: Go to Step7
	Step3	Inspection procedure Turn the starter switch in OFF. Replace component "B24 (Temperature sensor Exhaust system 2)". Reinstall all the removed connectors. Turn the starter switch in ON. Go to Step4

https://truckmanualshub.com/

Inspection procedure	Step4	Inspection procedure Turn the starter switch in OFF. Reinstall all the removed connectors. Erase fault memory and perform a test drive. Check if this diagnosis code has occurred. Are current fault codes present? No: Go to Step5 Yes: Go to Step6
	Step5	Inspection completed
	Step6	Inspection procedure Perform the operation start and replace A4 (Combustion engine Control unit). Go to Step5
	Step7	Inspection procedure Repair or replace electrical lines. Reinstall all the removed connectors. Turn the starter switch in ON. Go to Step8
	Step8	Inspection procedure Turn the starter switch in OFF. Reinstall all the removed connectors. Erase fault memory and perform a test drive. Check if this diagnosis code has occurred. Are current fault codes present? No: Go to Step5 Yes: Go to Step3

520357-31: A fault was detected during regeneration of the diesel particulate filter.Regeneration takes too long.

Generation condition	[Test Condition] • Regeneration and outer control loop active, i.e. the Adapted DPF upstream temperature in interval between 561.96°C {1043.53°F} and 699.96°C {1291.93°F} but at least 149.96°C {301.93°F} (to guarantee burning of fuel) for at least 1.50s resp. not longer than 0.00s outside this range.
	[Fault Detection] • The control for increased temperature after Oxicat (i.e. Post injection) is active longer than an exhaust gas temperature dependant threshold (from 120.00s at -0.04°C {31.93°F} over 120.00s at 149.96°C {301.93°F} and 120.00s at 399.96°C {751.93°F} to 120.00s at 799.96°C {1471.93°F}), corrected by an engine speed and load dependant factor and frozen to the maximum value obtained during the monitoring period.
	[Defect Debouncing] • Defect condition fulfilled continuously > 1.00 events
Fault healing	• No Healing possible (disabled by Data set)
System reaction	• According FID (see FID's)
	• 1) FId / Inhibit OxiCat passive monitor
Failure cause	• Problems with temperature measurement after Oxicat (sensor defect or sensors before/after Oxicat interchanged) • Oxicat defective (does not burn fuel) • Problems with injection system (too low post injection quantity)
Failure repair	• Check Temperature sensors • Check Oxicat (execute service regeneration --> does tempa fter Oxicat increase with activated Post injection?) • Check injection system

https://truckmanualshub.com/

Inspection procedure	Step1	Inspect or verify the following items. Repair or replace faulty items as necessary. Check the installation condition of B23 (Temperature sensor Exhaust system 1) and B24 (Temperature sensor 'Exhaust system' 2) If proper temperature can not be attained even after conducting DPF regeneration, faulty DPF is suspected. Repair or replace the DPF. If one of diagnosis codes associated with Fuel injector is generated, make a system diagnosis according to the diagnosis code. For procedures, refer to the Shop Manual Go to Step2
	Step2	Inspection procedure Turn the starter switch in OFF. Remove the connector of A4 (Combustion engine Control unit). Check electrical line between pins A4.X2.94/12 and B24.2/1 for open circuit. Check electrical line between pins A4.X2.94/63 and B24.2/2 for open circuit. Check electrical line between pins A4.X2.94/12 and B24.2/1 for short circuit to positive. Check harness between A4 (Combustion engine Control unit) and B24 (Temperature sensor Exhaust system 2) for short-circuit to another line. Is any abnormality recognized? No: Go to Step3 Yes: Go to Step7
	Step3	Inspection procedure Turn the starter switch in OFF. Replace component "B24 (Temperature sensor Exhaust system 2)". Reinstall all the removed connectors. Turn the starter switch in ON. Go to Step4
	Step4	Inspection procedure Turn the starter switch in OFF. Reinstall all the removed connectors. Erase fault memory and perform a test drive. Check if this diagnosis code has occurred. Are current fault codes present? No: Go to Step5 Yes: Go to Step6
	Step5	Inspection completed
	Step6	Inspection procedure Perform the operation start and replace A4 (Combustion engine Control unit). Go to Step5
	Step7	Inspection procedure Repair or replace electrical lines. Reinstall all the removed connectors. Turn the starter switch in ON. Go to Step8
	Step8	Inspection procedure Turn the starter switch in OFF. Reinstall all the removed connectors. Erase fault memory and perform a test drive. Check if this diagnosis code has occurred. Are current fault codes present? No: Go to Step5 Yes: Go to Step3

520358-2: Exhaust Flap actuator has sticking valve or loose connection.

Generation condition	[Test Condition] • Monitoring is active while the battery voltage is over 10.00V and as long as the battery voltage is over 10.00V and 2.00s after this threshold has been exceeded • Continuously
	[Fault Detection] • Sticking counter exceeds 5.00-
	[Defect Debouncing] • Immediate

https://truckmanualshub.com/

Fault healing		• Exhaust flap not sticking for at least 800.00ms
System reaction		• None except FIDs
		• 1) FId / Inhibit Charged Air Cooler monitoring
Failure cause		• Electrical problem in exhaust flap (loose connection) or sticking flap
Failure repair		• Check exhaust flap, check electrical connection
Inspection procedure	Step1	Inspect or verify the following items. Repair or replace faulty items as necessary. If any other fault code has occurred, perform the diagnostics procedure for the fault code.
	Step2	Inspection procedure Turn the starter switch in OFF. Remove the connector of A4 (Combustion engine Control unit). Remove the connector of Y9 (Engine brake Solenoid valve). Remove the connector of A20 (SAM). Remove the connector of Ground. Check the circuit across A4.X1.60/34 and Y9.3/1 for open or short circuit. Check the circuit across A20.X10.14/2 and Y9.3/3 for open or short circuit. Check the circuit across Ground and Y9.3/2 for open or short circuit. Make a visual check on each connector. Is any abnormality recognized? No: Go to Step3 Yes: Go to Step
	Step3	Inspection procedure Turn the starter switch in OFF. Replace component “Y9 (Engine brake Solenoid valve)”. Reinstall all the removed connectors. Turn the starter switch in ON. Go to Step4
	Step4	Inspection procedure Turn the starter switch in OFF. Reinstall all the removed connectors. Erase fault memory and perform a test drive. Check if this diagnosis code has occurred. Are current fault codes present? No: Go to Step Yes: Go to Step5
	Step5	Inspection procedure Perform the operation start and replace A4 (Combustion engine Control unit). Go to Step6
	Step6	Inspection completed
	Step7	Inspection procedure Turn the starter switch in OFF. Remove the connector of A4 (Combustion engine Control unit). Remove the connector of X39. Remove the connector of A20 (SAM). Remove the connector of Ground. Check the circuit across Ground and X39.12/8 for open or short circuit. Check the circuit across A20.X10.14/2 and X39.12/7 for open or short circuit. Make a visual check on each connector. Is any abnormality recognized? No: Go to Step8 Yes: Go to Step9
	Step8	Inspection procedure Repair or replace the harness across Y9 (Engine brake Solenoid valve) and X39. Reinstall all the removed connectors. Erase fault memory and perform a test drive. Check if this diagnosis code has occurred. Are current fault codes present? No: Go to Step6 Yes: Go to Step3

https://truckmanualshub.com/

Inspection procedure	Step9	Inspection procedure Repair or replace the harness across A20 (SAM) and X39. Repair or replace the harness across Ground and X39. Reinstall all the removed connectors. Erase fault memory and perform a test drive. Check if this diagnosis code has occurred. Are current fault codes present? No: Go to Step6 Yes: Go to Step3

520359-2: Exhaust Flap actuator reports an error by a defined SCG duration of PWM wiring (X2 Error).

Generation condition		[Test Condition] • Monitoring is active while the battery voltage is over 10.00V and as long as the battery voltage is over 10.00V and 2.00s after this threshold has been exceeded • Continuously
		[Fault Detection] • The Exhaust Flap Power stage reports the failure class 3 “Flap closed blocked”: “Overtemperature” OR “Supply voltage out of range” or “Wrong PWM command” (SCG active for 600mse and inactive 400ms).
		[Defect Debouncing] • Defect condition exceeded cumulatively > 2.00 events • Failure is detected if active for 25% of events
Fault healing		• No Healing possible (disabled by Data set)
System reaction		• The Flap is actuated with 5.00%, i.e. the Exhaust brake does no more work. • Further reactions according FID (see FID’s)
		• 1) FId / Exhaust flap position (PWM) set to fix replacement value (ExhFlpLP_Cal.rPwrStgDis_C) • 2) FId / Particulate filter ((DPF) Regeneration inhibited • 3) FId / Service regeneration of Particulate filter ((DPF) inhibited (due to DPF failure) • 4) FId / Inhibit Charged Air Cooler monitoring
Failure cause		• Exhaust flap too hot (due to bad cooling or too high current due to electrical problem) • Supply wiring defect / or ECM Supply to Exhaust flap actuator defect • PWM wiring defect (sporadic interruptions lead to “wrong PWM” detection)
Failure repair		• Check exhaust flap actuator and wiring
Inspection procedure	Step1	Inspect or verify the following items. Repair or replace faulty items as necessary. If any other fault code has occurred, perform the diagnostics procedure for the fault code. Go to Step2
	Step2	Inspection procedure Turn the starter switch in OFF. Remove the connector of A4 (Combustion engine Control unit). Remove the connector of Y9 (Engine brake Solenoid valve). Remove the connector of A20 (SAM). Remove the connector of Ground. Check the circuit across A4.X1.60/34 and Y9.3/1 for open or short circuit. Check the circuit across A20.X10.14/2 and Y9.3/3 for open or short circuit. Check the circuit across Ground and Y9.3/2 for open or short circuit. Make a visual check on each connector. Is any abnormality recognized? No: Go to Step3 Yes: Go to Step7
	Step3	Inspection procedure Turn the starter switch in OFF. Replace component “Y9 (Engine brake Solenoid valve)”. Reinstall all the removed connectors. Turn the starter switch in ON. Go to Step4

https://truckmanualshub.com/

Inspection procedure	Step4	Inspection procedure Turn the starter switch in OFF. Reinstall all the removed connectors. Erase fault memory and perform a test drive. Check if this diagnosis code has occurred. Are current fault codes present? No: Go to Step6 Yes: Go to Step5
	Step5	Inspection procedure Perform the operation start and replace A4 (Combustion engine Control unit). Go to Step6
	Step6	Inspection completed
	Step7	Inspection procedure Turn the starter switch in OFF. Remove the connector of A4 (Combustion engine Control unit). Remove the connector of X39. Remove the connector of A20 (SAM). Remove the connector of Ground. Check the circuit across Ground and X39.12/8 for open or short circuit. Check the circuit across A20.X10.14/2 and X39.12/7 for open or short circuit. Make a visual check on each connector. Is any abnormality recognized? No: Go to Step8 Yes: Go to Step9
	Step8	Inspection procedure Repair or replace the harness across Y9 (Engine brake Solenoid valve) and X39. Reinstall all the removed connectors. Erase fault memory and perform a test drive. Check if this diagnosis code has occurred. Are current fault codes present? No: Go to Step6 Yes: Go to Step3
	Step9	Inspection procedure Repair or replace the harness across A20 (SAM) and X39. Repair or replace the harness across Ground and X39. Reinstall all the removed connectors. Erase fault memory and perform a test drive. Check if this diagnosis code has occurred. Are current fault codes present? No: Go to Step6 Yes: Go to Step3

520360-2: Exhaust Flap actuator reports an error by a defined SCG duration of PWM wiring (X Error).

Generation condition	[Test Condition] • Monitoring is active while the battery voltage is over 10.00V and as long as the battery voltage is over 10.00V and 2.00s after this threshold has been exceeded • Continuously
	[Fault Detection] • The Exhaust Flap actuator reports the failure class 1 “Flap blocked in closed position (SCG active for 200mse / inactive 800ms)
	[Defect Debouncing] • Defect condition exceeded cumulatively > 2.00 events • Failure is detected if active for 25% of events
Fault healing	• No Healing possible (disabled by Data set)

https://truckmanualshub.com/

System reaction		• The Flap is actuated with 5.00%, i.e. the Exhaust brake does no more work. • Further reactions according FID (see FID's)
		• 1) Fid / Exhaust flap position (PWM) set to fix replacement value (ExhFlpLP_Cal.rPwrStgDis_C) • 2) FId / Status of function identifier FId_EngDemTrqLimErr1 • 3) FId / Torque limitation 2 activated for power reduction • 4) FId / Engine speed Limitation 2 for HIgh/Low engine speed (HLS) control active • 5) FId / Particulate filter ((DPF) Regeneration inhibited • 6) FId / Service regeneration of Particulate filter ((DPF) inhibited (due to DPF failure) • 7) FId / EGR switched off • 8) Fid / SCR Monitoring or DEF injection release not possible (according calibration of Release Masks) • 9) FId / Inhibit Charged Air Cooler monitoring • 10) FId / Zero Fuel Calibration (ZFC) of injectors by Lambda Sensor signal disabled
Failure cause		• Exhaust flap mechanically blocked in closed position • Internal failure in Exhaust flap actuator.
Failure repair		• Check exhaust flap actuator and wiring
Inspection procedure	Step1	Inspect or verify the following items. Repair or replace faulty items as necessary. If any other fault code has occurred, perform the diagnostics procedure for the fault code.
	Step2	Inspection procedure Turn the starter switch in OFF. Remove the connector of A4 (Combustion engine Control unit). Remove the connector of Y9 (Engine brake Solenoid valve). Remove the connector of A20 (SAM). Remove the connector of Ground. Check the circuit across A4.X1.60/34 and Y9.3/1 for open or short circuit. Check the circuit across A20.X10.14/2 and Y9.3/3 for open or short circuit. Check the circuit across Ground and Y9.3/2 for open or short circuit. Make a visual check on each connector. Is any abnormality recognized? No: Go to Step3 Yes: Go to Step
	Step3	Inspection procedure Turn the starter switch in OFF. Replace component "Y9 (Engine brake Solenoid valve)". Reinstall all the removed connectors. Turn the starter switch in ON. Go to Step4
	Step4	Inspection procedure Turn the starter switch in OFF. Reinstall all the removed connectors. Erase fault memory and perform a test drive. Check if this diagnosis code has occurred. Are current fault codes present? No: Go to Step Yes: Go to Step5
	Step5	Inspection procedure Perform the operation start and replace A4 (Combustion engine Control unit). Go to Step6
	Step6	Inspection completed

https://truckmanualshub.com/

Inspection procedure	Step7	Inspection procedure Turn the starter switch in OFF. Remove the connector of A4 (Combustion engine Control unit). Remove the connector of X39. Remove the connector of A20 (SAM). Remove the connector of Ground. Check the circuit across Ground and X39.12/8 for open or short circuit. Check the circuit across A20.X10.14/2 and X39.12/7 for open or short circuit. Make a visual check on each connector. Is any abnormality recognized? No: Go to Step8 Yes: Go to Step9
	Step8	Inspection procedure Repair or replace the harness across Y9 (Engine brake Solenoid valve) and X39. Reinstall all the removed connectors. Erase fault memory and perform a test drive. Check if this diagnosis code has occurred. Are current fault codes present? No: Go to Step6 Yes: Go to Step3
	Step9	Inspection procedure Repair or replace the harness across A20 (SAM) and X39. Repair or replace the harness across Ground and X39. Reinstall all the removed connectors. Erase fault memory and perform a test drive. Check if this diagnosis code has occurred. Are current fault codes present? No: Go to Step6 Yes: Go to Step3

520361-2: Exhaust Flap actuator reports an error by a defined SCG duration of PWM wiring (Y2 Error).

Generation condition		[Test Condition] • Monitoring is active while the battery voltage is over 10.00V and as long as the battery voltage is over 10.00V and 2.00s after this threshold has been exceeded • Continuously
		[Fault Detection] • The Exhaust Flap Power stage reports the failure class 4, which means “EEPROM fault, i.e. a fatal error inside the electronic part of the Exhaust flap actuator. (SCG active 800ms and inactive 200ms)
		[Defect Debouncing] • Defect condition exceeded cumulatively > 2.00 events • Failure is detected if active for 25% of events
Fault healing		• No Healing possible (disabled by Data set)
System reaction		• The Flap is actuated with 5.00%, i.e. the Exhaust brake does no more work. • Further reactions according FID (see FID’s)
		• 1) FId / Exhaust flap position (PWM) set to fix replacement value (ExhFlpLP_Cal.rPwrStgDis_C) • 2) FId / Particulate filter ((DPF) Regeneration inhibited • 3) FId / Service regeneration of Particulate filter ((DPF) inhibited (due to DPF failure) • 4) FId / Inhibit Charged Air Cooler monitoring
Failure cause		• Fatal failure of the electronic part inside the Exhaust flap actuator.
Failure repair		• Check exhaust flap actuator and wiring
Inspection procedure	Step1	Inspect or verify the following items. Repair or replace faulty items as necessary. If any other fault code has occurred, perform the diagnostics procedure for the fault code. Go to Step2

https://truckmanualshub.com/

Inspection procedure	Step2	Inspection procedure Turn the starter switch in OFF. Remove the connector of A4 (Combustion engine Control unit). Remove the connector of Y9 (Engine brake Solenoid valve). Remove the connector of A20 (SAM). Remove the connector of Ground. Check the circuit across A4.X1.60/34 and Y9.3/1 for open or short circuit. Check the circuit across A20.X10.14/2 and Y9.3/3 for open or short circuit. Check the circuit across Ground and Y9.3/2 for open or short circuit. Make a visual check on each connector. Is any abnormality recognized? No: Go to Step3 Yes: Go to Step7
	Step3	Inspection procedure Turn the starter switch in OFF. Replace component “Y9 (Engine brake Solenoid valve)”. Reinstall all the removed connectors. Turn the starter switch in ON. Go to Step4
	Step4	Inspection procedure Turn the starter switch in OFF. Reinstall all the removed connectors. Erase fault memory and perform a test drive. Check if this diagnosis code has occurred. Are current fault codes present? No: Go to Step6 Yes: Go to Step5
	Step5	Inspection procedure Perform the operation start and replace A4 (Combustion engine Control unit). Go to Step6
	Step6	Inspection completed
	Step7	Inspection procedure Turn the starter switch in OFF. Remove the connector of A4 (Combustion engine Control unit). Remove the connector of X39. Remove the connector of A20 (SAM). Remove the connector of Ground. Check the circuit across Ground and X39.12/8 for open or short circuit. Check the circuit across A20.X10.14/2 and X39.12/7 for open or short circuit. Make a visual check on each connector. Is any abnormality recognized? No: Go to Step8 Yes: Go to Step9
	Step8	Inspection procedure Repair or replace the harness across Y9 (Engine brake Solenoid valve) and X39. Reinstall all the removed connectors. Erase fault memory and perform a test drive. Check if this diagnosis code has occurred. Are current fault codes present? No: Go to Step6 Yes: Go to Step3
	Step9	Inspection procedure Repair or replace the harness across A20 (SAM) and X39. Repair or replace the harness across Ground and X39. Reinstall all the removed connectors. Erase fault memory and perform a test drive. Check if this diagnosis code has occurred. Are current fault codes present? No: Go to Step6 Yes: Go to Step3

https://truckmanualshub.com/

520362-2: Exhaust Flap actuator reports an error by a defined SCG duration of PWM wiring (Y Error).

Generation condition		[Test Condition] • Monitoring is active while the battery voltage is over 10.00V and as long as the battery voltage is over 10.00V and 2.00s after this threshold has been exceeded • Continuously
		[Fault Detection] • The Exhaust Flap Power stage reports the Failure 2 which means: • Flap blocked in intermediate or opened position OR • Over current detected • Sensor fault detected • (SCG active for 400mse / inactive 600ms)
		[Defect Debouncing] • Defect condition exceeded cumulatively > 10.00 events • Failure is detected if active for 25% of events
Fault healing		• No Healing possible (disabled by Data set)
System reaction		• The Flap is actuated with 5.00%, i.e. the Exhaust brake does no more work. • Further reactions according FID (see FID's)
		• 1) FId / Exhaust flap position (PWM) set to fix replacement value (ExhFlpLP_Cal.rPwrStgDis_C) • 2) FId / Particulate filter ((DPF) Regeneration inhibited • 3) FId / Service regeneration of Particulate filter ((DPF) inhibited (due to DPF failure) • 4) FId / Inhibit Charged Air Cooler monitoring
Failure cause		• Exhaust flap mechanically blocked or high movement resistance • Internal failure in Exhaust flap actuator.
Failure repair		• Check exhaust flap actuator
Inspection procedure	Step1	Inspect or verify the following items. Repair or replace faulty items as necessary. If any other fault code has occurred, perform the diagnostics procedure for the fault code.
	Step2	Inspection procedure Turn the starter switch in OFF. Remove the connector of A4 (Combustion engine Control unit). Remove the connector of Y9 (Engine brake Solenoid valve). Remove the connector of A20 (SAM). Remove the connector of Ground. Check the circuit across A4.X1.60/34 and Y9.3/1 for open or short circuit. Check the circuit across A20.X10.14/2 and Y9.3/3 for open or short circuit. Check the circuit across Ground and Y9.3/2 for open or short circuit. Make a visual check on each connector. Is any abnormality recognized? No: Go to Step3 Yes: Go to Step
	Step3	Inspection procedure Turn the starter switch in OFF. Replace component "Y9 (Engine brake Solenoid valve)". Reinstall all the removed connectors. Turn the starter switch in ON. Go to Step4
	Step4	Inspection procedure Turn the starter switch in OFF. Reinstall all the removed connectors. Erase fault memory and perform a test drive. Check if this diagnosis code has occurred. Are current fault codes present? No: Go to Step Yes: Go to Step5
	Step5	Inspection procedure Perform the operation start and replace A4 (Combustion engine Control unit). Go to Step6
	Step6	Inspection completed

https://truckmanualshub.com/

Inspection procedure	Step7	Inspection procedure Turn the starter switch in OFF. Remove the connector of A4 (Combustion engine Control unit). Remove the connector of X39. Remove the connector of A20 (SAM). Remove the connector of Ground. Check the circuit across Ground and X39.12/8 for open or short circuit. Check the circuit across A20.X10.14/2 and X39.12/7 for open or short circuit. Make a visual check on each connector. Is any abnormality recognized? No: Go to Step8 Yes: Go to Step9
	Step8	Inspection procedure Repair or replace the harness across Y9 (Engine brake Solenoid valve) and X39. Reinstall all the removed connectors. Erase fault memory and perform a test drive. Check if this diagnosis code has occurred. Are current fault codes present? No: Go to Step6 Yes: Go to Step3
	Step9	Inspection procedure Repair or replace the harness across A20 (SAM) and X39. Repair or replace the harness across Ground and X39. Reinstall all the removed connectors. Erase fault memory and perform a test drive. Check if this diagnosis code has occurred. Are current fault codes present? No: Go to Step6 Yes: Go to Step3

520364-2: More than one exhaust temperature sensors are defect.

Generation condition	[Test Condition] • once in a driving cycle if following conditions are true: • monitoring not disabled by FID_ExhTMonPlausTemp due to another failure. • Not in high altitude (ambient pressure > 50kPa {7.3psi, 0.5kgf/cm^2} • The time since last engine stop > 5.00h (time usually taken via CAN from tachograph). • In case the timer or the CAN transmission is defective, the monitoring is inhibited (by FID_ExhTMonPlausTemp)
	[Fault Detection] • If more than 1 of the sensors compared to each other shows too high deviation. Following sensors are compared: Exhaust Temperature Sensor before Oxicat and Exhaust Temperature Sensor after Oxicat (if available) and Exhaust Temperature Sensor before DPF (if available) and Exhaust Temperature Sensor after DPF (if available) and Exhaust Temperature Sensor after DPF (if available) and Exhaust Temperature Sensor after DPF (if available)
	[Defect Debouncing] • Defect condition exceeded cumulatively > 1000.00ms • Failure is detected if active for 50% of the time
Fault healing	• Healing only at next driving cycle possible, if test conditions fulfilled. Healing if all temperatures similar OR a clear identification of a defective sensor possible (in this case a dedicated failure path stored)
System reaction	• Only according FID (see FID)
	• 1) FId / Inhibit OxiCat passive monitor • 2) FId / Monitoring of particulate filter (DPF) by comparing the calculated flow resistance with measured pressure drop disabled • 3) FId / Monitoring for the destroyed particle filter (DPF) by minimal flow resistance disabled • 4) FId / Inhibit DPF efficiency monitor • 5) FId / Interrupt DPF efficiency monitor • 6) FId / Inhibit monitor for DPF frequent regeneration • 7) FId / Inhibit monitor for incomplete regeneration of the DPF • 8) Fid / SCR Monitoring or DEF injection release not possible (according calibration of Release Masks)

https://truckmanualshub.com/

Failure cause		• Several sensors have wrong measurement values. • Too fast change of ambient temperature (e.g. due to sun shining in the morning after cold night.) --> see ambient conditions
Failure repair		• Check with ambient conditions, which sensors show highest deviation form intake air temperature in AFS, Boost temperature and Coolant temperature. If Boost temperature and coolant temperature are similar but higher than the exhaust temperatures --> failure caused probably by “fast ambient temperature change” --> no action needed. • Else identify sensors which deviate most from the intake air temperature. • Note: Too fast ambient temperature change, e.g. vehicle (and dedicated temperature sensor) exposed to sun shine after very cold night, or if the sensor is in a “warm air stream” (e.g. by additional engines like a cooling compressor for a cold compartment which runs also during vehicle stand still, or an external source like a “exhaust stream” of a building climatisation) can cause this failure, if the ambient of this sensor is not equal to the “normal” ambient! --> in this case no action needed!
Inspection procedure	Step1	Inspection procedure Inspect the suspected factors mentioned above sequentially to locate faulty parts. Repair or replace the faulty part as necessary.

520379-0: Corrected value of injection quantity is too high.

Generation condition		[Test Condition] • Continuously monitoring
		[Fault Detection] • Error is detected when the total quantity correction minus the current value exceeds the limit defined in the map. • AND • The correction quantity from the learning map minus the current value exceeds the limit from the map.
		[Defect Debouncing] • Defect condition fulfilled continuously > 30000.0 ms
Fault healing		• Correction quantity in range
System reaction		• None except FIDs
		• 1) Fid / SCR Monitoring or DEF injection release not possible (according calibration of Release Masks) • 2) FId / Monitoring of particulate filter (DPF) by comparing the calculated flow resistance with measured pressure drop disabled • 3) FId / Inhibit DPF monitor • 4) FId / Inhibit Charged Air Cooler monitoring • 5) FId / Inhibit EGR cooler efficiency monitoring • 6) FId / Calculation of Turbocharger Compressor Temperature inhibited • 7) FId / Inhibit monitor for DPF frequent regeneration • 8) FId / Inhibit monitor for incomplete regeneration of the DPF
Failure cause		• Calculated lambda may be wrong: air mass meter defect or injectors defect. Measured lambda-value wrong, check lambda sensor.
Failure repair		• Check air mass meter, injectors and lambda sensor.
Inspection procedure	Step1	Inspect or verify the following items. Repair or replace faulty items as necessary. If one of diagnosis codes associated with Fuel injector is generated, make a system diagnosis according to the diagnosis code. If one of diagnosis codes associated with B18 (Air flow and intake air temperature sensor) is generated, make a system diagnosis according to the diagnosis code. If one of diagnosis codes associated with Y2 Valve is generated, make a system diagnosis according to the diagnosis code. Go to Step2
	Step2	Inspection procedure If one of diagnosis codes associated with A20 (SAM) is generated, make a system diagnosis according to the diagnosis code. Go to Step3

https://truckmanualshub.com/

Inspection procedure	Step3	Inspection procedure Turn the starter switch in OFF. Remove the connector of A4 (Combustion engine Control unit). Remove the connector of B29 (Oxygen sensor). Remove the connector of A20 (SAM). Check the circuit across B29.6/6 and A4.X2.94/78 for open or short circuit. Check the circuit across B29.6/1 and A4.X2.94/76 for open or short circuit. Check the circuit across B29.6/3 and A4.X2.94/51 for open or short circuit. Check the circuit across B29.6/2 and A4.X2.94/86 for open or short circuit. Check the circuit across B29.6/4 and A20.X10.14/2 for open or short circuit. Make a visual check on each connector. Is any abnormality recognized? No: Go to Step4 Yes: Go to Step8
	Step4	Inspection procedure Turn the starter switch in OFF. Replace component “B29 (Oxygen sensor)”. Reinstall all the removed connectors. Turn the starter switch in ON. Perform the learned value resetting procedure of B29 (Oxygen sensor) which A4 (Combustion engine Control unit) learns. Go to Step5
	Step5	Inspection procedure Turn the starter switch in OFF. Reinstall all the removed connectors. Erase fault memory and perform a test drive. Check if this diagnosis code has occurred. Are current fault codes present? No: Go to Step7 Yes: Go to Step6
	Step6	Inspection procedure Perform the operation start and replace A4 (Combustion engine Control unit). Go to Step7
	Step7	Inspection completed
	Step8	Inspection procedure Repair or replace electrical lines. Reinstall all the removed connectors. Erase fault memory and perform a test drive. Check if this diagnosis code has occurred. Are current fault codes present? No: Go to Step7 Yes: Go to Step4

520379-1: Corrected value of injection quantity is too low.

Generation condition	[Test Condition] • Continuously monitoring
	[Fault Detection] • Error is detected when the total quantity correction minus the current value falls below the limit defined in the map. • AND • The correction quantity from the learning map minus the current value falls below the limit from the map.
	[Defect Debouncing] • Defect condition fulfilled continuously > 30000.0 ms
Fault healing	• Correction quantity in range

https://truckmanualshub.com/

System reaction		• None except FIDs
		• 1) Fid / SCR Monitoring or DEF injection release not possible (according calibration of Release Masks) • 2) FId / Monitoring of particulate filter (DPF) by comparing the calculated flow resistance with measured pressure drop disabled • 3) FId / Inhibit DPF monitor • 4) FId / Inhibit Charged Air Cooler monitoring • 5) FId / Inhibit EGR cooler efficiency monitoring • 6) FId / Calculation of Turbocharger Compressor Temperature inhibited • 7) FId / Inhibit monitor for DPF frequent regeneration • 8) FId / Inhibit monitor for incomplete regeneration of the DPF
Failure cause		• Calculated lambda may be wrong: air mass meter defect or injectors defect. Measured lambda-value wrong, check lambda sensor.
Failure repair		• Check air mass meter, injectors and lambda sensor.
Inspection procedure	Step1	Inspect or verify the following items. Repair or replace faulty items as necessary. If one of diagnosis codes associated with Fuel injector is generated, make a system diagnosis according to the diagnosis code. If one of diagnosis codes associated with B18 (Air flow and intake air temperature sensor) is generated, make a system diagnosis according to the diagnosis code. If one of diagnosis codes associated with Y2 Valve is generated, make a system diagnosis according to the diagnosis code. Go to Step2
	Step2	Inspection procedure If one of diagnosis codes associated with A20 (SAM) is generated, make a system diagnosis according to the diagnosis code. Go to Step3
	Step3	Inspection procedure Turn the starter switch in OFF. Remove the connector of A4 (Combustion engine Control unit). Remove the connector of B29 (Oxygen sensor). Remove the connector of A20 (SAM). Check the circuit across B29.6/6 and A4.X2.94/78 for open or short circuit. Check the circuit across B29.6/1 and A4.X2.94/76 for open or short circuit. Check the circuit across B29.6/3 and A4.X2.94/51 for open or short circuit. Check the circuit across B29.6/2 and A4.X2.94/86 for open or short circuit. Check the circuit across B29.6/4 and A20.X10.14/2 for open or short circuit. Make a visual check on each connector. Is any abnormality recognized? No: Go to Step4 Yes: Go to Step8
	Step4	Inspection procedure Turn the starter switch in OFF. Replace component “B29 (Oxygen sensor)”. Reinstall all the removed connectors. Turn the starter switch in ON. Perform the learned value resetting procedure of B29 (Oxygen sensor) which A4 (Combustion engine Control unit) learns. Go to Step5
	Step5	Inspection procedure Turn the starter switch in OFF. Reinstall all the removed connectors. Erase fault memory and perform a test drive. Check if this diagnosis code has occurred. Are current fault codes present? No: Go to Step7 Yes: Go to Step6
	Step6	Inspection procedure Perform the operation start and replace A4 (Combustion engine Control unit). Go to Step7
	Step7	Inspection completed

https://truckmanualshub.com/

Inspection procedure	Step8	Inspection procedure Repair or replace electrical lines. Reinstall all the removed connectors. Erase fault memory and perform a test drive. Check if this diagnosis code has occurred. Are current fault codes present? No: Go to Step7 Yes: Go to Step4

520380-12: Component '10271-494' is faulty.

Generation condition		[Test Condition] • Monitoring is active 2.00s after ECU initialization while engine isn't running yet, while the engine isn't cranking, 2.00s after engine startup, while the battery voltage is over 10.00V, as long as the battery voltage is over 10.00V and 2.00s after this threshold has been exceeded, if none of the CAN controllers is in bus-off state, 2.00s after last CAN controller is no more in bus-off state and if the ECU is not in afterrun • continuously
		[Fault Detection] • The NOx Sensor sends the message "Sensor temperature not OK" (Bits 0-1 = 00)
		[Defect Debouncing] • Defect condition fulfilled continuously >2000.0 ms
Fault healing		• The NOx Sensor sends the message "Sensor temperature OK" (Bits 0-1 = 01)
System reaction		• According FID (see FID's) • Usually the NOx signal is set to FFFF by the Sensor itself which causes a fix NOx concentration of 1.20-.
		• 1) Fid/ NOx Sensor not working correctly --> System monitoring with NOx sensor inhibited • 2) Fid/ SCR Monitoring or DEF injection release not possible (according calibration of Release Masks)
Failure cause		• Defective NOx sensor heating
Failure repair		• Check wiring harness • Check NOx Sensor
Inspection procedure	Step1	Inspect or verify the following items. Repair or replace faulty items as necessary. If one of diagnosis codes associated with A20 (SAM) is generated, make a system diagnosis according to the diagnosis code. Go to Step2
	Step2	Inspection procedure Turn the starter switch in OFF. Remove the connector of A4 (Combustion engine Control unit). Remove the connector of B29 (Oxygen sensor). Remove the connector of A20 (SAM). Check the circuit across A4.X2.94/62 and B31.5/4 for open or short circuit. Check the circuit across A4.X2.94/61 and B31.5/3 for open or short circuit. Check the circuit across A20.X10.14/2 and B31.5/1 for open or short circuit. Check the circuit across B31.5/2 and Ground for open or short circuit. Make a visual check on each connector. Is any abnormality recognized? No: Go to Step3 Yes: Go to Step7
	Step3	Inspection procedure Turn the starter switch in OFF. Replace component "B29 (Oxygen sensor)". Reinstall all the removed connectors. Turn the starter switch in ON. Go to Step4

https://truckmanualshub.com/

Inspection procedure	Step4	Inspection procedure Turn the starter switch in OFF. Reinstall all the removed connectors. Erase fault memory and perform a test drive. Check if this diagnosis code has occurred. Are current fault codes present? No: Go to Step5 Yes: Go to Step6
	Step5	Inspection completed
	Step6	Inspection procedure Perform the operation start and replace A4 (Combustion engine Control unit). Inspection completed
	Step7	Inspection procedure Turn the starter switch in OFF. Remove the connector of A4 (Combustion engine Control unit). Remove the connector of X42 (Intermediate connector). Remove the connector of A20 (SAM). Check the circuit across A4.X2.94/62 and X42.8/3 for open or short circuit. Check the circuit across A4.X2.94/61 and X42.8/2 for open or short circuit. Check the circuit across A20.X10.14/2 and X42.8/4 for open or short circuit. Check the circuit across X42.8/1 and Ground for open or short circuit. Make a visual check on each connector. Is any abnormality recognized? No: Go to Step8 Yes: Go to Step9
	Step8	Inspection procedure Repair or replace the harness across B29 (Oxygen sensor) and X42 (Intermediate connector). Reinstall all the removed connectors. Erase fault memory and perform a test drive. Check if this diagnosis code has occurred. Are current fault codes present? No: Go to Step5 Yes: Go to Step3
	Step9	Inspection procedure Repair or replace the harness across A4 (Combustion engine Control unit) and X42 (Intermediate connector). Reinstall all the removed connectors. Erase fault memory and perform a test drive. Check if this diagnosis code has occurred. Are current fault codes present? No: Go to Step5 Yes: Go to Step3

520380-31: NOx sensor: The power supply is faulty.

Generation condition	[Test Condition] • Monitoring is active 2.00s after ECU initialization while engine isn't running yet, while the engine isn't cranking, 2.00s after engine startup, while the battery voltage is over 10.00V, as long as the battery voltage is over 10.00V and 2.00s after this threshold has been exceeded, if none of the CAN controllers is in bus-off state, 2.00s after last CAN controller is no more in bus-off state and if the ECU is not in afterrun • continuously
	[Fault Detection] • The NOx Sensor sends the message "Supply not OK" (Bits 6-7 = 00)
	[Defect Debouncing] • Defect condition fulfilled continuously >20000.0 ms
Fault healing	• The NOx Sensor sends the message "Supply OK" (Bits 6-7 = 01)

https://truckmanualshub.com/

System reaction		• According FID (see FID's) • Usually the NOx signal is set to FFFF by the Sensor itself which causes a fix NOx concentration of 1.20-.
		• 1) Fid/ NOx Sensor not working correctly --> System monitoring with NOx sensor inhibited • 2) Fid/ SCR Monitoring or DEF injection release not possible (according calibration of Release Masks)
Failure cause		• Defective NOx sensor supply
Failure repair		• Check wiring harness • Check NOx Sensor
Inspection procedure	Step1	Inspect or verify the following items. Repair or replace faulty items as necessary. If one of diagnosis codes associated with A20 (SAM) is generated, make a system diagnosis according to the diagnosis code. Go to Step2
	Step2	Inspection procedure Turn the starter switch in OFF. Remove the connector of A4 (Combustion engine Control unit). Remove the connector of B29 (Oxygen sensor). Remove the connector of A20 (SAM). Check the circuit across A4.X2.94/62 and B31.5/4 for open or short circuit. Check the circuit across A4.X2.94/61 and B31.5/3 for open or short circuit. Check the circuit across A20.X10.14/2 and B31.5/1 for open or short circuit. Check the circuit across B31.5/2 and Ground for open or short circuit. Make a visual check on each connector. Is any abnormality recognized? No: Go to Step3 Yes: Go to Step7
	Step3	Inspection procedure Turn the starter switch in OFF. Replace component "B29 (Oxygen sensor)". Reinstall all the removed connectors. Turn the starter switch in ON. Go to Step4
	Step4	Inspection procedure Turn the starter switch in OFF. Reinstall all the removed connectors. Erase fault memory and perform a test drive. Check if this diagnosis code has occurred. Are current fault codes present? No: Go to Step5 Yes: Go to Step6
	Step5	Inspection completed
	Step6	Inspection procedure Perform the operation start and replace A4 (Combustion engine Control unit). Inspection completed
	Step7	Inspection procedure Turn the starter switch in OFF. Remove the connector of A4 (Combustion engine Control unit). Remove the connector of X42 (Intermediate connector). Remove the connector of A20 (SAM). Check the circuit across A4.X2.94/62 and X42.8/3 for open or short circuit. Check the circuit across A4.X2.94/61 and X42.8/2 for open or short circuit. Check the circuit across A20.X10.14/2 and X42.8/4 for open or short circuit. Check the circuit across X42.8/1 and Ground for open or short circuit. Make a visual check on each connector. Is any abnormality recognized? No: Go to Step8 Yes: Go to Step9

https://truckmanualshub.com/

Inspection procedure	Step8	Inspection procedure Repair or replace the harness across B29 (Oxygen sensor) and X42 (Intermediate connector). Reinstall all the removed connectors. Erase fault memory and perform a test drive. Check if this diagnosis code has occurred. Are current fault codes present? No: Go to Step5 Yes: Go to Step3
	Step9	Inspection procedure Repair or replace the harness across A4 (Combustion engine Control unit) and X42 (Intermediate connector). Reinstall all the removed connectors. Erase fault memory and perform a test drive. Check if this diagnosis code has occurred. Are current fault codes present? No: Go to Step5 Yes: Go to Step3

520382-31: Test internal resistance of component 'R9/1 (Cylinder 1 glow plug)'.: Implausible data

Generation condition		[Test Condition] • Monitoring is active while the battery voltage is over 10.00V • Only if glow plug are actuated and no other glow plug failure already detected.
		[Fault Detection] • Glow plug resistance GlwCtl_resGlpRstnEff_mp is not between thresholds determined by the map GlwCtl_resGlpRstnEffThresHi_MAP or GlwCtl_resGlpRstnEffThresLo_MAP. The input values of the map are the derivation of the glow plug current and the effective glow plug voltage.
		[Defect Debouncing] • Defect condition fulfilled continuously >3000.0 ms
Fault healing		• Glow plug resistance is in range
System reaction		• None
Failure cause		• Glow Plug resistance not matching specification: wiring problem, defective glow plug or glow plug installed not matching dataset application
Failure repair		• Check wiring, check glow plug
Inspection procedure	Step1	Inspect or verify the following items. Repair or replace faulty items as necessary. If any other fault code has occurred, perform the diagnostics procedure for the fault code. Go to step2
	Step2	Inspect or verify the following items. Repair or replace faulty items as necessary. If one of diagnosis codes associated with A20 (SAM) is generated, make a system diagnosis according to the diagnosis code. Go to step3

https://truckmanualshub.com/

Inspection procedure	Step3	Inspection procedure Turn the starter switch in OFF. Remove the connector of A4 (Combustion engine Control unit). Remove the connector of A31 (Preglow system Control unit). Remove the connector of Y11 (Glow plug 1). Remove the connector of Y12 (Glow plug 2). Remove the connector of Y13 (Glow plug 3). Remove the connector of Y14 (Glow plug 4). Remove the connector of HF5. Remove the connector of A20 (SAM). Remove the connector of Ground. Check the circuit across A4.X2.94/44 and A31.11/10 for open or short circuit. Check the circuit across A31.11/1 and Y11.1/1 for open or short circuit. Check the circuit across A31.11/2 and Y12.1/1 for open or short circuit. Check the circuit across A31.11/3 and Y13.1/1 for open or short circuit. Check the circuit across A31.11/4 and Y14.1/1 for open or short circuit. Check the circuit across A31.11/11 and HF5 for open or short circuit. Check the circuit across A31.11/6 and A20.X10.14/2 for open or short circuit. Check the circuit across A31.11/7 and Ground for open or short circuit. Make a visual check on each connector. Is any abnormality recognized? No: Go to step4 Yes: Go to step10
	Step4	Inspection procedure Reinstall all the removed connectors. Erase the fault code. Turn the starter switch in ON. Execute the control “Cold start”. Turn the starter switch in OFF. Replaced the damaged electrical parts Go to step5
	Step5	Inspection procedure Turn the starter switch in OFF. Reinstall all the removed connectors. Erase fault memory and perform a test drive. Check if this diagnosis code has occurred. Are current fault codes present? No: Go to step6 Yes: Go to step7
	Step6	Inspection completed
	Step7	Inspection procedure Turn the starter switch in OFF. Replace component “A31 (Preglow system Control unit)”. Reinstall all the removed connectors. Go to step8
	Step8	Inspection procedure Turn the starter switch in OFF. Reinstall all the removed connectors. Erase fault memory and perform a test drive. Check if this diagnosis code has occurred. Are current fault codes present? No: Go to step6 Yes: Go to step9
	Step9	Inspection procedure Perform the operation start and replace A4 (Combustion engine Control unit). Inspection completed
	Step10	Inspection procedure Repair or replace electrical lines. Reinstall all the removed connectors. Erase the fault code. Execute the control “Cold start”. Check if this diagnosis code has occurred. Are current fault codes present? No: Go to step6 Yes: Go to step4

https://truckmanualshub.com/

520383-31: Test internal resistance of component 'R9/3 (Cylinder 3 glow plug)'.: Implausible data

Generation condition		[Test Condition] • Monitoring is active while the battery voltage is over 10.00V • Only if glow plug are actuated and no other glow plug failure already detected.
		[Fault Detection] • Glow plug resistance GlwCtl_resGlpRstnEff_mp is not between thresholds determined by the map GlwCtl_resGlpRstnEffThresHi_MAP or GlwCtl_resGlpRstnEffThresLo_MAP. The input values of the map are the derivation of the glow plug current and the effective glow plug voltage.
		[Defect Debouncing] • Defect condition fulfilled continuously >3000.0 ms
Fault healing		• Glow plug resistance is in range
System reaction		• None
Failure cause		• Glow Plug resistance not matching specification: wiring problem, defective glow plug or glow plug installed not matching dataset application
Failure repair		• Check wiring, check glow plug
Inspection procedure	Step1	Inspect or verify the following items. Repair or replace faulty items as necessary. If any other fault code has occurred, perform the diagnostics procedure for the fault code. Go to step2
	Step2	Inspect or verify the following items. Repair or replace faulty items as necessary. If one of diagnosis codes associated with A20 (SAM) is generated, make a system diagnosis according to the diagnosis code. Go to step3
	Step3	Inspection procedure Turn the starter switch in OFF. Remove the connector of A4 (Combustion engine Control unit). Remove the connector of A31 (Preglow system Control unit). Remove the connector of Y11 (Glow plug 1). Remove the connector of Y12 (Glow plug 2). Remove the connector of Y13 (Glow plug 3). Remove the connector of Y14 (Glow plug 4). Remove the connector of HF5. Remove the connector of A20 (SAM). Remove the connector of Ground. Check the circuit across A4.X2.94/44 and A31.11/10 for open or short circuit. Check the circuit across A31.11/1 and Y11.1/1 for open or short circuit. Check the circuit across A31.11/2 and Y12.1/1 for open or short circuit. Check the circuit across A31.11/3 and Y13.1/1 for open or short circuit. Check the circuit across A31.11/4 and Y14.1/1 for open or short circuit. Check the circuit across A31.11/11 and HF5 for open or short circuit. Check the circuit across A31.11/6 and A20.X10.14/2 for open or short circuit. Check the circuit across A31.11/7 and Ground for open or short circuit. Make a visual check on each connector. Is any abnormality recognized? No: Go to step4 Yes: Go to step10
	Step4	Inspection procedure Reinstall all the removed connectors. Erase the fault code. Turn the starter switch in ON. Execute the control "Cold start". Turn the starter switch in OFF. Replaced the damaged electrical parts Go to step5

https://truckmanualshub.com/

Inspection procedure	Step5	Inspection procedure Turn the starter switch in OFF. Reinstall all the removed connectors. Erase fault memory and perform a test drive. Check if this diagnosis code has occurred. Are current fault codes present? No: Go to step6 Yes: Go to step7
	Step6	Inspection completed
	Step7	Inspection procedure Turn the starter switch in OFF. Replace component “A31 (Preglow system Control unit)”. Reinstall all the removed connectors. Go to step8
	Step8	Inspection procedure Turn the starter switch in OFF. Reinstall all the removed connectors. Erase fault memory and perform a test drive. Check if this diagnosis code has occurred. Are current fault codes present? No: Go to step6 Yes: Go to step9
	Step9	Inspection procedure Perform the operation start and replace A4 (Combustion engine Control unit). Inspection completed
	Step10	Inspection procedure Repair or replace electrical lines. Reinstall all the removed connectors. Erase the fault code. Execute the control “Cold start”. Check if this diagnosis code has occurred. Are current fault codes present? No: Go to step6 Yes: Go to step4

520384-31: Test internal resistance of component ‘R9/4 (Cylinder 4 glow plug)’.: Implausible data

Generation condition	[Test Condition] • Monitoring is active while the battery voltage is over 10.00V • Only if glow plug are actuated and no other glow plug failure already detected.
	[Fault Detection] • Glow plug resistance GlwCtl_resGlpRstnEff_mp is not between thresholds determined by the map GlwCtl_resGlpRstnEffThresHi_MAP or GlwCtl_resGlpRstnEffThresLo_MAP. The input values of the map are the derivation of the glow plug current and the effective glow plug voltage.
	[Defect Debouncing] • Defect condition fulfilled continuously >3000.0 ms
Fault healing	• Glow plug resistance is in range
System reaction	• None
Failure cause	• Glow Plug resistance not matching specification: wiring problem, defective glow plug or glow plug installed not matching dataset application
Failure repair	• Check wiring, check glow plug

https://truckmanualshub.com/

Inspection procedure	Step1	Inspect or verify the following items. Repair or replace faulty items as necessary. If any other fault code has occurred, perform the diagnostics procedure for the fault code. Go to step2
	Step2	Inspect or verify the following items. Repair or replace faulty items as necessary. If one of diagnosis codes associated with A20 (SAM) is generated, make a system diagnosis according to the diagnosis code. Go to step3
	Step3	Inspection procedure Turn the starter switch in OFF. Remove the connector of A4 (Combustion engine Control unit). Remove the connector of A31 (Preglow system Control unit). Remove the connector of Y11 (Glow plug 1). Remove the connector of Y12 (Glow plug 2). Remove the connector of Y13 (Glow plug 3). Remove the connector of Y14 (Glow plug 4). Remove the connector of HF5. Remove the connector of A20 (SAM). Remove the connector of Ground. Check the circuit across A4.X2.94/44 and A31.11/10 for open or short circuit. Check the circuit across A31.11/1 and Y11.1/1 for open or short circuit. Check the circuit across A31.11/2 and Y12.1/1 for open or short circuit. Check the circuit across A31.11/3 and Y13.1/1 for open or short circuit. Check the circuit across A31.11/4 and Y14.1/1 for open or short circuit. Check the circuit across A31.11/11 and HF5 for open or short circuit. Check the circuit across A31.11/6 and A20.X10.14/2 for open or short circuit. Check the circuit across A31.11/7 and Ground for open or short circuit. Make a visual check on each connector. Is any abnormality recognized? No: Go to step4 Yes: Go to step10
	Step4	Inspection procedure Reinstall all the removed connectors. Erase the fault code. Turn the starter switch in ON. Execute the control “Cold start”. Turn the starter switch in OFF. Replaced the damaged electrical parts Go to step5

https://truckmanualshub.com/

Inspection procedure	Step5	Inspection procedure Turn the starter switch in OFF. Reinstall all the removed connectors. Erase fault memory and perform a test drive. Check if this diagnosis code has occurred. Are current fault codes present? No: Go to step6 Yes: Go to step7
	Step6	Inspection completed
	Step7	Inspection procedure Turn the starter switch in OFF. Replace component “A31 (Preglow system Control unit)”. Reinstall all the removed connectors. Go to step8
	Step8	Inspection procedure Turn the starter switch in OFF. Reinstall all the removed connectors. Erase fault memory and perform a test drive. Check if this diagnosis code has occurred. Are current fault codes present? No: Go to step6 Yes: Go to step9
	Step9	Inspection procedure Perform the operation start and replace A4 (Combustion engine Control unit). Inspection completed
	Step10	Inspection procedure Repair or replace electrical lines. Reinstall all the removed connectors. Erase the fault code. Execute the control “Cold start”. Check if this diagnosis code has occurred. Are current fault codes present? No: Go to step6 Yes: Go to step4

520385-31: Test internal resistance of component ‘R9/2 (Cylinder 2 glow plug)’.: Implausible data

Generation condition		[Test Condition] • Monitoring is active while the battery voltage is over 10.00V • Only if glow plug are actuated and no other glow plug failure already detected.
		[Fault Detection] • Glow plug resistance GlwCtl_resGlpRstnEff_mp is not between thresholds determined by the map GlwCtl_resGlpRstnEffThresHi_MAP or GlwCtl_resGlpRstnEffThresLo_MAP. The input values of the map are the derivation of the glow plug current and the effective glow plug voltage.
		[Defect Debouncing] • Defect condition fulfilled continuously >3000.0 ms
Fault healing		• Glow plug resistance is in range
System reaction		• None
Failure cause		• Glow Plug resistance not matching specification: wiring problem, defective glow plug or glow plug installed not matching dataset application
Failure repair		• Check wiring, check glow plug
Inspection procedure	Step1	Inspect or verify the following items. Repair or replace faulty items as necessary. If any other fault code has occurred, perform the diagnostics procedure for the fault code. Go to step2
	Step2	Inspect or verify the following items. Repair or replace faulty items as necessary. If one of diagnosis codes associated with A20 (SAM) is generated, make a system diagnosis according to the diagnosis code. Go to step3

https://truckmanualshub.com/

Inspection procedure	Step3	Inspection procedure Turn the starter switch in OFF. Remove the connector of A4 (Combustion engine Control unit). Remove the connector of A31 (Preglow system Control unit). Remove the connector of Y11 (Glow plug 1). Remove the connector of Y12 (Glow plug 2). Remove the connector of Y13 (Glow plug 3). Remove the connector of Y14 (Glow plug 4). Remove the connector of HF5. Remove the connector of A20 (SAM). Remove the connector of Ground. Check the circuit across A4.X2.94/44 and A31.11/10 for open or short circuit. Check the circuit across A31.11/1 and Y11.1/1 for open or short circuit. Check the circuit across A31.11/2 and Y12.1/1 for open or short circuit. Check the circuit across A31.11/3 and Y13.1/1 for open or short circuit. Check the circuit across A31.11/4 and Y14.1/1 for open or short circuit. Check the circuit across A31.11/11 and HF5 for open or short circuit. Check the circuit across A31.11/6 and A20.X10.14/2 for open or short circuit. Check the circuit across A31.11/7 and Ground for open or short circuit. Make a visual check on each connector. Is any abnormality recognized? No: Go to step4 Yes: Go to step10
	Step4	Inspection procedure Reinstall all the removed connectors. Erase the fault code. Turn the starter switch in ON. Execute the control “Cold start”. Turn the starter switch in OFF. Replaced the damaged electrical parts Go to step5
	Step5	Inspection procedure Turn the starter switch in OFF. Reinstall all the removed connectors. Erase fault memory and perform a test drive. Check if this diagnosis code has occurred. Are current fault codes present? No: Go to step6 Yes: Go to step7
	Step6	Inspection completed
	Step7	Inspection procedure Turn the starter switch in OFF. Replace component “A31 (Preglow system Control unit)”. Reinstall all the removed connectors. Go to step8
	Step8	Inspection procedure Turn the starter switch in OFF. Reinstall all the removed connectors. Erase fault memory and perform a test drive. Check if this diagnosis code has occurred. Are current fault codes present? No: Go to step6 Yes: Go to step9
	Step9	Inspection procedure Perform the operation start and replace A4 (Combustion engine Control unit). Inspection completed
	Step10	Inspection procedure Repair or replace electrical lines. Reinstall all the removed connectors. Erase the fault code. Execute the control “Cold start”. Check if this diagnosis code has occurred. Are current fault codes present? No: Go to step6 Yes: Go to step4

https://truckmanualshub.com/

520386-9: Control unit GCU4 has LIN timeout error while receiving glow plug current information.

Generation condition		[Test Condition] • Monitoring is active while the battery voltage is over 10.00V • Continuously if not inhibited by LIN BUS Off failure
		[Fault Detection] • TimeOut of Receive Frame GLP_CURB1 (0x18) is determined (receive frame glow plug current)
		[Defect Debouncing] • Defect condition fulfilled continuously >2000.0 ms
Fault healing		• Time out no more detected
System reaction		• None
Failure cause		• LIN Disturbance, glowplug connection interruption, defective glow plug
Failure repair		• Check LIN connection, check glow plugs
Inspection procedure	Step1	Inspect or verify the following items. Repair or replace faulty items as necessary. If any other fault code has occurred, perform the diagnostics procedure for the fault code. Go to step2
	Step2	Inspect or verify the following items. Repair or replace faulty items as necessary. If one of diagnosis codes associated with A20 (SAM) is generated, make a system diagnosis according to the diagnosis code. Go to step3
	Step3	Inspection procedure Turn the starter switch in OFF. Remove the connector of A4 (Combustion engine Control unit). Remove the connector of A31 (Preglow system Control unit). Remove the connector of Y11 (Glow plug 1). Remove the connector of Y12 (Glow plug 2). Remove the connector of Y13 (Glow plug 3). Remove the connector of Y14 (Glow plug 4). Remove the connector of HF5. Remove the connector of A20 (SAM). Remove the connector of Ground. Check the circuit across A4.X2.94/44 and A31.11/10 for open or short circuit. Check the circuit across A31.11/1 and Y11.1/1 for open or short circuit. Check the circuit across A31.11/2 and Y12.1/1 for open or short circuit. Check the circuit across A31.11/3 and Y13.1/1 for open or short circuit. Check the circuit across A31.11/4 and Y14.1/1 for open or short circuit. Check the circuit across A31.11/11 and HF5 for open or short circuit. Check the circuit across A31.11/6 and A20.X10.14/2 for open or short circuit. Check the circuit across A31.11/7 and Ground for open or short circuit. Make a visual check on each connector. Is any abnormality recognized? No: Go to step4 Yes: Go to step10
	Step4	Inspection procedure Reinstall all the removed connectors. Erase the fault code. Turn the starter switch in ON. Execute the control “Cold start”. Turn the starter switch in OFF. Replaced the damaged electrical parts Go to step5
	Step5	Inspection procedure Turn the starter switch in OFF. Reinstall all the removed connectors. Erase fault memory and perform a test drive. Check if this diagnosis code has occurred. Are current fault codes present? No: Go to step6 Yes: Go to step7
	Step6	Inspection completed

https://truckmanualshub.com/

Inspection procedure	Step7	Inspection procedure Turn the starter switch in OFF. Replace component “A31 (Preglow system Control unit)”. Reinstall all the removed connectors. Go to step8
	Step8	Inspection procedure Turn the starter switch in OFF. Reinstall all the removed connectors. Erase fault memory and perform a test drive. Check if this diagnosis code has occurred. Are current fault codes present? No: Go to step6 Yes: Go to step9
	Step9	Inspection procedure Perform the operation start and replace A4 (Combustion engine Control unit). Inspection completed
	Step10	Inspection procedure Repair or replace electrical lines. Reinstall all the removed connectors. Erase the fault code. Execute the control “Cold start”. Check if this diagnosis code has occurred. Are current fault codes present? No: Go to step6 Yes: Go to step4

520387-9: Control unit GCU4 has LIN timeout error while receiving glow plug status information.

Generation condition		[Test Condition] • Monitoring is active while the battery voltage is over 10.00V • Continuously if not inhibited by LIN BUS Off failure
		[Fault Detection] • Timeout of Receive Frame GCU_DIAG (0x1D) is detected (glow plug diagnostic information)
		[Defect Debouncing] • Defect condition fulfilled continuously >2000.0 ms
Fault healing		• Time out no more detected
System reaction		• None
Failure cause		• LIN Disturbance, glowplug connection interruption, defective glow plug
Failure repair		• Check LIN connection, check glow plugs
Inspection procedure	Step1	Inspect or verify the following items. Repair or replace faulty items as necessary. If any other fault code has occurred, perform the diagnostics procedure for the fault code. Go to step2
	Step2	Inspect or verify the following items. Repair or replace faulty items as necessary. If one of diagnosis codes associated with A20 (SAM) is generated, make a system diagnosis according to the diagnosis code. Go to step3

https://truckmanualshub.com/

Inspection procedure	Step3	Inspection procedure Turn the starter switch in OFF. Remove the connector of A4 (Combustion engine Control unit). Remove the connector of A31 (Preglow system Control unit). Remove the connector of Y11 (Glow plug 1). Remove the connector of Y12 (Glow plug 2). Remove the connector of Y13 (Glow plug 3). Remove the connector of Y14 (Glow plug 4). Remove the connector of HF5. Remove the connector of A20 (SAM). Remove the connector of Ground. Check the circuit across A4.X2.94/44 and A31.11/10 for open or short circuit. Check the circuit across A31.11/1 and Y11.1/1 for open or short circuit. Check the circuit across A31.11/2 and Y12.1/1 for open or short circuit. Check the circuit across A31.11/3 and Y13.1/1 for open or short circuit. Check the circuit across A31.11/4 and Y14.1/1 for open or short circuit. Check the circuit across A31.11/11 and HF5 for open or short circuit. Check the circuit across A31.11/6 and A20.X10.14/2 for open or short circuit. Check the circuit across A31.11/7 and Ground for open or short circuit. Make a visual check on each connector. Is any abnormality recognized? No: Go to step4 Yes: Go to step10
	Step4	Inspection procedure Reinstall all the removed connectors. Erase the fault code. Turn the starter switch in ON. Execute the control “Cold start”. Turn the starter switch in OFF. Replaced the damaged electrical parts Go to step5
	Step5	Inspection procedure Turn the starter switch in OFF. Reinstall all the removed connectors. Erase fault memory and perform a test drive. Check if this diagnosis code has occurred. Are current fault codes present? No: Go to step6 Yes: Go to step7
	Step6	Inspection completed
	Step7	Inspection procedure Turn the starter switch in OFF. Replace component “A31 (Preglow system Control unit)”. Reinstall all the removed connectors. Go to step8
	Step8	Inspection procedure Turn the starter switch in OFF. Reinstall all the removed connectors. Erase fault memory and perform a test drive. Check if this diagnosis code has occurred. Are current fault codes present? No: Go to step6 Yes: Go to step9
	Step9	Inspection procedure Perform the operation start and replace A4 (Combustion engine Control unit). Inspection completed
	Step10	Inspection procedure Repair or replace electrical lines. Reinstall all the removed connectors. Erase the fault code. Execute the control “Cold start”. Check if this diagnosis code has occurred. Are current fault codes present? No: Go to step6 Yes: Go to step4

https://truckmanualshub.com/

520388-9: Control unit GCU4 has LIN timeout error while receiving glow plug current information and status information.

Generation condition		[Test Condition] • Monitoring is active while the battery voltage is over 10.00V • Continuously if not inhibited by LIN BUS Off failure
		[Fault Detection] • All receive frames selected via 3.00- timed out: Messages GLP_CURB1 and GCU_DIAG timed out
		[Defect Debouncing] • Defect condition fulfilled continuously >2000.0 ms
Fault healing		• At least one receive frame received
System reaction		• None except FIDs
		• 1) FId / Funktionsidentifier for Receive Frame GLP_CURB1 (x18) • 2) FId / Funktionsidentifier for Receive Frame GCU_DIAG (x1D)
Failure cause		• LIN Disturbance, glowplug connection interruption, defective glow plug
Failure repair		• Check LIN connection, check glow plugs
Inspection procedure	Step1	Inspect or verify the following items. Repair or replace faulty items as necessary. If any other fault code has occurred, perform the diagnostics procedure for the fault code. Go to step2
	Step2	Inspect or verify the following items. Repair or replace faulty items as necessary. If one of diagnosis codes associated with A20 (SAM) is generated, make a system diagnosis according to the diagnosis code. Go to step3
	Step3	Inspection procedure Turn the starter switch in OFF. Remove the connector of A4 (Combustion engine Control unit). Remove the connector of A31 (Preglow system Control unit). Remove the connector of Y11 (Glow plug 1). Remove the connector of Y12 (Glow plug 2). Remove the connector of Y13 (Glow plug 3). Remove the connector of Y14 (Glow plug 4). Remove the connector of HF5. Remove the connector of A20 (SAM). Remove the connector of Ground. Check the circuit across A4.X2.94/44 and A31.11/10 for open or short circuit. Check the circuit across A31.11/1 and Y11.1/1 for open or short circuit. Check the circuit across A31.11/2 and Y12.1/1 for open or short circuit. Check the circuit across A31.11/3 and Y13.1/1 for open or short circuit. Check the circuit across A31.11/4 and Y14.1/1 for open or short circuit. Check the circuit across A31.11/11 and HF5 for open or short circuit. Check the circuit across A31.11/6 and A20.X10.14/2 for open or short circuit. Check the circuit across A31.11/7 and Ground for open or short circuit. Make a visual check on each connector. Is any abnormality recognized? No: Go to step4 Yes: Go to step10
	Step4	Inspection procedure Reinstall all the removed connectors. Erase the fault code. Turn the starter switch in ON. Execute the control “Cold start”. Turn the starter switch in OFF. Replaced the damaged electrical parts Go to step5

https://truckmanualshub.com/

Inspection procedure	Step5	Inspection procedure Turn the starter switch in OFF. Reinstall all the removed connectors. Erase fault memory and perform a test drive. Check if this diagnosis code has occurred. Are current fault codes present? No: Go to step6 Yes: Go to step7
	Step6	Inspection completed
	Step7	Inspection procedure Turn the starter switch in OFF. Replace component “A31 (Preglow system Control unit)”. Reinstall all the removed connectors. Go to step8
	Step8	Inspection procedure Turn the starter switch in OFF. Reinstall all the removed connectors. Erase fault memory and perform a test drive. Check if this diagnosis code has occurred. Are current fault codes present? No: Go to step6 Yes: Go to step9
	Step9	Inspection procedure Perform the operation start and replace A4 (Combustion engine Control unit). Inspection completed
	Step10	Inspection procedure Repair or replace electrical lines. Reinstall all the removed connectors. Erase the fault code. Execute the control “Cold start”. Check if this diagnosis code has occurred. Are current fault codes present? No: Go to step6 Yes: Go to step4

520391-0: Component ‘Glow Plugs’ has detected an overvoltage.

Generation condition		[Test Condition] • Monitoring is active while the battery voltage is over 10.00V • If glow plugs are activated (LIN communication active only when glow plugs are active)
		[Fault Detection] • If Over voltage error is reported by LIN (Com_stOvrVltg = 1).
		[Defect Debouncing] • Defect condition exceeded cumulatively > 20.00 events • Failure is detected if active for 25% of events
Fault healing		• If Over voltage error is not reported
System reaction		• None
Failure cause		• Overvoltage at main power supply / GCU4
Failure repair		• Check GCU4 voltage at connector term.30 with running engine, if overvoltage is not present, failure can be deleted. Failure was probably caused by jump start (24V). • If voltage is abnormal, problem at alternator control. • Check alternator.
Inspection procedure	Step1	Inspect or verify the following items. Repair or replace faulty items as necessary. If any other fault code has occurred, perform the diagnostics procedure for the fault code. Go to Step2

https://truckmanualshub.com/

Inspection procedure	Step2	Inspect or verify the following items. Repair or replace faulty items as necessary. If one of diagnosis codes associated with A20 (SAM) is generated, make a system diagnosis according to the diagnosis code. Go to Step3
	Step3	Inspection procedure Turn the starter switch in OFF. Remove the connector of A4 (Combustion engine Control unit). Remove the connector of A31 (Preglow system Control unit). Remove the connector of Y11 (Glow plug 1). Remove the connector of Y12 (Glow plug 2). Remove the connector of Y13 (Glow plug 3). Remove the connector of Y14 (Glow plug 4). Remove the connector of HF5. Remove the connector of A20 (SAM). Remove the connector of Ground. Check the circuit across A4.X2.94/44 and A31.11/10 for open or short circuit. Check the circuit across A31.11/1 and Y11.1/1 for open or short circuit. Check the circuit across A31.11/2 and Y12.1/1 for open or short circuit. Check the circuit across A31.11/3 and Y13.1/1 for open or short circuit. Check the circuit across A31.11/4 and Y14.1/1 for open or short circuit. Check the circuit across A31.11/11 and HF5 for open or short circuit. Check the circuit across A31.11/6 and A20.X10.14/2 for open or short circuit. Check the circuit across A31.11/7 and Ground for open or short circuit. Make a visual check on each connector. Is any abnormality recognized? No: Go to Step4 Yes: Go to Step10
	Step4	Inspection procedure Reinstall all the removed connectors. Erase the fault code. Turn the starter switch in ON. Execute the control “Cold start”. Turn the starter switch in OFF. Replaced the damaged electrical parts Go to Step5
	Step5	Inspection procedure Turn the starter switch in OFF. Reinstall all the removed connectors. Erase fault memory and perform a test drive. Check if this diagnosis code has occurred. Are current fault codes present? No: Go to Step6 Yes: Go to Step7
	Step6	Inspection completed
	Step7	Inspection procedure Turn the starter switch in OFF. Replace component “A31 (Preglow system Control unit)”. Reinstall all the removed connectors. Go to Step8
	Step8	Inspection procedure Turn the starter switch in OFF. Reinstall all the removed connectors. Erase fault memory and perform a test drive. Check if this diagnosis code has occurred. Are current fault codes present? No: Go to Step6 Yes: Go to Step9
	Step9	Inspection procedure Perform the operation start and replace A4 (Combustion engine Control unit). Go to Step6

https://truckmanualshub.com/

Inspection procedure	Step10	Inspection procedure Repair or replace electrical lines. Reinstall all the removed connectors. Erase the fault code. Execute the control “Cold start”. Check if this diagnosis code has occurred. Are current fault codes present? No: Go to Step6 Yes: Go to Step4

520391-9: Engine control unit has LIN timeout error while receiving informations from control unit GCU4.

Generation condition		[Test Condition] • Monitoring is active while the battery voltage is over 10.00V • If glow plugs are activated (LIN communication active only when glow plugs are active)
		[Fault Detection] • If GlwPlg_stGCUComActv is true (LIN communication active) and no new frames received from GCU4
		[Defect Debouncing] • Defect condition exceeded cumulatively > 20.00 events • Failure is detected if active for 25% of events
Fault healing		• If frame is received from GCU4
System reaction		• None except FIDs
		• 1) Fid / Inhibit glowplug monitor
Failure cause		• LIN communication problem or glow plug failure
Failure repair		• Check LIN, check glow plugs
Inspection procedure	Step1	Inspect or verify the following items. Repair or replace faulty items as necessary. If any other fault code has occurred, perform the diagnostics procedure for the fault code. Go to step2
	Step2	Inspect or verify the following items. Repair or replace faulty items as necessary. If one of diagnosis codes associated with A20 (SAM) is generated, make a system diagnosis according to the diagnosis code. Go to step3
	Step3	Inspection procedure Turn the starter switch in OFF. Remove the connector of A4 (Combustion engine Control unit). Remove the connector of A31 (Preglow system Control unit). Remove the connector of Y11 (Glow plug 1). Remove the connector of Y12 (Glow plug 2). Remove the connector of Y13 (Glow plug 3). Remove the connector of Y14 (Glow plug 4). Remove the connector of HF5. Remove the connector of A20 (SAM). Remove the connector of Ground. Check the circuit across A4.X2.94/44 and A31.11/10 for open or short circuit. Check the circuit across A31.11/1 and Y11.1/1 for open or short circuit. Check the circuit across A31.11/2 and Y12.1/1 for open or short circuit. Check the circuit across A31.11/3 and Y13.1/1 for open or short circuit. Check the circuit across A31.11/4 and Y14.1/1 for open or short circuit. Check the circuit across A31.11/11 and HF5 for open or short circuit. Check the circuit across A31.11/6 and A20.X10.14/2 for open or short circuit. Check the circuit across A31.11/7 and Ground for open or short circuit. Make a visual check on each connector. Is any abnormality recognized? No: Go to step4 Yes: Go to step10

Inspection procedure	Step4	Inspection procedure Reinstall all the removed connectors. Erase the fault code. Turn the starter switch in ON. Execute the control “Cold start”. Turn the starter switch in OFF. Replaced the damaged electrical parts Go to step5
	Step5	Inspection procedure Turn the starter switch in OFF. Reinstall all the removed connectors. Erase fault memory and perform a test drive. Check if this diagnosis code has occurred. Are current fault codes present? No: Go to step6 Yes: Go to step7
	Step6	Inspection completed
	Step7	Inspection procedure Turn the starter switch in OFF. Replace component “A31 (Preglow system Control unit)”. Reinstall all the removed connectors. Go to step8
	Step8	Inspection procedure Turn the starter switch in OFF. Reinstall all the removed connectors. Erase fault memory and perform a test drive. Check if this diagnosis code has occurred. Are current fault codes present? No: Go to step6 Yes: Go to step9
	Step9	Inspection procedure Perform the operation start and replace A4 (Combustion engine Control unit). Inspection completed
	Step10	Inspection procedure Repair or replace electrical lines. Reinstall all the removed connectors. Erase the fault code. Execute the control “Cold start”. Check if this diagnosis code has occurred. Are current fault codes present? No: Go to step6 Yes: Go to step4

520391-12: Component ‘Glow plug’ is thermally overloaded.

Generation condition	[Test Condition] • Monitoring is active while the battery voltage is over 10.00V • If glow plugs are activated (LIN communication active only when glow plugs are active)
	[Fault Detection] • When over temperature is reported by LIN.(Com_stOvrTemp=1)
	[Defect Debouncing] • Defect condition exceeded cumulatively > 20.00 events • Failure is detected if active for 25% of events
Fault healing	• When over temperature is not reported by LIN.(Com_stOvrTemp=1)
System reaction	• Glow Plug switched OFF • Further reactions see FIDs
	• 1) Fid / Inhibit glowplug monitor
Failure cause	• High battery voltage, high temperature inside Glow Plug Control, high load or wiring problem
Failure repair	• Check battery load and output, check wiring, replace Glow Plug Control

https://truckmanualshub.com/

Inspection procedure	Step1	Inspect or verify the following items. Repair or replace faulty items as necessary. If any other fault code has occurred, perform the diagnostics procedure for the fault code. Go to Step2
	Step2	Inspect or verify the following items. Repair or replace faulty items as necessary. If one of diagnosis codes associated with A20 (SAM) is generated, make a system diagnosis according to the diagnosis code. Go to Step3
	Step3	Inspection procedure Turn the starter switch in OFF. Remove the connector of A4 (Combustion engine Control unit). Remove the connector of A31 (Preglow system Control unit). Remove the connector of Y11 (Glow plug 1). Remove the connector of Y12 (Glow plug 2). Remove the connector of Y13 (Glow plug 3). Remove the connector of Y14 (Glow plug 4). Remove the connector of HF5. Remove the connector of A20 (SAM). Remove the connector of Ground. Check the circuit across A4.X2.94/44 and A31.11/10 for open or short circuit. Check the circuit across A31.11/1 and Y11.1/1 for open or short circuit. Check the circuit across A31.11/2 and Y12.1/1 for open or short circuit. Check the circuit across A31.11/3 and Y13.1/1 for open or short circuit. Check the circuit across A31.11/4 and Y14.1/1 for open or short circuit. Check the circuit across A31.11/11 and HF5 for open or short circuit. Check the circuit across A31.11/6 and A20.X10.14/2 for open or short circuit. Check the circuit across A31.11/7 and Ground for open or short circuit. Make a visual check on each connector. Is any abnormality recognized? No: Go to Step4 Yes: Go to Step10
	Step4	Inspection procedure Reinstall all the removed connectors. Erase the fault code. Turn the starter switch in ON. Execute the control “Cold start”. Turn the starter switch in OFF. Replaced the damaged electrical parts Go to Step5
	Step5	Inspection procedure Turn the starter switch in OFF. Reinstall all the removed connectors. Erase fault memory and perform a test drive. Check if this diagnosis code has occurred. Are current fault codes present? No: Go to Step6 Yes: Go to Step7
	Step6	Inspection completed
	Step7	Inspection procedure Turn the starter switch in OFF. Replace component “A31 (Preglow system Control unit)”. Reinstall all the removed connectors. Go to Step8
	Step8	Inspection procedure Turn the starter switch in OFF. Reinstall all the removed connectors. Erase fault memory and perform a test drive. Check if this diagnosis code has occurred. Are current fault codes present? No: Go to Step6 Yes: Go to Step9

https://truckmanualshub.com/

Inspection procedure	Step9	Inspection procedure Perform the operation start and replace A4 (Combustion engine Control unit). Go to Step6
	Step10	Inspection procedure Repair or replace electrical lines. Reinstall all the removed connectors. Erase the fault code. Execute the control “Cold start”. Check if this diagnosis code has occurred. Are current fault codes present? No: Go to Step6 Yes: Go to Step4

520391-31: The Glow Plugs Control Unit could not be reset.

Generation condition		[Test Condition] • Monitoring is active while the battery voltage is over 10.00V • If glow plugs are activated (LIN communication active only when glow plugs are active)
		[Fault Detection] • When GlwPlg_stMch = CD535_RST_CMD and GlwPlg_stPRFlg = 0 i.e. GCU4 not responding for request to reset. • OR when GlwPlg_stMch = GE_CLR_CMD and GlwPlg_stPRFlg = 1 i.e. GCU4 not responding for request to set the GE flag.
		[Defect Debouncing] • Defect condition exceeded cumulatively > 20.00 events • Failure is detected if active for 25% of events
Fault healing		• Command from ECU to GCU and status replied by GCU are compatible
System reaction		• None
Failure cause		• GCU not responding to set/reset command from ECU
Failure repair		• Internal GCU4 SW failure code, no direct check possible • Replace GCU4.
Inspection procedure	Step1	Inspection procedure Inspect the suspected factors mentioned above sequentially to locate faulty parts. Repair or replace the faulty part as necessary.

520392-1: Component ‘Fuel pump’ has detected an undervoltage.

Generation condition		[Test Condition] • Monitoring is active while the battery voltage is over 10.00V • If glow plugs are activated (LIN communication active only when glow plugs are active)
		[Fault Detection] • When there is charge pump under voltage reported by LIN (Com_stCPUV=1).
		[Defect Debouncing] • Defect condition exceeded cumulatively > 20.00 events • Failure is detected if active for 25% of events
Fault healing		• Undervoltage no more detected
System reaction		• Glow Plug switched OFF • Further reactions see FIDs
		• 1) Fid / Inhibit glowplug monitor
Failure cause		• Glow plug failure
Failure repair		• Replace glow plug
Inspection procedure	Step1	Inspect or verify the following items. Repair or replace faulty items as necessary. If any other fault code has occurred, perform the diagnostics procedure for the fault code. Go to step2

https://truckmanualshub.com/

Inspection procedure	Step2	Inspect or verify the following items. Repair or replace faulty items as necessary. If one of diagnosis codes associated with A20 (SAM) is generated, make a system diagnosis according to the diagnosis code. Go to step3
	Step3	Inspection procedure Turn the starter switch in OFF. Remove the connector of A4 (Combustion engine Control unit). Remove the connector of A31 (Preglow system Control unit). Remove the connector of Y11 (Glow plug 1). Remove the connector of Y12 (Glow plug 2). Remove the connector of Y13 (Glow plug 3). Remove the connector of Y14 (Glow plug 4). Remove the connector of HF5. Remove the connector of A20 (SAM). Remove the connector of Ground. Check the circuit across A4.X2.94/44 and A31.11/10 for open or short circuit. Check the circuit across A31.11/1 and Y11.1/1 for open or short circuit. Check the circuit across A31.11/2 and Y12.1/1 for open or short circuit. Check the circuit across A31.11/3 and Y13.1/1 for open or short circuit. Check the circuit across A31.11/4 and Y14.1/1 for open or short circuit. Check the circuit across A31.11/11 and HF5 for open or short circuit. Check the circuit across A31.11/6 and A20.X10.14/2 for open or short circuit. Check the circuit across A31.11/7 and Ground for open or short circuit. Make a visual check on each connector. Is any abnormality recognized? No: Go to step4 Yes: Go to step10
	Step4	Inspection procedure Reinstall all the removed connectors. Erase the fault code. Turn the starter switch in ON. Execute the control “Cold start”. Turn the starter switch in OFF. Replaced the damaged electrical parts Go to step5
	Step5	Inspection procedure Turn the starter switch in OFF. Reinstall all the removed connectors. Erase fault memory and perform a test drive. Check if this diagnosis code has occurred. Are current fault codes present? No: Go to step6 Yes: Go to step7
	Step6	Inspection completed
	Step7	Inspection procedure Turn the starter switch in OFF. Replace component “A31 (Preglow system Control unit)”. Reinstall all the removed connectors. Go to step8
	Step8	Inspection procedure Turn the starter switch in OFF. Reinstall all the removed connectors. Erase fault memory and perform a test drive. Check if this diagnosis code has occurred. Are current fault codes present? No: Go to step6 Yes: Go to step9
	Step9	Inspection procedure Perform the operation start and replace A4 (Combustion engine Control unit). Inspection completed

https://truckmanualshub.com/

Inspection procedure	Step10	Inspection procedure Repair or replace electrical lines. Reinstall all the removed connectors. Erase the fault code. Execute the control “Cold start”. Check if this diagnosis code has occurred. Are current fault codes present? No: Go to step6 Yes: Go to step4

520393-5: Component Y11 (Glow plug 1) has an Open Load error.

Generation condition		[Test Condition] • Monitoring is active while the battery voltage is over 10.00V • If glow plugs are activated (LIN communication active only when glow plugs are active)
		[Fault Detection] • If the plug current on cylinder 1 Com_uGlpCurrA < 0.23V
		[Defect Debouncing] • Defect condition exceeded cumulatively > 20.00 events • Failure is detected if active for 25% of events
Fault healing		• Plug current on cylinder 1 Com_uGlpCurrA > 0.23V
System reaction		• None except FIDs
		• 1) Fid / Glow control monitor deactivated
Failure cause		• Open load error in the glow plug of cylinder 1
Failure repair		• Check glow plug and wiring
Inspection procedure	Step1	Inspect or verify the following items. Repair or replace faulty items as necessary. If any other fault code has occurred, perform the diagnostics procedure for the fault code. Go to step2
	Step2	Inspect or verify the following items. Repair or replace faulty items as necessary. If one of diagnosis codes associated with A20 (SAM) is generated, make a system diagnosis according to the diagnosis code. Go to step3
	Step3	Inspection procedure Turn the starter switch in OFF. Remove the connector of A4 (Combustion engine Control unit). Remove the connector of A31 (Preglow system Control unit). Remove the connector of Y11 (Glow plug 1). Remove the connector of Y12 (Glow plug 2). Remove the connector of Y13 (Glow plug 3). Remove the connector of Y14 (Glow plug 4). Remove the connector of HF5. Remove the connector of A20 (SAM). Remove the connector of Ground. Check the circuit across A4.X2.94/44 and A31.11/10 for open or short circuit. Check the circuit across A31.11/1 and Y11.1/1 for open or short circuit. Check the circuit across A31.11/2 and Y12.1/1 for open or short circuit. Check the circuit across A31.11/3 and Y13.1/1 for open or short circuit. Check the circuit across A31.11/4 and Y14.1/1 for open or short circuit. Check the circuit across A31.11/11 and HF5 for open or short circuit. Check the circuit across A31.11/6 and A20.X10.14/2 for open or short circuit. Check the circuit across A31.11/7 and Ground for open or short circuit. Make a visual check on each connector. Is any abnormality recognized? No: Go to step4 Yes: Go to step10

https://truckmanualshub.com/

Inspection procedure	Step4	Inspection procedure Reinstall all the removed connectors. Erase the fault code. Turn the starter switch in ON. Execute the control “Cold start”. Turn the starter switch in OFF. Replaced the damaged electrical parts Go to step5
	Step5	Inspection procedure Turn the starter switch in OFF. Reinstall all the removed connectors. Erase fault memory and perform a test drive. Check if this diagnosis code has occurred. Are current fault codes present? No: Go to step6 Yes: Go to step7
	Step6	Inspection completed
	Step7	Inspection procedure Turn the starter switch in OFF. Replace component “A31 (Preglow system Control unit)”. Reinstall all the removed connectors. Go to step8
	Step8	Inspection procedure Turn the starter switch in OFF. Reinstall all the removed connectors. Erase fault memory and perform a test drive. Check if this diagnosis code has occurred. Are current fault codes present? No: Go to step6 Yes: Go to step9
	Step9	Inspection procedure Perform the operation start and replace A4 (Combustion engine Control unit). Inspection completed
	Step10	Inspection procedure Repair or replace electrical lines. Reinstall all the removed connectors. Erase the fault code. Execute the control “Cold start”. Check if this diagnosis code has occurred. Are current fault codes present? No: Go to step6 Yes: Go to step4

520393-6: The electric circuit of component ‘Y11 (Glow plug 1)’ is overloaded.

Generation condition	[Test Condition] • Monitoring is active while the battery voltage is over 10.00V • If glow plugs are activated (LIN communication active only when glow plugs are active)
	[Fault Detection] • If the plug current Com_uGlpCurrA > 2.20V
	[Defect Debouncing] • Defect condition exceeded cumulatively > 20.00 events • Failure is detected if active for 25% of events
Fault healing	• Plug current Com_uGlpCurrA < 2.20V
System reaction	• Glow plug for cylinder 1 is deactivated. • Further reactions according to FIDs
	• 1) Fid / Glow control monitor deactivated
Failure cause	• Current overload for Glow Plug of cylinder 1

https://truckmanualshub.com/

Failure repair		• Check glow plug cylinder 1 • Check wiring between glow plug cylinder 1 and GCU4 • After repair, system can be checked using actuator test: • Activate Glow plugs by sending duty cycle > 8% for at least 5 seconds at PWM Outputs: Glow Plug Actuator (Id: $D90C). • After that verify Failure memory to check if failure was detected again. • If not, problem is solved.
Inspection procedure	Step1	Inspect or verify the following items. Repair or replace faulty items as necessary. If any other fault code has occurred, perform the diagnostics procedure for the fault code. Go to Step2
	Step2	Inspect or verify the following items. Repair or replace faulty items as necessary. If one of diagnosis codes associated with A20 (SAM) is generated, make a system diagnosis according to the diagnosis code. Go to Step3
	Step3	Inspection procedure Turn the starter switch in OFF. Remove the connector of A4 (Combustion engine Control unit). Remove the connector of A31 (Preglow system Control unit). Remove the connector of Y11 (Glow plug 1). Remove the connector of Y12 (Glow plug 2). Remove the connector of Y13 (Glow plug 3). Remove the connector of Y14 (Glow plug 4). Remove the connector of HF5. Remove the connector of A20 (SAM). Remove the connector of Ground. Check the circuit across A4.X2.94/44 and A31.11/10 for open or short circuit. Check the circuit across A31.11/1 and Y11.1/1 for open or short circuit. Check the circuit across A31.11/2 and Y12.1/1 for open or short circuit. Check the circuit across A31.11/3 and Y13.1/1 for open or short circuit. Check the circuit across A31.11/4 and Y14.1/1 for open or short circuit. Check the circuit across A31.11/11 and HF5 for open or short circuit. Check the circuit across A31.11/6 and A20.X10.14/2 for open or short circuit. Check the circuit across A31.11/7 and Ground for open or short circuit. Make a visual check on each connector. Is any abnormality recognized? No: Go to Step4 Yes: Go to Step10
	Step4	Inspection procedure Reinstall all the removed connectors. Erase the fault code. Turn the starter switch in ON. Execute the control “Cold start”. Turn the starter switch in OFF. Replaced the damaged electrical parts Go to Step5
	Step5	Inspection procedure Turn the starter switch in OFF. Reinstall all the removed connectors. Erase fault memory and perform a test drive. Check if this diagnosis code has occurred. Are current fault codes present? No: Go to Step6 Yes: Go to Step7
	Step6	Inspection completed
	Step7	Inspection procedure Turn the starter switch in OFF. Replace component “A31 (Preglow system Control unit)”. Reinstall all the removed connectors. Go to Step8

https://truckmanualshub.com/

Inspection procedure	Step8	Inspection procedure Turn the starter switch in OFF. Reinstall all the removed connectors. Erase fault memory and perform a test drive. Check if this diagnosis code has occurred. Are current fault codes present? No: Go to Step6 Yes: Go to Step9
	Step9	Inspection procedure Perform the operation start and replace A4 (Combustion engine Control unit). Go to Step6
	Step10	Inspection procedure Repair or replace electrical lines. Reinstall all the removed connectors. Erase the fault code. Execute the control “Cold start”. Check if this diagnosis code has occurred. Are current fault codes present? No: Go to Step6 Yes: Go to Step4

520393-31: Glow Plug control unit 4 has a Transistor failure for glow plug in cylinder 1.

Generation condition		[Test Condition] • Monitoring is active while the battery voltage is over 10.00V • If glow plugs are activated (LIN communication active only when glow plugs are active)
		[Fault Detection] • Glow plug of cylinder 1 reports over LIN a MOSFET error (Transistor failure)
		[Defect Debouncing] • Defect condition exceeded cumulatively > 20.00 events • Failure is detected if active for 25% of events
Fault healing		• Glow plug of cylinder 1 does not report a MOSFET error (Transistor failure)
System reaction		• Glow plug for cylinder 1 is deactivated. • Further reactions according to FIDs
		• 1) Fid / Glow control monitor deactivated
Failure cause		• Glow plug failure of cylinder 1
Failure repair		• Replace glow plug for cylinder 1
Inspection procedure	Step1	Inspect or verify the following items. Repair or replace faulty items as necessary. If any other fault code has occurred, perform the diagnostics procedure for the fault code. Go to step2
	Step2	Inspect or verify the following items. Repair or replace faulty items as necessary. If one of diagnosis codes associated with A20 (SAM) is generated, make a system diagnosis according to the diagnosis code. Go to step3

https://truckmanualshub.com/

Inspection procedure	Step3	Inspection procedure Turn the starter switch in OFF. Remove the connector of A4 (Combustion engine Control unit). Remove the connector of A31 (Preglow system Control unit). Remove the connector of Y11 (Glow plug 1). Remove the connector of Y12 (Glow plug 2). Remove the connector of Y13 (Glow plug 3). Remove the connector of Y14 (Glow plug 4). Remove the connector of HF5. Remove the connector of A20 (SAM). Remove the connector of Ground. Check the circuit across A4.X2.94/44 and A31.11/10 for open or short circuit. Check the circuit across A31.11/1 and Y11.1/1 for open or short circuit. Check the circuit across A31.11/2 and Y12.1/1 for open or short circuit. Check the circuit across A31.11/3 and Y13.1/1 for open or short circuit. Check the circuit across A31.11/4 and Y14.1/1 for open or short circuit. Check the circuit across A31.11/11 and HF5 for open or short circuit. Check the circuit across A31.11/6 and A20.X10.14/2 for open or short circuit. Check the circuit across A31.11/7 and Ground for open or short circuit. Make a visual check on each connector. Is any abnormality recognized? No: Go to step4 Yes: Go to step10
	Step4	Inspection procedure Reinstall all the removed connectors. Erase the fault code. Turn the starter switch in ON. Execute the control “Cold start”. Turn the starter switch in OFF. Replaced the damaged electrical parts Go to step5
	Step5	Inspection procedure Turn the starter switch in OFF. Reinstall all the removed connectors. Erase fault memory and perform a test drive. Check if this diagnosis code has occurred. Are current fault codes present? No: Go to step6 Yes: Go to step7
	Step6	Inspection completed
	Step7	Inspection procedure Turn the starter switch in OFF. Replace component “A31 (Preglow system Control unit)”. Reinstall all the removed connectors. Go to step8
	Step8	Inspection procedure Turn the starter switch in OFF. Reinstall all the removed connectors. Erase fault memory and perform a test drive. Check if this diagnosis code has occurred. Are current fault codes present? No: Go to step6 Yes: Go to step9
	Step9	Inspection procedure Perform the operation start and replace A4 (Combustion engine Control unit). Inspection completed
	Step10	Inspection procedure Repair or replace electrical lines. Reinstall all the removed connectors. Erase the fault code. Execute the control “Cold start”. Check if this diagnosis code has occurred. Are current fault codes present? No: Go to step6 Yes: Go to step4

https://truckmanualshub.com/

520394-5: Component Y13 (Glow plug 3) has an Open Load error.

Generation condition		[Test Condition] • Monitoring is active while the battery voltage is over 10.00V • If glow plugs are activated (LIN communication active only when glow plugs are active)
		[Fault Detection] • If the plug current on cylinder 3 Com_uGlpCurrA < 0.23V
		[Defect Debouncing] • Defect condition exceeded cumulatively > 20.00 events • Failure is detected if active for 25% of events
Fault healing		• Plug current on cylinder 3 Com_uGlpCurrA > 0.23V
System reaction		• None except FIDs
		• 1) Fid / Glow control monitor deactivated
Failure cause		• Open load error in the glow plug of cylinder 3
Failure repair		• Check glow plug and wiring
Inspection procedure	Step1	Inspect or verify the following items. Repair or replace faulty items as necessary. If any other fault code has occurred, perform the diagnostics procedure for the fault code. Go to Step2
	Step2	Inspect or verify the following items. Repair or replace faulty items as necessary. If one of diagnosis codes associated with A20 (SAM) is generated, make a system diagnosis according to the diagnosis code. Go to Step3
	Step3	Inspection procedure Turn the starter switch in OFF. Remove the connector of A4 (Combustion engine Control unit). Remove the connector of A31 (Preglow system Control unit). Remove the connector of Y11 (Glow plug 1). Remove the connector of Y12 (Glow plug 2). Remove the connector of Y13 (Glow plug 3). Remove the connector of Y14 (Glow plug 4). Remove the connector of HF5. Remove the connector of A20 (SAM). Remove the connector of Ground. Check the circuit across A4.X2.94/44 and A31.11/10 for open or short circuit. Check the circuit across A31.11/1 and Y11.1/1 for open or short circuit. Check the circuit across A31.11/2 and Y12.1/1 for open or short circuit. Check the circuit across A31.11/3 and Y13.1/1 for open or short circuit. Check the circuit across A31.11/4 and Y14.1/1 for open or short circuit. Check the circuit across A31.11/11 and HF5 for open or short circuit. Check the circuit across A31.11/6 and A20.X10.14/2 for open or short circuit. Check the circuit across A31.11/7 and Ground for open or short circuit. Make a visual check on each connector. Is any abnormality recognized? No: Go to Step4 Yes: Go to Step10
	Step4	Inspection procedure Reinstall all the removed connectors. Erase the fault code. Turn the starter switch in ON. Execute the control “Cold start”. Turn the starter switch in OFF. Replaced the damaged electrical parts Go to Step5

Inspection procedure	Step5	Inspection procedure Turn the starter switch in OFF. Reinstall all the removed connectors. Erase fault memory and perform a test drive. Check if this diagnosis code has occurred. Are current fault codes present? No: Go to Step6 Yes: Go to Step7
	Step6	Inspection completed
	Step7	Inspection procedure Turn the starter switch in OFF. Replace component “A31 (Preglow system Control unit)”. Reinstall all the removed connectors. Go to Step8
	Step8	Inspection procedure Turn the starter switch in OFF. Reinstall all the removed connectors. Erase fault memory and perform a test drive. Check if this diagnosis code has occurred. Are current fault codes present? No: Go to Step6 Yes: Go to Step9
	Step9	Inspection procedure Perform the operation start and replace A4 (Combustion engine Control unit). Go to Step6
	Step10	Inspection procedure Repair or replace electrical lines. Reinstall all the removed connectors. Erase the fault code. Execute the control “Cold start”. Check if this diagnosis code has occurred. Are current fault codes present? No: Go to Step6 Yes: Go to Step4

520394-6: The electric circuit of component ‘Y13 (Glow plug 3)’ is overloaded.

Generation condition		[Test Condition] • Monitoring is active while the battery voltage is over 10.00V • If glow plugs are activated (LIN communication active only when glow plugs are active)
		[Fault Detection] • If the plug current Com_uGlpCurrA > 2.20V
		[Defect Debouncing] • Defect condition exceeded cumulatively > 20.00 events • Failure is detected if active for 25% of events
Fault healing		• Plug current Com_uGlpCurrA < 2.20V
System reaction		• Glow plug for cylinder 3 is deactivated. • Further reactions according to FIDs
		• 1) Fid / Glow control monitor deactivated
Failure cause		• Current overload for Glow Plug of cylinder 3
Failure repair		• Check glow plug cylinder 3 • Check wiring between glow plug cylinder 3 and GCU4 • After repair, system can be checked using actuator test: • Activate Glow plugs by sending duty cycle > 8% for at least 5 seconds at PWM Outputs: Glow Plug Actuator (Id: $D90C). • After that verify Failure memory to check if failure was detected again. • If not, problem is solved.
Inspection procedure	Step1	Inspect or verify the following items. Repair or replace faulty items as necessary. If any other fault code has occurred, perform the diagnostics procedure for the fault code. Go to Step2

https://truckmanualshub.com/

Inspection procedure	Step2	Inspect or verify the following items. Repair or replace faulty items as necessary. If one of diagnosis codes associated with A20 (SAM) is generated, make a system diagnosis according to the diagnosis code. Go to Step3
	Step3	Inspection procedure Turn the starter switch in OFF. Remove the connector of A4 (Combustion engine Control unit). Remove the connector of A31 (Preglow system Control unit). Remove the connector of Y11 (Glow plug 1). Remove the connector of Y12 (Glow plug 2). Remove the connector of Y13 (Glow plug 3). Remove the connector of Y14 (Glow plug 4). Remove the connector of HF5. Remove the connector of A20 (SAM). Remove the connector of Ground. Check the circuit across A4.X2.94/44 and A31.11/10 for open or short circuit. Check the circuit across A31.11/1 and Y11.1/1 for open or short circuit. Check the circuit across A31.11/2 and Y12.1/1 for open or short circuit. Check the circuit across A31.11/3 and Y13.1/1 for open or short circuit. Check the circuit across A31.11/4 and Y14.1/1 for open or short circuit. Check the circuit across A31.11/11 and HF5 for open or short circuit. Check the circuit across A31.11/6 and A20.X10.14/2 for open or short circuit. Check the circuit across A31.11/7 and Ground for open or short circuit. Make a visual check on each connector. Is any abnormality recognized? No: Go to Step4 Yes: Go to Step10
	Step4	Inspection procedure Reinstall all the removed connectors. Erase the fault code. Turn the starter switch in ON. Execute the control “Cold start”. Turn the starter switch in OFF. Replaced the damaged electrical parts Go to Step5
	Step5	Inspection procedure Turn the starter switch in OFF. Reinstall all the removed connectors. Erase fault memory and perform a test drive. Check if this diagnosis code has occurred. Are current fault codes present? No: Go to Step6 Yes: Go to Step7
	Step6	Inspection completed
	Step7	Inspection procedure Turn the starter switch in OFF. Replace component “A31 (Preglow system Control unit)”. Reinstall all the removed connectors. Go to Step8
	Step8	Inspection procedure Turn the starter switch in OFF. Reinstall all the removed connectors. Erase fault memory and perform a test drive. Check if this diagnosis code has occurred. Are current fault codes present? No: Go to Step6 Yes: Go to Step9
	Step9	Inspection procedure Perform the operation start and replace A4 (Combustion engine Control unit). Go to Step6

https://truckmanualshub.com/

Inspection procedure	Step10	Inspection procedure Repair or replace electrical lines. Reinstall all the removed connectors. Erase the fault code. Execute the control “Cold start”. Check if this diagnosis code has occurred. Are current fault codes present? No: Go to Step6 Yes: Go to Step4

520394-31: Glow Plug control unit 4 has a Transistor failure for glow plug in cylinder 3.

Generation condition		[Test Condition] • Monitoring is active while the battery voltage is over 10.00V • If glow plugs are activated (LIN communication active only when glow plugs are active)
		[Fault Detection] • Glow plug of cylinder 3 reports over LIN a MOSFET error (Transistor failure)
		[Defect Debouncing] • Defect condition exceeded cumulatively > 20.00 events • Failure is detected if active for 25% of events
Fault healing		• Glow plug of cylinder 3 does not report a MOSFET error (Transistor failure)
System reaction		• Glow plug for cylinder 3 is deactivated. • Further reactions according to FIDs
		• 1) Fid / Glow control monitor deactivated
Failure cause		• Glow plug failure of cylinder 3
Failure repair		• Replace glow plug for cylinder 3
Inspection procedure	Step1	Inspect or verify the following items. Repair or replace faulty items as necessary. If any other fault code has occurred, perform the diagnostics procedure for the fault code. Go to step2
	Step2	Inspect or verify the following items. Repair or replace faulty items as necessary. If one of diagnosis codes associated with A20 (SAM) is generated, make a system diagnosis according to the diagnosis code. Go to step3
	Step3	Inspection procedure Turn the starter switch in OFF. Remove the connector of A4 (Combustion engine Control unit). Remove the connector of A31 (Preglow system Control unit). Remove the connector of Y11 (Glow plug 1). Remove the connector of Y12 (Glow plug 2). Remove the connector of Y13 (Glow plug 3). Remove the connector of Y14 (Glow plug 4). Remove the connector of HF5. Remove the connector of A20 (SAM). Remove the connector of Ground. Check the circuit across A4.X2.94/44 and A31.11/10 for open or short circuit. Check the circuit across A31.11/1 and Y11.1/1 for open or short circuit. Check the circuit across A31.11/2 and Y12.1/1 for open or short circuit. Check the circuit across A31.11/3 and Y13.1/1 for open or short circuit. Check the circuit across A31.11/4 and Y14.1/1 for open or short circuit. Check the circuit across A31.11/11 and HF5 for open or short circuit. Check the circuit across A31.11/6 and A20.X10.14/2 for open or short circuit. Check the circuit across A31.11/7 and Ground for open or short circuit. Make a visual check on each connector. Is any abnormality recognized? No: Go to step4 Yes: Go to step10

https://truckmanualshub.com/

Inspection procedure	Step4	Inspection procedure Reinstall all the removed connectors. Erase the fault code. Turn the starter switch in ON. Execute the control “Cold start”. Turn the starter switch in OFF. Replaced the damaged electrical parts Go to step5
	Step5	Inspection procedure Turn the starter switch in OFF. Reinstall all the removed connectors. Erase fault memory and perform a test drive. Check if this diagnosis code has occurred. Are current fault codes present? No: Go to step6 Yes: Go to step7
	Step6	Inspection completed
	Step7	Inspection procedure Turn the starter switch in OFF. Replace component “A31 (Preglow system Control unit)”. Reinstall all the removed connectors. Go to step8
	Step8	Inspection procedure Turn the starter switch in OFF. Reinstall all the removed connectors. Erase fault memory and perform a test drive. Check if this diagnosis code has occurred. Are current fault codes present? No: Go to step6 Yes: Go to step9
	Step9	Inspection procedure Perform the operation start and replace A4 (Combustion engine Control unit). Inspection completed
	Step10	Inspection procedure Repair or replace electrical lines. Reinstall all the removed connectors. Erase the fault code. Execute the control “Cold start”. Check if this diagnosis code has occurred. Are current fault codes present? No: Go to step6 Yes: Go to step4

520395-5: Component Y14 (Glow plug 4) has an Open Load error.

Generation condition	[Test Condition] • Monitoring is active while the battery voltage is over 10.00V • If glow plugs are activated (LIN communication active only when glow plugs are active)
	[Fault Detection] • If the plug current on cylinder 4 Com_uGlpCurrA < 0.23V
	[Defect Debouncing] • Defect condition exceeded cumulatively > 20.00 events • Failure is detected if active for 25% of events
Fault healing	• Plug current on cylinder 4 Com_uGlpCurrA > 0.23V
System reaction	• None except FIDs
	• 1) Fid / Glow control monitor deactivated
Failure cause	• Open load error in the glow plug of cylinder 4
Failure repair	• Check glow plug and wiring

https://truckmanualshub.com/

Inspection procedure	Step1	Inspect or verify the following items. Repair or replace faulty items as necessary. If any other fault code has occurred, perform the diagnostics procedure for the fault code. Go to Step2
	Step2	Inspect or verify the following items. Repair or replace faulty items as necessary. If one of diagnosis codes associated with A20 (SAM) is generated, make a system diagnosis according to the diagnosis code. Go to Step3
	Step3	Inspection procedure Turn the starter switch in OFF. Remove the connector of A4 (Combustion engine Control unit). Remove the connector of A31 (Preglow system Control unit). Remove the connector of Y11 (Glow plug 1). Remove the connector of Y12 (Glow plug 2). Remove the connector of Y13 (Glow plug 3). Remove the connector of Y14 (Glow plug 4). Remove the connector of HF5. Remove the connector of A20 (SAM). Remove the connector of Ground. Check the circuit across A4.X2.94/44 and A31.11/10 for open or short circuit. Check the circuit across A31.11/1 and Y11.1/1 for open or short circuit. Check the circuit across A31.11/2 and Y12.1/1 for open or short circuit. Check the circuit across A31.11/3 and Y13.1/1 for open or short circuit. Check the circuit across A31.11/4 and Y14.1/1 for open or short circuit. Check the circuit across A31.11/11 and HF5 for open or short circuit. Check the circuit across A31.11/6 and A20.X10.14/2 for open or short circuit. Check the circuit across A31.11/7 and Ground for open or short circuit. Make a visual check on each connector. Is any abnormality recognized? No: Go to Step4 Yes: Go to Step10
	Step4	Inspection procedure Reinstall all the removed connectors. Erase the fault code. Turn the starter switch in ON. Execute the control “Cold start”. Turn the starter switch in OFF. Replaced the damaged electrical parts Go to Step5
	Step5	Inspection procedure Turn the starter switch in OFF. Reinstall all the removed connectors. Erase fault memory and perform a test drive. Check if this diagnosis code has occurred. Are current fault codes present? No: Go to Step6 Yes: Go to Step7
	Step6	Inspection completed
	Step7	Inspection procedure Turn the starter switch in OFF. Replace component “A31 (Preglow system Control unit)”. Reinstall all the removed connectors. Go to Step8
	Step8	Inspection procedure Turn the starter switch in OFF. Reinstall all the removed connectors. Erase fault memory and perform a test drive. Check if this diagnosis code has occurred. Are current fault codes present? No: Go to Step6 Yes: Go to Step9

https://truckmanualshub.com/

Inspection procedure	Step9	Inspection procedure Perform the operation start and replace A4 (Combustion engine Control unit). Go to Step6
	Step10	Inspection procedure Repair or replace electrical lines. Reinstall all the removed connectors. Erase the fault code. Execute the control “Cold start”. Check if this diagnosis code has occurred. Are current fault codes present? No: Go to Step6 Yes: Go to Step4

520395-6: The electric circuit of component ‘Y14 (Glow plug 4)’ is overloaded.

Generation condition		[Test Condition] • Monitoring is active while the battery voltage is over 10.00V • If glow plugs are activated (LIN communication active only when glow plugs are active)
		[Fault Detection] • If the plug current Com_uGlpCurrA > 2.20V
		[Defect Debouncing] • Defect condition exceeded cumulatively > 20.00 events • Failure is detected if active for 25% of events
Fault healing		• Plug current Com_uGlpCurrA < 2.20V
System reaction		• Glow plug for cylinder 4 is deactivated. • Further reactions according to FIDs
		• 1) Fid / Glow control monitor deactivated
Failure cause		• Current overload for Glow Plug of cylinder 4
Failure repair		• Check glow plug cylinder 4 • Check wiring between glow plug cylinder 4 and GCU4 • After repair, system can be checked using actuator test: • Activate Glow plugs by sending duty cycle > 8% for at least 5 seconds at PWM Outputs: Glow Plug Actuator (Id: $D90C). • After that verify Failure memory to check if failure was detected again. • If not, problem is solved.
Inspection procedure	Step1	Inspect or verify the following items. Repair or replace faulty items as necessary. If any other fault code has occurred, perform the diagnostics procedure for the fault code. Go to Step2
	Step2	Inspect or verify the following items. Repair or replace faulty items as necessary. If one of diagnosis codes associated with A20 (SAM) is generated, make a system diagnosis according to the diagnosis code. Go to Step3

https://truckmanualshub.com/

Inspection procedure	Step3	Inspection procedure Turn the starter switch in OFF. Remove the connector of A4 (Combustion engine Control unit). Remove the connector of A31 (Preglow system Control unit). Remove the connector of Y11 (Glow plug 1). Remove the connector of Y12 (Glow plug 2). Remove the connector of Y13 (Glow plug 3). Remove the connector of Y14 (Glow plug 4). Remove the connector of HF5. Remove the connector of A20 (SAM). Remove the connector of Ground. Check the circuit across A4.X2.94/44 and A31.11/10 for open or short circuit. Check the circuit across A31.11/1 and Y11.1/1 for open or short circuit. Check the circuit across A31.11/2 and Y12.1/1 for open or short circuit. Check the circuit across A31.11/3 and Y13.1/1 for open or short circuit. Check the circuit across A31.11/4 and Y14.1/1 for open or short circuit. Check the circuit across A31.11/11 and HF5 for open or short circuit. Check the circuit across A31.11/6 and A20.X10.14/2 for open or short circuit. Check the circuit across A31.11/7 and Ground for open or short circuit. Make a visual check on each connector. Is any abnormality recognized? No: Go to Step4 Yes: Go to Step10
	Step4	Inspection procedure Reinstall all the removed connectors. Erase the fault code. Turn the starter switch in ON. Execute the control “Cold start”. Turn the starter switch in OFF. Replaced the damaged electrical parts Go to Step5
	Step5	Inspection procedure Turn the starter switch in OFF. Reinstall all the removed connectors. Erase fault memory and perform a test drive. Check if this diagnosis code has occurred. Are current fault codes present? No: Go to Step6 Yes: Go to Step7
	Step6	Inspection completed
	Step7	Inspection procedure Turn the starter switch in OFF. Replace component “A31 (Preglow system Control unit)”. Reinstall all the removed connectors. Go to Step8
	Step8	Inspection procedure Turn the starter switch in OFF. Reinstall all the removed connectors. Erase fault memory and perform a test drive. Check if this diagnosis code has occurred. Are current fault codes present? No: Go to Step6 Yes: Go to Step9
	Step9	Inspection procedure Perform the operation start and replace A4 (Combustion engine Control unit). Go to Step6
	Step10	Inspection procedure Repair or replace electrical lines. Reinstall all the removed connectors. Erase the fault code. Execute the control “Cold start”. Check if this diagnosis code has occurred. Are current fault codes present? No: Go to Step6 Yes: Go to Step4

https://truckmanualshub.com/

520395-31: Glow Plug control unit 4 has a Transistor failure for glow plug in cylinder 4.

Generation condition		[Test Condition] • Monitoring is active while the battery voltage is over 10.00V • If glow plugs are activated (LIN communication active only when glow plugs are active)
		[Fault Detection] • Glow plug of cylinder 4 reports over LIN a MOSFET error (Transistor failure)
		[Defect Debouncing] • Defect condition exceeded cumulatively > 20.00 events • Failure is detected if active for 25% of events
Fault healing		• Glow plug of cylinder 4 does not report a MOSFET error (Transistor failure)
System reaction		• Glow plug for cylinder 4 is deactivated. • Further reactions according to FIDs
		• 1) Fid / Glow control monitor deactivated
Failure cause		• Glow plug failure of cylinder 4
Failure repair		• Replace glow plug for cylinder 4
Inspection procedure	Step1	Inspect or verify the following items. Repair or replace faulty items as necessary. If any other fault code has occurred, perform the diagnostics procedure for the fault code. Go to step2
	Step2	Inspect or verify the following items. Repair or replace faulty items as necessary. If one of diagnosis codes associated with A20 (SAM) is generated, make a system diagnosis according to the diagnosis code. Go to step3
	Step3	Inspection procedure Turn the starter switch in OFF. Remove the connector of A4 (Combustion engine Control unit). Remove the connector of A31 (Preglow system Control unit). Remove the connector of Y11 (Glow plug 1). Remove the connector of Y12 (Glow plug 2). Remove the connector of Y13 (Glow plug 3). Remove the connector of Y14 (Glow plug 4). Remove the connector of HF5. Remove the connector of A20 (SAM). Remove the connector of Ground. Check the circuit across A4.X2.94/44 and A31.11/10 for open or short circuit. Check the circuit across A31.11/1 and Y11.1/1 for open or short circuit. Check the circuit across A31.11/2 and Y12.1/1 for open or short circuit. Check the circuit across A31.11/3 and Y13.1/1 for open or short circuit. Check the circuit across A31.11/4 and Y14.1/1 for open or short circuit. Check the circuit across A31.11/11 and HF5 for open or short circuit. Check the circuit across A31.11/6 and A20.X10.14/2 for open or short circuit. Check the circuit across A31.11/7 and Ground for open or short circuit. Make a visual check on each connector. Is any abnormality recognized? No: Go to step4 Yes: Go to step10
	Step4	Inspection procedure Reinstall all the removed connectors. Erase the fault code. Turn the starter switch in ON. Execute the control “Cold start”. Turn the starter switch in OFF. Replaced the damaged electrical parts Go to step5

https://truckmanualshub.com/

Inspection procedure	Step5	Inspection procedure Turn the starter switch in OFF. Reinstall all the removed connectors. Erase fault memory and perform a test drive. Check if this diagnosis code has occurred. Are current fault codes present? No: Go to step6 Yes: Go to step7
	Step6	Inspection completed
	Step7	Inspection procedure Turn the starter switch in OFF. Replace component “A31 (Preglow system Control unit)”. Reinstall all the removed connectors. Go to step8
	Step8	Inspection procedure Turn the starter switch in OFF. Reinstall all the removed connectors. Erase fault memory and perform a test drive. Check if this diagnosis code has occurred. Are current fault codes present? No: Go to step6 Yes: Go to step9
	Step9	Inspection procedure Perform the operation start and replace A4 (Combustion engine Control unit). Inspection completed
	Step10	Inspection procedure Repair or replace electrical lines. Reinstall all the removed connectors. Erase the fault code. Execute the control “Cold start”. Check if this diagnosis code has occurred. Are current fault codes present? No: Go to step6 Yes: Go to step4

520396-5: Component Y12 (Glow plug 2) has an Open Load error.

Generation condition		[Test Condition] • Monitoring is active while the battery voltage is over 10.00V • If glow plugs are activated (LIN communication active only when glow plugs are active)
		[Fault Detection] • If the plug current on cylinder 2 Com_uGlpCurrA < 0.23V
		[Defect Debouncing] • Defect condition exceeded cumulatively > 20.00 events • Failure is detected if active for 25% of events
Fault healing		• Plug current on cylinder 2 Com_uGlpCurrA > 0.23V
System reaction		• None except FIDs
		• 1) Fid / Glow control monitor deactivated
Failure cause		• Open load error in the glow plug of cylinder 2
Failure repair		• Check glow plug and wiring
Inspection procedure	Step1	Inspect or verify the following items. Repair or replace faulty items as necessary. If any other fault code has occurred, perform the diagnostics procedure for the fault code. Go to Step2
	Step2	Inspect or verify the following items. Repair or replace faulty items as necessary. If one of diagnosis codes associated with A20 (SAM) is generated, make a system diagnosis according to the diagnosis code. Go to Step3

https://truckmanualshub.com/

Inspection procedure	Step3	Inspection procedure Turn the starter switch in OFF. Remove the connector of A4 (Combustion engine Control unit). Remove the connector of A31 (Preglow system Control unit). Remove the connector of Y11 (Glow plug 1). Remove the connector of Y12 (Glow plug 2). Remove the connector of Y13 (Glow plug 3). Remove the connector of Y14 (Glow plug 4). Remove the connector of HF5. Remove the connector of A20 (SAM). Remove the connector of Ground. Check the circuit across A4.X2.94/44 and A31.11/10 for open or short circuit. Check the circuit across A31.11/1 and Y11.1/1 for open or short circuit. Check the circuit across A31.11/2 and Y12.1/1 for open or short circuit. Check the circuit across A31.11/3 and Y13.1/1 for open or short circuit. Check the circuit across A31.11/4 and Y14.1/1 for open or short circuit. Check the circuit across A31.11/11 and HF5 for open or short circuit. Check the circuit across A31.11/6 and A20.X10.14/2 for open or short circuit. Check the circuit across A31.11/7 and Ground for open or short circuit. Make a visual check on each connector. Is any abnormality recognized? No: Go to Step4 Yes: Go to Step10
	Step4	Inspection procedure Reinstall all the removed connectors. Erase the fault code. Turn the starter switch in ON. Execute the control “Cold start”. Turn the starter switch in OFF. Replaced the damaged electrical parts Go to Step5
	Step5	Inspection procedure Turn the starter switch in OFF. Reinstall all the removed connectors. Erase fault memory and perform a test drive. Check if this diagnosis code has occurred. Are current fault codes present? No: Go to Step6 Yes: Go to Step7
	Step6	Inspection completed
	Step7	Inspection procedure Turn the starter switch in OFF. Replace component “A31 (Preglow system Control unit)”. Reinstall all the removed connectors. Go to Step8
	Step8	Inspection procedure Turn the starter switch in OFF. Reinstall all the removed connectors. Erase fault memory and perform a test drive. Check if this diagnosis code has occurred. Are current fault codes present? No: Go to Step6 Yes: Go to Step9
	Step9	Inspection procedure Perform the operation start and replace A4 (Combustion engine Control unit). Go to Step6
	Step10	Inspection procedure Repair or replace electrical lines. Reinstall all the removed connectors. Erase the fault code. Execute the control “Cold start”. Check if this diagnosis code has occurred. Are current fault codes present? No: Go to Step6 Yes: Go to Step4

https://truckmanualshub.com/

520396-6: The electric circuit of component 'Y12 (Glow plug 2)' is overloaded.

Generation condition		[Test Condition] • Monitoring is active while the battery voltage is over 10.00V • If glow plugs are activated (LIN communication active only when glow plugs are active)
		[Fault Detection] • If the plug current Com_uGlpCurrA > 2.20V
		[Defect Debouncing] • Defect condition exceeded cumulatively > 20.00 events • Failure is detected if active for 25% of events
Fault healing		• Plug current Com_uGlpCurrA < 2.20V
System reaction		• Glow plug for cylinder 2 is deactivated. • Further reactions according to FIDs
		• 1) Fid / Glow control monitor deactivated
Failure cause		• Current overload for Glow Plug of cylinder 2
Failure repair		• Check glow plug cylinder 2 • Check wiring between glow plug cylinder 2 and GCU4 • After repair, system can be checked using actuator test: • Activate Glow plugs by sending duty cycle > 8% for at least 5 seconds at PWM Outputs: Glow Plug Actuator (Id: $D90C). • After that verify Failure memory to check if failure was detected again. • If not, problem is solved.
Inspection procedure	Step1	Inspect or verify the following items. Repair or replace faulty items as necessary. If any other fault code has occurred, perform the diagnostics procedure for the fault code. Go to Step2
	Step2	Inspect or verify the following items. Repair or replace faulty items as necessary. If one of diagnosis codes associated with A20 (SAM) is generated, make a system diagnosis according to the diagnosis code. Go to Step3
	Step3	Inspection procedure Turn the starter switch in OFF. Remove the connector of A4 (Combustion engine Control unit). Remove the connector of A31 (Preglow system Control unit). Remove the connector of Y11 (Glow plug 1). Remove the connector of Y12 (Glow plug 2). Remove the connector of Y13 (Glow plug 3). Remove the connector of Y14 (Glow plug 4). Remove the connector of HF5. Remove the connector of A20 (SAM). Remove the connector of Ground. Check the circuit across A4.X2.94/44 and A31.11/10 for open or short circuit. Check the circuit across A31.11/1 and Y11.1/1 for open or short circuit. Check the circuit across A31.11/2 and Y12.1/1 for open or short circuit. Check the circuit across A31.11/3 and Y13.1/1 for open or short circuit. Check the circuit across A31.11/4 and Y14.1/1 for open or short circuit. Check the circuit across A31.11/11 and HF5 for open or short circuit. Check the circuit across A31.11/6 and A20.X10.14/2 for open or short circuit. Check the circuit across A31.11/7 and Ground for open or short circuit. Make a visual check on each connector. Is any abnormality recognized? No: Go to Step4 Yes: Go to Step10
	Step4	Inspection procedure Reinstall all the removed connectors. Erase the fault code. Turn the starter switch in ON. Execute the control "Cold start". Turn the starter switch in OFF. Replaced the damaged electrical parts Go to Step5

https://truckmanualshub.com/

Inspection procedure	Step5	Inspection procedure Turn the starter switch in OFF. Reinstall all the removed connectors. Erase fault memory and perform a test drive. Check if this diagnosis code has occurred. Are current fault codes present? No: Go to Step6 Yes: Go to Step7
	Step6	Inspection completed
	Step7	Inspection procedure Turn the starter switch in OFF. Replace component “A31 (Preglow system Control unit)”. Reinstall all the removed connectors. Go to Step8
	Step8	Inspection procedure Turn the starter switch in OFF. Reinstall all the removed connectors. Erase fault memory and perform a test drive. Check if this diagnosis code has occurred. Are current fault codes present? No: Go to Step6 Yes: Go to Step9
	Step9	Inspection procedure Perform the operation start and replace A4 (Combustion engine Control unit). Go to Step6
	Step10	Inspection procedure Repair or replace electrical lines. Reinstall all the removed connectors. Erase the fault code. Execute the control “Cold start”. Check if this diagnosis code has occurred. Are current fault codes present? No: Go to Step6 Yes: Go to Step4

520396-31: Glow Plug control unit 4 has a Transistor failure for glow plug in cylinder 2.

Generation condition		[Test Condition] • Monitoring is active while the battery voltage is over 10.00V • If glow plugs are activated (LIN communication active only when glow plugs are active)
		[Fault Detection] • Glow plug of cylinder 2 reports over LIN a MOSFET error (Transistor failure)
		[Defect Debouncing] • Defect condition exceeded cumulatively > 20.00 events • Failure is detected if active for 25% of events
Fault healing		• Glow plug of cylinder 2 does not report a MOSFET error (Transistor failure)
System reaction		• Glow plug for cylinder 2 is deactivated. • Further reactions according to FIDs
		• 1) Fid / Glow control monitor deactivated
Failure cause		• Glow plug failure of cylinder 2
Failure repair		• Replace glow plug for cylinder 2
Inspection procedure	Step1	Inspect or verify the following items. Repair or replace faulty items as necessary. If any other fault code has occurred, perform the diagnostics procedure for the fault code. Go to step2
	Step2	Inspect or verify the following items. Repair or replace faulty items as necessary. If one of diagnosis codes associated with A20 (SAM) is generated, make a system diagnosis according to the diagnosis code. Go to step3

https://truckmanualshub.com/

Inspection procedure	Step3	Inspection procedure Turn the starter switch in OFF. Remove the connector of A4 (Combustion engine Control unit). Remove the connector of A31 (Preglow system Control unit). Remove the connector of Y11 (Glow plug 1). Remove the connector of Y12 (Glow plug 2). Remove the connector of Y13 (Glow plug 3). Remove the connector of Y14 (Glow plug 4). Remove the connector of HF5. Remove the connector of A20 (SAM). Remove the connector of Ground. Check the circuit across A4.X2.94/44 and A31.11/10 for open or short circuit. Check the circuit across A31.11/1 and Y11.1/1 for open or short circuit. Check the circuit across A31.11/2 and Y12.1/1 for open or short circuit. Check the circuit across A31.11/3 and Y13.1/1 for open or short circuit. Check the circuit across A31.11/4 and Y14.1/1 for open or short circuit. Check the circuit across A31.11/11 and HF5 for open or short circuit. Check the circuit across A31.11/6 and A20.X10.14/2 for open or short circuit. Check the circuit across A31.11/7 and Ground for open or short circuit. Make a visual check on each connector. Is any abnormality recognized? No: Go to step4 Yes: Go to step10
	Step4	Inspection procedure Reinstall all the removed connectors. Erase the fault code. Turn the starter switch in ON. Execute the control “Cold start”. Turn the starter switch in OFF. Replaced the damaged electrical parts Go to step5
	Step5	Inspection procedure Turn the starter switch in OFF. Reinstall all the removed connectors. Erase fault memory and perform a test drive. Check if this diagnosis code has occurred. Are current fault codes present? No: Go to step6 Yes: Go to step7
	Step6	Inspection completed
	Step7	Inspection procedure Turn the starter switch in OFF. Replace component “A31 (Preglow system Control unit)”. Reinstall all the removed connectors. Go to step8
	Step8	Inspection procedure Turn the starter switch in OFF. Reinstall all the removed connectors. Erase fault memory and perform a test drive. Check if this diagnosis code has occurred. Are current fault codes present? No: Go to step6 Yes: Go to step9
	Step9	Inspection procedure Perform the operation start and replace A4 (Combustion engine Control unit). Inspection completed
	Step10	Inspection procedure Repair or replace electrical lines. Reinstall all the removed connectors. Erase the fault code. Execute the control “Cold start”. Check if this diagnosis code has occurred. Are current fault codes present? No: Go to step6 Yes: Go to step4

https://truckmanualshub.com/

520397-31: Component 'Y11 (Glow plug 1)' has a short circuit.

Generation condition		[Test Condition] • Monitoring is active while the battery voltage is over 10.00V • If glow plugs are activated (LIN communication active)
		[Fault Detection] • If a Short circuit error is reported for a glow plug over LIN. (Com_stGlpStat=03 and Com_stErrGlpX>0, both in GCU_DIAG message).
		[Defect Debouncing] • Immediate
Fault healing		• No short circuit reported
System reaction		• Glow plug for cylinder 1 is deactivated. • Further reactions according to FIDs
		• 1) Fid / Glow control monitor deactivated
Failure cause		• Short circuit in glow plug of cylinder 1 or in its wiring
Failure repair		• Check wiring, check and replace glow plug
Inspection procedure	Step1	Inspect or verify the following items. Repair or replace faulty items as necessary. If any other fault code has occurred, perform the diagnostics procedure for the fault code. Go to Step2
	Step2	Inspect or verify the following items. Repair or replace faulty items as necessary. If one of diagnosis codes associated with A20 (SAM) is generated, make a system diagnosis according to the diagnosis code. Go to Step3
	Step3	Inspection procedure Turn the starter switch in OFF. Remove the connector of A4 (Combustion engine Control unit). Remove the connector of A31 (Preglow system Control unit). Remove the connector of Y11 (Glow plug 1). Remove the connector of Y12 (Glow plug 2). Remove the connector of Y13 (Glow plug 3). Remove the connector of Y14 (Glow plug 4). Remove the connector of HF5. Remove the connector of A20 (SAM). Remove the connector of Ground. Check the circuit across A4.X2.94/44 and A31.11/10 for open or short circuit. Check the circuit across A31.11/1 and Y11.1/1 for open or short circuit. Check the circuit across A31.11/2 and Y12.1/1 for open or short circuit. Check the circuit across A31.11/3 and Y13.1/1 for open or short circuit. Check the circuit across A31.11/4 and Y14.1/1 for open or short circuit. Check the circuit across A31.11/11 and HF5 for open or short circuit. Check the circuit across A31.11/6 and A20.X10.14/2 for open or short circuit. Check the circuit across A31.11/7 and Ground for open or short circuit. Make a visual check on each connector. Is any abnormality recognized? No: Go to Step4 Yes: Go to Step10
	Step4	Inspection procedure Reinstall all the removed connectors. Erase the fault code. Turn the starter switch in ON. Execute the control "Cold start". Turn the starter switch in OFF. Replaced the damaged electrical parts Go to Step5

https://truckmanualshub.com/

Inspection procedure	Step5	Inspection procedure Turn the starter switch in OFF. Reinstall all the removed connectors. Erase fault memory and perform a test drive. Check if this diagnosis code has occurred. Are current fault codes present? No: Go to Step6 Yes: Go to Step7
	Step6	Inspection completed
	Step7	Inspection procedure Turn the starter switch in OFF. Replace component “A31 (Preglow system Control unit)”. Reinstall all the removed connectors. Go to Step8
	Step8	Inspection procedure Turn the starter switch in OFF. Reinstall all the removed connectors. Erase fault memory and perform a test drive. Check if this diagnosis code has occurred. Are current fault codes present? No: Go to Step6 Yes: Go to Step9
	Step9	Inspection procedure Perform the operation start and replace A4 (Combustion engine Control unit). Go to Step6
	Step10	Inspection procedure Repair or replace electrical lines. Reinstall all the removed connectors. Erase the fault code. Execute the control “Cold start”. Check if this diagnosis code has occurred. Are current fault codes present? No: Go to Step6 Yes: Go to Step4

520398-31: Component ‘Y13 (Glow plug 3)’ has a short circuit.

Generation condition		[Test Condition] • Monitoring is active while the battery voltage is over 10.00V • If glow plugs are activated (LIN communication active)
		[Fault Detection] • If a Short circuit error is reported for a glow plug over LIN. (Com_stGlpStat=03 and Com_stErrGlpX>0, both in GCU_DIAG message).
		[Defect Debouncing] • Immediate
Fault healing		• No short circuit reported
System reaction		• Glow plug for cylinder 3 is deactivated. • Further reactions according to FIDs
		• 1) Fid / Glow control monitor deactivated
Failure cause		• Short circuit in glow plug of cylinder 3 or in its wiring
Failure repair		• Check wiring, check and replace glow plug
Inspection procedure	Step1	Inspect or verify the following items. Repair or replace faulty items as necessary. If any other fault code has occurred, perform the diagnostics procedure for the fault code. Go to Step2
	Step2	Inspect or verify the following items. Repair or replace faulty items as necessary. If one of diagnosis codes associated with A20 (SAM) is generated, make a system diagnosis according to the diagnosis code. Go to Step3

https://truckmanualshub.com/

Inspection procedure	Step3	Inspection procedure Turn the starter switch in OFF. Remove the connector of A4 (Combustion engine Control unit). Remove the connector of A31 (Preglow system Control unit). Remove the connector of Y11 (Glow plug 1). Remove the connector of Y12 (Glow plug 2). Remove the connector of Y13 (Glow plug 3). Remove the connector of Y14 (Glow plug 4). Remove the connector of HF5. Remove the connector of A20 (SAM). Remove the connector of Ground. Check the circuit across A4.X2.94/44 and A31.11/10 for open or short circuit. Check the circuit across A31.11/1 and Y11.1/1 for open or short circuit. Check the circuit across A31.11/2 and Y12.1/1 for open or short circuit. Check the circuit across A31.11/3 and Y13.1/1 for open or short circuit. Check the circuit across A31.11/4 and Y14.1/1 for open or short circuit. Check the circuit across A31.11/11 and HF5 for open or short circuit. Check the circuit across A31.11/6 and A20.X10.14/2 for open or short circuit. Check the circuit across A31.11/7 and Ground for open or short circuit. Make a visual check on each connector. Is any abnormality recognized? No: Go to Step4 Yes: Go to Step10
	Step4	Inspection procedure Reinstall all the removed connectors. Erase the fault code. Turn the starter switch in ON. Execute the control “Cold start”. Turn the starter switch in OFF. Replaced the damaged electrical parts Go to Step5
	Step5	Inspection procedure Turn the starter switch in OFF. Reinstall all the removed connectors. Erase fault memory and perform a test drive. Check if this diagnosis code has occurred. Are current fault codes present? No: Go to Step6 Yes: Go to Step7
	Step6	Inspection completed
	Step7	Inspection procedure Turn the starter switch in OFF. Replace component “A31 (Preglow system Control unit)”. Reinstall all the removed connectors. Go to Step8
	Step8	Inspection procedure Turn the starter switch in OFF. Reinstall all the removed connectors. Erase fault memory and perform a test drive. Check if this diagnosis code has occurred. Are current fault codes present? No: Go to Step6 Yes: Go to Step9
	Step9	Inspection procedure Perform the operation start and replace A4 (Combustion engine Control unit). Go to Step6
	Step10	Inspection procedure Repair or replace electrical lines. Reinstall all the removed connectors. Erase the fault code. Execute the control “Cold start”. Check if this diagnosis code has occurred. Are current fault codes present? No: Go to Step6 Yes: Go to Step4

https://truckmanualshub.com/

520399-31: Component 'Y14 (Glow plug 4)' has a short circuit.

Generation condition		[Test Condition] • Monitoring is active while the battery voltage is over 10.00V • If glow plugs are activated (LIN communication active)
		[Fault Detection] • If a Short circuit error is reported for a glow plug over LIN. (Com_stGlpStat=03 and Com_stErrGlpX>0, both in GCU_DIAG message).
		[Defect Debouncing] • Immediate
Fault healing		• No short circuit reported
System reaction		• Glow plug for cylinder 4 is deactivated. • Further reactions according to FIDs
		• 1) Fid / Glow control monitor deactivated
Failure cause		• Short circuit in glow plug of cylinder 4 or in its wiring
Failure repair		• Check wiring, check and replace glow plug
Inspection procedure	Step1	Inspect or verify the following items. Repair or replace faulty items as necessary. If any other fault code has occurred, perform the diagnostics procedure for the fault code. Go to Step2
	Step2	Inspect or verify the following items. Repair or replace faulty items as necessary. If one of diagnosis codes associated with A20 (SAM) is generated, make a system diagnosis according to the diagnosis code. Go to Step3
	Step3	Inspection procedure Turn the starter switch in OFF. Remove the connector of A4 (Combustion engine Control unit). Remove the connector of A31 (Preglow system Control unit). Remove the connector of Y11 (Glow plug 1). Remove the connector of Y12 (Glow plug 2). Remove the connector of Y13 (Glow plug 3). Remove the connector of Y14 (Glow plug 4). Remove the connector of HF5. Remove the connector of A20 (SAM). Remove the connector of Ground. Check the circuit across A4.X2.94/44 and A31.11/10 for open or short circuit. Check the circuit across A31.11/1 and Y11.1/1 for open or short circuit. Check the circuit across A31.11/2 and Y12.1/1 for open or short circuit. Check the circuit across A31.11/3 and Y13.1/1 for open or short circuit. Check the circuit across A31.11/4 and Y14.1/1 for open or short circuit. Check the circuit across A31.11/11 and HF5 for open or short circuit. Check the circuit across A31.11/6 and A20.X10.14/2 for open or short circuit. Check the circuit across A31.11/7 and Ground for open or short circuit. Make a visual check on each connector. Is any abnormality recognized? No: Go to Step4 Yes: Go to Step10
	Step4	Inspection procedure Reinstall all the removed connectors. Erase the fault code. Turn the starter switch in ON. Execute the control "Cold start". Turn the starter switch in OFF. Replaced the damaged electrical parts Go to Step5

https://truckmanualshub.com/

Inspection procedure	Step5	Inspection procedure Turn the starter switch in OFF. Reinstall all the removed connectors. Erase fault memory and perform a test drive. Check if this diagnosis code has occurred. Are current fault codes present? No: Go to Step6 Yes: Go to Step7
	Step6	Inspection completed
	Step7	Inspection procedure Turn the starter switch in OFF. Replace component “A31 (Preglow system Control unit)”. Reinstall all the removed connectors. Go to Step8
	Step8	Inspection procedure Turn the starter switch in OFF. Reinstall all the removed connectors. Erase fault memory and perform a test drive. Check if this diagnosis code has occurred. Are current fault codes present? No: Go to Step6 Yes: Go to Step9
	Step9	Inspection procedure Perform the operation start and replace A4 (Combustion engine Control unit). Go to Step6
	Step10	Inspection procedure Repair or replace electrical lines. Reinstall all the removed connectors. Erase the fault code. Execute the control “Cold start”. Check if this diagnosis code has occurred. Are current fault codes present? No: Go to Step6 Yes: Go to Step4

520400-31: Component ‘Y12 (Glow plug 2)’ has a short circuit.

Generation condition		[Test Condition] • Monitoring is active while the battery voltage is over 10.00V • If glow plugs are activated (LIN communication active)
		[Fault Detection] • If a Short circuit error is reported for a glow plug over LIN. (Com_stGlpStat=03 and Com_stErrGlpX>0, both in GCU_DIAG message).
		[Defect Debouncing] • Immediate
Fault healing		• No short circuit reported
System reaction		• Glow plug for cylinder 2 is deactivated. • Further reactions according to FIDs
		• 1) Fid / Glow control monitor deactivated
Failure cause		• Short circuit in glow plug of cylinder 2 or in its wiring
Failure repair		• Check wiring, check and replace glow plug
Inspection procedure	Step1	Inspect or verify the following items. Repair or replace faulty items as necessary. If any other fault code has occurred, perform the diagnostics procedure for the fault code. Go to Step2
	Step2	Inspect or verify the following items. Repair or replace faulty items as necessary. If one of diagnosis codes associated with A20 (SAM) is generated, make a system diagnosis according to the diagnosis code. Go to Step3

https://truckmanualshub.com/

Inspection procedure	Step3	Inspection procedure Turn the starter switch in OFF. Remove the connector of A4 (Combustion engine Control unit). Remove the connector of A31 (Preglow system Control unit). Remove the connector of Y11 (Glow plug 1). Remove the connector of Y12 (Glow plug 2). Remove the connector of Y13 (Glow plug 3). Remove the connector of Y14 (Glow plug 4). Remove the connector of HF5. Remove the connector of A20 (SAM). Remove the connector of Ground. Check the circuit across A4.X2.94/44 and A31.11/10 for open or short circuit. Check the circuit across A31.11/1 and Y11.1/1 for open or short circuit. Check the circuit across A31.11/2 and Y12.1/1 for open or short circuit. Check the circuit across A31.11/3 and Y13.1/1 for open or short circuit. Check the circuit across A31.11/4 and Y14.1/1 for open or short circuit. Check the circuit across A31.11/11 and HF5 for open or short circuit. Check the circuit across A31.11/6 and A20.X10.14/2 for open or short circuit. Check the circuit across A31.11/7 and Ground for open or short circuit. Make a visual check on each connector. Is any abnormality recognized? No: Go to Step4 Yes: Go to Step10
	Step4	Inspection procedure Reinstall all the removed connectors. Erase the fault code. Turn the starter switch in ON. Execute the control “Cold start”. Turn the starter switch in OFF. Replaced the damaged electrical parts Go to Step5
	Step5	Inspection procedure Turn the starter switch in OFF. Reinstall all the removed connectors. Erase fault memory and perform a test drive. Check if this diagnosis code has occurred. Are current fault codes present? No: Go to Step6 Yes: Go to Step7
	Step6	Inspection completed
	Step7	Inspection procedure Turn the starter switch in OFF. Replace component “A31 (Preglow system Control unit)”. Reinstall all the removed connectors. Go to Step8
	Step8	Inspection procedure Turn the starter switch in OFF. Reinstall all the removed connectors. Erase fault memory and perform a test drive. Check if this diagnosis code has occurred. Are current fault codes present? No: Go to Step6 Yes: Go to Step9
	Step9	Inspection procedure Perform the operation start and replace A4 (Combustion engine Control unit). Go to Step6
	Step10	Inspection procedure Repair or replace electrical lines. Reinstall all the removed connectors. Erase the fault code. Execute the control “Cold start”. Check if this diagnosis code has occurred. Are current fault codes present? No: Go to Step6 Yes: Go to Step4

https://truckmanualshub.com/

520401-31: The power supply of circuit 30 is not OK.

Generation condition		[Test Condition] • Monitoring is active while the battery voltage is over 10.00V • If glow plugs are activated (LIN communication active only when glow plugs are active)
		[Fault Detection] • When there is no voltage present at the Terminal 30, reported over LIN (Com_uT30Vltg1=0x00) or • (Com_uT30Vltg2=0x00 in message GCU_DIAG)
		[Defect Debouncing] • Defect condition exceeded cumulatively > 20.00 events • Failure is detected if active for 25% of events
Fault healing		• Missing voltage not reported
System reaction		• Glow Plug switched OFF • Further reactions see FIDs
		• 1) Fid / Inhibit glowplug monitor
Failure cause		• No supply on T30, GCU4 detects no terminal 30 voltage
Failure repair		• Measure GCU4 voltage at connector term.30 • If voltage is not present or very low failure can be result of disconnected T30 supply wire. Check wire and connection (slackly screw at battery)
Inspection procedure	Step1	Inspect or verify the following items. Repair or replace faulty items as necessary. If any other fault code has occurred, perform the diagnostics procedure for the fault code. Go to Step2
	Step2	Inspect or verify the following items. Repair or replace faulty items as necessary. If one of diagnosis codes associated with A20 (SAM) is generated, make a system diagnosis according to the diagnosis code. Go to Step3
	Step3	Inspection procedure Turn the starter switch in OFF. Remove the connector of A4 (Combustion engine Control unit). Remove the connector of A31 (Preglow system Control unit). Remove the connector of Y11 (Glow plug 1). Remove the connector of Y12 (Glow plug 2). Remove the connector of Y13 (Glow plug 3). Remove the connector of Y14 (Glow plug 4). Remove the connector of HF5. Remove the connector of A20 (SAM). Remove the connector of Ground. Check the circuit across A4.X2.94/44 and A31.11/10 for open or short circuit. Check the circuit across A31.11/1 and Y11.1/1 for open or short circuit. Check the circuit across A31.11/2 and Y12.1/1 for open or short circuit. Check the circuit across A31.11/3 and Y13.1/1 for open or short circuit. Check the circuit across A31.11/4 and Y14.1/1 for open or short circuit. Check the circuit across A31.11/11 and HF5 for open or short circuit. Check the circuit across A31.11/6 and A20.X10.14/2 for open or short circuit. Check the circuit across A31.11/7 and Ground for open or short circuit. Make a visual check on each connector. Is any abnormality recognized? No: Go to Step4 Yes: Go to Step10
	Step4	Inspection procedure Reinstall all the removed connectors. Erase the fault code. Turn the starter switch in ON. Execute the control “Cold start”. Turn the starter switch in OFF. Replaced the damaged electrical parts Go to Step5

Inspection procedure	Step5	Inspection procedure Turn the starter switch in OFF. Reinstall all the removed connectors. Erase fault memory and perform a test drive. Check if this diagnosis code has occurred. Are current fault codes present? No: Go to Step6 Yes: Go to Step7
	Step6	Inspection completed
	Step7	Inspection procedure Turn the starter switch in OFF. Replace component “A31 (Preglow system Control unit)”. Reinstall all the removed connectors. Go to Step8
	Step8	Inspection procedure Turn the starter switch in OFF. Reinstall all the removed connectors. Erase fault memory and perform a test drive. Check if this diagnosis code has occurred. Are current fault codes present? No: Go to Step6 Yes: Go to Step9
	Step9	Inspection procedure Perform the operation start and replace A4 (Combustion engine Control unit). Go to Step6
	Step10	Inspection procedure Repair or replace electrical lines. Reinstall all the removed connectors. Erase the fault code. Execute the control “Cold start”. Check if this diagnosis code has occurred. Are current fault codes present? No: Go to Step6 Yes: Go to Step4

520418-0: Signal Range Check (SRC) for ‘voltage of the piezo fuel injector actuator’ reports HIGH.

Generation condition	[Test Condition] • Continuously speed synchronously with each measurement of a main injection.
	[Fault Detection] • If the raw actuator voltage of Piezo Injector > 3.30V
	[Defect Debouncing] • Defect condition exceeded cumulatively > 10.00 events • Failure is detected if active for 50% of events
Fault healing	• If the raw actuator voltage of Piezo Injector < 3.30V
System reaction	• Only according FID (see FID’s)
	• 1) Fid / Reagent dosing quantity for SCR reduced (to DStgy_facUreaDesRed_C) • 2) FId / Adaptation of the correction values of Fuel Mass Observer (FMO) inhibited (no correction of detected deviation between injected fuel and Lambda sensor signal) • 3) FId / Fuel Mass Observer (FMO) switched off (no monitoring of injected fuel by Lambda sensor) • 4) FId / Misfire Detection disabled • 5) FId / Inhibit OxiCat passive monitor • 6) Fid / SCR Monitoring or DEF injection release not possible (according calibration of Release Masks)
Failure cause	• Failure in wiring harness between ECU and injectors • Failure in injector (actuator) • Failure in ECU (power stage)
Failure repair	• Check wiring harness between ECU and injectors • Check injectors • Check/Replace ECU

https://truckmanualshub.com/

Inspection procedure	Step1	Inspection procedure Turn the starter switch in OFF. Remove the connector of A4 (Combustion engine Control unit). Remove the connector of Y15 (Fuel injector 1). Remove the connector of Y16 (Fuel injector 2). Remove the connector of Y17 (Fuel injector 3). Remove the connector of Y18 (Fuel injector 4). Check the circuit across Y15.2/1 and A4.X1.60/31 for open or short circuit. Check the circuit across Y15.2/2 and A4.X1.60/46 for open or short circuit. Check the circuit across Y16.2/1 and A4.X1.60/17 for open or short circuit. Check the circuit across Y16.2/2 and A4.X1.60/2 for open or short circuit. Check the circuit across Y17.2/1 and A4.X1.60/16 for open or short circuit. Check the circuit across Y17.2/2 and A4.X1.60/1 for open or short circuit. Check the circuit across Y18.2/1 and A4.X1.60/32 for open or short circuit. Check the circuit across Y18.2/2 and A4.X1.60/47 for open or short circuit. Make a visual check on each connector. Is any abnormality recognized? No: Go to Step2 Yes: Go to Step6
	Step2	Inspection procedure Reinstall all the removed connectors. Turn the starter switch in ON. Erase the fault code. Execute the control “Fuel injector”. Turn the starter switch in OFF. Replace the damaged Fuel injector. Perform the learned value resetting procedure of Fuel injector which A4 (Combustion engine Control unit) learns. Perform coding of Fuel injector which A4 (Combustion engine Control unit) learns. Go to Step3
	Step3	Inspection procedure Turn the starter switch in OFF. Reinstall all the removed connectors. Erase fault memory and perform a test drive. Check if this diagnosis code has occurred. Are current fault codes present? No: Go to Step5 Yes: Go to Step4
	Step4	Inspection procedure Perform the operation start and replace A4 (Combustion engine Control unit). Go to Step5
	Step5	Inspection completed
	Step6	Inspection procedure Repair or replace electrical lines. Reinstall all the removed connectors. Erase fault memory and perform a test drive. Check if this diagnosis code has occurred. Are current fault codes present? No: Go to Step5 Yes: Go to Step2

520418-1: Signal Range Check (SRC) for ‘voltage of the piezo fuel injector actuator’ reports LOW.

Generation condition	[Test Condition] • Continuously speed synchronously with each measurement of a main injection.
	[Fault Detection] • If the raw actuator voltage IVActr_uActrRaw_mp or IVActr_uImmdMeasRaw_mp falls below the limiting value 0.00mV, an error will be detected.
	[Defect Debouncing] • Defect condition exceeded cumulatively > 10.00 events • Failure is detected if active for 50% of events
Fault healing	• If the raw actuator voltage of Piezo injectors > 0.00mV

https://truckmanualshub.com/

System reaction		• Only according FID (see FID's)
		• 1) Fid / Reagent dosing quantity for SCR reduced (to DStgy_facUreaDesRed_C) • 2) FId / Adaptation of the correction values of Fuel Mass Observer (FMO) inhibited (no correction of detected deviation between injected fuel and Lambda sensor signal) • 3) FId / Fuel Mass Observer (FMO) switched off (no monitoring of injected fuel by Lambda sensor) • 4) FId / Misfire Detection disabled • 5) FId / Inhibit OxiCat passive monitor • 6) Fid / SCR Monitoring or DEF injection release not possible (according calibration of Release Masks)
Failure cause		• Failure in wiring harness between ECU and injectors • Failure in injector (actuator) • Failure in ECU (power stage)
Failure repair		• Check wiring harness between ECU and injectors • Check injectors • Check/Replace ECU
Inspection procedure	Step1	Inspection procedure Turn the starter switch in OFF. Remove the connector of A4 (Combustion engine Control unit). Remove the connector of Y15 (Fuel injector 1). Remove the connector of Y16 (Fuel injector 2). Remove the connector of Y17 (Fuel injector 3). Remove the connector of Y18 (Fuel injector 4). Check the circuit across Y15.2/1 and A4.X1.60/31 for open or short circuit. Check the circuit across Y15.2/2 and A4.X1.60/46 for open or short circuit. Check the circuit across Y16.2/1 and A4.X1.60/17 for open or short circuit. Check the circuit across Y16.2/2 and A4.X1.60/2 for open or short circuit. Check the circuit across Y17.2/1 and A4.X1.60/16 for open or short circuit. Check the circuit across Y17.2/2 and A4.X1.60/1 for open or short circuit. Check the circuit across Y18.2/1 and A4.X1.60/32 for open or short circuit. Check the circuit across Y18.2/2 and A4.X1.60/47 for open or short circuit. Make a visual check on each connector. Is any abnormality recognized? No: Go to Step2 Yes: Go to Step6
	Step2	Inspection procedure Reinstall all the removed connectors. Turn the starter switch in ON. Erase the fault code. Execute the control "Fuel injector". Turn the starter switch in OFF. Replace the damaged Fuel injector. Perform the learned value resetting procedure of Fuel injector which A4 (Combustion engine Control unit) learns. Perform coding of Fuel injector which A4 (Combustion engine Control unit) learns. Go to Step3
	Step3	Inspection procedure Turn the starter switch in OFF. Reinstall all the removed connectors. Erase fault memory and perform a test drive. Check if this diagnosis code has occurred. Are current fault codes present? No: Go to Step5 Yes: Go to Step4
	Step4	Inspection procedure Perform the operation start and replace A4 (Combustion engine Control unit). Go to Step5
	Step5	Inspection completed

https://truckmanualshub.com/

Inspection procedure	Step6	Inspection procedure Repair or replace electrical lines. Reinstall all the removed connectors. Erase fault memory and perform a test drive. Check if this diagnosis code has occurred. Are current fault codes present? No: Go to Step5 Yes: Go to Step2

520419-2: Injector Adjustment: IMA/ISA programming not correct for cyl 1.

Generation condition		[Test Condition] • After each switch on of the ECU (Key 15 “on”)
		[Fault Detection] • The checksum is not correct • OR • one correction class is not within 1.00- and 6.00- • OR • the EEPROM displays a value of 0 (not IMA/ISA programming not done)
		[Defect Debouncing] • immediate
Fault healing		• No healing at actual driving cycle. • Healing possible if all values correct at next system start or after a reprogramming of the injector correction.
System reaction		• The dedicated injector is not corrected, i.e. the fuel quantity of this injector could deviate more than usual. Possibly irregular engine idle • Further reactions according FID (see FID’s)
		• 1) Fid / SCR Monitoring or DEF injection release not possible (according calibration of Release Masks)
Failure cause		• Invalid IMA/ISA code has been programmed • wrong programming/flashing of the EDC (initialization of EEPROM) • internal defect of the ECU
Failure repair		• Reprogram IMA/ISA code • Reflash the ECU (including EEPROM initialisation) • if defect persists: replace EDC
Inspection procedure	Step1	Inspection procedure Inspect the suspected factors mentioned above sequentially to locate faulty parts. Repair or replace the faulty part as necessary.

520419-31: Injector Adjustment: IMA programming not correct for injector cyl 1.

Generation condition		[Test Condition] • After each switch on of the ECU (Key 15 “on”) • After each programming with tester.
		[Fault Detection] • the checksum of the injector adjustment code words is not correct • OR • the basic correction quantity of at least 1 correction class not within the acceptable range for this class • OR • no injector adjustment values could be read due to faulty EEPROM access.
		[Defect Debouncing] • immediate
Fault healing		• No healing at actual driving cycle. • Healing possible if all values correct at next system start or after a reprogramming of the injector correction.
System reaction		• The dedicated injector is not corrected, i.e. the fuel quantity of this injector could deviate more than usual. Possibly irregular engine idle • Further reactions according FID (see FID’s)
		• 1) Fid / SCR Monitoring or DEF injection release not possible (according calibration of Release Masks)

https://truckmanualshub.com/

Failure cause		• Invalid IMA code has been programmed • wrong programming/flashing of the EDC (initialization of EEPROM) • internal defect of the ECU
Failure repair		• Reprogram IMA code • Reflash the ECU (including EEPROM initialisation) • if defect persists: replace EDC
Inspection procedure	Step1	Inspection procedure Inspect the suspected factors mentioned above sequentially to locate faulty parts. Repair or replace the faulty part as necessary.

520420-2: Injector Adjustment: IMA/ISA programming not correct for cyl 3.

Generation condition		[Test Condition] • After each switch on of the ECU (Key 15 “on”)
		[Fault Detection] • The checksum is not correct • OR • one correction class is not within 1.00- and 6.00- • OR • the EEPROM displays a value of 0 (not IMA/ISA programming not done)
		[Defect Debouncing] • immediate
Fault healing		• No healing at actual driving cycle. • Healing possible if all values correct at next system start or after a reprogramming of the injector correction.
System reaction		• The dedicated injector is not corrected, i.e. the fuel quantity of this injector could deviate more than usual. Possibly irregular engine idle • Further reactions according FID (see FID’s)
		• 1) Fid / SCR Monitoring or DEF injection release not possible (according calibration of Release Masks)
Failure cause		• Invalid IMA/ISA code has been programmed • wrong programming/flashing of the EDC (initialization of EEPROM) • internal defect of the ECU
Failure repair		• Reprogram IMA/ISA code • Reflash the ECU (including EEPROM initialisation) • if defect persists: replace EDC
Inspection procedure	Step1	Inspection procedure Inspect the suspected factors mentioned above sequentially to locate faulty parts. Repair or replace the faulty part as necessary.

520420-31: Injector Adjustment: IMA programming not correct for injector cyl 3.

Generation condition		[Test Condition] • After each switch on of the ECU (Key 15 “on”) • After each programming with tester.
		[Fault Detection] • the checksum of the injector adjustment code words is not correct • OR • the basic correction quantity of at least 1 correction class not within the acceptable range for this class • OR • no injector adjustment values could be read due to faulty EEPROM access.
		[Defect Debouncing] • immediate
Fault healing		• No healing at actual driving cycle. • Healing possible if all values correct at next system start or after a reprogramming of the injector correction.
System reaction		• The dedicated injector is not corrected, i.e. the fuel quantity of this injector could deviate more than usual. Possibly irregular engine idle • Further reactions according FID (see FID’s)
		• 1) Fid / SCR Monitoring or DEF injection release not possible (according calibration of Release Masks)

https://truckmanualshub.com/

Failure cause		• Invalid IMA code has been programmed • wrong programming/flashing of the EDC (initialization of EEPROM) • internal defect of the ECU
Failure repair		• Reprogram IMA code • Reflash the ECU (including EEPROM initialisation) • if defect persists: replace EDC
Inspection procedure	Step1	Inspection procedure Inspect the suspected factors mentioned above sequentially to locate faulty parts. Repair or replace the faulty part as necessary.

520421-2: Injector Adjustment: IMA/ISA programming not correct for cyl 4.

Generation condition		[Test Condition] • After each switch on of the ECU (Key 15 “on”)
		[Fault Detection] • The checksum is not correct • OR • one correction class is not within 1.00- and 6.00- • OR • the EEPROM displays a value of 0 (not IMA/ISA programming not done)
		[Defect Debouncing] • immediate
Fault healing		• No healing at actual driving cycle. • Healing possible if all values correct at next system start or after a reprogramming of the injector correction.
System reaction		• The dedicated injector is not corrected, i.e. the fuel quantity of this injector could deviate more than usual. Possibly irregular engine idle • Further reactions according FID (see FID’s)
		• 1) Fid / SCR Monitoring or DEF injection release not possible (according calibration of Release Masks)
Failure cause		• Invalid IMA/ISA code has been programmed • wrong programming/flashing of the EDC (initialization of EEPROM) • internal defect of the ECU
Failure repair		• Reprogram IMA/ISA code • Reflash the ECU (including EEPROM initialisation) • if defect persists: replace EDC
Inspection procedure	Step1	Inspection procedure Inspect the suspected factors mentioned above sequentially to locate faulty parts. Repair or replace the faulty part as necessary.

520421-31: Injector Adjustment: IMA programming not correct for injector cyl 4.

Generation condition		[Test Condition] • After each switch on of the ECU (Key 15 “on”) • After each programming with tester.
		[Fault Detection] • the checksum of the injector adjustment code words is not correct • OR • the basic correction quantity of at least 1 correction class not within the acceptable range for this class • OR • no injector adjustment values could be read due to faulty EEPROM access.
		[Defect Debouncing] • immediate
Fault healing		• No healing at actual driving cycle. • Healing possible if all values correct at next system start or after a reprogramming of the injector correction.
System reaction		• The dedicated injector is not corrected, i.e. the fuel quantity of this injector could deviate more than usual. Possibly irregular engine idle • Further reactions according FID (see FID’s)
		• 1) Fid / SCR Monitoring or DEF injection release not possible (according calibration of Release Masks)

https://truckmanualshub.com/

Failure cause		• Invalid IMA code has been programmed • wrong programming/flashing of the EDC (initialization of EEPROM) • internal defect of the ECU
Failure repair		• Reprogram IMA code • Reflash the ECU (including EEPROM initialisation) • if defect persists: replace EDC
Inspection procedure	Step1	Inspection procedure Inspect the suspected factors mentioned above sequentially to locate faulty parts. Repair or replace the faulty part as necessary.

520422-2: Injector Adjustment: IMA/ISA programming not correct for cyl 2.

Generation condition		[Test Condition] • After each switch on of the ECU (Key 15 “on”)
		[Fault Detection] • The checksum is not correct • OR • one correction class is not within 1.00- and 6.00- • OR • the EEPROM displays a value of 0 (not IMA/ISA programming not done)
		[Defect Debouncing] • immediate
Fault healing		• No healing at actual driving cycle. • Healing possible if all values correct at next system start or after a reprogramming of the injector correction.
System reaction		• The dedicated injector is not corrected, i.e. the fuel quantity of this injector could deviate more than usual. Possibly irregular engine idle • Further reactions according FID (see FID’s)
		• 1) Fid / SCR Monitoring or DEF injection release not possible (according calibration of Release Masks)
Failure cause		• Invalid IMA/ISA code has been programmed • wrong programming/flashing of the EDC (initialization of EEPROM) • internal defect of the ECU
Failure repair		• Reprogram IMA/ISA code • Reflash the ECU (including EEPROM initialisation) • if defect persists: replace EDC
Inspection procedure	Step1	Inspection procedure Inspect the suspected factors mentioned above sequentially to locate faulty parts. Repair or replace the faulty part as necessary.

520422-31: Injector Adjustment: IMA programming not correct for injector cyl 2.

Generation condition		[Test Condition] • After each switch on of the ECU (Key 15 “on”) • After each programming with tester.
		[Fault Detection] • the checksum of the injector adjustment code words is not correct • OR • the basic correction quantity of at least 1 correction class not within the acceptable range for this class • OR • no injector adjustment values could be read due to faulty EEPROM access.
		[Defect Debouncing] • immediate
Fault healing		• No healing at actual driving cycle. • Healing possible if all values correct at next system start or after a reprogramming of the injector correction.
System reaction		• The dedicated injector is not corrected, i.e. the fuel quantity of this injector could deviate more than usual. Possibly irregular engine idle • Further reactions according FID (see FID’s)
		• 1) Fid / SCR Monitoring or DEF injection release not possible (according calibration of Release Masks)

https://truckmanualshub.com/

Failure cause		• Invalid IMA code has been programmed • wrong programming/flashing of the EDC (initialization of EEPROM) • internal defect of the ECU
Failure repair		• Reprogram IMA code • Reflash the ECU (including EEPROM initialisation) • if defect persists: replace EDC
Inspection procedure	Step1	Inspection procedure Inspect the suspected factors mentioned above sequentially to locate faulty parts. Repair or replace the faulty part as necessary.

520423-16: Signal Range Check (SRC) for 'Accelerator pedal position during Low Idle Accelerator pedal position Adjustment' reports HIGH.

Generation condition		[Test Condition] • Monitoring is active 2.00s after ECU initialization while engine isn't running yet, while the engine isn't cranking, 2.00s after engine startup, while the battery voltage is over 10.00V, as long as the battery voltage is over 10.00V and 2.00s after this threshold has been exceeded, if none of the CAN controllers is in bus-off state, 2.00s after last CAN controller is no more in bus-off state and if the ECU is not in afterrun • The signal range checks are only carried out if ADC has not reported a module error. Continuously.
		[Fault Detection] • The sensed raw voltage value LIAdj_uAPPRaw is above 4.50V
		[Defect Debouncing] • Defect condition exceeded cumulatively > 500.00ms • Failure is detected if active for 25% of the time
Fault healing		• The sensed raw voltage value LIAdj_uAPPRaw is less than 4.50V
System reaction		• Low idle accelerator pedal adjustment value jumps to fixed replacement value 0.00%
Failure cause		• Short circuit to external source or defective sensor
Failure repair		• Check wiring and sensor
Inspection procedure	Step1	Inspect or verify the following items. Repair or replace faulty items as necessary. If any other fault code has occurred, perform the diagnostics procedure for the fault code. Go to Step2
	Step2	Inspect or verify the following items. Repair or replace faulty items as necessary. If one of diagnosis codes associated with A20 (SAM) is generated, make a system diagnosis according to the diagnosis code. Go to Step3
	Step3	Inspection procedure Turn the starter switch in OFF. Remove the connector of A4 (Combustion engine Control unit). Remove the connector of B17 (Position sensor Accelerator pedal). Check the circuit across A4.X2.94/30 and B17.6/5 for open or short circuit. Check the circuit across A4.X2.94/57 and B17.6/4 for open or short circuit. Check the circuit across A4.X2.94/45 and B17.6/6 for open or short circuit. Check the circuit across A4.X2.94/8 and B17.6/2 for open or short circuit. Check the circuit across A4.X2.94/35 and B17.6/1 for open or short circuit. Check the circuit across A4.X2.94/46 and B17.6/3 for open or short circuit. Make a visual check on each connector. Is any abnormality recognized? No: Go to Step4 Yes: Go to Step8
	Step4	Inspection procedure Turn the starter switch in OFF. Replace component "B17 (Position sensor Accelerator pedal)". Reinstall all the removed connectors. Turn the starter switch in ON. Go to Step5

Inspection procedure	Step5	Inspection procedure Turn the starter switch in OFF. Reinstall all the removed connectors. Erase fault memory and perform a test drive. Check if this diagnosis code has occurred. Are current fault codes present? No: Go to Step7 Yes: Go to Step6
	Step6	Inspection procedure Perform the operation start and replace A4 (Combustion engine Control unit). Go to Step7
	Step7	Inspection completed
	Step8	Inspection procedure Turn the starter switch in OFF. Remove the connector of A4 (Combustion engine Control unit). Remove the connector of X17 (Intermediate connector). Check the circuit across A4.X2.94/45 and X16.16/1 for open or short circuit. Check the circuit across A4.X2.94/46 and X16.16/5 for open or short circuit. Check the circuit across A4.X2.94/57 and X16.16/2 for open or short circuit. Check the circuit across A4.X2.94/35 and X16.16/6 for open or short circuit. Check the circuit across A4.X2.94/30 and X16.16/2 for open or short circuit. Check the circuit across A4.X2.94/8 and X16.16/7 for open or short circuit. Make a visual check on each connector. Is any abnormality recognized? No: Go to Step9 Yes: Go to Step10
	Step9	Inspection procedure Repair or replace the harness across B17 (Position sensor Accelerator pedal) and X17 (Intermediate connector). Reinstall all the removed connectors. Erase fault memory and perform a test drive. Check if this diagnosis code has occurred. Are current fault codes present? No: Go to Step7 Yes: Go to Step4
	Step10	Inspection procedure Repair or replace the harness across A4 (Combustion engine Control unit) and X17 (Intermediate connector). Reinstall all the removed connectors. Erase fault memory and perform a test drive. Check if this diagnosis code has occurred. Are current fault codes present? No: Go to Step7 Yes: Go to Step4

520423-18: Signal Range Check (SRC) for 'Accelerator pedal position during Low Idle Accelerator pedal position Adjustment' reports LOW.

Generation condition	[Test Condition] • Monitoring is active 2.00s after ECU initialization while engine isn't running yet, while the engine isn't cranking, 2.00s after engine startup, while the battery voltage is over 10.00V, as long as the battery voltage is over 10.00V and 2.00s after this threshold has been exceeded, if none of the CAN controllers is in bus-off state, 2.00s after last CAN controller is no more in bus-off state and if the ECU is not in afterrun • The signal range checks are only carried out if ADC has not reported a module error. Continuously.
	[Fault Detection] • The sensed raw voltage value LIAdj_uAPPRaw is less than 500.00mV
	[Defect Debouncing] • Defect condition exceeded cumulatively > 500.00ms • Failure is detected if active for 25% of the time
Fault healing	• The sensed raw voltage value LIAdj_uAPPRaw is above 500.00mV
System reaction	• Low idle accelerator pedal adjustment value jumps to fixed replacement value 0.00%

https://truckmanualshub.com/

Failure cause		• Short circuit of sensor to ground or defective sensor
Failure repair		• Check wiring and sensor
Inspection procedure	Step1	Inspect or verify the following items. Repair or replace faulty items as necessary. If any other fault code has occurred, perform the diagnostics procedure for the fault code. Go to Step2
	Step2	Inspect or verify the following items. Repair or replace faulty items as necessary. If one of diagnosis codes associated with SAM ECU is generated, make a system diagnosis according to the diagnosis code. Go to Step3
	Step3	Inspection procedure Turn the starter switch in OFF. Remove the connector of A4 (Combustion engine Control unit). Remove the connector of B17 (Position sensor Accelerator pedal). Check the circuit across A4.X2.94/30 and B17.6/5 for open or short circuit. Check the circuit across A4.X2.94/57 and B17.6/4 for open or short circuit. Check the circuit across A4.X2.94/45 and B17.6/6 for open or short circuit. Check the circuit across A4.X2.94/8 and B17.6/2 for open or short circuit. Check the circuit across A4.X2.94/35 and B17.6/1 for open or short circuit. Check the circuit across A4.X2.94/46 and B17.6/3 for open or short circuit. Make a visual check on each connector. Is any abnormality recognized? No: Go to Step4 Yes: Go to Step8
	Step4	Inspection procedure Turn the starter switch in OFF. Replace component “B17 (Position sensor Accelerator pedal)”. Reinstall all the removed connectors. Turn the starter switch in ON. Go to Step5
	Step5	Inspection procedure Turn the starter switch in OFF. Reinstall all the removed connectors. Erase fault memory and perform a test drive. Check if this diagnosis code has occurred. Are current fault codes present? No: Go to Step7 Yes: Go to Step6
	Step6	Inspection procedure Perform the operation start and replace A4 (Combustion engine Control unit). Go to Step7
	Step7	Inspection completed
	Step8	Inspection procedure Turn the starter switch in OFF. Remove the connector of A4 (Combustion engine Control unit). Remove the connector of X17 (Intermediate connector). Check the circuit across A4.X2.94/45 and X16.16/1 for open or short circuit. Check the circuit across A4.X2.94/46 and X16.16/5 for open or short circuit. Check the circuit across A4.X2.94/57 and X16.16/2 for open or short circuit. Check the circuit across A4.X2.94/35 and X16.16/6 for open or short circuit. Check the circuit across A4.X2.94/30 and X16.16/2 for open or short circuit. Check the circuit across A4.X2.94/8 and X16.16/7 for open or short circuit. Make a visual check on each connector. Is any abnormality recognized? No: Go to Step9 Yes: Go to Step10

https://truckmanualshub.com/

Inspection procedure	Step9	Inspection procedure Repair or replace the harness across B17 (Position sensor Accelerator pedal) and X17 (Intermediate connector). Reinstall all the removed connectors. Erase fault memory and perform a test drive. Check if this diagnosis code has occurred. Are current fault codes present? No: Go to Step7 Yes: Go to Step4
	Step10	Inspection procedure Repair or replace the harness across A4 (Combustion engine Control unit) and X17 (Intermediate connector). Reinstall all the removed connectors. Erase fault memory and perform a test drive. Check if this diagnosis code has occurred. Are current fault codes present? No: Go to Step7 Yes: Go to Step4

520424-0: Signal Range Check (SRC) for 'Accelerator Pedal position during Low Idle Speed Adjustment' reports HIGH.

Generation condition		[Test Condition] • Monitoring is active 2.00s after ECU initialization while engine isn't running yet, while the engine isn't cranking, 2.00s after engine startup, while the battery voltage is over 10.00V, as long as the battery voltage is over 10.00V and 2.00s after this threshold has been exceeded, if none of the CAN controllers is in bus-off state, 2.00s after last CAN controller is no more in bus-off state and if the ECU is not in afterrun • The signal range checks are only carried out if ADC has not reported a module error. Continuously.
		[Fault Detection] • The sensed raw voltage value LIAdj_uSpdRaw is above 4.50V
		[Defect Debouncing] • Defect condition exceeded cumulatively > 500.00ms • Failure is detected if active for 25% of the time
Fault healing		• The sensed raw voltage value LIAdj_uSpdRaw is less than 4.50V
System reaction		• Low idle speed adjustment value is frozen at last valid value on preliminary failure and jumps to fixed replacement value 0.00mV
Failure cause		• Short circuit of sensor to external source or defective sensor
Failure repair		• Check wiring and sensor
Inspection procedure	Step1	Inspect or verify the following items. Repair or replace faulty items as necessary. If any other fault code has occurred, perform the diagnostics procedure for the fault code. Go to Step2
	Step2	Inspect or verify the following items. Repair or replace faulty items as necessary. If one of diagnosis codes associated with SAM ECU is generated, make a system diagnosis according to the diagnosis code. Go to Step3

https://truckmanualshub.com/

Inspection procedure	Step3	Inspection procedure Turn the starter switch in OFF. Remove the connector of A4 (Combustion engine Control unit). Remove the connector of B17 (Position sensor Accelerator pedal). Check the circuit across A4.X2.94/30 and B17.6/5 for open or short circuit. Check the circuit across A4.X2.94/57 and B17.6/4 for open or short circuit. Check the circuit across A4.X2.94/45 and B17.6/6 for open or short circuit. Check the circuit across A4.X2.94/8 and B17.6/2 for open or short circuit. Check the circuit across A4.X2.94/35 and B17.6/1 for open or short circuit. Check the circuit across A4.X2.94/46 and B17.6/3 for open or short circuit. Make a visual check on each connector. Is any abnormality recognized? No: Go to Step4 Yes: Go to Step8
	Step4	Inspection procedure Turn the starter switch in OFF. Replace component “B17 (Position sensor Accelerator pedal)”. Reinstall all the removed connectors. Turn the starter switch in ON. Go to Step5
	Step5	Inspection procedure Turn the starter switch in OFF. Reinstall all the removed connectors. Erase fault memory and perform a test drive. Check if this diagnosis code has occurred. Are current fault codes present? No: Go to Step7 Yes: Go to Step6
	Step6	Inspection procedure Perform the operation start and replace A4 (Combustion engine Control unit). Go to Step7
	Step7	Inspection completed
	Step8	Inspection procedure Turn the starter switch in OFF. Remove the connector of A4 (Combustion engine Control unit). Remove the connector of X17 (Intermediate connector). Check the circuit across A4.X2.94/45 and X10.1/5[VCC1] for open or short circuit. Check the circuit across A4.X2.94/46 and X10.1/5[VCC2] for open or short circuit. Check the circuit across A4.X2.94/57 and X10.2/5[SIG1] for open or short circuit. Check the circuit across A4.X2.94/35 and X10.2/5[SIG2] for open or short circuit. Check the circuit across A4.X2.94/30 and X10.2/5[SIG1] for open or short circuit. Check the circuit across A4.X2.94/8 and X10.1/5[GND2] for open or short circuit. Make a visual check on each connector. Is any abnormality recognized? No: Go to Step9 Yes: Go to Step10
	Step9	Inspection procedure Repair or replace the harness across B17 (Position sensor Accelerator pedal) and X17 (Intermediate connector). Reinstall all the removed connectors. Erase fault memory and perform a test drive. Check if this diagnosis code has occurred. Are current fault codes present? No: Go to Step7 Yes: Go to Step4

https://truckmanualshub.com/

Inspection procedure	Step10	Inspection procedure Repair or replace the harness across A4 (Combustion engine Control unit) and X17 (Intermediate connector). Reinstall all the removed connectors. Erase fault memory and perform a test drive. Check if this diagnosis code has occurred. Are current fault codes present? No: Go to Step7 Yes: Go to Step4

520424-1: Signal Range Check (SRC) for 'Accelerator Pedal position during Low Idle Speed Adjustment' reports LOW.

Generation condition		[Test Condition] • Monitoring is active 2.00s after ECU initialization while engine isn't running yet, while the engine isn't cranking, 2.00s after engine startup, while the battery voltage is over 10.00V, as long as the battery voltage is over 10.00V and 2.00s after this threshold has been exceeded, if none of the CAN controllers is in bus-off state, 2.00s after last CAN controller is no more in bus-off state and if the ECU is not in afterrun • The signal range checks are only carried out if ADC has not reported a module error. Continuously.
		[Fault Detection] • The sensed raw voltage value LIAdj_uSpdRaw is less than 500.00mV
		[Defect Debouncing] • Defect condition exceeded cumulatively > 500.00ms • Failure is detected if active for 25% of the time
Fault healing		• The sensed raw voltage value LIAdj_uSpdRaw is above 500.00mV
System reaction		• Low idle speed adjustment value is frozen at last valid value on preliminary failure and jumps to fixed replacement value 0.00mV
Failure cause		• Short circuit of sensor to ground or defective sensor
Failure repair		• Check wiring and sensor
Inspection procedure	Step1	Inspect or verify the following items. Repair or replace faulty items as necessary. If any other fault code has occurred, perform the diagnostics procedure for the fault code. Go to Step2
	Step2	Inspect or verify the following items. Repair or replace faulty items as necessary. If one of diagnosis codes associated with SAM ECU is generated, make a system diagnosis according to the diagnosis code. Go to Step3
	Step3	Inspection procedure Turn the starter switch in OFF. Remove the connector of A4 (Combustion engine Control unit). Remove the connector of B17 (Position sensor Accelerator pedal). Check the circuit across A4.X2.94/30 and B17.6/5 for open or short circuit. Check the circuit across A4.X2.94/57 and B17.6/4 for open or short circuit. Check the circuit across A4.X2.94/45 and B17.6/6 for open or short circuit. Check the circuit across A4.X2.94/8 and B17.6/2 for open or short circuit. Check the circuit across A4.X2.94/35 and B17.6/1 for open or short circuit. Check the circuit across A4.X2.94/46 and B17.6/3 for open or short circuit. Make a visual check on each connector. Is any abnormality recognized? No: Go to Step4 Yes: Go to Step8
	Step4	Inspection procedure Turn the starter switch in OFF. Replace component "B17 (Position sensor Accelerator pedal)". Reinstall all the removed connectors. Turn the starter switch in ON. Go to Step5

https://truckmanualshub.com/

Inspection procedure	Step5	Inspection procedure Turn the starter switch in OFF. Reinstall all the removed connectors. Erase fault memory and perform a test drive. Check if this diagnosis code has occurred. Are current fault codes present? No: Go to Step7 Yes: Go to Step6
	Step6	Inspection procedure Perform the operation start and replace A4 (Combustion engine Control unit). Go to Step7
	Step7	Inspection completed
	Step8	Inspection procedure Turn the starter switch in OFF. Remove the connector of A4 (Combustion engine Control unit). Remove the connector of X17 (Intermediate connector). Check the circuit across A4.X2.94/45 and X16.16/1 for open or short circuit. Check the circuit across A4.X2.94/46 and X16.16/5 for open or short circuit. Check the circuit across A4.X2.94/57 and X16.16/2 for open or short circuit. Check the circuit across A4.X2.94/35 and X16.16/6 for open or short circuit. Check the circuit across A4.X2.94/30 and X16.16/2 for open or short circuit. Check the circuit across A4.X2.94/8 and X16.16/7 for open or short circuit. Make a visual check on each connector. Is any abnormality recognized? No: Go to Step9 Yes: Go to Step10
	Step9	Inspection procedure Repair or replace the harness across B17 (Position sensor Accelerator pedal) and X17 (Intermediate connector). Reinstall all the removed connectors. Erase fault memory and perform a test drive. Check if this diagnosis code has occurred. Are current fault codes present? No: Go to Step7 Yes: Go to Step4
	Step10	Inspection procedure Repair or replace the harness across A4 (Combustion engine Control unit) and X17 (Intermediate connector). Reinstall all the removed connectors. Erase fault memory and perform a test drive. Check if this diagnosis code has occurred. Are current fault codes present? No: Go to Step7 Yes: Go to Step4

520425-19: Communication malfunction with LIN bus (Default)

Generation condition	[Test Condition] • Monitoring is active while the battery voltage is over 10.00V • Continuously
	[Fault Detection] • Short circuit of the LIN-Bus to Ubatt or Ground, or all LIN-Frames of all LIN-Nodes timed out.
	[Defect Debouncing] • Defect condition fulfilled continuously >2000.0 ms
Fault healing	• LIN Bus working correctly
System reaction	• No Lin communication possible, Glow plugs activation not possible. • Further reactions according to FIDs.
	• 1) FId / Funktionsidentifier for GCU4-Node TimeOut • 2) FId / Funktionsidentifier for Receive Frame GLP_CURB1 (x18) • 3) FId / Funktionsidentifier for Receive Frame GCU_DIAG (x1D) • 4) FId / Funktionsidentifier for LIN-BusOff
Failure cause	• LIN-Bus disturbance
Failure repair	• Check LIN-Bus

https://truckmanualshub.com/

Inspection procedure	Step1	Inspect or verify the following items. Repair or replace faulty items as necessary. If one of diagnosis codes associated with A20 (SAM) is generated, make a system diagnosis according to the diagnosis code. Go to step2
	Step2	Inspect or verify the following items. Repair or replace faulty items as necessary. If one of diagnosis codes associated with A20 (SAM) is generated, make a system diagnosis according to the diagnosis code. Go to step3
	Step3	Inspection procedure Turn the starter switch in OFF. Remove the connector of A4 (Combustion engine Control unit). Remove the connector of A31 (Preglow system Control unit). Remove the connector of Y11 (Glow plug 1). Remove the connector of Y12 (Glow plug 2). Remove the connector of Y13 (Glow plug 3). Remove the connector of Y14 (Glow plug 4). Remove the connector of HF5. Remove the connector of A20 (SAM). Remove the connector of Ground. Check the circuit across A4.X2.94/44 and A31.11/10 for open or short circuit. Check the circuit across A31.11/1 and Y11.1/1 for open or short circuit. Check the circuit across A31.11/2 and Y12.1/1 for open or short circuit. Check the circuit across A31.11/3 and Y13.1/1 for open or short circuit. Check the circuit across A31.11/4 and Y14.1/1 for open or short circuit. Check the circuit across A31.11/11 and HF5 for open or short circuit. Check the circuit across A31.11/6 and A20.X10.14/2 for open or short circuit. Check the circuit across A31.11/7 and Ground for open or short circuit. Make a visual check on each connector. Is any abnormality recognized? No: Go to step4 Yes: Go to step10
	Step4	Inspection procedure Reinstall all the removed connectors. Erase the fault code. Turn the starter switch in ON. Execute the control “Cold start”. Turn the starter switch in OFF. Replaced the damaged electrical parts Go to step5
	Step5	Inspection procedure Turn the starter switch in OFF. Reinstall all the removed connectors. Erase fault memory and perform a test drive. Check if this diagnosis code has occurred. Are current fault codes present? No: Go to step6 Yes: Go to step7
	Step6	Inspection completed
	Step7	Inspection procedure Turn the starter switch in OFF. Replace component “A31 (Preglow system Control unit)”. Reinstall all the removed connectors. Go to step8
	Step8	Inspection procedure Turn the starter switch in OFF. Reinstall all the removed connectors. Erase fault memory and perform a test drive. Check if this diagnosis code has occurred. Are current fault codes present? No: Go to step6 Yes: Go to step9

https://truckmanualshub.com/

Inspection procedure	Step9	Inspection procedure Perform the operation start and replace A4 (Combustion engine Control unit). Inspection completed
	Step10	Inspection procedure Repair or replace electrical lines. Reinstall all the removed connectors. Erase the fault code. Execute the control “Cold start”. Check if this diagnosis code has occurred. Are current fault codes present? No: Go to step6 Yes: Go to step4

520426-5: Lambda sensor has an Open circuit at the Nernst cell pin.

Generation condition	[Test Condition] • Following condition must be fulfilled: • The LSU Temperature is in operating range (> 804.96°C {1480.93°F}) for at least 10.00s • The Vehicle is not in Overrun (engine not motored) since 0.00ms or in Overrun not longer than 100.00ms • Battery Voltage > 10.70V for at least 2.00s or < 10.70V not longer than 0.00ms • LSU in normal operation (no error) • Monitoring not inhibited by FID_LSUUNVGOpnLdTst_0 due to another failure
	[Fault Detection] • If the Heater voltage (LSU_uRiFlt0) > 2.10V for at least 0.00ms or below 2.10V not longer than 0.00ms the Test state is activated. If the test state is active for at least 2.00s AND the O2 Raw signal (LSU_uO2Raw0) > 1.50V or < -1300.00mV during further 2.00s the failure is recognised (but not yet debounced!)
	[Defect Debouncing] • Defect condition exceeded cumulatively > 2.00s • Failure is detected if active for 50% of the time
Fault healing	• No Healing possible (disabled by Data set)
System reaction	• Only according FID (see FID)
	• 1) FId / Adaptation of the correction values of Fuel Mass Observer (FMO) inhibited (no correction of detected deviation between injected fuel and Lambda sensor signal) • 2) FId / Fuel Mass Observer (FMO) switched off (no monitoring of injected fuel by Lambda sensor) • 3) FId / The Adaptation of lambda Sensor disabled • 4) FId / The Difference Check between several Lambda Sensors is disabled • 5) FId / Lambda Sensor Heater Control and Monitoring disabled • 6) FId / Dynamic Signal Monitoring of Lambda Sensor disabled • 7) FId / Heater Coupling Check of lambda Sensor disabled • 8) FId / Electrical Open Load Check of Lambda Sensor disabled • 9) FId / Shunting Detection of Lambda Sensor disabled • 10) FId / The adaptation values for Lambda Sensor stored in EEPROM are reset to • 11) FId / O2 Measurement of Lambda sensor not valid • 12) FId / O2 Calibration disabled (last valid calibration value fixed) • 13) FId / Signal Range Check of O2 Signal of lambda Sensor disabled • 14) FId / Plausibility Check of O2-Signal of Lambda Sensor (e.g. with HFM or Air calculation by Boost pressure) is disabled and last valid value taken • 15) Fid / Calibrated inner resistance of Lambda Sensor is not valid • 16) FId / Calibration of inner resistance of Lambda Sensor disabled • 17) FId / Electrical check for Short to Battery and Short to Ground of Lambda Sensor disabled • 18) FId / Open Load Check for the Virtual Ground (VG) and Nernst Cell (UN) of Lambda Sensor disabled
Failure cause	• Defect in wiring (open load in Nernst Cell (UN) line, Nernst cell; Due to SW bug: open load in heater line, K51) of the lambda sensor, defective lambda sensor

https://truckmanualshub.com/

Failure repair		• Check entire wiring of lambda sensor, check lambda sensor itself, if necessary replace lambda sensor (and reset all learning values in EEPROM with tester) • Note for EURO OBD application: this failure activates a Performance limitation due to legislation. Therefore after repair following procedure must be done, otherwise there is the risk that performance limiter gets active, although the failure is repaired: • 1) clear memory with tester • 2) if performance limiter active: disable it with tester • 3) drive the vehicle ~20min in engine speed range >1600rpm with constant periods of ~5 sec and more than 5 motoring phases > 10sec (highest gear) • 4) check with “OBD scan tool” Service $01 (or Readiness state) that “comprehensive components” are “ready” • 5) if not: repeat the procedure
Inspection procedure	Step1	Inspection procedure If one of diagnosis codes associated with A20 (SAM) is generated, make a system diagnosis according to the diagnosis code. Go to Step2
	Step2	Inspection procedure Turn the starter switch in OFF. Remove the connector of A4 (Combustion engine Control unit). Remove the connector of B29 (Oxygen sensor). Remove the connector of A20 (SAM). Check the circuit across B29.6/6 and A4.X2.94/78 for open or short circuit. Check the circuit across B29.6/1 and A4.X2.94/76 for open or short circuit. Check the circuit across B29.6/3 and A4.X2.94/51 for open or short circuit. Check the circuit across B29.6/2 and A4.X2.94/86 for open or short circuit. Check the circuit across B29.6/4 and A20.X10.14/2 for open or short circuit. Make a visual check on each connector. Is any abnormality recognized? No: Go to Step3 Yes: Go to Step7
	Step3	Inspection procedure Turn the starter switch in OFF. Replace component “B29 (Oxygen sensor)”. Reinstall all the removed connectors. Turn the starter switch in ON. Perform the learned value resetting procedure of B29 (Oxygen sensor) which A4 (Combustion engine Control unit) learns. Go to Step4
	Step4	Inspection procedure Turn the starter switch in OFF. Reinstall all the removed connectors. Erase fault memory and perform a test drive. Check if this diagnosis code has occurred. Are current fault codes present? No: Go to Step6 Yes: Go to Step5
	Step5	Inspection procedure Perform the operation start and replace A4 (Combustion engine Control unit). Go to Step6
	Step6	Inspection completed
	Step7	Inspection procedure Repair or replace electrical lines. Reinstall all the removed connectors. Erase fault memory and perform a test drive. Check if this diagnosis code has occurred. Are current fault codes present? No: Go to Step6 Yes: Go to Step3

https://truckmanualshub.com/

520427-5: Lambda sensor has an Open circuit at pump current pin.

Generation condition		[Test Condition] • The O2 signal is valid and Lambda sensor in normal mode • The Open load test not inhibited by FID_LSUIPOpnLdTst0 due to another failure • The calculated O2 content >0.07- longer than 2.00s • Engine not in Overrun condition since 100.00ms or not longer in overrun than 0.00ms • Battery voltage >= 10.70V since 2.00s or < 10.70V not longer than 0.00ms • By Data Set (LSU_stOpMLmbd1EnaMsk): Engine in normal operation
		[Fault Detection] • The temperature compensated and filtered (2.00s) O2 value < 0.01- while O2 content in exhaust gas is expected due to engine conditions (no rich mixture).
		[Defect Debouncing] • Defect condition exceeded cumulatively > 2.00s • Failure is detected if active for 50% of the time
Fault healing		• No healing possible at this driving cycle. Failure no more active at start of next driving cycle
System reaction		• Only according FID (see FID)
		• 1) FId / Adaptation of the correction values of Fuel Mass Observer (FMO) inhibited (no correction of detected deviation between injected fuel and Lambda sensor signal) • 2) FId / Fuel Mass Observer (FMO) switched off (no monitoring of injected fuel by Lambda sensor) • 3) FId / The Adaptation of lambda Sensor disabled • 4) FId / The Difference Check between several Lambda Sensors is disabled • 5) FId / Dynamic Signal Monitoring of Lambda Sensor disabled • 6) FId / Heater Coupling Check of lambda Sensor disabled • 7) FId / Electrical Open Load Check of Lambda Sensor disabled • 8) FId / Shunting Detection of Lambda Sensor disabled • 9) FId / The adaptation values for Lambda Sensor stored in EEPROM are reset to • 10) FId / O2 Measurement of Lambda sensor not valid • 11) FId / O2 Calibration disabled (last valid calibration value fixed) • 12) FId / Signal Range Check of O2 Signal of lambda Sensor disabled • 13) FId / Plausibility Check of O2-Signal of Lambda Sensor (e.g. with HFM or Air calculation by Boost pressure) is disabled and last valid value taken • 14) FId / Open Load Check for the Virtual Ground (VG) and Nernst Cell (UN) of Lambda Sensor disabled
Failure cause		• Defect in wiring (open load in IP line, pump current; of the lambda sensor, defective lambda sensor
Failure repair		• Check entire wiring of lambda sensor, check lambda sensor itself, if necessary replace lambda sensor (and reset all learning values in EEPROM with tester) • Note for EURO OBD application: this failure activates a Performance limitation due to legislation. Therefore after repair following procedure must be done, otherwise there is the risk that performance limiter gets active, although the failure is repaired: • 1) clear memory with tester • 2) if performance limiter active: disable it with tester • 3) drive the vehicle ~20min in engine speed range >1600rpm with constant periods of ~5 sec and more than 5 motoring phases > 10sec (highest gear) • 4) check with “OBD scan tool” Service $01 (or Readiness state) that “comprehensive components” are “ready” • 5) if not: repeat the procedure
Inspection procedure	Step1	Inspection procedure If one of diagnosis codes associated with A20 (SAM) is generated, make a system diagnosis according to the diagnosis code. Go to Step2

https://truckmanualshub.com/

Inspection procedure	Step2	Inspection procedure Turn the starter switch in OFF. Remove the connector of A4 (Combustion engine Control unit). Remove the connector of B29 (Oxygen sensor). Remove the connector of A20 (SAM). Check the circuit across B29.6/6 and A4.X2.94/78 for open or short circuit. Check the circuit across B29.6/1 and A4.X2.94/76 for open or short circuit. Check the circuit across B29.6/3 and A4.X2.94/51 for open or short circuit. Check the circuit across B29.6/2 and A4.X2.94/86 for open or short circuit. Check the circuit across B29.6/4 and A20.X10.14/2 for open or short circuit. Make a visual check on each connector. Is any abnormality recognized? No: Go to Step3 Yes: Go to Step7
	Step3	Inspection procedure Turn the starter switch in OFF. Replace component “B29 (Oxygen sensor)”. Reinstall all the removed connectors. Turn the starter switch in ON. Perform the learned value resetting procedure of B29 (Oxygen sensor) which A4 (Combustion engine Control unit) learns. Go to Step4
	Step4	Inspection procedure Turn the starter switch in OFF. Reinstall all the removed connectors. Erase fault memory and perform a test drive. Check if this diagnosis code has occurred. Are current fault codes present? No: Go to Step6 Yes: Go to Step5
	Step5	Inspection procedure Perform the operation start and replace A4 (Combustion engine Control unit). Go to Step6
	Step6	Inspection completed
	Step7	Inspection procedure Repair or replace electrical lines. Reinstall all the removed connectors. Erase fault memory and perform a test drive. Check if this diagnosis code has occurred. Are current fault codes present? No: Go to Step6 Yes: Go to Step3

520428-5: Lambda sensor has an Open circuit at Virtual ground pin.

Generation condition	[Test Condition] • Following condition must be fulfilled: • The LSU Temperature is in operating range (> 804.96°C {1480.93°F}) for at least 10.00s • The Vehicle is not in Overrun (engine not motored) since 0.00ms or in Overrun not longer than 100.00ms • Battery Voltage > 10.70V for at least 2.00s or < 10.70V not longer than 0.00ms • LSU in normal operation (no error) • Monitoring not inhibited by FID_LSUUNVGOpnLdTst_0 due to another failure
	[Fault Detection] • If the Heater voltage (LSU_uRiFlt0) > 2.10V for at least 0.00ms or below 2.10V not longer than 0.00ms the Test state is activated. If the test state is active for at least 2.00s AND the O2 Raw signal (LSU_uO2Raw0) between -200.00mV AND 200.00mV during further 2.00s the failure is recognised (but not yet debounced!)
	[Defect Debouncing] • Defect condition exceeded cumulatively > 2.00s • Failure is detected if active for 50% of the time
Fault healing	• No Healing possible (disabled by Data set)

https://truckmanualshub.com/

		• Only according FID (see FID)
System reaction		• 1) FId / Adaptation of the correction values of Fuel Mass Observer (FMO) inhibited (no correction of detected deviation between injected fuel and Lambda sensor signal) • 2) FId / Fuel Mass Observer (FMO) switched off (no monitoring of injected fuel by Lambda sensor) • 3) FId / The Adaptation of lambda Sensor disabled • 4) FId / The Difference Check between several Lambda Sensors is disabled • 5) FId / Lambda Sensor Heater Control and Monitoring disabled • 6) FId / Dynamic Signal Monitoring of Lambda Sensor disabled • 7) FId / Heater Coupling Check of lambda Sensor disabled • 8) FId / Electrical Open Load Check of Lambda Sensor disabled • 9) FId / Shunting Detection of Lambda Sensor disabled • 10) FId / O2 Measurement of Lambda sensor not valid • 11) FId / O2 Calibration disabled (last valid calibration value fixed) • 12) FId / Signal Range Check of O2 Signal of lambda Sensor disabled • 13) FId / Plausibility Check of O2-Signal of Lambda Sensor (e.g. with HFM or Air calculation by Boost pressure) is disabled and last valid value taken • 14) Fid / Calibrated inner resistance of Lambda Sensor is not valid • 15) FId / Calibration of inner resistance of Lambda Sensor disabled • 16) FId / Electrical check for Short to Battery and Short to Ground of Lambda Sensor disabled • 17) FId / Open Load Check for the Virtual Ground (VG) and Nernst Cell (UN) of Lambda Sensor disabled
Failure cause		• Defect in wiring (open load in Virtual Ground (VG) line, virtual ground; Due to SW bug: open load in heater line, K51) of the lambda sensor, defective lambda sensor
Failure repair		• Check entire wiring of lambda sensor, check lambda sensor itself, if necessary replace lambda sensor (and reset all learning values in EEPROM with tester) • Note for EURO OBD application: this failure activates a Performance limitation due to legislation. Therefore after repair following procedure must be done, otherwise there is the risk that performance limiter gets active, although the failure is repaired: • 1) clear memory with tester • 2) if performance limiter active: disable it with tester • 3) drive the vehicle ~20min in engine speed range >1600rpm with constant periods of ~5 sec and more than 5 motoring phases > 10sec (highest gear) • 4) check with “OBD scan tool” Service $01 (or Readiness state) that “comprehensive components” are “ready” • 5) if not: repeat the procedure
Inspection procedure	Step1	Inspection procedure If one of diagnosis codes associated with A20 (SAM) is generated, make a system diagnosis according to the diagnosis code. Go to Step2
	Step2	Inspection procedure Turn the starter switch in OFF. Remove the connector of A4 (Combustion engine Control unit). Remove the connector of B29 (Oxygen sensor). Remove the connector of A20 (SAM). Check the circuit across B29.6/6 and A4.X2.94/78 for open or short circuit. Check the circuit across B29.6/1 and A4.X2.94/76 for open or short circuit. Check the circuit across B29.6/3 and A4.X2.94/51 for open or short circuit. Check the circuit across B29.6/2 and A4.X2.94/86 for open or short circuit. Check the circuit across B29.6/4 and A20.X10.14/2 for open or short circuit. Make a visual check on each connector. Is any abnormality recognized? No: Go to Step3 Yes: Go to Step7

https://truckmanualshub.com/

Inspection procedure	Step3	Inspection procedure Turn the starter switch in OFF. Replace component “B29 (Oxygen sensor)”. Reinstall all the removed connectors. Turn the starter switch in ON. Perform the learned value resetting procedure of B29 (Oxygen sensor) which A4 (Combustion engine Control unit) learns. Go to Step4
	Step4	Inspection procedure Turn the starter switch in OFF. Reinstall all the removed connectors. Erase fault memory and perform a test drive. Check if this diagnosis code has occurred. Are current fault codes present? No: Go to Step6 Yes: Go to Step5
	Step5	Inspection procedure Perform the operation start and replace A4 (Combustion engine Control unit). Go to Step6
	Step6	Inspection completed
	Step7	Inspection procedure Repair or replace electrical lines. Reinstall all the removed connectors. Erase fault memory and perform a test drive. Check if this diagnosis code has occurred. Are current fault codes present? No: Go to Step6 Yes: Go to Step3

520429-18: The dynamic check of Lambda Sensor reports SLOW.

Generation condition	[Test Condition] • Sensor is working in normal operation and O2 signal is valid • Monitoring not disabled by FID_LSUDynChk0 by another failure • By Data set via Bit Mask LSU_stOpMMonEnaMsk: engine in normal operation • Battery Voltage > 10.70V • engine speed > 1500.00rpm and engine load > 10.00mg/hub • steady state condition, i.e. the engine load variation < 2.50mg/hub during 0.90s • Dynamic check is started if all conditions above are fulfilled and the engine load drops down from 10.00mg/hub (or higher) by more than 2.50mg/hub to < 0.50mg/hub within 0.60s and must remain < 0.50mg/hub until OK or defect recognition happens. Otherwise test is aborted and restarted if the conditions are fulfilled again.
	[Fault Detection] • The measured and pressure compensated O2-concentration • needs longer than 1.50s to rise from 30% to 60% of the expected step between actual O2 concentration to 20.95% • OR • 60% of expected step are not reached within 2.50s.
	[Defect Debouncing] • Defect condition exceeded cumulatively > 3.00 events • Failure is detected if active for 50% of events
Fault healing	• The measured and pressure compensated O2-concentration • needs less than 1.50s to rise from 30% to 60% of the expected step between actual O2 concentration to 20.95% • AND • 60% of expected step are reached within 2.50s.

https://truckmanualshub.com/

		• Only according FID (See FID)
System reaction		• 1) FId / Adaptation of the correction values of Fuel Mass Observer (FMO) inhibited (no correction of detected deviation between injected fuel and Lambda sensor signal) • 2) FId / Fuel Mass Observer (FMO) switched off (no monitoring of injected fuel by Lambda sensor) • 3) FId / The Adaptation of lambda Sensor disabled • 4) FId / The Difference Check between several Lambda Sensors is disabled • 5) FId / The adaptation values for Lambda Sensor stored in EEPROM are reset to • 6) FId / O2 Signal of Lambda Sensor not valid
Failure cause		• Defect in wiring of lambda sensor, defective lambda sensor, problems in injection system (e.g. leaky injectors) or EGR valve does not close in overrun condition
Failure repair		• Check wiring, check injection system, replace lambda sensor (and reset all learning values in EEPROM with tester) • Note for EURO OBD application: this failure activates a Performance limitation due to legislation. Therefore after repair following procedure must be done, otherwise there is the risk that performance limiter gets active, although the failure is repaired: • 1) clear memory with tester • 2) if performance limiter active: disable it with tester • 3) drive the vehicle ~20min in engine speed range >1600rpm with constant periods of ~5 sec and more than 5 motoring phases > 10sec (highest gear) • 4) check with “OBD scan tool” Service $01 (or Readiness state) that “comprehensive components” are “ready” • 5) if not: repeat the procedure
Inspection procedure	Step1	Inspect or verify the following items. Repair or replace faulty items as necessary. If one of diagnosis codes associated with Fuel injector is generated, make a system diagnosis according to the diagnosis code. If one of diagnosis codes associated with A14 (EGR valve) is generated, make a system diagnosis according to the diagnosis code. Go to Step2
	Step2	Inspection procedure If one of diagnosis codes associated with A20 (SAM) is generated, make a system diagnosis according to the diagnosis code. Go to Step3
	Step3	Inspection procedure Turn the starter switch in OFF. Remove the connector of A4 (Combustion engine Control unit). Remove the connector of B29 (Oxygen sensor). Remove the connector of A20 (SAM). Check the circuit across B29.6/6 and A4.X2.94/78 for open or short circuit. Check the circuit across B29.6/1 and A4.X2.94/76 for open or short circuit. Check the circuit across B29.6/3 and A4.X2.94/51 for open or short circuit. Check the circuit across B29.6/2 and A4.X2.94/86 for open or short circuit. Check the circuit across B29.6/4 and A20.X10.14/2 for open or short circuit. Make a visual check on each connector. Is any abnormality recognized? No: Go to Step4 Yes: Go to Step8
	Step4	Inspection procedure Turn the starter switch in OFF. Replace component “B29 (Oxygen sensor)”. Reinstall all the removed connectors. Turn the starter switch in ON. Perform the learned value resetting procedure of B29 (Oxygen sensor) which A4 (Combustion engine Control unit) learns. Go to Step5

https://truckmanualshub.com/

Inspection procedure	Step5	Inspection procedure Turn the starter switch in OFF. Reinstall all the removed connectors. Erase fault memory and perform a test drive. Check if this diagnosis code has occurred. Are current fault codes present? No: Go to Step7 Yes: Go to Step6
	Step6	Inspection procedure Perform the operation start and replace A4 (Combustion engine Control unit). Go to Step7
	Step7	Inspection completed
	Step8	Inspection procedure Repair or replace electrical lines. Reinstall all the removed connectors. Erase fault memory and perform a test drive. Check if this diagnosis code has occurred. Are current fault codes present? No: Go to Step7 Yes: Go to Step4

520431-2: Component Lambda Sensor Heater has an Open Load error.

Generation condition	[Test Condition] • Continuously if all following conditions are fulfilled: • LSU Heater Power stage active: ECU not in After-run state and Battery Voltage > 9.50V (with switch off Hysteresis at 9.00V) • By Data Set (LSU_stPsDiaDisbl): ECU not in After-run state • Battery voltage > 10.70V longer than 2.00s or Battery Voltage < 10.70V less than 0.00ms Integrated Circuit CJ125 not defective (FID_LSU_HtrPS0 not set)
	[Fault Detection] • The SPI chip CJ125 reports a “no load” defect.
	[Defect Debouncing] • Defect condition exceeded cumulatively > 5.00s • Failure is detected if active for 50% of the time
Fault healing	• The SPI chip CJ125 reports no “no load” failure.
System reaction	• Heater power stage switched off, therefore Lambda sensor not working. All calibration and monitoring by lambda Sensor switched off
	• 1) FId / Adaptation of the correction values of Fuel Mass Observer (FMO) inhibited (no correction of detected deviation between injected fuel and Lambda sensor signal) • 2) FId / Fuel Mass Observer (FMO) switched off (no monitoring of injected fuel by Lambda sensor) • 3) FId / The Adaptation of lambda Sensor disabled • 4) FId / The Difference Check between several Lambda Sensors is disabled • 5) FId / Dynamic Signal Monitoring of Lambda Sensor disabled • 6) FId / Heater Coupling Check of lambda Sensor disabled • 7) FId / Electrical Open Load Check of Lambda Sensor disabled • 8) FId / Shunting Detection of Lambda Sensor disabled • 9) FId / The adaptation values for Lambda Sensor stored in EEPROM are reset to • 10) FId / O2 Measurement of Lambda sensor not valid • 11) FId / Signal Range Check of O2 Signal of lambda Sensor disabled • 12) FId / Plausibility Check of O2-Signal of Lambda Sensor (e.g. with HFM or Air calculation by Boost pressure) is disabled and last valid value taken • 13) FId / Open Load Check for the Virtual Ground (VG) and Nernst Cell (UN) of Lambda Sensor disabled
Failure cause	• Broken or disconnected wiring or defective lambda sensor

https://truckmanualshub.com/

Failure repair		• Check wiring and lambda sensor, if necessary replace lambda sensor (and reset all learning values in EEPROM with tester) • Note for EURO OBD application: this failure activates a Performance limitation due to legislation. Therefore after repair following procedure must be done, otherwise there is the risk that performance limiter gets active, although the failure is repaired: • 1) clear memory with tester • 2) if performance limiter active: disable it with tester • 3) drive the vehicle ~20min in engine speed range >1600rpm with constant periods of ~5 sec and more than 5 motoring phases > 10sec (highest gear) • 4) check with “OBD scan tool” Service $01 (or Readiness state) that “comprehensive components” are “ready” • 5) if not: repeat the procedure
Inspection procedure	Step1	Inspection procedure If one of diagnosis codes associated with A20 (SAM) is generated, make a system diagnosis according to the diagnosis code. Go to Step2
	Step2	Inspection procedure Turn the starter switch in OFF. Remove the connector of A4 (Combustion engine Control unit). Remove the connector of B29 (Oxygen sensor). Remove the connector of A20 (SAM). Check the circuit across B29.6/6 and A4.X2.94/78 for open or short circuit. Check the circuit across B29.6/1 and A4.X2.94/76 for open or short circuit. Check the circuit across B29.6/3 and A4.X2.94/51 for open or short circuit. Check the circuit across B29.6/2 and A4.X2.94/86 for open or short circuit. Check the circuit across B29.6/4 and A20.X10.14/2 for open or short circuit. Make a visual check on each connector. Is any abnormality recognized? No: Go to Step3 Yes: Go to Step7
	Step3	Inspection procedure Turn the starter switch in OFF. Replace component “B29 (Oxygen sensor)”. Reinstall all the removed connectors. Turn the starter switch in ON. Perform the learned value resetting procedure of B29 (Oxygen sensor) which A4 (Combustion engine Control unit) learns. Go to Step4
	Step4	Inspection procedure Turn the starter switch in OFF. Reinstall all the removed connectors. Erase fault memory and perform a test drive. Check if this diagnosis code has occurred. Are current fault codes present? No: Go to Step6 Yes: Go to Step5
	Step5	Inspection procedure Perform the operation start and replace A4 (Combustion engine Control unit). Go to Step6
	Step6	Inspection completed
	Step7	Inspection procedure Repair or replace electrical lines. Reinstall all the removed connectors. Erase fault memory and perform a test drive. Check if this diagnosis code has occurred. Are current fault codes present? No: Go to Step6 Yes: Go to Step3

https://truckmanualshub.com/

520431-3: Lambda Sensor Heater has a SCB error.

Generation condition		[Test Condition] • Continuously if all following conditions are fulfilled: • LSU Heater Power stage active: ECU not in After-run state and Battery Voltage > 9.50V (with switch off Hysteresis at 9.00V) • By Data Set (LSU_stPsDiaDisbl): ECU not in After-run state • Battery voltage > 10.70V longer than 2.00s or Battery Voltage < 10.70V less than 0.00ms Integrated Circuit CJ125 not defective (FID_LSU_HtrPS0 not set)
		[Fault Detection] • The SPI chip CJ125 reports a “short circuit to battery” defect.
		[Defect Debouncing] • Defect condition exceeded cumulatively > 5.00s • Failure is detected if active for 50% of the time
Fault healing		• The power stage is switched off, if a final short circuit to battery is reported. In order to detect the healing, the power stage is switched on every 5.00s with a dutycycle of 5.00% and switched off in case a failure is recognised within 100ms, for a maximum of 1000.00- number of times within actual driving cycle. If within this number one further error is detected, the error can’t be healed in the current driving cycle (i.e. healing only, if within 1000.00- tests no further failure was detected)
System reaction		• Heater power stage switched off, therefore Lambda sensor not working. All calibration and monitoring by lambda Sensor switched off
		• 1) FId / Adaptation of the correction values of Fuel Mass Observer (FMO) inhibited (no correction of detected deviation between injected fuel and Lambda sensor signal) • 2) FId / Fuel Mass Observer (FMO) switched off (no monitoring of injected fuel by Lambda sensor) • 3) FId / The Adaptation of lambda Sensor disabled • 4) FId / The Difference Check between several Lambda Sensors is disabled • 5) FId / Dynamic Signal Monitoring of Lambda Sensor disabled • 6) FId / Heater Coupling Check of lambda Sensor disabled • 7) FId / Electrical Open Load Check of Lambda Sensor disabled • 8) FId / Shunting Detection of Lambda Sensor disabled • 9) FId / The adaptation values for Lambda Sensor stored in EEPROM are reset to • 10) FId / O2 Measurement of Lambda sensor not valid • 11) FId / Signal Range Check of O2 Signal of lambda Sensor disabled • 12) FId / Plausibility Check of O2-Signal of Lambda Sensor (e.g. with HFM or Air calculation by Boost pressure) is disabled and last valid value taken • 13) FId / Open Load Check for the Virtual Ground (VG) and Nernst Cell (UN) of Lambda Sensor disabled
Failure cause		• Short circuit of wiring to external source, defective lambda sensor or power stage
Failure repair		• Check wiring and lambda sensor, if necessary replace lambda sensor (and reset all learning values in EEPROM with tester) or ECU. • Note for EURO OBD application: this failure activates a Performance limitation due to legislation. Therefore after repair following procedure must be done, otherwise there is the risk that performance limiter gets active, although the failure is repaired: • 1) clear memory with tester • 2) if performance limiter active: disable it with tester • 3) drive the vehicle ~20min in engine speed range >1600rpm with constant periods of ~5 sec and more than 5 motoring phases > 10sec (highest gear) • 4) check with “OBD scan tool” Service $01 (or Readiness state) that “comprehensive components” are “ready” • 5) if not: repeat the procedure
Inspection procedure	Step1	Inspection procedure If one of diagnosis codes associated with A20 (SAM) is generated, make a system diagnosis according to the diagnosis code. Go to Step2

https://truckmanualshub.com/

Inspection procedure	Step2	Inspection procedure Turn the starter switch in OFF. Remove the connector of A4 (Combustion engine Control unit). Remove the connector of B29 (Oxygen sensor). Remove the connector of A20 (SAM). Check the circuit across B29.6/6 and A4.X2.94/78 for open or short circuit. Check the circuit across B29.6/1 and A4.X2.94/76 for open or short circuit. Check the circuit across B29.6/3 and A4.X2.94/51 for open or short circuit. Check the circuit across B29.6/2 and A4.X2.94/86 for open or short circuit. Check the circuit across B29.6/4 and A20.X10.14/2 for open or short circuit. Make a visual check on each connector. Is any abnormality recognized? No: Go to Step3 Yes: Go to Step7
	Step3	Inspection procedure Turn the starter switch in OFF. Replace component “B29 (Oxygen sensor)”. Reinstall all the removed connectors. Turn the starter switch in ON. Perform the learned value resetting procedure of B29 (Oxygen sensor) which A4 (Combustion engine Control unit) learns. Go to Step4
	Step4	Inspection procedure Turn the starter switch in OFF. Reinstall all the removed connectors. Erase fault memory and perform a test drive. Check if this diagnosis code has occurred. Are current fault codes present? No: Go to Step6 Yes: Go to Step5
	Step5	Inspection procedure Perform the operation start and replace A4 (Combustion engine Control unit). Go to Step6
	Step6	Inspection completed
	Step7	Inspection procedure Repair or replace electrical lines. Reinstall all the removed connectors. Erase fault memory and perform a test drive. Check if this diagnosis code has occurred. Are current fault codes present? No: Go to Step6 Yes: Go to Step3

520431-4: Lambda Sensor Heater has a SCG error.

Generation condition	[Test Condition] • Continuously if all following conditions are fulfilled: • LSU Heater Power stage active: ECU not in After-run state and Battery Voltage > 9.50V (with switch off Hysteresis at 9.00V) • By Data Set (LSU_stPsDiaDisbl): ECU not in After-run state • Battery voltage > 10.70V longer than 2.00s or Battery Voltage < 10.70V less than 0.00ms
	[Fault Detection] • The SPI chip CJ125 reports a “short circuit to ground” defect.
	[Defect Debouncing] • Defect condition exceeded cumulatively > 5.00s • Failure is detected if active for 50% of the time
Fault healing	• The SPI chip CJ125 reports no “short circuit to ground” failure

https://truckmanualshub.com/

		• Heater power stage switched off, therefore Lambda sensor not working. All calibration and monitoring by lambda Sensor switched off
System reaction		• 1) FId / Adaptation of the correction values of Fuel Mass Observer (FMO) inhibited (no correction of detected deviation between injected fuel and Lambda sensor signal) • 2) FId / Fuel Mass Observer (FMO) switched off (no monitoring of injected fuel by Lambda sensor) • 3) FId / The Adaptation of lambda Sensor disabled • 4) FId / The Difference Check between several Lambda Sensors is disabled • 5) FId / Dynamic Signal Monitoring of Lambda Sensor disabled • 6) FId / Heater Coupling Check of lambda Sensor disabled • 7) FId / Electrical Open Load Check of Lambda Sensor disabled • 8) FId / Shunting Detection of Lambda Sensor disabled • 9) FId / The adaptation values for Lambda Sensor stored in EEPROM are reset to • 10) FId / O2 Measurement of Lambda sensor not valid • 11) FId / Signal Range Check of O2 Signal of lambda Sensor disabled • 12) FId / Plausibility Check of O2-Signal of Lambda Sensor (e.g. with HFM or Air calculation by Boost pressure) is disabled and last valid value taken • 13) FId / Open Load Check for the Virtual Ground (VG) and Nernst Cell (UN) of Lambda Sensor disabled
Failure cause		• Short circuit of wiring to external ground, defective lambda sensor or power stage
Failure repair		• Check wiring and lambda sensor, if necessary replace lambda sensor (and reset all learning values in EEPROM with tester) or ECU • Note for EURO OBD application: this failure activates a Performance limitation due to legislation. Therefore after repair following procedure must be done, otherwise there is the risk that performance limiter gets active, although the failure is repaired: • 1) clear memory with tester • 2) if performance limiter active: disable it with tester • 3) drive the vehicle ~20min in engine speed range >1600rpm with constant periods of ~5 sec and more than 5 motoring phases > 10sec (highest gear) • 4) check with “OBD scan tool” Service $01 (or Readiness state) that “comprehensive components” are “ready” • 5) if not: repeat the procedure
Inspection procedure	Step1	Inspection procedure If one of diagnosis codes associated with A20 (SAM) is generated, make a system diagnosis according to the diagnosis code. Go to Step2
	Step2	Inspection procedure Turn the starter switch in OFF. Remove the connector of A4 (Combustion engine Control unit). Remove the connector of B29 (Oxygen sensor). Remove the connector of A20 (SAM). Check the circuit across B29.6/6 and A4.X2.94/78 for open or short circuit. Check the circuit across B29.6/1 and A4.X2.94/76 for open or short circuit. Check the circuit across B29.6/3 and A4.X2.94/51 for open or short circuit. Check the circuit across B29.6/2 and A4.X2.94/86 for open or short circuit. Check the circuit across B29.6/4 and A20.X10.14/2 for open or short circuit. Make a visual check on each connector. Is any abnormality recognized? No: Go to Step3 Yes: Go to Step7
	Step3	Inspection procedure Turn the starter switch in OFF. Replace component “B29 (Oxygen sensor)”. Reinstall all the removed connectors. Turn the starter switch in ON. Perform the learned value resetting procedure of B29 (Oxygen sensor) which A4 (Combustion engine Control unit) learns. Go to Step4

https://truckmanualshub.com/

Inspection procedure	Step4	Inspection procedure Turn the starter switch in OFF. Reinstall all the removed connectors. Erase fault memory and perform a test drive. Check if this diagnosis code has occurred. Are current fault codes present? No: Go to Step6 Yes: Go to Step5
	Step5	Inspection procedure Perform the operation start and replace A4 (Combustion engine Control unit). Go to Step6
	Step6	Inspection completed
	Step7	Inspection procedure Repair or replace electrical lines. Reinstall all the removed connectors. Erase fault memory and perform a test drive. Check if this diagnosis code has occurred. Are current fault codes present? No: Go to Step6 Yes: Go to Step3

520434-2: Diagnostic fault check to report SPI chip error of Lambda sensor.

Generation condition		[Test Condition] • Detection is done continuously
		[Fault Detection] • If the initialisation register value of the SPI chip read by HWE is different from the value written into the chip in the previous cycle by HWE function, then there is a non plausible defect.
		[Defect Debouncing] • Immediate
Fault healing		• If the initialisation register value of the SPI chip read by HWE and the value written into the chip in the previous cycle by HWE function are identical.
System reaction		• Only according FID (see FID)
		• 1) FId / The Difference Check between several Lambda Sensors is disabled • 2) FId / Lambda Sensor Heater Control and Monitoring disabled • 3) FId / Dynamic Signal Monitoring of Lambda Sensor disabled • 4) FId / Heater Coupling Check of lambda Sensor disabled • 5) Fid / Lambda Sensor Heater Power stage Monitoring disabled • 6) FId / Electrical Open Load Check of Lambda Sensor disabled • 7) FId / Shunting Detection of Lambda Sensor disabled • 8) FId / Monitoring for Low Battery Voltage for lambda Sensor SPI (CJ125) disabled • 9) FId / The adaptation values for Lambda Sensor stored in EEPROM are re-set to • 10) FId / O2 Measurement of Lambda sensor not valid • 11) FId / O2 Calibration disabled (last valid calibration value fixed) • 12) FId / Signal Range Check of O2 Signal of lambda Sensor disabled • 13) FId / Plausibility Check of O2-Signal of Lambda Sensor (e.g. with HFM or Air calculation by Boost pressure) is disabled and last valid value taken • 14) Fid / Calibrated inner resistance of Lambda Sensor is not valid • 15) FId / Calibration of inner resistance of Lambda Sensor disabled • 16) FId / Electrical check for Short to Battery and Short to Ground of Lambda Sensor disabled • 17) FId / Open Load Check for the Virtual Ground (VG) and Nernst Cell (UN) of Lambda Sensor disabled
Failure cause		• SPI chip in ECU defective
Failure repair		• Replace ECU
Inspection procedure	Step1	Inspection procedure Erase fault memory and perform a test drive. If the diagnosis code has occurred even during the test drive, start the operation and then replace the A4 (Combustion engine Control unit). Inspection completed

https://truckmanualshub.com/

520434-31: The low battery voltage of Lambda Sensor is detected by the SPI Chip.

Generation condition		[Test Condition] • Battery voltage > 10.70V at least for 2.00s or < 10.70V not longer than 0.00ms. • Engine running in normal state • No temporary communication error to the SPI • The monitoring not inhibited by FID_LSULoBatt0 due to another failure
		[Fault Detection] • The SPI chip CJ125 reports a “very low battery voltage” defect (i.e. Voltage at the ASIC < 9V)
		[Defect Debouncing] • Defect condition exceeded cumulatively > 2.00s • Failure is detected if active for 50% of the time
Fault healing		• The SPI chip CJ125 reports no “very low battery voltage” failure (i.e. Voltage at the ASIC > 9V)
System reaction		• Only according FID (see FID)
		• 1) FId / Adaptation of the correction values of Fuel Mass Observer (FMO) inhibited (no correction of detected deviation between injected fuel and Lambda sensor signal) • 2) FId / Fuel Mass Observer (FMO) switched off (no monitoring of injected fuel by Lambda sensor) • 3) FId / The Adaptation of lambda Sensor disabled • 4) FId / The Difference Check between several Lambda Sensors is disabled • 5) FId / Lambda Sensor Heater Control and Monitoring disabled • 6) FId / Dynamic Signal Monitoring of Lambda Sensor disabled • 7) FId / Heater Coupling Check of lambda Sensor disabled • 8) Fid / Lambda Sensor Heater Power stage Monitoring disabled • 9) FId / Electrical Open Load Check of Lambda Sensor disabled • 10) FId / Shunting Detection of Lambda Sensor disabled • 11) FId / The adaptation values for Lambda Sensor stored in EEPROM are reset to • 12) FId / O2 Measurement of Lambda sensor not valid • 13) FId / O2 Calibration disabled (last valid calibration value fixed) • 14) FId / Signal Range Check of O2 Signal of lambda Sensor disabled • 15) FId / Plausibility Check of O2-Signal of Lambda Sensor (e.g. with HFM or Air calculation by Boost pressure) is disabled and last valid value taken • 16) Fid / Calibrated inner resistance of Lambda Sensor is not valid • 17) FId / Calibration of inner resistance of Lambda Sensor disabled • 18) FId / Electrical check for Short to Battery and Short to Ground of Lambda Sensor disabled • 19) FId / Open Load Check for the Virtual Ground (VG) and Nernst Cell (UN) of Lambda Sensor disabled
Failure cause		• wiring defect, defective lambda sensor or SPI chip in ECU
Failure repair		• Check Wiring of lambda sensor, if necessary replace lambda sensor (and reset the learning factors in EEPROM with tester) or ECU • Note for EURO OBD application: this failure activates a Performance limitation due to legislation. Therefore after repair following procedure must be done, otherwise there is the risk that performance limiter gets active, although the failure is repaired: • 1) clear memory with tester • 2) if performance limiter active: disable it with tester • 3) drive the vehicle ~20min in engine speed range >1600rpm with constant periods of ~5 sec and more than 5 motoring phases > 10sec (highest gear) • 4) check with “OBD scan tool” Service $01 (or Readiness state) that “comprehensive components” are “ready” • 5) if not: repeat the procedure
Inspection procedure	Step1	Inspection procedure If one of diagnosis codes associated with A20 (SAM) is generated, make a system diagnosis according to the diagnosis code. Go to Step2

https://truckmanualshub.com/

Inspection procedure	Step2	Inspection procedure Turn the starter switch in OFF. Remove the connector of A4 (Combustion engine Control unit). Remove the connector of B29 (Oxygen sensor). Remove the connector of A20 (SAM). Check the circuit across B29.6/6 and A4.X2.94/78 for open or short circuit. Check the circuit across B29.6/1 and A4.X2.94/76 for open or short circuit. Check the circuit across B29.6/3 and A4.X2.94/51 for open or short circuit. Check the circuit across B29.6/2 and A4.X2.94/86 for open or short circuit. Check the circuit across B29.6/4 and A20.X10.14/2 for open or short circuit. Make a visual check on each connector. Is any abnormality recognized? No: Go to Step3 Yes: Go to Step7
	Step3	Inspection procedure Turn the starter switch in OFF. Replace component “B29 (Oxygen sensor)”. Reinstall all the removed connectors. Turn the starter switch in ON. Perform the learned value resetting procedure of B29 (Oxygen sensor) which A4 (Combustion engine Control unit) learns. Go to Step4
	Step4	Inspection procedure Turn the starter switch in OFF. Reinstall all the removed connectors. Erase fault memory and perform a test drive. Check if this diagnosis code has occurred. Are current fault codes present? No: Go to Step6 Yes: Go to Step5
	Step5	Inspection procedure Perform the operation start and replace A4 (Combustion engine Control unit). Go to Step6
	Step6	Inspection completed
	Step7	Inspection procedure Repair or replace electrical lines. Reinstall all the removed connectors. Erase fault memory and perform a test drive. Check if this diagnosis code has occurred. Are current fault codes present? No: Go to Step6 Yes: Go to Step3

520435-0: The temperature of Lambda Sensor heater exceeds the maximum limit.

Generation condition	[Test Condition] • The test frequency is continuous as long as following conditions are met: • The battery voltage > 10.70V for at least 2.00s and not longer than 0.00ms below 10.70V • Engine not in Overrun (motoring) for at least 0.00ms and not longer in Overrun than 100.00ms • LSU Heater in control mode
	[Fault Detection] • The calculated temperature (based on inner resistance Ri) of the sensor exceeds 823.96°C {1515.13°F}
	[Defect Debouncing] • Defect condition exceeded cumulatively > 30.00s • Failure is detected if active for 50% of the time
Fault healing	• The calculated temperature (based on inner resistance Ri) of the sensor is below 823.96°C {1515.13°F})

https://truckmanualshub.com/

		• LSU Heater on Minimal 3.67%, therefore no function of LSU possible and therefore all calibration / monitorings with O2 disabled
System reaction		• 1) FId / Adaptation of the correction values of Fuel Mass Observer (FMO) inhibited (no correction of detected deviation between injected fuel and Lambda sensor signal) • 2) FId / Fuel Mass Observer (FMO) switched off (no monitoring of injected fuel by Lambda sensor) • 3) FId / The Difference Check between several Lambda Sensors is disabled • 4) FId / Lambda Sensor Heater Control and Monitoring disabled • 5) FId / Dynamic Signal Monitoring of Lambda Sensor disabled • 6) FId / Heater Coupling Check of lambda Sensor disabled • 7) FId / Electrical Open Load Check of Lambda Sensor disabled • 8) FId / Shunting Detection of Lambda Sensor disabled • 9) FId / The adaptation values for Lambda Sensor stored in EEPROM are reset to • 10) FId / O2 Measurement of Lambda sensor not valid • 11) FId / Plausibility Check of O2-Signal of Lambda Sensor (e.g. with HFM or Air calculation by Boost pressure) is disabled and last valid value taken • 12) FId / Open Load Check for the Virtual Ground (VG) and Nernst Cell (UN) of Lambda Sensor disabled
Failure cause		• Defect in wiring of sensor. • Disconnected lambda sensor. • Short circuit to ground in UN line. • Defective lambda sensor.
Failure repair		• Check entire wiring of the sensor and the sensor itself, • check connection of lambda sensor, • if necessary replace lambda sensor (and reset the learning factors in EEPROM with tester) • Note for EURO OBD application: this failure activates a Performance limitation due to legislation. Therefore after repair following procedure must be done, otherwise there is the risk that performance limiter gets active, although the failure is repaired: • 1) clear memory with tester • 2) if performance limiter active: disable it with tester • 3) drive the vehicle ~20min in engine speed range >1600rpm with constant periods of ~5 sec and more than 5 motoring phases > 10sec (highest gear) • 4) check with “OBD scan tool” Service $01 (or Readiness state) that “comprehensive components” are “ready” • 5) if not: repeat the procedure
Inspection procedure	Step1	Inspection procedure If one of diagnosis codes associated with A20 (SAM) is generated, make a system diagnosis according to the diagnosis code. Go to Step2
	Step2	Inspection procedure Turn the starter switch in OFF. Remove the connector of A4 (Combustion engine Control unit). Remove the connector of B29 (Oxygen sensor). Remove the connector of A20 (SAM). Check the circuit across B29.6/6 and A4.X2.94/78 for open or short circuit. Check the circuit across B29.6/1 and A4.X2.94/76 for open or short circuit. Check the circuit across B29.6/3 and A4.X2.94/51 for open or short circuit. Check the circuit across B29.6/2 and A4.X2.94/86 for open or short circuit. Check the circuit across B29.6/4 and A20.X10.14/2 for open or short circuit. Make a visual check on each connector. Is any abnormality recognized? No: Go to Step3 Yes: Go to Step7
	Step3	Inspection procedure Turn the starter switch in OFF. Replace component “B29 (Oxygen sensor)”. Reinstall all the removed connectors. Turn the starter switch in ON. Perform the learned value resetting procedure of B29 (Oxygen sensor) which A4 (Combustion engine Control unit) learns. Go to Step4

https://truckmanualshub.com/

Inspection procedure	Step4	Inspection procedure Turn the starter switch in OFF. Reinstall all the removed connectors. Erase fault memory and perform a test drive. Check if this diagnosis code has occurred. Are current fault codes present? No: Go to Step6 Yes: Go to Step5
	Step5	Inspection procedure Perform the operation start and replace A4 (Combustion engine Control unit). Go to Step6
	Step6	Inspection completed
	Step7	Inspection procedure Repair or replace electrical lines. Reinstall all the removed connectors. Erase fault memory and perform a test drive. Check if this diagnosis code has occurred. Are current fault codes present? No: Go to Step6 Yes: Go to Step3

520435-1: The temperature of Lambda Sensor heater exceeds the minimum limit.

Generation condition	[Test Condition] • The test frequency is continuous as long as following conditions are met: • The battery voltage > 10.70V for at least 2.00s and not longer than 0.00ms below 10.70V • Engine not in Overrun (motoring) for at least 0.00ms and not longer in Overrun than 100.00ms • LSU Heater in control mode
	[Fault Detection] • The calculated temperature (based on inner resistance Ri) of the sensor is below or equal 805.96°C {1482.73°F}
	[Defect Debouncing] • Defect condition exceeded cumulatively > 60.00s • Failure is detected if active for 50% of the time
Fault healing	• The calculated temperature (based on inner resistance Ri) of the sensor exceeds 805.96°C {1482.73°F}
System reaction	• LSU Heater on Minimal 3.67%, therefore no function of LSU possible and therefore all calibration / monitorings with O2 disabled
	• 1) FId / Adaptation of the correction values of Fuel Mass Observer (FMO) inhibited (no correction of detected deviation between injected fuel and Lambda sensor signal) • 2) FId / Fuel Mass Observer (FMO) switched off (no monitoring of injected fuel by Lambda sensor) • 3) FId / The Difference Check between several Lambda Sensors is disabled • 4) FId / Lambda Sensor Heater Control and Monitoring disabled • 5) FId / Dynamic Signal Monitoring of Lambda Sensor disabled • 6) FId / Heater Coupling Check of lambda Sensor disabled • 7) FId / Electrical Open Load Check of Lambda Sensor disabled • 8) FId / Shunting Detection of Lambda Sensor disabled • 9) FId / The adaptation values for Lambda Sensor stored in EEPROM are reset to • 10) FId / O2 Measurement of Lambda sensor not valid • 11) FId / Plausibility Check of O2-Signal of Lambda Sensor (e.g. with HFM or Air calculation by Boost pressure) is disabled and last valid value taken • 12) FId / Open Load Check for the Virtual Ground (VG) and Nernst Cell (UN) of Lambda Sensor disabled
Failure cause	• Disconnected lambda sensor. • Open load in VM or UN sensor line • Defect in wiring of sensor • Defective lambda sensor

https://truckmanualshub.com/

Failure repair		• Check connection of lambda sensor, • check entire wiring of the sensor and the sensor itself, • if necessary replace lambda sensor (and reset the learning factors in EE-PROM with tester) • Note for EURO OBD application: this failure activates a Performance limitation due to legislation. Therefore after repair following procedure must be done, otherwise there is the risk that performance limiter gets active, although the failure is repaired: • 1) clear memory with tester • 2) if performance limiter active: disable it with tester • 3) drive the vehicle ~20min in engine speed range >1600rpm with constant periods of ~5 sec and more than 5 motoring phases > 10sec (highest gear) • 4) check with “OBD scan tool” Service $01 (or Readiness state) that “comprehensive components” are “ready” • 5) if not: repeat the procedure
Inspection procedure	Step1	Inspection procedure If one of diagnosis codes associated with A20 (SAM) is generated, make a system diagnosis according to the diagnosis code. Go to Step2
	Step2	Inspection procedure Turn the starter switch in OFF. Remove the connector of A4 (Combustion engine Control unit). Remove the connector of B29 (Oxygen sensor). Remove the connector of A20 (SAM). Check the circuit across B29.6/6 and A4.X2.94/78 for open or short circuit. Check the circuit across B29.6/1 and A4.X2.94/76 for open or short circuit. Check the circuit across B29.6/3 and A4.X2.94/51 for open or short circuit. Check the circuit across B29.6/2 and A4.X2.94/86 for open or short circuit. Check the circuit across B29.6/4 and A20.X10.14/2 for open or short circuit. Make a visual check on each connector. Is any abnormality recognized? No: Go to Step3 Yes: Go to Step7
	Step3	Inspection procedure Turn the starter switch in OFF. Replace component “B29 (Oxygen sensor)”. Reinstall all the removed connectors. Turn the starter switch in ON. Perform the learned value resetting procedure of B29 (Oxygen sensor) which A4 (Combustion engine Control unit) learns. Go to Step4
	Step4	Inspection procedure Turn the starter switch in OFF. Reinstall all the removed connectors. Erase fault memory and perform a test drive. Check if this diagnosis code has occurred. Are current fault codes present? No: Go to Step6 Yes: Go to Step5
	Step5	Inspection procedure Perform the operation start and replace A4 (Combustion engine Control unit). Go to Step6
	Step6	Inspection completed
	Step7	Inspection procedure Repair or replace electrical lines. Reinstall all the removed connectors. Erase fault memory and perform a test drive. Check if this diagnosis code has occurred. Are current fault codes present? No: Go to Step6 Yes: Go to Step3

https://truckmanualshub.com/

520436-3: Lambda sensor Wiring has a Short Circuit to battery at Pump Cell (IA,IP), Nernst Cell (UN), or virtual ground (VG).

Generation condition	[Test Condition] • Continuously when all following conditions fulfilled: • No open load failure Pump Cell (IA,IP), Nernst Cell (UN) or Virtual Ground (VG) • Open load test for Nernst Cell (UN) and Virtual Ground (VG) not active • Monitoring not inhibited by FID_LSUShCir0 due to another failure • The Nernst Cell is monitored only if Lambda Sensor temperature measurement is valid (no Ri failure) • The Pump Cell is monitored additionally at cold condition: During EDC initialisation the Short to Batt test is executed for 3.00s
	[Fault Detection] • The SPI chip CJ125 reports a “short circuit to battery” defect at any of the lines for Nernst Cell (UN), Virtual Ground (VG), or Pump Cell (IA,IP)
	[Defect Debouncing] • Defect condition exceeded cumulatively > 2.00s • Failure is detected if active for 50% of the time
Fault healing	• No Healing possible (disabled by Data set)
System reaction	• All Short to battery and Short to ground checks for Lambda sensor wiring are disabled • The Current for Pump Cell is switched off for 2.00s
	• 1) FId / Adaptation of the correction values of Fuel Mass Observer (FMO) inhibited (no correction of detected deviation between injected fuel and Lambda sensor signal) • 2) FId / Fuel Mass Observer (FMO) switched off (no monitoring of injected fuel by Lambda sensor) • 3) FId / The Adaptation of lambda Sensor disabled • 4) FId / The Difference Check between several Lambda Sensors is disabled • 5) FId / Lambda Sensor Heater Control and Monitoring disabled • 6) FId / Dynamic Signal Monitoring of Lambda Sensor disabled • 7) FId / Heater Coupling Check of lambda Sensor disabled • 8) FId / Electrical Open Load Check of Lambda Sensor disabled • 9) FId / Shunting Detection of Lambda Sensor disabled • 10) FId / The adaptation values for Lambda Sensor stored in EEPROM are reset to • 11) FId / O2 Measurement of Lambda sensor not valid • 12) FId / O2 Calibration disabled (last valid calibration value fixed) • 13) FId / Signal Range Check of O2 Signal of lambda Sensor disabled • 14) FId / Plausibility Check of O2-Signal of Lambda Sensor (e.g. with HFM or Air calculation by Boost pressure) is disabled and last valid value taken • 15) Fid / Calibrated inner resistance of Lambda Sensor is not valid • 16) FId / Calibration of inner resistance of Lambda Sensor disabled • 17) FId / Electrical check for Short to Battery and Short to Ground of Lambda Sensor disabled • 18) FId / Open Load Check for the Virtual Ground (VG) and Nernst Cell (UN) of Lambda Sensor disabled
Failure cause	• Short circuit to external source in one of the wiring lines of the lambda sensor, open load in virtual ground VG, defective LSU
Failure repair	• Check entire wiring of lambda sensor, check lambda sensor itself, if necessary replace lambda sensor (and reset the learning factors in EEPROM with tester) • Note for EURO OBD application: this failure activates a Performance limitation due to legislation. Therefore after repair following procedure must be done, otherwise there is the risk that performance limiter gets active, although the failure is repaired: • 1) clear memory with tester • 2) if performance limiter active: disable it with tester • 3) drive the vehicle ~20min in engine speed range >1600rpm with constant periods of ~5 sec and more than 5 motoring phases > 10sec (highest gear) • 4) check with “OBD scan tool” Service $01 (or Readiness state) that “comprehensive components” are “ready” • 5) if not: repeat the procedure

https://truckmanualshub.com/

Inspection procedure	Step1	Inspection procedure If one of diagnosis codes associated with A20 (SAM) is generated, make a system diagnosis according to the diagnosis code. Go to Step2
	Step2	Inspection procedure Turn the starter switch in OFF. Remove the connector of A4 (Combustion engine Control unit). Remove the connector of B29 (Oxygen sensor). Remove the connector of A20 (SAM). Check the circuit across B29.6/6 and A4.X2.94/78 for open or short circuit. Check the circuit across B29.6/1 and A4.X2.94/76 for open or short circuit. Check the circuit across B29.6/3 and A4.X2.94/51 for open or short circuit. Check the circuit across B29.6/2 and A4.X2.94/86 for open or short circuit. Check the circuit across B29.6/4 and A20.X10.14/2 for open or short circuit. Make a visual check on each connector. Is any abnormality recognized? No: Go to Step3 Yes: Go to Step7
	Step3	Inspection procedure Turn the starter switch in OFF. Replace component “B29 (Oxygen sensor)”. Reinstall all the removed connectors. Turn the starter switch in ON. Perform the learned value resetting procedure of B29 (Oxygen sensor) which A4 (Combustion engine Control unit) learns. Go to Step4
	Step4	Inspection procedure Turn the starter switch in OFF. Reinstall all the removed connectors. Erase fault memory and perform a test drive. Check if this diagnosis code has occurred. Are current fault codes present? No: Go to Step6 Yes: Go to Step5
	Step5	Inspection procedure Perform the operation start and replace A4 (Combustion engine Control unit). Go to Step6
	Step6	Inspection completed
	Step7	Inspection procedure Repair or replace electrical lines. Reinstall all the removed connectors. Erase fault memory and perform a test drive. Check if this diagnosis code has occurred. Are current fault codes present? No: Go to Step6 Yes: Go to Step3

520436-4: Lambda sensor Wiring has a Short Circuit to ground at Pump Cell (IA,IP), Nernst Cell (UN), or virtual ground (VG).

Generation condition	[Test Condition] • Continuously when all following conditions fulfilled: • No open load failure Pump Cell (IA,IP), Nernst Cell (UN) or Virtual Ground (VG) • Open load test for Nernst Cell (UN) and Virtual Ground (VG) not active • Monitoring not inhibited by FID_LSUShCir0 due to another failure • The Nernst Cell is monitored only if Lambda Sensor temperature measurement is valid (no Ri failure)
	[Fault Detection] • The SPI chip CJ125 reports a “short circuit to ground” defect at any of the lines for Nernst Cell (UN), Virtual Ground (VG), or Pump Cell (IA,IP)
	[Defect Debouncing] • Defect condition exceeded cumulatively > 2.00s • Failure is detected if active for 50% of the time
Fault healing	• No Healing possible (disabled by Data set)

https://truckmanualshub.com/

		• The Diagnostic for the Pump Cell (IA line) is SET as soon as the Lambda sensor temperature reaches 804.96°C {1480.93°F} to avoid the toggling of IA.
System reaction		• 1) FId / Adaptation of the correction values of Fuel Mass Observer (FMO) inhibited (no correction of detected deviation between injected fuel and Lambda sensor signal) • 2) FId / Fuel Mass Observer (FMO) switched off (no monitoring of injected fuel by Lambda sensor) • 3) FId / The Adaptation of lambda Sensor disabled • 4) FId / The Difference Check between several Lambda Sensors is disabled • 5) FId / Lambda Sensor Heater Control and Monitoring disabled • 6) FId / Dynamic Signal Monitoring of Lambda Sensor disabled • 7) FId / Heater Coupling Check of lambda Sensor disabled • 8) FId / Electrical Open Load Check of Lambda Sensor disabled • 9) FId / Shunting Detection of Lambda Sensor disabled • 10) FId / The adaptation values for Lambda Sensor stored in EEPROM are reset to • 11) FId / O2 Measurement of Lambda sensor not valid • 12) FId / O2 Calibration disabled (last valid calibration value fixed) • 13) FId / Signal Range Check of O2 Signal of lambda Sensor disabled • 14) FId / Plausibility Check of O2-Signal of Lambda Sensor (e.g. with HFM or Air calculation by Boost pressure) is disabled and last valid value taken • 15) Fid / Calibrated inner resistance of Lambda Sensor is not valid • 16) FId / Calibration of inner resistance of Lambda Sensor disabled • 17) FId / Electrical check for Short to Battery and Short to Ground of Lambda Sensor disabled • 18) FId / Open Load Check for the Virtual Ground (VG) and Nernst Cell (UN) of Lambda Sensor disabled
Failure cause		• Short circuit to ground in one of the wiring lines of the lambda sensor, defective LSU
Failure repair		• Check entire wiring of lambda sensor, check lambda sensor itself, if necessary replace lambda sensor (and reset the learning factors in EEPROM with tester) • Note for EURO OBD application: this failure activates a Performance limitation due to legislation. Therefore after repair following procedure must be done, otherwise there is the risk that performance limiter gets active, although the failure is repaired: • 1) clear memory with tester • 2) if performance limiter active: disable it with tester • 3) drive the vehicle ~20min in engine speed range >1600rpm with constant periods of ~5 sec and more than 5 motoring phases > 10sec (highest gear) • 4) check with “OBD scan tool” Service $01 (or Readiness state) that “comprehensive components” are “ready” • 5) if not: repeat the procedure
Inspection procedure	Step1	Inspection procedure If one of diagnosis codes associated with A20 (SAM) is generated, make a system diagnosis according to the diagnosis code. Go to Step2
	Step2	Inspection procedure Turn the starter switch in OFF. Remove the connector of A4 (Combustion engine Control unit). Remove the connector of B29 (Oxygen sensor). Remove the connector of A20 (SAM). Check the circuit across B29.6/6 and A4.X2.94/78 for open or short circuit. Check the circuit across B29.6/1 and A4.X2.94/76 for open or short circuit. Check the circuit across B29.6/3 and A4.X2.94/51 for open or short circuit. Check the circuit across B29.6/2 and A4.X2.94/86 for open or short circuit. Check the circuit across B29.6/4 and A20.X10.14/2 for open or short circuit. Make a visual check on each connector. Is any abnormality recognized? No: Go to Step3 Yes: Go to Step7

https://truckmanualshub.com/

Inspection procedure	Step3	Inspection procedure Turn the starter switch in OFF. Replace component “B29 (Oxygen sensor)”. Reinstall all the removed connectors. Turn the starter switch in ON. Perform the learned value resetting procedure of B29 (Oxygen sensor) which A4 (Combustion engine Control unit) learns. Go to Step4
	Step4	Inspection procedure Turn the starter switch in OFF. Reinstall all the removed connectors. Erase fault memory and perform a test drive. Check if this diagnosis code has occurred. Are current fault codes present? No: Go to Step6 Yes: Go to Step5
	Step5	Inspection procedure Perform the operation start and replace A4 (Combustion engine Control unit). Go to Step6
	Step6	Inspection completed
	Step7	Inspection procedure Repair or replace electrical lines. Reinstall all the removed connectors. Erase fault memory and perform a test drive. Check if this diagnosis code has occurred. Are current fault codes present? No: Go to Step6 Yes: Go to Step3

520437-0: Fuel in Lube Oil has exceeded the Maximum limit.

Generation condition		[Test Condition] • Engine running
		[Fault Detection] • When fuel mass in engine oil (Lub_mFl) exceeds applied limit of 760.00g
		[Defect Debouncing] • Defect condition fulfilled continuously >100.0 ms
Fault healing		• When fuel in oil integrator is reset (EEPROM value reset) or when enough fuel gets evaporated (Lub_mFl < 600.00g)
System reaction		• None
		• 1) FId / Particulate filter ((DPF) Regeneration inhibited
Failure cause		• Excessive oil dilution by fuel due to post injections during particulate filter regeneration
Failure repair		• Change lubrication oil and reset the fuel-in-oil calculation via tester, using UDS Routine Control Service (ID $0255)
Inspection procedure	Step1	Inspection procedure Turn the starter switch in OFF. Replace component “Engine oil”. Perform the learned value resetting procedure of Engine oil which A4 (Combustion engine Control unit) learns. Erase fault memory and perform a test drive. If the diagnosis code has occurred even during the test drive, start the operation and then replace the A4 (Combustion engine Control unit). Inspection completed

520437-16: Fuel in Lube Oil has exceeded the warning limit.

Generation condition	[Test Condition] • Engine running
	[Fault Detection] • When fuel mass in engine oil (Lub_mFl) exceeds applied limit of 700.00g
	[Defect Debouncing] • Defect condition fulfilled continuously >100.0 ms

https://truckmanualshub.com/

Fault healing		• When fuel in oil integrators are reset (EEPROM value reset), or when enough fuel gets evaporated (Lub_mFl < 999.94mg)
System reaction		• None
Failure cause		• Excessive oil dilution by fuel due to post injections during particulate filter re-generations
Failure repair		• Change lubrication oil and reset the fuel-in-oil calculation via tester, using UDS Routine Control Service (ID $0255)
Inspection procedure	Step1	Inspection procedure Turn the starter switch in OFF. Replace component “Engine oil”. Perform the learned value resetting procedure of Engine oil which A4 (Combustion engine Control unit) learns. Erase fault memory and perform a test drive. If the diagnosis code has occurred even during the test drive, start the operation and then replace the A4 (Combustion engine Control unit). Inspection completed

520438-0: Soot in Lube Oil has exceeded the Maximum limit.

Generation condition		[Test Condition] • Engine running
		[Fault Detection] • When soot mass in oil (Lub_mSot) exceeds applied limit of 11.00kg
		[Defect Debouncing] • Defect condition fulfilled continuously >100.0 ms
Fault healing		• When “soot in oil” integrators are reset (EEPROM value reset)
System reaction		• None
Failure cause		• Soot accumulation in the lubrication oil too high
Failure repair		• Change lubrication oil and reset the soot-in-oil calculation via tester, using UDS Routine Control Service (ID $0245)
Inspection procedure	Step1	Inspection procedure Turn the starter switch in OFF. Replace component “Engine oil”. Perform the learned value resetting procedure of Engine oil which A4 (Combustion engine Control unit) learns. Erase fault memory and perform a test drive. If the diagnosis code has occurred even during the test drive, start the operation and then replace the A4 (Combustion engine Control unit). Inspection completed

520439-31: The signal value of component ‘analog/digital converter of accelerator pedal’ is implausible.

Generation condition		[Test Condition] • When accelerator pedal input is stationary
		[Fault Detection] • If the difference between accelerator pedal converted by external ADC and CPU internal ADC > 64.00mV more than 12.00-.
		[Defect Debouncing] • Defect condition fulfilled continuously >12.0 times
Fault healing		• None
System reaction		• None
Failure cause		• ECM internal failure
Failure repair		• Replace ECM
Inspection procedure	Step1	Inspection procedure Erase fault memory and perform a test drive. If the diagnosis code has occurred even during the test drive, start the operation and then replace the A4 (Combustion engine Control unit). Inspection completed

https://truckmanualshub.com/

520440-31: There is an internal control unit fault in the analog/digital converter.

Generation condition		[Test Condition] • Continuously
		[Fault Detection] • A fixed test input voltage is cyclically converted by ADC, its value MoCADC_uTst_mp should be in range between 4.73V and 4.83V, if not a counter is incremented. If counter exceeds 15.00- failure is detected.
		[Defect Debouncing] • Defect condition fulfilled continuously >15.0 times
Fault healing		• None
System reaction		• Engine is stopped (injection cut off)
Failure cause		• ECM internal failure
Failure repair		• Replace ECM
Inspection procedure	Step1	Inspection procedure Erase fault memory and perform a test drive. If the diagnosis code has occurred even during the test drive, start the operation and then replace the A4 (Combustion engine Control unit). Inspection completed

520441-31: The voltage ratio of the analog/digital converter is not plausible.

Generation condition		[Test Condition] • Continuously.
		[Fault Detection] • If the ratio between 3.3V and 5V voltage supply converted is not in range between 0.6239814 and 0.7439814.
		[Defect Debouncing] • Immediate Defect condition fulfilled continuously >15.0 times
Fault healing		• None
System reaction		• None
Failure cause		• ECM internal failure
Failure repair		• Replace ECM
Inspection procedure	Step1	Inspection procedure Erase fault memory and perform a test drive. If the diagnosis code has occurred even during the test drive, start the operation and then replace the A4 (Combustion engine Control unit). Inspection completed

520442-31: Diagnostic fault check to report errors in query-/response-communication.

Generation condition	[Test Condition] • If there is no active shut-off path test (MocSOP_stRdyMsg == TRUE) the error counters MoCCom_ctErrMM and MoCCom_ctErrFC are tested during every call of the process MoCCom (80ms task).
	[Fault Detection] • If one of the error counters exceed limit.
	[Defect Debouncing] • Immediate
Fault healing	• If both error counters are below limits.
System reaction	• ECM reset takes places for a maximum of 7 times, if error is still present engine is stopped.
Failure cause	• Defective monitoring module or CPU (e.g. impaired functioning of the CPU clock) of the EDC. Disturbed SPI-Bus.
Failure repair	• If error exists only temporary (i.e. injection reoccurs) error can be ignored and error deleted in the fault memory. In case of a permanent error the injection remains blocked and the ECU has to be replaced

https://truckmanualshub.com/

Inspection procedure	Step1	Inspection procedure Erase fault memory and perform a test drive. If the diagnosis code has occurred even during the test drive, start the operation and then replace the A4 (Combustion engine Control unit). Inspection completed

520443-31: Diagnostic fault check to report SPI-communication Error.

Generation condition		[Test Condition] • If there is no active shut-off path test (MocSOP_stRdyMsg == TRUE) the error counter MoCCom_ctErrSPI is tested during every call of the process MoCCOM (80ms task).
		[Fault Detection] • If the error counter MoCCom_ctErrSPI is greater than 0 and there is no active shut-off path test
		[Defect Debouncing] • Immediate
Fault healing		• In case of error counter MoCCom_ctErrSPI = 0, the error path is reset.
System reaction		• ECM reset takes places for a maximum of 7 times, if error is still present engine is stopped.
Failure cause		• Disturbed SPI-Bus
Failure repair		• If ECM functions correctly after recovery only temporary SPI error occurred and fault memory can be deleted and error ignored. If permanent SPI error is present and the ECM does not leave boot block --> Replace ECM
Inspection procedure	Step1	Inspection procedure Erase fault memory and perform a test drive. If the diagnosis code has occurred even during the test drive, start the operation and then replace the A4 (Combustion engine Control unit). Inspection completed

520444-31: Diagnostic fault check to report multiple error while checking the complete ROM-memory.

Generation condition		[Test Condition] • During after-run.
		[Fault Detection] • If checksum errors in ROM-memory blocks are detected.
		[Defect Debouncing] • Immediate
Fault healing		• None.
System reaction		• Power stages are shut OFF, no engine running possible.
Failure cause		• Corrupted datas in the ECM,ECM internal failure
Failure repair		• Reprogram ECM, replace ECM
Inspection procedure	Step1	Inspection procedure Erase fault memory and perform a test drive. If the diagnosis code has occurred even during the test drive, start the operation and then replace the A4 (Combustion engine Control unit). Inspection completed

520445-31: Communication timeout from CPU to Monitoring Module

Generation condition	[Test Condition] • During ECM start up
	[Fault Detection] • Wrong response from processor to CY320 (power stage supply), detected during Shut Off Path test
	[Defect Debouncing] • Defect condition fulfilled > 10 times (software constant MOCSOP_MM_RESPBYTE_ • RESET_ERROR)
Fault healing	• Irreversible

https://truckmanualshub.com/

System reaction		• Software reset is performed
Failure cause		• ECM internal failure
Failure repair		• Contact Help desk
Inspection procedure	Step1	Inspection procedure Erase fault memory and perform a test drive. If the diagnosis code has occurred even during the test drive, start the operation and then replace the A4 (Combustion engine Control unit). Inspection completed

520446-31: Error during Shut Off Path test due to defective injector or shut-off path.

Generation condition		[Test Condition] • Continuously.
		[Fault Detection] • At least one error detected in redundant shut off paths test (MoCSOP_st >0) and also injector diagnostic reported an error (bit 13 in MoCSOP_st is additionally set)
		[Defect Debouncing] • Immediate
Fault healing		• Irreversible
System reaction		• Software reset is performed
		• 1) FId / Status of function identifier FId_EngDemTrqLimErr1 • 2) FId / Torque limitation 2 activated for power reduction • 3) FId / Engine speed Limitation 2 for HIgh/Low engine speed (HLS) control active
Failure cause		• ECM internal failure or injector problem
Failure repair		• Contact Help Desk
Inspection procedure	Step1	Inspection procedure Erase fault memory and perform a test drive. If the diagnosis code has occurred even during the test drive, start the operation and then replace the A4 (Combustion engine Control unit). Inspection completed

520447-31: Internal error: Wrong set response time

Generation condition		[Test Condition] • During ECM start up
		[Fault Detection] • Timeout error of monitoring module
		[Defect Debouncing] • Defect condition fulfilled > 2 times (software constant MOCSOP_MM_RESPTIME_ • RESET_ERRORS)
Fault healing		• Irreversible
System reaction		• Software reset is performed
Failure cause		• ECM internal failure
Failure repair		• Contact Help Desk
Inspection procedure	Step1	Inspection procedure Erase fault memory and perform a test drive. If the diagnosis code has occurred even during the test drive, start the operation and then replace the A4 (Combustion engine Control unit). Inspection completed

https://truckmanualshub.com/

520448-31: ECU internal: Too many SPI errors during shut off path test execution

Generation condition		[Test Condition] • During ECM start up
		[Fault Detection] • If faulty communication over SPI detected during Shut Off Path test
		[Defect Debouncing] • Defect condition fulfilled > 16 times (software constant MOCSOP_SPI_RESET_ERRORS)
Fault healing		• Irreversible
System reaction		• Software reset is performed
Failure cause		• ECM internal failure
Failure repair		• Contact Help Desk
Inspection procedure	Step1	Inspection procedure Erase fault memory and perform a test drive. If the diagnosis code has occurred even during the test drive, start the operation and then replace the A4 (Combustion engine Control unit). Inspection completed

520449-31: ECU internal: Diagnostic fault check to report Error in undervoltage monitoring.

Generation condition		[Test Condition] • During ECM start up
		[Fault Detection] • Under voltage detected during Shut Off Path test
		[Defect Debouncing] • Defect condition fulfilled > 209.00 times
Fault healing		• Irreversible
System reaction		• None. Software reset is performed
Failure cause		• ECM internal failure
Failure repair		• Contact Help Desk
Inspection procedure	Step1	Inspection procedure Erase fault memory and perform a test drive. If the diagnosis code has occurred even during the test drive, start the operation and then replace the A4 (Combustion engine Control unit). Inspection completed

520450-31: ECU internal: Diagnostic fault check to report Power stage supply not working correctly.

Generation condition		[Test Condition] • During ECM start up
		[Fault Detection] • Implausible response in the power stage feedback during Shut Off Path test
		[Defect Debouncing] • Immediate
Fault healing		• Irreversible
System reaction		• None. Software reset is performed
Failure cause		• ECM internal failure
Failure repair		• Contact Help Desk
Inspection procedure	Step1	Inspection procedure Erase fault memory and perform a test drive. If the diagnosis code has occurred even during the test drive, start the operation and then replace the A4 (Combustion engine Control unit). Inspection completed

https://truckmanualshub.com/

520451-31: ECU internal: OSTimeout in the shut off path test-Failed to set alarm task period

Generation condition		[Test Condition] • During ECM start up
		[Fault Detection] • Alarm task cannot be set or reset detected after having detected a timeout problem during Shut Off Path test
		[Defect Debouncing] • Defect condition fulfilled > 2 times (software constant MOCSOP_MM_OSTIMEOUT_ • RESET_ERRORS)
Fault healing		• Irreversible
System reaction		• Software reset is performed
Failure cause		• ECM internal failure
Failure repair		• Contact Help Desk
Inspection procedure	Step1	Inspection procedure Erase fault memory and perform a test drive. If the diagnosis code has occurred even during the test drive, start the operation and then replace the A4 (Combustion engine Control unit). Inspection completed

520452-31: ECU internal: Error during positive test

Generation condition		[Test Condition] • During ECM start up
		[Fault Detection] • Irreversible error bit 10 set in MoCSOP_st
		[Defect Debouncing] • Immediate
Fault healing		• Irreversible
System reaction		• Software reset is performed
Failure cause		• ECM internal failure
Failure repair		• Contact Help Desk
Inspection procedure	Step1	Inspection procedure Erase fault memory and perform a test drive. If the diagnosis code has occurred even during the test drive, start the operation and then replace the A4 (Combustion engine Control unit). Inspection completed

520453-31: ECU internal: Diagnostic fault check to report Timeout in the shut off path test.

Generation condition		[Test Condition] • During ECM start up
		[Fault Detection] • Timeout in the power stage feedback detected during Shut Off Path test
		[Defect Debouncing] • Defect condition fulfilled > 209.00 times
Fault healing		• Irreversible
System reaction		• Software reset is performed
Failure cause		• ECM internal failure
Failure repair		• Contact Help Desk
Inspection procedure	Step1	Inspection procedure Erase fault memory and perform a test drive. If the diagnosis code has occurred even during the test drive, start the operation and then replace the A4 (Combustion engine Control unit). Inspection completed

https://truckmanualshub.com/

520454-31: ECU internal: Diagnostic fault check to report Error in the overvoltage monitoring.

Generation condition		[Test Condition] • During ECM start up
		[Fault Detection] • Over voltage detected during Shut Off Path test
		[Defect Debouncing] • Defect condition fulfilled > 209.00 times
Fault healing		• Irreversible
System reaction		• Software reset is performed
Failure cause		• ECM internal failure
Failure repair		• Contact Help Desk
Inspection procedure	Step1	Inspection procedure Erase fault memory and perform a test drive. If the diagnosis code has occurred even during the test drive, start the operation and then replace the A4 (Combustion engine Control unit). Inspection completed

520455-31: ECU internal: Diagnostic fault check to report Accelerator pedal position error.

Generation condition		[Test Condition] • Continuously
		[Fault Detection] • Implausible accelerator pedal voltage. The two voltage values (ADC_VAL1, ADC_VAL2), detected by the accelerator pedal, are not plausible to each other, difference > 410.00mV if both values < 1.29V otherwise if difference > 352.00mV
		[Defect Debouncing] • Debouncing of the error and setting of the test bit with 330.00ms.
Fault healing		• None during this “running cycle”. After ECM Reset failure healed automatically.
System reaction		• The ECU is reset 1.0 times, i.e. ECU switches off for a short time and reboots automatically --> engine has no injection during this time!. • The engine speed is limited to 1500.00rpm with a ramp 16384000.00rpm/s (to prevent jumps - comfort limitation) Additionally the injection is switched off at engine speed > 1600.00rpm, i.e. engine speed “stalls with misfiring” at 1600.00rpm, and the failure “EngICO” is set (see description of “EngICO”) additionally. • If engine speed exceeds 1720.00rpm more than 2.00- times (i.e. the previous reactions did not limit the engine speed) the engine is stopped by the irreversible power stage switch off. • Further reactions according FID (see FID’s)
Failure cause		• ECM internal failure or calibration error.
Failure repair		• Contact Helpdesk
Inspection procedure	Step1	Inspection procedure Erase fault memory and perform a test drive. If the diagnosis code has occurred even during the test drive, start the operation and then replace the A4 (Combustion engine Control unit). Inspection completed

520456-31: ECU internal: Diagnostic fault check to report Engine speed error.

Generation condition		[Test Condition] • If the engine speed, calculated in level 2 MoFESpd_nEngL2_mp >= 1200.00rpm.
		[Fault Detection] • Fault is set if difference between Level2 speed (MoFESpd_nEngL2_mp) and Level1 speed (Epm_nEngLRes) > 400.00rpm.
		[Defect Debouncing] • Defect condition fulfilled continuously > 8.0 times
Fault healing		• None during this “running cycle”. After ECM Reset failure healed automatically.

https://truckmanualshub.com/

System reaction		• The ECU is reset 1.0 times, i.e. ECU switches off for a short time and reboots automatically --> engine has no injection during this time!. • The engine speed is limited to 1500.00rpm with a ramp 16384000.00rpm/s (to prevent jumps - comfort limitation) Additionally the injection is switched off at engine speed > 1600.00rpm, i.e. engine speed “stalls with misfiring” at 1600.00rpm, and the failure “EngICO” is set (see description of “EngICO”) additionally. • If engine speed exceeds 1720.00rpm more than 2.00- times (i.e. the previous reactions did not limit the engine speed) the engine is stopped by the irreversible power stage switch off. • Further reactions according FID (see FID’s)
Failure cause		• ECM internal failure or calibration error.
Failure repair		• Contact Helpdesk
Inspection procedure	Step1	Inspection procedure Erase fault memory and perform a test drive. If the diagnosis code has occurred even during the test drive, start the operation and then replace the A4 (Combustion engine Control unit). Inspection completed

520457-31: ECU internal: Plausibility error of injection energizing time

Generation condition		[Test Condition] • Continuously if engine speed > 1200.00rpm AND rail pressure > 20MPa {2900psi, 205kgf/cm^2}
		[Fault Detection] • Implausible injection energizing time for either Pilot Main or Post-injection, if the difference between measured and programmed injection duration > 72.00us
		[Defect Debouncing] • Defect condition fulfilled continuously >10.0 times
Fault healing		• None during this “running cycle”. After ECM Reset failure healed automatically.
System reaction		• The ECU is reset 1.0 times, i.e. ECU switches off for a short time and reboots automatically --> engine has no injection during this time!. • The engine speed is limited to 1500.00rpm with a ramp 16384000.00rpm/s (to prevent jumps - comfort limitation) Additionally the injection is switched off at engine speed > 1600.00rpm, i.e. engine speed “stalls with misfiring” at 1600.00rpm, and the failure “EngICO” is set (see description of “EngICO”) additionally. • If engine speed exceeds 1720.00rpm more than 2.00- times (i.e. the previous reactions did not limit the engine speed) the engine is stopped by the irreversible power stage switch off. • Further reactions according FID (see FID’s)
Failure cause		• ECM internal failure or calibration error.
Failure repair		• Contact Helpdesk
Inspection procedure	Step1	Inspection procedure Erase fault memory and perform a test drive. If the diagnosis code has occurred even during the test drive, start the operation and then replace the A4 (Combustion engine Control unit). Inspection completed

520458-31: ECU internal: Plausibility error of energising angle start

Generation condition		[Test Condition] • Continuously
		[Fault Detection] • Implausible Start of Energising of either Main or a Pilot or a Post-injection, detection not inhibited by another failure.
		[Defect Debouncing] • Defect condition fulfilled continuously >10.0 times
Fault healing		• None during this “running cycle”. After ECM Reset failure healed automatically.

https://truckmanualshub.com/

System reaction		• System reset is performed for a maximum of 1.00-, if implausibility persists injection cut off request is activated. The ECU is reset 1.0 times, i.e. ECU switches off for a short time and reboots automatically --> engine has no injection during this time!. • The engine speed is limited to 1500.00rpm with a ramp 16384000.00rpm/s (to prevent jumps - comfort limitation) Additionally the injection is switched off at engine speed > 1600.00rpm, i.e. engine speed “stalls with misfiring” at 1600.00rpm, and the failure “EngICO” is set (see description of “EngICO”) additionally. • If engine speed exceeds 1720.00rpm more than 2.00- times (i.e. the previous reactions did not limit the engine speed) the engine is stopped by the irreversible power stage switch off. • Further reactions according FID (see FID’s)
Failure cause		• ECM internal failure or calibration error.
Failure repair		• Contact Helpdesk
Inspection procedure	Step1	Inspection procedure Erase fault memory and perform a test drive. If the diagnosis code has occurred even during the test drive, start the operation and then replace the A4 (Combustion engine Control unit). Inspection completed

520459-31: ECU internal: Diagnostic fault check to report Error due to implausible ZFC.

Generation condition		[Test Condition] • Continuously
		[Fault Detection] • The energising times of the zero fuel quantity calibration ZFC are outside tolerance range defined by a minimum curve MoFInjQnt_tiZFCETMin and maximum curve MoFInjQnt_tiZFCETMax.
		[Defect Debouncing] • Defect condition fulfilled continuously > 5.0 times
Fault healing		• None during this “running cycle”. After ECU Reset failure healed automatically.
System reaction		• The ECU is reset 1.0 times, i.e. ECU switches off for a short time and reboots automatically --> engine has no injection during this time!. • The engine speed is limited to 1500.00rpm with a ramp 16384000.00rpm/s (to prevent jumps - comfort limitation) Additionally the injection is switched off at engine speed > 1600.00rpm, i.e. engine speed “stalls with misfiring” at 1600.00rpm, and the failure “EngICO” is set (see description of “EngICO”) additionally. • If engine speed exceeds 1720.00rpm more than 2.00- times (i.e. the previous reactions did not limit the engine speed) the engine is stopped by the irreversible power stage switch off. • Further reactions according FID (see FID’s)
Failure cause		• ECM internal failure or calibration error.
Failure repair		• Contact Helpdesk
Inspection procedure	Step1	Inspection procedure Erase fault memory and perform a test drive. If the diagnosis code has occurred even during the test drive, start the operation and then replace the A4 (Combustion engine Control unit). Inspection completed

520461-31: ECU internal: Diagnostic fault check to report ICO demand error in the POI2 shut off.

Generation condition		[Test Condition] • Continuously
		[Fault Detection] • Post injection 2 quantity exceeds limit 5.00mg in normal mode.
		[Defect Debouncing] • Defect condition fulfilled continuously > 10.0 times
Fault healing		• None during this “running cycle”. After ECU Reset failure healed automatically.

https://truckmanualshub.com/

System reaction		• The ECU is reset 1.0 times, i.e. ECU switches off for a short time and reboots automatically --> engine has no injection during this time!. • The engine speed is limited to 1500.00rpm with a ramp 16384000.00rpm/s (to prevent jumps - comfort limitation) Additionally the injection is switched off at engine speed > 1600.00rpm, i.e. engine speed “stalls with misfiring” at 1600.00rpm, and the failure “EngICO” is set (see description of “EngICO”) additionally. • If engine speed exceeds 1720.00rpm more than 2.00- times (i.e. the previous reactions did not limit the engine speed) the engine is stopped by the irreversible power stage switch off. • Further reactions according FID (see FID’s)
Failure cause		• ECM internal failure or calibration error.
Failure repair		• Contact Helpdesk
Inspection procedure	Step1	Inspection procedure Erase fault memory and perform a test drive. If the diagnosis code has occurred even during the test drive, start the operation and then replace the A4 (Combustion engine Control unit). Inspection completed

520462-31: ECU internal: Plausibility error in POI3 efficiency

Generation condition		[Test Condition] • Continuously.
		[Fault Detection] • Implausible PoI3 efficiencies. The efficiency of PoI3 MoFInjDat_facPoI3EffSet is tested of its plausible value range. • If efficiency < -4.0039814 or > 4.0039814 failure is detected.
		[Defect Debouncing] • Defect condition fulfilled continuously > 20.0 times
Fault healing		• None during this “running cycle”. After ECU Reset failure healed automatically.
System reaction		• The ECU is reset 1.0 times, i.e. ECU switches off for a short time and reboots automatically --> engine has no injection during this time!. • The engine speed is limited to 1500.00rpm with a ramp 16384000.00rpm/s (to prevent jumps - comfort limitation) Additionally the injection is switched off at engine speed > 1600.00rpm, i.e. engine speed “stalls with misfiring” at 1600.00rpm, and the failure “EngICO” is set (see description of “EngICO”) additionally. • If engine speed exceeds 1720.00rpm more than 2.00- times (i.e. the previous reactions did not limit the engine speed) the engine is stopped by the irreversible power stage switch off. • Further reactions according FID (see FID’s)
Failure cause		• ECM internal failure or calibration error.
Failure repair		• Contact Helpdesk
Inspection procedure	Step1	Inspection procedure Erase fault memory and perform a test drive. If the diagnosis code has occurred even during the test drive, start the operation and then replace the A4 (Combustion engine Control unit). Inspection completed

https://truckmanualshub.com/

520463-31: ECU internal: Diagnostic fault check to report Error due to over run.

Generation condition		[Test Condition] • “Overrun” (= no requested fuel injection) is active since > 226.00- 20ms-Tasks (surge dampener could be active - gear ratio dependant - for 400.00ms at 1.00- to 400.00ms at 6.00- --> assurance, that surge dampener is no more active). • “Overrun” is active if all following conditions fulfilled: • Driver Demand = 0 (Accelerator Pedal request = 0). • Idle speed governor not active, i.e. engine speed > 2000.00rpm. AND Engine start system not active, i.e. engine speed > 80.00rpm (which is higher). • No Cruise control request OR Vehicle Brake actuated > 80.00ms. • No torque request of the vehicle dynamics control. • No torque request of the gear box. • No torque request by an auxiliary (e.g. A/C).
		[Fault Detection] • The current energising time > engine speed dependant limit (from 6.00ms at 0.00rpm to 200.00ms at 4000.00rpm).
		[Defect Debouncing] • Continuously 20.00- Events
Fault healing		• None during this “running cycle”. After ECU Reset failure healed automatically.
System reaction		• The ECU is reset 1.0 times, i.e. ECU switches off for a short time and reboots automatically --> engine has no injection during this time!. • The engine speed is limited to 1500.00rpm with a ramp 16384000.00rpm/s (to prevent jumps - comfort limitation) If engine speed > 1600.00rpm the injection is switched off, i.e. engine speed “stalls with misfiring” at 1600.00rpm, and the failure “EngICO” is set (see description of “EngICO”) additionally. • If engine speed exceeds 1720.00rpm more than 2.00- times (i.e. the previous reactions did not limit the engine speed) the engine is stopped by the irreversible power stage switch off. • Further reactions according FID (see FID’s)
Failure cause		• Electronic disturbances, requested torque increase via tester, wrong application of injection relevant parameters, defective ECU
Failure repair		• Contact Helpdesk
Inspection procedure	Step1	Inspection procedure Erase fault memory and perform a test drive. If the diagnosis code has occurred even during the test drive, start the operation and then replace the A4 (Combustion engine Control unit). Inspection completed

https://truckmanualshub.com/

520464-31: ECU internal: Diagnostic fault check to report Error due to injection quantity correction.

Generation condition		[Test Condition] • Continuously
		[Fault Detection] • One of the following conditions fulfilled: • Correction of Main injection > 5.00mg while all Pilot quantities (1,2,3) are 0. • Correction of Main injection exceeds the maximum possible correction of 10.00mg or falls below -10.00mg by more than 5.00mg, while at least one of the 3 Pilot quantities > 0. • Correction of Pilot injection 1 > 5.00mg while all Pilot quantities (1,2,3) are 0. • Correction of Pilot injection 1 exceeds the maximum possible correction of 10.00mg or falls below -10.00mg by more than 5.00mg, while at least one Pilot quantity (1,2,3) is not 0. • Correction of Pilot injection 2 > 5.00mg while both quantities of Pilot 2 and 3 are 0. • Correction of Pilot injection 2 exceeds the maximum possible correction of 10.00mg or falls below -10.00mg by more than 5.00mg, while at least one of the Pilot quantities 2 and 3 is not 0. • Correction of Post injection 2 > 5.00mg while both quantities of Main and Post 2 are 0. • Correction of Pilot injection 2 exceeds the maximum possible correction of 10.00mg or falls below -10.00mg by more than 5.00mg, while at least one of the quantities Main and Post 2 is not 0.
		[Defect Debouncing] • Continuously 11.00- Events
Fault healing		• None during this “running cycle”. After ECU Reset failure healed automatically.
System reaction		• The ECU is reset 1.0 times, i.e. ECU switches off for a short time and reboots automatically --> engine has no injection during this time!. • The engine speed is limited to 1500.00rpm with a ramp 16384000.00rpm/s (to prevent jumps - comfort limitation) If engine speed > 1600.00rpm the injection is switched off, i.e. engine speed “stalls with misfiring” at 1600.00rpm, and the failure “EngICO” is set (see description of “EngICO”) additionally. • If engine speed exceeds 1720.00rpm more than 2.00- times (i.e. the previous reactions did not limit the engine speed) the engine is stopped by the irreversible power stage switch off. • Further reactions according FID (see FID’s)
Failure cause		• ECU internal failure or calibration error.
Failure repair		• Contact Helpdesk
Inspection procedure	Step1	Inspection procedure Erase fault memory and perform a test drive. If the diagnosis code has occurred even during the test drive, start the operation and then replace the A4 (Combustion engine Control unit). Inspection completed

520465-31: Actual value 'Rail pressure' is implausible.

Generation condition	[Test Condition] • continuously as long as the failure paths RailPSRCMin, RailPSRCMax and RailPGradMon are not set.
	[Fault Detection] • Depending on calibration: Fuel pressure out of range (Case1) AND/OR fuel pressure gradient out o range (Case 2). • Case 1: The Fuel pressure is > 204MPa {29580psi, 2080kgf/cm^2} or < 20MPa {2900psi, 205kgf/cm^2} and Level 1 monitoring did not detect an SRC failure of the fuel pressure sensor (RailPSRCMax and RailPSRCMin not active)
	[Defect Debouncing] • Case 1 (Rail pressure > 204MPa {29580psi, 2080kgf/cm^2} or < 20MPa {2900psi, 205kgf/cm^2}): Continuously 510.00ms • infinite for Case 2 (Pressure Gradient))
Fault healing	• None during this “running cycle”. After ECU Reset failure healed automatically.

https://truckmanualshub.com/

System reaction		• The ECU is reset 1.0 times, i.e. ECU switches off for a short time and reboots automatically --> engine has no injection during this time!. • The engine speed is limited to 1500.00rpm with a ramp 16384000.00rpm/s (to prevent jumps - comfort limitation) If engine speed > 1600.00rpm the injection is switched off, i.e. engine speed “stalls with misfiring” at 1600.00rpm, and the failure “EngICO” is set (see description of “EngICO”) additionally. • If engine speed exceeds 1720.00rpm more than 2.00- times (i.e. the previous reactions did not limit the engine speed) the engine is stopped by the irreversible power stage switch off. • • Further reactions according FID (see FID’s)
Failure cause		• ECU internal failure or calibration error.
Failure repair		• Contact Helpdesk
Inspection procedure	Step1	Inspection procedure Erase fault memory and perform a test drive. If the diagnosis code has occurred even during the test drive, start the operation and then replace the A4 (Combustion engine Control unit). Inspection completed

520466-31: ECU internal: Diagnostic fault check to report Error due to torque comparison.

Generation condition		[Test Condition] • Engine running with load (i.e. fuel quantity >0) • No engine test active
		[Fault Detection] • The actual plausible requested inner engine torque (MoFCoOfs_rTrqPtdOfs) > maximal allowed torque (MoFTrqIdc_rTrq)
		[Defect Debouncing] • Continuously 13.00- events
Fault healing		• None during this “running cycle”. After ECU Reset failure healed automatically.
System reaction		• The engine speed is limited to 1500.00rpm with a ramp 16384000.00rpm/s (to prevent jumps - comfort limitation) If engine speed > 1600.00rpm the injection is switched off, i.e. engine speed “stalls with misfiring” at 1600.00rpm, and the failure “EngICO” is set (see description of “EngICO”) additionally. • If engine speed exceeds 1720.00rpm more than 2.00- times (i.e. the previous reactions did not limit the engine speed) the engine is stopped by the irreversible power stage switch off. • Further reactions according FID (see FID’s)
Failure cause		• ECU internal failure or calibration error.
Failure repair		• Contact Helpdesk
Inspection procedure	Step1	Inspection procedure Erase fault memory and perform a test drive. If the diagnosis code has occurred even during the test drive, start the operation and then replace the A4 (Combustion engine Control unit). Inspection completed

520469-31: ECU internal: Diagnosis of engine torque limit forced by ECU monitor level2

Generation condition		[Test Condition] • Engine speed > 1200.00rpm
		[Fault Detection] • The calculated (inner) engine torque (PthSet_trqInrSetNoMo) > than max acceptable (inner) engine torque (EngTrqPtd_trqInrSet) longer than 120.00ms
		[Defect Debouncing] • Defect condition exceeded cumulatively > 100.00 events • Failure is detected if active for 50% of events
Fault healing		• The calculated (inner) engine torque (PthSet_trqInrSetNoMo) < than max acceptable (inner) engine torque (EngTrqPtd_trqInrSet)
System reaction		• Engine Torque limited to max allowed torque (EngTrqPtd_trqLim) • Note: this should mot be detected by driver, as max allowed torque is normally higher than all “physical” limitations

https://truckmanualshub.com/

Failure cause		• ECU internal failure or failure in the data set calibration of ECU or another vehicle control unit
Failure repair		• Contact Help desk
Inspection procedure	Step1	Inspection procedure Erase fault memory and perform a test drive. If the diagnosis code has occurred even during the test drive, start the operation and then replace the A4 (Combustion engine Control unit). Inspection completed

520486-12: Internal error: Diagnostic fault check to report “WDA active” due to errors in query-/response communication.

Generation condition		[Test Condition] • Continuously if shut off path test not active
		[Fault Detection] • Unexpected communication (wire active when it should not be)
		[Defect Debouncing] • Immediate
Fault healing		• No fault detected
System reaction		• None
Failure cause		• ECM internal failure
Failure repair		• Contact Help Desk
Inspection procedure	Step1	Inspection procedure Erase fault memory and perform a test drive. If the diagnosis code has occurred even during the test drive, start the operation and then replace the A4 (Combustion engine Control unit). Inspection completed

520487-12: Internal error: Diagnostic fault check to report “ABE active” due to undervoltage detection.

Generation condition		[Test Condition] • Continuously if battery voltage BattU_u > 8.00V and shut off path test not active
		[Fault Detection] • ABE wire between CJ945 (power stage chips) and CY320 (power stage voltage supplier) is active due to undervoltage detection
		[Defect Debouncing] • Immediate
Fault healing		• No undervoltage detection
System reaction		• None
Failure cause		• ECM internal failure
Failure repair		• Contact Help Desk
Inspection procedure	Step1	Inspection procedure Erase fault memory and perform a test drive. If the diagnosis code has occurred even during the test drive, start the operation and then replace the A4 (Combustion engine Control unit). Inspection completed

520488-12: Internal error: Diagnostic fault check to report “ABE active” due to overvoltage detection.

Generation condition		[Test Condition] • Continuously if shut off path test not active
		[Fault Detection] • Active ABE wire due to overvoltage
		[Defect Debouncing] • Defect condition fulfilled continuously >1.00 times
Fault healing		• No overvoltage detection
System reaction		• None
Failure cause		• ECM internal failure

https://truckmanualshub.com/

Failure repair		• Contact Help Desk
Inspection procedure	Step1	Inspection procedure Erase fault memory and perform a test drive. If the diagnosis code has occurred even during the test drive, start the operation and then replace the A4 (Combustion engine Control unit). Inspection completed

520489-12: Internal error: Diagnostic fault check to report “ABE or WDA active” due to an unknown reason.

Generation condition		[Test Condition] • Continuously if shut off path test not active and battery voltage > 8.00V
		[Fault Detection] • Active WDA/ABE communication wire due to unknown reason
		[Defect Debouncing] • Immediate
Fault healing		• No undervoltage detection
System reaction		• None
Failure cause		• ECM internal failure
Failure repair		• Contact Help Desk
Inspection procedure	Step1	Inspection procedure Erase fault memory and perform a test drive. If the diagnosis code has occurred even during the test drive, start the operation and then replace the ECU. Inspection completed

520491-2: The function of component ‘Oxidation catalytic converter’ is not OK.

Generation condition	[Test Condition] • The monitoring is STARTED if following conditions are all fulfilled: • By Data set via Bit Mask OxiCat_stMskMonPas: DPF Regeneration 1 active • The time since last post injection sequence > 0.00s (to be sure that Oxicat is “cold” enough, i.e. no more hot due to last thermic reaction) • The measured Temperature before Oxicat > 219.96°C {427.93°F} (light off of Oxicat guaranteed) • HC mass (post injection) flow > 0.00Kg/h (for enough exothermic energy) • The Difference between measured and calculated temperature after Oxicat is between -200.00K and 200.00K for at least 1.00s (i.e. calculation and measurement congruent) • The monitoring is ABORTED (and no evaluation made!) if one of the following conditions is fulfilled: • Monitoring inhibited by FID_OxiCatMonPas due to another failure. • By Data set via Bit OxiCat_stMskAbrtMonPas: engine in normal operation and DPF Regeneration 1 active • During ACTIVE monitoring the converted HC mass by the Oxicat is integrated as: • MEASURED HC conversion by comparing the MEASURED temperature after catalyst and CALCULATED Temperature after catalyst WITHOUT HC Conversion energy • CALCULATED (=expected) HC conversion by comparing the CALCULATED Temperatures after Catalyst WITH and WITHOUT HC Conversion energy. • The Duration of integration lasts until the DPF regeneration has finished OR the injected HC mass has reached 50.00g, which is enough for a validation of the exothermic. • Evaluation of the results takes place if: • The average HC flow during integration > 0.00g/s • The Total converted HC > 25.00g
	[Fault Detection] • The ratio “expected / measured” HC Conversion energy < 0.30-
	[Defect Debouncing] • Defect condition fulfilled continuously > 1.00 events • Note: As Monitoring is made only each regeneration, debouncing can last several 100km’s
Fault healing	• The ratio “expected / measured” HC Conversion energy > 0.30-

https://truckmanualshub.com/

System reaction		• Only by FID (see FID's) • DPF Regeneration does probably not work --> risk of DPF clogging respective detection of corresponding failure
		• 1) Fid / SCR Monitoring or DEF injection release not possible (according calibration of Release Masks) • 2) FId / Inhibit OxiCat passive monitor • 3) FId / Particulate filter ((DPF) Regeneration inhibited
Failure cause		• Temperature sensors before and after Oxicat interchanged • Oxicat thermal aged (too low efficiency) • Post injection not working
Failure repair		• Check correct connection of Temperature sensors at Oxicat • Check / Replace Oxicat • Check Injectors
Inspection procedure	Step1	Inspection procedure Inspect the suspected factors mentioned above sequentially to locate faulty parts. Repair or replace the faulty part as necessary.

520495-12: The signal of circuit conversion maps of fuel quantity/torque is implausible.

Generation condition		[Test Condition] • At ECU initialisation
		[Fault Detection] • If the fuel quantity co-ordinates above the basic torque values has not a strictly monotonously increasing course for every engine speed co-ordinate in PhyMod_trq2qBasEOM_MAP a failure is detected.
		[Defect Debouncing] • Immediate
Fault healing		• Healing takes place if the condition for detecting the error is no longer met.
System reaction		• None (only via Inhibit Handler)
Failure cause		• Wrong application of the basic map for conversion of injection quantity to inner torque and vice versa (FMTC_trq2qBas_MAP).
Failure repair		• Application error, the dataset has a faulty application and should not be used.
Inspection procedure	Step1	Inspection procedure Erase fault memory and perform a test drive. If the diagnosis code has occurred even during the test drive, start the operation and then replace the A4 (Combustion engine Control unit). Inspection completed

520496-2: SCR Reagent pump has not defrosted within time.

Generation condition		[Test Condition] • Monitoring is active while the battery voltage is over 10.00V and as long as the battery voltage is over 10.00V and 2.00s after this threshold has been exceeded • System start and "DEF heating" active OR remaining defrosting time of DEF tank < 120.00s. • Pump Actuation between 87 and 91% (Dataset = 88.00%)
		[Fault Detection] • If the duration of active heating lasts more than 120.00s
		[Defect Debouncing] • Native (ECU internal, not calibrated)
Fault healing		• Native (ECU internal, not calibrated)
System reaction		• None
Failure cause		• Pump blocked • heating system not OK
Failure repair		• Check if Pump runs in warm condition: • If OK: problem of heating system • If not OK: replace Pump module

https://truckmanualshub.com/

Inspection procedure	Step1	Inspection procedure Inspect the suspected factors mentioned above sequentially to locate faulty parts. Repair or replace the faulty part as necessary.

520497-0: Signal Range Check (SRC) for 'PTO Accelerator pedal position' reports HIGH.

Generation condition		[Test Condition] • Monitoring is active 2.00s after ECU initialization while engine isn't running yet, while the engine isn't cranking, 2.00s after engine startup, while the battery voltage is over 10.00V, as long as the battery voltage is over 10.00V and 2.00s after this threshold has been exceeded, if none of the CAN controllers is in bus-off state, 2.00s after last CAN controller is no more in bus-off state and if the ECU is not in afterrun • The error monitoring is carried out if the PTO state of the accelerator position sensor checked a value out of the range (DFC_PTOAPPSRCMax or DFC_PTOAPPSRCMin). Or if the PTO accelerator pedal is enabled during the PTO operation (PTOCtl_st = PTOCTL_CNA_PTO_APP_BP (2).
		[Fault Detection] • If the PTO accelerator position sensor tension (PTO_uAPPRaw) is higher than 4.40V, then the control unit detects a failure.
		[Defect Debouncing] • Defect condition exceeded cumulatively > 500.00ms • Failure is detected if active for 25% of the time
Fault healing		• The PTO_uAPPRaw tension is lower than 4.40V.
System reaction		• The PTO speed adjustment value jumps to the fixed replacement value 0.00%.
Failure cause		• Short circuit of sensor to battery plus or defective sensor.
Failure repair		• Check wiring and sensor.
Inspection procedure	Step1	Inspect or verify the following items. Repair or replace faulty items as necessary. If any other fault code has occurred, perform the diagnostics procedure for the fault code. Go to Step2
	Step2	Inspect or verify the following items. Repair or replace faulty items as necessary. If one of diagnosis codes associated with SAM ECU is generated, make a system diagnosis according to the diagnosis code. Go to Step3
	Step3	Inspection procedure Turn the starter switch in OFF. Remove the connector of A4 (Combustion engine Control unit). Remove the connector of B33 (PTO load sensor). Check the circuit across A4.X2.94/36 and B33.6/5 for open or short circuit. Check the circuit across A4.X2.94/88 and B33.6/4 for open or short circuit. Check the circuit across A4.X2.94/39 and B33.6/6 for open or short circuit. Make a visual check on each connector. Is any abnormality recognized? No: Go to Step4 Yes: Go to Step8
	Step4	Inspection procedure Turn the starter switch in OFF. Replace component "B33 (PTO load sensor)". Reinstall all the removed connectors. Turn the starter switch in ON. Go to Step5
	Step5	Inspection procedure Turn the starter switch in OFF. Reinstall all the removed connectors. Erase fault memory and perform a test drive. Check if this diagnosis code has occurred. Are current fault codes present? No: Go to Step7 Yes: Go to Step6

https://truckmanualshub.com/

Inspection procedure	Step6	Inspection procedure Perform the operation start and replace A4 (Combustion engine Control unit). Go to Step7
	Step7	Inspection completed
	Step8	Inspection procedure Turn the starter switch in OFF. Remove the connector of A4 (Combustion engine Control unit). Remove the connector of X40 (Intermediate connector). Check the circuit across A4.X2.94/36 and X40.3/2 for open or short circuit. Check the circuit across A4.X2.94/88 and X40.3/1 for open or short circuit. Check the circuit across A4.X2.94/39 and X40.3/3 for open or short circuit. Make a visual check on each connector. Is any abnormality recognized? No: Go to Step9 Yes: Go to Step10
	Step9	Inspection procedure Repair or replace the harness across B33 (PTO load sensor) and X40 (Intermediate connector). Reinstall all the removed connectors. Erase fault memory and perform a test drive. Check if this diagnosis code has occurred. Are current fault codes present? No: Go to Step7 Yes: Go to Step4
	Step10	Inspection procedure Repair or replace the harness across A4 (Combustion engine Control unit) and X40 (Intermediate connector). Reinstall all the removed connectors. Erase fault memory and perform a test drive. Check if this diagnosis code has occurred. Are current fault codes present? No: Go to Step7 Yes: Go to Step4

520497-1: Signal Range Check (SRC) for 'PTO Accelerator pedal position' reports LOW.

Generation condition		[Test Condition] • Monitoring is active 2.00s after ECU initialization while engine isn't running yet, while the engine isn't cranking, 2.00s after engine startup, while the battery voltage is over 10.00V, as long as the battery voltage is over 10.00V and 2.00s after this threshold has been exceeded, if none of the CAN controllers is in bus-off state, 2.00s after last CAN controller is no more in bus-off state and if the ECU is not in afterrun • The error monitoring is carried out if the PTO state of the accelerator position sensor checked a value out of the range (DFC_PTOAPPSRCMax or DFC_PTOAPPSRCMin). Or if the PTO accelerator pedal is enabled during the PTO operation (PTOCtl_st = PTOCTL_CNA_PTO_APP_BP (2).
		[Fault Detection] • If the PTO accelerator position sensor tension (PTO_uAPPRaw) is lower than 600.00mV, then the control unit detects a failure.
		[Defect Debouncing] • Defect condition exceeded cumulatively > 500.00ms • Failure is detected if active for 25% of the time
Fault healing		• The PTO_uAPPRaw tension is higher than 600.00mV.
System reaction		• The PTO accelerator pedal position value jumps to the fixed replacement value 0.00%.
Failure cause		• Short circuit of sensor to ground or defective sensor.
Failure repair		• Check wiring and sensor.
Inspection procedure	Step1	Inspect or verify the following items. Repair or replace faulty items as necessary. If any other fault code has occurred, perform the diagnostics procedure for the fault code. Go to Step2

https://truckmanualshub.com/

Inspection procedure	Step2	Inspect or verify the following items. Repair or replace faulty items as necessary. If one of diagnosis codes associated with SAM ECU is generated, make a system diagnosis according to the diagnosis code. Go to Step3
	Step3	Inspection procedure Turn the starter switch in OFF. Remove the connector of A4 (Combustion engine Control unit). Remove the connector of B33 (PTO load sensor). Check the circuit across A4.X2.94/36 and B33.6/5 for open or short circuit. Check the circuit across A4.X2.94/88 and B33.6/4 for open or short circuit. Check the circuit across A4.X2.94/39 and B33.6/6 for open or short circuit. Make a visual check on each connector. Is any abnormality recognized? No: Go to Step4 Yes: Go to Step8
	Step4	Inspection procedure Turn the starter switch in OFF. Replace component “B33 (PTO load sensor)”. Reinstall all the removed connectors. Turn the starter switch in ON. Go to Step5
	Step5	Inspection procedure Turn the starter switch in OFF. Reinstall all the removed connectors. Erase fault memory and perform a test drive. Check if this diagnosis code has occurred. Are current fault codes present? No: Go to Step7 Yes: Go to Step6
	Step6	Inspection procedure Perform the operation start and replace A4 (Combustion engine Control unit). Go to Step7
	Step7	Inspection completed
	Step8	Inspection procedure Turn the starter switch in OFF. Remove the connector of A4 (Combustion engine Control unit). Remove the connector of X40 (Intermediate connector). Check the circuit across A4.X2.94/36 and X40.3/2 for open or short circuit. Check the circuit across A4.X2.94/88 and X40.3/1 for open or short circuit. Check the circuit across A4.X2.94/39 and X40.3/3 for open or short circuit. Make a visual check on each connector. Is any abnormality recognized? No: Go to Step9 Yes: Go to Step10
	Step9	Inspection procedure Repair or replace the harness across B33 (PTO load sensor) and X40 (Intermediate connector). Reinstall all the removed connectors. Erase fault memory and perform a test drive. Check if this diagnosis code has occurred. Are current fault codes present? No: Go to Step7 Yes: Go to Step4
	Step10	Inspection procedure Repair or replace the harness across A4 (Combustion engine Control unit) and X40 (Intermediate connector). Reinstall all the removed connectors. Erase fault memory and perform a test drive. Check if this diagnosis code has occurred. Are current fault codes present? No: Go to Step7 Yes: Go to Step4

https://truckmanualshub.com/

520499-20: The fuel pressure in the metering device is too low.

Generation condition		[Test Condition] • Monitoring not inhibited by FID_RailMeUn0Blk due to another failure • Fuel Tank not Empty, i.e. FID_RailTnkLo not set due to Failure FlSysTnkLo (see description of FlSysTnkLo) • Pressure control by metering unit (Rail_stCtlLoop == 5) • The high pressure pump delivery quantity > than max engine speed dependant quantity (from 8200.00mm3/s at 800.00rpm to 34830.00mm3/s at 3900.00rpm) for MeUn Control
		[Fault Detection] • The measured rail pressure is lower than the desired pressure by > engine speed dependant threshold (from 20MPa {2900psi, 205kgf/cm^2} at 630.00rpm over 20MPa {2900psi, 205kgf/cm^2} at 1600.00rpm to 17MPa {2470psi, 175kgf/cm^2} at 3600.00rpm)
		[Defect Debouncing] • Defect condition fulfilled continuously >1000.0 ms
Fault healing		• No Healing possible (disabled by Data set)
System reaction		• According FID (see FID's)
		• 1) Fid / SCR Monitoring or DEF injection release not possible (according calibration of Release Masks) • 2) Fid / Reagent dosing quantity for SCR reduced (to DStgy_facUreaDesRed_C) • 3) FId / Status of function identifier FId_EngDemTrqLimErr1 • 4) FId / Torque limitation 2 activated for power reduction • 5) FId / Engine speed Limitation 2 for HIgh/Low engine speed (HLS) control active • 6) FId / Substitute reaction: In the event of an error, a regeneration is prevented or a currently-running regeneration is interrupted. • 7) FId / Monitoring of positive governor deviation of fuel rail pressure and Fuel delivery Set point with Control by Metering Unit released • 8) FId / Monitoring of positive deviation of fuel rail pressure (too low pressure) disabled • 9) FId / Monitoring of positive deviation (too low pressure) combined with set value of pressure control valve enabled • 10) FId / Fuel Rail pressure reduced (by Rail_pSet pointRed_C) in case of torque limitation active • 11) FId / Zero Fuel Calibration (ZFC) of injectors disabled • 12) FId / Status of function identifier FId_PFltLmp • 13) FId / Inhibit ISS, max number of engine starts exceeded
Failure cause		• Leakage in the high pressure system: • injection nozzle stuck in open position, low efficiency of high pressure pump, internal leakage of injector, leaking pressure control valve • Too low pressure at High pressure pump inlet due clogged filter, leaking low pressure tubes, electric pre supply pump defective or gear pump defective
Failure repair		• Check low pressure system for clogging (specially fuel filter) • Check tubing between pre supply and gear pump • Check feeding of pre supply pump (possibly low due to clogged tubes at tank outlet) • Check high pressure part for leakages (internal / external) • Check PCV for tightness in closed position (100% PWM) • Check High pressure pump for efficiency • Check injectors for tightness
Inspection procedure	Step1	Inspect or verify the following items. Repair or replace faulty items as necessary. Component 'Common rail' is faulty. Component 'Fuel injector' is stuck. Reduced pressure of Supply pump Fuel leakage of Fuel injector Fuel leakage of Y29 (Pressure limiting valve in rail) Fuel leakage of Fuel pipe Plugged Fuel filter module Component 'A41 (Electric fuel pump)' is faulty. Component 'Supply pump' is faulty. For procedures, refer to the Shop Manual. Go to Step2

https://truckmanualshub.com/

Inspection procedure	Step2	Inspection procedure If one of diagnosis codes associated with SAM ECU is generated, make a system diagnosis according to the diagnosis code. Go to Step3
	Step3	Inspection procedure Turn the starter switch in OFF. Remove the connector of A4 (Combustion engine Control unit). Remove the connector of Y10 (Pressure regulating valve in rail). Check the circuit across Y10.2/1 and A4.X1.60/30 for open or short circuit. Check the circuit across Y10.2/2 and A4.X1.60/60 for open or short circuit. Make a visual check on each connector. Is any abnormality recognized? No: Go to Step4 Yes: Go to Step9
	Step4	Inspection procedure Turn the starter switch in OFF. Replace component “Y10 (Pressure regulating valve in rail)”. Reinstall all the removed connectors. Turn the starter switch in ON. Perform the learned value resetting procedure of Y10 (Pressure regulating valve in rail) which A4 (Combustion engine Control unit) learns. Go to Step5
	Step5	Inspection procedure Turn the starter switch in OFF. Reinstall all the removed connectors. Erase fault memory and perform a test drive. Check if this diagnosis code has occurred. Are current fault codes present? No: Go to Step8 Yes: Go to Step6
	Step6	Inspect or verify the following items. Repair or replace faulty items as necessary. Component ‘Common rail’ is faulty. Component ‘Fuel injector’ is stuck. Reduced pressure of Supply pump Fuel leakage of Fuel injector Fuel leakage of Y29 (Pressure limiting valve in rail) Fuel leakage of Fuel pipe Plugged Fuel filter module Component ‘A41 (Electric fuel pump)’ is faulty. Component ‘Supply pump’ is faulty. For procedures, refer to the Shop Manual Go to Step7
	Step7	Inspection procedure Perform the operation start and replace A4 (Combustion engine Control unit). Go to Step8
	Step8	Inspection completed
	Step9	Inspection procedure Repair or replace electrical lines. Reinstall all the removed connectors. Erase fault memory and perform a test drive. Check if this diagnosis code has occurred. Are current fault codes present? No: Go to Step8 Yes: Go to Step4

https://truckmanualshub.com/

520500-0: Fuel rail pressure is too low in fast transient condition with MeUn Control.

Generation condition		[Test Condition] • Monitoring is active 2.00s after ECU initialization while engine isn't running yet, while the engine isn't cranking and 2.00s after engine startup • Monitoring not inhibited by FID_RailMeUn5Blk due to another failure • Fuel Tank not Empty, i.e. FID_RailTnkLo not set due to Failure FlSysTnkLo (see description of FlSysTnkLo) • Pressure control by metering unit (Rail_stCtlLoop == 5) • The high pressure pump delivery quantity > engine speed dependant quantity (from 9200.00mm3/s at 1000.00rpm to 34330.00mm3/s at 4800.00rpm)
		[Fault Detection] • The measured rail pressure is lower than the desired pressure by > engine speed dependant threshold (from 21MPa {3050psi, 215kgf/cm^2} at 1000.00rpm over 30MPa {4350psi, 305kgf/cm^2} at 2500.00rpm to 30MPa {4350psi, 305kgf/cm^2} at 4500.00rpm)
		[Defect Debouncing] • Defect condition fulfilled continuously >300.0 ms
Fault healing		• No Healing possible (disabled by Data set)
System reaction		• According FID (see FID's)
		• 1) FId / Energizing time for injectors forced to minimum (= no fuel injection = engine stop) • 2) FId / Fuel quantity set to (= engine stop) • 3) FId / PreSupply Pump switched off • 4) FId / Fuel pressure set to minimum (= engine stop) • 5) FId / Engine torque forced to (=engine stop) • 6) FId / PreSupply Pump switched off • 7) FId / Inhibit ISS, max number of engine starts exceeded • 8) Fid / SCR Monitoring or DEF injection release not possible (according calibration of Release Masks)
Failure cause		• Leakage in the high pressure system: • injection nozzle stuck in open position, low efficiency of high pressure pump, internal leakage of injector, leaking pressure control valve • Too low pressure at High pressure pump inlet due clogged filter, leaking low pressure tubes, electric pre supply pump defective or gear pump defective
Failure repair		• Check low pressure system for clogging (specially fuel filter) • Check tubing between pre supply and gear pump • Check feeding of pre supply pump (possibly low due to clogged tubes at tank outlet) • Check high pressure part for leakages (internal / external) • Check PCV for thightness in closed position (100% PWM) • Check High pressure pump for efficiency • Check injectors for tightness
Inspection procedure	Step1	Inspect or verify the following items. Repair or replace faulty items as necessary. Component 'Common rail' is faulty. Component 'Fuel injector' is stuck. Reduced pressure of Supply pump Fuel leakage of Fuel injector Fuel leakage of Y29 (Pressure limiting valve in rail) Fuel leakage of Fuel pipe Plugged Fuel filter module Component 'A41 (Electric fuel pump)' is faulty. Component 'Supply pump' is faulty. For procedures, refer to the Shop Manual. Go to Step2
	Step2	Inspection procedure If one of diagnosis codes associated with SAM ECU is generated, make a system diagnosis according to the diagnosis code. Go to Step3

https://truckmanualshub.com/

Inspection procedure	Step3	Inspection procedure Turn the starter switch in OFF. Remove the connector of A4 (Combustion engine Control unit). Remove the connector of Y10 (Pressure regulating valve in rail). Check the circuit across Y10.2/1 and A4.X1.60/30 for open or short circuit. Check the circuit across Y10.2/2 and A4.X1.60/60 for open or short circuit. Make a visual check on each connector. Is any abnormality recognized? No: Go to Step4 Yes: Go to Step9
	Step4	Inspection procedure Turn the starter switch in OFF. Replace component “Y10 (Pressure regulating valve in rail)”. Reinstall all the removed connectors. Turn the starter switch in ON. Perform the learned value resetting procedure of Y10 (Pressure regulating valve in rail) which A4 (Combustion engine Control unit) learns. Go to Step5
	Step5	Inspection procedure Turn the starter switch in OFF. Reinstall all the removed connectors. Erase fault memory and perform a test drive. Check if this diagnosis code has occurred. Are current fault codes present? No: Go to Step8 Yes: Go to Step6
	Step6	Inspect or verify the following items. Repair or replace faulty items as necessary. Component ‘Common rail’ is faulty. Component ‘Fuel injector’ is stuck. Reduced pressure of Supply pump Fuel leakage of Fuel injector Fuel leakage of Y29 (Pressure limiting valve in rail) Fuel leakage of Fuel pipe Plugged Fuel filter module Component ‘Supply pump’ is faulty. For procedures, refer to the Shop Manual Go to Step7
	Step7	Inspection procedure Perform the operation start and replace A4 (Combustion engine Control unit). Go to Step8
	Step8	Inspection completed
	Step9	Inspection procedure Repair or replace electrical lines. Reinstall all the removed connectors. Erase fault memory and perform a test drive. Check if this diagnosis code has occurred. Are current fault codes present? No: Go to Step8 Yes: Go to Step4

https://truckmanualshub.com/

520500-16: Fuel pressure is too high with MeUn on 0-delivery state.

Generation condition		[Test Condition] • Monitoring not inhibited by FID_RailMeUn2Blk due to another failure • Fuel Tank not Empty, i.e. FID_RailTnkLo not set due to Failure FlSysTnkLo (see description of FlSysTnkLo) • Pressure control by metering unit (Rail_stCtlLoop == 5) • Fuel injection quantity > 2.50mg/hub and Desired fuel flow of MeUn <= -2100.00mm3/s and fuel temperature > 9.96°C {49.93°F}
		[Fault Detection] • The measured fuel rail pressure higher than the desired one by more than engine speed dependant value (from -35000kPa {-5080psi, -355kgf/cm^2} at 600.00rpm over -25000kPa {-3630psi, -255kgf/cm^2} at 1600.00rpm to -20000kPa {-2900psi, -205kgf/cm^2} at 3200.00rpm) although the requested fuel feeding by MeUn < -2100.00mm3/s
		[Defect Debouncing] • Defect condition fulfilled continuously >3000.0 ms
Fault healing		• No Healing possible (disabled by Data set)
System reaction		• According FID (see FID's)
		• 1) Fid / SCR Monitoring or DEF injection release not possible (according calibration of Release Masks) • 2) FId / Status of function identifier FId_EngDemTrqLimErr1 • 3) FId / Torque limitation 2 activated for power reduction • 4) FId / Engine speed Limitation 2 for HIgh/Low engine speed (HLS) control active • 5) FId / Closed loop control of Fuel Rail pressure by metering unit MeUn disabled (control exclusively by pressure control valve) • 6) FId / Monitoring of positive deviation of fuel rail pressure (too low pressure) disabled • 7) FId / Monitoring of positive deviation (too low pressure) combined with set value of pressure control valve enabled • 8) FId / Zero Fuel Calibration (ZFC) of injectors disabled • 9) FId / Zero Fuel Calibration (ZFC) of injectors by Lambda Sensor signal disabled • 10) FId / Inhibit ISS, max number of engine starts exceeded
Failure cause		• Metering unit stuck in open position, zero-delivery throttle clogged, metering unit without power due to electrical error. • Low pressure side: Pressure before gear pump too high (e.g. by pressure relieve valve), pressure after zero-delivery throttle too high
Failure repair		• Check metering Unit (MeUn), if closing (PWM = 100%) • Check electric wiring to PCV and MeUn • Check low pressure fuel tubes (return from CP to tank free?) • Check zero delivery valve for correct working
Inspection procedure	Step1	Inspect or verify the following items. Repair or replace faulty items as necessary. Component 'Y10 (Pressure regulating valve in rail)' is stuck. The electrical line between pins A4 (Combustion engine Control unit) and Y29 (Pressure limiting valve in rail) has an open circuit. Component 'A41 (Electric fuel pump)' is faulty. For procedures, refer to the Shop Manual. Go to Step2
	Step2	Inspection procedure If one of diagnosis codes associated with SAM ECU is generated, make a system diagnosis according to the diagnosis code. Go to Step3
	Step3	Inspection procedure Turn the starter switch in OFF. Remove the connector of A4 (Combustion engine Control unit). Remove the connector of Y10 (Pressure regulating valve in rail). Check the circuit across Y10.2/1 and A4.X1.60/30 for open or short circuit. Check the circuit across Y10.2/2 and A4.X1.60/60 for open or short circuit. Make a visual check on each connector. Is any abnormality recognized? No: Go to Step4 Yes: Go to Step9

https://truckmanualshub.com/

Inspection procedure	Step4	Inspection procedure Turn the starter switch in OFF. Replace component “Y10 (Pressure regulating valve in rail)”. Reinstall all the removed connectors. Turn the starter switch in ON. Perform the learned value resetting procedure of Y10 (Pressure regulating valve in rail) which A4 (Combustion engine Control unit) learns. Go to Step5
	Step5	Inspection procedure Turn the starter switch in OFF. Reinstall all the removed connectors. Erase fault memory and perform a test drive. Check if this diagnosis code has occurred. Are current fault codes present? No: Go to Step8 Yes: Go to Step6
	Step6	Inspect or verify the following items. Repair or replace faulty items as necessary. Component ‘Y10 (Pressure regulating valve in rail)’ is stuck. The electrical line between pins A4 (Combustion engine Control unit) and Y29 (Pressure limiting valve in rail) has an open circuit. Component ‘A41 (Electric fuel pump)’ is faulty. For procedures, refer to the Shop Manual Go to Step7
	Step7	Inspection procedure Perform the operation start and replace A4 (Combustion engine Control unit). Go to Step8
	Step8	Inspection completed
	Step9	Inspection procedure Repair or replace electrical lines. Reinstall all the removed connectors. Erase fault memory and perform a test drive. Check if this diagnosis code has occurred. Are current fault codes present? No: Go to Step8 Yes: Go to Step4

520500-20: Fuel rail pressure is too low concerning the fuel feeding with MeUn Control.

Generation condition	[Test Condition] • Monitoring not inhibited by FID_RailMeUn1Blk due to another failure • Fuel Tank not Empty, i.e. FID_RailTnkLo not set due to Failure FlSysTnkLo (see description of FlSysTnkLo) • Pressure control by metering unit (Rail_stCtlLoop == 5)” • Monitoring only active if requested by another failure by FID_RailMeUn1Rls • Desired fuel quantity for MeUn Control (MeUn_dvolSet) > engine speed dependant maximal Set point (i.e. required quantity rises due to too low measured fuel pressure)
	[Fault Detection] • The measured rail pressure is lower than the desired pressure by > 20MPa {2900psi, 205kgf/cm^2}
	[Defect Debouncing] • Defect condition fulfilled continuously >750.0 ms
Fault healing	• No Healing possible (disabled by Data set)

https://truckmanualshub.com/

System reaction		• According FID (see FID's)
		• 1) Fid / SCR Monitoring or DEF injection release not possible (according calibration of Release Masks) • 2) Fid / Reagent dosing quantity for SCR reduced (to DStgy_facUreaDesRed_C) • 3) FId / Closed loop control of Fuel Rail pressure by metering unit MeUn disabled (control exclusively by pressure control valve) • 4) FId / Monitoring of positive deviation of fuel rail pressure (too low pressure) disabled • 5) FId / Monitoring of positive deviation (too low pressure) combined with set value of pressure control valve enabled • 6) FId / Zero Fuel Calibration (ZFC) of injectors disabled • 7) FId / Zero Fuel Calibration (ZFC) of injectors by Lambda Sensor signal disabled • 8) FId / Inhibit ISS, max number of engine starts exceeded
Failure cause		• Leakage in the high pressure system: • injection nozzle stuck in open position, low efficiency of high pressure pump, internal leakage of injector, leaking pressure control valve • Too low pressure at High pressure pump inlet due clogged filter, leaking low pressure tubes, electric pre supply pump defective or gear pump defective
Failure repair		• Check low pressure system for clogging (specially fuel filter) • Check tubing between presupply and gear pump • Check feeding of pre supply pump (possibly low due to clogged tubes at tank outlet) • Check high pressure part for leakages (internal / external) • Check PCV for tightness in closed position (100% PWM) • Check High pressure pump for efficiency • Check injectors for tightness
Inspection procedure	Step1	Inspect or verify the following items. Repair or replace faulty items as necessary. Component 'Common rail' is faulty. Component 'Fuel injector' is stuck. Reduced pressure of Supply pump Fuel leakage of Fuel injector Fuel leakage of Y29 (Pressure limiting valve in rail) Fuel leakage of Fuel pipe Plugged Fuel filter module Component 'A41 (Electric fuel pump)' is faulty. Component 'Supply pump' is faulty. For procedures, refer to the Shop Manual. Go to Step2
	Step2	Inspection procedure If one of diagnosis codes associated with SAM ECU is generated, make a system diagnosis according to the diagnosis code. Go to Step3
	Step3	Inspection procedure Turn the starter switch in OFF. Remove the connector of A4 (Combustion engine Control unit). Remove the connector of Y10 (Pressure regulating valve in rail). Check the circuit across Y10.2/1 and A4.X1.60/30 for open or short circuit. Check the circuit across Y10.2/2 and A4.X1.60/60 for open or short circuit. Make a visual check on each connector. Is any abnormality recognized? No: Go to Step4 Yes: Go to Step9
	Step4	Inspection procedure Turn the starter switch in OFF. Replace component "Y10 (Pressure regulating valve in rail)". Reinstall all the removed connectors. Turn the starter switch in ON. Perform the learned value resetting procedure of Y10 (Pressure regulating valve in rail) which A4 (Combustion engine Control unit) learns. Go to Step5

https://truckmanualshub.com/

Inspection procedure	Step5	Inspection procedure Turn the starter switch in OFF. Reinstall all the removed connectors. Erase fault memory and perform a test drive. Check if this diagnosis code has occurred. Are current fault codes present? No: Go to Step8 Yes: Go to Step6
	Step6	Inspect or verify the following items. Repair or replace faulty items as necessary. Component 'Common rail' is faulty. Component 'Fuel injector' is stuck. Reduced pressure of Supply pump Fuel leakage of Fuel injector Fuel leakage of Y29 (Pressure limiting valve in rail) Fuel leakage of Fuel pipe Plugged Fuel filter module Component 'Supply pump' is faulty. For procedures, refer to the Shop Manual Go to Step7
	Step7	Inspection procedure Perform the operation start and replace A4 (Combustion engine Control unit). Go to Step8
	Step8	Inspection completed
	Step9	Inspection procedure Repair or replace electrical lines. Reinstall all the removed connectors. Erase fault memory and perform a test drive. Check if this diagnosis code has occurred. Are current fault codes present? No: Go to Step8 Yes: Go to Step4

520502-0: Fuel Rail pressure above maximum limit with MeUn Control.

Generation condition	[Test Condition] • Monitoring not inhibited by FId_RailMeUn4Blk due to another failure • Fuel Tank not Empty, i.e. FID_RailTnkLo not set due to Failure FlSysTnkLo (see description of FlSysTnkLo) • Pressure control by metering unit (Rail_stCtlLoop == 5)
	[Fault Detection] • Measured rail pressure > 215MPa {31180psi, 2190kgf/cm^2}
	[Defect Debouncing] • Defect condition fulfilled continuously >300.0 ms
Fault healing	• No Healing possible (disabled by Data set)
System reaction	• According FID (see FID's)
	• 1) Fid / SCR Monitoring or DEF injection release not possible (according calibration of Release Masks) • 2) Fid / Reagent dosing quantity for SCR reduced (to DStgy_facUreaDesRed_C) • 3) FId / Status of function identifier FId_EngDemTrqLimErr1 • 4) FId / Torque limitation 2 activated for power reduction • 5) FId / Engine speed Limitation 2 for HIgh/Low engine speed (HLS) control active • 6) FId / Closed loop control of Fuel Rail pressure by metering unit MeUn disabled (control exclusively by pressure control valve) • 7) FId / Monitoring of positive deviation of fuel rail pressure (too low pressure) disabled • 8) FId / Monitoring of positive deviation (too low pressure) combined with set value of pressure control valve enabled • 9) FId / Zero Fuel Calibration (ZFC) of injectors disabled • 10) FId / Zero Fuel Calibration (ZFC) of injectors by Lambda Sensor signal disabled • 11) FId / Inhibit ISS, max number of engine starts exceeded

https://truckmanualshub.com/

Failure cause		• Metering unit stuck in open position, zero-delivery throttle clogged, metering unit without power due to electrical error. • Low pressure side: Pressure before gear pump too high (e.g. by pressure relieve valve), pressure after zero-delivery throttle too high
Failure repair		• Check metering Unit (MeUn), if closing (PWM = 100%) • Check electric wiring to PCV and MeUn • Check low pressure fuel tubes (return from CP to tank free?) • Check zero delivery valve for correct working
Inspection procedure	Step1	Inspect or verify the following items. Repair or replace faulty items as necessary. Component 'Y10 (Pressure regulating valve in rail)' is stuck. The electrical line between pins A4 (Combustion engine Control unit) and Y29 (Pressure limiting valve in rail) has an open circuit. Component 'A41 (Electric fuel pump)' is faulty. For procedures, refer to the Shop Manual. Go to Step2
	Step2	Inspection procedure If one of diagnosis codes associated with SAM ECU is generated, make a system diagnosis according to the diagnosis code. Go to Step3
	Step3	Inspection procedure Turn the starter switch in OFF. Remove the connector of A4 (Combustion engine Control unit). Remove the connector of Y10 (Pressure regulating valve in rail). Check the circuit across Y10.2/1 and A4.X1.60/30 for open or short circuit. Check the circuit across Y10.2/2 and A4.X1.60/60 for open or short circuit. Make a visual check on each connector. Is any abnormality recognized? No: Go to Step4 Yes: Go to Step9
	Step4	Inspection procedure Turn the starter switch in OFF. Replace component "Y10 (Pressure regulating valve in rail)". Reinstall all the removed connectors. Turn the starter switch in ON. Perform the learned value resetting procedure of Y10 (Pressure regulating valve in rail) which A4 (Combustion engine Control unit) learns. Go to Step5
	Step5	Inspection procedure Turn the starter switch in OFF. Reinstall all the removed connectors. Erase fault memory and perform a test drive. Check if this diagnosis code has occurred. Are current fault codes present? No: Go to Step8 Yes: Go to Step6
	Step6	Inspect or verify the following items. Repair or replace faulty items as necessary. Component 'Y10 (Pressure regulating valve in rail)' is stuck. The electrical line between pins A4 (Combustion engine Control unit) and Y29 (Pressure limiting valve in rail) has an open circuit. Component 'A41 (Electric fuel pump)' is faulty. For procedures, refer to the Shop Manual Go to Step7
	Step7	Inspection procedure Perform the operation start and replace A4 (Combustion engine Control unit). Go to Step8
	Step8	Inspection completed

https://truckmanualshub.com/

Inspection procedure	Step9	Inspection procedure Repair or replace electrical lines. Reinstall all the removed connectors. Erase fault memory and perform a test drive. Check if this diagnosis code has occurred. Are current fault codes present? No: Go to Step8 Yes: Go to Step4

520502-1: Fuel rail pressure below limit with MeUn Control

Generation condition		[Test Condition] • Monitoring not inhibited by FId_RailMeUn1Blk due to another failure • Fuel Tank not Empty, i.e. FID_RailTnkLo not set due to Failure FlSysTnkLo (see description of FlSysTnkLo) • Pressure control by metering unit (Rail_stCtlLoop == 5)
		[Fault Detection] • The rail pressure < engine speed dependant minimal value (from 12000kPa {1740psi, 120kgf/cm^2} at 600.00rpm over 12000kPa {1740psi, 120kgf/cm^2} at 1600.00rpm) to 12000kPa {1740psi, 120kgf/cm^2} at 3200.00rpm))
		[Defect Debouncing] • Defect condition fulfilled continuously >300.0 ms
Fault healing		• No Healing possible (disabled by Data set)
System reaction		• According FID (see FID's)
		• 1) FId / Energizing time for injectors forced to minimum (= no fuel injection = engine stop) • 2) FId / Fuel quantity set to (= engine stop) • 3) FId / PreSupply Pump switched off • 4) FId / Fuel pressure set to minimum (= engine stop) • 5) Fid / SCR Monitoring or DEF injection release not possible (according calibration of Release Masks) • 6) Fid / Reagent dosing quantity for SCR reduced (to DStgy_facUreaDesRed_C) • 7) FId / Closing of metering unit forced (full fuel feeding) • 8) FId / Inhibit ISS, max number of engine starts exceeded
Failure cause		• Leakage in the high pressure system: • injection nozzle stuck in open position, low efficiency of high pressure pump, internal leakage of injector, leaking pressure control valve • Too low pressure at High pressure pump inlet due clogged filter, leaking low pressure tubes, electric pre supply pump defective or gear pump defective
Failure repair		• Check low pressure system for clogging (specially fuel filter) • Check tubing between pre supply and gear pump • Check feeding of pre supply pump (possibly low due to clogged tubes at tank outlet) • Check high pressure part for leakages (internal / external) • Check PCV for tightness in closed position (100% PWM) • Check High pressure pump for efficiency • Check injectors for tightness
Inspection procedure	Step1	Inspect or verify the following items. Repair or replace faulty items as necessary. Component 'Common rail' is faulty. Component 'Fuel injector' is stuck. Reduced pressure of Supply pump Fuel leakage of Fuel injector Fuel leakage of Y29 (Pressure limiting valve in rail) Fuel leakage of Fuel pipe Plugged Fuel filter module Component 'A41 (Electric fuel pump)' is faulty. Component 'Supply pump' is faulty. For procedures, refer to the Shop Manual. Go to Step2
	Step2	Inspection procedure If one of diagnosis codes associated with SAM ECU is generated, make a system diagnosis according to the diagnosis code. Go to Step3

https://truckmanualshub.com/

Inspection procedure	Step3	Inspection procedure Turn the starter switch in OFF. Remove the connector of A4 (Combustion engine Control unit). Remove the connector of Y10 (Pressure regulating valve in rail). Check the circuit across Y10.2/1 and A4.X1.60/30 for open or short circuit. Check the circuit across Y10.2/2 and A4.X1.60/60 for open or short circuit. Make a visual check on each connector. Is any abnormality recognized? No: Go to Step4 Yes: Go to Step9
	Step4	Inspection procedure Turn the starter switch in OFF. Replace component “Y10 (Pressure regulating valve in rail)”. Reinstall all the removed connectors. Turn the starter switch in ON. Perform the learned value resetting procedure of Y10 (Pressure regulating valve in rail) which A4 (Combustion engine Control unit) learns. Go to Step5
	Step5	Inspection procedure Turn the starter switch in OFF. Reinstall all the removed connectors. Erase fault memory and perform a test drive. Check if this diagnosis code has occurred. Are current fault codes present? No: Go to Step8 Yes: Go to Step6
	Step6	Inspect or verify the following items. Repair or replace faulty items as necessary. Component ‘Common rail’ is faulty. Component ‘Fuel injector’ is stuck. Reduced pressure of Supply pump Fuel leakage of Fuel injector Fuel leakage of Y29 (Pressure limiting valve in rail) Fuel leakage of Fuel pipe Plugged Fuel filter module Component ‘Supply pump’ is faulty. For procedures, refer to the Shop Manual Go to Step7
	Step7	Inspection procedure Perform the operation start and replace A4 (Combustion engine Control unit). Go to Step8
	Step8	Inspection completed
	Step9	Inspection procedure Repair or replace electrical lines. Reinstall all the removed connectors. Erase fault memory and perform a test drive. Check if this diagnosis code has occurred. Are current fault codes present? No: Go to Step8 Yes: Go to Step4

https://truckmanualshub.com/

520503-15: Too low fuel rail pressure concerning PCV Control.

Generation condition		[Test Condition] • Monitoring not inhibited by FID_RailPCV1Blk due to another failure • Fuel Tank not empty, i.e. FID_RailTnkLo not set by Failure FlSysTnkLo (se description there) • Monitoring only active if requested by another failure by FID_RailPCV1Rls • Pressure control by metering unit (Rail_stCtlLoop == 4) or in CPC (“both devices”) mode ((Rail_stCtlLoop == 15) • Control output for PCV (PCV_pSet) > Desired fuel pressure dependant maximum limit
		[Fault Detection] • The measured rail pressure is lower than the desired pressure by > engine speed dependant threshold (20MPa {2900psi, 205kgf/cm^2} at 650.00rpm to 20MPa {2900psi, 205kgf/cm^2} at 3600.00rpm)
		[Defect Debouncing] • Defect condition fulfilled continuously >750.0 ms
Fault healing		• No Healing possible (disabled by Data set)
System reaction		• According FID (see FID’s)
		• 1) FId / Energizing time for injectors forced to minimum (= no fuel injection = engine stop) • 2) FId / Fuel quantity set to (= engine stop) • 3) FId / PreSupply Pump switched off • 4) FId / Fuel pressure set to minimum (= engine stop) • 5) Fid / Reagent dosing quantity for SCR reduced (to DStgy_facUreaDesRed_C) • 6) FId / Closing of metering unit forced (full fuel feeding) • 7) FId / Zero Fuel Calibration (ZFC) of injectors disabled • 8) Fid / SCR Monitoring or DEF injection release not possible (according calibration of Release Masks) • 9) FId / Inhibit ISS, max number of engine starts exceeded
Failure cause		• Leakage in the high pressure system: • injection nozzle stuck in open position, low efficiency of high pressure pump, internal leakage of injector, leaking pressure control valve • Too low pressure at High pressure pump inlet due clogged filter, leaking low pressure tubes, electric pre supply pump defective or gear pump defective
Failure repair		• Check low pressure system for clogging (specially fuel filter) • Check tubing between pre supply and gear pump • Check feeding of pre supply pump (possibly low due to clogged tubes at tank outlet) • Check high pressure part for leakages (internal / external) • Check PCV for tightness in closed position (100% PWM) • Check High pressure pump for efficiency • Check injectors for tightness
Inspection procedure	Step1	Inspect or verify the following items. Repair or replace faulty items as necessary. Component ‘Common rail’ is faulty. Component ‘Fuel injector’ is stuck. Reduced pressure of Supply pump Fuel leakage of Fuel injector Fuel leakage of Y29 (Pressure limiting valve in rail) Plugged Fuel filter module Fuel leakage of Fuel pipe Component ‘A41 (Electric fuel pump)’ is faulty. For procedures, refer to the Shop Manual. Go to Step2
	Step2	Inspect or verify the following items. Repair or replace faulty items as necessary. If any other fault code has occurred, perform the diagnostics procedure for the fault code. Go to Step3

https://truckmanualshub.com/

Inspection procedure	Step3	Inspection procedure Turn the starter switch in OFF. Remove the connector of A4 (Combustion engine Control unit). Remove the connector of Y29 (Pressure limiting valve in rail). Check the circuit across Y29.2/1 and A4.X1.60/45 for open or short circuit. Check the circuit across Y29.2/2 and A4.X1.60/15 for open or short circuit. Make a visual check on each connector. Is any abnormality recognized? No: Go to Step4 Yes: Go to Step9
	Step4	Inspection procedure Turn the starter switch in OFF. Replace component “Y29 (Pressure limiting valve in rail)”. Reinstall all the removed connectors. Turn the starter switch in ON. Perform the learned value resetting procedure of Y29 (Pressure limiting valve in rail) which A4 (Combustion engine Control unit) learns. Go to Step5
	Step5	Inspection procedure Turn the starter switch in OFF. Reinstall all the removed connectors. Erase fault memory and perform a test drive. Check if this diagnosis code has occurred. Are current fault codes present? No: Go to Step8 Yes: Go to Step6
	Step6	Inspect or verify the following items. Repair or replace faulty items as necessary. Component ‘Common rail’ is faulty. Component ‘Fuel injector’ is stuck. Reduced pressure of Supply pump Fuel leakage of Fuel injector Fuel leakage of Y29 (Pressure limiting valve in rail) Plugged Fuel filter module Fuel leakage of Fuel pipe Component ‘A41 (Electric fuel pump)’ is faulty. For procedures, refer to the Shop Manual. Go to Step7
	Step7	Inspection procedure Perform the operation start and replace A4 (Combustion engine Control unit). Go to Step8
	Step8	Inspection completed
	Step9	Inspection procedure Repair or replace electrical lines. Reinstall all the removed connectors. Erase fault memory and perform a test drive. Check if this diagnosis code has occurred. Are current fault codes present? No: Go to Step8 Yes: Go to Step4

520503-16: Maximum rail pressure exceeded with PCV control.

Generation condition	[Test Condition] • Monitoring not inhibited by FID_RailPCV4Blk due to another failure • Fuel Tank not empty, i.e. FID_RailTnkLo not set by Failure FlSysTnkLo (se description there) • Pressure control by metering unit (Rail_stCtlLoop == 4) or in CPC (“both devices”) mode ((Rail_stCtlLoop == 15)
	[Fault Detection] • The measured rail pressure> 215MPa {31180psi, 2190kgf/cm^2}
	[Defect Debouncing] • Defect condition fulfilled continuously >240.0 ms
Fault healing	• No Healing possible (disabled by Data set)

https://truckmanualshub.com/

System reaction		• According FID (see FID's)
		• 1) Fid / Reagent dosing quantity for SCR reduced (to DStgy_facUreaDesRed_C) • 2) FId / Status of function identifier FId_EngDemTrqLimErr1 • 3) FId / Torque limitation 2 activated for power reduction • 4) FId / Engine speed Limitation 2 for HIgh/Low engine speed (HLS) control active • 5) FId / Monitoring of positive governor deviation of fuel rail pressure with Control by Metering Unit disabled • 6) FId / Monitoring of positive governor deviation of fuel rail pressure and Fuel delivery Set point with Control by Metering Unit released • 7) FId / Closed loop control of fuel rail pressure by pressure control valve PCV disabled (control exclusively with metering unit MeUn) • 8) FId / Zero Fuel Calibration (ZFC) of injectors disabled • 9) FId / Zero Fuel Calibration (ZFC) of injectors by Lambda Sensor signal disabled • 10) Fid / SCR Monitoring or DEF injection release not possible (according calibration of Release Masks) • 11) FId / Inhibit ISS, max number of engine starts exceeded
Failure cause		• Pressure Control Valve (PCV) stuck in close position, • additional current through PCV due to electric problem in wiring, • return flow tube from PCV clogged • Metering Unit (MeUn) stuck in full feeding position • No electrical power to metering unit
Failure repair		• Check PCV for opening (PWM=0% --> no pressure) • Check wiring harness for "external" electric power (short circuit) • Check return tube from PCV to tank for clogging • Check metering Unit for 0-delivery (PWM=100% --> no delivery) • Check wiring for metering unit for partial short circuit (current by-passes Me-Un) • Check 0-delivery valve of CP • Check return flow tube from zero delivery valve to tank for clogging
Inspection procedure	Step1	Inspect or verify the following items. Repair or replace faulty items as necessary. Component 'Y29 (Pressure limiting valve in rail)' is stuck. Clogging of Return tube from Y29 (Pressure limiting valve in rail) Component 'Y10 (Pressure regulating valve in rail)' is stuck. For procedures, refer to the Shop Manual. Go to Step2
	Step2	Inspect or verify the following items. Repair or replace faulty items as necessary. If any other fault code has occurred, perform the diagnostics procedure for the fault code. Go to Step3
	Step3	Inspection procedure Turn the starter switch in OFF. Remove the connector of A4 (Combustion engine Control unit). Remove the connector of Y29 (Pressure limiting valve in rail). Check the circuit across Y29.2/1 and A4.X1.60/45 for open or short circuit. Check the circuit across Y29.2/2 and A4.X1.60/15 for open or short circuit. Make a visual check on each connector. Is any abnormality recognized? No: Go to Step4 Yes: Go to Step9
	Step4	Inspection procedure Turn the starter switch in OFF. Replace component "Y29 (Pressure limiting valve in rail)". Reinstall all the removed connectors. Turn the starter switch in ON. Perform the learned value resetting procedure of Y29 (Pressure limiting valve in rail) which A4 (Combustion engine Control unit) learns. Go to Step5

https://truckmanualshub.com/

Inspection procedure	Step5	Inspection procedure Turn the starter switch in OFF. Reinstall all the removed connectors. Erase fault memory and perform a test drive. Check if this diagnosis code has occurred. Are current fault codes present? No: Go to Step8 Yes: Go to Step6
	Step6	Inspect or verify the following items. Repair or replace faulty items as necessary. Component 'Y29 (Pressure limiting valve in rail)' is stuck. Component 'Y10 (Pressure regulating valve in rail)' is stuck. Clogging of Return tube from Y29 (Pressure limiting valve in rail) For procedures, refer to the Shop Manual Go to Step7
	Step7	Inspection procedure Perform the operation start and replace A4 (Combustion engine Control unit). Go to Step8
	Step8	Inspection completed
	Step9	Inspection procedure Repair or replace electrical lines. Reinstall all the removed connectors. Erase fault memory and perform a test drive. Check if this diagnosis code has occurred. Are current fault codes present? No: Go to Step8 Yes: Go to Step4

520503-18: Minimum rail pressure not reached with PCV Control

Generation condition	[Test Condition] • Monitoring not inhibited by FID_RailPCV3Blk due to another failure • Fuel Tank not empty, i.e. FID_RailTnkLo not set by Failure FlSysTnkLo (se description there) • Pressure control by PCV(Rail_stCtlLoop == 4) or in CPC ("both devices") mode ((Rail_stCtlLoop == 15)
	[Fault Detection] • The measured rail pressure < engine speed dependant threshold (12000kPa {1740psi, 120kgf/cm^2} at 600.00rpm to 12000kPa {1740psi, 120kgf/cm^2} at 3600.00rpm)
	[Defect Debouncing] • Defect condition fulfilled continuously >300.0 ms
Fault healing	• No Healing possible (disabled by Data set)
System reaction	• According FID (see FID's)
	• 1) FId / Energizing time for injectors forced to minimum (= no fuel injection = engine stop) • 2) FId / Fuel quantity set to (= engine stop) • 3) FId / PreSupply Pump switched off • 4) FId / Fuel pressure set to minimum (= engine stop) • 5) Fid / Reagent dosing quantity for SCR reduced (to DStgy_facUreaDesRed_C) • 6) FId / Closing of metering unit forced (full fuel feeding) • 7) Fid / SCR Monitoring or DEF injection release not possible (according calibration of Release Masks) • 8) FId / Inhibit ISS, max number of engine starts exceeded
Failure cause	• Leakage in the high pressure system: • injection nozzle stuck in open position, low efficiency of high pressure pump, internal leakage of injector, leaking pressure control valve • Too low pressure at High pressure pump inlet due clogged filter, leaking low pressure tubes, electric pre supply pump defective or gear pump defective

https://truckmanualshub.com/

Failure repair		• Check low pressure system for clogging (specially fuel filter) • Check tubing between pre supply and gear pump • Check feeding of pre supply pump (possibly low due to clogged tubes at tank outlet) • Check high pressure part for leakages (internal / external) • Check PCV for tightness in closed position (100% PWM) • Check High pressure pump for efficiency • Check injectors for tightness
Inspection procedure	Step1	Inspect or verify the following items. Repair or replace faulty items as necessary. Component 'Common rail' is faulty. Component 'Fuel injector' is stuck. Reduced pressure of Supply pump Fuel leakage of Fuel injector Fuel leakage of Y29 (Pressure limiting valve in rail) Plugged Fuel filter module Fuel leakage of Fuel pipe Component 'A41 (Electric fuel pump)' is faulty. Component 'Supply pump' is faulty. For procedures, refer to the Shop Manual. Go to Step2
	Step2	Inspect or verify the following items. Repair or replace faulty items as necessary. If any other fault code has occurred, perform the diagnostics procedure for the fault code. Go to Step3
	Step3	Inspection procedure Turn the starter switch in OFF. Remove the connector of A4 (Combustion engine Control unit). Remove the connector of Y29 (Pressure limiting valve in rail). Check the circuit across Y29.2/1 and A4.X1.60/45 for open or short circuit. Check the circuit across Y29.2/2 and A4.X1.60/15 for open or short circuit. Make a visual check on each connector. Is any abnormality recognized? No: Go to Step4 Yes: Go to Step9
	Step4	Inspection procedure Turn the starter switch in OFF. Replace component "Y29 (Pressure limiting valve in rail)". Reinstall all the removed connectors. Turn the starter switch in ON. Perform the learned value resetting procedure of Y29 (Pressure limiting valve in rail) which A4 (Combustion engine Control unit) learns. Go to Step5
	Step5	Inspection procedure Turn the starter switch in OFF. Reinstall all the removed connectors. Erase fault memory and perform a test drive. Check if this diagnosis code has occurred. Are current fault codes present? No: Go to Step8 Yes: Go to Step6
	Step6	Inspect or verify the following items. Repair or replace faulty items as necessary. Component 'Common rail' is faulty. Component 'Fuel injector' is stuck. Reduced pressure of Supply pump Fuel leakage of Fuel injector Fuel leakage of Y29 (Pressure limiting valve in rail) Plugged Fuel filter module Fuel leakage of Fuel pipe Component 'A41 (Electric fuel pump)' is faulty. Component 'Supply pump' is faulty. For procedures, refer to the Shop Manual Go to Step7

https://truckmanualshub.com/

Inspection procedure	Step7	Inspection procedure Perform the operation start and replace A4 (Combustion engine Control unit). Go to Step8
	Step8	Inspection completed
	Step9	Inspection procedure Repair or replace electrical lines. Reinstall all the removed connectors. Erase fault memory and perform a test drive. Check if this diagnosis code has occurred. Are current fault codes present? No: Go to Step8 Yes: Go to Step4

520503-20: Too low fuel rail pressure with PCV control

Generation condition	[Test Condition] • Monitoring not inhibited by FID_RailPCV0Blk due to another failure • Pressure control by PCV(Rail_stCtlLoop == 4) or in CPC (“both devices”) mode ((Rail_stCtlLoop == 15) • Fuel Tank not empty, i.e. FID_RailTnkLo not set by Failure FlSysTnkLo (se description there)
	[Fault Detection] • The measured rail pressure is lower than the desired pressure by > engine speed dependant threshold (from 20MPa {2900psi, 205kgf/cm^2} at 650.00rpm to 20MPa {2900psi, 205kgf/cm^2} at 3200.00rpm)
	[Defect Debouncing] • Defect condition fulfilled continuously >800.0 ms
Fault healing	• No Healing possible (disabled by Data set)
System reaction	• According FID (see FID’s)
	• 1) Fid / Reagent dosing quantity for SCR reduced (to DStgy_facUreaDesRed_C) • 2) FId / Status of function identifier FId_EngDemTrqLimErr1 • 3) FId / Torque limitation 2 activated for power reduction • 4) FId / Engine speed Limitation 2 for HIgh/Low engine speed (HLS) control active • 5) FId / Fuel pressure control exclusively made by metering unit (MeUn) in current driving cycle • 6) FId / Monitoring of positive governor deviation of fuel rail pressure with Control by Metering Unit disabled • 7) FId / Monitoring of positive governor deviation of fuel rail pressure and Fuel delivery Set point with Control by Metering Unit released • 8) FId / Monitoring of positive deviation (too low pressure) combined with set value of pressure control valve enabled • 9) FId / Fuel Rail pressure reduced (by Rail_pSet pointRed_C) in case of torque limitation active • 10) FId / Zero Fuel Calibration (ZFC) of injectors disabled • 11) FId / Zero Fuel Calibration (ZFC) of injectors by Lambda Sensor signal disabled • 12) Fid / SCR Monitoring or DEF injection release not possible (according calibration of Release Masks) • 13) FId / Inhibit ISS, max number of engine starts exceeded
Failure cause	• Leakage in the high pressure system: • injection nozzle stuck in open position, low efficiency of high pressure pump, internal leakage of injector, leaking pressure control valve • Too low pressure at High pressure pump inlet due clogged filter, leaking low pressure tubes, electric pre supply pump defective or gear pump defective
Failure repair	• Check low pressure system for clogging (specially fuel filter) • Check tubing between pre supply and gear pump • Check feeding of pre supply pump (possibly low due to clogged tubes at tank outlet) • Check high pressure part for leakages (internal / external) • Check PCV for tightness in closed position (100% PWM) • Check High pressure pump for efficiency • Check injectors for tightness

https://truckmanualshub.com/

Inspection procedure	Step1	Inspect or verify the following items. Repair or replace faulty items as necessary. Component ‘Common rail’ is faulty. Component ‘Fuel injector’ is stuck. Reduced pressure of Supply pump Fuel leakage of Fuel injector Fuel leakage of Y29 (Pressure limiting valve in rail) Plugged Fuel filter module Fuel leakage of Fuel pipe Component ‘A41 (Electric fuel pump)’ is faulty. For procedures, refer to the Shop Manual. Go to Step2
	Step2	Inspect or verify the following items. Repair or replace faulty items as necessary. If any other fault code has occurred, perform the diagnostics procedure for the fault code. Go to Step3
	Step3	Inspection procedure Turn the starter switch in OFF. Remove the connector of A4 (Combustion engine Control unit). Remove the connector of Y29 (Pressure limiting valve in rail). Check the circuit across Y29.2/1 and A4.X1.60/45 for open or short circuit. Check the circuit across Y29.2/2 and A4.X1.60/15 for open or short circuit. Make a visual check on each connector. Is any abnormality recognized? No: Go to Step4 Yes: Go to Step9
	Step4	Inspection procedure Turn the starter switch in OFF. Replace component “Y29 (Pressure limiting valve in rail)”. Reinstall all the removed connectors. Turn the starter switch in ON. Perform the learned value resetting procedure of Y29 (Pressure limiting valve in rail) which A4 (Combustion engine Control unit) learns. Go to Step5
	Step5	Inspection procedure Turn the starter switch in OFF. Reinstall all the removed connectors. Erase fault memory and perform a test drive. Check if this diagnosis code has occurred. Are current fault codes present? No: Go to Step8 Yes: Go to Step6
	Step6	Inspect or verify the following items. Repair or replace faulty items as necessary. Component ‘Common rail’ is faulty. Component ‘Fuel injector’ is stuck. Reduced pressure of Supply pump Fuel leakage of Fuel injector Fuel leakage of Y29 (Pressure limiting valve in rail) Plugged Fuel filter module Fuel leakage of Fuel pipe Component ‘A41 (Electric fuel pump)’ is faulty. For procedures, refer to the Shop Manual. Go to Step7
	Step7	Inspection procedure Perform the operation start and replace A4 (Combustion engine Control unit). Go to Step8
	Step8	Inspection completed

https://truckmanualshub.com/

Inspection procedure	Step9	Inspection procedure Repair or replace electrical lines. Reinstall all the removed connectors. Erase fault memory and perform a test drive. Check if this diagnosis code has occurred. Are current fault codes present? No: Go to Step8 Yes: Go to Step4

520503-21: Too high fuel rail pressure with PCV Control

Generation condition		[Test Condition] • Monitoring not inhibited by FID_RailPCV2Blk due to another failure • Fuel Tank not empty, i.e. FID_RailTnkLo not set by Failure FlSysTnkLo (se description there) • Pressure control by metering unit (Rail_stCtlLoop == 4) or in CPC (“both devices”) mode ((Rail_stCtlLoop == 15) • PCV governor output in open position (PCV_pSet < 1MPa {145psi, 10kgf/cm^2})
		[Fault Detection] • The measured rail pressure exceeds the desired pressure by > 25MPa {3630psi, 255kgf/cm^2}
		[Defect Debouncing] • Defect condition fulfilled continuously >1000.0 ms
Fault healing		• No Healing possible (disabled by Data set)
System reaction		• According FID (see FID’s)
		• 1) Fid / Reagent dosing quantity for SCR reduced (to DStgy_facUreaDesRed_C) • 2) FId / Status of function identifier FId_EngDemTrqLimErr1 • 3) FId / Torque limitation 2 activated for power reduction • 4) FId / Engine speed Limitation 2 for HIgh/Low engine speed (HLS) control active • 5) FId / Monitoring of positive governor deviation of fuel rail pressure with Control by Metering Unit disabled • 6) FId / Monitoring of positive governor deviation of fuel rail pressure and Fuel delivery Set point with Control by Metering Unit released • 7) FId / Closed loop control of fuel rail pressure by pressure control valve PCV disabled (control exclusively with metering unit MeUn) • 8) FId / Zero Fuel Calibration (ZFC) of injectors disabled • 9) FId / Zero Fuel Calibration (ZFC) of injectors by Lambda Sensor signal disabled • 10) Fid / SCR Monitoring or DEF injection release not possible (according calibration of Release Masks) • 11) FId / Inhibit ISS, max number of engine starts exceeded
Failure cause		• Pressure Control Valve (PCV) stuck in close position, additional current though PCV due to electric problem in wiring, return flow tube from PCV clogged
Failure repair		• Check PCV for opening (PWM=0% --> no pressure) • Check wiring harness for “external” electric power (short circuit) • Check return tube from PCV to tank for clogging
Inspection procedure	Step1	Inspect or verify the following items. Repair or replace faulty items as necessary. Component ‘Y29 (Pressure limiting valve in rail)’ is stuck. Clogging of Return tube from Y29 (Pressure limiting valve in rail) For procedures, refer to the Shop Manual. Go to Step2
	Step2	Inspect or verify the following items. Repair or replace faulty items as necessary. If any other fault code has occurred, perform the diagnostics procedure for the fault code. Go to Step3

https://truckmanualshub.com/

Inspection procedure	Step3	Inspection procedure Turn the starter switch in OFF. Remove the connector of A4 (Combustion engine Control unit). Remove the connector of Y29 (Pressure limiting valve in rail). Check the circuit across Y29.2/1 and A4.X1.60/45 for open or short circuit. Check the circuit across Y29.2/2 and A4.X1.60/15 for open or short circuit. Make a visual check on each connector. Is any abnormality recognized? No: Go to Step4 Yes: Go to Step9
	Step4	Inspection procedure Turn the starter switch in OFF. Replace component “Y29 (Pressure limiting valve in rail)”. Reinstall all the removed connectors. Turn the starter switch in ON. Perform the learned value resetting procedure of Y29 (Pressure limiting valve in rail) which A4 (Combustion engine Control unit) learns. Go to Step5
	Step5	Inspection procedure Turn the starter switch in OFF. Reinstall all the removed connectors. Erase fault memory and perform a test drive. Check if this diagnosis code has occurred. Are current fault codes present? No: Go to Step8 Yes: Go to Step6
	Step6	Inspect or verify the following items. Repair or replace faulty items as necessary. Component ‘Y29 (Pressure limiting valve in rail)’ is stuck. Clogging of Return tube from Y29 (Pressure limiting valve in rail) For procedures, refer to the Shop Manual. Go to Step7
	Step7	Inspection procedure Perform the operation start and replace A4 (Combustion engine Control unit). Go to Step8
	Step8	Inspection completed
	Step9	Inspection procedure Repair or replace electrical lines. Reinstall all the removed connectors. Erase fault memory and perform a test drive. Check if this diagnosis code has occurred. Are current fault codes present? No: Go to Step8 Yes: Go to Step4

520505-31: SCR reagent tank level below first warning level.

Generation condition	[Test Condition] • Continuously
	[Fault Detection] • Reducing agent tank level (UDC_rRdcAgRmn) below the calibratable limit 10.00%.
	[Defect Debouncing] • Defect condition fulfilled continuously > 500.0 ms
Fault healing	• Reducing agent tank level (UDC_rRdcAgRmn) above the calibratable limit 10.00%.
System reaction	• None except FIDs
	• 1) FId / Function Identifier to trigger Mild Warning level for Status Block 3 • 2) FId / OBD Performance Limiter 121 switched ON • 3) FId / OBD Performance limiter 121 released if failure path is tested and OK
Failure cause	• Reducing agent tank level below first warning level
Failure repair	• Refill reducing agent tank

https://truckmanualshub.com/

Inspection procedure	Step1	Inspection procedure Inspect the suspected factors mentioned above sequentially to locate faulty parts. Repair or replace the faulty part as necessary.

520506-31: SCR reagent tank level below second warning level.

Generation condition		[Test Condition] • Continuously
		[Fault Detection] • Reducing agent tank level (UDC_rRdcAgRmn) below the calibratable limit 5.00%.
		[Defect Debouncing] • Defect condition fulfilled continuously >500.0 ms
Fault healing		• Reducing agent tank level (UDC_rRdcAgRmn) above the calibratable limit 5.00%.
System reaction		• None except FIDs
		• 1) FId / Function Identifier to trigger Mild Warning level for Status Block 1 • 2) FId / Function Identifier to trigger Mild Warning level for Status Block 5 • 3) FId / Function Identifier to trigger Moderate Warning level for Status Block 3
Failure cause		• Reducing agent tank level below low second warning level
Failure repair		• Refill reducing agent tank
Inspection procedure	Step1	Inspection procedure Inspect the suspected factors mentioned above sequentially to locate faulty parts. Repair or replace the faulty part as necessary.

520509-2: Invalid dataset identifier

Generation condition		[Test Condition] • During ECM start up.
		[Fault Detection] • Invalid variant identifier.
		[Defect Debouncing] • Immediate
Fault healing		• None
System reaction		• Master dataset is used
Failure cause		• Dataset not correct
Failure repair		• Check programmed dataset, contact Help Desk
Inspection procedure	Step1	Inspection procedure Erase fault memory and perform a test drive. If the diagnosis code has occurred even during the test drive, start the operation and then replace the A4 (Combustion engine Control unit). Inspection completed

520510-2: Dataset switching error

Generation condition		[Test Condition] • During ECM start up.
		[Fault Detection] • Error during switchover to desired dataset variant in code word
		[Defect Debouncing] • Immediate.
Fault healing		• None
System reaction		• Master dataset is used
Failure cause		• Dataset incorrect, possibly not compatible with End of Line application
Failure repair		• Check dataset, contact Help Desk

https://truckmanualshub.com/

Inspection procedure	Step1	Inspection procedure Perform the appropriate coding. Coding items All Set items All Go to step2
	Step2	Inspection procedure Perform the appropriate settings. Set items Default settings of sensors For procedures, refer to the Shop Manual. All Inspection completed

520511-2: EEPROM codeword read error

Generation condition		[Test Condition] • During ECM start up.
		[Fault Detection] • Code word could not be read correctly from EEPROM
		[Defect Debouncing] • Immediate
Fault healing		• Code word could be read correctly from EEPROM, healing possible at next ECM start up.
System reaction		• Master dataset is used
Failure cause		• ECM End of line programming not correctly completed
Failure repair		• Check ECM programming, contact Help Desk
Inspection procedure	Step1	Inspection procedure Perform the appropriate coding. Coding items All Set items All Go to step2
	Step2	Inspection procedure Perform the appropriate settings. Set items Default settings of sensors For procedures, refer to the Shop Manual. All Inspection completed

520512-12: SW reset for all testers

Generation condition	[Test Condition] • None
	[Fault Detection] • The evaluation of the reset reason will be done after every reset. Depending on the configured visibility of the current reset, one of the fault checks in the array will be set.
	[Defect Debouncing] • None
Fault healing	• When the detected reset was no trap and no SoftwareReset all fault checks will be cleared.
System reaction	• An ECU reset occurring while driving should cause a short power reduction, all instrument panel lights could flash (power on test) and the instruments could shortly go to zero.
Failure cause	• Electronic disturbances, various hardware defects (ECU internal) or configuration problems

https://truckmanualshub.com/

Failure repair		• Analyze what error triggered the recovery (Read out label HWEMon_numRecovery and compare the value with the according table). If error occurs repeatedly, reprogram EDC. If error remains, replace EDC.
Inspection procedure	Step1	Inspection procedure Erase fault memory and perform a test drive. If the diagnosis code has occurred even during the test drive, start the operation and then replace the A4 (Combustion engine Control unit). Inspection completed

520513-12: SW reset for manufacturer only

Generation condition		[Test Condition] • None
		[Fault Detection] • The evaluation of the reset reason will be done after every reset. Depending on the configured visibility of the current reset, one of the fault checks in the array will be set.
		[Defect Debouncing] • None
Fault healing		• When the detected reset was no trap and no SoftwareReset all fault checks will be cleared.
System reaction		• An ECU reset occurring while driving should cause a short power reduction, all instrument panel lights could flash (power on test) and the instruments could shortly go to zero.
Failure cause		• Electronic disturbances, various hardware defects (ECU internal) or configuration problems
Failure repair		• Analyze what error triggered the recovery (Read out label HWEMon_numRecovery and compare the value with the according table). If error occurs repeatedly, reprogram EDC. If error remains, replace EDC.
Inspection procedure	Step1	Inspection procedure Erase fault memory and perform a test drive. If the diagnosis code has occurred even during the test drive, start the operation and then replace the A4 (Combustion engine Control unit). Inspection completed

520514-12: SW reset invisibility

Generation condition		[Test Condition] • None
		[Fault Detection] • The evaluation of the reset reason will be done after every reset. Depending on the configured visibility of the current reset, one of the fault checks in the array will be set.
		[Defect Debouncing] • None
Fault healing		• When the detected reset was no trap and no SoftwareReset all fault checks will be cleared.
System reaction		• An ECU reset occurring while driving should cause a short power reduction, all instrument panel lights could flash (power on test) and the instruments could shortly go to zero.
Failure cause		• Electronic disturbances, various hardware defects (ECU internal) or configuration problems
Failure repair		• Analyze what error triggered the recovery (Read out label HWEMon_numRecovery and compare the value with the according table). If error occurs repeatedly, reprogram EDC. If error remains, replace EDC.
Inspection procedure	Step1	Inspection procedure Erase fault memory and perform a test drive. If the diagnosis code has occurred even during the test drive, start the operation and then replace the A4 (Combustion engine Control unit). Inspection completed

https://truckmanualshub.com/

520530-0: Catalyst upstream temperature Signal range checkHIGH

Generation condition		[Test Condition] • Monitoring is active while the battery voltage is over 10.00V and as long as the battery voltage is over 10.00V and 2.00s after this threshold has been exceeded • Continuously if the ADC module does not report any error.
		[Fault Detection] • The Sensed raw voltage value SCR_uRawUCatUsT is above 4.00V
		[Defect Debouncing] • Defect condition exceeded cumulatively > 700.00ms • Failure is detected if active for 50% of the time
Fault healing		• The Sensed raw voltage value SCR_uRawUCatUsT is below 4.00V
System reaction		• DEF catalyst upstream temperature is frozen at last valid value on preliminary failure and ramps to fixed replacement value 26.96°C {80.53°F} if failure is validated using slope 3300.00K/s or 3300.00K/s depending on whether the replacement value is above or below the current value • Further reactions according FID (see FID's)
		• 1) FId / Freeze Cat Upstream temperature if preliminary failure is detected • 2) FId / Replace Cat Upstream temperature with default value if failure is validated • 3) FId / Plausibilty check of temperature sensors at cold start not allowed • 4) Fid / Reagent dosing for SCR inhibited • 5) FId / Physical signal range check of temperature sensor 3 inhibited • 6) Fid / SCR Monitoring or DEF injection release not possible (according calibration of Release Masks) • 7) FId / Inhibit Physical Range Check of sensed Catalyst Upstream temperature • 8) Fid / Replace modelled Catalyst Upstream temperature value with a default value
Failure cause		• Sensor defective or short circuit in wiring to external source
Failure repair		• Check wiring or replace sensor
Inspection procedure	Step1	Inspect or verify the following items. Repair or replace faulty items as necessary. If any other fault code has occurred, perform the diagnostics procedure for the fault code. Go to Step2
	Step2	Inspect or verify the following items. Repair or replace faulty items as necessary. If one of diagnosis codes associated with SAM ECU is generated, make a system diagnosis according to the diagnosis code. Go to Step3
	Step3	Inspection procedure Turn the starter switch in OFF. Remove the connector of A4 (Combustion engine Control unit). Remove the connector of B28 (Temperature sensor "SCR catalytic converter" 1). Check the circuit across A4.X2.94/14 and B28.2/1 for open or short circuit. Check the circuit across A4.X2.94/41 and B28.2/2 for open or short circuit. Make a visual check on each connector. Is any abnormality recognized? No: Go to Step4 Yes: Go to Step8
	Step4	Inspection procedure Turn the starter switch in OFF. Replace component "B28 (Temperature sensor "SCR catalytic converter" 1)". Reinstall all the removed connectors. Turn the starter switch in ON. Go to Step5

https://truckmanualshub.com/

Inspection procedure	Step5	Inspection procedure Turn the starter switch in OFF. Reinstall all the removed connectors. Erase fault memory and perform a test drive. Check if this diagnosis code has occurred. Are current fault codes present? No: Go to Step6 Yes: Go to Step7
	Step6	Inspection completed
	Step7	Inspection procedure Perform the operation start and replace A4 (Combustion engine Control unit). Inspection completed
	Step8	Inspection procedure Turn the starter switch in OFF. Remove the connector of A4 (Combustion engine Control unit). Remove the connector of X42 (Intermediate connector). Check the circuit across A4.X2.94/14 and X42.8/8 for open or short circuit. Check the circuit across A4.X2.94/41 and X42.8/7 for open or short circuit. Make a visual check on each connector. Is any abnormality recognized? No: Go to Step9 Yes: Go to Step10
	Step9	Inspection procedure Repair or replace the harness across B28 (Temperature sensor "SCR catalytic converter" 1) and X42 (Intermediate connector). Reinstall all the removed connectors. Erase fault memory and perform a test drive. Check if this diagnosis code has occurred. Are current fault codes present? No: Go to Step6 Yes: Go to Step4
	Step10	Inspection procedure Repair or replace the harness across A4 (Combustion engine Control unit) and X42 (Intermediate connector). Reinstall all the removed connectors. Erase fault memory and perform a test drive. Check if this diagnosis code has occurred. Are current fault codes present? No: Go to Step6 Yes: Go to Step4

https://truckmanualshub.com/

520530-1: Catalyst upstream temperature Signal range checkLOW

Generation condition		[Test Condition] • Monitoring is active while the battery voltage is over 10.00V and as long as the battery voltage is over 10.00V and 2.00s after this threshold has been exceeded • Continuously if the ADC module does not report any error.
		[Fault Detection] • The Sensed raw voltage value SCR_uRawUCatUsT is below 500.00mV
		[Defect Debouncing] • Defect condition exceeded cumulatively > 700.00ms • Failure is detected if active for 50% of the time
Fault healing		• The Sensed raw voltage value SCR_uRawUCatUsT is above 500.00mV
System reaction		• DEF catalyst upstream temperature is frozen at last valid value on preliminary failure and ramps to fixed replacement value 26.96°C {80.53°F} if failure is validated using slope 3300.00K/s or 3300.00K/s depending on whether the replacement value is above or below the current value • Further reactions according FID (see FID's)
		• 1) FId / Freeze Cat Upstream temperature if preliminary failure is detected • 2) FId / Replace Cat Upstream temperature with default value if failure is validated • 3) FId / Plausibilty check of temperature sensors at cold start not allowed • 4) Fid / Reagent dosing for SCR inhibited • 5) FId / Physical signal range check of temperature sensor 3 inhibited • 6) Fid / SCR Monitoring or DEF injection release not possible (according calibration of Release Masks) • 7) FId / Inhibit Physical Range Check of sensed Catalyst Upstream temperature • 8) Fid / Replace modelled Catalyst Upstream temperature value with a default value
Failure cause		• Sensor defective or short circuit in wiring to ground
Failure repair		• Check wiring or replace sensor
Inspection procedure	Step1	Inspect or verify the following items. Repair or replace faulty items as necessary. If any other fault code has occurred, perform the diagnostics procedure for the fault code. Go to Step2
	Step2	Inspect or verify the following items. Repair or replace faulty items as necessary. If one of diagnosis codes associated with SAM ECU is generated, make a system diagnosis according to the diagnosis code. Go to Step3
	Step3	Inspection procedure Turn the starter switch in OFF. Remove the connector of A4 (Combustion engine Control unit). Remove the connector of B28 (Temperature sensor "SCR catalytic converter" 1). Check the circuit across A4.X2.94/14 and B28.2/1 for open or short circuit. Check the circuit across A4.X2.94/41 and B28.2/2 for open or short circuit. Make a visual check on each connector. Is any abnormality recognized? No: Go to Step4 Yes: Go to Step8
	Step4	Inspection procedure Turn the starter switch in OFF. Replace component "B28 (Temperature sensor "SCR catalytic converter" 1)". Reinstall all the removed connectors. Turn the starter switch in ON. Go to Step5

https://truckmanualshub.com/

Inspection procedure	Step5	Inspection procedure Turn the starter switch in OFF. Reinstall all the removed connectors. Erase fault memory and perform a test drive. Check if this diagnosis code has occurred. Are current fault codes present? No: Go to Step6 Yes: Go to Step7
	Step6	Inspection completed
	Step7	Inspection procedure Perform the operation start and replace A4 (Combustion engine Control unit). Inspection completed
	Step8	Inspection procedure Turn the starter switch in OFF. Remove the connector of A4 (Combustion engine Control unit). Remove the connector of X42 (Intermediate connector). Check the circuit across A4.X2.94/14 and X42.8/8 for open or short circuit. Check the circuit across A4.X2.94/41 and X42.8/7 for open or short circuit. Make a visual check on each connector. Is any abnormality recognized? No: Go to Step9 Yes: Go to Step10
	Step9	Inspection procedure Repair or replace the harness across B28 (Temperature sensor "SCR catalytic converter" 1) and X42 (Intermediate connector). Reinstall all the removed connectors. Erase fault memory and perform a test drive. Check if this diagnosis code has occurred. Are current fault codes present? No: Go to Step6 Yes: Go to Step4
	Step10	Inspection procedure Repair or replace the harness across A4 (Combustion engine Control unit) and X42 (Intermediate connector). Reinstall all the removed connectors. Erase fault memory and perform a test drive. Check if this diagnosis code has occurred. Are current fault codes present? No: Go to Step6 Yes: Go to Step4

520530-16: Exhaust temperature upstream of SCR catalytic converter: Signal value above maximum limit

Generation condition	[Test Condition] • Monitoring is active while the battery voltage is over 10.00V and as long as the battery voltage is over 10.00V and 2.00s after this threshold has been exceeded • continuously if analogic Digital Converter module doesn’t report any error and the Signal Range Check error for the catalyst upstream temperature sensor is not set
	[Fault Detection] • The sensed sensor signal SCR_tSensUCatUsT is above 999.96°C {1831.93°F}
	[Defect Debouncing] • Defect condition exceeded cumulatively > 10.00s • Failure is detected if active for 50% of the time
Fault healing	• The sensed sensor signal SCR_tSensUCatUsT is below 999.96°C {1831.93°F}

https://truckmanualshub.com/

System reaction		• DEF catalyst upstream temperature is frozen at last valid value on preliminary failure and ramps to fixed replacement value 26.96°C {80.53°F} if failure is validated using slope 3300.00K/s or 3300.00K/s depending on whether the replacement value is above or below the current value • Further reactions according FID (see FID's)
		• 1) FId / Freeze Cat Upstream temperature if preliminary failure is detected • 2) FId / Replace Cat Upstream temperature with default value if failure is validated • 3) Fid / Reagent dosing for SCR inhibited • 4) Fid / SCR Monitoring or DEF injection release not possible (according calibration of Release Masks)
Failure cause		• DEF Catalyst temperature upstream sensor drifted or not correctly mounted • Partial short circuit on wiring harness or sensor
Failure repair		• Check sensor • Check wiring
Inspection procedure	Step1	Inspect or verify the following items. Repair or replace faulty items as necessary. If any other fault code has occurred, perform the diagnostics procedure for the fault code. Go to Step2
	Step2	Inspect or verify the following items. Repair or replace faulty items as necessary. If one of diagnosis codes associated with SAM ECU is generated, make a system diagnosis according to the diagnosis code. Go to Step3
	Step3	Inspection procedure Turn the starter switch in OFF. Remove the connector of A4 (Combustion engine Control unit). Remove the connector of B28 (Temperature sensor "SCR catalytic converter" 1). Check the circuit across A4.X2.94/14 and B28.2/1 for open or short circuit. Check the circuit across A4.X2.94/41 and B28.2/2 for open or short circuit. Make a visual check on each connector. Is any abnormality recognized? No: Go to Step4 Yes: Go to Step8
	Step4	Inspection procedure Turn the starter switch in OFF. Replace component "B28 (Temperature sensor "SCR catalytic converter" 1)". Reinstall all the removed connectors. Turn the starter switch in ON. Go to Step5
	Step5	Inspection procedure Turn the starter switch in OFF. Reinstall all the removed connectors. Erase fault memory and perform a test drive. Check if this diagnosis code has occurred. Are current fault codes present? No:Go to Step6 Yes: Go to Step7
	Step6	Inspection completed
	Step7	Inspection procedure Perform the operation start and replace A4 (Combustion engine Control unit). Inspection completed
	Step8	Inspection procedure Turn the starter switch in OFF. Remove the connector of A4 (Combustion engine Control unit). Remove the connector of X42 (Intermediate connector). Check the circuit across A4.X2.94/14 and X42.8/8 for open or short circuit. Check the circuit across A4.X2.94/41 and X42.8/7 for open or short circuit. Make a visual check on each connector. Is any abnormality recognized? No: Go to Step9 Yes: Go to Step10

https://truckmanualshub.com/

Inspection procedure	Step9	Inspection procedure Repair or replace the harness across B28 (Temperature sensor "SCR catalytic converter" 1) and X42 (Intermediate connector). Reinstall all the removed connectors. Erase fault memory and perform a test drive. Check if this diagnosis code has occurred. Are current fault codes present? No: Go to Step6 Yes: Go to Step4
	Step10	Inspection procedure Repair or replace the harness across A4 (Combustion engine Control unit) and X42 (Intermediate connector). Reinstall all the removed connectors. Erase fault memory and perform a test drive. Check if this diagnosis code has occurred. Are current fault codes present? No: Go to Step6 Yes: Go to Step4

520530-18: Exhaust temperature upstream of SCR catalytic converter: Signal value below minimum limit

Generation condition		[Test Condition] • Monitoring is active while the battery voltage is over 10.00V and as long as the battery voltage is over 10.00V and 2.00s after this threshold has been exceeded • continuously if analogic Digital Converter module doesn't report any error and the Signal Range Check error for the catalyst upstream temperature sensor is not set
		[Fault Detection] • The sensed sensor signal SCR_tSensUCatUsT is below -45.04°C {-49.07°F}
		[Defect Debouncing] • Defect condition exceeded cumulatively > 10.00s • Failure is detected if active for 50% of the time
Fault healing		• The sensed sensor signal SCR_tSensUCatUsT is above -45.04°C {-49.07°F}
System reaction		• DEF catalyst upstream temperature is frozen at last valid value on preliminary failure and ramps to fixed replacement value 26.96°C {80.53°F} if failure is validated using slope 3300.00K/s or 3300.00K/s depending on whether the replacement value is above or below the current value • Further reactions according FID (see FID's)
		• 1) FId / Freeze Cat Upstream temperature if preliminary failure is detected • 2) FId / Replace Cat Upstream temperature with default value if failure is validated • 3) Fid / Reagent dosing for SCR inhibited • 4) Fid / SCR Monitoring or DEF injection release not possible (according calibration of Release Masks)
Failure cause		• DEF Catalyst temperature upstream sensor drifted or not correctly mounted • Partial short circuit on wiring harness or sensor
Failure repair		• Check sensor • Check wiring
Inspection procedure	Step1	Inspect or verify the following items. Repair or replace faulty items as necessary. If any other fault code has occurred, perform the diagnostics procedure for the fault code. Go to Step2
	Step2	Inspect or verify the following items. Repair or replace faulty items as necessary. If one of diagnosis codes associated with SAM ECU is generated, make a system diagnosis according to the diagnosis code. Go to Step3

https://truckmanualshub.com/

Inspection procedure	Step3	Inspection procedure Turn the starter switch in OFF. Remove the connector of A4 (Combustion engine Control unit). Remove the connector of B28 (Temperature sensor "SCR catalytic converter" 1). Check the circuit across A4.X2.94/14 and B28.2/1 for open or short circuit. Check the circuit across A4.X2.94/41 and B28.2/2 for open or short circuit. Make a visual check on each connector. Is any abnormality recognized? No: Go to Step4 Yes: Go to Step8
	Step4	Inspection procedure Turn the starter switch in OFF. Replace component "B28 (Temperature sensor "SCR catalytic converter" 1)". Reinstall all the removed connectors. Turn the starter switch in ON. Go to Step5
	Step5	Inspection procedure Turn the starter switch in OFF. Reinstall all the removed connectors. Erase fault memory and perform a test drive. Check if this diagnosis code has occurred. Are current fault codes present? No: Go to Step6 Yes: Go to Step7
	Step6	Inspection completed
	Step7	Inspection procedure Perform the operation start and replace A4 (Combustion engine Control unit). Inspection completed
	Step8	Inspection procedure Turn the starter switch in OFF. Remove the connector of A4 (Combustion engine Control unit). Remove the connector of X42 (Intermediate connector). Check the circuit across A4.X2.94/14 and X42.8/8 for open or short circuit. Check the circuit across A4.X2.94/41 and X42.8/7 for open or short circuit. Make a visual check on each connector. Is any abnormality recognized? No: Go to Step9 Yes: Go to Step10
	Step9	Inspection procedure Repair or replace the harness across B28 (Temperature sensor "SCR catalytic converter" 1) and X42 (Intermediate connector). Reinstall all the removed connectors. Erase fault memory and perform a test drive. Check if this diagnosis code has occurred. Are current fault codes present? No: Go to Step6 Yes: Go to Step4
	Step10	Inspection procedure Repair or replace the harness across A4 (Combustion engine Control unit) and X42 (Intermediate connector). Reinstall all the removed connectors. Erase fault memory and perform a test drive. Check if this diagnosis code has occurred. Are current fault codes present? No: Go to Step6 Yes: Go to Step4

https://truckmanualshub.com/

520531-3: SCR dosing valve: Short circuit to positiveOn the high side switch

Generation condition		[Test Condition] • Monitoring is active while the battery voltage is over 10.00V and as long as the battery voltage is over 10.00V and 2.00s after this threshold has been exceeded • ECU not in pre drive condition, Battery voltage > 9.50V (switch off < 9.00V), Battery voltage < 16.00V (switch off > 16.50V) and Battery voltage correction factor between 0.80- (switch off < 0.78-) and 1.56- (switch off > 1.65-)
		[Fault Detection] • The measured current > 200.00mA AND Low side switch does NOT report an Open Load error (i.e. failure “UDosVlvOL” not active.
		[Defect Debouncing] • Defect condition exceeded cumulatively > 2.00s • Failure is detected if active for 25% of the time
Fault healing		• The measured current < 200.00mA AND Low side switch does NOT report an Open Load error (i.e. failure “UDosVlvOL” not active.
System reaction		• According FID (see FID’s)
		• 1) Fid / Reagent dosing for SCR inhibited • 2) FId / Release of the SCRMon function/no emergency shut-off with emptying • 3) FId / Service regeneration of Particulate filter ((DPF) inhibited (due to DPF failure) • 4) Fid / SCR Monitoring or DEF injection release not possible (according calibration of Release Masks) • 5) FId / Inhibit DEF dosing valve plausibility check • 6) FId / Inhibit Physical Range Check of Tank Heater raw voltage
Failure cause		• Short circuit in the wiring (+ wire) to U-Batt • Short circuit inside dosing valve actuator.
Failure repair		• Check wiring harness • Check Dosing valve actuator
Inspection procedure	Step1	Inspection procedure Turn the starter switch in OFF. Remove the connector of A4 (Combustion engine Control unit). Remove the connector of Y7 (DEF metering device). Check the circuit across Y7.2/1 and A4.X2.94/25 for open or short circuit. Check the circuit across Y7.2/2 and A4.X2.94/29 for open or short circuit. Make a visual check on each connector. Is any abnormality recognized? No: Go to Step2 Yes: Go to Step6
	Step2	Inspection procedure Turn the starter switch in OFF. Replace component “Y7 (DEF metering device)”. Reinstall all the removed connectors. Turn the starter switch in ON. Perform the learned value resetting procedure of Y7 (DEF metering device) which A4 (Combustion engine Control unit) learns. Go to Step3
	Step3	Inspection procedure Turn the starter switch in OFF. Reinstall all the removed connectors. Erase fault memory and perform a test drive. Check if this diagnosis code has occurred. Are current fault codes present? No: Go to Step5 Yes: Go to Step4
	Step4	Inspection procedure Perform the operation start and replace A4 (Combustion engine Control unit). Go to Step5
	Step5	Inspection completed

https://truckmanualshub.com/

Inspection procedure	Step6	Inspection procedure Repair or replace electrical lines. Reinstall all the removed connectors. Erase fault memory and perform a test drive. Check if this diagnosis code has occurred. Are current fault codes present? No: Go to Step5 Yes: Go to Step2

520531-4: Component DEF metering device has a short circuit to ground.

Generation condition		[Test Condition] • Monitoring is active 2.00s after ECU initialization while engine isn't running yet, while the battery voltage is over 10.00V and as long as the battery voltage is over 10.00V and 2.00s after this threshold has been exceeded • ECU not in pre drive condition, Battery voltage > 9.50V (switch off < 9.00V), Battery voltage < 16.00V (switch off > 16.50V) and Battery voltage correction factor between 0.80- (switch off < 0.78-) and 1.56- (switch off > 1.65-)
		[Fault Detection] • The measured current > 1.60A OR High side switch reports an directly an error.
		[Defect Debouncing] • Defect condition exceeded cumulatively > 2.00s • Failure is detected if active for 50% of the time
Fault healing		• To give the possibility for healing, an electric impulse is sent to power stage each 1000.00ms 5.00- times in actual driving cycle. Failure healed, if the power stage does not report a an error AND the measured current < 1.60A. Else no healing possible at this driving cycle.
System reaction		• Power stage is shut-off DEF dosing valve actuator in closed position). • Further reactions according FID (see FID's)
		• 1) Fid / Reagent dosing for SCR inhibited • 2) FId / Release of the SCRMon function/no emergency shut-off with emptying • 3) FId / Service regeneration of Particulate filter ((DPF) inhibited (due to DPF failure) • 4) Fid / SCR Monitoring or DEF injection release not possible (according calibration of Release Masks) • 5) FId / Inhibit DEF dosing valve plausibility check • 6) FId / Inhibit Physical Range Check of Tank Heater raw voltage
Failure cause		• Short circuit in the wiring (+ wire) to Ground • Short circuit inside dosing valve actuator.
Failure repair		• Check wiring harness • Check Dosing valve actuator
Inspection procedure	Step1	Inspection procedure Turn the starter switch in OFF. Remove the connector of A4 (Combustion engine Control unit). Remove the connector of Y7 (DEF metering device). Check the circuit across Y7.2/1 and A4.X2.94/25 for open or short circuit. Check the circuit across Y7.2/2 and A4.X2.94/29 for open or short circuit. Make a visual check on each connector. Is any abnormality recognized? No: Go to Step2 Yes: Go to Step6
	Step2	Inspection procedure Turn the starter switch in OFF. Replace component "Y7 (DEF metering device)". Reinstall all the removed connectors. Turn the starter switch in ON. Perform the learned value resetting procedure of Y7 (DEF metering device) which A4 (Combustion engine Control unit) learns. Go to Step3

https://truckmanualshub.com/

Inspection procedure	Step3	Inspection procedure Turn the starter switch in OFF. Reinstall all the removed connectors. Erase fault memory and perform a test drive. Check if this diagnosis code has occurred. Are current fault codes present? No: Go to Step5 Yes: Go to Step4
	Step4	Inspection procedure Perform the operation start and replace A4 (Combustion engine Control unit). Go to Step5
	Step5	Inspection completed
	Step6	Inspection procedure Repair or replace electrical lines. Reinstall all the removed connectors. Erase fault memory and perform a test drive. Check if this diagnosis code has occurred. Are current fault codes present? No: Go to Step5 Yes: Go to Step2

520532-4: DEF pressure line heater: Short circuit to ground

Generation condition		[Test Condition] • Monitoring is active while the battery voltage is over 10.00V and as long as the battery voltage is over 10.00V and 2.00s after this threshold has been exceeded • Once per heating cycle if a jump is detected or if 0.20s has expired.
		[Fault Detection] • An error will be detected if the conductance is above the value 0.601/Ohm after a • conductance increase or after the time after heater actuation 0.20s.
		[Defect Debouncing] • Defect condition exceeded cumulatively > 1.00 events • Failure is detected if active for 50% of events
Fault healing		• Fault no more detected
System reaction		• None
Failure cause		• Short circuit error in the heater element of DEF Pressure Line or in wiring
Failure repair		• Check and replace wiring and DEF Pressure Line Heater
Inspection procedure	Step1	Inspection procedure If one of diagnosis codes associated with SAM ECU is generated, make a system diagnosis according to the diagnosis code. Go to Step2
	Step2	Inspection procedure Turn the starter switch in OFF. Remove the connector of A4 (Combustion engine Control unit). Remove the connector of R3 (DEF heater power unit). Remove the connector of R2 (DEF line heater). Remove the connector of A18 (DEF delivery pump). Remove the connector of A20 (SAM). Remove the connector of Ground. Check the circuit across A4.X2.94/28 and R3.X2.4/4 for open or short circuit. Check the circuit across A4.X2.94/32 and R3.X2.4/3 for open or short circuit. Check the circuit across A4.X2.94/50 and R3.X2.4/2 for open or short circuit. Check the circuit across A4.X2.94/10 and R3.X2.4/1 for open or short circuit. Check the circuit across R3.X1.5/1 and R2.2/1 for open or short circuit. Check the circuit across R3.X1.5/2 and A18.5/2 for open or short circuit. Check the circuit across R3.X1.5/3 and A20.X10.14/4 for open or short circuit. Check the circuit across R3.X1.5/5 and A20.X10.14/6 for open or short circuit. Check the circuit across R2.2/2 and Ground for open or short circuit. Check the circuit across A18.5/1 and Ground for open or short circuit. Make a visual check on each connector. Is any abnormality recognized?

https://truckmanualshub.com/

Inspection procedure	Step3	Inspection procedure Turn the starter switch in OFF. Replace component “R2 (DEF line heater)”. Reinstall all the removed connectors. Turn the starter switch in ON. Go to Step4
	Step4	Inspection procedure Turn the starter switch in OFF. Reinstall all the removed connectors. Erase fault memory and perform a test drive. Check if this diagnosis code has occurred. Are current fault codes present? No: Go to Step10 Yes: Go to Step5
	Step5	Inspection procedure Turn the starter switch in OFF. Replace component “R3 (DEF heater power unit)”. Reinstall all the removed connectors. Go to Step6
	Step6	Inspection procedure Turn the starter switch in OFF. Reinstall all the removed connectors. Erase fault memory and perform a test drive. Check if this diagnosis code has occurred. Are current fault codes present? No: Go to Step10 Yes: Go to Step7
	Step7	Inspection procedure Turn the starter switch in OFF. Replace component “A40 (DEF tank)”. Reinstall all the removed connectors. Turn the starter switch in ON. Perform the learned value resetting procedure of A40 (DEF tank) which A4 (Combustion engine Control unit) learns. Go to Step8
	Step8	Inspection procedure Turn the starter switch in OFF. Reinstall all the removed connectors. Erase fault memory and perform a test drive. Check if this diagnosis code has occurred. Are current fault codes present? No: Go to Step6 Yes: Go to Step9
	Step9	Inspection procedure Perform the operation start and replace A4 (Combustion engine Control unit). Go to Step10
	Step10	Inspection completed

https://truckmanualshub.com/

Inspection procedure	Step11	Inspection procedure Turn the starter switch in OFF. Remove the connector of A4 (Combustion engine Control unit). Remove the connector of X19 (Intermediate connector). Remove the connector of X41 (Intermediate connector). Remove the connector of A20 (SAM). Remove the connector of Ground. Check the circuit across A4.X2.94/28 and X19.16/4 for open or short circuit. Check the circuit across A4.X2.94/32 and X19.16/3 for open or short circuit. Check the circuit across A4.X2.94/50 and X19.16/1 for open or short circuit. Check the circuit across A4.X2.94/10 and X19.16/2 for open or short circuit. Check the circuit across X41.4/3 and Ground for open or short circuit. Check the circuit across X41.4/4 and Ground for open or short circuit. Check the circuit across X41.4/1 and A20.X10.14/4 for open or short circuit. Check the circuit across X41.4/2 and A20.X10.14/6 for open or short circuit. Make a visual check on each connector. Is any abnormality recognized? No: Go to Step12 Yes: Go to Step13
	Step12	Inspection procedure Repair or replace the harness across R3 (DEF heater power unit) and X19 (Intermediate connector). Repair or replace the harness across R3 (DEF heater power unit) and X19 (Intermediate connector). Repair or replace the harness across R3 (DEF heater power unit) and A18 (DEF delivery pump). Repair or replace the harness across R3 (DEF heater power unit) and R2 (DEF line heater). Reinstall all the removed connectors. Erase fault memory and perform a test drive. Check if this diagnosis code has occurred. Are current fault codes present? No: Go to Step10 Yes: Go to Step3
	Step13	Inspection procedure Repair or replace the harness across A4 (Combustion engine Control unit) and X19 (Intermediate connector). Repair or replace the harness across A20 (SAM) and X41 (Intermediate connector). Repair or replace the harness across Ground and X41 (Intermediate connector). Reinstall all the removed connectors. Erase fault memory and perform a test drive. Check if this diagnosis code has occurred. Are current fault codes present? No: Go to Step10 Yes: Go to Step3

520532-5: DEF pressure line heater: Open circuit

Generation condition	[Test Condition] • Monitoring is active while the battery voltage is over 10.00V and as long as the battery voltage is over 10.00V and 2.00s after this threshold has been exceeded • Once per heating cycle if a jump is detected or if 0.20s has expired.
	[Fault Detection] • An error will be detected if no conductance increase is detected after the time after heater • actuation 0.20s
	[Defect Debouncing] • Defect condition exceeded cumulatively > 1.00 events • Failure is detected if active for 50% of events
Fault healing	• Fault no more detected
System reaction	• None
Failure cause	• Open circuit error in the heater element of DEF Pressure Line or in the wiring
Failure repair	• Check and replace wiring and DEF Pressure Line Heater

https://truckmanualshub.com/

Inspection procedure	Step1	Inspection procedure If one of diagnosis codes associated with SAM ECU is generated, make a system diagnosis according to the diagnosis code. Go to Step2
	Step2	Inspection procedure Turn the starter switch in OFF. Remove the connector of A4 (Combustion engine Control unit). Remove the connector of R3 (DEF heater power unit). Remove the connector of R2 (DEF line heater). Remove the connector of A18 (DEF delivery pump). Remove the connector of A20 (SAM). Remove the connector of Ground. Check the circuit across A4.X2.94/28 and R3.X2.4/4 for open or short circuit. Check the circuit across A4.X2.94/32 and R3.X2.4/3 for open or short circuit. Check the circuit across A4.X2.94/50 and R3.X2.4/2 for open or short circuit. Check the circuit across A4.X2.94/10 and R3.X2.4/1 for open or short circuit. Check the circuit across R3.X1.5/1 and R2.2/1 for open or short circuit. Check the circuit across R3.X1.5/2 and A18.5/2 for open or short circuit. Check the circuit across R3.X1.5/3 and A20.X10.14/4 for open or short circuit. Check the circuit across R3.X1.5/5 and A20.X10.14/6 for open or short circuit. Check the circuit across R2.2/2 and Ground for open or short circuit. Check the circuit across A18.5/1 and Ground for open or short circuit. Make a visual check on each connector. Is any abnormality recognized?
	Step3	Inspection procedure Turn the starter switch in OFF. Replace component “R2 (DEF line heater)”. Reinstall all the removed connectors. Turn the starter switch in ON. Go to Step4
	Step4	Inspection procedure Turn the starter switch in OFF. Reinstall all the removed connectors. Erase fault memory and perform a test drive. Check if this diagnosis code has occurred. Are current fault codes present? No: Go to Step10 Yes: Go to Step5
	Step5	Inspection procedure Turn the starter switch in OFF. Replace component “R3 (DEF heater power unit)”. Reinstall all the removed connectors. Go to Step6
	Step6	Inspection procedure Turn the starter switch in OFF. Reinstall all the removed connectors. Erase fault memory and perform a test drive. Check if this diagnosis code has occurred. Are current fault codes present? No: Go to Step10 Yes: Go to Step7
	Step7	Inspection procedure Turn the starter switch in OFF. Replace component “A40 (DEF tank)”. Reinstall all the removed connectors. Turn the starter switch in ON. Perform the learned value resetting procedure of A40 (DEF tank) which A4 (Combustion engine Control unit) learns. Go to Step8

https://truckmanualshub.com/

Inspection procedure	Step8	Inspection procedure Turn the starter switch in OFF. Reinstall all the removed connectors. Erase fault memory and perform a test drive. Check if this diagnosis code has occurred. Are current fault codes present? No: Go to Step6 Yes: Go to Step9
	Step9	Inspection procedure Perform the operation start and replace A4 (Combustion engine Control unit). Go to Step10
	Step10	Inspection completed
	Step11	Inspection procedure Turn the starter switch in OFF. Remove the connector of A4 (Combustion engine Control unit). Remove the connector of X19 (Intermediate connector). Remove the connector of X41 (Intermediate connector). Remove the connector of A20 (SAM). Remove the connector of Ground. Check the circuit across A4.X2.94/28 and X19.16/4 for open or short circuit. Check the circuit across A4.X2.94/32 and X19.16/3 for open or short circuit. Check the circuit across A4.X2.94/50 and X19.16/1 for open or short circuit. Check the circuit across A4.X2.94/10 and X19.16/2 for open or short circuit. Check the circuit across X41.4/3 and Ground for open or short circuit. Check the circuit across X41.4/4 and Ground for open or short circuit. Check the circuit across X41.4/1 and A20.X10.14/4 for open or short circuit. Check the circuit across X41.4/2 and A20.X10.14/6 for open or short circuit. Make a visual check on each connector. Is any abnormality recognized? No: Go to Step12 Yes: Go to Step13
	Step12	Inspection procedure Repair or replace the harness across R3 (DEF heater power unit) and X19 (Intermediate connector). Repair or replace the harness across R3 (DEF heater power unit) and X19 (Intermediate connector). Repair or replace the harness across R3 (DEF heater power unit) and A18 (DEF delivery pump). Repair or replace the harness across R3 (DEF heater power unit) and R2 (DEF line heater). Reinstall all the removed connectors. Erase fault memory and perform a test drive. Check if this diagnosis code has occurred. Are current fault codes present? No: Go to Step10 Yes: Go to Step3
	Step13	Inspection procedure Repair or replace the harness across A4 (Combustion engine Control unit) and X19 (Intermediate connector). Repair or replace the harness across A20 (SAM) and X41 (Intermediate connector). Repair or replace the harness across Ground and X41 (Intermediate connector). Reinstall all the removed connectors. Erase fault memory and perform a test drive. Check if this diagnosis code has occurred. Are current fault codes present? No: Go to Step10 Yes: Go to Step3

https://truckmanualshub.com/

520533-4: DEF supply module heater: Short circuit to ground

Generation condition		[Test Condition] • Monitoring is active while the battery voltage is over 10.00V and as long as the battery voltage is over 10.00V and 2.00s after this threshold has been exceeded • Once per heating cycle if a jump is detected or if 2.00s has expired.
		[Fault Detection] • An error will be detected if the conductance is above the value 1.201/Ohm after a • conductance increase or after the time after heater actuation 2.00s.
		[Defect Debouncing] • Defect condition exceeded cumulatively > 1.00 events • Failure is detected if active for 50% of events
Fault healing		• Fault no more detected
System reaction		• None
Failure cause		• Short circuit error in the heater element of DEF Supply Module or in wiring
Failure repair		• Check and replace wiring and DEF Supply Module Heater
Inspection procedure	Step1	Inspection procedure If one of diagnosis codes associated with SAM ECU is generated, make a system diagnosis according to the diagnosis code. Go to Step2
	Step2	Inspection procedure Turn the starter switch in OFF. Remove the connector of A4 (Combustion engine Control unit). Remove the connector of R3 (DEF heater power unit). Remove the connector of R2 (DEF line heater). Remove the connector of A18 (DEF delivery pump). Remove the connector of A20 (SAM). Remove the connector of Ground. Check the circuit across A4.X2.94/28 and R3.X2.4/4 for open or short circuit. Check the circuit across A4.X2.94/32 and R3.X2.4/3 for open or short circuit. Check the circuit across A4.X2.94/50 and R3.X2.4/2 for open or short circuit. Check the circuit across A4.X2.94/10 and R3.X2.4/1 for open or short circuit. Check the circuit across R3.X1.5/1 and R2.2/1 for open or short circuit. Check the circuit across R3.X1.5/2 and A18.5/2 for open or short circuit. Check the circuit across R3.X1.5/3 and A20.X10.14/4 for open or short circuit. Check the circuit across R3.X1.5/5 and A20.X10.14/6 for open or short circuit. Check the circuit across R2.2/2 and Ground for open or short circuit. Check the circuit across A18.5/1 and Ground for open or short circuit. Make a visual check on each connector. Is any abnormality recognized?
	Step3	Inspection procedure Turn the starter switch in OFF. Replace component “R2 (DEF line heater)”. Reinstall all the removed connectors. Turn the starter switch in ON. Go to Step4
	Step4	Inspection procedure Turn the starter switch in OFF. Reinstall all the removed connectors. Erase fault memory and perform a test drive. Check if this diagnosis code has occurred. Are current fault codes present? No: Go to Step10 Yes: Go to Step5
	Step5	Inspection procedure Turn the starter switch in OFF. Replace component “R3 (DEF heater power unit)”. Reinstall all the removed connectors. Go to Step6

https://truckmanualshub.com/

Inspection procedure	Step6	Inspection procedure Turn the starter switch in OFF. Reinstall all the removed connectors. Erase fault memory and perform a test drive. Check if this diagnosis code has occurred. Are current fault codes present? No: Go to Step10 Yes: Go to Step7
	Step7	Inspection procedure Turn the starter switch in OFF. Replace component “A40 (DEF tank)”. Reinstall all the removed connectors. Turn the starter switch in ON. Perform the learned value resetting procedure of A40 (DEF tank) which A4 (Combustion engine Control unit) learns. Go to Step8
	Step8	Inspection procedure Turn the starter switch in OFF. Reinstall all the removed connectors. Erase fault memory and perform a test drive. Check if this diagnosis code has occurred. Are current fault codes present? No: Go to Step6 Yes: Go to Step9
	Step9	Inspection procedure Perform the operation start and replace A4 (Combustion engine Control unit). Go to Step10
	Step10	Inspection completed
	Step11	Inspection procedure Turn the starter switch in OFF. Remove the connector of A4 (Combustion engine Control unit). Remove the connector of X19 (Intermediate connector). Remove the connector of X41 (Intermediate connector). Remove the connector of A20 (SAM). Remove the connector of Ground. Check the circuit across A4.X2.94/28 and X19.16/4 for open or short circuit. Check the circuit across A4.X2.94/32 and X19.16/3 for open or short circuit. Check the circuit across A4.X2.94/50 and X19.16/1 for open or short circuit. Check the circuit across A4.X2.94/10 and X19.16/2 for open or short circuit. Check the circuit across X41.4/3 and Ground for open or short circuit. Check the circuit across X41.4/4 and Ground for open or short circuit. Check the circuit across X41.4/1 and A20.X10.14/4 for open or short circuit. Check the circuit across X41.4/2 and A20.X10.14/6 for open or short circuit. Make a visual check on each connector. Is any abnormality recognized? No: Go to Step12 Yes: Go to Step13
	Step12	Inspection procedure Repair or replace the harness across R3 (DEF heater power unit) and X19 (Intermediate connector). Repair or replace the harness across R3 (DEF heater power unit) and X19 (Intermediate connector). Repair or replace the harness across R3 (DEF heater power unit) and A18 (DEF delivery pump). Repair or replace the harness across R3 (DEF heater power unit) and R2 (DEF line heater). Reinstall all the removed connectors. Erase fault memory and perform a test drive. Check if this diagnosis code has occurred. Are current fault codes present? No: Go to Step10 Yes: Go to Step3

https://truckmanualshub.com/

Inspection procedure	Step13	Inspection procedure Repair or replace the harness across A4 (Combustion engine Control unit) and X19 (Intermediate connector). Repair or replace the harness across A20 (SAM) and X41 (Intermediate connector). Repair or replace the harness across Ground and X41 (Intermediate connector). Reinstall all the removed connectors. Erase fault memory and perform a test drive. Check if this diagnosis code has occurred. Are current fault codes present? No: Go to Step10 Yes: Go to Step3

520533-5: DEF supply module heater: Open circuit

Generation condition		[Test Condition] • Monitoring is active while the battery voltage is over 10.00V and as long as the battery voltage is over 10.00V and 2.00s after this threshold has been exceeded • Once per heating cycle if a jump is detected or if 2.00s has expired.
		[Fault Detection] • An error will be detected if no conductance increase is detected after the time after heater • actuation 2.00s
		[Defect Debouncing] • Defect condition exceeded cumulatively > 1.00 events • Failure is detected if active for 50% of events
Fault healing		• Fault no more detected
System reaction		• None
Failure repair		• Check and replace wiring and Supply Module Heater
Inspection procedure	Step1	Inspection procedure If one of diagnosis codes associated with SAM ECU is generated, make a system diagnosis according to the diagnosis code. Go to Step2
	Step2	Inspection procedure Turn the starter switch in OFF. Remove the connector of A4 (Combustion engine Control unit). Remove the connector of R3 (DEF heater power unit). Remove the connector of R2 (DEF line heater). Remove the connector of A18 (DEF delivery pump). Remove the connector of A20 (SAM). Remove the connector of Ground. Check the circuit across A4.X2.94/28 and R3.X2.4/4 for open or short circuit. Check the circuit across A4.X2.94/32 and R3.X2.4/3 for open or short circuit. Check the circuit across A4.X2.94/50 and R3.X2.4/2 for open or short circuit. Check the circuit across A4.X2.94/10 and R3.X2.4/1 for open or short circuit. Check the circuit across R3.X1.5/1 and R2.2/1 for open or short circuit. Check the circuit across R3.X1.5/2 and A18.5/2 for open or short circuit. Check the circuit across R3.X1.5/3 and A20.X10.14/4 for open or short circuit. Check the circuit across R3.X1.5/5 and A20.X10.14/6 for open or short circuit. Check the circuit across R2.2/2 and Ground for open or short circuit. Check the circuit across A18.5/1 and Ground for open or short circuit. Make a visual check on each connector. Is any abnormality recognized?
	Step3	Inspection procedure Turn the starter switch in OFF. Replace component “R2 (DEF line heater)”. Reinstall all the removed connectors. Turn the starter switch in ON. Go to Step4

https://truckmanualshub.com/

Inspection procedure	Step4	Inspection procedure Turn the starter switch in OFF. Reinstall all the removed connectors. Erase fault memory and perform a test drive. Check if this diagnosis code has occurred. Are current fault codes present? No: Go to Step10 Yes: Go to Step5
	Step5	Inspection procedure Turn the starter switch in OFF. Replace component “R3 (DEF heater power unit)”. Reinstall all the removed connectors. Go to Step6
	Step6	Inspection procedure Turn the starter switch in OFF. Reinstall all the removed connectors. Erase fault memory and perform a test drive. Check if this diagnosis code has occurred. Are current fault codes present? No: Go to Step10 Yes: Go to Step7
	Step7	Inspection procedure Turn the starter switch in OFF. Replace component “A40 (DEF tank)”. Reinstall all the removed connectors. Turn the starter switch in ON. Perform the learned value resetting procedure of A40 (DEF tank) which A4 (Combustion engine Control unit) learns. Go to Step8
	Step8	Inspection procedure Turn the starter switch in OFF. Reinstall all the removed connectors. Erase fault memory and perform a test drive. Check if this diagnosis code has occurred. Are current fault codes present? No: Go to Step6 Yes: Go to Step9
	Step9	Inspection procedure Perform the operation start and replace A4 (Combustion engine Control unit). Go to Step10
	Step10	Inspection completed
	Step11	Inspection procedure Turn the starter switch in OFF. Remove the connector of A4 (Combustion engine Control unit). Remove the connector of X19 (Intermediate connector). Remove the connector of X41 (Intermediate connector). Remove the connector of A20 (SAM). Remove the connector of Ground. Check the circuit across A4.X2.94/28 and X19.16/4 for open or short circuit. Check the circuit across A4.X2.94/32 and X19.16/3 for open or short circuit. Check the circuit across A4.X2.94/50 and X19.16/1 for open or short circuit. Check the circuit across A4.X2.94/10 and X19.16/2 for open or short circuit. Check the circuit across X41.4/3 and Ground for open or short circuit. Check the circuit across X41.4/4 and Ground for open or short circuit. Check the circuit across X41.4/1 and A20.X10.14/4 for open or short circuit. Check the circuit across X41.4/2 and A20.X10.14/6 for open or short circuit. Make a visual check on each connector. Is any abnormality recognized? No: Go to Step12 Yes: Go to Step13

https://truckmanualshub.com/

Inspection procedure	Step12	Inspection procedure Repair or replace the harness across R3 (DEF heater power unit) and X19 (Intermediate connector). Repair or replace the harness across R3 (DEF heater power unit) and X19 (Intermediate connector). Repair or replace the harness across R3 (DEF heater power unit) and A18 (DEF delivery pump). Repair or replace the harness across R3 (DEF heater power unit) and R2 (DEF line heater). Reinstall all the removed connectors. Erase fault memory and perform a test drive. Check if this diagnosis code has occurred. Are current fault codes present? No: Go to Step10 Yes: Go to Step3
	Step13	Inspection procedure Repair or replace the harness across A4 (Combustion engine Control unit) and X19 (Intermediate connector). Repair or replace the harness across A20 (SAM) and X41 (Intermediate connector). Repair or replace the harness across Ground and X41 (Intermediate connector). Reinstall all the removed connectors. Erase fault memory and perform a test drive. Check if this diagnosis code has occurred. Are current fault codes present? No: Go to Step10 Yes: Go to Step3

520534-6: SCR Reagent heating: Short circuitPressure line heater

Generation condition		[Test Condition] • Monitoring is active while the battery voltage is over 10.00V and as long as the battery voltage is over 10.00V and 2.00s after this threshold has been exceeded • Continuously if DEF Pressure Line heater is OFF
		[Fault Detection] • An error will be detected if the conductance UHC_cndUHtrPLWp_m > 0.101/Ohm when heater is OFF
		[Defect Debouncing] • Defect condition fulfilled continuously > 1000.0 ms
Fault healing		• if the conductance UHC_cndUHtrPLWp_m < 0.101/Ohm when heater is OFF
System reaction		• None
Failure cause		• Short circuit error in the wiring or the DEF Pressure Line Heater or DEF Module Supply Heater
Failure repair		• Check wiring or replace defective heater
Inspection procedure	Step1	Inspection procedure If one of diagnosis codes associated with SAM ECU is generated, make a system diagnosis according to the diagnosis code. Go to Step2

https://truckmanualshub.com/

Inspection procedure	Step2	Inspection procedure Turn the starter switch in OFF. Remove the connector of A4 (Combustion engine Control unit). Remove the connector of R3 (DEF heater power unit). Remove the connector of R2 (DEF line heater). Remove the connector of A18 (DEF delivery pump). Remove the connector of A20 (SAM). Remove the connector of Ground. Check the circuit across A4.X2.94/28 and R3.X2.4/4 for open or short circuit. Check the circuit across A4.X2.94/32 and R3.X2.4/3 for open or short circuit. Check the circuit across A4.X2.94/50 and R3.X2.4/2 for open or short circuit. Check the circuit across A4.X2.94/10 and R3.X2.4/1 for open or short circuit. Check the circuit across R3.X1.5/1 and R2.2/1 for open or short circuit. Check the circuit across R3.X1.5/2 and A18.5/2 for open or short circuit. Check the circuit across R3.X1.5/3 and A20.X10.14/4 for open or short circuit. Check the circuit across R3.X1.5/5 and A20.X10.14/6 for open or short circuit. Check the circuit across R2.2/2 and Ground for open or short circuit. Check the circuit across A18.5/1 and Ground for open or short circuit. Make a visual check on each connector. Is any abnormality recognized?
	Step3	Inspection procedure Turn the starter switch in OFF. Replace component “R2 (DEF line heater)”. Reinstall all the removed connectors. Turn the starter switch in ON. Go to Step4
	Step4	Inspection procedure Turn the starter switch in OFF. Reinstall all the removed connectors. Erase fault memory and perform a test drive. Check if this diagnosis code has occurred. Are current fault codes present? No: Go to Step10 Yes: Go to Step5
	Step5	Inspection procedure Turn the starter switch in OFF. Replace component “R3 (DEF heater power unit)”. Reinstall all the removed connectors. Go to Step6
	Step6	Inspection procedure Turn the starter switch in OFF. Reinstall all the removed connectors. Erase fault memory and perform a test drive. Check if this diagnosis code has occurred. Are current fault codes present? No: Go to Step10 Yes: Go to Step7
	Step7	Inspection procedure Turn the starter switch in OFF. Replace component “A40 (DEF tank)”. Reinstall all the removed connectors. Turn the starter switch in ON. Perform the learned value resetting procedure of A40 (DEF tank) which A4 (Combustion engine Control unit) learns. Go to Step8
	Step8	Inspection procedure Turn the starter switch in OFF. Reinstall all the removed connectors. Erase fault memory and perform a test drive. Check if this diagnosis code has occurred. Are current fault codes present? No: Go to Step6 Yes: Go to Step9
	Step9	Inspection procedure Perform the operation start and replace A4 (Combustion engine Control unit). Go to Step10

https://truckmanualshub.com/

Inspection procedure	Step10	Inspection completed
	Step11	Inspection procedure Turn the starter switch in OFF. Remove the connector of A4 (Combustion engine Control unit). Remove the connector of X19 (Intermediate connector). Remove the connector of X41 (Intermediate connector). Remove the connector of A20 (SAM). Remove the connector of Ground. Check the circuit across A4.X2.94/28 and X19.16/4 for open or short circuit. Check the circuit across A4.X2.94/32 and X19.16/3 for open or short circuit. Check the circuit across A4.X2.94/50 and X19.16/1 for open or short circuit. Check the circuit across A4.X2.94/10 and X19.16/2 for open or short circuit. Check the circuit across X41.4/3 and Ground for open or short circuit. Check the circuit across X41.4/4 and Ground for open or short circuit. Check the circuit across X41.4/1 and A20.X10.14/4 for open or short circuit. Check the circuit across X41.4/2 and A20.X10.14/6 for open or short circuit. Make a visual check on each connector. Is any abnormality recognized? No: Go to Step12 Yes: Go to Step13
	Step12	Inspection procedure Repair or replace the harness across R3 (DEF heater power unit) and X19 (Intermediate connector). Repair or replace the harness across R3 (DEF heater power unit) and X19 (Intermediate connector). Repair or replace the harness across R3 (DEF heater power unit) and A18 (DEF delivery pump). Repair or replace the harness across R3 (DEF heater power unit) and R2 (DEF line heater). Reinstall all the removed connectors. Erase fault memory and perform a test drive. Check if this diagnosis code has occurred. Are current fault codes present? No: Go to Step10 Yes: Go to Step3
	Step13	Inspection procedure Repair or replace the harness across A4 (Combustion engine Control unit) and X19 (Intermediate connector). Repair or replace the harness across A20 (SAM) and X41 (Intermediate connector). Repair or replace the harness across Ground and X41 (Intermediate connector). Reinstall all the removed connectors. Erase fault memory and perform a test drive. Check if this diagnosis code has occurred. Are current fault codes present? No: Go to Step10 Yes: Go to Step3

520536-5: SCR Reagent heating: Tank open circuit error

Generation condition	[Test Condition] • Monitoring is active while the battery voltage is over 10.00V and as long as the battery voltage is over 10.00V and 2.00s after this threshold has been exceeded • Continuously if heater is ON
	[Fault Detection] • If conductance UHC_cndUHtrTnkWp_mp < 0.061/Ohm, while heater is active
	[Defect Debouncing] • Defect condition fulfilled continuously >2200.0 ms
Fault healing	• No Healing possible (disabled by Data set)
System reaction	• None except FIDs
	• 1) FId / Inhibit DEF Tank cavity check • 2) FId / Disable the DEF Tank heater lerning function

https://truckmanualshub.com/

Failure cause		• Open circuit error in the wiring or the Tank Heater
Failure repair		• Check wiring or replace tank heater
Inspection procedure	Step1	Inspection procedure If one of diagnosis codes associated with SAM ECU is generated, make a system diagnosis according to the diagnosis code. Go to Step2
	Step2	Inspection procedure Turn the starter switch in OFF. Remove the connector of A4 (Combustion engine Control unit). Remove the connector of R3 (DEF heater power unit). Remove the connector of R5 (DEF tank heater). Remove the connector of A20 (SAM). Remove the connector of Ground. Check the circuit across A4.X2.94/28 and R3.X2.4/4 for open or short circuit. Check the circuit across A4.X2.94/32 and R3.X2.4/3 for open or short circuit. Check the circuit across A4.X2.94/50 and R3.X2.4/2 for open or short circuit. Check the circuit across A4.X2.94/10 and R3.X2.4/1 for open or short circuit. Check the circuit across R3.X1.5/4 and B36.4/2 for open or short circuit. Check the circuit across R3.X1.5/3 and A20.X10.14/4 for open or short circuit. Check the circuit across R3.X1.5/5 and A20.X10.14/6 for open or short circuit. Check the circuit across B36.4/1 and Ground for open or short circuit. Make a visual check on each connector. Is any abnormality recognized? No: Go to Step3 Yes: Go to Step11
	Step3	Inspection procedure Turn the starter switch in OFF. Replace component “R5 (DEF tank heater)”. Reinstall all the removed connectors. Turn the starter switch in ON. Go to Step4
	Step4	Inspection procedure Turn the starter switch in OFF. Reinstall all the removed connectors. Erase fault memory and perform a test drive. Check if this diagnosis code has occurred. Are current fault codes present? No: Go to Step10 Yes: Go to Step5
	Step5	Inspection procedure Turn the starter switch in OFF. Replace component “R3 (DEF heater power unit)”. Reinstall all the removed connectors. Go to Step6
	Step6	Inspection procedure Turn the starter switch in OFF. Reinstall all the removed connectors. Erase fault memory and perform a test drive. Check if this diagnosis code has occurred. Are current fault codes present? No: Go to Step10 Yes: Go to Step7
	Step7	Inspection procedure Turn the starter switch in OFF. Replace component “A40 (DEF tank)”. Reinstall all the removed connectors. Turn the starter switch in ON. Perform the learned value resetting procedure of A40 (DEF tank) which A4 (Combustion engine Control unit) learns. Go to Step8

https://truckmanualshub.com/

Inspection procedure	Step8	Inspection procedure Turn the starter switch in OFF. Reinstall all the removed connectors. Erase fault memory and perform a test drive. Check if this diagnosis code has occurred. Are current fault codes present? No: Go to Step6 Yes: Go to Step9
	Step9	Inspection procedure Perform the operation start and replace A4 (Combustion engine Control unit). Go to Step10
	Step10	Inspection completed
	Step11	Inspection procedure Turn the starter switch in OFF. Remove the connector of A4 (Combustion engine Control unit). Remove the connector of X19 (Intermediate connector). Remove the connector of X41 (Intermediate connector). Remove the connector of A20 (SAM). Remove the connector of Ground. Check the circuit across A4.X2.94/28 and X19.16/4 for open or short circuit. Check the circuit across A4.X2.94/32 and X19.16/3 for open or short circuit. Check the circuit across A4.X2.94/50 and X19.16/1 for open or short circuit. Check the circuit across A4.X2.94/10 and X19.16/2 for open or short circuit. Check the circuit across X41.4/3 and Ground for open or short circuit. Check the circuit across X41.4/2 and A20.X10.14/4 for open or short circuit. Check the circuit across X41.4/1 and A20.X10.14/6 for open or short circuit. Make a visual check on each connector. Is any abnormality recognized? No: Go to Step12 Yes: Go to Step13
	Step12	Inspection procedure Repair or replace the harness across R3 (DEF heater power unit) and X19 (Intermediate connector). Repair or replace the harness across R3 (DEF heater power unit) and X19 (Intermediate connector). Repair or replace the harness across R3 (DEF heater power unit) and R5 (DEF tank heater). Reinstall all the removed connectors. Erase fault memory and perform a test drive. Check if this diagnosis code has occurred. Are current fault codes present? No: Go to Step10 Yes: Go to Step3
	Step13	Inspection procedure Repair or replace the harness across A4 (Combustion engine Control unit) and X19 (Intermediate connector). Repair or replace the harness across A20 (SAM) and X41 (Intermediate connector). Repair or replace the harness across Ground and X41 (Intermediate connector). Reinstall all the removed connectors. Erase fault memory and perform a test drive. Check if this diagnosis code has occurred. Are current fault codes present? No: Go to Step10 Yes: Go to Step3

https://truckmanualshub.com/

520536-6: SCR Reagent heating: Tank short circuit error

Generation condition		[Test Condition] • Monitoring is active while the battery voltage is over 10.00V and as long as the battery voltage is over 10.00V and 2.00s after this threshold has been exceeded • Continuously if the heater is not activated.
		[Fault Detection] • An error will be detected if a current is measured in an OFF state. iTnkSens-Dia >= 200.00uA
		[Defect Debouncing] • Defect condition fulfilled continuously > 1000.0 ms
Fault healing		• Current measured in an OFF state iTnkSensDia < 200.00uA
System reaction		• None
Failure cause		• Possible short circuit in the wiring or the Tank Heater
Failure repair		• Check wiring and replace tank heater
Inspection procedure	Step1	Inspection procedure If one of diagnosis codes associated with SAM ECU is generated, make a system diagnosis according to the diagnosis code. Go to Step2
	Step2	Inspection procedure Turn the starter switch in OFF. Remove the connector of A4 (Combustion engine Control unit). Remove the connector of R3 (DEF heater power unit). Remove the connector of R5 (DEF tank heater). Remove the connector of A20 (SAM). Remove the connector of Ground. Check the circuit across A4.X2.94/28 and R3.X2.4/4 for open or short circuit. Check the circuit across A4.X2.94/32 and R3.X2.4/3 for open or short circuit. Check the circuit across A4.X2.94/50 and R3.X2.4/2 for open or short circuit. Check the circuit across A4.X2.94/10 and R3.X2.4/1 for open or short circuit. Check the circuit across R3.X1.5/4 and B36.4/2 for open or short circuit. Check the circuit across R3.X1.5/3 and A20.X10.14/4 for open or short circuit. Check the circuit across R3.X1.5/5 and A20.X10.14/6 for open or short circuit. Check the circuit across B36.4/1 and Ground for open or short circuit. Make a visual check on each connector. Is any abnormality recognized? No: Go to Step3 Yes: Go to Step11
	Step3	Inspection procedure Turn the starter switch in OFF. Replace component “R5 (DEF tank heater)”. Reinstall all the removed connectors. Turn the starter switch in ON. Go to Step4
	Step4	Inspection procedure Turn the starter switch in OFF. Reinstall all the removed connectors. Erase fault memory and perform a test drive. Check if this diagnosis code has occurred. Are current fault codes present? No: Go to Step10 Yes: Go to Step5
	Step5	Inspection procedure Turn the starter switch in OFF. Replace component “R3 (DEF heater power unit)”. Reinstall all the removed connectors. Go to Step6

https://truckmanualshub.com/

Inspection procedure	Step6	Inspection procedure Turn the starter switch in OFF. Reinstall all the removed connectors. Erase fault memory and perform a test drive. Check if this diagnosis code has occurred. Are current fault codes present? No: Go to Step10 Yes: Go to Step7
	Step7	Inspection procedure Turn the starter switch in OFF. Replace component “A40 (DEF tank)”. Reinstall all the removed connectors. Turn the starter switch in ON. Perform the learned value resetting procedure of A40 (DEF tank) which A4 (Combustion engine Control unit) learns. Go to Step8
	Step8	Inspection procedure Turn the starter switch in OFF. Reinstall all the removed connectors. Erase fault memory and perform a test drive. Check if this diagnosis code has occurred. Are current fault codes present? No: Go to Step6 Yes: Go to Step9
	Step9	Inspection procedure Perform the operation start and replace A4 (Combustion engine Control unit). Go to Step10
	Step10	Inspection completed
	Step11	Inspection procedure Turn the starter switch in OFF. Remove the connector of A4 (Combustion engine Control unit). Remove the connector of X19 (Intermediate connector). Remove the connector of X41 (Intermediate connector). Remove the connector of A20 (SAM). Remove the connector of Ground. Check the circuit across A4.X2.94/28 and X19.16/4 for open or short circuit. Check the circuit across A4.X2.94/32 and X19.16/3 for open or short circuit. Check the circuit across A4.X2.94/50 and X19.16/1 for open or short circuit. Check the circuit across A4.X2.94/10 and X19.16/2 for open or short circuit. Check the circuit across X41.4/3 and Ground for open or short circuit. Check the circuit across X41.4/2 and A20.X10.14/4 for open or short circuit. Check the circuit across X41.4/1 and A20.X10.14/6 for open or short circuit. Make a visual check on each connector. Is any abnormality recognized? No: Go to Step12 Yes: Go to Step13
	Step12	Inspection procedure Repair or replace the harness across R3 (DEF heater power unit) and X19 (Intermediate connector). Repair or replace the harness across R3 (DEF heater power unit) and X19 (Intermediate connector). Repair or replace the harness across R3 (DEF heater power unit) and R5 (DEF tank heater). Reinstall all the removed connectors. Erase fault memory and perform a test drive. Check if this diagnosis code has occurred. Are current fault codes present? No: Go to Step10 Yes: Go to Step3

https://truckmanualshub.com/

Inspection procedure	Step13	Inspection procedure Repair or replace the harness across A4 (Combustion engine Control unit) and X19 (Intermediate connector). Repair or replace the harness across A20 (SAM) and X41 (Intermediate connector). Repair or replace the harness across Ground and X41 (Intermediate connector). Reinstall all the removed connectors. Erase fault memory and perform a test drive. Check if this diagnosis code has occurred. Are current fault codes present? No: Go to Step10 Yes: Go to Step3

520537-5: SCR Reagent heating: PTCShort circuit

Generation condition		[Test Condition] • Monitoring is active while the battery voltage is over 10.00V and as long as the battery voltage is over 10.00V and 2.00s after this threshold has been exceeded • Continuously if heater activated
		[Fault Detection] • If the maximum conductance UHC_cndTnkMaxVal_mp is above the threshold UHC_cndTnkMaxCalc_mp and the heating activation time UHC_tiTnkHtrDur_mp is above 70.00s
		[Defect Debouncing] • Defect condition exceeded cumulatively > 1.00 events • Failure is detected if active for 50% of events
Fault healing		• Fault no more detected
System reaction		• None
Failure cause		• Short circuit in the PTC element of Tank Heater
Failure repair		• Check and replace tank heater
Inspection procedure	Step1	Inspection procedure If one of diagnosis codes associated with SAM ECU is generated, make a system diagnosis according to the diagnosis code. Go to Step2
	Step2	Inspection procedure Turn the starter switch in OFF. Remove the connector of A4 (Combustion engine Control unit). Remove the connector of R3 (DEF heater power unit). Remove the connector of R5 (DEF tank heater). Remove the connector of A20 (SAM). Remove the connector of Ground. Check the circuit across A4.X2.94/28 and R3.X2.4/4 for open or short circuit. Check the circuit across A4.X2.94/32 and R3.X2.4/3 for open or short circuit. Check the circuit across A4.X2.94/50 and R3.X2.4/2 for open or short circuit. Check the circuit across A4.X2.94/10 and R3.X2.4/1 for open or short circuit. Check the circuit across R3.X1.5/4 and B36.4/2 for open or short circuit. Check the circuit across R3.X1.5/3 and A20.X10.14/4 for open or short circuit. Check the circuit across R3.X1.5/5 and A20.X10.14/6 for open or short circuit. Check the circuit across B36.4/1 and Ground for open or short circuit. Make a visual check on each connector. Is any abnormality recognized? No: Go to Step3 Yes: Go to Step11
	Step3	Inspection procedure Turn the starter switch in OFF. Replace component “R5 (DEF tank heater)”. Reinstall all the removed connectors. Turn the starter switch in ON. Go to Step4

https://truckmanualshub.com/

Inspection procedure	Step4	Inspection procedure Turn the starter switch in OFF. Reinstall all the removed connectors. Erase fault memory and perform a test drive. Check if this diagnosis code has occurred. Are current fault codes present? No: Go to Step10 Yes: Go to Step5
	Step5	Inspection procedure Turn the starter switch in OFF. Replace component “R3 (DEF heater power unit)”. Reinstall all the removed connectors. Go to Step6
	Step6	Inspection procedure Turn the starter switch in OFF. Reinstall all the removed connectors. Erase fault memory and perform a test drive. Check if this diagnosis code has occurred. Are current fault codes present? No: Go to Step10 Yes: Go to Step7
	Step7	Inspection procedure Turn the starter switch in OFF. Replace component “A40 (DEF tank)”. Reinstall all the removed connectors. Turn the starter switch in ON. Perform the learned value resetting procedure of A40 (DEF tank) which A4 (Combustion engine Control unit) learns. Go to Step8
	Step8	Inspection procedure Turn the starter switch in OFF. Reinstall all the removed connectors. Erase fault memory and perform a test drive. Check if this diagnosis code has occurred. Are current fault codes present? No: Go to Step6 Yes: Go to Step9
	Step9	Inspection procedure Perform the operation start and replace A4 (Combustion engine Control unit). Go to Step10
	Step10	Inspection completed
	Step11	Inspection procedure Turn the starter switch in OFF. Remove the connector of A4 (Combustion engine Control unit). Remove the connector of X19 (Intermediate connector). Remove the connector of X41 (Intermediate connector). Remove the connector of A20 (SAM). Remove the connector of Ground. Check the circuit across A4.X2.94/28 and X19.16/4 for open or short circuit. Check the circuit across A4.X2.94/32 and X19.16/3 for open or short circuit. Check the circuit across A4.X2.94/50 and X19.16/1 for open or short circuit. Check the circuit across A4.X2.94/10 and X19.16/2 for open or short circuit. Check the circuit across X41.4/3 and Ground for open or short circuit. Check the circuit across X41.4/2 and A20.X10.14/4 for open or short circuit. Check the circuit across X41.4/1 and A20.X10.14/6 for open or short circuit. Make a visual check on each connector. Is any abnormality recognized? No: Go to Step12 Yes: Go to Step13

https://truckmanualshub.com/

Inspection procedure	Step12	Inspection procedure Repair or replace the harness across R3 (DEF heater power unit) and X19 (Intermediate connector). Repair or replace the harness across R3 (DEF heater power unit) and X19 (Intermediate connector). Repair or replace the harness across R3 (DEF heater power unit) and R5 (DEF tank heater). Reinstall all the removed connectors. Erase fault memory and perform a test drive. Check if this diagnosis code has occurred. Are current fault codes present? No: Go to Step10 Yes: Go to Step3
	Step13	Inspection procedure Repair or replace the harness across A4 (Combustion engine Control unit) and X19 (Intermediate connector). Repair or replace the harness across A20 (SAM) and X41 (Intermediate connector). Repair or replace the harness across Ground and X41 (Intermediate connector). Reinstall all the removed connectors. Erase fault memory and perform a test drive. Check if this diagnosis code has occurred. Are current fault codes present? No: Go to Step10 Yes: Go to Step3

520537-6: SCR Reagent heating: PTCOpen circuit

Generation condition		[Test Condition] • Monitoring is active while the battery voltage is over 10.00V and as long as the battery voltage is over 10.00V and 2.00s after this threshold has been exceeded • Continuously if heater activated
		[Fault Detection] • If UHC_cndTnkMaxVal_mp is below the threshold UHC_cndTnkMinCalc_mp and the heating • activation time UHC_tiTnkHtrDur_mp is above 70.00s
		[Defect Debouncing] • Defect condition exceeded cumulatively > 1.00 events • Failure is detected if active for 50% of events
Fault healing		• Fault no more detected
System reaction		• None except FIDs
		• 1) FId / Inhibit DEF Tank cavity check • 2) FId / Disable the DEF Tank heater lerning function
Failure cause		• Open circuit error in the PTC element of Tank Heater
Failure repair		• Check and replace tank heater
Inspection procedure	Step1	Inspection procedure If one of diagnosis codes associated with SAM ECU is generated, make a system diagnosis according to the diagnosis code. Go to Step2

https://truckmanualshub.com/

Inspection procedure	Step2	Inspection procedure Turn the starter switch in OFF. Remove the connector of A4 (Combustion engine Control unit). Remove the connector of R3 (DEF heater power unit). Remove the connector of R5 (DEF tank heater). Remove the connector of A20 (SAM). Remove the connector of Ground. Check the circuit across A4.X2.94/28 and R3.X2.4/4 for open or short circuit. Check the circuit across A4.X2.94/32 and R3.X2.4/3 for open or short circuit. Check the circuit across A4.X2.94/50 and R3.X2.4/2 for open or short circuit. Check the circuit across A4.X2.94/10 and R3.X2.4/1 for open or short circuit. Check the circuit across R3.X1.5/4 and B36.4/2 for open or short circuit. Check the circuit across R3.X1.5/3 and A20.X10.14/4 for open or short circuit. Check the circuit across R3.X1.5/5 and A20.X10.14/6 for open or short circuit. Check the circuit across B36.4/1 and Ground for open or short circuit. Make a visual check on each connector. Is any abnormality recognized? No: Go to Step3 Yes: Go to Step11
	Step3	Inspection procedure Turn the starter switch in OFF. Replace component “R5 (DEF tank heater)”. Reinstall all the removed connectors. Turn the starter switch in ON. Go to Step4
	Step4	Inspection procedure Turn the starter switch in OFF. Reinstall all the removed connectors. Erase fault memory and perform a test drive. Check if this diagnosis code has occurred. Are current fault codes present? No: Go to Step10 Yes: Go to Step5
	Step5	Inspection procedure Turn the starter switch in OFF. Replace component “R3 (DEF heater power unit)”. Reinstall all the removed connectors. Go to Step6
	Step6	Inspection procedure Turn the starter switch in OFF. Reinstall all the removed connectors. Erase fault memory and perform a test drive. Check if this diagnosis code has occurred. Are current fault codes present? No: Go to Step10 Yes: Go to Step7
	Step7	Inspection procedure Turn the starter switch in OFF. Replace component “A40 (DEF tank)”. Reinstall all the removed connectors. Turn the starter switch in ON. Perform the learned value resetting procedure of A40 (DEF tank) which A4 (Combustion engine Control unit) learns. Go to Step8
	Step8	Inspection procedure Turn the starter switch in OFF. Reinstall all the removed connectors. Erase fault memory and perform a test drive. Check if this diagnosis code has occurred. Are current fault codes present? No: Go to Step6 Yes: Go to Step9
	Step9	Inspection procedure Perform the operation start and replace A4 (Combustion engine Control unit). Go to Step10

https://truckmanualshub.com/

Inspection procedure	Step10	Inspection completed
	Step11	Inspection procedure Turn the starter switch in OFF. Remove the connector of A4 (Combustion engine Control unit). Remove the connector of X19 (Intermediate connector). Remove the connector of X41 (Intermediate connector). Remove the connector of A20 (SAM). Remove the connector of Ground. Check the circuit across A4.X2.94/28 and X19.16/4 for open or short circuit. Check the circuit across A4.X2.94/32 and X19.16/3 for open or short circuit. Check the circuit across A4.X2.94/50 and X19.16/1 for open or short circuit. Check the circuit across A4.X2.94/10 and X19.16/2 for open or short circuit. Check the circuit across X41.4/3 and Ground for open or short circuit. Check the circuit across X41.4/2 and A20.X10.14/4 for open or short circuit. Check the circuit across X41.4/1 and A20.X10.14/6 for open or short circuit. Make a visual check on each connector. Is any abnormality recognized? No: Go to Step12 Yes: Go to Step13
	Step12	Inspection procedure Repair or replace the harness across R3 (DEF heater power unit) and X19 (Intermediate connector). Repair or replace the harness across R3 (DEF heater power unit) and X19 (Intermediate connector). Repair or replace the harness across R3 (DEF heater power unit) and R5 (DEF tank heater). Reinstall all the removed connectors. Erase fault memory and perform a test drive. Check if this diagnosis code has occurred. Are current fault codes present? No: Go to Step10 Yes: Go to Step3
	Step13	Inspection procedure Repair or replace the harness across A4 (Combustion engine Control unit) and X19 (Intermediate connector). Repair or replace the harness across A20 (SAM) and X41 (Intermediate connector). Repair or replace the harness across Ground and X41 (Intermediate connector). Reinstall all the removed connectors. Erase fault memory and perform a test drive. Check if this diagnosis code has occurred. Are current fault codes present? No: Go to Step10 Yes: Go to Step3

520538-0: SCR Reagent heating: DEF pressure line heaterSignal range checkHIGH

Generation condition	[Test Condition] • Monitoring is active while the battery voltage is over 10.00V and as long as the battery voltage is over 10.00V and 2.00s after this threshold has been exceeded • Continuously, if ADC module does not report any error.
	[Fault Detection] • The Sensed raw voltage > 3.20V
	[Defect Debouncing] • Defect condition exceeded cumulatively > 50.00ms • Failure is detected if active for 50% of the time
Fault healing	• No Healing possible (disabled by Data set)

https://truckmanualshub.com/

System reaction		• Raw voltage is frozen at last valid value on preliminary failure and ramps to fixed replacement value 41.00uA if failure is validated using slope 3300.00K/s or 3300.00K/s depending on whether the replacement value is above or below the current value • Further reactions according FID (see FID's)
		• 1) FId / Inhibit monitoring of Pressure Line Heater Circuit • 2) FId / Disable the sending of TESTING signal for heater PressureLine • 3) FId / state release pressure line heating • 4) FId / Freeze DEF pressure line heater raw voltage if preliminary failure is detected • 5) FId / Inhibit physical range check DEF pressure line heater current • 6) FId / Replace DEF pressure line heater raw voltage with default value if failure is validated
Failure cause		• Wiring Harness defect (short circuit) • Relay defect. • Heating element in pressure line defect
Failure repair		• Check Wiring Harness • Check Relay • Check Heating element in pressure line
Inspection procedure	Step1	Inspection procedure If one of diagnosis codes associated with SAM ECU is generated, make a system diagnosis according to the diagnosis code. Go to Step2
	Step2	Inspection procedure Turn the starter switch in OFF. Remove the connector of A4 (Combustion engine Control unit). Remove the connector of R3 (DEF heater power unit). Remove the connector of R2 (DEF line heater). Remove the connector of A18 (DEF delivery pump). Remove the connector of A20 (SAM). Remove the connector of Ground. Check the circuit across A4.X2.94/28 and R3.X2.4/4 for open or short circuit. Check the circuit across A4.X2.94/32 and R3.X2.4/3 for open or short circuit. Check the circuit across A4.X2.94/50 and R3.X2.4/2 for open or short circuit. Check the circuit across A4.X2.94/10 and R3.X2.4/1 for open or short circuit. Check the circuit across R3.X1.5/1 and R2.2/1 for open or short circuit. Check the circuit across R3.X1.5/2 and A18.5/2 for open or short circuit. Check the circuit across R3.X1.5/3 and A20.X10.14/4 for open or short circuit. Check the circuit across R3.X1.5/5 and A20.X10.14/6 for open or short circuit. Check the circuit across R2.2/2 and Ground for open or short circuit. Check the circuit across A18.5/1 and Ground for open or short circuit. Make a visual check on each connector. Is any abnormality recognized?
	Step3	Inspection procedure Turn the starter switch in OFF. Replace component "R2 (DEF line heater)". Reinstall all the removed connectors. Turn the starter switch in ON. Go to Step4
	Step4	Inspection procedure Turn the starter switch in OFF. Reinstall all the removed connectors. Erase fault memory and perform a test drive. Check if this diagnosis code has occurred. Are current fault codes present? No: Go to Step10 Yes: Go to Step5
	Step5	Inspection procedure Turn the starter switch in OFF. Replace component "R3 (DEF heater power unit)". Reinstall all the removed connectors. Go to Step6

https://truckmanualshub.com/

Inspection procedure	Step6	Inspection procedure Turn the starter switch in OFF. Reinstall all the removed connectors. Erase fault memory and perform a test drive. Check if this diagnosis code has occurred. Are current fault codes present? No: Go to Step10 Yes: Go to Step7
	Step7	Inspection procedure Turn the starter switch in OFF. Replace component “A40 (DEF tank)”. Reinstall all the removed connectors. Turn the starter switch in ON. Perform the learned value resetting procedure of A40 (DEF tank) which A4 (Combustion engine Control unit) learns. Go to Step8
	Step8	Inspection procedure Turn the starter switch in OFF. Reinstall all the removed connectors. Erase fault memory and perform a test drive. Check if this diagnosis code has occurred. Are current fault codes present? No: Go to Step6 Yes: Go to Step9
	Step9	Inspection procedure Perform the operation start and replace A4 (Combustion engine Control unit). Go to Step10
	Step10	Inspection completed
	Step11	Inspection procedure Turn the starter switch in OFF. Remove the connector of A4 (Combustion engine Control unit). Remove the connector of X19 (Intermediate connector). Remove the connector of X41 (Intermediate connector). Remove the connector of A20 (SAM). Remove the connector of Ground. Check the circuit across A4.X2.94/28 and X19.16/4 for open or short circuit. Check the circuit across A4.X2.94/32 and X19.16/3 for open or short circuit. Check the circuit across A4.X2.94/50 and X19.16/1 for open or short circuit. Check the circuit across A4.X2.94/10 and X19.16/2 for open or short circuit. Check the circuit across X41.4/3 and Ground for open or short circuit. Check the circuit across X41.4/4 and Ground for open or short circuit. Check the circuit across X41.4/1 and A20.X10.14/4 for open or short circuit. Check the circuit across X41.4/2 and A20.X10.14/6 for open or short circuit. Make a visual check on each connector. Is any abnormality recognized? No: Go to Step12 Yes: Go to Step13
	Step12	Inspection procedure Repair or replace the harness across R3 (DEF heater power unit) and X19 (Intermediate connector). Repair or replace the harness across R3 (DEF heater power unit) and X19 (Intermediate connector). Repair or replace the harness across R3 (DEF heater power unit) and A18 (DEF delivery pump). Repair or replace the harness across R3 (DEF heater power unit) and R2 (DEF line heater). Reinstall all the removed connectors. Erase fault memory and perform a test drive. Check if this diagnosis code has occurred. Are current fault codes present? No: Go to Step10 Yes: Go to Step3

https://truckmanualshub.com/

Inspection procedure	Step13	Inspection procedure Repair or replace the harness across A4 (Combustion engine Control unit) and X19 (Intermediate connector). Repair or replace the harness across A20 (SAM) and X41 (Intermediate connector). Repair or replace the harness across Ground and X41 (Intermediate connector). Reinstall all the removed connectors. Erase fault memory and perform a test drive. Check if this diagnosis code has occurred. Are current fault codes present? No: Go to Step10 Yes: Go to Step3

520538-1: SCR Reagent heating: DEF pressure line heaterSignal range checkLOW

Generation condition		[Test Condition] • Monitoring is active while the battery voltage is over 10.00V and as long as the battery voltage is over 10.00V and 2.00s after this threshold has been exceeded • Continuously, if ADC module does not report any error.
		[Fault Detection] • The Sensed raw voltage < 0.00mV
		[Defect Debouncing] • Defect condition exceeded cumulatively > 500.00ms • Failure is detected if active for 50% of the time
Fault healing		• The sensed raw voltage > 0.00mV
System reaction		• Raw voltage is frozen at last valid value on preliminary failure and ramps to fixed replacement value 41.00uA if failure is validated using slope 3300.00K/s or 3300.00K/s depending on whether the replacement value is above or below the current value • Further reactions according FID (see FID's)
		• 1) FId / Freeze DEF pressure line heater raw voltage if preliminary failure is detected • 2) FId / Inhibit physical range check DEF pressure line heater current • 3) FId / Replace DEF pressure line heater raw voltage with default value if failure is validated
Failure cause		• Wiring Harness defect (short circuit or Open load) • Relay defect. • Heating element in pressure line defect
Failure repair		• Check Wiring Harness • Check Relay • Check Heating element in pressure line
Inspection procedure	Step1	Inspection procedure If one of diagnosis codes associated with SAM ECU is generated, make a system diagnosis according to the diagnosis code. Go to Step2

https://truckmanualshub.com/

Inspection procedure	Step2	Inspection procedure Turn the starter switch in OFF. Remove the connector of A4 (Combustion engine Control unit). Remove the connector of R3 (DEF heater power unit). Remove the connector of R2 (DEF line heater). Remove the connector of A18 (DEF delivery pump). Remove the connector of A20 (SAM). Remove the connector of Ground. Check the circuit across A4.X2.94/28 and R3.X2.4/4 for open or short circuit. Check the circuit across A4.X2.94/32 and R3.X2.4/3 for open or short circuit. Check the circuit across A4.X2.94/50 and R3.X2.4/2 for open or short circuit. Check the circuit across A4.X2.94/10 and R3.X2.4/1 for open or short circuit. Check the circuit across R3.X1.5/1 and R2.2/1 for open or short circuit. Check the circuit across R3.X1.5/2 and A18.5/2 for open or short circuit. Check the circuit across R3.X1.5/3 and A20.X10.14/4 for open or short circuit. Check the circuit across R3.X1.5/5 and A20.X10.14/6 for open or short circuit. Check the circuit across R2.2/2 and Ground for open or short circuit. Check the circuit across A18.5/1 and Ground for open or short circuit. Make a visual check on each connector. Is any abnormality recognized?
	Step3	Inspection procedure Turn the starter switch in OFF. Replace component “R2 (DEF line heater)”. Reinstall all the removed connectors. Turn the starter switch in ON. Go to Step4
	Step4	Inspection procedure Turn the starter switch in OFF. Reinstall all the removed connectors. Erase fault memory and perform a test drive. Check if this diagnosis code has occurred. Are current fault codes present? No: Go to Step10 Yes: Go to Step5
	Step5	Inspection procedure Turn the starter switch in OFF. Replace component “R3 (DEF heater power unit)”. Reinstall all the removed connectors. Go to Step6
	Step6	Inspection procedure Turn the starter switch in OFF. Reinstall all the removed connectors. Erase fault memory and perform a test drive. Check if this diagnosis code has occurred. Are current fault codes present? No: Go to Step10 Yes: Go to Step7
	Step7	Inspection procedure Turn the starter switch in OFF. Replace component “A40 (DEF tank)”. Reinstall all the removed connectors. Turn the starter switch in ON. Perform the learned value resetting procedure of A40 (DEF tank) which A4 (Combustion engine Control unit) learns. Go to Step8
	Step8	Inspection procedure Turn the starter switch in OFF. Reinstall all the removed connectors. Erase fault memory and perform a test drive. Check if this diagnosis code has occurred. Are current fault codes present? No: Go to Step6 Yes: Go to Step9
	Step9	Inspection procedure Perform the operation start and replace A4 (Combustion engine Control unit). Go to Step10

https://truckmanualshub.com/

Inspection procedure	Step10	Inspection completed
	Step11	Inspection procedure Turn the starter switch in OFF. Remove the connector of A4 (Combustion engine Control unit). Remove the connector of X19 (Intermediate connector). Remove the connector of X41 (Intermediate connector). Remove the connector of A20 (SAM). Remove the connector of Ground. Check the circuit across A4.X2.94/28 and X19.16/4 for open or short circuit. Check the circuit across A4.X2.94/32 and X19.16/3 for open or short circuit. Check the circuit across A4.X2.94/50 and X19.16/1 for open or short circuit. Check the circuit across A4.X2.94/10 and X19.16/2 for open or short circuit. Check the circuit across X41.4/3 and Ground for open or short circuit. Check the circuit across X41.4/4 and Ground for open or short circuit. Check the circuit across X41.4/1 and A20.X10.14/4 for open or short circuit. Check the circuit across X41.4/2 and A20.X10.14/6 for open or short circuit. Make a visual check on each connector. Is any abnormality recognized? No: Go to Step12 Yes: Go to Step13
	Step12	Inspection procedure Repair or replace the harness across R3 (DEF heater power unit) and X19 (Intermediate connector). Repair or replace the harness across R3 (DEF heater power unit) and X19 (Intermediate connector). Repair or replace the harness across R3 (DEF heater power unit) and A18 (DEF delivery pump). Repair or replace the harness across R3 (DEF heater power unit) and R2 (DEF line heater). Reinstall all the removed connectors. Erase fault memory and perform a test drive. Check if this diagnosis code has occurred. Are current fault codes present? No: Go to Step10 Yes: Go to Step3
	Step13	Inspection procedure Repair or replace the harness across A4 (Combustion engine Control unit) and X19 (Intermediate connector). Repair or replace the harness across A20 (SAM) and X41 (Intermediate connector). Repair or replace the harness across Ground and X41 (Intermediate connector). Reinstall all the removed connectors. Erase fault memory and perform a test drive. Check if this diagnosis code has occurred. Are current fault codes present? No: Go to Step10 Yes: Go to Step3

https://truckmanualshub.com/

520538-3: SCR Reagent heating: Pressure line heaterShort circuit to positive

Generation condition		[Test Condition] • Monitoring is active while the battery voltage is over 10.00V and as long as the battery voltage is over 10.00V and 2.00s after this threshold has been exceeded • Monitoring only when the power stage is active. • ECU not in pre drive condition, Battery voltage > 9.50V (switch off < 9.00V), Battery voltage < 16.00V (switch off > 16.50V) and Battery voltage correction factor between 0.80- (switch off < 0.78-) and 1.56- (switch off > 1.65-) • Power stage not switched off, i.e. ECU not in pre drive condition, Battery voltage > 9.50V (switch off < 9.00V) and Battery voltage < 16.00V (switch off > 16.50V)
		[Fault Detection] • Hardware reports a short circuit to battery (SCB) error on the power stage for the power stage of DEF Pressure Line heater
		[Defect Debouncing] • Defect condition exceeded cumulatively > 450.00ms • Failure is detected if active for 50% of the time
Fault healing		• To give the possibility for healing, an electric impulse is sent to power stage each 1000.00ms 5.00- times in actual driving cycle. Failure healed, if the power stage does not report an SCB error. Else no healing possible at this driving cycle.
System reaction		• Power stage is shut off. • Test impulse is sent to power stage via SPI. • Further reactions according FID (see FID's)
		• 1) FId / Disable the sending of TESTING signal for heater PressureLine • 2) FId / state release pressure line heating
Failure cause		• Short circuit of wiring to external source or inside SCR Reagent Heating
Failure repair		• Check of wiring, replace SCR Reagent Heating
Inspection procedure	Step1	Inspection procedure If one of diagnosis codes associated with SAM ECU is generated, make a system diagnosis according to the diagnosis code. Go to Step2
	Step2	Inspection procedure Turn the starter switch in OFF. Remove the connector of A4 (Combustion engine Control unit). Remove the connector of R3 (DEF heater power unit). Remove the connector of R2 (DEF line heater). Remove the connector of A18 (DEF delivery pump). Remove the connector of A20 (SAM). Remove the connector of Ground. Check the circuit across A4.X2.94/28 and R3.X2.4/4 for open or short circuit. Check the circuit across A4.X2.94/32 and R3.X2.4/3 for open or short circuit. Check the circuit across A4.X2.94/50 and R3.X2.4/2 for open or short circuit. Check the circuit across A4.X2.94/10 and R3.X2.4/1 for open or short circuit. Check the circuit across R3.X1.5/1 and R2.2/1 for open or short circuit. Check the circuit across R3.X1.5/2 and A18.5/2 for open or short circuit. Check the circuit across R3.X1.5/3 and A20.X10.14/4 for open or short circuit. Check the circuit across R3.X1.5/5 and A20.X10.14/6 for open or short circuit. Check the circuit across R2.2/2 and Ground for open or short circuit. Check the circuit across A18.5/1 and Ground for open or short circuit. Make a visual check on each connector. Is any abnormality recognized?
	Step3	Inspection procedure Turn the starter switch in OFF. Replace component "R2 (DEF line heater)". Reinstall all the removed connectors. Turn the starter switch in ON. Go to Step4

https://truckmanualshub.com/

Inspection procedure	Step4	Inspection procedure Turn the starter switch in OFF. Reinstall all the removed connectors. Erase fault memory and perform a test drive. Check if this diagnosis code has occurred. Are current fault codes present? No: Go to Step10 Yes: Go to Step5
	Step5	Inspection procedure Turn the starter switch in OFF. Replace component “R3 (DEF heater power unit)”. Reinstall all the removed connectors. Go to Step6
	Step6	Inspection procedure Turn the starter switch in OFF. Reinstall all the removed connectors. Erase fault memory and perform a test drive. Check if this diagnosis code has occurred. Are current fault codes present? No: Go to Step10 Yes: Go to Step7
	Step7	Inspection procedure Turn the starter switch in OFF. Replace component “A40 (DEF tank)”. Reinstall all the removed connectors. Turn the starter switch in ON. Perform the learned value resetting procedure of A40 (DEF tank) which A4 (Combustion engine Control unit) learns. Go to Step8
	Step8	Inspection procedure Turn the starter switch in OFF. Reinstall all the removed connectors. Erase fault memory and perform a test drive. Check if this diagnosis code has occurred. Are current fault codes present? No: Go to Step6 Yes: Go to Step9
	Step9	Inspection procedure Perform the operation start and replace A4 (Combustion engine Control unit). Go to Step10
	Step10	Inspection completed
	Step11	Inspection procedure Turn the starter switch in OFF. Remove the connector of A4 (Combustion engine Control unit). Remove the connector of X19 (Intermediate connector). Remove the connector of X41 (Intermediate connector). Remove the connector of A20 (SAM). Remove the connector of Ground. Check the circuit across A4.X2.94/28 and X19.16/4 for open or short circuit. Check the circuit across A4.X2.94/32 and X19.16/3 for open or short circuit. Check the circuit across A4.X2.94/50 and X19.16/1 for open or short circuit. Check the circuit across A4.X2.94/10 and X19.16/2 for open or short circuit. Check the circuit across X41.4/3 and Ground for open or short circuit. Check the circuit across X41.4/4 and Ground for open or short circuit. Check the circuit across X41.4/1 and A20.X10.14/4 for open or short circuit. Check the circuit across X41.4/2 and A20.X10.14/6 for open or short circuit. Make a visual check on each connector. Is any abnormality recognized? No: Go to Step12 Yes: Go to Step13

https://truckmanualshub.com/

Inspection procedure	Step12	Inspection procedure Repair or replace the harness across R3 (DEF heater power unit) and X19 (Intermediate connector). Repair or replace the harness across R3 (DEF heater power unit) and X19 (Intermediate connector). Repair or replace the harness across R3 (DEF heater power unit) and A18 (DEF delivery pump). Repair or replace the harness across R3 (DEF heater power unit) and R2 (DEF line heater). Reinstall all the removed connectors. Erase fault memory and perform a test drive. Check if this diagnosis code has occurred. Are current fault codes present? No: Go to Step10 Yes: Go to Step3
	Step13	Inspection procedure Repair or replace the harness across A4 (Combustion engine Control unit) and X19 (Intermediate connector). Repair or replace the harness across A20 (SAM) and X41 (Intermediate connector). Repair or replace the harness across Ground and X41 (Intermediate connector). Reinstall all the removed connectors. Erase fault memory and perform a test drive. Check if this diagnosis code has occurred. Are current fault codes present? No: Go to Step10 Yes: Go to Step3

520538-4: SCR Reagent heating: Pressure line heaterShort circuit to ground

Generation condition		[Test Condition] • Monitoring is active while the battery voltage is over 10.00V and as long as the battery voltage is over 10.00V and 2.00s after this threshold has been exceeded • Monitoring only when the power stage is NOT active. • ECU not in pre drive condition, Battery voltage > 9.50V (switch off < 9.00V), Battery voltage < 16.00V (switch off > 16.50V) and Battery voltage correction factor between 0.80- (switch off < 0.78-) and 1.56- (switch off > 1.65-) • Power stage not switched off, i.e. ECU not in pre drive condition, Battery voltage > 9.50V (switch off < 9.00V) and Battery voltage < 16.00V (switch off > 16.50V)
		[Fault Detection] • Hardware reports a short circuit to ground (SCG) error on the power stage for the power stage of DEF Pressure Line heater
		[Defect Debouncing] • Defect condition exceeded immediately
Fault healing		• SCG fault not detected
System reaction		• Power stage shut off. • Further reactions according FID (see FID's)
		• 1) FId / Inhibit monitoring of Pressure Line Heater Circuit • 2) FId / Disable the sending of TESTING signal for heater PressureLine • 3) FId / state release pressure line heating
Failure cause		• Short circuit of wiring to ground or inside SCR Reagent Heating
Failure repair		• Check of wiring, replace SCR Reagent Heating
Inspection procedure	Step1	Inspection procedure If one of diagnosis codes associated with SAM ECU is generated, make a system diagnosis according to the diagnosis code. Go to Step2

https://truckmanualshub.com/

Inspection procedure	Step2	Inspection procedure Turn the starter switch in OFF. Remove the connector of A4 (Combustion engine Control unit). Remove the connector of R3 (DEF heater power unit). Remove the connector of R2 (DEF line heater). Remove the connector of A18 (DEF delivery pump). Remove the connector of A20 (SAM). Remove the connector of Ground. Check the circuit across A4.X2.94/28 and R3.X2.4/4 for open or short circuit. Check the circuit across A4.X2.94/32 and R3.X2.4/3 for open or short circuit. Check the circuit across A4.X2.94/50 and R3.X2.4/2 for open or short circuit. Check the circuit across A4.X2.94/10 and R3.X2.4/1 for open or short circuit. Check the circuit across R3.X1.5/1 and R2.2/1 for open or short circuit. Check the circuit across R3.X1.5/2 and A18.5/2 for open or short circuit. Check the circuit across R3.X1.5/3 and A20.X10.14/4 for open or short circuit. Check the circuit across R3.X1.5/5 and A20.X10.14/6 for open or short circuit. Check the circuit across R2.2/2 and Ground for open or short circuit. Check the circuit across A18.5/1 and Ground for open or short circuit. Make a visual check on each connector. Is any abnormality recognized?
	Step3	Inspection procedure Turn the starter switch in OFF. Replace component “R2 (DEF line heater)”. Reinstall all the removed connectors. Turn the starter switch in ON. Go to Step4
	Step4	Inspection procedure Turn the starter switch in OFF. Reinstall all the removed connectors. Erase fault memory and perform a test drive. Check if this diagnosis code has occurred. Are current fault codes present? No: Go to Step10 Yes: Go to Step5
	Step5	Inspection procedure Turn the starter switch in OFF. Replace component “R3 (DEF heater power unit)”. Reinstall all the removed connectors. Go to Step6
	Step6	Inspection procedure Turn the starter switch in OFF. Reinstall all the removed connectors. Erase fault memory and perform a test drive. Check if this diagnosis code has occurred. Are current fault codes present? No: Go to Step10 Yes: Go to Step7
	Step7	Inspection procedure Turn the starter switch in OFF. Replace component “A40 (DEF tank)”. Reinstall all the removed connectors. Turn the starter switch in ON. Perform the learned value resetting procedure of A40 (DEF tank) which A4 (Combustion engine Control unit) learns. Go to Step8
	Step8	Inspection procedure Turn the starter switch in OFF. Reinstall all the removed connectors. Erase fault memory and perform a test drive. Check if this diagnosis code has occurred. Are current fault codes present? No: Go to Step6 Yes: Go to Step9
	Step9	Inspection procedure Perform the operation start and replace A4 (Combustion engine Control unit). Go to Step10

https://truckmanualshub.com/

Inspection procedure	Step10	Inspection completed
	Step11	Inspection procedure Turn the starter switch in OFF. Remove the connector of A4 (Combustion engine Control unit). Remove the connector of X19 (Intermediate connector). Remove the connector of X41 (Intermediate connector). Remove the connector of A20 (SAM). Remove the connector of Ground. Check the circuit across A4.X2.94/28 and X19.16/4 for open or short circuit. Check the circuit across A4.X2.94/32 and X19.16/3 for open or short circuit. Check the circuit across A4.X2.94/50 and X19.16/1 for open or short circuit. Check the circuit across A4.X2.94/10 and X19.16/2 for open or short circuit. Check the circuit across X41.4/3 and Ground for open or short circuit. Check the circuit across X41.4/4 and Ground for open or short circuit. Check the circuit across X41.4/1 and A20.X10.14/4 for open or short circuit. Check the circuit across X41.4/2 and A20.X10.14/6 for open or short circuit. Make a visual check on each connector. Is any abnormality recognized? No: Go to Step12 Yes: Go to Step13
	Step12	Inspection procedure Repair or replace the harness across R3 (DEF heater power unit) and X19 (Intermediate connector). Repair or replace the harness across R3 (DEF heater power unit) and X19 (Intermediate connector). Repair or replace the harness across R3 (DEF heater power unit) and A18 (DEF delivery pump). Repair or replace the harness across R3 (DEF heater power unit) and R2 (DEF line heater). Reinstall all the removed connectors. Erase fault memory and perform a test drive. Check if this diagnosis code has occurred. Are current fault codes present? No: Go to Step10 Yes: Go to Step3
	Step13	Inspection procedure Repair or replace the harness across A4 (Combustion engine Control unit) and X19 (Intermediate connector). Repair or replace the harness across A20 (SAM) and X41 (Intermediate connector). Repair or replace the harness across Ground and X41 (Intermediate connector). Reinstall all the removed connectors. Erase fault memory and perform a test drive. Check if this diagnosis code has occurred. Are current fault codes present? No: Go to Step10 Yes: Go to Step3

https://truckmanualshub.com/

520538-5: SCR Reagent heating: Pressure line heaterOpen circuit

Generation condition		[Test Condition] • Monitoring is active while the battery voltage is over 10.00V and as long as the battery voltage is over 10.00V and 2.00s after this threshold has been exceeded • Monitoring only when the power stage is NOT active. • ECU not in pre drive condition, Battery voltage > 9.50V (switch off < 9.00V), Battery voltage < 16.00V (switch off > 16.50V) and Battery voltage correction factor between 0.80- (switch off < 0.78-) and 1.56- (switch off > 1.65-) • Power stage not switched off, i.e. ECU not in pre drive condition, Battery voltage > 9.50V (switch off < 9.00V) and Battery voltage < 16.00V (switch off > 16.50V)
		[Fault Detection] • Hardware reports an Open Load (OL) error on the power stage for the power stage of DEF Pressure Line heater
		[Defect Debouncing] • Defect condition exceeded cumulatively > 2.00s • Failure is detected if active for 50% of the time
Fault healing		• Hardware does not report an Open Load (OL) error on the power stage for the power stage of DEF Pressure Line heater
System reaction		• Power stage shut off. • Further reactions according FID (see FID's)
		• 1) FId / Disable the sending of TESTING signal for heater PressureLine • 2) FId / state release pressure line heating
Failure cause		• Broken or disconnected wiring or defective relay
Failure repair		• Check of wiring, replace DEF Pressure Line heater actuator
Inspection procedure	Step1	Inspection procedure If one of diagnosis codes associated with SAM ECU is generated, make a system diagnosis according to the diagnosis code. Go to Step2
	Step2	Inspection procedure Turn the starter switch in OFF. Remove the connector of A4 (Combustion engine Control unit). Remove the connector of R3 (DEF heater power unit). Remove the connector of R2 (DEF line heater). Remove the connector of A18 (DEF delivery pump). Remove the connector of A20 (SAM). Remove the connector of Ground. Check the circuit across A4.X2.94/28 and R3.X2.4/4 for open or short circuit. Check the circuit across A4.X2.94/32 and R3.X2.4/3 for open or short circuit. Check the circuit across A4.X2.94/50 and R3.X2.4/2 for open or short circuit. Check the circuit across A4.X2.94/10 and R3.X2.4/1 for open or short circuit. Check the circuit across R3.X1.5/1 and R2.2/1 for open or short circuit. Check the circuit across R3.X1.5/2 and A18.5/2 for open or short circuit. Check the circuit across R3.X1.5/3 and A20.X10.14/4 for open or short circuit. Check the circuit across R3.X1.5/5 and A20.X10.14/6 for open or short circuit. Check the circuit across R2.2/2 and Ground for open or short circuit. Check the circuit across A18.5/1 and Ground for open or short circuit. Make a visual check on each connector. Is any abnormality recognized?
	Step3	Inspection procedure Turn the starter switch in OFF. Replace component "R2 (DEF line heater)". Reinstall all the removed connectors. Turn the starter switch in ON. Go to Step4
	Step4	Inspection procedure Turn the starter switch in OFF. Reinstall all the removed connectors. Erase fault memory and perform a test drive. Check if this diagnosis code has occurred. Are current fault codes present? No: Go to Step10 Yes: Go to Step5

https://truckmanualshub.com/

Inspection procedure	Step5	Inspection procedure Turn the starter switch in OFF. Replace component “R3 (DEF heater power unit)”. Reinstall all the removed connectors. Go to Step6
	Step6	Inspection procedure Turn the starter switch in OFF. Reinstall all the removed connectors. Erase fault memory and perform a test drive. Check if this diagnosis code has occurred. Are current fault codes present? No: Go to Step10 Yes: Go to Step7
	Step7	Inspection procedure Turn the starter switch in OFF. Replace component “A40 (DEF tank)”. Reinstall all the removed connectors. Turn the starter switch in ON. Perform the learned value resetting procedure of A40 (DEF tank) which A4 (Combustion engine Control unit) learns. Go to Step8
	Step8	Inspection procedure Turn the starter switch in OFF. Reinstall all the removed connectors. Erase fault memory and perform a test drive. Check if this diagnosis code has occurred. Are current fault codes present? No: Go to Step6 Yes: Go to Step9
	Step9	Inspection procedure Perform the operation start and replace A4 (Combustion engine Control unit). Go to Step10
	Step10	Inspection completed
	Step11	Inspection procedure Turn the starter switch in OFF. Remove the connector of A4 (Combustion engine Control unit). Remove the connector of X19 (Intermediate connector). Remove the connector of X41 (Intermediate connector). Remove the connector of A20 (SAM). Remove the connector of Ground. Check the circuit across A4.X2.94/28 and X19.16/4 for open or short circuit. Check the circuit across A4.X2.94/32 and X19.16/3 for open or short circuit. Check the circuit across A4.X2.94/50 and X19.16/1 for open or short circuit. Check the circuit across A4.X2.94/10 and X19.16/2 for open or short circuit. Check the circuit across X41.4/3 and Ground for open or short circuit. Check the circuit across X41.4/4 and Ground for open or short circuit. Check the circuit across X41.4/1 and A20.X10.14/4 for open or short circuit. Check the circuit across X41.4/2 and A20.X10.14/6 for open or short circuit. Make a visual check on each connector. Is any abnormality recognized? No: Go to Step12 Yes: Go to Step13

https://truckmanualshub.com/

Inspection procedure	Step12	Inspection procedure Repair or replace the harness across R3 (DEF heater power unit) and X19 (Intermediate connector). Repair or replace the harness across R3 (DEF heater power unit) and X19 (Intermediate connector). Repair or replace the harness across R3 (DEF heater power unit) and A18 (DEF delivery pump). Repair or replace the harness across R3 (DEF heater power unit) and R2 (DEF line heater). Reinstall all the removed connectors. Erase fault memory and perform a test drive. Check if this diagnosis code has occurred. Are current fault codes present? No: Go to Step10 Yes: Go to Step3
	Step13	Inspection procedure Repair or replace the harness across A4 (Combustion engine Control unit) and X19 (Intermediate connector). Repair or replace the harness across A20 (SAM) and X41 (Intermediate connector). Repair or replace the harness across Ground and X41 (Intermediate connector). Reinstall all the removed connectors. Erase fault memory and perform a test drive. Check if this diagnosis code has occurred. Are current fault codes present? No: Go to Step10 Yes: Go to Step3

520539-0: SCR reagent pressure: The pressure rise is too high.

Generation condition	[Test Condition] • Monitoring is active while the battery voltage is over 10.00V and as long as the battery voltage is over 10.00V and 2.00s after this threshold has been exceeded • Plausibility Monitoring not inhibited by FID_pUPmpPPlaus due to another failure. • Dosing system not yet pressurised after start or depressurised at system stop (after-run) (“No pressure control”). • System not in “defreezing mode”, i.e. reagent not frozen.
	[Fault Detection] • The measured relative pressure, corrected depending on ambient temperature (from 0kPa {0psi, 0kgf/cm^2} at -50.04°C {-58.07°F} over 0kPa {0psi, 0kgf/cm^2} at -10.04°C {13.93°F} and 0kPa {0psi, 0kgf/cm^2} at 39.96°C {103.93°F} to 0kPa {0psi, 0kgf/cm^2} at 149.96°C {301.93°F})> 50kPa {7.3psi, 0.5kgf/cm^2}
	[Defect Debouncing] • Defect condition exceeded cumulatively > 600.00ms • Failure is detected if active for 50% of the time
Fault healing	• No Healing possible (disabled by Data set)

https://truckmanualshub.com/

		• According FID (see FID's) • Possibly also failures related to too high NOx emissions or NH3 slip stored, as the real reagent injection quantity is not correct due to wrong pressure measurement.
System reaction		• 1) DEF dosing inhibited --> Dosing system goes to error state • 2) Pressure build up of Reagent dosing system inhibited --> pressure reduction • 3) Pressure control of reagent dosing system inhibited --> dosing system goes into error state • 4) Pressure reduction of reagent dosing system inhibited • 5) Pressure reduction procedure 1 of reagent dosing system activated (pressure reduction by open dosing valve and pump speed =) • 6) Pressure reduction procedure 2 of reagent dosing system activated (pressure reduction with closed sosing valve and pump speed = - pressure reduction through back flow throttle) • 7) Pressure reduction procedure 3 of reagent dosing system activated (pressure reduction with closed sosing valve and pump speed = - pressure reduction through back flow throttle) • 8) FId/ Release of the SCRMon function/no emergency shut-off with emptying • 9) FId / Service regeneration of Particulate filter ((DPF) inhibited (due to DPF failure) • 10) Fid / Reagent dosing for SCR inhibited • 11) Fid / SCR Monitoring or DEF injection release not possible (according calibration of Release Masks) • 12) FId / Inhibit DEF dosing valve plausibility check • 13) FId / Inhibit Physical Range Check of Tank Heater raw voltage • 14) FId / Inhibit reverting valve plausibility check
Failure cause		• Sensor in Pump module defective • Possibly emptying not executed correctly (clogged tubes, reverting valve not opening etc)
Failure repair		• Check sensor signal: Set Pump speed to 0, wait 1 minute (to give to the system for pressure release), open dosing valve to 100%, wait again some seconds and measure the DEF pressure: the value must be near 0 (between -50kPa {-7.3psi, -0.5kgf/cm^2} and 50kPa {7.3psi, 0.5kgf/cm^2}) • If OK --> failure occurred under "strange circumstances" and system seems OK. • If not OK: Check if system clogged: • Backflow test: Set pressure to ~500kPa {73psi, 5.1kgf/cm^2}, switch off pump (set to 0) --> pressure must decrease slowly --> if OK tube OK • Dosing test: Set pressure to ^500kPa {73psi, 5.1kgf/cm^2}, switch off pump, open dosing valve 100% --> pressure must decrease fast. --> if OK --> sensor does not measure correctly --> replace sensor (or whole pump module) • If pressure does not decrease: dismount dosing valve and repeat "dosing test". If DEF exits form dosing valve --> pressure sensor defect, if no flow --> dosing valve or DEF tubes possibly clogged.
Inspection procedure	Step1	Inspect or verify the following items. Repair or replace faulty items as necessary. If one of diagnosis codes associated with A18 (DEF delivery pump) is generated, make a system diagnosis according to the diagnosis code. If one of diagnosis codes associated with Y7 (DEF metering device) is generated, make a system diagnosis according to the diagnosis code. If one of diagnosis codes associated with B30 (DEF pressure sensor) is generated, make a system diagnosis according to the diagnosis code. If one of diagnosis codes associated with Y20 (DEF switchover valve) is generated, make a system diagnosis according to the diagnosis code. Go to Step2
	Step2	Inspect or verify the following items. Repair or replace faulty items as necessary. If one of diagnosis codes associated with A20 (SAM) is generated, make a system diagnosis according to the diagnosis code. Go to Step3

https://truckmanualshub.com/

Inspection procedure	Step3	Inspection procedure Remove Y7 (DEF metering device) from Exhaust pipe. Turn the starter switch in ON. Perform control and make sure that appropriate DEF can be added. Is any abnormality recognized? No: Go to Step4 Yes: Go to Step8
	Step4	Inspection procedure Turn the starter switch in OFF. Replace component “A40 (DEF tank)”. Reinstall all the removed connectors. Turn the starter switch in ON. Perform the learned value resetting procedure of A40 (DEF tank) which A4 (Combustion engine Control unit) learns. Go to Step5
	Step5	Inspection procedure Turn the starter switch in OFF. Reinstall all the removed connectors. Erase fault memory and perform a test drive. Check if this diagnosis code has occurred. Are current fault codes present? No: Go to Step7 Yes: Go to Step6
	Step6	Inspection procedure Perform the operation start and replace A4 (Combustion engine Control unit). Go to Step7
	Step7	Inspection completed
	Step8	Inspection procedure Turn the starter switch in OFF. Remove DEF tube from A18 (DEF delivery pump). Remove Y7 (DEF metering device) from DEF tube. Check the Clogging or Breaks at DEF tube. Is any abnormality recognized? No: Go to Step9 Yes: Go to Step10
	Step9	Inspection procedure Turn the starter switch in OFF. Replace component “Y7 (DEF metering device)”. Mount DEF tube on A18 (DEF delivery pump). Mount DEF tube on Y7 (DEF metering device). Mount Y7 (DEF metering device) on Exhaust pipe. Reinstall all the removed connectors. Turn the starter switch in ON. Erase fault memory and perform a test drive. Check if this diagnosis code has occurred. Is any abnormality recognized? No: Go to Step7 Yes: Go to Step4
	Step10	Inspection procedure Turn the starter switch in OFF. Replace component “DEF tube”. Mount DEF tube on A18 (DEF delivery pump). Mount DEF tube on Y7 (DEF metering device). Mount Y7 (DEF metering device) on Exhaust pipe. Reinstall all the removed connectors. Turn the starter switch in ON. Erase fault memory and perform a test drive. Check if this diagnosis code has occurred. Is any abnormality recognized? No: Go to Step7 Yes: Go to Step4

https://truckmanualshub.com/

520539-2: SCR Reagent pump: Motor speed deviation

Generation condition		[Test Condition] • Monitoring is active while the battery voltage is over 10.00V and as long as the battery voltage is over 10.00V and 2.00s after this threshold has been exceeded • Failure “UPmpMotOL” and “UPmpMotSCG” not yet debounced.
		[Fault Detection] • “OL” or “SCG” failure active longer than 4.00s but less than 6.00s.
		[Defect Debouncing] • Defect condition fulfilled continuously > 1.00 events
Fault healing		• No healing at this driving cycle. Healing at the end of next driving cycle, if failure was not reported during that cycle.
System reaction		• None
Failure cause		• Pump motor defective (blocked, possibly due to crystallisation (after long stand still period) or frozen DEF in case of cold ambient condition)
Failure repair		• Check if Pump is delivering: • If OK: failure is only sporadic (possibly long still stand period or by frozen Reagent - check ambient conditions) --> probably no action needed. If failure appears several times --> replace pump module. • If Not OK: Replace Pump module
Inspection procedure	Step1	Inspect or verify the following items. Repair or replace faulty items as necessary. Component ‘Due to Crystallization of DEF A18 (DEF delivery pump)’ is stuck. Component ‘Due to Freeze of DEF A18 (DEF delivery pump)’ is stuck. For procedures, refer to the Shop Manual. Go to Step2
	Step2	Inspect or verify the following items. Repair or replace faulty items as necessary. If any other fault code has occurred, perform the diagnostics procedure for the fault code. Go to Step3
	Step3	Inspection procedure Turn the starter switch in OFF. Remove the connector of A4 (Combustion engine Control unit). Remove the connector of A18 (DEF delivery pump). Remove the connector of A20 (SAM). Remove the connector of Ground. Check the circuit across A4.X2.94/7 and A18.5/5 for open or short circuit. Check the circuit across A20.X10.14/2 and A18.5/3 for open or short circuit. Check the circuit across Ground and A18.5/4 for open or short circuit. Make a visual check on each connector. Is any abnormality recognized? No: Go to Step4 Yes: Go to Step8
	Step4	Inspection procedure Turn the starter switch in OFF. Replace component “A40 (DEF tank)”. Reinstall all the removed connectors. Turn the starter switch in ON. Perform the learned value resetting procedure of A40 (DEF tank) which A4 (Combustion engine Control unit) learns. Go to Step5
	Step5	Inspection procedure Turn the starter switch in OFF. Reinstall all the removed connectors. Erase fault memory and perform a test drive. Check if this diagnosis code has occurred. Are current fault codes present? No: Go to Step7 Yes: Go to Step6

https://truckmanualshub.com/

Inspection procedure	Step6	Inspection procedure Perform the operation start and replace A4 (Combustion engine Control unit). Go to Step7
	Step7	Inspection completed
	Step8	Inspection procedure Turn the starter switch in OFF. Remove the connector of A4 (Combustion engine Control unit). Remove the connector of X19 (Intermediate connector). Remove the connector of X41 (Intermediate connector). Remove the connector of A20 (SAM). Remove the connector of Ground. Repair or replace the harness across A4.X2.94/7 and X19.16/7. Check the circuit across A20.X10.14/2 and X19.16/8 for open or short circuit. Check the circuit across Ground and X41.4/3 for open or short circuit. Make a visual check on each connector. Is any abnormality recognized? No: Go to Step9 Yes: Go to Step10
	Step9	Inspection procedure Repair or replace the harness across A18 (DEF delivery pump) and X19 (Intermediate connector). Repair or replace the harness across A18 (DEF delivery pump) and X41 (Intermediate connector). Reinstall all the removed connectors. Erase fault memory and perform a test drive. Check if this diagnosis code has occurred. Are current fault codes present? No: Go to Step7 Yes: Go to Step4
	Step10	Inspection procedure Repair or replace the harness across A4 (Combustion engine Control unit) and X19 (Intermediate connector). Repair or replace the harness across A20 (SAM) and X41 (Intermediate connector). Repair or replace the harness across Ground and X41 (Intermediate connector). Reinstall all the removed connectors. Erase fault memory and perform a test drive. Check if this diagnosis code has occurred. Are current fault codes present? No: Go to Step7 Yes: Go to Step4

520539-3: SCR Reagent pump: Output to DEF pump motor-Short circuit to positive

Generation condition	[Test Condition] • Monitoring is active while the battery voltage is over 10.00V and as long as the battery voltage is over 10.00V and 2.00s after this threshold has been exceeded • DEF Pump is actuated • DEF Pump Motor Power stage not disabled, i.e. Battery voltage > 9.50V (switch off < 9.00V) and Battery voltage < 16.00V (switch off > 16.50V) • ECU not in pre drive condition, Battery voltage > 9.50V (switch off < 9.00V), Battery voltage < 16.00V (switch off > 16.50V) and Battery voltage correction factor between 0.80- (switch off < 0.78-) and 1.56- (switch off > 1.65-)
	[Fault Detection] • The power stage hardware reports a “Short to Battery” (SCB) error.
	[Defect Debouncing] • Defect condition exceeded cumulatively > 200.00ms • Failure is detected if active for 50% of the time
Fault healing	• To give the possibility for healing, an electric impulse is sent to power stage each 1000.00ms 5.00- times in actual driving cycle. Failure healed, if the power stage does not report an SCB error. Else no healing possible at this driving cycle.

https://truckmanualshub.com/

System reaction		• Power stage for DEF Pump Module Motor Actuator is shut-off. • Further reactions according FID (see FID's)
		• 1) Fid / The DEF Dosing system goes into Error mode instead of Afterrun • 2) Fid / Reagent dosing for SCR inhibited • 3) Fid / The DEF dosing System goes in Error mode after Emptying • 4) DEF dosing inhibited --> Dosing system goes to error state • 5) Fid / DEF dosing system does not enter in pressure control mode (i.e. will not inject DEF) • 6) Pressure build up of Reagent dosing system inhibited --> pressure reduction • 7) FId / Inhibit DEF pressure compensation in afterrun • 8) Pressure control of reagent dosing system inhibited --> dosing system goes into error state • 9) FId / Refilling of SCR Dosing system inhibited • 10) FId / Function inhibiting afterrun temperature check DEF • 11) Fid / SCR Dosing system ventilation inhibited • 12) FId / Inhibit reverting valve plausibility check • 13) FId / Service regeneration of Particulate filter ((DPF) inhibited (due to DPF failure) • 14) Fid / SCR Monitoring or DEF injection release not possible (according calibration of Release Masks)
Failure cause		• Short circuit of wiring to external source or inside DEF pump motor
Failure repair		• Check of wiring, replace DEF pump motor
Inspection procedure	Step1	Inspect or verify the following items. Repair or replace faulty items as necessary. If any other fault code has occurred, perform the diagnostics procedure for the fault code. Go to Step2
	Step2	Inspection procedure Turn the starter switch in OFF. Remove the connector of A4 (Combustion engine Control unit). Remove the connector of A18 (DEF delivery pump). Remove the connector of A20 (SAM). Remove the connector of Ground. Check the circuit across A4.X2.94/7 and A18.5/5 for open or short circuit. Check the circuit across A20.X10.14/2 and A18.5/3 for open or short circuit. Check the circuit across Ground and A18.5/4 for open or short circuit. Make a visual check on each connector. Is any abnormality recognized? No: Go to Step3 Yes: Go to Step7
	Step3	Inspection procedure Turn the starter switch in OFF. Replace component "A40 (DEF tank)". Reinstall all the removed connectors. Turn the starter switch in ON. Perform the learned value resetting procedure of A40 (DEF tank) which A4 (Combustion engine Control unit) learns. Go to Step4
	Step4	Inspection procedure Turn the starter switch in OFF. Reinstall all the removed connectors. Erase fault memory and perform a test drive. Check if this diagnosis code has occurred. Are current fault codes present? No: Go to Step6 Yes: Go to Step5
	Step5	Inspection procedure Perform the operation start and replace A4 (Combustion engine Control unit). Go to Step6
	Step6	Inspection completed

https://truckmanualshub.com/

Inspection procedure	Step7	Inspection procedure Turn the starter switch in OFF. Remove the connector of A4 (Combustion engine Control unit). Remove the connector of X19 (Intermediate connector). Remove the connector of X41 (Intermediate connector). Remove the connector of A20 (SAM). Remove the connector of Ground. Repair or replace the harness across A4.X2.94/7 and X19.16/7. Check the circuit across A20.X10.14/2 and X19.16/8 for open or short circuit. Check the circuit across Ground and X41.4/3 for open or short circuit. Make a visual check on each connector. Is any abnormality recognized? No: Go to Step8 Yes: Go to Step9
	Step8	Inspection procedure Repair or replace the harness across A18 (DEF delivery pump) and X19 (Intermediate connector). Repair or replace the harness across A18 (DEF delivery pump) and X41 (Intermediate connector). Reinstall all the removed connectors. Erase fault memory and perform a test drive. Check if this diagnosis code has occurred. Are current fault codes present? No: Go to Step6 Yes: Go to Step3
	Step9	Inspection procedure Repair or replace the harness across A4 (Combustion engine Control unit) and X19 (Intermediate connector). Repair or replace the harness across A20 (SAM) and X41 (Intermediate connector). Repair or replace the harness across Ground and X41 (Intermediate connector). Reinstall all the removed connectors. Erase fault memory and perform a test drive. Check if this diagnosis code has occurred. Are current fault codes present? No: Go to Step6 Yes: Go to Step3

520539-4: SCR Reagent pump: Output to DEF pump motor-Short circuit to ground

Generation condition	[Test Condition] • Monitoring is active while the battery voltage is over 10.00V and as long as the battery voltage is over 10.00V and 2.00s after this threshold has been exceeded • DEF Pump not actuated • DEF Pump Motor Power stage not disabled, i.e. Battery voltage > 9.50V (switch off < 9.00V) and Battery voltage < 16.00V (switch off > 16.50V) • ECU not in pre drive condition, Battery voltage > 9.50V (switch off < 9.00V), Battery voltage < 16.00V (switch off > 16.50V) and Battery voltage correction factor between 0.80- (switch off < 0.78-) and 1.56- (switch off > 1.65-)
	[Fault Detection] • The power stage hardware reports a “short circuit to ground” (SCG) error.
	[Defect Debouncing] • Defect condition exceeded cumulatively > 8.00s • Failure is detected if active for 50% of the time
Fault healing	• The power stage hardware does not report a “short circuit to ground” (SCG) error.

https://truckmanualshub.com/

System reaction		• Power stage for DEF Pump Module Motor Actuator is shut-off. • Further reactions according FID (see FID)
		• 1) Fid / The DEF Dosing system goes into Error mode instead of Afterrun • 2) Fid / Reagent dosing for SCR inhibited • 3) Fid / The DEF dosing System goes in Error mode after Emptying • 4) DEF dosing inhibited --> Dosing system goes to error state • 5) Fid / DEF dosing system does not enter in pressure control mode (i.e. will not inject DEF) • 6) Pressure build up of Reagent dosing system inhibited --> pressure reduction • 7) FId / Inhibit DEF pressure compensation in afterrun • 8) Pressure control of reagent dosing system inhibited --> dosing system goes into error state • 9) FId / Refilling of SCR Dosing system inhibited • 10) FId / Function inhibiting afterrun temperature check DEF • 11) Fid / SCR Dosing system ventilation inhibited • 12) FId / Service regeneration of Particulate filter ((DPF) inhibited (due to DPF failure) • 13) Fid / SCR Monitoring or DEF injection release not possible (according calibration of Release Masks) • 14) FId / Inhibit reverting valve plausibility check
Failure cause		• Short circuit of wiring to ground or inside DEF pump motor
Failure repair		• Check of wiring, replace DEF pump motor
Inspection procedure	Step1	Inspect or verify the following items. Repair or replace faulty items as necessary. If any other fault code has occurred, perform the diagnostics procedure for the fault code. Go to Step2
	Step2	Inspection procedure Turn the starter switch in OFF. Remove the connector of A4 (Combustion engine Control unit). Remove the connector of A18 (DEF delivery pump). Remove the connector of A20 (SAM). Remove the connector of Ground. Check the circuit across A4.X2.94/7 and A18.5/5 for open or short circuit. Check the circuit across A20.X10.14/2 and A18.5/3 for open or short circuit. Check the circuit across Ground and A18.5/4 for open or short circuit. Make a visual check on each connector. Is any abnormality recognized? No: Go to Step3 Yes: Go to Step7
	Step3	Inspection procedure Turn the starter switch in OFF. Replace component “A40 (DEF tank)”. Reinstall all the removed connectors. Turn the starter switch in ON. Perform the learned value resetting procedure of A40 (DEF tank) which A4 (Combustion engine Control unit) learns. Go to Step4
	Step4	Inspection procedure Turn the starter switch in OFF. Reinstall all the removed connectors. Erase fault memory and perform a test drive. Check if this diagnosis code has occurred. Are current fault codes present? No: Go to Step6 Yes: Go to Step5
	Step5	Inspection procedure Perform the operation start and replace A4 (Combustion engine Control unit). Go to Step6
	Step6	Inspection completed

https://truckmanualshub.com/

Inspection procedure	Step7	Inspection procedure Turn the starter switch in OFF. Remove the connector of A4 (Combustion engine Control unit). Remove the connector of X19 (Intermediate connector). Remove the connector of X41 (Intermediate connector). Remove the connector of A20 (SAM). Remove the connector of Ground. Repair or replace the harness across A4.X2.94/7 and X19.16/7. Check the circuit across A20.X10.14/2 and X19.16/8 for open or short circuit. Check the circuit across Ground and X41.4/3 for open or short circuit. Make a visual check on each connector. Is any abnormality recognized? No: Go to Step8 Yes: Go to Step9
	Step8	Inspection procedure Repair or replace the harness across A18 (DEF delivery pump) and X19 (Intermediate connector). Repair or replace the harness across A18 (DEF delivery pump) and X41 (Intermediate connector). Reinstall all the removed connectors. Erase fault memory and perform a test drive. Check if this diagnosis code has occurred. Are current fault codes present? No: Go to Step6 Yes: Go to Step3
	Step9	Inspection procedure Repair or replace the harness across A4 (Combustion engine Control unit) and X19 (Intermediate connector). Repair or replace the harness across A20 (SAM) and X41 (Intermediate connector). Repair or replace the harness across Ground and X41 (Intermediate connector). Reinstall all the removed connectors. Erase fault memory and perform a test drive. Check if this diagnosis code has occurred. Are current fault codes present? No: Go to Step6 Yes: Go to Step3

520539-5: SCR Reagent pump: Output to DEF pump motor-Open circuit

Generation condition	[Test Condition] • Monitoring is active while the battery voltage is over 10.00V and as long as the battery voltage is over 10.00V and 2.00s after this threshold has been exceeded • DEF Pump not actuated • DEF Pump Motor Power stage not disabled, i.e. Battery voltage > 9.50V (switch off < 9.00V) and Battery voltage < 16.00V (switch off > 16.50V) • ECU not in pre drive condition, Battery voltage > 9.50V (switch off < 9.00V), Battery voltage < 16.00V (switch off > 16.50V) and Battery voltage correction factor between 0.80- (switch off < 0.78-) and 1.56- (switch off > 1.65-)
	[Fault Detection] • The power stage hardware reports a “open load” (OL) error.
	[Defect Debouncing] • Defect condition exceeded cumulatively > 8.00s • Failure is detected if active for 50% of the time
Fault healing	• The power stage does not report an “open load” (OL) error

https://truckmanualshub.com/

System reaction		• Power stage for DEF Pump Module Motor Actuator is shut-off. • Further reactions according FID (see FID)
		• 1) Fid / The DEF Dosing system goes into Error mode instead of Afterrun • 2) Fid / Reagent dosing for SCR inhibited • 3) Fid / The DEF dosing System goes in Error mode after Emptying • 4) DEF dosing inhibited --> Dosing system goes to error state • 5) Fid / DEF dosing system does not enter in pressure control mode (i.e. will not inject DEF) • 6) Pressure build up of Reagent dosing system inhibited --> pressure reduction • 7) FId / Inhibit DEF pressure compensation in afterrun • 8) Pressure control of reagent dosing system inhibited --> dosing system goes into error state • 9) FId / Refilling of SCR Dosing system inhibited • 10) FId / Function inhibiting afterrun temperature check DEF • 11) Fid / SCR Dosing system ventilation inhibited • 12) FId / Inhibit reverting valve plausibility check • 13) FId / Service regeneration of Particulate filter ((DPF) inhibited (due to DPF failure) • 14) Fid / SCR Monitoring or DEF injection release not possible (according calibration of Release Masks)
Failure cause		• Broken or disconnected wiring or defective relay
Failure repair		• Check of wiring, replace DEF pump motor
Inspection procedure	Step1	Inspect or verify the following items. Repair or replace faulty items as necessary. If any other fault code has occurred, perform the diagnostics procedure for the fault code. Go to Step2
	Step2	Inspection procedure Turn the starter switch in OFF. Remove the connector of A4 (Combustion engine Control unit). Remove the connector of A18 (DEF delivery pump). Remove the connector of A20 (SAM). Remove the connector of Ground. Check the circuit across A4.X2.94/7 and A18.5/5 for open or short circuit. Check the circuit across A20.X10.14/2 and A18.5/3 for open or short circuit. Check the circuit across Ground and A18.5/4 for open or short circuit. Make a visual check on each connector. Is any abnormality recognized? No: Go to Step3 Yes: Go to Step7
	Step3	Inspection procedure Turn the starter switch in OFF. Replace component “A40 (DEF tank)”. Reinstall all the removed connectors. Turn the starter switch in ON. Perform the learned value resetting procedure of A40 (DEF tank) which A4 (Combustion engine Control unit) learns. Go to Step4
	Step4	Inspection procedure Turn the starter switch in OFF. Reinstall all the removed connectors. Erase fault memory and perform a test drive. Check if this diagnosis code has occurred. Are current fault codes present? No: Go to Step6 Yes: Go to Step5
	Step5	Inspection procedure Perform the operation start and replace A4 (Combustion engine Control unit). Go to Step6
	Step6	Inspection completed

https://truckmanualshub.com/

Inspection procedure	Step7	Inspection procedure Turn the starter switch in OFF. Remove the connector of A4 (Combustion engine Control unit). Remove the connector of X19 (Intermediate connector). Remove the connector of X41 (Intermediate connector). Remove the connector of A20 (SAM). Remove the connector of Ground. Repair or replace the harness across A4.X2.94/7 and X19.16/7. Check the circuit across A20.X10.14/2 and X19.16/8 for open or short circuit. Check the circuit across Ground and X41.4/3 for open or short circuit. Make a visual check on each connector. Is any abnormality recognized? No: Go to Step8 Yes: Go to Step9
	Step8	Inspection procedure Repair or replace the harness across A18 (DEF delivery pump) and X19 (Intermediate connector). Repair or replace the harness across A18 (DEF delivery pump) and X41 (Intermediate connector). Reinstall all the removed connectors. Erase fault memory and perform a test drive. Check if this diagnosis code has occurred. Are current fault codes present? No: Go to Step6 Yes: Go to Step3
	Step9	Inspection procedure Repair or replace the harness across A4 (Combustion engine Control unit) and X19 (Intermediate connector). Repair or replace the harness across A20 (SAM) and X41 (Intermediate connector). Repair or replace the harness across Ground and X41 (Intermediate connector). Reinstall all the removed connectors. Erase fault memory and perform a test drive. Check if this diagnosis code has occurred. Are current fault codes present? No: Go to Step6 Yes: Go to Step3

520539-12: SCR Reagent pump: Output to DEF pump motor-Overtemperature

Generation condition	[Test Condition] • DEF Pump is actuated • DEF Pump Motor Power stage not disabled, i.e. Battery voltage > 9.50V (switch off < 9.00V) and Battery voltage < 16.00V (switch off > 16.50V) • ECU not in pre drive condition, Battery voltage > 9.50V (switch off < 9.00V), Battery voltage < 16.00V (switch off > 16.50V) and Battery voltage correction factor between 0.80- (switch off < 0.78-) and 1.56- (switch off > 1.65-)
	[Fault Detection] • The power stage hardware reports an “Overtemperature” (OT) error.
	[Defect Debouncing] • Defect condition exceeded cumulatively > 250.00ms • Failure is detected if active for 50% of the time
Fault healing	• To give the possibility for healing, an electric impulse is sent to power stage each 5.00s 5.00- times in actual driving cycle. Failure healed, if the power stage does not report an SCB error. Else no healing possible at this driving cycle.

https://truckmanualshub.com/

System reaction		• Power stage for DEF Pump Module Motor Actuator is shut-off. • Further reactions according FID (see FID's)
		• 1) Fid / The DEF Dosing system goes into Error mode instead of Afterrun • 2) Fid / Reagent dosing for SCR inhibited • 3) Fid / The DEF dosing System goes in Error mode after Emptying • 4) DEF dosing inhibited --> Dosing system goes to error state • 5) Fid / DEF dosing system does not enter in pressure control mode (i.e. will not inject DEF) • 6) Pressure build up of Reagent dosing system inhibited --> pressure reduction • 7) FId / Inhibit DEF pressure compensation in afterrun • 8) Pressure control of reagent dosing system inhibited --> dosing system goes into error state • 9) FId / Refilling of SCR Dosing system inhibited • 10) FId / Function inhibiting afterrun temperature check DEF • 11) Fid / SCR Dosing system ventilation inhibited • 12) FId / Inhibit reverting valve plausibility check • 13) FId / Service regeneration of Particulate filter ((DPF) inhibited (due to DPF failure) • 14) Fid / SCR Monitoring or DEF injection release not possible (according calibration of Release Masks)
Failure cause		• High battery voltage, high temperature inside ECU, high load or wiring problem
Failure repair		• No reaction needed if failure isn't present after short time, check load and output, check wiring, replace ECU
Inspection procedure	Step1	Inspect or verify the following items. Repair or replace faulty items as necessary. If any other fault code has occurred, perform the diagnostics procedure for the fault code. Go to Step2
	Step2	Inspection procedure Turn the starter switch in OFF. Remove the connector of A4 (Combustion engine Control unit). Remove the connector of A18 (DEF delivery pump). Remove the connector of A20 (SAM). Remove the connector of Ground. Check the circuit across A4.X2.94/7 and A18.5/5 for open or short circuit. Check the circuit across A20.X10.14/2 and A18.5/3 for open or short circuit. Check the circuit across Ground and A18.5/4 for open or short circuit. Make a visual check on each connector. Is any abnormality recognized? No: Go to Step3 Yes: Go to Step7
	Step3	Inspection procedure Turn the starter switch in OFF. Replace component "A40 (DEF tank)". Reinstall all the removed connectors. Turn the starter switch in ON. Perform the learned value resetting procedure of A40 (DEF tank) which A4 (Combustion engine Control unit) learns. Go to Step4
	Step4	Inspection procedure Turn the starter switch in OFF. Reinstall all the removed connectors. Erase fault memory and perform a test drive. Check if this diagnosis code has occurred. Are current fault codes present? No: Go to Step6 Yes: Go to Step5
	Step5	Inspection procedure Perform the operation start and replace A4 (Combustion engine Control unit). Go to Step6
	Step6	Inspection completed

https://truckmanualshub.com/

Inspection procedure	Step7	Inspection procedure Turn the starter switch in OFF. Remove the connector of A4 (Combustion engine Control unit). Remove the connector of X19 (Intermediate connector). Remove the connector of X41 (Intermediate connector). Remove the connector of A20 (SAM). Remove the connector of Ground. Repair or replace the harness across A4.X2.94/7 and X19.16/7. Check the circuit across A20.X10.14/2 and X19.16/8 for open or short circuit. Check the circuit across Ground and X41.4/3 for open or short circuit. Make a visual check on each connector. Is any abnormality recognized? No: Go to Step8 Yes: Go to Step9
	Step8	Inspection procedure Repair or replace the harness across A18 (DEFdelivery pump) and X19 (Intermediate connector). Repair or replace the harness across A18 (DEF delivery pump) and X41 (Intermediate connector). Reinstall all the removed connectors. Erase fault memory and perform a test drive. Check if this diagnosis code has occurred. Are current fault codes present? No: Go to Step6 Yes: Go to Step3
	Step9	Inspection procedure Repair or replace the harness across A4 (Combustion engine Control unit) and X19 (Intermediate connector). Repair or replace the harness across A20 (SAM) and X41 (Intermediate connector). Repair or replace the harness across Ground and X41 (Intermediate connector). Reinstall all the removed connectors. Erase fault memory and perform a test drive. Check if this diagnosis code has occurred. Are current fault codes present? No: Go to Step6 Yes: Go to Step3

520540-3: Component ‘SCR catalytic converter heating’ has a short circuit to positive.

Generation condition	[Test Condition] • Monitoring is active while the battery voltage is over 10.00V and as long as the battery voltage is over 10.00V and 2.00s after this threshold has been exceeded • Monitoring only when the power stage is active. • ECU not in pre drive condition, Battery voltage > 9.50V (switch off < 9.00V), Battery voltage < 16.00V (switch off > 16.50V) and Battery voltage correction factor between 0.80- (switch off < 0.78-) and 1.56- (switch off > 1.65-) • Power state not switched off, i.e. Battery voltage > 9.50V (switch off < 9.00V) and Battery voltage < 16.00V (switch off > 16.50V)
	[Fault Detection] • Hardware reports a short circuit to battery (SCB) error on the power stage for the DEF Reverting Valve Actuator.
	[Defect Debouncing] • Defect condition exceeded cumulatively > 100.00ms • Failure is detected if active for 50% of the time
Fault healing	• To give the possibility for healing, an electric impulse is sent to power stage each 1000.00ms 5.00- times in actual driving cycle. Failure healed, if the power stage does not report an SCB error. Else no healing possible at this driving cycle.

https://truckmanualshub.com/

		• Power stage is shut-off DEF Reverting Valve Actuator in open position). • Test impulse is send to power stage via SPI. • Further reactions according FID (see FID's)
System reaction		• 1) Fid / The DEF Dosing system goes into Error mode instead of Afterrun • 2) Fid / The DEF dosing System goes in Error mode after Emptying • 3) Fid / DEF dosing system does not enter in pressure control mode (i.e. will not inject DEF) • 4) FId / Inhibit DEF pressure compensation in afterrun • 5) Pressure reduction of reagent dosing system inhibited • 6) FId / Inhibit reverting valve plausibility check • 7) FId / Function inhibiting afterrun temperature check DEF • 8) Fid / SCR Monitoring or DEF injection release not possible (according calibration of Release Masks) • 9) FId / Service regeneration of Particulate filter ((DPF) inhibited (due to DPF failure) • 10) FId / Inhibit reverting valve plausibility check
Failure cause		• Short circuit of wiring to external source or inside DEF Reverting Valve Actuator
Failure repair		• Check of wiring, replace DEF Reverting Valve Actuator
Inspection procedure	Step1	Inspect or verify the following items. Repair or replace faulty items as necessary. If one of diagnosis codes associated with A20 (SAM) is generated, make a system diagnosis according to the diagnosis code. Go to Step2
	Step2	Inspection procedure Turn the starter switch in OFF. Remove the connector of A4 (Combustion engine Control unit). Remove the connector of Y20 (DEF switchover valve). Remove the connector of A20 (SAM). Check the circuit across A20.X10.14/2 and Y20.2/1 for open or short circuit. Check the circuit across A4.X2.94/73 and Y20.2/2 for open or short circuit. Make a visual check on each connector. Is any abnormality recognized? No: Go to Step3 Yes: Go to Step7
	Step3	Inspection procedure Turn the starter switch in OFF. Replace component "A40 (DEF tank)". Reinstall all the removed connectors. Turn the starter switch in ON. Perform the learned value resetting procedure of A40 (DEF tank) which A4 (Combustion engine Control unit) learns. Go to Step4
	Step4	Inspection procedure Turn the starter switch in OFF. Reinstall all the removed connectors. Erase fault memory and perform a test drive. Check if this diagnosis code has occurred. Are current fault codes present? No: Go to Step6 Yes: Go to Step5
	Step5	Inspection procedure Perform the operation start and replace A4 (Combustion engine Control unit). Go to Step6
	Step6	Inspection completed

https://truckmanualshub.com/

Inspection procedure	Step7	Inspection procedure Turn the starter switch in OFF. Remove the connector of A4 (Combustion engine Control unit). Remove the connector of X19 (Intermediate connector). Remove the connector of A20 (SAM). Check the circuit across A4.X2.94/73 and X19.16/9 for open or short circuit. Check the circuit across A20.X10.14/2 and X19.16/8 for open or short circuit. Make a visual check on each connector. Is any abnormality recognized? No: Go to Step8 Yes: Go to Step9
	Step8	Inspection procedure Repair or replace the harness across Y20 (DEF switchover valve) and X19 (Intermediate connector). Reinstall all the removed connectors. Erase fault memory and perform a test drive. Check if this diagnosis code has occurred. Are current fault codes present? No: Go to Step6 Yes: Go to Step3
	Step9	Inspection procedure Repair or replace the harness across A4 (Combustion engine Control unit) and X19 (Intermediate connector). Reinstall all the removed connectors. Erase fault memory and perform a test drive. Check if this diagnosis code has occurred. Are current fault codes present? No: Go to Step6 Yes: Go to Step3

520540-4: Component ‘SCR catalytic converter heating’ has a short circuit to ground.

Generation condition	[Test Condition] • Monitoring is active while the battery voltage is over 10.00V and as long as the battery voltage is over 10.00V and 2.00s after this threshold has been exceeded • Monitoring only when the power stage is NOT active. • ECU not in pre drive condition, Battery voltage > 9.50V (switch off < 9.00V), Battery voltage < 16.00V (switch off > 16.50V) and Battery voltage correction factor between 0.80- (switch off < 0.78-) and 1.56- (switch off > 1.65-) • Power state not switched off, i.e. Battery voltage > 9.50V (switch off < 9.00V) and Battery voltage < 16.00V (switch off > 16.50V)
	[Fault Detection] • Hardware reports a short circuit to ground (SCG) error on the power stage for the DEF Reverting Valve Actuator.
	[Defect Debouncing] • Defect condition exceeded cumulatively > 500.00ms • Failure is detected if active for 50% of the time
Fault healing	• No Healing possible (disabled by Data set)

https://truckmanualshub.com/

System reaction		• Power stage is shut-off DEF Reverting Valve Actuator in open position). • Further reactions according FID (see FID's)
		• 1) Fid / Reagent dosing for SCR inhibited • 2) DEF dosing inhibited --> Dosing system goes to error state • 3) Fid / DEF dosing system does not enter in pressure control mode (i.e. will not inject DEF) • 4) Pressure build up of Reagent dosing system inhibited --> pressure reduction • 5) Pressure control of reagent dosing system inhibited --> dosing system goes into error state • 6) FId / Refilling of SCR Dosing system inhibited • 7) FId / Release of the SCRMon function/no emergency shut-off with emptying • 8) FId / Release of Standby state • 9) FId / Function inhibiting afterrun temperature check DEF • 10) Fid / SCR Dosing system ventilation inhibited • 11) Fid / SCR Monitoring or DEF injection release not possible (according calibration of Release Masks) • 12) FId / Service regeneration of Particulate filter ((DPF) inhibited (due to DPF failure) • 13) FId / Inhibit reverting valve plausibility check
Failure cause		• Short circuit of wiring to ground or inside DEF Reverting Valve Actuator
Failure repair		• Check of wiring, replace DEF Reverting Valve Actuator
Inspection procedure	Step1	Inspect or verify the following items. Repair or replace faulty items as necessary. If one of diagnosis codes associated with A20 (SAM) is generated, make a system diagnosis according to the diagnosis code. Go to Step2
	Step2	Inspection procedure Turn the starter switch in OFF. Remove the connector of A4 (Combustion engine Control unit). Remove the connector of Y20 (DEF switchover valve). Remove the connector of A20 (SAM). Check the circuit across A20.X10.14/2 and Y20.2/1 for open or short circuit. Check the circuit across A4.X2.94/73 and Y20.2/2 for open or short circuit. Make a visual check on each connector. Is any abnormality recognized? No: Go to Step3 Yes: Go to Step7
	Step3	Inspection procedure Turn the starter switch in OFF. Replace component "A40 (DEF tank)". Reinstall all the removed connectors. Turn the starter switch in ON. Perform the learned value resetting procedure of A40 (DEF tank) which A4 (Combustion engine Control unit) learns. Go to Step4
	Step4	Inspection procedure Turn the starter switch in OFF. Reinstall all the removed connectors. Erase fault memory and perform a test drive. Check if this diagnosis code has occurred. Are current fault codes present? No: Go to Step6 Yes: Go to Step5
	Step5	Inspection procedure Perform the operation start and replace A4 (Combustion engine Control unit). Go to Step6
	Step6	Inspection completed

https://truckmanualshub.com/

Inspection procedure	Step7	Inspection procedure Turn the starter switch in OFF. Remove the connector of A4 (Combustion engine Control unit). Remove the connector of X19 (Intermediate connector). Remove the connector of A20 (SAM). Check the circuit across A4.X2.94/73 and X19.16/9 for open or short circuit. Check the circuit across A20.X10.14/2 and X19.16/8 for open or short circuit. Make a visual check on each connector. Is any abnormality recognized? No: Go to Step8 Yes: Go to Step9
	Step8	Inspection procedure Repair or replace the harness across Y20 (DEF switchover valve) and X19 (Intermediate connector). Reinstall all the removed connectors. Erase fault memory and perform a test drive. Check if this diagnosis code has occurred. Are current fault codes present? No: Go to Step6 Yes: Go to Step3
	Step9	Inspection procedure Repair or replace the harness across A4 (Combustion engine Control unit) and X19 (Intermediate connector). Reinstall all the removed connectors. Erase fault memory and perform a test drive. Check if this diagnosis code has occurred. Are current fault codes present? No: Go to Step6 Yes: Go to Step3

520540-5: Component SCR catalytic converter heating has a no load error.

Generation condition	[Test Condition] • Monitoring is active while the battery voltage is over 10.00V and as long as the battery voltage is over 10.00V and 2.00s after this threshold has been exceeded • Monitoring only when the power stage is NOT active. • ECU not in pre drive condition, Battery voltage > 9.50V (switch off < 9.00V), Battery voltage < 16.00V (switch off > 16.50V) and Battery voltage correction factor between 0.80- (switch off < 0.78-) and 1.56- (switch off > 1.65-) • Power state not switched off, i.e. Battery voltage > 9.50V (switch off < 9.00V) and Battery voltage < 16.00V (switch off > 16.50V)
	[Fault Detection] • Hardware reports an open load (OL) error on the power stage for the DEF Reverting Valve Actuator.
	[Defect Debouncing] • Defect condition exceeded cumulatively > 700.00ms • Failure is detected if active for 50% of the time
Fault healing	• Hardware does not report an open load (OL) error on the power stage for the DEF Reverting Valve Actuator.
System reaction	• Power stage is shut-off DEF Reverting Valve Actuator in open position). • Further reactions according FID (see FID's)
	• 1) Fid / The DEF Dosing system goes into Error mode instead of Afterrun • 2) Fid / The DEF dosing System goes in Error mode after Emptying • 3) Fid / DEF dosing system does not enter in pressure control mode (i.e. will not inject DEF) • 4) FId / Inhibit DEF pressure compensation in afterrun • 5) Pressure reduction of reagent dosing system inhibited • 6) FId / Inhibit reverting valve plausibility check • 7) FId / Function inhibiting afterrun temperature check DEF • 8) Fid / SCR Monitoring or DEF injection release not possible (according calibration of Release Masks) • 9) FId / Service regeneration of Particulate filter ((DPF) inhibited (due to DPF failure) • 10) FId / Inhibit reverting valve plausibility check
Failure cause	• Broken or disconnected wiring or defective DEF Reverting Valve Actuator

https://truckmanualshub.com/

Failure repair		• Check of wiring, replace DEF Reverting Valve Actuator
Inspection procedure	Step1	Inspect or verify the following items. Repair or replace faulty items as necessary. If one of diagnosis codes associated with A20 (SAM) is generated, make a system diagnosis according to the diagnosis code. Go to Step2
	Step2	Inspection procedure Turn the starter switch in OFF. Remove the connector of A4 (Combustion engine Control unit). Remove the connector of Y20 (DEF switchover valve). Remove the connector of A20 (SAM). Check the circuit across A20.X10.14/2 and Y20.2/1 for open or short circuit. Check the circuit across A4.X2.94/73 and Y20.2/2 for open or short circuit. Make a visual check on each connector. Is any abnormality recognized? No: Go to Step3 Yes: Go to Step7
	Step3	Inspection procedure Turn the starter switch in OFF. Replace component “A40 (DEF tank)”. Reinstall all the removed connectors. Turn the starter switch in ON. Perform the learned value resetting procedure of A40 (DEF tank) which A4 (Combustion engine Control unit) learns. Go to Step4
	Step4	Inspection procedure Turn the starter switch in OFF. Reinstall all the removed connectors. Erase fault memory and perform a test drive. Check if this diagnosis code has occurred. Are current fault codes present? No: Go to Step6 Yes: Go to Step5
	Step5	Inspection procedure Perform the operation start and replace A4 (Combustion engine Control unit). Go to Step6
	Step6	Inspection completed
	Step7	Inspection procedure Turn the starter switch in OFF. Remove the connector of A4 (Combustion engine Control unit). Remove the connector of X19 (Intermediate connector). Remove the connector of A20 (SAM). Check the circuit across A4.X2.94/73 and X19.16/9 for open or short circuit. Check the circuit across A20.X10.14/2 and X19.16/8 for open or short circuit. Make a visual check on each connector. Is any abnormality recognized? No: Go to Step8 Yes: Go to Step9
	Step8	Inspection procedure Repair or replace the harness across Y20 (DEF switchover valve) and X19 (Intermediate connector). Reinstall all the removed connectors. Erase fault memory and perform a test drive. Check if this diagnosis code has occurred. Are current fault codes present? No: Go to Step6 Yes: Go to Step3

https://truckmanualshub.com/

Inspection procedure	Step9	Inspection procedure Repair or replace the harness across A4 (Combustion engine Control unit) and X19 (Intermediate connector). Reinstall all the removed connectors. Erase fault memory and perform a test drive. Check if this diagnosis code has occurred. Are current fault codes present? No: Go to Step6 Yes: Go to Step3

520541-0: Component 'DEF' has a plausibility error.High temperature

Generation condition		[Test Condition] • At cold start conditions, when coolant temperature and environmental temperature are similar, if no fault on environmental temperature or coolant temperature or tank temperature already detected
		[Fault Detection] • Difference between DEF tank temperature and environmental temperature is above 49.96°C {121.93°F}
		[Defect Debouncing] • Defect condition exceeded cumulatively > 500.00ms • Failure is detected if active for 50% of the time
Fault healing		• Difference between DEF tank temperature and environmental temperature is in range
System reaction		• Replacement value:-5°C {23°F} <T<threshold for heating
Failure cause		• DEF Tank temperature sensor drifted
Failure repair		• Check sensor connector, wiring and sensor measured value
Inspection procedure	Step1	Inspect or verify the following items. Repair or replace faulty items as necessary. If one of diagnosis codes associated with A20 (SAM) is generated, make a system diagnosis according to the diagnosis code. Go to Step2
	Step2	Inspection procedure Turn the starter switch in OFF. Remove the connector of A4 (Combustion engine Control unit). Remove the connector of B36 (DEF temperature sensor). Check the circuit across A4.X2.94/89 and B36.4/4 for open or short circuit. Check the circuit across A4.X2.94/33 and B36.4/3 for open or short circuit. Make a visual check on each connector. Is any abnormality recognized? No: Go to Step3 Yes: Go to Step7
	Step3	Inspection procedure Turn the starter switch in OFF. Replace component "A40 (DEF tank)". Reinstall all the removed connectors. Turn the starter switch in ON. Perform the learned value resetting procedure of A40 (DEF tank) which A4 (Combustion engine Control unit) learns. Go to Step4
	Step4	Inspection procedure Turn the starter switch in OFF. Reinstall all the removed connectors. Erase fault memory and perform a test drive. Check if this diagnosis code has occurred. Are current fault codes present? No: Go to Step6 Yes: Go to Step5
	Step5	Inspection procedure Perform the operation start and replace A4 (Combustion engine Control unit). Go to Step6
	Step6	Inspection completed

Inspection procedure	Step7	Inspection procedure Turn the starter switch in OFF. Remove the connector of A4 (Combustion engine Control unit). Remove the connector of X19. Check the circuit across A4.X2.94/33 and X19.16/6 for open or short circuit. Check the circuit across A4.X2.94/89 and X19.16/5 for open or short circuit. Make a visual check on each connector. Is any abnormality recognized? No: Go to Step8 Yes: Go to Step9
	Step8	Inspection procedure Repair or replace the harness across B36 (DEF temperature sensor) and X19. Reinstall all the removed connectors. Erase fault memory and perform a test drive. Check if this diagnosis code has occurred. Are current fault codes present? No: Go to Step6 Yes: Go to Step3
	Step9	Inspection procedure Repair or replace the harness across A4 (Combustion engine Control unit) and X19. Reinstall all the removed connectors. Erase fault memory and perform a test drive. Check if this diagnosis code has occurred. Are current fault codes present? No: Go to Step6 Yes: Go to Step3

520541-1: Component 'DEF' has a plausibility error.Low temperature

Generation condition		[Test Condition] • At cold start conditions, when coolant temperature and environmental temperature are similar, if no fault on environmental temperature or coolant temperature or tank temperature already detected
		[Fault Detection] • Difference between DEF tank temperature and environmental temperature is below -30.04°C {-22.07°F}
		[Defect Debouncing] • Defect condition exceeded cumulatively > 500.00ms • Failure is detected if active for 50% of the time
Fault healing		• Difference between DEF tank temperature and environmental temperature is in range
System reaction		• Replacement value:-5°C {23°F} <T<threshold for heating
Failure cause		• DEF Tank temperature sensor drifted
Failure repair		• Check sensor connector, wiring and sensor measured value
Inspection procedure	Step1	Inspect or verify the following items. Repair or replace faulty items as necessary. If one of diagnosis codes associated with A20 (SAM) is generated, make a system diagnosis according to the diagnosis code. Go to Step2
	Step2	Inspection procedure Turn the starter switch in OFF. Remove the connector of A4 (Combustion engine Control unit). Remove the connector of B36 (DEF temperature sensor). Check the circuit across A4.X2.94/89 and B36.4/4 for open or short circuit. Check the circuit across A4.X2.94/33 and B36.4/3 for open or short circuit. Make a visual check on each connector. Is any abnormality recognized? No: Go to Step3 Yes: Go to Step7

https://truckmanualshub.com/

Inspection procedure	Step3	Inspection procedure Turn the starter switch in OFF. Replace component “A40 (DEF tank)”. Reinstall all the removed connectors. Turn the starter switch in ON. Perform the learned value resetting procedure of A40 (DEF tank) which A4 (Combustion engine Control unit) learns. Go to Step4
	Step4	Inspection procedure Turn the starter switch in OFF. Reinstall all the removed connectors. Erase fault memory and perform a test drive. Check if this diagnosis code has occurred. Are current fault codes present? No: Go to Step6 Yes: Go to Step5
	Step5	Inspection procedure Perform the operation start and replace A4 (Combustion engine Control unit). Go to Step6
	Step6	Inspection completed
	Step7	Inspection procedure Turn the starter switch in OFF. Remove the connector of A4 (Combustion engine Control unit). Remove the connector of X19. Check the circuit across A4.X2.94/33 and X19.16/6 for open or short circuit. Check the circuit across A4.X2.94/89 and X19.16/5 for open or short circuit. Make a visual check on each connector. Is any abnormality recognized? No: Go to Step8 Yes: Go to Step9
	Step8	Inspection procedure Repair or replace the harness across B36 (DEF temperature sensor) and X19. Reinstall all the removed connectors. Erase fault memory and perform a test drive. Check if this diagnosis code has occurred. Are current fault codes present? No: Go to Step6 Yes: Go to Step3
	Step9	Inspection procedure Repair or replace the harness across A4 (Combustion engine Control unit) and X19. Reinstall all the removed connectors. Erase fault memory and perform a test drive. Check if this diagnosis code has occurred. Are current fault codes present? No: Go to Step6 Yes: Go to Step3

520544-9: CAN Timeout Error during CAN-Transmit-Frame to Transmission Control message TC1.

Generation condition	[Test Condition] • Monitoring is active 2.00s after ECU initialization while engine isn’t running yet, while the engine isn’t cranking, 2.00s after engine startup, while the battery voltage is over 10.00V, as long as the battery voltage is over 10.00V and 2.00s after this threshold has been exceeded, if none of the CAN controllers is in bus-off state, 2.00s after last CAN controller is no more in bus-off state and if the ECU is not in afterrun • Continuously
	[Fault Detection] • Timeout of transmitted Transmission Control (TC1) message
	[Defect Debouncing] • Defect condition fulfilled continuously >500.0 ms
Fault healing	• Timeout of transmitted Transmission Control (TC1) message no more detected
System reaction	• None

https://truckmanualshub.com/

Failure cause		• Defective CAN controller, CAN cable disconnected or broken. Short circuit in wiring.
Failure repair		• Check the presence and correct connection of the EDC to the network, Check correct functioning of the CAN controller. Check wiring.
Inspection procedure	Step1	Refer to the help menu for Nos. other than above. *1: M/T *2: DUONIC *3: ISS (With Lock brake) *4: ISS (Without Lock brake) *5: Lock brake (Without ISS) *6: Other than *3,*4,*5 *7: Full-automatic air conditioner *8: Auto leveling *9: Manual leveling Inspection procedure Turn the starter switch in OFF. Remove all ECU connectors from the CAN communication line. Check CAN line for open circuit, short circuit to positive, short circuit to ground or short circuit to another electrical line. Is any abnormality recognized? No: Go to step2 Yes: Go to step5
	Step2	Inspection procedure Attach the connector of A20 (SAM). Check CAN line for open circuit, short circuit to positive, short circuit to ground or short circuit to another electrical line. Is any abnormality recognized? No: Go to step3 Yes: Go to step4
	Step3	Inspection procedure Turn the starter switch in OFF. Reinstall all the removed connectors. Erase fault memory and perform a test drive. If the diagnosis code has occurred even during the test drive, start the operation and then replace the A4 (Combustion engine Control unit). Inspection completed
	Step4	Inspection procedure Turn the starter switch in OFF. Reinstall all the removed connectors. Erase fault memory and perform a test drive. If the diagnosis code has occurred even during the test drive, start the operation and then replace the A20 (SAM). Inspection completed
	Step5	Refer to the help menu for Nos. other than above. *1: M/T *2: DUONIC *3: ISS (With Lock brake) *4: ISS (Without Lock brake) *5: Lock brake (Without ISS) *6: Other than *3,*4,*5 *7: Full-automatic air conditioner *8: Auto leveling *9: Manual leveling Inspection procedure Repair or replace electrical lines. Reinstall all the removed connectors. Turn the starter switch in ON. Inspection completed

https://truckmanualshub.com/

520549-31: Actual value 'Specified value of NOx concentration' is implausible.

Generation condition		[Test Condition] • Monitoring is active 2.00s after ECU initialization while engine isn't running yet, while the engine isn't cranking, 2.00s after engine startup and if the ECU is not in afterrun • In case of a mismatch in the lambda signal between NOx-Sensor and Lambda-Sensor (DStgyLambdaRecMon) or in case of increased NOx emissions (DStgyNOxLvl1 is set).
		[Fault Detection] • NOx-Sensor signal is not similar to the NOx estimation (in ECU) and also a component which is an input fot he NOx estimation has detected a failure.
		[Defect Debouncing] • immediate
Fault healing		• To reset this failure both failures (DStgyLambdaRecMon and DStgyNOxLvl1) has to be detected as healed
System reaction		• None
Failure cause		• A component which is relevant for the NOx estimation has detected a failure.
Failure repair		• See error memory for further failures
Inspection procedure	Step1	Inspection procedure Inspect the suspected factors mentioned above sequentially to locate faulty parts. Repair or replace the faulty part as necessary.

520550-31: The emission value of the NOx sensor is implausibel.

Generation condition		[Test Condition] • Monitoring is active 2.00s after ECU initialization while engine isn't running yet, while the engine isn't cranking, 2.00s after engine startup and if the ECU is not in afterrun • In case of a mismatch in the lambda signal between NOx-Sensor and Lambda-Sensor (DStgyLambdaRecMon) or in case of increased NOx emissions (DStgyNOxLvl1 is set).
		[Fault Detection] • NOx-Sensor signal is similar to the NOx estimation (in ECU) and no failure in the Lambda-Sensor is active.
		[Defect Debouncing] • immediate
Fault healing		• To reset this failure both failures (DStgyLambdaRecMon and DStgyNOxLvl1) has to be detected as healed
System reaction		• None
Failure cause		• Defect in dosing system.
Failure repair		• Check dosing system.
Inspection procedure	Step1	Inspect or verify the following items. Repair or replace faulty items as necessary. If amount of DEF in DEF tank is not sufficient, add DEF. If DEF is leaking from A18 (DEF delivery pump), repair or replace If DEF is leaking from Y7 (DEF metering device), repair or replace If DEF is leaking from DEF tube, repair or replace For procedures, refer to the Shop Manual. Go to Step2
	Step2	Inspect or verify the following items. Repair or replace faulty items as necessary. If one of diagnosis codes associated with A18 (DEF delivery pump) is generated, make a system diagnosis according to the diagnosis code. If one of diagnosis codes associated with Y7 (DEF metering device) is generated, make a system diagnosis according to the diagnosis code. If one of diagnosis codes associated with B30 (DEF pressure sensor) is generated, make a system diagnosis according to the diagnosis code. If one of diagnosis codes associated with Y20 (DEF switchover valve) is generated, make a system diagnosis according to the diagnosis code. Go to Step3

https://truckmanualshub.com/

Inspection procedure	Step3	Inspect or verify the following items. Repair or replace faulty items as necessary. If one of diagnosis codes associated with A20 (SAM) is generated, make a system diagnosis according to the diagnosis code. Go to Step4
	Step4	Inspection procedure Remove Y7 (DEF metering device) from Exhaust pipe. Turn the starter switch in ON. Perform control and make sure that appropriate DEF can be added. Is any abnormality recognized? No: Go to Step5 Yes: Go to Step9
	Step5	Inspection procedure Turn the starter switch in OFF. Replace component “A40 (DEF tank)”. Reinstall all the removed connectors. Turn the starter switch in ON. Perform the learned value resetting procedure of A40 (DEF tank) which A4 (Combustion engine Control unit) learns. Go to Step6
	Step6	Inspection procedure Turn the starter switch in OFF. Reinstall all the removed connectors. Erase fault memory and perform a test drive. Check if this diagnosis code has occurred. Are current fault codes present? No: Go to Step7 Yes: Go to Step8
	Step7	Inspection completed
	Step8	Inspection procedure Perform the operation start and replace A4 (Combustion engine Control unit). Go to Step7
	Step9	Inspection procedure Turn the starter switch in OFF. Remove DEF tube from A18 (DEF delivery pump). Remove Y7 (DEF metering device) from DEF tube. Check the Clogging or Breaks at DEF tube. Is any abnormality recognized? No: Go to Step10 Yes: Go to Step11
	Step10	Inspection procedure Turn the starter switch in OFF. Replace component “Y7 (DEF metering device)”. Mount DEF tube on A18 (DEF delivery pump). Mount DEF tube on Y7 (DEF metering device). Mount Y7 (DEF metering device) on Exhaust pipe. Reinstall all the removed connectors. Turn the starter switch in ON. Erase fault memory and perform a test drive. Check if this diagnosis code has occurred. Is any abnormality recognized? No: Go to Step7 Yes: Go to Step5

https://truckmanualshub.com/

Inspection procedure	Step11	Inspection procedure Turn the starter switch in OFF. Replace component “DEF tube”. Mount DEF tube on A18 (DEF delivery pump). Mount DEF tube on Y7 (DEF metering device). Mount Y7 (DEF metering device) on Exhaust pipe. Reinstall all the removed connectors. Turn the starter switch in ON. Erase fault memory and perform a test drive. Check if this diagnosis code has occurred. Is any abnormality recognized? No: Go to Step7 Yes: Go to Step5

520553-31: Warning Block 1 for SCR inducement ia activated. Data valid but above normal operational range.

Generation condition		[Test Condition] • Continuously (after a SCR-failure, which trigger this function occurs)
		[Fault Detection] • This Info-failure is set directly by a failure (via FId_SCRCtlWarnBlk1SetImmd) or after the operating time accumulation or the distance accumulation is reached. Info-failure set after 120.00min Info-failure set after 160.00Km
		[Defect Debouncing] • Defect condition fulfilled continuously >500.0 ms
Fault healing		• If the leading failure is healed following reaction will happen: After 0.00s the timer ramp down with the factor 8.00-. After 0.00s the distance accumulator ramp down with 655.35km/h {407.2mph}.
System reaction		• see FID
		• 1) FId / Function Identifier to trigger Moderate Warning level for Status Block 5 • 2) FId / Function Identifier to trigger Moderate Warning level for Status Block 1
Failure cause		• This Info-failure is triggered by a leading (SCR) failure.
Failure repair		• See the actual active leading failure.
Inspection procedure	Step1	Inspection procedure Inspect the suspected factors mentioned above sequentially to locate faulty parts. Repair or replace the faulty part as necessary.

520554-31: SCR Warning Block 2 is activated.

Generation condition		[Test Condition] • Continuously (after a SCR-failure, which trigger this function occurs)
		[Fault Detection] • This Info-failure is set directly by a failure (via FId_SCRCtlWarnBlk2SetImmd) or after the operating time accumulation or the distance accumulation is reached. Info-failure set after 4.00h Info-failure set after 320.00Km
		[Defect Debouncing] • Defect condition fulfilled continuously >500.0 ms
Fault healing		• If the leading failure is healed following reaction will happen: After 0.00s the timer ramp down with the factor 8.00-. After 0.00s the distance accumulator ramp down with 655.35km/h {407.2mph}.
System reaction		• see FID
		• 1) FId / Function Identifier to trigger Moderate Warning level for Status Block 5 • 2) FId / Function Identifier to trigger Moderate Warning level for Status Block 1
Failure cause		• This Info-failure is triggered by a leading (SCR) failure.
Failure repair		• See the actual active leading failure.

https://truckmanualshub.com/

Inspection procedure	Step1	Inspection procedure Inspect the suspected factors mentioned above sequentially to locate faulty parts. Repair or replace the faulty part as necessary.

520555-31: SCR Warning Block 3 is activated.

Generation condition		[Test Condition] • Continuously (after a SCR-failure, which trigger this function occurs)
		[Fault Detection] • This Info-failure is set directly by a failure (via FId_SCRCtlWarnBlk3SetImmd) or after the operating time accumulation or the distance accumulation is reached. Info-failure set after 60.00min Info-failure set after 80.00Km
		[Defect Debouncing] • Defect condition fulfilled continuously >500.0 ms
Fault healing		• If the leading failure is healed following reaction will happen: After 6.67d the timer ramp down with the factor 8.00-. After 6.67d the distance accumulator ramp down with 655.35km/h {407.2mph}.
System reaction		• see FID
		• 1) FId / OBD Performance Limiter 211 switched ON • 2) FId / OBD Performance limiter 211 released if failure path is tested and OK • 3) FId / Function Identifier to trigger Mild Warning level for Status Block 5
Failure cause		• This Info-failure is triggered by a leading (SCR) failure.
Failure repair		• See the actual active leading failure.
Inspection procedure	Step1	Inspection procedure Inspect the suspected factors mentioned above sequentially to locate faulty parts. Repair or replace the faulty part as necessary.

520556-31: SCR Inducement: Warning Block 4 activated.

Generation condition		[Test Condition] • Continuously (after a SCR-failure, which trigger this function occurs)
		[Fault Detection] • This Info-failure is set directly by a failure (via FId_SCRCtlWarnBlk4SetImmd) or after the operating time accumulation or the distance accumulation is reached. Info-failure set after 0.00s Info-failure set after 0.00Km
		[Defect Debouncing] • Defect condition fulfilled continuously >500.0 ms
Fault healing		• If the leading failure is healed following reaction will happen: After 0.00s the timer ramp down with the factor 8.00-. After 0.00s the distance accumulator ramp down with 655.35km/h {407.2mph}.
System reaction		• See FID
		• 1) FId / Function Identifier to trigger Moderate Warning level for Status Block 3
Failure cause		• This Info-failure is triggered by a leading (SCR) failure.
Failure repair		• See the actual active leading failure.
Inspection procedure	Step1	IInspection procedure Inspect the suspected factors mentioned above sequentially to locate faulty parts. Repair or replace the faulty part as necessary.

https://truckmanualshub.com/

520558-31: SCR Inducement: Warning Block 6 activated.

Generation condition		[Test Condition] • Continuously (after a SCR-failure, which trigger this function occurs)
		[Fault Detection] • This Info-failure is set directly by a failure (via FId_SCRCtlWarnBlk6SetImmd) or after the operating time accumulation or the distance accumulation is reached. Info-failure set after 0.00s Info-failure set after 0.00Km
		[Defect Debouncing] • Defect condition fulfilled continuously >500.0 ms
Fault healing		• If the leading failure is healed following reaction will happen: After 0.00s the timer ramp down with the factor 8.00-. After 0.00s the distance accumulator ramp down with 655.35km/h {407.2mph}.
System reaction		• see FID
		• 1) FId / OBD Performance Limiter 121 switched ON • 2) FId / OBD Performance limiter 121 released if failure path is tested and OK • 3) FId / Function Identifier to trigger Mild Warning level for Status Block 1
Failure cause		• This Info-failure is triggered by a leading (SCR) failure.
Failure repair		• See the actual active leading failure.
Inspection procedure	Step1	Inspection procedure Inspect the suspected factors mentioned above sequentially to locate faulty parts. Repair or replace the faulty part as necessary.

520559-31: SCR Inducement: Warning Block 7 activated.

Generation condition		[Test Condition] • Continuously (after a SCR-failure, which trigger this function occurs)
		[Fault Detection] • This Info-failure is set directly by a failure (via FId_SCRCtlWarnBlk7SetImmd) or after the operating time accumulation or the distance accumulation is reached. Info-failure set after 0.00s Info-failure set after 0.00Km
		[Defect Debouncing] • Defect condition fulfilled continuously >500.0 ms
Fault healing		• If the leading failure is healed following reaction will happen: After 0.00s the timer ramp down with the factor 8.00-. After 0.00s the distance accumulator ramp down with 655.35km/h {407.2mph}.
System reaction		• see FID
		• 1) FId / OBD Performance Limiter 121 switched ON • 2) FId / OBD Performance limiter 121 released if failure path is tested and OK • 3) FId / Function Identifier to trigger Mild Warning level for Status Block 1
Failure cause		• This Info-failure is triggered by a leading (SCR) failure.
Failure repair		• See the actual active leading failure.
Inspection procedure	Step1	Inspection procedure Inspect the suspected factors mentioned above sequentially to locate faulty parts. Repair or replace the faulty part as necessary.

520560-31: SCR Inducement: Warning Block 8 activated.

Generation condition		[Test Condition] • Continuously (after a SCR-failure, which trigger this function occurs)
		[Fault Detection] • This Info-failure is set directly by a failure (via FId_SCRCtlWarnBlk8SetImmd) or after the operating time accumulation or the distance accumulation is reached. Info-failure set after 0.00s Info-failure set after 0.00Km
		[Defect Debouncing] • Defect condition fulfilled continuously >500.0 ms

https://truckmanualshub.com/

Fault healing		• If the leading failure is healed following reaction will happen: After 0.00s the timer ramp down with the factor 8.00-. After 0.00s the distance accumulator ramp down with 655.35km/h {407.2mph}.
System reaction		• see FID
		• 1) FId / OBD Performance Limiter 121 switched ON • 2) FId / OBD Performance limiter 121 released if failure path is tested and OK • 3) FId / Function Identifier to trigger Mild Warning level for Status Block 1
Failure cause		• This Info-failure is triggered by a leading (SCR) failure.
Failure repair		• See the actual active leading failure.
Inspection procedure	Step1	Inspection procedure Inspect the suspected factors mentioned above sequentially to locate faulty parts. Repair or replace the faulty part as necessary.

520561-0: Engine start: The maximum number of operating cycles has been exceeded.

Generation condition		[Test Condition] • Monitoring is active while the battery voltage is over 10.00V, as long as the battery voltage is over 10.00V and 2.00s after this threshold has been exceeded, if none of the CAN controllers is in bus-off state, 2.00s after last CAN controller is no more in bus-off state and if the ECU is not in afterrun • Continuously
		[Fault Detection] • Number of weighted engine starts reaches the threshold 350000.00-. • Manual and automatic starts are considered and weighted (automatic starts are a lesser stress for the system) • Manual start are counted with +1 increment • Automatic starts are counted with a weighting factor of 1.00- (normally < 1)
		[Defect Debouncing] • Defect condition exceeded cumulatively > 500.00ms • Failure is detected if active for 25% of the time
Fault healing		• Only possible if number of starts reset by service tester
System reaction		• The start stop functionality is disabled.
Failure cause		• Number of engine starts exceeded, starter and possibly other component relevant for engine start reached end of life.
Failure repair		• Replace starter (and other specified components defined as relevant for engine start) and reset weighted number of starts (Routine control $0274: Reset of engine start counter value)
Inspection procedure	Step1	Inspection procedure Inspect the suspected factors mentioned above sequentially to locate faulty parts. Repair or replace the faulty part as necessary.

520562-31: Information: Torque limitation active Refilling fuel tank without refilling DEF tank.

Generation condition	[Test Condition] • When creep mode activation is pending
	[Fault Detection] • If the fuel level in the tank changes by 10.00% (refill detected) when there is a request for the activation of creep mode pending
	[Defect Debouncing] • Defect condition fulfilled continuously >500.0 ms
Fault healing	• No creep mode requested
System reaction	• Creep mode is activated: • maximum speed allowed 7km/h {5mph} • only reverse neutral or first gear possible
Failure cause	• Inducement activation (creep mode) for driving with empty DEF tank or bad DEF quality or technical failure which leads to too high NOx emissions.
Failure repair	• Reason for creep mode must be eliminated. • DEF tank must be refilled • DEF quality must be OK • NOx emission should be in range

https://truckmanualshub.com/

Inspection procedure	Step1	Inspection procedure Inspect the suspected factors mentioned above sequentially to locate faulty parts. Repair or replace the faulty part as necessary.

520563-31: Information: Torque limitation active After a long parking time.

Generation condition		[Test Condition] • When creep mode activation is pending
		[Fault Detection] • If the vehicle stands still for at least 24855.13d if ECU ON time for current driving cycle < 24.00h. or vehicle stands still for at least 24855.13d if ECU ON time > 24.00h.
		[Defect Debouncing] • Defect condition fulfilled continuously >500.0 ms
Fault healing		• No creep mode requested
System reaction		• Creep mode is activated: • maximum speed allowed 7km/h {5mph} • only reverse neutral or first gear possible
Failure cause		• Inducement activation (creep mode) for driving with empty DEF tank or bad DEF quality or technical failure which leads to too high NOx emissions.
Failure repair		• Reason for creep mode must be eliminated. • DEF tank must be refilled • DEF quality must be OK • NOx emission should be in range
Inspection procedure	Step1	Inspection procedure Inspect the suspected factors mentioned above sequentially to locate faulty parts. Repair or replace the faulty part as necessary.

520564-31: Information: Torque limitation active Engine restart

Generation condition		[Test Condition] • When creep mode activation is pending
		[Fault Detection] • If there was a request for the activation of creep mode in the previous driving cycle or if the number of • engine stalls EngReq_numStalEng exceeds the threshold 2.00-.
		[Defect Debouncing] • Defect condition fulfilled continuously >500.0 ms
Fault healing		• No creep mode requested
System reaction		• Creep mode is activated: • maximum speed allowed 7km/h {5mph} • only reverse neutral or first gear possible
Failure cause		• Inducement activation (creep mode) for driving with empty DEF tank or bad DEF quality or technical failure which leads to too high NOx emissions.
Failure repair		• Reason for creep mode must be eliminated. • DEF tank must be refilled • DEF quality must be OK • NOx emission should be in range
Inspection procedure	Step1	Inspection procedure Inspect the suspected factors mentioned above sequentially to locate faulty parts. Repair or replace the faulty part as necessary.

https://truckmanualshub.com/

520569-31: Component 'AMT' reports an implausible gear.

Generation condition		[Test Condition] • Monitoring is active 2.00s after ECU initialization while engine isn't running yet, while the engine isn't cranking, 2.00s after engine startup, while the battery voltage is over 10.00V, as long as the battery voltage is over 10.00V and 2.00s after this threshold has been exceeded, if none of the CAN controllers is in bus-off state, 2.00s after last CAN controller is no more in bus-off state and if the ECU is not in afterrun • Continuously
		[Fault Detection] • If ETC2 CAN message is disabled • OR • if selected gear Com_numGearTrgt == 0x7F (not plausible value) OR • if current gear ration Com_rTrqTra== 0x7FFF (not plausible value) OR • if current gear Com_numGear==0x7F (not plausible value)
		[Defect Debouncing] • Defect condition fulfilled continuously >500.0 ms
Fault healing		• If ETC2 CAN message is enabled • AND selected gear Com_numGearTrgt != 0x7F (plausible value) AND • current gear ration Com_rTrqTra!= 0x7FFF (plausible value) AND • current gear Com_numGear!=0x7F (plausible value)
System reaction		• Selected gear is replaced by default value 0.00- • Current gear is replaced by default value 1.00- • Current gear ratio is replaced by default value 0.00- • Status for Parking/Neutral Position of Current Gear is replaced by default value 0.00-
Failure cause		• ETC2 message from AMT transmission is disabled or AMT problem with gear recognition
Failure repair		• Check if dataset in ECU is compatible to AMT transmission, check AMT for gear recognition problem
Inspection procedure	Step1	Refer to the help menu for Nos. other than above. *1: M/T *2: DUONIC *3: ISS (With Lock brake) *4: ISS (Without Lock brake) *5: Lock brake (Without ISS) *6: Other than *3,*4,*5 *7: Full-automatic air conditioner *8: Auto leveling *9: Manual leveling Inspection procedure If one of diagnosis codes associated with A28 (DUONIC Control unit) is generated, make a system diagnosis according to the diagnosis code. Go to step2
	Step2	Refer to the help menu for Nos. other than above. *1: M/T *2: DUONIC *3: ISS (With Lock brake) *4: ISS (Without Lock brake) *5: Lock brake (Without ISS) *6: Other than *3,*4,*5 *7: Full-automatic air conditioner *8: Auto leveling *9: Manual leveling Inspection procedure Turn the starter switch in OFF. Remove all ECU connectors from the CAN communication line. Check CAN line for open circuit, short circuit to positive, short circuit to ground or short circuit to another electrical line. Is any abnormality recognized? No: Go to step3 Yes: Go to step8

https://truckmanualshub.com/

Inspection procedure	Step3	Inspection procedure Attach the connector of A20 (SAM). Check CAN line for open circuit, short circuit to positive, short circuit to ground or short circuit to another electrical line. Is any abnormality recognized? No: Go to step4 Yes: Go to step7
	Step4	Inspection procedure Attach the connector of A28 (DUONIC Control unit). Check CAN line for open circuit, short circuit to positive, short circuit to ground or short circuit to another electrical line. Is any abnormality recognized? No: Go to step5 Yes: Go to step6
	Step5	Inspection procedure Turn the starter switch in OFF. Reinstall all the removed connectors. Erase fault memory and perform a test drive. If the diagnosis code has occurred even during the test drive, start the operation and then replace the A4 (Combustion engine Control unit). Inspection completed
	Step6	Inspection procedure Turn the starter switch in OFF. Reinstall all the removed connectors. Erase fault memory and perform a test drive. If the diagnosis code has occurred even during the test drive, start the operation and then replace the A28 (DUONIC Control unit). Inspection completed
	Step7	Inspection procedure Turn the starter switch in OFF. Reinstall all the removed connectors. Erase fault memory and perform a test drive. If the diagnosis code has occurred even during the test drive, start the operation and then replace the A20 (SAM). Inspection completed
	Step8	Refer to the help menu for Nos. other than above. *1: M/T *2: DUONIC *3: ISS (With Lock brake) *4: ISS (Without Lock brake) *5: Lock brake (Without ISS) *6: Other than *3,*4,*5 *7: Full-automatic air conditioner *8: Auto leveling *9: Manual leveling Inspection procedure Repair or replace electrical lines. Reinstall all the removed connectors. Turn the starter switch in ON. Inspection completed

520570-31: Torque limitation activeOBD performance limiter group 111

Generation condition	[Test Condition] • Monitoring is active never (readiness set) • Continuously
	[Fault Detection] • A failure is requested the performance limiter via FId_CoVehPrfmLim111OBD.
	[Defect Debouncing] • Immediate
Fault healing	• If all failure of the performance limiter group 111 are tested OK.
System reaction	• None
Failure cause	• A failure is requested the performance limiter.

Failure repair		• see leading failure
Inspection procedure	Step1	Inspection procedure Inspect the suspected factors mentioned above sequentially to locate faulty parts. Repair or replace the faulty part as necessary.

520571-31: Torque limitation activeOBD performance limiter group 112

Generation condition		[Test Condition] • Monitoring is active never (readiness set) • Continuously
		[Fault Detection] • A failure is requested the performance limiter via FId_CoVehPrfmLim112OBD.
		[Defect Debouncing] • Immediate
Fault healing		• If all failure of the performance limiter group 112 are tested OK.
System reaction		• None
Failure cause		• A failure is requested the performance limiter.
Failure repair		• see leading failure
Inspection procedure	Step1	Inspection procedure Inspect the suspected factors mentioned above sequentially to locate faulty parts. Repair or replace the faulty part as necessary.

520572-31: Torque limitation activeOBD performance limiter group 121

Generation condition		[Test Condition] • Monitoring is active never (readiness set) • Continuously
		[Fault Detection] • A failure is requested the performance limiter via FId_CoVehPrfmLim121OBD.
		[Defect Debouncing] • Immediate
Fault healing		• If all failure of the performance limiter group 121 are tested OK.
System reaction		• None
Failure cause		• A failure is requested the performance limiter.
Failure repair		• see leading failure
Inspection procedure	Step1	Inspection procedure Inspect the suspected factors mentioned above sequentially to locate faulty parts. Repair or replace the faulty part as necessary.

520573-31: Torque limitation activeOBD performance limiter group 122

Generation condition		[Test Condition] • Monitoring is active never (readiness set) • Continuously
		[Fault Detection] • A failure is requested the performance limiter via FId_CoVehPrfmLim122OBD.
		[Defect Debouncing] • Immediate
Fault healing		• If all failure of the performance limiter group 122 are tested OK.
System reaction		• None
Failure cause		• A failure is requested the performance limiter.
Failure repair		• see leading failure
Inspection procedure	Step1	Inspection procedure Inspect the suspected factors mentioned above sequentially to locate faulty parts. Repair or replace the faulty part as necessary.

https://truckmanualshub.com/

520574-31: Torque limitation activeOBD performance limiter group 211

Generation condition		[Test Condition] • Monitoring is active never (readiness set) • Continuously
		[Fault Detection] • A failure is requested the performance limiter via FId_CoVehPrfmLim211OBD.
		[Defect Debouncing] • Immediate
Fault healing		• If all failure of the performance limiter group 211 are tested OK.
System reaction		• None
Failure cause		• A failure is requested the performance limiter.
Failure repair		• see leading failure
Inspection procedure	Step1	Inspection procedure Inspect the suspected factors mentioned above sequentially to locate faulty parts. Repair or replace the faulty part as necessary.

520575-31: Torque limitation activeOBD performance limiter group 212

Generation condition		[Test Condition] • Monitoring is active never (readiness set) • Continuously
		[Fault Detection] • A failure is requested the performance limiter via FId_CoVehPrfmLim212OBD.
		[Defect Debouncing] • Immediate
Fault healing		• If all failure of the performance limiter group 212 are tested OK.
System reaction		• None
Failure cause		• A failure is requested the performance limiter.
Failure repair		• see leading failure
Inspection procedure	Step1	Inspection procedure Inspect the suspected factors mentioned above sequentially to locate faulty parts. Repair or replace the faulty part as necessary.

520576-31: Torque limitation activeOBD performance limiter group 221

Generation condition		[Test Condition] • Monitoring is active never (readiness set) • Continuously
		[Fault Detection] • A failure is requested the performance limiter via FId_CoVehPrfmLim221OBD.
		[Defect Debouncing] • Immediate
Fault healing		• If all failure of the performance limiter group 221 are tested OK.
System reaction		• None
Failure cause		• A failure is requested the performance limiter.
Failure repair		• see leading failure
Inspection procedure	Step1	Inspection procedure Inspect the suspected factors mentioned above sequentially to locate faulty parts. Repair or replace the faulty part as necessary.

https://truckmanualshub.com/

520577-31: Torque limitation activeOBD performance limiter group 222

Generation condition		[Test Condition] • Monitoring is active never (readiness set) • Continuously
		[Fault Detection] • A failure is requested the performance limiter via FId_CoVehPrfmLim222OBD.
		[Defect Debouncing] • Immediate
Fault healing		• If all failure of the performance limiter group 222 are tested OK.
System reaction		• None
Failure cause		• A failure is requested the performance limiter.
Failure repair		• see leading failure
Inspection procedure	Step1	Inspection procedure Inspect the suspected factors mentioned above sequentially to locate faulty parts. Repair or replace the faulty part as necessary.

520578-31: Information: Torque limitation active The current value for the 'DEF content' component is too low.

Generation condition		[Test Condition] • Continuously
		[Fault Detection] • The creep mode request is activated Engreq_stCrpMode == 1
		[Defect Debouncing] • Defect condition fulfilled continuously >500.0 ms
Fault healing		• No creep mode request present Engreq_stCrpMode ==0
System reaction		• None
Failure cause		• A failure related to the SCR system should be present ot DEF tank is empty
Failure repair		• Refill DEF tank if empty, check and repair SCR failures
Inspection procedure	Step1	Inspection procedure Inspect the suspected factors mentioned above sequentially to locate faulty parts. Repair or replace the faulty part as necessary.

520579-31: Component 'NOx sensor' has an open circuit or short circuit. / Component 'NOx sensor' has a mechanical defect.

Generation condition	[Test Condition] • Monitoring is active 2.00s after ECU initialization while engine isn't running yet, while the engine isn't cranking, 2.00s after engine startup, while the battery voltage is over 10.00V, as long as the battery voltage is over 10.00V and 2.00s after this threshold has been exceeded, if none of the CAN controllers is in bus-off state, 2.00s after last CAN controller is no more in bus-off state and if the ECU is not in afterrun • Continuously
	[Fault Detection] • The NOx Sensor sends the message "Lambda signal not plausible" (Bits 2-3 = 00)
	[Defect Debouncing] • Defect condition fulfilled continuously > 120000.0 ms
Fault healing	• The NOx Sensor sends the message "Lambda signal plausible" (Bits 2-3 = 01)
System reaction	• According FID (see FID's) • Usually the NOx signal is set to FFFF by the Sensor itself which causes a fix NOx concentration of 1.20-.
	• 1) Fid/ NOx Sensor not working correctly --> System monitoring with NOx sensor inhibited • 2) Fid/ SCR Monitoring or DEF injection release not possible (according calibration of Release Masks)

https://truckmanualshub.com/

Failure cause		• Short Circuit or Open wire in wiring harness • Defective NOx Sensor
Failure repair		• Check wiring harness • Check NOx Sensor • Note for EURO OBD application: this failure activates a Performance limitation due to legislation. Therefore after repair following procedure must be done, otherwise there is the risk tha performance limiter gets active, although the failure is repaired: • 1) clear memory with tester • 2) if performance limiter active: disable it with tester • 3) drive the vehicle ~20min in engine speed range >1600rpm with constant periods of ~5 sec and more than 5 motoring phases > 10sec (highest gear) • 4) check with “OBD scan tool” Service $01 (or Readinsess state) that “comprehensive components” are “ready” • 5) if not: repeat the procedure
Inspection procedure	Step1	Inspect or verify the following items. Repair or replace faulty items as necessary. If one of diagnosis codes associated with A20 (SAM) is generated, make a system diagnosis according to the diagnosis code. Go to Step2
	Step2	Inspection procedure Turn the starter switch in OFF. Remove the connector of A4 (Combustion engine Control unit). Remove the connector of B29 (Oxygen sensor). Remove the connector of A20 (SAM). Check the circuit across A4.X2.94/62 and B31.5/4 for open or short circuit. Check the circuit across A4.X2.94/61 and B31.5/3 for open or short circuit. Check the circuit across A20.X10.14/2 and B31.5/1 for open or short circuit. Check the circuit across B31.5/2 and Ground for open or short circuit. Make a visual check on each connector. Is any abnormality recognized? No: Go to Step3 Yes: Go to Step7
	Step3	Inspection procedure Turn the starter switch in OFF. Replace component "B29 (Oxygen sensor)". Reinstall all the removed connectors. Turn the starter switch in ON. Go to Step4
	Step4	Inspection procedure Turn the starter switch in OFF. Reinstall all the removed connectors. Erase fault memory and perform a test drive. Check if this diagnosis code has occurred. Are current fault codes present? No: Go to Step5 Yes: Go to Step6
	Step5	Inspection completed
	Step6	Inspection procedure Perform the operation start and replace A4 (Combustion engine Control unit). Inspection completed
	Step7	Inspection procedure Turn the starter switch in OFF. Remove the connector of A4 (Combustion engine Control unit). Remove the connector of X42 (Intermediate connector). Remove the connector of A20 (SAM). Check the circuit across A4.X2.94/62 and X42.8/3 for open or short circuit. Check the circuit across A4.X2.94/61 and X42.8/2 for open or short circuit. Check the circuit across A20.X10.14/2 and X42.8/4 for open or short circuit. Check the circuit across X42.8/1 and Ground for open or short circuit. Make a visual check on each connector. Is any abnormality recognized? No: Go to Step8 Yes: Go to Step9

Inspection procedure	Step8	Inspection procedure Repair or replace the harness across B29 (Oxygen sensor) and X42 (Intermediate connector). Reinstall all the removed connectors. Erase fault memory and perform a test drive. Check if this diagnosis code has occurred. Are current fault codes present? No: Go to Step5 Yes: Go to Step3
	Step9	Inspection procedure Repair or replace the harness across A4 (Combustion engine Control unit) and X42 (Intermediate connector). Reinstall all the removed connectors. Erase fault memory and perform a test drive. Check if this diagnosis code has occurred. Are current fault codes present? No: Go to Step5 Yes: Go to Step3

520580-31: Component 'NOx sensor' has an open circuit or short circuit. / Component 'NOx sensor' has a mechanical defect.

Generation condition		[Test Condition] • Monitoring is active 2.00s after ECU initialization while engine isn't running yet, while the engine isn't cranking, 2.00s after engine startup, while the battery voltage is over 10.00V, as long as the battery voltage is over 10.00V and 2.00s after this threshold has been exceeded, if none of the CAN controllers is in bus-off state, 2.00s after last CAN controller is no more in bus-off state and if the ECU is not in afterrun • Continuously
		[Fault Detection] • The NOx Sensor sends the message "NOx signal not plausible (bits 4-5=00)
		[Defect Debouncing] • Defect condition fulfilled continuously > 120000.0 ms
Fault healing		• The NOx Sensor sends the message "NOx signal plausible (bits 4-5=01)
System reaction		• According FID (see FID's) • Usually the NOx signal is set to FFFF by the Sensor itself which causes a fix NOx concentration of 1.20-.
		• 1) Fid/ NOx Sensor not working correctly --> System monitoring with NOx sensor inhibited • 2) Fid/ SCR Monitoring or DEF injection release not possible (according calibration of Release Masks)
Failure cause		• Short Circuit or Open wire in wiring harness • Defective NOx Sensor
Failure repair		• Check wiring harness • Check NOx Sensor • Note for EURO OBD application: this failure activates a Performance limitation due to legislation. Therefore after repair following procedure must be done, otherwise there is the risk that performance limiter gets active, although the failure is repaired: • 1) clear memory with tester • 2) if performance limiter active: disable it with tester • 3) drive the vehicle ~20min in engine speed range >1600rpm with constant periods of ~5 sec and more than 5 motoring phases > 10sec (highest gear) • 4) check with "OBD scan tool" Service $01 (or Readinsess state) that "comprehensive components" are "ready" • 5) if not: repeat the procedure
Inspection procedure	Step1	Inspect or verify the following items. Repair or replace faulty items as necessary. If one of diagnosis codes associated with A20 (SAM) is generated, make a system diagnosis according to the diagnosis code. Go to Step2

https://truckmanualshub.com/

Inspection procedure	Step2	Inspection procedure Turn the starter switch in OFF. Remove the connector of A4 (Combustion engine Control unit). Remove the connector of B29 (Oxygen sensor). Remove the connector of A20 (SAM). Check the circuit across A4.X2.94/62 and B31.5/4 for open or short circuit. Check the circuit across A4.X2.94/61 and B31.5/3 for open or short circuit. Check the circuit across A20.X10.14/2 and B31.5/1 for open or short circuit. Check the circuit across B31.5/2 and Ground for open or short circuit. Make a visual check on each connector. Is any abnormality recognized? No: Go to Step3 Yes: Go to Step7
	Step3	Inspection procedure Turn the starter switch in OFF. Replace component “B29 (Oxygen sensor)". Reinstall all the removed connectors. Turn the starter switch in ON. Go to Step4
	Step4	Inspection procedure Turn the starter switch in OFF. Reinstall all the removed connectors. Erase fault memory and perform a test drive. Check if this diagnosis code has occurred. Are current fault codes present? No: Go to Step5 Yes: Go to Step6
	Step5	Inspection completed
	Step6	Inspection procedure Perform the operation start and replace A4 (Combustion engine Control unit). Inspection completed
	Step7	Inspection procedure Turn the starter switch in OFF. Remove the connector of A4 (Combustion engine Control unit). Remove the connector of X42 (Intermediate connector). Remove the connector of A20 (SAM). Check the circuit across A4.X2.94/62 and X42.8/3 for open or short circuit. Check the circuit across A4.X2.94/61 and X42.8/2 for open or short circuit. Check the circuit across A20.X10.14/2 and X42.8/4 for open or short circuit. Check the circuit across X42.8/1 and Ground for open or short circuit. Make a visual check on each connector. Is any abnormality recognized? No: Go to Step8 Yes: Go to Step9
	Step8	Inspection procedure Repair or replace the harness across B29 (Oxygen sensor) and X42 (Intermediate connector). Reinstall all the removed connectors. Erase fault memory and perform a test drive. Check if this diagnosis code has occurred. Are current fault codes present? No: Go to Step5 Yes: Go to Step3
	Step9	Inspection procedure Repair or replace the harness across A4 (Combustion engine Control unit) and X42 (Intermediate connector). Reinstall all the removed connectors. Erase fault memory and perform a test drive. Check if this diagnosis code has occurred. Are current fault codes present? No: Go to Step5 Yes: Go to Step3

https://truckmanualshub.com/

520583-0: The HFM value at cold start is too high.

Generation condition		[Test Condition] • Monitoring is active if the ECU is not in afterrun and never (readiness set) • The check is carried out every 20ms if the EGR closed control loop is switched on, (AirCtl_swtGovEna = 1) and no other system error is present. • No DPF regeneration is active.
		[Fault Detection] • The limit for the maximum permissible positive control deviation of the exhaust-gas recirculation • control has been exceeded.
		[Defect Debouncing] • infinite
Fault healing		• When the error is present, to allow healing the closed control loop is restored in a speed/fuelling range between 600.00rpm and 600.00rpm / 0.00mg/hub and 10.00mg/hub • If the engine is running in this area and at the same time deviation is below the limit
System reaction		• The exhaust-gas recirculation control is shut off and constant default values are output.
		• 1) FId / Check of gain plausibility of air flow meter (HFM/AFS) at low idle disabled • 2) Fid/ SCR Monitoring or DEF injection release not possible (according calibration of Release Masks) • 3) FId / Inhibit ISS, max number of engine starts exceeded
Failure cause		• Defective air mass flow sensor, leakage in the air duct, electrical or mechanical defect in EGR actuators (EGR valve or Exhaust throttle) or defect in wiring of EGR actuators,
Failure repair		• Check air mass flow sensor, air duct, EGR actuators and their wiring
Inspection procedure	Step1	Inspect or verify the following items. Repair or replace faulty items as necessary. Component ‘A14 (EGR valve)’ is faulty. Component ‘Y8 (Exhaust gas recirculation actuator)’ is faulty. Damage of Intake system For procedures, refer to the Shop Manual. Go to Step2
	Step2	Inspect or verify the following items. Repair or replace faulty items as necessary. If one of diagnosis codes associated with B18 (Air flow and intake air temperature sensor) is generated, make a system diagnosis according to the diagnosis code. Go to Step3
	Step3	Inspection procedure If one of diagnosis codes associated with A20 (SAM) is generated, make a system diagnosis according to the diagnosis code. Go to Step4
	Step4	Inspection procedure Turn the starter switch in ON. Execute the control “{0}”. Turn the starter switch in OFF. Check the Mechanical fault at A14 (EGR valve). Can occurrence of a mechanical fault be confirmed? No: Go to Step5 Yes: Go to Step6

https://truckmanualshub.com/

Inspection procedure	Step5	Inspection procedure Turn the starter switch in OFF. Remove the connector of A4 (Combustion engine Control unit). Remove the connector of A14 (EGR valve). Check the circuit across A4.X1.60/50 and Y8.X7.5/2 for open or short circuit. Check the circuit across A4.X1.60/35 and Y8.X7.5/1 for open or short circuit. Check the circuit across A4.X1.60/29 and B21.X7.5/5 for open or short circuit. Check the circuit across A4.X1.60/27 and B21.X7.5/4 for open or short circuit. Check the circuit across A4.X1.60/33 and B21.X7.5/3 for open or short circuit. Make a visual check on each connector. Is any abnormality recognized? No: Go to Step6 Yes: Go to Step10
	Step6	Inspection procedure Turn the starter switch in OFF. Replace component “A14 (EGR valve)”. Reinstall all the removed connectors. Turn the starter switch in ON. Perform the learned value resetting procedure of A14 (EGR valve) which A4 (Combustion engine Control unit) learns. Go to Step7
	Step7	Inspection procedure Turn the starter switch in OFF. Reinstall all the removed connectors. Erase fault memory and perform a test drive. Check if this diagnosis code has occurred. Are current fault codes present? No: Go to Step8 Yes: Go to Step9
	Step8	Inspection completed
	Step9	Inspection procedure Perform the operation start and replace A4 (Combustion engine Control unit). Go to Step8
	Step10	Inspection procedure Repair or replace electrical lines. Reinstall all the removed connectors. Erase fault memory and perform a test drive. Check if this diagnosis code has occurred. Are current fault codes present? No: Go to Step8 Yes: Go to Step6

520583-1: The HFM value at cold start is too low.

Generation condition	[Test Condition] • Monitoring is active if the ECU is not in afterrun and never (readiness set) • The check is carried out every 20ms if the EGR closed control loop is switched on, (AirCtl_swtGovEna = 1) and no other system error is present. • No DPF regeneration is active.
	[Fault Detection] • The limit for the maximum permissible negative control deviation of the exhaust-gas recirculation control has been exceeded.
	[Defect Debouncing] • infinite
Fault healing	• When the error is present, to allow healing the closed control loop is restored in a speed/fuelling range between 600.00rpm and 600.00rpm / 0.00mg/hub and 10.00mg/hub • If the engine is running in this area and at the same time deviation is below the limit

https://truckmanualshub.com/

System reaction		• The exhaust-gas recirculation control is shut off and constant default values are output.
		• 1) Fid/ SCR Monitoring or DEF injection release not possible (according calibration of Release Masks) • 2) FId / Inhibit ISS, max number of engine starts exceeded • 3) Fid/ SCR Monitoring or DEF injection release not possible (according calibration of Relea
Failure cause		• Defective air mass flow sensor, obstruction or leakage in air duct, electrical or mechanical defect in EGR actuators (EGR valve or Exhaust throttle) or defect in wiring of EGR actuators
Failure repair		• Check air mass flow sensor, air duct, EGR actuators and their wiring
Inspection procedure	Step1	Inspect or verify the following items. Repair or replace faulty items as necessary. Component 'A14 (EGR valve)' is faulty. Component 'Y8 (Exhaust gas recirculation actuator)' is faulty. Damage of Intake system Plugged Intake system For procedures, refer to the Shop Manual. Go to Step2
	Step2	Inspect or verify the following items. Repair or replace faulty items as necessary. If one of diagnosis codes associated with B18 (Air flow and intake air temperature sensor) is generated, make a system diagnosis according to the diagnosis code. Go to Step3
	Step3	Inspection procedure If one of diagnosis codes associated with A20 (SAM) is generated, make a system diagnosis according to the diagnosis code. Go to Step4
	Step4	Inspection procedure Turn the starter switch in ON. Execute the control "{0}". Turn the starter switch in OFF. Check the Mechanical fault at A14 (EGR valve). Can occurrence of a mechanical fault be confirmed? No: Go to Step5 Yes: Go to Step6
	Step5	Inspection procedure Turn the starter switch in OFF. Remove the connector of A4 (Combustion engine Control unit). Remove the connector of A14 (EGR valve). Check the circuit across A4.X1.60/50 and Y8.X7.5/2 for open or short circuit. Check the circuit across A4.X1.60/35 and Y8.X7.5/1 for open or short circuit. Check the circuit across A4.X1.60/29 and B21.X7.5/5 for open or short circuit. Check the circuit across A4.X1.60/27 and B21.X7.5/4 for open or short circuit. Check the circuit across A4.X1.60/33 and B21.X7.5/3 for open or short circuit. Make a visual check on each connector. Is any abnormality recognized? No: Go to Step6 Yes: Go to Step10
	Step6	Inspection procedure Turn the starter switch in OFF. Replace component "A14 (EGR valve)". Reinstall all the removed connectors. Turn the starter switch in ON. Perform the learned value resetting procedure of A14 (EGR valve) which A4 (Combustion engine Control unit) learns. Go to Step7

https://truckmanualshub.com/

Inspection procedure	Step7	Inspection procedure Turn the starter switch in OFF. Reinstall all the removed connectors. Erase fault memory and perform a test drive. Check if this diagnosis code has occurred. Are current fault codes present? No: Go to Step8 Yes: Go to Step9
	Step8	Inspection completed
	Step9	Inspection procedure Perform the operation start and replace A4 (Combustion engine Control unit). Go to Step8
	Step10	Inspection procedure Repair or replace electrical lines. Reinstall all the removed connectors. Erase fault memory and perform a test drive. Check if this diagnosis code has occurred. Are current fault codes present? No: Go to Step8 Yes: Go to Step6

520584-31: Regeneration was aborted due to a fault.

Generation condition		[Test Condition] • Continuously
		[Fault Detection] • If DPF Lamp status indicates: • Over long regeneration (bit8 in PFltRgn_stLmp is set): regeneration time > 41.33min OR • DPF state machine is in state ON (bit5 in PFltRgn_stLmp is set) OR • Overload 1 (bit3 in PFltRgn_stLmp is set): soot load exceeds 54.99g OR • Overload 2 (bit4 in PFltRgn_stLmp is set): soot load exceeds 63.00g
		[Defect Debouncing] • Immediate
Fault healing		• When lamp failure status not indicated (correct regeneration identified)
System reaction		• DPF lamp is activated
		• 1) FId / Particulate filter ((DPF) Regeneration inhibited
Failure cause		• DPF regeneration not successful, not started or interrupted to often. This could have technical reason or simply mission dependent reason (for example: always drive in city traffic)
Failure repair		• Start service regeneration
Inspection procedure	Step1	Inspection procedure Inspect the suspected factors mentioned above sequentially to locate faulty parts. Repair or replace the faulty part as necessary.

520586-31: Information error Monitor function of Nox level is aborted.

Generation condition	[Test Condition] • DEF dosing valve component protection is active • Creep mode is not active
	[Fault Detection] • DEF doing valve component protection active, or terminated since less than 4.00min
	[Defect Debouncing] • Defect condition fulfilled continuously > 500.0 ms
Fault healing	• DEF doing valve component protection terminated since longer than 4.00min
System reaction	• NOx level monitor interrupted
	• 1) Fid/ SCR Monitoring or DEF injection release not possible (according calibration of Release Masks) • 2) FId / Inhibit the plausibility check for DPF upstream temperature with model

https://truckmanualshub.com/

Failure cause		• Non a fault, information that NOx monitoring was suspended due to DEF dosing valve component protection
Failure repair		• No action needed
Inspection procedure	Step1	Inspection procedure Inspect the suspected factors mentioned above sequentially to locate faulty parts. Repair or replace the faulty part as necessary.

520588-12: The vehicle speed signal is missing. (The electrical fuse of component 'Instrument panel' is defective.)

Generation condition	[Test Condition] • Monitoring is active if the ECU is not in afterrun • The FId_VehVPlausA is not inhibited by another failure.
	[Fault Detection] • The acceleration value VehV_aUnFlt_mp < -9.50m/s^2 for at least 0.05s.
	[Defect Debouncing] • Defect condition exceeded cumulatively > 200.00ms • Failure is detected if active for 50% of the time
Fault healing	• Vehicle speed VehV_vSens > 10km/h {6.2mph} OR the acceleration VehV_aUnFlt_mp > 5.00m/s^2 for the time 0.10s • OR ECU is restarted.
System reaction	• None except FIDs.
	• 1) FId / Vehicle speed monitoring inhibited • 3) FId / Vehicle speed value (via CAN) replaced by substitute value if failure is validated • 4) FId / Vehicle speed value (via HW) replaced by substitute value if failure is validated • 5) FId / Status of function identifier FId_EngDemTrqLimErr1 • 6) FId / Torque limitation 4 activated for power reduction • 7) FId / Engine speed Limitation 1 for HIgh/Low engine speed (HLS) control active • 8) Fid / Cruise control immediately shut off • 9) FId / Multiple state switch error, PTO disabled • 10) FId / Vehicle speed sensing error, Cruise control disabled • 11) FId / Release of OBD Performance Limiter at low vehicle speed inhibited due to a failure • 12) FId / Zero Fuel Calibration (ZFC) of injectors disabled • 13) FId / Plausibility Check Accelerator and brake pedal not released due to failure in vehicle speed evaluation • 14) FId / Inhibit Charged Air Cooler monitoring • 15) Fid / Crankshaft sensor diagnosis inhibited (due to vehicle speed implausibility, e.g. towed vehicle) • 16) FId / Vehicle speed assumed by engine speed and load for calculation of total driven distance of vehicle • 17) FId / Drive away-set point idle speed calculation by High/Low engine speed control (HLS) inhibited • 18) FId / Underbraking disabled for High and Low engine speed control (HLS) (no special control parameters in case of Underbraking used) • 19) FId / High and Low engine speed demand control (HLS) disabled • 20) FId / Vehicle Speed signal defective, speed limiter blocked • 21) FId / Misfire Detection disabled • 22) FId / Closing of metering unit forced (full fuel feeding) • 23) FId / Tooth Angle Adaption (TAA) of crank speed sensor disabled • 24) FId / Vehicle speed signal evaluation defective • 25) Fid / Fix Substitution value (FE) for actual fuel economy status transmit to CAN Message FIEco • 26) FId / Status of Function Identifier for Wheel Based Vehicle Speed • 27) FId / Coolant thermostat diagnosis disabled • 28) FId / Use of the gear signal for the range check of particulate filter (DPF) is inhibited • 29) FId / Use of the vehicle speed for the range check of particulate filter (DPF) is inhibited • 30) FId / Vehicle speed sensor defective, PGNRQ can message invalid • 31) FId / Cooling fan speed set point calculation does not take into consideration vehicle speed (fix value Fans_vSubst_C used)

https://truckmanualshub.com/

Failure cause		• Instrument Cluster fuse burned or removed.
Failure repair		• Check Instrument Cluster fuse, check IC is running correctly.
Inspection procedure	Step1	Inspection procedure Inspect the suspected factors mentioned above sequentially to locate faulty parts. Repair or replace the faulty part as necessary.

https://truckmanualshub.com/

M E M O

https://truckmanualshub.com/

2. FUSO Diagnostics Service Data (Actual values)

- Since the FUSO diagnostics data are updated from time to time, descriptions or wording may not agree with the workshop manual. The FUSO diagnostics will have the latest data.

Current value group	Description	Value	Remarks
Temperature values	Temperature of componentEGR cooler outlet temperature sensor	-459.7°F	Displays the Temperature of componentEGR cooler outlet temperature sensor
	Temperature of componentEGR cooler outlet temperature sensor	-459.4°F	Displays the Temperature of componentEGR cooler outlet temperature sensor
	Intake air temperature upstream inlet valve	-459.4°F	Displays the Intake air temperature upstream inlet valve
	Intake air temperature of component Air flow and intake air temperature sensor	-459.4°F	Displays the Intake air temperature of component Air flow and intake air temperature sensor
	Internal temperature of componentSCR catalyst	-459.4°F	Displays the Internal temperature of componentSCR catalyst
	Internal temperature of componentDPF catalyst	-459.4°F	Displays the Internal temperature of component DPF catalyst
	Internal temperature of componentDPF	-459.4°F	Displays the Internal temperature of component DPF
	Internal temperature of componentDPF	-459.4°F	Displays the Internal temperature of component DPF
	Exhaust gas temperature before DPF	-459.4°F	Displays the Exhaust gas temperature before DPF
	Fuel temperature	-459.4°F	Displays the Fuel temperature
	Temperature of Lambda sensor	-459.4°F	Displays the Temperature of Lambda sensor
	Temperature after SCR catalyst	-459.4°F	Displays the temperature after SCR catalyst
	Temperature before SCR catalyst	-459.4°F	Displays the temperature before SCR catalyst
	Temperature of componentDEF tank	-459.4°F	Displays the Temperature of componentDEF tank
	Temperature of engine control unit	-459.4°F	Displays the Temperature of engine control unit
	Ambient temperature	-459.4°F	Displays the Ambient temperature
	Intake air temperature of component Air flow and intake air temperature sensor	-273.140 deg C	Displays the intake air temperature of component Air flow and intake air temperature sensor
	Coolant temperature	-273.140 deg C	Displays the Coolant temperature
Pressure values	Signal voltage of temperature sensor in component Pressure and temperature sensor 'Turbocharger'	0 psi	Displays the Signal voltage of temperature sensor in component Pressure and temperature sensor 'Turbocharger'
	Pressure of component Blow-by gas pressure sensor1	0.000 psi	Displays the pressure of component Blow-by gas pressure sensor1
	Pressure of component Blow-by gas pressure sensor2	0.000 psi	Displays the pressure of component Blow-by gas pressure sensor2
	Adapted value of DPF differential pressure	0 psi	Displays the adapted value of DPF differential pressure
	DPF differential pressure	0 psi	Displays the DPF differential pressure
	Differential pressure between componentDPF catalyst and componentDPF	0 psi	Displays the Differential pressure between componentDPF catalyst and componentDPF
	Oil pressure of Engine oil	0 psi	Displays the Oil pressure of Engine oil
	Status of Oil pressure switch	00	Displays the Status of Oil pressure switch
	Desired value of boost pressure for PCR (pressure charging regulator)	0 psi	Displays the Desired value of boost pressure for PCR (pressure charging regulator)
	Rail pressure (actual value)	0 psi	Displays the Rail pressure (actual value)

https://truckmanualshub.com/

Current value group	Description	Value	Remarks
Pressure values	Pressure of component DEF delivery pump	0 psi	Displays the pressure of component DEF delivery pump
	Ambient pressure	0 psi	Displays the Ambient pressure
	Boost pressure	0 psi	Displays the Boost pressure
	Refrigerant compressor	0.00 psi	Displays the Refrigerant compressor
Voltage values	Battery voltage	0.0000V	Displays the Battery voltage
	Operating state of heater in component Oxygen sensor	0.000 to 96.00%	Displays the Operating state of heater in component Oxygen sensor
	Signal voltage of temperature sensor in component Pressure and temperature sensor 'Turbocharger'	0.000000V	Displays the Signal voltage of temperature sensor in component Pressure and temperature sensor 'Turbocharger'
	Signal voltage of temperature sensor in component Pressure and temperature sensor 'Turbocharger'	0.000000V	Displays the Signal voltage of temperature sensor in component Pressure and temperature sensor 'Turbocharger'
	Signal voltage of temperature sensor in component Air flow and intake air temperature sensor	0.000000V	Displays the Signal voltage of temperature sensor in component Air flow and intake air temperature sensor
	Signal voltage of component 'Intercooler outlet temperature sensor'	0.000000V	Displays the Signal voltage of component 'Intercooler outlet temperature sensor'
	Signal voltage of temperature sensor in component Pressure and temperature sensor 'Turbocharger'	0.000000V	Displays the Signal voltage of temperature sensor in component Pressure and temperature sensor 'Turbocharger'
	Signal voltage of component 'Position sensor 'Accelerator pedal'1'	0.850000 to 4.150000V	Displays the Signal voltage of component 'Position sensor 'Accelerator pedal'1'
	Signal voltage of component 'Position sensor 'Accelerator pedal'2'	0.850000 to 4.150000V	Displays the Signal voltage of component 'Position sensor 'Accelerator pedal'2'
	Signal voltage of component 'Atmospheric pressure sensor'	0.000000V	Displays the Signal voltage of component 'Atmospheric pressure sensor'
	Signal voltage of temperature sensor in component Humidity and temperature sensor “Intake air”	0.000000V	Displays the Signal voltage of temperature sensor in component Humidity and temperature sensor “Intake air”
	Sensor voltage (DPF differential pressure) (raw value)	0.000000V	Displays the Sensor voltage (DPF differential pressure) (raw value)
	Signal voltage of component 'Temperature sensor “SCR catalytic converter”2'	0.000000V	Displays the Signal voltage of component 'Temperature sensor “SCR catalytic converter”2'
	Signal voltage of component 'Temperature sensor Exhaust system1'	0.000000V	Displays the Signal voltage of component 'Temperature sensor Exhaust system1'
	Signal voltage of humidity sensor in component Humidity and temperature sensor “Intake air”	0.000000V	Displays the Signal voltage of humidity sensor in component Humidity and temperature sensor “Intake air”
	Sensor voltage (accelerator pedal position by power take-off) (raw value)	0.000000V	Displays the Sensor voltage (accelerator pedal position by power take-off) (raw value)
	Actuation value from tester for component Glow plug	0.0000V	Displays the Actuation value from tester for component Glow plug
	Signal voltage of component 'Idle adjust volume'	0.000000V	Displays the Signal voltage of component 'Idle adjust volume'
Speed values	Engine speed	0.00rpm	Displays the Engine speed
	Maximum Idle speed	0.00 to 4000.00rpm	Displays the Maximum Idle speed
	Minimum Idle speed	0.00 to 650.00rpm	Displays the Minimum Idle speed
	Maximum vehicle speed	0.0000mph	Displays the Maximum vehicle speed
	Transmission ratio	0.0000-	Displays the Transmission ratio
	Vehicle speed	0.0000mph	Displays the Vehicle speed

https://truckmanualshub.com/

Current value group	Description	Value	Remarks
Speed values	Status of switch SLD1	00	Displays the Status of switch SLD1
	Status of switch SLD2	00	Displays the Status of switch SLD2
	Required engine speed for PTO control	0.00rpm	Displays the Required engine speed for PTO control
Air mass (specified value)	Amount of intake air	0.000m^3/s	Displays the Amount of intake air
	Desired value of Amount of intake air	0.000lb	Displays the Desired value of Desired value of Amount of intake air
	Desired value of Amount of intake air	0.000mg/Hub	Displays the Desired value of Desired value of Amount of intake air
	Humidity of intake air	0.000%	Displays the Humidity of intake air
	Lambda value	0.00000-	Displays the Lambda value
Torque values	Desired engine torque	30.000 to 50.000Nm	Displays the Desired engine torque
	Engine torque calculated from fuel injection quantity	30.000 to 50.000Nm	Displays the Engine torque calculated from fuel injection quantity
	calculated engine torque	0.000%	Displays the calculated engine torque
	Maximum engine torque request	0.000Nm	Displays the Maximum engine torque request
	Minimum engine torque request	0.000Nm	Displays the Minimum engine torque request
	Output torque of engine speed governor	30.000 to 50.000Nm	Displays the Output torque of engine speed governor
	Limitation of engine torque	0.000Nm	Displays the Limitation of engine torque
	Reducing torque instruction to the compressor of Air Condition	00	Displays the Reducing torque instruction to the compressor of Air Condition
Injection quantity	Required post injection quantity	0.0000mg/hub	Displays the Required post injection quantity
	Fuel injection quantity (calculated value)	3 to 10mg/hub	Displays the Fuel injection quantity (calculated value)
	Fuel injection quantity (raw value)	3 to 10mg/hub	Displays the Fuel injection quantity (raw value)
	current fuel injection quantity	3 to 10mg/hub	Displays the current fuel injection quantity
	Fuel mass contained in engine oil	0.00lb	Displays the Fuel mass contained in engine oil
	Status of injection valve (cylinder 0):	00	Displays the Status of injection valve (cylinder 0):
	Actual pattern of injections	00	Displays the Actual pattern of injections
	Correction value of fuel quantity (Cylinder 1)	0.0000mg/hub	Displays the Correction value of fuel quantity (Cylinder 1)
	Correction value of fuel quantity (Cylinder 2)	0.0000mg/hub	Displays the Correction value of fuel quantity (Cylinder 2)
	Correction value of fuel quantity (Cylinder 3)	0.0000mg/hub	Displays the Correction value of fuel quantity (Cylinder 3)
	Correction value of fuel quantity (Cylinder 4)	0.0000mg/hub	Displays the Correction value of fuel quantity (Cylinder 4)
	Soot content of engine oil	0.0000lb	Displays the Soot content of engine oil
Vehicle mileage	Vehicle mileage after healing the SCR failure.	0ft	Displays the Vehicle mileage after healing the SCR failure.
	Vehicle mileage after SCR warning 1	0mi	Displays the Vehicle mileage after SCR warning 1
	Vehicle mileage after SCR warning 2	0mi	Displays the Vehicle mileage after SCR warning 2
	Vehicle mileage after SCR warning 3	0mi	Displays the Vehicle mileage after SCR warning 3
	Vehicle mileage after SCR warning 4	0mi	Displays the Vehicle mileage after SCR warning 4
	Vehicle mileage after SCR warning 5	0mi	Displays the Vehicle mileage after SCR warning 5
	Vehicle mileage after SCR warning 6	0mi	Displays the Vehicle mileage after SCR warning 6
	Vehicle mileage after SCR warning 7	0mi	Displays the Vehicle mileage after SCR warning 7

https://truckmanualshub.com/

Current value group	Description	Value	Remarks
Vehicle mileage	Vehicle mileage after SCR warning 8	0mi	Displays the Vehicle mileage after SCR warning 8
	Exact remaining vehicle mileage	0mi	Displays the Exact remaining vehicle mileage
	Vehicle mileage when healing the SCR failure 1.	0mi	Displays the Vehicle mileage when healing the SCR failure 1.
	Vehicle mileage when healing the SCR failure 2.	0mi	Displays the Vehicle mileage when healing the SCR failure 2.
Time	Debouncing time of SCR warning 1	0s	Displays the Debouncing time of SCR warning 1
	Debouncing time of SCR warning 2	0s	Displays the Debouncing time of SCR warning 2
	Debouncing time of SCR warning 3	0s	Displays the Debouncing time of SCR warning 3
	Debouncing time of SCR warning 4	0s	Displays the Debouncing time of SCR warning 4
	Debouncing time of SCR warning 5	0s	Displays the Debouncing time of SCR warning 5
	Debouncing time of SCR warning 6	0s	Displays the Debouncing time of SCR warning 6
	Debouncing time of SCR warning 7	0s	Displays the Debouncing time of SCR warning 7
	Debouncing time of SCR warning 8	0s	Displays the Debouncing time of SCR warning 8
	Time since engine start	0.0ms	Displays the Time since engine start
	Degradation time of component Oxidation catalyst	0-	Displays the Degradation time of component Oxidation catalyst
	PRES_Time_s_M_32_SIG	0.0000s	Displays the PRES_Time_s_M_32_SIG
Efficiency of catalytic converter	Efficiency of catalytic converter (calculated value)	0.000000-	Displays the Efficiency of catalytic converter (calculated value)
	Efficiency of catalytic converter (Measured value)	0.000000-	Displays the Efficiency of catalytic converter (Measured value)
	Catalyst efficiency ratio (calculated/ measured)	0.000000-	Displays the Catalyst efficiency ratio (calculated/ measured)
Diesel particulate filter	Denounced value of fuel filter water level sensor signal	00	Displays the Denounced value of fuel filter water level sensor signal
	Fuel filter heater	ON/OFF	Displays the Fuel filter heater
	Ash content of diesel particulate filter	0.00000lb	Displays the Ash content of diesel particulate filter
	Soot content of diesel particulate filter	0.0000lb	Displays the Soot content of diesel particulate filter
	Status of DPF lamp	00	Displays the Status of DPF lamp
	Status of regeneration	Stage_0 to 10	Displays the Status of regeneration
EGR	Desired value of EGR valve	0.000%	Displays the Desired value of EGR valve
	NOX concentration (raw value)	0ppm	Displays the NOX concentration (raw value)
	actual position of exhaust flap	5.0000 to 95.0000%	• Displays the actual position of exhaust flap • Value must be >90% during engine brake.
	Desired value of Engine brake valve	5.000 to 95.00%	Displays the Desired value of Engine brake valve
	Actual position of exhaust flap	5.0000 to 95.0000%	Displays the actual position of exhaust flap
	Accelerator pedal position by power take-off	0.0000%	Displays the accelerator pedal position by power take-off
	Ramped smoke limitation quantity	0.0000mg/hub	Displays the ramped smoke limitation quantity
	Exhaust gas volume at Upstream area of DPF	0.000m^3/s	Displays the Exhaust gas volume at Upstream area of DPF
	Exhaust gas recirculation actuator	5.0000 to 95.0000%	Displays the Exhaust gas recirculation actuator
	NOx concentration	0-	Displays the NOx concentration
	Storage quantity of NH3	0.0000lb	Displays the Storage quantity of NH3
	Switch off event of EGR	00 00 00 00	Displays the Switch off event of EGR

https://truckmanualshub.com/

Current value group	Description	Value	Remarks
VGT	Actual position of VGT	0.0000%	Displays the actual position of VGT
	Desired value of Turbocharger	0.0000%	Displays the Desired value of Turbocharger
	VGT actuator output	5.0000 to 95.0000%	Displays the VGT actuator output
DEF values	Actual value of DEF dosing injection	0.000mg/s	Displays the actual value of DEF dosing injection
	Desired value of DEF dosing injection	0.000kg/s	Displays the desired value of DEF dosing injection
	DEF quantity	0.00000lb	Displays the DEF quantity
	DEF tank level	0.0000%	Displays the DEF tank level
	Refill status of the DEF tank	FALSE/TRUE	Displays the Refill status of the DEF tank
	DEF dosing valve	5.0000 to 95.0000%	Displays the DEF dosing valve
	Status of DEF heater	0-	Displays the Status of DEF heater
	Status of DEF tank heater	0-	Displays the Status of DEF tank heater
	Desired value of DEF delivery pump	5.0000 to 95.0000%	Displays the Desired value of DEF delivery pump
	Output to DEF pump motor	5.0000 to 95.0000%	Displays the Output to DEF pump motor
	Input status of DEF reverting valve	00	Displays the input status of DEF reverting valve
	Output status of DEF reverting valve	00	Displays the output status of DEF reverting valve
	DEF Level	0.0000%	Displays the DEF Level
Engine brake	Status of Exhaust brake switch	00	Displays the Status of Exhaust brake switch
	Current mode of Engine Brake	00	• Displays the Current mode of Engine Brake • 0: Brake RELEASED
	Status of electric parking brake	00	• Displays the Status of electric parking brake • 0=OFF • 1=ON
	Position of brake pedal	Brake pedal NOT OPERATED / Brake pedal OPERATED	Displays the Position of brake pedal
	Raw value of the Auxiliary brake cut switch	ON/OFF	• Displays the Raw value of the Auxiliary brake cut switch • 1: Engine brake cut requested by ABS
	Debounced value of the auxiliary brake cut switch	ON/OFF	• Displays the Debounced value of the auxiliary brake cut switch • 1: Engine brake cut requested by ABS
	Debounced value of Engine Brake switch signal	00	Displays the Debounced value of Engine Brake switch signal
Status	Status of Engine shutoff	00 00 00 00	Displays the Status of Engine shutoff
	Synchronisation state of Engine Position Management	EPM_ALE_SYNC/ EPM_CAS_SYNC/ EPM_NO_SYNC/ EPM_FULL_SYNC	Displays the Synchronisation state of Engine Position Management
	Status of Engine control	COENG_FINISH/ COENG_RUNNING/ COENG_READY/ COENG_STOPPING/ COENG_STANDBY/ COENG_CRANKING	Displays the Status of Engine control
	Mode of engine operation	Normal/ CldStrt/ NSC_Rgn/ DeSOx/ PFlt_Rng1/ PHC/ PFlt_Rng2/ EGTM	Displays the Mode of engine operation

https://truckmanualshub.com/

Current value group	Description	Value	Remarks
Status	Stored fault	-	Displays the Stored fault
	Status of Idle up request	00	Displays the Status of Idle up request
	Accelerator pedal sensor 1 (raw value)	0.000%	Displays the Accelerator pedal sensor 1 (raw value)
	Accelerator pedal sensor 1	0.000%	Displays the Accelerator pedal sensor 1
	Neutral position	The transmission is in neutral / The transmission is not in neutral	Displays the neutral position
	Actual gear	0-	Displays the Actual gear
	Power stage of air condition compressor actuator	00	Displays the Power stage of air condition compressor actuator
Switch status	Status of air conditioning	ON/OFF	Displays the Status of air conditioning
	Status of EGR control	ON/OFF	• Displays the Status of EGR control • 0=OFF • 1=ON
	The actual value indicates the kickdown position of the accelerator pedal.	ON/OFF	• Displays the The actual value indicates the kickdown position of the accelerator pedal. • With accelerator pedal fully depressed: 1 • With accelerator pedal not depressed: 0
	Status of power take-off	ON/OFF	• Displays the Status of power take-off • 0=OFF • 1=ON
	Status of quantity wave correction	ON/OFF	Displays the status of quantity wave correction
	Status of clutch pedal	Clutch pedal NOT OPERATED / Clutch pedal OPERATED	Displays the Status of clutch pedal
	Status of button 'CRUISE CONTROL'	ON/OFF	• Displays the Status of button 'CRUISE CONTROL' • 0=OFF • 1=ON
	Status of MI-Lampe (Malfunction Indicator Lamp)	ON/OFF	Displays the status of MI-Lampe (Malfunction Indicator Lamp)
	Status of system lamp	ON/OFF	Displays the status of system lamp
	Status of Torque limitation Switches	00	• Displays the Status of Torque limitation Switches • 0=OFF • 1=ON
	Status of oxygen sensor heater	00	• Displays the Status of oxygen sensor heater • 0=OFF • 1=ON
	Status of ECU main relay	00	• Displays the Status of ECU main relay • 0=OFF • 1=ON
	Status of fuel pump	00	• Displays the Status of fuel pump² 0=OFF • 1=ON
	Current value of component Oxygen sensor	00	Displays the Current value of component Oxygen sensor
	Control signal for starter relay	00	Displays the Control signal for starter relay
	Status of Safety relay (1)	00	Displays the Status of Safety relay (1)
	Status of Safety relay (2)	00	Displays the Status of Safety relay (2)
	Coolant level	00	• Displays the Coolant level • 0: The coolant level is too low.

https://truckmanualshub.com/

Current value group	Description	Value	Remarks
Switch status	Status of Cab tilt system	00	Displays the Status of Cab tilt system
	Status of cold start lamp	00	Displays the Status of cold start lamp
Status of glow system	status of glow plug control	00	Displays the status of glow plug control
	Status of glow plug	00	Displays the Status of glow plug
	PWM signal of component 'Glow plug'	0.0000%	Displays the PWM signal of component 'Glow plug'
	Feedback signal of component Glow plug	00	Displays the Feedback signal of component Glow plug
Other actual values	Status of SCR system	00 00	Displays the Status of SCR system
	Status of Terminal 15 after debouncing	00	Displays the Status of Terminal 15 after debouncing
	Status of Terminal 50 after debouncing	00	Displays the Status of Terminal 50 after debouncing
	Output of throttle valve actuator	5.0000 to 95.0000%	Displays the Output of throttle valve actuator
	Desired value of Pressure regulating valve in rail	0.000A	Displays the Desired value of Pressure regulating valve in rail
	Control diviation of PCR (pressure charging regulator)	0psi	Displays the control diviation of PCR (pressure charging regulator)
	Desired value of Pressure limiting valve in rail	0.000A	Displays the Desired value of Pressure limiting valve in rail
	PWM output for PCV (pressure control valve)	0.000%	Displays the PWM output for PCV (pressure control valve)
	Rail pressure governor deviation	0psi	Displays the Rail pressure governor deviation
	Desired value of Common rail pressure governor	0psi	Displays the Desired value of Common rail pressure governor
	State of rail pressure governor	00	Displays the state of rail pressure governor

https://truckmanualshub.com/

3. FUSO Diagnostics Actuator Test (Actuations)

- Since the FUSO diagnostics data are updated from time to time, descriptions or wording may not agree with the workshop manual. The FUSO diagnostics will have the latest data.

Section	Comment
Lamp actuations	Forcibly drives the next lamp. • Engine control lamp (amber) • Engine control lamp (red) • Cold start lamp • Exhaust brake lamp • Water temperature warning lamp
Cold start	Forcibly drives the cold start [Test prerequisite] • Engine stop [Test procedure] • Carry out actuation. • Battery tension negative peak should be detected • Terminate actuation. • Battery tension positive peak should be detected
Check metering unit zero delivery	Forcibly drives the check metering unit zero delivery [Note] • Engine running at idle • Carry out actuation. • Engine should stop • Check that there is no leakage from Pressure regulating valve in rail. • Switch ignition off and then back on again.
Check PCV opening	Forcibly drives the check PCV opening [Note] • Engine running at idle • Carry out actuation. • Engine should stop • Check that fuel is supplied from Pressure limiting valve in rail. • Switch ignition off and then back on again.
Control of shutting off cylinders	Forcibly drives the check control of shutting off cylinders [Test prerequisite] • Vehicle in idle state [Note] • During the test, the combustion engine must be operated at idle. • Press button to continue
Boost pressure control	Forcibly drives the check boost pressure control [Test prerequisite] • Engine start • The engine speed must be between 650 and 2000 rpm.
Control of exhaust gas recirculation	Forcibly drives the check control of exhaust flap [Test prerequisite] • Engine start • Engine running at idle
control of exhaust flap	Forcibly drives the check control of exhaust flap [Test prerequisite] • Engine start • Engine running at idle
DEF dosing test	Forcibly drives the check DEF dosing test [Test prerequisite] • Dismount dosing injector from catalyst and inject into a glass • Ignition ON • Internal combustion engine OFF

https://truckmanualshub.com/

Section	Comment
DEF leakage test	Forcibly drives the check DEF leakage test [Requirement] • Ignition ON • Internal combustion engine OFF [Note] • Start actuation. - DEF system is pressurized • Check system for leaks • Stop actuation. - DEF system is depressurized
Emptying DEF lines	Forcibly drives the check emptying DEF lines [Requirement] • The specified value for the temperature must be < 200°C.
DPF regeneration	Forcibly drives the check DPF regeneration [Test prerequisite] • Engine start • Engine running at idle

https://truckmanualshub.com/

4. ALTERATION AND RESET OF CODING DATA IN ENGINE ELECTRONIC CONTROL UNIT

4.1 General

- In the engine electronic control unit, information such as vehicle information and equipment specifications are registered as the coding data.
- When a specified equipment is replaced, alteration of the coding data or resetting of information using the FUSO Diagnostics must be performed. Otherwise, the discrepancies between the vehicle information in the engine electronic control unit and the actual conditions may generate the engine-control-related diagnosis code(s).

(1) Replacing Engine Oil

- During vehicle life time, the engine electronic control unit counts up the quantity of post-injected fuel in order to activate and maintain regeneration.
- A least fraction of this fuel, comes into contact with lubrication oil and dissolves into it.
- The engine electronic control unit is capable to calculate the limit quantity of fuel dissolved into oil and, consequently, to suggest oil refilling.
- It is obvious that, if after engine oil refilling the function is not reset, the engine electronic control unit will keep on counting the increase of oil fraction in engine oil even with new oil and, sooner or later, groundlessly request to replace engine oil by flashing warning lamp (red).
- See Gr12, “Engine Oil Replacement in ON-VEHICLE INSPECTION AND ADJUSTMENT” for the procedure of resetting the engine oil parameter.

(2) Replacing Injector

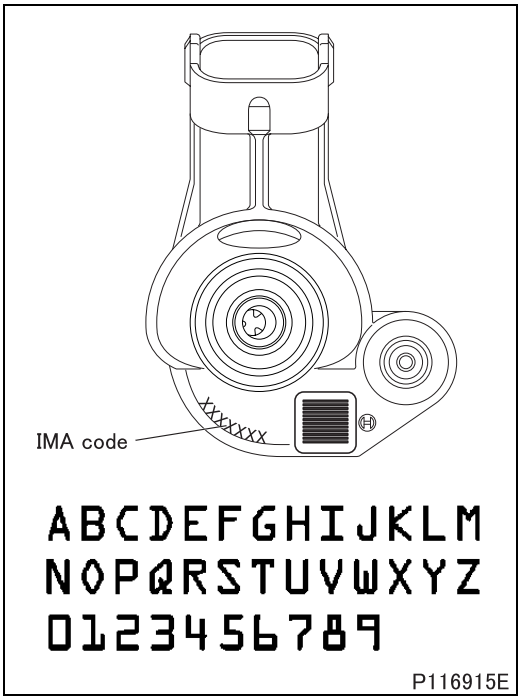

- When electrical injectors mounted on the vehicle must be replaced, meet following warnings:
  - Where electrical injectors are dismounted and do not need to be replaced, their mounting position has to be noted down in order to remount them later in the same position; this is done to avoid to reprogram the engine electronic control unit;
  - After replacing one or more injectors, the engine electronic control unit has to be reprogrammed;
- Where the engine electronic control unit is replaced, reprogram the new engine electronic control unit with the IMA codes of the electrical injectors mounted on the engine and copy down the rectification coefficients of replaced engine electronic control unit;

(3) Replacing air flow and intake air temperature sensor

- Each time after air flow and intake air temperature sensor is replaced, perform the following:
  1. Reset the learnings of the air flow and intake air temperature sensor using FUSO Diagnostics.
  2. Warm up the engine.
  3. Run the engine at idle for 5 minutes.
  4. Fully depress the accelerator pedal to accelerate the engine to such a level that it runs at a speed of 2000 to 3800 rpm with the 5th or 6th gear selected. (Be sure to keep the pedal depressed 100%.)
  5. Place the starter switch in OFF position and leave it there for 1 minute (until afterrun is completed).
  6. Repeat the above steps 3 to 5 three times.

https://truckmanualshub.com/

4.2Alteration or Resetting of Coding Data

- The items which require alteration or resetting of coding data are listed below.
- For the details of resetting of the coding data, refer to the later section. For the details of alteration of the coding data, contact your nearest MITSUBISHI FUSO dealer or distributor.

(1) Alteration of Coding Data

Disposition of equipment \ Engine electronic control unit data	Air conditioner	Power take-off	Fuel filter (fuel heater)	Exhaust brake switch	Glow electronic control unit	Anti-lock brake system	Auto cruise	Programmable speed imitation device	A vehicle peculiar parameter excluding the following	Engine oil factor	Engine relation equipment learning value	Injector correction	Remarks
Replacement of engine electronic control unit	O	O	O	O	O	O	O	O	O	O	O	O	
Replacement of engine oil										O			
Replacement of injector												O	
Removal/Installation of air conditioner	O												
Removal/Installation of power take-off		O											
Removal/Installation of fuel filter (fuel heater)			O										
Removal/Installation of combination switch (exhaust brake switch)				O									
Removal/Installation of glow electronic control unit					O								
Removal/Installation of anti-lock brake system related device						O							
Removal/Installation of auto cruise related device							O						

O: Denotes the necessity of alteration of coding data.

https://truckmanualshub.com/

(2) Resetting of Coding Data

Engine electronic control unit data / Disposition of equipment	Injector learning value	Boost pressure factor	Air flow and intake air temperature sensor factor	Air flow and intake air temperature sensor learning value	Pressure regulation valve learning value	Pressure sensor learning value	EGR valve factor	lambda sensor factor	lambda sensor learning value	DPF differential pressure factor	DPF related information	SCR related information	Remarks
Replacement of injector	O												
Replacement of boost pressure and temperature sensor		O											
Replacement of air flow and intake air temperature sensor			O	O									
Replacement of pressure regulation valve					O								
Replacement of pressure sensor						O							
Replacement of EGR valve							O						
Replacement of lambda sensor								O	O				
Replacement of DPF differential pressure sensor										O			
Replacement of diesel particulate filter											O		
Replacement of SCR muffler												O	
Replacement of DEF tank												O	
Replacement of DEF dosing module												O	

O: Denotes the necessity of resetting of coding data.

https://truckmanualshub.com/

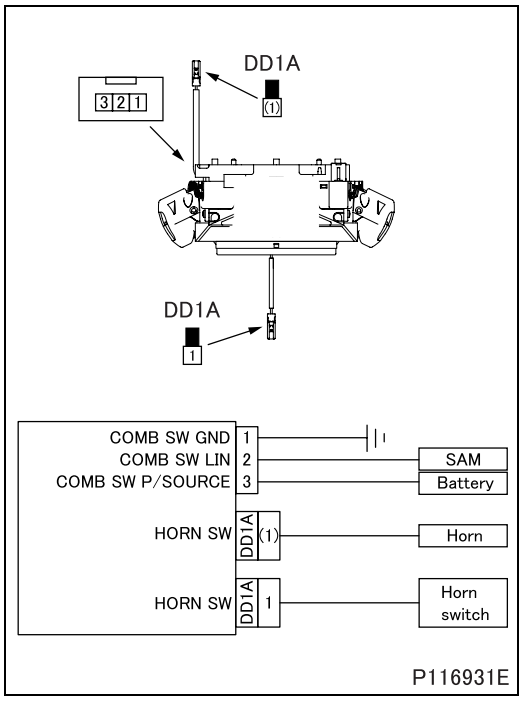

#001 Inspection of combination switch

- Because it is not easy to independently check the switch for the function, determine quality of the switch indirectly by checking the related parts, such as harness, horn switch, etc. in the system.
- If there is nothing abnormal in the related parts, but the problem remains in the system, then replace the switch. (See Gr37.)

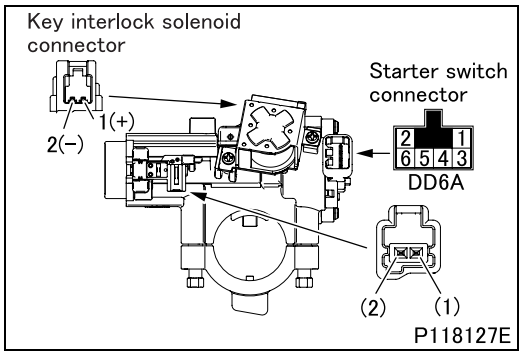

#002 Inspection of starter switch

- Perform the following checks, and if any fault is found, replace the switch. (See Gr37.)

(1) Starter switch

Switch position		Continuity terminal
LOCK	without key	–
	with key	(1)–(2)
ACC		(1)–(2), 4–5
ON		(1)–(2), 4–5–6
START		(1)–(2), 3–4–5–6

(2) Key interlock solenoid

- Check that applying battery voltage between the terminals 1 and 2 prevents the key from turning toward the LOCK position.

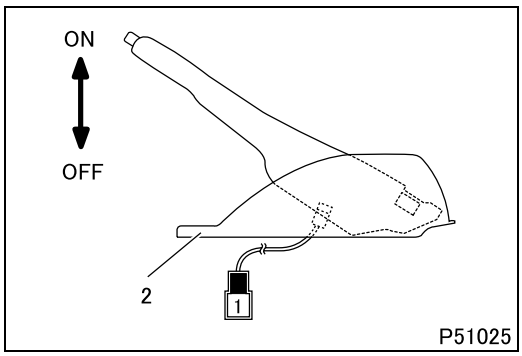

#038 Inspection of parking brake switch

- Measure continuity between terminals 1 and 2 (body) ground.

Pull the parking brake lever	Continuity exists
Release the parking brake lever	Continuity does not exist

- If any fault is found, replace the switch. (See Gr36.)

https://truckmanualshub.com/

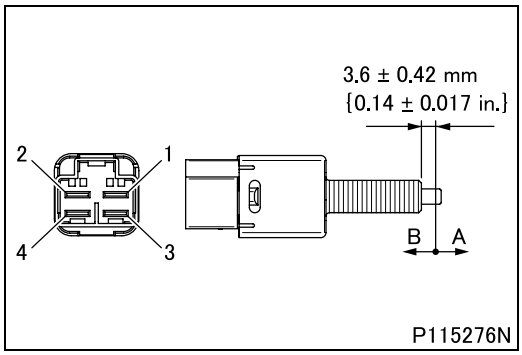

#042 Inspection of stop lamp switch

Switch position	Continuity terminal
A	1–2
B	3–4

- If any fault is found, replace the switch. (See Gr35.)

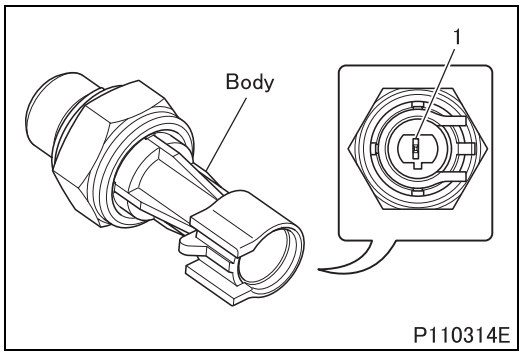

#044 Inspection of oil pressure switch

- Perform the following checks, and if any fault is found, replace the switch. (See Gr12.)

(1) Inspection without applying air pressure

- Make sure that there is continuity between terminals 1 and body.

(2) Inspection by applying air pressure

- Gradually apply air pressure to the switch starting from 0 kPa {0 psi, 0 kgf/cm^2}.
- Measure the degree of air pressure at the moment when continuity is not detected between terminals 1 and body, and make sure to confirm if the value meets the standard.

Standard value (operating pressure)	50 ± 10 kPa {7.1 ± 1.4 psi, 0.5 ± 0.1 kgf/cm^2}

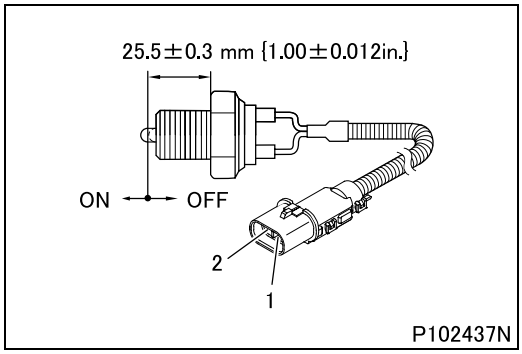

#054 Inspection of power take-off control switch

- Perform the following checks, and if any fault is found, replace the switch. (See Gr22.)

Switch position	Continuity terminal
OFF	–
ON	1–2

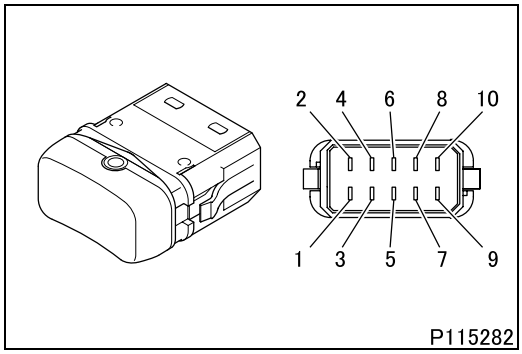

#089 Inspection of switch

- Perform the following checks, and if any fault is found, replace the switch.
  - DPF cleaning switch

Switch position	Continuity terminal	Night illumination
OFF	–	(+) 1–10 (–)
ON	3–7	

  - Cruise control main switch

Switch position	Continuity terminal	Operation illumination	Night illumination
OFF	4–8, 5–7	–	(+) 1–10 (–)
Neutral	4–6, 5–7	–	
ON	3–7, 4–6	(+) 9–10 (–)	

https://truckmanualshub.com/

INSPECTION OF ELECTRICAL EQUIPMENT

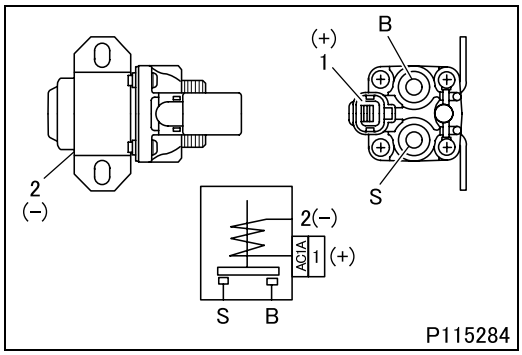

#187 Inspection of starter relay

- Perform continuity check and operation check, and if any fault is found, replace the relay.

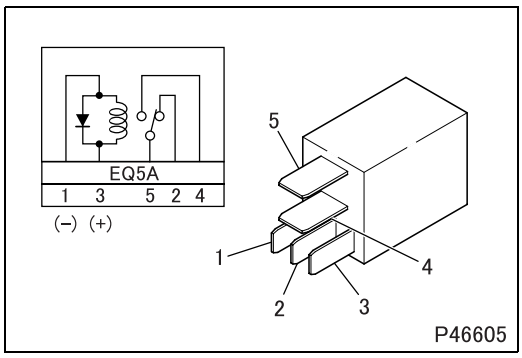

#201 Inspection of relay (normally open type 5 pin)

- Perform continuity check and operation check, and if any fault is found, replace the relay.

#252 Inspection of pressure sensor

- Because it is not easy to check these switches individually, determine quality of the sensors indirectly by checking related parts, such as harnesses, etc. in the system.
- If any fault is not found in the related parts, and the problem still remains in the system, replace the sensors.

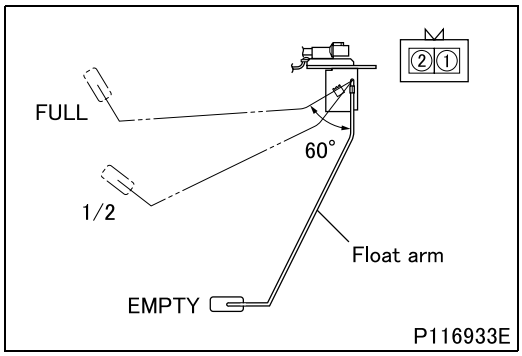

#258 Inspection of fuel level sensor

- Measure resistance values between terminals 1 and 2 when bringing the float arm into contact with stoppers (at EMPTY and FULL positions) and placing it at the midpoint position.

Standard value	at FULL position	0^{+2}_{0} Ω
	at 1/2 position	50 ± 3 Ω
	at EMPTY position	150 ± 10 Ω

- If the measured value deviates from the standard value, replace the sensor. (See Gr13.)

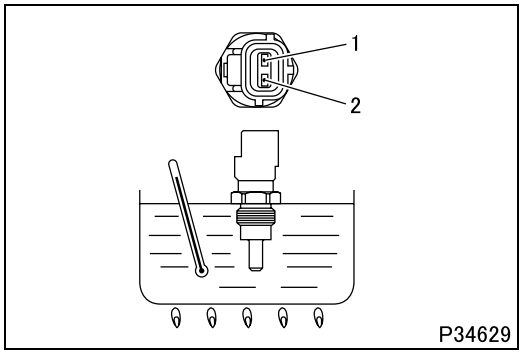

#262 Inspection of water temperature sensor

- Dip the sensor in a container filled with engine oil.
- Raise the oil temperature to the specified one while stirring oil.
- Measure resistance values between terminal 1 and 2.

Standard value	–30°C {–22°F}	22.307 to 310.194 kΩ
	20°C {68°F}	2.262 to 2.760 kΩ
	80°C {176°F}	0.304 to 0.342 kΩ
	120°C {248°F}	0.106 to 0.119 kΩ

- If the measured value deviates from the standard value, replace the sensor. (See Gr14.)

https://truckmanualshub.com/

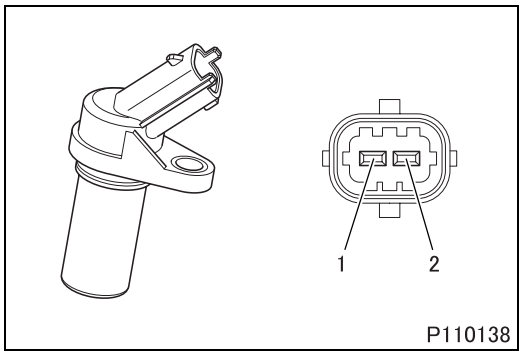

#263 Inspection of engine speed sensor

- Measure the resistance value between terminals 1 and 2.

Standard value (at 20°C {68°F})	860 ± 86 Ω

- If the measured value deviates from the standard value, replace the sensor. (See Gr11.)

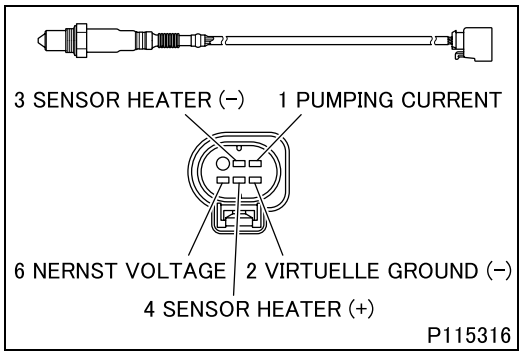

#297 Inspection of lambda sensor

- Because it is not easy to check these sensor individually, determine quality of the sensor indirectly by checking related parts, such as harnesses, etc. in the system.
- If any fault is not found in the related parts, and the problem still remains in the system, replace the sensor. (See Gr15.)

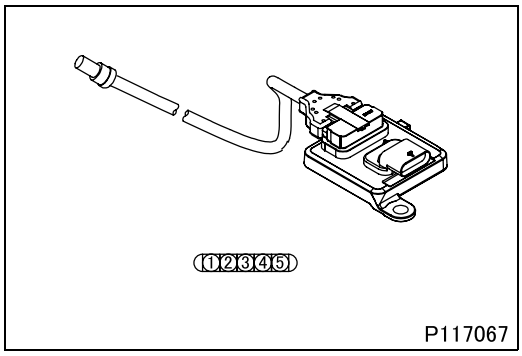

#298 Inspection of NOx sensor

- Because it is not easy to check these sensor individually, determine quality of the sensor indirectly by checking related parts, such as harnesses, etc. in the system.
- If any fault is not found in the related parts, and the problem still remains in the system, replace the sensor. (See Gr17.)

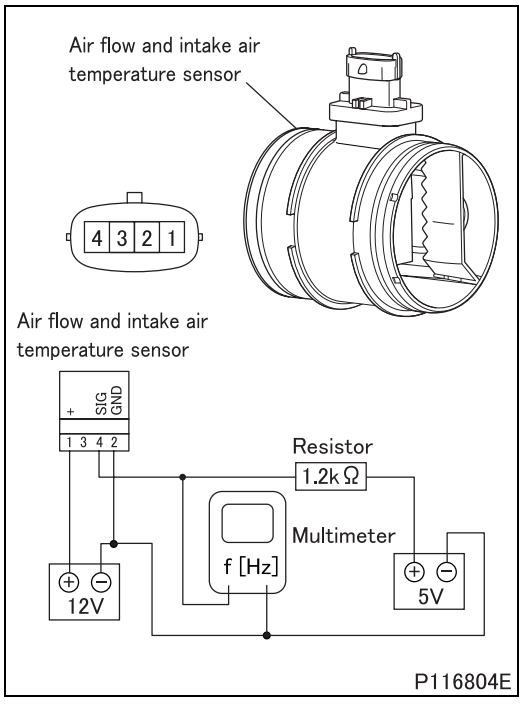

#306 Inspection of air flow and intake air temperature sensor

<Inspection of on-vehicle condition>

- Using the FUSO Diagnostics, check if its service data changes in accordance with changes in the engine speed.
- Replace the sensor if the service data is not changed. (See Gr15.)

<Inspection of standalone condition>

- Connect the air flow and intake air temperature sensor, multimeter capable of measuring frequency output, resistor and batteries as shown in the illustration.
- Blow air against the sensor and check if the frequency is changed.
- Replace the sensor if the frequencies not changed. (See Gr15.)

https://truckmanualshub.com/

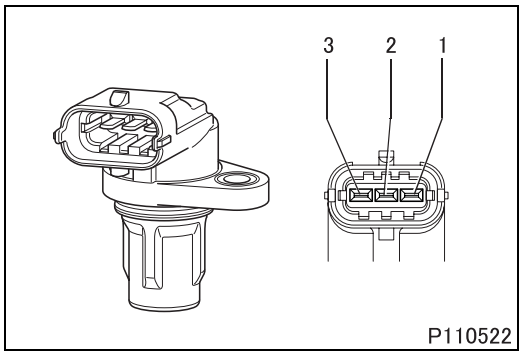

#320 Inspection of camshaft timing sensor

- Apply 5 volts DC to terminals 3 and 1 and measure, using a multimeter the output from terminal 2 and 1.
- With no metallic part close to sensor tip the output should be 5 V.
- Draw up a metallic part to sensor tip around 1 mm {0.039 in.}, the output should become 0 V.
- If the measurement is out of specification, replace the sensor. (See Gr11.)
- This kind of test is made in static condition, and it isn't able to detect all sensor failure mode on the engine during normal functioning.

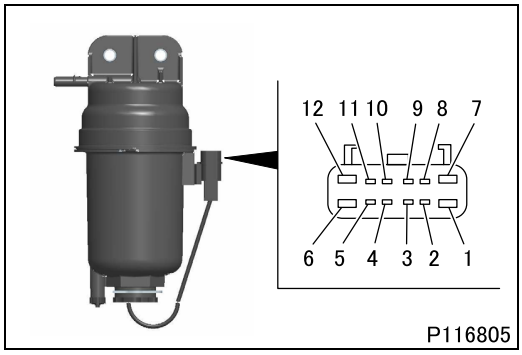

#323 Inspection of fuel filter (fuel temperature sensor)

- Measure the resistance between terminals 8–9.

Standard value	–30°C {–22°F}	26.114 ± 2.533 Ω
	0°C {32°F}	5.896 ± 0.430 Ω
	25°C {77°F}	2.057 ± 0.115 Ω
	60°C {140°F}	596 ± 23 Ω
	100°C {212°F}	186 ± 4 Ω
	110°C {230°F}	144 ± 3.456 Ω

- If the measurement is out of specification, replace the fuel filter. (See Gr13.)

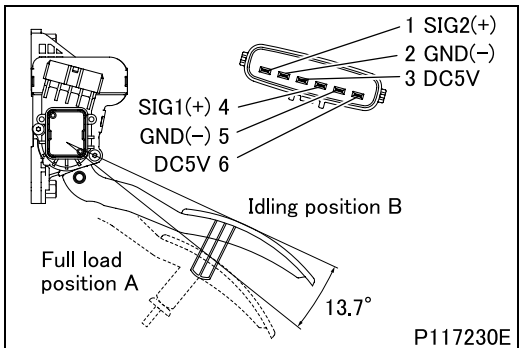

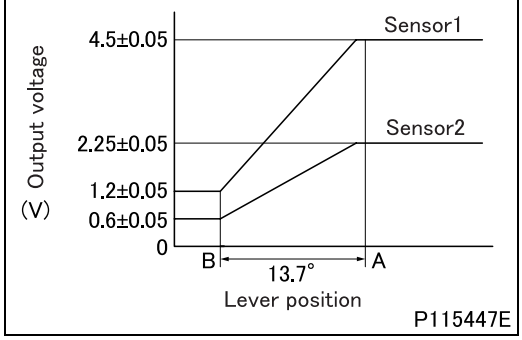

#324 Inspection of accelerator pedal position sensor

- Apply 5 volts DC to terminals 6 and 5 (sensor 1) and terminals 3 and 2 (sensor 2) of the accelerator pedal position sensor.
- Measure the output voltage at terminals 4 and 5 (sensor 1) and the output voltage at terminals 1 and 2 (sensor 2) with the accelerator lever in each specified position.

	Lever position	Output voltage	
Standard value	Full load position A	Sensor 1	4.5 ± 0.05 V
		Sensor 2	2.25 ± 0.05 V
	Idling position B	Sensor 1	1.2 ± 0.05 V
		Sensor 2	0.6 ± 0.05 V

- If the measurement is out of specification, replace the sensor.

https://truckmanualshub.com/

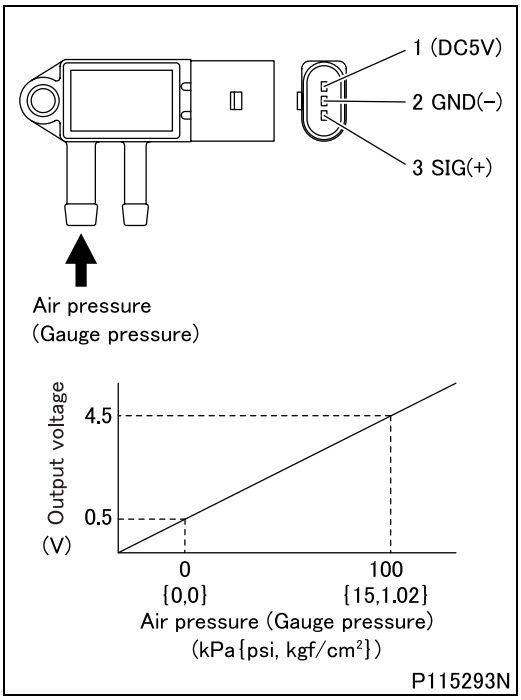

#334 Inspection of DPF differential pressure sensor

- Apply 5 volts DC to terminals 1 and 2.
- Apply air pressure (gauge pressure) and measure the output voltage occurring at terminals 2 and 3 (left figure).

Standard value	0 kPa {0 psi, 0 kgf/cm^2}	0.5 V
	100 kPa {15 psi, 1.02 kgf/cm^2}	4.5 V

- If the measurement is out of specification, replace the sensor. (See Gr17.)

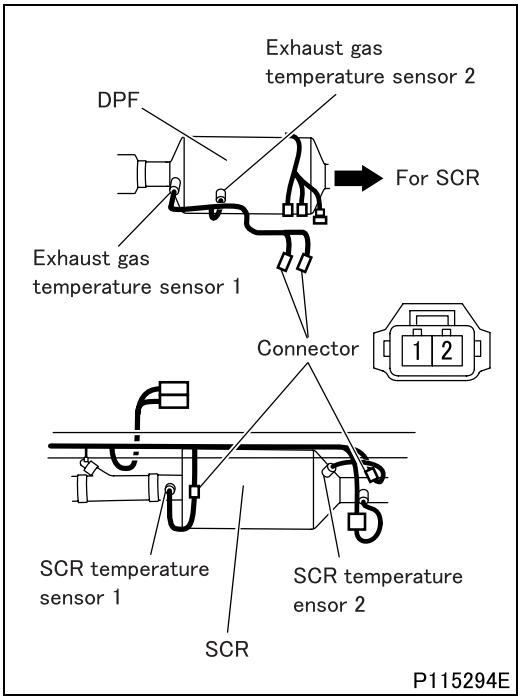

#336 Exhaust gas temperature sensor 1, 2, SCR temperature sensor 1, 2

- Measurement must be carried out with DPF (diesel particulate filter) cooled enough.
- Unplug electrical connector, but do not remove sensor from DPF and SCR (selective catalytic reduction).
- Measure the resistance between terminals 1 and 2.
- See the chart below for normal resistance versus temperature.

Standard value	–18°C {0°F}	187 Ω
	–12°C {10°F}	191 Ω
	–7°C {19°F}	195 Ω
	–1°C {30°F}	200 Ω
	0°C {32°F}	201 Ω
	4°C {39°F}	204 Ω
	10°C {50°F}	208 Ω
	16°C {61°F}	212 Ω
	21°C {70°F}	217 Ω
	27°C {81°F}	221 Ω
	32°C {90°F}	225 Ω
	38°C {100°F}	229 Ω

- Check if the measured value is within the standard value by comparing the measured value with the value according to the chart and outside temperature.
- Measure resistance between each pin to sensor body. Resistance should be greater than 1 MΩ (open circuit).
- If the measurement is out of standard value, replace the sensor. (See Gr17.)

https://truckmanualshub.com/

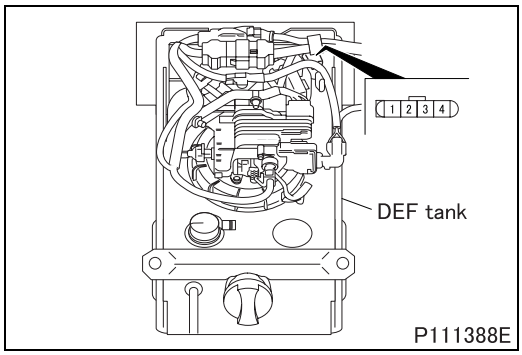

#339 Inspection of DEF temperature sensor and DEF tank heater

- Unplug electrical connector, but do not remove sensor from DEF tank.
- Measure the resistance between terminals 3 and 4 while changing surrounding temperature of the DEF level and temperature sensor.

Standard value	15°C {59°F}	13.75 to 17.76 kΩ
	20°C {68°F}	11 to 14.09 kΩ
	25°C {77°F}	8.83 to 11.21 kΩ
	30°C {86°F}	7.08 to 9.03 kΩ
	35°C {95°F}	5.75 to 7.35 kΩ

- If the measurement is out of standard value, replace the DEF tank. (See Gr17.)

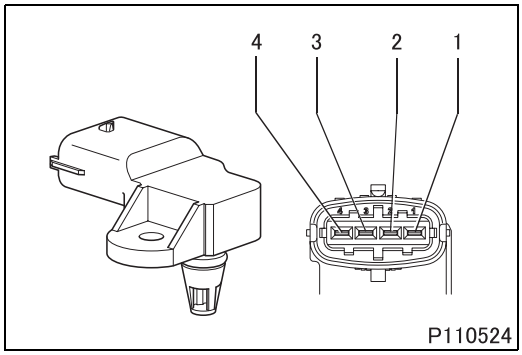

#346 Inspection of boost pressure and temperature sensor

(1) Boost pressure sensor inspection

- Apply 5 volts DC to terminals 3 and 1.
- Apply air pressure and gradually increase it, measuring the output voltage occurring at terminals 2 and 1.

	Air pressure (gauge)	Voltage
Standard value	100 kPa {15 psi, 1 kgf/cm^2}	3 V
	250 kPa {36 psi, 2.5 kgf/cm^2}	4.35 V

- If the measured value deviates from the standard value, replace the sensor. (See Gr15.)
- If a boost pressure and temperature sensor was replaced with a new one, the data must be reset in the engine electronic control unit.
- For the data resetting work, consult your nearest authorized dealer or distributor.

(2) Boost temperature sensor inspection

- Place the sensor in ambient with temperature controlled to 20°C {68°F} for 15 min.
- Measure the resistance between terminals 2 and 1.

Standard value	0°C {32°F}	5895 ± 250 Ω
	20°C {68°F}	2499 ± 80 Ω
	40°C {104°F}	1174 ± 30 Ω

- If the measured value deviates from the standard value, replace the sensor. (See Gr15.)
- If a boost pressure and temperature sensor was replaced with a new one, the data must be reset in the engine electronic control unit.
- For the data resetting work, consult your nearest authorized dealer or distributor.

https://truckmanualshub.com/

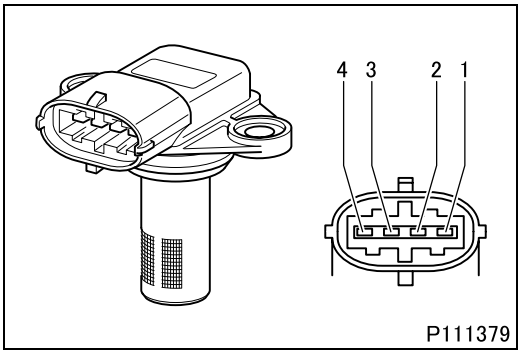

#347 Inspection of humidity and intake air temperature sensor

- Measure the resistance value between terminals 2 (or 4) and 3.

Standard value	0°C {32°F}	5750 to 6230 Ω
	30°C {86°F}	1759 to 1875 Ω
	60°C {140°F}	634 to 690 Ω
	90°C {194°F}	265 to 293 Ω

- If the measurement is out of standard value, replace the sensor. (See Gr15.)

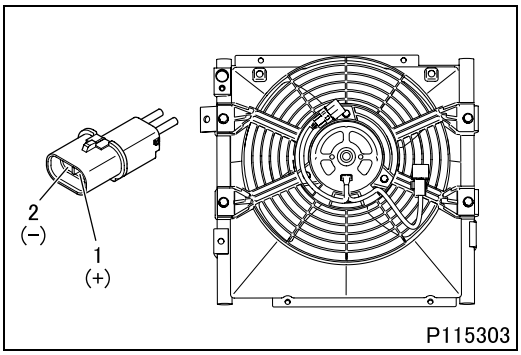

#431 Inspection of condenser fan motor

- Make sure that the motor operates when 12 volts DC is applied between each terminal.
- If any fault is found, replace condenser. (See Gr55.)

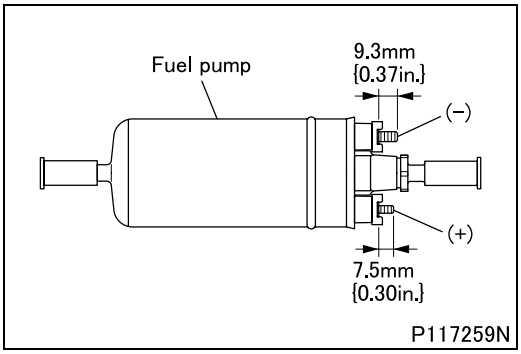

#497 Inspection of fuel pump

- Make sure that the motor operates when battery voltage is applied between each terminal.
- If any fault is found, replace the fuel pump. (See Gr13.)

#530 Inspection of EGR actuator

- Because it is not easy to check these actuator individually, determine quality of the actuator indirectly by checking related parts, such as harnesses, power window motor, etc. in the system.
- If any fault is not found in the related parts, and the problem still remains in the system, replace the EGR actuator. (See Gr17.)

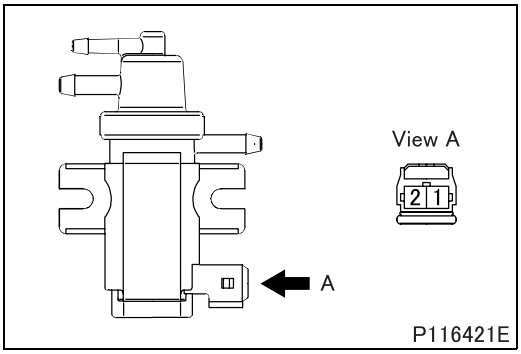

#536 Inspection of vacuum modulator

- Apply battery voltage between each terminals confirm that the vacuum modulator operates.
- If any fault is found, replace the vacuum modulator. (See Gr15.)

https://truckmanualshub.com/

#572 Inspection of FMU (fuel metering unit)

- Because it is not easy to check these FMU (fuel metering unit) individually, determine quality of the FMU (fuel metering unit) indirectly by checking related parts, such as harnesses, etc. in the system.
- If any fault is not found in the related parts, and the problem still remains in the system, replace the FMU (fuel metering unit).

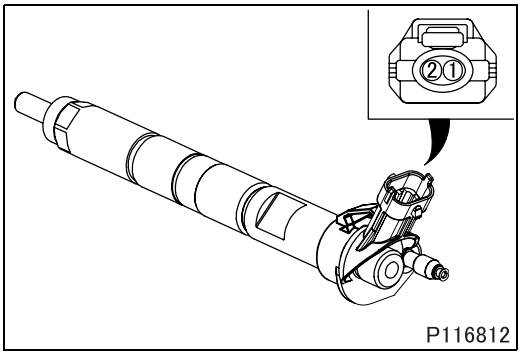

#582 Inspection of injector

- Measure the resistance between terminals 1 and 2.

Standard value (at 20°C {68°F})	180 ± 30 kΩ

- If the measurement is out of specification, replace the injector. (See Gr13.)
- If an injector was replaced with a new one, the data must be written and reset in the engine electronic control unit.
- For the data writing and resetting work, consult your nearest authorized dealer or distributor.

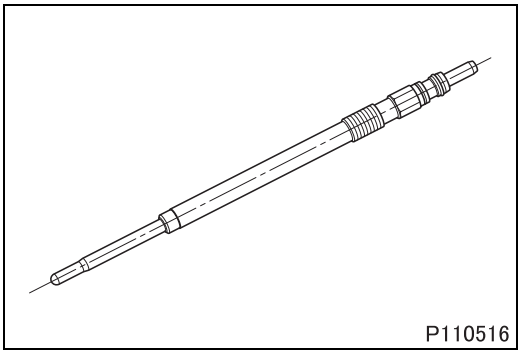

#764 Inspection of glow plug

- Measure using a multimeter the resistance between the housing and the connection pin.

Standard value (at 20°C {68°F})	0.6 to 1.0 Ω

- If the measured value deviates from the standard value, replace the glow plug. (See Gr11.)

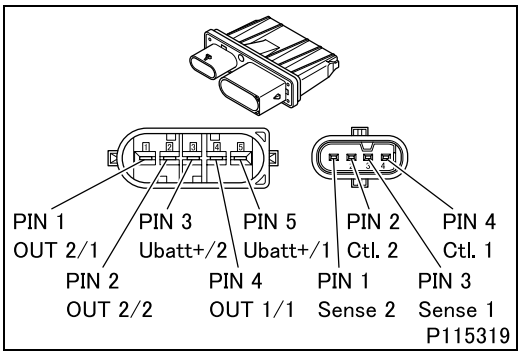

#773 Inspection of DEF heater power unit

- Because it is not easy to check these DEF heater power unit individually, determine quality of the DEF heater power unit indirectly by checking related parts, such as harnesses, etc. in the system.
- If any fault is not found in the related parts, and the problem still remains in the system, replace the DEF heater power unit. (See Gr17.)

https://truckmanualshub.com/

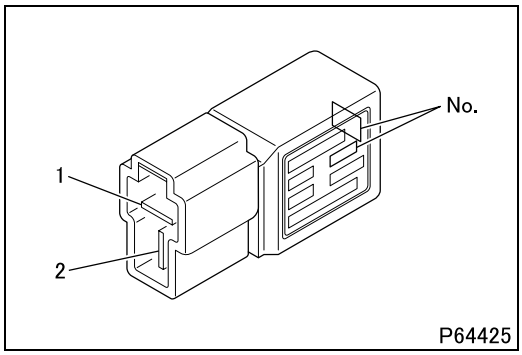

#828 Inspection of controller area network resistor

- Measure the resistance of the resistor number marked on the controller area network resistor.

Standard value (at 20°C {68°F})	Resistor No.	1	270 ± 13.5 Ω
		2	510 ± 25.5 Ω
		3	820 ± 41 Ω
		4	1300 ± 65 Ω
		5	2000 ± 100 Ω
		6	3300 ± 165 Ω
		7	5600 ± 280 Ω
		8	15000 ± 750 Ω
		9	390 ± 19.5 Ω
		10	4300 ± 215 Ω
		11	9100 ± 455 Ω
		12	120 ± 6 Ω

- If the measurement is out of specification, replace the controller area network resistor with one that has the same resistor number and same specified resistance.

CAUTION ⚠

The controller area network resistor are matched to the engine. If you replace any of them, be sure to replace it with one that has the same resistor number.

https://truckmanualshub.com/

A13 to 14 (Switch)

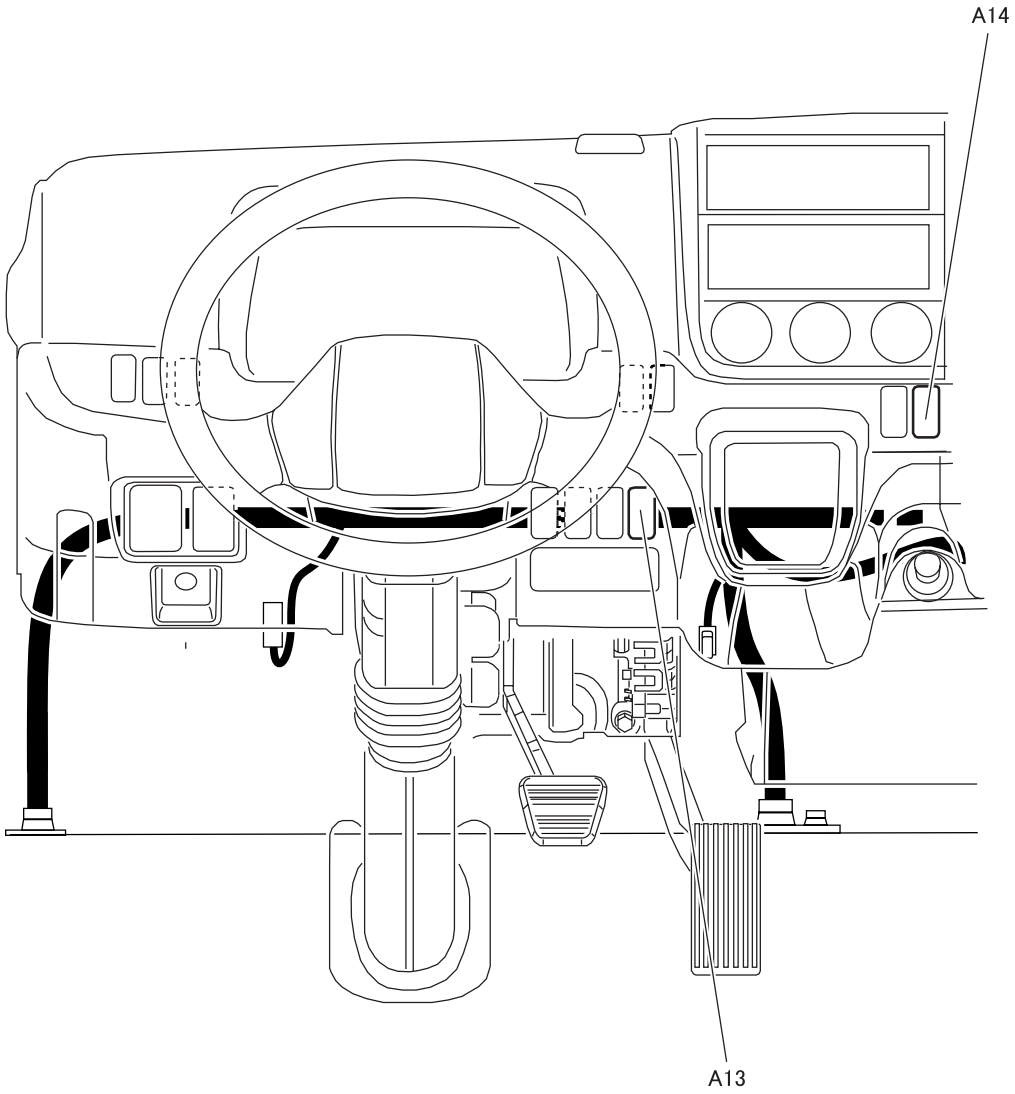

A13 DPF cleaning switch
A14 Cruise control main switch

DPF : Diesel particulate filter

https://truckmanualshub.com/

A17 to 21 (Switch)

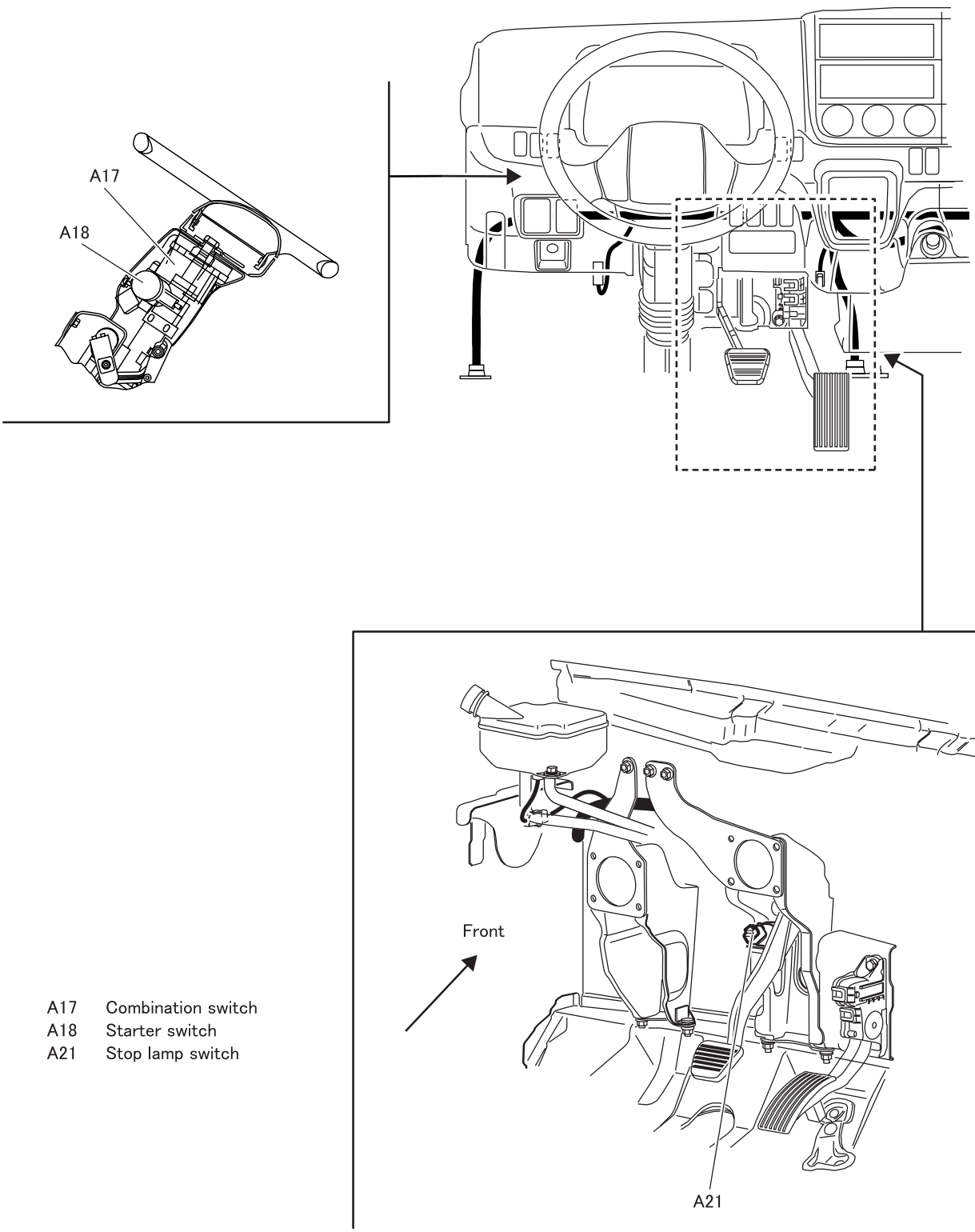

A17 Combination switch
A18 Starter switch
A21 Stop lamp switch

https://truckmanualshub.com/

INSTALLED LOCATIONS OF PARTS

A36	(Switch)

＜Except crew cab＞

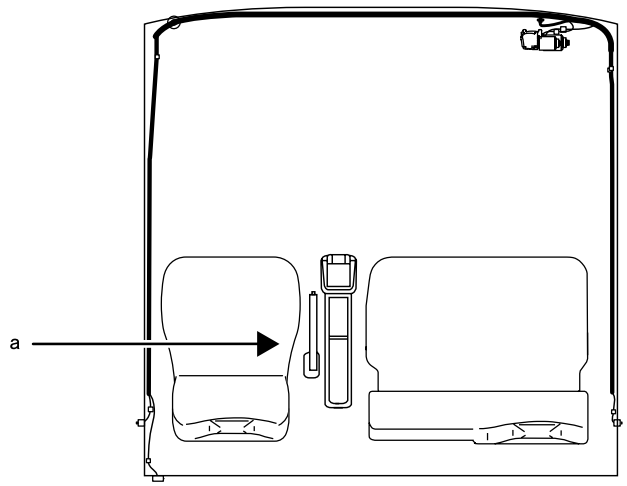

(View a)

＜Parking brake lever＞

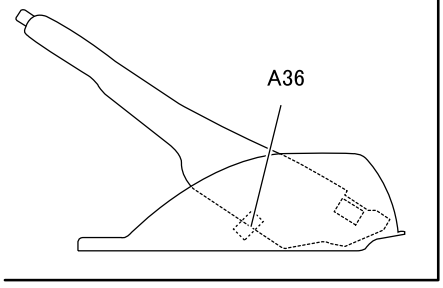

＜Crew cab＞

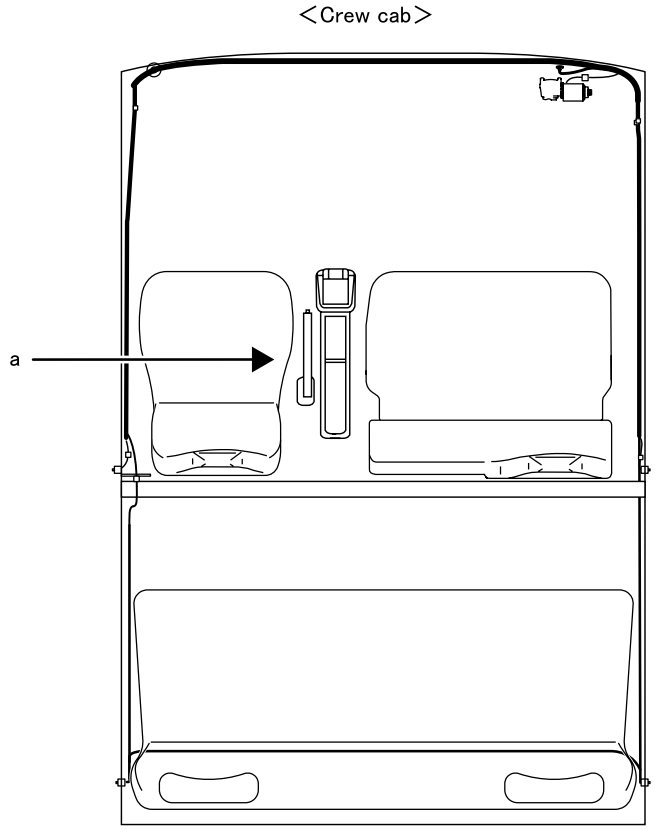

A36 Parking brake switch

https://truckmanualshub.com/

A42 (Sensor)

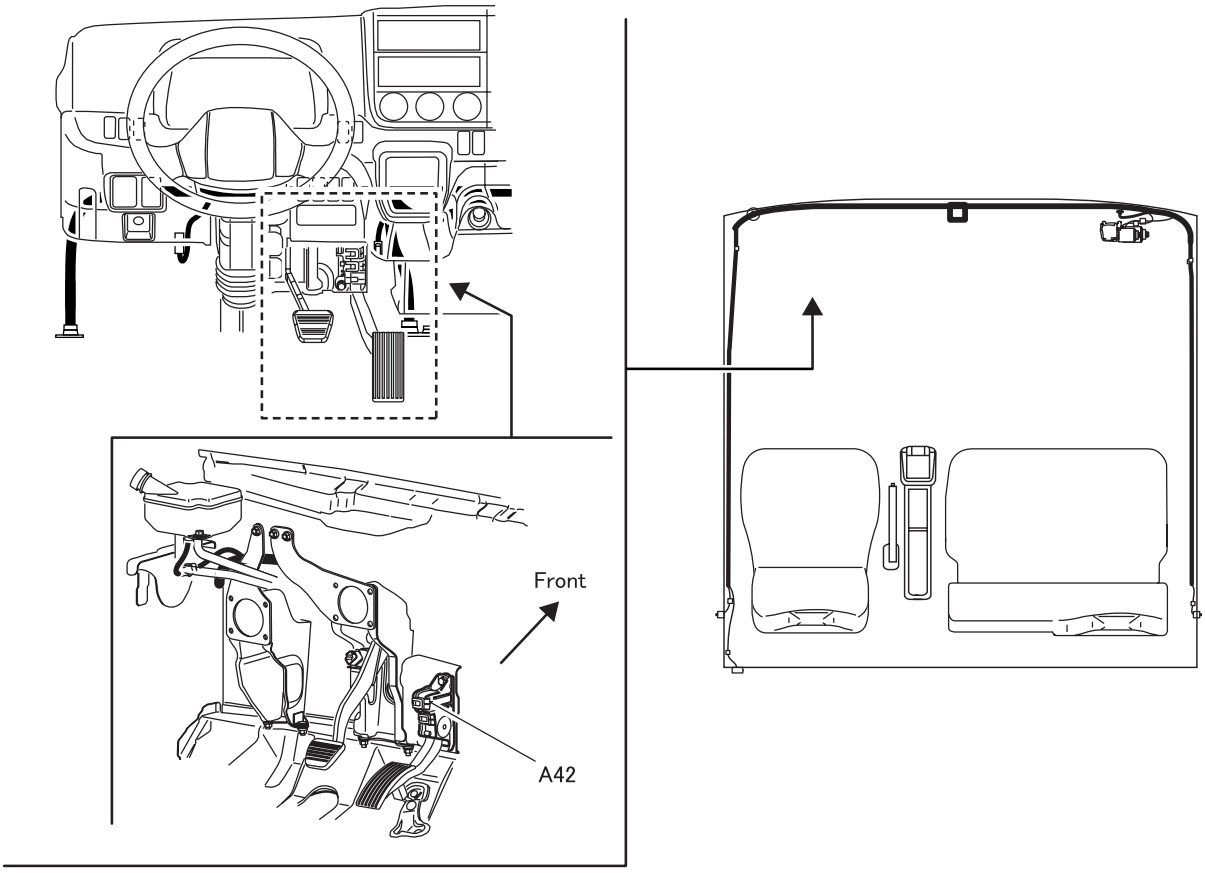

A42 Accelerator pedal position sensor

https://truckmanualshub.com/

INSTALLED LOCATIONS OF PARTS

B12 to 19

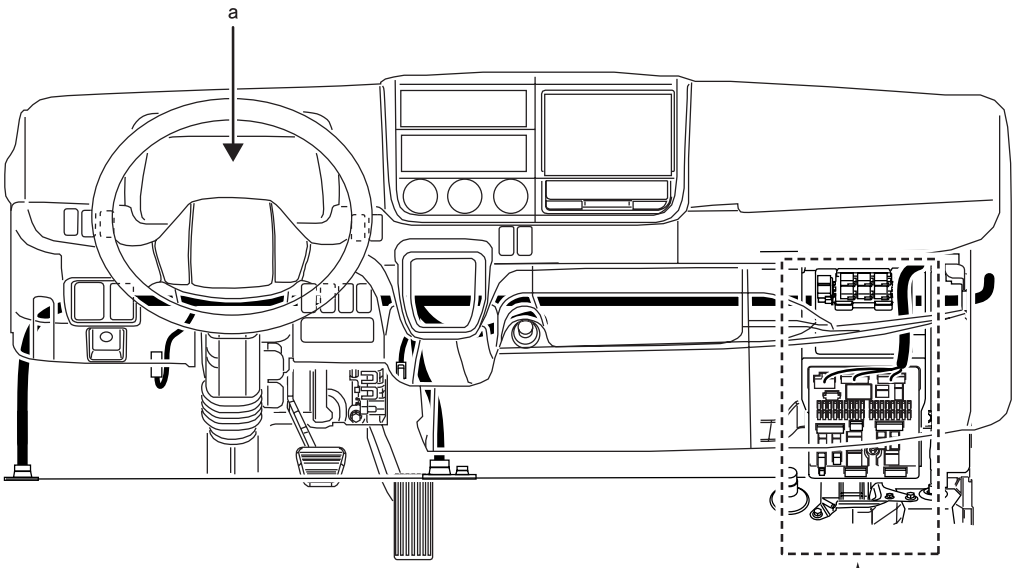

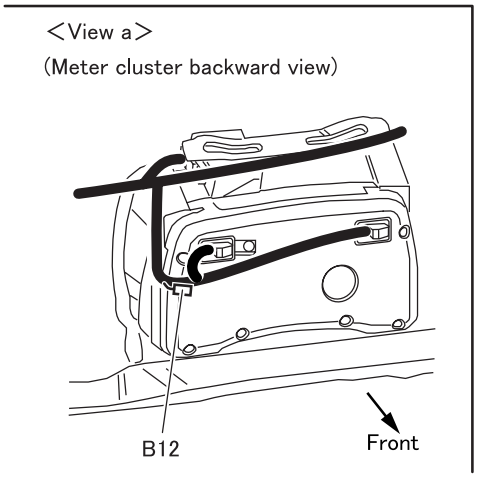

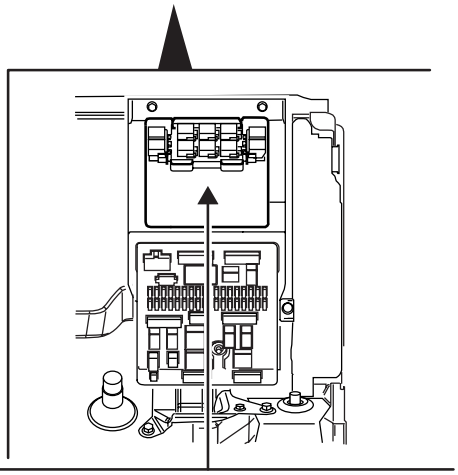

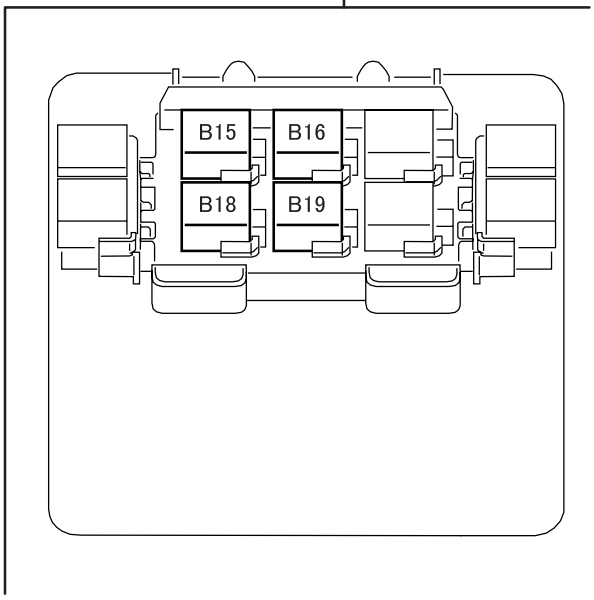

B12 CAN resistor
B15 Fuel heater relay
B16 Condenser fan relay
B18 Cruise control relay
B19 Starter relay (for drive)

CAN : Controller Area Network

13E-L05232B-1

https://truckmanualshub.com/

B40

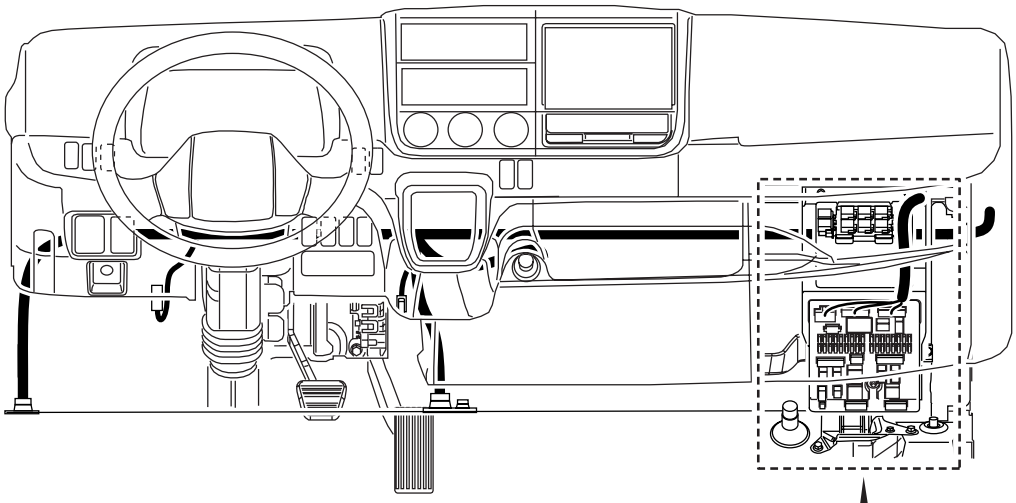

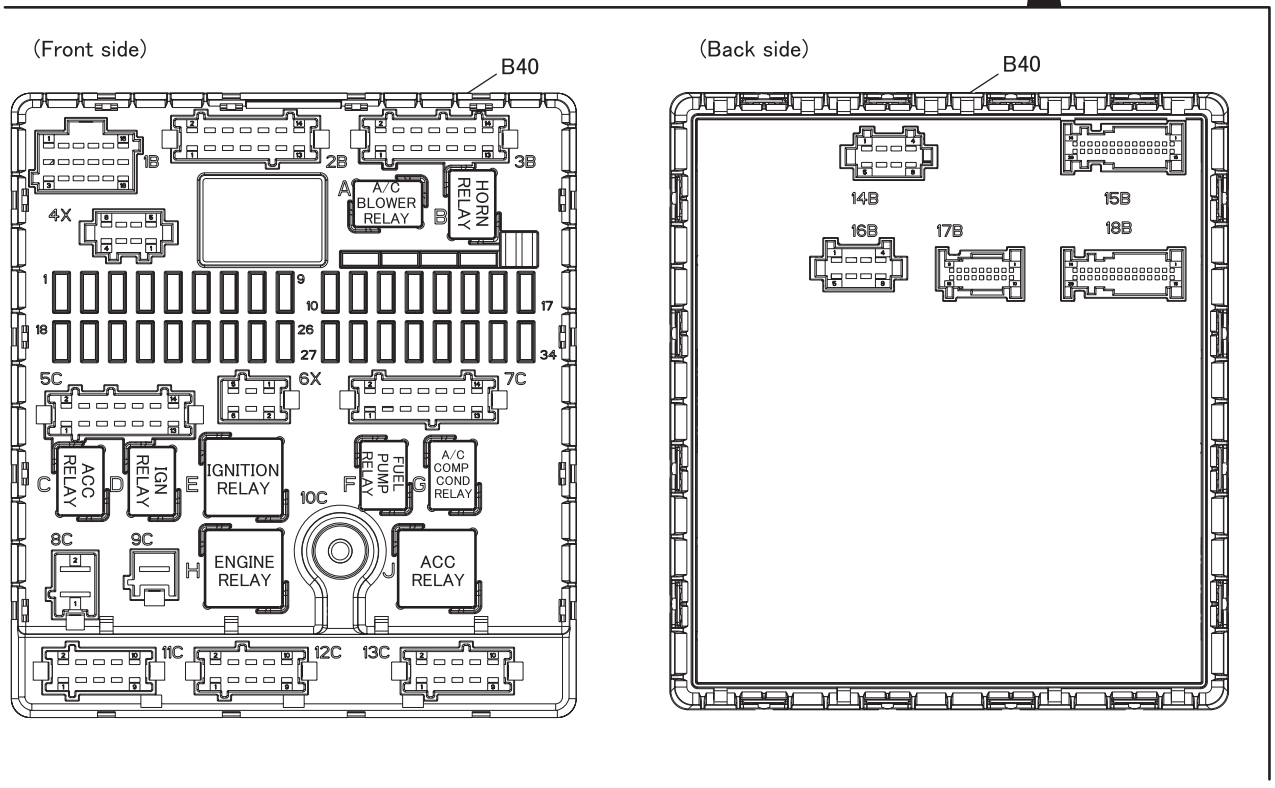

B40 SAM

SAM : Signal detect and actuation modules

https://truckmanualshub.com/

INSTALLED LOCATIONS OF PARTS

C01

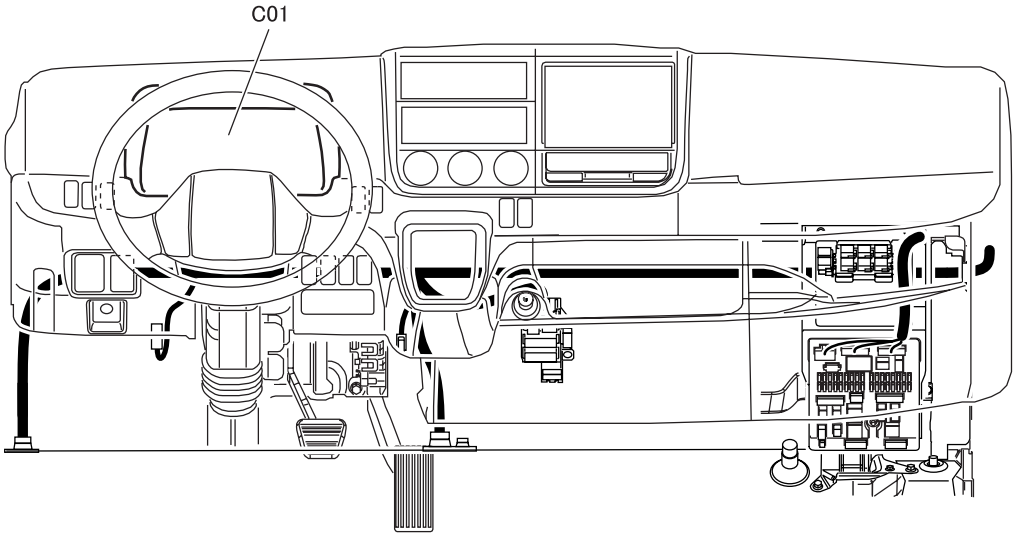

C01 Meter cluster

https://truckmanualshub.com/

M E M O

https://truckmanualshub.com/

INSTALLED LOCATIONS OF PARTS

J01 to 14

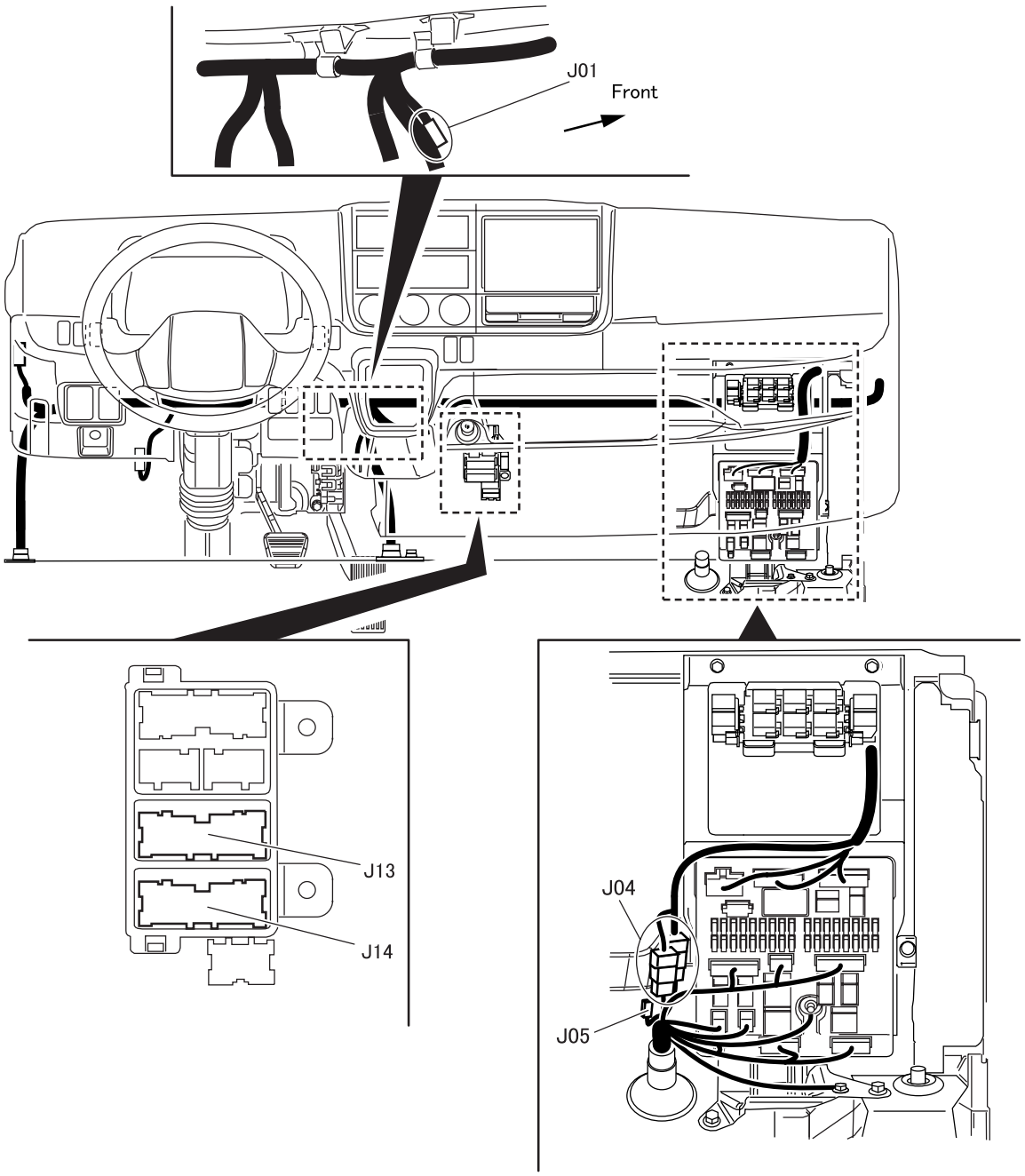

J01 Joint connector (EAB1LG) ＜Ground＞
J04 Connection of cab harness and chassis harness : [AN2A], [DD6A]
J05 Optional connector : [AK2A]
J13 Connection of cab harness and instrument panel harness : [AK22B]
J14 Connection of cab harness and instrument panel harness : [AK22A]

ECU : Electronic control unit
Indicate by connector type [ ].

13E-L05232J-1

https://truckmanualshub.com/

J17 to 21

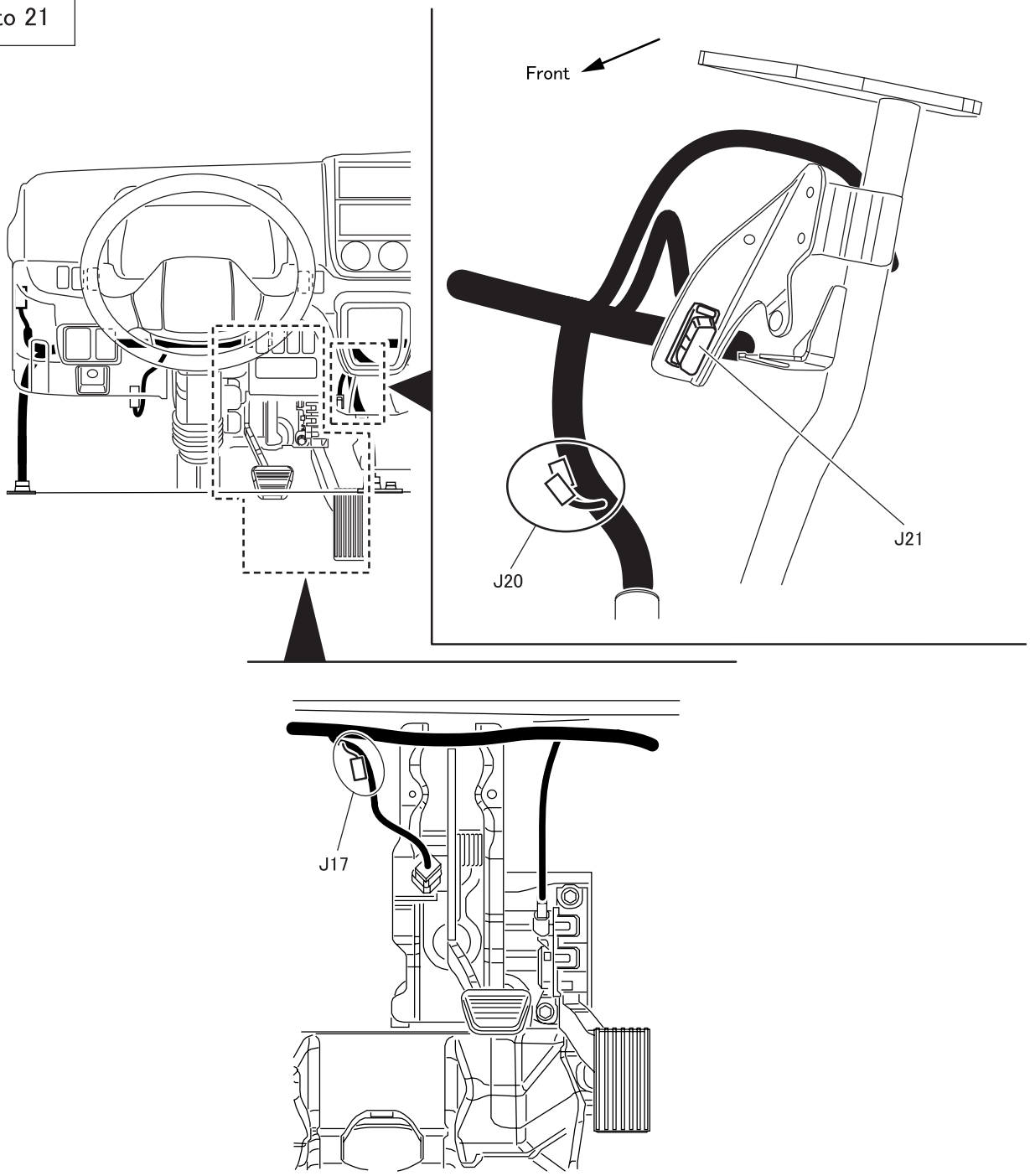

J17 Joint connector (CAN-H) <Immobilizer>
Joint connector (CAN-L) <Immobilizer>
J20 Joint connector (CAN-H) <Meter cluster>
Joint connector (CAN-L) <Meter cluster>
J21 Diagnosis connector

Indicate by connector type [ ].

https://truckmanualshub.com/

INSTALLED LOCATIONS OF PARTS

R01 to 09

(Upper view)

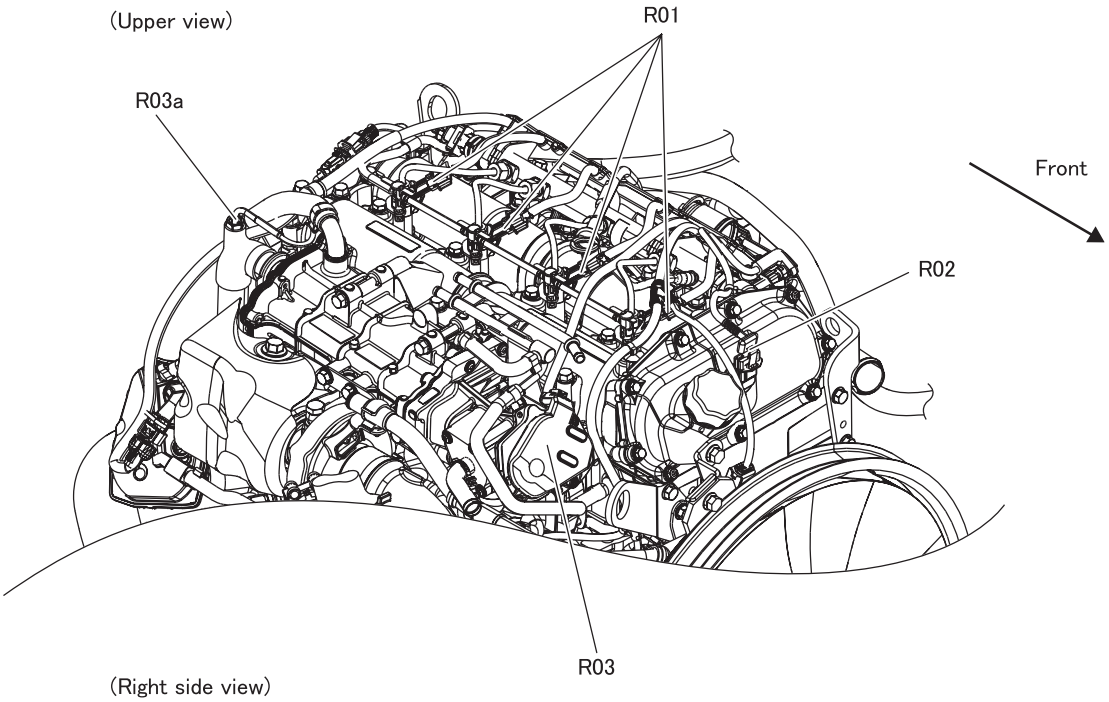

(Right side view)

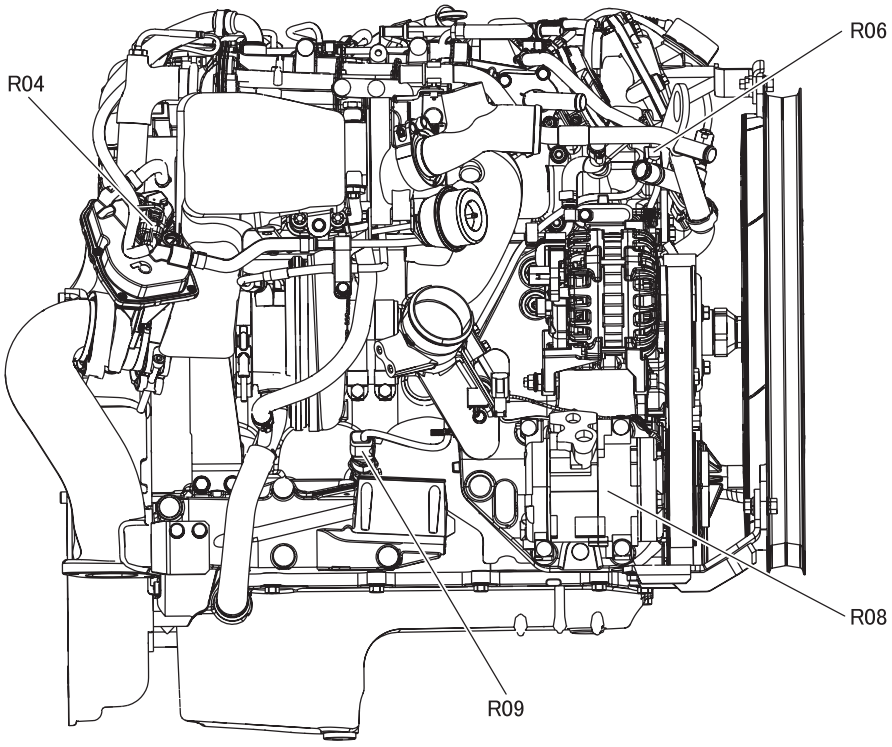

R01 Injector
R02 Camshaft timing sensor
R03 EGR actuator
R03a EGR cooler outlet temperature sensor
R04 Exhaust brake valve
R06 Engine speed sensor
R08 Magnetic clutch
R09 Blow-by pressure sensor 2

EGR : Exhaust gas recirculation

13E-L05232R-1

https://truckmanualshub.com/

R11 to 19

(Left side view)

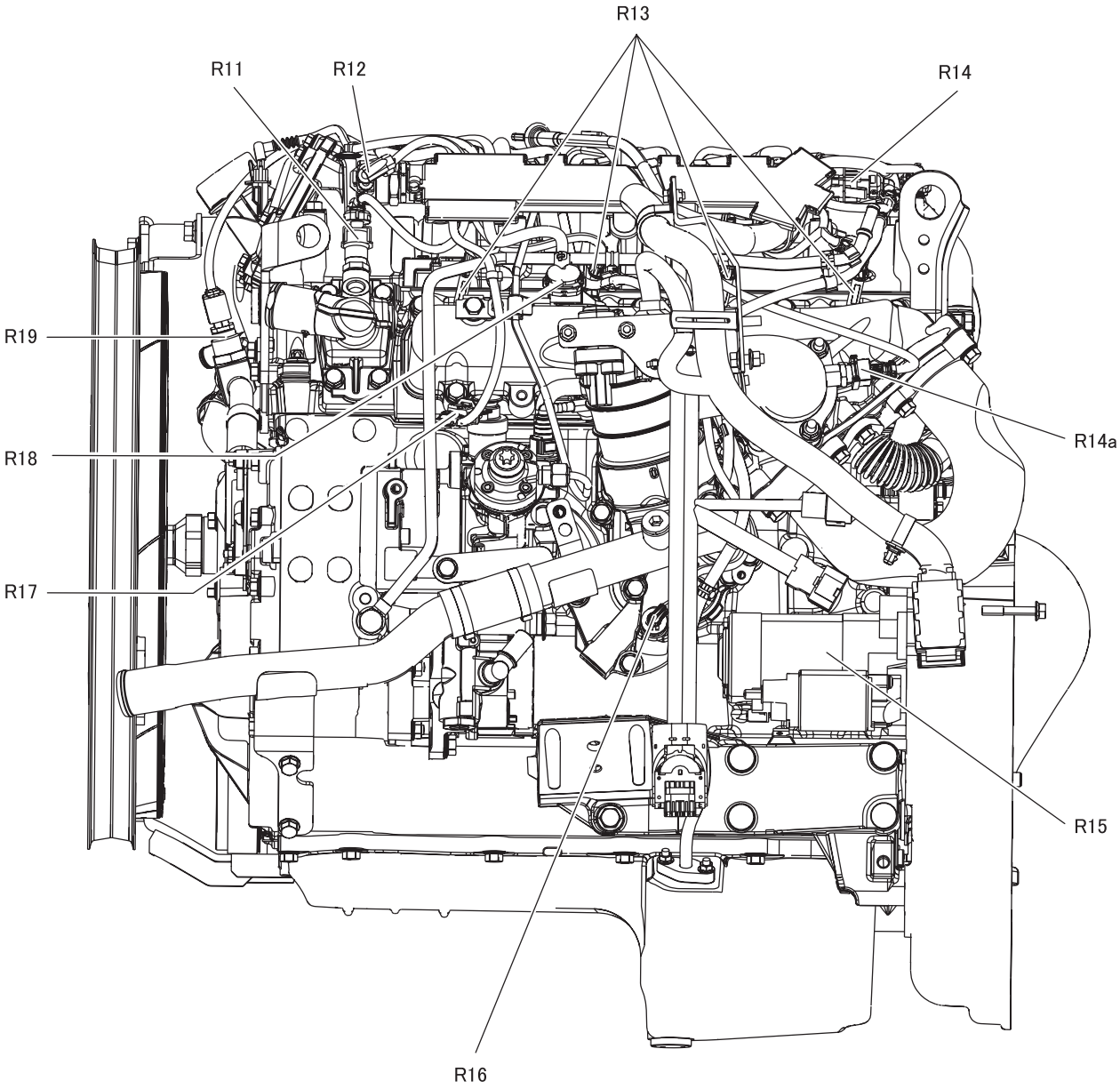

R11 Water temperature sensor
R12 Pressure regulation valve
R13 Glow plug
R14 Pressure sensor
R14a Intercooler outlet temperature sensor
R15 Starter
R16 Oil pressure switch
R17 FMU(fuel metering unit)
R18 Boost pressure and temperature sensor
R19 Blow-by pressure sensor 1

https://truckmanualshub.com/

INSTALLED LOCATIONS OF PARTS

S05

(Left side view)

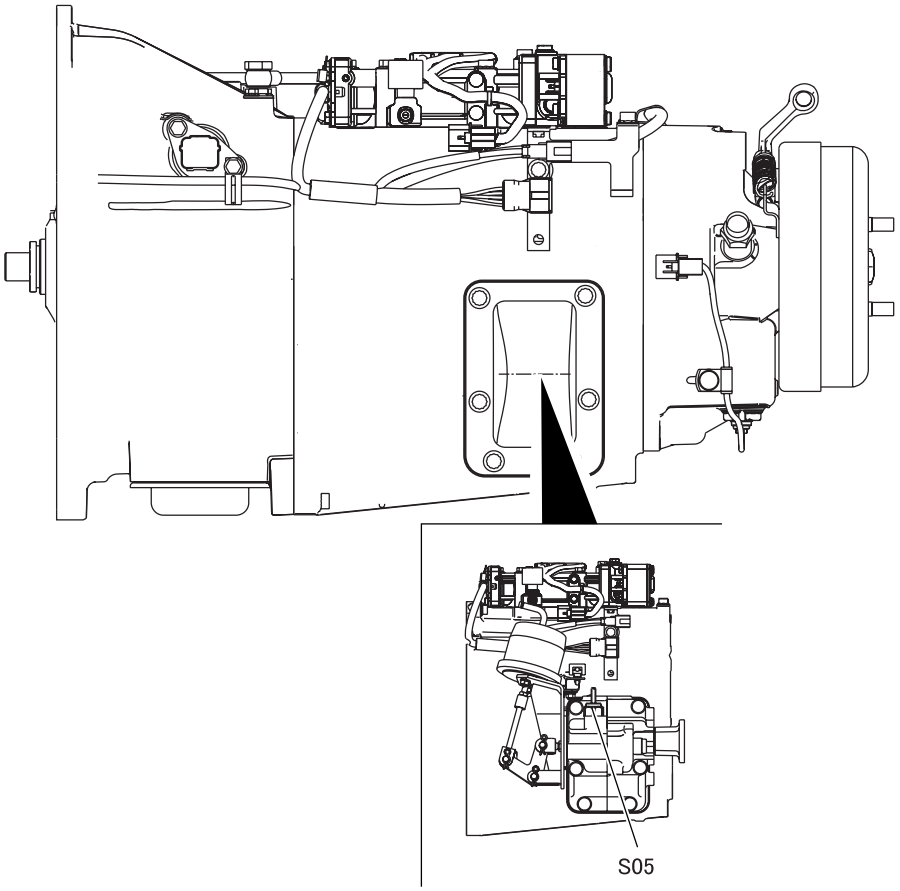

S05 Power take-off control switch

https://truckmanualshub.com/

M E M O

https://truckmanualshub.com/

T02 (Switch)

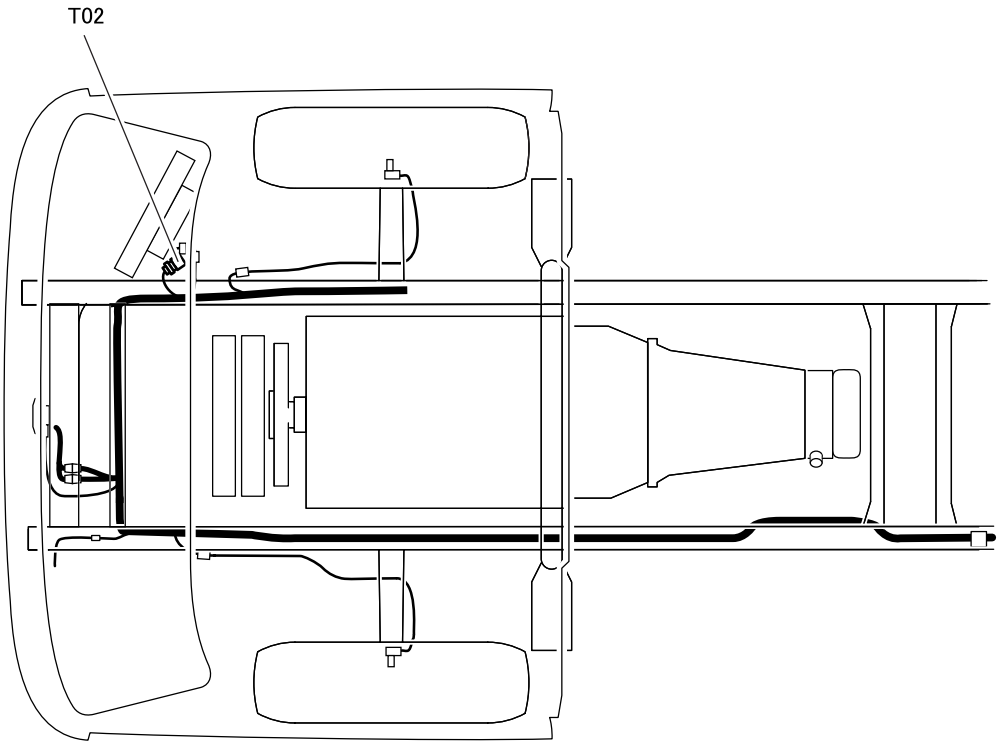

T02 Dual pressure switch ＜Air−conditioner＞

https://truckmanualshub.com/

T11 to 12 (Sensor)

<FE>

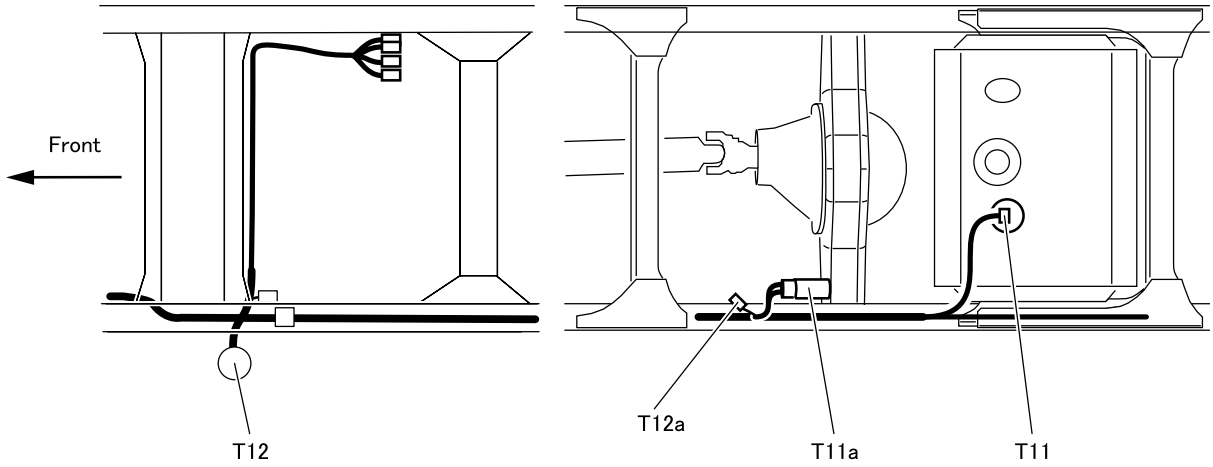

<FG>

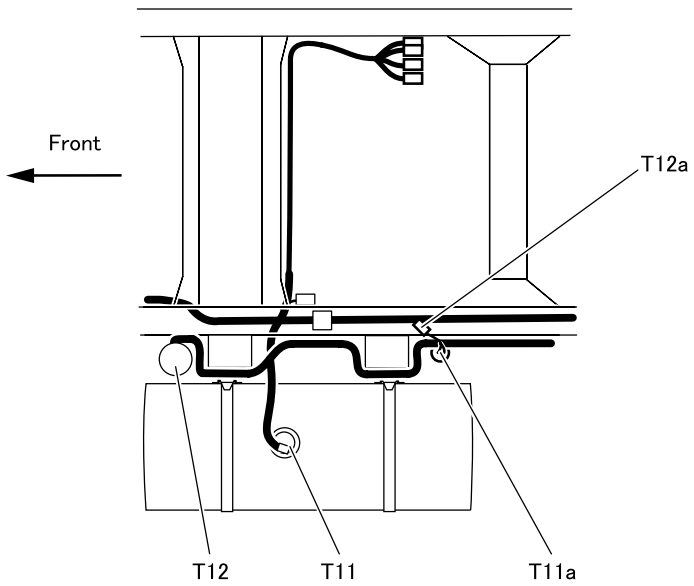

T11	Fuel level sensor
T11a	Fuel pump
T12	Fuel filter
T12a	Diode

https://truckmanualshub.com/

T16 (Sensor)

<Except crew cab>

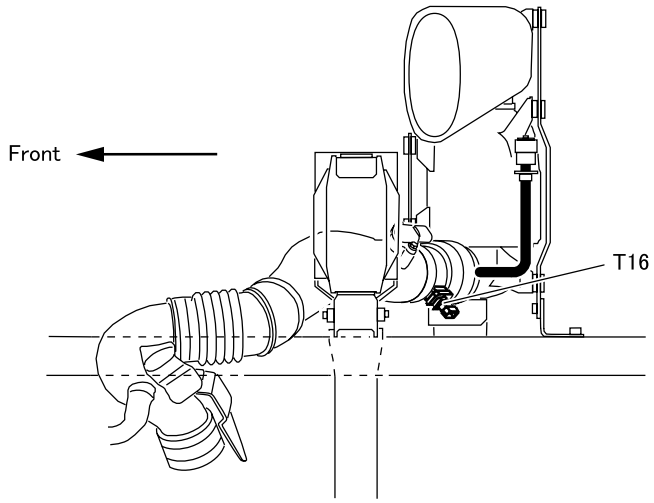

<Crew cab>

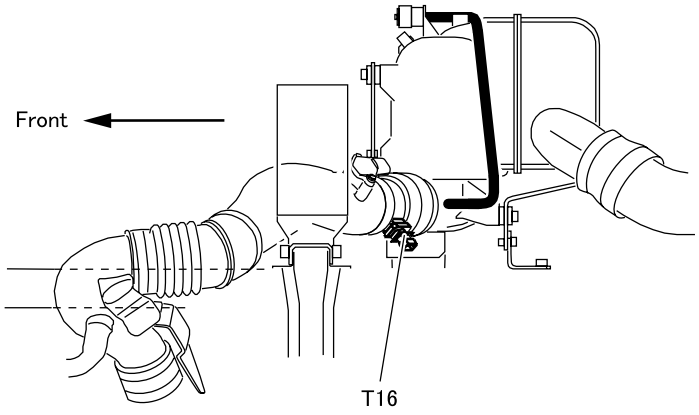

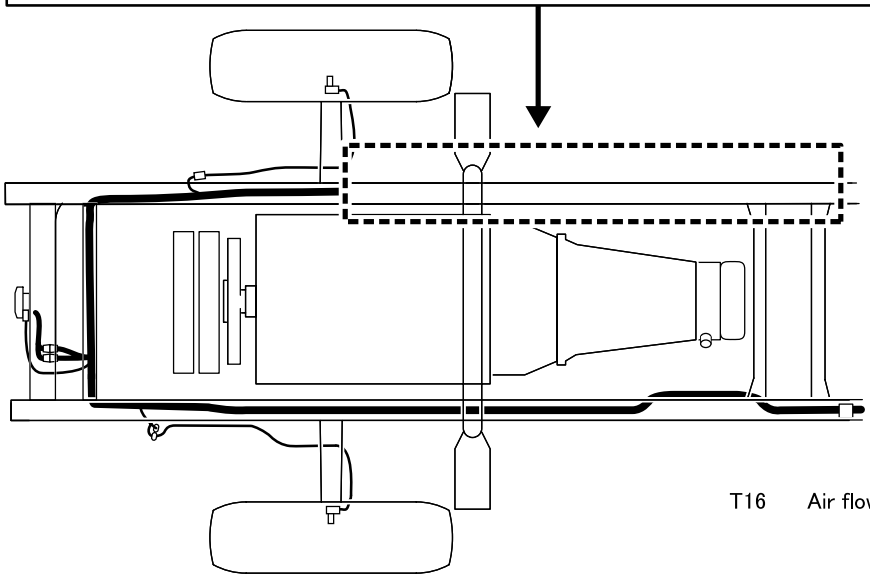

T16 Air flow and intake air temperature sensor

13E-L05232T-3

https://truckmanualshub.com/

T21 to T24 (Sensor)

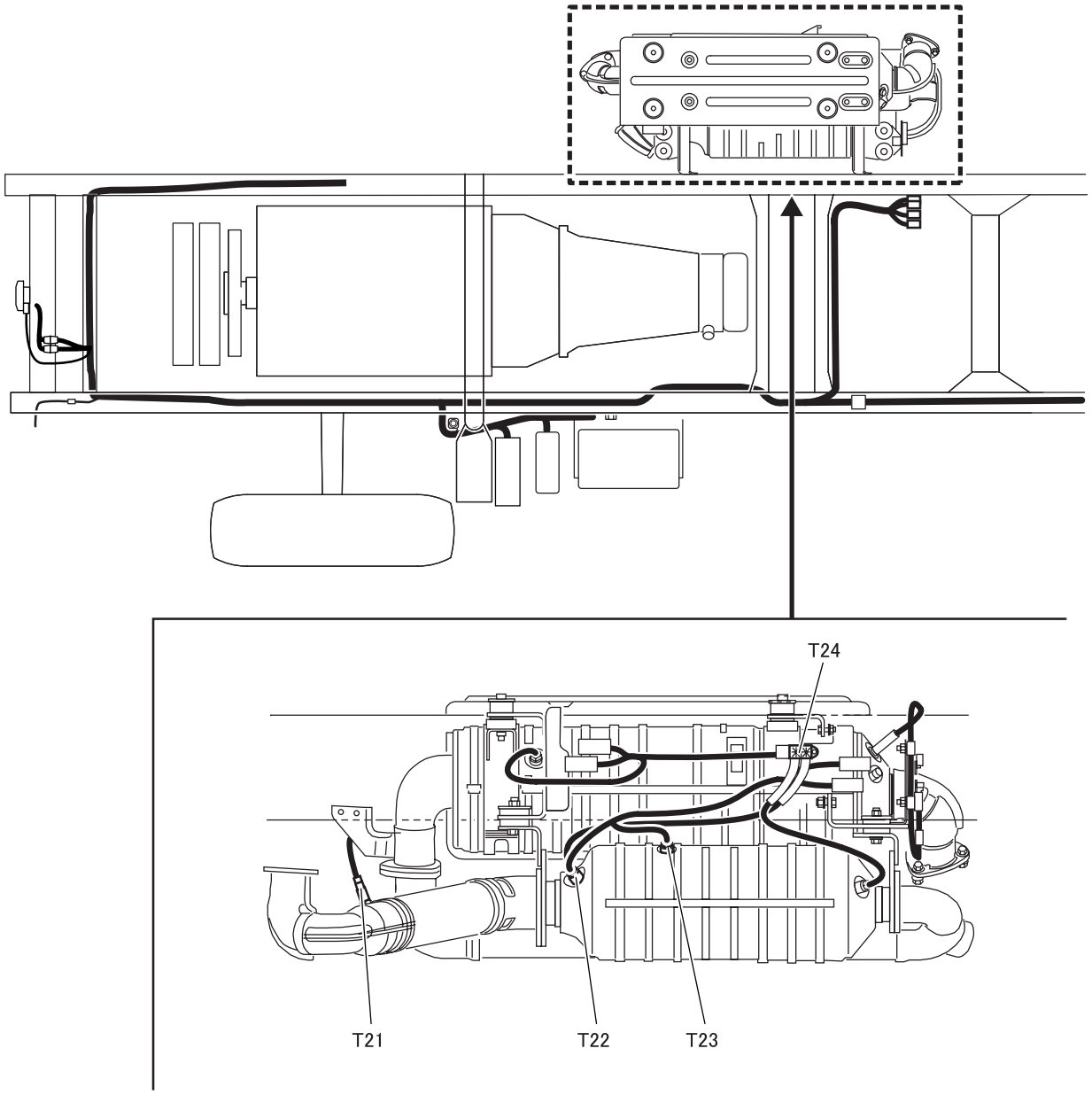

T21 Lambda sensor
T22 Exhaust gas temperature sensor 1
T23 Exhaust gas temperature sensor 2
T24 DPF differential pressure sensor

DPF : Diesel particulate filter

https://truckmanualshub.com/

INSTALLED LOCATIONS OF PARTS

U01 to 06

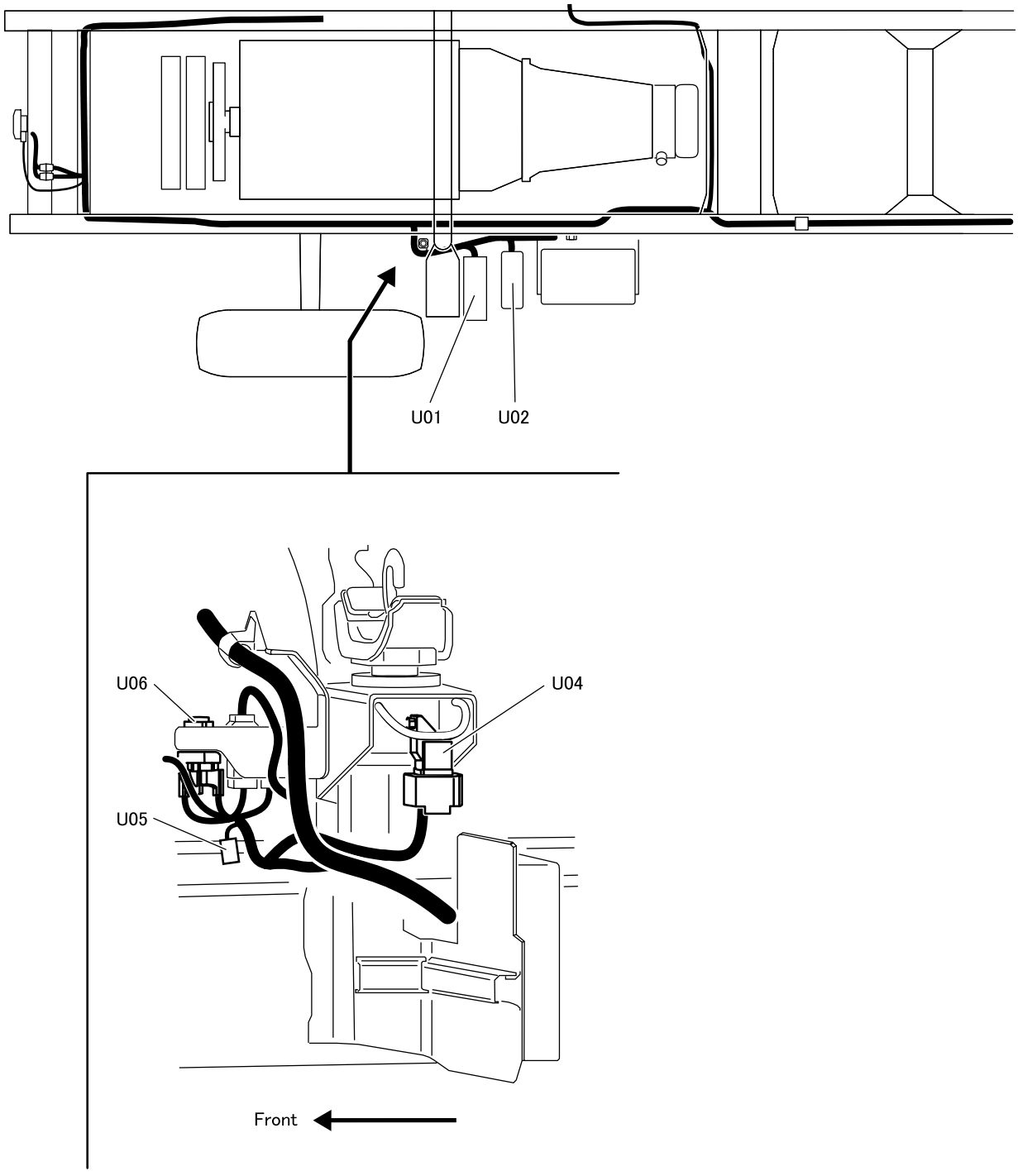

U01 Engine ECU
U02 High-current fuse box
U04 Glow ECU
U05 Diode (for starter relay)
U06 Starter relay

ECU : Electronic control unit

13E-L05232U

https://truckmanualshub.com/

V01 to 05

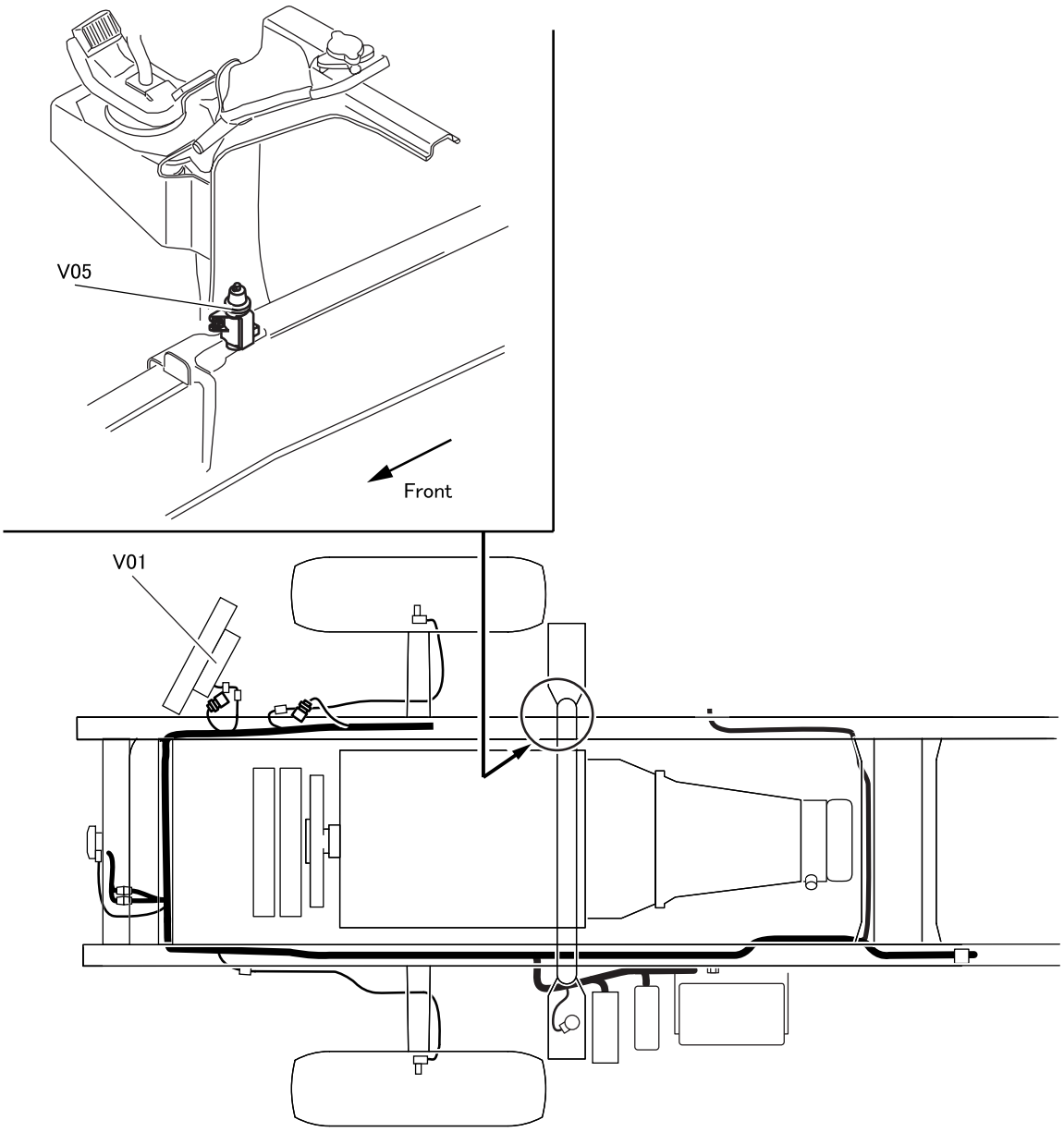

V01 Condenser fan motor
V05 Vacuum modulator

https://truckmanualshub.com/

INSTALLED LOCATIONS OF PARTS

W01 to 08

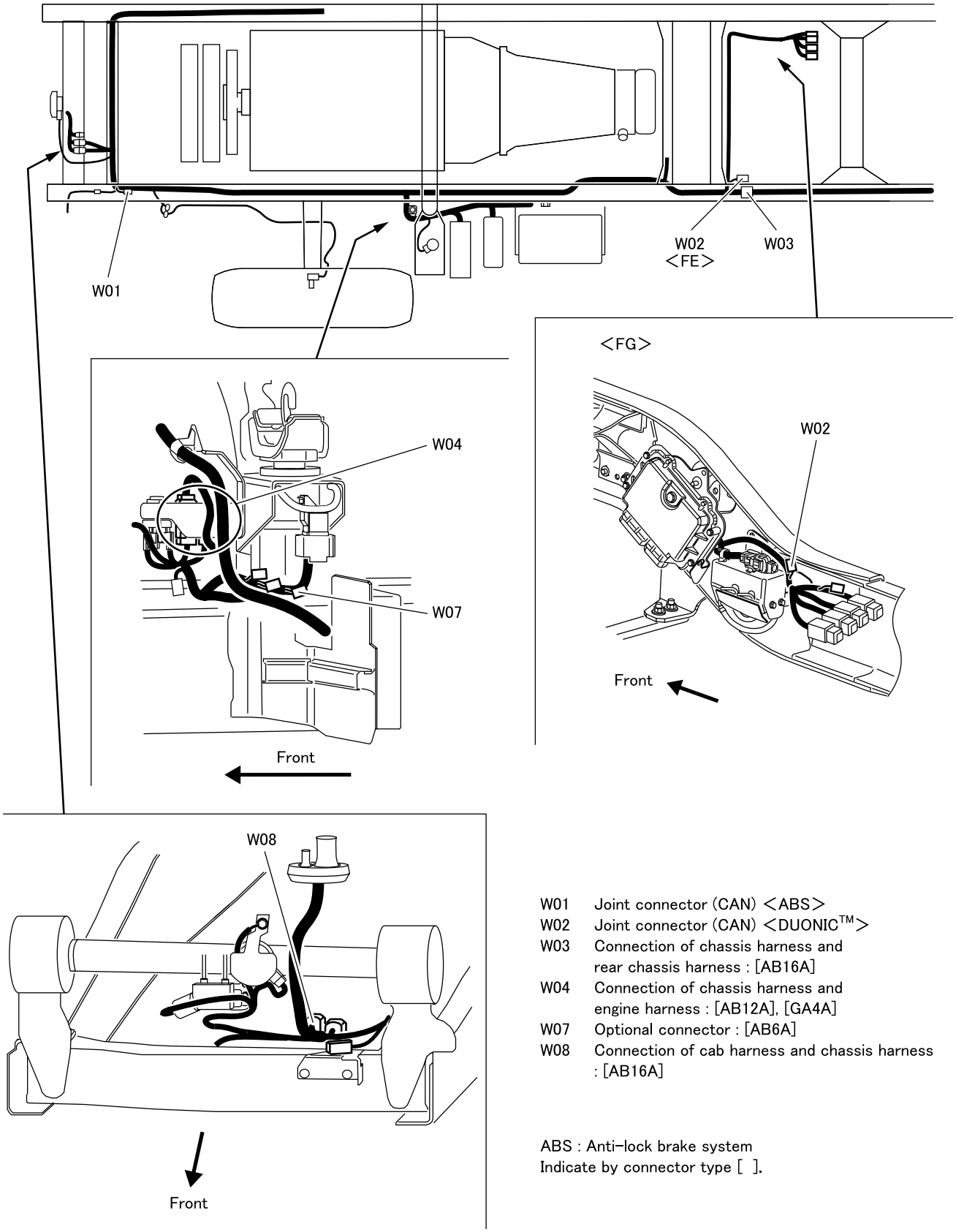

W01 Joint connector (CAN) <ABS>
W02 Joint connector (CAN) <DUONIC™>
W03 Connection of chassis harness and rear chassis harness : [AB16A]
W04 Connection of chassis harness and engine harness : [AB12A], [GA4A]
W07 Optional connector : [AB6A]
W08 Connection of cab harness and chassis harness : [AB16A]

ABS : Anti-lock brake system
Indicate by connector type [ ].

13E-L05232W-1

https://truckmanualshub.com/

W16 to 20

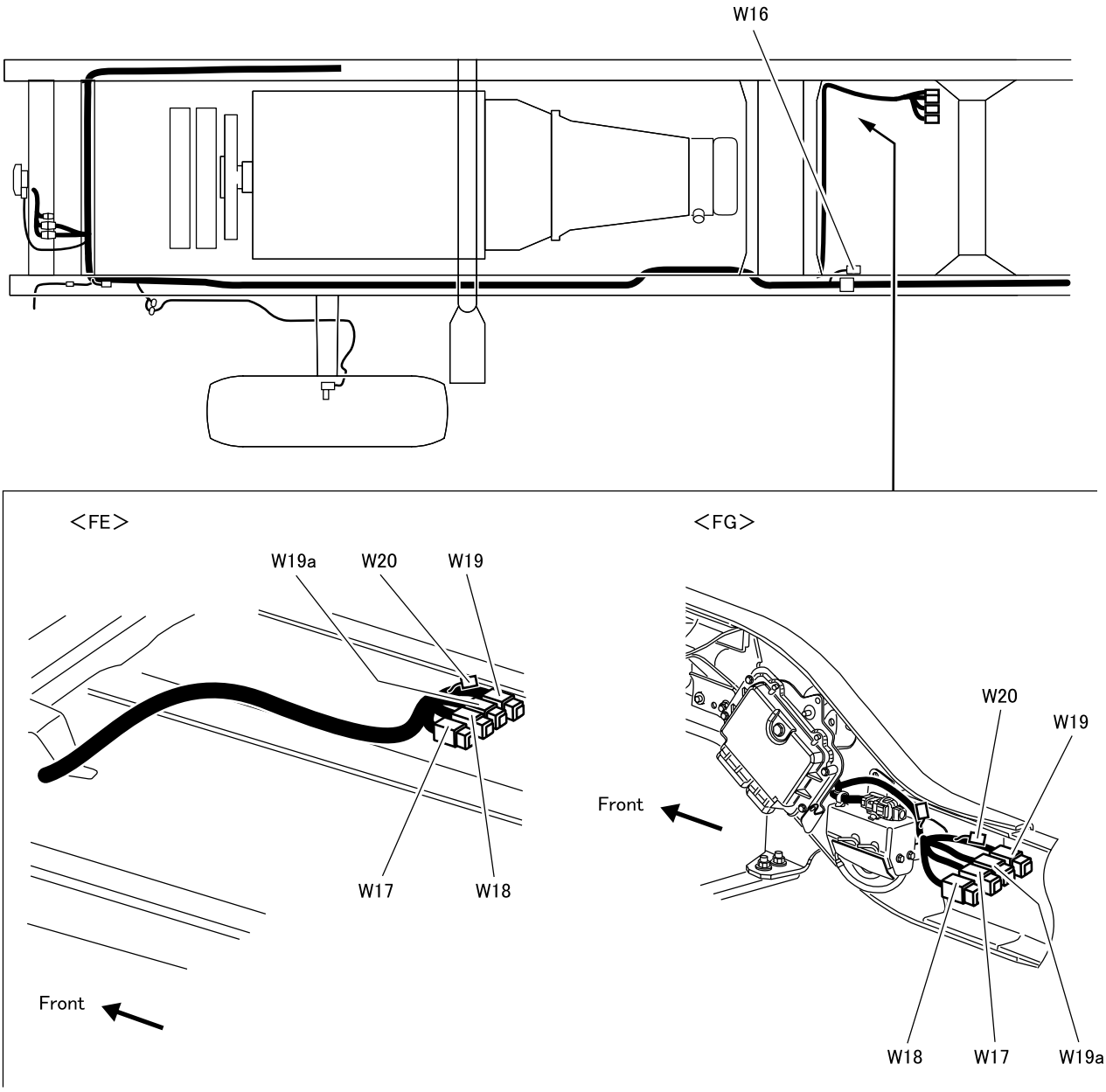

W16 Connection of chassis harness and fuel harness : [AB12A] <FG>
W17 Connection of chassis harness and DEF tank harness : [AB16A]
W18 Connection of chassis harness and DEF tank harness : [AC4A]
W19 Connection of chassis harness and ATS harness : [AB8A]
W19a Connection of chassis harness and ATS harness : [AB12A]
W20 Joint connector (CAN) <Engine control>

DEF : Diesel exhaust fluid
Indicate by connector type [ ].

https://truckmanualshub.com/

INSTALLED LOCATIONS OF PARTS

W27

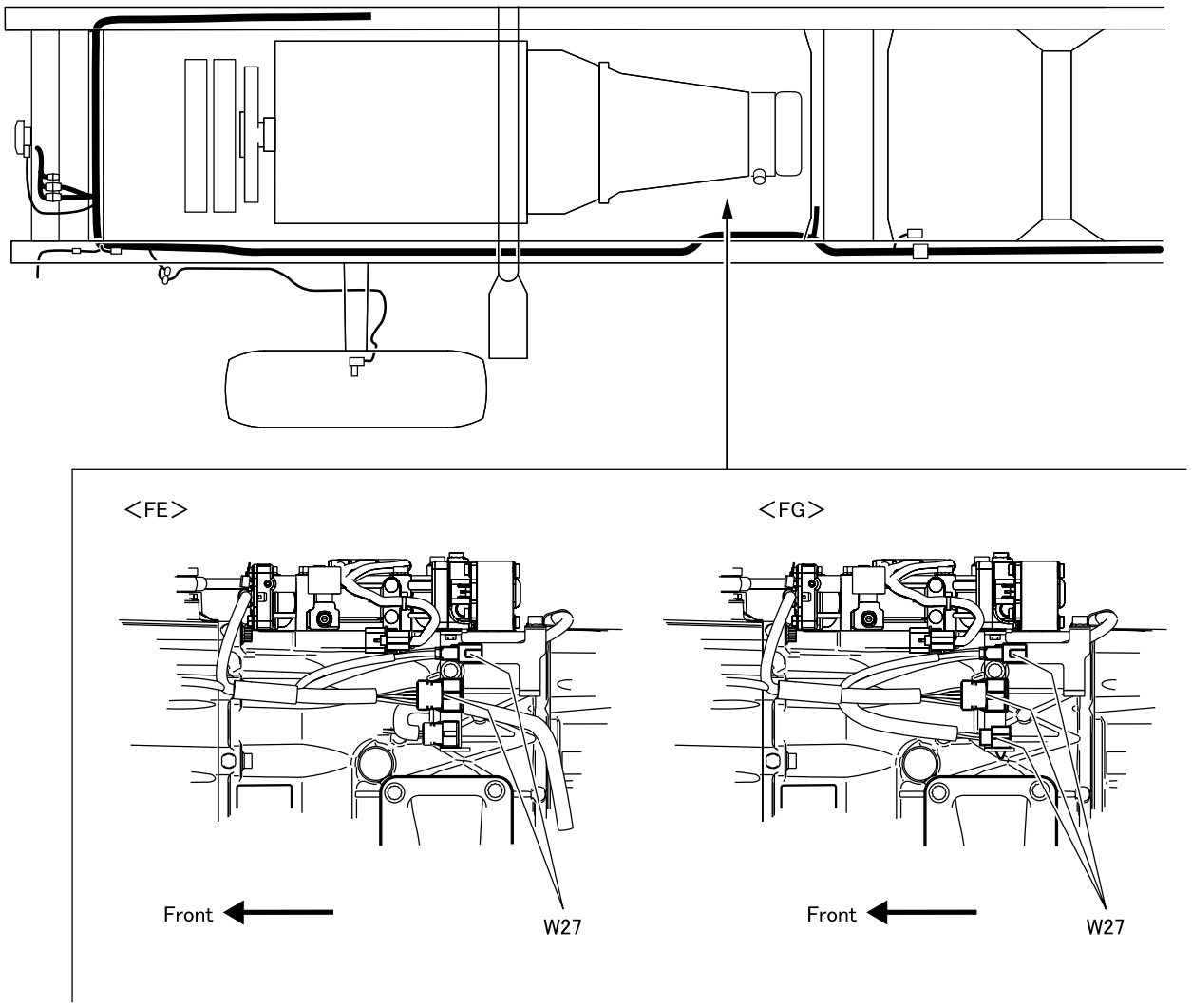

W27 Connection of chassis harness and DUONIC™ harness
: [AB8A], [AC1A]

Indicate by connector type [ ].

https://truckmanualshub.com/

M E M O

https://truckmanualshub.com/

INSTALLED LOCATIONS OF PARTS

X11 <BlueTec® exhaust gas aftertreatment>

<Except crew cab>

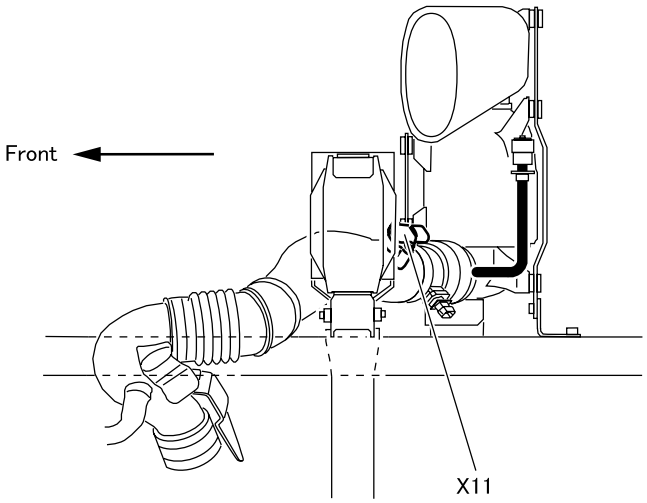

<Crew cab>

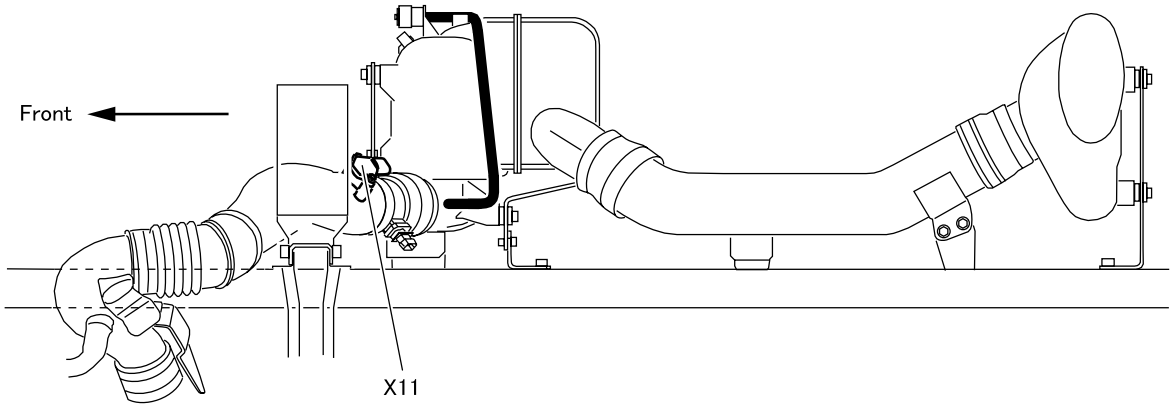

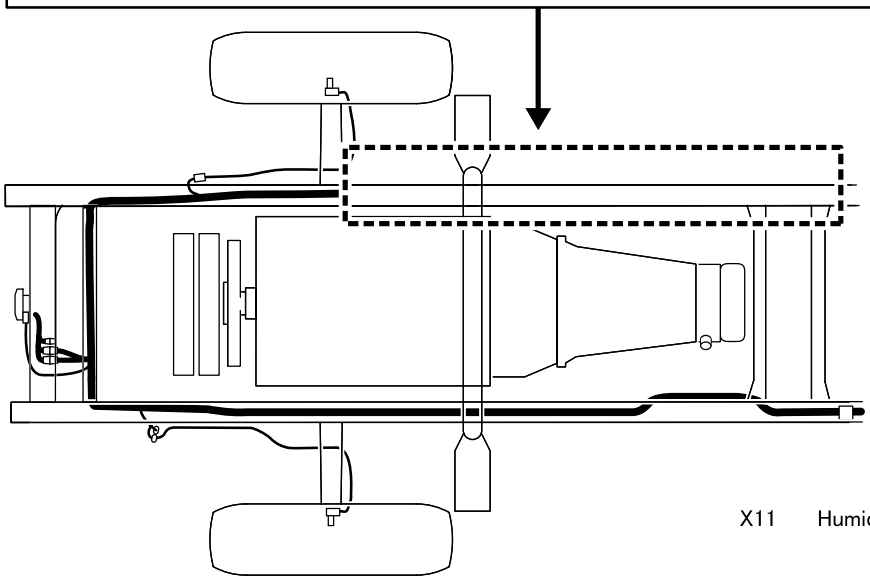

X11 Humidity and intake air temperature sensor

13E-L05232X-1

https://truckmanualshub.com/

X16 to 19 <BlueTec® exhaust gas aftertreatment>

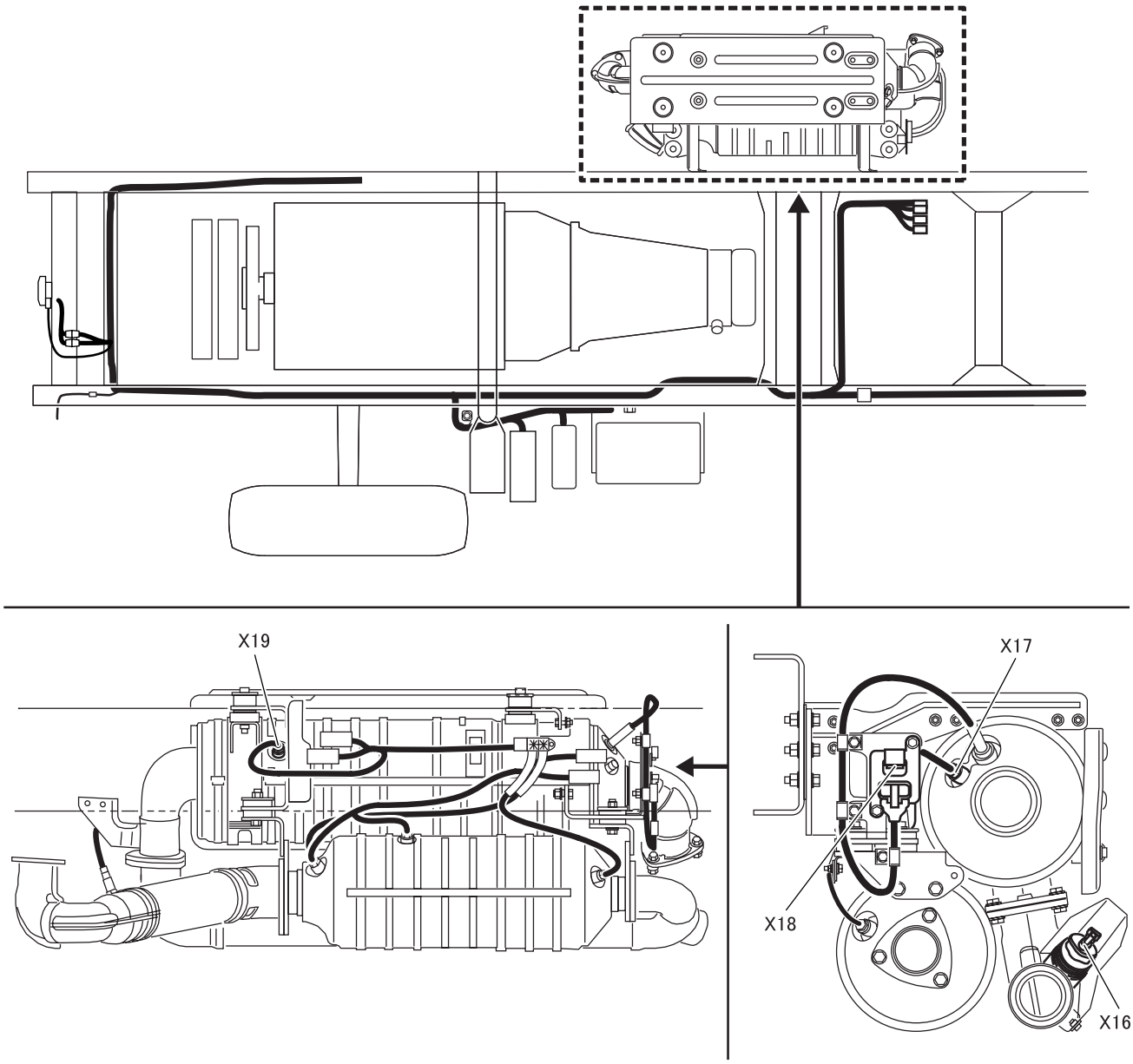

X16 DEF dosing module
X17 SCR temperature sensor 2
X18 NOx sensor
X19 SCR temperature sensor 1

DEF : Diesel exhaust fluid
SCR : Selective catalytic reduction

https://truckmanualshub.com/

INSTALLED LOCATIONS OF PARTS

X21 to 27 <BlueTec® exhaust gas aftertreatment>

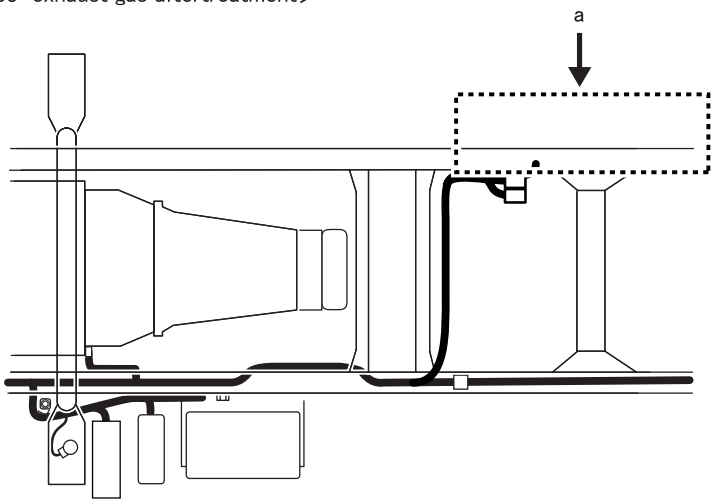

<View a>

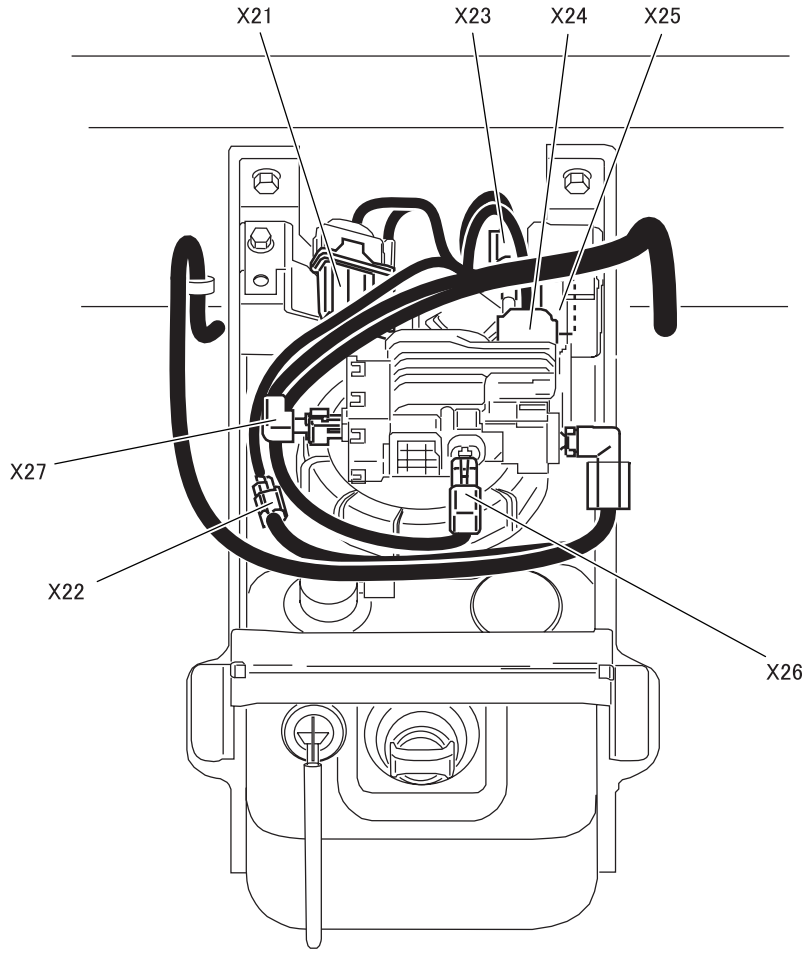

X21 DEF heater power unit
X22 DEF line heater
X23 DEF temperature sensor and DEF tank heater
X24 DEF supply module (motor and heater)
X25 DEF tank level unit
X26 DEF pressure sensor
X27 DEF reverting valve

DEF : Diesel exhaust fluid

13E-L05232X-3

https://truckmanualshub.com/

M E M O

https://truckmanualshub.com/

INSTALLED LOCATIONS OF PARTS

[12] to [17] Chassis ground

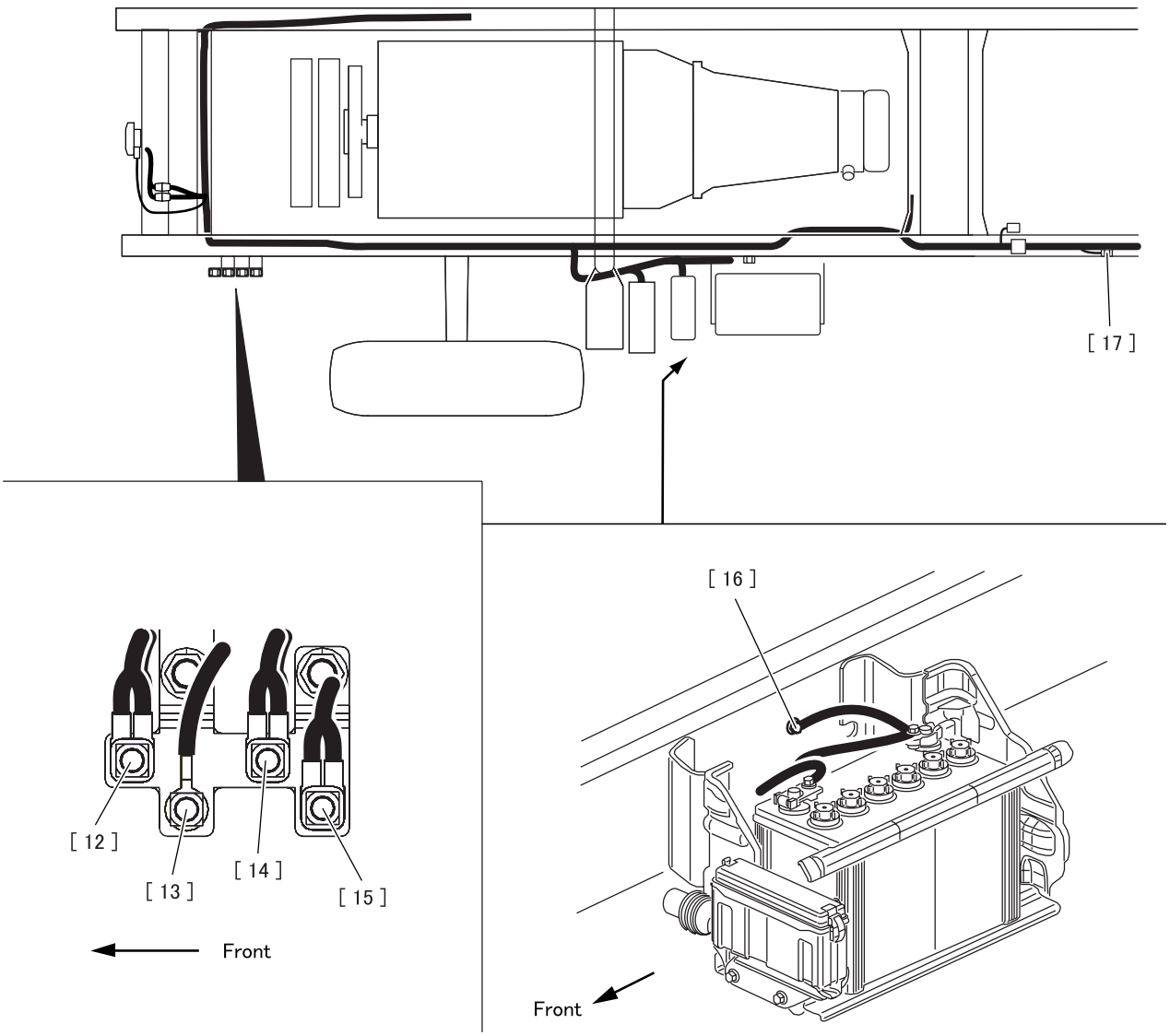

https://truckmanualshub.com/

Location	Circuit No.	Wire diameter - wire color	Destination	Remarks
[12]	CFE1	1.25-B	Condenser fan motor	FE
	EAC1	1.25-B	JOINT (EAC1)	
	FHE1	1.25-B	Fuel filter	FG
	FHE1S			
	HSE1	2-B	DEF tank	BlueTec® exhaust gas aftertreatment
	HSE2	2-B		
[13]	EAB1	8-B	SAM	
[14]	EDE1	2.5-B	Engine ECU	
	EDE2	2.5-B		
	EDE3	2.5-B		
	EXE1	1.25-B		
[15]	FHE1	1.25-B	Fuel filter	FE
[16]	—	15-B	Battery	FG
	BTE3	30-BY	Battery	FE
[17]	FPE1X	0.85-B	Fuel pump	FE

SAM : Signal detect and actuation modules
ECU : Electronic control unit
DEF : Diesel exhaust fluid

https://truckmanualshub.com/

ELECTRIC CIRCUIT DIAGRAM

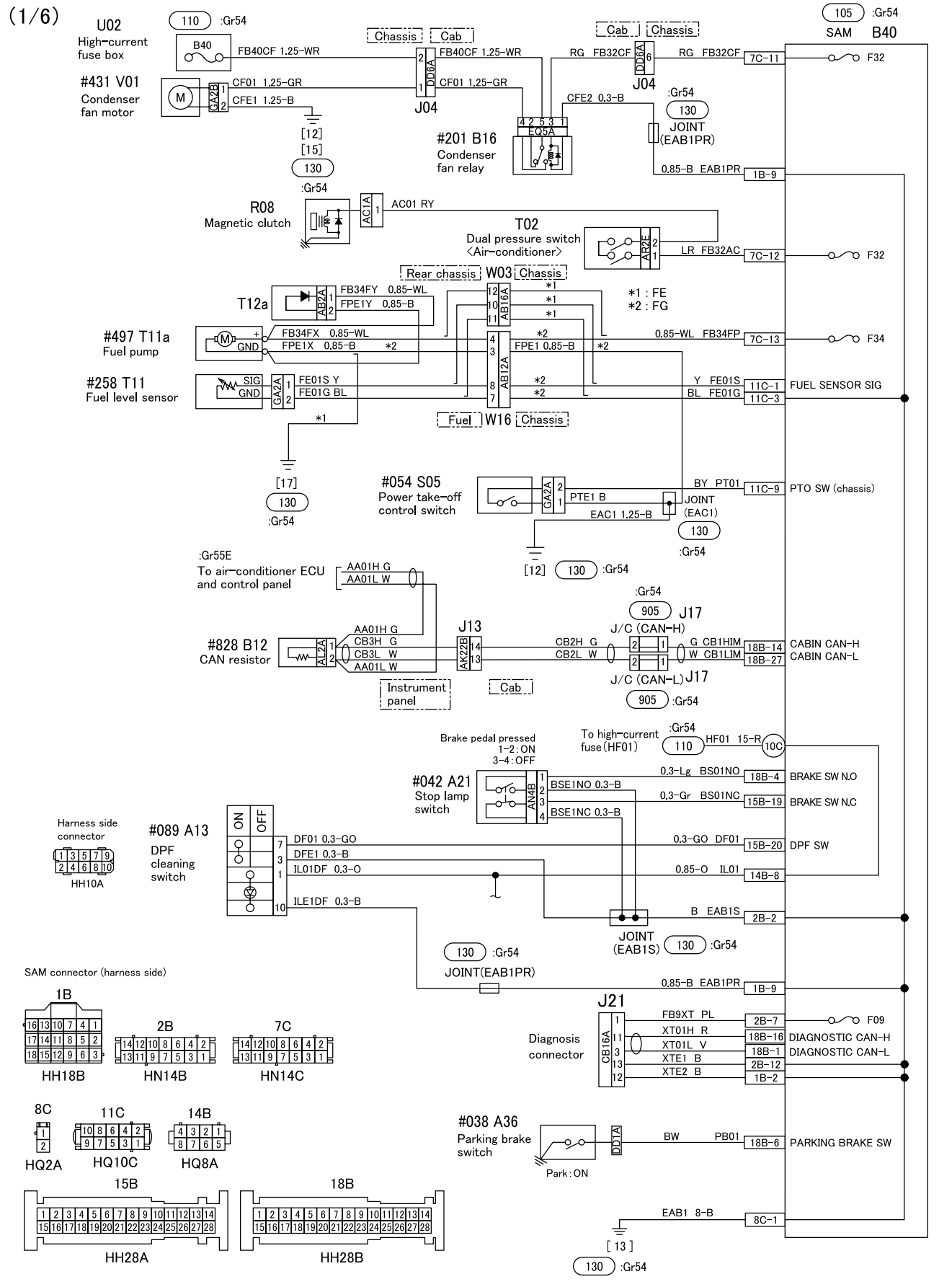

13E-C07348-1

https://truckmanualshub.com/

(2/6)

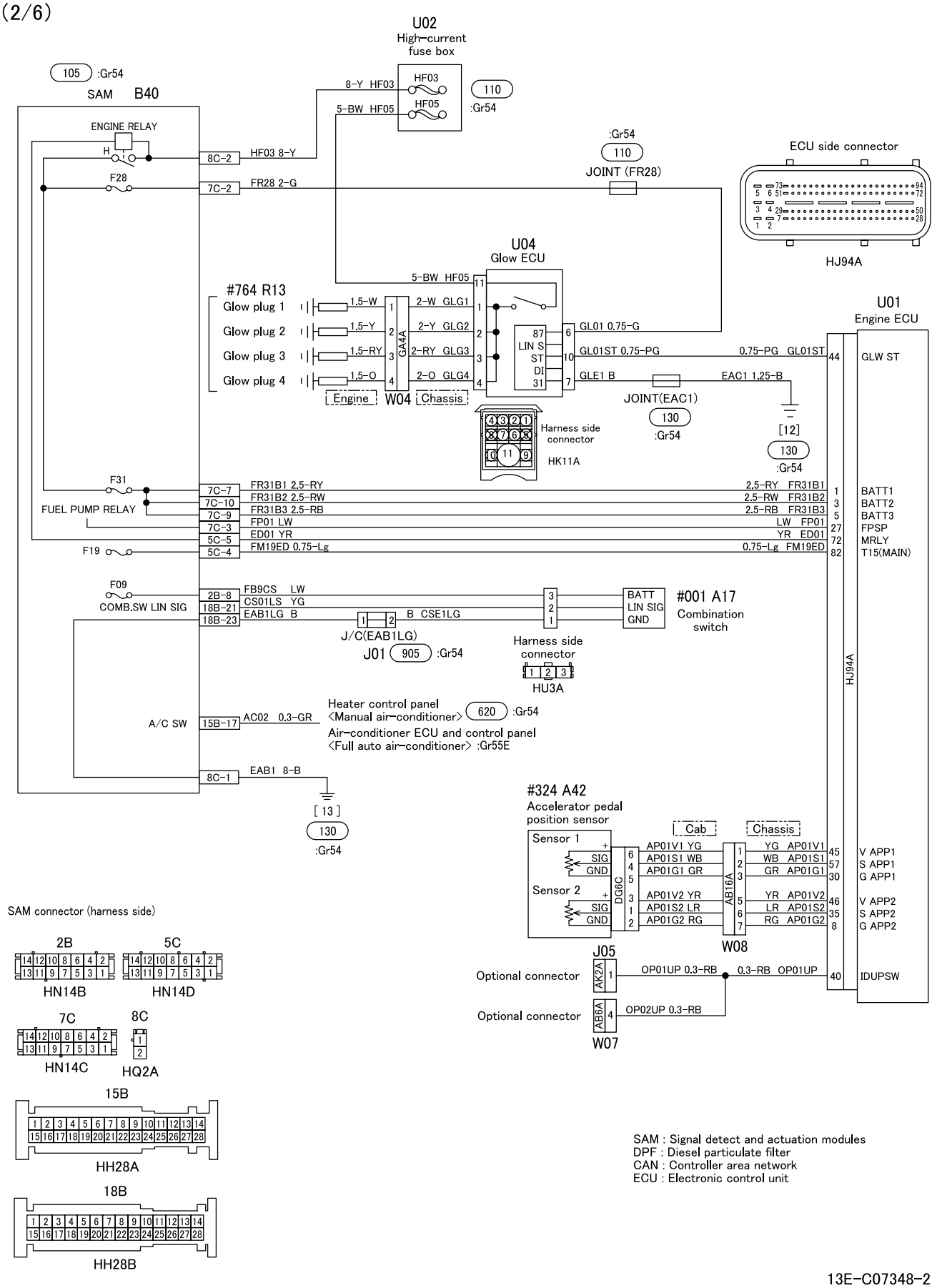

13E-C07348-2

https://truckmanualshub.com/

ELECTRIC CIRCUIT DIAGRAM

(3/6)

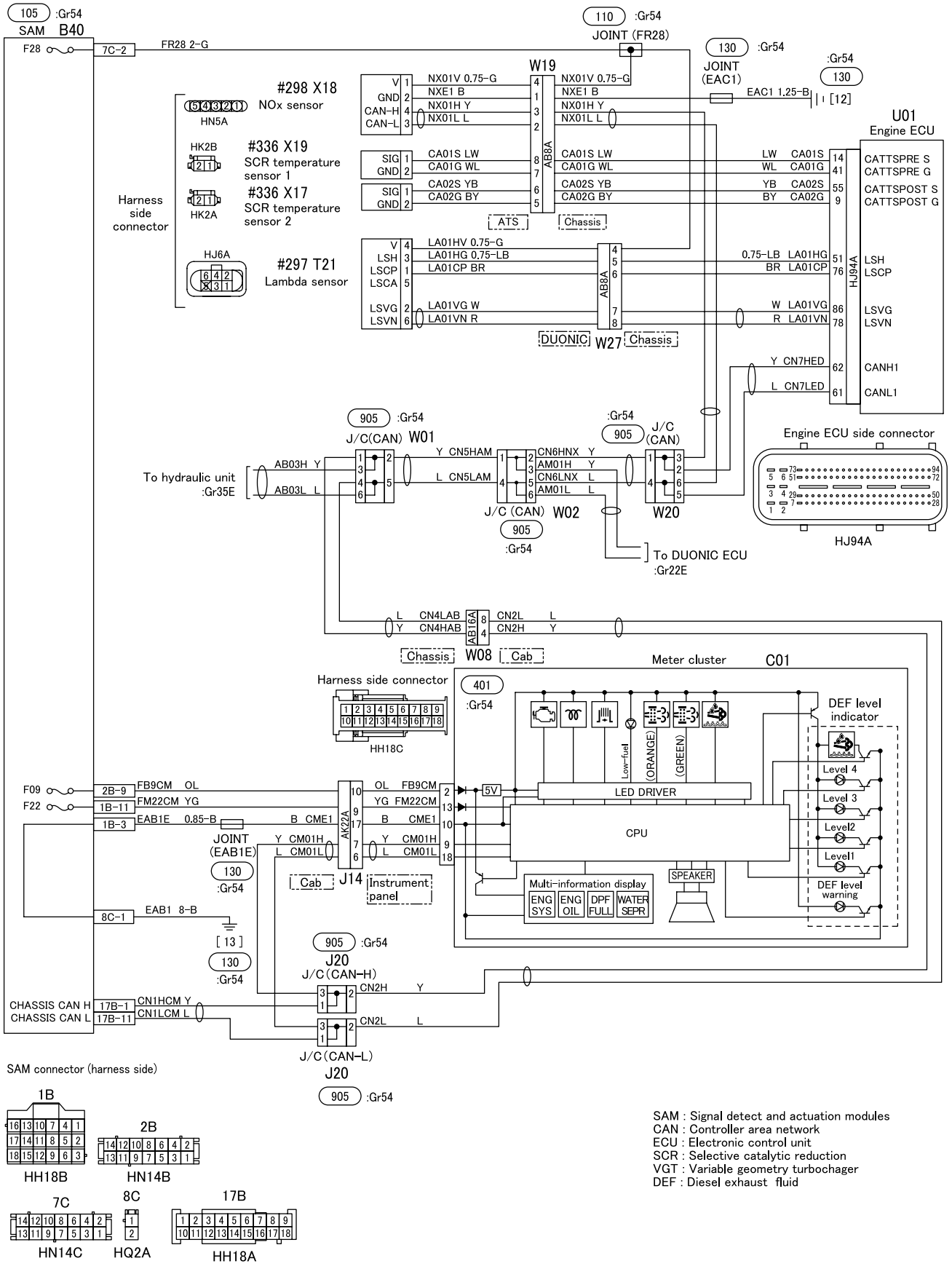

SAM : Signal detect and actuation modules
CAN : Controller area network
ECU : Electronic control unit
SCR : Selective catalytic reduction
VGT : Variable geometry turbochager
DEF : Diesel exhaust fluid

13E-C07348-3

https://truckmanualshub.com/

(4/6)

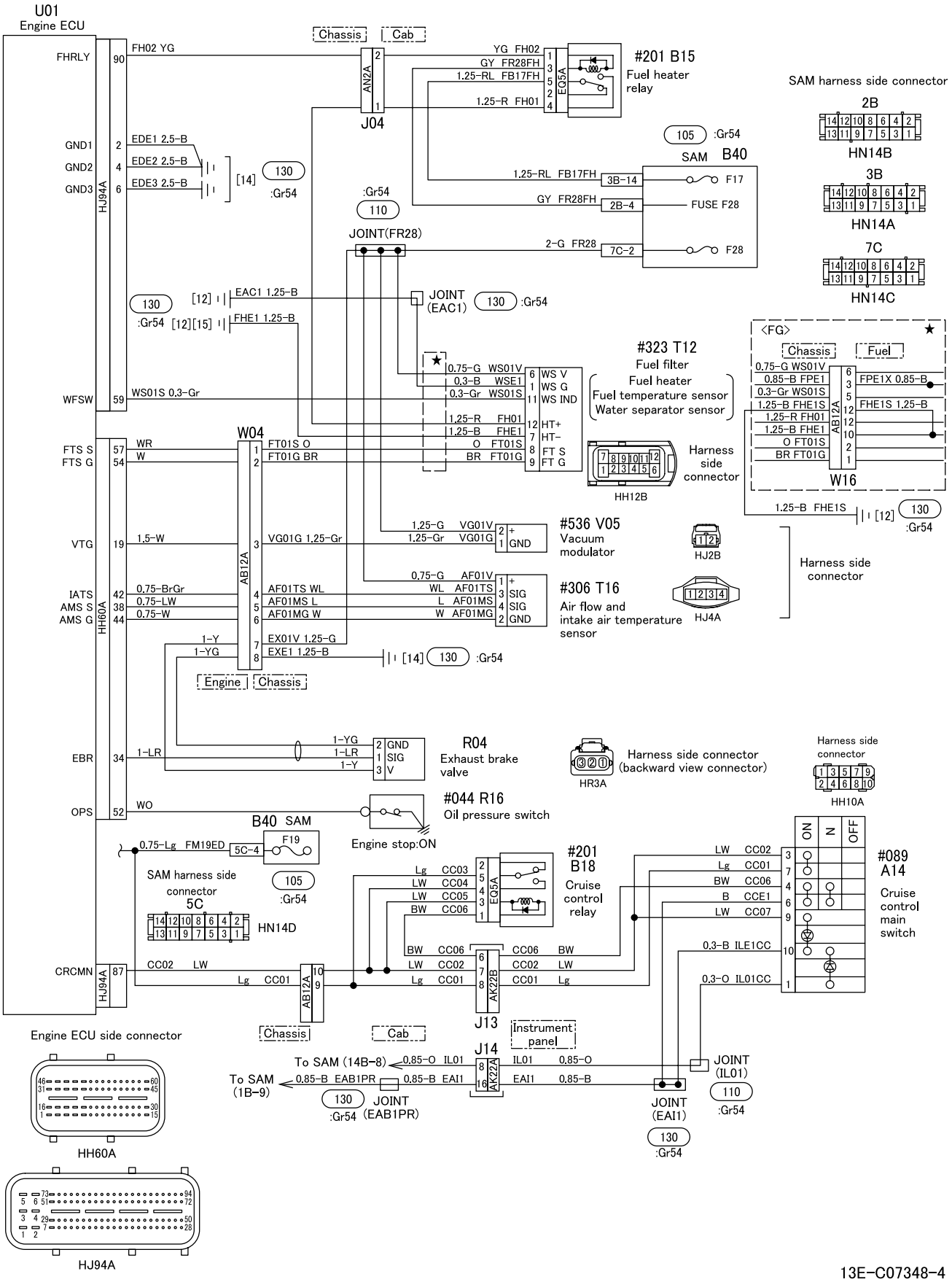

13E-C07348-4

https://truckmanualshub.com/

ELECTRIC CIRCUIT DIAGRAM

(5/6)

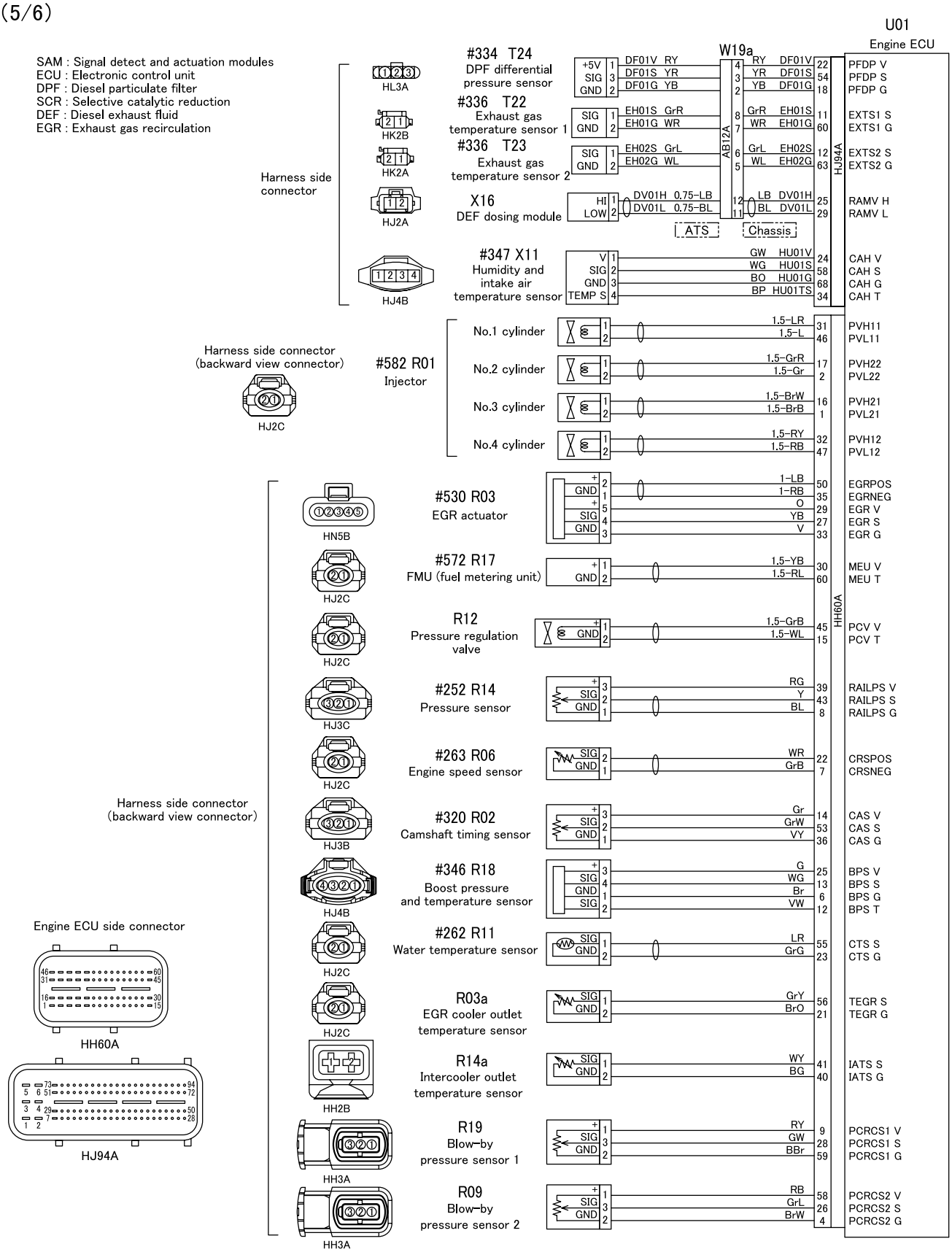

13E-C07348-5

https://truckmanualshub.com/

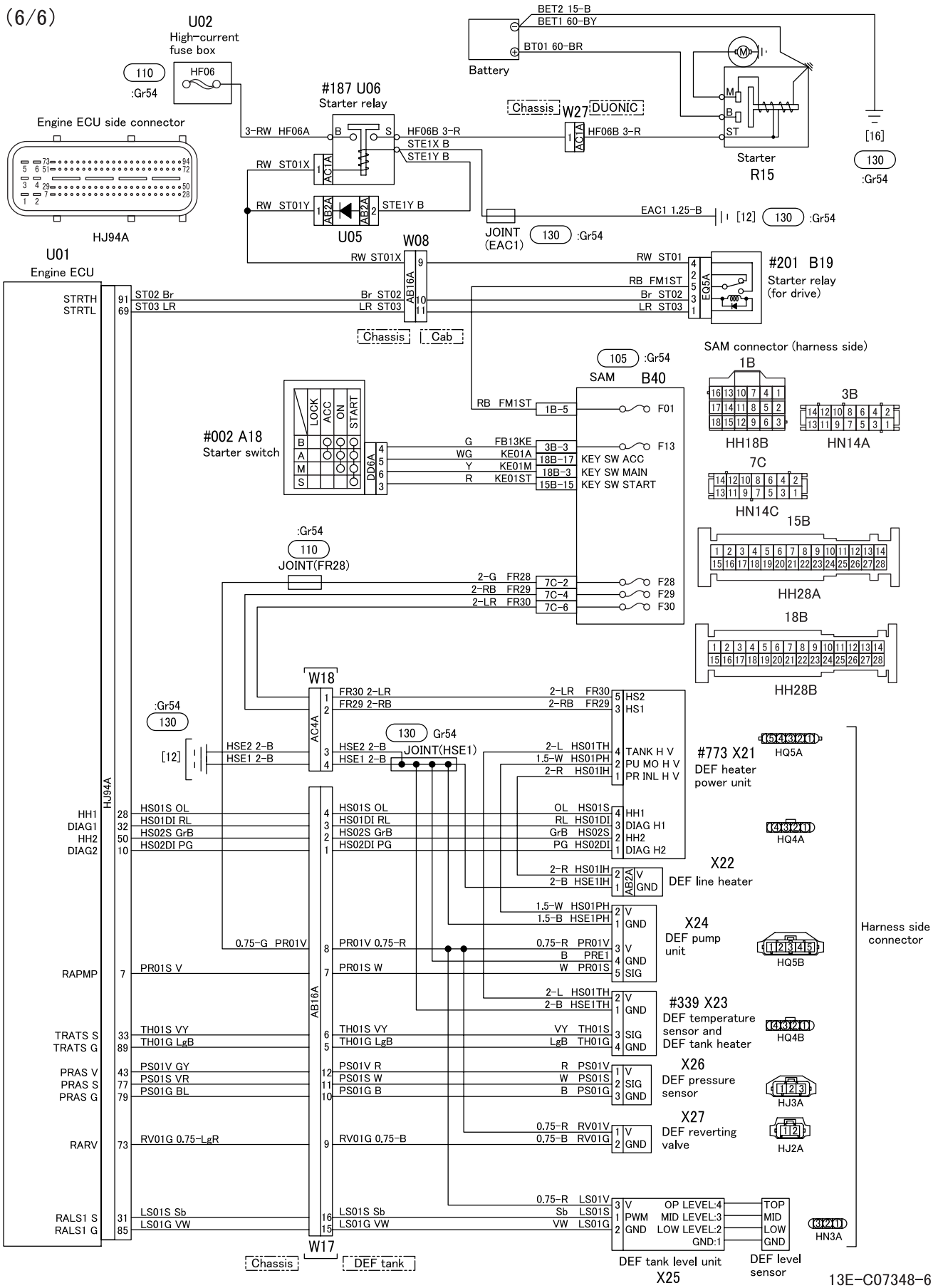

13E-C07348-6

https://truckmanualshub.com/

FUSO

Group 14

Cooling

MITSUBISHI FUSO TRUCK OF AMERICA, Inc.

Pub.No.00ELT0001-14

https://truckmanualshub.com/

INDEX

SPECIFICATIONS 14-2

STRUCTURE AND OPERATION
1. Cooling System 14-3
2. Water Pump 14-4
3. Thermostat 14-4

TROUBLESHOOTING 14-5

ON-VEHICLE INSPECTION AND ADJUSTMENT
1. Inspection of Auto Tensioner 14-6
2. Inspection of Coolant Level 14-9
3. Inspection for Coolant Leaks 14-9
4. Coolant Replacement and Cleaning of Cooling System 14-9
5. Air Bleeding of Cooling System 14-13
6. Air/Gas Leakage Test 14-13
7. Inspection of Cracks or Damage of the Belt 14-13

DISCONNECTION AND CONNECTION OF HOSES AND PIPES 14-14

RADIATOR 14-22

PRESSURE CAP, SURGE TANK 14-24

RESERVOIR TANK 14-26

COOLING FAN 14-28

BELT, WATER PUMP, DAMPER PULLEY 14-32

THERMOSTAT 14-38

https://truckmanualshub.com/

SPECIFICATIONS

Item			Specifications
Cooling system			Forced water circulation system
Water pump			Belt-driven involute type
Thermostat	Type		N.I.
	Start of opening °C {°F}		79 ± 2 {174 ± 3.6}
	Max opening °C {°F}		92 ± 2 {198 ± 3.6}
Automatic cooling fan coupling			Continuous control type (viscous coupling)
Radiator			Tube and corrugated fin type
Coolant capacity L {qts}	Except crew cab		Approx. 14 {15}
	Crew cab	With rear air conditioner	Approx. 15.1 {16}
		With rear heater	Approx. 15.2 {16}

https://truckmanualshub.com/

1. Cooling System

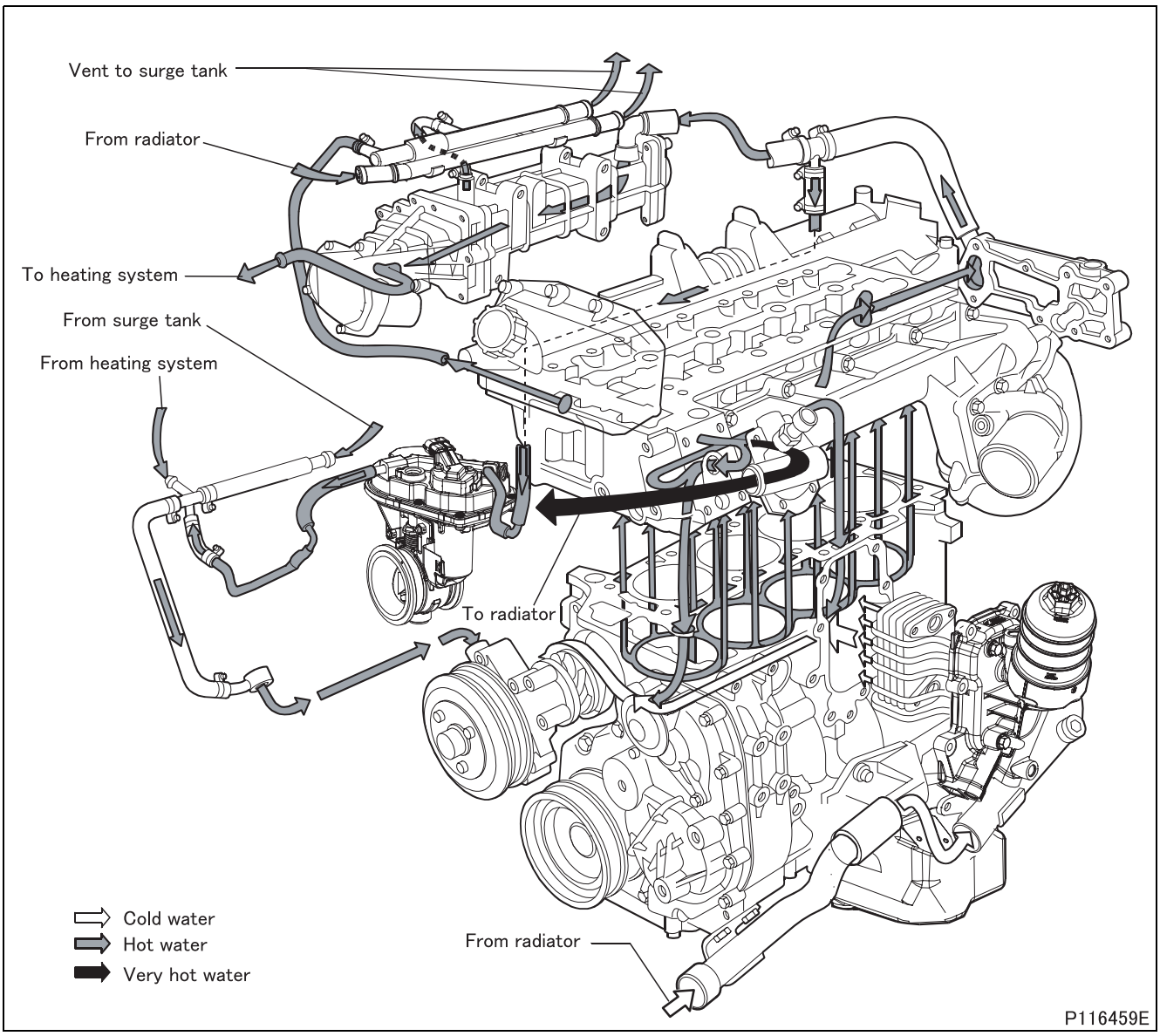

- The engine cooling system is the type with forced circulation in a closed circuit. It comprises the following parts.
  - A surge tank.
  - An engine cooling module to dissipate the heat taken from the engine by the coolant with a radiator.
  - An oil cooler to cool the lubricating oil.
  - A water pump incorporated in the crankcase.
  - A cooling fan activated by a viscous coupling.
  - A thermostat governing the circulation of the coolant.
- The water pump driven by a V belt by the crankshaft sends coolant into the crankcase and into the cylinder head.
- When the coolant temperature reaches and exceeds the working temperature, it causes the thermostat to open and the fluid is channelled from there to the radiator and is cooled by the fan.
- The pressure in the system due to the change in temperature is governed by the outlet and inlet valves incorporated in the surge tank pressure cap.
- The outlet valve has the following twofold function.
  - To keep the system slightly pressurized so as to raise the boiling point of the coolant.
  - To discharge into the atmosphere the excess pressure produced in case of high coolant temperatures.

https://truckmanualshub.com/

- The function of the inlet valve is to permit transferring the coolant from the surge tank to the radiator when a lower pressure is created in the system due to the reduction in volume of the coolant as a result of its temperature lowering.

2. Water Pump

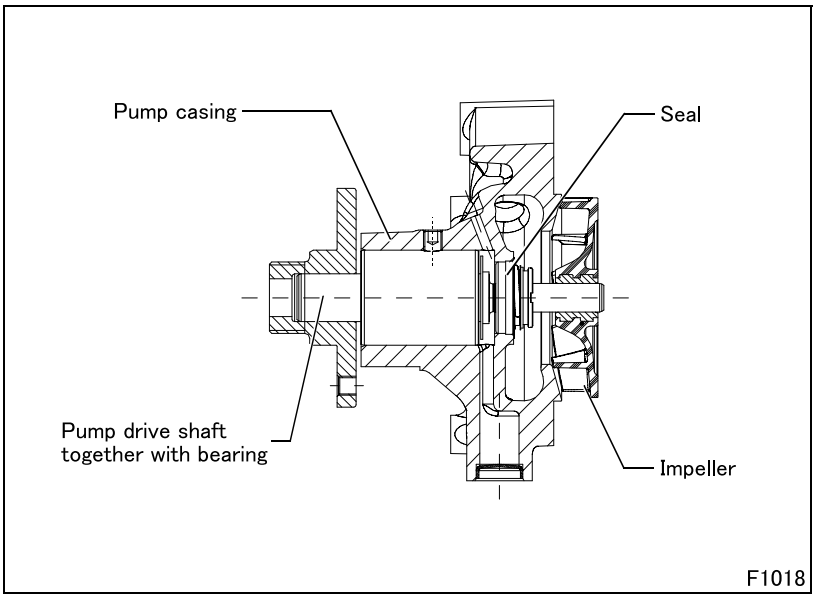

- The water pump is the belt-driven involute type.

3. Thermostat

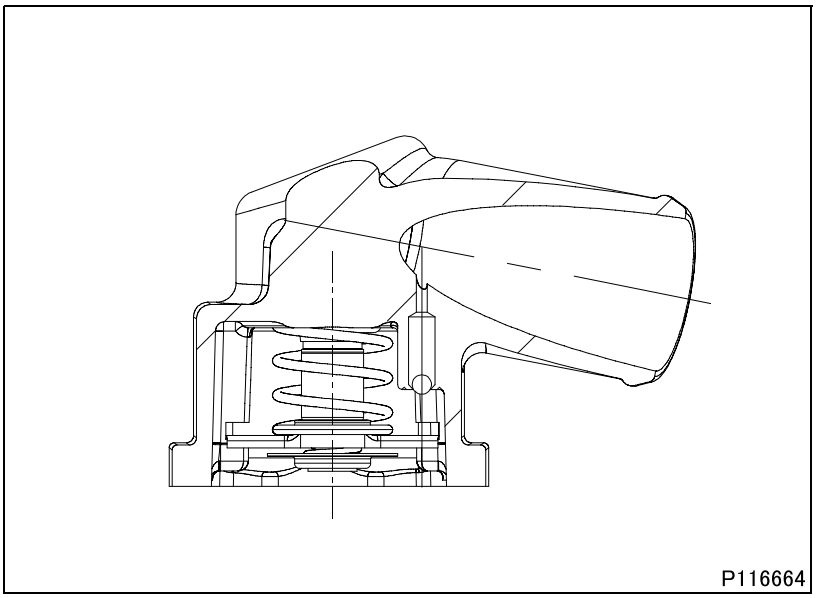

- The thermostat casing is fitted with the thermometric switch/transmitter and water temperature sensor.
  Valve travel at 79 ± 2°C {174 ± 3.6°F} = 0.3 mm {0.012 in.}
  Valve travel at 92 ± 2°C {198 ± 3.6°F}, min. 7.5 mm {0.30 in.}

https://truckmanualshub.com/

Possible causes \ Symptoms		Overheating (poor cooling)	Overcooling	Abnormal noise	Excessive coolant loss	Electronic control unit diagnosis lamp	Reference Gr
V-belt	Damaged	O				O	
	Oil on belt	O					
Water pump	Incorrectly mounted water pump	O		O	O	O	
	Defective gasket	O			O	O	
	Defective water pump	O		O	O	O	
Thermostat	Incorrectly mounted thermostat	O			O	O	
	Defective gasket	O			O	O	
	Valve opening temperature too high (valve remains closed)	O				O	
	Valve opening temperature too low (valve remains open)		O				
	Leakage from coolant temperature sensor	O			O		
Radiator	Clogged core	O				O	
	Cracked core and/or separation in welds	O			O	O	
	Cracks in upper tank and/or lower tank	O			O	O	
Automatic cooling fan coupling	Defective bearing	O		O		O	
	Damaged bimetal	O				O	
	Contaminated bimetal	O	O			O	
	Silicone oil leakage	O		O		O	
Cylinder head	Incorrectly mounted cylinder head	O			O	O	Gr11
	Defective gasket	O			O	O	
Oil cooler	Incorrectly mounted oil cooler	O			O	O	Gr12
	Defective gasket	O			O	O	
Exhaust gas recirculation-related items	Incorrectly mounted exhaust gas recirculation gas pipes			O		O	Gr17
	Incorrectly mounted exhaust gas recirculation coolant pipes	O			O		
	Exhaust gas recirculation cooler clogged (coolant side)	O					
	Damaged O-ring (exhaust gas recirculation-coolant sealing)	O			O		
Poorly airtight pressure cap		O			O	O	
Insufficient coolant amount, contaminated coolant		O				O	
Clogged or scaled coolant passage		O				O	
Incorrectly connected hoses		O			O	O	
Incorrectly connected pipes		O			O	O	
Excessively low exterior temperature			O				

https://truckmanualshub.com/

ON-VEHICLE INSPECTION AND ADJUSTMENT

1. Inspection of Auto Tensioner

Special tools (Unit: mm {in.})

Mark	Tool name and shape	Part No.	Application
[a]	Sonic belt tension gauge 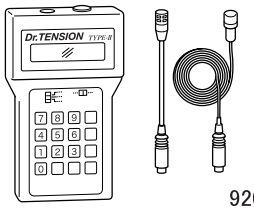 92054	ME357715	Measurement of tension of belt

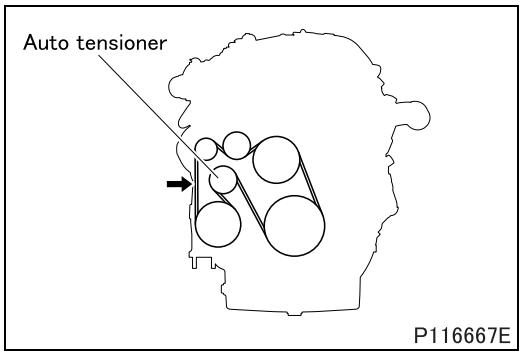

- The fan belt is automatically adjusted for proper tension by the auto tensioner. So, check the auto tensioner for correct operation.
- Confirm that the tension pulley moves smoothly when each of the midpoints between pulleys of the fan belt indicated by the arrows is pushed with your palm or pull on it.

1.1 Looseness of belt

- Use a sonic belt tension gauge to check to see that the belt tension is within the standard.

[Inspection of tension]

- Measurement using sonic belt tension gauge
- Direct the sensor microphone of [a] to the position shown in the illustration and measure the belt tension. For the operation of the sonic belt tension gauge, see the instruction manual of the tension gauge.
  [a]: Sonic belt tension gauge ME357715

CAUTION ⚠

- **When checking or adjusting the belt tension, measure the belt tension with the belt surface temperature being similar to the room temperature. Higher temperature will increase the belt tension, leading to incorrect tension measurements.**

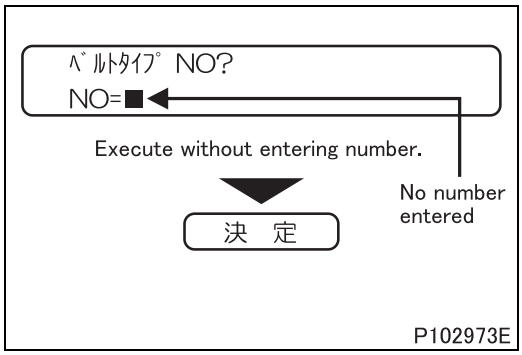

- Turn on [a].
- Press "決定 (means "execute")" key with no belt type number entered.
- Set the sensitivity of its sensor microphone when measuring the belt tension.
  ON (低 : means "low"): Measuring in noisy environment, or outdoors in heavy wind
  ON (高 : means "high"): Measuring in silent environment, or measuring a hard-to-vibrate belt

https://truckmanualshub.com/

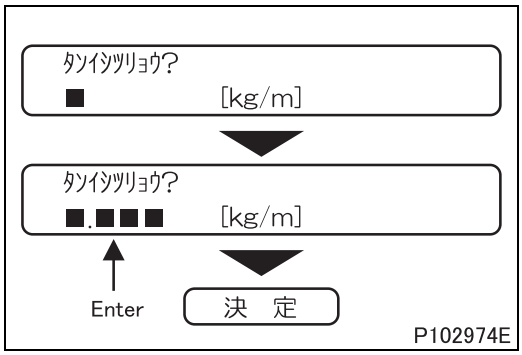

- Enter the unit mass of the belt and push “決定 (means “execute”)”.

Measuring point on the belt	Unit mass of the belt
Fan belt	0.016 kg/m

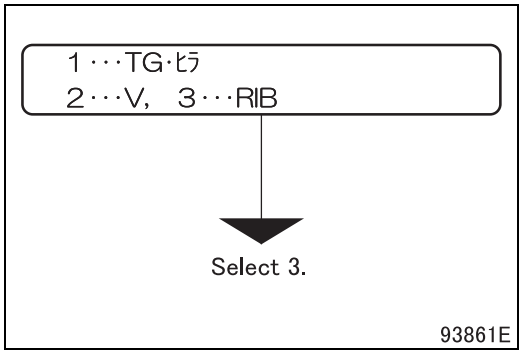

- Select the type of the belt. (Select “3” for ribbed belt.)

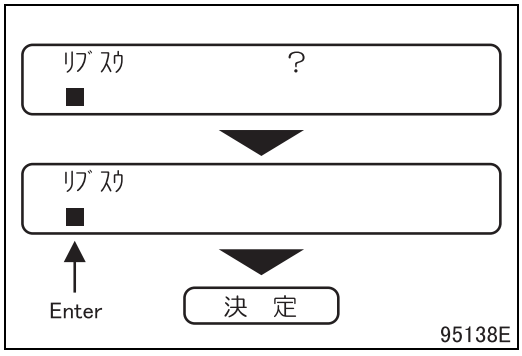

- Enter the number of ribs and push “決定 (means “execute”)”.

Measuring point on the belt	Number of ribs
Fan belt	7

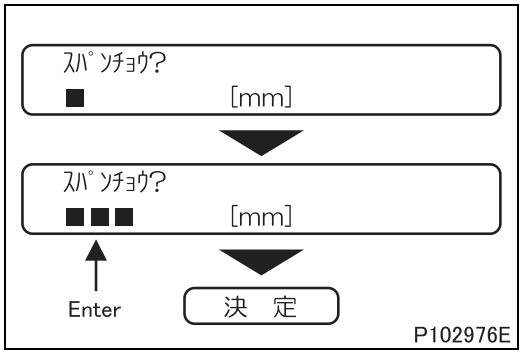

- Enter the length of span and push “決定 (means “execute”)”.

Measuring point on the belt	Length of span
Fan belt	202 mm

https://truckmanualshub.com/

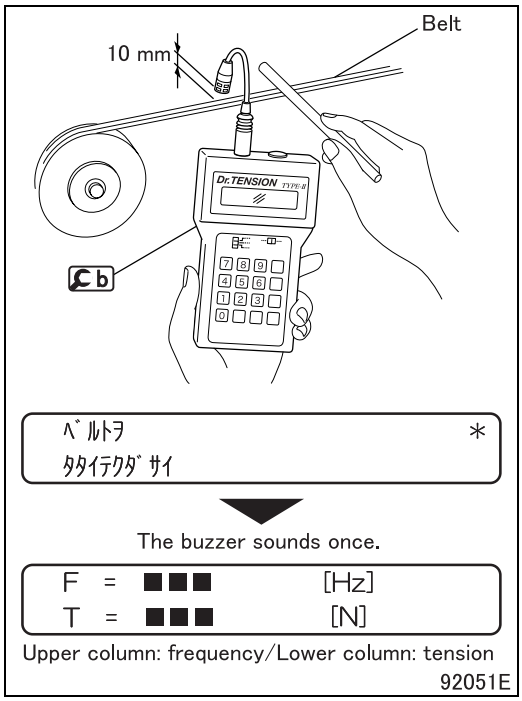

- Set the sensor microphone of approx. 10 mm {0.39 in.} above the belt, at the middle position between pulleys.
- Tap the belt lightly with a grip of a screwdriver to vibrate the belt.
- Measure the tension a few times and calculate the average value.

Standard value	300 to 700 N

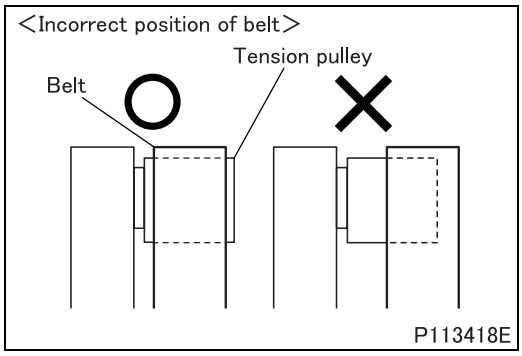

- Confirm that the belt is in correct alignment with the tension pulley.
- If the belt is not in correct alignment with tension pulley, check the auto tensioner or replace the belt with a new one.

https://truckmanualshub.com/

2. Inspection of Coolant Level

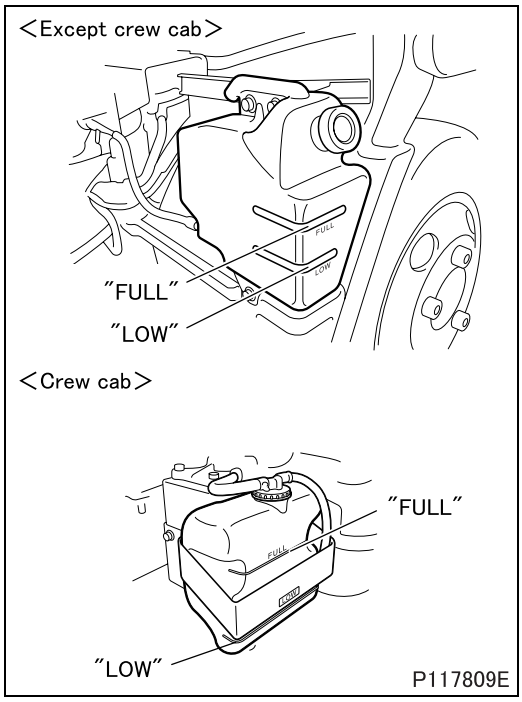

- Perform the coolant level inspection when the coolant is cold before the engine is started.
- Confirm that the coolant level is between the "FULL" and "LOW" lines of the reservoir tank.
- If the coolant level is lower than the "LOW" line, check that the cooling system for leaks. If no leaks are found, then add coolant up to the "FULL" line. Use coolant containing the predetermined amount of coolant to protect the cooling system from freezing and corrosion. (See the Owner's Manual for how to prepare the coolant.)
- If the coolant level is abnormally low or lowers in an abnormally short period of time, the cooling system may be leaking. Inspect the system for leaks. (See "3. Inspection for coolant leaks" in ON-VEHICLE INSPECTION AND ADJUSTMENT.)

3. Inspection for Coolant Leaks

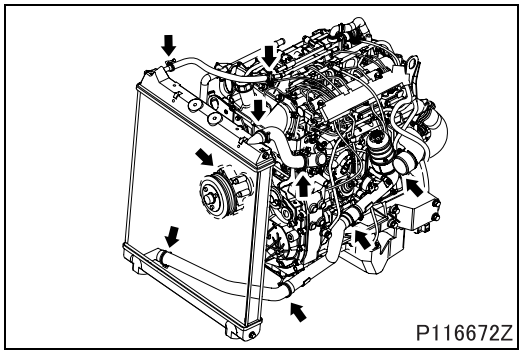

- Sufficiently warm up the engine. With the engine still running at idle, check that no coolant leaks from the radiator, reservoir tank, water pump, radiator hose, heater hose, or other associated components.
- If there is a coolant leak, check connections of the corresponding components. Tighten any loose connections to the specified torques. Replace any cracked or otherwise damaged part with a new one. (See later section.)

4. Coolant Replacement and Cleaning of Cooling System

Tightening torque (Unit: N·m {ft.lbs, kgf·m})

Mark	Parts to be tightened	Tightening torque	Remarks
–	Radiator drain cock	2.5 ± 0.5 {1.8 ± 0.4, 0.3 ± 0.1}	–

- Using the radiator for extended periods of time without cleaning can increase chance of rust and scale formation, which may cause engine overheating. The cooling system must be cleaned periodically.

https://truckmanualshub.com/

4.1 Draining of coolant

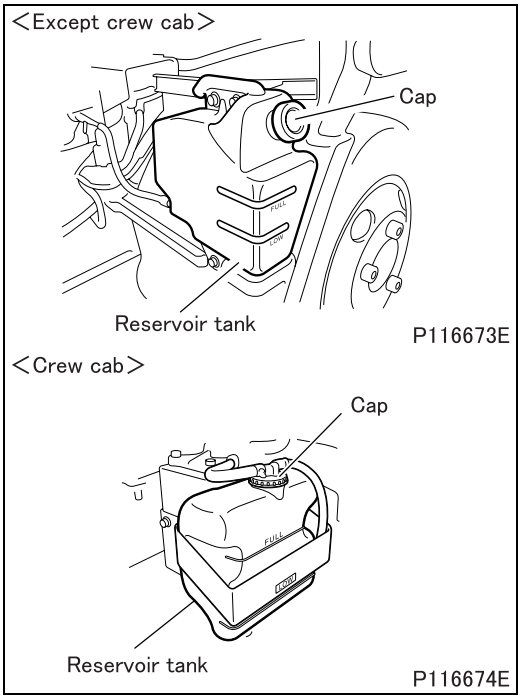

- Place a container to catch coolant under the radiator drain cock.
- Remove the cap from the reservoir tank.

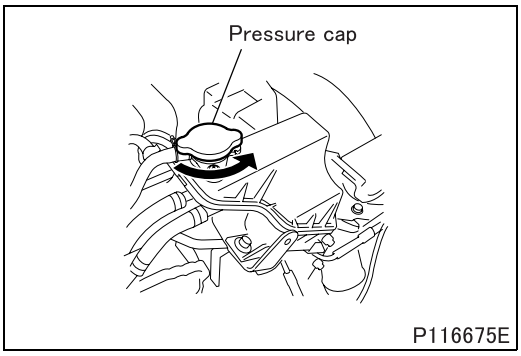

- Before draining the coolant, loosen the pressure cap to reduce the pressure in the cooling system. Remember to drain the coolant out of the reservoir tank as well.

WARNING ⚠

- **Drain the coolant only after it has cooled sufficiently to avoid getting scalded.**
- **Opening the pressure cap while the coolant temperature is still high can cause hot coolant to spray out. Cover the pressure cap with a cloth, and loosen it slowly to let the pressure out before opening it fully.**

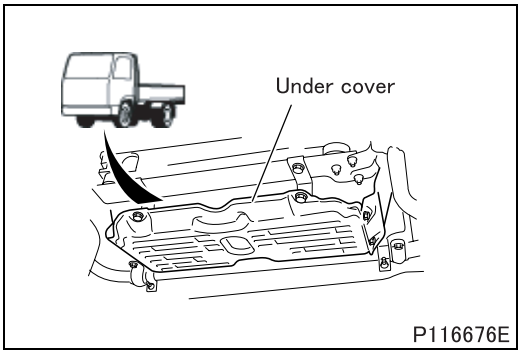

- Remove the under cover below the radiator, if the vehicle is so equipped.

https://truckmanualshub.com/

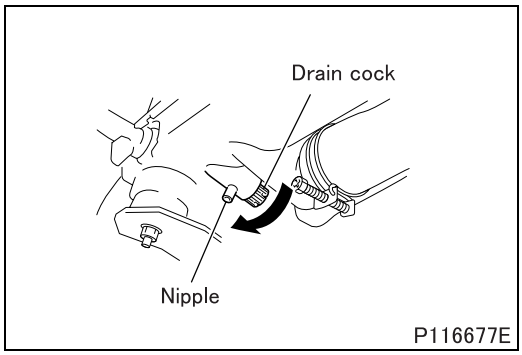

- Loosen the radiator drain cock to let the coolant run through the nipple.

4.2 Cleaning procedure

- Using coolant additive
  To prevent the cooling system freezing up and minimize corrosion, use coolant or an equivalent. Coolant is an ethylene-glycol-based antifreeze (SAE J814-C) with both anti-freeze and anti-corrosion properties. Dilute it with soft water to the specified concentration.
- Keep the coolant temperature at approximately 90°C {194°F} so that the thermostat valve remains open and the coolant continues to circulate in the radiator.
- For the sake of convenience you can raise the coolant temperature quickly by covering the front of the radiator with corrugated cardboard or something similar.
- In cases where a large amount of rust has accumulated it is common for the radiator to leak as a result of cleaning. Conduct a thorough check for leakage after cleaning.
- After completing the cleaning, check the reservoir tank coolant level. Add coolant if necessary.
- If the coolant has been completely replaced, reset the service and maintenance memory of the multi-information system. (See Chapter 6 “Multi-information system” of Owner’s Manual.)

WARNING ⚠

- **If you splash coolant in your eye, immediately rinse the eye with water and then seek medical attention.**

CAUTION ⚠

- **Coolant is flammable. Never bring an open flame close to it.**

https://truckmanualshub.com/

- Select an appropriate cleaning method according to the condition of the cooling system as shown below.

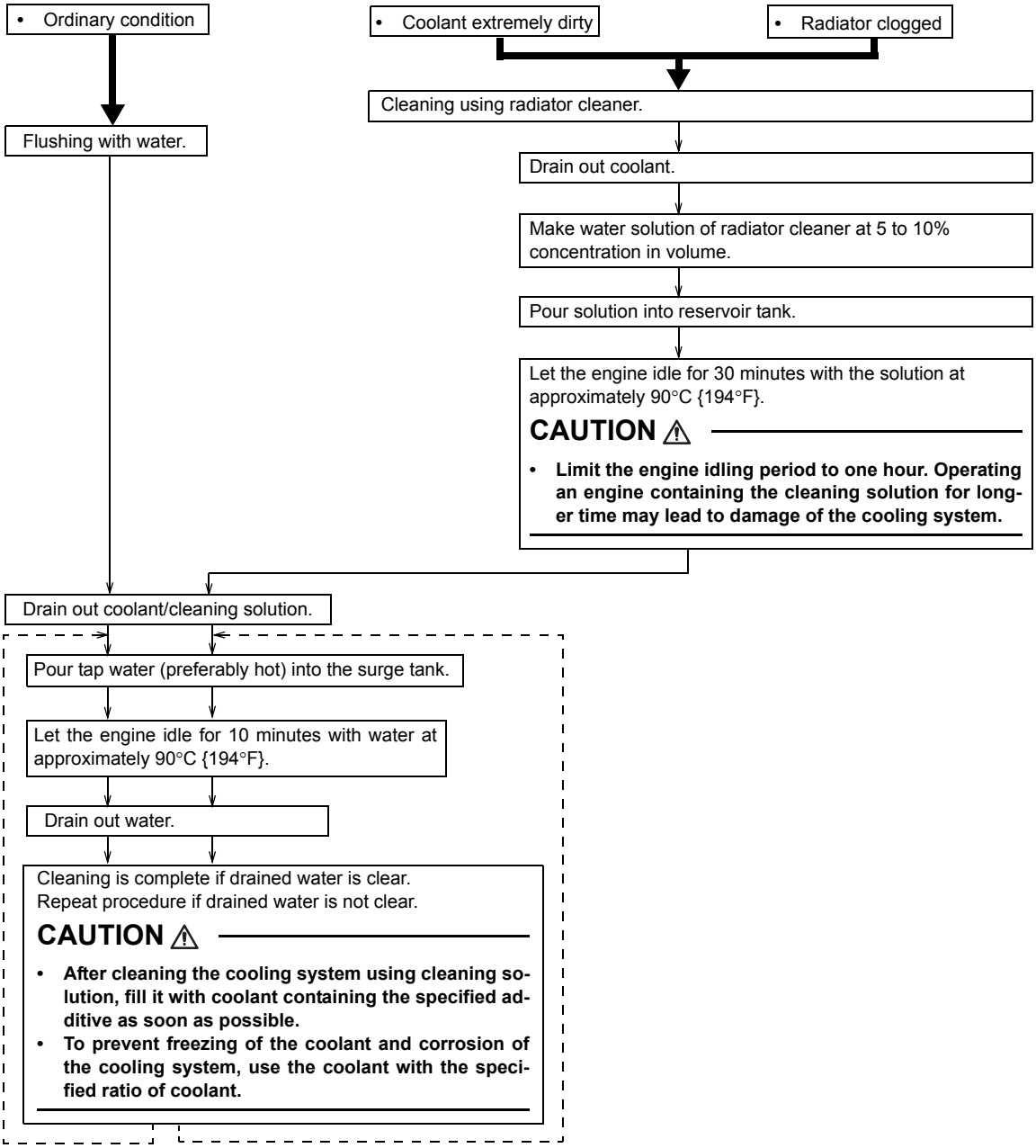

https://truckmanualshub.com/

5. Air Bleeding of Cooling System

- With the pressure cap removed and the coolant temperature at 90°C {194°F}, let the engine idle in order to bleed air completely out of the cooling system.
- After air bleeding is completed, refill the surge tank with coolant as needed.

6. Air/Gas Leakage Test

- Presence of air or exhaust gas in coolant accelerates corrosion of the cooling system components. To prevent this, carry out air/gas leakage tests in accordance with the following procedure.
- Remove the pressure cap.

WARNING ⚠

- **If the engine is hot, boiling coolant may spurt out from the filler port when the pressure cap is loosened. To avoid burning yourself, make sure to remove the pressure cap only when the coolant is cold.**

- Run the engine until the coolant temperature rises to approximately 90°C {194°F}.
- If air bubbles appear continuously through the filler port, there is air or exhaust gas penetrating into the cooling system.
- Presence of air in coolant can be an indication of loose cylinder head bolts, loose water pump mounting bolts, loose hose connections, and/or a damaged hose.
- Presence of exhaust gas in coolant can be an indication of a damaged cylinder head gasket and/or cracks in the cylinder head.

7. Inspection of Cracks or Damage of the Belt

- If a belt is cracked or otherwise damaged, have it replaced it as soon as possible. Belt replacement requires component disassembly.

Belt condition	Remaining service life (reference)
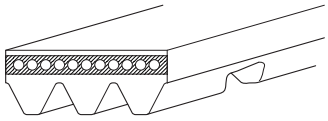 Piece(s) missing from rib(s) P110542E	• The belt has reached the end of its service life and must be replaced.

https://truckmanualshub.com/

DISCONNECTION AND CONNECTION OF HOSES AND PIPES

Radiator Hose and Pipe

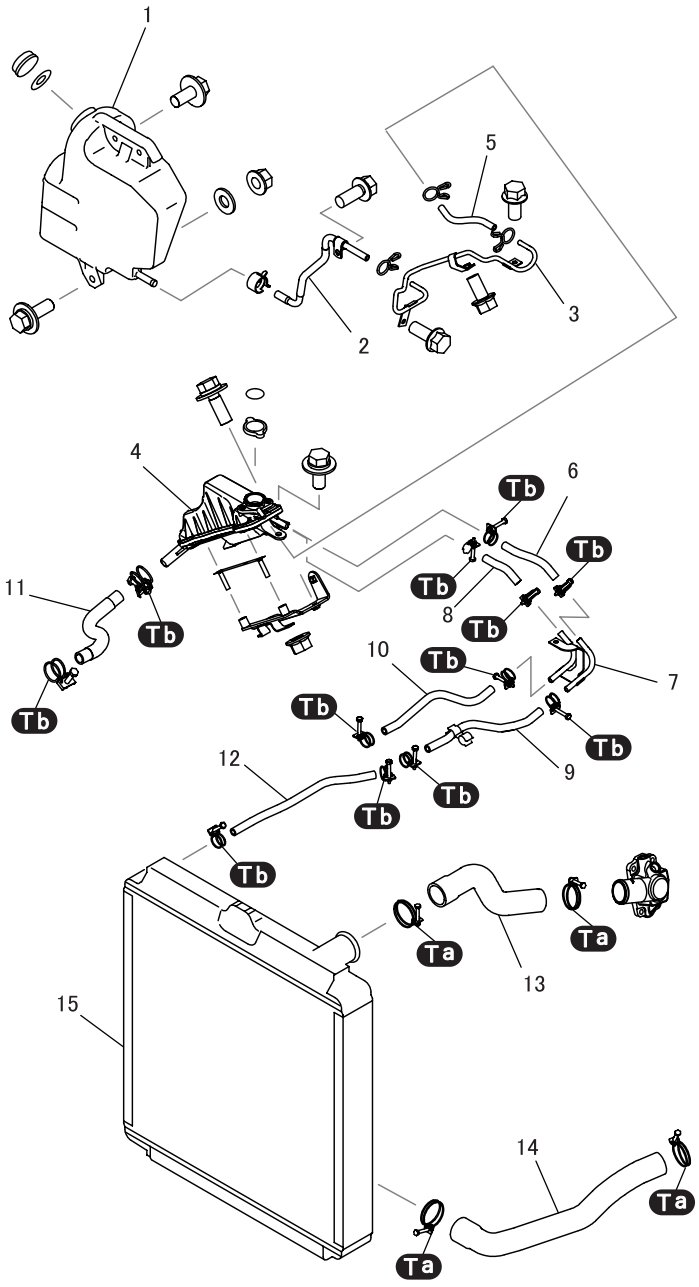

This drawing shows the components for the single−cab models.

P116679E

● **Removal sequence**

1. Reservoir tank (See later section.)
2. Water hose A
3. Water pipe A
4. Surge tank (See later section.)
5. Water hose B
6. Water hose C
7. Water pipe B
8. Water hose D
9. Water hose E
10. Water hose F
11. Supply hose
12. Water hose G
13. Upper radiator hose
14. Lower radiator hose
15. Radiator (See later section.)

https://truckmanualshub.com/

● Installation sequence

Follow the removal sequence in reverse.

Tightening torque (Unit: N·m {ft.lbs, kgf·m})

Mark	Parts to be tightened	Tightening torque	Remarks
Ta	Clamp	4.0 ± 0.1 {3.0 ± 0.1, 0.4 ± 0.01}	Wet
Tb	Clamp	1 ± 0.5 {0.7 ± 0.4, 0.1 ± 0.05}	–

◆Installation procedure◆

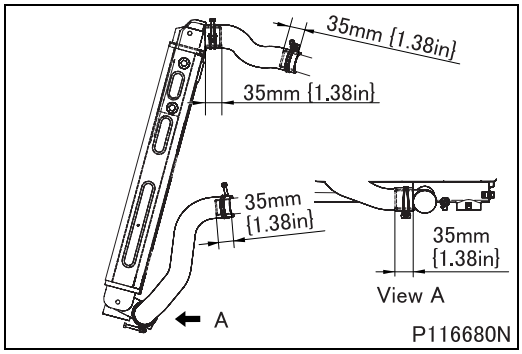

■ **Installation: Upper radiator hose, lower radiator hose**

- Each hose end should overlap with the fitting to the dimension shown in the illustration.

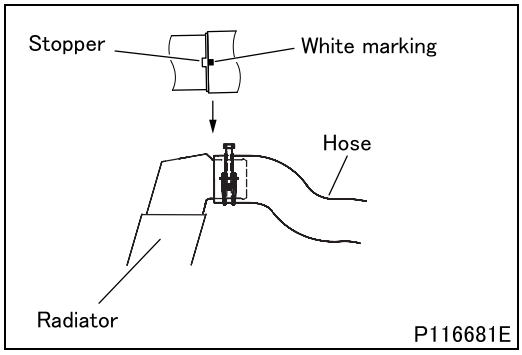

- Install the radiator end of the radiator hose with its white marking aligned with the stopper on the hose fitting of the radiator.

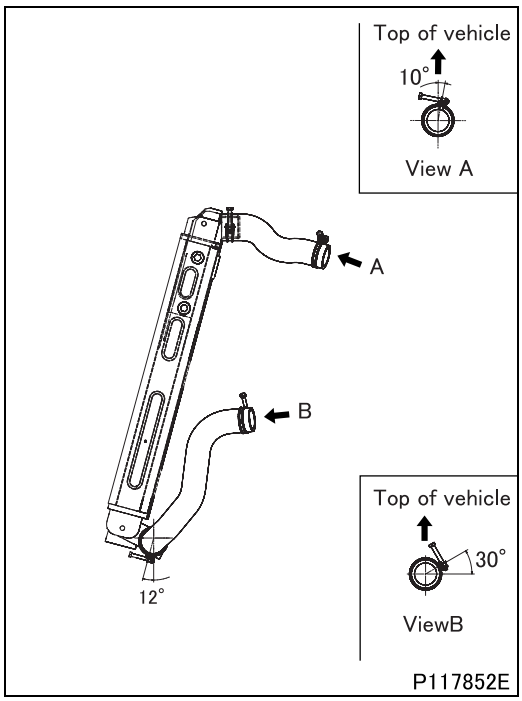

- Install the clamps at the angles shown.

https://truckmanualshub.com/

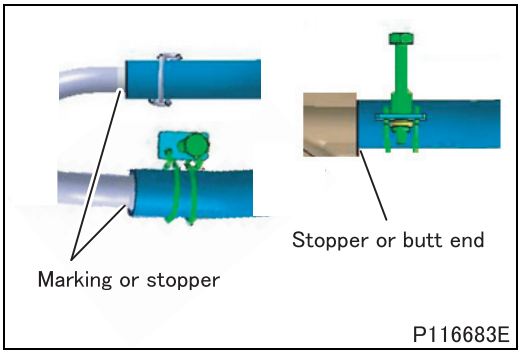

■ **Installation: Water hose, water pipe**

- Insert the water hose all the way up to the stopper or marking on the water pipe.
- Insert the reservoir tank end of the water hose all the way until it stops against the stopper or butt end.
- The white or yellow marking on the water hose, if provided, should face upward of the vehicle when the water hose is installed.

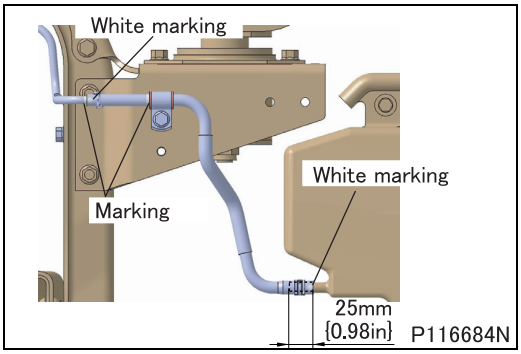

- The reservoir tank end of the water hose should overlap with the filling by 25 mm {0.98 in.} and the white marking should face the rear of the vehicle. Affix the hose on the cab bridge while making the edges of the clips align with the markings on the hose as shown in the illustration.

- Fasten the clamps firmly.

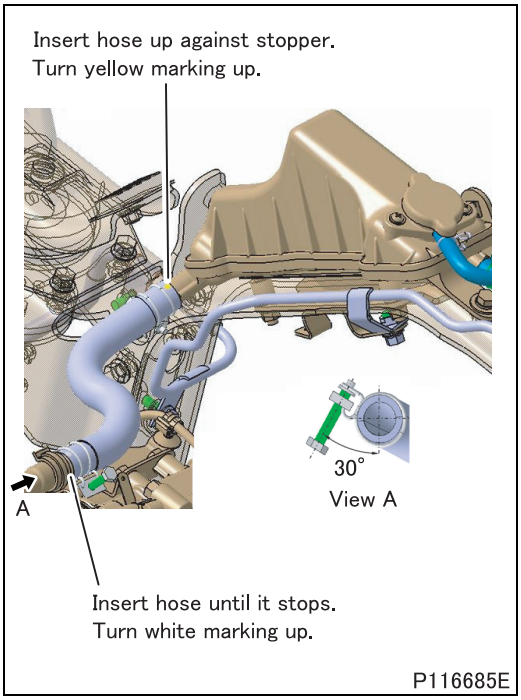

■ **Installation: Supply hose**

- Insert the hose up against the stopper. Turn the white and yellow markings on the hose upward.
- Install the clamp at the angle shown.

https://truckmanualshub.com/

Heater Hose and Pipe <Front Heater>

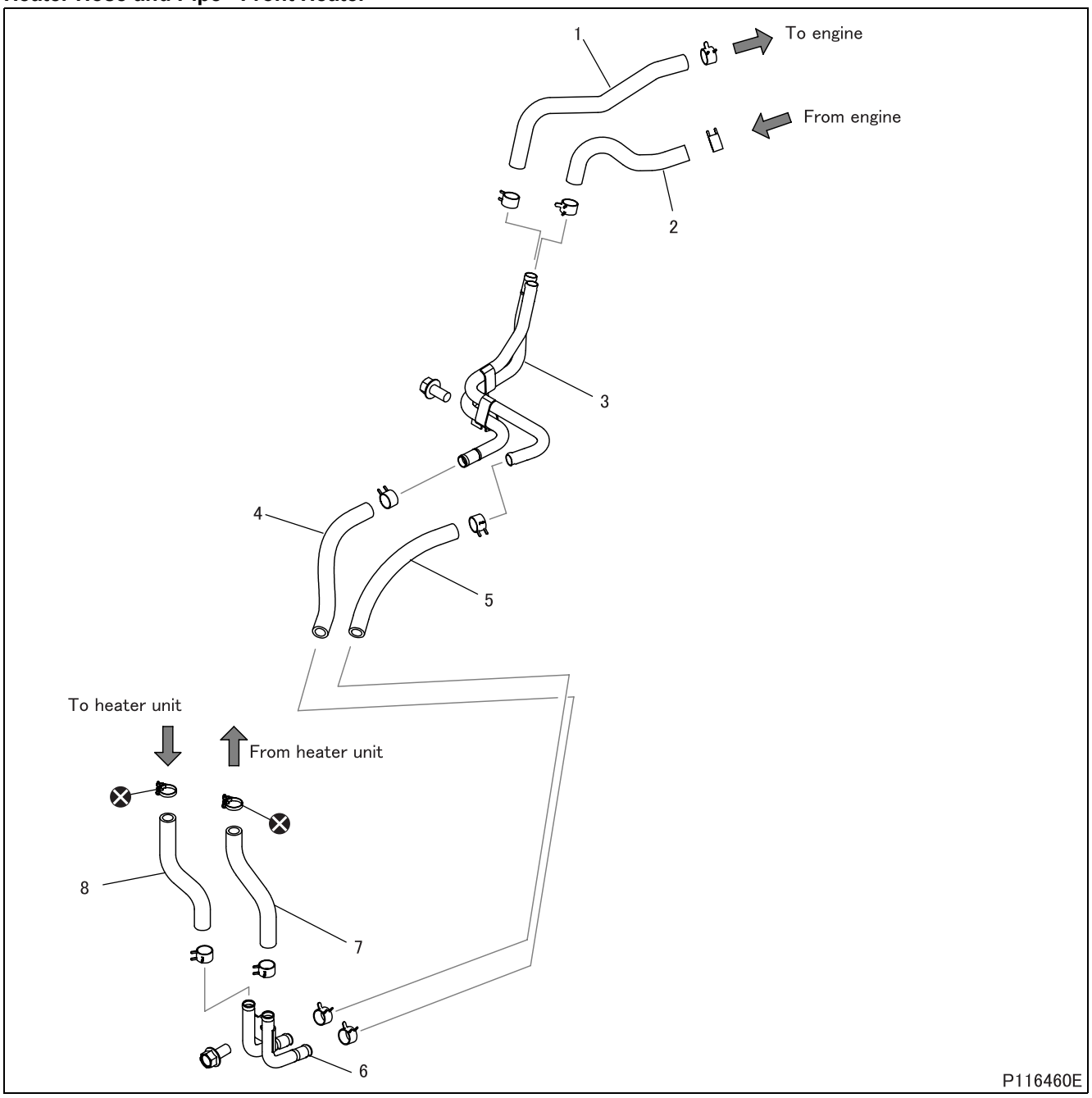

● Removal sequence

1 Heater hose A
2 Heater hose B
3 Heater pipe A
4 Heater hose C
5 Heater hose D
6 Heater pipe C
7 Heater hose E
8 Heater hose F

⊗: Non-reusable parts

● Installation sequence

Follow the removal sequence in reverse.

https://truckmanualshub.com/

DISCONNECTION AND CONNECTION OF HOSES AND PIPES

◆Installation procedure◆

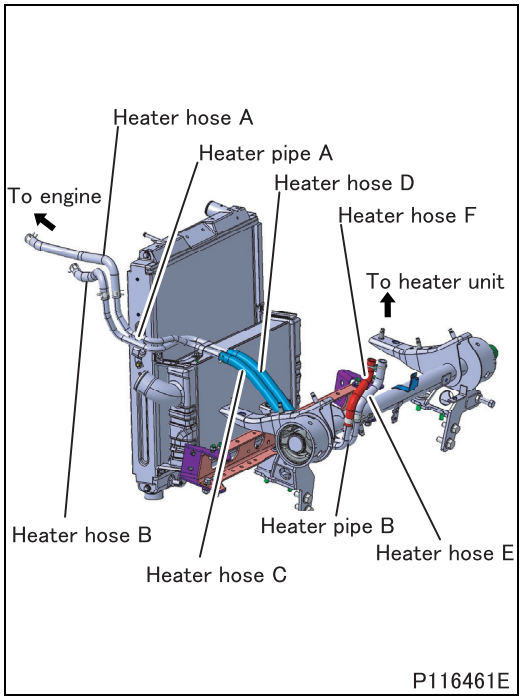

■ **Installation: Heater hoses, heater pipes**

- Install the heater hoses to the pipes as shown in the illustration.

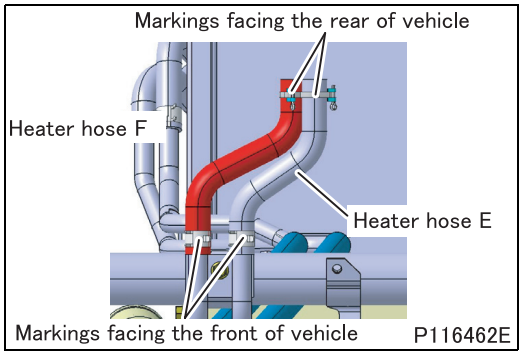

■ **Installation: Heater hose E, heater hose F**

- Connect the heater hoses E and F to the heater unit with the markings facing the rear of the vehicle and to the heater pipes C with the markings facing the front of the vehicle.

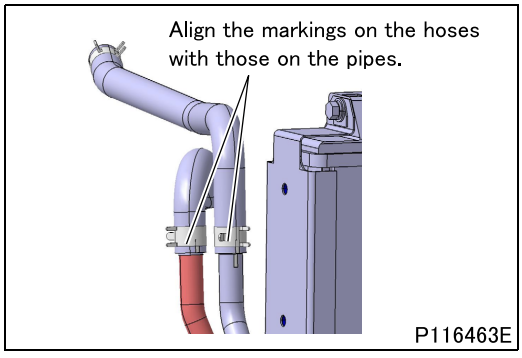

■ **Installation: Heater hose A, heater hose B**

- Connect the hoses aligning the shown markings with each other.

https://truckmanualshub.com/

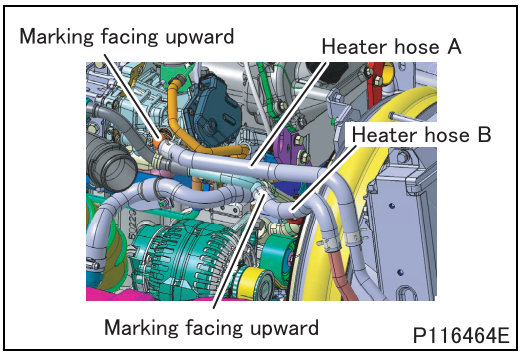

■ **Installation: Heater hose A, heater hose B**

- Install the engine ends of the hoses with the markings facing upward.

https://truckmanualshub.com/

DISCONNECTION AND CONNECTION OF HOSES AND PIPES

Heater Hose and Pipe <Rear Heater>

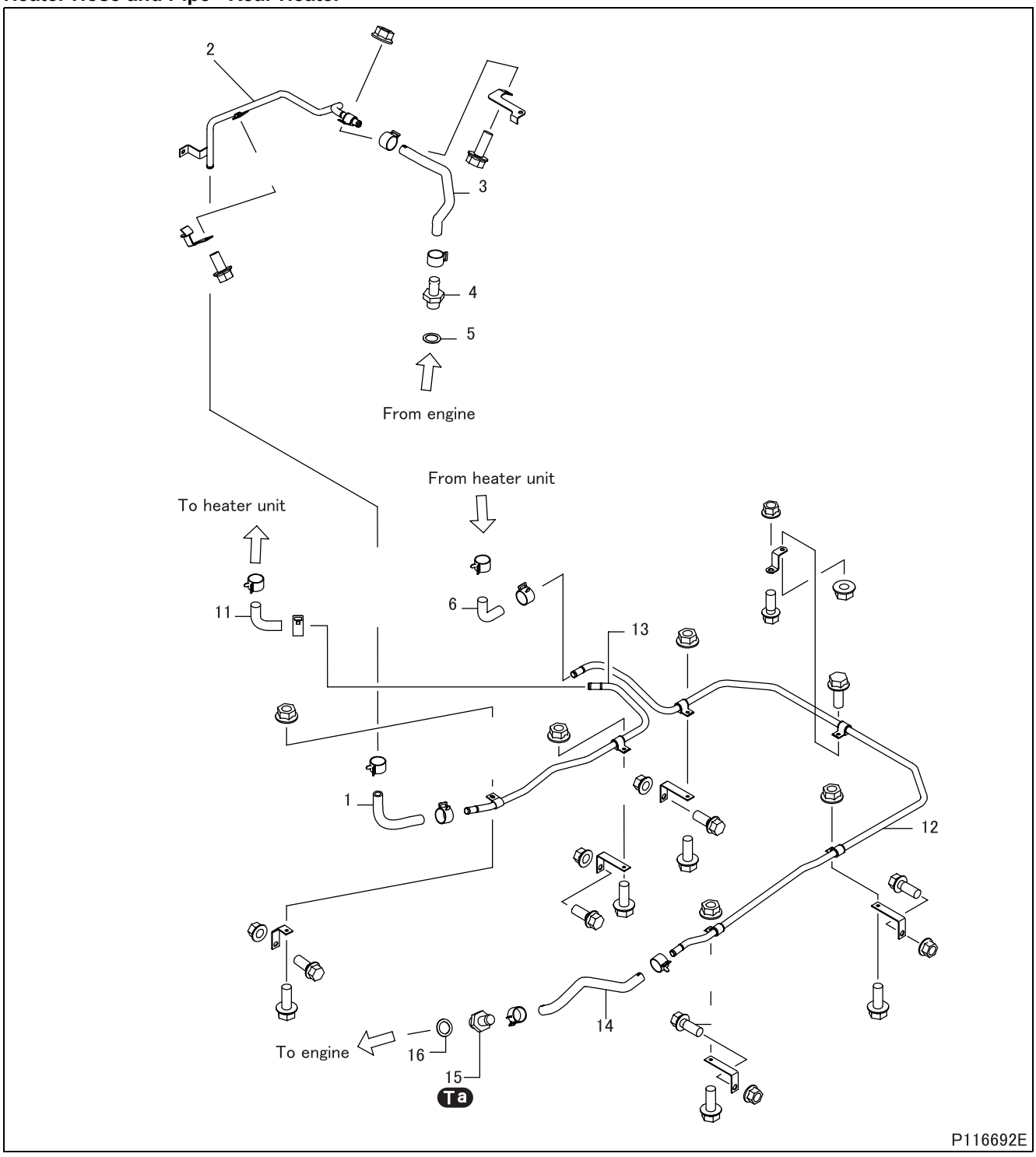

● **Removal sequence**

1 Heater hose A
2 Heater pipe A
3 Heater hose B
4 Connector
5 Gasket
6 Heater hose C
7 Heater pipe B
8 Heater hose D
9 Heater hose E
10 Heater pipe C
11 Heater hose F
12 Heater pipe D
13 Heater pipe E
14 Heater hose G
15 Connector
16 Gasket

https://truckmanualshub.com/

● Installation sequence

Follow the removal sequence in reverse.

Tightening torque (Unit: N·m {ft.lbs, kgf·m})

Mark	Parts to be tightened	Tightening torque	Remarks
Ta	Connector	50 to 60 {37 to 44, 5.1 to 6.1}	–

◆Installation procedure◆

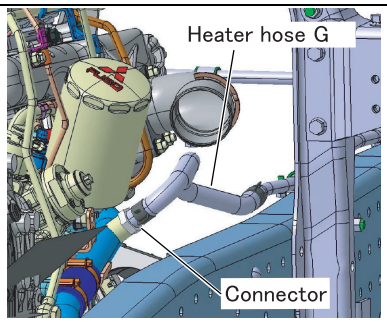

P116693E

■ Installation: Connector, heater hose G

- Install the gasket and connector on the connection fitting on the engine side.
- Connect the heater hose G to the connector with its marking facing upward. Connect the heater hose G to the heater pipe D with the markings on them aligned with each other.

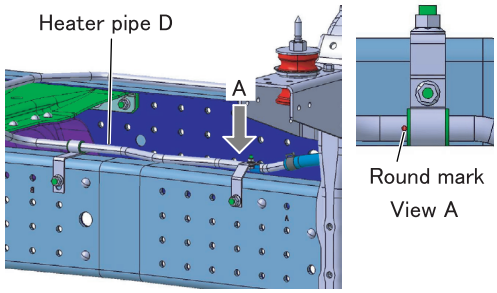

P116697E

■ Installation: Heater pipe D

- Install heater pipe D with its round mark facing upward and aligned with the edge of the clip.

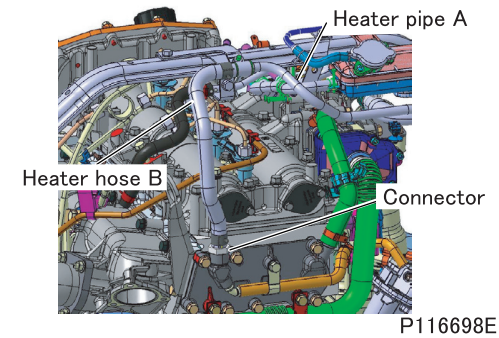

P116698E

■ Installation: Connector, heater hose B

- Install the gasket and connector on the connection fitting on the engine side.
- Connect the heater hose B to the connector with its marking facing the rear of the vehicle. Connect the heater hose B to the heater pipe A with its marking facing upward.

https://truckmanualshub.com/

RADIATOR

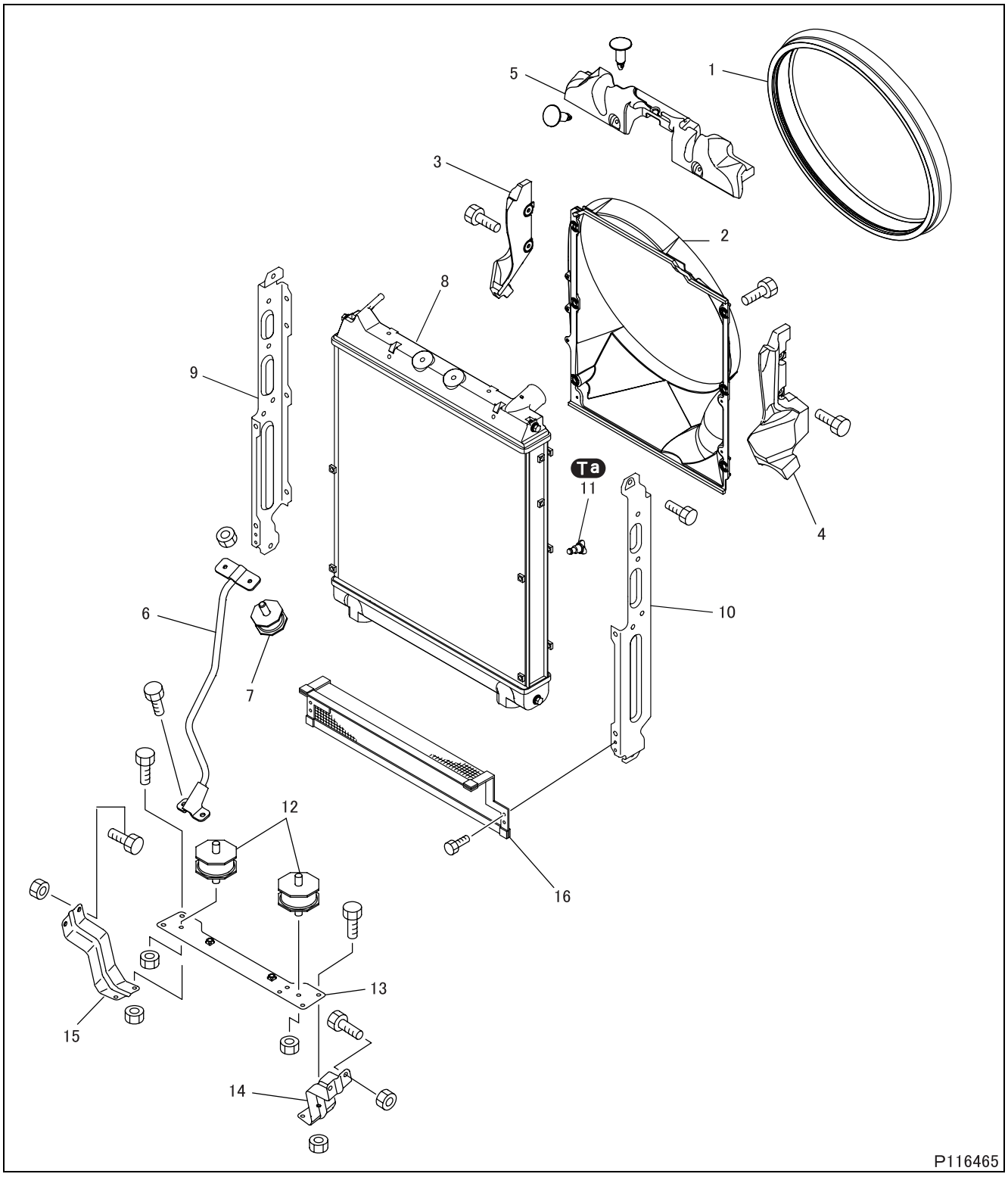

● **Removal sequence**

1 Shroud seal
2 Radiator shroud
3 Baffle plate RH
4 Baffle plate LH
5 Upper baffle plate
6 Support rod
7 Support cushion
8 Radiator
9 Side member RH
10 Side member LH
11 Radiator drain cock
12 Support cushion
13 Lower support
14 Side bracket LH
15 Side bracket RH
16 Radiator filter

https://truckmanualshub.com/

● Installation sequence

Follow the removal sequence in reverse.

Service standards

Location	Maintenance item	Standard value	Limit	Remedy
8	Air leakage from radiator (air pressure 147 kPa {21 psi, 1.47 kgf/cm^2})	0 cm^3 {0 mL}	–	Repair or replace

Tightening torque (Unit: N·m {ft.lbs, kgf·m})

Mark	Parts to be tightened	Tightening torque	Remarks
Ta	Radiator drain cock	2.5 ± 0.5 {1.8 ± 0.4, 0.3 ± 0.1}	–

◆Inspection procedure◆

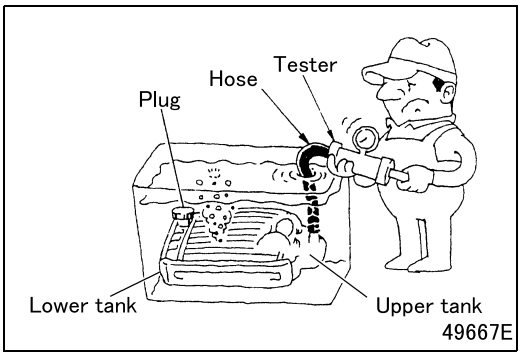

■ Inspection: Radiator air leakage

- Connect a hose and radiator cap tester to the upper tank.
- Plug the lower tank and put the entire radiator into a tank filled with water.
- Use the radiator cap tester to apply an air pressure of 147 kPa {21 psi, 1.47 kgf/cm^2} and check for air leakage.
- If air leakage is found, replace the radiator.

https://truckmanualshub.com/

PRESSURE CAP, SURGE TANK

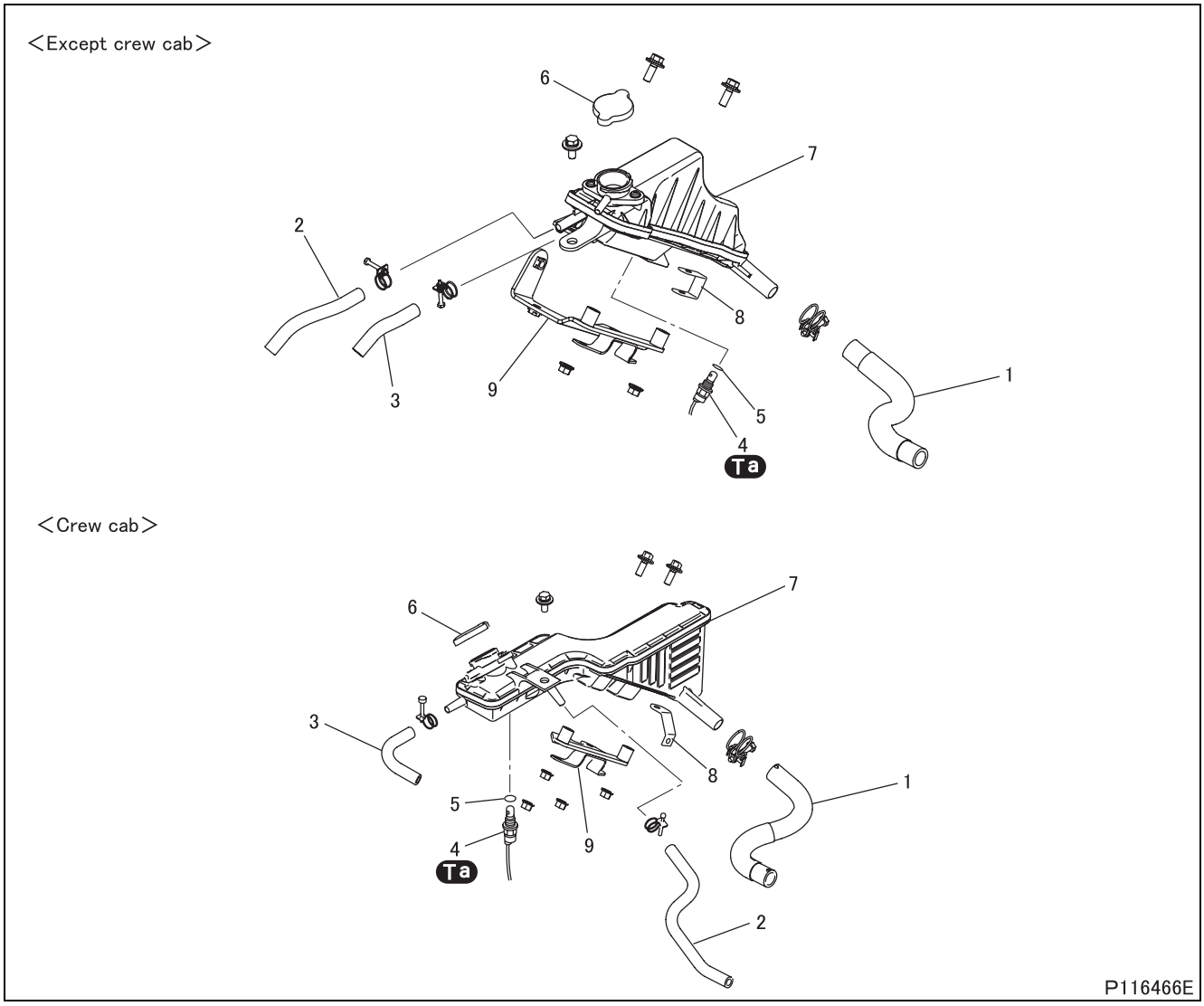

● **Removal sequence**

1 Water hose A
2 Water hose B
3 Water hose C
4 Water level sensor
5 O-ring
6 Pressure cap
7 Surge tank
8 Bracket
9 Surge tank bracket

● **Installation sequence**

Follow the removal sequence in reverse.

Service standards

Location	Maintenance item	Standard value	Limit	Remedy
1	Pressure cap valve opening pressure	110 ± 15 kPa {16 ± 2.2 psi, 1.1 ± 0.15 kgf/cm^2}	–	Replace

Tightening torque (Unit: N·m {ft.lbs, kgf·m})

Mark	Parts to be tightened	Tightening torque	Remarks
Ta	Water level sensor	$3\ ^{+1}_{0}$ {$2.2\ ^{+0.7}_{0}$, $0.3\ ^{+0.1}_{0}$}	–

https://truckmanualshub.com/

◆Inspection procedure◆

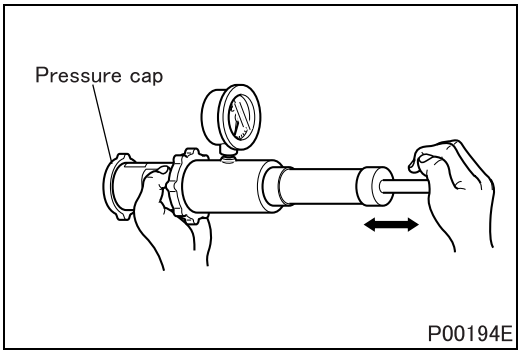

■ **Inspection: Pressure cap**

(1) Pressure valve opening pressure

- Measure the pressure valve opening pressure using a pressure cap tester.
- Replace the pressure cap if the measured value deviates from the standard value range.

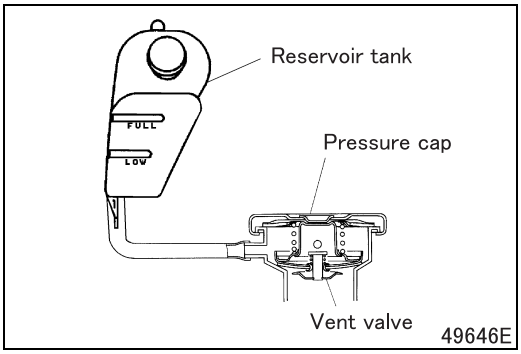

(2) Inspection: Vent valve

- Check the reservoir tank for water level in advance.
- Let the engine run at high speeds and, when a certain amount of coolant overflows to the reservoir tank, stop the engine.
- Leave the unit to stand for some time. When the coolant temperature becomes the atmospheric temperature, check that the water level of the reservoir tank is the same as that before the engine was started.
- If the water level does not lower, the vent valve is faulty. So, replace the pressure cap with a new one.

CAUTION ⚠

- **If the pressure cap is removed before the coolant temperature lowers to the atmospheric level, a vacuum develops inside the radiator, so that the coolant cannot return to the reservoir tank.**

◆Installation procedure◆

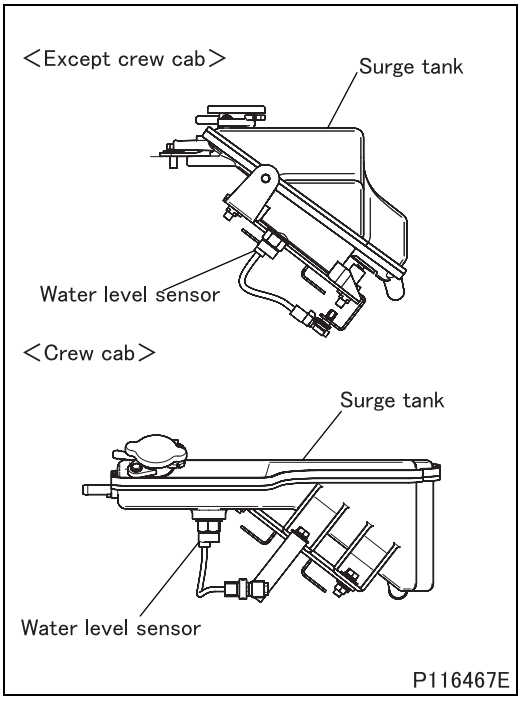

■ **Installation: Water level sensor**

- The water level sensor is installed on the surge tank.

https://truckmanualshub.com/

RESERVOIR TANK

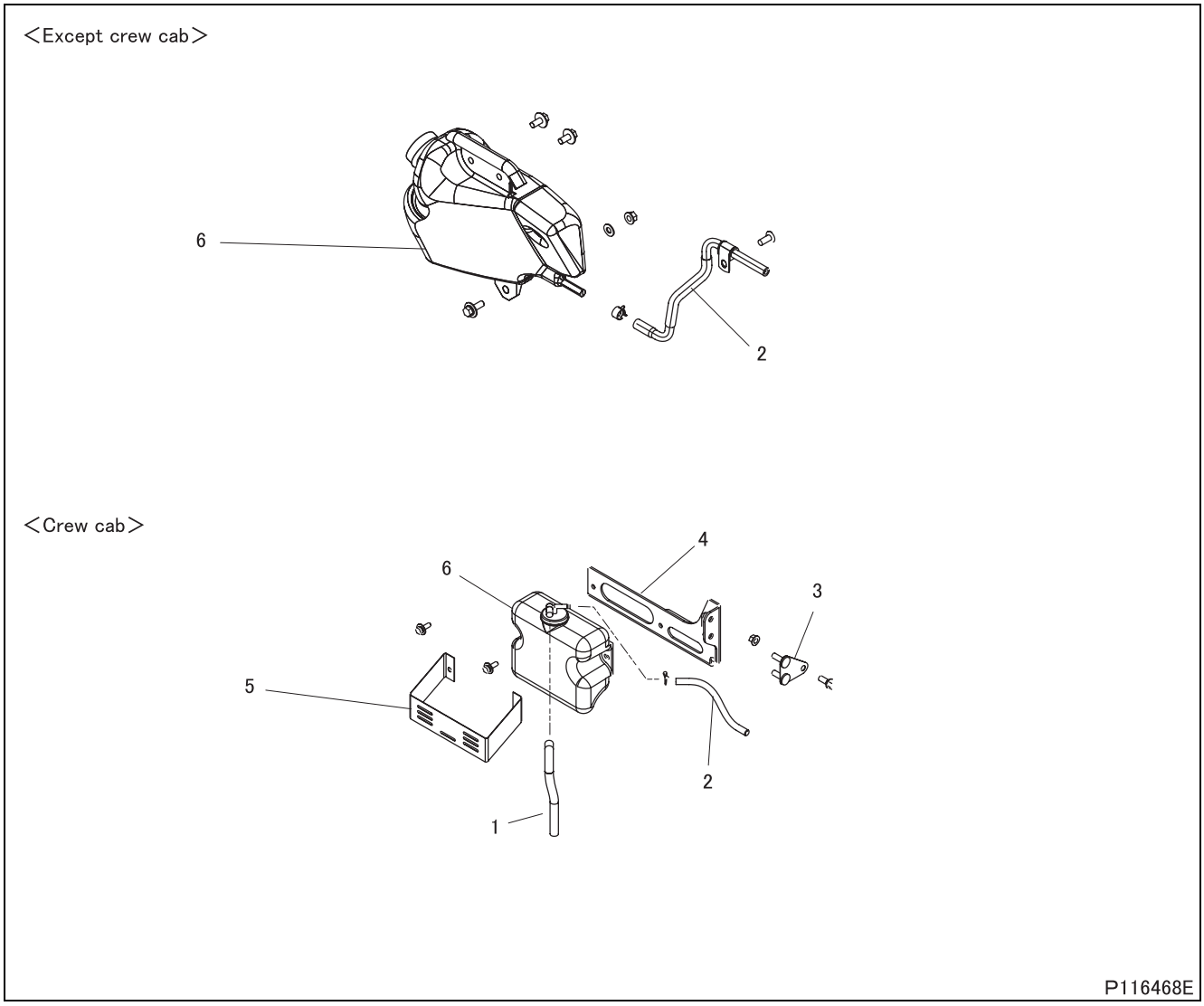

● **Removal sequence**

1 Water hose A
2 Water hose B
3 Tank bracket A
4 Tank bracket B
5 Tank protector
6 Reservoir tank

● **Installation sequence**

Follow the removal sequence in reverse.

https://truckmanualshub.com/

M E M O

https://truckmanualshub.com/

COOLING FAN

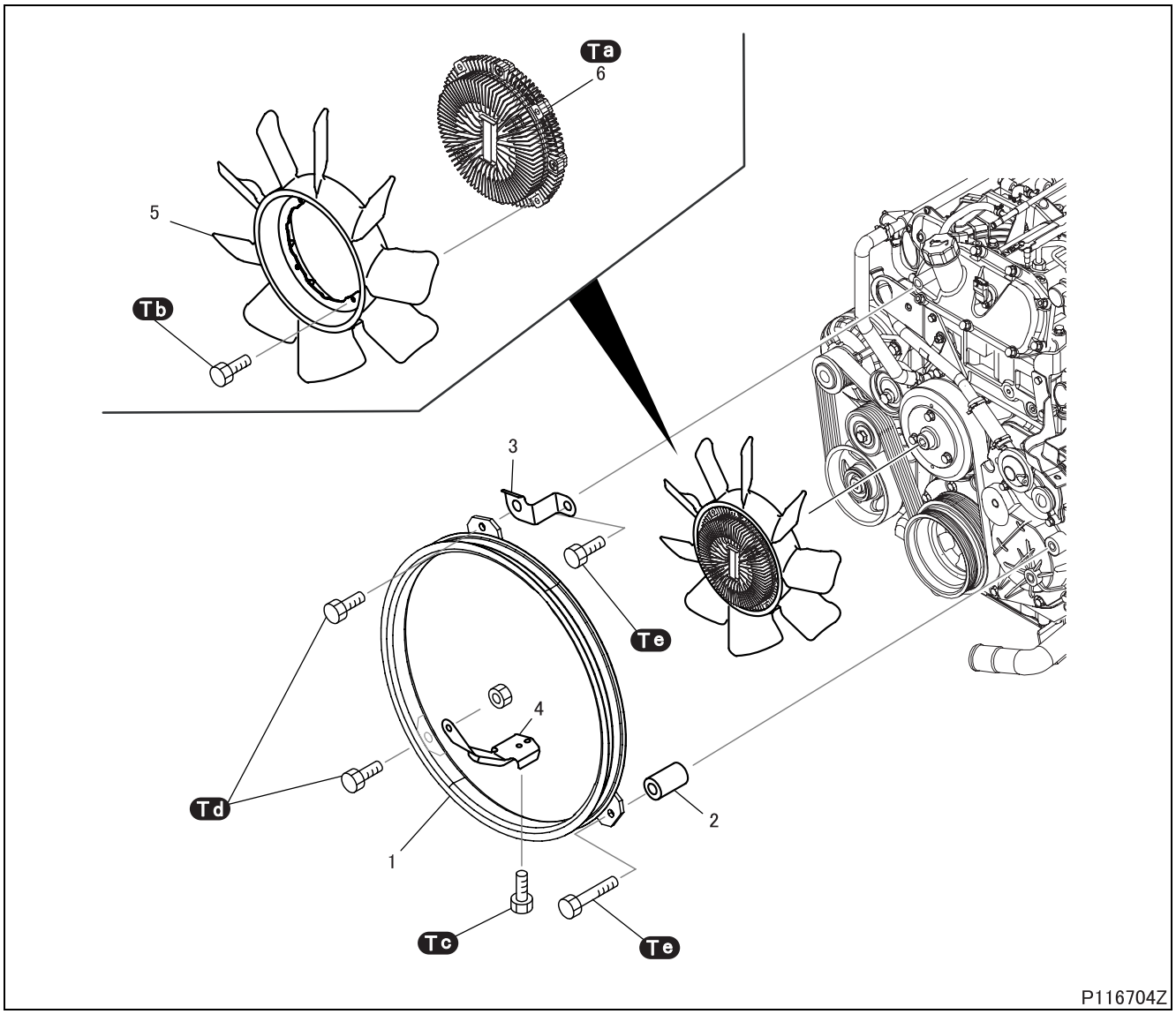

● **Removal sequence**

1 Fan shroud
2 Spacer
3 Shroud upper stay
4 Shroud lower stay
5 Cooling fan
6 Automatic cooling fan coupling

● **Installation sequence**

Follow the removal sequence in reverse.

Service standards (Unit: mm {in.})

Location	Maintenance item	Standard value	Limit	Remedy
–	Clearance between fan shroud and cooling fan	5.0 to 9.0 {0.20 to 0.35}	–	Correct or replace

https://truckmanualshub.com/

Tightening torque (Unit: N·m {ft.lbs, kgf·m})

Mark	Parts to be tightened	Tightening torque	Remarks
Ta	Automatic cooling fan coupling	90 to 112 {66 to 83, 9.2 to 11}	–
Tb	Bolt (cooling fan mounting)	7 to10 {5.2 to 7.4, 0.7 to 1.0}	–
Tc	Bolt	19 to 28 {14 to 21, 1.9 to 2.8}	–
Td	Bolt	45 to 55 {33 to 41, 4.5 to 5.6}	–
Te	Bolt	32 to 48 {24 to 35, 3.3 to 4.9}	–

Special tools (Unit: mm {in.})

Mark	Tool name and shape	Part No.	Application
Ca	Coupling fan attachment tool A: 101 {3.98}, B: 12.7 {0.50}, C: 230 {9.06} 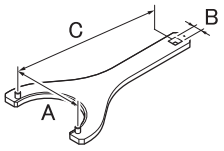 P116718	MH064219	Holding of fan pulley

◆Inspection and cleaning procedure◆

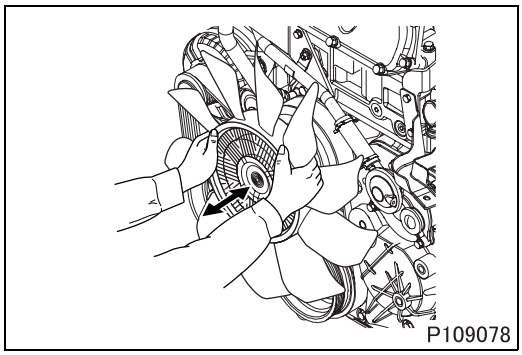
P109078

■ **Inspection: Automatic cooling fan coupling**

- Make an inspection of the following points. Replace the automatic cooling fan coupling if defective.
  Check the followings.
  - The hydraulic oil sealed inside the coupling is not leaking.
  - The coupling does not make any abnormal noise or rotate unevenly due to defects in the inside bearing when rotated manually.
  - The automatic cooling fan coupling does not move too much when pushed and pulled in the axial directions when the engine is cold.

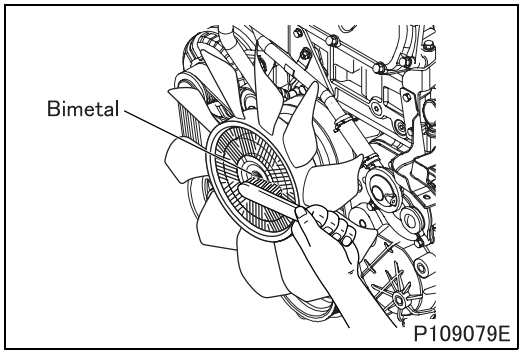

P109079E

■ **Cleaning: Automatic cooling fan coupling**

- When removing foreign matter from the bimetal, be careful not to press too hard against the bimetal.

◆Removal procedure◆

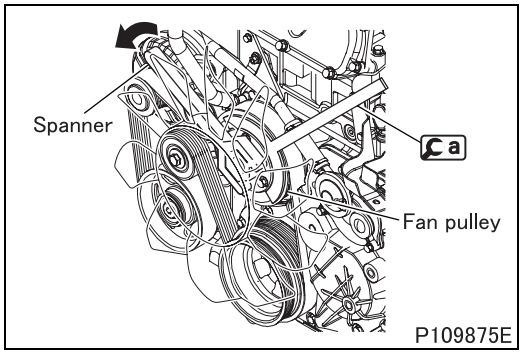

P109875E

■ **Removal: Automatic cooling fan coupling**

- Fit Ca to the fan pulley.
- While holding Ca, remove the automatic cooling fan coupling.

CAUTION ⚠

- **The automatic cooling fan coupling has left hand thread.**

https://truckmanualshub.com/

◆Installation procedure◆

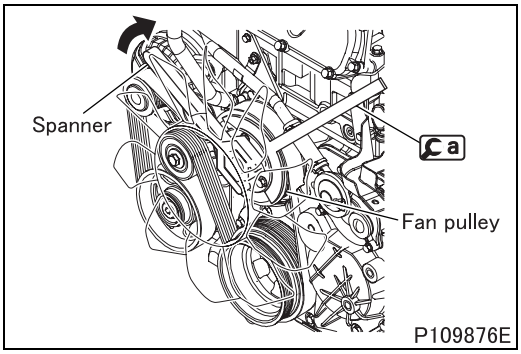

■ **Installation: Automatic cooling fan coupling**

- Fit a to the fan pulley.
- While holding a, tighten the automatic cooling fan coupling to the specified torque.

CAUTION ⚠

- **The automatic cooling fan coupling has left hand thread.**

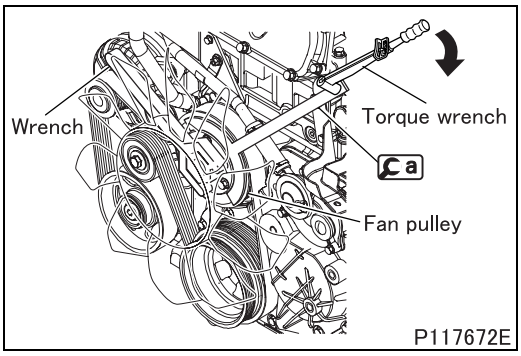

- If it is difficult to check the tightening torque during tightening the automatic cooling fan coupling, perform the following steps: set a torque wrench on a while holding down the automatic cooling fan coupling with a wrench and tighten the automatic cooling fan coupling by turning the fan pulley, to thereby check the tightening torque.
- In this case, the length 230 mm {9.06 in.} of a should be taken into consideration when setting the tightening torque.

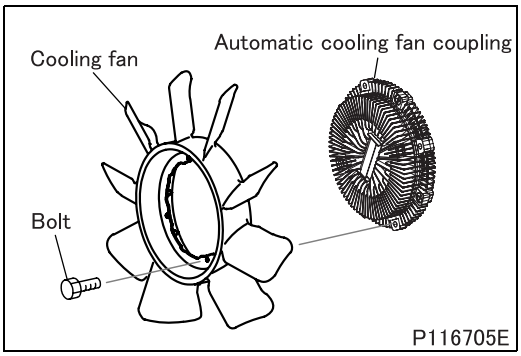

■ **Installation: Cooling fan**

- Mount the cooling fan on the automatic cooling fan coupling.

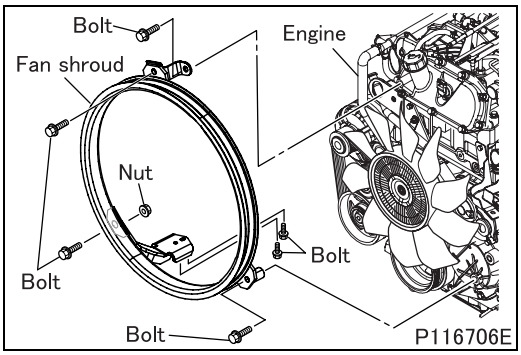

■ **Installation: Fan shroud**

- Install the fan shroud on the engine main body.
- Make sure that, when assembled, there is the specified clearance between the fan shroud and cooling fan throughout the entire periphery.

https://truckmanualshub.com/

M E M O

https://truckmanualshub.com/

BELT, WATER PUMP, DAMPER PULLEY

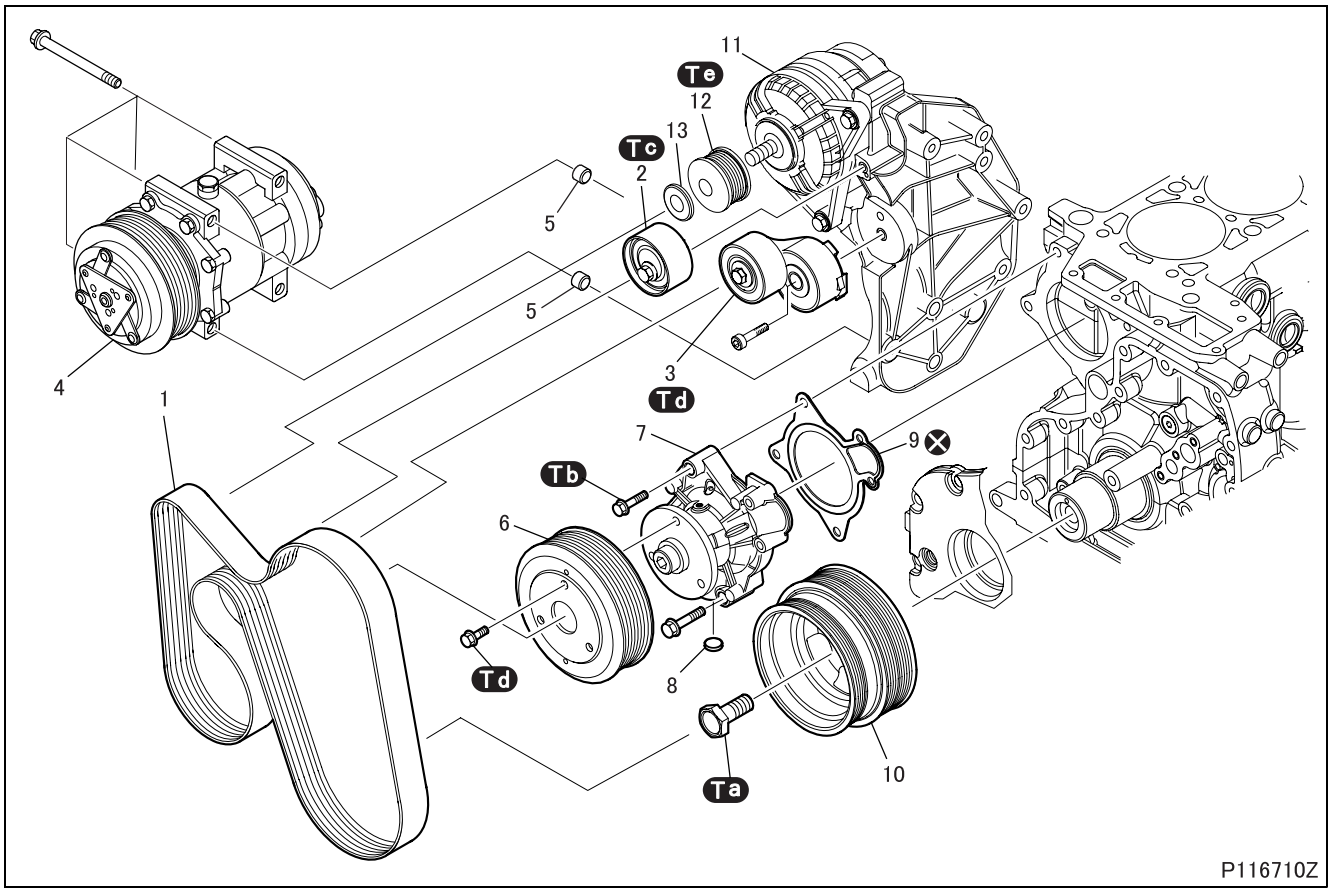

● **Removal sequence**

1 Belt
2 Idler pulley
3 Belt tensioner
4 Air conditioner compressor
5 Dowel pin
6 Pulley
7 Water pump
8 Lock plug
9 Gasket
10 Damper pulley
11 Alternator
12 Alternator pulley
13 Cover

⊗: Non-reusable parts

● **Installation sequence**

Follow the removal sequence in reverse.

Tightening torque (Unit: N·m {ft.lbs, kgf·m})

Mark	Parts to be tightened		Tightening torque	Remarks
Ta	Bolt (damper pulley mounting)		350 {260, 35}	–
Tb	Bolt (water pump mounting)	M8	25 {18, 2.5}	–
		M10	50 {37, 5}	
Tc	Bolt (belt tensioner mounting)		40 {30, 4}	–
Td	Bolt (belt tensioner mounting)		25 {18, 2.5}	–
	Bolt (pulley mounting)			
	Bolt (support pulley mounting)			
Te	Pulley		60 to 70 {44 to 52, 6.1 to 7.1}	–

https://truckmanualshub.com/

Special tools (Unit: mm {in.})

Mark	Tool name and shape	Part No.	Application
a	Wrench, alternator pulley 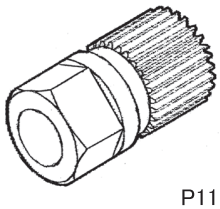 P116715	MH063986	Wrench for alternator pulley (free wheel) removal/refitting
b	Tool to retain engine flywheel 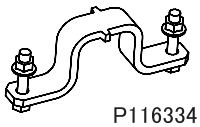 P116334	MH064194	Stop the rotation of the engine flywheel
c	Coupling fan attachment tool A: 101 {3.98}, B: 12.7 {0.50}, C: 230 {9.06} 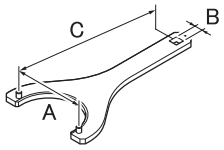 P116718	MH064219	Holding of fan pulley

◆Removal procedure◆

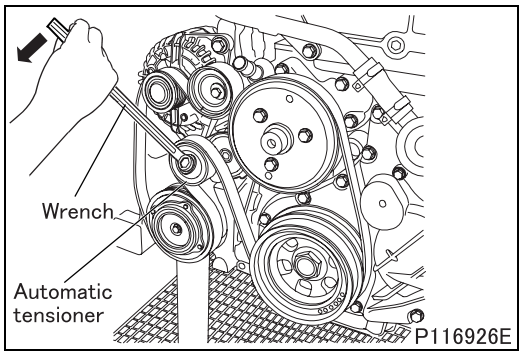

P116926E

■ **Removal: Belt**

- Using a wrench of an adequate type, operate automatic belt tensioner in the direction of the arrow to loosen the belt.

CAUTION ⚠

- **Use care not to allow your finger to be caught between the belt and pulley.**

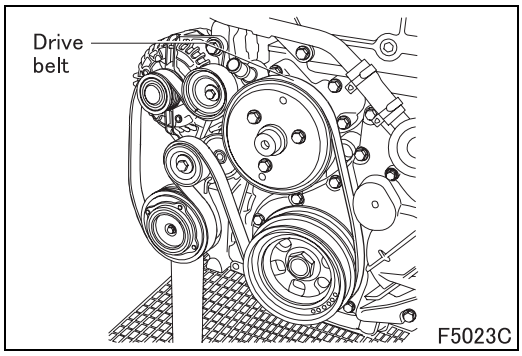

F5023C

- Remove the auxiliary mechanism drive belt.

https://truckmanualshub.com/

BELT, WATER PUMP, DAMPER PULLEY

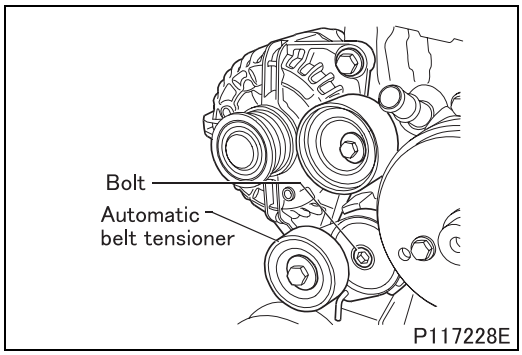

■ **Removal: Automatic belt tensioner**

- Loosen the bolt and remove the automatic belt tensioner.

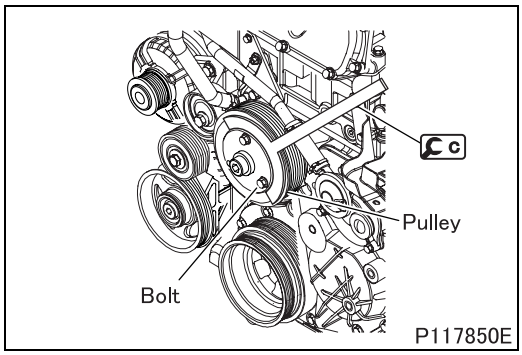

■ **Removal: Pulley**

- Fit c to the fan pulley.
- While holding c, remove the automatic cooling fan coupling.

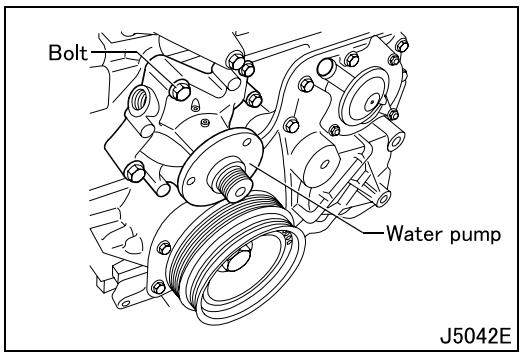

■ **Removal: Water pump**

- Unscrew and remove the attaching bolts; remove the water pump taking care to remove the gasket.

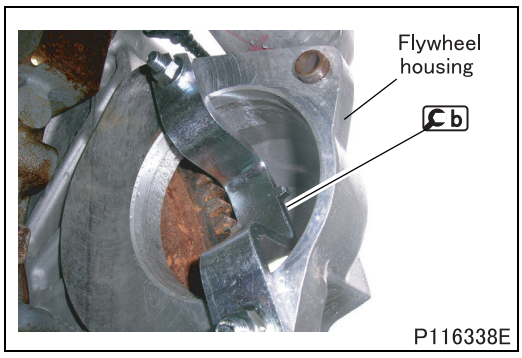

■ **Removal: Damper pulley**

- Using b, block rotation of the engine flywheel.

https://truckmanualshub.com/

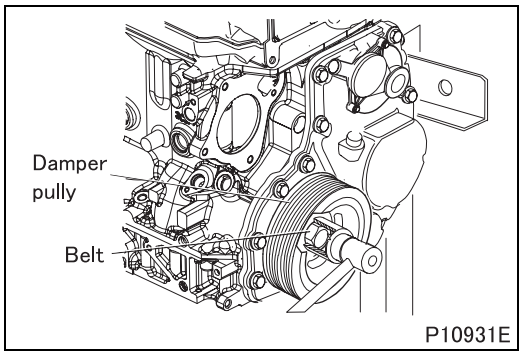

- Take out the bolt and remove the damper pulley.

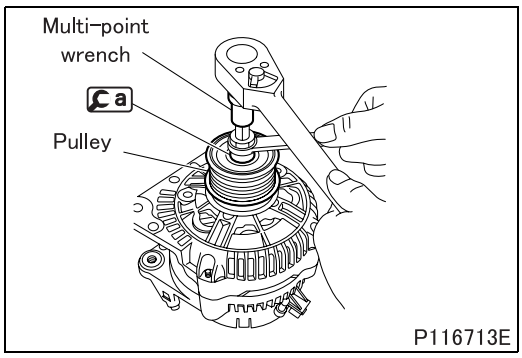

■ Removal: Alternator pulley

- Insert Ca, into the inner gear of the pulley.
- While holding the rotor shaft of the alternator with a multi-point wrench, remove the pulley using Ca and ϕ17 {0.67 in.} box wrench.

◆Installation procedure◆

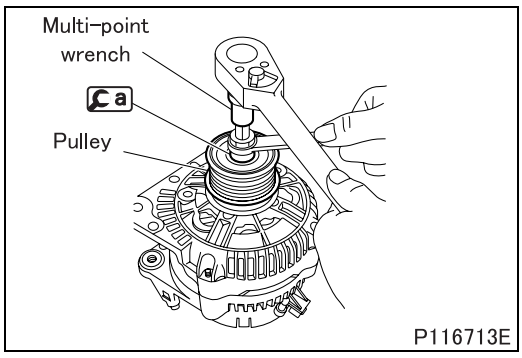

■ Installation: Alternator pulley

- Insert Ca, into the inner gear of the free wheel pulley.
- While holding the rotor shaft of the alternator with a multi-point wrench, tighten the pulley to the specified torque using Ca and ϕ17 {0.67 in.} wrench.

https://truckmanualshub.com/

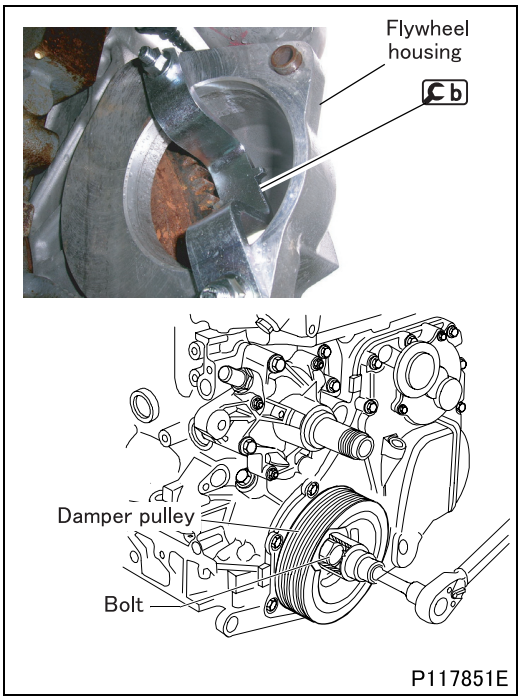

■ **Installation: Damper pulley**

- Stop the rotation of the engine flywheel by means of b.
- Fit the damper pulley. Drive in the screw and tighten it to the prescribed torque.

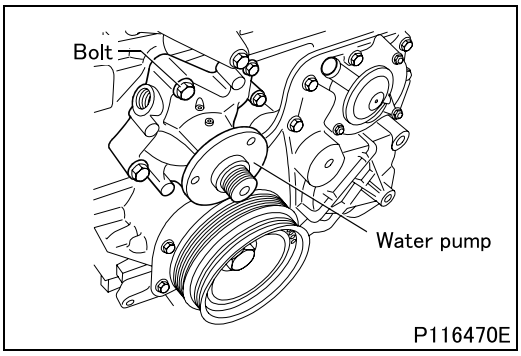

■ **Installation: Water pump**

- Install the water pump with a new gasket.
- Drive in the bolts and tighten them to the prescribed torque.

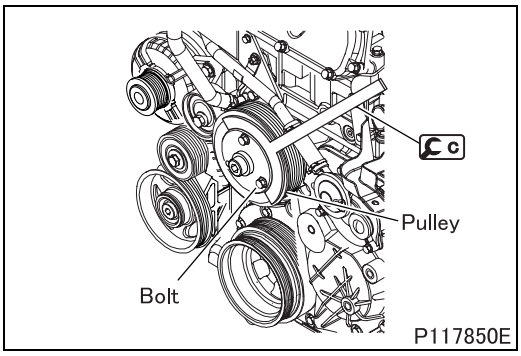

■ **Installation: Pulley**

- Attach c to the fan pulley.
- While holding c, tighten the automatic cooling fan coupling to a torque of 25 N·m {18 ft.lbs, 2.5 kgf·m}.

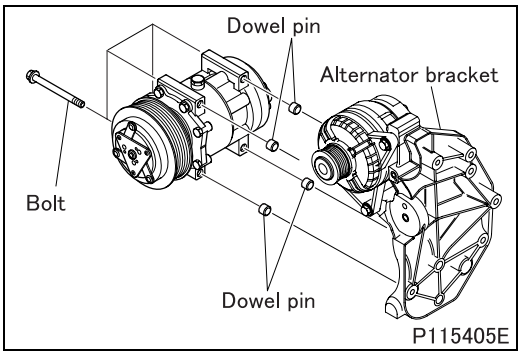

■ **Installation: Air compressor**

- Install the air compressor on the alternator bracket.

https://truckmanualshub.com/

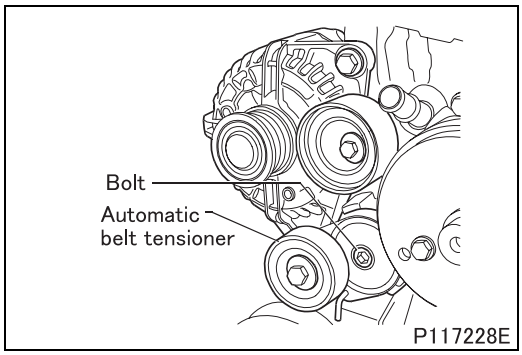

■ **Installation: Automatic belt tensioner**

- Install the automatic belt tensioner and tighten the bolt.

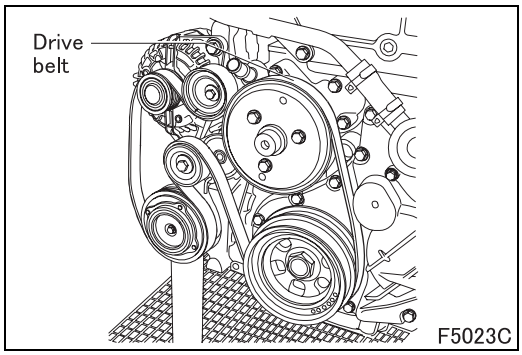

■ **Installation: Belt**

- Position the auxiliary mechanism drive belt.

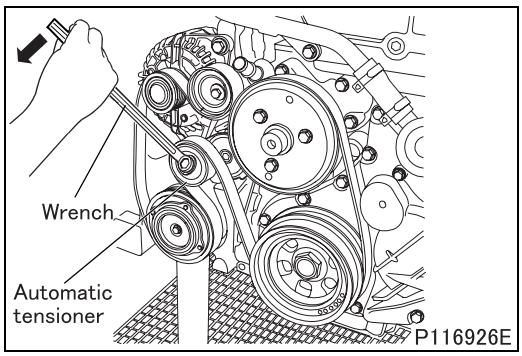

- Using a wrench of an adequate type, operate the automatic belt tensioner in the direction of the arrow to tighten the accessory drive belt.

CAUTION ⚠

- **Use care not to allow your finger to be caught between the belt and pulley.**

https://truckmanualshub.com/

THERMOSTAT

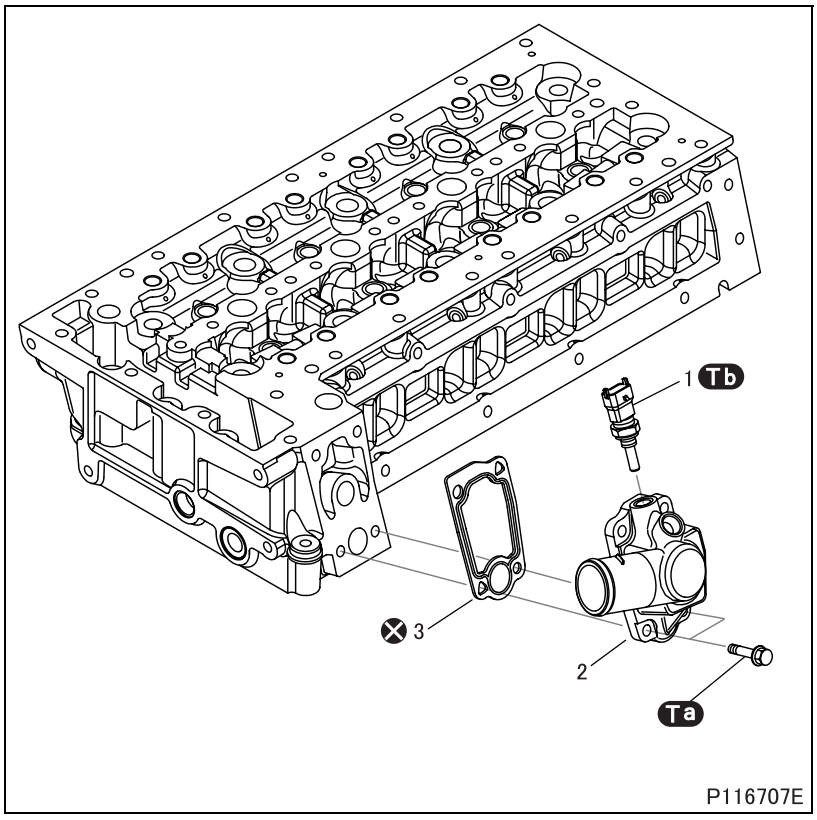

● **Removal sequence**

1 Water temperature sensor
2 Thermostat
3 Gasket

⊗: Non-reusable parts

● **Installation sequence**

Follow the removal sequence in reverse.

Service standards (Unit: mm {in.})

Location	Maintenance item		Standard value	Limit	Remedy
1	Thermostat	Valve opening temperature	79 ± 2°C {174 ± 3.6°F}	–	Replace
		Valve lift / temperature	7.5 or more / 92°C {0.30 or more / 198°F}		

Tightening torque (Unit: N·m {ft.lbs, kgf·m})

Mark	Parts to be tightened	Tightening torque	Remarks
Ta	Bolt (thermostat mounting)	25 {18, 2.5}	–
Tb	Water temperature sensor	40 {30, 4.1}	–

◆Inspection procedure◆

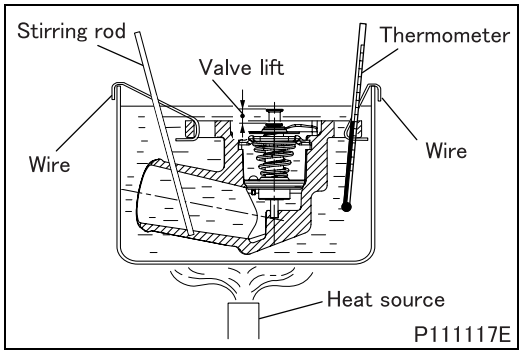

■ **Inspection: Thermostat**

- Stir the water using a stirring rod to maintain an even water temperature in the container, then conduct the tests indicated below.
- If the measured values deviate from the standard value ranges, replace the thermostat.

(1) Valve opening temperature

- Hold the thermostat with wire to keep it away from the heat source.
- Heat the water gradually to the valve opening temperature.
- Maintain this temperature for five minutes and make sure that the valve is completely open.
- Make sure that the valve closes completely when the water temperature drops below 77°C {171°F}.

https://truckmanualshub.com/

(2) Valve lift

- Heat the water to 94°C {201°F} and keep the temperature for five minutes with the valve opened completely. Measure the amount of the valve lift.

◆Removal procedure◆

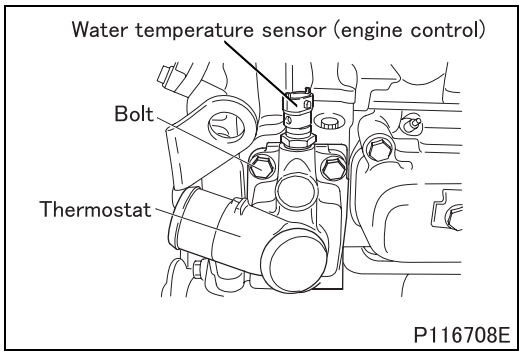

■ **Removal: Thermostat, water temperature sensor**

- Remove four bolts and remove the thermostat together with the water temperature sensor.

◆Installation procedure◆

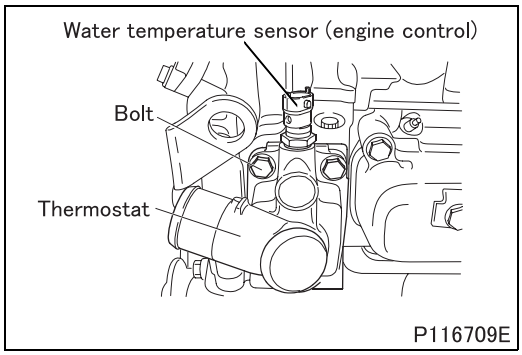

■ **Installation: Thermostat, water temperature sensor**

- Install the thermostat together with the water temperature sensor. Mount a new gasket between the thermostat and cylinder head.

https://truckmanualshub.com/

FUSO

Group 15

Intake and Exhaust

MITSUBISHI FUSO TRUCK OF AMERICA, Inc.

Pub.No.00ELT0001-15

https://truckmanualshub.com/

INDEX

SPECIFICATIONS 15-2

STRUCTURE AND OPERATION
1. Air Cleaner 15-3
2. Turbocharging System 15-4
3. EBS (Exhaust Brake System) Valve 15-9

TROUBLESHOOTING <GENERAL> 15-10

ON-VEHICLE INSPECTION AND ADJUSTMENT
1. Exhaust Emission Condition 15-11
2. Cleaning and Inspection of Air Cleaner Element 15-11
3. Installation, Looseness, and Damage of Exhaust Pipe and Muffler 15-12
4. Functions of Muffler 15-13

AIR DUCT AND AIR CLEANER
<EXCEPT CREW CAB> 15-14
<CREW CAB> 15-20

TURBOCHARGER 15-26

EXHAUST MANIFOLD 15-32

INTERCOOLER 15-34

INTAKE MANIFOLD 15-38

FRONT PIPE 15-42

https://truckmanualshub.com/

SPECIFICATIONS

Item		Specifications
Air cleaner element type		Filter paper type
Turbocharger	Type	K03 B2 waste-Gate
	Manufacturer	BORG WARNER
	Turbocharger shaft radial play mm {in.}	0.396 to 0.602 {0.016 to 0.024}
	Turbocharger shaft end float mm {in.}	0.034 to 0.106 {0.0013 to 0.0042}
Intercooler type		Tube and corrugated fin air cooled type

https://truckmanualshub.com/

1. Air Cleaner

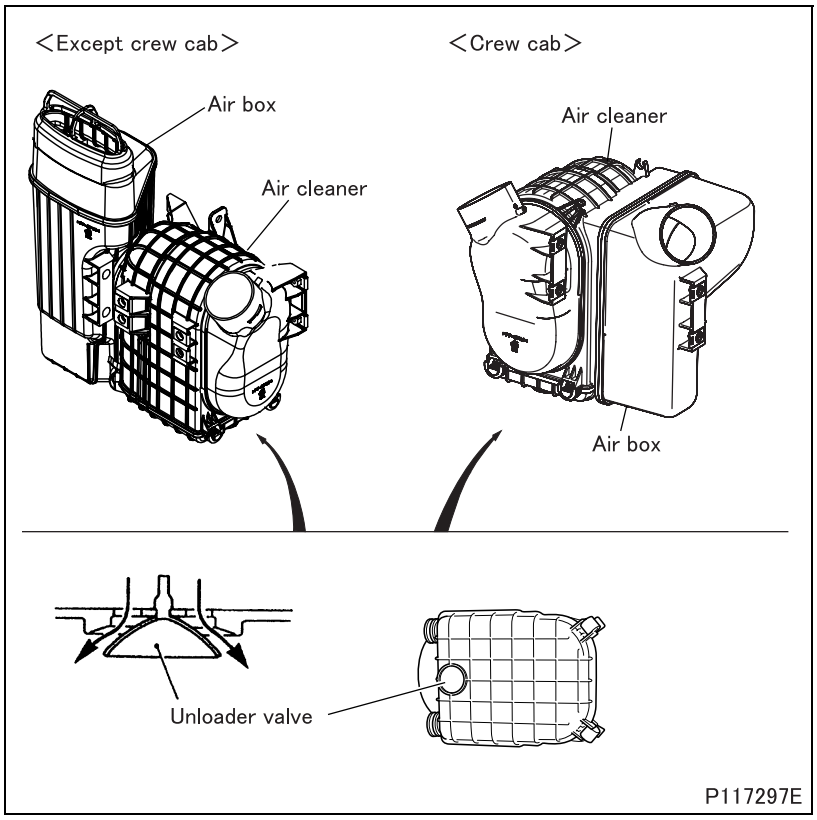

- The air cleaner is a single element type.
- When the engine slows down below the predetermined speed, the level of vacuum in the air cleaner changes and causes the unloader valve to vibrate. Vibration of the unloader valve allows the air cleaner to automatically discharge any water and dust that has accumulated inside.

https://truckmanualshub.com/

2. Turbocharging System

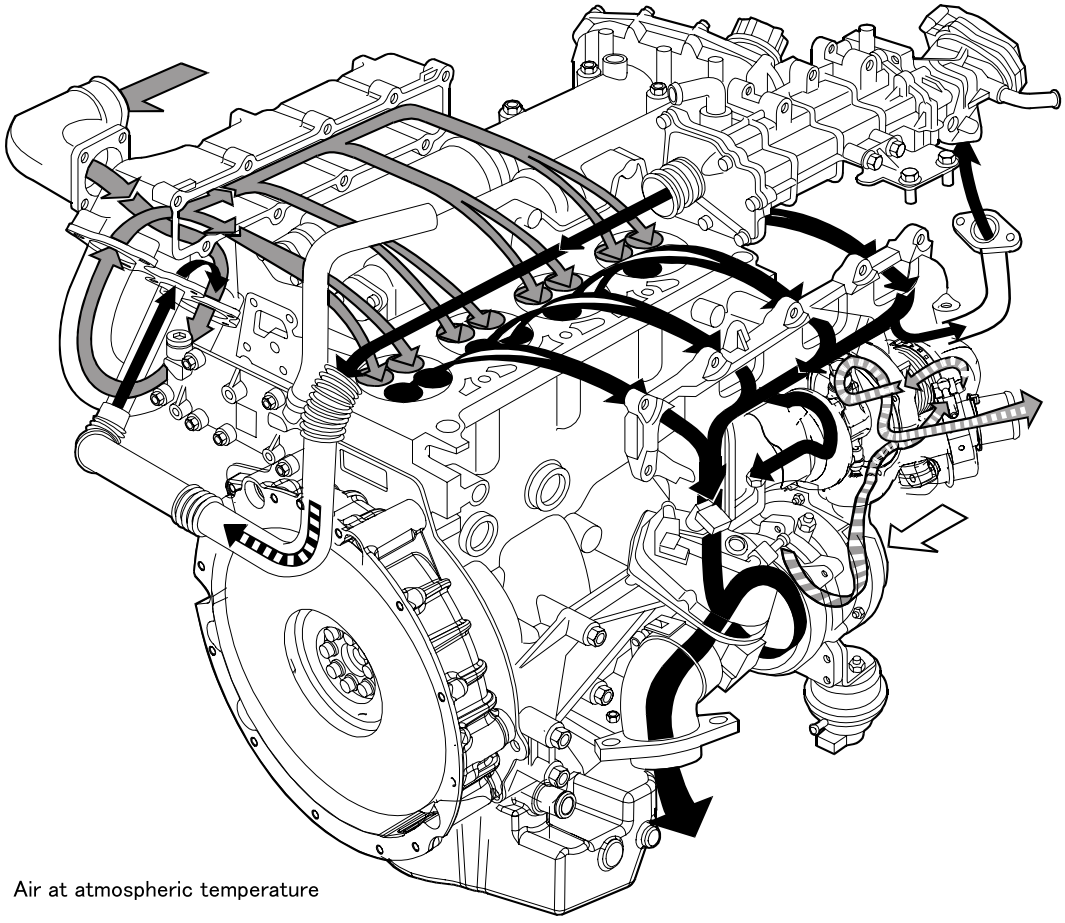

- The turbocharging system is composed of: an air filter, two-stage turbocompressor and intercooler.
- The air filter is the dry type comprising a filtering cartridge to be periodically replaced.
- The function of the two-stage turbocharger is to use the energy of the engine's exhaust gas to send pressurized air to the cylinders.
- The intercooler comprises a radiator included in the engine coolant radiator and its function is to lower the temperature of the air leaving the turbocharger to send it to the cylinders.

https://truckmanualshub.com/

2.1 Turbocharger system function diagram

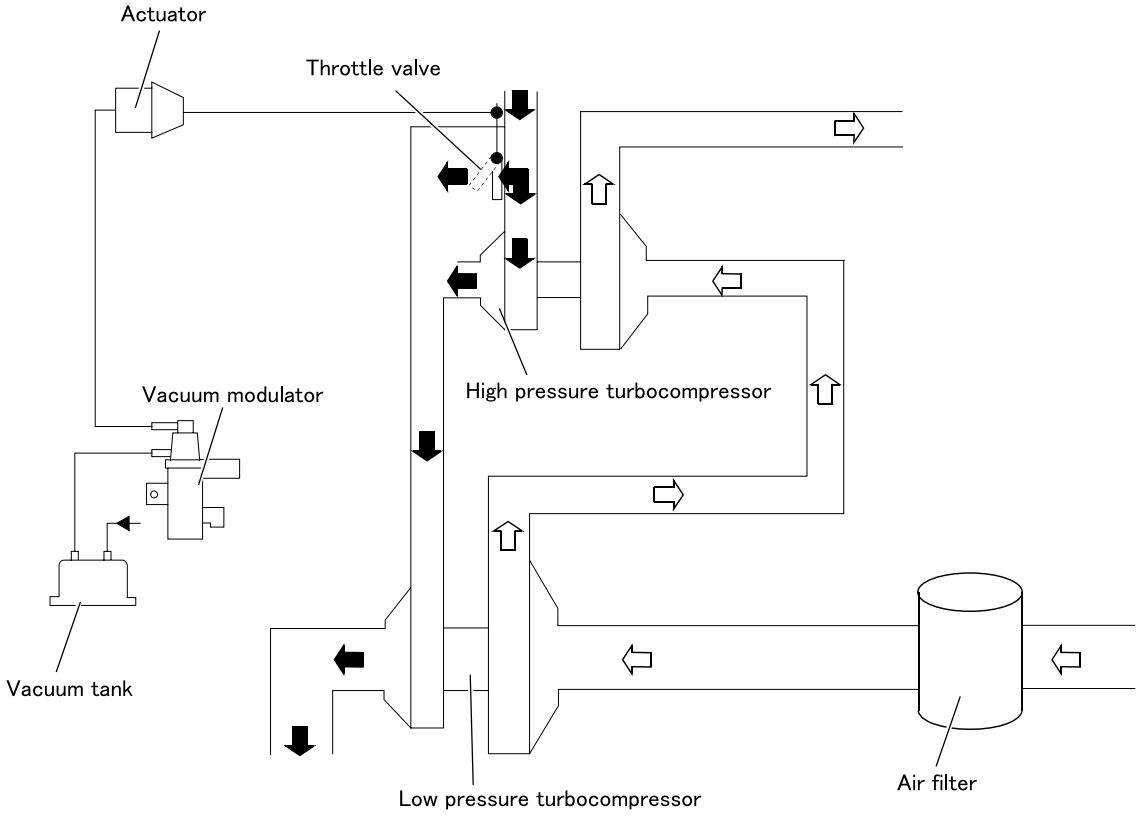

- For electronic control unit connector diagram of turbocharger system, see Gr13.

https://truckmanualshub.com/

2.2 Turbocharger

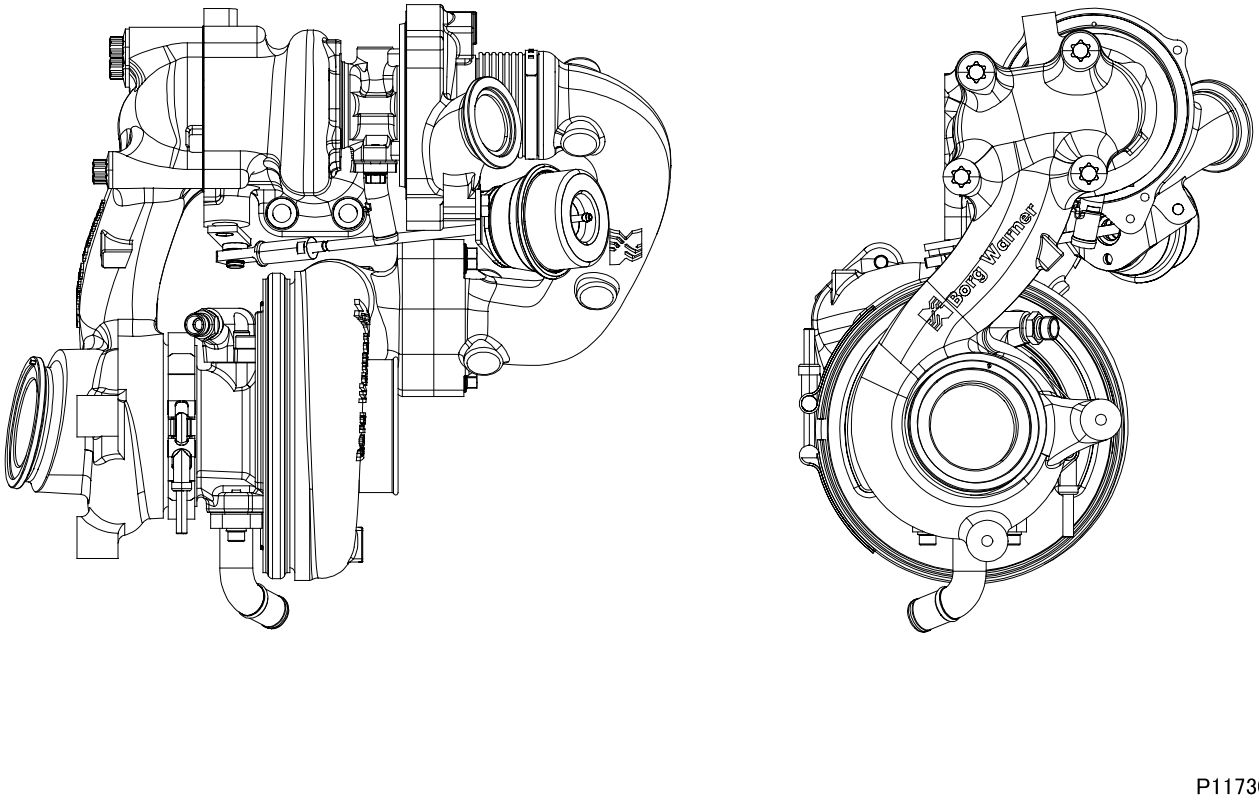

P117300

- The borg warner turbcompressor is of the two-stage type with waste gate. It basically consists of;
  - A primary high-pressure turbocharger consisting of.
    - Central body in which a shaft is fitted, supported by bushings, fitted with the turbine impeller and compressor impeller at opposite ends.
    - A small fixed geometry turbine casing and a compressor casing mounted at the end of the central casing.
- A secondary low-pressure turbocharger consisting of:
  - central casing in which a shaft is fitted, supported by bushings, fitted with the turbine impeller and compressor impeller at opposite ends;
  - a larger fixed geometry turbine casing and a compressor casing mounted at the end of the central casing;
- A gas pipe connecting the two turbines;
- A pipe connecting the compressed air between the two compressors;
- An overpressure relief valve fitted on the high pressure turbine casing. This partialises the exhaust gas outlet and sends part directly to the low pressure turbine via the pipe connecting the two turbines when the supercharging pressure exceeds the set value. The waste gate valve is controlled by a modulator valve which modulates the underpressure taken from the air circuit of the servo brake, according to the information exchanged between the electronic control unit and the sensors: engine speed, throttle pedal position and pressure/temperature fitted on the intake manifold.

https://truckmanualshub.com/

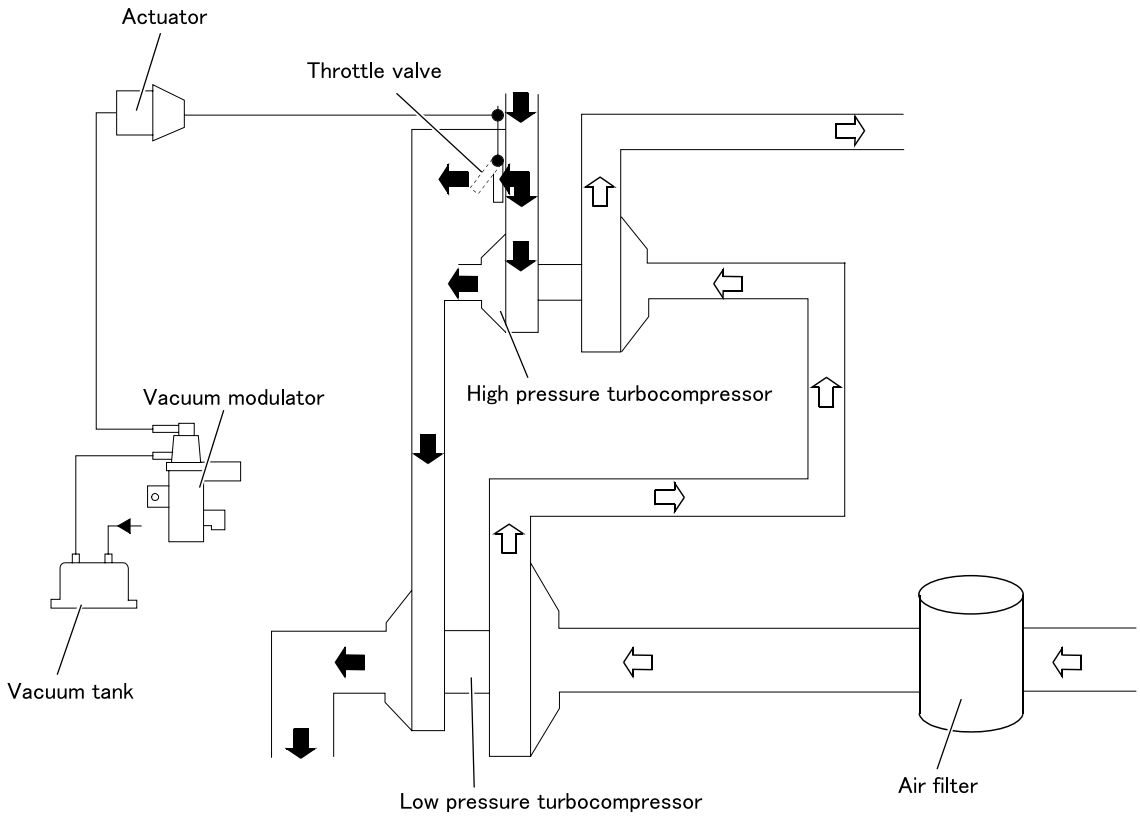

(1) Operation at low speed

- At low engine speed, the WG valve is closed and the exhaust gases from the exhaust manifold offer a weak kinetic energy to rotate the high-pressure turbine slowly. The residual kinetic energy of the exhaust gases flowing out of the high-pressure turbine also rotate the low-pressure turbine slowly, activating both compressors and thus allowing the outside air to be compressed and sent through the connection piping to the intercooler with a limited turbocharge pressure.

(2) Operation at high speed

- When the engine speed increases, the kinetic energy of the exhaust gases also increases, therefore the high-pressure turbine speed increases, which in turn causes the WG valve to intervene and create a rise in tubocharging pressure.
- Waste Gate valve intervention allows the part of the exhaust gases with greater kinetic energy to bypass the high-pressure turbine and go directly to the low-pressure turbine, which is rotating more quickly; also, by activating both compressors and thus allowing the outside air to be compressed, it is sent through the connection piping to the intercooler with a limited turbocharge pressure.

https://truckmanualshub.com/

2.3 Actuator

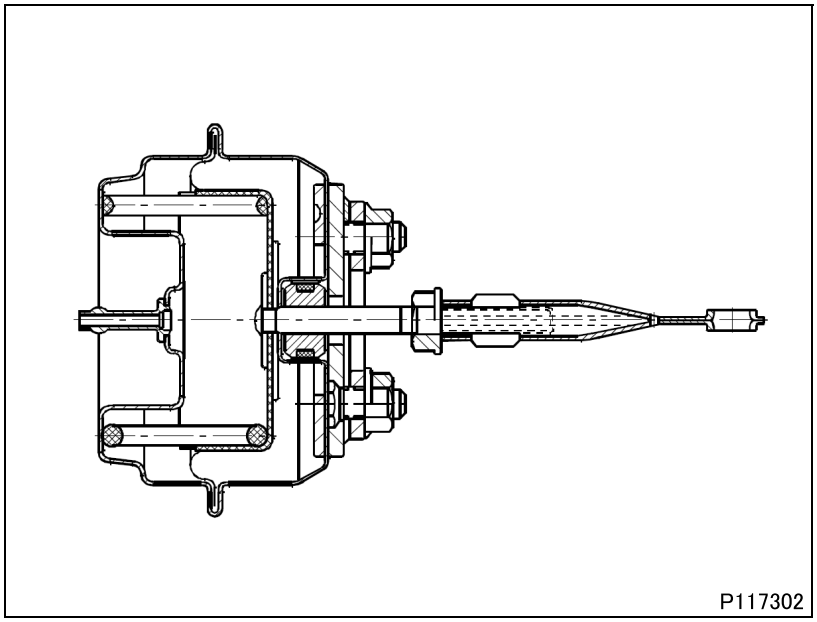

- The actuator diaphragm, connected to the control rod, is governed by the low pressure on the top of the actuator.
- The underpressure modulated by the proportional magnetic valve varies the movement of the diaphragm and, as a result, of the rod governing the throttle.

https://truckmanualshub.com/

3. EBS (Exhaust Brake System) Valve

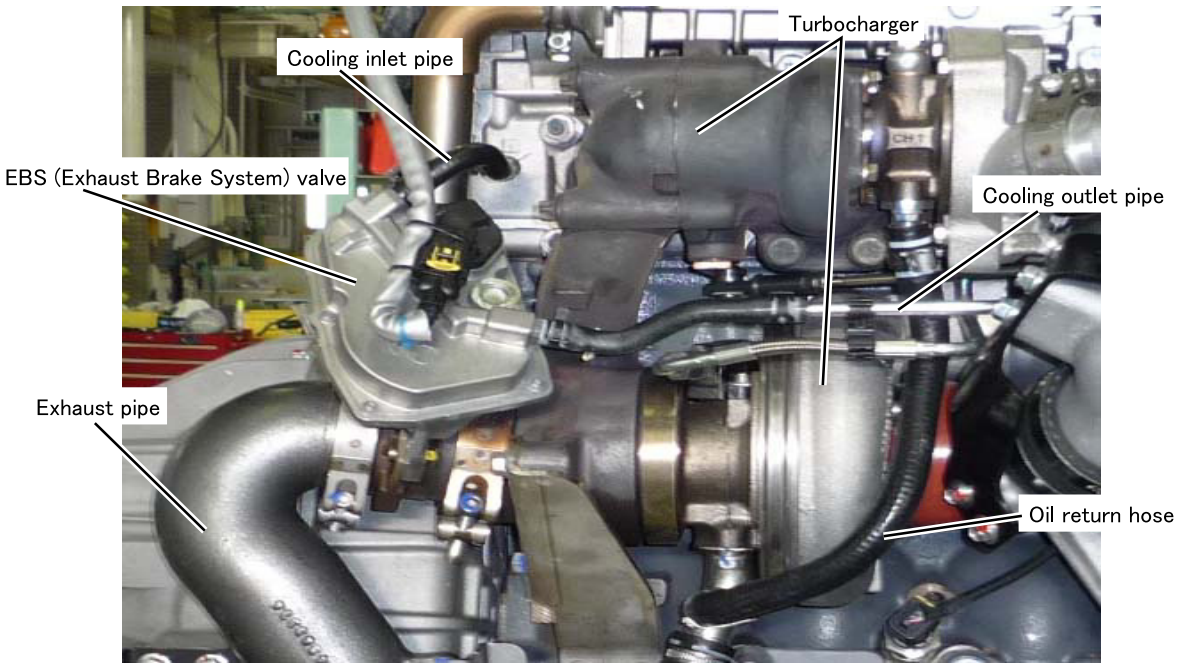

P117303E

- The EBS valve fitted on the turbocharger outlet it modulates the pressure of the exhaust gases flowing out of the turbine to increase the “EGR” function in aspiration with the purpose of graduating the value of the exhaust emission. It improves the value of the gaseous emissions bringing it to the parameters required by the norm.
- Following the value of restriction defined by the valve the exhaust gas pressure is increased upstream of the turbine. Greater the pressure determined by the restriction, the greater will be the flow of the exhaust gases that are diverted, upstream of the turbine inlet, toward the EGR (Exhaust Gas Recirculation) unit and recirculated in the inlet.
- The engine electronic control unit is mapped for the management of the gaseous emissions values and following these parameters it controls the opening of the EBS valve.

- The flow of the exhaust gases “not diverted” is sent to the exhaust pipe.

https://truckmanualshub.com/

Possible causes / Symptoms		Engine hard to start	Black exhaust gas → DPF premature clogging	White exhaust gas	Poor engine power	Excess oil consumption	ECU diagnosis lamp	Reference Gr
Air cleaner	Clogged air cleaner element	O	O		O			
Turbocharger	Defective turbocharger		O	O	O	O		
	Damaged air pipe, air hose, and air duct; defective air valve				O			
Intercooler	Foreign substances deposited on intercooler front core				O			
Front pipe/DPF/tail pipe deformed								Gr17
Front pipe/DPF/tail pipe fitted poorly								Gr17
Rocker arms broken/out of place		O	O		O			Gr11
Cylinder head gasket defective			O		O			Gr11
Wear/carbon deposits on valves and valve seats			O					Gr11
Valve spring weakened		O	O		O			Gr11
Piston rings worn/damaged		O		O	O	O		Gr11
Piston ring grooves worn/damaged		O		O	O	O		Gr11
Cooling system malfunctioning			O		O			
Engine oil quantity excessive				O				Gr12
Major moving parts seized		O	O		O			
Uneven or excessive fuel injection			O					Gr13

DPF: Diesel particulate filter

https://truckmanualshub.com/

1. Exhaust Emission Condition

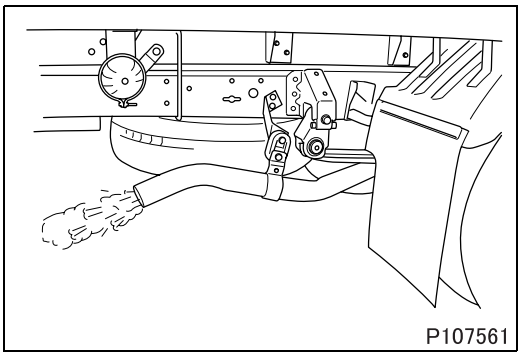
P107561

- With the engine warmed up sufficiently, visually check to see if an abnormal black smoke is discharged.
- If an abnormal condition is evident, check different parts and correct or replace any defective part.

2. Cleaning and Inspection of Air Cleaner Element

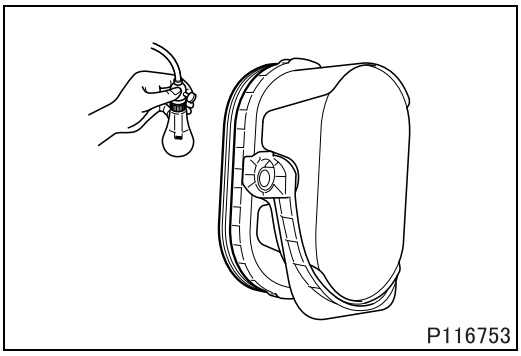
P116753

[Inspection]

- Shine light inside the element.
- Replace the element if thin spots or broken parts are evident in the filter paper, or if the packing at the top of the element is damaged.
  Also replace the element if the dust on the element is damp with oily soot, regardless of the replacement schedule.

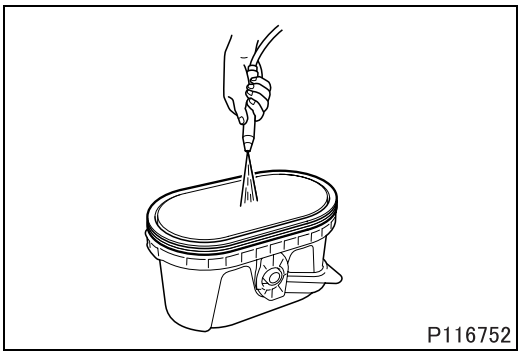
P116752

[Cleaning]

- Blow a jet of compressed air at a pressure not higher than 685 kPa {100 psi, 7 kgf/cm^2} against the inside surfaces of the element.
- Move the compressed air jet up and down along all pleats of the filter paper element.

CAUTION ⚠

- **For the frequency and timing of cleaning, see the relevant instruction manual. More frequent cleaning than necessary may damage the element, causing dust and foreign matter to be sucked into the engine.**
- **Do not strike the element or hit it against another object to remove dust.**
- **Do not blow compressed air against outside surfaces of the element.**

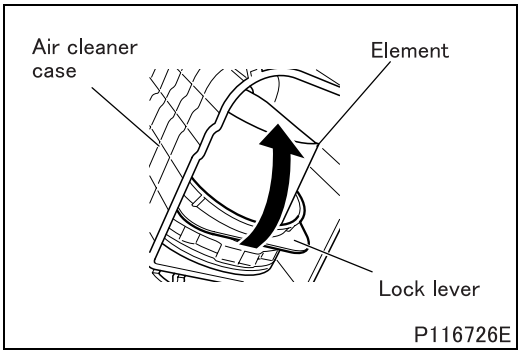

P116726E

[Installation]

- Insert the air cleaner element straight into the air cleaner case. Then move the lock lever in the air cleaner case to the “LOCK” position.

https://truckmanualshub.com/

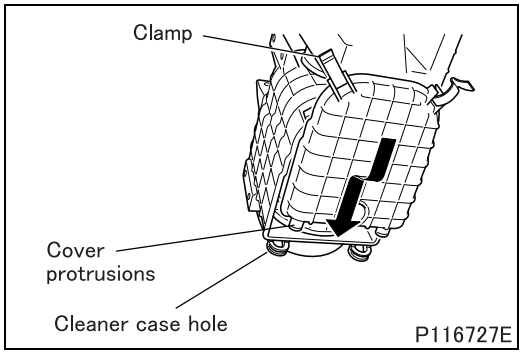

- Install the cover while inserting its projections into the holes in the air cleaner case.

3. Installation, Looseness, and Damage of Exhaust Pipe and Muffler

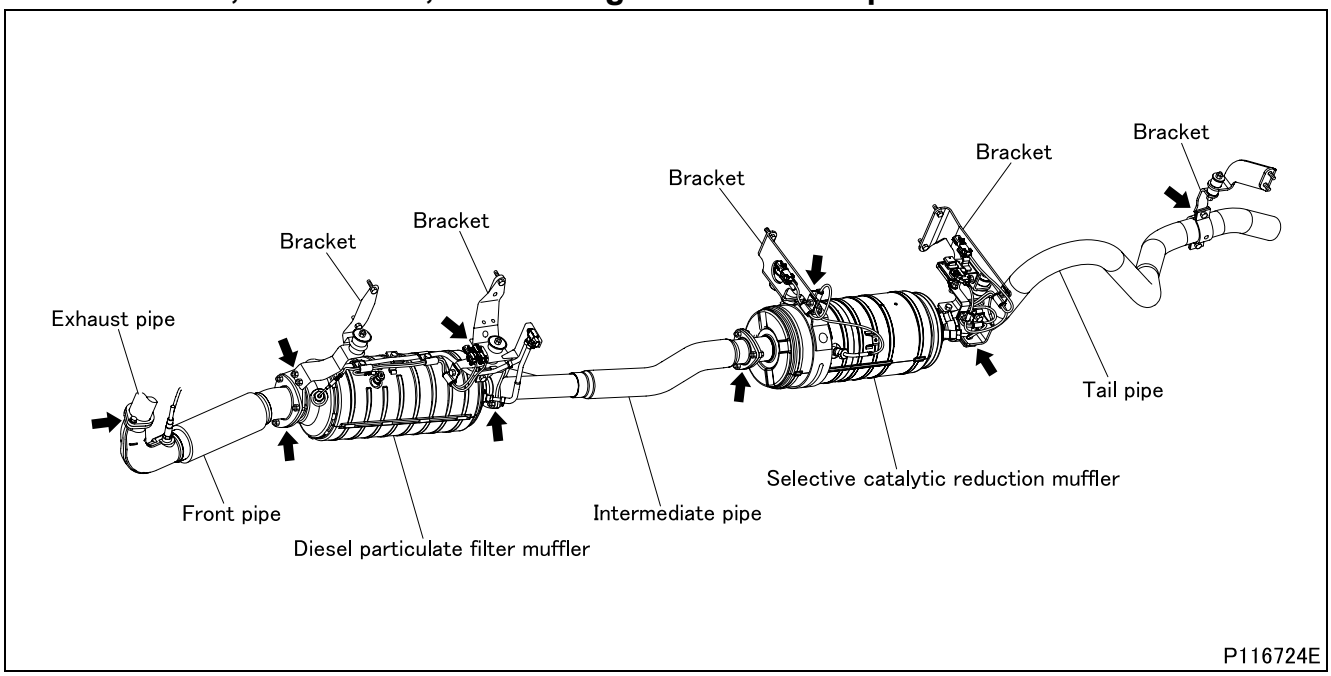

- Check the following and when a loose or faulty part is detected, correct or replace the part.
  - Check the mounting and connecting portions of the exhaust (front) pipe, muffler, DPF, and oxidation catalyst for looseness by shaking them by hand.
  - Using a wrench or similar tool, check the mounting bolts and nuts of the exhaust (front) pipe, muffler, DPF, oxidation catalyst, and heat insulating board (insulator) for looseness.
  - Check the rubber hanger for deterioration, damage, and installed condition.
  - Check the exhaust (front) pipe, muffler, DPF, oxidation catalyst, and heat insulating board (insulator) for damage and corrosion.
  - Check the exhaust (front) pipe, muffler, DPF, and oxidation catalyst for possible contact with other parts.
  - Start the engine (and let it warm up thoroughly) and check for possible leakage of exhaust gas from connections.

CAUTION ⚠

- **Do not touch water that comes out from the DPF or SCR. If such water attaches to your skin, wash it off thoroughly with running water.**

DPF: Diesel particulate filter

https://truckmanualshub.com/

4. Functions of Muffler

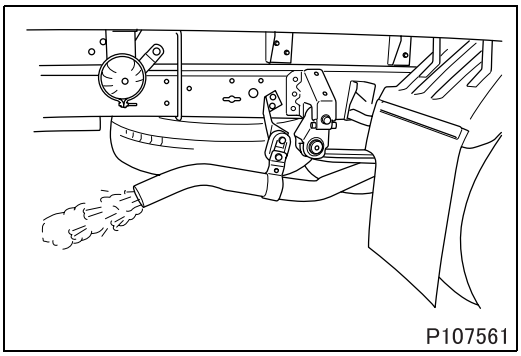

- Start the engine (and let it warm up thoroughly). Then, change its speed to listen for any unusual exhaust noise.
- If any unusual noise is heard, correct or replace the defective part.

CAUTION ⚠

- **Do not touch water that comes out from the DPF or SCR. If such water attaches to your skin, wash it off thoroughly with running water.**

DPF: Diesel particulate filter
SCR: Selective catalytic reduction

https://truckmanualshub.com/

AIR DUCT AND AIR CLEANER <EXCEPT CREW CAB>

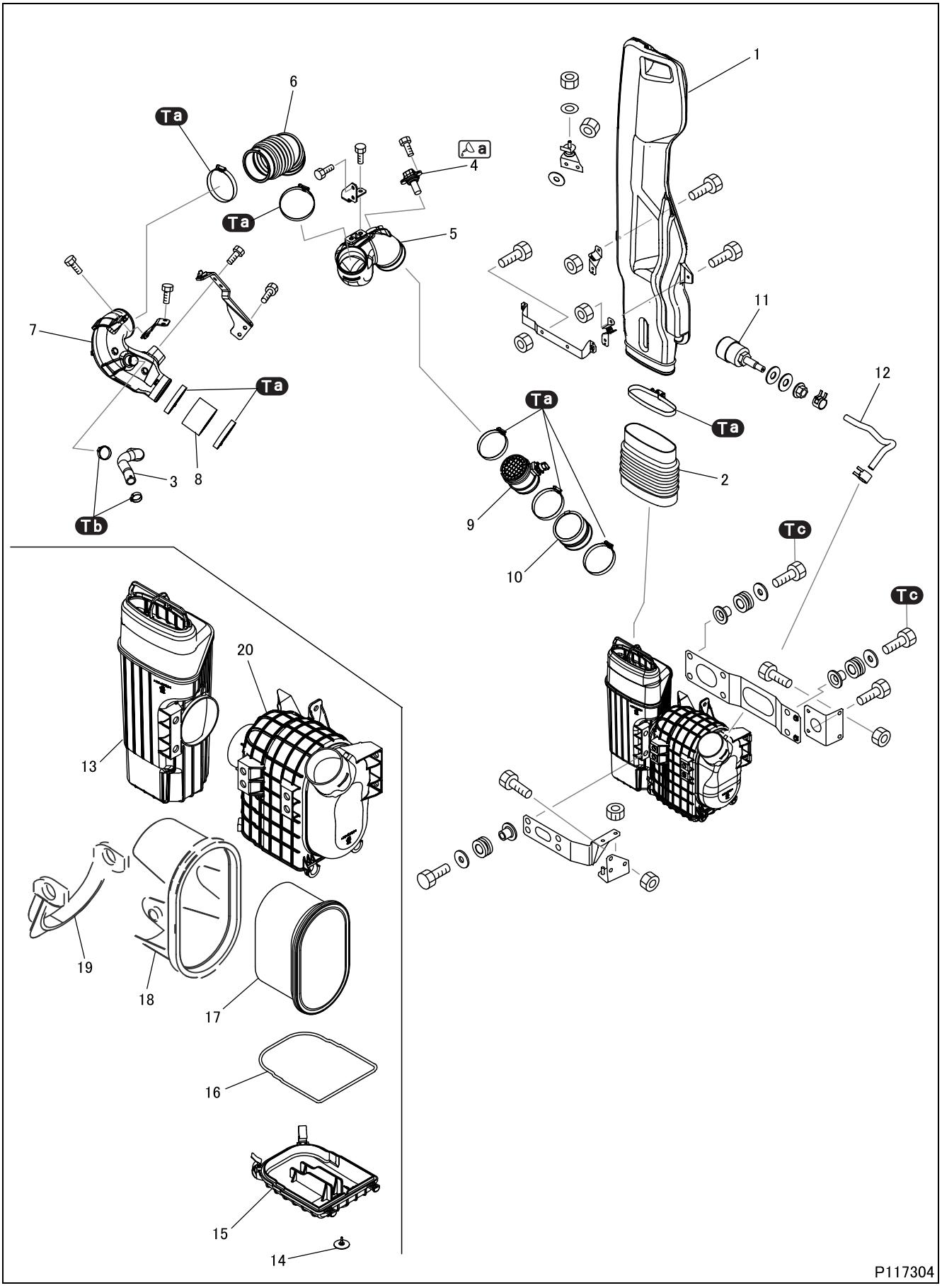

https://truckmanualshub.com/

● **Disassembly sequence**

1 Air intake duct
2 Connector
3 PCV hose
4 Humidity and intake air temperature sensor
5 Air duct A
6 Air hose A
7 Air duct B
8 Air hose B
9 Air flow and intake air temperature sensor
10 Air hose C
11 Dust indicator
12 Indicator hose
13 Air box
14 Unloader valve
15 Air cleaner cover
16 Gasket
17 Element
18 Air cleaner cover
19 Air cleaner cover lever
20 Air cleaner case

⊗: Non-reusable parts
PCV: Positive Crankcase Ventilation

● **Assembly sequence**

Follow the disassembly sequence in reverse.

Tightening torque (Unit: N·m {ft.lbs, kgf·m})

Mark	Parts to be tightened	Tightening torque	Remarks
Ta	Clamp	3.0 to 3.4 {2.2 to 2.5, 0.3 to 0.35}	–
Tb	Clamp	9.0 to 11.0 {6.6 to 8.1, 0.9 to 1.1}	–
Tc	Bolt	12 to15 {8.9 to 11, 1.2 to 1.5}	–

Lubricant and/or sealant

Mark	Points of application	Specified lubricant and/or sealant	Quantity
a	Humidity and intake air temperature sensor	ThreeBond 1855	As required

◆**Removal procedure**◆

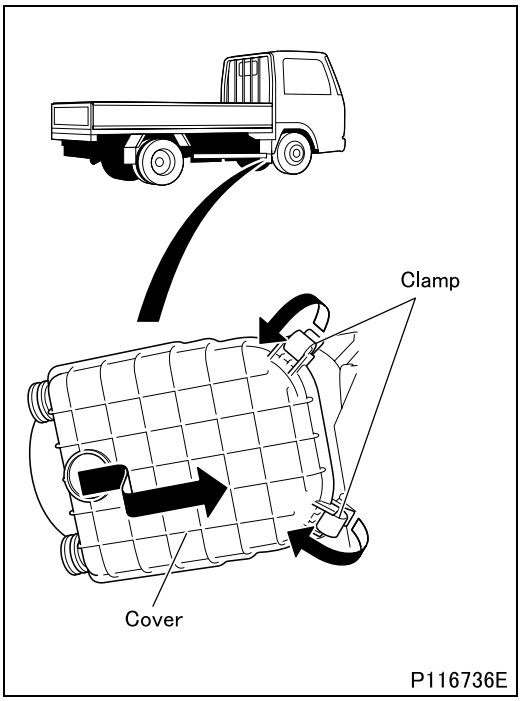

■**Removal: Air cleaner element**

- Make sure the parking brake is firmly applied.
- Chock the wheels.
- Undo the clamps at 2 places, then remove the cover by pulling it in the direction of the clamps.

https://truckmanualshub.com/

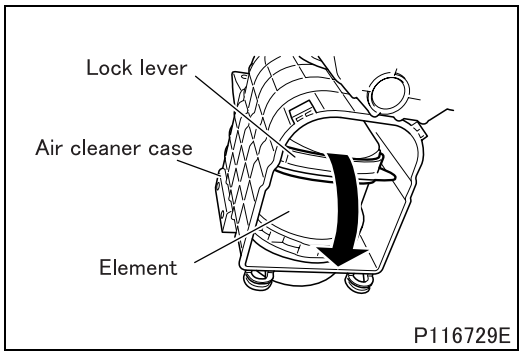

- Move the lock lever in the air cleaner case to the “UNLOCK” position.

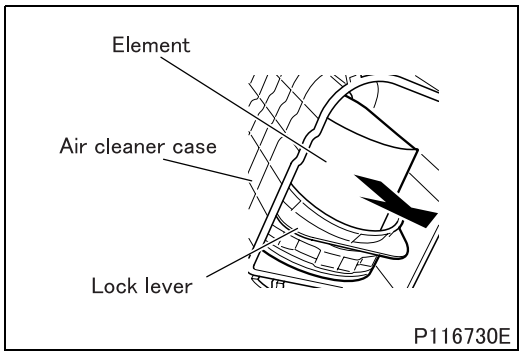

- Pull the air cleaner element straight out of the air cleaner case.

◆Inspection procedure◆

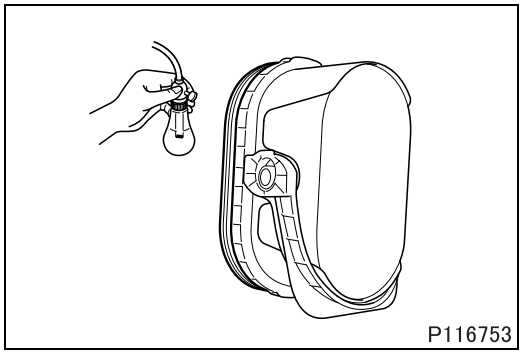

■ Inspection: Element

- Shine light inside the element.
- Replace the element if thin spots or broken parts are evident in the filter paper, or if the packing at the top of the element is damaged.
  Also replace the element if the dust on the element is damp with oily soot, regardless of the replacement schedule.

◆Cleaning procedure◆

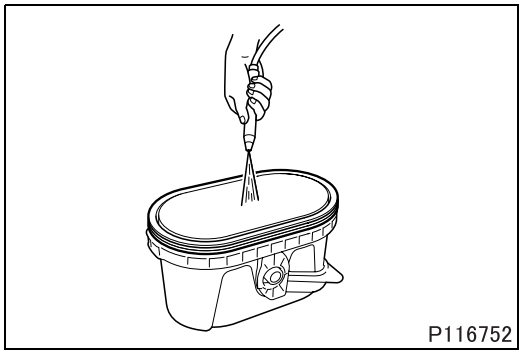

■ Cleaning: Element

- Blow a jet of compressed air at a pressure not higher than 685 kPa {100 psi, 7 kgf/cm^2} against the inside surfaces of the element.
- Move the compressed air jet up and down along all pleats of the filter paper element.

CAUTION ⚠

- **For the cleaning interval of the element, refer to the Owner’s Manual. Unnecessarily frequent cleaning may damage the element and can be the cause of dust and foreign objects being trapped in the engine.**
- **Do not strike the element or hit it against another object to remove dust.**
- **Do not blow compressed air against outside surfaces of the element.**

https://truckmanualshub.com/

◆Installation procedure◆

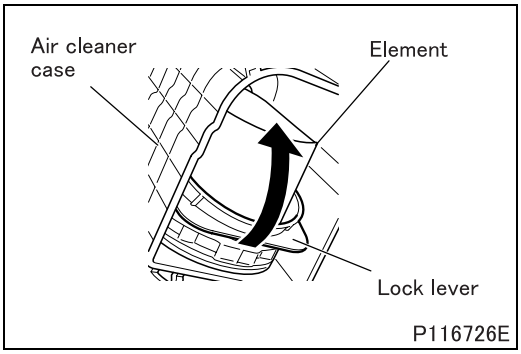

■ **Installation: Air cleaner element, air cleaner cover**

- Insert the air cleaner element straight into the air cleaner case, then move the lock lever in the air cleaner case to the “LOCK” position.

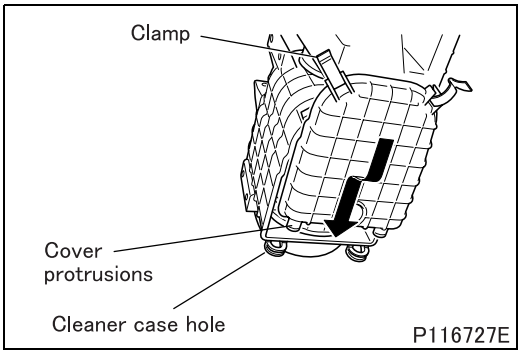

- Install the cover while inserting its protrusions into the holes in the air cleaner case.

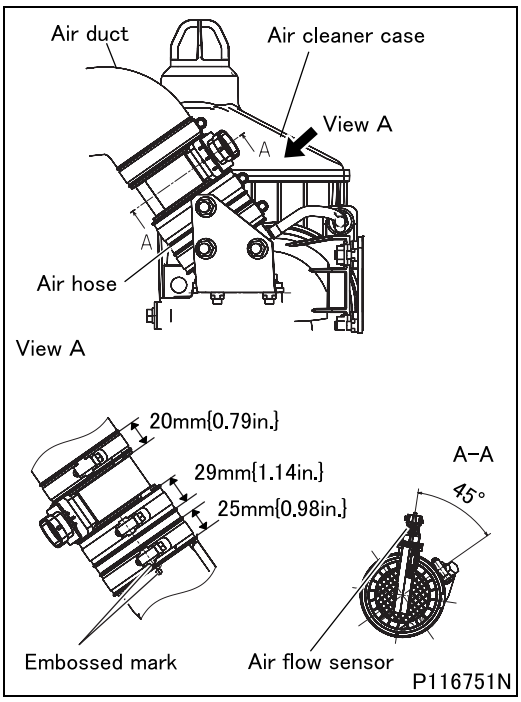

■ **Installation: Air flow sensor**

- Install the air flow sensor to the dimensions indicated in the illustration.
- Align the marks “o” on air hose and push it in until it hits stopper.

https://truckmanualshub.com/

AIR DUCT AND AIR CLEANER <EXCEPT CREW CAB>

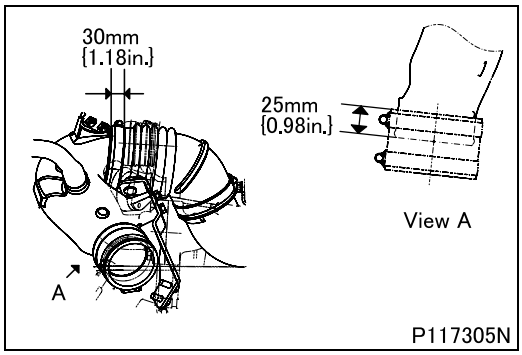

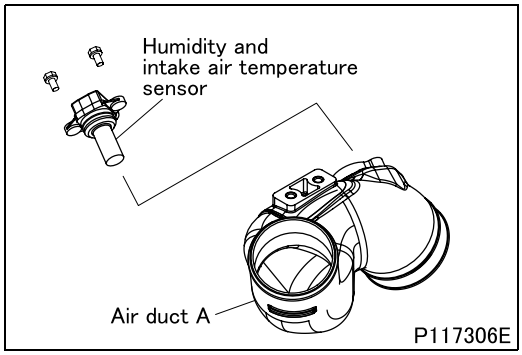

■ **Installation: Air hose B, air duct B**

- Connect the air hose B to the air duct B to the dimensions indicated in the illustration.
- Align the marks “o” on air hose and push it in until it hits stopper.

CAUTION ⚠

- **When assembling the secondary side hose or duct, use water only for smooth installation. Appling soup suds, grease or other lubricating material will cause malfunction of the air flow sensor.**

■ **Installation: Humidity and intake air temperature sensor**

- Apply sealant to the humidity and intake air temperature sensor, then install the sensor on the air duct A.

https://truckmanualshub.com/

M E M O

https://truckmanualshub.com/

AIR DUCT AND AIR CLEANER <CREW CAB>

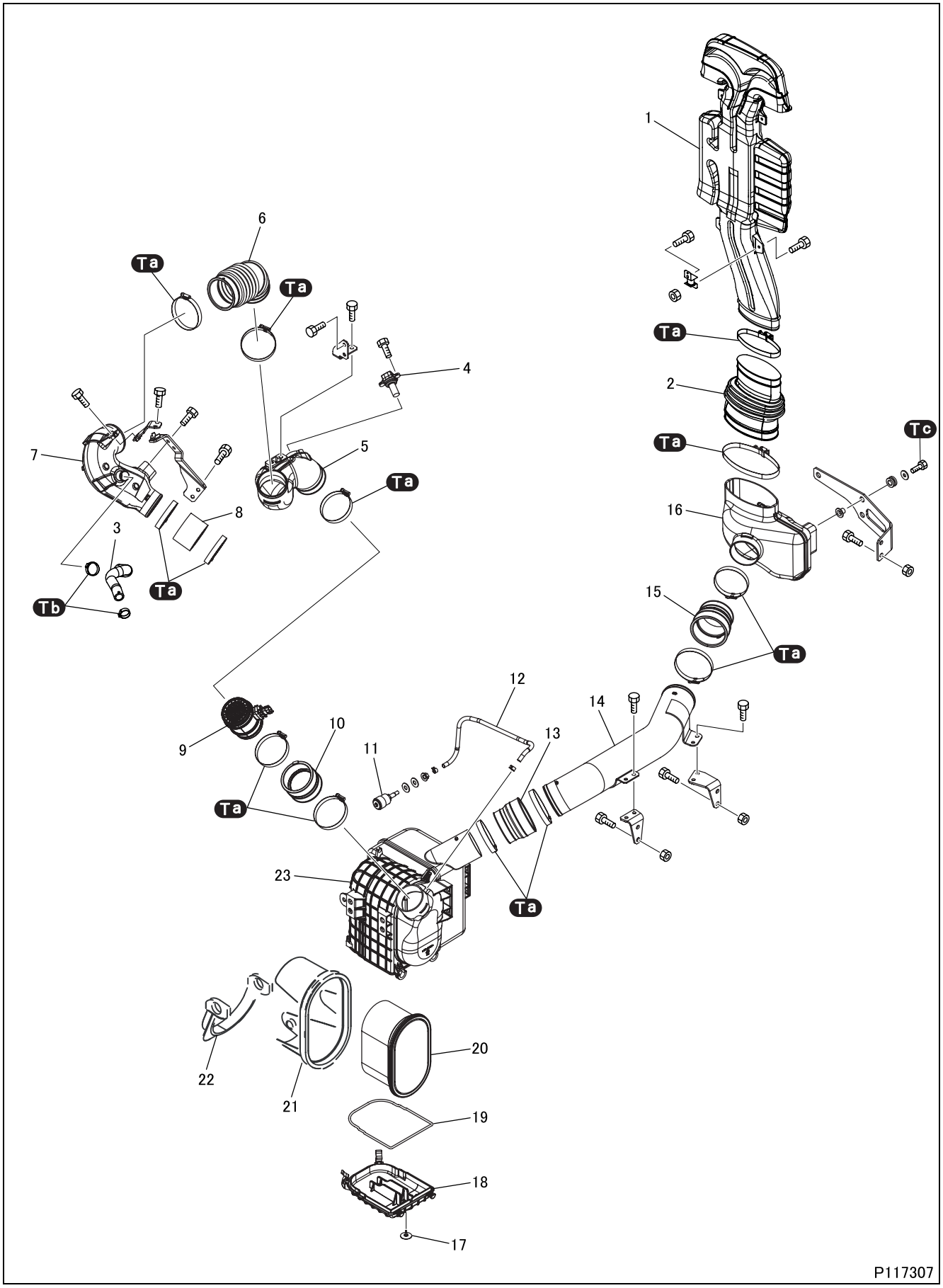

https://truckmanualshub.com/

● **Disassembly sequence**

1 Air inlet duct
2 Connector
3 PCV hose
4 Humidity and intake air temperature sensor
5 Air duct A
6 Air hose A
7 Air duct B
8 Air hose B
9 Air flow and intake air temperature sensor
10 Air hose C
11 Dust indicator
12 Indicator hose
13 Air hose D
14 Air pipe
15 Air hose E
16 Lower duct
17 Unloader valve
18 Air cleaner cover
19 Gasket
20 Element
21 Air cleaner cover
22 Air cleaner cover lever
23 Air cleaner case

⊗: Non-reusable parts
PCV: Positive Crankcase Ventilation

● **Assembly sequence**

Follow the disassembly sequence in reverse.

Tightening torque (Unit: N·m {ft.lbs, kgf·m})

Mark	Parts to be tightened	Tightening torque	Remarks
Ta	Clamp	3.0 to 3.4 {2.2 to 2.5, 0.3 to 0.35}	–
Tb	Clamp	9.0 to 11.0 {6.6 to 8.1, 0.9 to 1.1}	–
Tc	Bolt	12 to15 {8.9 to 11, 1.2 to 1.5}	–

Lubricant and/or sealant

Mark	Points of application	Specified lubricant and/or sealant	Quantity
a	Humidity and intake air temperature sensor	ThreeBond 1855	As required

◆**Removal procedure**◆

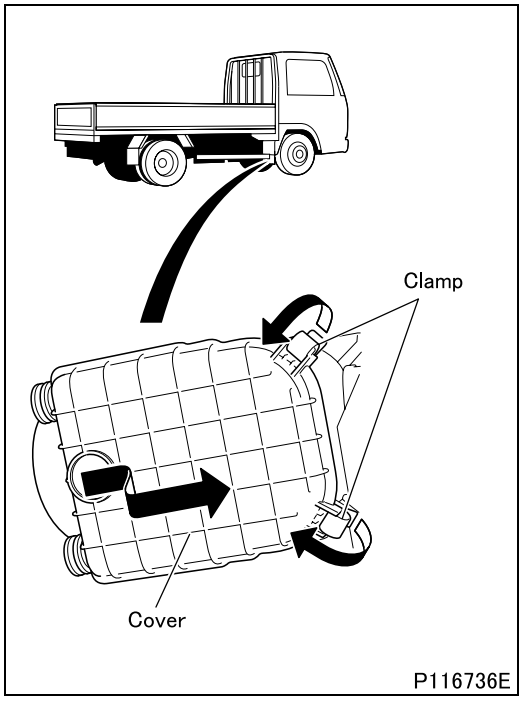

■**Removal: Air cleaner element**

- Make sure the parking brake is firmly applied.
- Chock the wheels.
- Undo the clamps at 2 places, then remove the cover by pulling it in the direction of the clamps.

https://truckmanualshub.com/

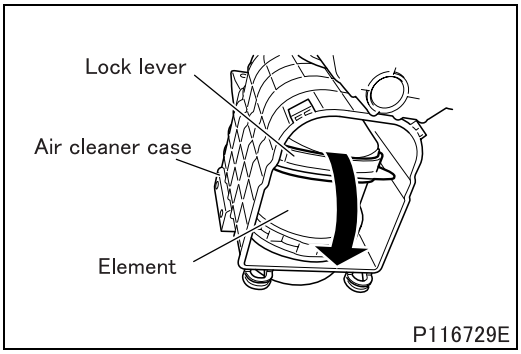

- Move the lock lever in the air cleaner case to the “UNLOCK” position.

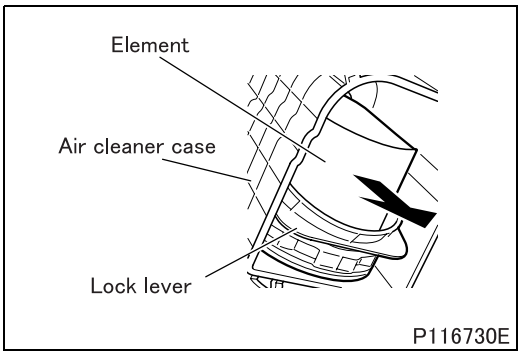

- Pull the air cleaner element straight out of the air cleaner case.

◆Inspection procedure◆

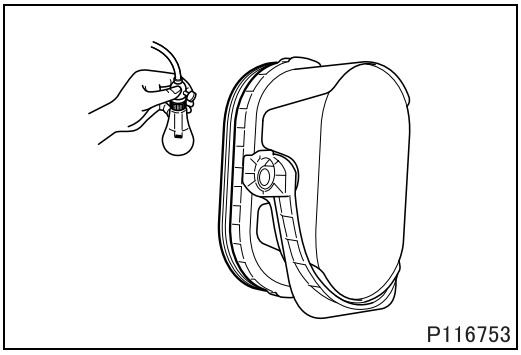

■ Inspection: Element

- Shine light inside the element.
- Replace the element if thin spots or broken parts are evident in the filter paper, or if the packing at the top of the element is damaged.
  Also replace the element if the dust on the element is damp with oily soot, regardless of the replacement schedule.

◆Cleaning procedure◆

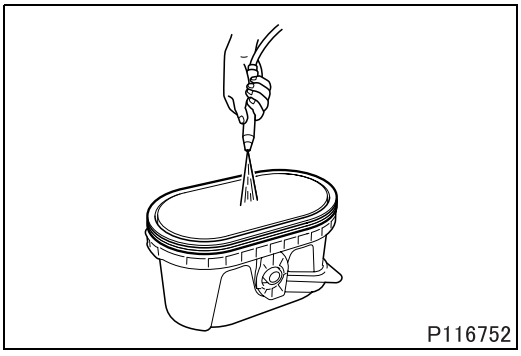

■ Cleaning: Element

- Blow a jet of compressed air at a pressure not higher than 685 kPa {100 psi, 7 kgf/cm^2} against the inside surfaces of the element.
- Move the compressed air jet up and down along all pleats of the filter paper element.

CAUTION ⚠

- **For the cleaning interval of the element, refer to the Owner’s Manual. Unnecessarily frequent cleaning may damage the element and can be the cause of dust and foreign objects being trapped in the engine.**
- **Do not strike the element or hit it against another object to remove dust.**
- **Do not blow compressed air against outside surfaces of the element.**

https://truckmanualshub.com/

◆Installation procedure◆

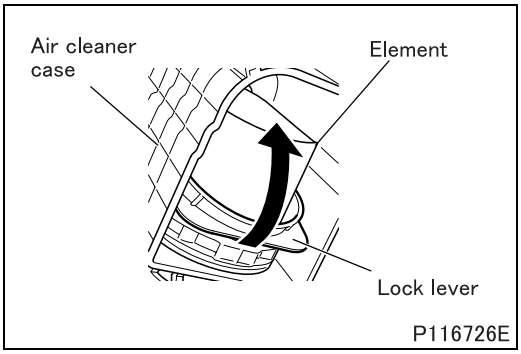

■ **Installation: Air cleaner element, air cleaner cover**

- Insert the air cleaner element straight into the air cleaner case.
- Move the lock lever in the air cleaner case to the “LOCK” position.

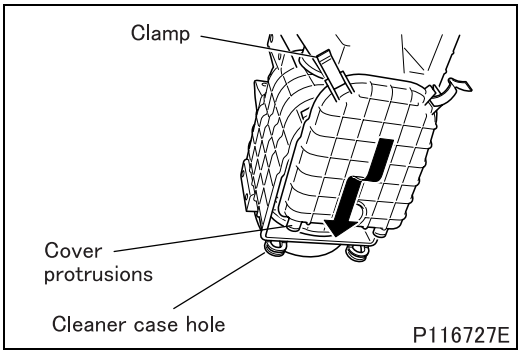

- Install the cover while inserting its protrusions into the holes in the air cleaner case, then fasten the clamps.

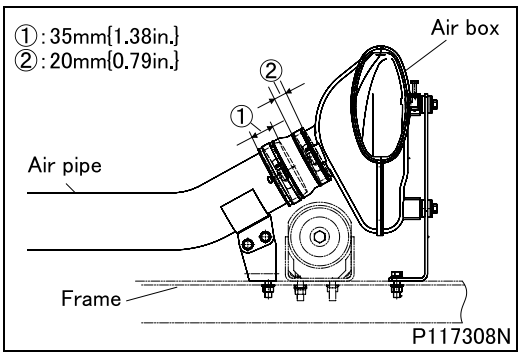

■ **Installation: Air box, air hose, air pipe**

- Connect the air hose E to the air box while respecting the dimensions indicated in the illustration.

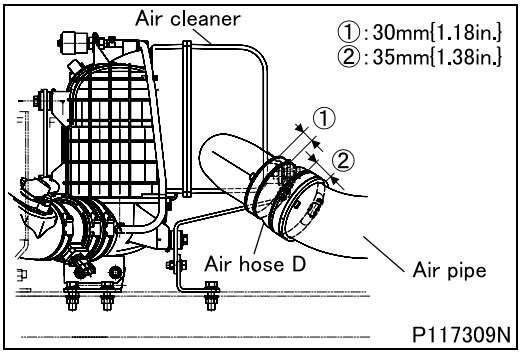

■ **Installation: Air cleaner, air hose D, air pipe**

- Connect the air hose D to the air cleaner while respecting the dimensions indicated in the illustration.

https://truckmanualshub.com/

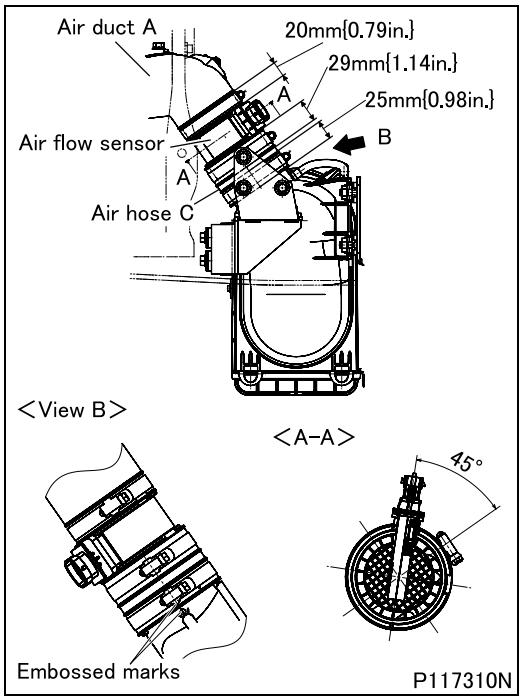

■ **Installation: Air hose C, air flow sensor, air duct A**

- Assemble the air hose C, air flow sensor, and air duct A together to the dimensions indicated in the illustration.
- Connect the air hose with the embossed mark on it aligned with that on the air duct.

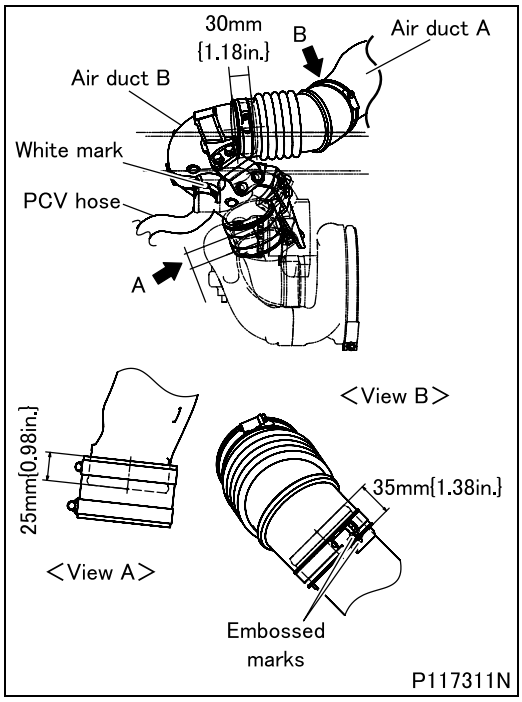

■ **Installation: Air hose A, air duct B, PCV (positive crankcase ventilation) hose**

- Assemble the air hose A, air duct B, and PCV (positive crankcase ventilation) hose together to the dimensions indicated in the illustration.
- Install the PVC hose with the indicated mark facing upward.
- Connect the air hose A to air duct B with the embossed marks aligned.

CAUTION ⚠

- **When assembling the secondary side hose or duct, use water only for smooth installation. Appling soup suds, grease or other lubricating material will cause malfunction of the air flow sensor.**

https://truckmanualshub.com/

M E M O

https://truckmanualshub.com/

TURBOCHARGER

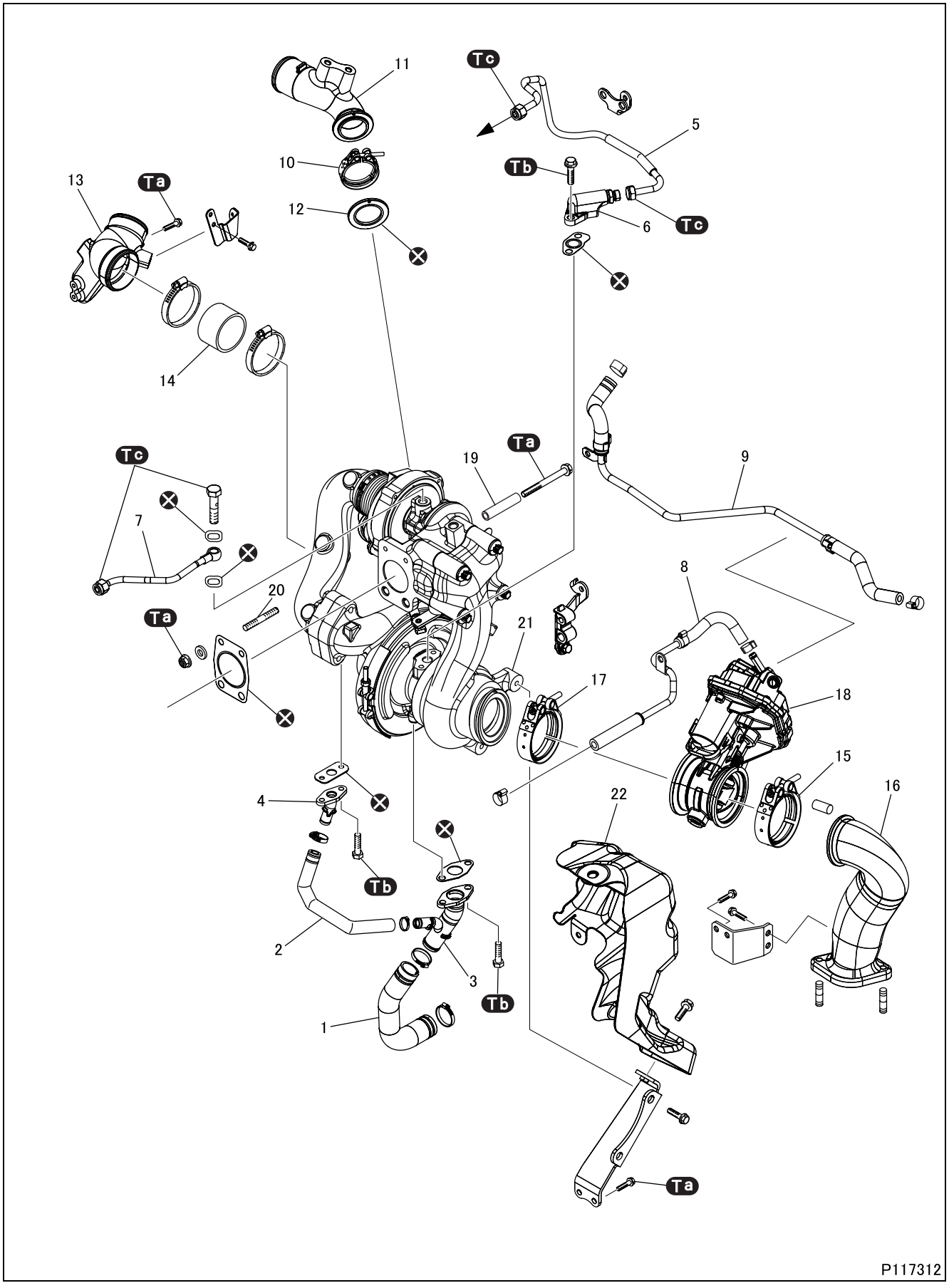

https://truckmanualshub.com/

● **Removal sequence**

1 Oil return hose A
2 Oil return hose B
3 Connector A
4 Connector B
5 Oil pipe A
6 Connector C
7 Oil pipe B
8 Water inlet pipe
9 Water outlet pipe
10 Clamp
11 Turbocharger coupler
12 Gasket
13 Air duct
14 Air inlet hose
15 Clamp
16 Exhaust pipe
17 Clamp
18 EBS (Exhaust Brake system)
19 Collar
20 Stud bolt
21 Turbocharger
22 Protector

⊗: Non-reusable parts

CAUTION ⚠

- **The turbocharger is a non-disassembly component. When it becomes unsmooth in rotation or has any problems, replace the turbocharger.**

● **Installation sequence**

Follow the removal sequence.

Tightening torque (Unit: N·m {ft.lbs, kgf·m})

Mark	Parts to be tightened	Tightening torque	Remarks
Ta	Bolt (exhaust manifold and turbocharger mounting)	25 {18, 2.5}	–
	Nut (exhaust manifold and turbocharger mounting)		
	Bolt (air duct mounting)		
	Bolt (bracket mounting)		
Tb	Bolt (oil return pipe mounting)	10 {7.4, 1.0}	–
Tc	Connector and Eyebolt (pipe mounting)	30 {22, 3.1}	–

■ **Work before removal**

- Open the radiator drain cock to discharge coolant.
- Perform the following steps to make a work space.
  - Remove the air ducts and air hoses.
  - Remove the air inlet hose and air inlet pipe.
  - Remove the surge hose.
  - Remove the heater hose.
  - Remove the PCV hose.
  - Remove the front pipe.
  - Remove the protector.
  - Remove the vacuum modulator.
  - Remove the EGR (Exhaust Gas Recirculation) unit.

◆**Removal procedure**◆

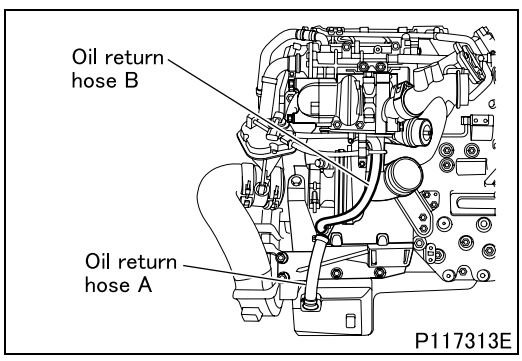

■ **Removal: Oil return hose A, oil return hose B**

- Disconnect the oil return hose A and oil return hose B from the turbocharger.

https://truckmanualshub.com/

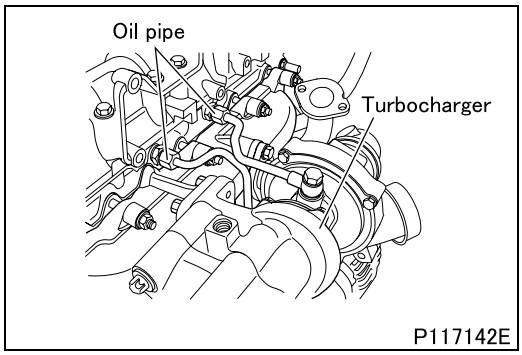

■ **Removal: Oil pipe**

- Remove the oil pipe.

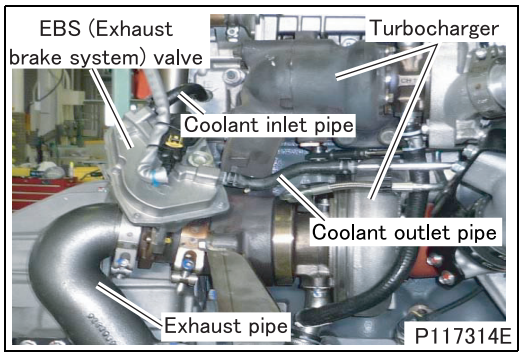

■ **Removal: Exhaust pipe, coolant inlet pipe, coolant outlet pipe, EBS (Exhaust Brake System) valve, bracket**

- Open the clamp and move it away from the position locking the coolant inlet pipe to the union on the EBS (Exhaust Brake System) valve.
- Remove the coolant inlet pipe from the EBS valve.
- Open the clamp and move it away from the position locking the coolant outlet pipe to the union on the EBS valve. Remove the coolant outlet pipe from the EBS valve.
- Undo the screw, loosen the clamp and detach the exhaust pipe from the EBS valve.
- Undo the screw, loosen the clamp and remove the EBS valve from the turbocharger.
-

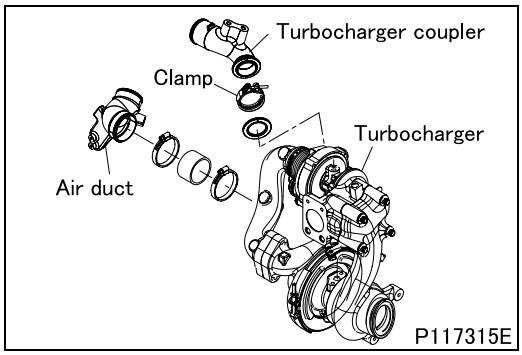

■ **Removal: Turbocharger coupler, air duct**

- Unfasten the clamp and remove the turbocharger coupler.
- Remove the air duct after unfastening the clamp.

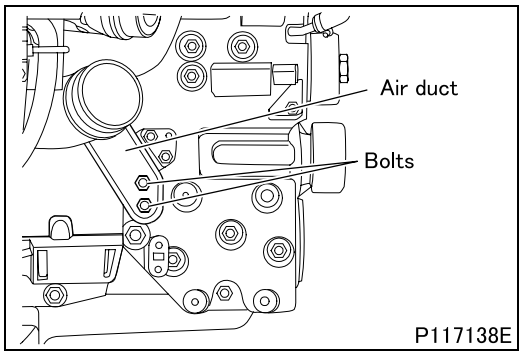

https://truckmanualshub.com/

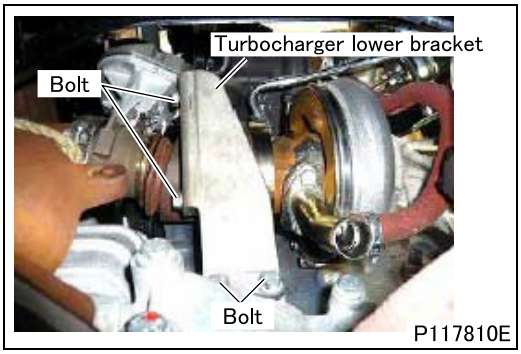

■ **Removal: Bracket**

- Remove the bracket that secures the turbocharger in place.

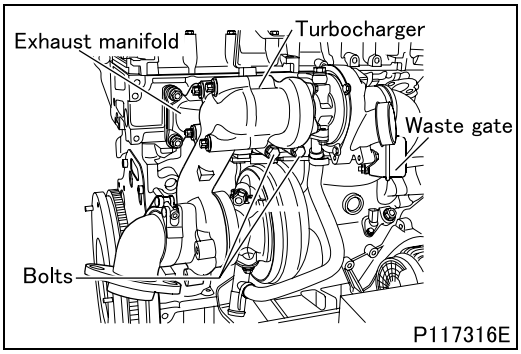

■ **Removal: Turbocharger**

- Remove the turbocharger from the exhaust manifold.

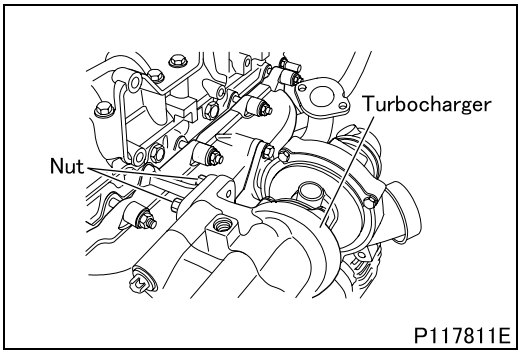

◆**Installation procedure**◆

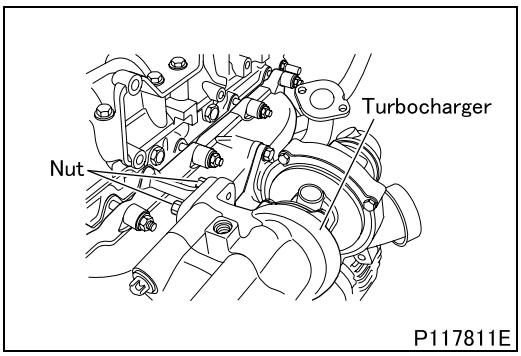

■ **Installation: Turbocharger**

- Install the turbocharger on the exhaust manifold.

https://truckmanualshub.com/

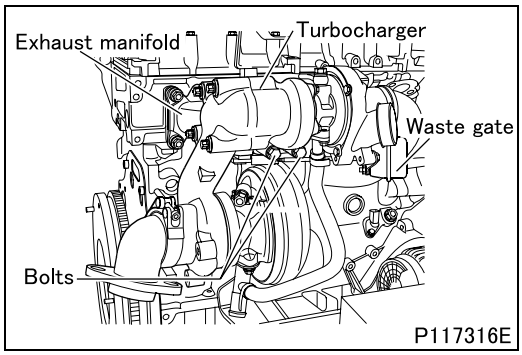

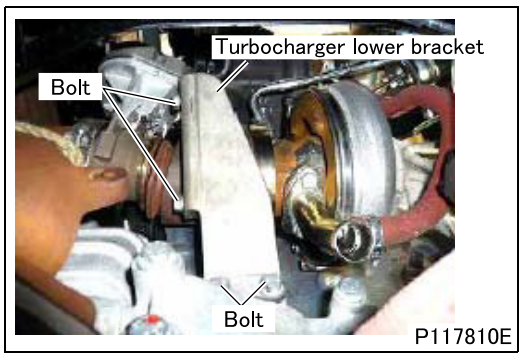

■ **Installation: Bracket**

- Fix the turbocharger to the cylinder head using the bracket.

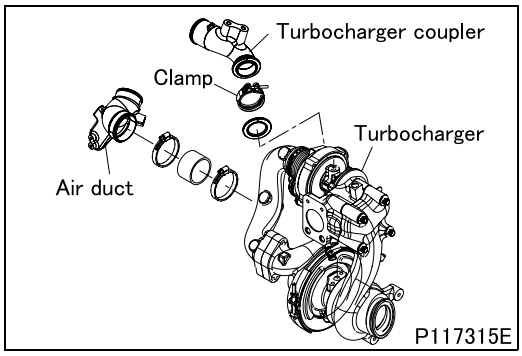

■ **Installation: Turbocharger coupler, air duct**

- Install the turbocharger coupler and air duct on the turbocharger.

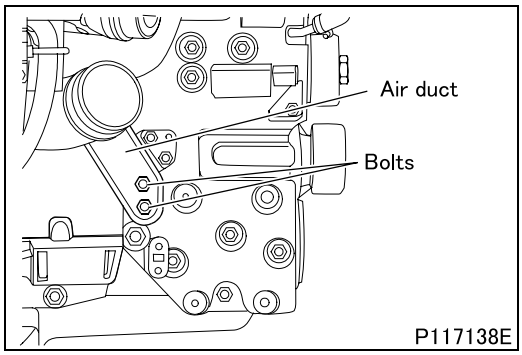

https://truckmanualshub.com/

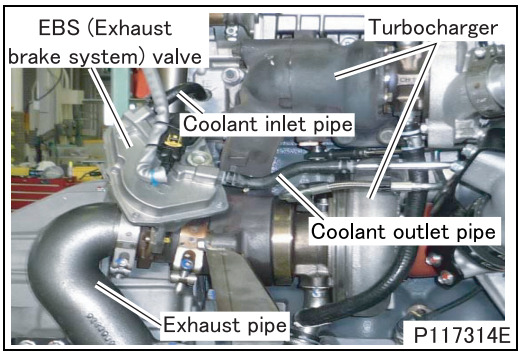

■ **Installation: Exhaust pipe, coolant inlet pipe, coolant outlet pipe, EBS (Exhaust Brake System) valve, bracket**

- Reinstall the EBS valve on the turbine outlet; place the clamp and tighten the screw.
- Install the exhaust pipe on the EBS valve.
- Install the clamp and position it so that the screw doesn't interfere with the operation of the valve.
- Insert the coolant inlet pipe for EBS valve in the union. Tighten the clamp to the stop position.
- Insert the coolant outlet pipe for EBS valve in the union. Tighten the clamp to the stop position.

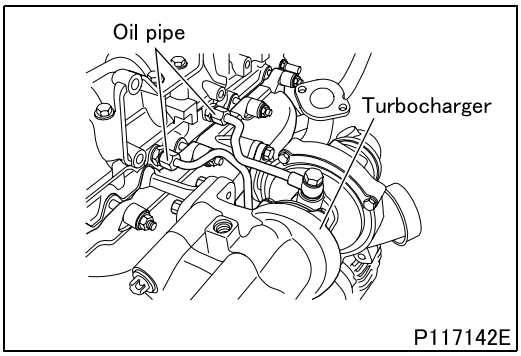

■ **Installation: Oil pipe**

- Install the oil pipe.

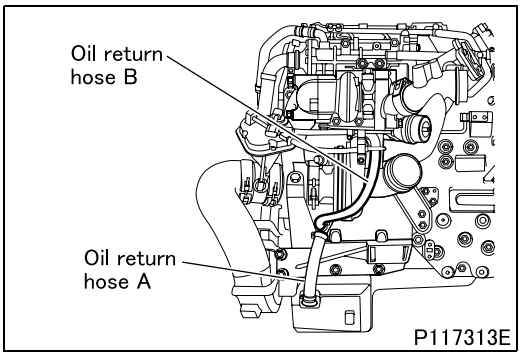

■ **Installation: Oil return hose A, Oil return hose B**

- Connect the oil return hose A and oil return hose B to the turbocharger.

■ **Work after installation**

- Reassemble those parts that have been removed to make the work space.
  - Install the vacuum modulator.
  - Install the exhaust gas recirculation unit.
  - Install the protector.
  - Install the air ducts and air hoses.
  - Install the air inlet hose and air inlet pipe.
  - Install the surge hose.
  - Install the heater hose.
  - Install the PCV hose.
  - Install the front pipe.

https://truckmanualshub.com/

EXHAUST MANIFOLD

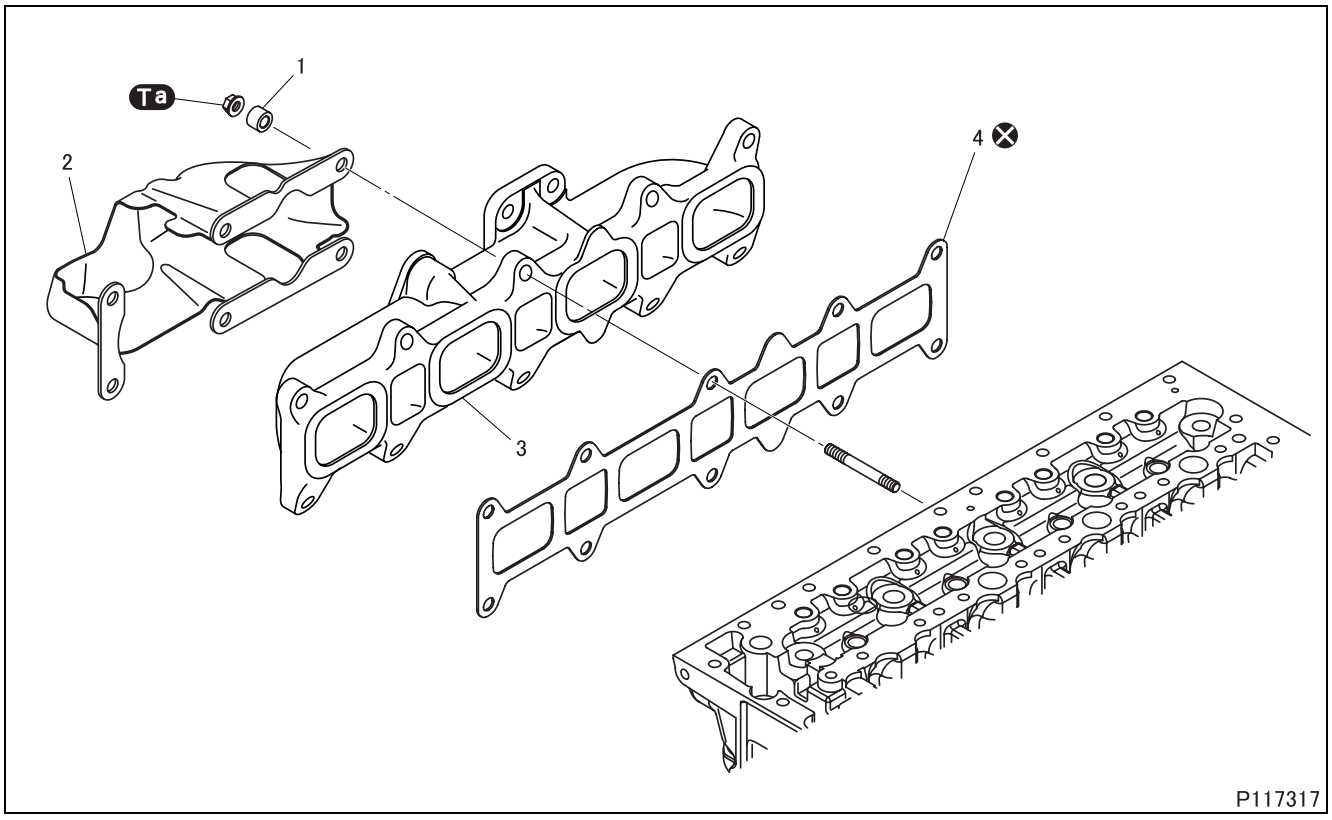

● **Disassembly sequence**

1 Spacer
2 Insulator
3 Exhaust manifold
4 Gasket
⊗: Non-reusable parts

● **Assembly sequence**

Follow the disassembly sequence in reverse.

Tightening torque (Unit: N·m {ft.lbs, kgf·m})

Mark	Parts to be tightened	Tightening torque	Remarks
Ta	Nut (exhaust manifold mounting)	25 {18, 2.5}	–

◆Installation procedure◆

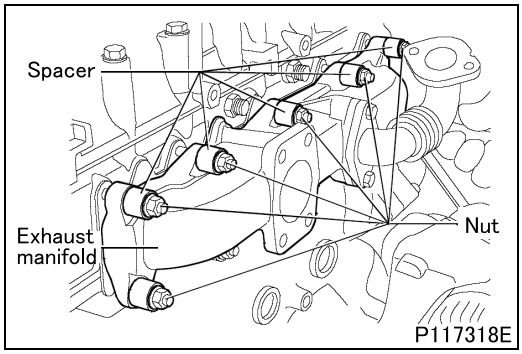

■ **Installation: Gasket**

- Set the exhaust manifold in position together with a new gasket, and fasten them by tightening the nuts via the spacers.

https://truckmanualshub.com/

M E M O

https://truckmanualshub.com/

INTERCOOLER

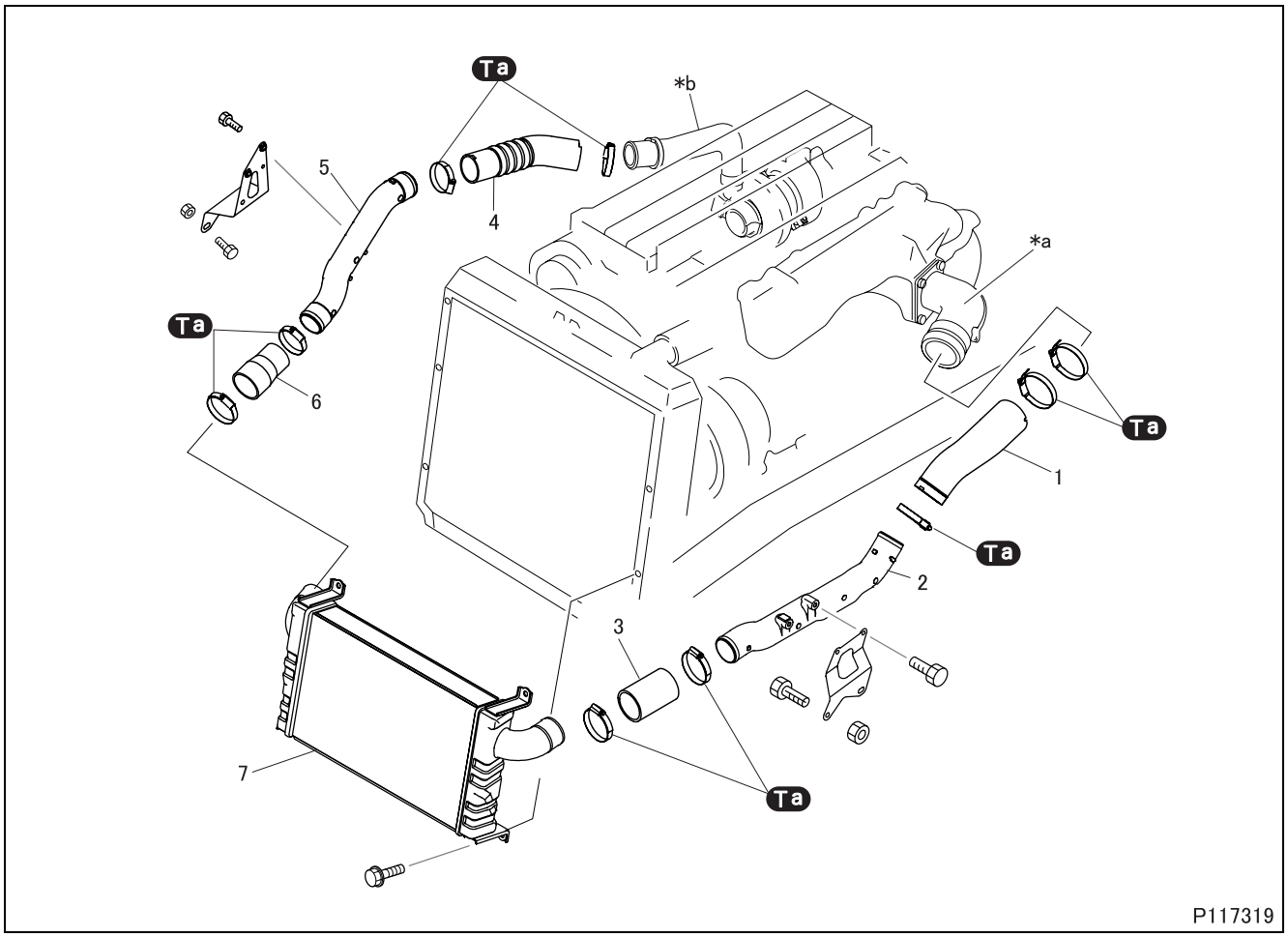

● **Disassembly sequence**

1 Air inlet hose A
2 Air inlet pipe LH
3 Air inlet hose B
4 Air inlet hose C
5 Air inlet pipe RH
6 Air inlet hose D
7 Intercooler

***a:** Air inlet pipe
***b:** Turbocharger coupler

CAUTION ⚠

- **When removing the air inlet hose, do not try to pry it off with strong force using a screwdriver or other similar tools. Doing that can damage the fluoro-layer on the inner surface of the hose, possibly compromising the oil resistance of the hose.**

● **Assembly sequence**

Follow the disassembly sequence in reverse.

Service standards

Location	Maintenance item	Standard value	Limit	Remedy
7	Intercooler air leakage (air pressure: 150 kPa {22 psi, 1.5 kgf/cm^2} maintained for 30 seconds)	0 cm^3 {0 mL}	–	Replace

https://truckmanualshub.com/

Tightening torque (Unit: N·m {ft.lbs, kgf·m})

Mark	Parts to be tightened	Tightening torque	Remarks
Ta	Clamp	8 to 9 {5.9 to 6.6, 0.8 to 0.9}	–

◆Inspection procedure◆

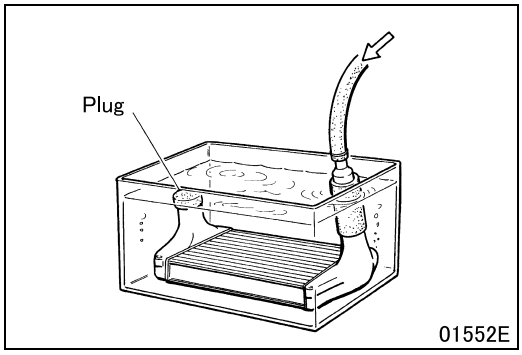

■ Inspection: Air leakage from intercooler

- Plug one of the air ports of the intercooler and immerse it in a tank of water. Apply the specified air pressure to the intercooler through the other air port and retain pressure for 30 seconds.
- Replace the intercooler if any air leakage is evident.

◆Installation procedure◆

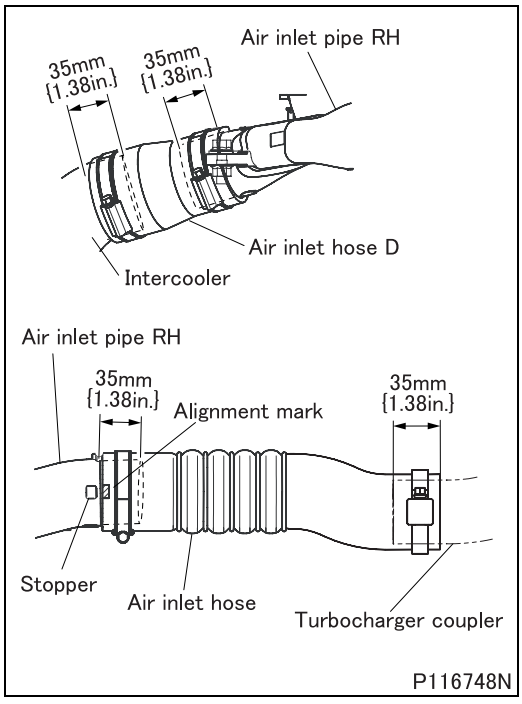

■Installation: Air inlet hose

- Install the air inlet hose on air inlet pipe RH so that the alignment mark on the hose is aligned with the stopper on the pipe.
- Connect the air inlet hose to the air turbocharger coupler.
- Install the air inlet hoses to the intercooler, air inlet pipe RH and turbocharger coupler to the illustrated dimensions.

https://truckmanualshub.com/

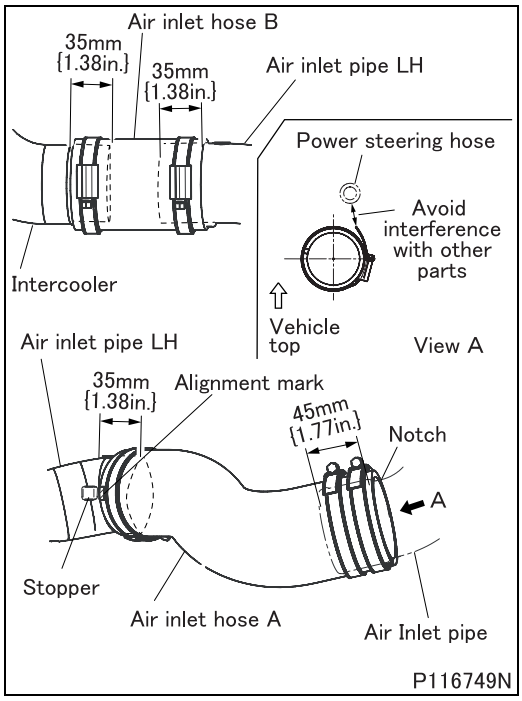

- Install the air inlet hose to the air inlet pipe LH so that the alignment mark on the hose is aligned with the stopper on the pipe.
- Connect the air inlet hose to the air inlet pipe aligning the notches.
- Install the air inlet hoses to the intercooler, air inlet pipe LH and air inlet pipe to the illustrated dimensions.

https://truckmanualshub.com/

M E M O

https://truckmanualshub.com/

INTAKE MANIFOLD

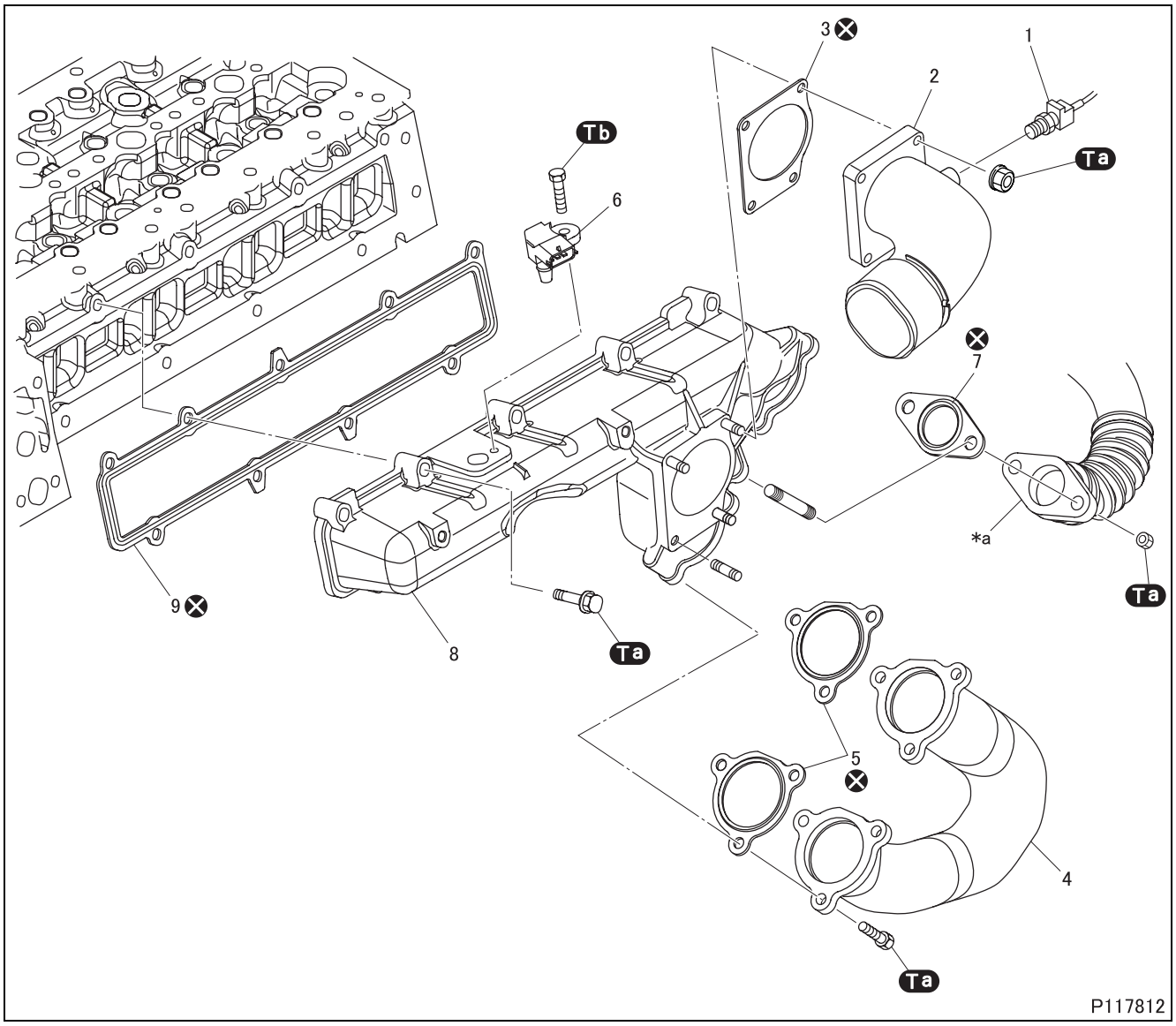

● **Removal sequence**

1 Intercooler outlet temperature sensor
2 Inlet pipe
3 Gasket
4 Mixing pipe
5 Gasket
6 Boost pressure and temperature sensor
7 Gasket
8 Intake manifold
9 Gasket

***a**: Connection pipe
⊗: Non-reusable parts

● **Installation sequence**

Follow the removal sequence in reverse.

https://truckmanualshub.com/

Tightening torque (Unit: N·m {ft.lbs, kgf·m})

Mark	Parts to be tightened	Tightening torque	Remarks
Ta	Bolt (intake manifold mounting)	25 {18, 2.5}	–
	Bolt (pipe mounting)		
	Nut (inlet pipe mounting)		
	Nut (connection pipe mounting)		
Tb	Bolt (pressure and temperature sensor mounting)	10 {7.4, 1.0}	–

◆Removal procedure◆

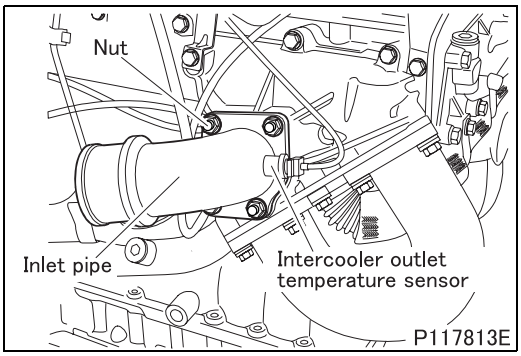

■ **Removal: Air inlet pipe**

- Remove the nuts and detach the air inlet pipe.

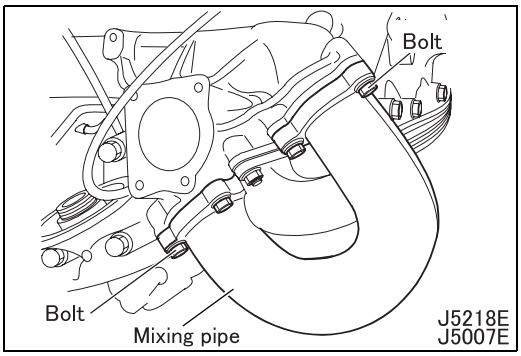

■ **Removal: Mixing pipe**

- Remove the bolt and detach the mixing pipe.

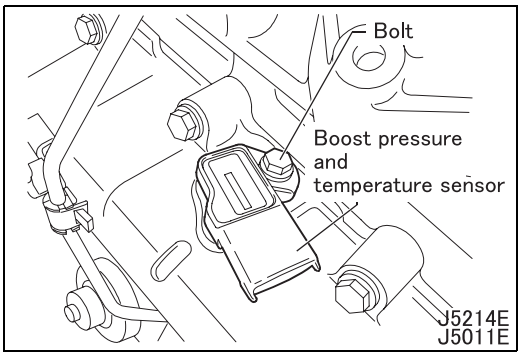

■ **Removal: Boost pressure and temperature sensor**

- Unscrew and remove the bolt; remove the boost pressure and temperature sensor from the intake manifold.

https://truckmanualshub.com/

INTAKE MANIFOLD

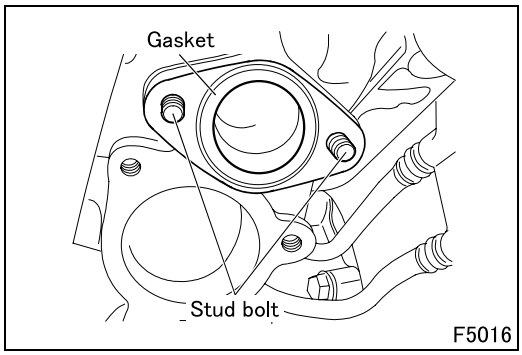

■ **Removal: Gasket, stud bolt**

- Remove the gasket after removing the connection pipe.
- Unscrew and remove the stud bolts.

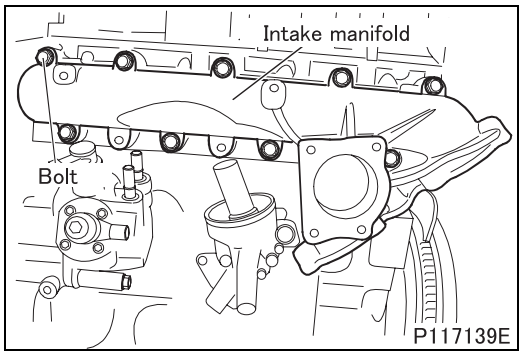

■ **Removal: Intake manifold**

- Unscrew and remove the fixing screws.
- Detach the intake manifold with its gasket.

◆Installation procedure◆

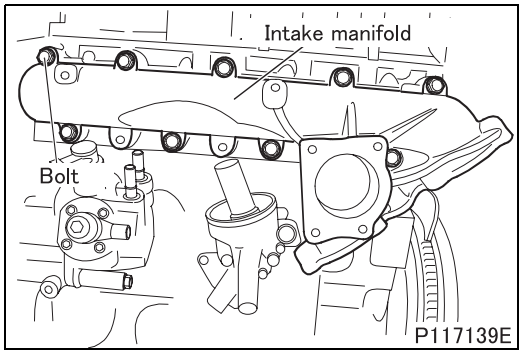

■ **Installation: Intake manifold**

- Install the intake manifold with a new gasket.
- Drive in the screws and tighten them to the prescribed torque: 25 N·m {18 ft.lbs, 2.5 kgf·m}.

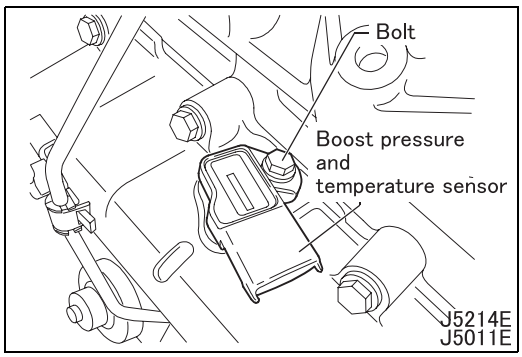

■ **Installation: Boost pressure and temperature sensor**

- Install the boost pressure and temperature sensor on the intake manifold.
- Tighten the bolt to a torque of 10 N·m {7.4 ft.lbs, 10 kgf·m}.

https://truckmanualshub.com/

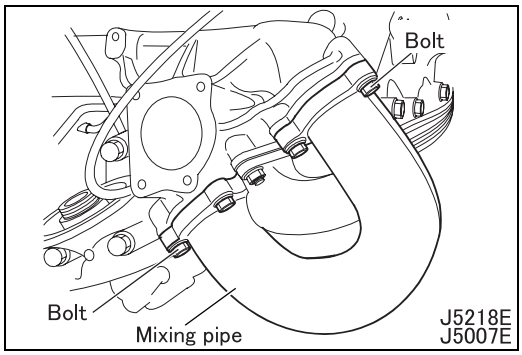

■ **Installation: Mixing pipe**

- Fit the pipe with new gaskets.
- Tighten the bolts to a torque of 25 N·m {181 ft.lbs, 2.5 kgf·m}.

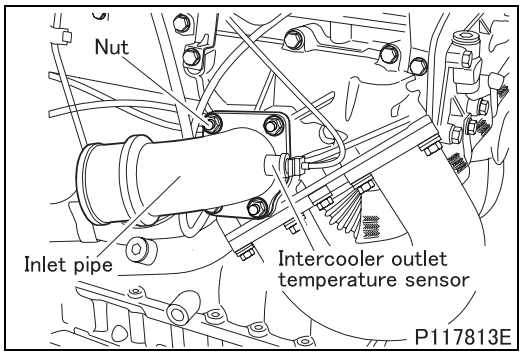

■ **Installation: Air inlet pipe**

- Fit the air inlet pipe on the intake manifold with a new gasket. Screw in the fixing nuts and tighten them to a torque of 25 N·m {181 ft.lbs, 2.5 kgf·m}.

https://truckmanualshub.com/

FRONT PIPE

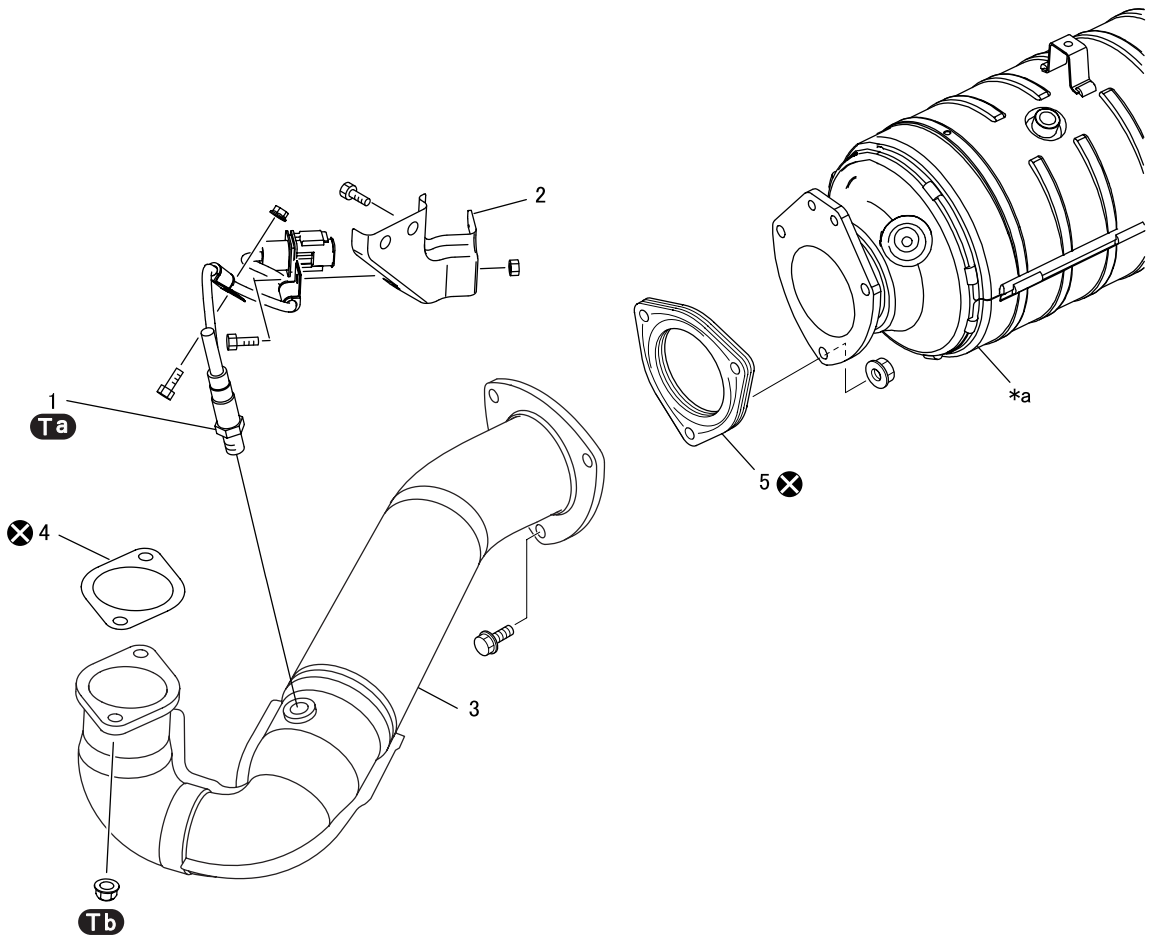

● **Removal sequence**

1 Lambda sensor
2 Sensor stay
3 Front pipe
4 Gasket
5 Gasket

***a**: DPF
⊗: Non-reusable parts
DPF: Diesel particulate filter

● **Installation sequence**

Follow the removal sequence in reverse.

Tightening torque (Unit: N·m {ft.lbs, kgf·m})

Mark	Parts to be tightened	Tightening torque	Remarks
Ta	Lambda sensor	50 ± 10 {37 ± 7.4, 5.1 ± 1.0}	–
Tb	Nut	50 ± 5 {37 ± 0.4, 5.1 ± 0.1}	–

https://truckmanualshub.com/

◆Installation procedure◆

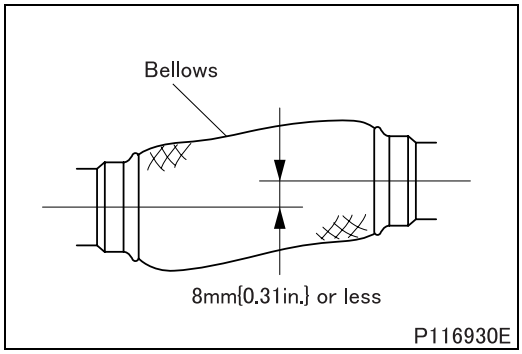

■Installation: Front pipe

- Install the front pipe so that the amount of offset in both vertical and horizontal directions between the pipes in front of and behind the bellows are within the specified value.

CAUTION ⚠

- **The function of the bellows on the front pipe is to reduce the vehicle noise level. It is not intended for compensating for misalignment that may result from improper installation of the front pipe. Install the front pipe properly to avoid excessive tension or other stress on the bellows.**

■Installation: Lambda sensor

- Install the lambda sensor on the front pipe.

CAUTION ⚠

- **Make sure that the sensor harness is free of tension, kink, or interference with surrounding parts.**

https://truckmanualshub.com/

FUSO

Group 17

Emission Control

MITSUBISHI FUSO TRUCK OF AMERICA, Inc.

Pub.No.00ELT0001-17

https://truckmanualshub.com/

INDEX

SPECIFICATIONS **17-2**

STRUCTURE AND OPERATION
1. **EGR (Exhaust Gas Recirculation) System** **17-3**
2. **Blowby Gas Return System** **17-5**
3. **BlueTec® System** **17-6**

TROUBLESHOOTING **17-13**

ON-VEHICLE INSPECTION AND ADJUSTMENT
1. **Leakage of Diesel Exhaust Fluid** **17-14**
2. **Damage and Improper Installation of Diesel Exhaust Fluid Lines** **17-15**
3. **Replacement of Diesel Exhaust Fluid (AdBlue®)** **17-16**
4. **Measures to be Taken if Diesel Exhaust Fluid Tank is Filled with Incorrect Diesel Exhaust Fluid Solution** **17-17**

EGR (Exhaust Gas Recirculation) UNIT **17-18**

BLOWBY GAS RETURN SYSTEM **17-24**

DEF (Diesel Exhaust Fluid) TANK **17-26**

DPF (Diesel Particulate Filter) **17-28**

SCR (Selective Catalytic Reduction) **17-32**

https://truckmanualshub.com/

SPECIFICATIONS

Item			Specifications
Regeneration control type DPF system	DPF muffler	Muffler Mass kg {lb}	14.7 {32}
		DPF	Regeneration control type
BlueTec® system	SCR muffler	Muffler Mass kg {lb}	21.1 {47}
	DEF		AdBlue® (DEF)
	DEF tank capacity L {qts}		Approx.12 {13}
Blowby gas return system			PCV (centrifugal blow-by recirculation system)

DPF: Diesel particulate filter
SCR: Selective catalytic reduction
DEF: Diesel exhaust fluid
BlueTec®: A registered trademark of Daimler AG

https://truckmanualshub.com/

1. EGR (Exhaust Gas Recirculation) System

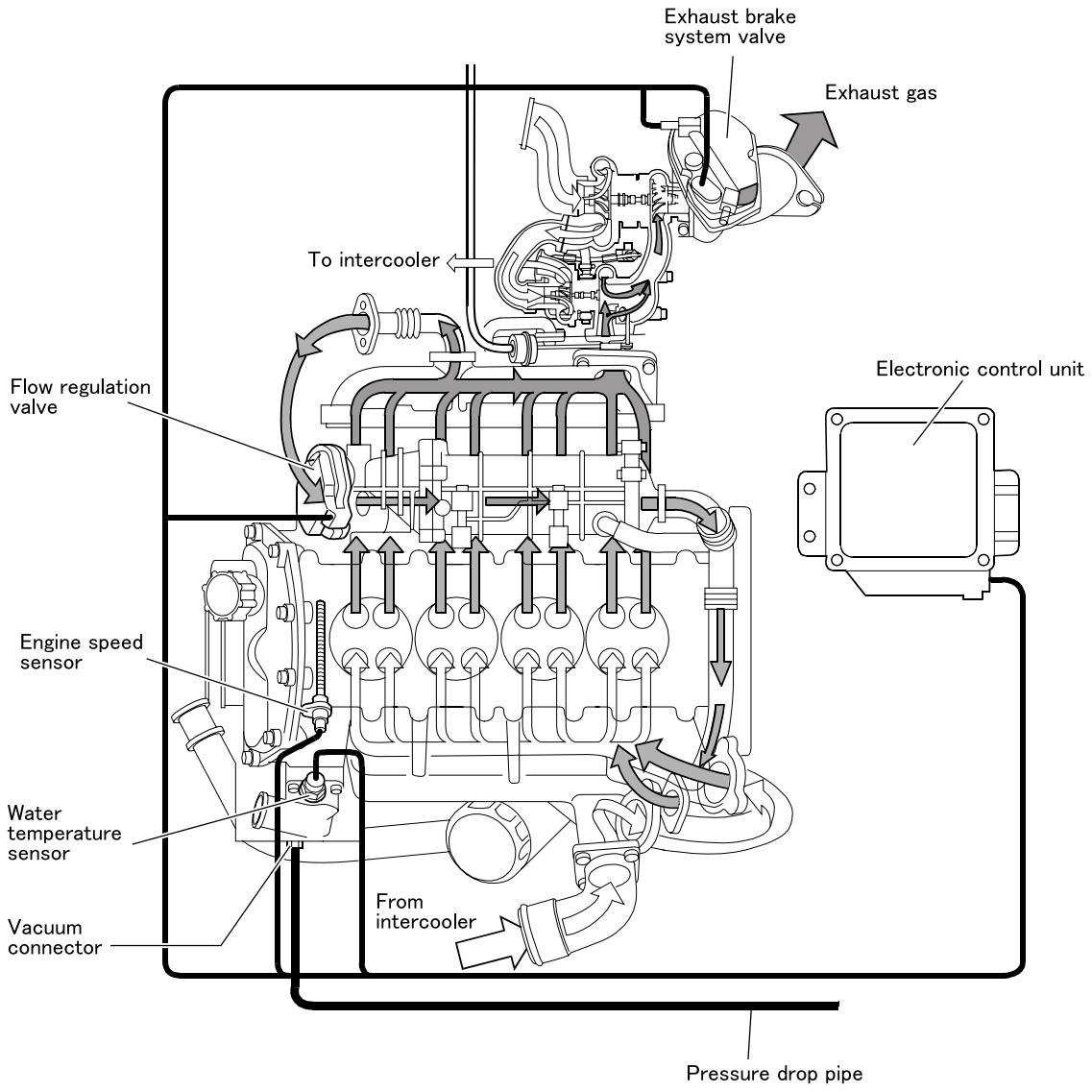

- The engine electronic control unit processes the information coming from the: atmospheric pressure sensor, water temperature sensor, engine speed sensor, accelerator pedal position sensor and, in accordance with suitably programmed modes in its memory, operate the opening of the plate in the EGR unit by means of a PWM signal.
- In this way, some of the exhaust gases are sent towards the EGR unit where they are cooled and directed to the chamber for the intake manifold to be mixed with the air coming from the intercooler and flow to the intake manifold. If the vehicle is fitted with a DPF (diesel particulate filter) catalytic converter, at the same time, the engine electronic control unit, adapts the flow rate of the fuel to be injected into the cylinders depending on the quantity of “recirculated” exhaust gases.
- When the engine is running and the recirculation of the gases is not required (regeneration of the particulate filter, starting, engine cold, idle speed, load request, high altitude), the engine electronic control unit control signal is cancelled.
- For electronic control unit connection diagram of EGR system, see Gr13.

https://truckmanualshub.com/

1.1 EGR (Exhaust Gas Recirculation) unit

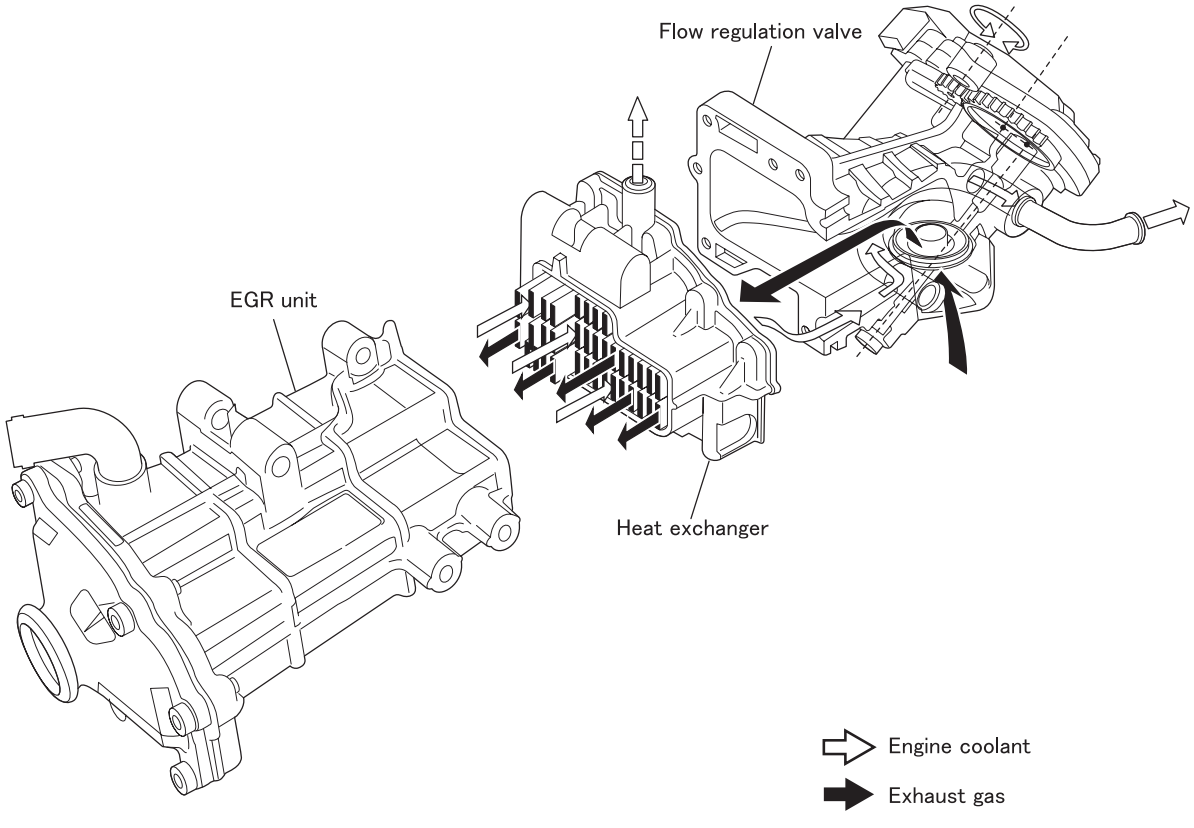

- The EGR unit comprises a heat exchanger and a flow regulation valve.
- The heat exchanger has the task of lowering the temperature of the exhaust gases which are partly sent to the intake manifold. This operation has only one aim: to lower the combustion temperature of the mixture. This takes place because the exhaust gases, totally inert, mix with the mixture and slow down combustion. Lowering this temperature produces a considerable decrease in NOx (nitrogen oxide) emissions which are harmful to the environment.
- The body of the heat exchanger is composed of a tube bundle cooled on the outside by the coolant fluid circulating in the engine. Some of the exhaust gases destined for “recirculation” pass inside the tube bundle and are cooled.
- The flow regulation valve is fitted on the end of the heat exchanger. The adjustment of the amount of recirculation exhaust gases takes place by means of an electrically operated plate valve.
- The valve is cooled by the engine coolant coming out of the heat exchanger thereby ensuring it is more efficient and lasts longer.

https://truckmanualshub.com/

2. Blowby Gas Return System

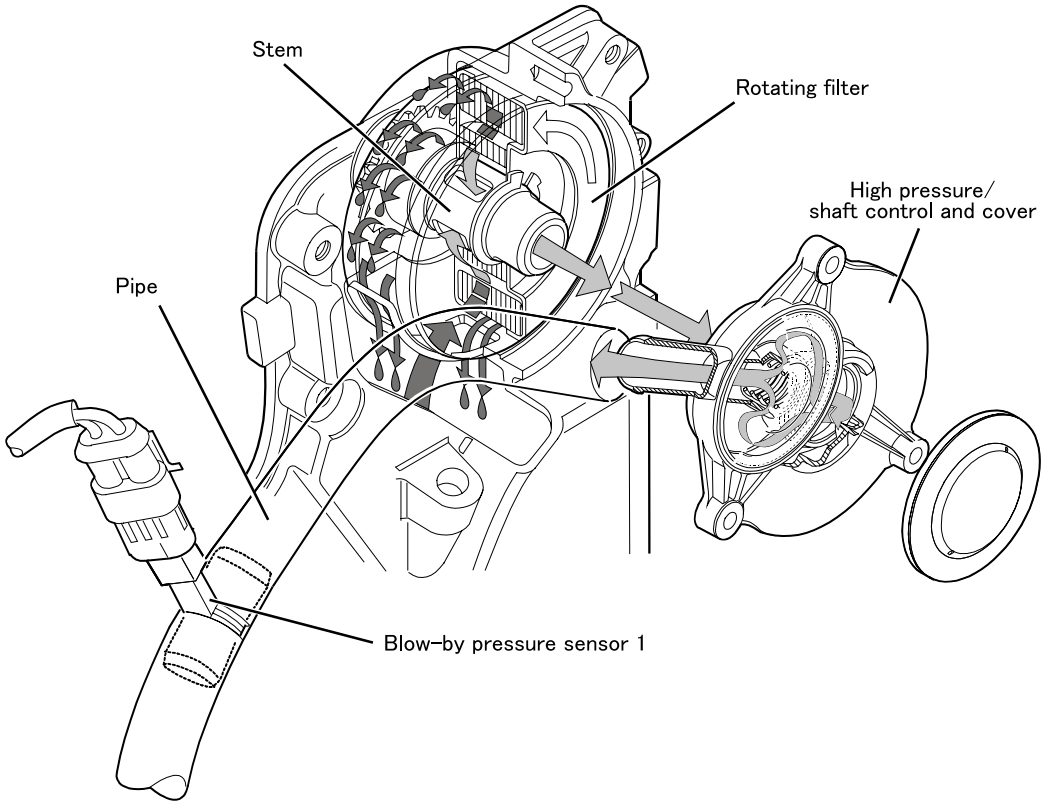

Gas with oil level above 10 g/h

Gas with oil level ~ 0.2 g/h

Condensed oil returning to the oil sump

P117105E

- Part of the gas produced by the combustion during the engine operation blows by the piston snap ring ports, in the oil sump, and mixes with the oil vapors present in the oil sump.
  This mixture, conveyed from the chain compartment to the top, is partially separated from the oil by means of a device situated on the top side of the distribution cover and is introduced in the air suction system. This device consists mainly of a rotating filter, fit flush on the stem, a high pressure/shaft control and a cover.
- The mixture which passes through the rotating filter is partially purified from the oil particles, as a result of centrifugation, and so these particles condense on the cover walls to return to the lubrication circuit.
  The resulting purified mixture is let in through the stem holes inside the air vent upstream of the turbocharger.
- The oil still present in the mixture coming from the rotating filter and which condenses in the chamber is drained into the chain.
- This presents the oil vapor solidifying and the water vapor freezing at low external temperatures, which would increase the pressure in the crankcase, thus resulting in oil leaks through the crankcase gaskets.

https://truckmanualshub.com/

3. BlueTec® System

3.1 Outline

- The BlueTec® system is an exhaust emission aftertreatment combining a regeneration control type DPF (Diesel Particulate Filter) with a BlueTec® exhaust emission aftertreatment device.

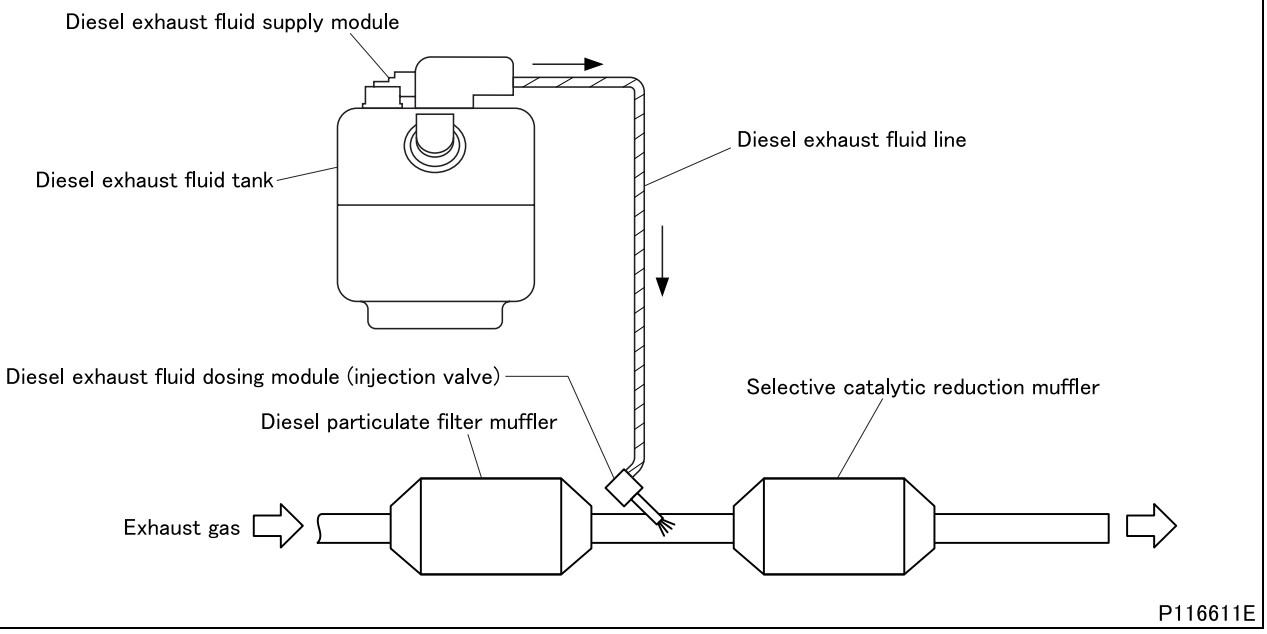

- The regeneration control type DPF system captures soot (particulate matters) contained in exhaust gasses by using a ceramic filter incorporated in the muffler, and then burns the soot accumulated on the filter to remove it (regenerates the filter continuously) by making use of the catalytic action of the pre-stage oxidation catalyst.
- When the filter will not be regenerated during driving at low speeds or other conditions, the system performs the regeneration operation of the filter (burning the soot) by raising the exhaust gas temperature forcibly (automatic DPF regeneration). However, it is necessary to perform the filter regeneration manually (parked DPF regeneration) if driving at very low speeds or starting/stopping the engine is repeated so many times that the automatic filter regeneration cannot be executed.
- The BlueTec® exhaust emission aftertreatment device doses (injects) AdBlue® (diesel exhaust fluid) in the exhaust line upstream from the SCR catalyst to decompose NOx into water and nitrogen, reducing NOx emission.
- Be sure to use the AdBlue® in conformity with JIS standards or ISO standards as diesel exhaust fluid in the system.

SCR: Selective Catalytic Reduction

https://truckmanualshub.com/

3.2 DPF (Diesel Particulate Filter) regeneration system

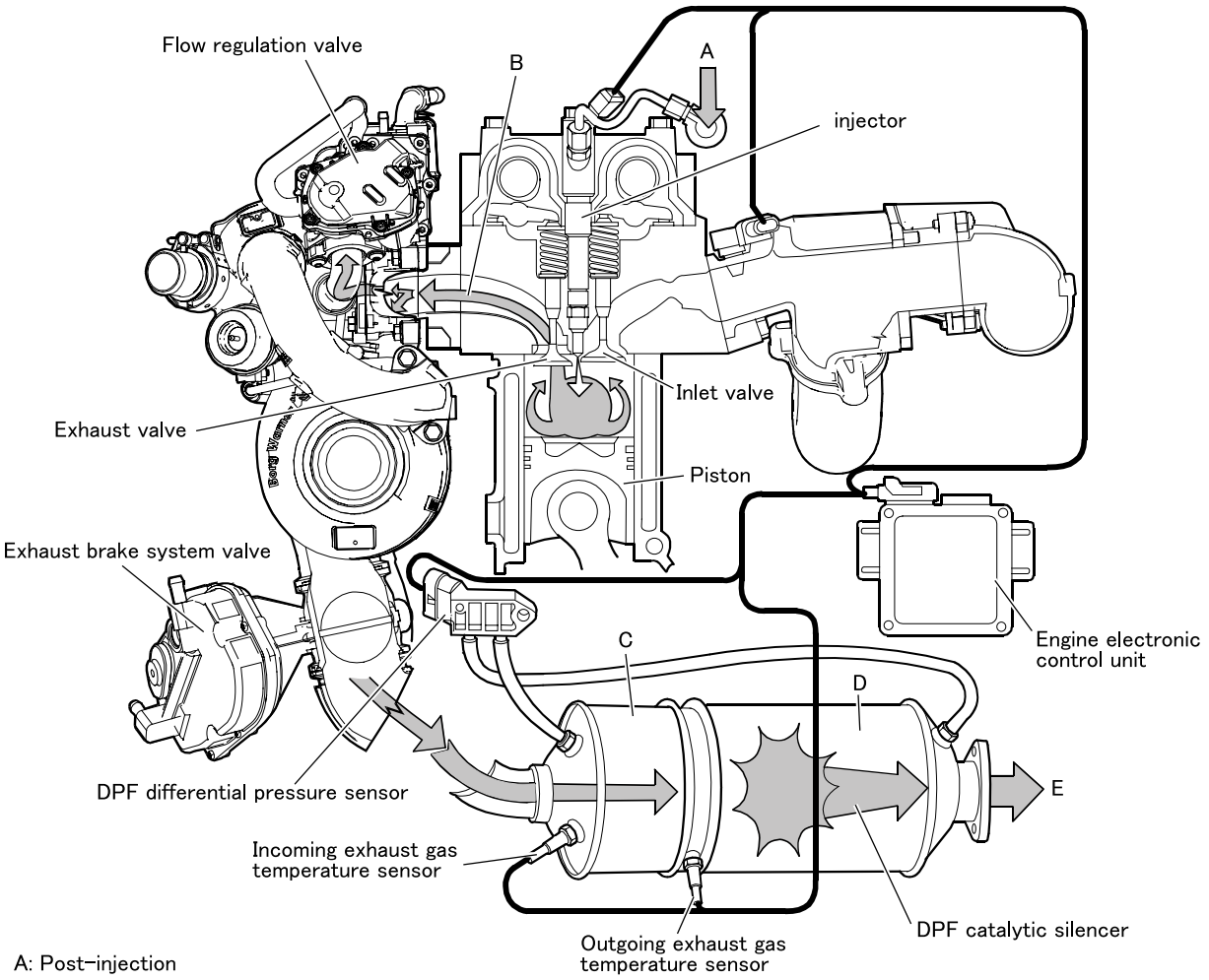

- DPF regeneration is managed by the engine electronic control unit. According to the values of the exhaust gas temperature detected by the sensors and the degree of DPF clogging detected by the DPF differential pressure sensor, the engine electronic control unit makes the injector inject small amounts of fuel in the cylinders when the exhaust valve is closing, at approx. 1 to 3° from T.D.C. The combustion of this fuel increases the temperature of the flowing gases.
- At the same time, the engine electronic control unit closes the flow regulation valve to prevent recirculated oil vapors and gases produced by post-injection from being sucked in the cylinders.
- Entering the silencer, the heated exhaust gases flow through the catalytic converter, where their pollutant elements (nitrogen oxides) are reduced or converted into inert substances (CO_2 - water vapor), and then enter the DPF where the regeneration process occurs. The high temperature of the exhaust gases causes combustion of the particulate accumulated in the filter.
- The DPF is regenerated when the following conditions exist.
- Temperature of exhaust gases entering the catalytic converter >230°C {446°F} with the aid of post-injection.
  - Temperature of exhaust gases in the particulate filter >530°C {986°F} with presence of > free oxygen at 8%.
  - Minimum time for the above-mentioned conditions >10 min.

https://truckmanualshub.com/

- If the function is not reset after changing the engine oil, the engine electronic control unit will continue to compute the increase in fuel accumulation even with the new oil, with subsequent signalling of engine oil change.
- For electronic control unit connection diagram of DPF regeneration system, see Gr13.

(1) Forced regeneration

- In many cases of uncertainty regarding the actual cleanness of the DPF and/or the impossibility of its regeneration due to particular vehicle/engine operation conditions (insistence in idling, very low speeds and very frequent stops), it is necessary to carry out forced safety regeneration.
- Independently of all the parameters that activate regeneration, the engine is made to run at a point where the temperature of the exhaust gases (>230°C {446°F}) can activate the reaction in the Oxicat in the presence of post-injection.
- The only limit to this operation is if there is too much particulate in the filter, in any case calculated by the engine electronic control unit and being a condition for the start of regeneration.

(2) Engine oil replacement

- During vehicle use, the engine electronic control unit counts post-injected fuel quantity in order to activate and maintain DPF regeneration.
- A small quantity of this fuel, which is injected into the cylinders after combustion has already taken place and remains partially unburnt, leaks out through pistons spring rings into oil sump, accumulating to lubrication oil.
- Although a part of it, evaporating, will be burnt in the engine through recirculation system, its remaining part can degrade oil characteristics, impairing its functionality.
- Quantity of accumulated fuel may increase in case of catalyst or engine inefficiency, and vehicle use in conditions of low temperature and/or small amounts of miles covered.
- The engine electronic control unit counts the amounts of post-injections and consequently determines the quantity of fuel accumulated in engine oil, and warns about replacement needed.
  If, after replacing engine oil, the function is not reset, the engine electronic control unit will keep on counting fuel accumulation increase even with new oil, with consequent engine oil replacement warning by flashing warning lamp (red).

DPF: Diesel particulate filter

https://truckmanualshub.com/

(3) DPF (Diesel Particulate Filter)

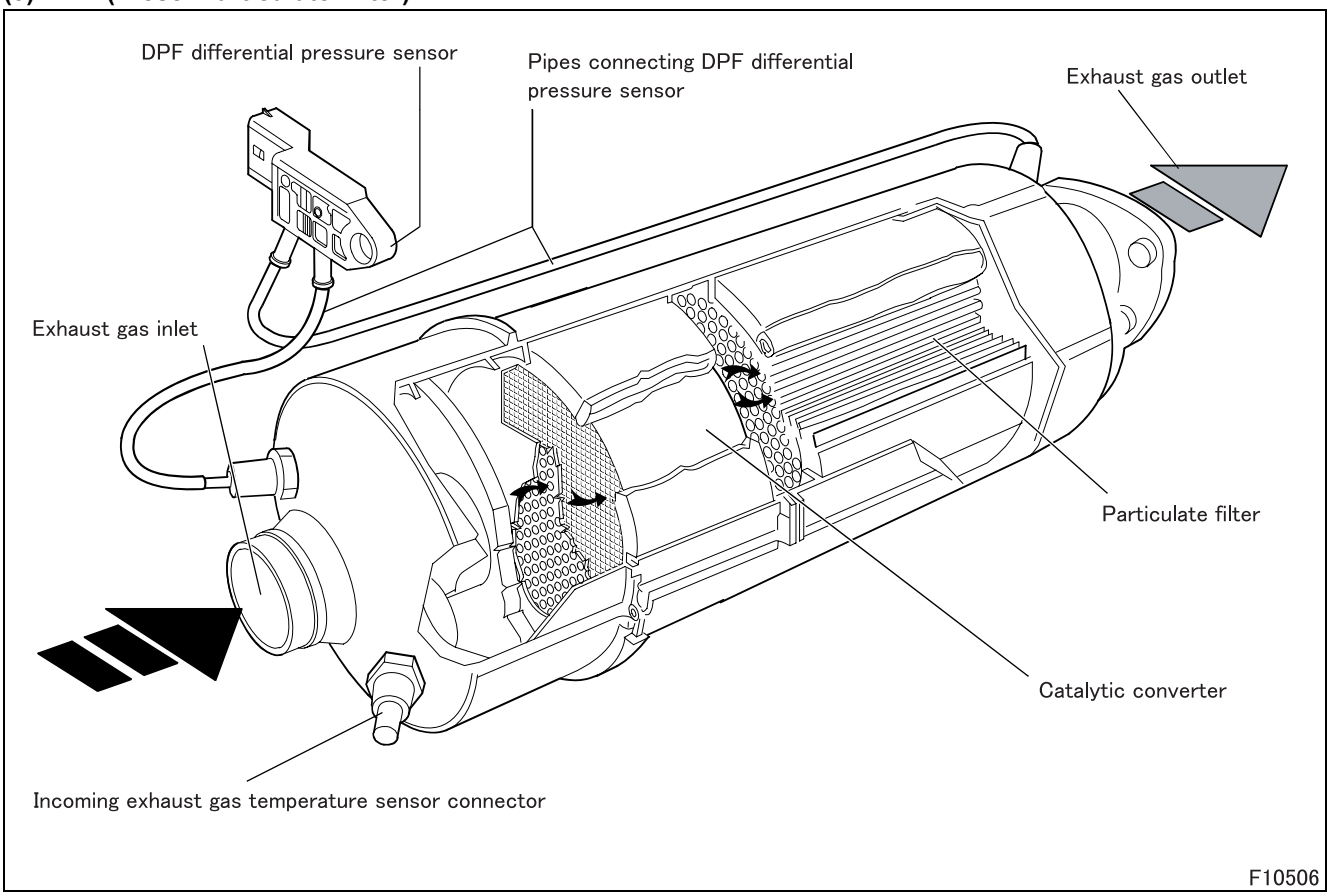

- DPF is made up of a catalytic converter and a particulate filter. Catalytic converter is an exhaust gas post-treatment device.
- Active substances, contained in the catalyst, oxidise, at 250 to 450°C {482 to 842°F} temperature, carbon oxide (CO) and hydrocarbons (HC), turning them into carbon dioxide (CO_2) and steam (H_2O).
- Catalyst module is made up of a ceramic structure impregnated with platinum, as platinum is a catalysing substance in oxidation reactions. Exhaust gasses heat the catalyst, so triggering the conversion of pollutants into inert compounds.
- Particulate filter, connected to the catalyst, has a double task: retaining particulate particles (PM) depositing between the pores of the ceramic structure of which the filter is made up and working as a particulate particles combustion chamber when the filter is being clogged.
- If filter interior is kept at a temperature higher than 530°C {986°F} and oxygen percentage is higher than 8% (oxygen being produced by the decomposition of nitrogen oxide NO_2), then some combustion reactions, boosted by the catalyst put before the filter, burn particulate particles (regeneration), so keeping the filter clean.
- On the contrary, if its temperature is lower, the filter is clogged, with negative effects, on counterpressure, on exhaust gasses generated by the filter.
- In this case, to regenerate the filter, temperature of exhaust gasses is artificially raised (up to 630°C {1166°F}) by fuel post-injection.
- A DPF differential pressure sensor, connected to DPF, as it detects a pressure difference between inlet and outlet, sends a (feed-back) signal to the engine electronic control unit to warn about particulate filter possible clogging.
  - The exhaust gas recirculation quantity controlled by the relative flow regulation valve.

https://truckmanualshub.com/

3.3 BlueTec® exhaust emission aftertreatment device

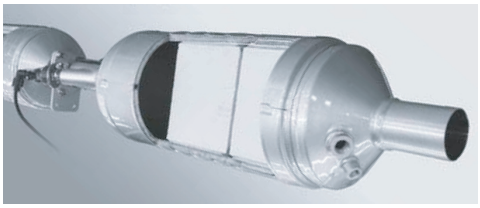

P116754

- This is a diesel exhaust fluid SCR system which decomposes NOx into water and nitrogen through the chemical reaction with AdBlue® (diesel exhaust fluid) with a help of SCR catalyst.

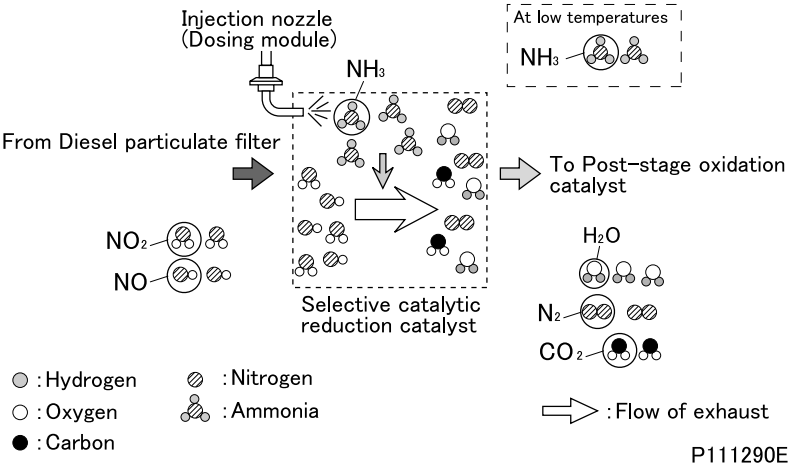

P111290E

(1) SCR catalyst

- The diesel exhaust fluid is decomposed into ammonia (NH_3) and carbon dioxide (CO_2) in the exhaust gas.
- Ammonia (NH_3) and nitrogen oxides (NOx) make a chemical reaction if they are exposed to a SCR catalyst, generating water (H_2O) and nitrogen (N_2) both of which are harmless.

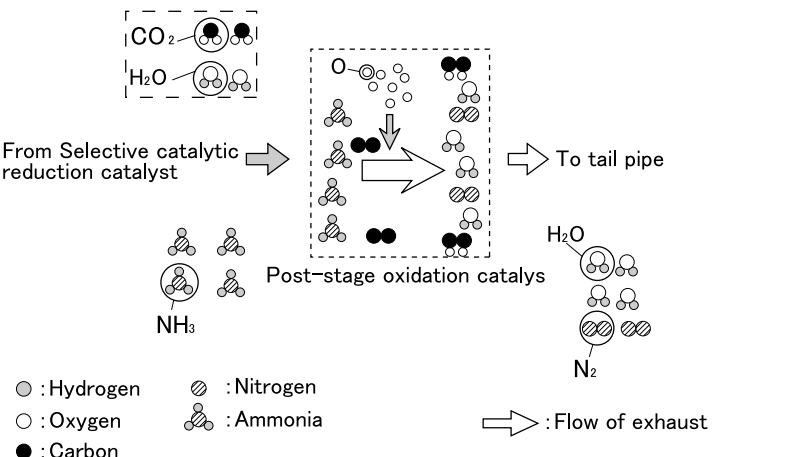

P111291E

(2) Post-stage oxidation catalyst

- The post-stage oxidation catalyst acts as follows:
  - Helps the components (HC, CO) left unprocessed during the DPF regeneration to be oxidized into water and nitrogen.
  - Keeps the excess of diesel exhaust fluid (AdBlue®) dosed (injected) or the amount of ammonia having not made any chemical reaction due to too low a temperature from being exhausted.

DPF: Diesel particulate filter
SCR: Selective catalytic reduction

https://truckmanualshub.com/

(3) Flow of diesel exhaust fluid (AdBlue®)

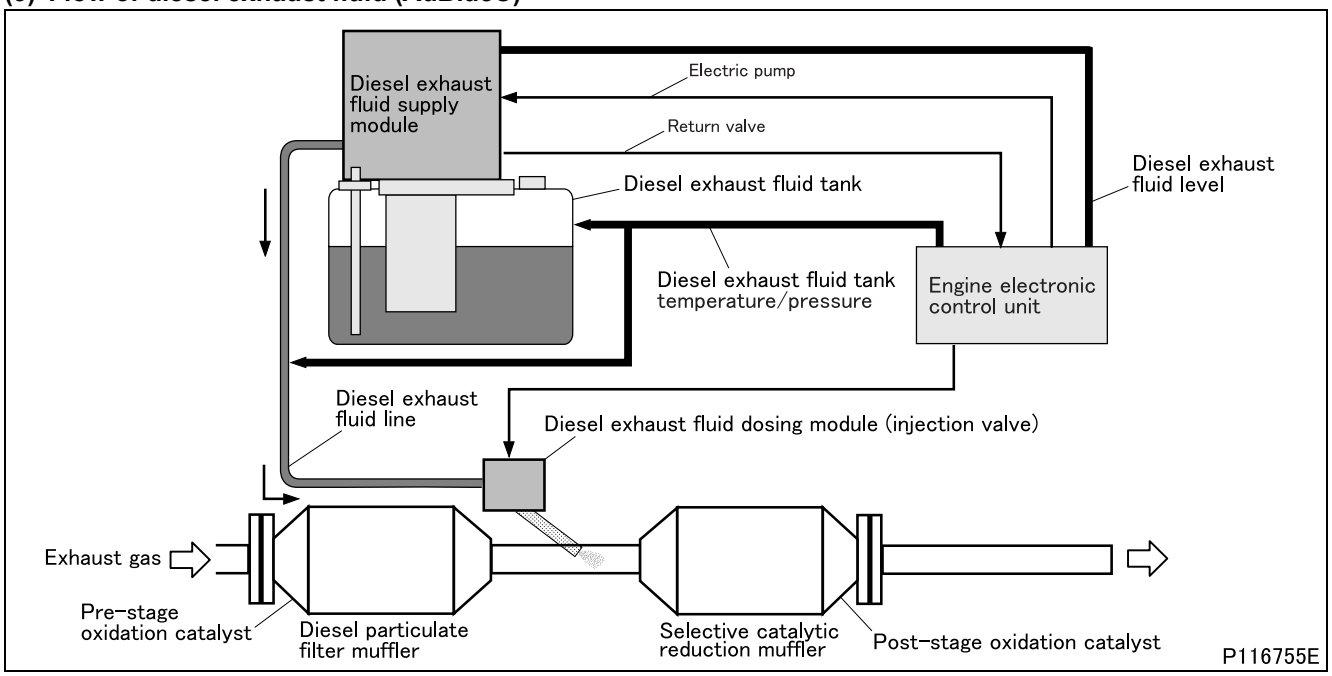

- Diesel exhaust fluid (AdBlue®) needed to reduce the emission of nitrogen oxides is fed from the diesel exhaust fluid tank to the diesel exhaust fluid dosing module through the diesel exhaust fluid supply module.
- The engine electronic control module activates or deactivates the diesel exhaust fluid supply module in such a way that the diesel exhaust fluid pressure is kept within the predetermined range.
- Diesel exhaust fluid (AdBlue®), after sucked up from the diesel exhaust fluid tank by the electric pump in the diesel exhaust fluid supply module, is supplied under pressure to the diesel exhaust fluid dosing module.
- Diesel exhaust fluid (AdBlue®) is injected into the exhaust gas through the diesel exhaust fluid dosing module being controlled by the engine electronic control unit, where it is decomposed into ammonia (NH_3) and carbon dioxide by the heat of the exhaust gas. Thereby, the nitrogen oxides make a chemical reaction with the ammonia inside the SCR, being reduced to water and nitrogen.

SCR: Selective catalytic reduction

https://truckmanualshub.com/

(4) Diesel exhaust fluid tank

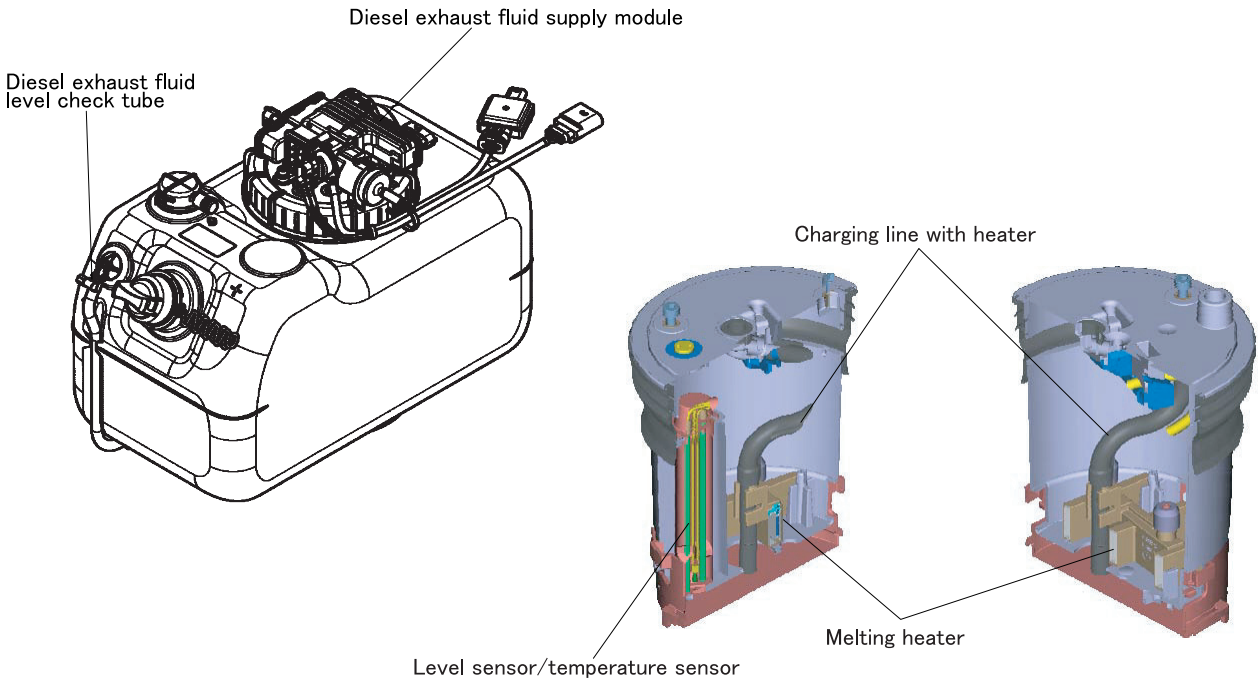

P116756E

- Diesel exhaust fluid tank body
  - The diesel exhaust fluid tank body is made of high density polyethylene which features a high corrosion resistance to diesel exhaust fluid (AdBlue®).
  - The diesel exhaust fluid tank is open to the atmosphere through the breather so that it may not be placed under negative pressure due to lowered level of diesel exhaust fluid (AdBlue®).
  - The diesel exhaust fluid tank has a built-in heater which serves for keeping the diesel exhaust fluid solution warm to prevent it from freezing.
- Diesel exhaust fluid level sensor and temperature sensor
  - The diesel exhaust fluid level sensor monitors the level of diesel exhaust fluid (AdBlue®) in the diesel exhaust fluid tank and sends the signals to the electronic control module to have the amount of the remaining solution shown by the diesel exhaust fluid level indicator.
  - If the level of diesel exhaust fluid (AdBlue®) is lowered below the E level, the warning message “Amount of remaining AdBlue® too small” will be displayed on the meter cluster.

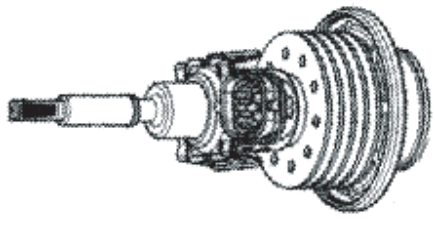

P116757

(5) Diesel exhaust fluid dosing module

- The diesel exhaust fluid dosing module injects the diesel exhaust fluid (AdBlue®) fed from the diesel exhaust fluid supply module in such a way that it is mixed up uniformly with the exhaust gas.
- It takes some amount of time for the injected solution of diesel exhaust fluid to mix up with the exhaust gas and to convert into ammonia. Therefore, the diesel exhaust fluid dosing module is installed in an accurately calibrated location upstream from the SCR catalyst.

SCR: Selective catalytic reduction

https://truckmanualshub.com/

Possible causes \ Symptoms		Black exhaust gas → DPF premature clogging	Engine output is insufficient	Fuel consumption is too high	Intake and exhaust system vibrates and/or makes abnormal noises	DPF regeneration is not established	Reference Gr
Deformed tail pipe					O		
Poorly installed tail pipe					O		
DPF	Clogged filter		O	O		O	
	Damaged diesel particulate filter	O			O	O	
Incoming or outgoing exhaust gas temperature sensor open-circuited or intermittent connection						O	

DPF: Diesel particulate filter

https://truckmanualshub.com/

ON-VEHICLE INSPECTION AND ADJUSTMENT

1. Leakage of Diesel Exhaust Fluid

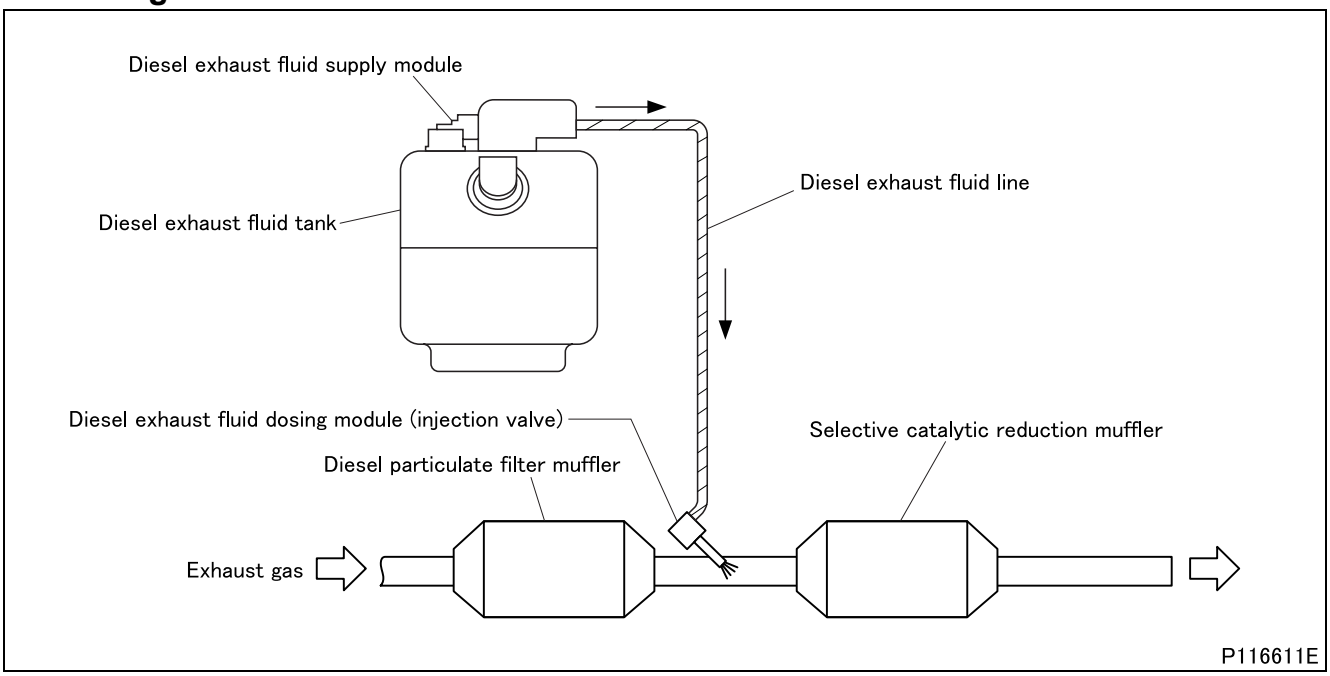

- Check to confirm that there are not found any white crystals or traces of diesel exhaust fluid leakage at the connections of the diesel exhaust fluid lines to the diesel exhaust fluid tank, diesel exhaust fluid dosing module, diesel exhaust fluid pump unit and diesel exhaust fluid dosing nozzle.
- If any trace of diesel exhaust fluid leakage is found, wipe the white crystals off with a cloth moistened with diesel exhaust fluid (AdBlue®) and then check each connection for tightening condition. Retighten any loose connections.

WARNING ⚠

- **If diesel exhaust fluid (AdBlue®) splashes into your eyes, wash it away immediately with plenty of water and seek medical attention as soon as possible.**
- **The diesel exhaust fluid (AdBlue®) is not harmful to the skin. However, if it makes contact with your skin, wash it off with water immediately. If the skin swells or irritates, seek medical attention.**
- **Direct contact with white crystals can cause the skin to inflame. In such a case, wash the affected part thoroughly with plenty of water without delay.**

https://truckmanualshub.com/

2. Damage and Improper Installation of Diesel Exhaust Fluid Lines

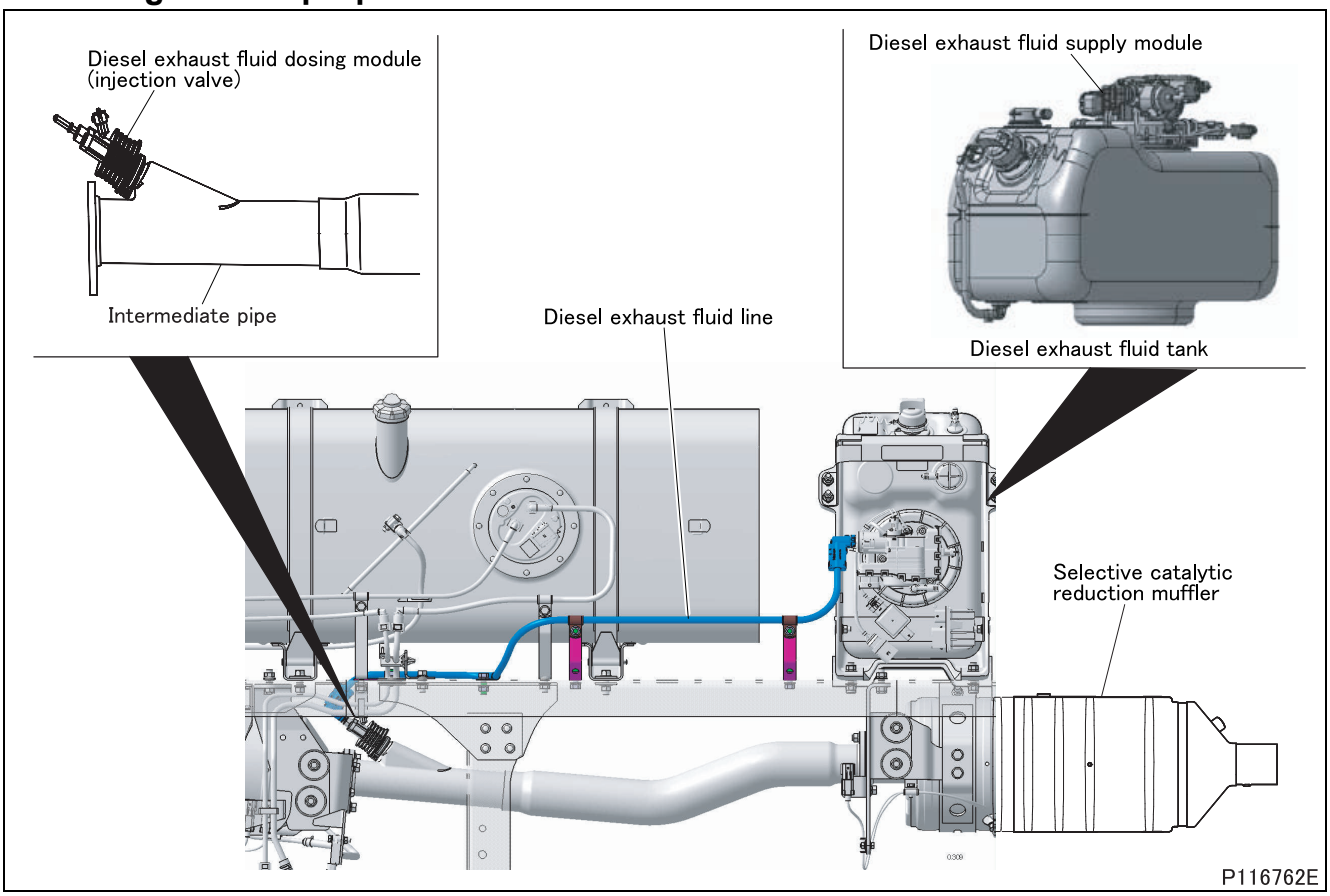

- Check the diesel exhaust fluid line connections at the diesel exhaust fluid tank (diesel exhaust fluid pump unit) and diesel exhaust fluid dosing nozzle for installation condition.
- If any trace of diesel exhaust fluid leakage is found, wipe the white crystals off with a cloth moistened with diesel exhaust fluid (AdBlue®) and then check each connection for tightening condition. Retighten any loose connections.

WARNING ⚠

- **If diesel exhaust fluid (AdBlue®) splashes into your eyes, wash it away immediately with plenty of water and seek medical attention as soon as possible.**
- **The diesel exhaust fluid (AdBlue®) is not harmful to the skin. However, if it makes contact with your skin, wash it off with water immediately. If the skin swells or irritates, seek medical attention.**
- **Direct contact with white crystals can cause the skin to inflame. In such a case, wash the affected part thoroughly with plenty of water without delay.**

https://truckmanualshub.com/

3. Replacement of Diesel Exhaust Fluid (AdBlue®)

Tightening torque (Unit: N·m {ft.lbs, kgf·m})

Mark	Parts to be tightened	Tightening torque	Remarks
–	Diesel exhaust fluid level check tube	2 {1.5, 0.2}	–

WARNING ⚠

- **If diesel exhaust fluid (AdBlue®) splashes into your eyes, wash it away immediately with plenty of water and seek medical attention as soon as possible.**
- **The diesel exhaust fluid (AdBlue®) is not harmful to the skin. However, if it makes contact with your skin, wash it off with water immediately. If the skin swells or irritates, seek medical attention.**

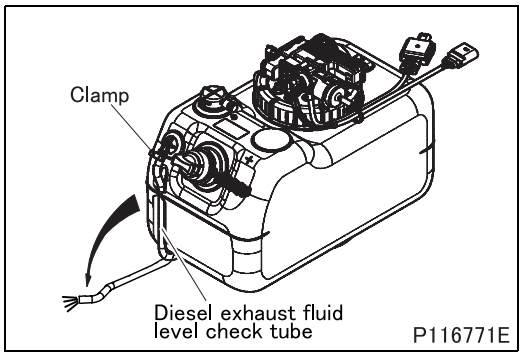

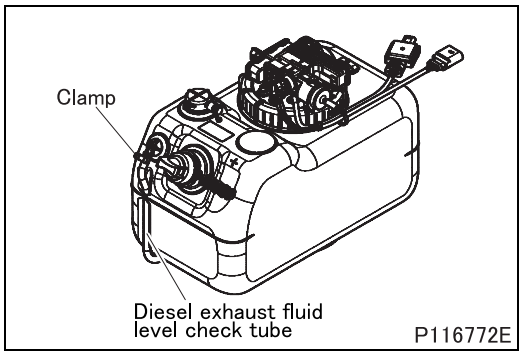

[Removal]

- Remove the diesel exhaust fluid tank cap.
- Undo the clamp of the diesel exhaust fluid level check tube.
- Disconnect the diesel exhaust fluid level check tube to drain the diesel exhaust fluid (AdBlue®).

CAUTION ⚠

- **The drained diesel exhaust fluid (AdBlue®) must be disposed of as an industrial waste.**

[Installation]

- Clamp the diesel exhaust fluid level check tube.
- Tighten the diesel exhaust fluid level check tube to the specified torque. Fill the tank with the specified amount of diesel exhaust fluid (AdBlue®).

CAUTION ⚠

- **Use of diesel exhaust fluid other than AdBlue® can cause the SCR system to malfunction. Always use the diesel exhaust fluid (AdBlue®) conforming to the automotive standards (JIS or ISO).**

- Check to see that two or more segments of diesel exhaust fluid level monitor lamp are illuminated, the warning message disappears and the buzzer stops sounding when the starter switch is turned from the LOCK into ON position.

CAUTION ⚠

- **Neglecting to perform the above procedures in a cold district can cause the diesel exhaust fluid (AdBlue®) to freeze, making it impossible to start the engine.**
  Also note that thawing the diesel exhaust fluid tank with hot water is not allowed.

SCR: Selective catalytic reduction

https://truckmanualshub.com/

4. Measures to be Taken if Diesel Exhaust Fluid Tank is Filled with Incorrect Diesel Exhaust Fluid Solution

- If the diesel exhaust fluid tank has been filled by mistake with diesel exhaust fluid solution other than AdBlue®, take the appropriate one of the following measures depending on whether or not the starter switch is turned to ON position. This is because the devices through which the diesel exhaust fluid solution has flowed are different case by case.

CAUTION ⚠

- **Incorrect diesel exhaust fluid solution penetrating into harness can cause the harness to corrode, resulting in open or short-circuit.**

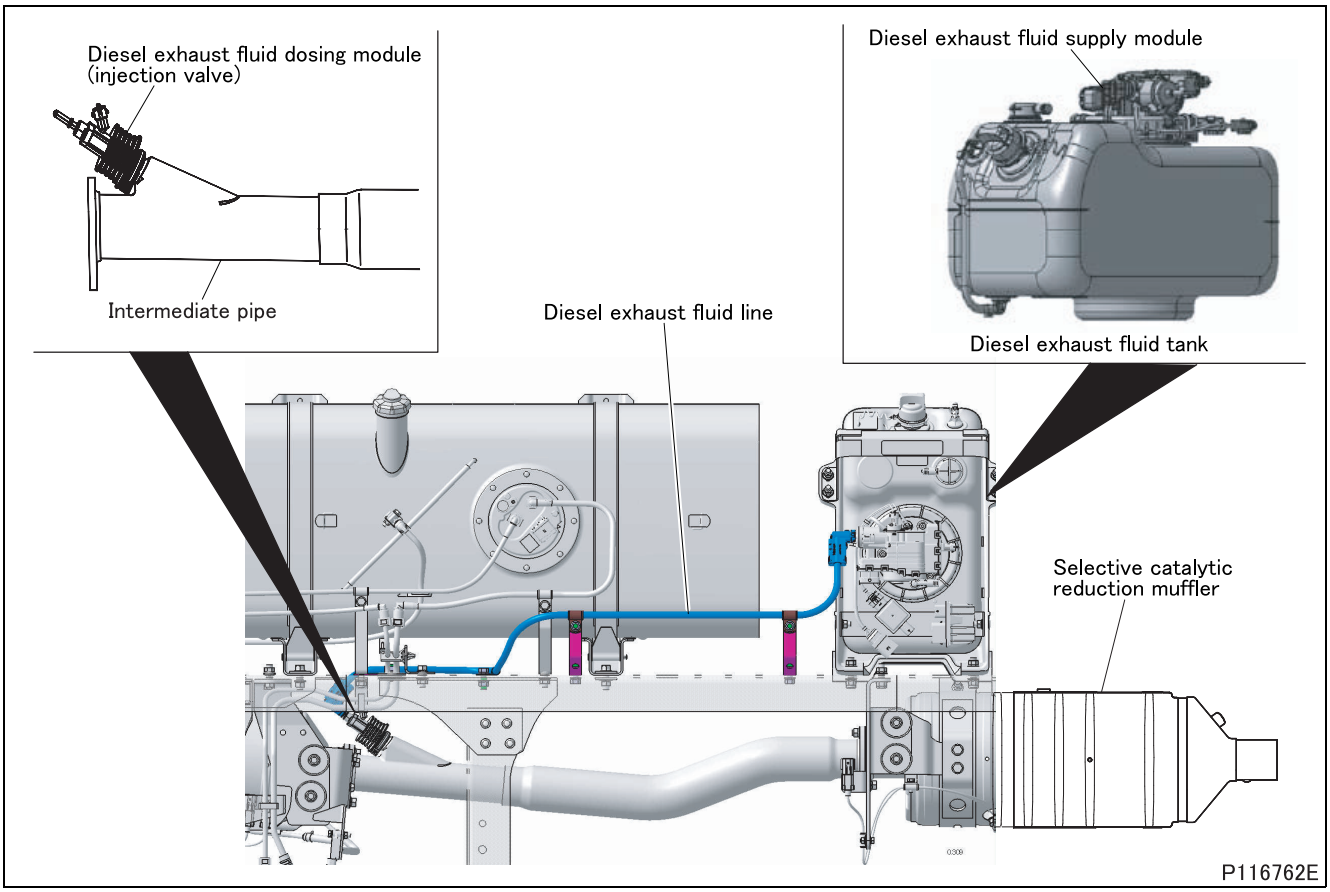

1. In the case that the starter switch has not been turned to ON position (stayed in LOCK, OFF or ACC position):
   - Drain the incorrect solution from the diesel exhaust fluid tank through the drain hose. (See 3. Replacement of Diesel Exhaust Fluid (AdBlue®).)
   - Replace the diesel exhaust fluid tank with a new one. (See DEF (Diesel Exhaust Fluid) TANK.)

2. When the starter switch has been placed in ON position (turned to the ON and START):
   - Drain the solution from the diesel exhaust fluid tank through the drain hose. (See 3. Replacement of Diesel Exhaust Fluid (AdBlue®).)
   - Replace the diesel exhaust fluid tank, diesel exhaust fluid line (tube), dosing module, intermediate pipe and SCR (selective catalytic reduction) muffler with new ones. (See DEF (Diesel Exhaust Fluid) TANK, DPF (Diesel Particulate Filter), SCR (Selective Catalytic Reduction).)

https://truckmanualshub.com/

EGR (Exhaust Gas Recirculation) UNIT

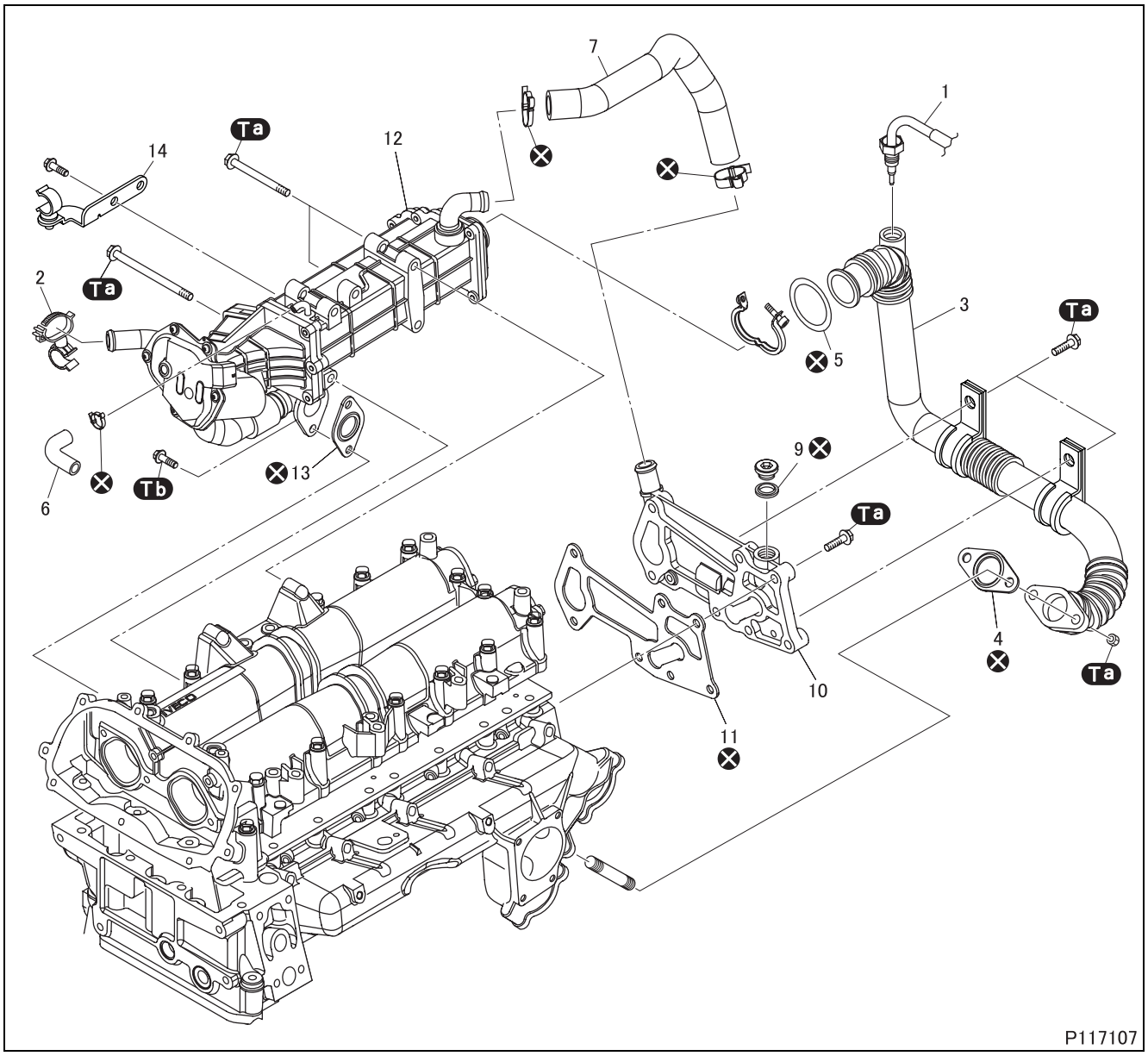

● **Removal sequence**

1 EGR cooler outlet temperature sensor
2 Spring clamp
3 Connection pipe
4 Gasket
5 Gasket
6 Hose
7 Hose
8 Threaded plug
9 Seal gasket
10 Cover
11 Gasket
12 EGR unit (See later section.)
13 Gasket
14 Bracket

EGR: Exhaust gas recirculation
⊗: Non-reusable parts

● **Installation sequence**

Follow the removal sequence in reverse.

https://truckmanualshub.com/

Tightening torque (Unit: N·m {ft.lbs, kgf·m})

Mark	Parts to be tightened	Tightening torque	Remarks
Ta	Bolt (EGR unit mounting)	25 {18, 2.5}	–
	Bolt (bracket mounting)		
	Bolt (connection pipe mounting)		
	Nut (connection pipe mounting)		
	Nut (cover mounting)		
Tb	Nut (pipe mounting)	30 {22, 3.0}	–

◆Removal procedure◆

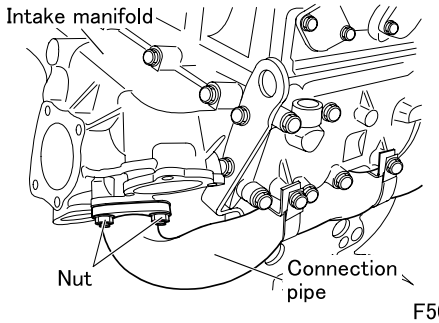

F5015

■ Removal: Connection pipe

- Unscrew and remove the two nuts; disconnect the connection pipe from the intake manifold.

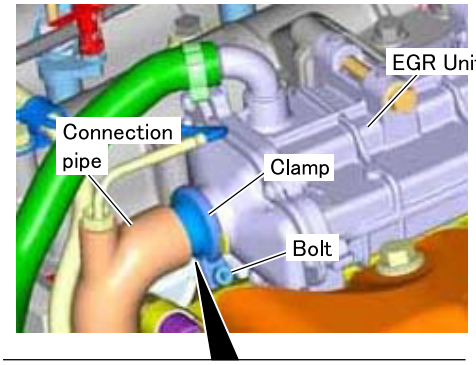

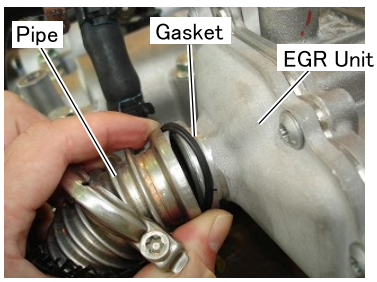

P117815E

- Unscrew the bolt and remove the clamp.
- Remove the connection pipe and gasket from the exhaust gas recirculation unit.

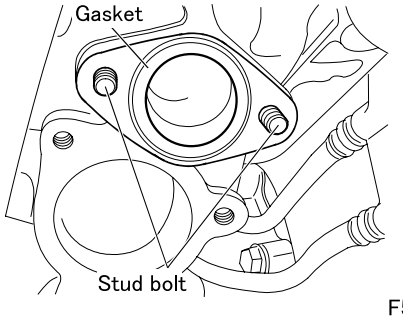

F5016

■ Removal: Gasket, stud bolt

- Remove the gasket.
- Unscrew and remove the stud bolts.

https://truckmanualshub.com/

EGR (Exhaust Gas Recirculation) UNIT

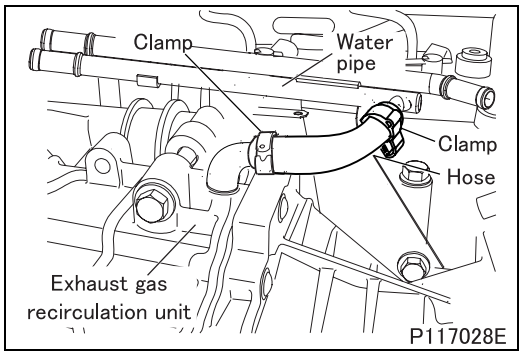

■ **Removal: Hose**

- Open the clamps and move them away from the position locking the pipe to the water pipe and EGR (Exhaust Gas Recirculation) unit.
- Remove the hose.

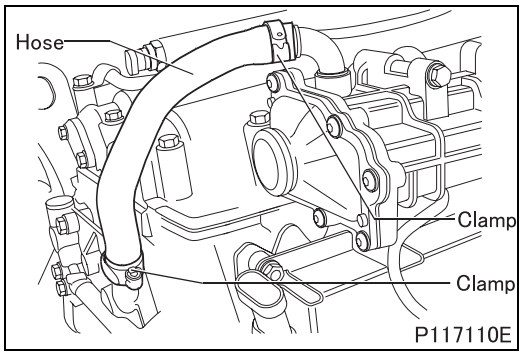

■ **Removal: Hose**

- Remove the retaining clamps.
- Remove the hose from the cooler and from the cover.

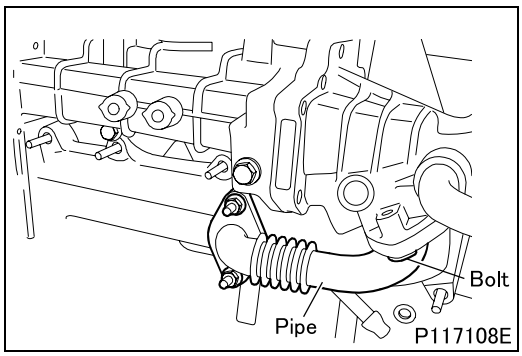

■ **Removal: Protector, EGR unit**

- Remove the protector.
- Remove the bolt that attaches the exhaust gas recirculation unit and EGR valve pipe.

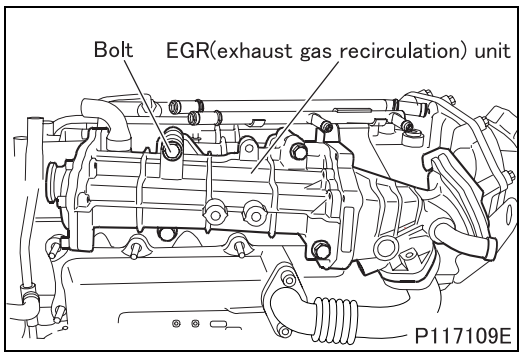

- Unscrew and remove the fixing bolts.
- Remove the EGR unit.

https://truckmanualshub.com/

◆Installation procedure◆

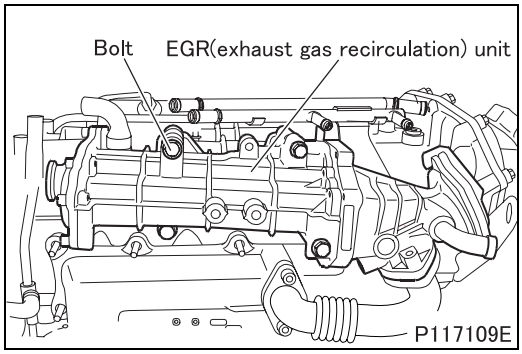

■ **Installation: EGR unit, protector**

- Fit the EGR unit on the overhead and tighten the fixing bolts to a tightening torque of 25 N·m {18.0 ft.lbs, 2.5 kgf·m}.

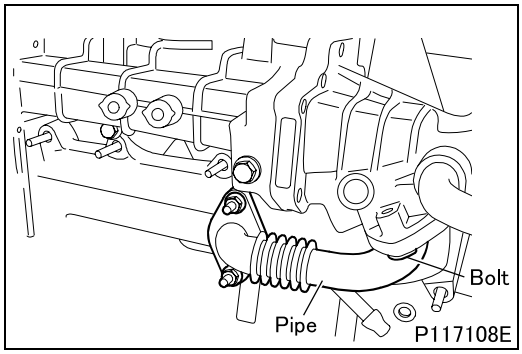

- Install the pipe with a new gasket to the EGR unit.
- Tighten the two bolts.
- Install the protector.

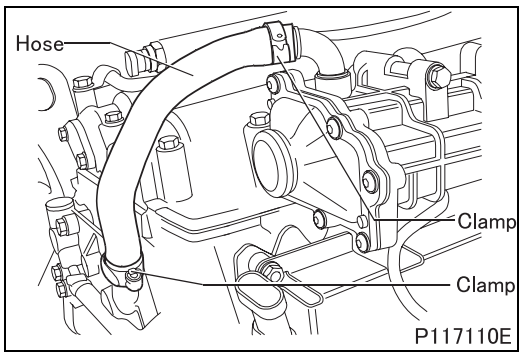

■ **Installation: Cross adapter, hose**

- Connect the hose with the heat exchanger and the cover.
- Retain it by means of the new clamps.

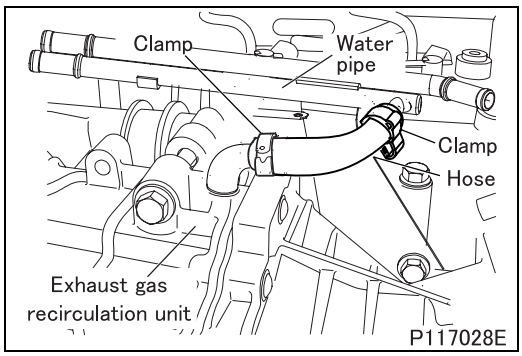

■ **Installation: Hose**

- Connect the hose between the water pipe and the EGR (Exhaust Gas Recirculation) unit.
- Fasten the hose to the adapters by means of the clamps.

https://truckmanualshub.com/

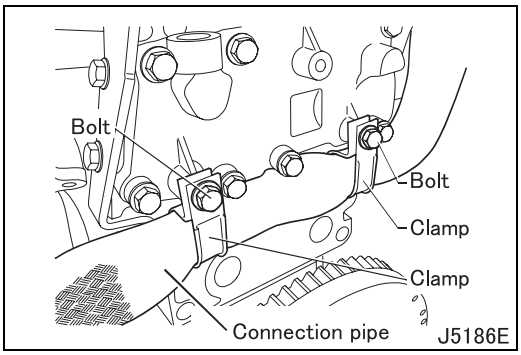

■ **Installation: Connection pipe**

- Assemble the connection pipe on the cylinder head retaining it by means of the clamps.
- Put the bolts and tighten it to a torque of 25 N·m {18.0 ft.lbs, 2.5 kgf·m}.

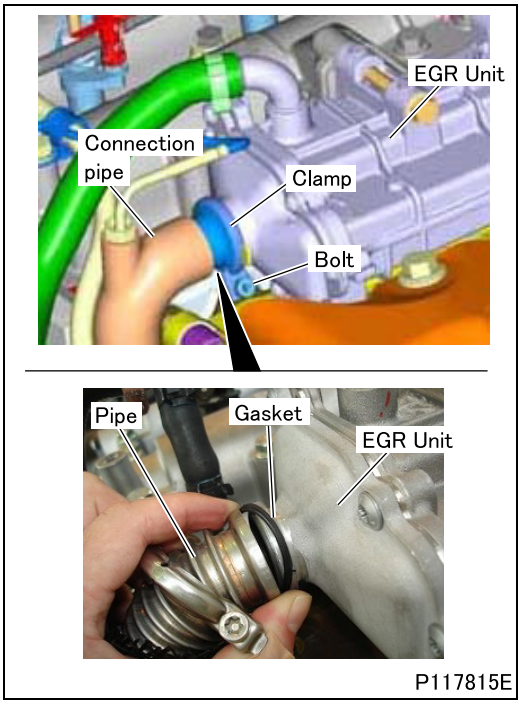

- Install the exhaust gas recirculation connection pipe and gasket on the exhaust gas recirculation unit.
- Install the clamp as shown.
- Tighten the clamp bolt.

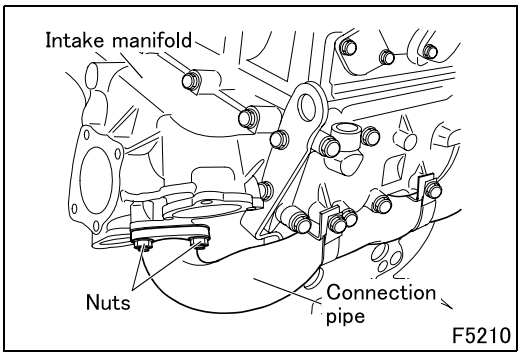

- Install the connection pipe with a new gasket on the intake manifold.
- Tighten the nuts to a torque of 25 N·m {18.0 ft.lbs, 2.5 kgf·m}.

https://truckmanualshub.com/

EGR Unit

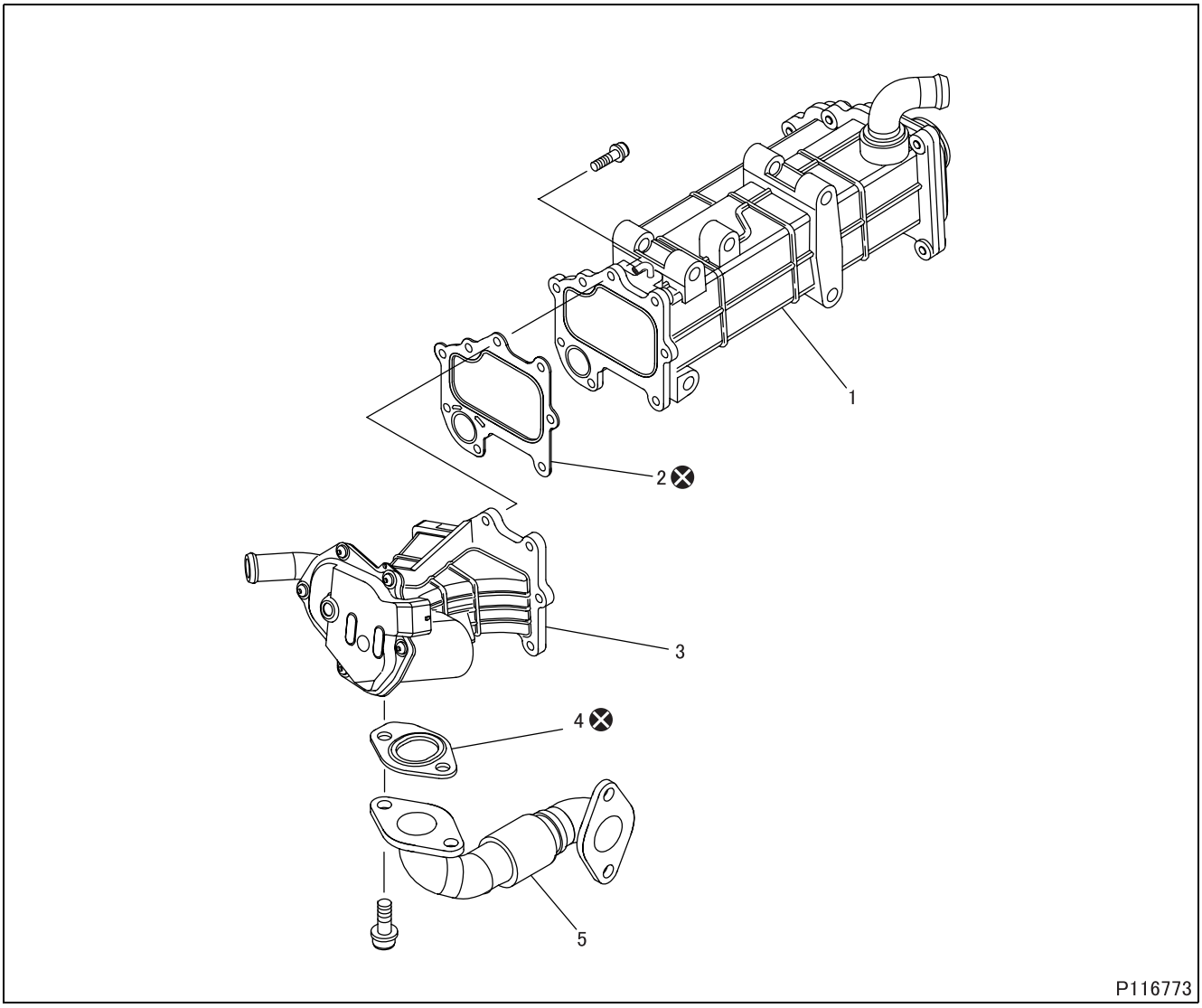

● **Removal sequence**

1 EGR cooler
2 Gasket
3 EGR valve
4 Gasket
5 EGR valve pipe

EGR: Exhaust gas recirculation
⊗: Non-reusable parts

● **Installation sequence**

Follow the removal sequence in reverse.

https://truckmanualshub.com/

BLOWBY GAS RETURN SYSTEM

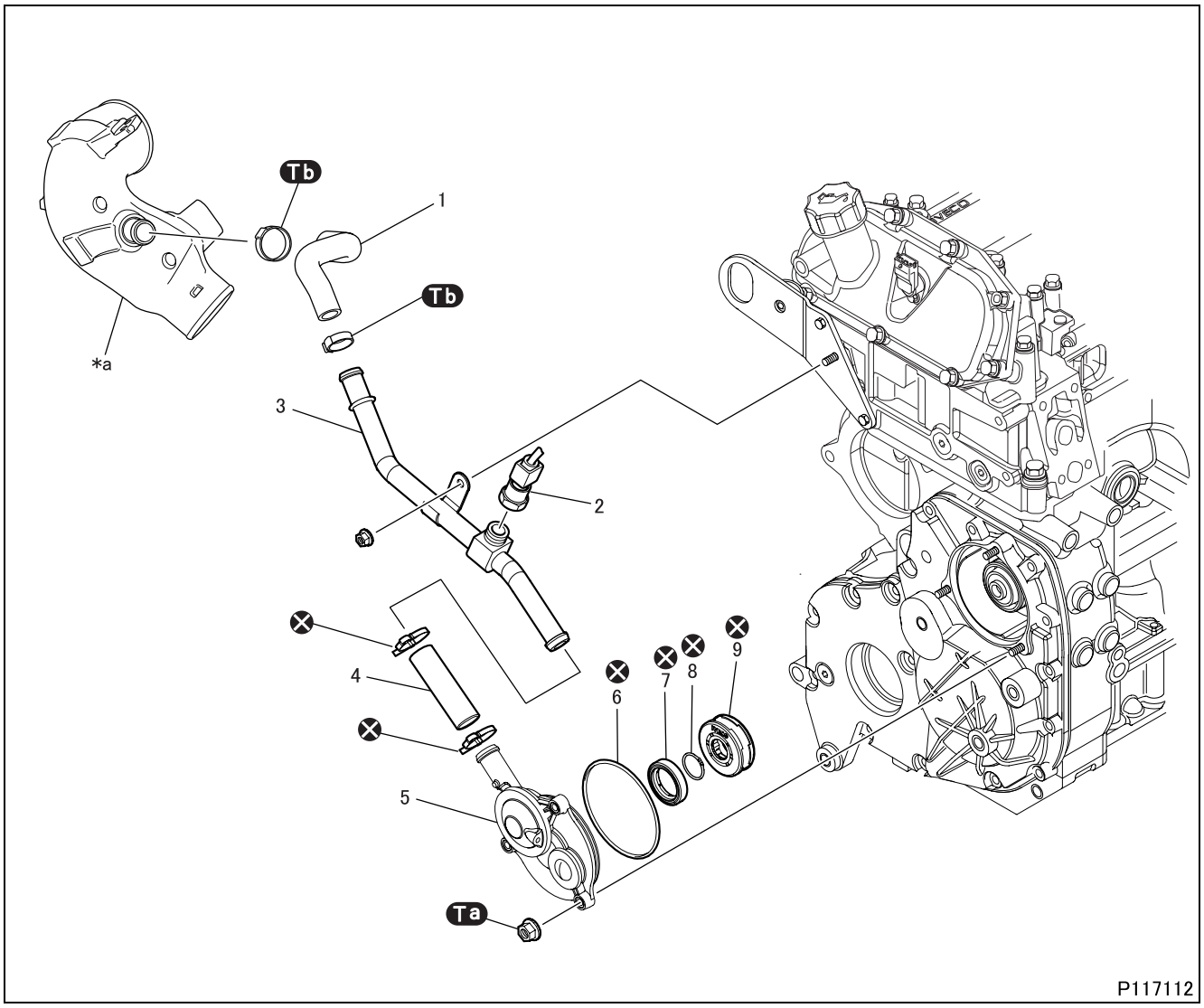

● **Removal sequence**

1 Breather hose
2 Blow-by pressure sensor 1
3 Breather pipe
4 Breather hose
5 Cover
6 O-ring
7 Seal ring
8 Snap ring
9 Air filter

***a**: Air duct
⊗: Non-reusable parts

● **Installation sequence**

Follow the removal sequence in reverse.

Tightening torque (Unit: N·m {ft.lbs, kgf·m})

Mark	Parts to be tightened	Tightening torque	Remarks
Ta	Nut (cover mounting)	10 {7.4, 1.0}	–
Tb	Clamp	9 to 11 {6.6 to 8.1, 0.9 to 1.1}	–

https://truckmanualshub.com/

◆Removal procedure◆

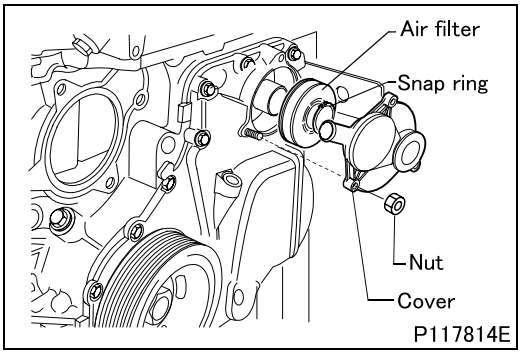

■ Removal: Air filter

- Remove the screws and the cover. Take off the snap ring. Pull out the air filter.

NOTE

- **The air filter and the seal ring of the cover must be changed at every removal.**

◆Installation procedure◆

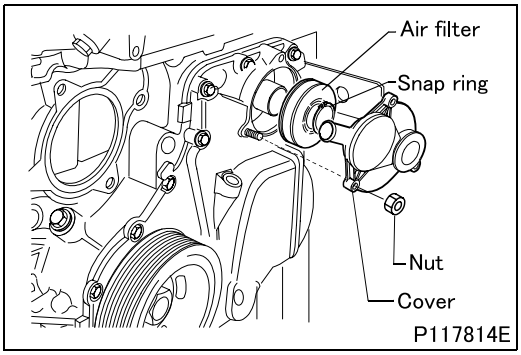

■Installation: Air filter

- Fit a new air filter.
- Fit a new snap ring.
- Fit the cover, drive in the screws and tighten them to the prescribed torque (10 N·m {7.4 ft.lbs, 1.0 kgf·m}).

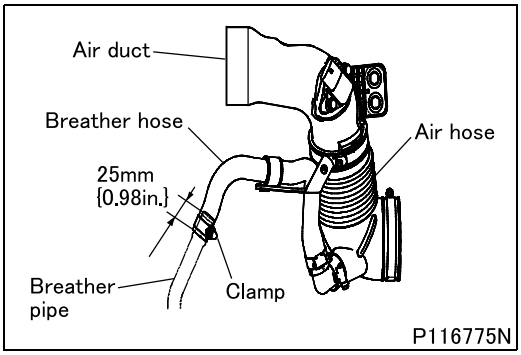

■Installation: Breather hose

- Install the hose as shown and tighten the clamp.

https://truckmanualshub.com/

DEF (Diesel Exhaust Fluid) TANK

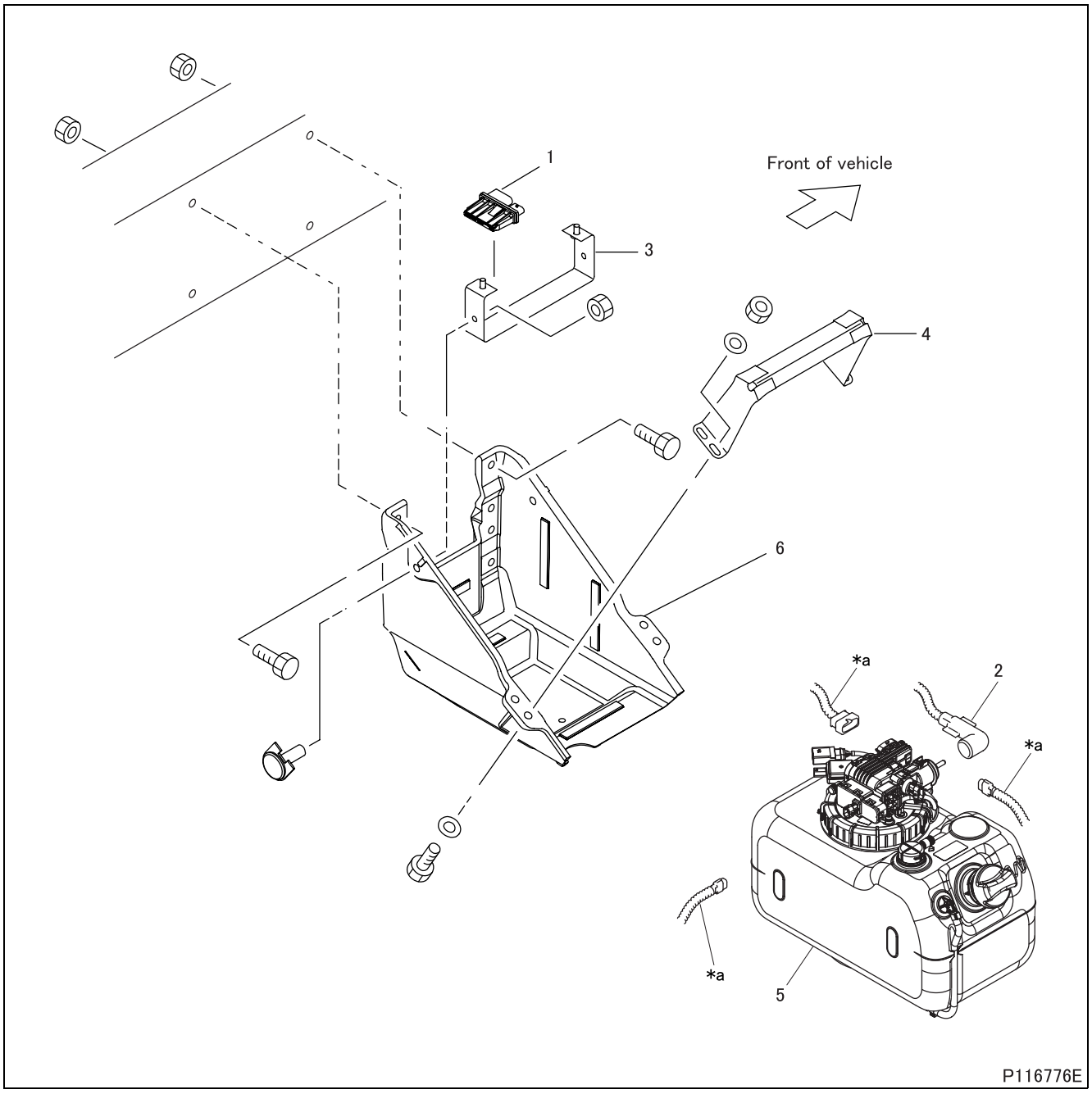

● **Removal sequence**

1 DEF heater power unit
2 DEF tube
3 Bracket
4 Band
5 DEF tank
6 DEF tank bracket

***a**: DEF tank harness

CAUTION ⚠

- **Be careful not to damage the end of the connector on the DEF tank when removing the DEF tube.**

- Plug the removed DEF tube and connector to prevent dust from entering them.

https://truckmanualshub.com/

- Turn the starter switch to OFF, then wait at least 2 minutes to allow time for the BlueTec® system to stop its internal operation completely before starting the removal procedure.

WARNING ⚠

- **If DEF gets in your eye, wash it with plenty of running water immediately and seek medical attention without delay.**
- **DEF is usually harmless to your skin, but in the case of its contact with the skin, it should be removed with running water immediately. Should any change in skin condition or irritation occurs as a result, ask medical attention.**

CAUTION ⚠

- **If DEF is splashed over brackets, bolts, nuts, or other similar parts, wash it from them with water. DEF may cause corrosion to these parts.**
- **To prevent corrosion of the harness and eventual open circuit due to DEF that can enter the harness connectors during the work, remove the harness in the last stage of the procedure.**

● Installation sequence

Follow the removal sequence in reverse.

◆Removal procedure◆

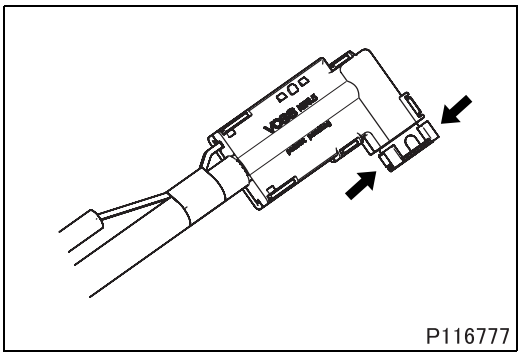

■Removal: DEF tube

- Hold the clip to release the stopper and disconnect the tube.

https://truckmanualshub.com/

DPF (Diesel Particulate Filter)

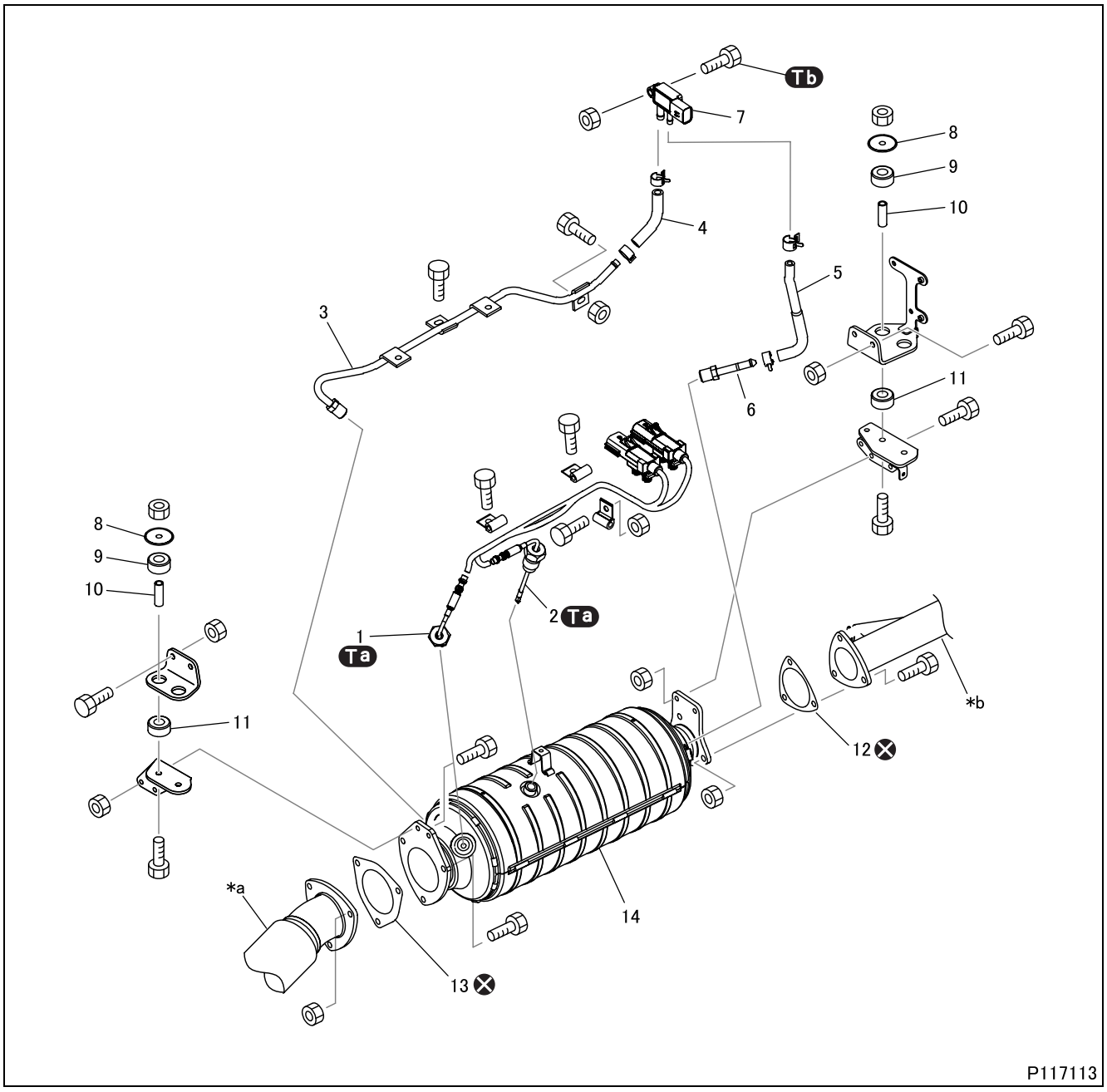

● **Removal sequence**

1 Exhaust gas temperature sensor 1
2 Exhaust gas temperature sensor 2
3 Pressure pipe
4 Pressure hose
5 Pressure hose
6 Pressure pipe
7 DPF differential pressure sensor
8 Cap
9 Cushion rubber
10 Collar
11 Cushion rubber
12 Gasket
13 Gasket
14 DPF muffler

***a**: Front pipe
***b**: Intermediate pipe
⊗: Non-reusable parts
DPF: Diesel Particulate Filter

https://truckmanualshub.com/

NOTE

- **The color of the DPF surface may turn brown. This discoloration is due to the inherent characteristics of stainless steel and does not indicate rusting or any other abnormality.**

● Installation sequence

Follow the removal sequence in reverse.

Tightening torque (Unit: N·m {ft.lbs, kgf·m})

Mark	Parts to be tightened	Tightening torque	Remarks
Ta	Exhaust gas temperature sensor 1, 2	45 ± 4.5 {33 ± 3.3, 4.6 ± 0.5}	–
Tb	Nut	8 ± 0.9 {5.9 ± 0.7, 0.8 ± 0.1}	–

◆Inspection procedure◆

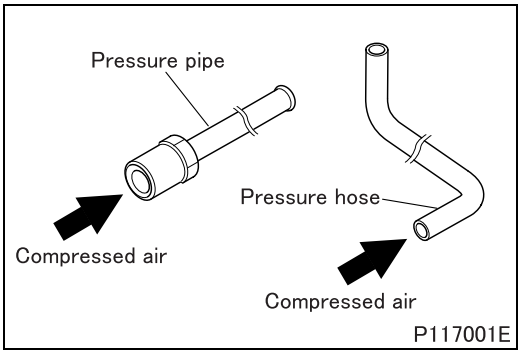

■Inspection: Pressure pipe and hose

- Check the pressure pipe and hose for clogging by blowing compressed air into the pipe and hose.

CAUTION ⚠

- **Inspection must be performed on an individual pressure pipe or hose.**
- **If compressed air is blown into the pressure pipe or hose with DPF differential pressure sensor still installed, the sensor may become damaged.**

■ Inspection: DPF (Diesel particulate filter)

CAUTION ⚠

- **The DPF is very hot just after the engine is stopped. Wait proceeding to the work until the DPF is cooled down sufficiently to prevent getting burned.**

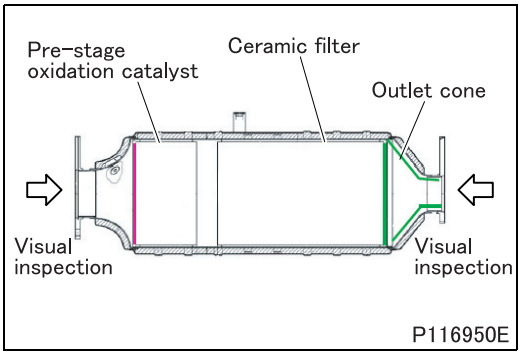

- Inspection of pre-stage oxidation catalyst
  - Check for clogging with foreign matters and damage.
  - If the filter is clogged with foreign matters, replace the DPF muffler with a new one.
  - If any damaged or broken parts are found, replace the DPF muffler with a new one.

https://truckmanualshub.com/

DPF (Diesel Particulate Filter)

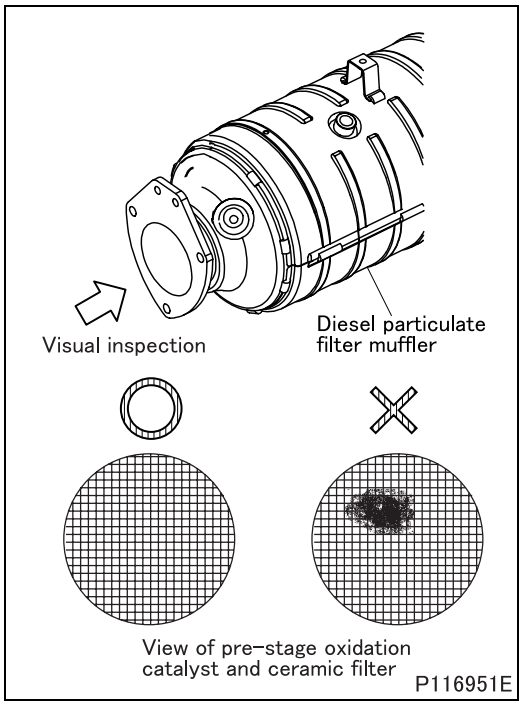

- Inspection of ceramic filter and outlet cone
  - Check for accumulation of soot and damage.
  - If any damaged or broken parts are found, replace the DPF muffler with a new one.

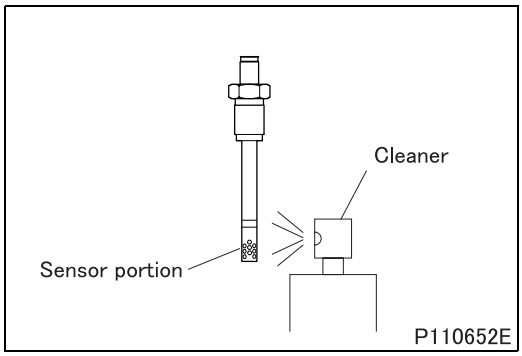

■ Inspection: Exhaust gas temperature sensor

- Check that the sensor portion is free of soot, oily substance, etc.
- If not, clean the sensor portion as follows.
- Spray a cleaner on the sensor portion from 2 or 3 cm {0.79 or 1.18 in.} away.
  Recommended cleaners:
  Nonchlorinated solvent
- In 20 to 30 seconds after spraying, wipe the sensor portion clear of the sprayed cleaner using a soft waste cloth the like.

CAUTION ⚠

- **Be sure to wait for 20 to 30 seconds before wiping. It takes the cleaner that long to dissolve foreign matter.**

◆Installation procedure◆

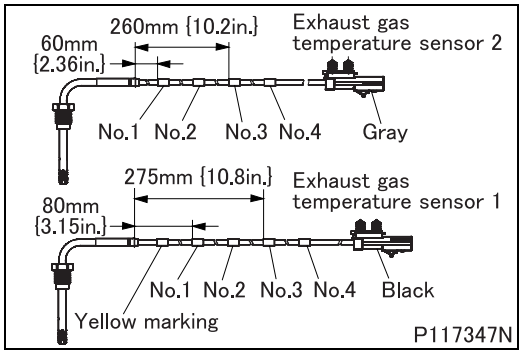

■Installation: Exhaust gas temperature sensor

- Move the clips to the white tape portions on the exhaust gas temperature sensors and install the sensor using them.

https://truckmanualshub.com/

M E M O

https://truckmanualshub.com/

SCR (Selective Catalytic Reduction)

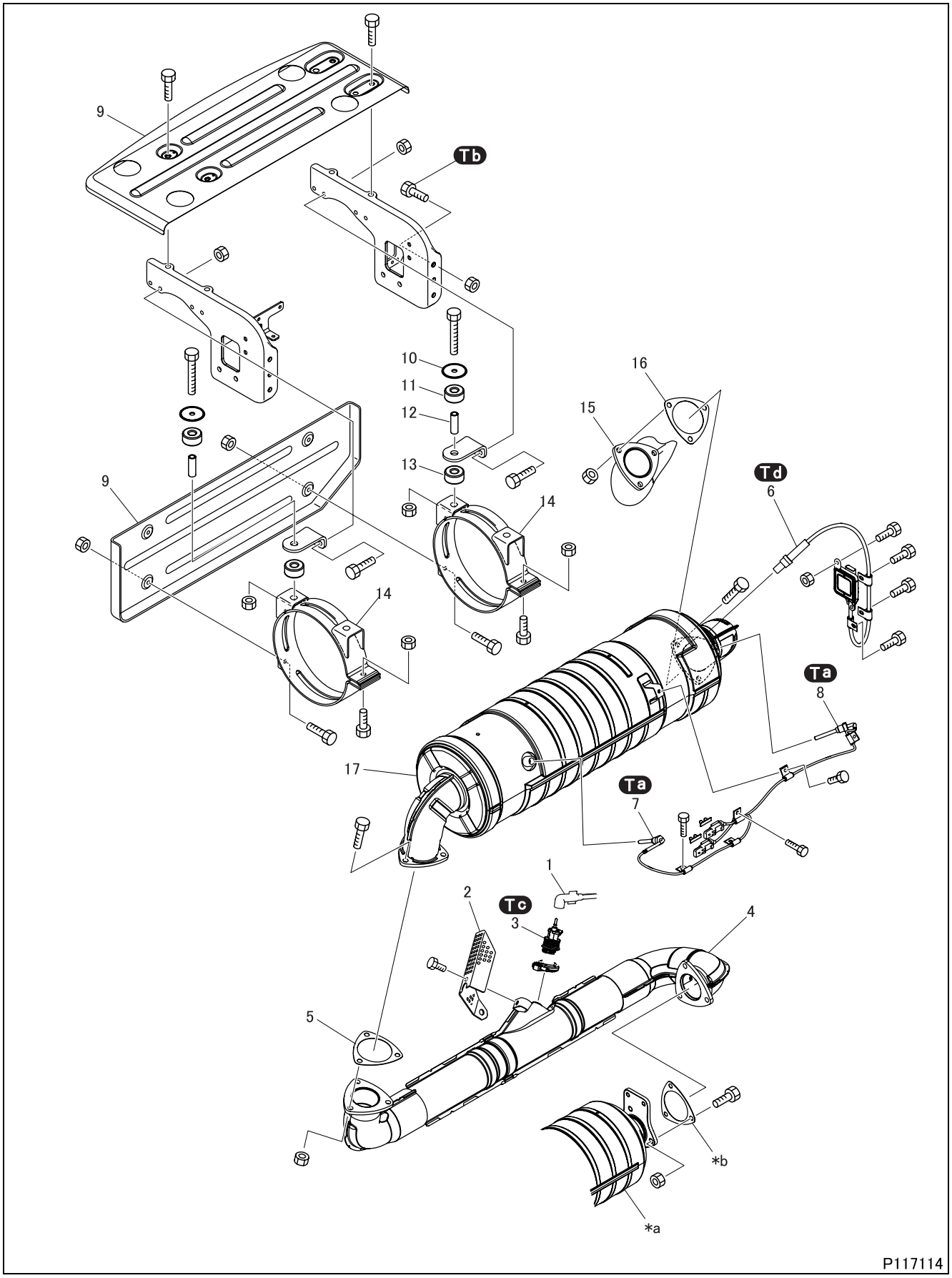

https://truckmanualshub.com/

● Removal sequence

1 DEF tube
2 Dosing module cover
3 Dosing module
4 Intermediate pipe
5 Gasket
6 NOx sensor
7 SCR temperature sensor 1
8 SCR temperature sensor 2
9 Heat insulator
10 Cap
11 Cushion rubber A
12 Collar
13 Cushion rubber B
14 SCR band
15 Tail pipe
16 Gasket
17 SCR muffler

***a**: DPF
***b**: DPF muffler gasket
⊗: Non-reusable parts
DPF: Diesel particulate filter
DEF: Diesel exhaust fluid

CAUTION ⚠

- **Be careful not to damage the end of dosing module when removing the diesel exhaust fluid tube.**

- Plug the removed diesel exhaust fluid tube and dosing module to prevent dust from entering them.

● Installation sequence

Follow the removal sequence in reverse.

Tightening torque (Unit: N·m {ft.lbs, kgf·m})

Mark	Parts to be tightened	Tightening torque	Remarks
Ta	SCR temperature sensor 1, 2	45 ± 4.5 {33 ± 3.3, 4.6 ± 0.5}	–
Tb	Bolt	95 to 110 {66 to 81, 9.1 to 11}	–
Tc	DEF dosing module	4.75 ± 0.25 {3.5 ± 0.2, 0.5 ± 0.025}	–
Td	NOx sensor	50 ± 10 {37 ± 7.4, 5.1 ± 1.0}	–

◆Removal procedure◆

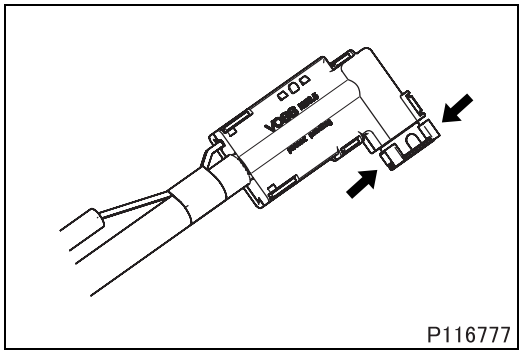

■Removal: DEF (Diesel Exhaust Fluid) tube

- Hold the clip to release the stopper and disconnect the tube.

https://truckmanualshub.com/

SCR (Selective Catalytic Reduction)

◆Installation procedure◆

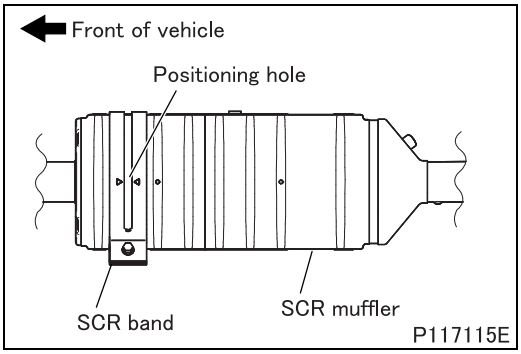

■**Installation: SCR band**

- Align the marks on the SCR band with the positioning hole at the bottom of the SCR.

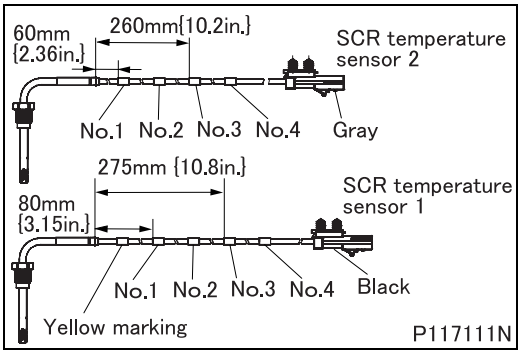

■**Installation: SCR temperature sensor**

CAUTION ⚠

- **The Selective Catalytic Reduction temperature sensor can be damaged if impacted.**
- **Do not give impact to the sensor (removal/installation using an impact wrench, dropping the Selective Catalytic Reduction temperature sensor, etc.).**
- **Should the Selective Catalytic Reduction sensor be impacted, check the sensor. (See Gr54-#336.)**

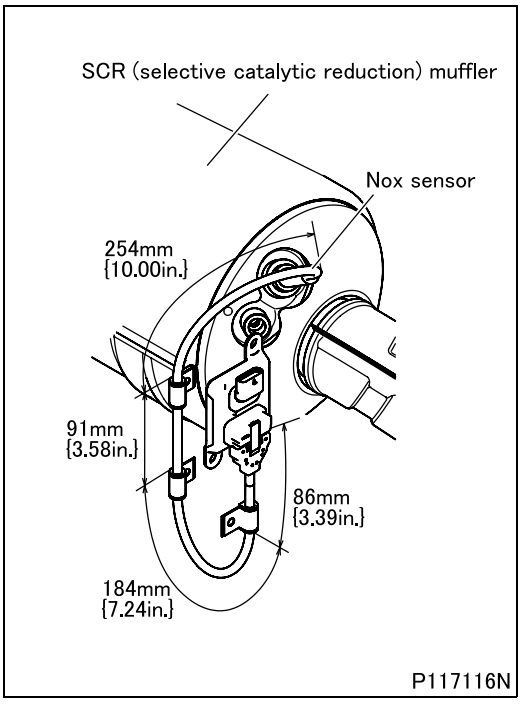

■**Installation: NOx sensor**

- Install the NOx sensor with its harness toward the SCR body.
- Locate and fasten the clip on the NOx sensor harness as shown in the illustration.

https://truckmanualshub.com/

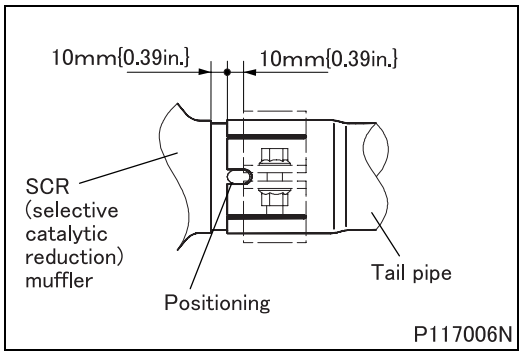

■Installation: Tail pipe

- Insert the tail pipe into the Selective Catalytic Reduction muffler to achieve the dimensions shown.

https://truckmanualshub.com/

FUSO

Group 17E

BlueTec® System

MITSUBISHI FUSO TRUCK OF AMERICA, Inc.

Pub.No.00ELT0001-17E

https://truckmanualshub.com/

INDEX

STRUCTURE AND OPERATION

1. **Overview 17E-2**
2. **Electronic Control System 17E-3**

TROUBLESHOOTING.....(See Gr13E.)

INSPECTION OF ELECTRICAL EQUIPMENT .....(See Gr13E.)

INSTALLED LOCATIONS OF PARTS .....(See Gr13E.)

ELECTRIC CIRCUIT DIAGRAM .....(See Gr13E.)

https://truckmanualshub.com/

1. Overview

- The BlueTec® system consists of a regeneration-controlled DPF (diesel particulate filter) system combined with BlueTec® exhaust gas aftertreatment.

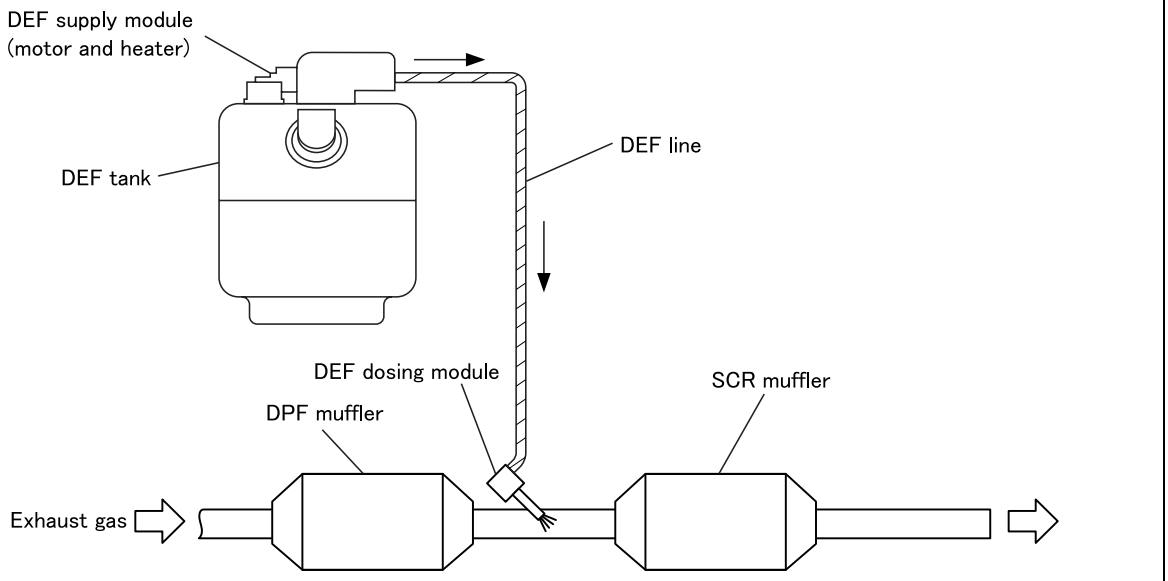

- The regeneration-controlled DPF system collects the soot (particulate matter) contained in exhaust gas with a ceramic filter incorporated in the muffler and burns soot off the filter (continuous filter regeneration) using front oxidation catalyst.
- If continuous filter regeneration is not possible in a situation such as low speed driving, the exhaust temperature is automatically raised to regenerate the filter (burn off soot) (automatic DPF regeneration). If automatic filter regeneration is not possible under certain conditions, such as when the vehicle is driven extremely slowly or during frequent engine stop-start driving, the vehicle must be parked to perform manual regeneration (burning off soot) (parked DPF regeneration).
- The BlueTec® exhaust gas aftertreatment reduces nitrogen oxides (NOx) by adding (injecting) DEF (diesel exhaust fluid) upstream of the SCR (selective catalytic ruduction) catalyst to decompose NOx into water and nitrogen.

https://truckmanualshub.com/

2. Electronic Control System

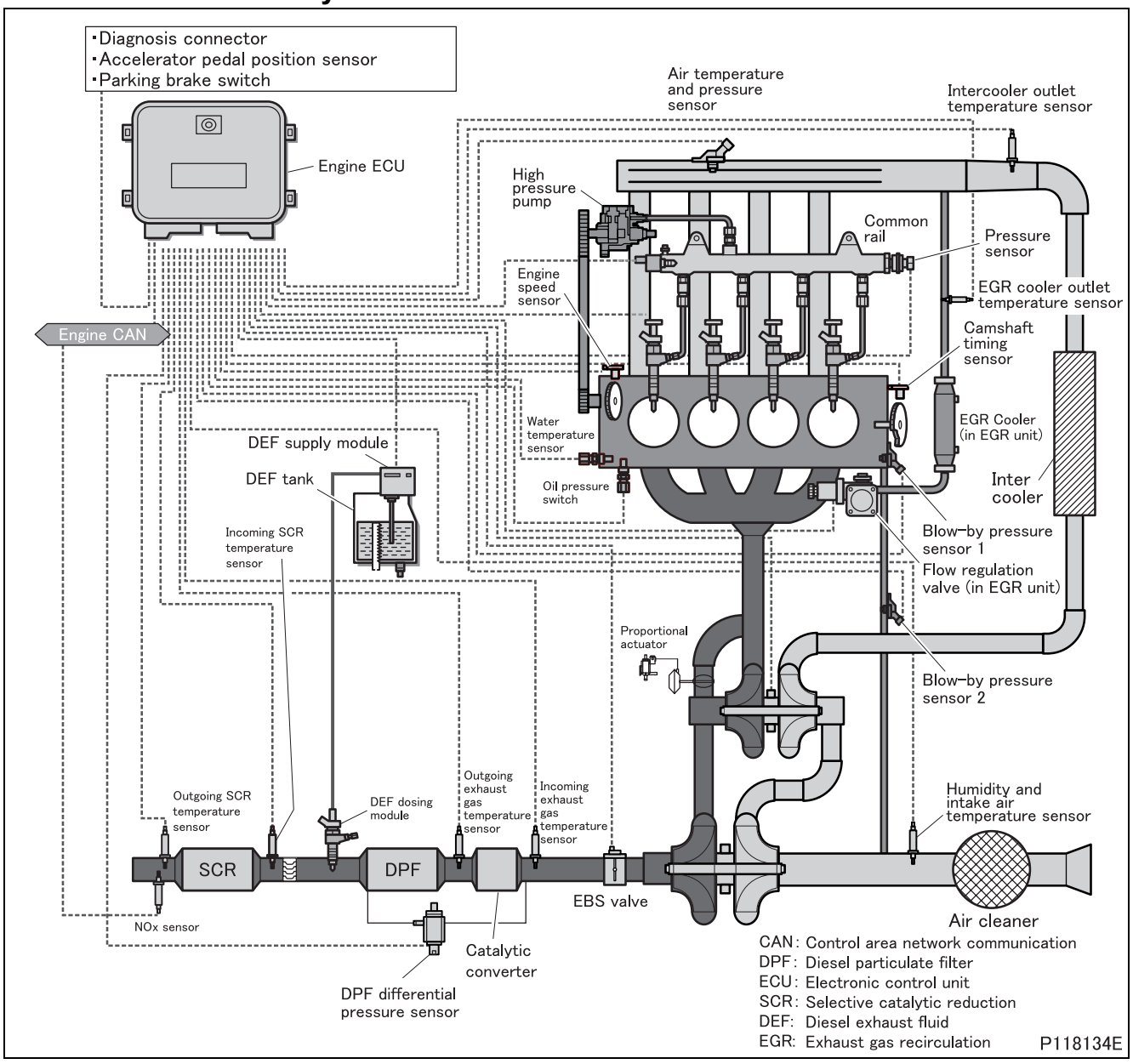

- The BlueTec® system consists of the following:
  - Engine with its engine electronic control unit and sensors for normal operation.
  - DPF (diesel particulate filter) with oxidation catalyst in one housing for reduction of particulate emissions.
  - Selective catalytic reduction together with a muffler in a housing for NOx emission reduction.
  - Dosing system with a separate tank for DEF.
  - Control area network communication between engine electronic control unit and NOx sensor.

2.1 System for NOx emission control

- The dosing system injects a quantity of DEF (diesel exhaust fluid) in the exhaust stream before the selective catalytic reduction, depending on the temperature of the catalyst and the NOx emissions of the engine.

https://truckmanualshub.com/

2.2 Calculation of desired DEF quantity

- The NOx emissions of the engine are calculated depending on the actual engine speed and engine load for standard conditions.
- The basic NOx emissions are then corrected depending on the deviation of the standard conditions, which are determined by following sensors:
  - Engine water temperature.
  - Absolute pressure and temperature in intake manifold.
  - Fuel pressure of engine with high pressure electronic injection system.
  - Start of fuel injection.
  - Exhaust gas recirculation humidity (depended on the air humidity sensor).
- In case of a defect of any of the above sensors the NOx calculation takes the nominal values.
- The calculated DEF quantity is then transmitted from the engine electronic control unit to the pump module, which realizes the DEF injection.

(1) Closed loop control:

- The expected NOx concentration after selective catalytic reduction is calculated by the estimated NOx emission of the engine, the actual exhaust flow (by engine speed, boost pressure, air temperature and actual fuel quantity) and the expected catalyst efficiency (calculated by DEF filling state, exhaust flow and actual catalyst temperature).

2.3 Basic functionality of dosing system: PC/LD schema

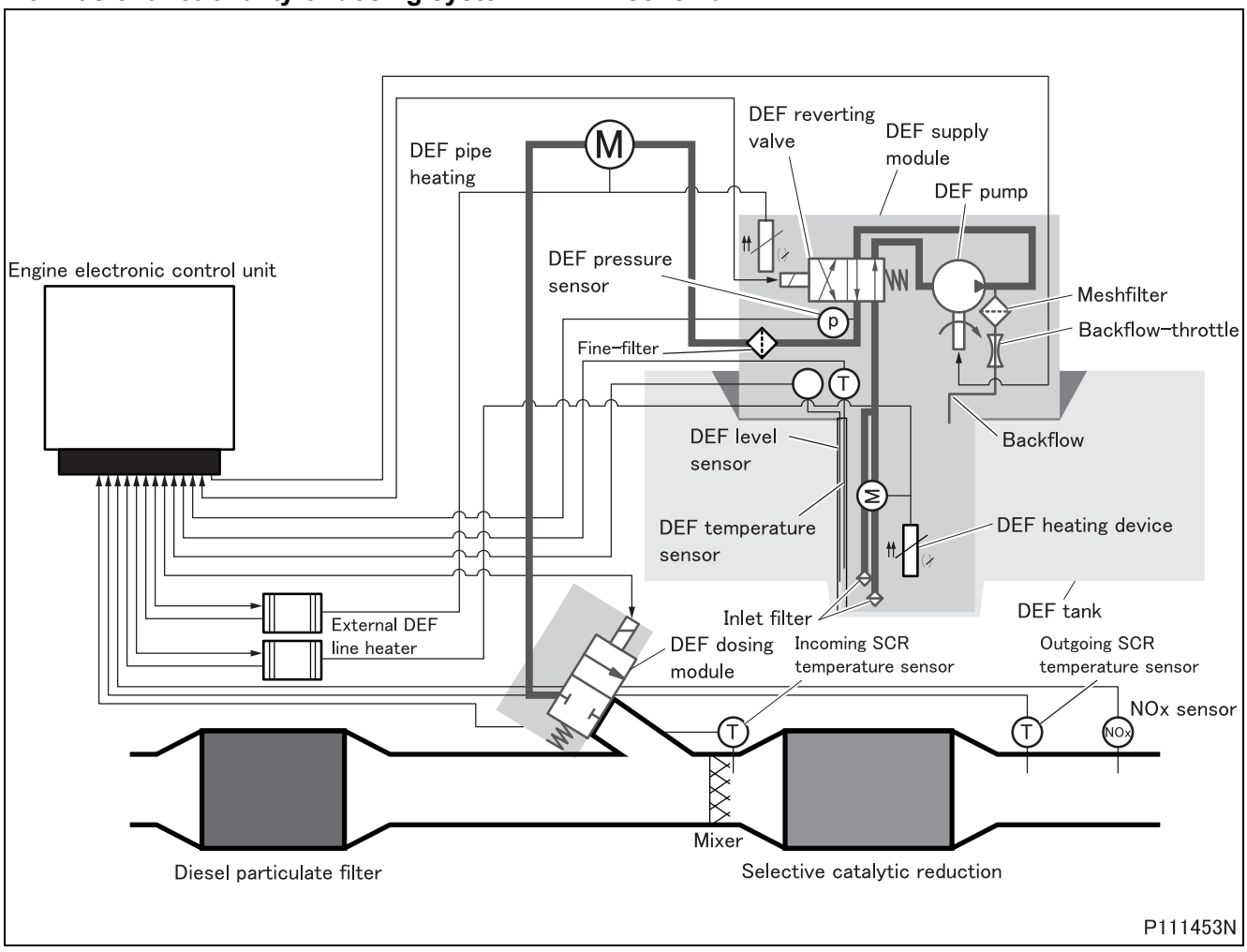

https://truckmanualshub.com/

- The system incorporates heaters. If DEF (diesel exhaust fluid) is frozen, a thawing process is performed and, immediately after that, the dosing system starts operating.
- The system starts the DEF pump and check if the needed DEF pressure is reached.
- The dosing system controls the DEF pressure in a closed loop control with the DEF pressure sensor.
- The dosing system sends to the engine electronic control unit a “ready state signal”. Then the engine electronic control unit sends the requested DEF quantity to the dosing system PC/LD. The system recognizes the requested DEF injection quantity and actuate the corresponding dosing valve.
- The dosing module of the dosing system is placed directly on the exhaust tube and the DEF is injected directly into the exhaust gas. Therefore the dosing module has to be passively cooled with air.

(1) DPF (diesel particulate filter) for particulate control

- The DPF is placed upstream of the SCR (selective catalytic reduction) and works as a passive collection filter.
- The collected soot/particulates are burned continuously by the NO_2 which are formed from the basic NO of the exhaust gas by the oxidation catalyst, which is placed upstream of the filter, but in the same housing.
- There is no active regeneration as long as the filter loading does not exceed a certain level. The loading level of the DPF is monitored by the flow resistance over the filter, i.e. the DPF pressure difference depending on exhaust flow, which is calculated by engine speed and load.
- If the flow resistance exceeds a limit – which happens only in very special cases (long driving times with very light load, e.g. only city cycle) – the active regeneration is activated:
- The injection start is retarded to increase the exhaust temperature, to bring the filter to a level higher than the specified temperature. If the temperature does not reach this limit within a time there is an additional procedure to increase the exhaust temperature again:
  - Reduction of the intake manifold pressure.
  - Reduction of the common rail pressure.
- During forced regeneration, the temperature of the exhaust gas downstream of the DPF increases. This high temperature, which is required to burn off the soot accumulated on the DPF, is achieved by optimizing the fuel injection timing. Forced regeneration is performed until the amount of soot accumulated on the filter reduces to the specified value.
- During the active regeneration the DEF injection is not switched off.

https://truckmanualshub.com/

2.4 BlueTec® system warning function

(1) Regeneration-controlled DPF (diesel particulate filter) warning function

- The regeneration-controlled DPF system has a function to issue a warning when a system failure occurs and a function to monitor the amount of particulate matter accumulated on the ceramic filter incorporated in the DPF.
- The meter indication varies depending on the failure, the amount of accumulated particulate matter and whether or not DPF regeneration is active.
- Regardless of the meter reading on the multi-information display, a manual regeneration request ((amber) flashes) could be issued by the DPF function. In such a case, follow the flashing indicator and perform manual regeneration.
- Parked DPF regeneration becomes possible when the DPF cleaning switch is pressed with the engine running until the indicator lamp (amber) changes from flashing to illuminating.
- Parked DPF regeneration is impossible in the following conditions:
  - Within 30 seconds after starting the engine
  - When the coolant indicator shows the temperature by up to 5 segments (Perform parked DPF regeneration after warming up the engine.)
  - When the PTO (power take-off) switch is in the “ON” position (vehicles with a PTO)
  - While the accelerator pedal or brake pedal is being depressed
  - While the vehicle is moving
  - When the gearshift lever is in any position other than “P” or “N”

		Meter cluster display			Remarks
				Multi-information display	
System malfunction		O	–	–	Diesel particulate filter regeneration control system stop.
Particulate matter (PM) accumulation amount	When the number of displayed segments is 1 to 6:	–	–	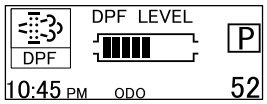 116016 • The (green) indicator is displayed.	–
	When the number of displayed segments is 7 or 8:	–	Flashes slowly (amber)	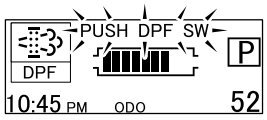 116017 • The “PUSH DPF SW” message flashes. • The symbol turns from green to amber.	Perform parked DPF regeneration within 50 km (31 miles) or 1 hour, whichever earlier, after the lamp starts flashing.
	When the number of displayed segments is 9:	–	Flashes quickly (amber)	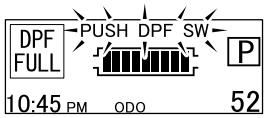 116018 • The “PUSH DPF SW” message flashes. • The warning is displayed.	Immediately stop the vehicle in a safe place and perform parked DPF regeneration.

https://truckmanualshub.com/

		Meter cluster display			Remarks
				Multi-information display	
Particulate matter (PM) accumulation amount	When the DPF is overloaded with PM:	–	Flashes quickly (amber)	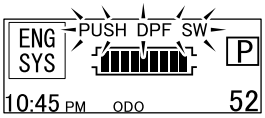 116019 • The “PUSH DPF SW” message flashes. • The ENG SYS warning is displayed.	• Immediately stop the vehicle in a safe place and perform parked DPF regeneration. • The engine power is automatically reduced when the ENG SYS warning is displayed.
When automatic DPF regeneration is in progress:	When the number of displayed segments is 6 or less.	–	Lights (green)	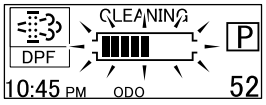 116020 • The “CLEANING” message is displayed. • PM amount segments flash.	–
	When the number of displayed segments is 7 or more.	–	Lights (green)*		
When parked DPF regeneration is in progress:		–	Lights (amber)	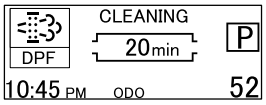 116021 • The “CLEANING” message is displayed. • The predicted time until completion of parked DPF regeneration is indicated.	–

*: When manual regeneration is required (7 or more segments displayed) during automatic regeneration ((green) lit), the lamp color alternates between green and amber.

SW: switch

https://truckmanualshub.com/

(2) BlueTec® exhaust gas aftertreatment warning function

- The abnormal conditions detected and alerted of by the BlueTec® exhaust gas aftertreatment are broadly classified into three types (BlueTec® exhaust gas aftertreatment malfunction, low DEF (diesel exhaust fluid) level, and poor DEF quality).
- The combination of warning indicators or buzzer sounding timing varies for each abnormal condition.

	Meter cluster display			Buzzer	Remarks
	DEF level indicator		ENG SYS		
Quantity of DEF in DEF tank has fallen too low.	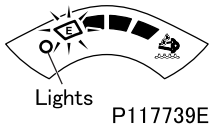 P117739E	–	Lights (amber)	–	Engine power is reduced in stages.
Quantity of DEF in DEF tank has fallen further.	 P117740	Lights	Lights (red)	Sounds	Engine power is further reduced in stages.
DEF tank has become empty.	 P117741	Flash	Lights (red)	Loudly sounds	A driving restriction automatically engages, locking the gear in 1st or reverse, so the vehicle can be driven only slowly. (creep mode)
DEF quality is degraded.	 P117742	Lights *1	Lights (amber) *2	– *3	Engine power is reduced in stages. *4
BlueTec® exhaust gas aftertreatment system is faulty.	–	Lights *5	Lights (amber) *2	– *6	Engine power is reduced in stages. *7

*1: If you drive more than another 160 km {100 miles} or additional 2 hours, the warning lamp, which has illuminated, starts flashing.

*2: If you drive more than another 80 km {50 miles} or additional 1 hour, the warning lamp color changes from amber to red.

*3: If you drive more than another 80 km {50 miles} or additional 1 hour, the buzzer starts sounding. If you drive more than another 160 km {100 miles} or additional 2 hours, the buzzer sound becomes louder.

*4: If you drive more than another 80 km {50 miles} or additional 1 hour, the engine power will be further reduced. If you drive more than another 160 km {100 miles} or additional 2 hours, the transmission will be locked in 1st or reverse, limiting the vehicle operation to slow-speed driving. (creep mode)
The engine power will be further reduced in stages if you add any fluid (such as water, low-density DEF, etc.) other than the acceptable DEF within 160 hours of driving after the above condition occurs.

*5: If you drive more than another 320 km {200 miles} or additional 4 hours, the warning lamp, which has illuminated, starts flashing.

*6: If you drive more than another 80 km {50 miles} or additional 1 hour, the buzzer starts sounding. If you drive more than another 320 km {200 miles} or additional 4 hours, the buzzer sound becomes louder.

*7: If you drive more than another 80 km {50 miles} or additional 1 hour, the engine power will be further reduced. If you drive more than another 320 km {200 miles} or additional 4 hours, the transmission will be locked in 1st or reverse, limiting the vehicle operation to slow-speed driving. (creep mode)
If BlueTec® exhaust gas aftertreatment malfunctions again within 160 operation hours, the engine output limit is further lowered from the above-mentioned level gradually.

https://truckmanualshub.com/

(2.1) Creep mode recovery

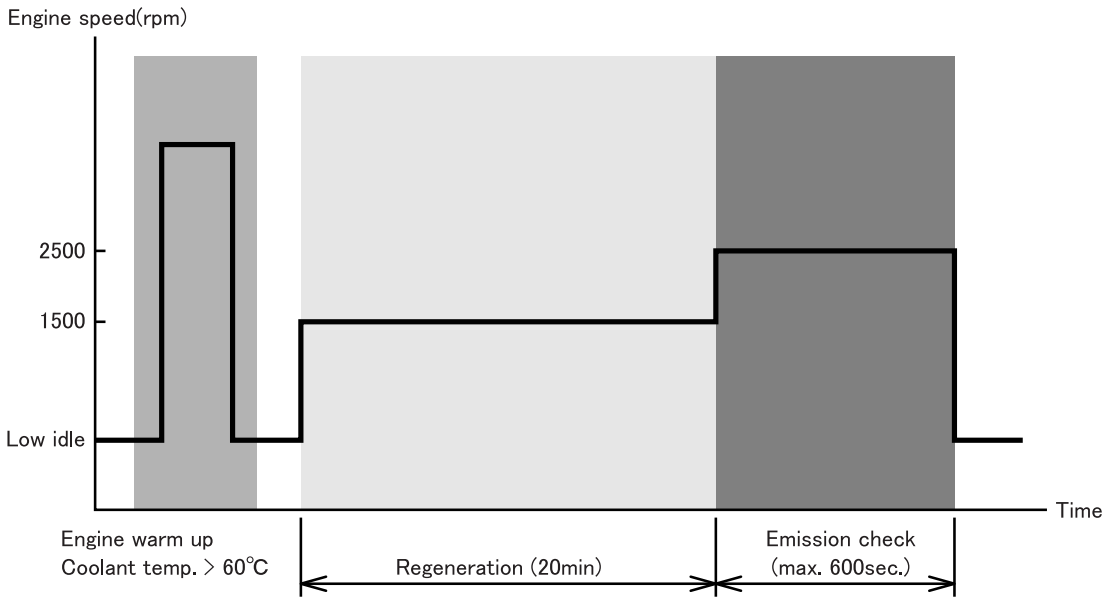

- In case an emission relevant error occurred and the failure was not repaired in time creep mode is activated.
- After repair the driver needs to perform a manual regeneration in order to recover from creep mode.
- Release conditions for creep mode recovery are exactly the same as for a manual regeneration.
- Abortion conditions for creep mode recovery are exactly the same as for a manual regeneration.
- Procedure is different. An additional phase for emission verification is added.
- During regeneration it is not possible to check emissions.
- Therefore the check has to be made after regeneration has finished.
- The engine needs to be run with higher exhaust flow in order to check emission. Therefore an engine speed increase is necessary.
- If all relevant sensors are positively checked, the engine goes immediately to low idle, all driver indications are switched off and creep mode is recovered.
- If the check was faulty, the emission check is aborted after 600 sec., the engine goes to low idle, creep mode is continued and driver indication remains.

https://truckmanualshub.com/

FUSO

Group 21

Clutch

MITSUBISHI FUSO TRUCK OF AMERICA, Inc.

Pub.No.00ELT0001-21

https://truckmanualshub.com/

INDEX

TROUBLESHOOTING.....21-2

DAMPER.....21-4

https://truckmanualshub.com/

Symptoms / Possible causes		Noise from transmission	Reference Gr
Damper	Torsion spring fatigued or damaged	O	
	Hysteresis torque generation mechanism fatigued or damaged	O	
	Spline worn	O	
	Damper mechanism oily or greasy	O	
Engine idling speed too low		O	Gr13

https://truckmanualshub.com/

M E M O

https://truckmanualshub.com/

DAMPER

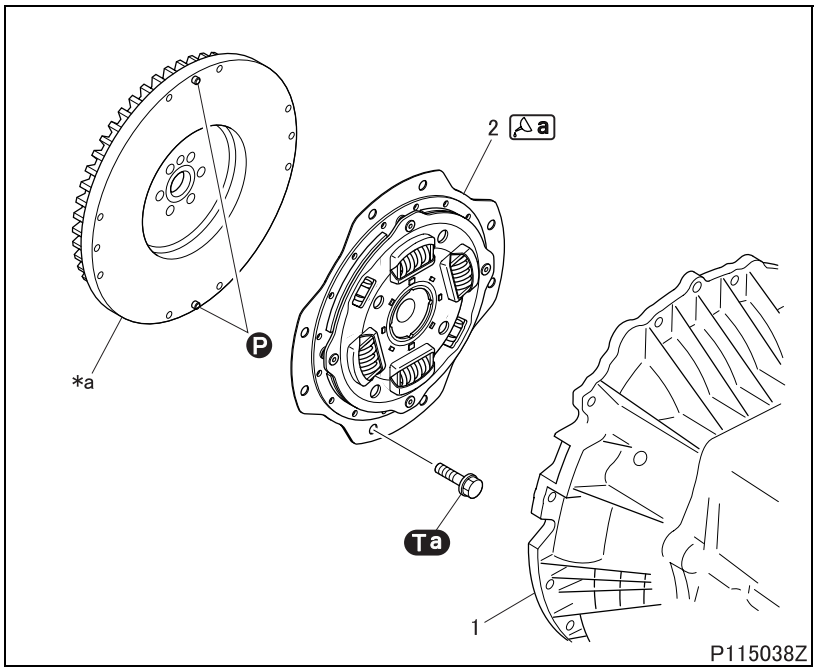

● **Removal sequence**

1 Transmission (See Gr22.)
2 Damper

***a**: Flywheel
Ⓟ: Locating pin

● **Installation sequence**

Follow the removal sequence in reverse.

Service standards (Unit: mm {in.})

Location	Maintenance item	Standard value	Limit	Remedy
2	Play in revolving direction in splines of damper	0.04 to 0.14 {0.0016 to 0.0055}	0.3 {0.012}	Replace

Tightening torque (Unit: N·m {ft.lbs, kgf·m})

Mark	Parts to be tightened	Tightening torque	Remarks
Ta	Bolt (damper mounting)	45 to 55 {33 to 41, 4.6 to 5.6}	–

Lubricant and/or sealant

Mark	Points of application	Specified lubricant and/or sealant	Quantity
a	Entire surface of splines	Molybdenum disulfide grease [NLGI No. 2 (Li soap)]	As required

◆Inspection procedure◆

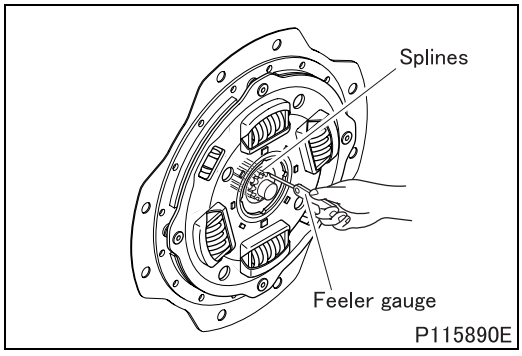

■ **Inspection: Play in revolving direction in splines of damper**

- Reshape a feeler gauge such that it can be inserted into the drive pinion splines. Then, using the gauge, measure the splines for play in revolving direction.
- If the measured value is equal to or exceeds the limit, replace the faulty part.

https://truckmanualshub.com/

◆Installation procedure◆

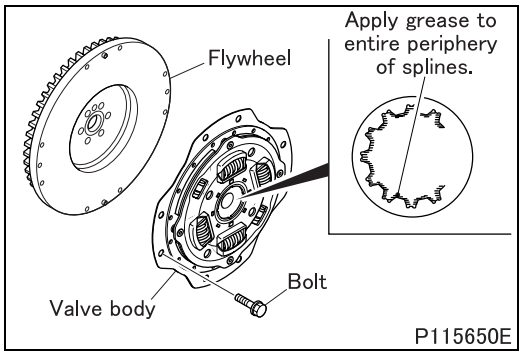

■ **Installation: Damper**

- Apply thin coat of grease to the entire periphery of the splines in the damper while taking care that any grease does seep out of the spline ends. Then, install the damper to the flywheel with the positioning pin and hole in alignment.

https://truckmanualshub.com/

FUSO

Group 22

Transmission <DUONIC™>

MITSUBISHI FUSO TRUCK OF AMERICA, Inc.

Pub.No.00ELT0001-22

https://truckmanualshub.com/

INDEX

SPECIFICATIONS 22-2

STRUCTURE AND OPERATION
1. Overview 22-4
2. Valve Body 22-5
3. Dual Clutch 22-6
4. Transmission 22-10
5. Synchromesh Mechanism 22-15
6. Transmission Power Take-off 22-18

TROUBLESHOOTING.....22-20

ON-VEHICLE INSPECTION AND ADJUSTMENT
1. Transmission Oil Leakage and Oil Quantity 22-24
2. Inspection of Looseness in Engine to Clutch Housing Connection 22-27
3. Inspection of Transmission Cooling System for Leakage, Damage and Installation Condition 22-27
4. Inspection of Looseness in Propeller Shaft Connection 22-27
5. Replacement of Transmission Oil...22-28
6. Replacement of Clutch Control Oil 22-30
7. Inspection of Transmission Mounting Cushion Rubber 22-31

REMOVAL AND INSTALLATION OF TRANSMISSION.....22-32

VALVE BODY, DUAL CLUTCH 22-38

GEAR SHIFT UNIT 22-54

EXTENSION HOUSING AND PARKING BRAKE <FE> 22-58

TRANSFER CASE ADAPTER <FG> ...22-68

REVERSE IDLER GEAR <WITHOUT LARGE-CAPACITY POWER TAKE-OFF> 22-76

REVERSE IDLER GEAR <WITH LARGE-CAPACITY POWER TAKE-OFF>.....22-80

TRANSMISSION BODY.....22-84

OUTER DRIVE PINION 22-104

INNER DRIVE PINION 22-110

MAINSHAFT 22-112

COUNTERSHAFT.....22-122

TRANSMISSION CONTROL 22-132

OIL COOLER 22-136

TRANSMISSION POWER TAKE-OFF <STANDARD TYPE> 22-138

TRANSMISSION POWER TAKE-OFF <LARGE-CAPACITY TYPE> 22-146

https://truckmanualshub.com/

SPECIFICATIONS

Item			Specifications
Transmission model			M038S6 (5.397/0.701)
Gear ratio		1st	5.397
		2nd	3.788
		3rd	2.310
		4th	1.474
		5th	1.000
		6th	0.701
		Rev	5.397
Transmission oil	Classification		API GL-3 SAE80
	Quantity L {qts.}	Standard	Approx. 3.5 {Approx. 3.7}
		With standard type transmission power take-off	Increase of approx. 0.2 {approx. 0.2}
		With large-capacity transmission power take-off	Increase of approx. 0.3 {approx. 0.3}
Automatic transmission fluid	Type		FUSO ATF-SP III
	Quantity L {qts.}		Approx. 4.3 {approx. 4.5}
Mass kg {lb}	Standard		Approx. 122 {Approx. 270}
	With standard type transmission power take-off		Approx. 132 {Approx. 290}
	With large-capacity transmission power take-off		Approx. 135 {Approx. 295}
Mode of control			Instrument panel shift remote control
Clutch			Wet-type dual clutch
Valve body			Hydraulic control unit

https://truckmanualshub.com/

M E M O

https://truckmanualshub.com/

1. Overview

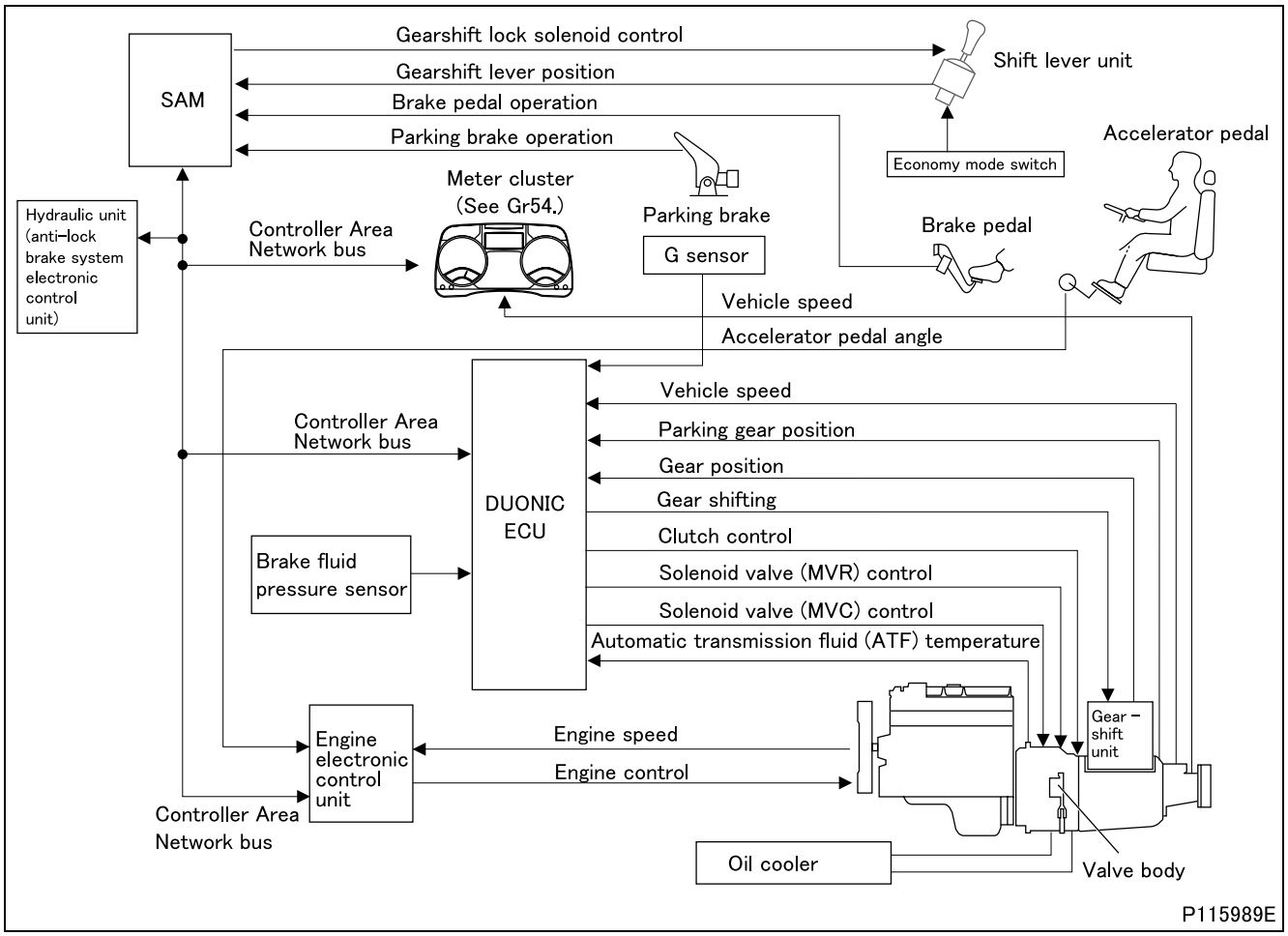

- The DUONIC™ system automates clutch and gear shift operations when starting or driving the vehicle by providing integrated control of the clutch, transmission and engine. This helps to reduce the driver's fatigue from frequent manual gear shift operations while achieving excellent fuel economy equivalent to or better than that of manual transmission vehicles.
- The clutch mechanism consists of two clutching systems (dual clutch) that allow smooth gear shift operations with reduced gear shift shock.
- There is no clutch pedal. Since there are only two pedals (accelerator and brake pedals), the driver can start and drive the vehicle with accelerator operations only. Manual operation can also be selected as required.
- The system consists of a DUONIC™ electronic control unit (that controls the gear shift unit and valve body based on the gear shift lever signals, transmission gear position, throttle opening, vehicle speed, etc.), engine electronic control unit (that controls fuel injection amount and timing based on engine speed, engine timing, coolant temperature, vehicle speed, etc.) and sensors that transmit/receive various signals to and from each electronic control unit.

https://truckmanualshub.com/

2. Valve Body

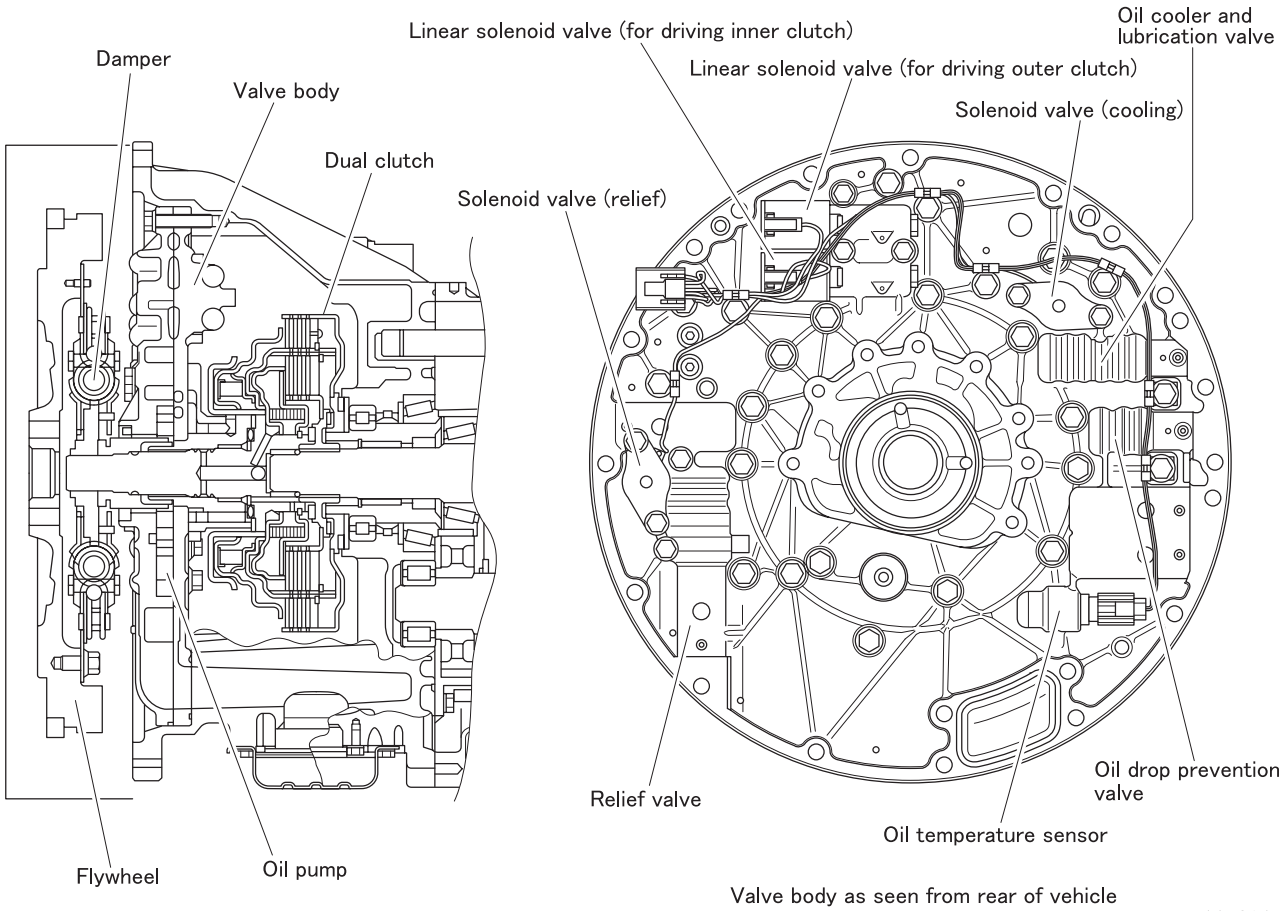

- The valve body is an electronically controlled hydraulic control unit.
- The dual clutch is installed inside the transmission and is operated by changing the flow direction of automatic transmission fluid in the dual clutch using the solenoid valve in the valve body.

https://truckmanualshub.com/

3. Dual Clutch

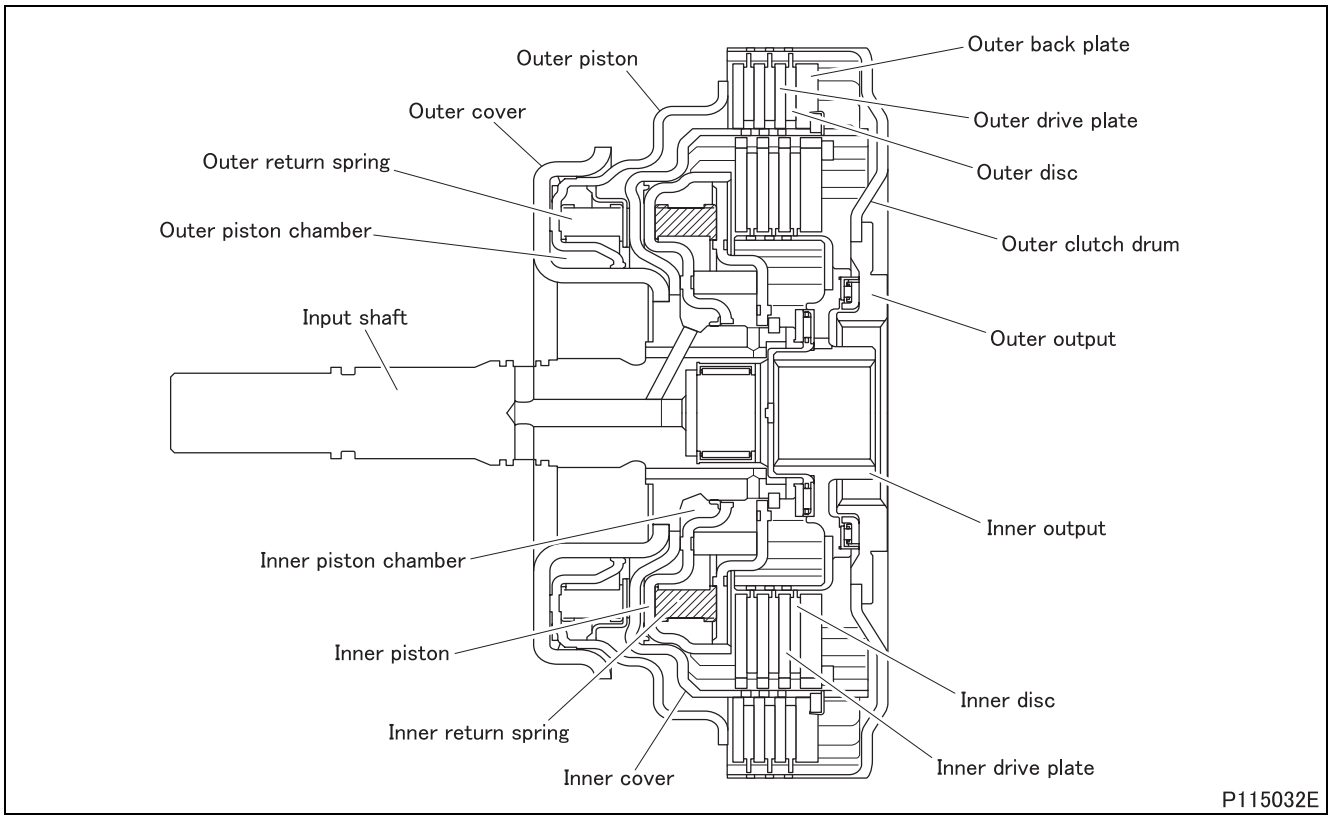

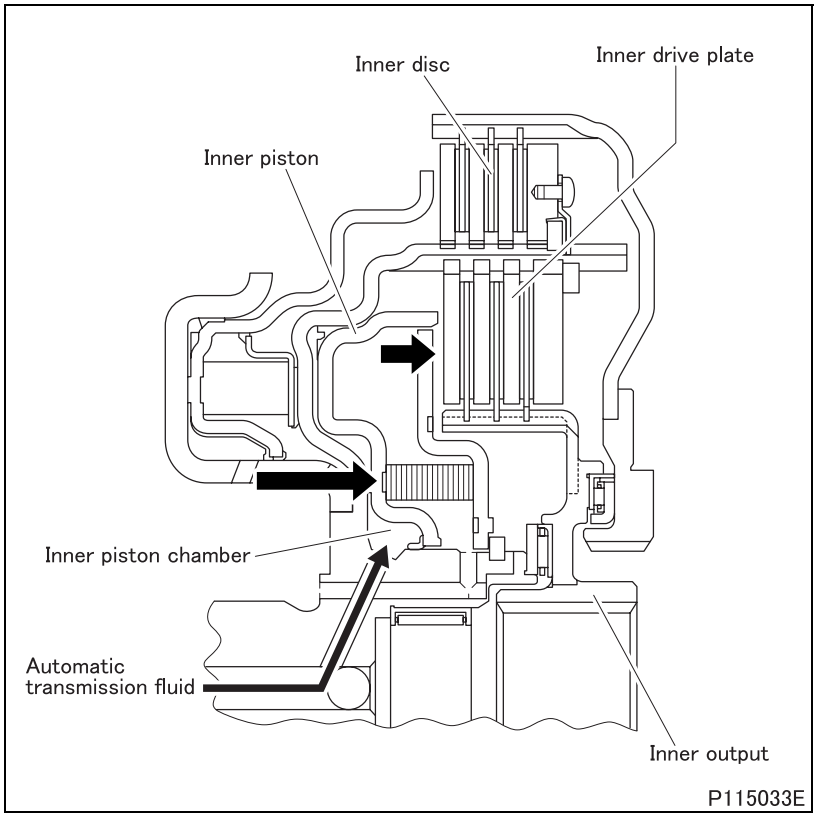

3.1 Inner clutch operation

(1) When the clutch engages

- The linear magnetic valve (for driving the inner clutch) in the valve body operates.
- Automatic transmission fluid enters the inner automatic transmission fluid chamber to push the inner piston. The inner drive plates and inner discs are then pressed together to engage the clutch, thereby transmitting torque to the inner output.

https://truckmanualshub.com/

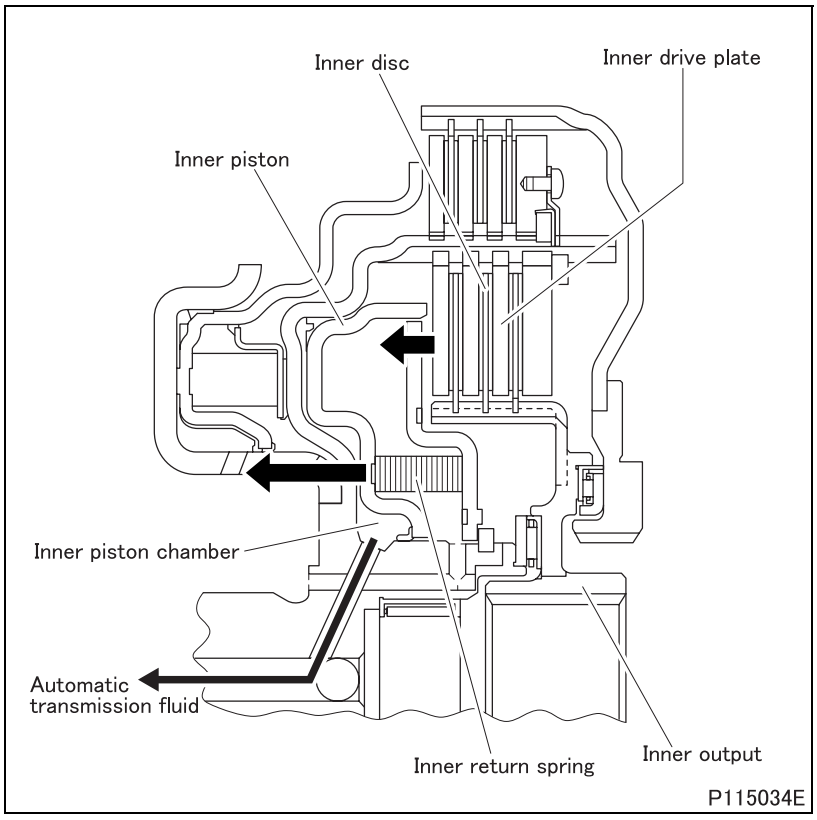

(2) When the clutch disengages

- The linear magnetic valve (for driving the inner clutch) in the valve body operates.
- Automatic transmission fluid is discharged from the inner piston housing and the inner piston is pushed back by the inner return spring. The inner drive plates and inner discs are then released to disengage the clutch.

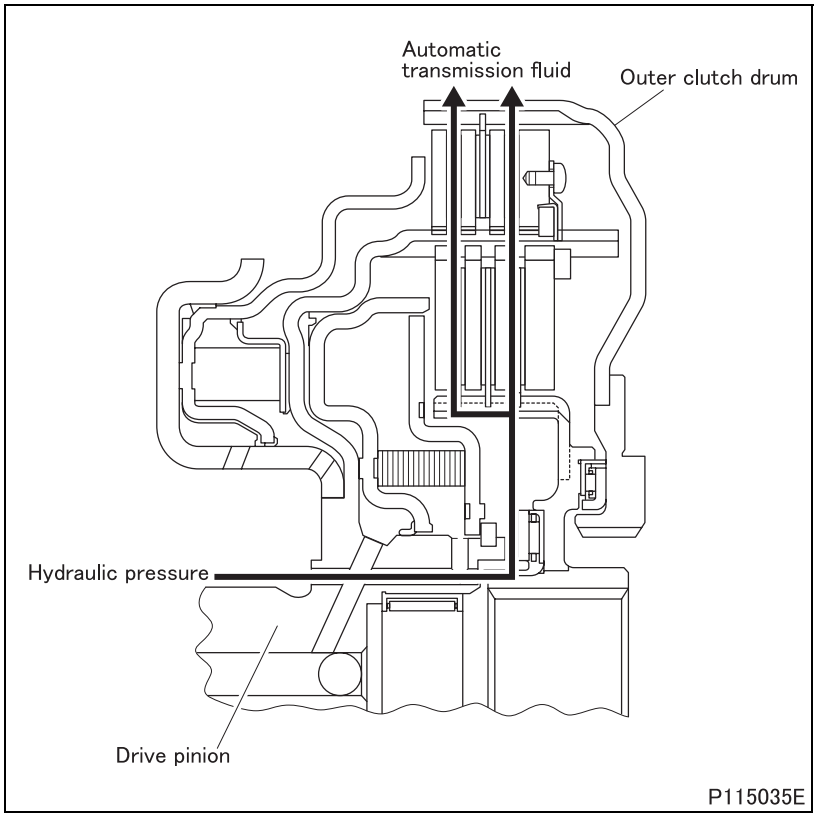

(3) Clutch cooling

- When the linear magnetic valve (for driving the inner clutch) in the valve body operates, automatic transmission fluid flows from the center of the input shaft and is discharged out of the outer clutch drum by centrifugal force, thereby cooling the clutch.

https://truckmanualshub.com/

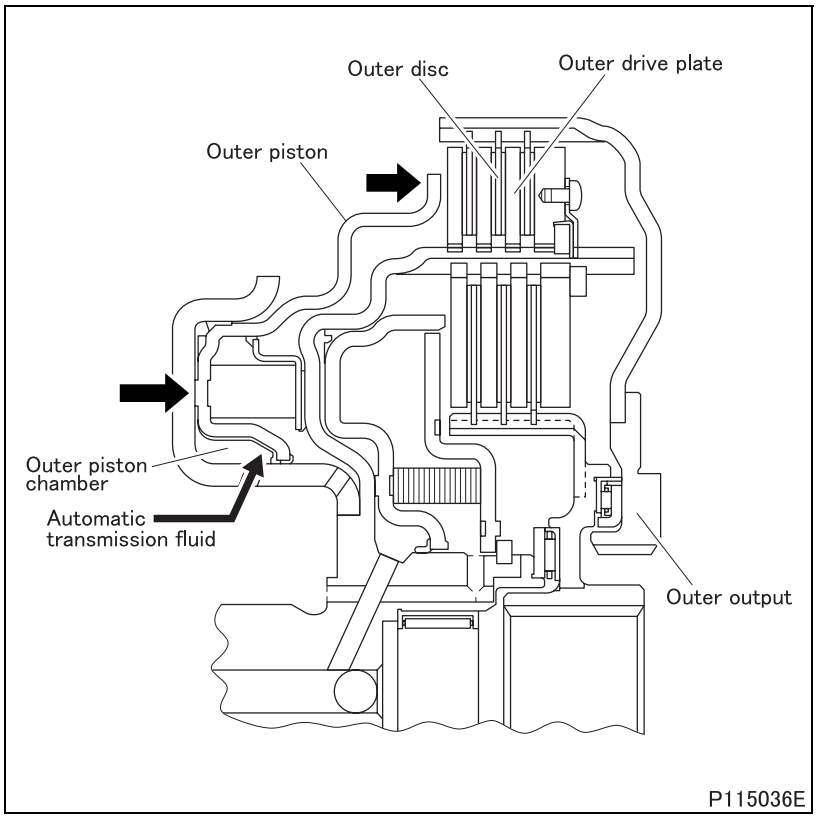

3.2 Outer clutch operation

(1) When the clutch engages

- The linear magnetic valve (for driving the outer clutch) in the valve body operates.
- Automatic transmission fluid enters the outer piston housing to push the outer piston. The outer drive plates and outer discs are then pressed together to engage the clutch, thereby transmitting torque to the outer output.

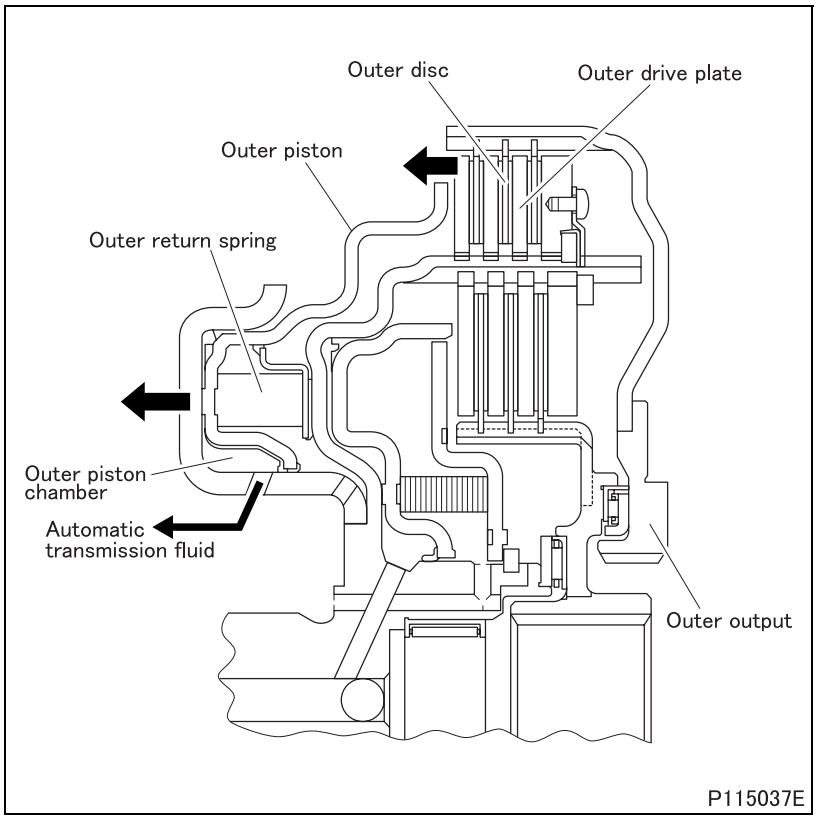

(2) When the clutch disengages

- The linear magnetic valve (for driving the outer clutch) in the valve body operates.
- Automatic transmission fluid is discharged from the outer piston housing and the outer piston is pushed back by the outer return spring. The outer drive plates and outer discs are then released to disengage the clutch.

https://truckmanualshub.com/

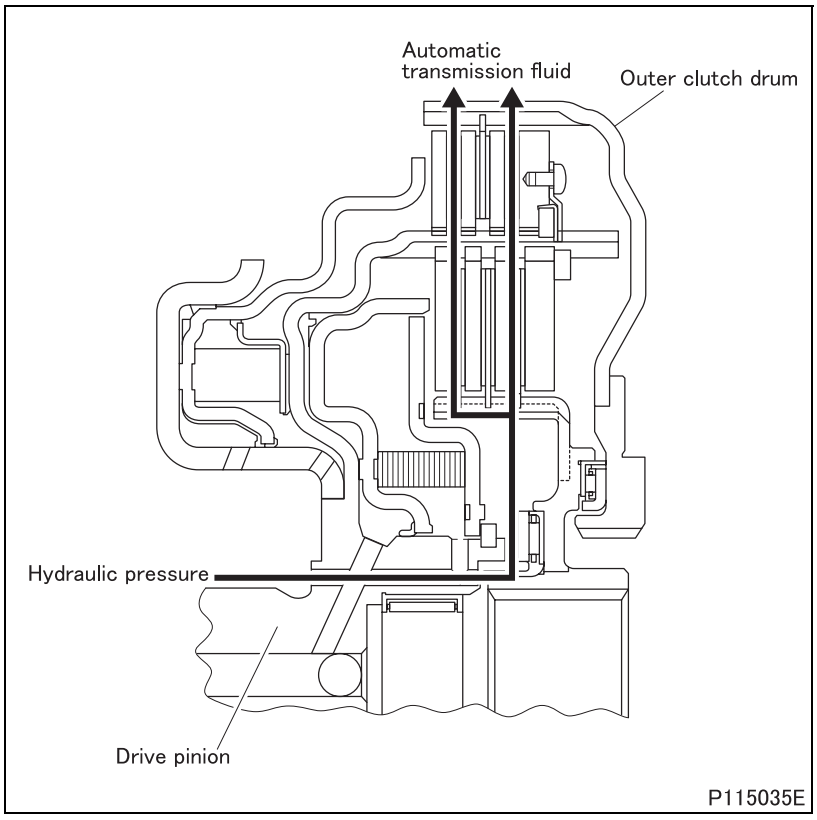

(3) Clutch cooling

- When the linear magnetic valve (for driving the outer clutch) in the valve body operates, automatic transmission fluid flows from the center of the input shaft and is discharged out of the outer clutch drum by centrifugal force, thereby cooling the clutch.

https://truckmanualshub.com/

4. Transmission

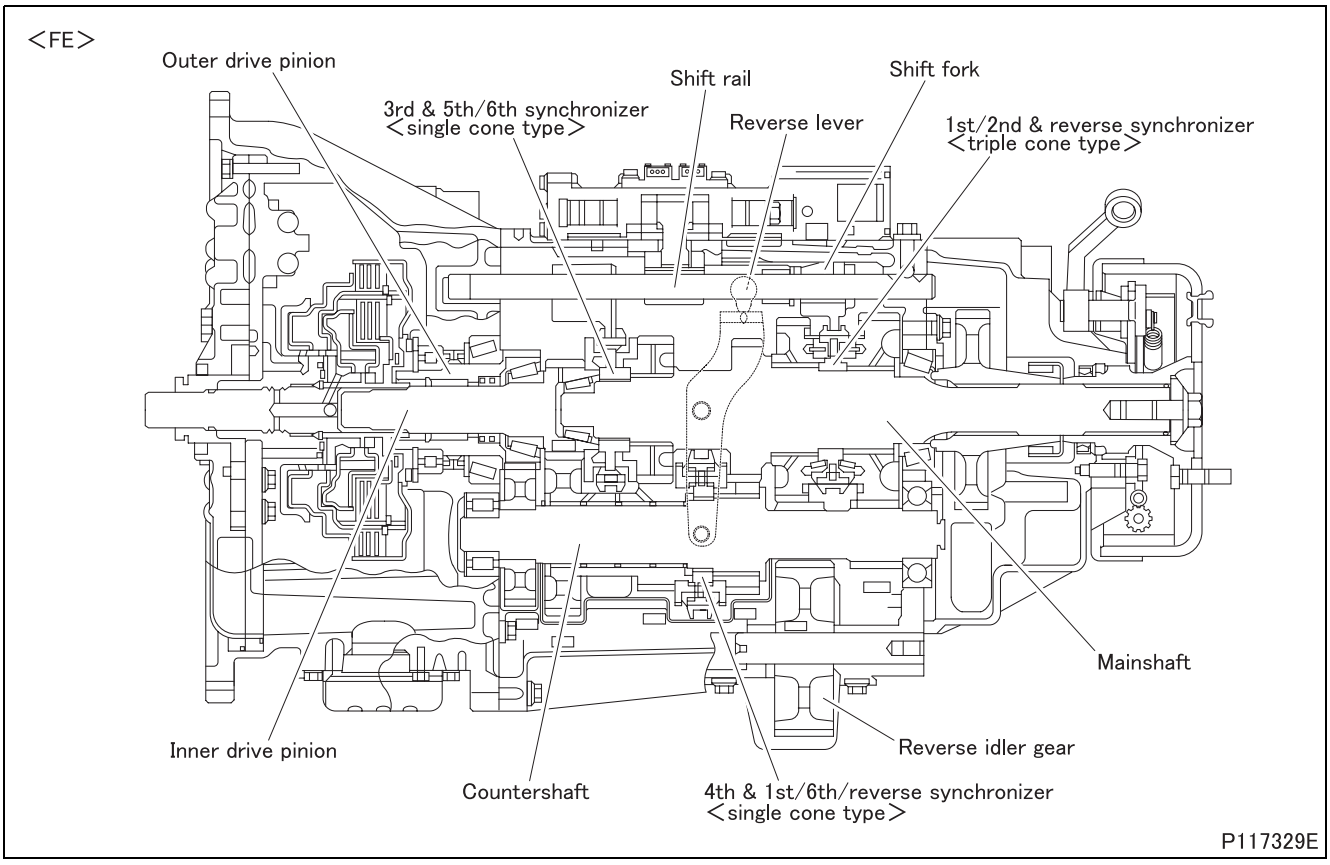

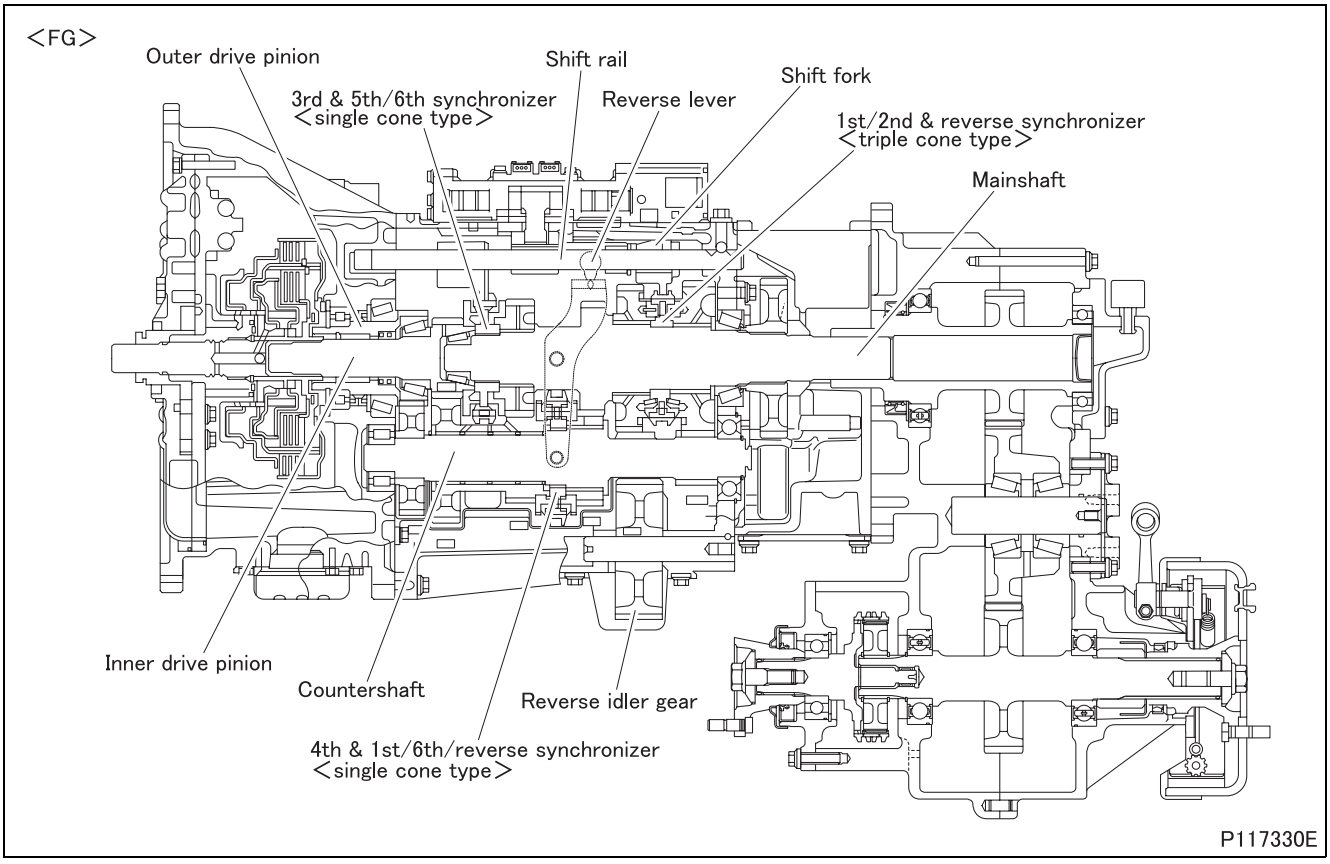

https://truckmanualshub.com/

4.1 1st

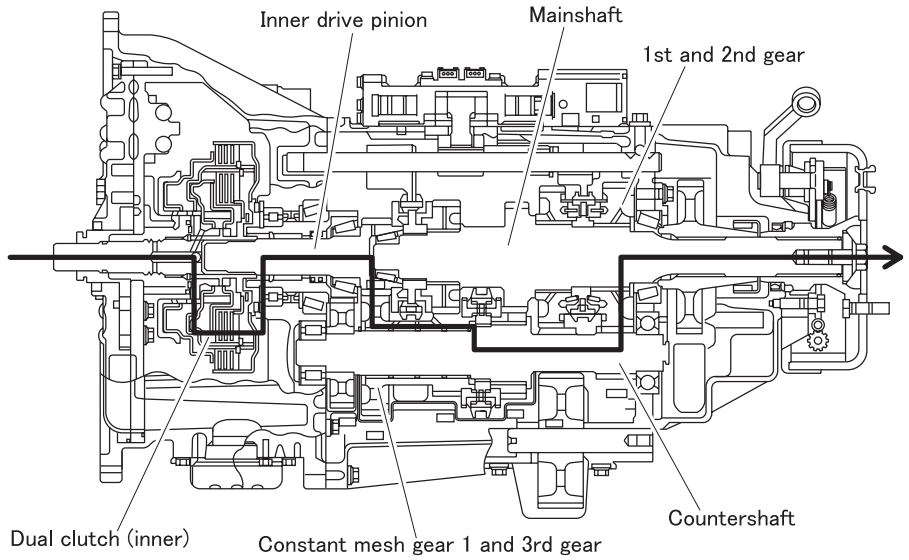

Shift rail arrangement as seen from above transmission

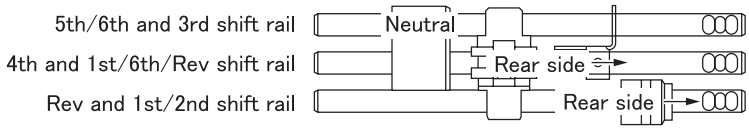

P114878E

4.2 2nd

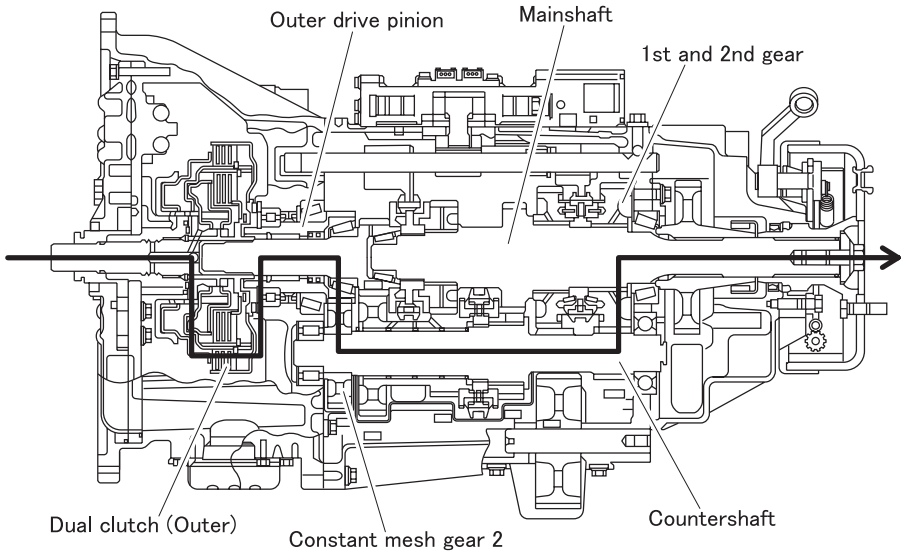

Shift rail arrangement as seen from above transmission

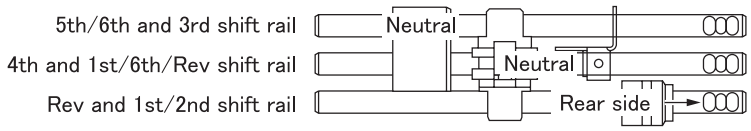

P114879E

https://truckmanualshub.com/

4.3 3rd

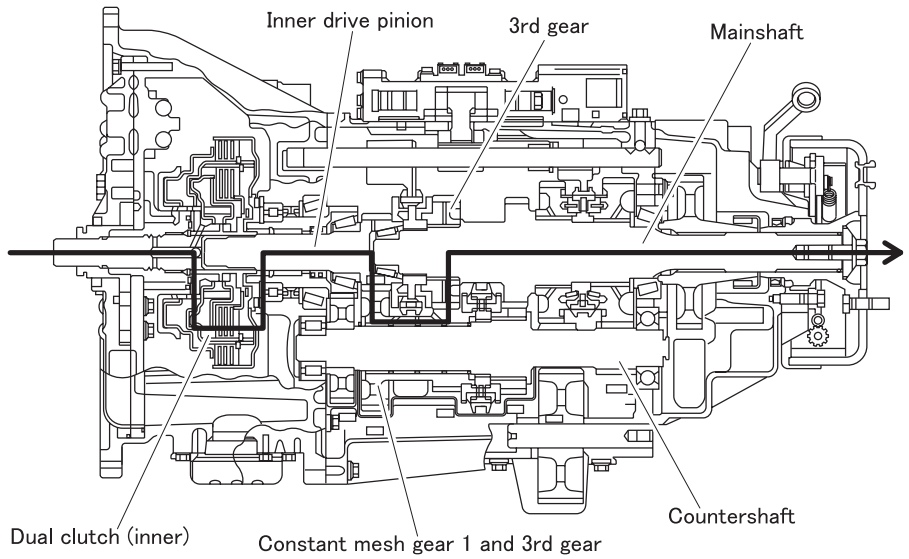

Shift rail arrangement as seen from above transmission

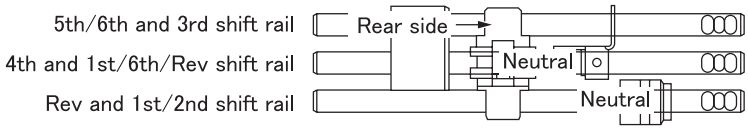

P114880E

4.4 4th

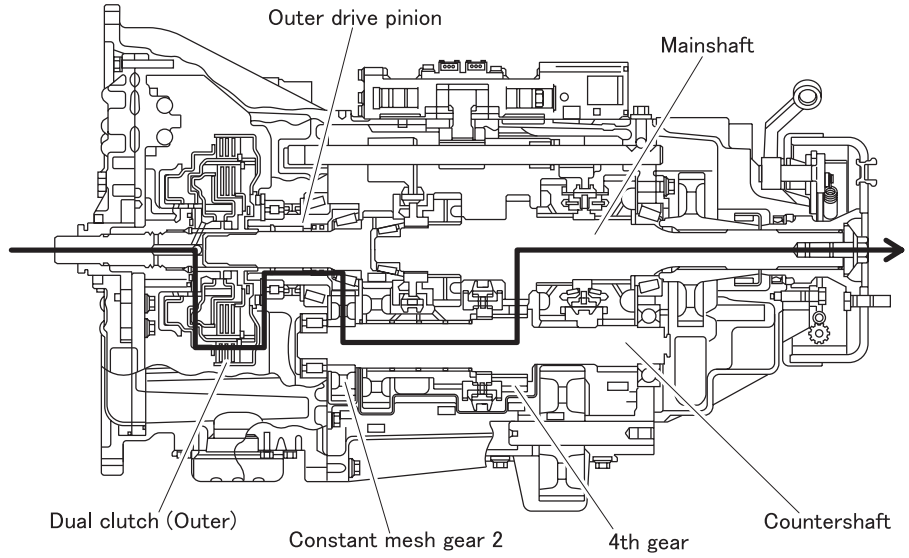

Shift rail arrangement as seen from above transmission

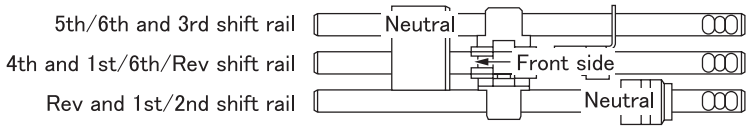

P114881E

https://truckmanualshub.com/

4.5 5th

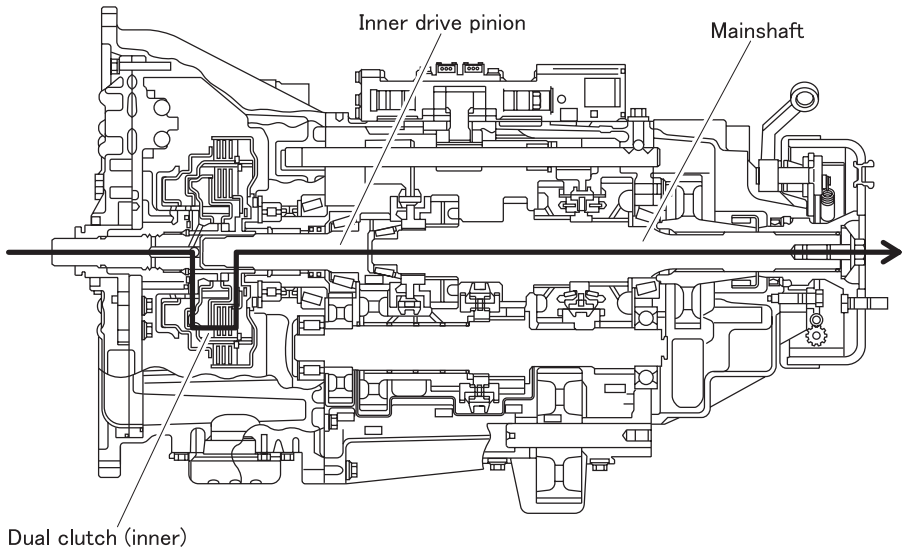

Shift rail arrangement as seen from above transmission

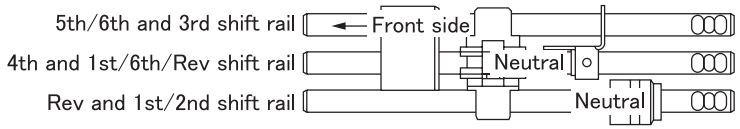

P114882E

4.6 6th

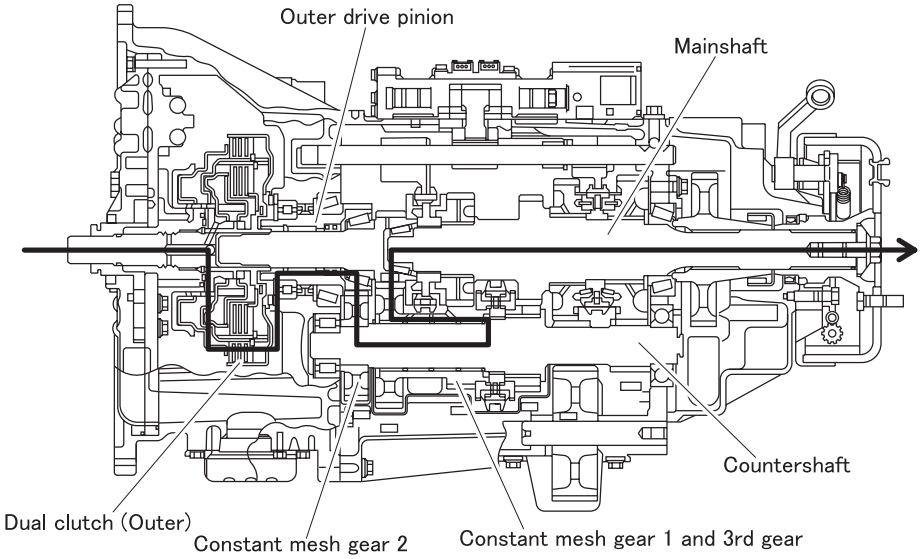

Shift rail arrangement as seen from above transmission

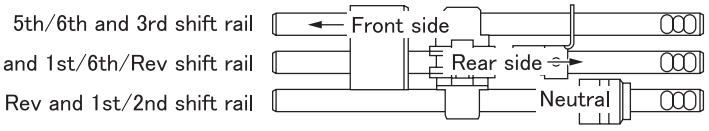

P114883E

https://truckmanualshub.com/

4.7 Reverse

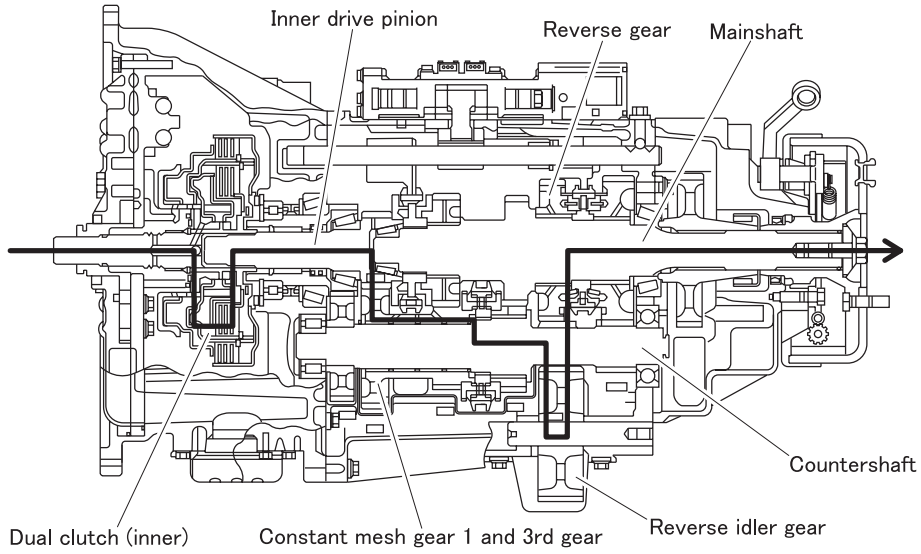

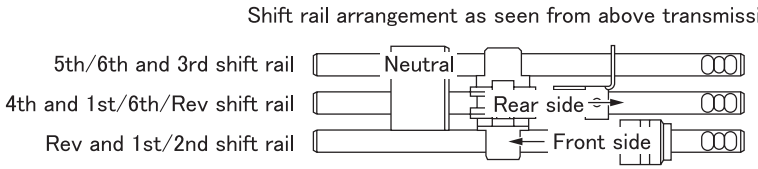

P114884E

4.8 Neutral

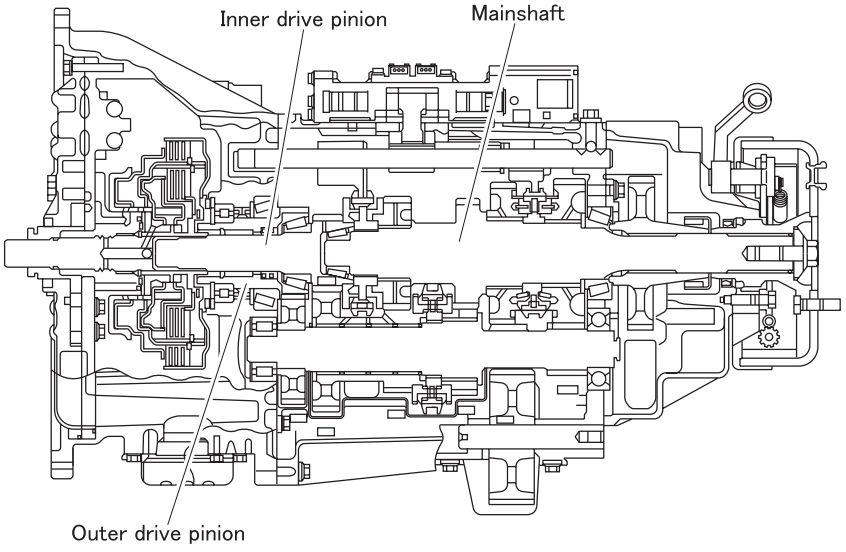

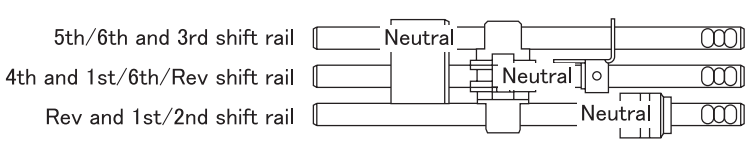

P114885E

- Since all clutches are disengaged when in neutral position, driving force from the pinion gears will not be transmitted to the mainshaft.

https://truckmanualshub.com/

5. Synchromesh Mechanism

- The synchromesh mechanism, when a shift change is made, synchronizes the rotation speed of the mainshaft, drive pinion and synchronizer hub that rotates integrally with the mainshaft with that of the gear to be shifted.
- The synchromesh mechanism is a Warner synchromesh type, and is used depending on the gear position as single cone type or triple cone type.

5.1 Single cone type <Shifting plunger type>

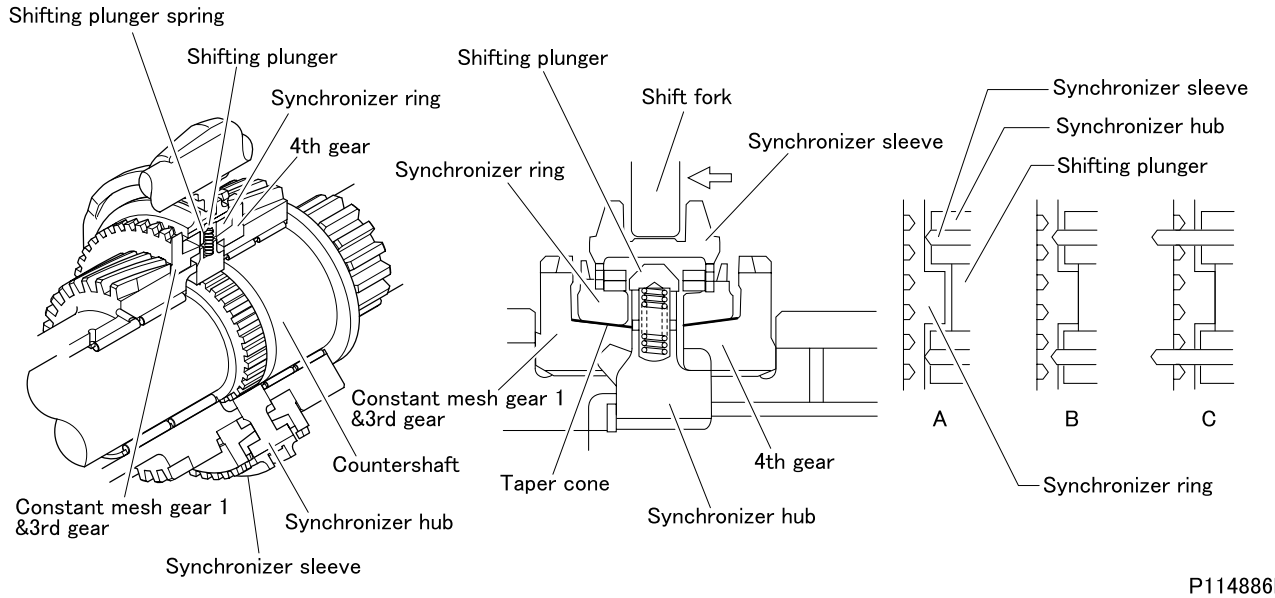

- The inside of the synchronizer hub engages the spline of the mainshaft and rotates with it. The outside of the synchronizer hub has a spline that engages the synchronizer sleeve and three grooves.
- Shifting plungers are inserted into these grooves. When the gear shift is in neutral, the shifting plunger engage grooves in the synchronizer sleeve and are pressed against the inside of the synchronizer sleeve by shifting plunger springs.
- Synchronizer rings are inserted into the respective taper cone of each gear.
- The outer splines of the synchronizer rings engage the synchronizer sleeve. On the synchronizer hub are three grooves in which protrusions of the synchronizer rings are inserted. These grooves are wider than the width of the protrusions of the synchronizer rings.
- Synchronizer rings rotate relative to the synchronizer sleeve by the amount of play (width difference).
- When the gear shift is in neutral (figure A), moving the shift fork in the direction of the arrow as illustrated, moves the synchronizer sleeve slightly to the gear. At the same time, the shifting plunger, the central protrusion of which engages the synchronizer sleeve, moves to the gear and presses the synchronizer ring against the taper cone of the gear (figure B).
- The taper cones of synchronizer rings, which act as cone clutches, generate friction torque and perform synchronous operation.
- The rotation speed of the synchronizer hub becomes gradually closer to that of the gear due to the synchronous operation, and eventually they rotate at the same speed. This allows the synchronizer sleeve to move smoothly to engage the synchronizer hub and gear, completing the shift change (figure C).

https://truckmanualshub.com/

5.2 Single cone type <Shifting key type>

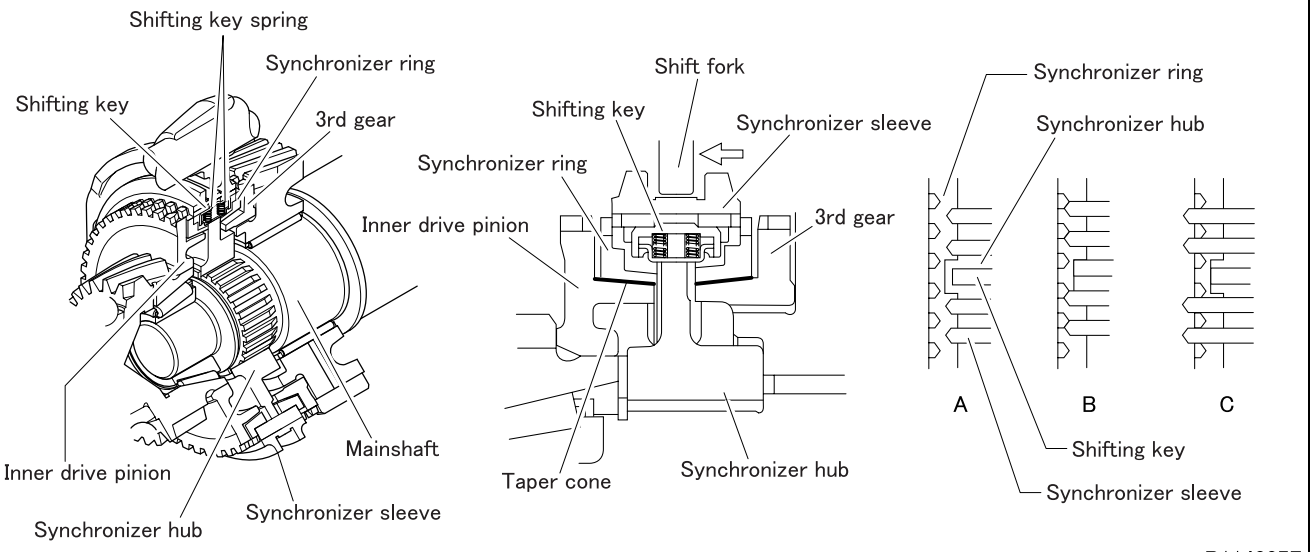

- The synchronizer hub is internally splined to the mainshaft and rotates with the mainshaft. The synchronizer hub has external splines that engage with the synchronizer sleeve and three keyways.
- Shifting keys fit in these keyways. With the shift fork in the neutral position, the shifting keys are seated in the grooves in the inside of the synchronizer sleeve and pressed against the inside surface of the synchronizer sleeve by shifting key springs.
- Synchronizer rings are seated on the taper cones of each gear.
- The external splines of synchronizer rings engage with the synchronizer sleeve. On the hub side surface of the synchronizer rings are provided three keyways, in which the ends of the synchronizer rings fit. These keyways are wider than the width of the shifting keys.
- The synchronizer rings are allowed to rotate relative to the synchronizer sleeve as much as this play in the keyways (width difference).
- Shifting the shift fork in the illustrated direction of arrow from the neutral position (figure A) moves the synchronizer sleeve slightly toward the gear. The shifting key, which engages with the synchronizer sleeve at the central projection, is also moved toward the gear to press the synchronizer ring against the taper cone of the gear. (figure B)
- As the taper cone of the synchronizer ring works as a cone clutch, frictional torque rises to make the rotation speed of the synchronizer hub gradually close to the gear speed of the gear.
- When the rotation speeds become equal eventually, the synchronizer sleeve is allowed to smoothly move into mesh with the synchronizer hub and gear, completing the speed change. (figure C)

https://truckmanualshub.com/

5.3 Triple cone type

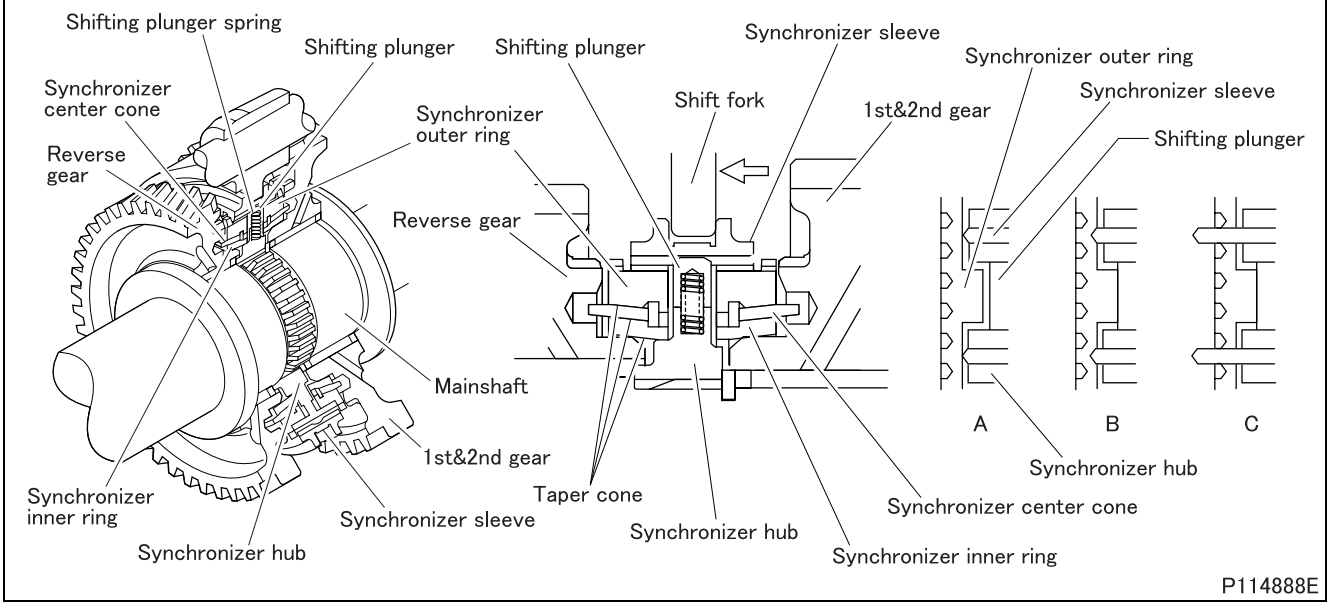

- The synchromesh structure and operation of the triple cone type are basically the same as for the single cone type. The synchronizer ring is divided into three parts (synchronizer inner ring, synchronizer center cone and synchronizer outer ring) and the center cone (both the inside and outside surfaces are tapered) and the inner ring (both the inside and outside surfaces are tapered) are sandwiched between the outer ring and the taper cone of each gear to shorten the time required for synchronization with cone clutches at three locations.
- Six protrusions on the outside of the synchronizer center cone fit into corresponding gear holes. As in the taper cone of the single cone type, the center cone and the gear are installed as if integrated.
- The inside of the synchronizer hub engages the spline of the mainshaft and rotates with it. The outside of the synchronizer hub has a spline that engages the synchronizer sleeve and three grooves.
- Shifting plungers are inserted into these keyways. When the gear shift is in neutral, the shifting plungers engage grooves in the synchronizer sleeve and are pressed against the inside of the synchronizer sleeve by shifting plunger springs.
- The synchronizer outer ring and synchronizer inner ring are inserted into synchronizer center cones, respectively.
- The outer spline of the synchronizer outer ring engages the synchronizer sleeve. On the synchronizer hub are three grooves in which protrusions of the synchronizer outer ring are inserted. These grooves are wider than the width of the protrusions of the synchronizer outer ring.
- The synchronizer outer ring rotates relative to the synchronizer sleeve by the amount of play.
- When the gear shift is in neutral (figure A), moving the shift fork in the direction of the arrow as illustrated, moves the synchronizer sleeve slightly to the gear. At the same time, the shifting plunger, the central protrusion of which engages the synchronizer sleeve, moves to the gear and presses the synchronizer outer ring and the center cone against the taper cone of the synchronizer center cone and the synchronizer inner ring, respectively and in addition, presses the inner ring against the gear (figure B).
- The taper cones of synchronizer rings, which act as cone clutches, generate friction torque and perform synchronous operation.
- The rotation speed of the synchronizer hub becomes gradually closer to that of the gear of the gear due to the synchronous operation, and eventually they rotate at the same speed. This allows the synchronizer sleeve to move smoothly to engage the synchronizer hub and gear, completing the shift change (figure C).

https://truckmanualshub.com/

6. Transmission Power Take-off

<Standard transmission power take-off>

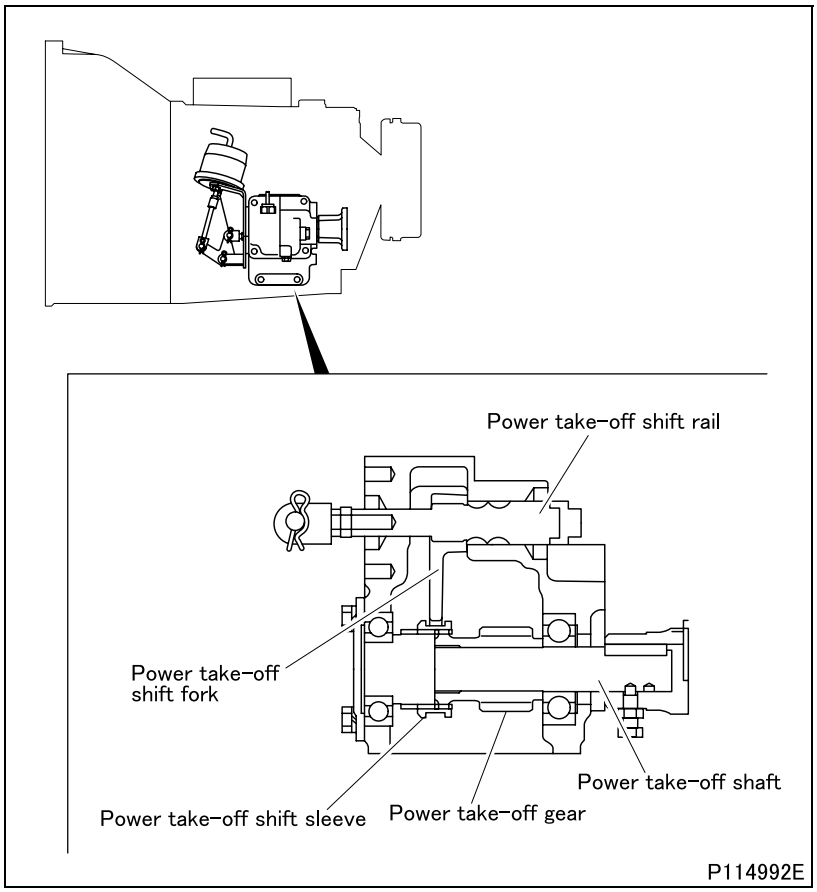

- The transmission power take-off takes out the power when the power take-off gear engages the reverse idler gear of the transmission, and delivers the engine power as it is.

https://truckmanualshub.com/

<Large-capacity transmission power take-off>

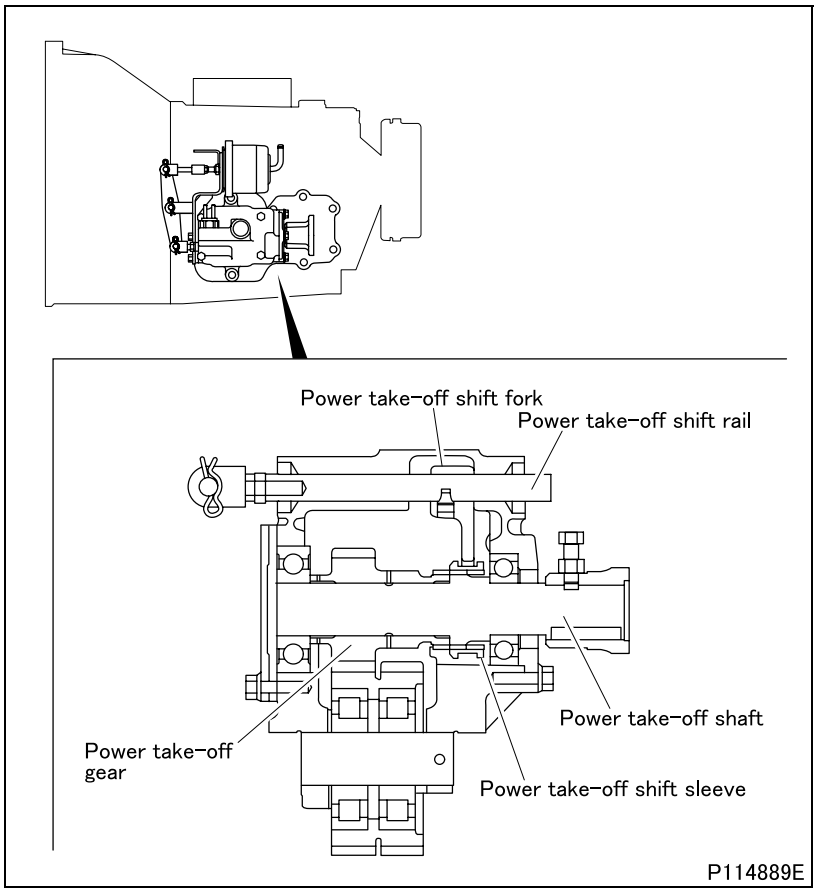

- The transmission power take-off takes out the power when the power take-off idler gear engages the countershaft 3rd gear of the transmission, and transmits the engine power to the power take-off flange.

https://truckmanualshub.com/

Possible causes \ Symptoms			Clutch slips	Clutch does not engage smoothly	Clutch does not switched	Gears slip out of engagement	Gears hard to engage	Noise when engine is idling	Noise when cruising	Noise when changing gear	Reference Gr
Transmission body faulty	Mainshaft companion flange mounting bolt loose					O	O				
	Mainshaft thrust washer worn					O	O				
	Mainshaft bearing worn or damaged					O	O		O		
	Synchronizer ring and synchronizer sleeve spline worn					O					
	Synchronizer ring and gears taper cone area worn						O				
	Mainshaft pilot bearing worn or damaged							O	O		
	Outer drive pinion bearing worn or damaged							O			
	Inner drive pinion bearing worn or damaged							O			
	Countershaft thrust washer worn					O	O				
	Countershaft bearing worn or damaged							O	O		
	Needle bearings of gears worn or damaged							O	O		
	Reverse idler gear or countershaft 3rd gear and power take-off gear backlash excessive							O			
	Mainshaft and countershaft gears backlash excessive								O		
	Spline of gears worn									O	
	Gears damaged								O		
	Transmission oil insufficient								O		
	Automatic transmission fluid insufficient		O	O	O	O	O	O	O	O	
Synchronizer faulty	Single cone type	Contacting surface of synchronizer ring and gear taper cone worn					O			O	
	Triple cone type	Contacting surface of synchronizer inner and outer rings and center cone worn					O			O	
		Contacting surface of synchronizer inner ring and gear taper cone worn					O			O	
	Synchronizer ring spline chamfer worn									O	
	Shifting plunger and shifting key worn									O	
	Shifting plunger spring and shifting key spring deteriorated or damaged									O	
	Synchronizer sleeve worn or damaged								O	O	

https://truckmanualshub.com/

Possible causes \ Symptoms		Clutch slips	Clutch does not engage smoothly	Clutch does not switched	Gears slip out of engagement	Gears hard to engage	Noise when engine is idling	Noise when cruising	Noise when changing gear	Reference Gr
Control mechanisms faulty	Control cable adjustment faulty					O				
	Control cable routing inadequate					O				
	Control cable length inadequate					O				
	Bushings worn				O	O				
	Steel ball and groove of shift rail worn				O					
	Poppet spring of shift rail fatigued or damaged				O					
	Shift rail sliding movement faulty					O				
	Shift fork jaws worn					O				
	Shift fork bent					O				
Clutch faulty	Clutch disengagement faulty					O			O	
Faulty ATF filter	Clogged filter	O	O	O	O	O	O	O	O	
	Clogged filter in eyebolt for connecting gearshift unit oil pipe				O	O	O	O	O	

https://truckmanualshub.com/

Possible causes \ Symptoms		Indicator lights though power take-off is not engaged	Indicator does not light though power take-off is engaged	Power take-off slips out of engagement	Power take-off cannot be disengaged	Power take-off cannot be engaged	Power take-off does not stay engaged	Noise from power take-off	Reference Gr
Power take-off body abnormal	Shift rail bent			O		O			
	Shift fork bent			O		O			
	Poppet spring deteriorated or damaged			O					
	Bearings worn or damaged			O		O		O	
	Transmission oil insufficient							O	
	Gears broken or worn							O	
	Gear backlash excessively large							O	
	Gear backlash excessively small							O	
Power take-off control system faulty	Transmission power take-off switch faulty		O			O			Gr54
	Blowout of fuse and high-current fuse		O			O			
	Battery overcharge					O			
	Power take-off control switch faulty	O					O		
	3-way magnet valve faulty				O	O	O		
	Broken wire, poor connection or faulty indicator		O						
	Air leakage in vacuum piping			O		O	O		
	Vacuum chamber faulty			O	O	O	O		

https://truckmanualshub.com/

M E M O

https://truckmanualshub.com/

ON-VEHICLE INSPECTION AND ADJUSTMENT

1. Transmission Oil Leakage and Oil Quantity

Tightening torque (Unit: N·m {ft.lbs, kgf·m})

Mark	Parts to be tightened	Tightening torque	Remarks
–	Inspection plug	68.6 ± 14.7 {51 ± 11, 7.0 ± 1.5}	–
	Drain plug		

Lubricant and/or sealant

Mark	Points of application	Specified lubricant and/or sealant	Quantity
–	Thread area of inspection plug	ThreeBond 1105	As required
	Thread area of drain plug		
–	Transmission case	API GL-3 SAE80	Approx. 3.5 L {3.7 qts.}
–	Clutch housing	FUSO ATF-SP III	Approx. 4.3 L {4.5 qts.}

- Grease depends on the driving conditions.
- For a model with standard type transmission power take-off, the quantity is increased by approx. 0.2 L {0.2 qts.}.
- For model with large-capacity transmission power take-off, the quantity is increased by approx. 0.3 L {0.3 qts.}.

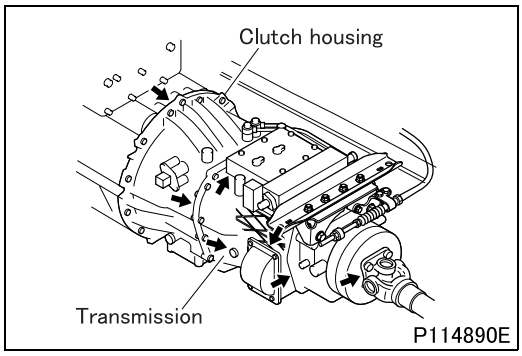

1.1 Inspection of oil leakage at each part of transmission body

- Check the oil leakage at each part of transmission body in visual.
  If the oil leakage is found, replace the defective part.

1.2 Inspection of oil leakage around transmission mounting part

- Check there is not oil stain on transmission mounting part caused by oil leakage from engine.
- If there is the oil stain, remove the transmission and clean the mounting surface of clutch housing and flywheel housing using brake cleaner etc. after repairing oil leakage part. Because the oil stain may loosen the transmission mounting bolts. (See “REMOVAL AND INSTALLATION OF TRANSMISSION”.)

https://truckmanualshub.com/

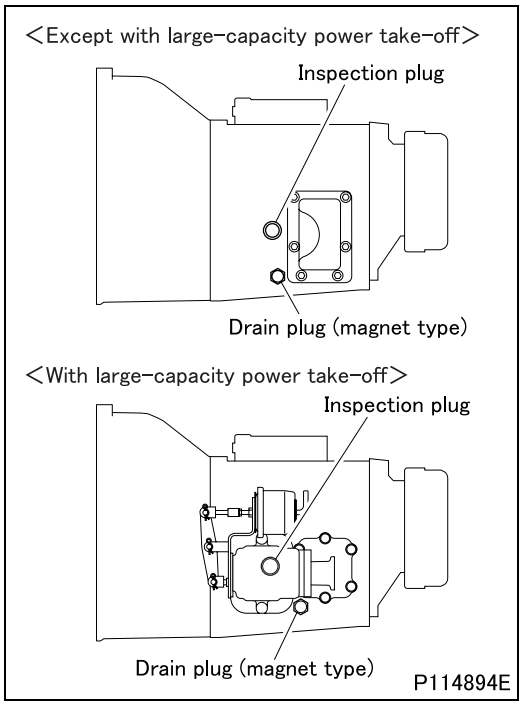

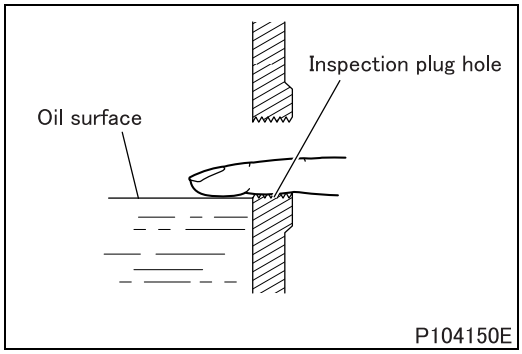

1.3 Inspection of oil quantity

WARNING ⚠

- **Temperature of transmission oil is high immediately after driving. Perform work when oil is cold.**

(1) Transmission case

- Remove the inspection plug, and check that oil is filled up to the neck.
- If oil is not sufficient, fill oil from the inspection plug hole up to the neck.
- After filling, apply sealant to the inspection plug and tighten it to the specified torque.

https://truckmanualshub.com/

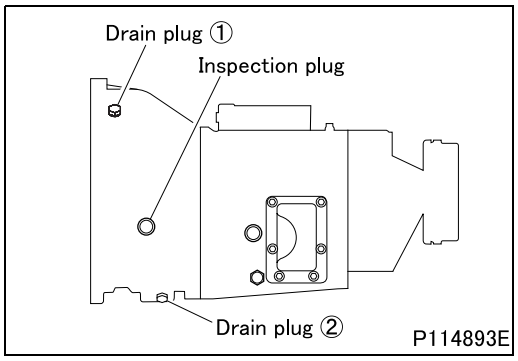

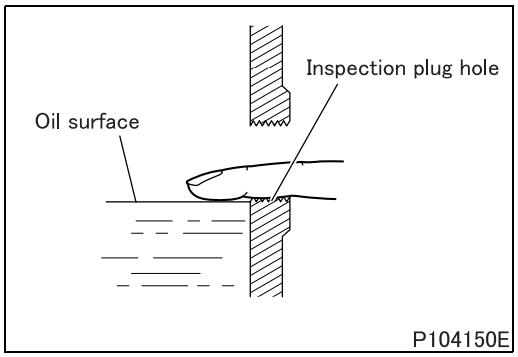

(2) Clutch housing

- Follow the flowchart below to check the automatic transmission fluid level.

Flowchart for checking automatic transmission fluid level

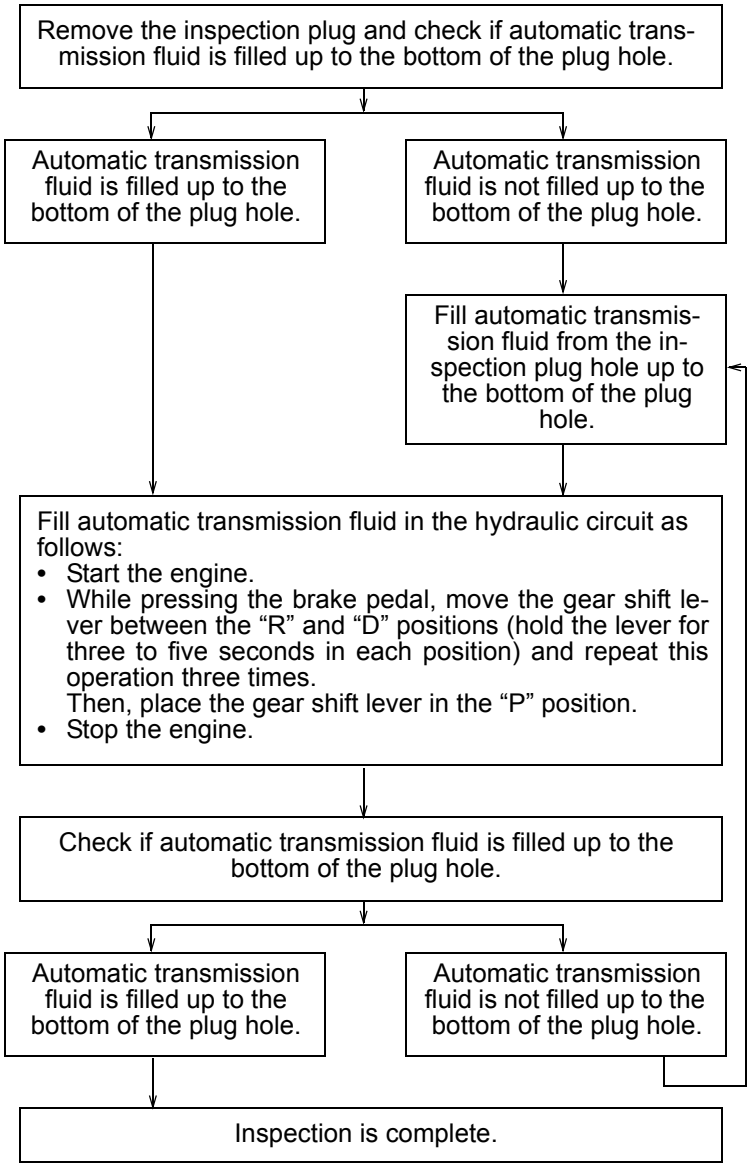

- When the inspection is complete, tighten the inspection plug.

CAUTION ⚠

- **After filling automatic transmission fluid, promptly install the inspection plug to prevent dirt and dust from entering the clutch housing.**

https://truckmanualshub.com/

2. Inspection of Looseness in Engine to Clutch Housing Connection

Tightening torque (Unit: N·m {ft.lbs, kgf·m})

Mark	Parts to be tightened	Tightening torque	Remarks
–	Bolt (transmission mounting)	47.1 {35, 4.8}	–

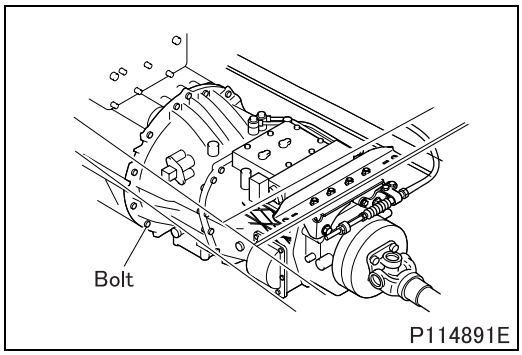

- Check the engine to clutch housing connection for looseness.
- Check the transmission mounting bolts and nuts for looseness.
- Retighten any loose bolt to the specified torque.

3. Inspection of Transmission Cooling System for Leakage, Damage and Installation Condition

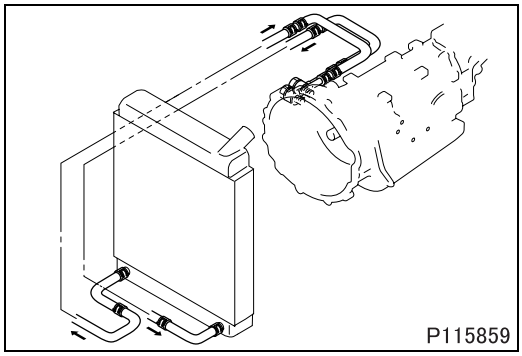

- Check the fluid leakage and damage in transmission cooling system. If there is any abnormality, replace the defective part(s). (See “Oil cooler” section.)

4. Inspection of Looseness in Propeller Shaft Connection

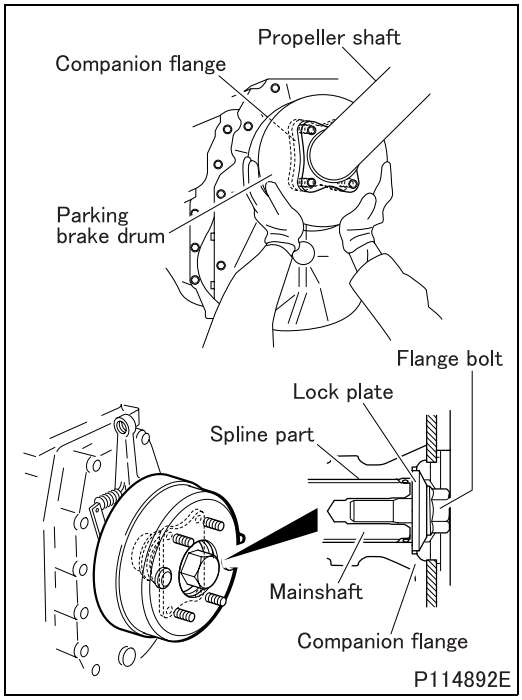

- Check the propeller shaft mounting bolts for looseness. (See Gr25.)
- Move the parking brake drum in axial and vertical directions to check for excessive play between the companion flange and mainshaft.
- If excessive play is detected, remove the propeller shaft, then check the companion flange mounting bolt for looseness and the splines on companion flange and mainshaft for abnormalities. If any part is found defective, replace the part. (See “EXTENSION HOUSING” section.)

https://truckmanualshub.com/

5. Replacement of Transmission Oil

Tightening torque (Unit: N·m {ft.lbs, kgf·m})

Mark	Parts to be tightened	Tightening torque	Remarks
–	Inspection plug	68.6 ± 14.7 {51 ± 11, 7.0 ± 1.5}	–
	Drain plug		

Lubricant and/or sealant

Mark	Points of application	Specified lubricant and/or sealant	Quantity
–	Thread area of inspection plug	ThreeBond 1105	As required
	Thread area of drain plug		
–	Transmission case	API GL-3 SAE80	Approx. 3.5 L {3.7 qts.}

- Grease depends on the driving conditions.
- For a model with standard type transmission power take-off, the quantity is increased by approx. 0.2 L {0.2 qts.}.
- For a model with large-capacity transmission power take-off, the quantity is increased by approx. 0.3 L {0.3 qts.}

WARNING ⚠

- **Temperature of transmission oil is high immediately after driving. Perform work when oil is cold.**

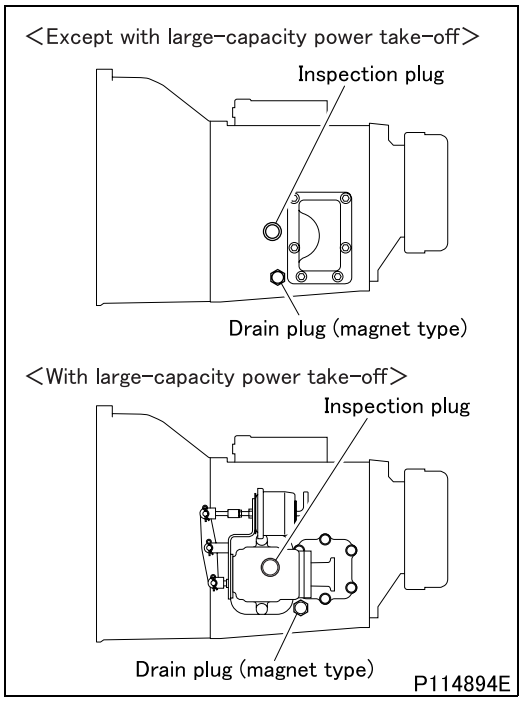

[Replacement]

- Remove the drain plug to drain transmission oil. Drainage can be made quickly with the inspection plug removed.
- After draining transmission oil, apply sealant to the drain plug and tighten it to the specified torque. Magnet type drain plugs should be cleaned before installation.
- Fill transmission oil in the specified quantity from the inspection plug hole.

https://truckmanualshub.com/

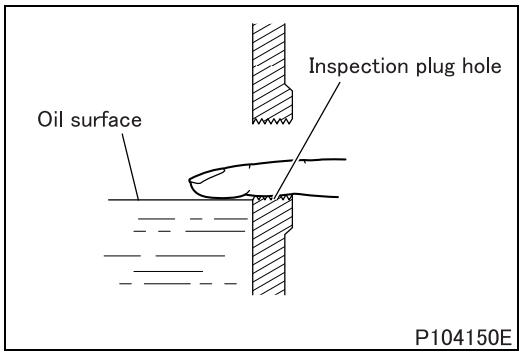

- After filling, wait for 1 minute or more to check that oil is filled up to the neck of the inspection plug hole by inserting a finger to the inspection plug hole. If oil is not sufficient, replenish it.
- After completing work, apply sealant to the inspection plug and tighten it to the specified torque.
- When automatic transmission fluid has been replaced, make initial setting of the DUONIC^{TM} system and perform a test drive. (See Gr22E.)
- When transmission oil has been replaced, reset the inspection/service memory of the multi information system. (See “Multi-information system” in chapter 6 of the Owner’s Manual.)

[Inspection]

- When draining transmission oil, check for oil quality, metal chips and metal powder.
- If an abnormally large amount of metal chips and metal powder is found, disassemble the transmission assembly for service, as abnormalities may be caused inside. (See “TRANSMISSION BODY” section.)

https://truckmanualshub.com/

6. Replacement of Clutch Control Oil

Tightening torque (Unit: N·m {ft.lbs, kgf·m})

Mark	Parts to be tightened	Tightening torque	Remarks
–	Inspection plug	68.6 ± 14.7 {51 ± 11, 7.0 ± 1.5}	–
	Drain plug (1)	9 to 13 {6.6 to 9.6, 0.9 to 1.3}	–
	Drain plug (2)	39 {2.9, 4.0}	–

Lubricant and/or sealant

Mark	Points of application	Specified lubricant and/or sealant	Quantity
–	Clutch housing	FUSO ATF-SP III	Approx. 2.0 L {2.1 qts.}

WARNING ⚠

- **Automatic transmission fluid is hot immediately after driving. Perform work when the fluid is cold.**

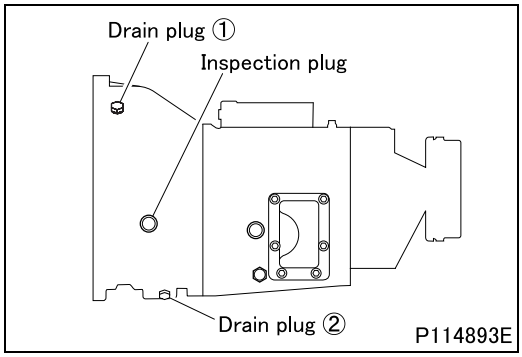

[Replacement]

- Remove the drain plug to drain automatic transmission fluid. Drainage can be made quickly by removing the inspection plug.
- After draining automatic transmission fluid, tighten the drain plug.

CAUTION ⚠

- **After draining automatic transmission fluid, promptly install the inspection plug to prevent dirt and dust from entering the clutch housing.**

- Fill automatic transmission fluid until it overflows from the inspection plug hole.
- After filling, wait for 1 minute or more to check the automatic transmission fluid level. (See ON-VEHICLE INSPECTION AND ADJUSTMENT.)
- When the work is complete, tighten the inspection plug.

CAUTION ⚠

- **After filling automatic transmission fluid, promptly install the inspection plug to prevent dirt and dust from entering the clutch housing.**

- When automatic transmission fluid has been replaced, make initial setting of the DUONIC^{TM} system and perform a test drive. (See Gr22E.)
- When automatic transmission fluid has been replaced, reset the inspection/service memory of the multi-information system. (See “Multi-information system” in chapter 6 of the Owner’s Manual.)

https://truckmanualshub.com/

[Inspection]

- When draining automatic transmission fluid, check for fluid quality, metal chips and metal powder.
- If an abnormally large amount of metal chips or metal powder is found, disassemble the transmission assembly for service, as abnormalities may be caused inside. (See VALVE BODY AND DUAL CLUTCH and TRANSMISSION BODY.)
- If there is automatic transmission fluid on the bottom of the transmission, wipe off the fluid and check for leaks from inside. If fluid is leaking, disassemble the transmission assembly for service, as abnormalities may be caused inside. (See VALVE BODY AND DUAL CLUTCH and TRANSMISSION BODY.)
- Since it may not be possible to check for fluid leaks if the air bleed hole in the clutch housing is clogged, add pure water (distilled water) from the inspection hole in the lower part of the flywheel housing and check that the water flows out from the air bleed hole. If the water will not flow out, clean the air bleed hole with a wire or equivalent.

CAUTION ⚠

- **To prevent rust on the components in the flywheel housing, add modest amount of pure water (distilled water) so as not to overflow from the inspection hole.**
- **Be careful not to forget to install the rubber cap on the inspection hole.**

7. Inspection of Transmission Mounting Cushion Rubber

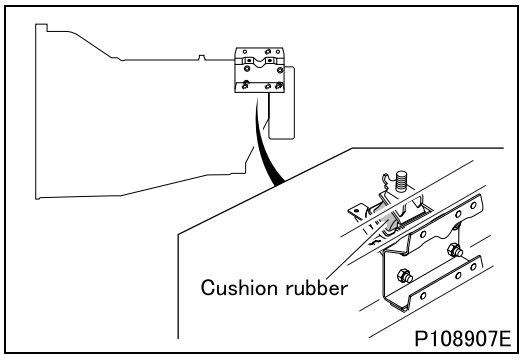

- Check that the cushion rubber on the transmission mounting is free from damage such as scratches, cracks or peeling.
- Use a hand mirror in places that are difficult to see.
- If there is a problem, replace the cushion rubber. (See REMOVAL AND INSTALLATION OF TRANSMISSION.)

https://truckmanualshub.com/

REMOVAL AND INSTALLATION OF TRANSMISSION

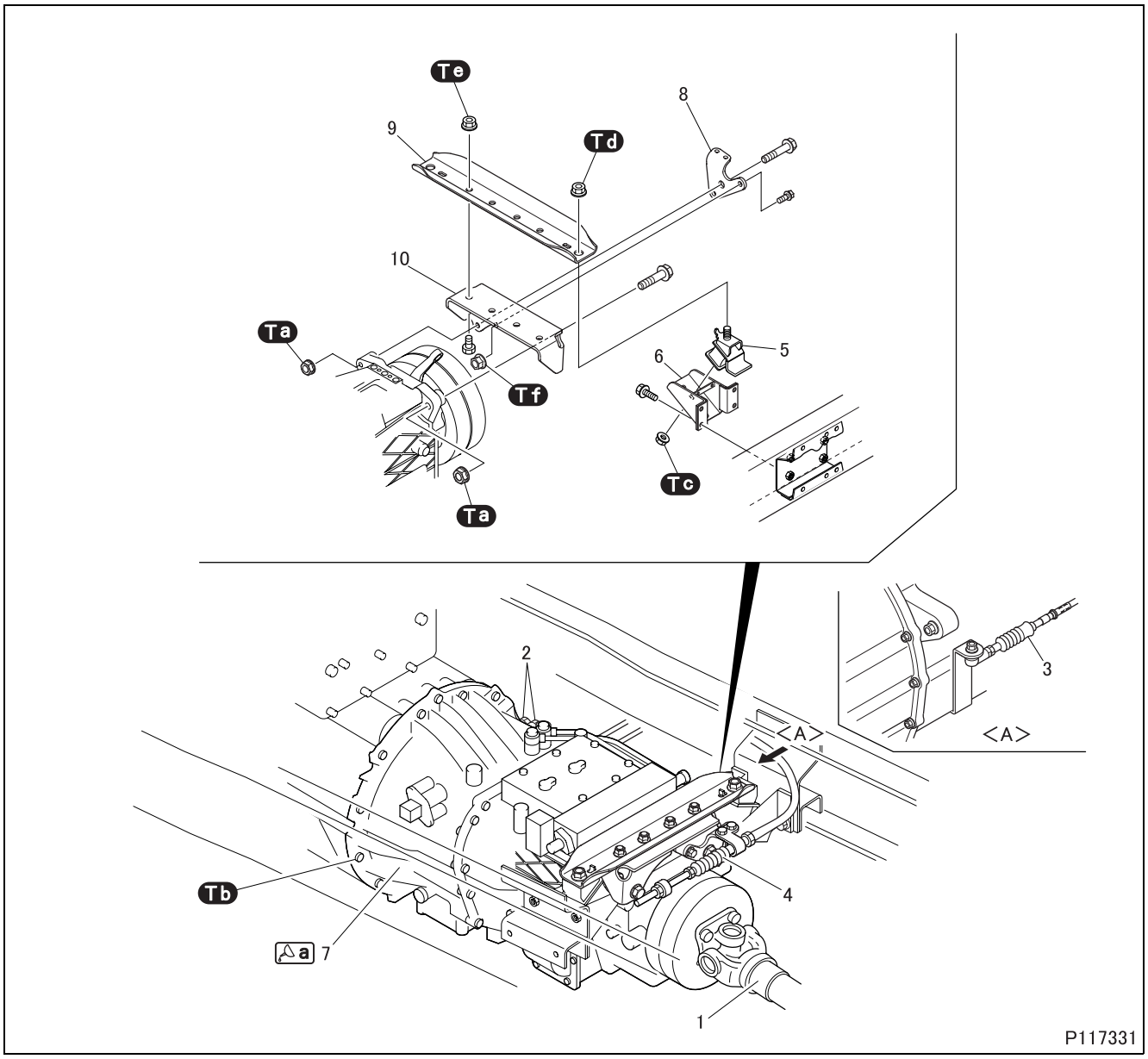

● **Removal sequence**

1 Propeller shaft (See Gr25.)
2 Transmission oil cooler pipe and hose (See later section.)
3 P-range cable (See later section.)
4 Parking brake cable (See Gr36.)
5 Cushion rubber
6 Mounting bracket
7 Transmission
8 Parking brake cable bracket
9 Mounting support
10 Mounting support bracket

● **Installation sequence**

Follow the removal sequence in reverse.

https://truckmanualshub.com/

Tightening torque (Unit: N·m {ft.lbs, kgf·m})

Mark	Parts to be tightened	Tightening torque	Remarks
Ta	Nut (transmission mounting)	235 ± 35 {175 ± 26, 24.0 ± 3.6}	–
Tb	Bolt (transmission mounting)	47.1 {35, 4.8}	–
Tc	Nut (cushion rubber mounting)	50.6 {37, 5.2}	–
Td	Nut (cushion rubber mounting)	260 ± 40 {190 ± 30, 27.0 ± 4.1}	–
Te	Nut (mounting support mounting)	145 ± 25 {105 ± 18, 15.0 ± 2.5}	–
Tf	Nut (parking brake cable bracket mounting)	50.6 ± 4.4 {37 ± 3.2, 5.2 ± 0.4}	–

Lubricant and/or sealant

Mark	Points of application	Specified lubricant and/or sealant	Quantity
a	Mating surface of clutch housing and engine	ThreeBond 1215	As required

◆Work before removal◆

■ Removal: Front pipe and diesel particulate filter

- To ensure the clearance for removing the transmission, remove the front pipe and diesel particulate filter. (See Gr15.)

◆Removal procedure◆

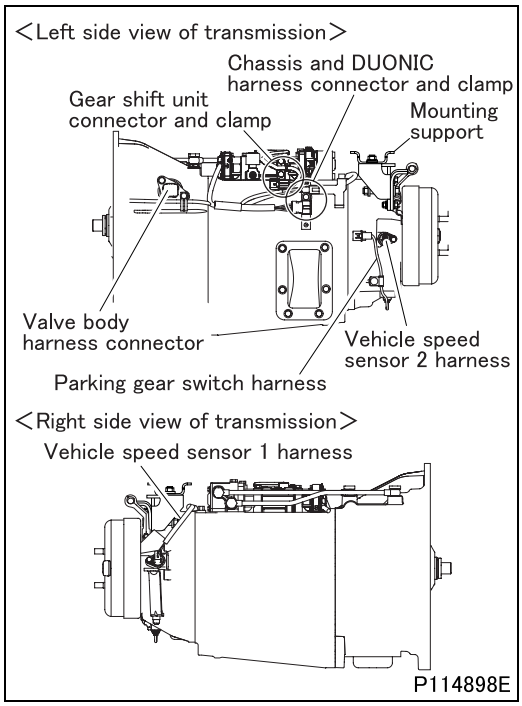

■ Removal: Harness

- Remove the harnesses and connectors shown in the drawing from the transmission. If a harness or connector cannot be removed from the bottom of the vehicle, remove it when removing the transmission from the engine.

CAUTION ⚠

- **The harnesses are also clamped to the transmission. Pulling a harness after just removing the connector may cause damage to the harness.**

- Remove the connectors and clamps of the gear shift unit harness as they will interfere with the mounting support when removing the transmission.

https://truckmanualshub.com/

REMOVAL AND INSTALLATION OF TRANSMISSION

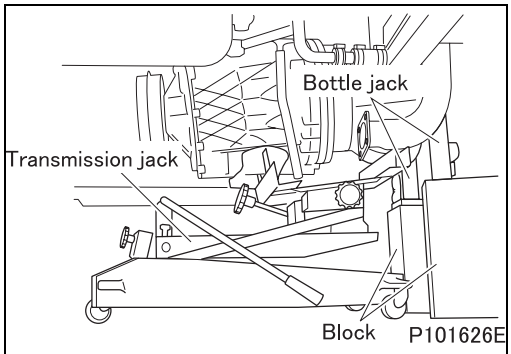

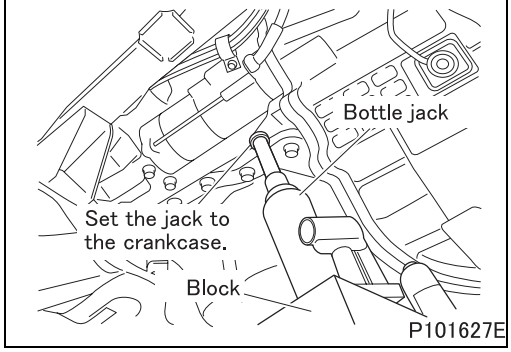

■ **Removal: Transmission**

- Apply the transmission jack and two bottle jacks to the transmission and engine block respectively as shown in the drawing before removing the transmission mounting bolts (to the engine and mounting support).
- Place a block under the jacks to apply bottle jacks to the engine block.

CAUTION ⚠

- **If the engine is not supported by the bottle jack, it will fall when the transmission is removed.**

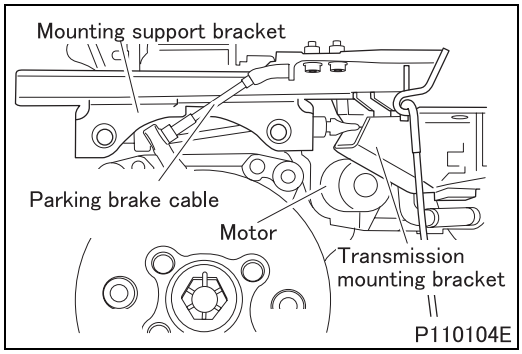

- After removing the transmission mounting bolts, lower the transmission by lowering the transmission jack and bottle jack until it does not interfere with the transmission mounting support bracket.
- Remove the transmission mounting bracket as it will interfere with the gear shift unit motor when removing the transmission.
- Remove the parking brake cable.

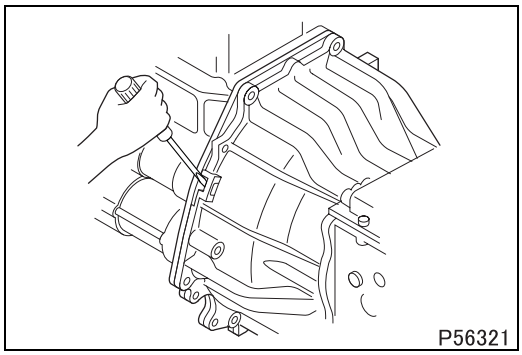

- Insert a screwdriver into the three removal grooves and remove the transmission from the engine.
- Move the transmission backward until the spline of the drive pinion is detached from the clutch.

CAUTION ⚠

- **Make sure that you pull the transmission out in a straight line. If you seesaw the transmission violently, you will damage the spline that connects the drive pinion and the clutch.**

- When the oil stain is found inside of clutch housing after removing the transmission, check the oil leakage portion of transmission or engine and replace the defective part.

https://truckmanualshub.com/

◆Inspection procedure◆

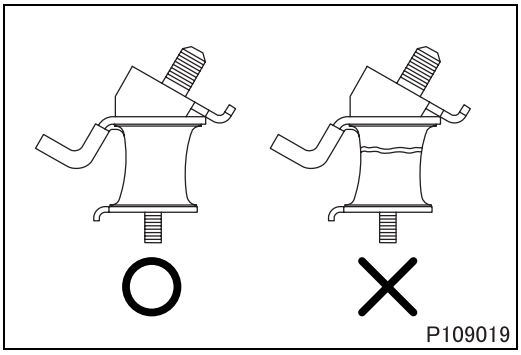

■ Inspection: Cushion rubber

- Inspect the entire circumference of the cushion rubber for cracks, breaks, oil or other problems.
- If a problem is found, replace the cushion rubber.

◆Installation procedure◆

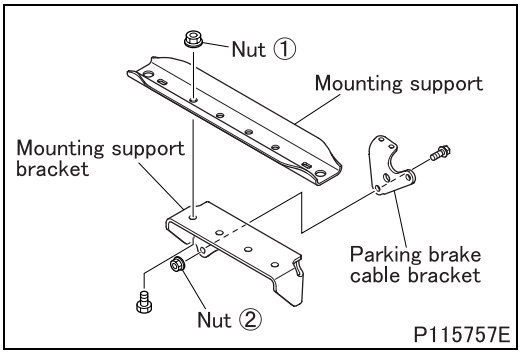

■ Installation: Mounting support and parking brake cable bracket

- Install the mounting support and parking brake cable bracket on the mounting support bracket.

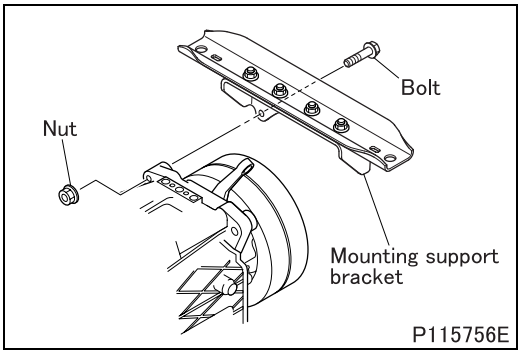

■ Installation: Mounting support bracket

- Install the mounting support bracket on the transmission.

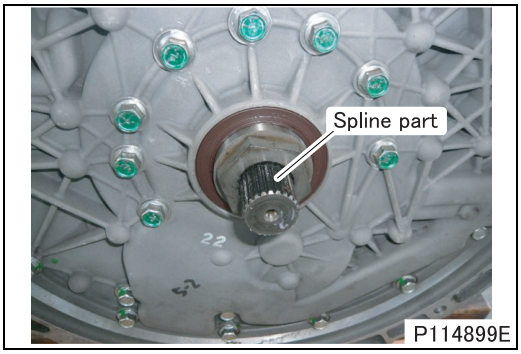

■ Installation: Transmission

- Check the spline of the drive pinion of dual clutch for rust.
- If rust is found, remove it using a wire brush.

CAUTION ⚠

- **Do not apply grease to the drive pinion as it may cause abnormal noise.**

https://truckmanualshub.com/

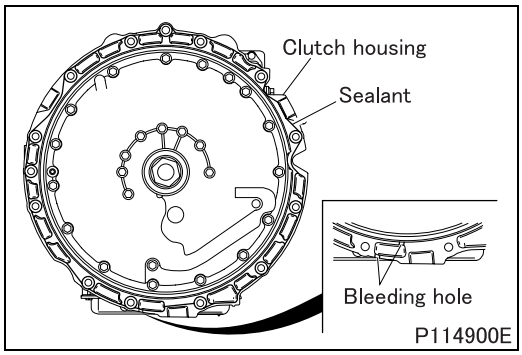

[Applying sealant]

- Apply sealant following manners shown below.

CAUTION ⚠

- **Take care not to apply sealant under any of the following conditions. Otherwise it causes water infiltration.**
  - **There is dust, oil, grease, etc. on the mating surface.**
  - **The diameter or thickness of the applied sealant is extremely different at each part.**
  - **The applied sealant has some breaks.**
- **Use utmost care to prevent the applied sealant from covering the air vent holes on the side of the clutch housing and engine.**

<Case of using nozzle gun>

- Clean the mating surfaces of each part.
- Apply sealant on the width center of the mating surfaces so that the diameter of the applied sealant is the same as the diameter of the nozzle. The line of applying sealant is illustrated.

<Case of using spatula, etc.>

- Clean the mating surfaces of each part.
- Apply sealant evenly on the entire mating surfaces.

[Installation]

- After applying the sealant, install the transmission before the sealant dries. Be sure not to allow the sealant to be displaced.
- Support the transmission on the transmission jack, and insert the transmission into the pilot bearing of the flywheel paying attention to the drive pinion spline.
- Tighten transmission mounting bolts to the specified torque.
- Do not start the engine within one hour after installing the transmission.
- When loosening or removing transmission mounting bolts, be sure to reapply the sealant.

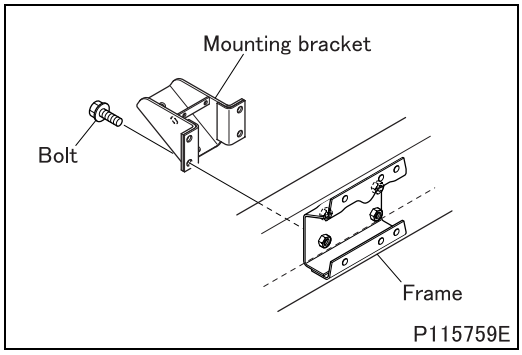

■ Installation: Mounting bracket

- Install the mounting bracket on the frame.

https://truckmanualshub.com/

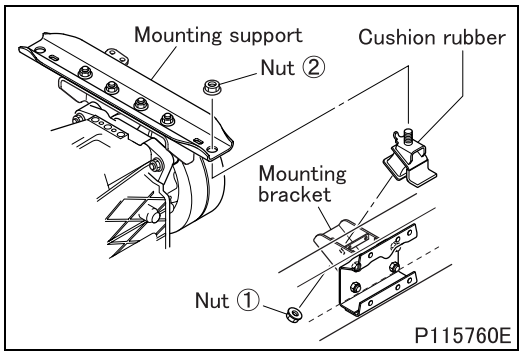

◆Work after installation◆

■ Installation: Cushion rubber

- Install the cushion rubber on the mounting bracket and mounting support.

■ Fill: Automatic transmission fluid

- Fill automatic transmission fluid. (See ON-VEHICLE INSPECTION AND ADJUSTMENT.)
- After filling automatic transmission fluid, make initial setting of the DUONIC™ system and perform a test drive. (See Gr22E.)

■ Inspection and adjustment: Parking brake lever

- Inspect and adjust the parking brake lever. (See Gr36.)

https://truckmanualshub.com/

VALVE BODY, DUAL CLUTCH

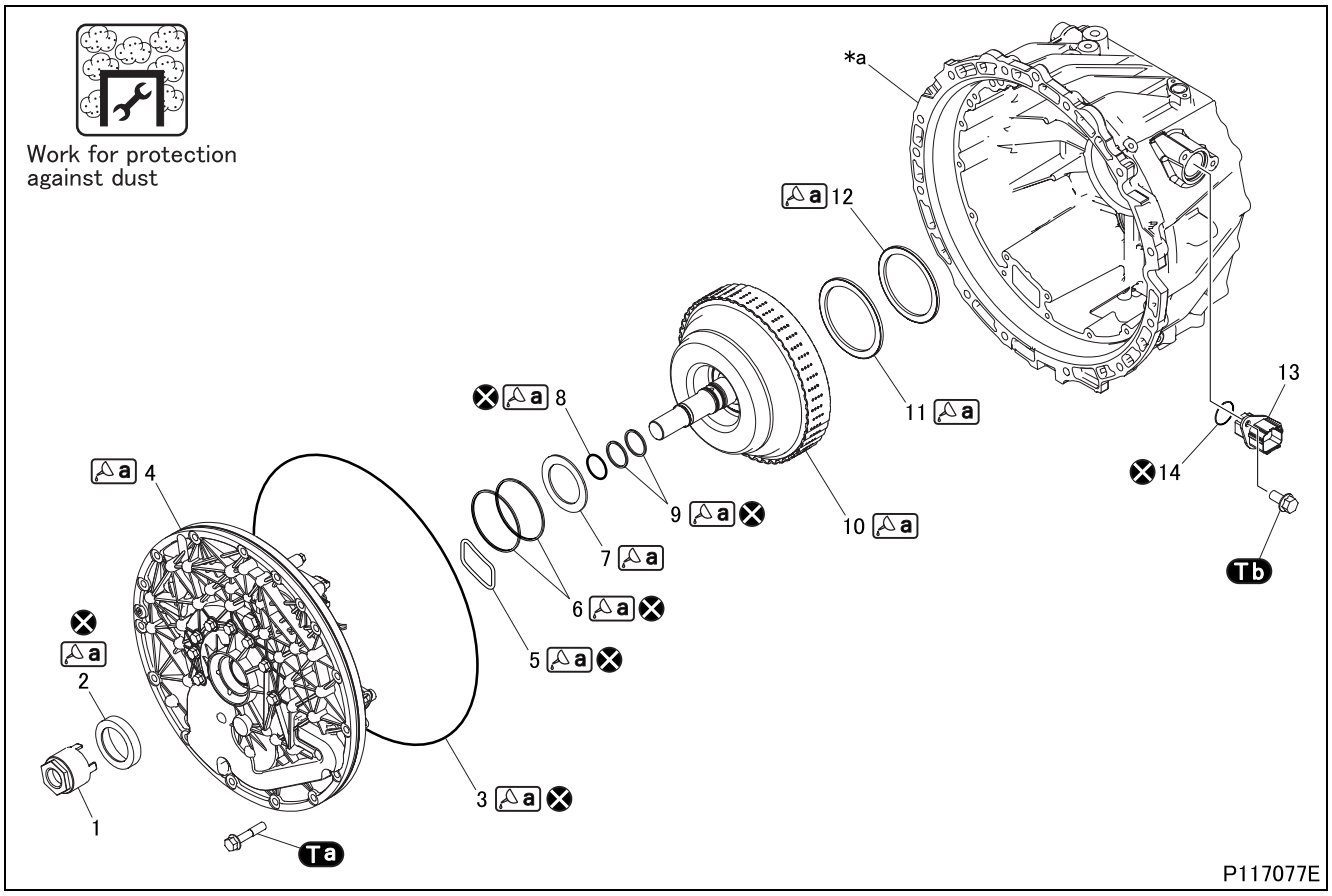

● **Removal sequence**

1 Pump driver
2 Oil seal
3 O-ring
4 Valve body
5 O-ring
6 Seal ring
7 Thrust needle bearing A
8 O-ring
9 Seal ring
10 Dual clutch
11 Thrust needle bearing B
12 Bearing thrust washer
13 Bushing connector
14 O-ring

***a**: Transmission (See later section.)

⊗: Non-reusable parts

: This work requires protection against dust. (See Gr00.)

- It is desirable that the job to service portions related to the hydraulic circuit of the transmission (DUONIC™) be performed in an environment comparable to that of a meeting room partitioned from the outside air. If it is not feasible to prepare such an environment, take necessary steps to protect the clutch housing with a vinyl bag for prevention of entry of sand and dust.
- Replace the vinyl bag immediately when it is broken during servicing.

● **Installation sequence**

Follow the removal sequence in reverse.

Service standards (Unit: mm {in.})

Location	Maintenance item	Standard value	Limit	Remedy
10	Installed height of dual clutch	12.9 ± 0.4 {0.51 ± 0.016}	–	Replace

https://truckmanualshub.com/

Tightening torque (Unit: N·m {ft.lbs, kgf·m})

Mark	Parts to be tightened	Tightening torque	Remarks
Ta	Bolt (valve body mounting)	19 to 28 {14 to 21, 1.9 to 2.9}	–
Tb	Bolt (bushing connector mounting)	12.7 ± 2.3 {9.4 ± 1.7, 1.3 ± 0.2}	–

Lubricant and/or sealant

Mark	Points of application	Specified lubricant and/or sealant	Quantity
a	Sliding area of bearing thrust washer	FUSO ATF-SP III	As required
	Sliding area of thrust needle bearing		
	Sliding area of dual clutch		
	Seal ring		
	O-ring		
	Sliding area of valve body		
	Lip area of oil seal		

Special tools (Unit: mm {in.})

Mark	Tool name and shape	Part No.	Application
a	Guide bar A: M8 × 1.25 B: ϕ8.5 {ϕ0.33} C: 195 {7.68} 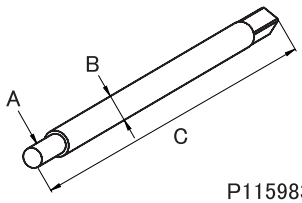 P115983	MH064241 (set of 3 pcs.) MH064239 (1 pc.)	Removal and installation of valve body
b	Puller A: M8 × 1.25 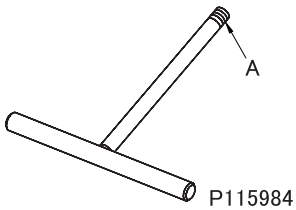 P115984	MH064242 (set of 3 pcs.) MH064240 (1 pc.)	Removal and installation of valve body
c	Oil seal installer A: ϕ67 {2.64} B: ϕ49.5 {1.95} 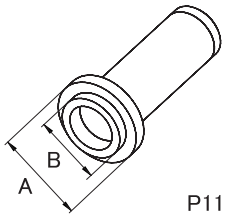 P116034	MH064238	Installation of oil seal

https://truckmanualshub.com/

VALVE BODY, DUAL CLUTCH

<table>
<tr><th>Mark</th><th>Tool name and shape</th><th>Part No.</th><th>Application</th></tr>
<tr><td>d</td><td>Transmission support stand kit
 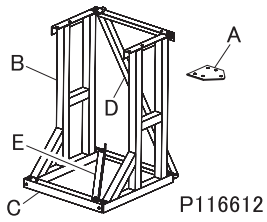

P116612
<table><tr><th colspan="2">Component</th><th>Part No.</th></tr><tr><td>A</td><td>Transmission support bracket</td><td>MH064260</td></tr><tr><td>B</td><td>Side stand</td><td>MH064264</td></tr><tr><td>C</td><td>Angle section A</td><td>MH064265</td></tr><tr><td>D</td><td>Angle section B</td><td>MH064266</td></tr><tr><td>E</td><td>Angle section C</td><td>MH064267</td></tr></table></td><td>MH064262</td><td>Removal and installation of valve body and dual clutch</td></tr>
<tr><td>e</td><td>Dual clutch plate
<table><tr><th>A</th><th>B</th></tr><tr><td>180
{7.09}</td><td>60
{2.36}</td></tr></table> 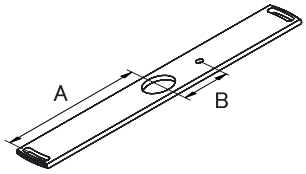

P116613</td><td>MH064269</td><td>Installation of dual clutch</td></tr>
</table>

◆Work before removal◆

■ **Cleaning: Transmission**

- Drain automatic transmission fluid. (See ON-VEHICLE INSPECTION AND ADJUSTMENT.)

CAUTION ⚠

- **After draining automatic transmission fluid, promptly install the automatic transmission fluid drain plug and automatic transmission fluid level plug to prevent dirt and dust from entering the clutch housing.**

- Wash the transmission before removal from the vehicle. Thoroughly wash off dirt and dust around the clutch housing.

CAUTION ⚠

- **Be careful not to allow water to enter the transmission from the air bleed hole or other openings.**

- Remove the transmission. (See REMOVAL AND INSTALLATION OF TRANSMISSION.)
- Check the precautions on washing when servicing. (See Gr00.)
- Use rubber or vinyl gloves that cover hands and arms.
- Use of an apron also is desirable.
- Clean the general tools, special tools, and work benches with a cleaner and a waste cloth before starting the service jobs.

NOTE

- **Do not use cotton work gloves.**
- **Do not use air tools when working inside a plastic bag.**
- **Do not reuse the plastic bag used during the servicing.**

https://truckmanualshub.com/

- Wash the transmission once again. After blowing dirt and dust off the clutch housing and valve body, thoroughly wipe them off with a rag, and then perform air blowing once again.

◆Removal procedure◆

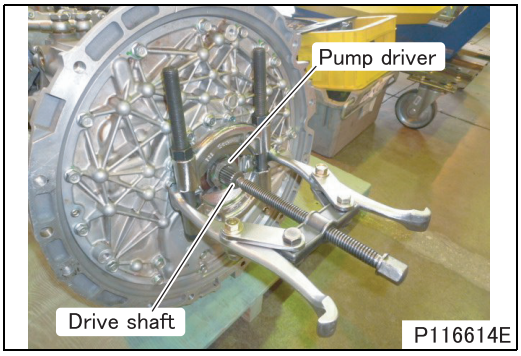

■ Removal: Pump driver

- Install a commercially available puller on the pump driver grooves and dual clutch drive shaft as shown in the picture and remove the pump driver.

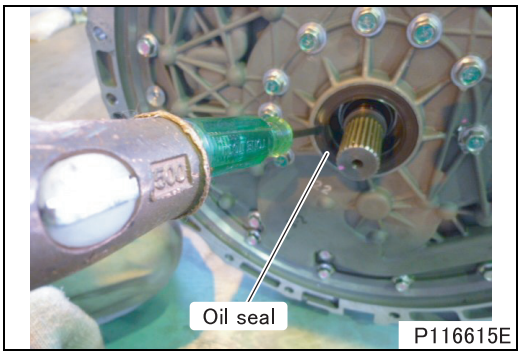

■ Removal: Oil seal

- Drive a flat-blade screwdriver into the metal plate part of the oil seal to remove the oil seal.

CAUTION ⚠

- **Be careful not to damage the valve body when driving the screwdriver.**

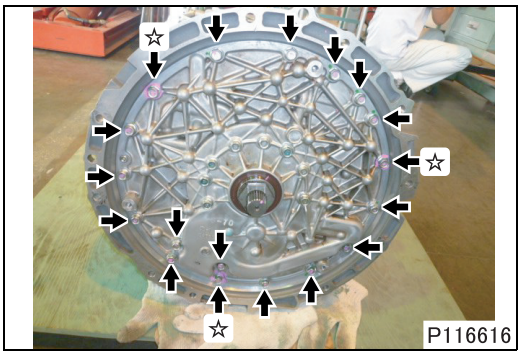

■ Removal: Valve body and bushing connector

: This work requires protection against dust.

CAUTION ⚠

- **If the valve body has been removed, the dual clutch may have been displaced; remove and install the dual clutch.**

- Remove the mounting bolts except those marked with a "☆" in the picture.
- Loosen the bolts marked with a "☆" in the picture until they can be removed by hand, and then make alignment marks.

https://truckmanualshub.com/

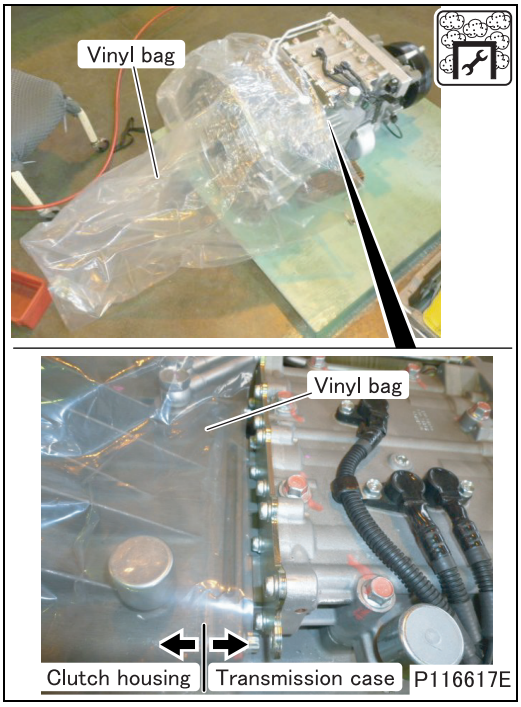

- Cover the clutch housing with a plastic bag.
- Align the open end of the plastic bag with the mating surfaces of the clutch housing and transmission case.
- Use a new plastic bag with a capacity of 90 L {95 qts.} (900 mm {35.4 in.} wide) or more and a thickness of 0.05 mm {0.0020 in.} or more.

NOTE

- **Do not use air tools when working inside a plastic bag.**

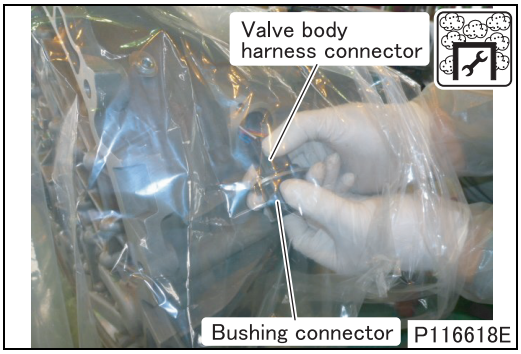

- Remove the busing connector.

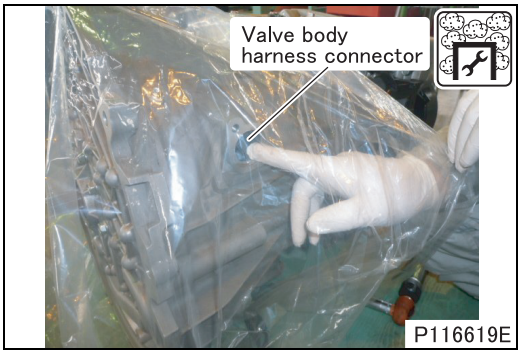

- Push the harness connector of the valve body into the clutch housing.

https://truckmanualshub.com/

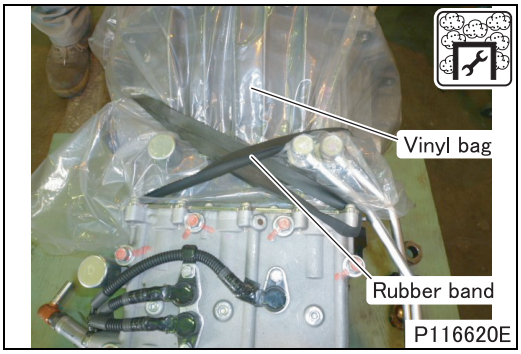

- Secure the open end of the plastic bag with a rubber band.

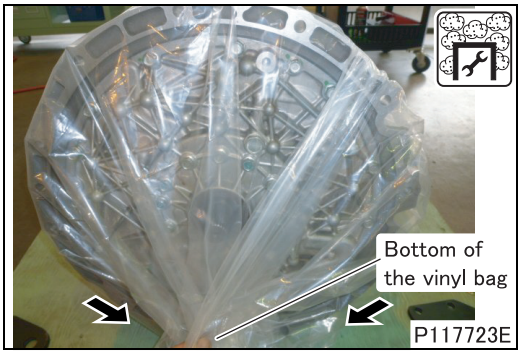

- Pull the bottom of the vinyl bag in the direction shown to eliminate slack.

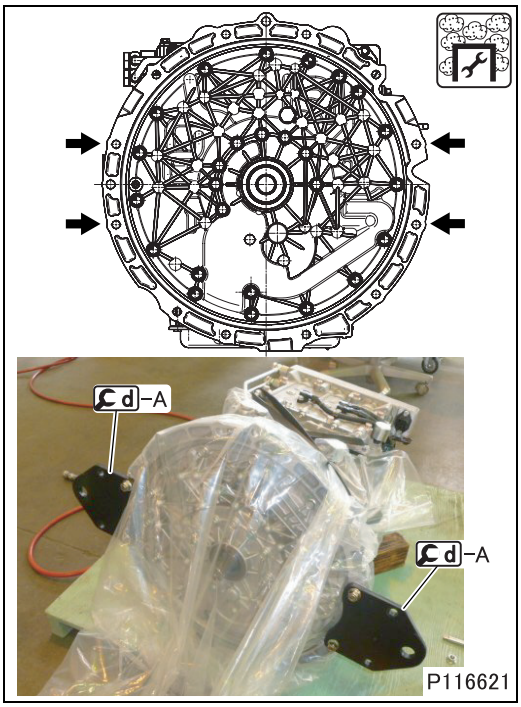

- Install d-A over the plastic bag on the clutch housing at the locations shown in the drawing.

CAUTION ⚠

- **Tuck the plastic bag between the clutch housing and d-A to prevent dirt and dust from entering the bag through the mounting bolt holes.**

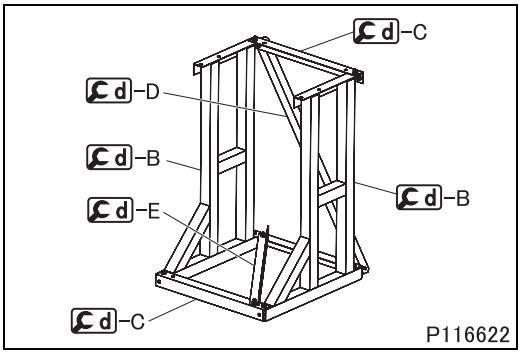

- Assemble d-B to -E.

https://truckmanualshub.com/

VALVE BODY, DUAL CLUTCH

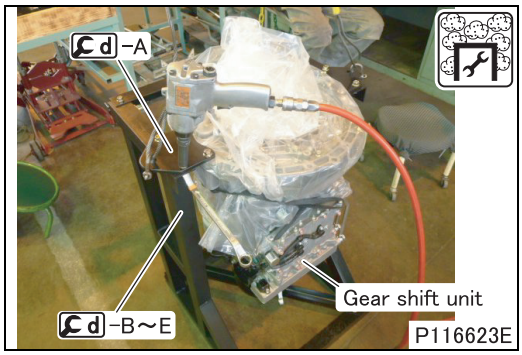

- Lift the transmission with a crane and secure it to d -B to -E in the vertical orientation.
- The gear shift unit side of the transmission should be on the opening side of the assembly of d -B to -E.

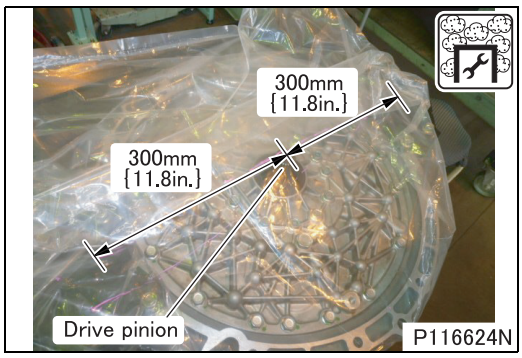

- Remove any slack in the plastic bag, and then draw lines of 300 mm {11.8 in.} long with a marking pen on the left and right sides of the center of the dual clutch drive pinion.

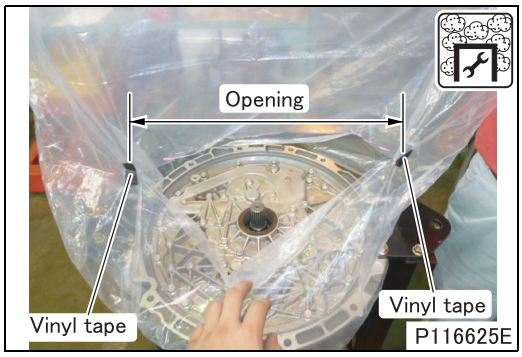

- Cut the plastic bag along the marker lines with a cutter knife to provide a working window.
- Reinforce both ends of the opening with plastic tape or equivalent.

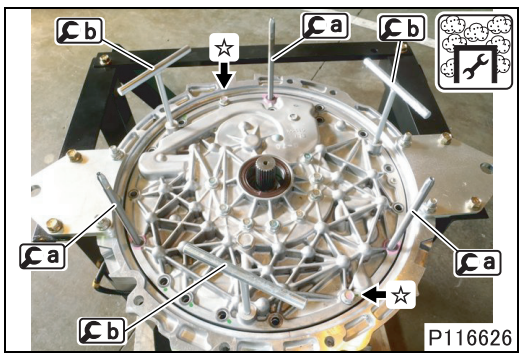

- Remove the three bolts remaining on the valve body by hand, and then install a.
- Install b at the locations shown in the picture.
- Install a bolt at the location marked with ☆ in the figure to prevent the valve body from coming off during the removal procedure.

https://truckmanualshub.com/

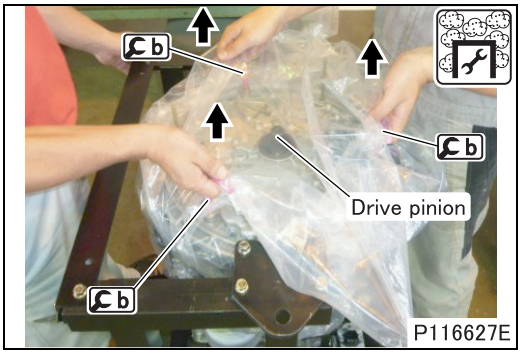

- When the valve body is lifted, the plastic bag will also be lifted with it; make some slack in the plastic bag in advance.
- Holding b over the plastic bag with your hands, lift the valve body straight up to remove it. At this time, hold the leading end of the drive pinion of the dual clutch in place to prevent the dual clutch from being removed with the valve body.

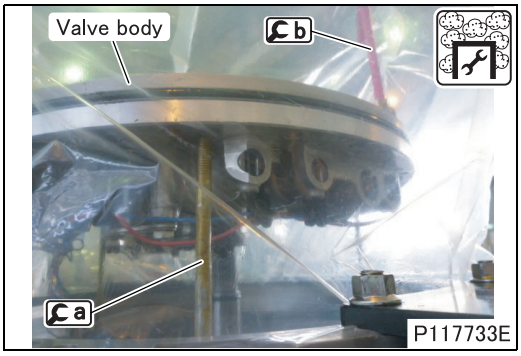

- Temporarily place the valve body on a and prepare a vinyl bag. At this time, have the maintenance personnel support b, to prevent the valve body from falling.

CAUTION ⚠

- **Do not put your finger under the valve body.**



- Before removing the valve body from the plastic bag, put it in a new plastic bag inside the original plastic bag.

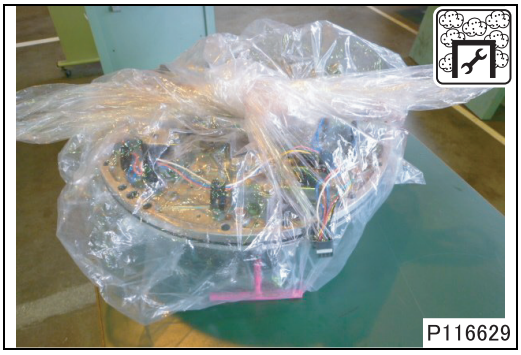

- To prevent dirt and dust from entering the removed valve body, securely close up the opening of the plastic bag.
- Face the vehicle forward side of the valve body downward and place the valve body, to which b is left attached, on the work bench.

https://truckmanualshub.com/



■ **Removal: Dual clutch**

: This work requires protection against dust.

- Before removing the dual clutch, put it in a new plastic bag inside the original plastic bag.
- To prevent dirt and dust from entering the removed dual clutch, securely close up the opening of the plastic bag.



■ **Work after removal**

: This work requires protection against dust.

- Secure the bottom end of the plastic bag with a rubber band to prevent dirt and dust from entering the clutch housing through the opening of the plastic bag.

◆**Installation procedure**◆

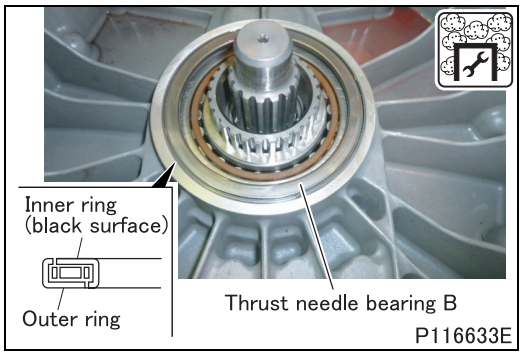

■ **Installation: Bearing thrust washer and thrust needle bearing B**

: This work requires protection against dust.

- Apply automatic transmission fluid to the sliding surface of each component, and then install thrust needle bearing B so that its black surface is toward the front side of the vehicle.

https://truckmanualshub.com/

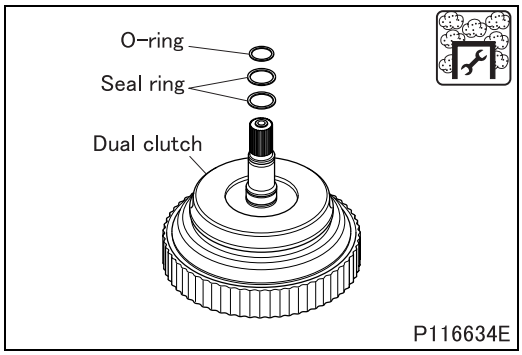

■ **Installation: Seal rings and O-ring**

: This work requires protection against dust.

- Apply automatic transmission fluid to the seal rings and O-ring, and then install them on the dual clutch.

CAUTION ⚠

- **Do not expand the seal ring excessively.**

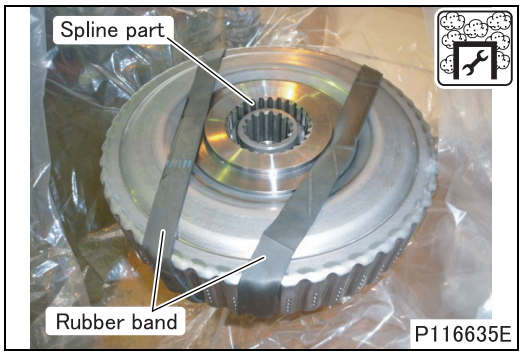

■ **Installation: Dual clutch**

: This work requires protection against dust.

- Degrease and wash the dual clutch to remove automatic transmission fluid from the clutch.
- Install a rubber bands to prevent the dual clutch outer drum from slipping off. Make sure the rubber bands does not catch the spline of the dual clutch outer drum. (When reusing the dual clutch)
- Do not remove the outer drum slipping-off prevention belt attached to a new dual clutch. (When the dual clutch is replaced with a new one)



- Replace the plastic bag covering the dual clutch with a new plastic bag.

CAUTION ⚠

- **Replace the plastic bag immediately before installing the dual clutch on the clutch housing.**

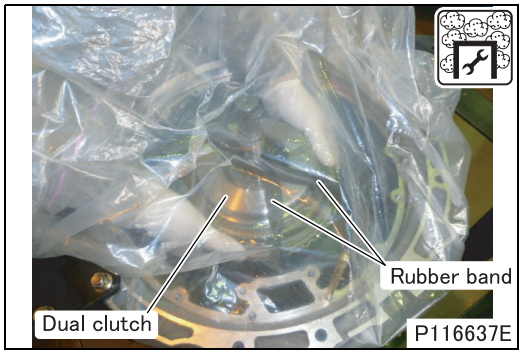

- When the dual clutch is completely inside the plastic bag covering the clutch housing, remove the plastic bag covering the dual clutch and install the dual clutch on the clutch housing.
- After the dual clutch has been installed, turn it clockwise and counterclockwise to make sure that the outer output and outer drive pinion, and the inner output splines and inner drive pinion, are in proper mesh with each other.
- After the check, remove the rubber bands or outer drum slipping-off prevention belt.

https://truckmanualshub.com/

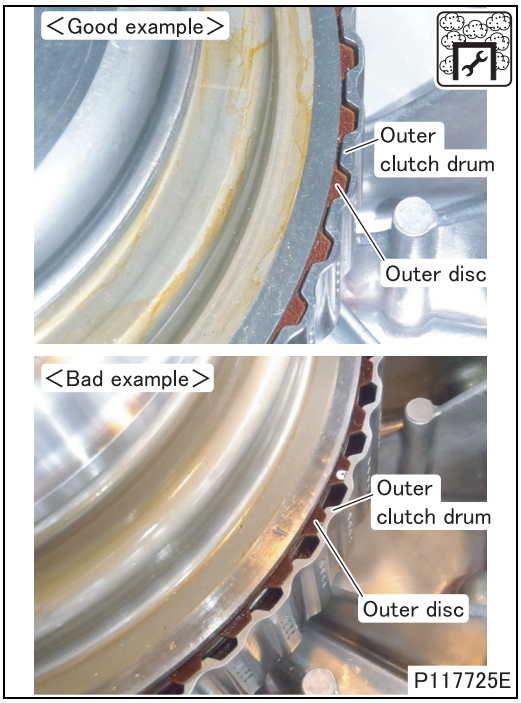

- Check that the outer disc does not come off the outer clutch drum.

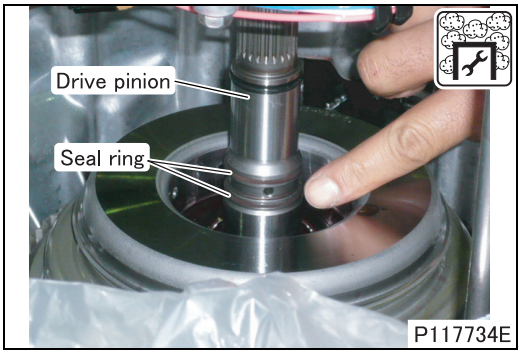

- Check that the drive pinion of the dual clutch can be turned lightly by hand.
- Make sure that the seal rings are in place in the grooves of the drive pinion of the dual clutch. They should not be unevenly positioned relative to, or protrude from, the grooves.

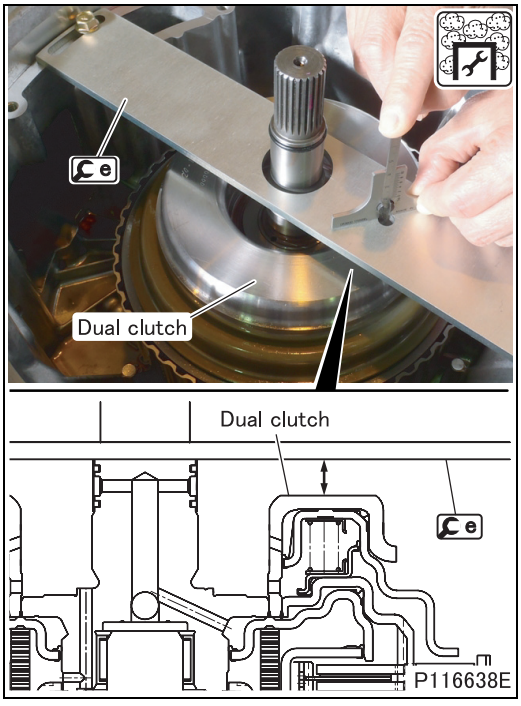

- Install e on the clutch housing.
- Measure the distance between the top surface of the dual clutch and the bottom surface of e. Take measurements at four locations by rotating e in 90° increments.
- If the measurement is deviated from the standard value, reinstall thrust needle bearing B and dual clutch.

CAUTION ⚠

- **If the valve body is installed with the measurement falling outside the standard value, thrust needle roller bearing B may be damaged. Be sure to start the installation procedure over if the standard value is not met.**

- If the measurement after reinstallation is still deviated from the standard value, replace defective parts.

https://truckmanualshub.com/

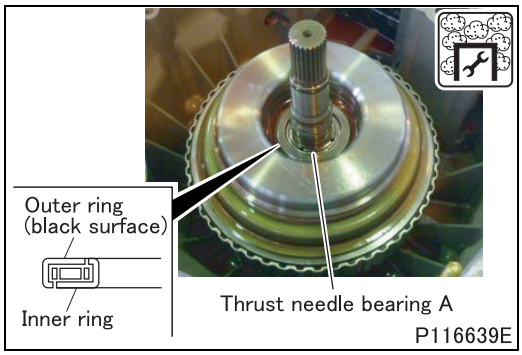

■ Installation: Thrust needle bearing A

: This work requires protection against dust.

- Apply automatic transmission fluid to the sliding surfaces, and then install thrust needle bearing A so that its black surface is toward the front side of the vehicle.

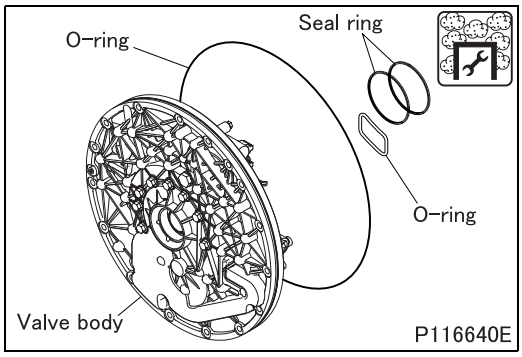

■ Installation: Seal rings and O-ring

: This work requires protection against dust.

- Apply automatic transmission fluid to the seal rings and O-ring, and then install them on the valve body.

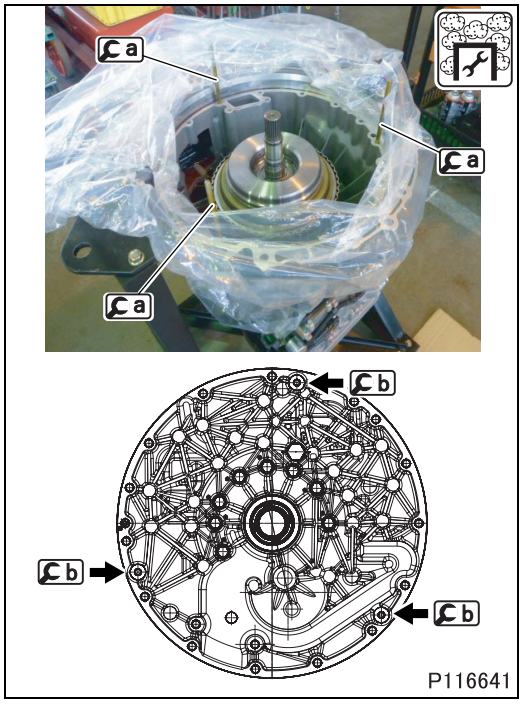

■ Installation: Valve body and bushing connector

: This work requires protection against dust.

- Install a on the clutch housing at the locations shown in the picture.
- Install b on the valve body at the locations shown in the drawing.

https://truckmanualshub.com/

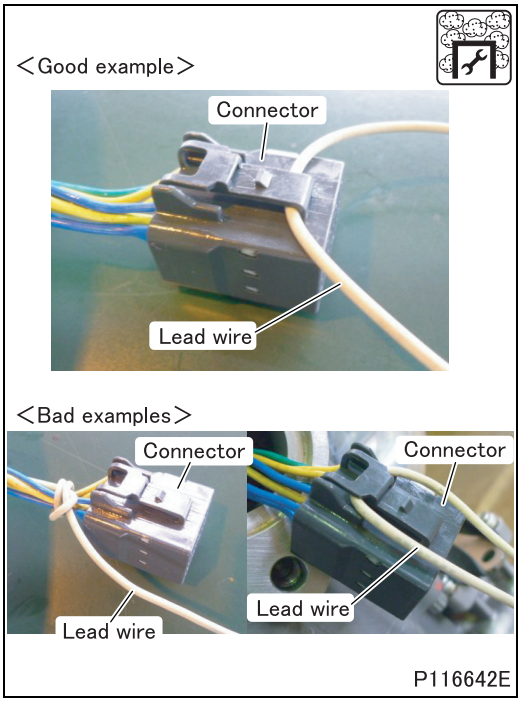

- Install the lead wire harness on the harness connector on the valve body as shown in the picture.



- Replace the plastic bag covering the valve body with a new plastic bag.
- Clean the mating surfaces of the valve body and clutch housing.

CAUTION ⚠

- **Replace the plastic bag and clean the mating surfaces immediately before installing the valve body on the clutch housing.**



- When the valve body is completely inside the plastic bag covering the clutch housing, remove the plastic bag covering the valve body.

https://truckmanualshub.com/

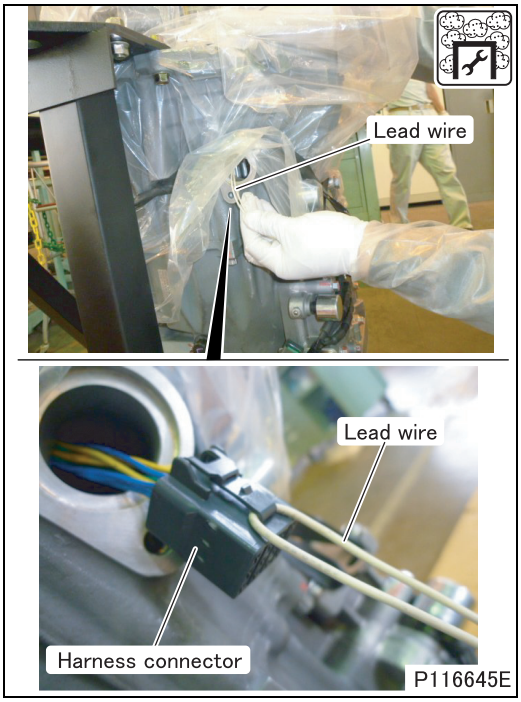

- Pull the lead wire installed on the harness connector on the valve body out of the hole in the bushing connector mount on the clutch housing.
- Remove the lead wire, and then install the bushing connector to the harness connector on the valve body and clutch housing.

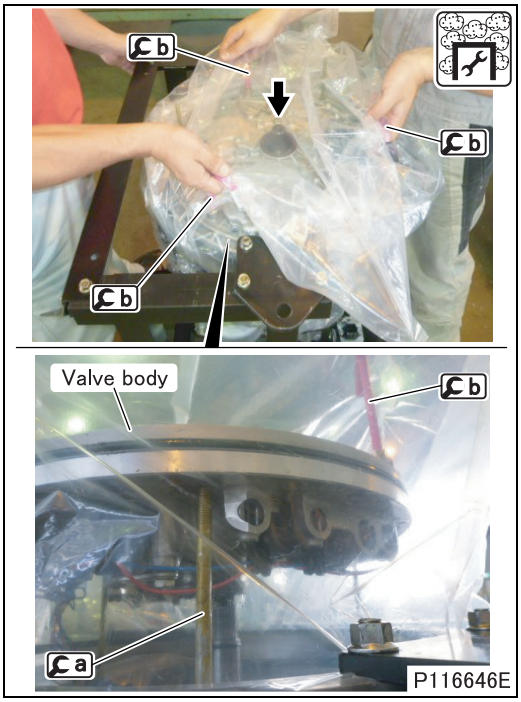

- Install the valve body on the clutch housing.
- Check that the valve body is entirely inside the clutch housing.
- Check that the drive pinion of the dual clutch can be turned by hand.

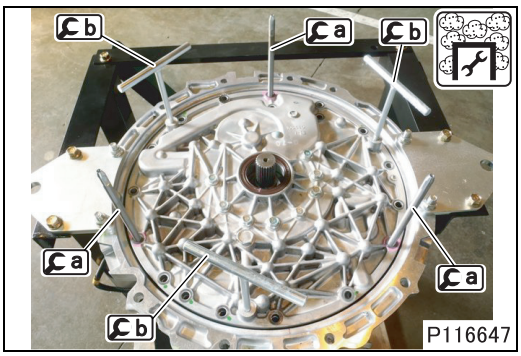

- Remove a, and then temporarily tighten the valve body mounting bolts by hand.
- Remove b.

https://truckmanualshub.com/

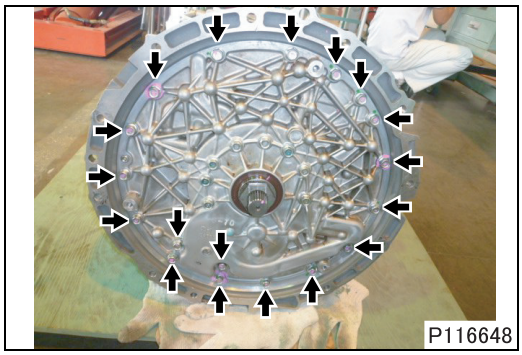

- Remove the plastic bag covering the clutch housing.
- Install the valve body mounting bolts.

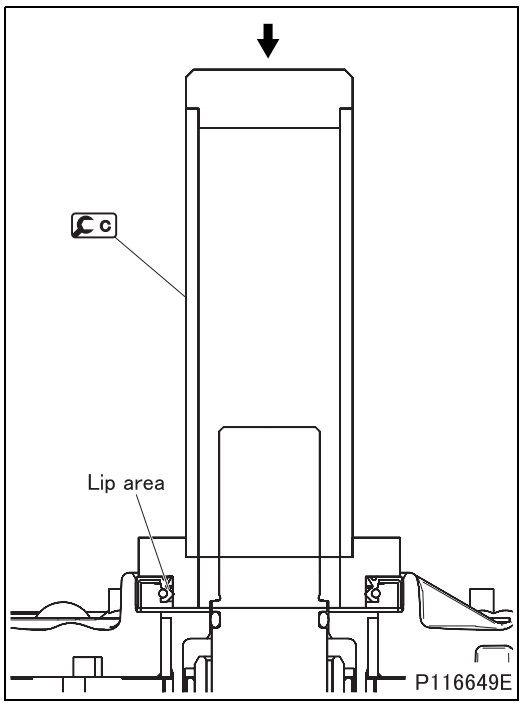

■ **Installation: Oil seal**

- Apply automatic transmission fluid to the lip area of the oil seal, and then install the oil seal in the illustrated direction using C.

■ **Installation: Pump driver**

- Install the pump driver as follows:

[Heating]

- Heat the pump driver evenly to 110°C {230°F} using one of the following methods.

CAUTION ⚠

- **If the pump driver is too hot, it may cause damage to the oil seal; do not heat the pump driver to higher than 110°C {230°F}.**

<Temperature-controlled chamber>

- Heat the pump driver with a temperature setting of 110°C {230°F} for more than 30 minutes.

<Ring heater>

- Repeat a heating process two to three times with a temperature setting of 110°C {230°F} so that the entire pump driver is evenly heated to 110°C {230°F}.

https://truckmanualshub.com/

CAUTION ⚠

- **Repeat the heating process two to three times because sufficient thermal expansion of the pump driver cannot be achieved in a single heating process.**

<Oil bath>

- Heat automatic transmission fluid to 110°C {230°F} and immerse the pump driver in the oil bath.

CAUTION ⚠

- **Be sure to use automatic transmission fluid when heating the pump driver in an oil bath.**
- **Be sure to put the pump driver in the oil bath with its protrusions facing up. If the protrusions are facing down, their edges will make direct contact with the heat source, thus heating the pump driver to higher than 110°C {230°F}.**

- Since the automatic transmission fluid temperature drops when the pump driver is immersed in the oil bath, reheat the fluid to 110°C {230°F} and keep the pump driver immersed in the oil bath for more than 20 minutes while maintaining the fluid temperature at 110°C {230°F}.

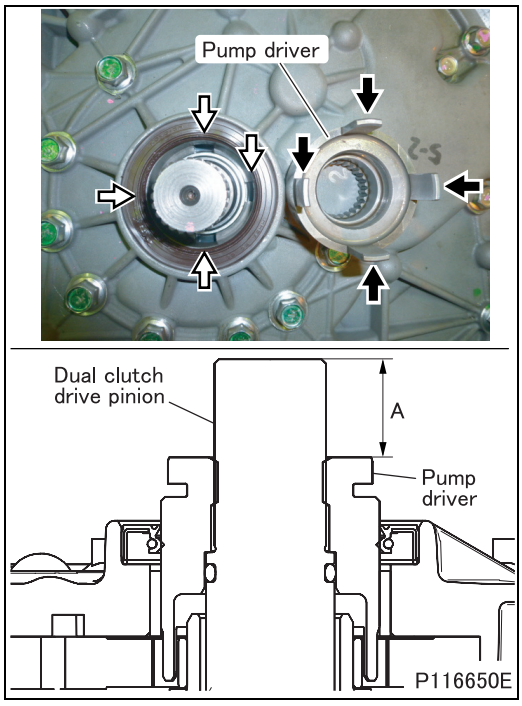

[Installation]

- If the pump driver is heated in an oil bath, wipe ATF completely.
- Install the pump driver by aligning the four protrusions with the valve body.

WARNING ⚠

- **Take care not to burn yourself when installing the hot pump driver.**

- If the pump driver is cool, reheat it before installation.
- After installation, check that distance A shown in the drawing is the following value:
  A: 23.45 mm {0.92 in.}

https://truckmanualshub.com/

GEAR SHIFT UNIT

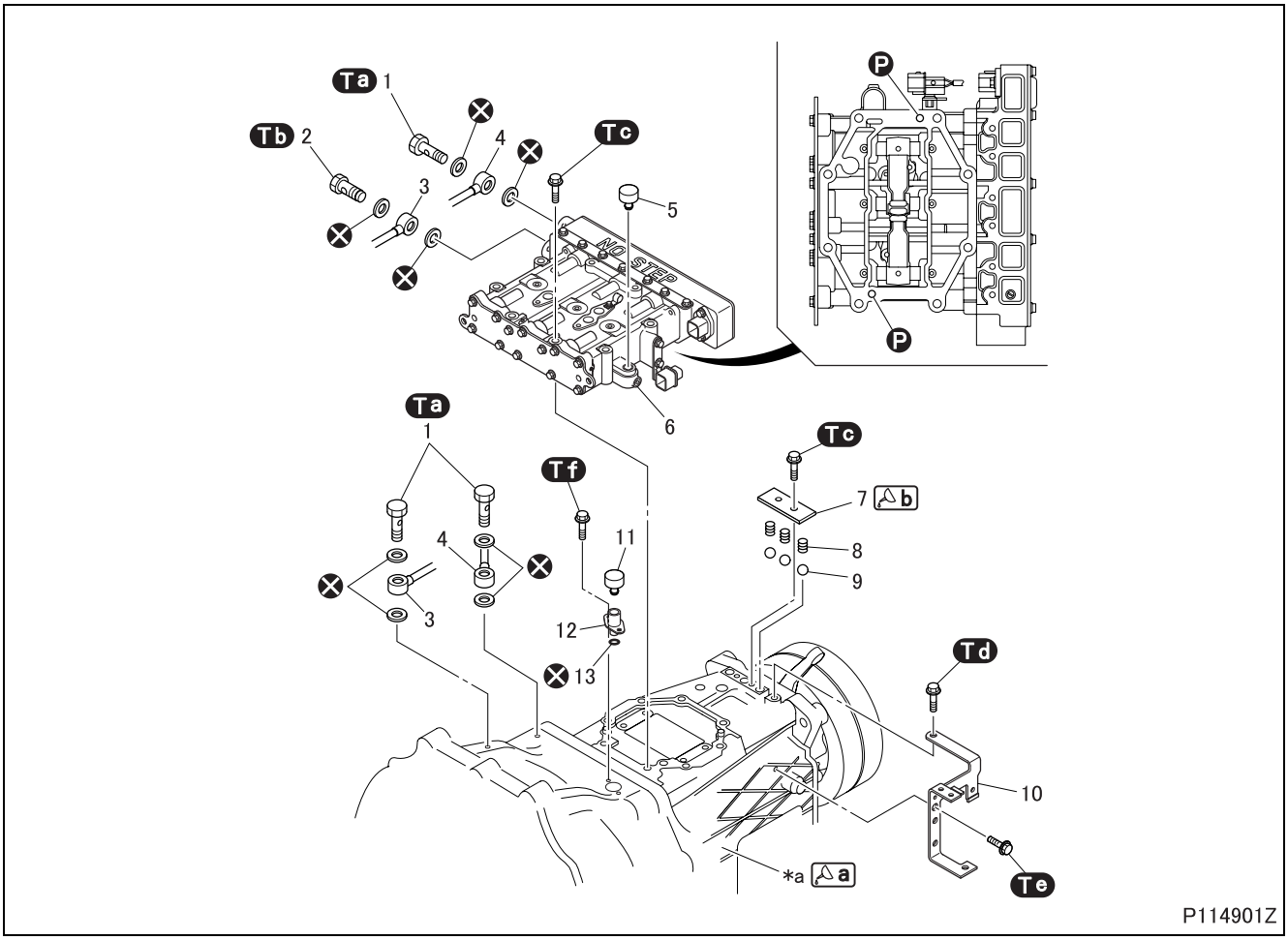

● **Removal sequence**

1 Eyebolt
2 Eyebolt with oil filter
3 Gear shift unit oil pipe
4 Gear shift unit exhaust oil pipe
5 Air breather
6 Gear shift unit
7 Poppet spring plate
8 Poppet spring
9 Steel ball
10 Harness bracket
11 Air breather
12 Air breather bracket
13 O-ring

***a**: Transmission case
Ⓟ: Locating pin
⊗: Non-reusable parts

● **Installation sequence**

Follow the removal sequence in reverse.

Service standards (Unit: mm {in.})

Location	Maintenance item	Standard value	Limit	Remedy
8	Poppet spring installed load (installed length 21.7 {0.85})	61.2 ± 5.9 N {14 ± 1.3 lbs, 6.24 ± 0.6 kgf}	43 N {9.7lbs, 4.4 kgf}	Replace

https://truckmanualshub.com/

Tightening torque (Unit: N·m {ft.lbs, kgf·m})

Mark	Parts to be tightened	Tightening torque	Remarks
Ta	Eyebolt	34 to 44 {25 to 32, 3.5 to 4.5}	–
Tb	Eyebolt with oil filter	25 to 29 {18.5 to 21.0, 2.5 to 3.0}	–
Tc	Bolt (gear shift unit mounting)	$23.8^{+4.2}_{-4.8}$ {$17.5^{+3.1}_{-3.5}$, $2.4^{+0.3}_{-0.5}$}	–
	Bolt (poppet spring plate mounting)		
Td	Bolt (harness bracket mounting)	23.8 {17.5, 2.4}	–
Te	Bolt (harness bracket mounting)	12.7 {9.4, 1.3}	–
Tf	Bolt (air breather bracket mounting)	5.45 {4.0, 0.6}	–

Lubricant and/or sealant

Mark	Points of application	Specified lubricant and/or sealant	Quantity
a	Mating surface of gear shift unit and transmission case	ThreeBond 1194 or ThreeBond 1215 or ThreeBond 1216 or Loctite 5999	As required
b	Mating surface of poppet spring plate and transmission case	ThreeBond 1215	As required

◆Removal procedure◆

■ **Removal: Gear shift unit oil pipe and gear shift unit exhaust oil pipe**

- Store the removed oil pipes in a plastic bag to prevent dirt and dust from entering the pipes.

◆Inspection procedure◆

■ **Inspection: Eyebolt with oil filter**

- Check the eyebolt with oil filter for contamination by foreign objects.
- If contaminated by foreign objects, replace the eyebolt with oil filter with a new one.

CAUTION ⚠

- **If the oil filter is contaminated by foreign objects, do not reuse the eyebolt by cleaning the filter.**

■ **Inspection: Poppet spring**

- Measure the installed load at the installed length of the poppet spring.
- If the measurement is below the limit, replace the poppet spring.

https://truckmanualshub.com/

◆Installation procedure◆

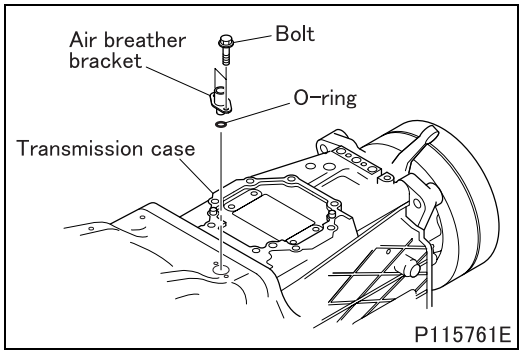

■ **Installation: Air breather bracket**

- Install the air breather bracket on the transmission case.

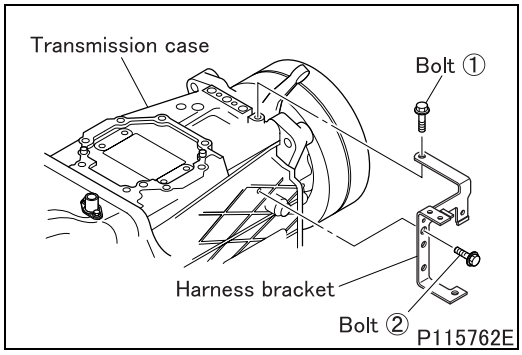

■ **Installation: Harness bracket**

- Install the harness bracket on the transmission case.

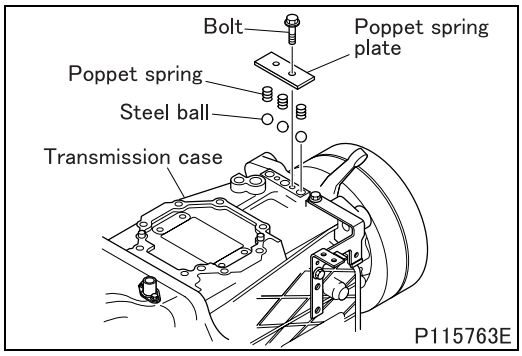

■ **Installation: Poppet spring plate**

- Apply sealant to the mating surfaces of the poppet spring plate and transmission case, and then install the poppet spring plate on the transmission case.

CAUTION ⚠

- **Remove any sealant remaining in the bolt holes before installation. Otherwise damage may result.**

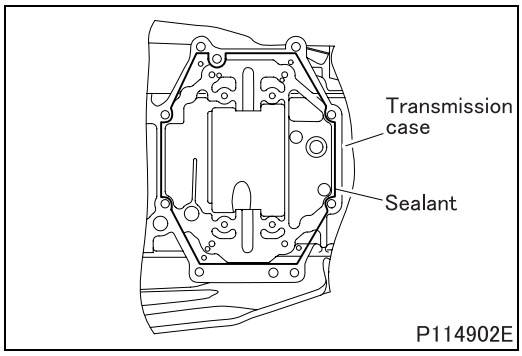

■ **Installation: Gear shift unit**

[Applying sealant]

- Apply sealant onto the transmission case, following manners shown below.

CAUTION ⚠

- **Remove any sealant remaining in the bolt holes before installation. Otherwise damage may result.**
- **Take care not to apply sealant under any of the following conditions. Otherwise it causes oil leak.**
  - **There is dust, oil, grease, etc. on the mating surface.**
  - **The diameter or thickness of the applied sealant is extremely different at each part.**
  - **The applied sealant has some breaks.**

https://truckmanualshub.com/

<Case of using nozzle gun>

- Clean the mating surfaces of each part.
- Apply sealant on the width center of the mating surfaces so that the diameter of the applied sealant is the same as the diameter of the nozzle. The line of applying sealant is illustrated.

<Case of using spatula, etc.>

- Clean the mating surfaces of each part.
- Apply sealant evenly on the entire mating surfaces.

[Installation]

- After applying the sealant, install the gear shift unit before the sealant dries. Be sure not to allow the sealant to be displaced.
- Do not start the engine within one hour after installing the gear shifter upper.
- When loosening or removing gear shift unit mounting bolts, be sure to reapply the sealant.

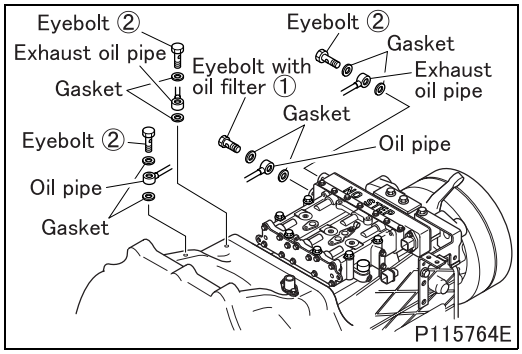

■ **Installation: Oil pipe and exhaust oil pipe**

- Install the oil pipes and exhaust oil pipes on the transmission case and gear shift unit using the eyebolt with oil filter and eyebolts.

CAUTION ⚠

- **Be careful not to install the eyebolt with oil filter in a wrong place.**

https://truckmanualshub.com/

EXTENSION HOUSING AND PARKING BRAKE <FE>

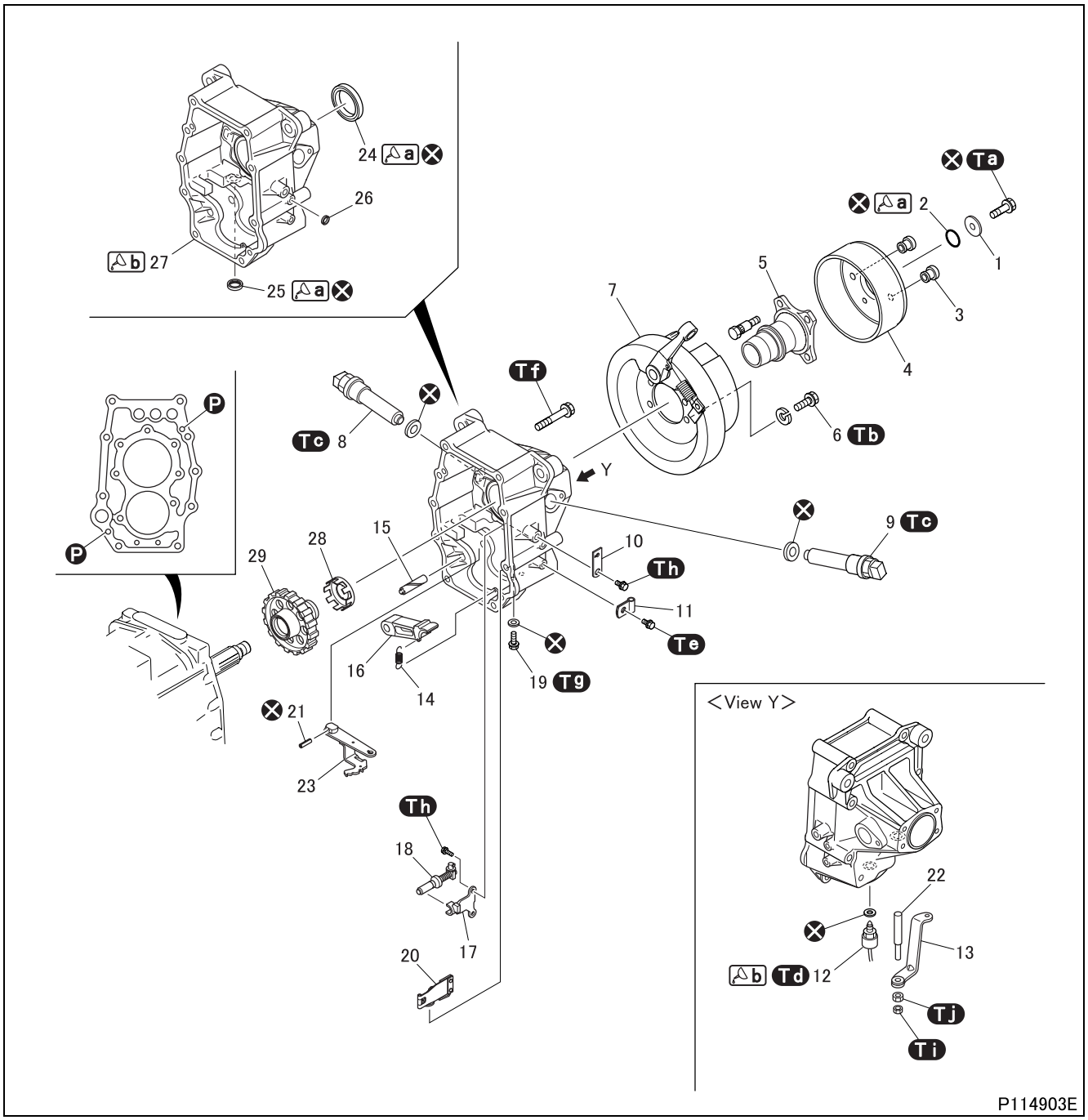

● **Removal sequence**

1 Lock plate
2 O-ring
3 Dust plug
4 Parking brake drum (See Gr36.)
5 Companion flange
6 Reamer bolt
7 Parking brake (See Gr36.)
8 Vehicle speed sensor 1
9 Vehicle speed sensor 2
10 Clip bracket
11 Clip
12 Parking gear switch
13 Parking cable lever
14 Parking sprag spring
15 Parking sprag shaft
16 Parking sprag
17 Support plate
18 Parking gear shift rail
19 Reamer bolt
20 Leaf spring
21 Spring pin
22 Lever shaft
23 Shift rail lever
24 Oil seal
25 Oil seal
26 Sealing cap
27 Extension housing
28 Pulse rotor
29 Parking gear

Ⓟ: Locating pin
⊗: Non-reusable parts

https://truckmanualshub.com/

● **Installation sequence**

Follow the removal sequence in reverse.

Service standards (Unit: mm {in.})

Location	Maintenance item	Standard value	Limit	Remedy
5	Runout at socket portion of companion flange	0 to 0.15 {0 to 0.0059}	0.15 {0.0059}	Replace
14	Parking sprag spring installed load (installed length 46.4 {1.83})	19.5N {4.4 lbs, 2.0 kgf}	13.7N {3.1 lbs, 1.4 kgf}	Replace

Tightening torque (Unit: N·m {ft.lbs, kgf·m})

Mark	Parts to be tightened	Tightening torque	Remarks
Ta	Bolt (lock plate mounting)	145 to 200 {105 to 145, 14.8 to 20.4}	–
Tb	Reamer bolt	52.0 to 66.7 {38 to 49, 5.3 to 6.8}	–
Tc	Vehicle speed sensor	45 to 50 {33 to 37, 4.6 to 5.1}	–
Td	Parking gear switch	29.4 to 39.2 {22 to 29, 3.0 to 4.0}	Sealant
Te	Bolt (clip bushing mounting)	19 to 28 {14 to 21, 1.9 to 2.9}	–
Tf	Bolt (extension housing mounting)	44.5 {33, 4.5}	–
Tg	Reamer bolt	14 to 16 {10 to 12, 1.4 to 1.6}	–
Th	Bolt (clip bracket mounting)	10 to 15 {7.4 to 11.0, 1.0 to 1.5}	–
	Bolt (support plate mounting)		
Ti	Nut (parking cable lever mounting)	30.5 {22, 3.1}	–
Tj	Nut (parking cable lever mounting)	25.4 {19, 2.6}	–

Lubricant and/or sealant

Mark	Points of application	Specified lubricant and/or sealant	Quantity
a	O-ring	Wheel bearing grease [NLGI No. 2 (Li soap)]	As required
	Lip area of oil seal		
b	Mating surface of extension housing and transmission case	ThreeBond 1215	As required
	Thread area of parking gear switch		

Special tools (Unit: mm {in.})

Mark	Tool name and shape	Part No.	Application
Ca	Flange puller A: ϕ95 {3.74}, B: ϕ100 {3.94}, C: ϕ90 {3.54} 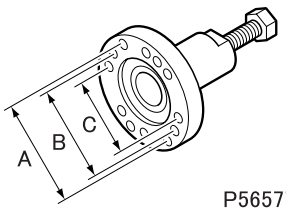 P56577	MH061848	Removal of companion flange
Cb	Oil seal installer A: ϕ64 {2.52}, B: ϕ49 {1.93} 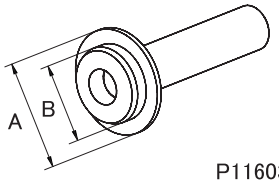 P116037	MH064251	Installation of oil seal

https://truckmanualshub.com/

EXTENSION HOUSING AND PARKING BRAKE <FE>

Mark	Tool name and shape	Part No.	Application
c	Eyebolt A: M14×1.5 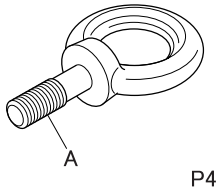 P41198	MH063515	Removal and installation of extension housing

◆Removal procedure◆

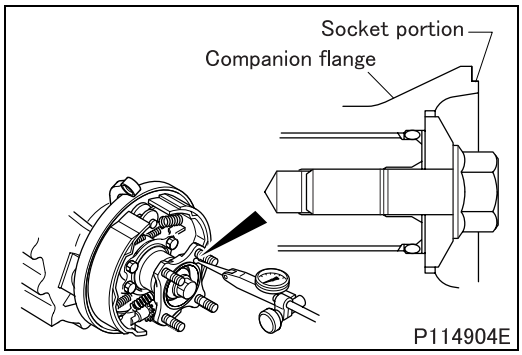

P114904E

■ **Inspection: Runout at socket portion of companion flange**

- After removing the parking brake drum, measure the runout at the socket portion of the companion flange.
- If the measurement exceeds the limit, replace the companion flange.

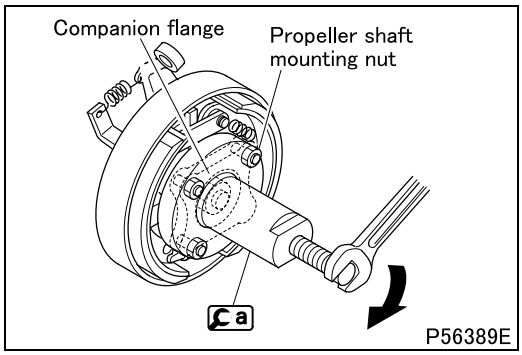

P56389E

■ **Removal: Companion flange**

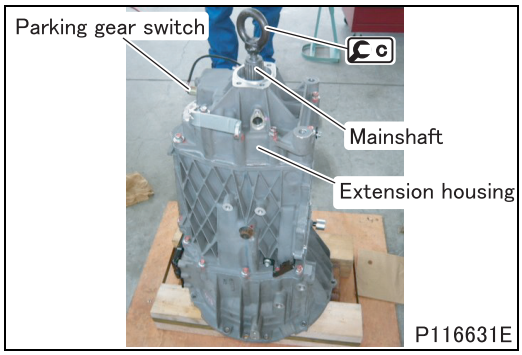

P116631E

■ **Removal: Parking gear switch and extension housing**

- Install c on the mainshaft. Lift the mainshaft and set it in the vertical orientation with the clutch housing facing down.
- Remove the parking gear switch.
- Remove the extension housing.

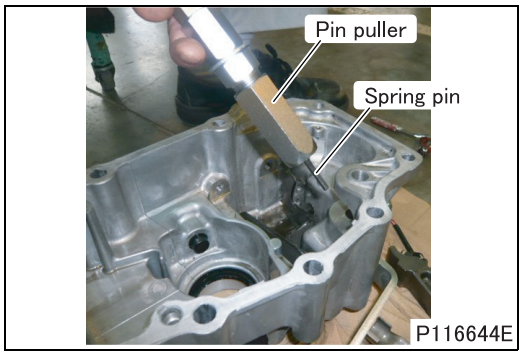

P116644E

■ **Removal: Spring pin**

- Use a commercially available pin puller and sliding hammer to remove the parking shift lever spring pin.

https://truckmanualshub.com/

◆Inspection procedure◆

■ Inspection: Parking sprag spring

- Measure the installed load at the installed length of the parking sprag spring.
- If the measurement is below the limit, replace the parking sprag spring.

◆Installation procedure◆

■ Installation: Parking gear

- Install the parking gear as follows.

[Heating]

- Heat the parking gear evenly to 150°C {302°F} using one of the following methods.

<Temperature-controlled chamber>

- Heat the parking gear with a temperature setting of 150°C {302°F} for more than 30 minutes.

<Ring heater>

- Repeat a heating process two to three times with a temperature setting of 150°C {302°F} so that the entire parking gear is evenly heated to 150°C {302°F}.

CAUTION ⚠

- **Repeat the heating process two to three times because sufficient thermal expansion of the parking gear cannot be achieved in a single heating process.**

<Oil bath>

- Heat automatic transmission fluid to 150°C {302°F} and immerse the parking gear in the oil bath.
- Since the automatic transmission fluid temperature drops when the parking gear is immersed in the oil bath, reheat the fluid to 150°C {302°F} and keep the parking gear immersed in the oil bath for more than 20 minutes while maintaining the fluid temperature at 150°C {302°F}.

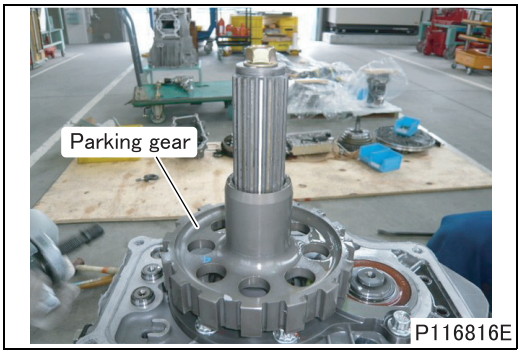

[Installation]

- Install the parking gear.

WARNING ⚠

- **Take care not to burn yourself when installing the hot parking gear.**

https://truckmanualshub.com/

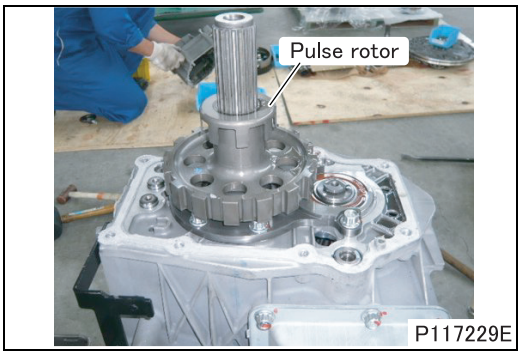

■ **Installation: Pulse rotor**

- Install the pulse rotor in the illustrated orientation.

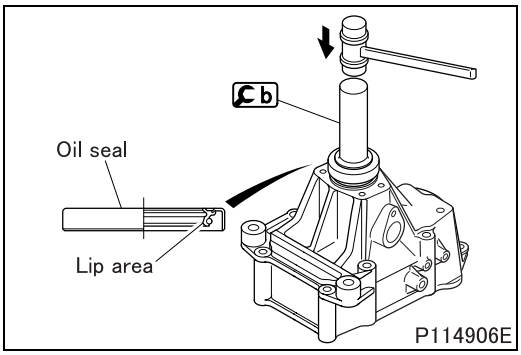

■ **Installation: Oil seal**

- Apply grease to the lip area of the oil seal.
- Install the oil seal in the extension housing in the illustrated direction using b.

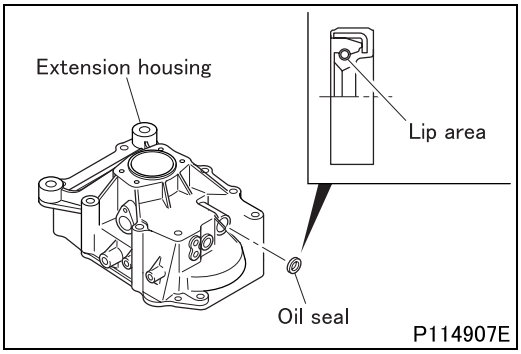

■ **Installation: Oil seal**

- Apply grease to the lip area of the oil seal
- Install the oil seal in the extension housing in the illustrated direction using a round bar with an outer diameter of 24 mm {0.94 in.}.

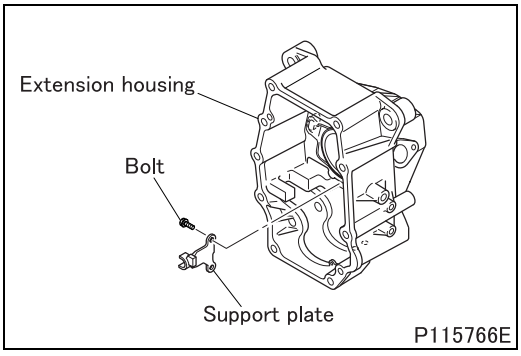

■ **Installation: Support plate**

- Install the support plate on the extension housing.

https://truckmanualshub.com/

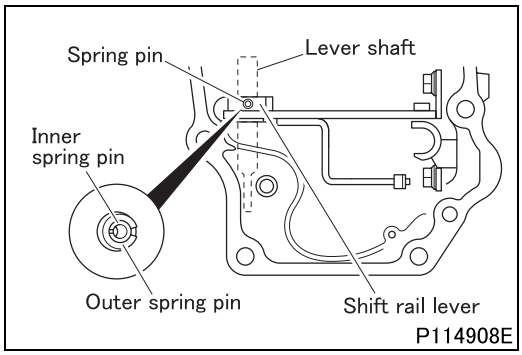

■ **Installation: Shift rail lever, lever shaft and spring pin**

- Install the shift rail lever and lever shaft on the extension housing.
- The spring pin is of a double-pin type with inner and outer springs.
- Drive the spring pin until it touches the shift rail lever to prevent the lever shaft from slipping off.
- After installing the spring pin, check that the spring pin is protruded from the shift rail lever by the following amount.
  Protrusion: 14 ± 1.5 mm {0.55 ± 0.059 in.}

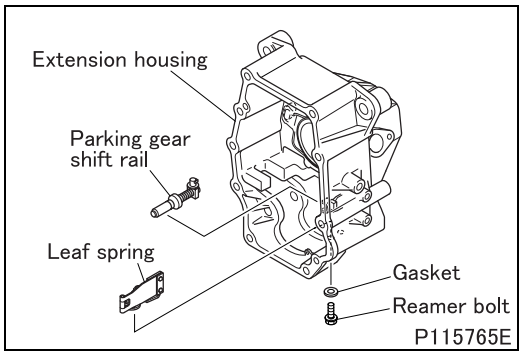

■ **Installation: Parking gear shift rail and leaf spring**

- Install the parking gear shift rail.
- Install the leaf spring on the extension housing using the reamer bolt.

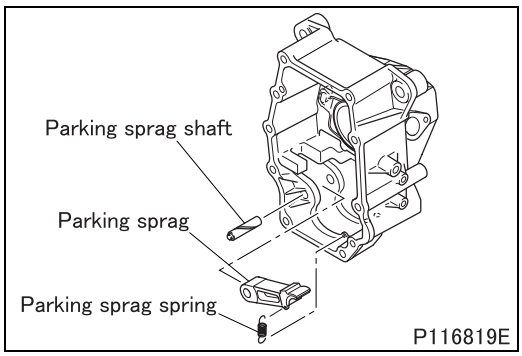

■ **Installation: Parking sprag, parking sprag shaft and parking sprag spring**

- Install each part.

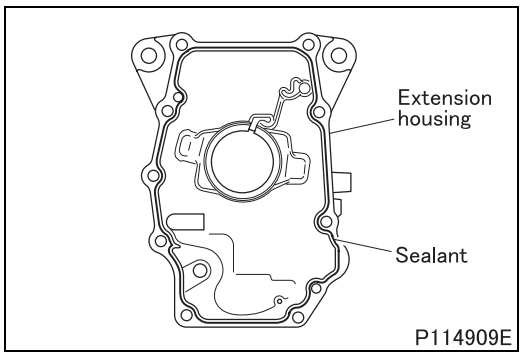

■ **Installation: Extension housing**

[Applying sealant]

- Apply sealant following manners shown below.

CAUTION ⚠

- **Remove any sealant remaining in the bolt holes before installation. Otherwise damage may result.**
- **Take care not to apply sealant under any of the following conditions. Otherwise it causes oil leak.**
  - **There is dust, oil, grease, etc. on the mating surface.**
  - **The diameter or thickness of the applied sealant is extremely different at each part.**
  - **The applied sealant has some breaks.**

<Case of using nozzle gun>

- Clean the mating surfaces of each part.
- Apply sealant on the width center of the mating surfaces so that the diameter of the applied sealant is the same as the diameter of the nozzle. The line of applying sealant is illustrated.

https://truckmanualshub.com/

<Case of using spatula, etc.>

- Clean the mating surfaces of each part.
- Apply sealant evenly on the entire mating surfaces.

[Installation]

- After applying the sealant, install the extension housing before the sealant dries. Be sure not to allow the sealant to be displaced.
- Do not start the engine within one hour after installing the extension housing.
- When loosening or removing extension housing mounting bolts, be sure to reapply the sealant.

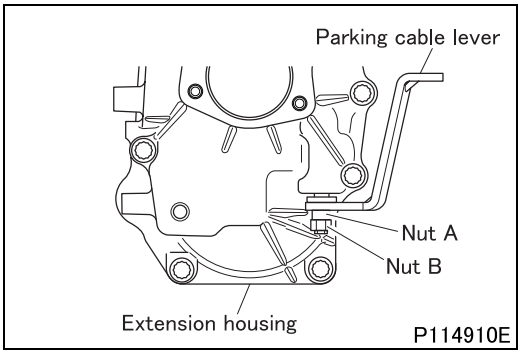

■ Installation: Parking cable lever

- Install the parking cable lever, and then tighten nut A.
- While holding nut A with a wrench or the like, tighten nut B.

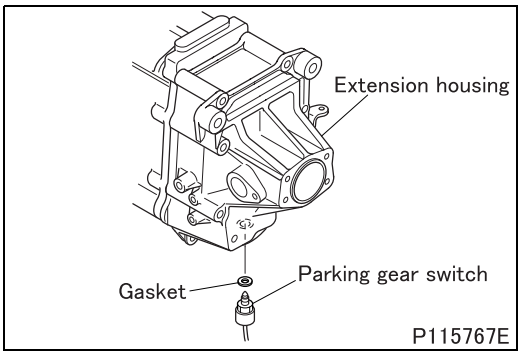

■ Installation: Parking gear switch

- Apply sealant to the threads of the parking gear switch, and then install the switch on the extension housing.

CAUTION ⚠

- **Remove any sealant remaining in the bolt hole before installation. Otherwise damage may result.**

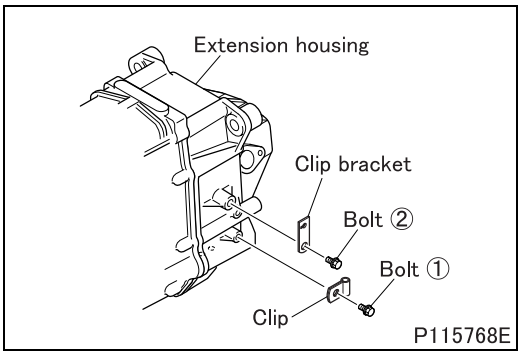

■ Installation: Clip and clip bracket

- Install the clip and clip bracket on the extension housing.

https://truckmanualshub.com/

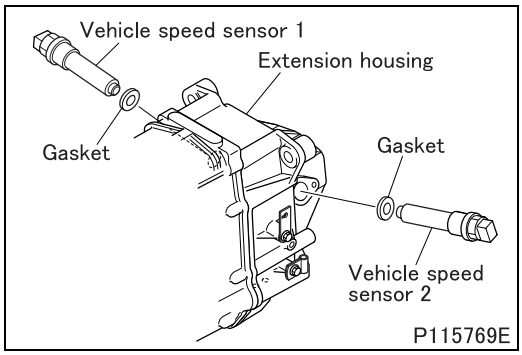

■ **Installation: Vehicle speed sensor**

- Install the vehicle speed sensor on the extension housing.

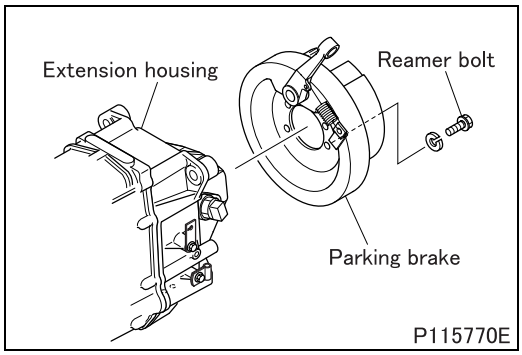

■ **Installation: Parking brake**

- Install the parking brake on the extension housing using the reamer bolt.

■ **Installation: Companion flange**

- Install the companion flange as follows.

[Heating]

- Heat the companion flange evenly to 140°C {284°F} using one of the following methods.

<Temperature-controlled chamber>

- Heat the companion flange with a temperature setting of 140°C {284°F} for more than 30 minutes.

<Ring heater>

- Repeat a heating process two to three times with a temperature setting of 140°C {284°F} so that the entire companion flange is evenly heated to 140°C {284°F}.
- Measure the temperature on the boss, not on the flange.

CAUTION ⚠

- **Repeat the heating process two to three times because sufficient thermal expansion of the companion flange cannot be achieved in a single heating process.**

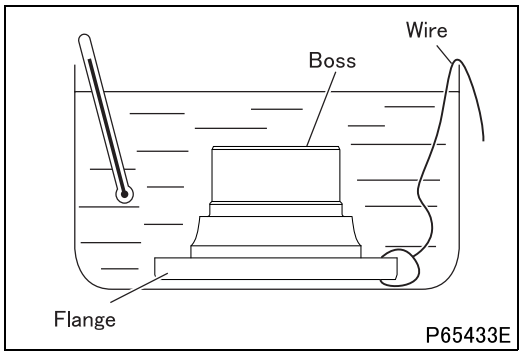

<Oil bath>

- Heat automatic transmission fluid to 140°C {284°F} and immerse the companion flange in the oil bath in the illustrated orientation.

CAUTION ⚠

- **Be sure to put the companion flange in the oil bath with its boss facing up. If the boss is facing down, its edge will make direct contact with the heat source, thus heating the companion flange to higher than 140°C {284°F}.**

https://truckmanualshub.com/

• Since the automatic transmission fluid temperature drops when the companion flange is immersed in the oil bath, reheat the fluid to 140°C {284°F} and keep the companion flange immersed in the oil bath for more than 20 minutes while maintaining the fluid temperature at 140°C {284°F}.

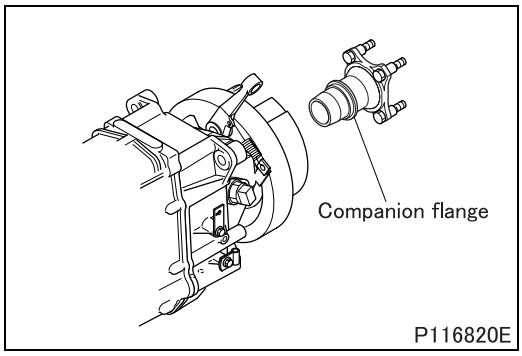

[Installation]

• Install the companion flange.

WARNING ⚠

- **Take care not to burn yourself when installing the hot companion flange**

CAUTION ⚠

- **If the companion flange is too hot, it may cause damage to the oil seal on the extension housing. Do not overheat the companion flange.**

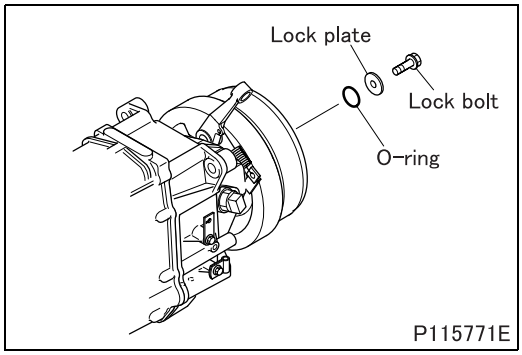

■ Installation: O-ring, lock plate and lock bolt

• Apply grease to the O-ring and install it between the companion flange and mainshaft, and then install the lock plate with the lock bolt.

https://truckmanualshub.com/

M E M O

https://truckmanualshub.com/

TRANSFER CASE ADAPTER <FG>

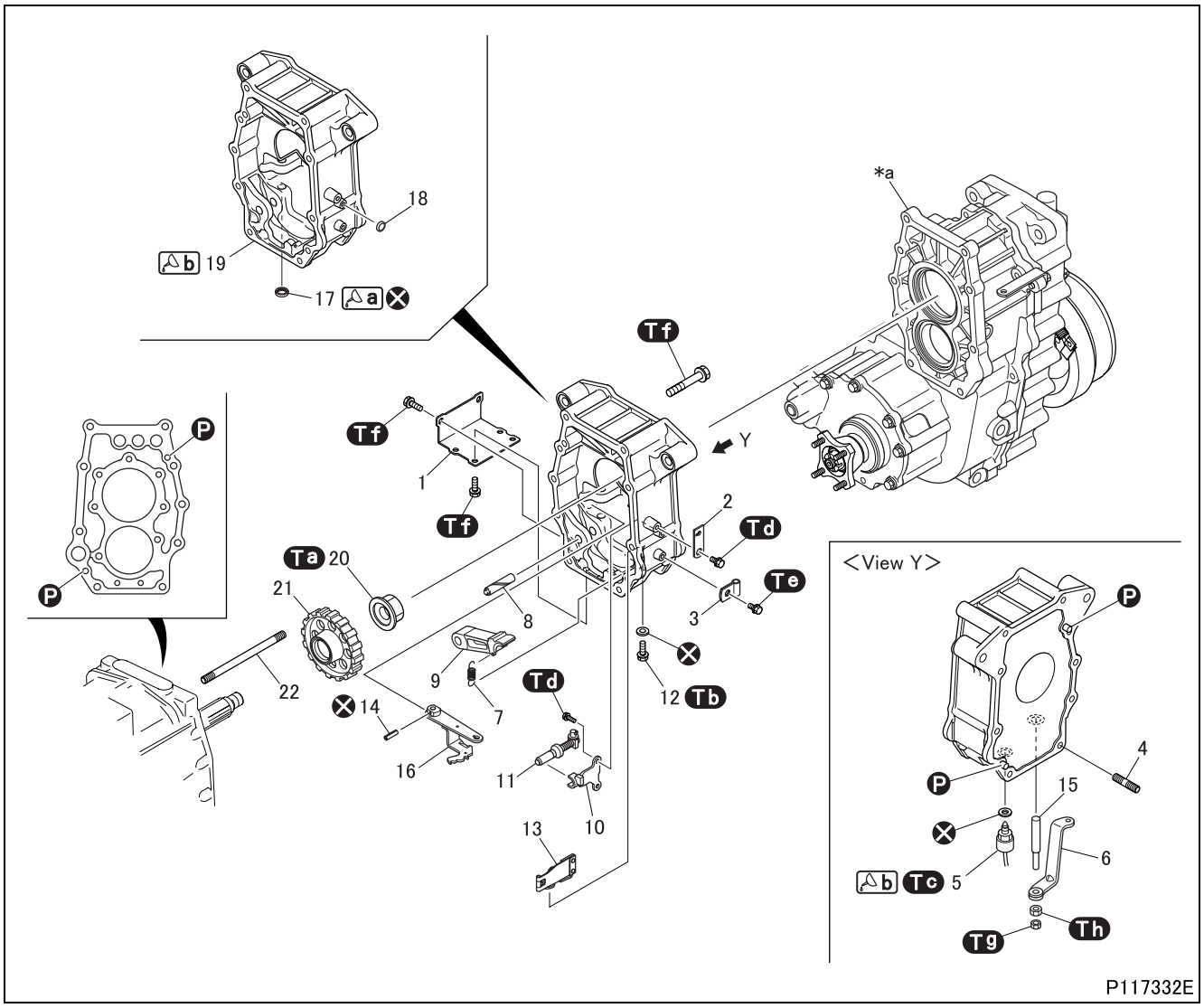

● **Removal sequence**

1	Transfer case adapter cover	**10**	Support plate	**19**	Transfer case adapter
2	Clip bracket	**11**	Parking gear shift rail	**20**	Lock nut
3	Clip	**12**	Reamer bolt	**21**	Parking gear
4	Stud bolt	**13**	Leaf spring	**22**	Stud bolt
5	Parking gear switch	**14**	Spring pin		
6	Parking cable lever	**15**	Lever shaft	***a**:	Transfer (See Gr24.)
7	Parking sprag spring	**16**	Shift rail lever	Ⓟ:	Locating pin
8	Parking sprag shaft	**17**	Oil seal	⊗:	Non-reusable parts
9	Parking sprag	**18**	Sealing cap		

● **Installation sequence**

Follow the removal sequence in reverse.

Service standards (Unit: mm {in.})

Location	Maintenance item	Standard value	Limit	Remedy
7	Parking sprag spring installed load (installed length 46.4 {1.83})	19.5 N {4.4 lbs,2.0 kgf}	13.7 N {3.1 lbs, 1.4 kgf}	Replace

https://truckmanualshub.com/

Tightening torque (Unit: N·m {ft.lbs, kgf·m})

Mark	Parts to be tightened	Tightening torque	Remarks
Ta	Lock nut	441 to 539 {325 to 395, 45 to 55}	–
Tb	Reamer bolt	14 to 16 {10 to 12, 1.4 to 1.6}	–
Tc	Parking gear switch	29.4 to 39.2 {22 to 29, 3.0 to 4.0}	Sealant
Td	Bolt (clip bracket mounting)	10 to 15 {7.4 to 11.0, 1.0 to 1.5}	–
	Bolt (support plate mounting)		
Te	Bolt (clip mounting)	19 to 28 {14 to 21, 1.9 to 2.9}	–
Tf	Bolt (transfer case adapter cover mounting)	45.8 {34, 4.7}	–
	Bolt (transfer case adapter mounting)		
Tg	Nut (parking cable lever mounting)	30.5 {22, 3.1}	–
Th	Nut (parking cable lever mounting)	25.4 {19, 2.6}	–

Lubricant and/or sealant

Mark	Points of application	Specified lubricant and/or sealant	Quantity
La	Lip area of oil seal	Wheel bearing grease	As required
Lb	Mating surface of transfer case adapter and transmission case	ThreeBond 1215	As required
	Thread area of parking gear switch		

Special tools (Unit: mm {in.})

Mark	Tool name and shape	Part No.	Application
Ca	Eyebolt A: M10×1.5 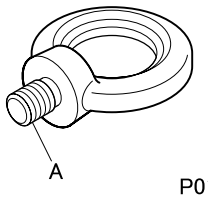 P01140	MH062340	Removal and installation of transfer case adapter
Cb	Socket wrench A: 60 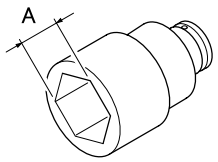 P45902	MH064209	Removal and installation of lock nut

https://truckmanualshub.com/

TRANSFER CASE ADAPTER <FG>

◆Removal procedure◆

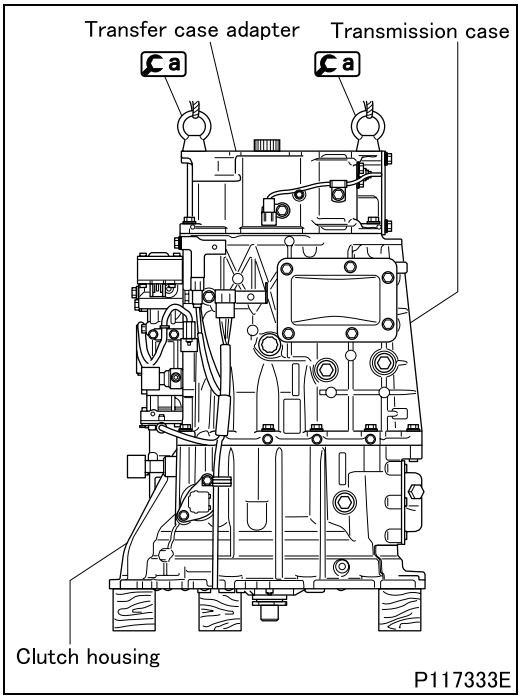

■ **Removal: Parking gear switch and transfer case adapter**

- Install a on the transfer case adapter. Lift the transmission using the transfer case adapter and set it in the vertical orientation with the clutch housing facing down.
- Remove the parking gear switch.
- Remove the transfer case adapter.

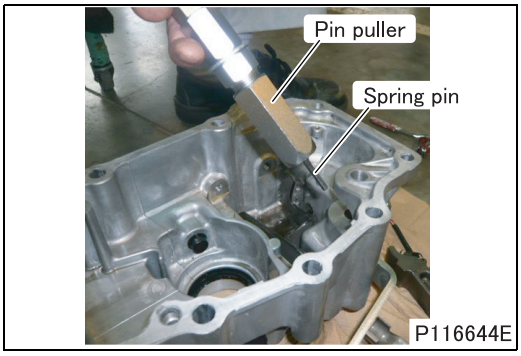

■ **Removal: Spring pin**

- Use a commercially available pin puller and sliding hammer to remove the parking shift lever spring pin.

◆Inspection procedure◆

■ **Inspection: Parking sprag spring**

- Measure the installed load at the installed length of the parking sprag spring.
- If the measurement is below the limit, replace the parking sprag spring.

◆Installation procedure◆

■ **Installation: Parking gear**

- Install the parking gear as follows.

[Heating]

- Heat the parking gear evenly to 150°C {302°F} using one of the following methods.

<Temperature-controlled chamber>

- Heat the parking gear with a temperature setting of 150°C {302°F} for more than 30 minutes.

https://truckmanualshub.com/

<Ring heater>

- Repeat a heating process two to three times with a temperature setting of 150°C {302°F} so that the entire parking gear is evenly heated to 150°C {302°F}.

CAUTION ⚠

- **Repeat the heating process two to three times because sufficient thermal expansion of the parking gear cannot be achieved in a single heating process.**

<Oil bath>

- Heat automatic transmission fluid to 150°C {302°F} and immerse the parking gear in the oil bath.
- Since the automatic transmission fluid temperature drops when the parking gear is immersed in the oil bath, reheat the fluid to 150°C {302°F} and keep the parking gear immersed in the oil bath for more than 20 minutes while maintaining the fluid temperature at 150°C {302°F}.

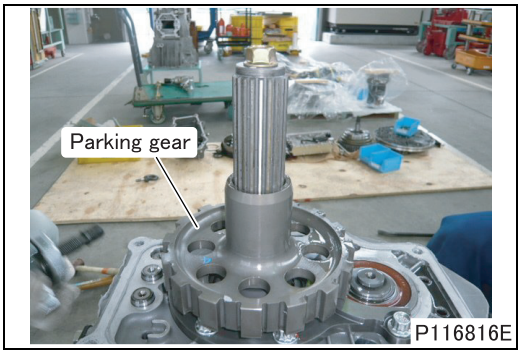

[Installation]

- Install the parking gear.

WARNING ⚠

- **Take care not to burn yourself when installing the hot parking gear.**

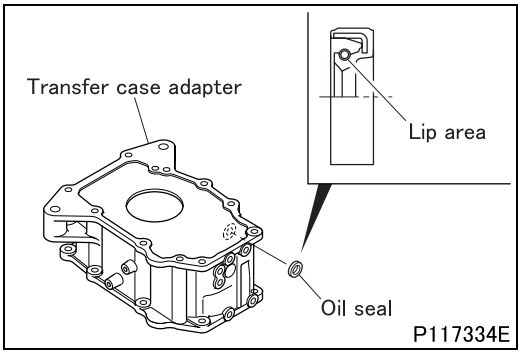

■ Installation: Oil seal

- Apply grease to the lip area of the oil seal.
- Install the oil seal in the transfer case adapter in the illustrated direction using a round bar with an outer diameter of 24 mm {0.94 in.}.

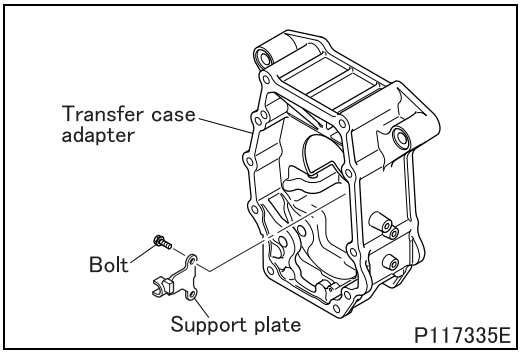

■ Installation: Support plate

- Install the support plate on the transfer case adapter.

https://truckmanualshub.com/

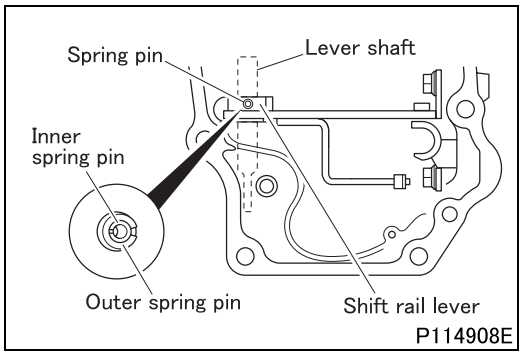

■ **Installation: Shift rail lever, lever shaft and spring pin**

- Install the shift rail lever and lever shaft on the transfer case adapter.
- The spring pin is of a double-pin type with inner and outer springs.
- Drive the spring pin until it touches the shift rail lever to prevent the lever shaft from slipping off.
- After installing the spring pin, check that the spring pin is protruded from the shift rail lever by the following amount.
  Protrusion: 14 ± 1.5 mm {0.55 ± 0.059 in.}

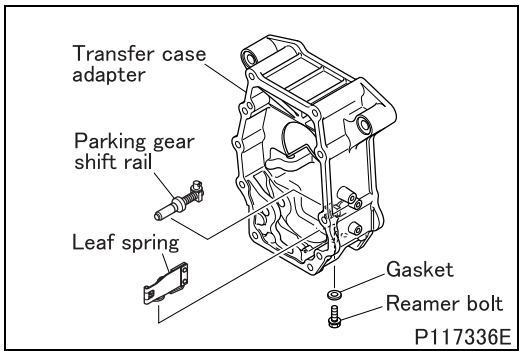

■ **Installation: Parking gear shift rail and leaf spring**

- Install the parking gear shift rail.
- Install the leaf spring on the transfer case adapter using the reamer bolt.

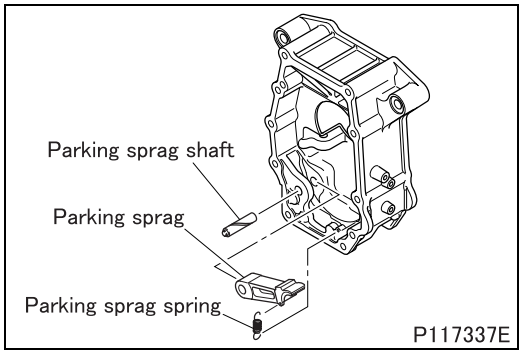

■ **Installation: Parking sprag, parking sprag shaft and parking sprag spring**

- Install each part.

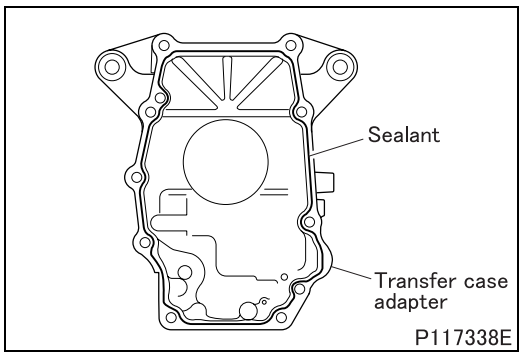

■ **Installation: Transfer case adapter**

[Applying sealant]

- Apply sealant following manners shown below.

CAUTION ⚠

- **Remove any sealant remaining in the bolt holes before installation. Otherwise damage may result.**
- **Take care not to apply sealant under any of the following conditions. Otherwise it causes oil leak.**
  - **There is dust, oil, grease, etc. on the mating surface.**
  - **The diameter or thickness of the applied sealant is extremely different at each part.**
  - **The applied sealant has some breaks.**

<Case of using nozzle gun>

- Clean the mating surfaces of each part.
- Apply sealant on the width center of the mating surfaces so that the diameter of the applied sealant is the same as the diameter of the nozzle. The line of applying sealant is illustrated.

https://truckmanualshub.com/

<Case of using spatula, etc.>

- Clean the mating surfaces of each part.
- Apply sealant evenly on the entire mating surfaces.

[Installation]

- After applying the sealant, install the transfer case adapter before the sealant dries. Be sure not to allow the sealant to be displaced.
- Do not start the engine within one hour after installing the transfer case adapter.
- When loosening or removing transfer case adapter mounting bolts, be sure to reapply the sealant.

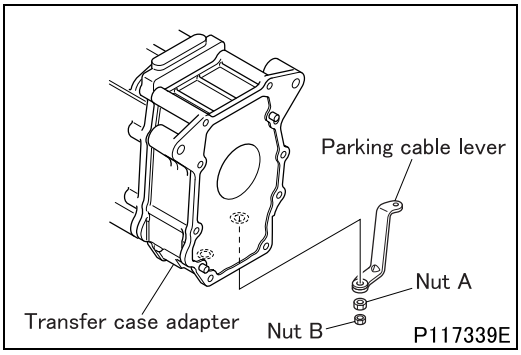

■ Installation: Parking cable lever

- Install the parking cable lever, and then tighten nut A.
- While holding nut A with a wrench or the like, tighten nut B.

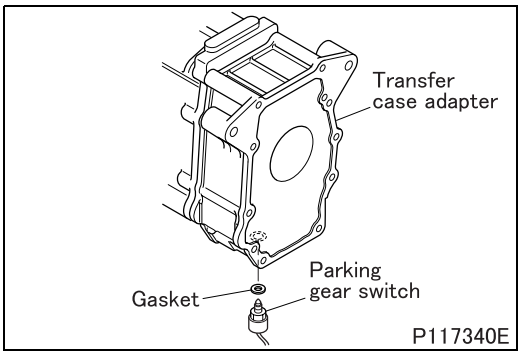

■ Installation: Parking gear switch

- Apply sealant to the threads of the parking gear switch, and then install the switch on the transfer case adapter.

CAUTION ⚠

- **Remove any sealant remaining in the bolt hole before installation. Otherwise damage may result.**

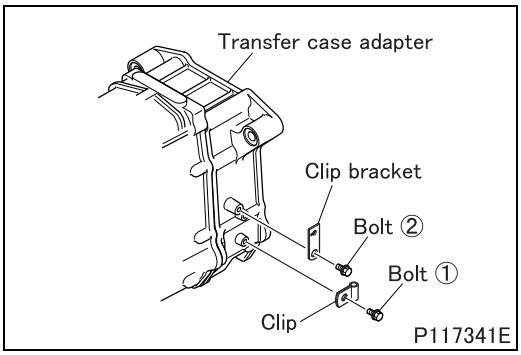

■ Installation: Clip and clip bracket

- Install the clip and clip bracket on the transfer case adapter.

https://truckmanualshub.com/

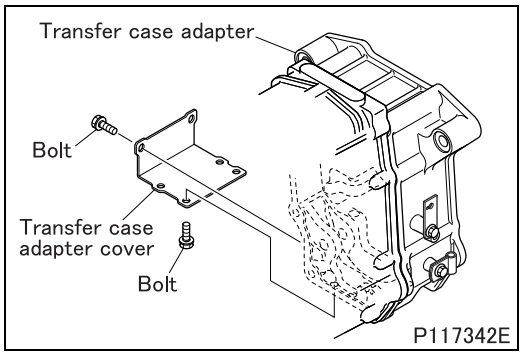

■ **Installation: Transfer case adapter cover**

- Install the transfer case adapter cover on the transfer case adapter.

https://truckmanualshub.com/

M E M O

https://truckmanualshub.com/

REVERSE IDLER GEAR <WITHOUT LARGE-CAPACITY POWER TAKE-OFF>

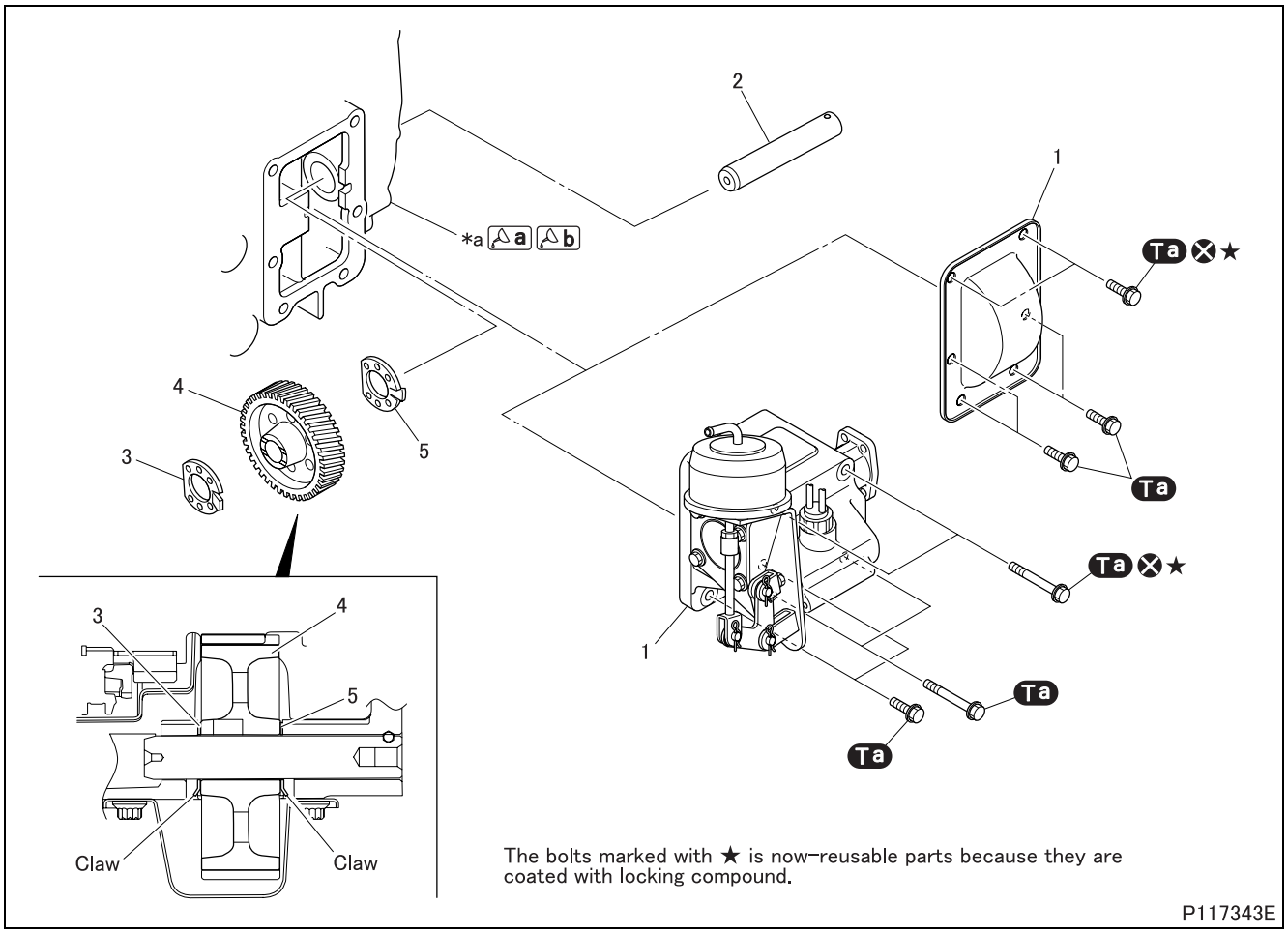

● Disassembly sequence

1 Power take-off cover <Without power take-off>
Transmission power take-off
<With power take-off> (See later section.)
2 Reverse idler gear shaft
3 Side washer
4 Reverse idler gear
5 Side washer

***a**: Transmission case
⊗: Non-reusable parts

● Assembly sequence

Follow the disassembly sequence in reverse.

Service standards (Unit: mm {in.})

Location	Maintenance item	Standard value	Limit	Remedy
–	Play in diameter direction of reverse idler gear	0.045 to 0.107 {0.0018 to 0.0042}	0.4 {0.016}	Replace
	End play of reverse idler gear	0.22 to 0.68 {0.0087 to 0.027}	1.0 {0.039}	

Tightening torque (Unit: N·m {ft.lbs, kgf·m})

Mark	Parts to be tightened	Tightening torque	Remarks
Ta	Bolt (power take-off cover or transmission power take-off mounting)	44.5 {33, 4.54}	–

https://truckmanualshub.com/

Lubricant and/or sealant

Mark	Points of application	Specified lubricant and/or sealant	Quantity
a	Power take-off cover mounting surface of transmission case	Loctite 5999	As required
b	Transmission power take-off mounting surface of transmission case	ThreeBond 1215	As required

Special tools (Unit: mm {in.})

Mark	Tool name and shape	Part No.	Application
a	Reverse shaft puller A: M12 × 1.25 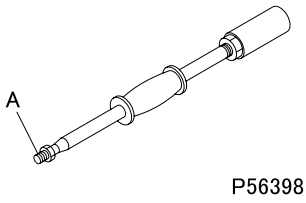 P56398	03726-82000	Removal of reverse idler gear shaft

◆Removal procedure◆

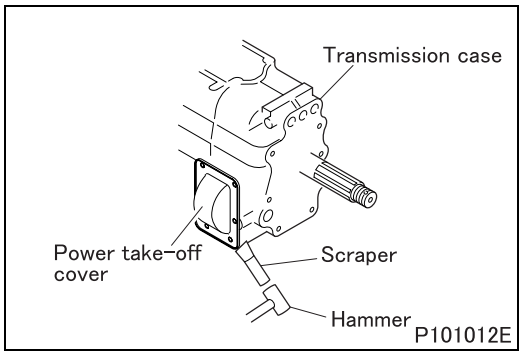

P101012E

■ Removal: Power take-off cover

- Insert a scraper from the lower right or lower left of the power take-off cover to remove the power take-off cover.

CAUTION ⚠

- **Beware that prying the scraper halfway could deform the power take-off cover or damage the transmission case.**

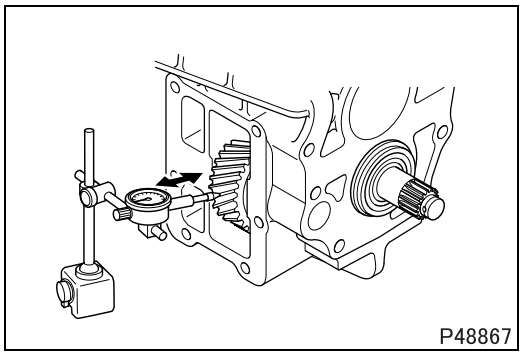
P48867

■ Inspection: Reverse idler gear

- After the power take-off cover or the transmission power take-off is removed, perform the following check. If the measurement exceeds the limit, replace defective parts.
- Check the play again after assembly and make sure it does not exceed the limit.

(1) Play in diameter direction

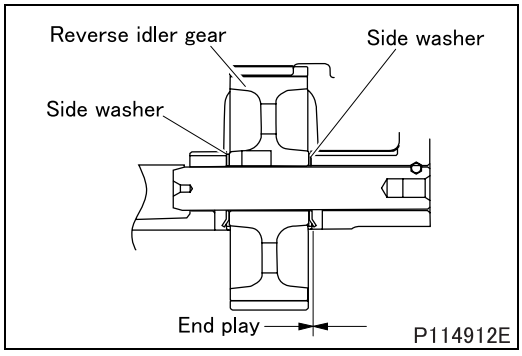

P114912E

(2) End play

- Measure the end play using feeler gauge.

https://truckmanualshub.com/

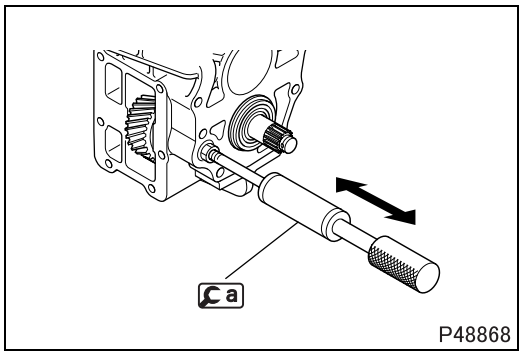

■ **Removal: Reverse idler gear shaft**

- Draw out the reverse idler gear shaft using a.

◆Installation procedure◆

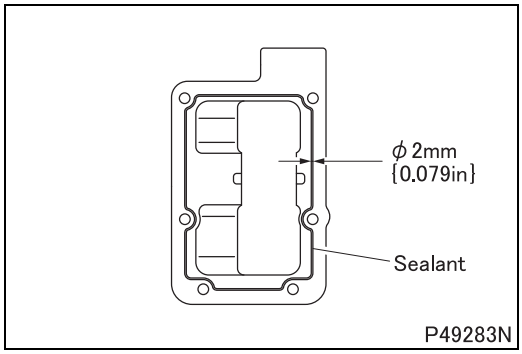

■ **Installation: Power take-off cover or Transmission power take-off**

[Applying sealant]

- Apply sealant onto the transmission case, following manners shown below.

CAUTION ⚠

- **Remove any sealant remaining in the bolt holes before installation. Otherwise damage may result.**
- **Take care not to apply sealant under any of the following conditions. Otherwise it causes oil leak.**
  - **There is dust, oil, grease, etc. on the mating surface.**
  - **The diameter or thickness of the applied sealant is extremely different at each part.**
  - **The applied sealant has some breaks.**

<Case of using nozzle gun>

- Clean the mating surfaces of each part.
- Apply sealant on the width center of the mating surfaces so that the diameter of the applied sealant is the same as the diameter of the nozzle. The line of applying sealant is illustrated.

<Case of using spatula, etc.>

- Clean the mating surfaces of each part.
- Apply sealant evenly on the entire mating surfaces.

https://truckmanualshub.com/

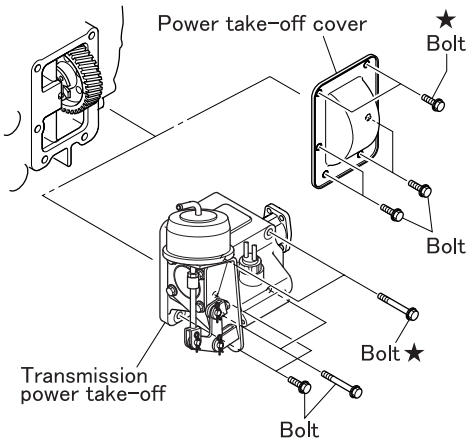

The bolts marked with ★ is now-reusable parts because they are coated with locking compound.

P117344E

[Installation]

- Install the power take-off cover or transmission power take-off according the following manners after applying the sealant. Be sure not to allow the sealant to be displaced.
  Power take-off cover: Install in three minutes
  Transmission power take-off: Install before sealant dries
- Do not start the engine within one hour after installing the power take-off cover or transmission power take-off.
- When loosening or removing power take-off cover or transmission power take-off mounting bolts, be sure to reapply the sealant.

https://truckmanualshub.com/

REVERSE IDLER GEAR <WITH LARGE-CAPACITY POWER TAKE-OFF>

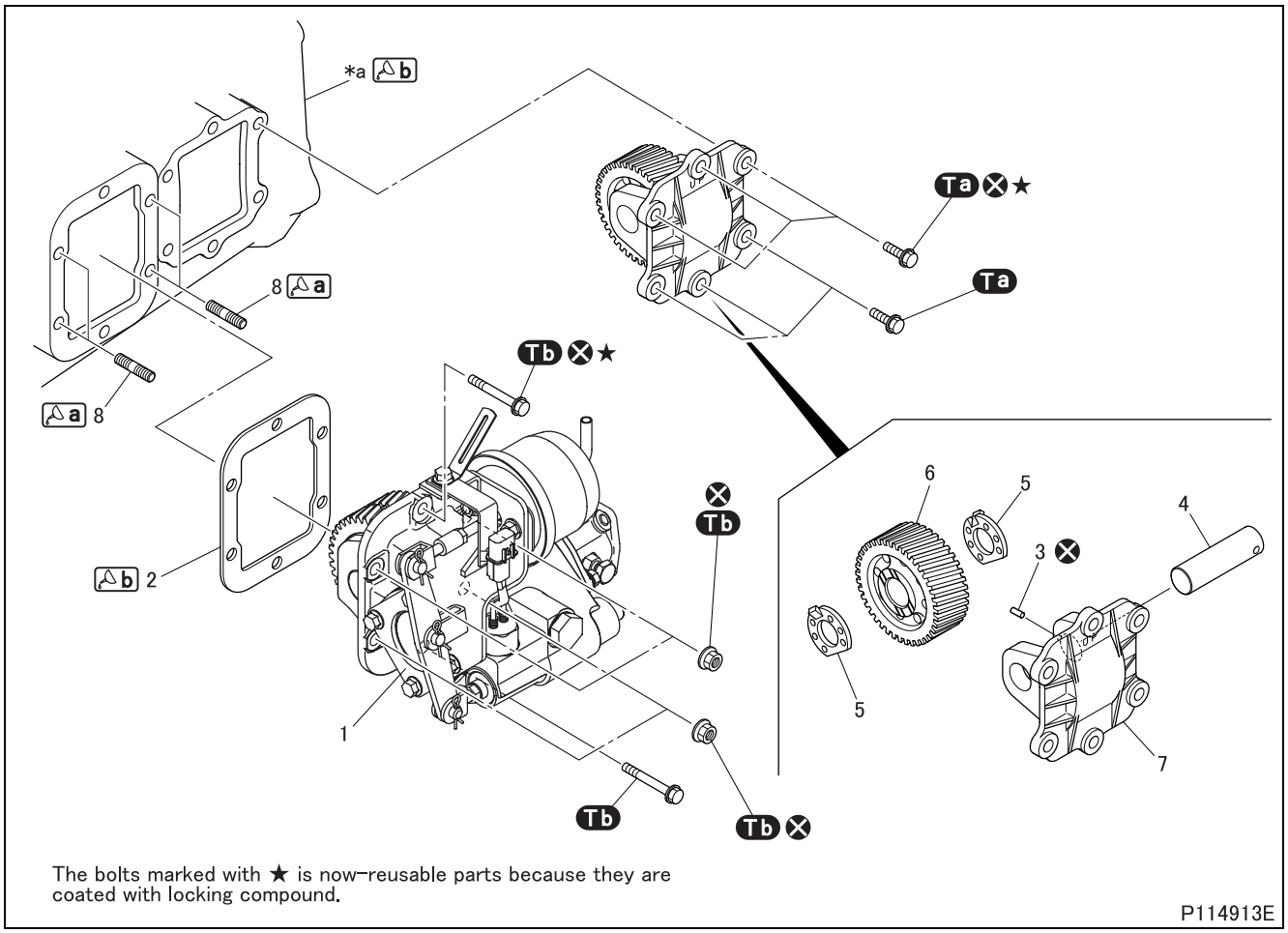

● Disassembly sequence

1 Transmission power take-off (See later section.)
2 Adjusting gasket
3 Spring pin
4 Reverse idler gear shaft
5 Side washer
6 Reverse idler gear
7 Reverse idler gear cover
8 Stud bolt

***a**: Transmission case
⊗: Non-reusable parts

● Assembly sequence

Follow the disassembly sequence in reverse.

Service standards (Unit: mm {in.})

Location	Maintenance item	Standard value	Limit	Remedy
–	Play in diameter direction of reverse idler gear	0.045 to 0.107 {0.0018 to 0.0042}	0.4 {0.016}	Replace
	End play of reverse idler gear	0.22 to 0.68 {0.0087 to 0.027}	1.0 {0.039}	
1, *a	Backlash between power take-off idler gear of transmission power take-off and countershaft constant mesh gear 1 and 3rd gear of transmission	0.08 to 0.26 {0.0031 to 0.010}	–	Replace

https://truckmanualshub.com/

Tightening torque (Unit: N·m {ft.lbs, kgf·m})

Mark	Parts to be tightened	Tightening torque	Remarks
Ta	Bolt (reverse idler gear cover mounting)	44.5 {33, 4.54}	–
Tb	Bolt (transmission power take-off mounting)	40.2 {30, 4.1}	–

Lubricant and/or sealant

Mark	Points of application	Specified lubricant and/or sealant	Quantity
a	Thread area of stud bolt	3M™ Fastener Adhesive 2353	As required
b	Transmission power take-off mounting surface of transmission case	ThreeBond 1215	As required
	Transmission power take-off mounting surface of adjusting gasket		

◆Removal procedure◆

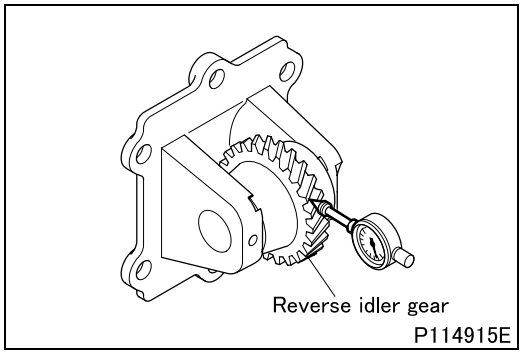

■ **Inspection: Reverse idler gear**

- After the reverse idler gear cover is removed, perform the following check. If the measurement exceeds the limit, replace defective parts.
- Check the play again after assembly and make sure it does not exceed the limit.

(1) Play in diameter direction

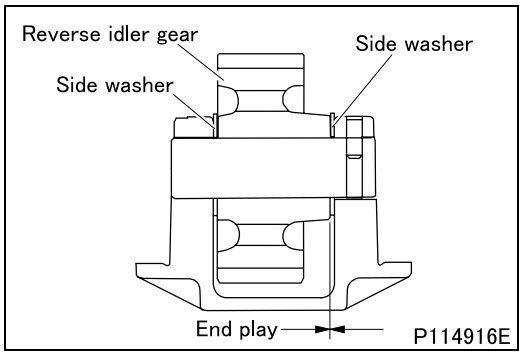

(2) End play

- Measure the end play using feeler gauge.

◆Installation procedure◆

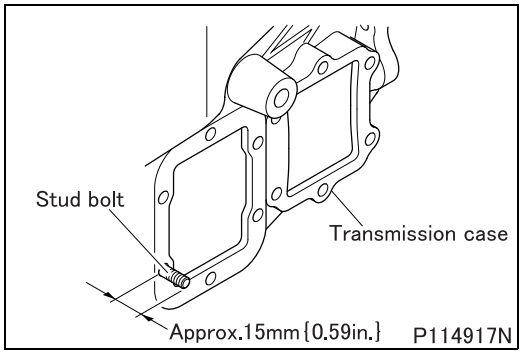

■ **Installation: Stud**

- Apply sealant to the threads of the stud where the transmission case is to be installed.
- Install the stud so that it protrudes from the transmission case by the amount shown in the drawing.

https://truckmanualshub.com/

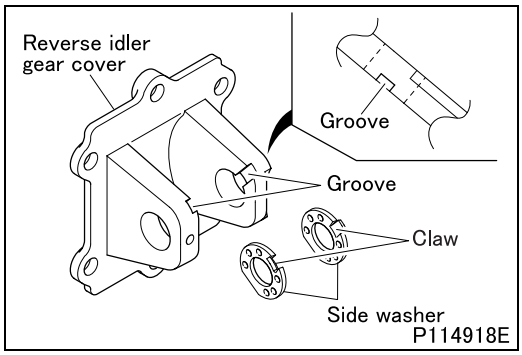

■ **Installation: Side washer**

- Install the side washers by aligning the tabs with the grooves in the reverse idler gear cover.

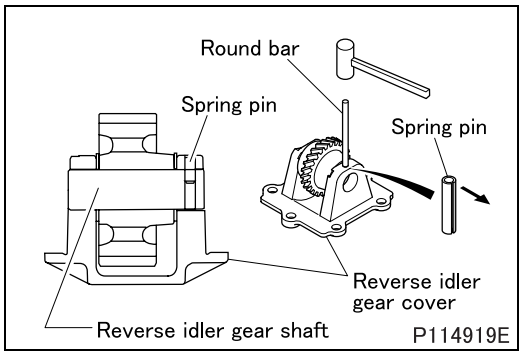

■ **Installation: Spring pin**

- Install the spring pin using a round bar with an outer diameter of 6 mm {0.24 in.} in the illustrated orientation.

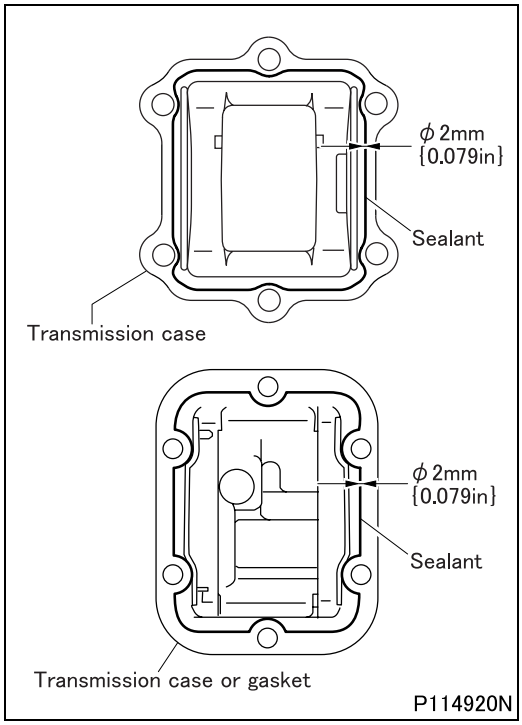

■ **Installation: Reverse idler gear cover or Transmission power take-off**

[Applying sealant]

- Apply sealant onto the transmission case, following manners shown below.

CAUTION ⚠

- **Remove any sealant remaining in the bolt holes before installation. Otherwise damage may result.**
- **Take care not to apply sealant under any of the following conditions. Otherwise it causes oil leak.**
  - **There is dust, oil, grease, etc. on the mating surface.**
  - **The diameter or thickness of the applied sealant is extremely different at each part.**
  - **The applied sealant has some breaks.**

<Case of using nozzle gun>

- Clean the mating surfaces of each part.
- Apply sealant on the width center of the mating surfaces so that the diameter of the applied sealant is the same as the diameter of the nozzle. The line of applying sealant is illustrated.

<Case of using spatula, etc.>

- Clean the mating surfaces of each part.
- Apply sealant evenly on the entire mating surfaces.

https://truckmanualshub.com/

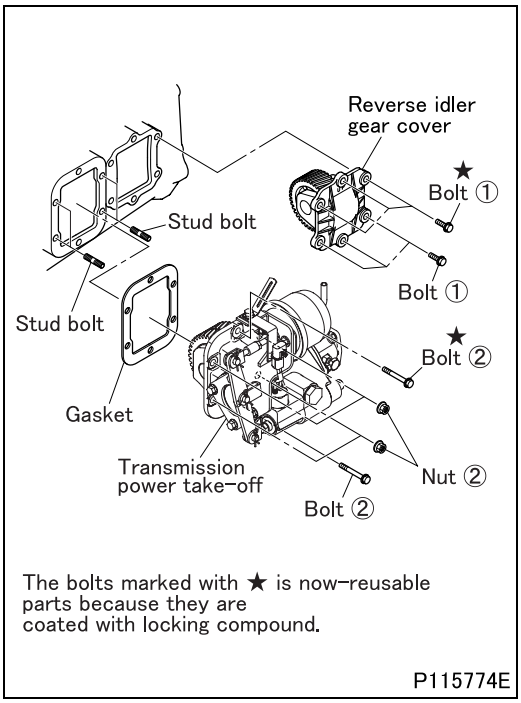

[Installation]

- Install the reverse idler gear cover or transmission power take-off according the following manners after applying the sealant. Be sure not to allow the sealant to be displaced.
  Reverse idler gear cover: Install in three minutes
  Transmission power take-off: Install before sealant dries
- Do not start the engine within one hour after installing the reverse idler gear cover or transmission power take-off.
- When loosening or removing reverse idler gear cover or transmission power take-off mounting bolts, be sure to reapply the sealant.

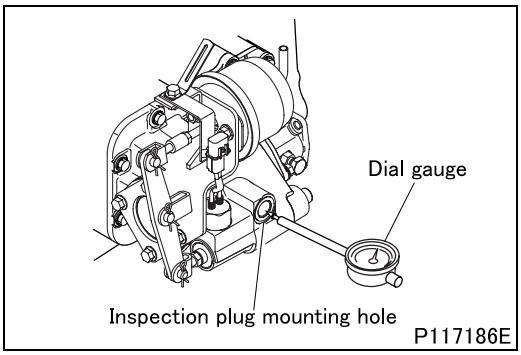

■ **Inspection: Backlash between power take-off idler gear of transmission power take-off and countershaft constant mesh 1st and 3rd gears of the transmission body**

- Engage transmission gears to hold the countershaft.
- Install any type of gasket.
  Gasket types: 0.13 ± 0.05, 0.25 ± 0.10 mm {0.0051 ± 0.0020, 0.0098 ± 0.0039 in.} (2 types)
- Insert a dial indicator through the inspection plug hole in the transmission power take-off and bring its tip into contact with the power take-off idler gear.
- Shift the power take-off to ON, and then measure the backlash by moving the power take-off output flange.
- If the measurement is deviated from the standard value, replace defective parts. (See later section.)

https://truckmanualshub.com/

TRANSMISSION BODY

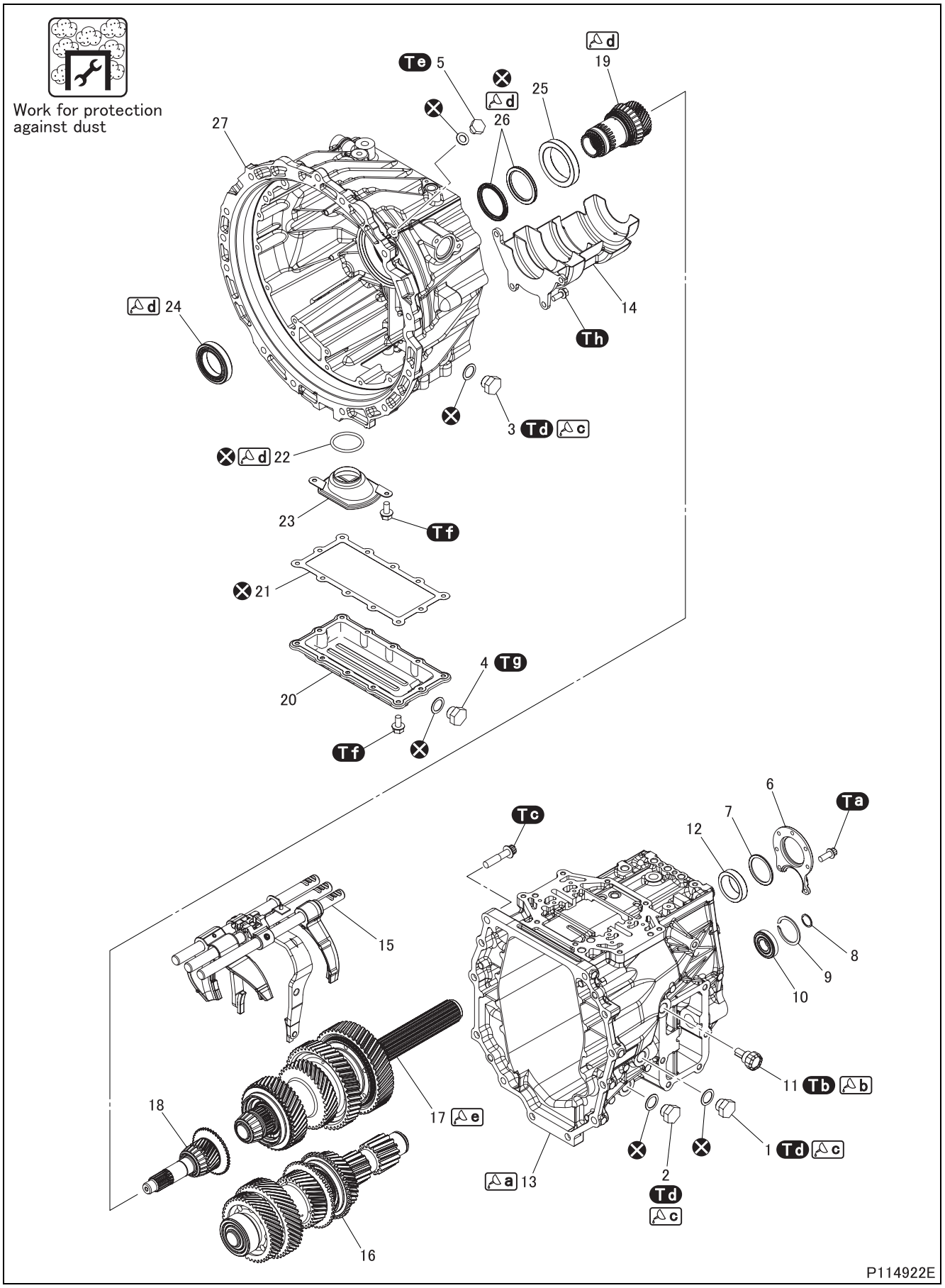

https://truckmanualshub.com/

● Disassembly sequence

1 Transmission oil inspection plug
2 Transmission oil drain plug
3 Automatic transmission fluid inspection plug
4 Automatic transmission fluid drain plug
5 Automatic transmission fluid drain plug
6 Rear bearing retainer
7 Shim
8 Snap ring
9 Snap ring
10 Countershaft rear bearing
11 Lever set bolt
12 Mainshaft rear bearing outer race
13 Transmission case
14 Oil separator
15 Shift rail and shift fork (See later section.)
16 Countershaft (See later section.)
17 Mainshaft (See later section.)
18 Inner drive pinion (See later section.)
19 Outer drive pinion (See later section.)
20 Oil pan
21 Oil pan gasket
22 O-ring
23 Oil filter
24 Outer drive pinion roller bearing outer race
25 Outer drive pinion taper bearing outer race
26 Oil seal
27 Clutch housing

Ⓟ: Locating pin
⊗: Non-reusable parts

- When disassembling the countershaft, drive pinion and mainshaft, first remove the valve body and dual clutch from the clutch housing. (See VALVE BODY AND DUAL CLUTCH.)
- If the countershaft, drive pinion and mainshaft are not disassembled, the shift rail and shift fork can be removed and disassembled on its own with the valve body and dual clutch mounted on the clutch housing.

: This work requires protection against dust. (See Gr00.)

- It is desirable that the job to service portions related to the hydraulic circuit of the transmission (DUONIC^{TM}) be performed in an environment comparable to that of a meeting room partitioned from the outside air. If it is not feasible to prepare such an environment, take necessary steps to protect the clutch housing with a vinyl bag for prevention of entry of sand and dust.
- Replace the vinyl bag immediately when it is broken during servicing.
- Cover the clutch housing with a plastic bag as described above.

● Assembly sequence

Follow the disassembly sequence in reverse.

Service standards (Unit: mm {in.})

Location	Maintenance item	Standard value	Limit	Remedy
17	Starting torque of mainshaft output side	1.5 N·m {1.1 ft.lbs, 0.15 kgf·m} or less	–	Replace

https://truckmanualshub.com/

Tightening torque (Unit: N·m {ft.lbs, kgf·m})

Mark	Parts to be tightened	Tightening torque	Remarks
Ta	Bolt (rear bearing retainer mounting)	44.5 {33, 4.5}	–
Tb	Lever set bolt	153 ± 23 {110 ± 17, 15.6 ± 2.3}	–
Tc	Bolt (transmission case mounting)	54 {40, 5.5}	–
Td	Inspection plug	68.6 ± 14.7 {51 ± 11, 7.0 ± 1.5}	–
	Drain plug		
Te	Drain plug	9 to 13 {0.7 to 9.6, 0.9 to 1.3}	–
Tf	Bolt (oil strainer mounting)	10.2 {7.5, 1.04}	–
	Bolt (oil pan mounting)		
Tg	Drain plug	39 {29, 4}	–
Th	Bolt (oil separator mounting)	23.8 {18, 2.4}	–

Lubricant and/or sealant

Mark	Points of application	Specified lubricant and/or sealant	Quantity
a	Transmission case mounting surface of clutch housing	ThreeBond 1215	As required
b	Thread area of lever set bolt	Loctite 271	As required
c	Thread area of inspection plug	ThreeBond 1105	As required
d	Thread area of drain plug		
e	O-ring	FUSO ATF-SP III	As required
	Sliding area of outer drive pinion roller bearing outer race		
	Lip area of oil seal		
	Sliding area of outer drive pinion		
f	Between rollers of pilot bearing	Molybdenum disulfide grease [NLGI No.2 (Li soap)]	As required

Special tools (Unit: mm {in.})

Mark	Tool name and shape	Part No.	Application
Ca	Snap ring expander 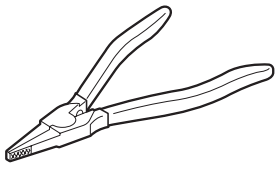 P01137	MH061268	Removal and installation of snap ring
Cb	Oil seal installer A: ϕ95 {3.74}, B: ϕ69 {2.72} 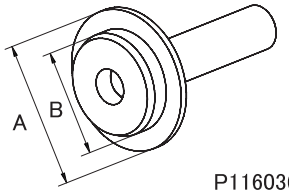 P116036	MH064250	Installation of oil seal
Cc	Bearing installer A: ϕ109 {4.29}, B: ϕ94 {3.70}, C: ϕ88 {3.46} 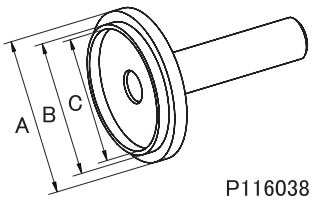 P116038	MH064247	Installation of outer drive pinion taper bearing outer race and outer drive pinion roller bearing outer race

https://truckmanualshub.com/

Mark	Tool name and shape	Part No.	Application
d	Bearing puller and installer A: ϕ76.8 {3.02}, B: ϕ30 {1.18} 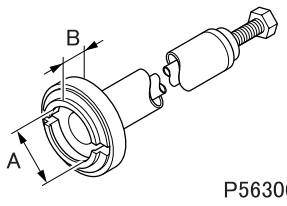 P56306	MH062696	Removal of countershaft rear bearing
e	Bearing installer A: ϕ45 {1.77}, B: ϕ41 {1.61} 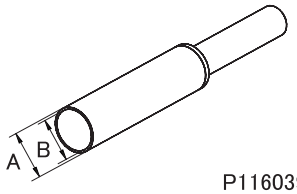 P116039	MH064244	Installation of countershaft rear bearing
f	Eyebolt A: M10×1.5 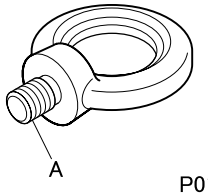 P01140	MH062340	Lifting of transmission case
g	Bearing installer A: ϕ87 {3.43}, B: ϕ80 {3.15} 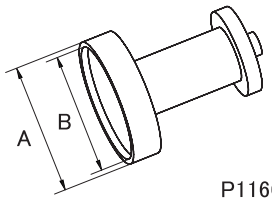 P116654	MH064255	Removal of outer drive pinion roller bearing outer race
h	Steel lifting band 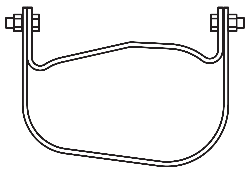 P116655	MH064187	Removal and installation of countershaft, mainshaft and inner drive pinion
i	Eyebolt A: M14×1.5 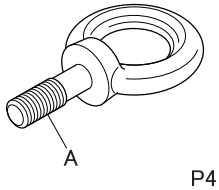 P41198	MH063515	
j	Shaft support bracket A: 66.5 {2.62} 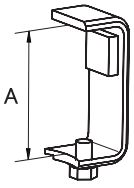 P116656	MH064259	For preventing inner drive pinion from falling out

https://truckmanualshub.com/

Mark	Tool name and shape	Part No.	Application
k	Mainshaft bearing fitting tool 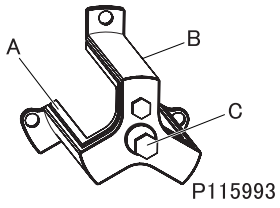 P115993 Component / Part No.: A Fitting tool plate — MH064186 B Fitting tool case — MH064185 C Bolt — MH063542	MH064183	For selecting mainshaft bearing shims
l	Bearing puller 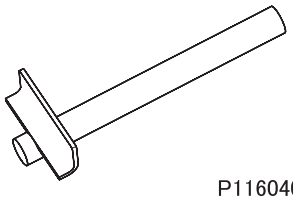 P116040	MH064254	Removal of outer drive pinion taper bearing outer race

◆Removal procedure◆

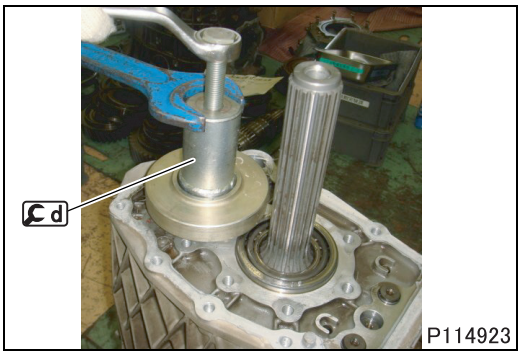

P114923

■ **Removal: Snap ring and countershaft rear bearing**

- Remove the snap ring using a.
- Remove the countershaft rear bearing using d.

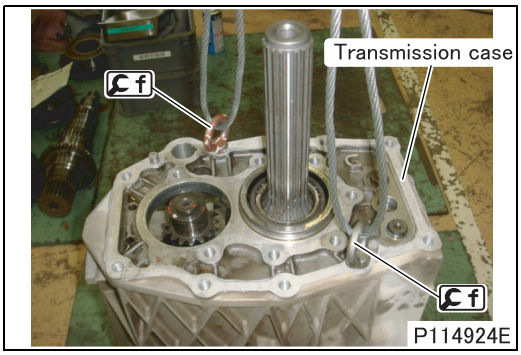

P114924E

■ **Removal: Transmission case**

- Install f on the transmission case for lifting it with a crane.
- Install the two f diagonally near the center of the transmission case.

https://truckmanualshub.com/

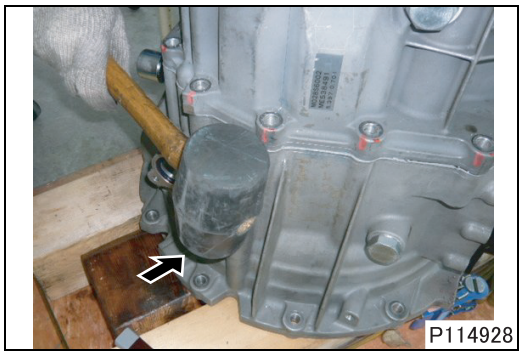
P114928

- After removing the bolts, lift the transmission case with a crane while hitting the rear ribs (indicated by an arrow) of the clutch housing with a plastic hammer to remove the transmission case.

CAUTION ⚠

- **Be sure to hit the ribs as illustrated because hitting other areas may break the clutch housing.**

■ **Removal: Mainshaft rear bearing outer race**

- Remove the mainshaft rear bearing outer race by using a plastic hammer on the inside of the transmission case.

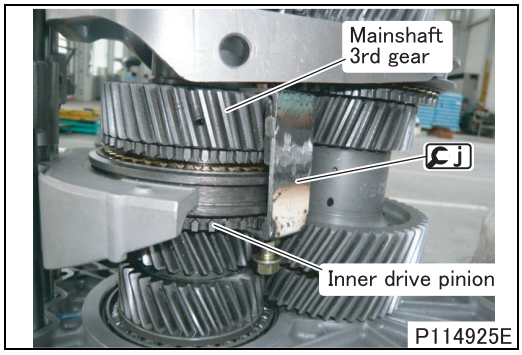

P114925E

■ **Removal: Shift rail and shift fork, countershaft, mainshaft, inner drive pinion and outer drive pinion**

- Install j on the mainshaft 3rd gear and inner drive pinion.

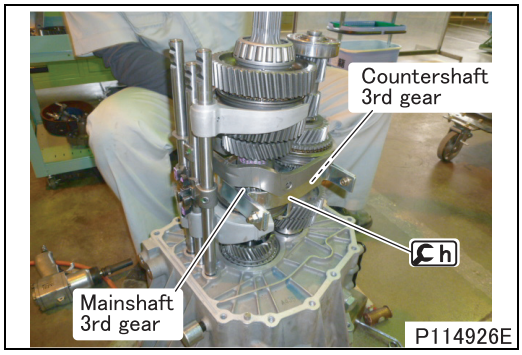

P114926E

- Fasten the 3rd gears of the mainshaft and countershaft with h.

https://truckmanualshub.com/

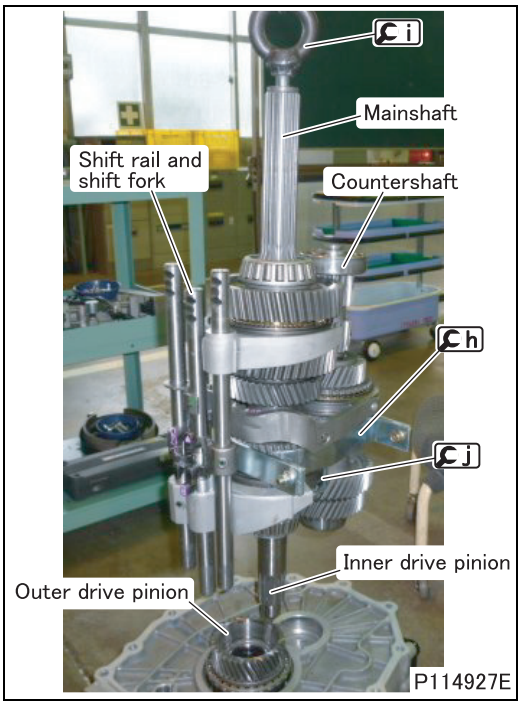

- Install i on the mainshaft for lifting it with a crane.
- Put a piece of wood on the clutch housing, and while hitting the wood with a plastic hammer, lift the mainshaft with a crane to remove it.
- When the mainshaft has been removed from the clutch housing, support the mainshaft with your hands to prevent if from inclining.
- Remove h and j, and then remove the mainshaft, countershaft and inner drive pinion.
- Remove the outer drive pinion.

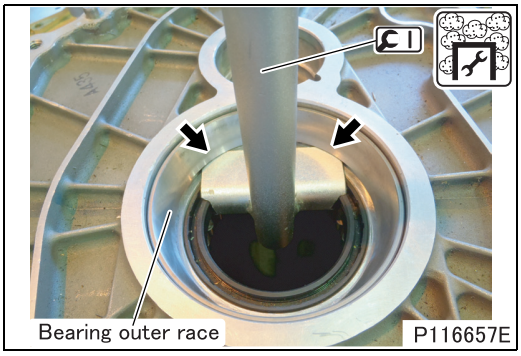

■ Removal: Outer drive pinion taper bearing outer race

: This work requires protection against dust.

- Hook the catch of l in the notch on the clutch housing, and then remove the outer drive pinion taper bearing outer race by lifting it with a sliding hammer.

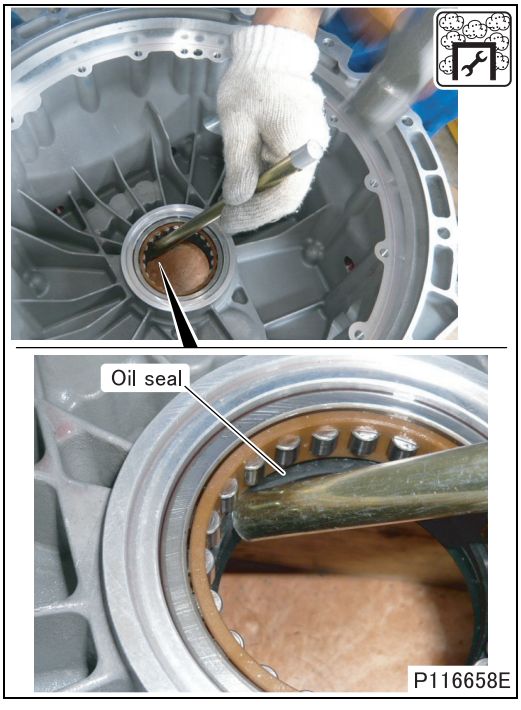

■ Removal: Oil seal

: This work requires protection against dust.

- Remove the oil seal by hitting it with a bar from the front side of the clutch housing.

https://truckmanualshub.com/

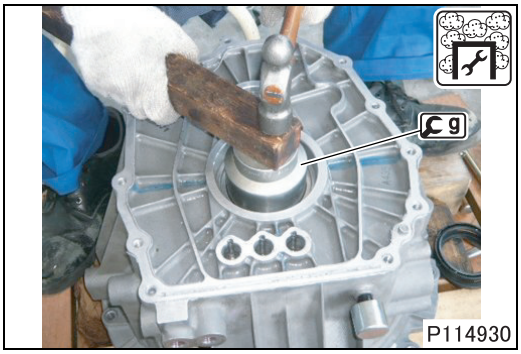

■ Removal: Outer drive pinion roller bearing outer race

: This work requires protection against dust.

- Remove the outer drive pinion roller bearing outer race from the rear side of the clutch housing using .

◆Inspection procedure◆

■ Inspection: Oil filter

: This work requires protection against dust.

[Inspection]

- Check that the drained automatic transmission fluid is not contaminated.
- If contaminated, inspect the oil filter.

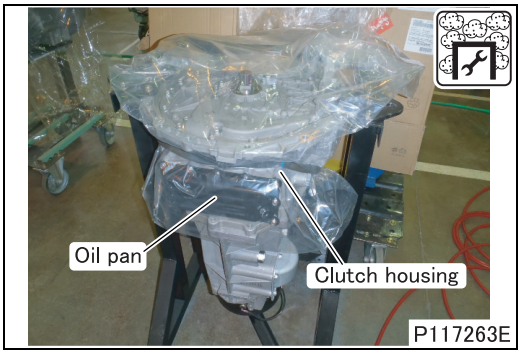

[Removal]

- Clean the clutch housing and the areas around the oil pan.
- Perform work with the transmission positioned vertically as shown. (See VALVE BODY AND DUAL CLUTCH.)

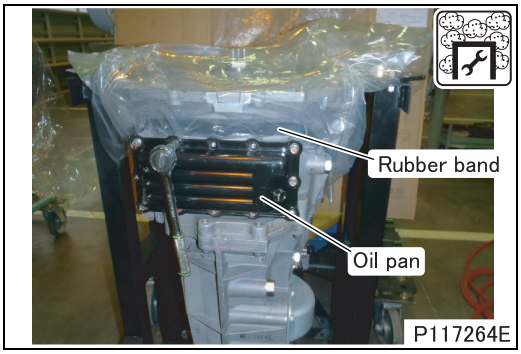

- Displace the rubber band securing the plastic bag to provide working space.
- Remove the oil pan.

NOTE

- **If there is no problem (e.g. no contamination) in automatic transmission fluid, do not remove the oil pan.**
- **Do not use air tools to remove the oil pan.**

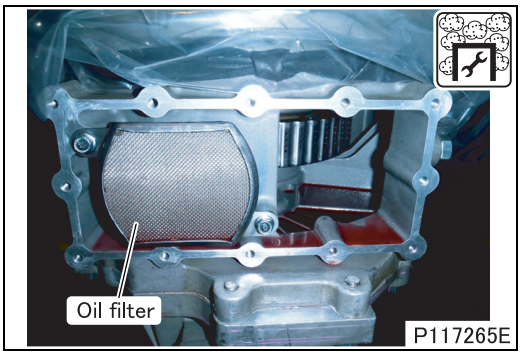

- Remove the oil filter.

https://truckmanualshub.com/

[Inspection]

- Confirm that the oil filter is not contaminated by foreign objects.
- If contaminated by foreign objects, replace the oil filter with a new one.

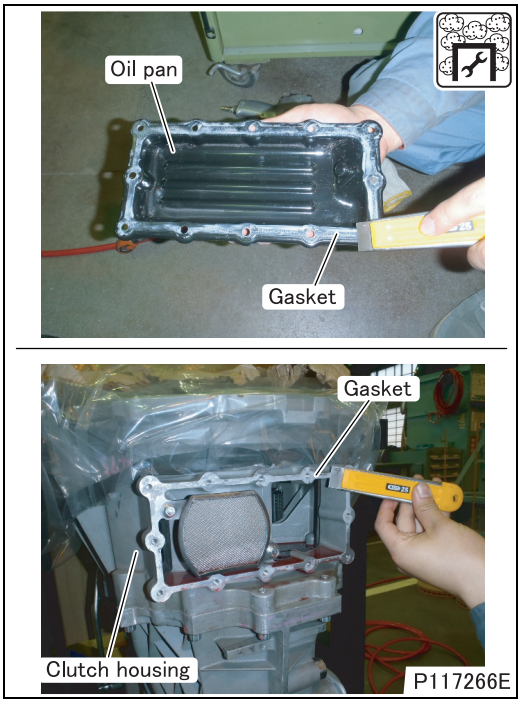

[Installation]

- Remove the gasket remaining on the oil pan and clutch housing with a scraper, and then degrease with brake cleaner.

CAUTION ⚠

- **Do not allow the scraped gasket to enter the clutch housing.**

- Wipe off automatic transmission fluid and brake cleaner using a non-woven cloth or paper towel.

CAUTION ⚠

- **Do not use anything other than a non-woven cloth or paper towel.**
- **Do not rub when using a paper towel.**

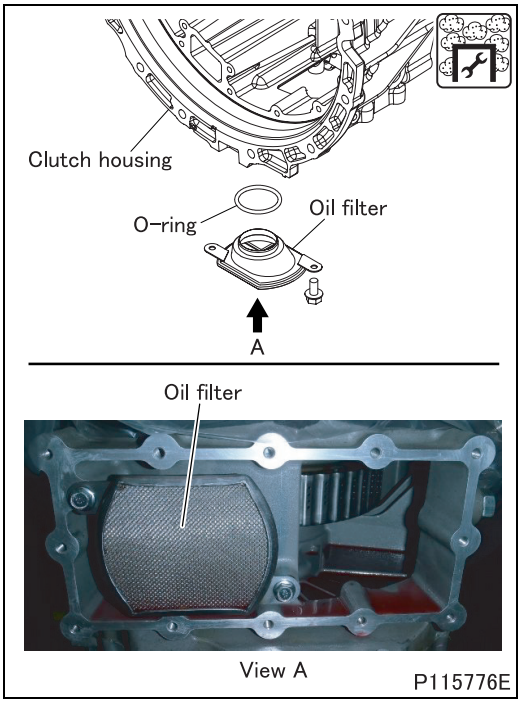

- Apply automatic transmission fluid to the O-ring, and then install the O-ring on the oil filter.
- Install the oil filter on the clutch housing.

https://truckmanualshub.com/

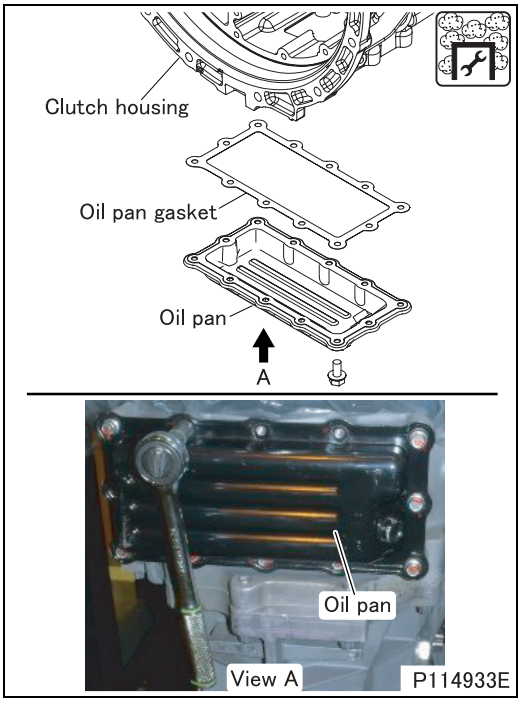

- Install the oil pan gasket and oil pan.

◆Installation procedure◆

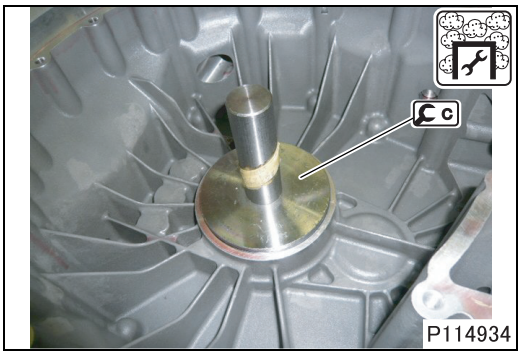

■ Installation: Outer drive pinion roller bearing outer race

: This work requires protection against dust.

- Apply automatic transmission fluid to the sliding surface of the outer drive pinion roller bearing outer race.
- Install the outer drive pinion roller bearing outer race from the front side of the clutch housing using C.

https://truckmanualshub.com/

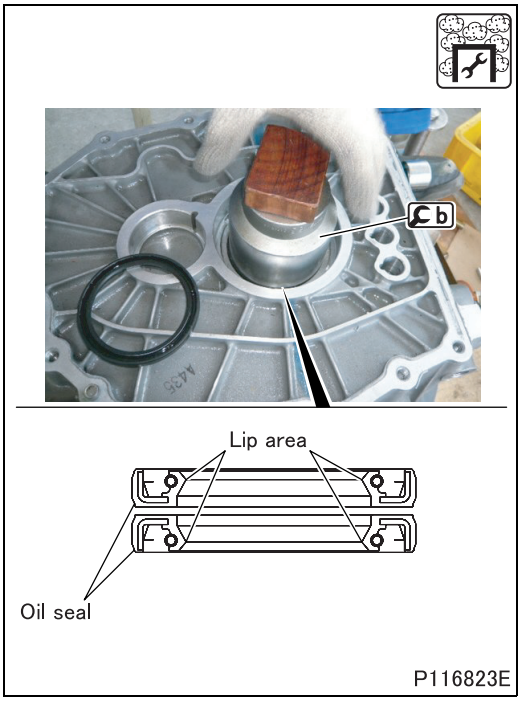

■ **Installation: Oil seal**

: This work requires protection against dust.

- Apply automatic transmission fluid to the lip areas of the oil seals.
- Install the oil seals in the illustrated orientations from the front side of the clutch housing using b.

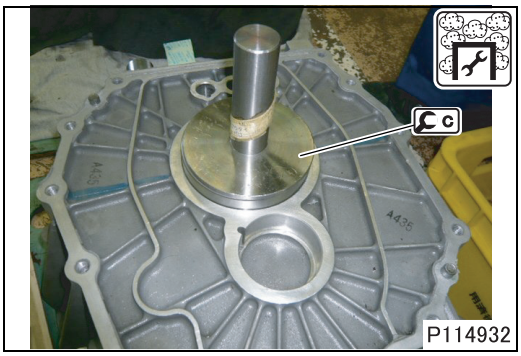

■ **Installation: Outer drive pinion taper bearing outer race**

: This work requires protection against dust.

- Install the outer drive pinion taper bearing outer race from the rear side of the clutch housing using c.

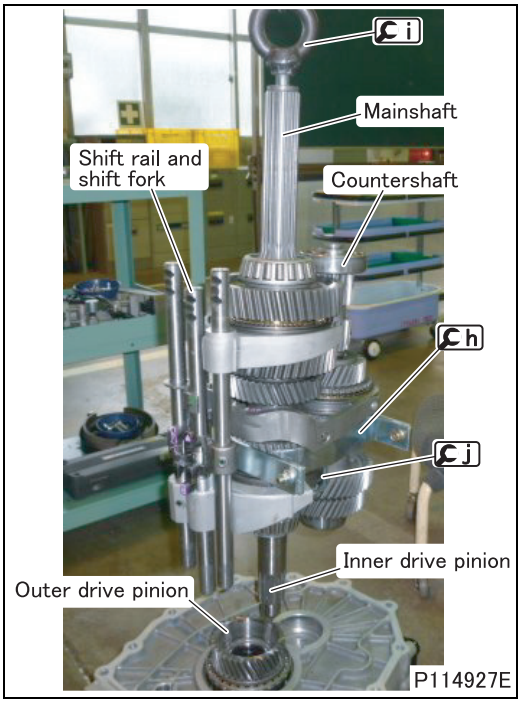

■ **Installation: Outer drive pinion, mainshaft, countershaft, inner drive pinion and shift rail and shift fork**

- Apply automatic transmission fluid to the sliding surface of the outer drive pinion, and then install the pinion on the clutch housing.
- Apply grease between the rollers of the mainshaft pilot bearing, install the inner drive pinion, and then fasten the mainshaft 3rd gear and inner drive pinion using j.
- Fasten the 3rd gears of the mainshaft and countershaft using h.
- Install the shift rail and shift fork on the mainshaft and countershaft.
- Install i on the mainshaft, and then lift the mainshaft with a crane and install it on the clutch housing.
- Be sure to remove all the tools used.

https://truckmanualshub.com/

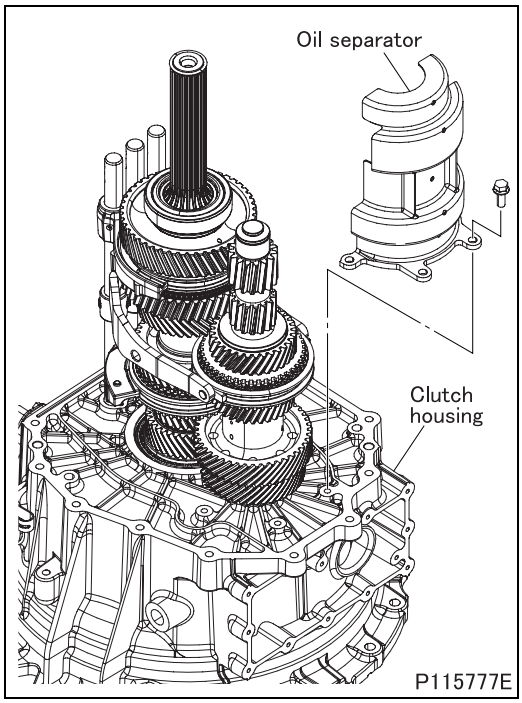

■ **Installation: Oil separator**

- Install the oil separator on the clutch housing.

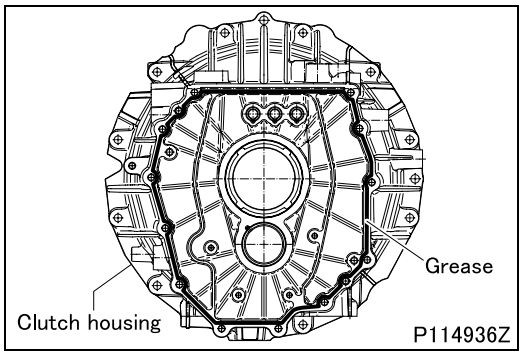

■ **Installation: Transmission case**

[Applying sealant]

- Applying sealant onto the clutch housing and motor generator, following manners shown below.

CAUTION ⚠

- **Remove any sealant remaining in the bolt holes before installation. Otherwise damage may result.**
- **Take care not to apply sealant under any of the following conditions. Otherwise it causes oil leak.**
  - **There is dust, oil, grease, etc. on the mating surface.**
  - **The diameter or thickness of the applied sealant is extremely different at each part.**
  - **The applied sealant has some breaks.**

<Case of using nozzle gun>

- Clean the mating surfaces of each part.
- Apply sealant on the width center of the mating surface so that the diameter of the applied sealant is the same as the diameter of the nozzle. The line of applying sealant is illustrated.

<Case of using spatula, etc.>

- Clean the mating surfaces of each part.
- Apply sealant evenly on the entire mating surfaces.

[Installation]

- After applying the sealant, install the transmission case before the sealant dries. Be sure not to allow the sealant to be displaced.
- Do not start the engine within one hour after installing the transmission case.
- When loosening or removing transmission case mounting bolts, be sure to reapply the sealant.

https://truckmanualshub.com/

■ **Installation: Mainshaft rear bearing outer race**

- Temporarily install the mainshaft rear bearing outer race from the rear side of the transmission case using a plastic hammer.

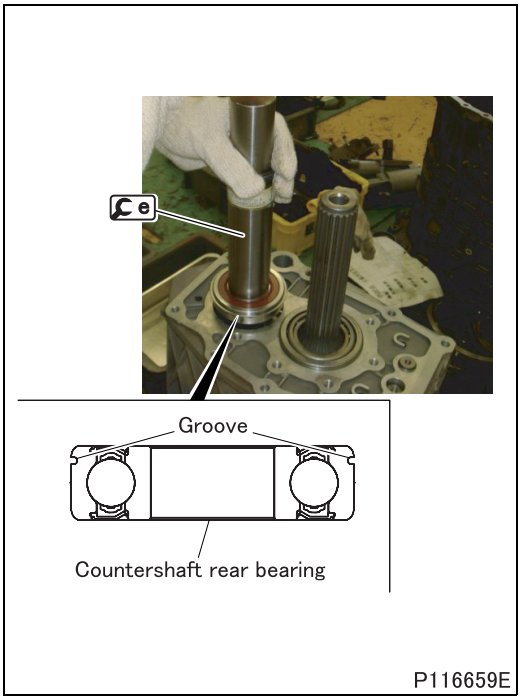

■ **Installation: Countershaft rear bearing and snap ring**

- Install the countershaft rear bearing in the illustrated orientation using e.

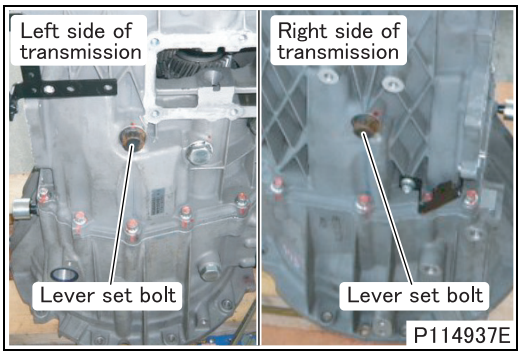

■ **Installation: Lever set bolt**

- Apply locking agent to the threads of the lever set bolts.
- Align the transmission case holes and reverse lever holes, and then secure the reverse lever with the lever set bolts.

CAUTION ⚠

- **Remove any sealant remaining in the bolt holes before installation. Otherwise damage may result.**

- After installing the lever set bolts, check that gears can be engaged by shifting gear positions.

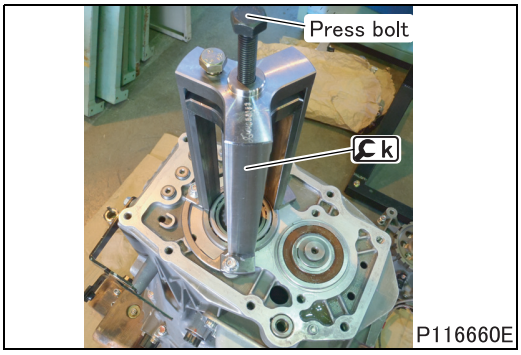

■ **Installation: Shim and rear bearing retainer**

[Selecting shim]

- Since a taper roller bearing is used on both ends of the mainshaft, it is necessary to select a shim to apply preload to the bearing.
- Install k on the transmission case, and then tighten the bearing press bolt to a torque of 13.3 N·m {9.8 ft.lbs, 130 kgf·cm}.

https://truckmanualshub.com/

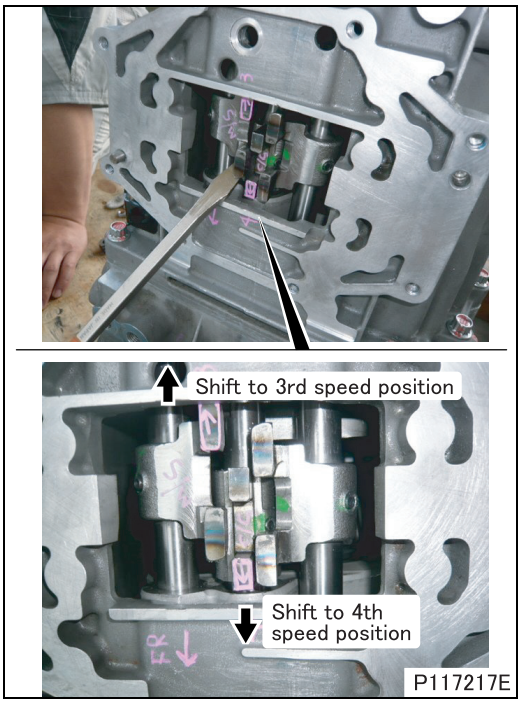

- Shift the mainshaft and countershaft to the 3rd and 4th speed positions, respectively.
- With the mainshaft and countershaft in the 3rd and 4th speed positions, respectively, rotate the mainshaft more than ten revolutions. Next, loosen the bearing press bolt until it does not press against ck, and then tighten it again to a torque of 3.2 N·m {2.4 ft.lbs, 32.5 kgf·cm}.

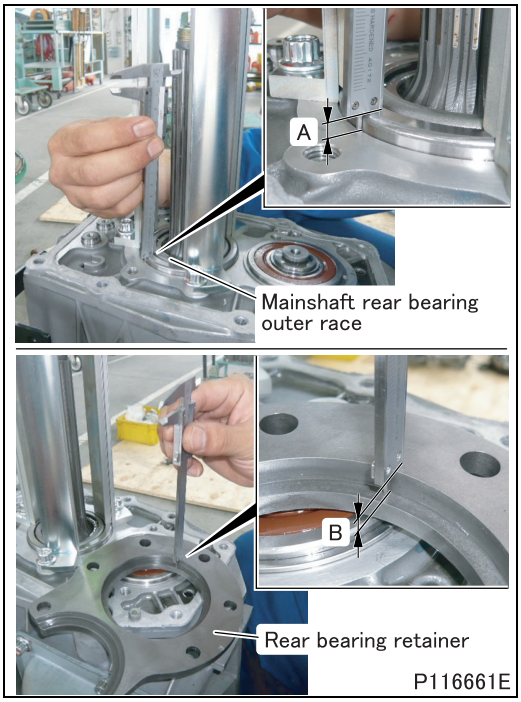

- Measure dimension A from the transmission case end face to the mainshaft rear bearing outer race end face at three locations.
- Measure dimension B of the rear bearing retainer at three locations.
- Calculate clearance C from measured dimensions A and B using the following formula.
  Clearance C = (average of B at 3 locations) – (average of A at 3 locations)

Clearance C (mm {in.})	Shim thickness (mm {in.})	Number of shims	Clearance after installation (reference value: mm {in.})
1.15 to 1.19 {0.0452 to 0.0468}	0.56 ± 0.01 {0.0220 ± 0.00039}	2	0.01 to 0.09 {0.00039 to 0.0035}
l.20 to 1.24 {0.0472 to 0.0488}	1.16 ± 0.01 {0.0456 ± 0.00039}	1	0.03 to 0.09 {0.0012 to 0.0035}
1.25 to 1.29 {0.0492 to 0.0507}	1.21 ± 0.01 {0.0476 ± 0.00039}	1	0.03 to 0.09 {0.0012 to 0.0035}
1.30 to 1.34 {0.051 to 0.0527}	1.26 ± 0.01 {0.0496 ± 0.00039}	1	0.03 to 0.09 {0.0012 to 0.0035}
1.35 to 1.39 {0.0531 to 0.0547}	1.31 ± 0.01 {0.0515 ± 0.00039}	1	0.03 to 0.09 {0.0012 to 0.0035}
1.40 to 1.44 {0.0551 to 0.0566}	1.36 ± 0.01 {0.0535 ± 0.00039}	1	0.03 to 0.09 {0.0012 to 0.0035}
1.45 to 1.49 {0.0570 to 0.0586}	1.41 ± 0.01 {0.0555 ± 0.00039}	1	0.03 to 0.09 {0.0012 to 0.0035}
1.50 to 1.54 {0.0590 to 0.0606}	1.46 ± 0.01 {0.0574 ± 0.00039}	1	0.03 to 0.09 {0.0012 to 0.0035}
1.55 to 1.59 {0.0610 to 0.0625}	1.51 ± 0.01 {0.0594 ± 0.00039}	1	0.03 to 0.09 {0.0012 to 0.0035}
1.60 to 1.64 {0.0629 to 0.0645}	1.56 ± 0.01 {0.0614 ± 0.00039}	1	0.03 to 0.09 {0.0012 to 0.0035}

https://truckmanualshub.com/

Clearance C (mm {in.})	Shim thickness (mm {in.})	Number of shims	Clearance after installation (reference value: mm {in.})
1.65 to 1.69 {0.0649 to 0.0665}	1.61 ± 0.01 {0.0633 ± 0.00039}	1	0.03 to 0.09 {0.0012 to 0.0035}
1.70 to 1.73 {0.0669 to 0.0685}	1.66 ± 0.01 {0.0653 ± 0.00039}	1	0.03 to 0.09 {0.0012 to 0.0035}
1.75 to 1.79 {0.0688 to 0.0704}	1.71 ± 0.01 {0.0673 ± 0.00039}	1	0.03 to 0.09 {0.0012 to 0.0035}
1.80 to 1.84 {0.0708 to 0.0724}	1.76 ± 0.01 {0.0692 ± 0.00039}	1	0.03 to 0.09 {0.0012 to 0.0035}
1.85 to 1.89 {0.0728 to 0.0744}	1.81 ± 0.01 {0.0712 ± 0.00039}	1	0.03 to 0.09 {0.0012 to 0.0035}
1.90 to 1.94 {0.0748 to 0.0763}	1.86 ± 0.01 {0.0732 ± 0.00039}	1	0.03 to 0.09 {0.0012 to 0.0035}
1.95 to 1.99 {0.0767 to 0.0783}	0.56 ± 0.01 {0.0220 ± 0.00039}	1	0.01 to 0.09 {0.00039 to 0.0035}
	0.36 ± 0.01 {0.0141 ± 0.00039}	1	

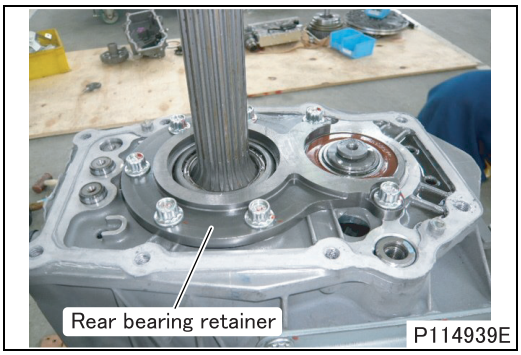

[Installation]

- Remove ck, and then install the selected shim, rear bearing retainer and tighten the bolts.

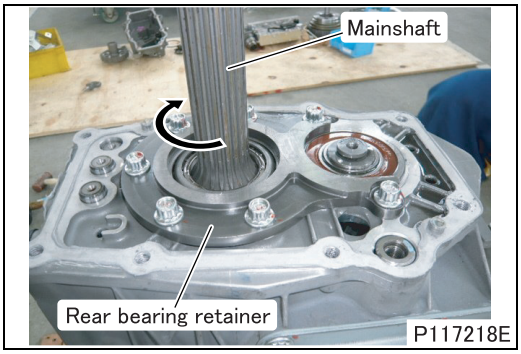

■Inspection: Starting torque on the mainshaft output side

- After installing the shim and rear bearing retainer, check that the starting torque on the mainshaft output side agrees with the standard value.
- If the measurement exceeds the standard value, select a shim again.

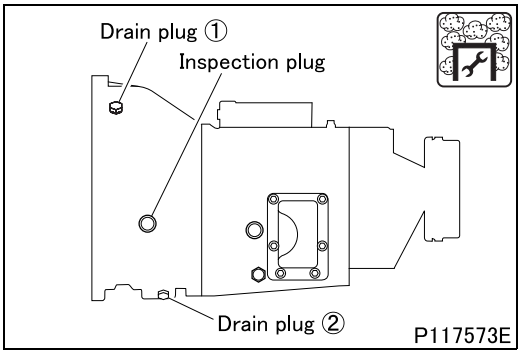

■Installation: Automatic transmission fluid drain plugs and automatic transmission fluid inspection plug

: This work requires protection against dust.

- Install the automatic transmission fluid drain plugs on the oil pan.
- Install automatic transmission fluid inspection plug on the clutch housing.

https://truckmanualshub.com/

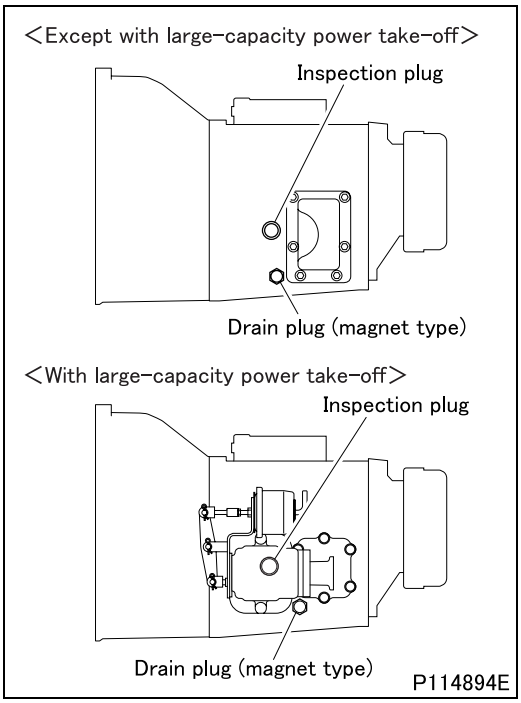

■ **Installation: Transmission oil drain plug and transmission oil inspection plug**

- Apply sealant to the threads of the transmission oil drain plug and transmission oil inspection plug, and then install the plugs on the transmission case.

https://truckmanualshub.com/

Shift Rail and Shift Fork

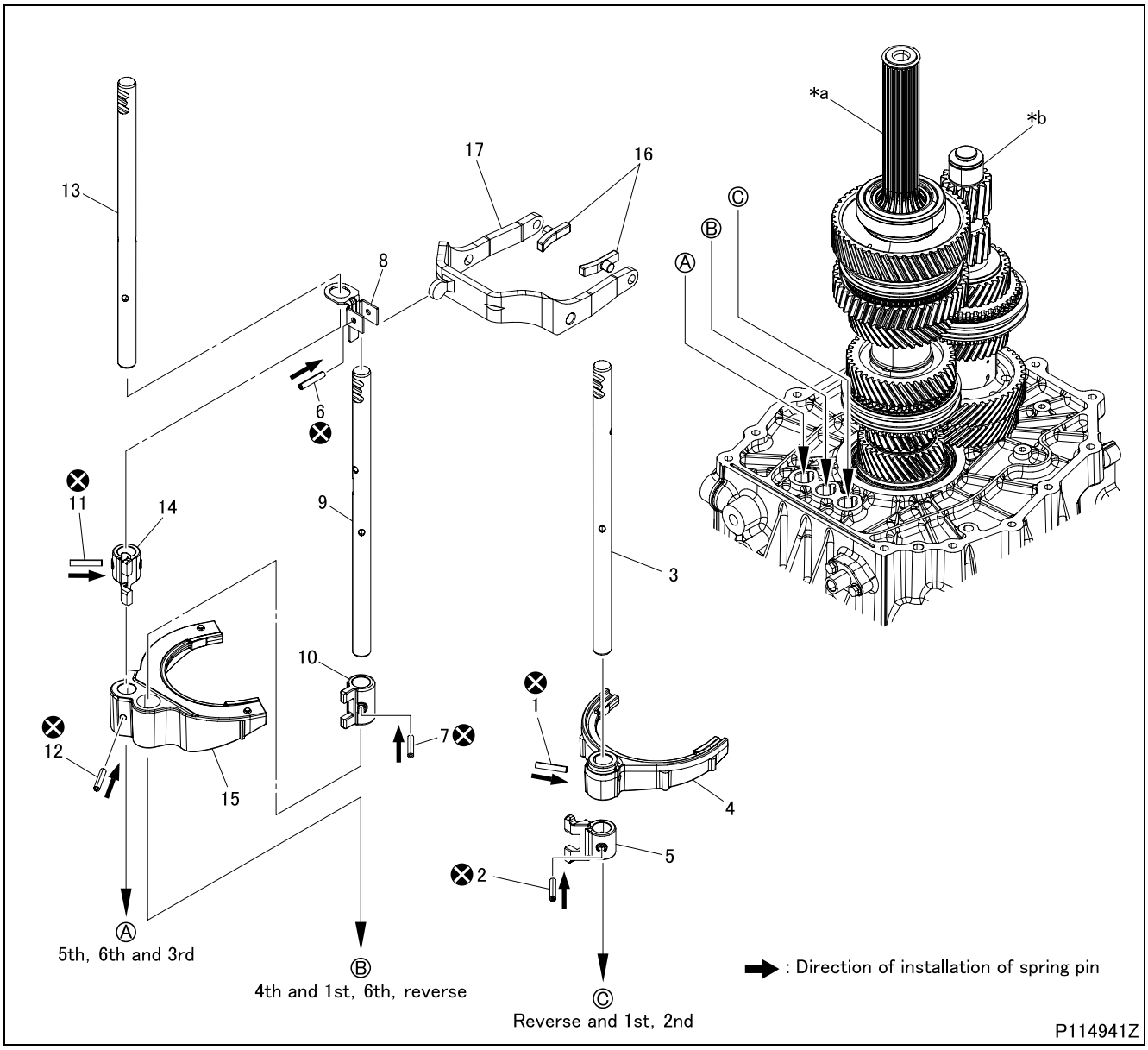

● Disassembly sequence

1 Spring pin
2 Spring pin
3 5th/6th and 3rd shift rail
4 5th/6th and 3rd shift fork
5 5th/6th and 3rd shift jaw
6 Spring pin
7 Spring pin
8 4th and 1st/6th/reverse shift jaw B
9 4th and 1st/6th/reverse shift rail
10 4th and 1st/6th/reverse shift jaw A
11 4th and 1st/6th/reverse lever
12 Shift fork piece
13 Spring pin
14 Spring pin
15 Reverse and 1st/2nd shift rail
16 Reverse and 1st/2nd shift jaw
17 Reverse and 1st/2nd shift fork

***a**: Mainshaft
***b**: Countershaft
⊗: Non-reusable parts

● Assembly sequence

Follow the disassembly sequence in reverse.

https://truckmanualshub.com/

Service standards (Unit: mm {in.})

Location	Maintenance item	Standard value	Limit	Remedy
3, 9, 15	Bend of shift rail	0 to 0.04 {0 to 0.0016}	0.05 {0.0020}	Replace
12, *a	Clearance between shift fork piece and synchronizer sleeve of mainshaft	0.3 to 0.6 {0.012 to 0.024}	1.0 {0.039}	Replace
4, 17	Tilt of shift fork claw	0.1 {0.0039} or less	0.2 {0.0079}	Replace
4, 17, *a	Clearance between shift fork and synchronizer sleeve of mainshaft	0.3 to 0.6 {0.012 to 0.024}	1.0 {0.039}	Replace

◆Inspection procedure◆

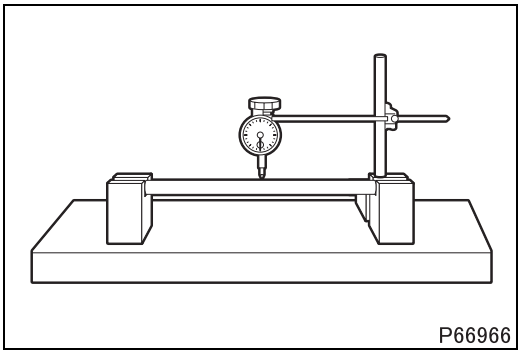
P66966

■ Inspection: Bend of shift rail

- Measure the extent of bending at the middle of each of shift rail.
- While rotating the shift rail by one revolution, read how much the dial gauge needle will move. A half of the reading observed represents the bend, if any, of the rail.
- If the measurement exceeds the limit, replace the shift rails.

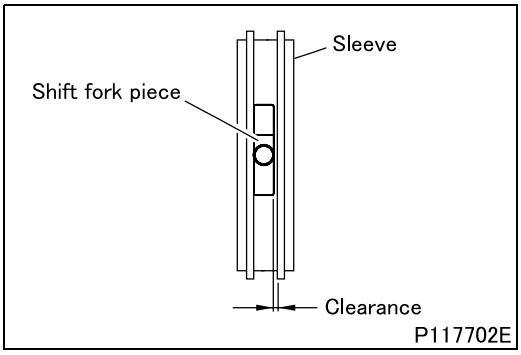

P117702E

■ Inspection: Clearance between shift fork piece and synchronizer sleeve of mainshaft

- If the measurement exceeds the limit, replace defective parts.

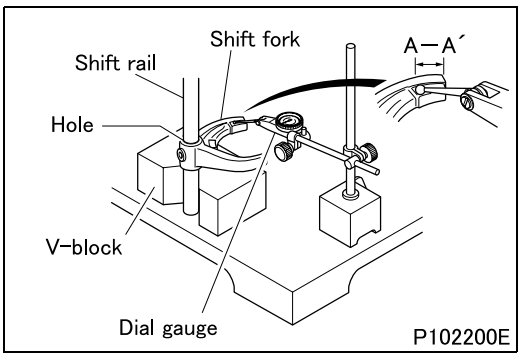

P102200E

■ Inspection: Tilt of shift fork claw

- Measure the tilt (difference between A and A´) of claw A-A´ against the shift rail hole of shift fork with pressing the rail to V-block and standing it vertically.
- If the measurement exceeds the limit, replace the shift fork.

https://truckmanualshub.com/

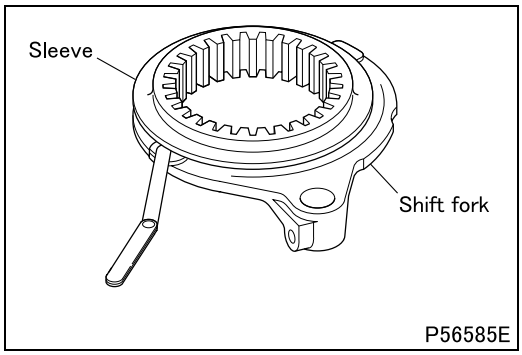

■ **Inspection: Clearance between shift fork and synchronizer sleeve of mainshaft**

- If the measurement exceeds the limit, replace defective part.

◆Installation procedure◆

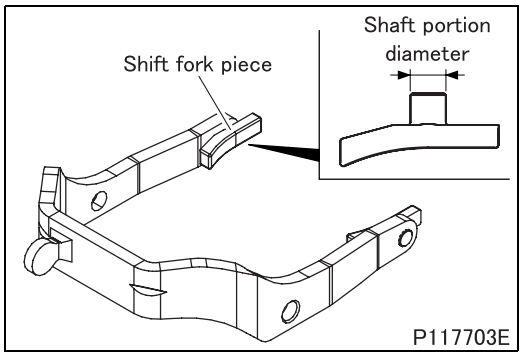

■ **Installation: Shift fork piece**

- Install the shift fork piece on the shift fork as shown in the illustration.

■ **Installation: 4th and 1st/6th/reverse lever**

- Place the synchronizer sleeve of mainshaft in neutral position before installing the reverse lever on the mainshaft.

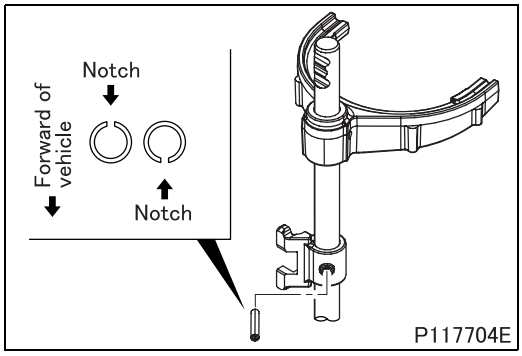

■ **Installation: Spring pin**

- Install the spring pin in the illustrated direction (the spring pin notch to be positioned forward or rearward of the vehicle). When installing the spring pin, leave 0 to 0.5 mm {0 to 0.020 in.} outside from each shift rail or each gear shift jaw.
- Drive the spring pin carefully so as not to impose too much load on each shift rail and each gear shift jaw.

https://truckmanualshub.com/

M E M O

https://truckmanualshub.com/

OUTER DRIVE PINION

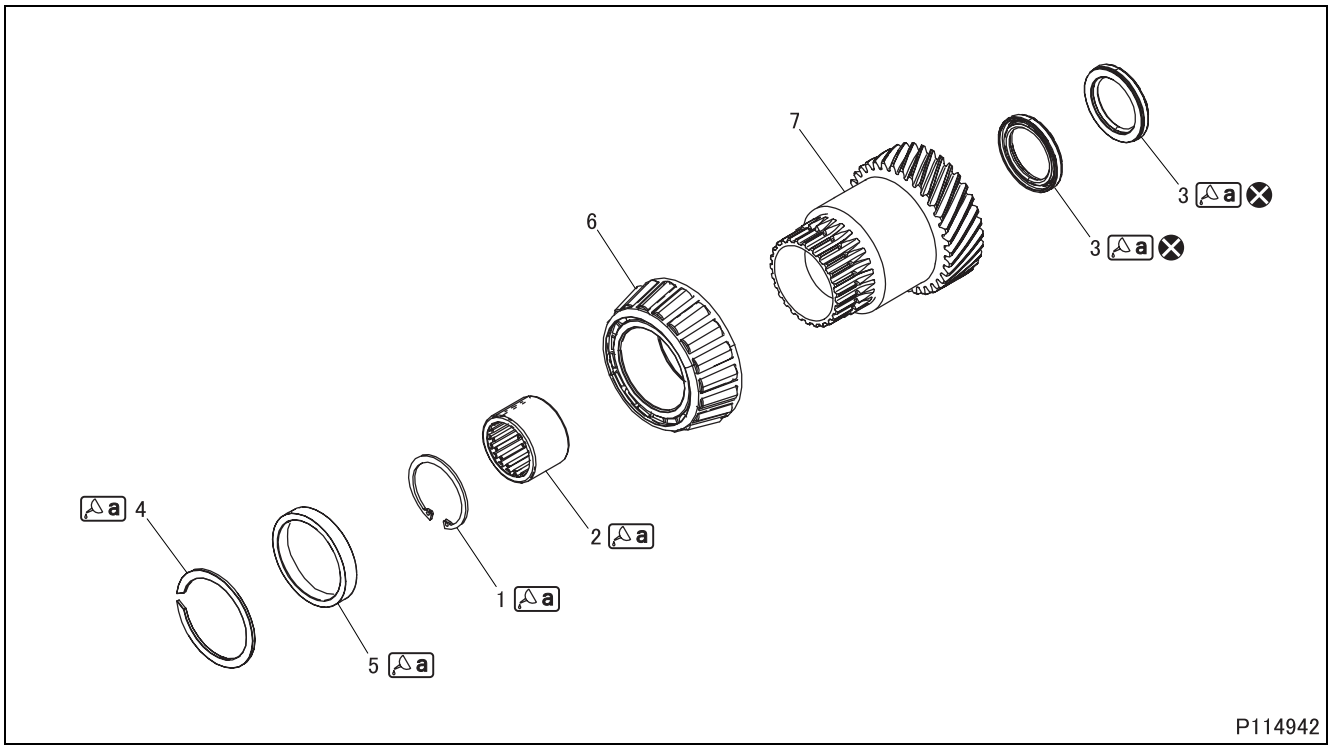

● **Disassembly sequence**

1 Snap ring
2 Needle bearing
3 Oil seal
4 Snap ring
5 Outer drive pinion roller bearing inner race
6 Outer drive pinion taper bearing inner race
7 Outer drive pinion
⊗: Non-reusable parts

● **Assembly sequence**

Follow the disassembly sequence in reverse.

Lubricant and/or sealant

Mark	Points of application	Specified lubricant and/or sealant	Quantity
a	Sliding area of needle bearing	FUSO ATF-SP III	As required
	Entire surface of snap ring		
	Lip area of oil seal		
	Sliding area of outer drive pinion roller bearing inner race		

Special tools (Unit: mm {in.})

Mark	Tool name and shape	Part No.	Application
a	Snap ring expander 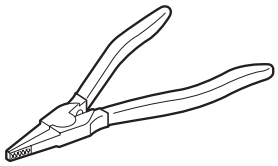 P01137	MH061268	Removal and installation of snap ring

https://truckmanualshub.com/

Mark	Tool name and shape	Part No.	Application
b	Bearing installer A: ϕ75 {2.95}, B: ϕ71 {2.80} 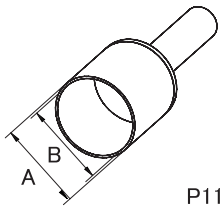 P116041	MH064245	Installation of outer drive pinion taper bearing inner race
c	Bearing installer A: ϕ65 {2.56}, B: ϕ61 {2.40} 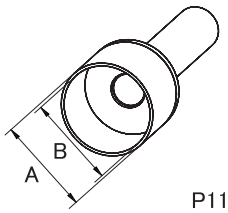 P116042	MH064246	Installation of outer drive pinion roller bearing inner race
d	Bearing installer A: ϕ44 {1.73}, B: ϕ34.5 {1.36} 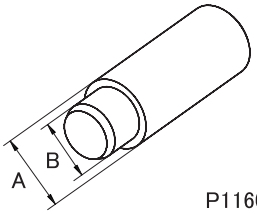 P116043	MH064248	Installation of needle bearing
e	Bearing puller A: ϕ39.8 {1.57}, B: ϕ100 {3.94} 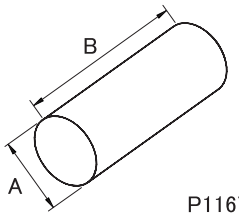 P116789	MH064190	Removal of needle bearing
f	Oil seal installer A: ϕ49 {1.93}, B: ϕ35.5 {1.40} 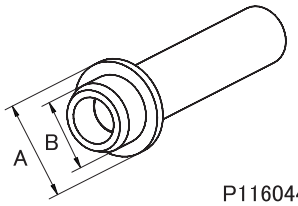 P116044	MH064249	Installation of oil seal
g	Thrust plate 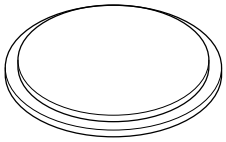 P110852	MH064100	Removal of outer drive pinion taper bearing inner race and outer drive pinion roller bearing inner race

https://truckmanualshub.com/

OUTER DRIVE PINION

◆Removal procedure◆

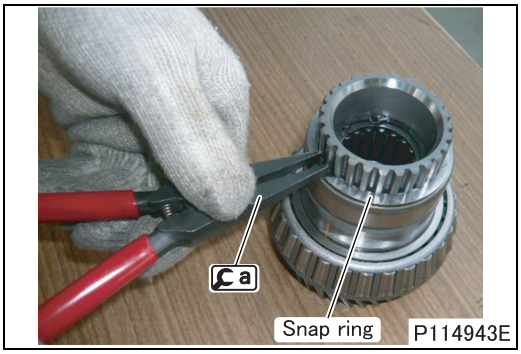

■ Removal: Snap ring

- Remove the snap ring using a.

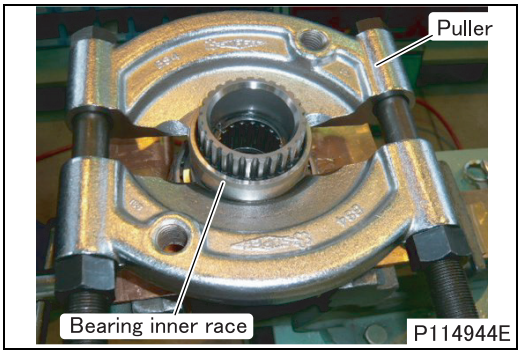

■ Removal: Outer drive pinion roller bearing inner race

- Install a commercially available bearing puller on the bottom of the outer drive pinion roller bearing inner race.
- Install g on the end of the outer drive pinion, and then remove the outer drive pinion roller bearing inner race by pushing it out with a press.

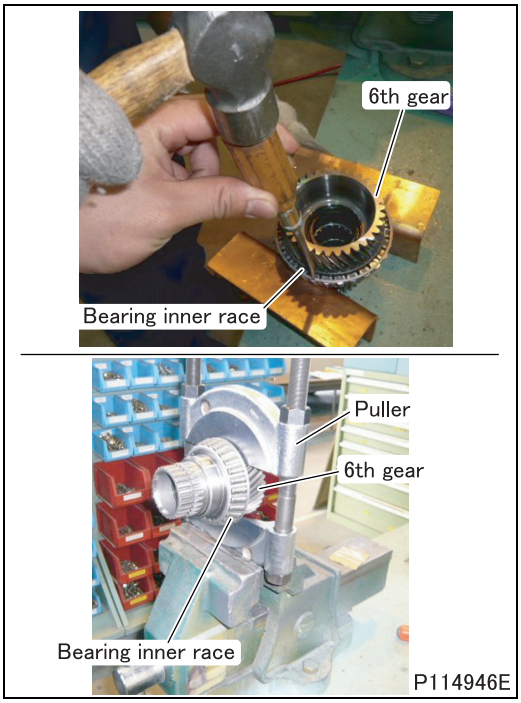

■ Removal: Outer drive pinion taper bearing inner race

- Evenly hit the flange of the outer drive pinion taper bearing inner race with a flat-blade screwdriver or the like to provide a clearance from the outer drive pinion 6th gear.
- Install a commercially available bearing puller in the clearance between the outer drive pinion taper bearing inner race and outer drive pinion 6th gear.

CAUTION ⚠

- **Be sure to provide a clearance before installing the bearing puller. Otherwise the outer drive pinion taper bearing inner race may be damaged.**
- **Be sure to install the bearing puller on the 6th gear side. The bearing will be seized if the puller is installed on the outer drive pinion taper bearing inner race side.**

- Install g on the end of the outer drive pinion, and then remove the outer drive pinion taper bearing inner race by pushing it out with a press.

https://truckmanualshub.com/

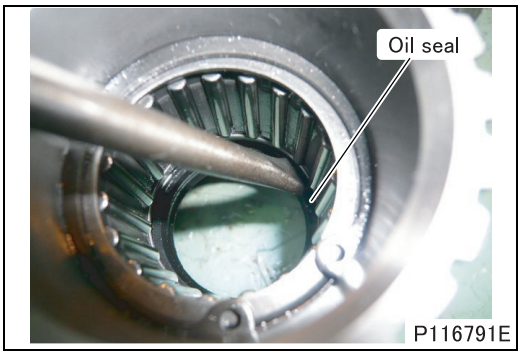

■ **Removal: Oil seal**

- Remove the oil seal using a screwdriver or the like.

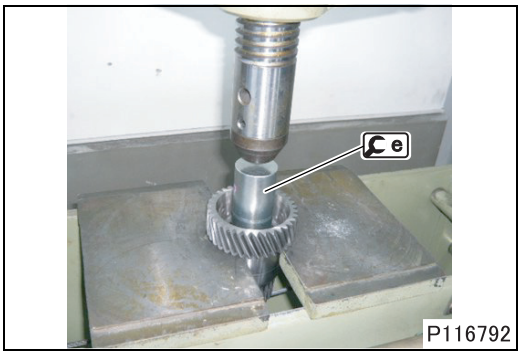

■ **Removal: Snap ring and needle bearing**

- Remove the snap ring.
- Using e, remove the needle bearing by pushing it out with a press.

◆Installation procedure◆

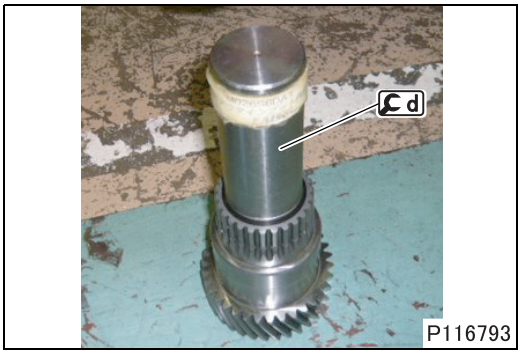

■ **Installation: Needle bearing and snap ring**

- Apply automatic transmission fluid to the needle bearing, and then install it on the outer drive pinion using d.
- Apply automatic transmission fluid to the snap ring, and then install it on the outer drive pinion.

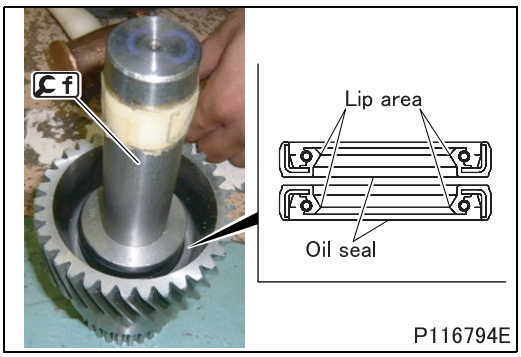

■ **Installation: Oil seal**

- Apply automatic transmission fluid to the lip areas of the oil seals, and then install the oil seals on the outer drive pinion in the illustrated orientations using f.

https://truckmanualshub.com/

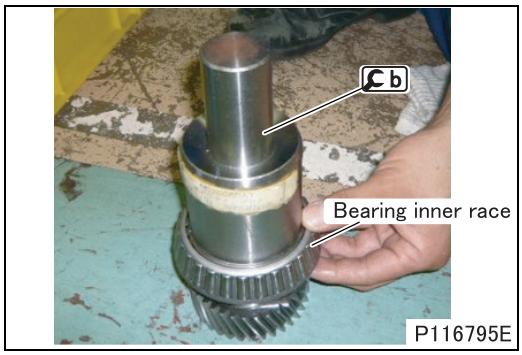

■ **Installation: Outer drive pinion taper bearing inner race**

- Install the outer drive pinion taper bearing inner race on the outer drive pinion using b.

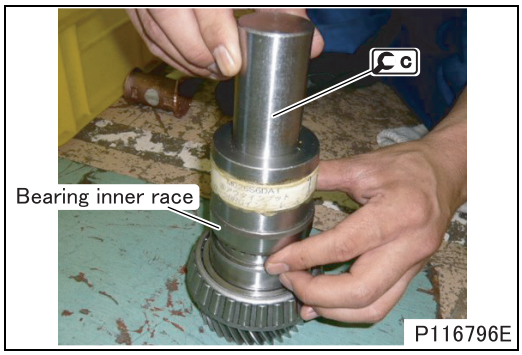

■ **Installation: Outer drive pinion roller bearing inner race and snap ring**

- Apply automatic transmission fluid to the outer drive pinion roller bearing inner race, and then install it on the outer drive pinion using c.
- Apply automatic transmission fluid to the snap ring, and then install it on the outer drive pinion using a.

https://truckmanualshub.com/

M E M O

https://truckmanualshub.com/

INNER DRIVE PINION

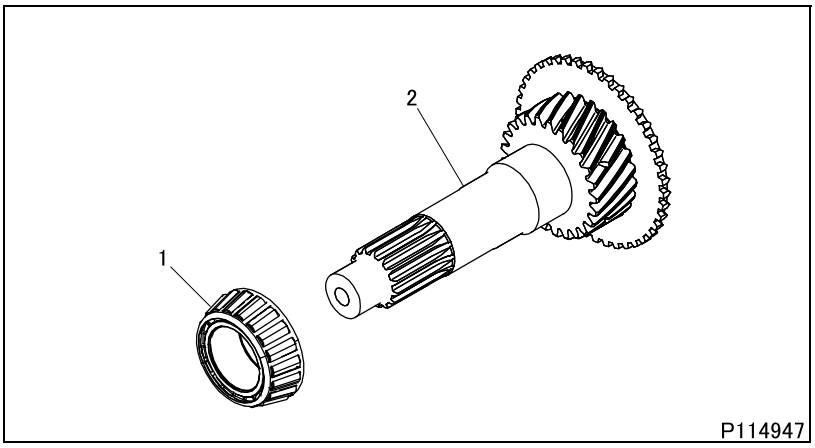

● **Disassembly sequence**

1 Inner drive pinion taper bearing inner race
2 Inner drive pinion

⊗: Non-reusable parts

● **Assembly sequence**

Follow the disassembly sequence in reverse.

Special tools (Unit: mm {in.})

Mark	Tool name and shape	Part No.	Application
a	Bearing installer A: ϕ45 {1.77} B: ϕ41 {1.61} 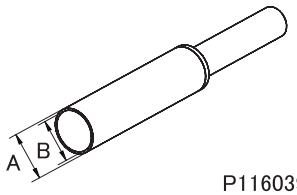	MH064244	Installation of outer drive pinion taper bearing inner race

◆**Removal procedure**◆

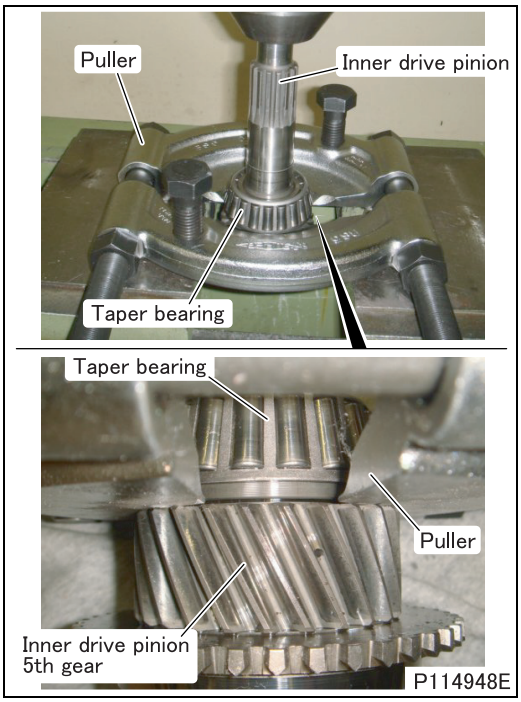

■ **Removal: Inner drive pinion taper bearing inner race**

- Install a commercially available bearing puller between the inner drive pinion taper bearing inner race and inner drive pinion 5th gear.
- After installing the bearing puller, check that the rollers on the taper bearing inner race rotate smoothly.

CAUTION ⚠

- **If the rollers do not rotate smoothly, reinstall the bearing puller. Otherwise the inner drive pinion taper bearing inner race may be damaged.**

- Remove the inner drive pinion taper bearing inner race by pushing it out with a press.

https://truckmanualshub.com/

◆Installation procedure◆

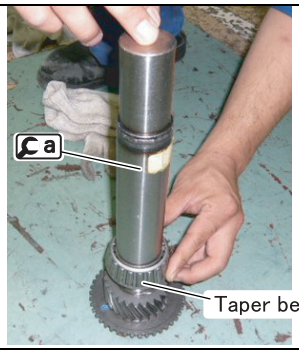

■ **Installation: Inner drive pinion taper bearing inner race**

- Install the inner drive pinion taper bearing inner race on the inner drive pinion using a.

https://truckmanualshub.com/

MAINSHAFT

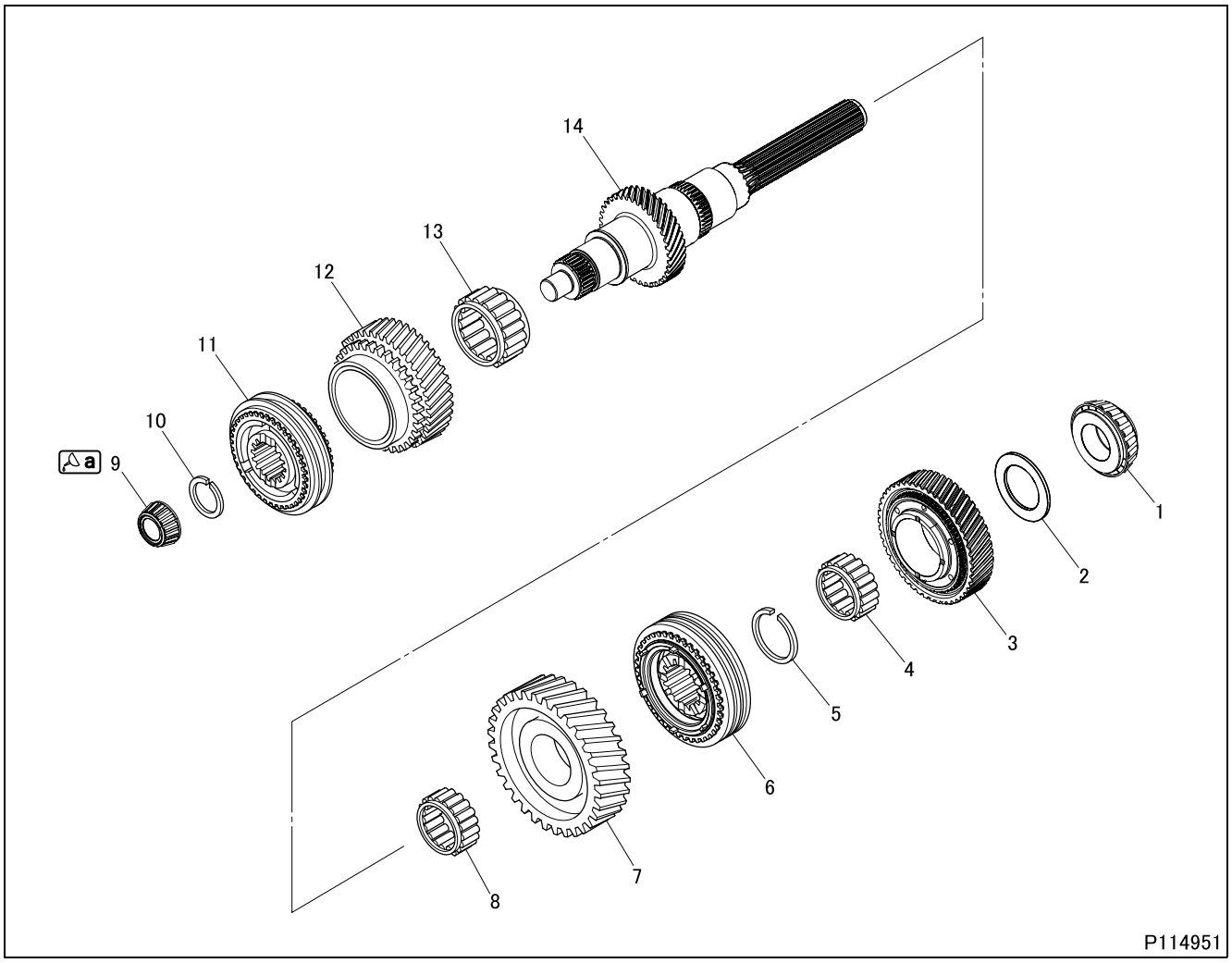

● **Disassembly sequence**

1 Mainshaft rear taper bearing inner race
2 1st gear thrust washer
3 1st and 2nd gear
4 Needle bearing
5 Snap ring
6 1st/2nd and reverse synchronizer (See later section.)
7 Reverse gear
8 Needle bearing
9 Pilot bearing
10 Snap ring
11 3rd and 5th/6th synchronizer (See later section.)
12 3rd gear
13 Needle bearing
14 Mainshaft

● **Assembly sequence**

Follow the disassembly sequence in reverse.

https://truckmanualshub.com/

Service standards (Unit: mm {in.})

Location	Maintenance item		Standard value	Limit	Remedy
–	End play	1st and 2nd gear	0.15 to 0.46 {0.0059 to 0.018}	0.7 {0.028}	Replace
		3rd gear	0.15 to 0.51 {0.0059 to 0.020}	0.7 {0.028}	
		Reverse gear	0.10 to 0.46 {0.0039 to 0.018}	0.7 {0.028}	
–	Play in the diameter direction	1st and 2nd gear	0.02 to 0.06 {0.00079 to 0.0024}	0.12 {0.0047}	Replace
		3rd gear	0.02 to 0.06 {0.00079 to 0.0024}	0.12 {0.0047}	
		Reverse gear	0.02 to 0.06 {0.00079 to 0.0024}	0.12 {0.0047}	
–	Clearance between gear and synchronizer ring	1st and 2nd gear and 1st/2nd and reverse synchronizer	1.02 to 1.49 {0.040 to 0.059}	0.5 {0.020}	Replace
		Reverse gear and 1st/2nd and reverse synchronizer	1.07 to 1.43 {0.042 to 0.056}	0.5 {0.020}	
		3rd gear and 3rd and 5th/6th synchronizer	1.17 to 1.53 {0.046 to 0.060}	0.5 {0.020}	
		Inner drive pinion and 3rd and 5th/6th synchronizer	1.10 to 1.60 {0.043 to 0.063}	0.5 {0.020}	

Lubricant and/or sealant

Mark	Points of application	Specified lubricant and/or sealant	Quantity
a	Entire periphery of pilot bearing roller	Molybdenum disulfide grease [NLGI No.2 (Li soap)]	As required

Special tools (Unit: mm {in.})

Mark	Tool name and shape	Part No.	Application
a	Snap ring expander 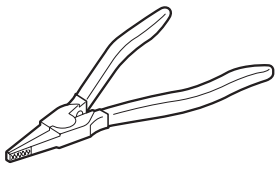 P01137	MH061268	Removal and installation of snap ring
b	Bearing installer A: ϕ30 {1.18} B: ϕ26 {1.02} 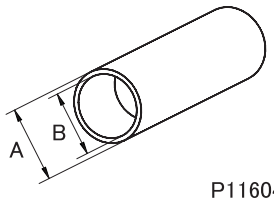 P116045	MH064243	Installation of pilot bearing
c	Bearing installer A: ϕ56 {2.20} B: ϕ51 {2.01} 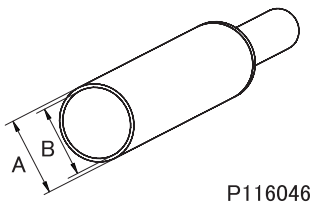 P116046	MH064253	Installation of mainshaft rear taper bearing inner race

https://truckmanualshub.com/

◆Work before removal◆

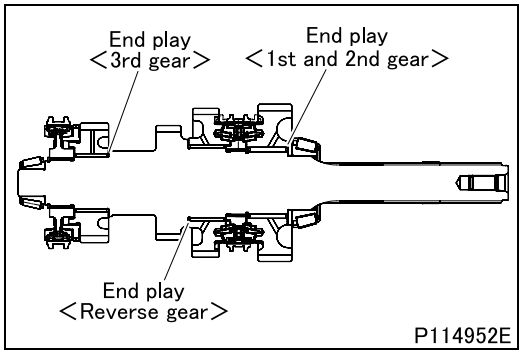

■ **Inspection: End play of each gears**

- Measure the end play using feeler gauge.
- If the measurement exceeds the limit, replace defective parts.

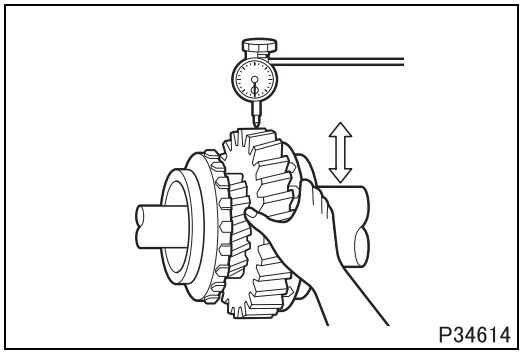

■ **Inspection: Play in diameter direction of each gears**

- If the measurement exceeds the limit, replace defective parts.

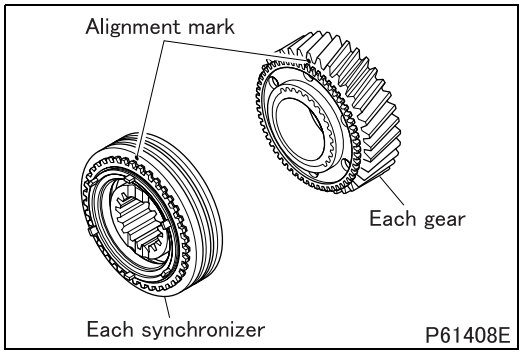

■ **Alignment marks: Each gear and each synchronizer**

- Put alignment marks on the each gear and the synchronizer sleeve of the each synchronizer so that the combination of their mating surfaces can be maintained when reassembled.

◆Removal procedure◆

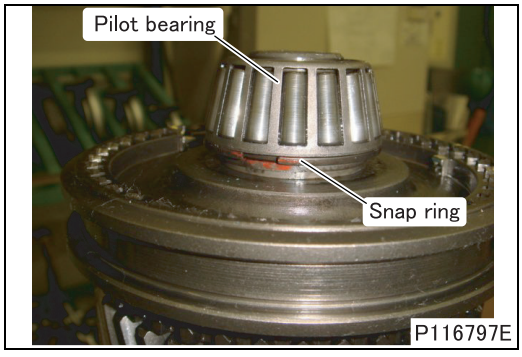

■ **Removal: Pilot bearing, snap ring, 3rd and 5th/6th synchronizer and 3rd gear**

- Remove the snap ring on the 3rd and 5th/6th synchronizer and hook it onto the pilot bearing.

https://truckmanualshub.com/

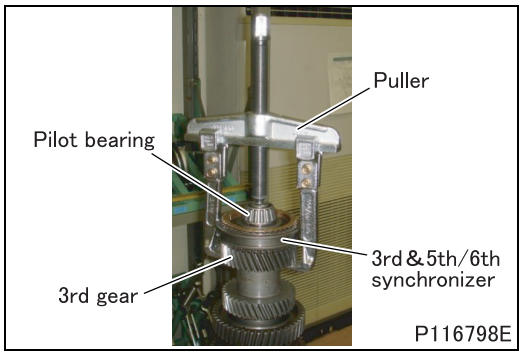

- Using a commercially available gear puller, remove the pilot bearing, snap ring, 3rd and 5th/6th synchronizer and 3rd gear as one unit.

CAUTION ⚠

- **Be sure to hook the gear puller onto the bottom of the 3rd gear; hooking it onto the bottom of the pilot bearing may damage the bearing.**

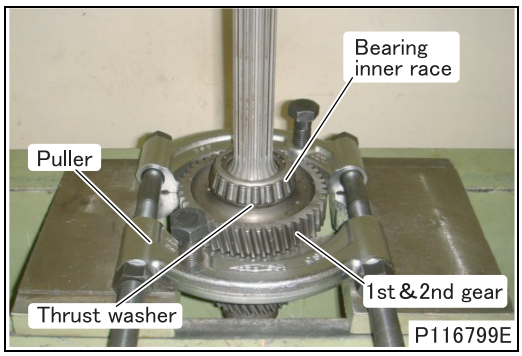

■ Removal: Mainshaft rear taper bearing inner race, 1st gear thrust washer and 1st and 2nd gears

- Install a commercially available bearing puller on the bottom of the 1st and 2nd gears.
- Remove the mainshaft rear taper bearing inner race, 1st gear thrust washer and 1st and 2nd gears as one unit by pushing them out with a press.

CAUTION ⚠

- **Be sure to install the bearing puller on the bottom of the 1st and 2nd gears; installing it on the bottom of mainshaft rear taper bearing inner race may damage the inner race.**

■ Removal: Snap ring, 1st/2nd and reverse synchronizer and reverse gear

- Remove the snap ring using [Ca].
- Remove the 1st/2nd and reverse synchronizer and reverse gear.

◆Inspection procedure◆

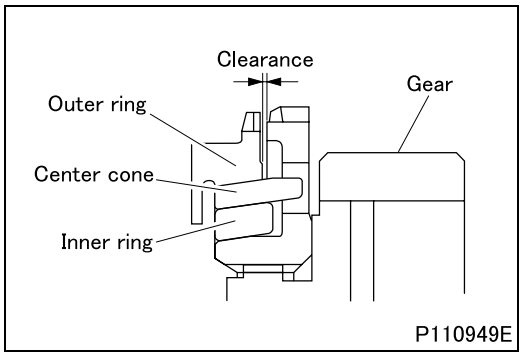

■ Inspection: Clearance between gear and synchronizer ring of synchronizer

<Triple cone type>

- When measuring the clearance, press the ring and the center cone evenly against the gear and measure all around the circumference.
- If the measurement is less than the limit, replace the ring and gear.

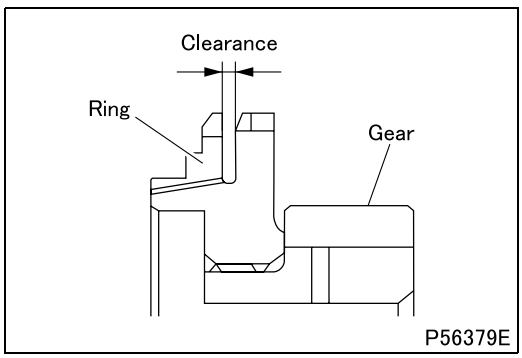

<Single cone type>

- When measuring the clearance, press the ring evenly against the gear and measure all around the circumference.
- If the measurement is less than the limit, replace the ring and the gear or inner drive pinion.

https://truckmanualshub.com/

◆Installation procedure◆

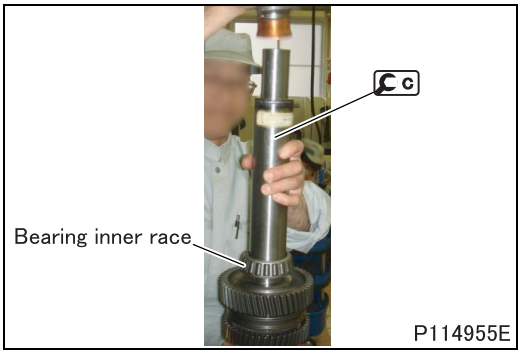

■ **Installation: Mainshaft rear taper bearing inner race**

- Install the mainshaft rear taper bearing inner race on the mainshaft using c.

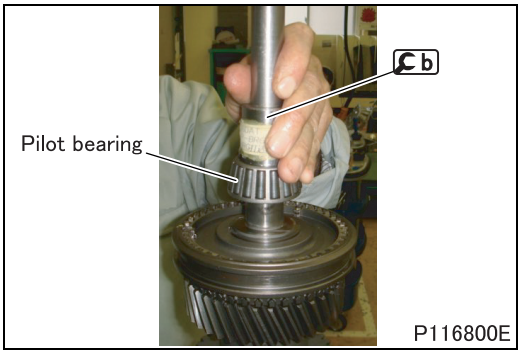

■ **Installation: Pilot bearing**

- Install the pilot bearing on the mainshaft using b.

https://truckmanualshub.com/

M E M O

https://truckmanualshub.com/

1st/2nd and Reverse Synchronizer

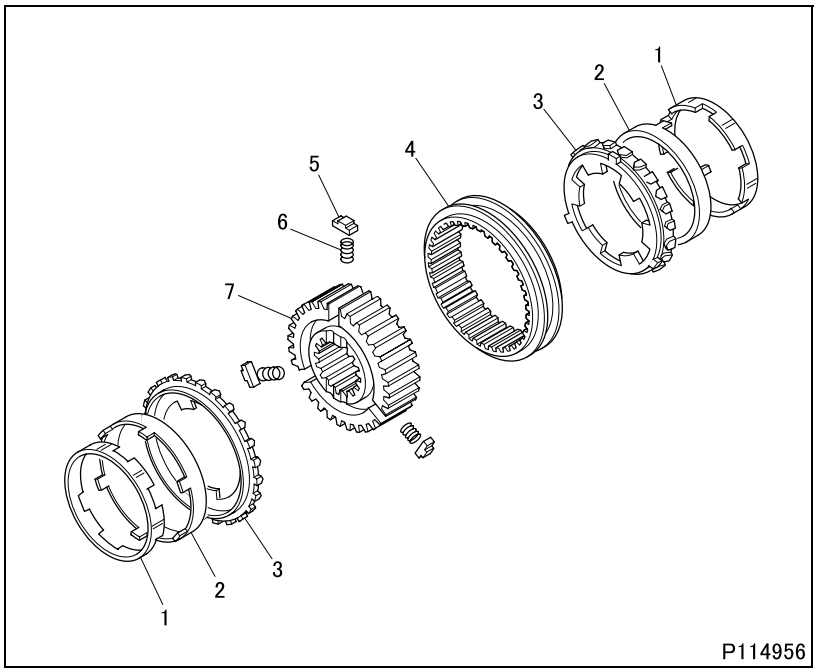

● Disassembly sequence

1 Synchronizer inner ring
2 Synchronizer center cone
3 Synchronizer outer ring
4 Synchronizer sleeve
5 Shifting plunger
6 Shifting plunger spring
7 Synchronizer hub

● Assembly sequence

Follow the disassembly sequence in reverse.

Service standards (Unit: mm {in.})

Location	Maintenance item	Standard value	Limit	Remedy
3, 7	Clearance between synchronizer outer ring protrusion and synchronizer hub groove	3.0 to 3.3 {0.12 to 0.13}	4.0 {0.16}	Replace

◆Work before removal◆

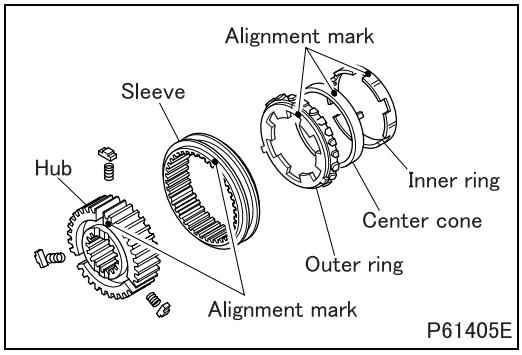

■ Alignment marks

- Put alignment marks on the synchronizer inner ring, center cone, outer ring and hub, each at one location, aligning with the alignment mark put on the synchronizer sleeve before disassembly.

◆Inspection procedure◆

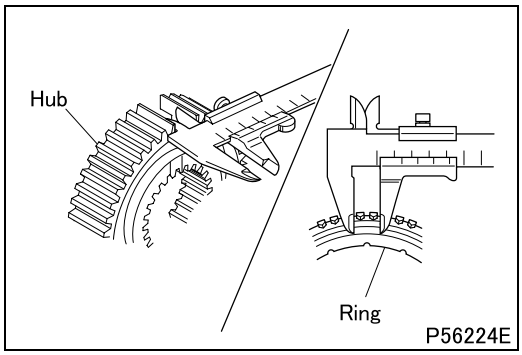

■ Inspection: Clearance between synchronizer outer ring protrusion and synchronizer hub groove

- If the clearance exceeds the limit, replace defective parts.

https://truckmanualshub.com/

◆Installation procedure◆

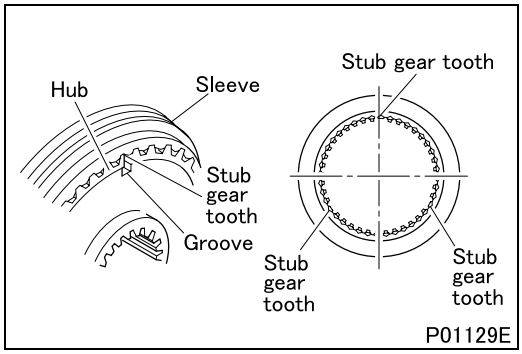

■ Installation: Synchronizer sleeve and synchronizer hub

- When replacing the synchronizer sleeve or synchronizer hub with a new one, align the three keyways of the synchronizer hub with three locations of the stub gear tooth of the synchronizer sleeve to install.

https://truckmanualshub.com/

3rd and 5th/6th Synchronizer

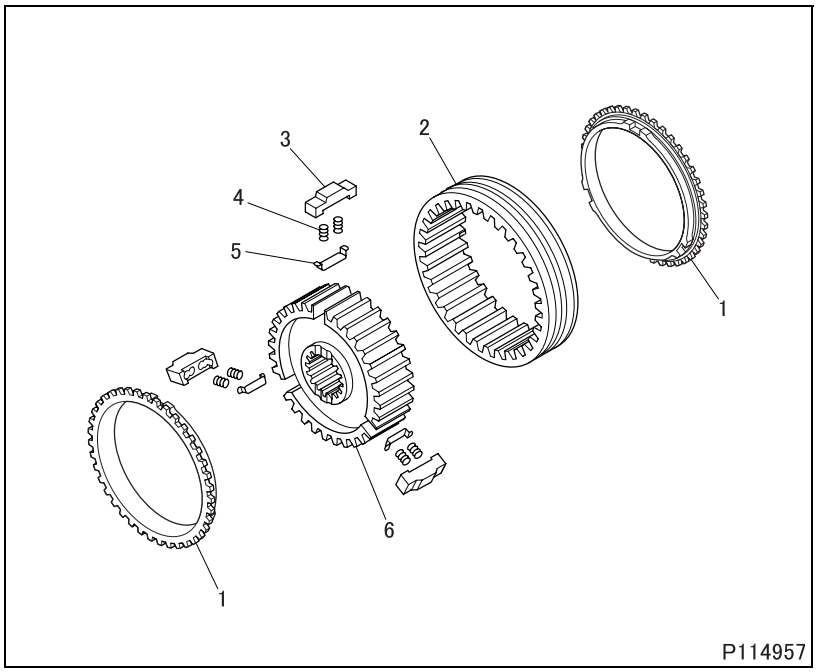

● Disassembly sequence

1 Synchronizer ring
2 Synchronizer sleeve
3 Shifting key
4 Shifting key spring
5 Shifting key retainer
6 Synchronizer hub

● Assembly sequence

Follow the disassembly sequence in reverse.

Service standards (Unit: mm {in.})

Location	Maintenance item	Standard value	Limit	Remedy
1, 3	Clearance between synchronizer ring keyway and shifting key	4.75 to 4.95 {0.187 to 0.194}	5.7 {0.22}	Replace
3, 6	Clearance between shifting key and synchronizer hub keyway	0.05 to 0.20 {0.0020 to 0.0079}	0.5 {0.020}	Replace
4	Shifting key spring installed load (installed length 3.95 {0.16})	17.16 ± 1.7 N {3.9 ± 0.4 lbs, 1.75 ± 0.2 kgf}	12 N {2.7 lbs, 1.23 kgf}	Replace

◆Work before removal◆

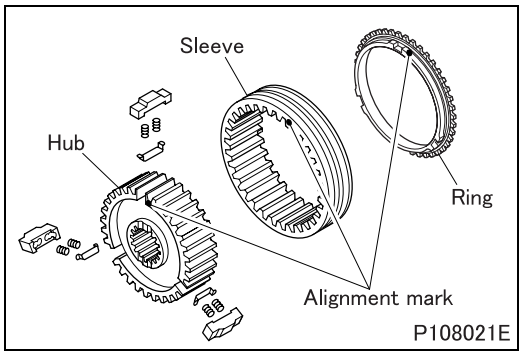

■ Alignment marks

- Put alignment marks on the synchronizer ring and hub, each at one location aligning with the alignment mark put on the synchronizer sleeve before disassembly.

https://truckmanualshub.com/

◆Inspection procedure◆

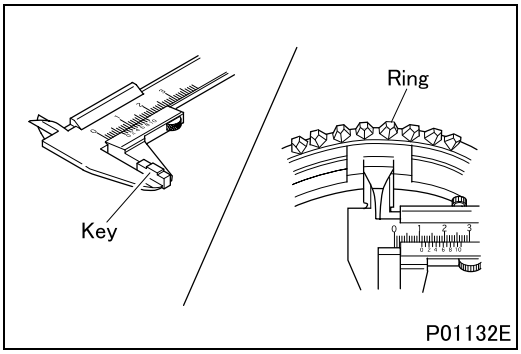

■ **Inspection: Clearance between synchronizer ring and shifting key**

- If the clearance exceeds the limit, replace defective parts.

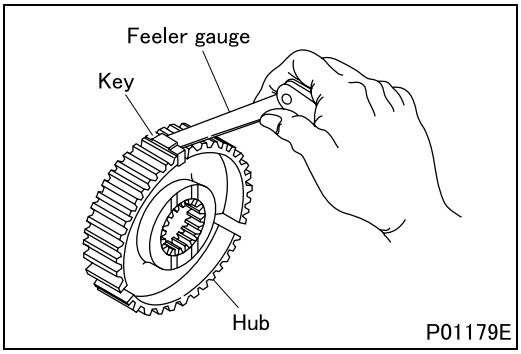

■ **Inspection: Clearance between shifting key and synchronizer hub**

- If the measurement exceeds the limit, replace defective parts.

■ **Inspection: Shifting key spring**

- Measure the installed load at the installed length of the shifting key spring.

◆Installation procedure◆

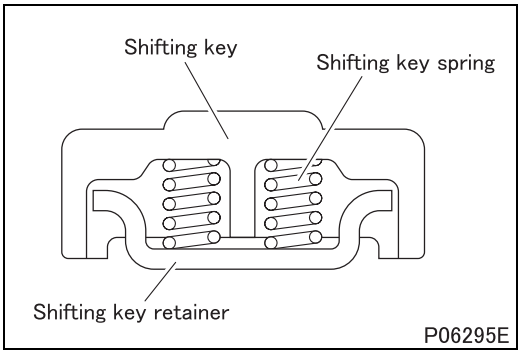

■ **Installation: Shifting key retainer**

- Install shifting key retainers as illustrated.

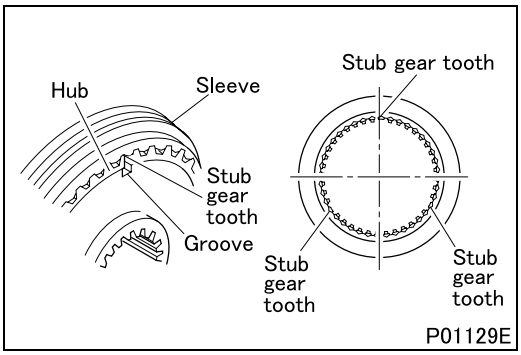

■ **Installation: Synchronizer sleeve and synchronizer hub**

- When replacing the synchronizer sleeve or synchronizer hub with a new one, align the three keyways of the synchronizer hub with three locations of the stub gear tooth of the synchronizer sleeve to install.

https://truckmanualshub.com/

COUNTERSHAFT

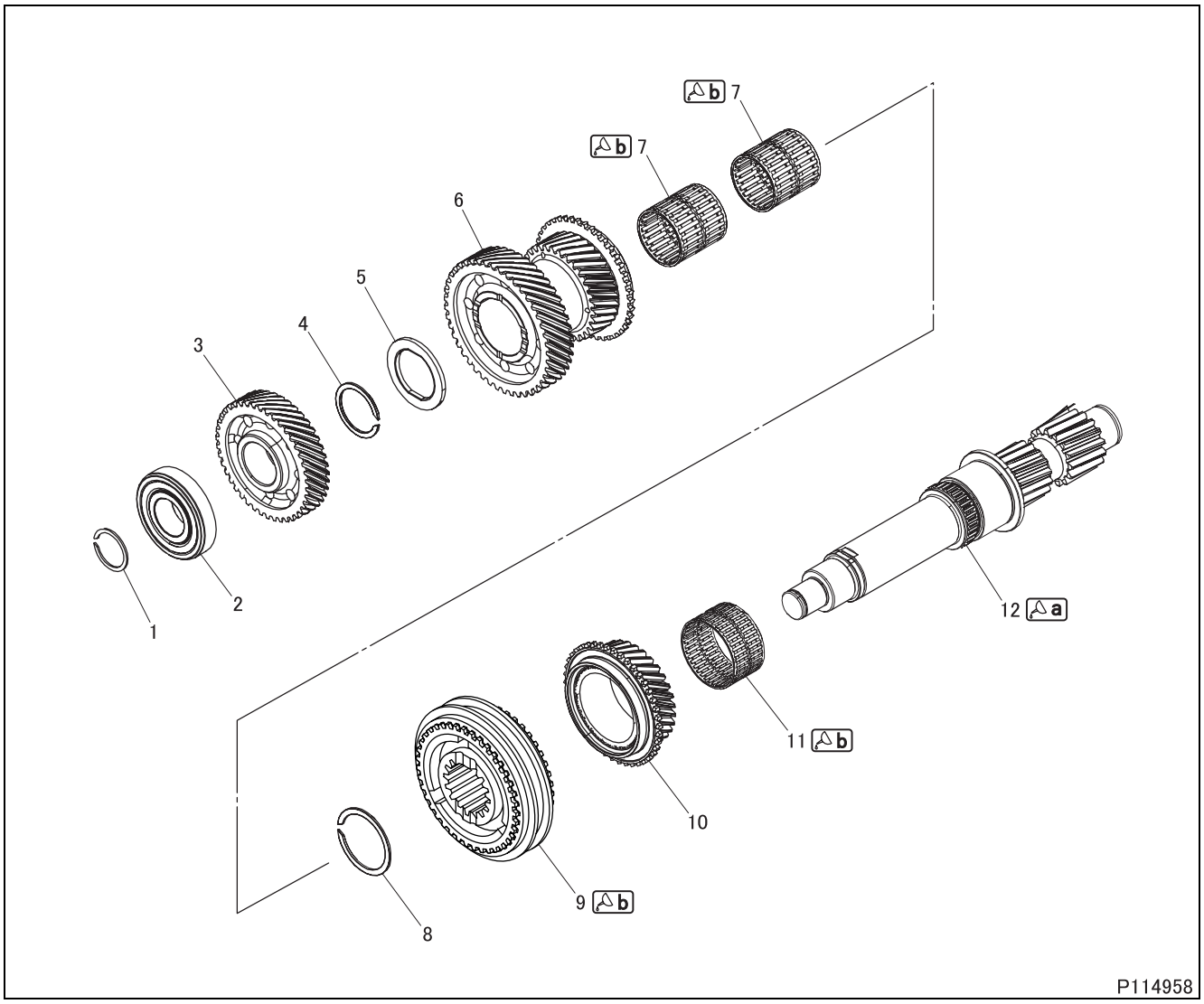

● Disassembly sequence

1 Snap ring
2 Countershaft front bearing
3 Constant mesh gear 2
4 Snap ring
5 Gear thrust washer
6 Constant mesh gear 1 and 3rd gear
7 Needle bearing
8 Snap ring
9 4th and 1st/6th/reverse synchronizer (See later section.)
10 4th gear
11 Needle bearing
12 Countershaft gear

● Assembly sequence

Follow the disassembly sequence in reverse.

https://truckmanualshub.com/

Service standards (Unit: mm {in.})

Location	Maintenance item		Standard value	Limit	Remedy
–	End play	Constant mesh gear 1 and 3rd gear	0.08 to 0.37 {0.0031 to 0.015}	0.7 {0.028}	Replace
		4th gear	0.15 to 0.46 {0.0059 to 0.018}	0.7 {0.028}	
–	Play in the diameter direction	Constant mesh gear 1	0.02 to 0.06 {0.00079 to 0.0024}	0.12 {0.047}	Replace
		3rd gear	0.02 to 0.06 {0.00079 to 0.0024}	0.12 {0.047}	
		4th gear	0.02 to 0.06 {0.00079 to 0.0024}	0.12 {0.047}	
–	Clearance between gear and synchronizer ring	3rd gear and 4th and 1st/6th/reverse synchronizer	1.16 to 1.49 {0.046 to 0.058}	0.5 {0.020}	Replace
		4th gear and 4th and 1st/6th/reverse synchronizer	1.14 to 1.51 {0.045 to 0.059}	0.5 {0.020}	

Lubricant and/or sealant

Mark	Points of application	Specified lubricant and/or sealant	Quantity
a	Circumference of the constant mesh gear 2 mounting section of the countershaft	Loctite 640	As required
b	Sliding area of needle bearing	API GL-3 SAE80	As required
	Sliding area of 4th and 1st/6th/reverse synchronizer		

Special tools (Unit: mm {in.})

Mark	Tool name and shape	Part No.	Application
a	Bearing installer A: ϕ30 {1.18}, B: ϕ26 {1.02} 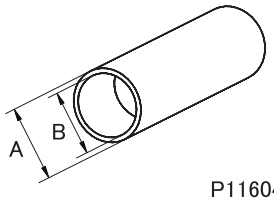 P116045	MH064243	Installation of countershaft front bearing
b	Snap ring expander 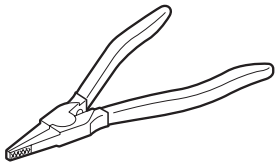 P01137	MH061268	Removal and installation of snap ring

https://truckmanualshub.com/

◆Work before removal◆

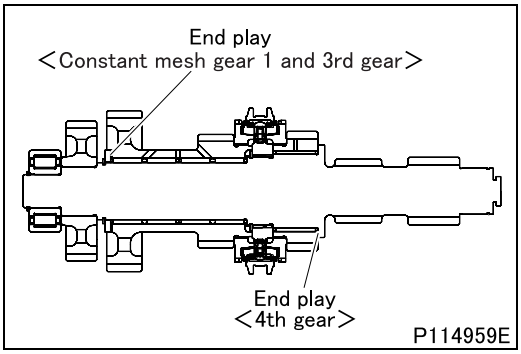

■ **Inspection: End play of each gears**

- Measure the end play using feeler gauge.
- If the measurement exceeds the limit, replace defective parts.

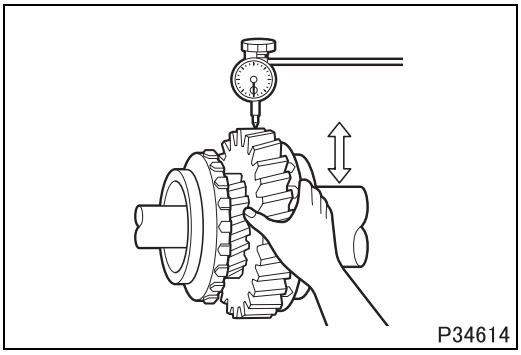

■ **Inspection: Play in diameter direction of each gears**

- If the measurement exceeds the limit, replace defective parts.

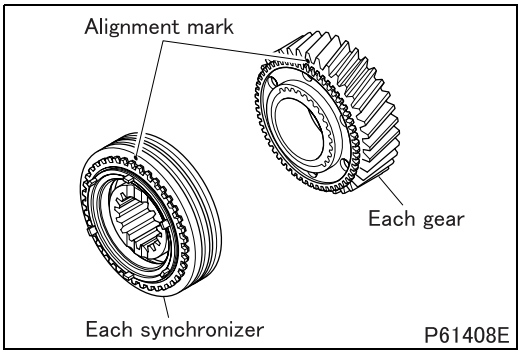

■ **Alignment marks: Each gear and each synchronizer**

- Put alignment marks on the each gear and the synchronizer sleeve of the each synchronizer so that the combination of their mating surfaces can be maintained when reassembled.

◆Removal procedure◆

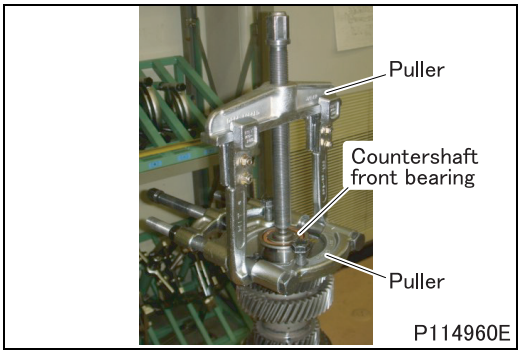

■ **Removal: Snap ring and countershaft front bearing**

- Remove the snap ring using [b].
- Remove the countershaft front bearing using a commercially available bearing puller and gear puller.

https://truckmanualshub.com/

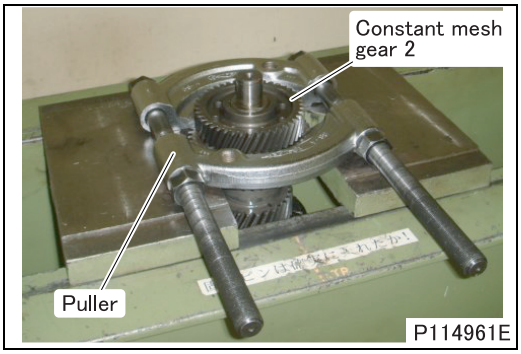

■ **Removal: Constant mesh gear 2**

- Install a commercially available bearing puller on the bottom of constant mesh gear 2, and then remove the gear by pushing it out with a press.

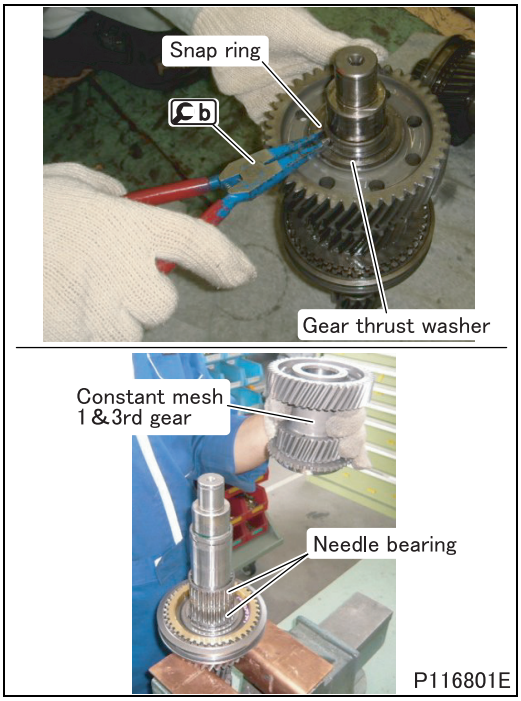

■ **Removal: Snap ring, gear thrust washer, constant mesh gear 1 and 3rd gear and needle bearing**

- Remove the snap ring using b.
- Remove each part.

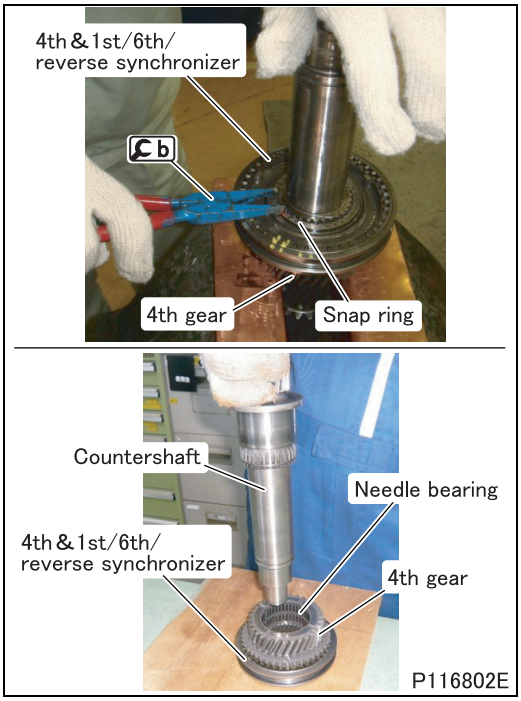

■ **Removal: Snap ring, 4th and 1st/6th/reverse synchronizer, 4th gear and needle bearing**

- Remove the snap ring using b.
- Remove each part.

https://truckmanualshub.com/

◆Inspection procedure◆

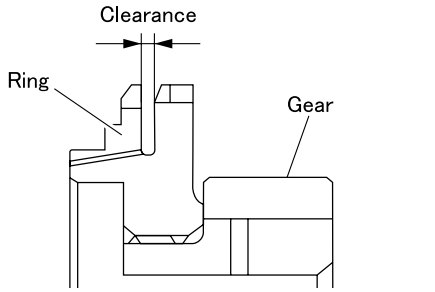

■ **Inspection: Clearance between 4th gear or constant mesh gear 1 and 3rd gear and synchronizer ring of 4th and 1st/6th/reverse synchronizer**

- When measuring the clearance, press the ring evenly against the gear and measure all around the circumference.
- If the measurement is less than the limit, replace the ring and the gear.

◆Installation procedure◆

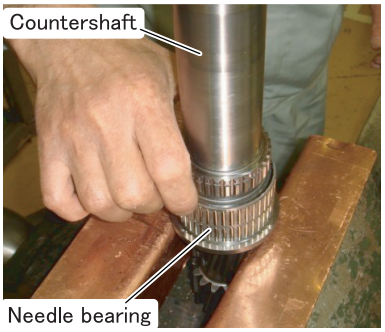

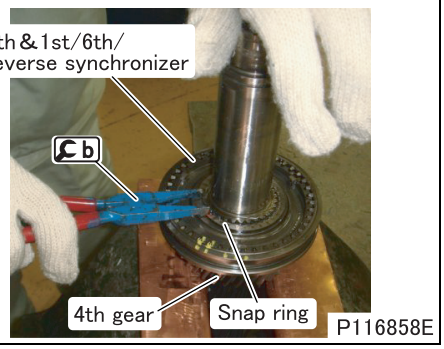

■ **Installation: Needle bearing, 4th gear, 4th and 1st/6th/reverse synchronizer and snap ring**

- Apply oil to the sliding surfaces of the needle bearing and 4th and 1st/6th/reverse synchronizer.
- Install each part.
- Install the snap ring using b.

https://truckmanualshub.com/

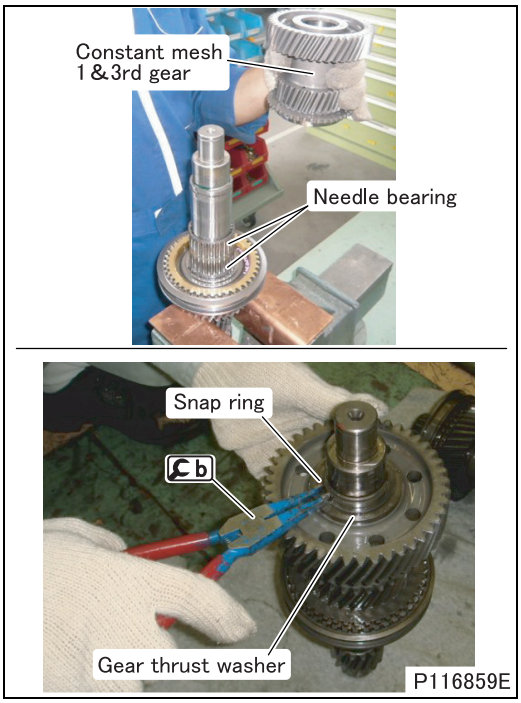

■ **Installation: Needle bearing, constant mesh gear 1 and 3rd gear, gear thrust washer and snap ring**

- Apply oil to the sliding surface of the needle bearing.
- Install each part.
- Install the snap ring using b.

■ **Installation: Constant mesh gear 2**

[Heating]

- Heat constant mesh gear 2 evenly to 130°C {266°F} using one of the following methods.

<Temperature-controlled chamber>

- Heat constant mesh gear 2 with a temperature setting of 130°C {266°F} for more than 15 minutes.

<Ring heater>

- Repeat a heating process two to three times with a temperature setting of 130°C {266°F} so that entire constant mesh gear 2 is evenly heated to 130°C {266°F}.

CAUTION ⚠

- **Repeat the heating process two to three times because sufficient thermal expansion of constant mesh gear 2 cannot be achieved in a single heating process.**

<Oil bath>

- Heat gear oil to 130°C {266°F} and immerse constant mesh gear 2 in the oil bath in the orientation shown in the picture.
- Since gear oil temperature drops when constant mesh gear 2 is immersed in the oil bath, reheat the oil to 130°C {266°F} and keep constant mesh gear 2 immersed in the oil bath for more than 15 minutes while maintaining the oil temperature at 130°C {266°F}.

https://truckmanualshub.com/

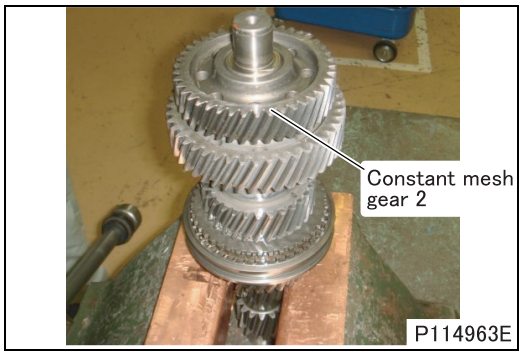

[Installation]

- Apply locking agent to the circumference of the constant mesh gear 2 mounting section of the countershaft.
- Install heated constant mesh gear 2.

WARNING ⚠

- **Take care not to burn yourself when installing the hot constant mesh gear 2.**

- When constant mesh gear 2 has sufficiently cooled down, install the snap ring using Ⓒb.

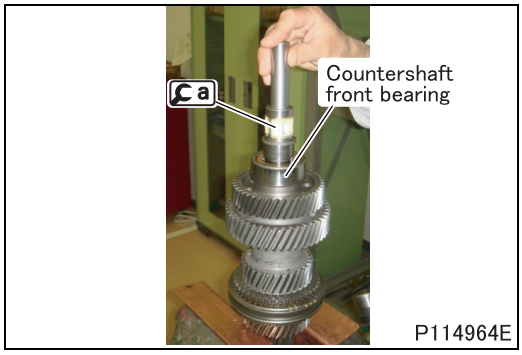

■ Installation: Countershaft front bearing

- Install the countershaft front bearing using Ⓒa.

https://truckmanualshub.com/

M E M O

https://truckmanualshub.com/

4th and 1st/6th/Reverse Synchronizer

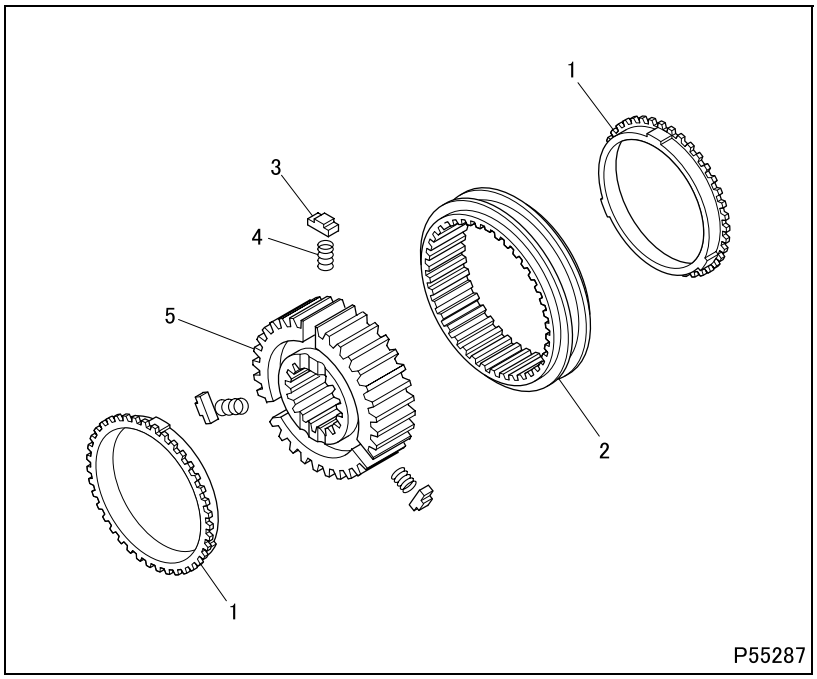

● Disassembly sequence

1 Synchronizer ring
2 Synchronizer sleeve
3 Shifting plunger
4 Shifting plunger spring
5 Synchronizer hub

● Assembly sequence

Follow the disassembly sequence in reverse.

Service standards (Unit: mm {in.})

Location	Maintenance item	Standard value	Limit	Remedy
1, 5	Clearance between synchronizer ring protrusion and synchronizer hub groove	4.8 to 5.1 {0.19 to 0.20}	5.8 {0.23}	Replace

◆Work before removal◆

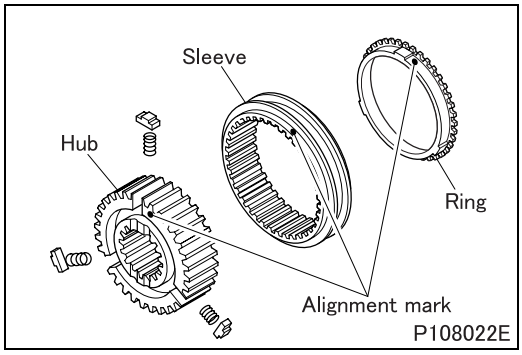

■ Alignment marks: Synchronizer ring and synchronizer hub

- Put alignment marks on the synchronizer ring and hub, each at one location aligning with the alignment mark put on the synchronizer sleeve before disassembly.

◆Inspection procedure◆

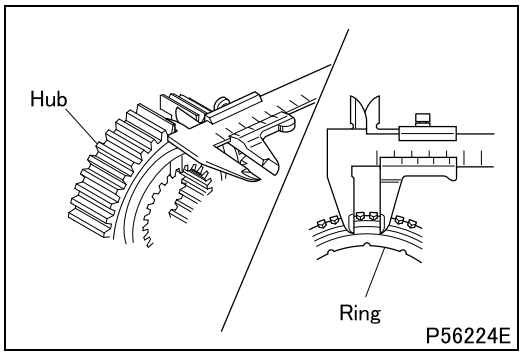

■ Inspection: Clearance between synchronizer ring protrusion and synchronizer hub groove

- If the clearance exceeds the limit, replace defective parts.

https://truckmanualshub.com/

◆Installation procedure◆

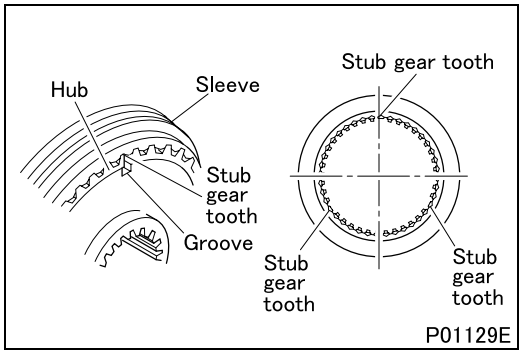

■ Installation: Synchronizer sleeve and synchronizer hub

- When replacing the synchronizer sleeve or synchronizer hub with a new one, align the three keyways of the synchronizer hub with three locations of the stub gear tooth of the synchronizer sleeve to install.

https://truckmanualshub.com/

TRANSMISSION CONTROL

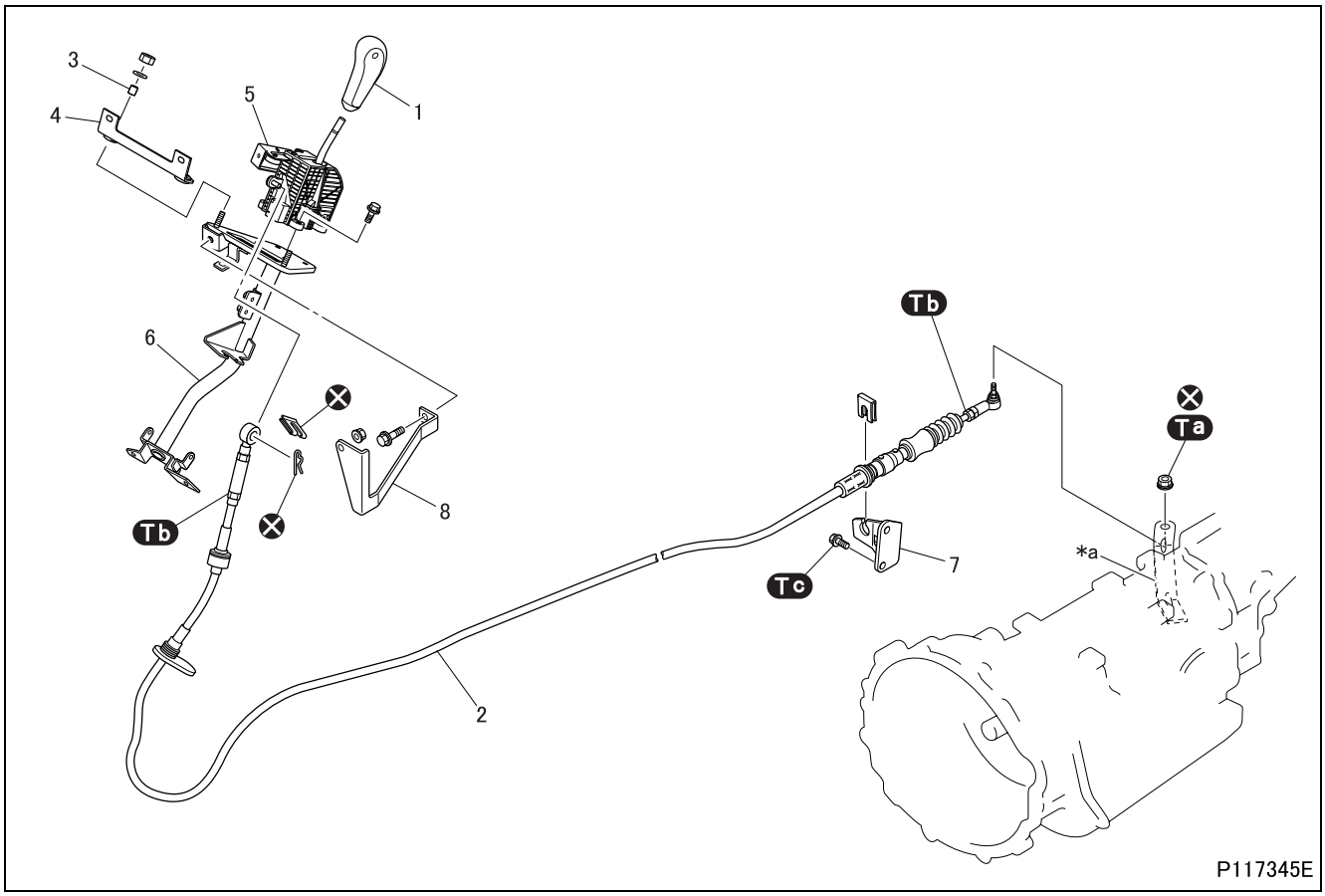

● **Removal sequence**

1 Shift knob
2 P-range cable
3 Collar
4 Instrument panel bracket
5 Shift lever unit
6 Shift lever bracket
7 Bracket
8 Shift lever stay
***a**: Parking cable lever
⊗: Non-reusable parts

- Place the gear shift lever in the R-range position before starting removal work because installation work will be performed in the N range position.
- If the shift lever is placed into the R range due to a discharged battery or an electric circuit not connected yet, operate the shift lock release lever to place the shift lever into the N range. (See Gr00.)

● **Installation sequence**

Follow the removal sequence in reverse.

CAUTION ⚠

- **Locking agent is applied to the nuts that are designated as non-reusable. Be sure to replace these nuts if they have been loosened or removed.**

https://truckmanualshub.com/

Tightening torque (Unit: N·m {ft.lbs, kgf·m})

Mark	Parts to be tightened		Tightening torque	Remarks
Ta	Nut (P-range cable mounting)		19 to 24 {14 to 18, 1.9 to 2.4)	–
Tb	P-range cable	Lock nut on transmission side	10 to 15 {7.4 to 11.0, 1.0 to 1.5}	–
		Lock nut on change lever unit side	4 to 6 {3.0 to 4.4, 0.4 to 0.6}	–
Tc	Bolt (bracket mounting}		37 to 53 {27 to 39, 3.8 to 5.4}	–

◆Installation procedure◆

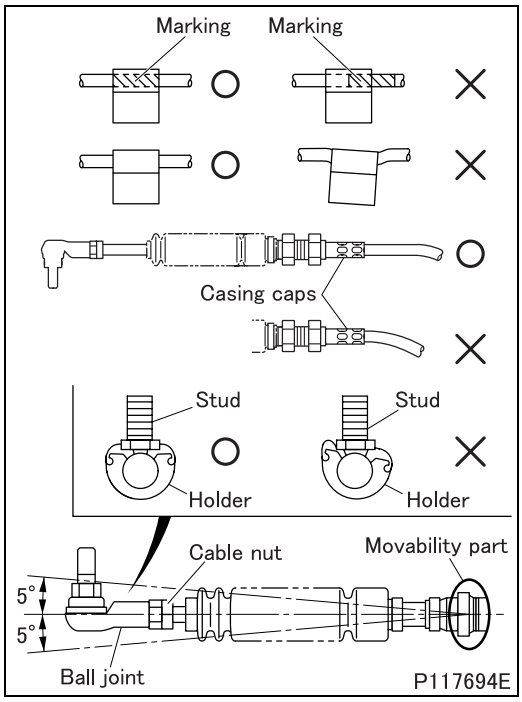

■ **Installation: P-range cable**

- Install the cable as follows.
  - Before installation, check the orientation and number of the clamps, orientation of the ball joint and other cabling conditions.
  - In places where a cable marking is provided, align the marking and clamp positions to install the cable.
  - Install the clamp at right angles to the cable.
  - Install the casing cap portion as a straight line.
  - Install the cable so that cable boot is not twisted. To eliminate the twist of the cable boot, remove the cable from both the gear shift lever and transmission, and then rotate the inner cable to remove the twist. When slight adjustment is required, loosen the cable nut to make adjustments.
  - Install the ball joint so that its stud does not come into one-sided contact with the boot. If the stud makes one-sided contact, loosen the cable nut to make adjustments.

CAUTION ⚠

- **Do not rotate the cable more than one revolution to eliminate twist or one-sided contact and make sure that the ball joint is screwed on the cable to a depth of 8 mm {0.31 in.} or more. Otherwise damage may result.**
  - Provide a large bending radius to the cable.
  - The bending angle from the movable section of the cable should not exceed 5°.
- Install the cable on the bracket and parking cable lever.

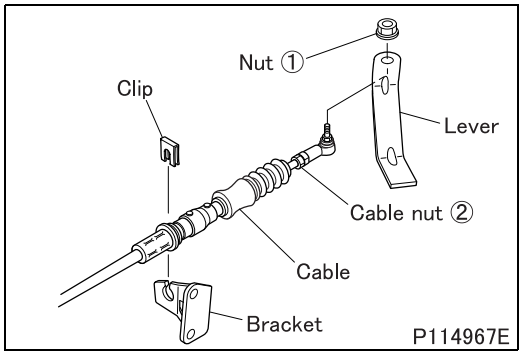

https://truckmanualshub.com/

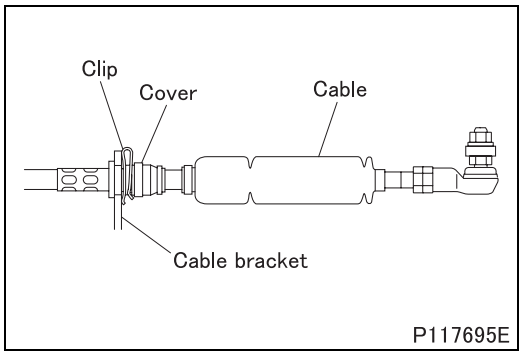

- Fix the cable with a clip with care not to allow an excessive force to be applied to the cable.
- Fit the clip all the way.

CAUTION ⚠

- **Be careful not to damage the cable cover when securing the cable with the clip.**

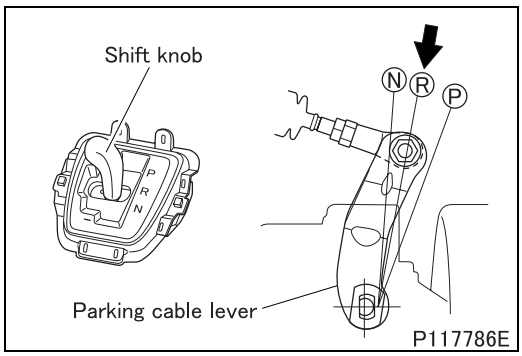

- Place the shift knob and parking cable lever to the R range positions, respectively.

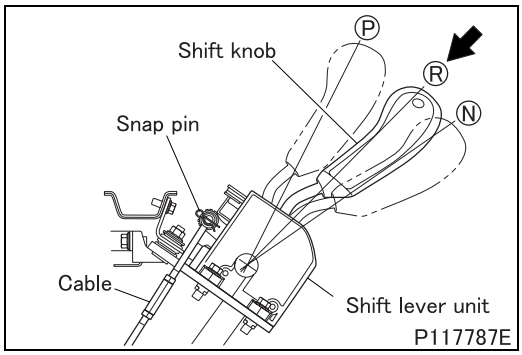

- After checking that the shift knob is in the R range position, install the P-range cable on the shift lever unit.

◆Work after installation◆

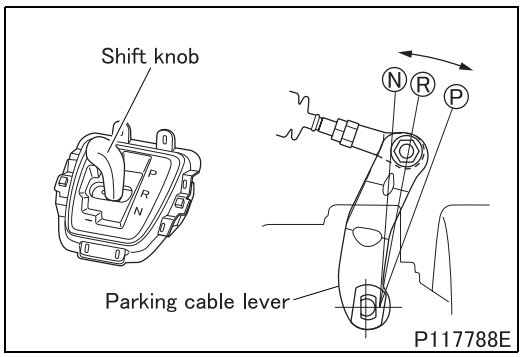

■ Inspection: Shift knob

[Inspection]

- Operate the shift knob to and fro between the P and N range positions two to three times, and then check the following.
  (1) The parking cable lever is positioned in the range corresponding to the shift knob position without any deviation and the indicator for the selected range in the meter cluster lights up.
  (2) Hard operation or poor detent feel is not observed in any of the ranges.
- If there is a problem, adjust the P-range cable.

https://truckmanualshub.com/

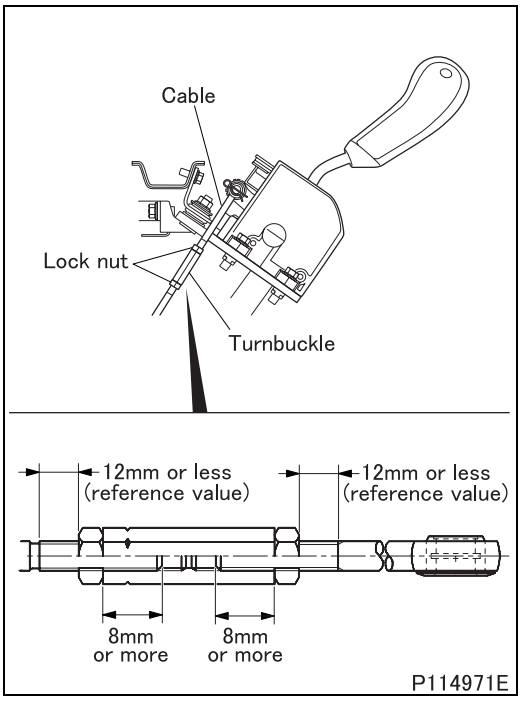

[Adjustment]

- Loosen the lock nuts on the P-range cable, and then rotate the turnbuckle to adjust the cable length.
- Make sure that the engagement margins of the threads of the turnbuckle comply with the specified dimensions.

CAUTION ⚠

- **Do not adjust the P-range cable length on the ball joint side (parking cable lever side).**
- **An engagement margin of the threads of the turnbuckle that falls short of the specified dimension could cause a breakage.**

- Tighten the lock nuts.
- After adjustment, inspect the selector cable again to check that there is no problem.
- If there is a problem that cannot be solved by adjustment, inspect the indicator-related parts in the meter cluster circuit.

https://truckmanualshub.com/

OIL COOLER

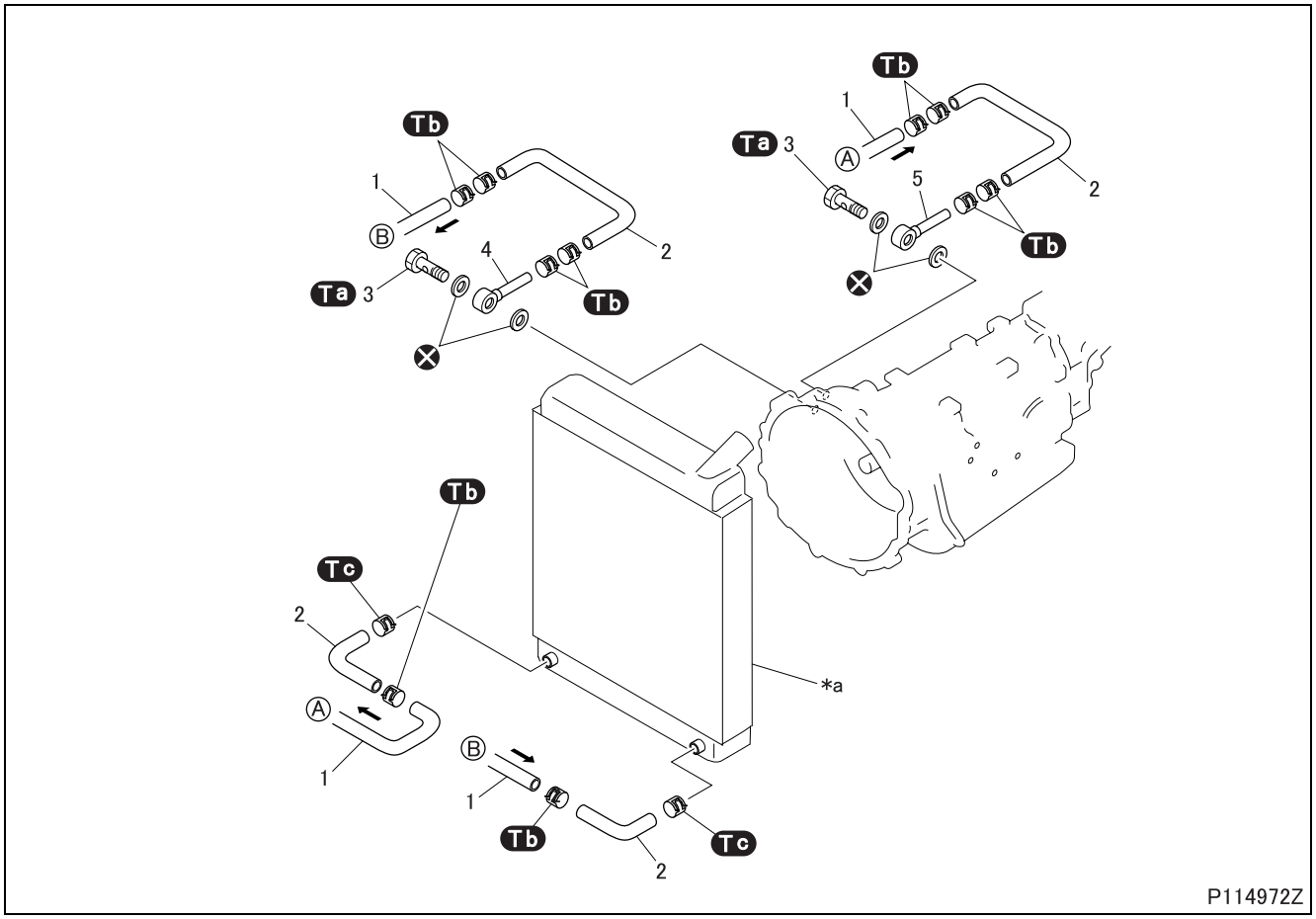

● **Removal sequence**

1 Oil cooler tube
2 Oil cooler hose
3 Eyebolt
4 Oil cooler feed tube
5 Oil cooler return tube
***a**: Radiator
⊗: Non-reusable parts

● **Installation sequence**

Follow the removal sequence in reverse.

Tightening torque (Unit: N·m {ft.lbs, kgf·m})

Mark	Parts to be tightened	Tightening torque	Remarks
Ta	Eyebolt	43 to 57 {32 to 42, 4.4 to 5.8}	–
Tb	Clip band (oil cooler tube and hose mounting)	2.5 to 3.0 {1.8 to 2.2, 0.25 to 0.30}	–
Tc	Clip band (oil cooler hose mounting)	1.3 to 1.8 {1.0 to 1.3, 0.13 to 0.18}	–

https://truckmanualshub.com/

◆Installation procedure◆

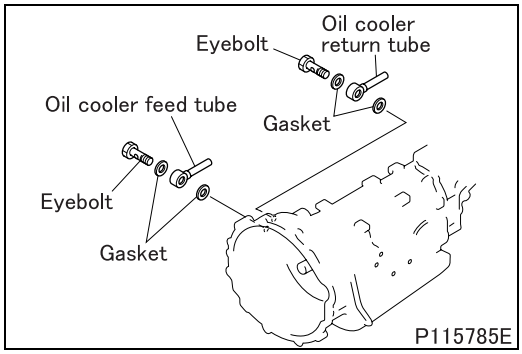

■ **Installation: Eyebolt**

- Install the oil cooler feed tube and oil cooler return tube on the transmission with the eyebolts.

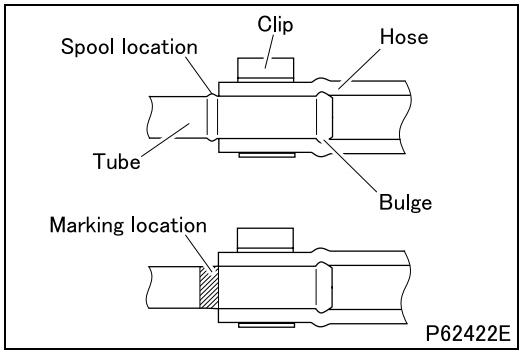

■ **Installation: Oil cooler hose**

- Fit the oil cooler hose all the way to the spool or marking location at the end or the oil cooler tube.
- Fasten the hose with the clip avoiding the bulge.

CAUTION ⚠

- **Install the oil cooler hose without forced bend and twist.**
- **When installing the oil cooler hose, do not apply oil to its joints.**

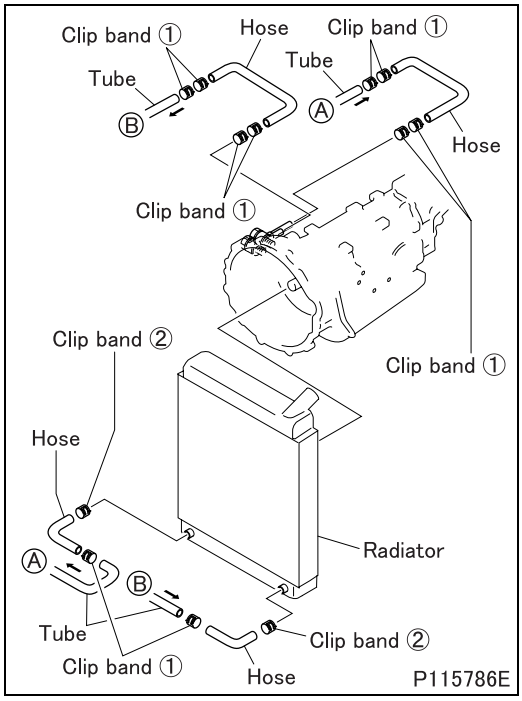

◆Work after installation◆

■ **Inspection: Automatic transmission fluid quantity**

- After oil line is removed, check the automatic transmission fluid level and replenish the fluid if necessary. (See ON-VEHICLE INSPECTION AND ADJUSTMENT.)

https://truckmanualshub.com/

TRANSMISSION POWER TAKE-OFF <STANDARD TYPE>

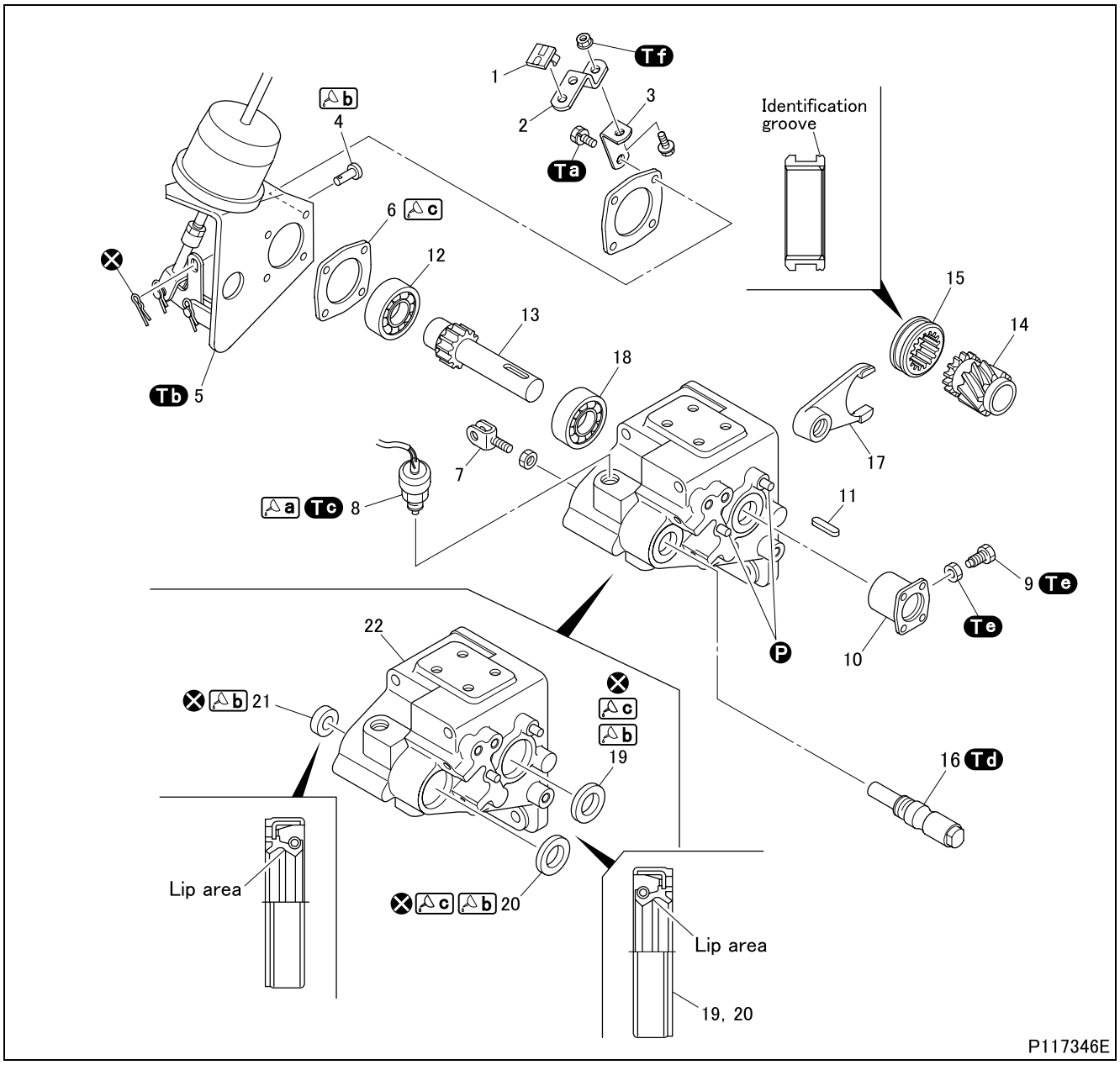

● Disassembly sequence

1 Clip
2 Clip bracket
3 Bracket
4 Clevis pin
5 Vacuum chamber (See later section.)
6 Front cover
7 Shift clevis
8 Power take-off control switch
9 Set bolt
10 Power take-off companion flange
11 Sunk key
12 Bearing
13 Power take-off shaft
14 Power take-off gear
15 Power take-off shift sleeve
16 Power take-off shift rail
17 Power take-off shift fork
18 Bearing
19 Oil seal
20 Oil seal
21 Oil seal
22 Power take-off case

Ⓟ: Locating pin
⊗: Non-reusable parts

● Assembly sequence

Follow the disassembly sequence in reverse.

https://truckmanualshub.com/

Service standards (Unit: mm {in.})

Location	Maintenance item	Standard value	Limit	Remedy
13, 14	Play in diameter direction of power take-off gear	0.07 to 0.11 {0.0028 to 0.0043}	0.2 {0.0079}	Replace
15, 17	Clearance between power take-off shift sleeve and power take-off shift fork	0.3 to 0.5 {0.012 to 0.020}	1.0 {0.039}	Replace

Tightening torque (Unit: N·m {ft.lbs, kgf·m})

Mark	Parts to be tightened	Tightening torque	Remarks
Ta	Bolt (bracket, vacuum chamber and front cover mounting)	23.2 {17, 2.37}	–
Tb	Vacuum chamber joint mounting nut	9.8 to 15.6 {7.2 to 12, 1.0 to 1.6}	–
Tc	Power take-off control switch	49 {36, 5}	Sealant
Td	Power take-off shift fork mounting section on power take-off shift rail	83.4 {62, 8.5}	–
Te	Set bolt	11.2 {8.3, 1.14}	–
	Nut (power take-off companion flange mounting)		
Tf	Nut (clip bracket mounting)	12.7 {9.4, 1.3}	–

Lubricant and/or sealant

Mark	Points of application	Specified lubricant and/or sealant	Quantity
a	Threads of power take-off control switch	ThreeBond 1105	As required
b	Sliding section of clevis pin	Wheel bearing grease [NLGI No. 2 (Li soap)]	As required
	Oil seal lips		
c	Power take-off case mating surface of front cover	ThreeBond 1194	As required
	Outer circumference of oil seal		

◆Work before removal◆

■ Removal: Transmission power take-off

- Remove the transmission power take-off. (See “REVERSE IDLER GEAR”.)

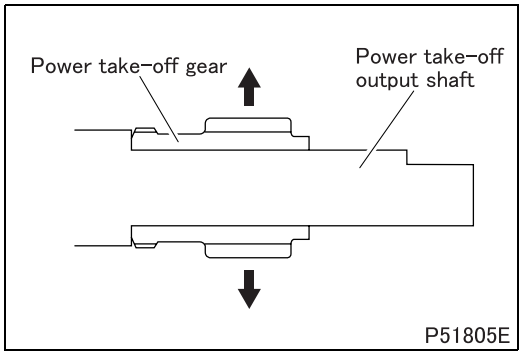

■ Inspection: Play in the diameter direction of power take-off gear

- If the measurement exceeds the limit, replace defective parts.

https://truckmanualshub.com/

◆Inspection procedure◆

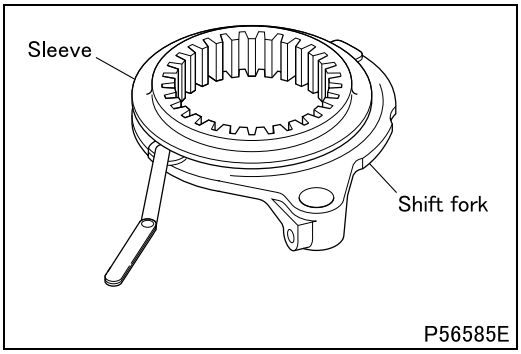

■ **Inspection: Clearance between power take-off shift sleeve and power take-off shift fork**

- If the measurement exceeds the limit, replace defective parts.

◆Installation procedure◆

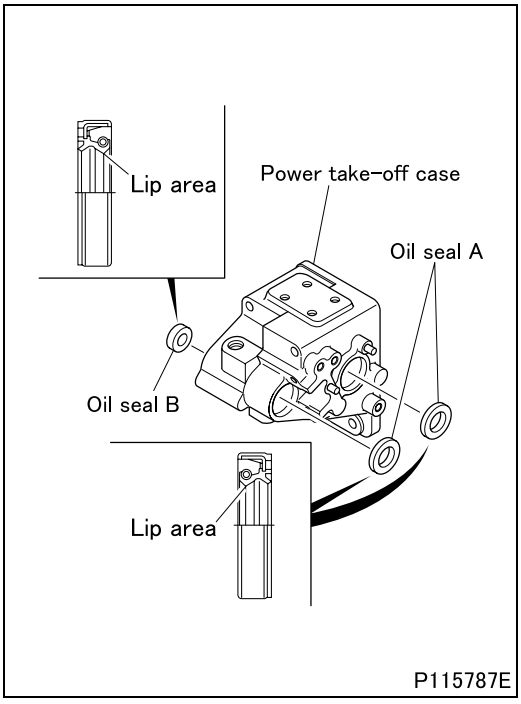

■ **Installation: Oil seal**

- Apply sealant to the outer circumference of the oil seal A.
- Apply grease to the oil seal A, B lips and install the oil seals to the power take-off case.

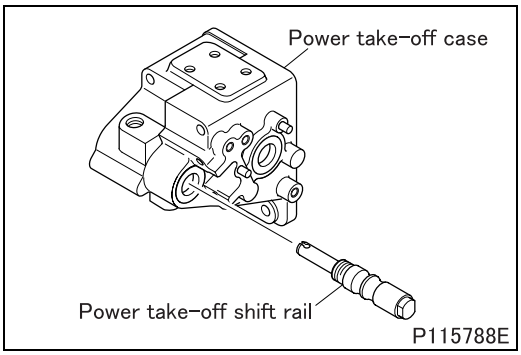

■ **Installation: Power take-off shift rail**

- Install the power take-off shift rail to the power take-off case.

https://truckmanualshub.com/

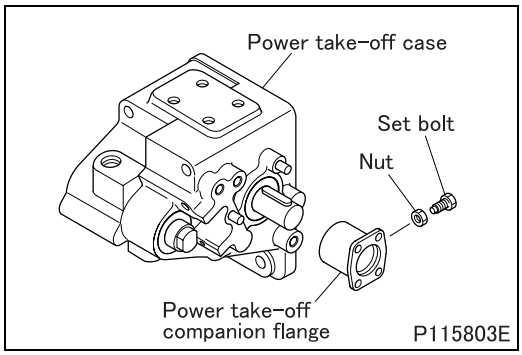

■ **Installation: Power take-off companion flange**

- Install the power take-off companion flange to the power take-off case and install the nut and set bolt.

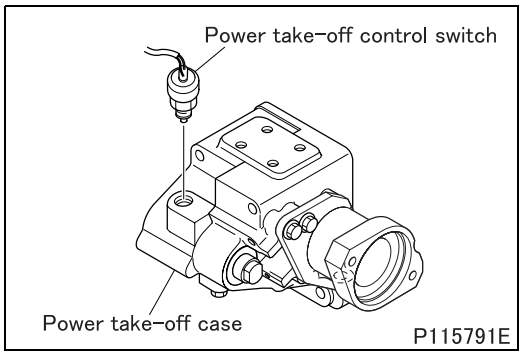

■ **Installation: Power take-off control switch**

- Apply sealant to the threads of the power take-off control switch and install it to the power take-off case.

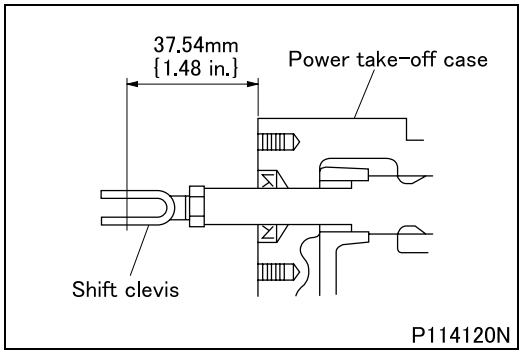

■ **Installation: Shift clevis**

- Install the shift clevis while adjusting the distance from the center of the shift clevis hole to the end surface of the power take-off case as shown in the drawing.

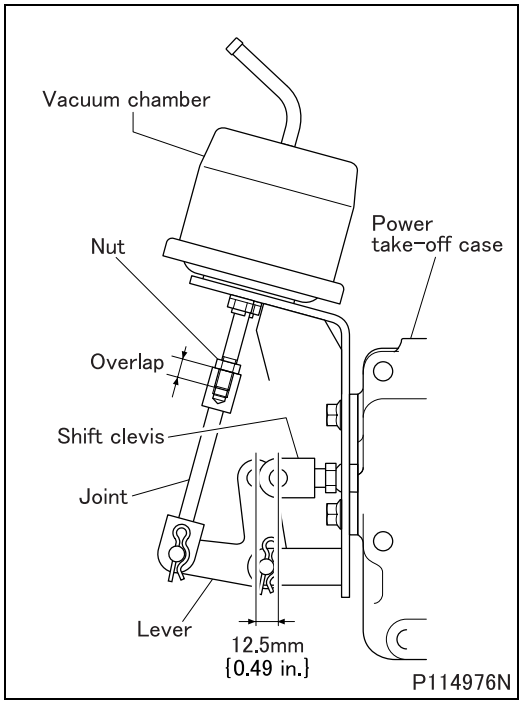

■ **Installation: Vacuum chamber**

- Apply sealant to the power take-off case mating surface of the front cover. Install the vacuum chamber and front cover to the power take-off case.
- Measure the distance between the centers of the holes in the shift clevis and lever.
- If the measurement does not match the value shown in the drawing, adjust by turning the shift clevis or joint.
- If the adjustment is performed by turning the joint, secure the overlap of the joint and the rod of the vacuum chamber by 8 threads or more.
- After adjustment, tighten the nut to the specified torque.
- Push in the joint to align the holes in the lever and shift clevis and connect them with the clevis pin.
- Apply Cb to the sliding surface of the clevis pin before installing the clevis pin.

https://truckmanualshub.com/

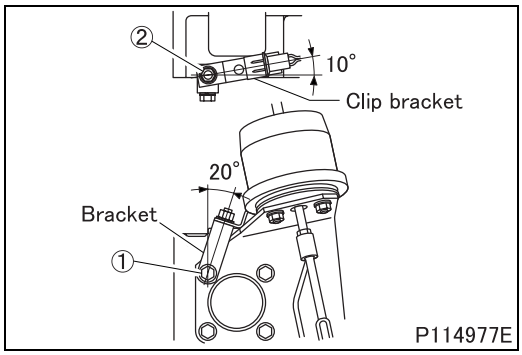

■ **Installation: Bracket and clip bracket**

- Install the bracket and clip bracket as shown in the drawing.

◆Work after installation◆

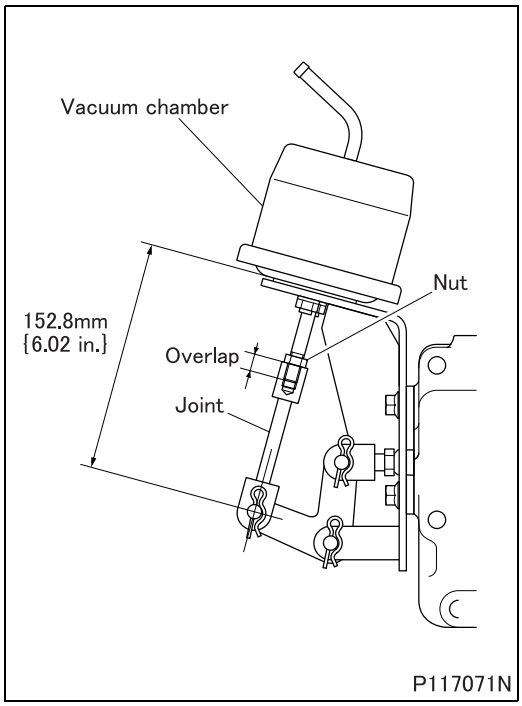

■ **Adjustment: Vacuum chamber**

- Measure the distance from the bottom of the vacuum chamber to the center of the hole in the joint.
- If the measurement does not match the value shown in the drawing, adjust by turning the joint. In this case, secure the overlap of the joint and the rod of the vacuum chamber by 8 threads or more.
- After adjustment, tighten the nut to the specified torque.

■ **Installation: Transmission power take-off**

- Install the transmission power take-off. (See “REVERSE IDLER GEAR”.)

https://truckmanualshub.com/

M E M O

https://truckmanualshub.com/

TRANSMISSION POWER TAKE-OFF <STANDARD TYPE>

Vacuum Chamber

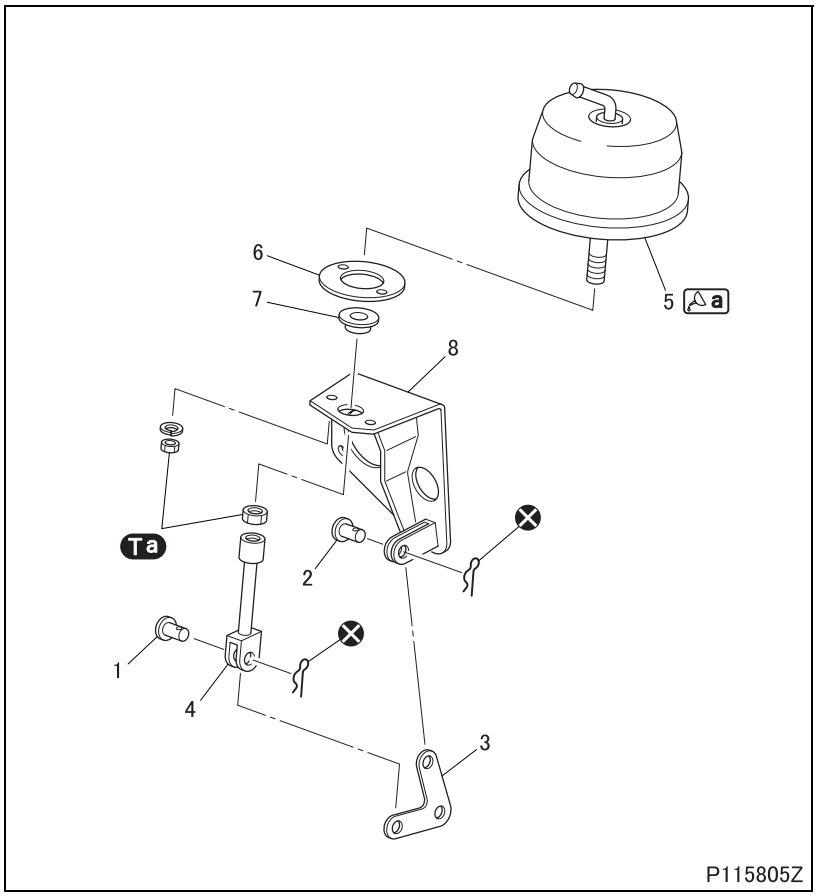

● **Disassembly sequence**

1 Clevis pin
2 Clevis pin
3 Lever
4 Joint
5 Vacuum chamber
6 Gasket
7 Bearing
8 Bracket

⊗: Non-reusable parts

● **Assembly sequence**

Follow the disassembly sequence in reverse.

Service standards (Unit: mm {in.})

Location	Maintenance item	Standard value	Limit	Remedy
5	Airtightness of vacuum chamber (inspection vacuum: 66.7 kPa {19.7 in.Hg, 500 mmHg}, 15 seconds)	Vacuum: 63 kPa {18.6 in.Hg, 475 mmHg} or more	–	Replace

Tightening torque (Unit: N·m {ft.lbs, kgf·m})

Mark	Parts to be tightened	Tightening torque	Remarks
Ta	Nut (mounting joint)	9.8 to 15.6 {7.2 to 12.0, 1.0 to 1.6}	–
	Nut (mounting vacuum chamber)		

Lubricant and/or sealant

Mark	Points of application	Specified lubricant and/or sealant	Quantity
a	Mounting threads of vacuum chamber	ThreeBond 1211	As required

https://truckmanualshub.com/

◆Inspection procedure◆

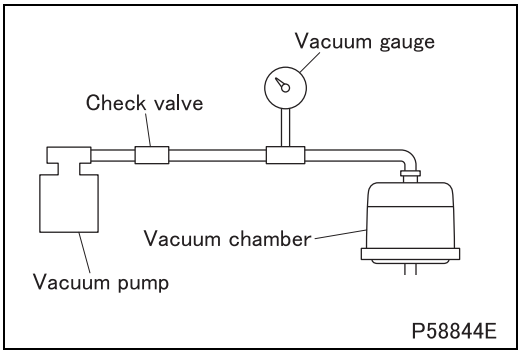

■ Inspection: Vacuum chamber

- Connect the vacuum pump, check valve and vacuum gauge to the vacuum chamber as shown in the drawing. Using the vacuum pump, apply specified vacuum to the vacuum chamber.
- After 15 seconds, read the vacuum on the vacuum gauge.
- If the measurement is out of the standard value, replace the vacuum chamber.

◆Installation procedure◆

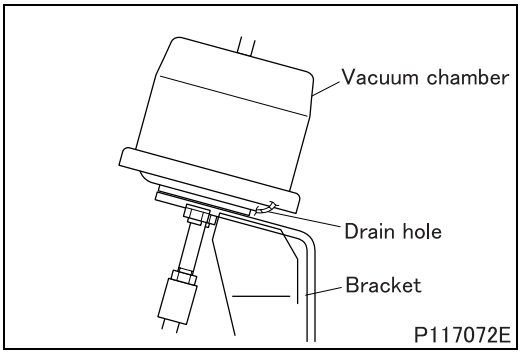

■ Installation: Vacuum chamber

- Apply sealant to the threads of the vacuum chamber and install it to the bracket in the direction shown in the drawing.

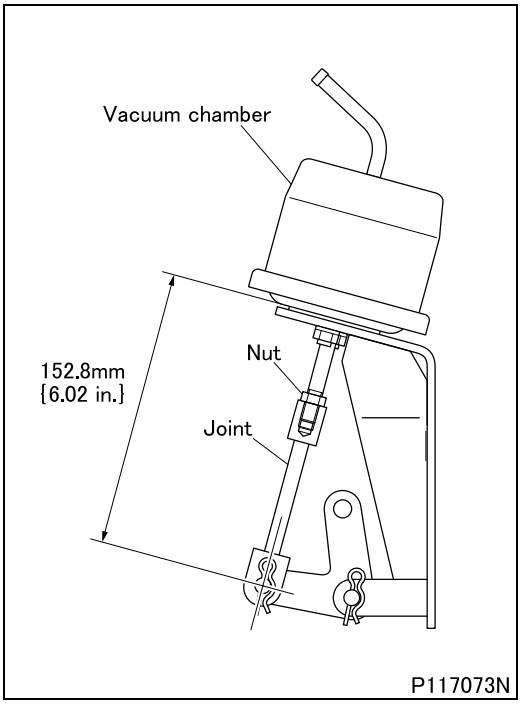

■ Installation: Joint

- Install the joint so that the distance from the bottom of the vacuum chamber to the center of the hole in the joint should be as shown in the drawing. Then tighten the nut to the specified torque.

https://truckmanualshub.com/

TRANSMISSION POWER TAKE-OFF <LARGE-CAPACITY TYPE>

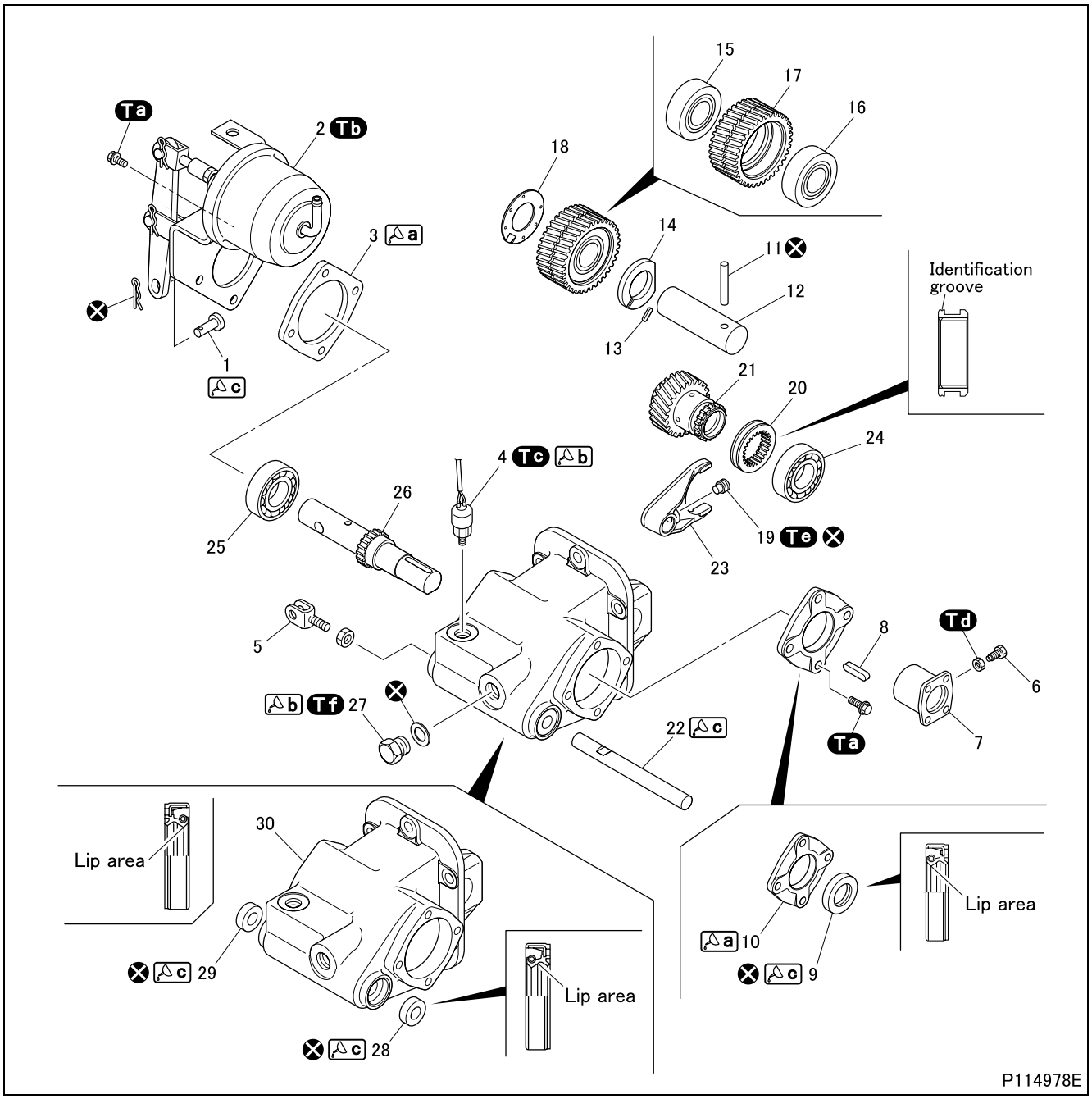

● **Disassembly sequence**

1 Clevis pin
2 Vacuum chamber (See later section.)
3 Front cover
4 Power take-off control switch
5 Shift clevis
6 Set bolt
7 Power take-off output flange
8 Sunk key
9 Oil seal
10 Rear cover
11 Spring pin
12 Power take-off idler shaft
13 Sunk key
14 Spacer
15 Bearing
16 Bearing
17 Power take off idler gear
18 Side washer
19 Set bolt
20 Power take-off shift sleeve
21 Power take-off output gear
22 Power take-off shift rail
23 Power take-off shift fork
24 Bearing
25 Bearing
26 Power take-off output shaft
27 Inspection plug
28 Oil seal
29 Oil seal
30 Power take-off case

⊗: Non-reusable parts

https://truckmanualshub.com/

● **Assembly sequence**

Follow the disassembly sequence in reverse.

Service standards (Unit: mm {in.})

Location	Maintenance item	Standard value	Limit	Remedy
–	Play of power take-off idler gear in diameter direction	–	0.1 {0.0039}	Replace
–	Play of power take-off output gear in diameter direction	–	0.1 {0.0039}	Replace
17, 21	Backlash between power take-off idler gear and power take-off output gear	0.04 to 0.20 {0.0016 to 0.0079}	0.5 {0.020}	Replace
20, 23	Clearance between power take-off shift sleeve and power take-off shift fork	0.3 to 0.5 {0.012 to 0.020}	1.0 {0.039}	Replace
20, 26	Play of power take-off output shaft and power take-off shift sleeve in rotating direction	0.06 to 0.17 {0.0024 to 0.0067}	0.3 {0.012}	Replace
23	Tilt of power take-off shift fork claw	0 to 0.1 {0 to 0.0039}	0.2 {0.0079}	Replace

Tightening torque (Unit: N·m {ft.lbs, kgf·m})

Mark	Parts to be tightened	Tightening torque	Remarks
Ta	Bolt (vacuum chamber and front cover mounting)	23.8 {18, 2.43}	–
	Bolt (rear cover mounting)		
Tb	Vacuum chamber joint mounting nut	9.8 to 15.6 {7.2 to 12.0, 1.0 to 1.6}	–
Tc	Power take-off control switch	49 {36, 5}	Sealant
Td	Set bolt	23.5 {17, 2.4}	–
Te	Set bolt	29.4 {22, 3.0}	–
Tf	Inspection plug	68.6 ± 14.7 {51 ± 11, 7.0 ± 1.5}	–

Lubricant and/or sealant

Mark	Points of application	Specified lubricant and/or sealant	Quantity
a	Power take-off case mounting surface of front cover	ThreeBond 1215	As required
	Power take-off case mounting surfaces of rear cover		
b	Threads of power take-off control switch	ThreeBond 1105	As required
	Threads of inspection plug		
c	Sliding area of clevis pin	Wheel bearing grease [NLGI No. 2 (Li soap)]	As required
	Oil seal lips		
	Sliding area of power take-off shift rail		

◆**Work before removal**◆

■ **Removal: Transmission power take-off**

- Remove the transmission power take-off. (See “REVERSE IDLER GEAR”.)

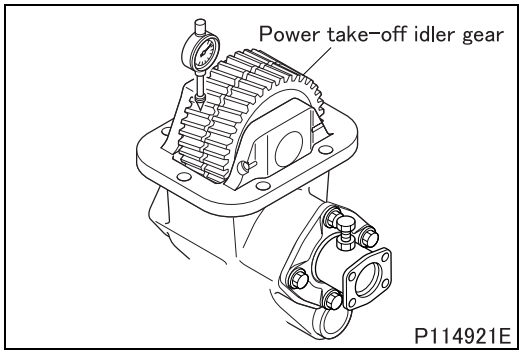

■ **Inspection: Backlash between power take-off idler gear and power take-off output gear**

- If measurement exceeds the limit, replace defective parts.

https://truckmanualshub.com/

◆Removal procedure◆

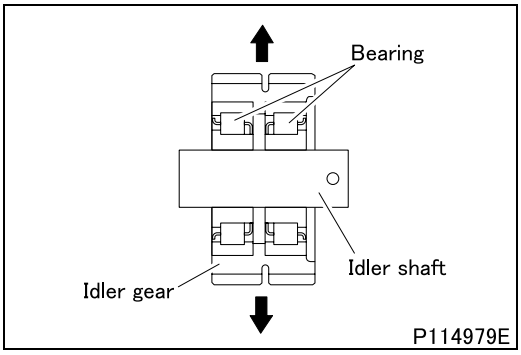

■ **Inspection: Play of power take-off idler gear in diameter direction**

- If measurement exceeds the limit, replace defective parts.

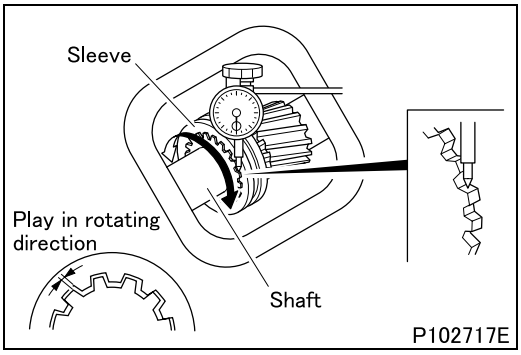

■ **Inspection: Play of power take-off output shaft and power take-off shift sleeve in rotating direction**

- Measure the play by turning the power take-off output shaft while holding the power take-off shift sleeve in place.
- If measurement exceeds the limit, replace defective parts.

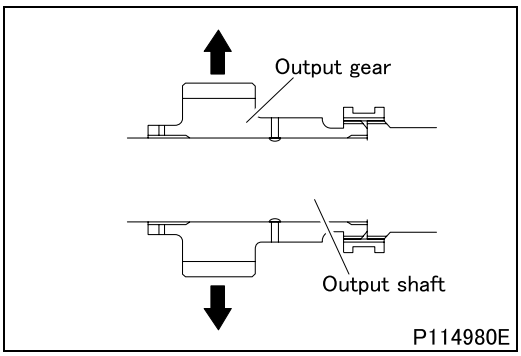

■ **Inspection: Play of power take-off output gear in diameter direction**

- If measurement exceeds the limit, replace defective parts.

◆Inspection procedure◆

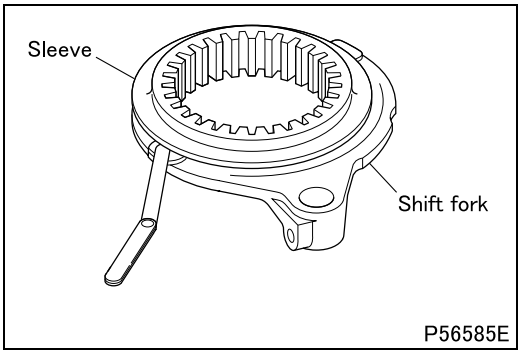

■ **Inspection: Clearance between power take-off shift sleeve and power take-off shift fork**

- If the measurement exceeds the limit, replace defective parts.

https://truckmanualshub.com/

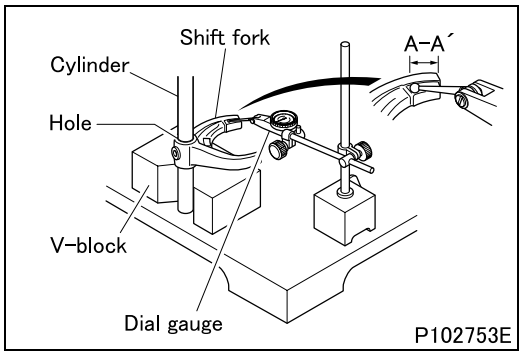

■ **Inspection: Tilt of power take-off shift fork claw**

- Measure the tilt (difference between A and A') of claw A-A' against the power take-off air cylinder hole of power take-off shift fork with pressing the air cylinder to the V-rail of the V-block and standing it vertically.
- If the measurement exceeds the limit, replace the power take-off shift fork.

◆Installation procedure◆

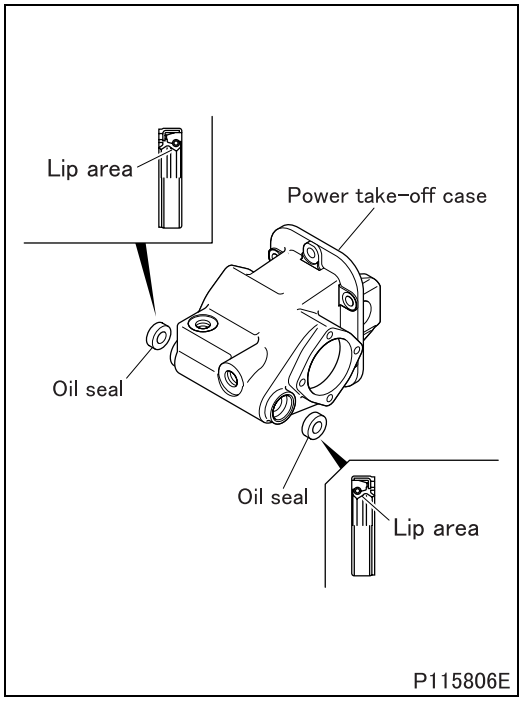

■ **Installation: Oil seal**

- Apply grease to the oil seal lips and install the oil seals to the power take-off case.

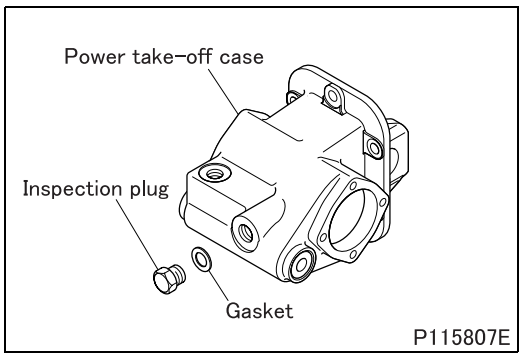

■ **Installation: Inspection plug**

- Apply sealant to the threads of the inspection plug and install it to the power take-off case.

https://truckmanualshub.com/

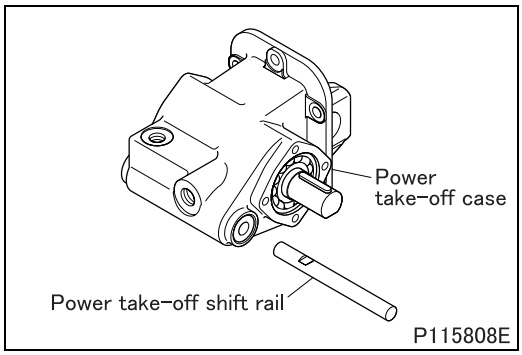

■ **Installation: Power take-off shift rail**

- Apply grease to the sliding section of the power take-off shift rail and install it to the power take-off shift fork.

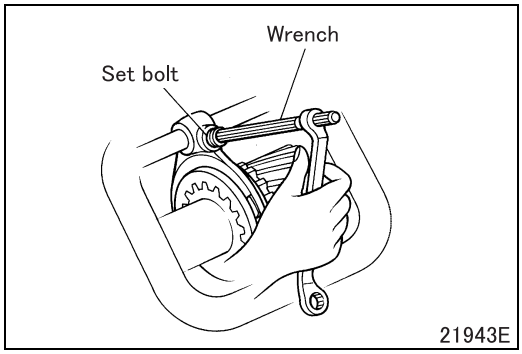

■ **Installation: Set bolt**

- Install the set bolt using a hexagon wrench.
- After tightening the bolt, stake the thread area at three places or more with the punch.

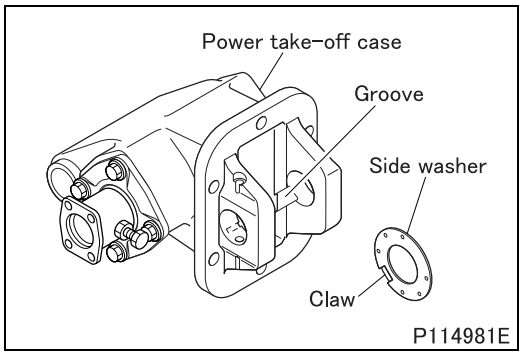

■ **Installation: Side washer**

- Install the side washer so that its claw fits into the groove in the power take-off case.

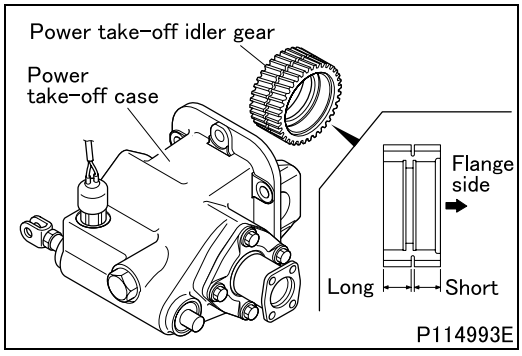

■ **Installation: Power take-off idler gear**

- Install the power take-off idler gear to the power take-off case in the direction shown in the drawing.

https://truckmanualshub.com/

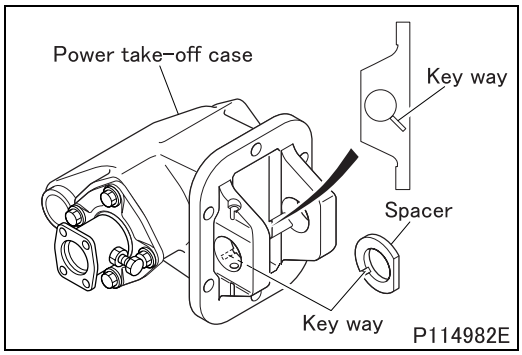

■ **Installation: Spacer**

- Install the spacer while aligning its keyway with that on the power take-off case.

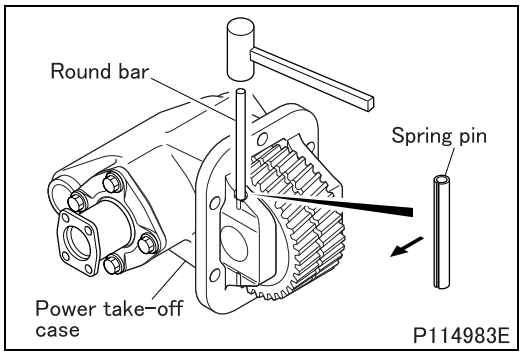

■ **Installation: Spring pin**

- Install the spring pin to the power take-off case in the direction shown in the drawing using a round rod of 6 mm {0.24 in.} in diameter.

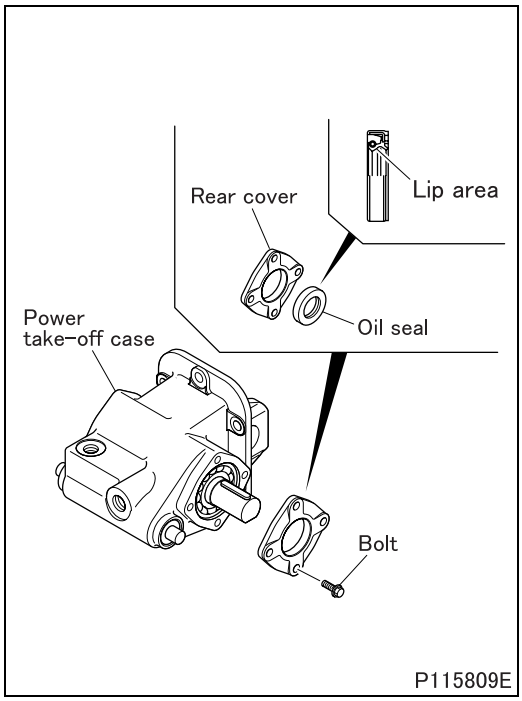

■ **Installation: Oil seal and rear cover**

- Apply grease to the lip of the oil seal and install it to the rear cover.
- Apply sealant to the power take-off case mating surface of the rear cover and install it to the power take-off case.

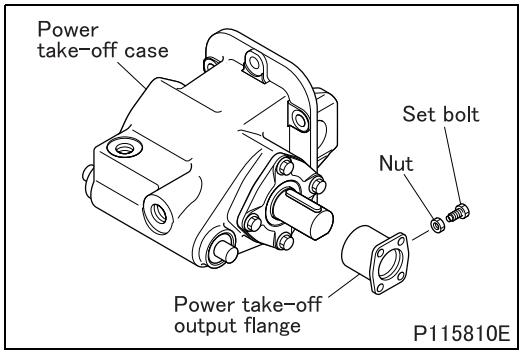

■ **Installation: Power take-off output flange**

- Install the power take-off output flange to the power take-off case, and install the nut and set bolt.

https://truckmanualshub.com/

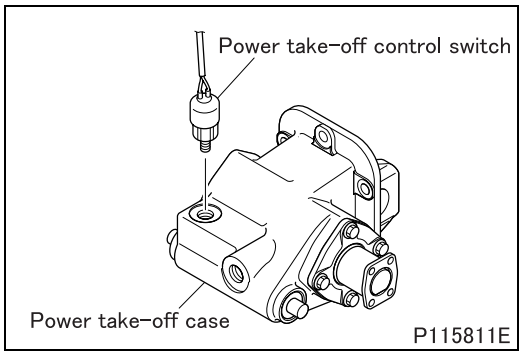

■ **Installation: Power take-off control switch**

- Apply sealant to the threads of the power take-off control switch and install it to the power take-off case.

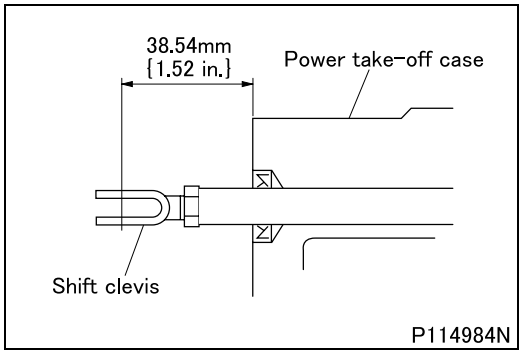

■ **Installation: Shift clevis**

- Install the shift clevis while adjusting the distance from the center of the shift clevis hole to the end surface of the power take-off case as shown in the drawing.

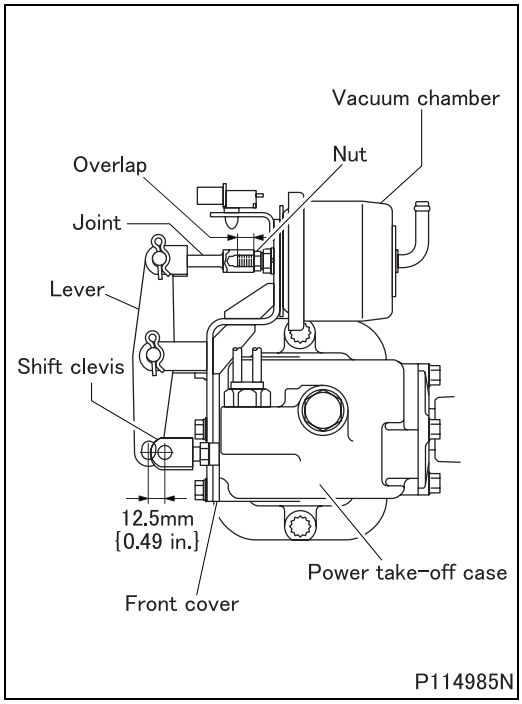

■ **Installation: Vacuum chamber**

- Apply sealant to the power take-off case mating surface of the front cover. Install the vacuum chamber and front cover to the power take-off case.
- Measure the distance between the centers of the holes in the shift clevis and lever.
- If the measurement does not match the value shown in the drawing, adjust by turning the shift clevis or joint.
- If the adjustment is performed by turning the joint, secure the overlap of the joint and the rod of the vacuum chamber by 8 threads or more.
- After adjustment, tighten the nut to the specified torque.
- Push in the joint to align the holes in the lever and shift clevis and connect them with the clevis pin.
- Apply [Cb] to the sliding surface of the clevis pin before installing the clevis pin.

https://truckmanualshub.com/

◆Work after installation◆

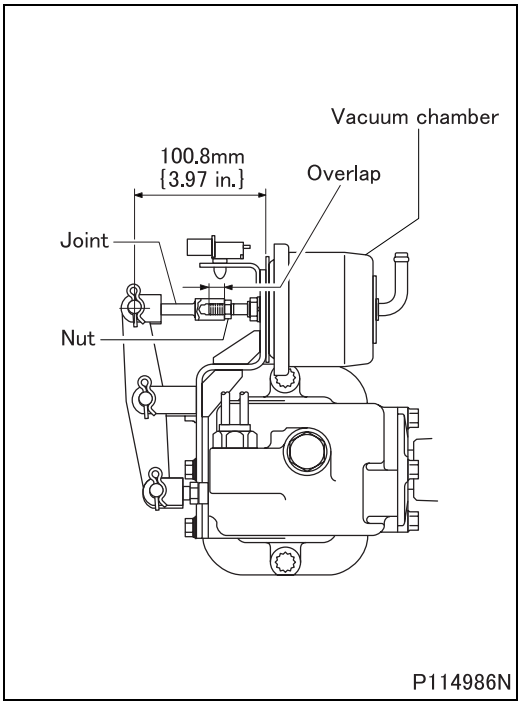

■ Adjustment: Vacuum chamber

- Measure the distance from the bottom of the vacuum chamber to the center of the hole in the joint.
- If the measurement does not match the value shown in the drawing, adjust by turning the joint. In this case, secure the overlap of the joint and the rod of the vacuum chamber by 8 threads or more.
- After adjustment, tighten the nut to the specified torque.

■ Installation: Transmission power take-off

- Install the transmission power take-off. (See “REVERSE IDLER GEAR”.)

https://truckmanualshub.com/

TRANSMISSION POWER TAKE-OFF <LARGE-CAPACITY TYPE>

Vacuum Chamber

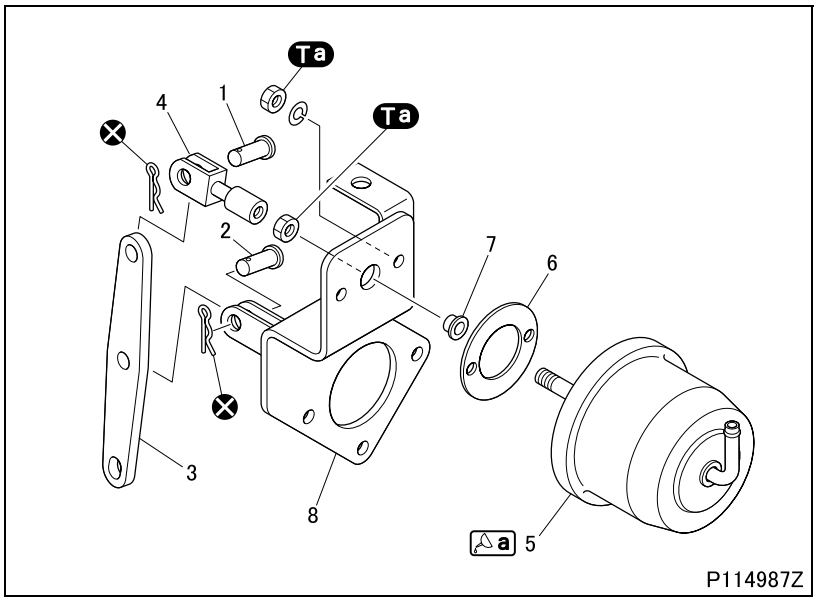

● **Disassembly sequence**

1 Clevis pin
2 Clevis pin
3 Lever
4 Joint
5 Vacuum chamber
6 Gasket
7 Bearing
8 Bracket

⊗: Non-reusable parts

● **Assembly sequence**

Follow the disassembly sequence in reverse.

Service standards (Unit: mm {in.})

Location	Maintenance item	Standard value	Limit	Remedy
5	Airtightness of vacuum chamber (inspection vacuum: 66.7 kPa {19.7 in.Hg, 500 mmHg}, 15 seconds)	Vacuum: 63 kPa {18.6 in.Hg, 475 mmHg} or higher	–	Replace

Tightening torque (Unit: N·m {ft.lbs, kgf·m})

Mark	Parts to be tightened	Tightening torque	Remarks
Ta	Nut (mounting joint)	9.8 to 15.6 {7.2 to 12.0, 1.0 to 1.6}	–
	Nut (mounting vacuum chamber)		

Lubricant and/or sealant

Mark	Points of application	Specified lubricant and/or sealant	Quantity
a	Mounting threads of vacuum chamber	ThreeBond 1211	As required

◆Inspection procedure◆

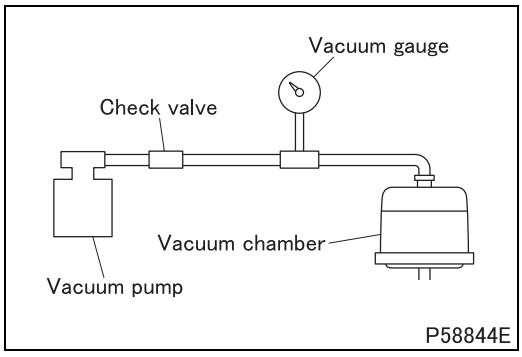

■ **Inspection: Vacuum chamber**

- Connect the vacuum pump, check valve and vacuum gauge to the vacuum chamber as shown in the drawing. Using the vacuum pump, apply specified vacuum to the vacuum chamber.
- After 15 seconds, read the vacuum on the vacuum gauge.
- If the measurement is out of the standard value, replace the vacuum chamber.

https://truckmanualshub.com/

◆Installation procedure◆

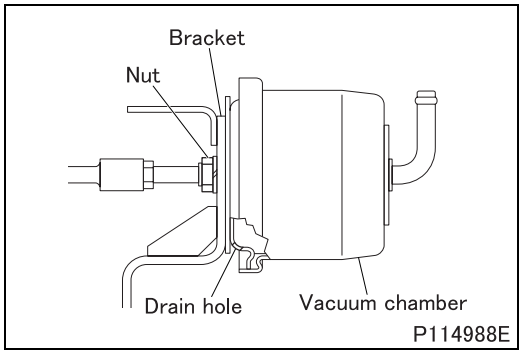

■ **Installation: Vacuum chamber**

- Apply sealant to the threads of the vacuum chamber and install it to the bracket in the direction shown in the drawing.

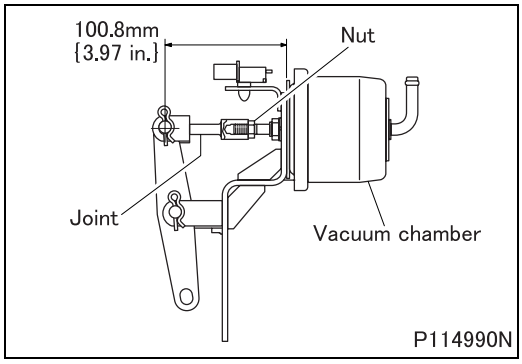

■ **Installation: Joint**

- Install the joint so that the distance from the bottom of the vacuum chamber to the center of the hole in the joint should be as shown in the drawing. Then tighten the nut to the specified torque.

https://truckmanualshub.com/

FUSO

Group 22E

DUONIC™

MITSUBISHI FUSO TRUCK OF AMERICA, Inc.

Pub.No.00ELT0001-22E

https://truckmanualshub.com/

INDEX

SPECIFICATIONS 22E-2

STRUCTURE AND OPERATION
1. **Overview 22E-4**
2. **Electronic Control System 22E-5**
3. **Electronic Control Unit Schematic Diagram 22E-14**

TROUBLESHOOTING
1. **Inspection Based on Diagnosis Codes 22E-16**
2. **Service Data (Actual Measurements) of FUSO Diagnostics ... 22E-137**
3. **Actuator tests available in FUSO Diagnostics 22E-146**
4. **Inputs and Outputs to/from Electronic Control Unit 22E-147**
5. **Coding Data in Electronic Control Unit 22E-148**
6. **Initialization of DUONIC^{TM} System 22E-149**

INSPECTION OF ELECTRICAL PARTS 22E-152

INSTALLED LOCATIONS OF PARTS 22E-158

ELECTRIC CIRCUIT DIAGRAM 22E-180

https://truckmanualshub.com/

SPECIFICATIONS

Item			Specifications
Gearshift unit	Manufacturer		Bosch
	Control		Hydraulic
	Power voltage	V	12
Valve body	Manufacturer		Sanwa Seiki
	Power voltage	V	12
Gearshift lever unit	Manufacturer		Bosch
	Power voltage	V	12
DUONIC^{TM} electronic control unit	Manufacturer		Bosch
	Power voltage	V	12

See Page Gr22 for the specifications of the transmission itself.

https://truckmanualshub.com/

M E M O

https://truckmanualshub.com/

1. Overview

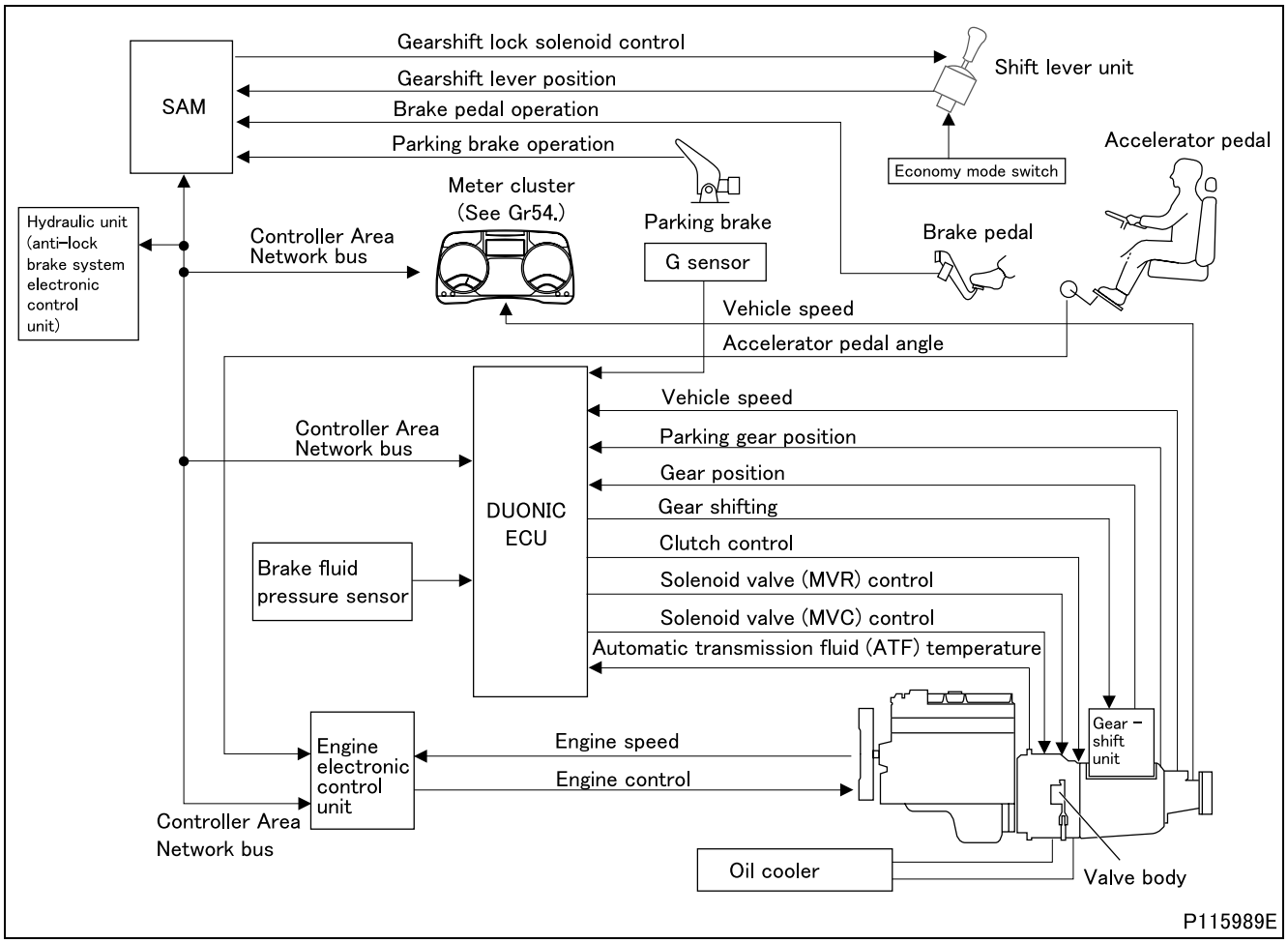

- The DUONIC™ system automates clutch and gear shift operations when starting or driving the vehicle by providing integrated control of the clutch, transmission and engine. This helps to reduce the driver's fatigue from frequent manual gear shift operations while achieving excellent fuel economy equivalent to or better than that of manual transmission vehicles.
- The clutch mechanism consists of two clutching systems (dual clutch) that allow smooth gear shift operations with reduced gear shift shock.
- There is no clutch pedal. Since there are only two pedals (accelerator and brake pedals), the driver can start and drive the vehicle with accelerator operations only. Manual operation can also be selected as required.
- The system consists of a DUONIC™ electronic control unit (that controls the gear shift unit and valve body based on the gear shift lever signals, transmission gear position, throttle opening, vehicle speed, etc.), engine electronic control unit (that controls fuel injection amount and timing based on engine speed, engine timing, coolant temperature, vehicle speed, etc.) and sensors that transmit/receive various signals to and from each electronic control unit.

https://truckmanualshub.com/

2. Electronic Control System

2.1 Block diagram

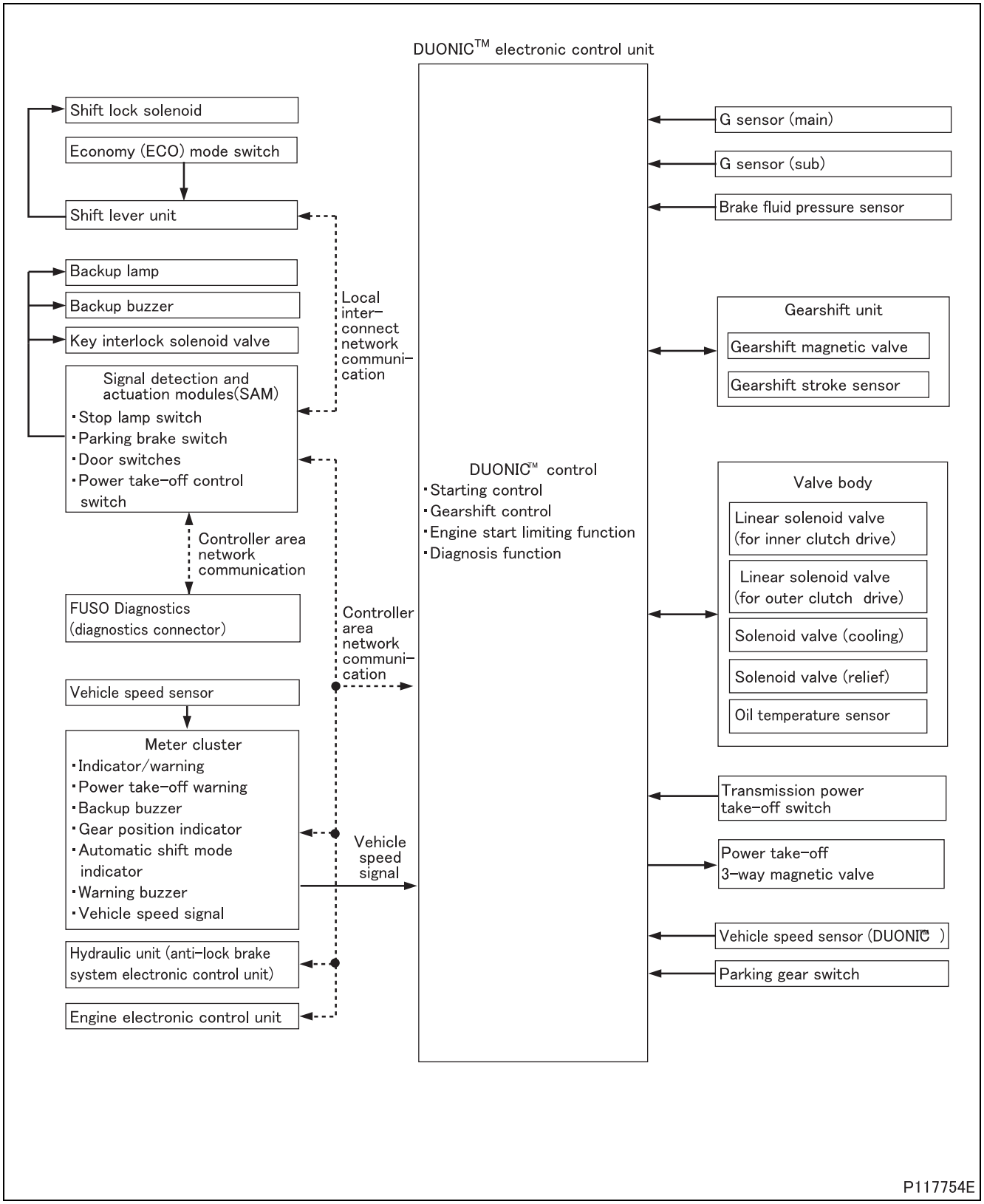

https://truckmanualshub.com/

Component	Main function/operation
Shift lever unit	Detects gearshift lever position.
Oil temperature sensor	Senses temperature of automatic transmission fluid (ATF).
G sensor	Senses acceleration.
Stop lamp switch	Senses brake pedal's pressed/released position.
Brake fluid pressure sensor	Senses extent to which brake pedal is pressed.
Vehicle speed sensor	Senses vehicle speed.
Hydraulic unit (electronic control unit)	Operates of anti-lock brake system (ABS) and its output warning signal.
Parking brake switch	Detects operation of parking brake.
Parking gear switch	Detects operation of parking mechanism.
Door switches	Detects whether each door is open or closed.
Power take-off control switch	Turns on/off power take-off (on power take-off).
Transmission power take-off switch	Turns on/off power take-off (in cab).
Economy (ECO) mode switch	Turn on/off economy mode
Engine electronic control unit	Makes control for smooth gear shifting and driving through exchange of signals with DUONIC^{TM} electronic control unit.
Gearshift stroke sensor	Senses gearshift position.
Power take-off 3-way magnetic valve	Puts transmission power take-off into motion.
Power take-off indicator	Illuminates when power take-off is in operation.
Gear position indicator	Indicates current gear in engagement and diagnostic codes.
Automatic shift mode indicator	Illuminates when automatic shift mode is selected with gearshift lever in "D".
Economy mode indicator	Indicated when economy mode switch is turned on.
DUONIC^{TM} indicator/warning	Comes on when there is problem with system to warn driver of the condition. It lights in either red or amber. Driving is impossible when the lamp lights in red; driving with minimum necessary control is possible when the lamp lights in amber.
Warning buzzer	Sounds when: • A door is opened with gearshift lever in any position except "P" and "N" while engine is running. • Temperature of automatic transmission fluid is too high. • Vehicle is driven with power take-off switch ON.
Linear solenoid valve (for inner clutch drive)	Supplies hydraulic oil to operate inner clutch.
Linear solenoid valve (for outer clutch drive)	Supplies hydraulic oil to operate outer clutch.
Solenoid valve (cooling)	Sends hydraulic oil to oil cooler.
Solenoid valve (relief)	Adjusts hydraulic oil pressure for operating clutch.
Gearshift magnetic valve	Enables gear shifting.
Shift lock solenoid valve	Activates and deactivates gearshift lock function.
Signal detection and actuation modules (SAM)	Manages power supply of component devices.
	Repeats input/output signals that are sent via Controller Area Network communication from/to relevant electronic control units by way of this module.
Key interlock solenoid	Activates/deactivates key interlocking function.

https://truckmanualshub.com/

2.2 DUONIC™ control

2.2.1 Starting control

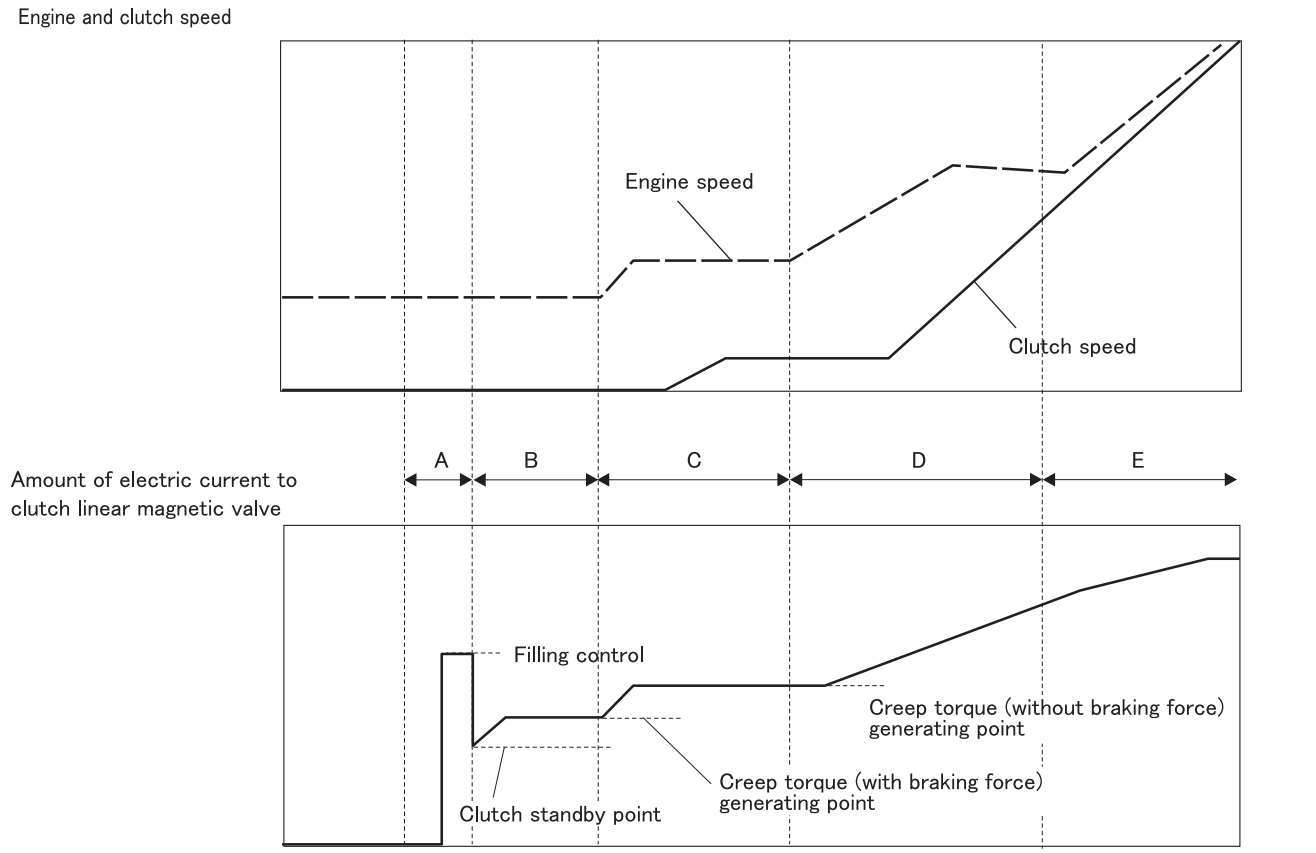

- When the gearshift lever is moved to the “D” position, the control unit starts controlling the inner or outer clutch that is on the starting gear side while applying the filling control (phase A). (See section 2.2.2 (7.2) for explanation of the filling control.)
- When the filling control ends, the control unit brings the clutch first to the clutch standby point and then to the creep torque generating point (phase B).
- When the brake pedal is released, the control unit allows the vehicle to start creeping (phase C).
- As soon as the accelerator pedal is pressed, the control unit makes control to engage the clutch (phase D).
- Once the engine and clutch speeds have synchronized with each other, the system terminates the starting control (phase E).

(1) Control for automatic selection of starting gear

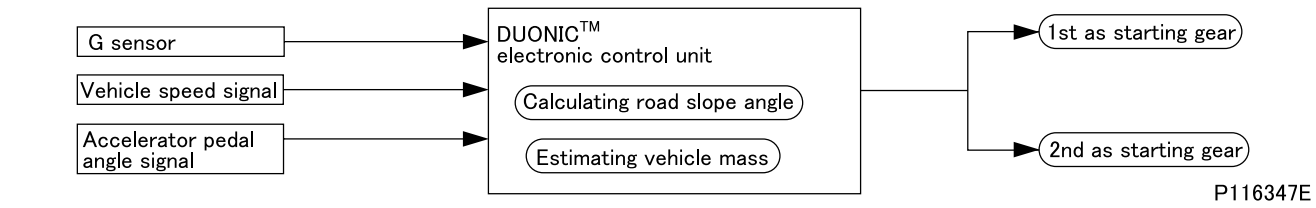

- When the vehicle is brought to a stop with the gearshift lever in the “D” position, the control unit selects the starting gear based on the road slope angle (as determined depending on the G sensor information) and the estimated vehicle mass (as determined depending on the vehicle speed and accelerator pedal angle). Then a shift to the selected gear takes place automatically.

https://truckmanualshub.com/

(2) Creep start function

- When the gearshift lever is in the “D” or “R” position, the vehicle starts moving at very low speed without need to press the accelerator pedal as soon as it is freed from braking force (by the service brakes and parking brake).

(2.1) Creep torque in 1st or reverse gear

- Regardless of braking forces, the amount of output creep torque is always varies with the vehicle speed.
- The output creep torque is inversely proportional to the vehicle speed.

(2.2) Creep torque in 2nd and higher gears

- While a braking force (by the service brakes or parking brake) is working, the output creep torque varies with both the braking force and vehicle speed.
- When the vehicle is free from braking forces, the output creep torque varies with the vehicle speed.
- The output creep torque is inversely proportional to both the braking force and vehicle speed.

CAUTION ⚠

- **During starts on uphill roads, the vehicle may move back even when creep torque is available. In such a case, the parking brake should also be used.**

https://truckmanualshub.com/

2.2.2 Gearshift control

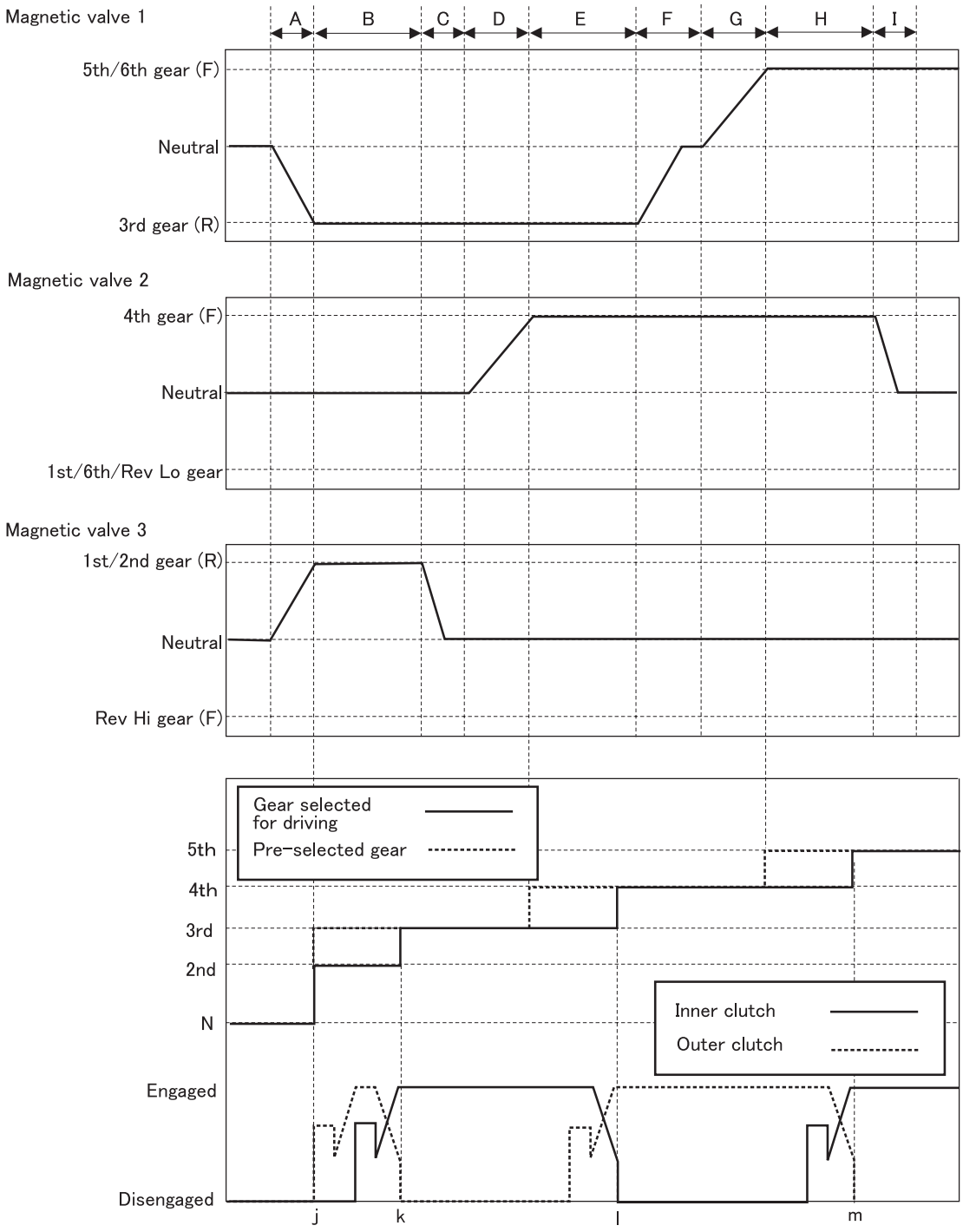

P116348E

https://truckmanualshub.com/

- The preceding diagram illustrates operation of the gearshift unit during shift-up from 2nd to 5th.
  - The 2nd gear (starting gear) is engaged and the next gear (3rd gear) is pre-selected (phase A).
  - The outer clutch is engaged (point j).
  - Gear shifts up from 2nd to 3rd according to the gearshift map (phase B).
  - The outer clutch disengages and the inner clutch engages (point k).
  - The 2nd gear is disengaged (phase C).
  - The next gear (4th gear) is pre-selected (phase D).
  - Gear shifts up from 3rd to 4th according to the gearshift map (phase E).
  - The inner clutch disengages and the outer clutch engages (point l).
  - The 3rd gear is disengaged (phase F).
  - The next gear (5th gear) is pre-selected (phase G).
  - Gear shifts up from 4th to 5th according to the gearshift map (phase H).
  - The outer clutch disengages and the inner clutch engages (point m).
  - The 4th gear is disengaged (phase I).

- Each gearshift rail has 2 gearshift magnetic valves (MVF and MVR). The magnetic valve that is driven varies depending on the direction of gear engagement as follows.

Gear	Clutch	Magnetic valve 1	Magnetic valve 2	Magnetic valve 3
1st	Inner	–	R	R
2nd	Outer	–	–	R
3rd	Inner	R	–	–
4th	Outer	–	F	–
5th	Inner	F	–	–
6th	Outer	F	R	–
Rev Lo	Inner	–	R	F
Rev Hi	Outer	–	–	F

(1) Automatic shift function

- When the gearshift lever is in the “D” position, this function selects gearshift maps stored in memory of the DUONIC™ electronic control unit appropriately depending on both the accelerator angle and vehicle speed and makes gear shifting automatically between the 1st and 6th gears according to the maps. The gear currently in engagement is indicated on the gearshift indicator in the meter cluster.
- During automatic gear shifting, the target gear is determined according to the gearshift map and also by applying a fuzzy control scheme. The fuzzy control estimates the driver’s intention from the vehicle load factor (derived from the theoretical acceleration and actual acceleration with an empty vehicle driven on a linear flat road), accelerator pedal angle, rate of change of the accelerator pedal angle, vehicle speed, engine speed, currently selected gear, and brake pedal condition, and reflects the driver’s intention thus estimated on the gearshift control.

(2) Manual shift function

- This function allows the driver to manually make shift-up by one gear by pushing the gearshift lever from the “D” position toward the “+” position and make shift-down by one gear by pushing the lever toward the “–” position.
- The DUONIC™ electronic control module is always monitoring the vehicle speed, engine speed, and selected gear. If there is a risk of engine over-revving as a result of manual gear shifting, no shift-down will take place even when the gearshift lever is pushed toward the “–” position. Likewise, if there is a risk of engine stall as a result of manual gear shifting, no shift-up will take place even when the gearshift lever is pushed toward the “+” position.

(3) Hold function

- If the gearshift lever is moved to the “A/M” position while driving in the automatic shift mode or after the lever has returned to the “D” position during manual shift operation, the gear is held in the currently selected gear. No automatic gear shifting takes place in this case. However, the gear automatically shifts up if the engine speed exceeds

https://truckmanualshub.com/

the limit value (4,300 rpm) and the gear automatically shifts down to the starting gear when the vehicle comes to a stop.

(4) Retry function

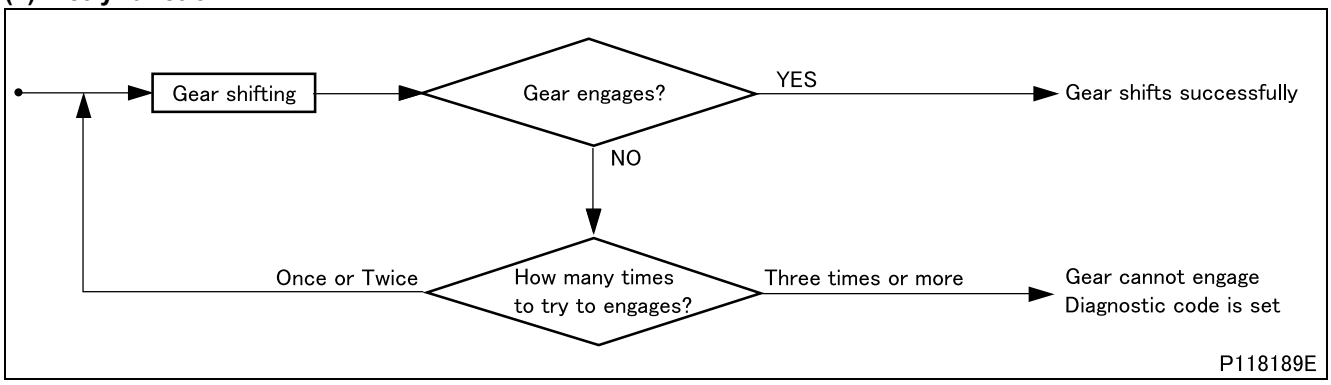

- If gear engagement fails to successfully complete, the transmission electronic control unit automatically activates the retry function to retry gear engagement (twice at maximum; three trials if the first normal trial is included). The retry control is applied to the same gear for which the first engagement trial has not successfully completed.

(5) Gear pre-selection function

- This function makes preparatory engagement of a gear that is expected to be engaged next. For example, when driving at 3rd (odd-number gear) with the inner clutch engaged, DUONIC^{TM} pre-selects an adjacent even-number gear (2nd or 4th) if the system judges this necessary based on acceleration/deceleration and other conditions. However, the even-number grears do not transmit power since the outer clutch is disengaged.
- With DUONIC^{TM}, the gear pre-selection control takes place as follows:
  - While driving in 1st, 2nd or 6th, the system invariably pre-select the gear indicated below.

Current gear	Pre-selected gear
1st	2nd
2nd	3rd
3rd	2nd or 4th
4th	3rd or 5th
5th	4th or 6th
6th	5th

  - While driving in 3rd, 4th or 5th, the system estimates a gear to be next selected and pre-select that gear.

(6) Control during operation of anti-lock brake system

- While the anti-lock brake system is in operation, the system may sometimes be unable to recognize the vehicle speed accurately. So it prohibits gear shifting down during the automatic shift mode (“D” range) and also a gear change during the manual shift mode to prevent over-revving of the engine.

(7) Clutch control function

- According to vehicle operating conditions, the system automatically controls the clutch to disengage, engage, or partially engage it.

(7.1) Solenoid valve control

- DUONIC^{TM} uses a wet clutch system to which the supply of hydraulic oil is adjusted using a solenoid valve. As the electric current supplied to the solenoid valve increases, the pressure applied to the clutch becomes stronger, so the clutch then can transmit greater torque.

https://truckmanualshub.com/

(7.2) Filling control

- This control makes the specified amount of electric current flow for the specified length of time at the beginning of a clutch engagement cycle to quickly reduce the gap between the clutch disc and drive plate (on the engine), thus shortening the clutch engagement time.

(7.3) Micro-slip control

- Except during gear changes, this control keeps the clutch slightly slipping to make it rotate several tens rpm slower than the engine rpm. This allows the clutch to disengage quickly and thus gearshifts to take place smoothly. In addition to reduced gearshift time, this control provides the effect of preventing shock and damping down the vibration transmitted from the engine to the drive train components.

2.2.3 Other functions

(1) Automatic clutch disengagement function

- In both the drive range (“D”) and reverse range (“R”), the system makes a control of disengaging the clutch when the vehicle comes to a stop for the purpose of preventing engine stalls.

(2) Gearshift control during drive using cruise control

- When the driver starts using the cruise control while driving in the manual shift mode, the gearshift mode is automatically changed to the automatic shift mode.
- During the use of the cruise control, the system makes automatic gear shifting depending on the amount of load on vehicle, engine speed, and acceleration of vehicle in order to maintain the target speed.

(3) Economy mode (mode to support low-fuel-consumption driving)

- When the driver turns on the economy mode switch, the system starts using a special map for its gearshift control.
- In the economy mode gear shifting, gear shift-up takes place at a gear lower than that in the standard mode gear shifting.

CAUTION ⚠

- **The economy mode should be used only when the vehicle is carrying a small load (i.e. it is empty or half-loaded) and running on a relatively level road. The mode must not be used when the vehicle is fully loaded or on an uphill/downhill road.**

(4) Gearshift lock function during shift to/from “P” or “R” position

- While the service brake pedal is being pressed, the system issues a gearshift lock cancellation signal to enable the gearshift lever to be moved to/from the “P” or “R” position.

(5) Power take-off control function

- When the transmission power take-off switch is turned on with the vehicle parked and the gearshift lever in “P” or “N” position, the system makes necessary controls on the gear and clutch after engaging the power take-off so that power can be delivered from the power take-off.
- The system causes the display of indicator to change according to the engagement state of power take-off.
- If any of the following operations is performed, the system turns on “PTO” on the indicator and causes a buzzer to sound.
  - The transmission power take-off switch is turned on while driving or with the gearshift lever in any position except “P” and “N”.
  - The gearshift lever is moved to any position except “P” and “N” or the vehicle is driven after the transmission power take-off switch has been turned on.

https://truckmanualshub.com/

2.3 Engine start limiting function

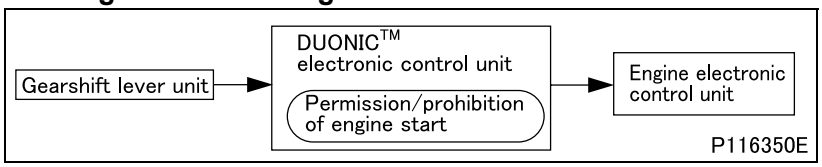

- To prevent the vehicle from lurching with the transmission in gear, the system permits the engine to be started only when the gearshift lever is in the “P” or “N” position.

2.4 Diagnosis function

- The diagnosis function of the DUONIC™ electronic control unit is working whenever the starter switch is in the ON position to determine whether the communication condition, each sensor, each relay, etc. is in normal condition or not. If the diagnosis function determines a component to be faulty, it causes the relevant indication to be displayed on the meter cluster to alert the driver to the failure, stores the faulty item in the form of a diagnostic code, and the system starts applying a malfunction mode control.
- During the malfunction mode control, the system functions are limited in order to assure safety of the crew and vehicle. The stored diagnostic codes can be read using FUSO Diagnostics and on the multi-information display in the meter cluster. (See Gr00.)

https://truckmanualshub.com/

3. Electronic Control Unit Schematic Diagram

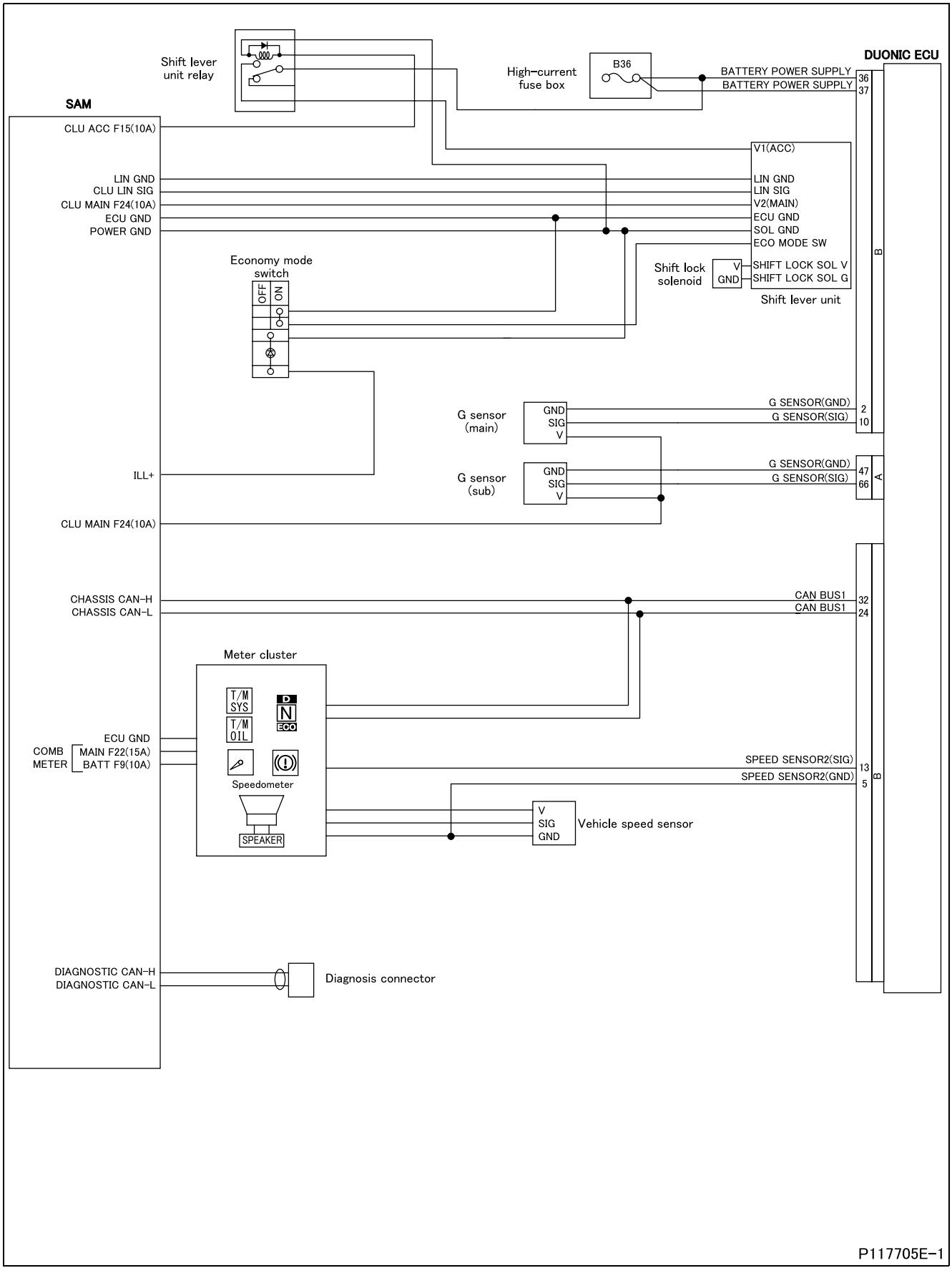

https://truckmanualshub.com/

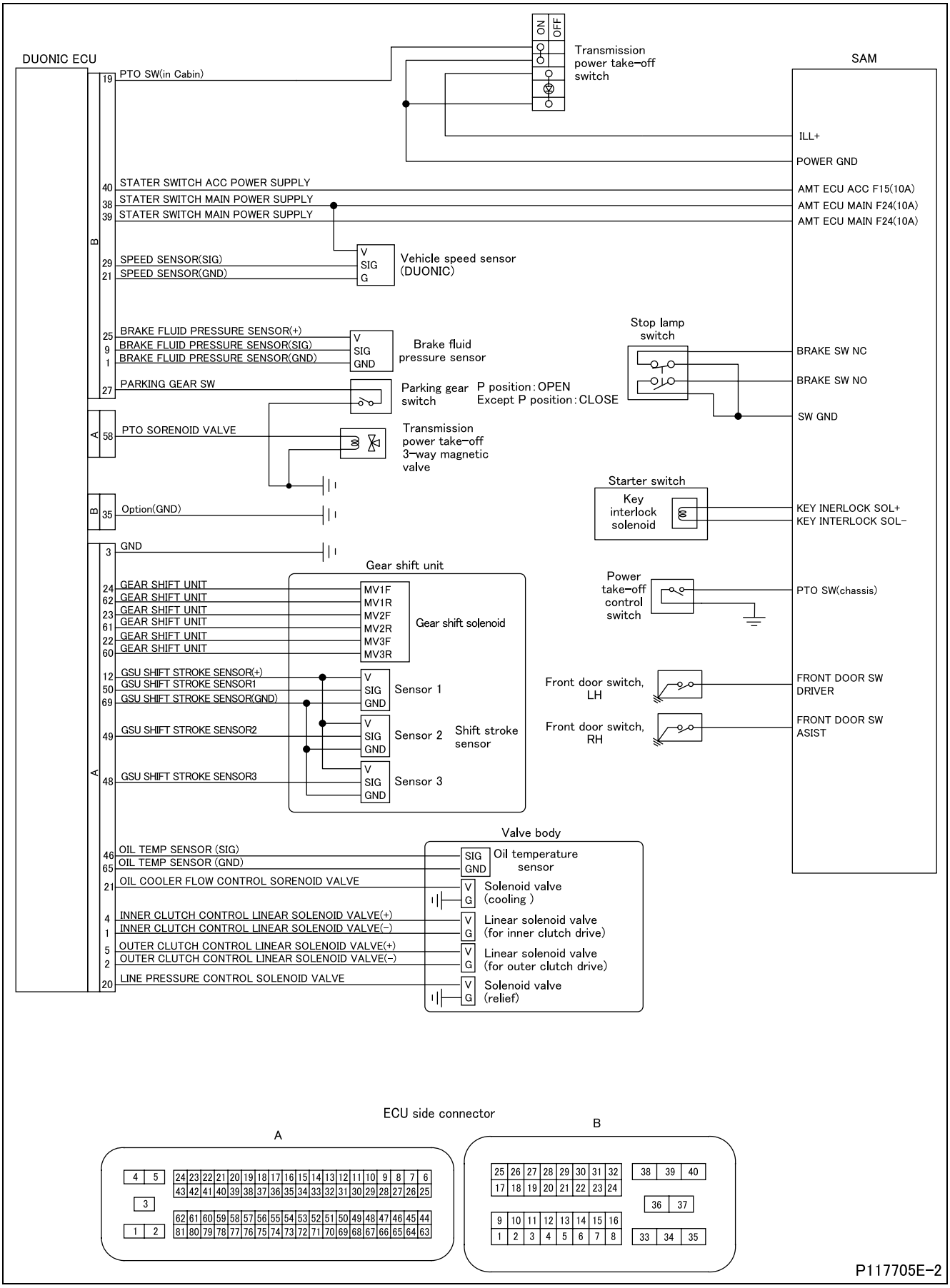

https://truckmanualshub.com/

1. Inspection Based on Diagnosis Codes

- FUSO Diagnostics is regularly updated and, as a result, the latest information may not be in line with the current version of the shop manual. In cases of such disagreement, the information in FUSO Diagnostics must be followed.

1.1 List of diagnosis codes

Diagnosis code	Indications made by FUSO diagnosis	Warning given at occurrence of diagnosis code		Remarks
		T/M SYS (red)	T/M SYS (amber)	
70-19	Out-of-range CAN reception data from component “Parking brake Switches”	–	O	
84-19	Out-of-range CAN reception data from component “Combustion engine Control unit”	–	O	
86-19	Out-of-range CAN reception data from component “Combustion engine Control unit	–	O	
91-19	Out-of-range CAN reception data from component “Position sensor Accelerator pedal”	O	O	Warning shown differs depending on what diagnosis code is active at that time.
110-19	Out-of-range CAN reception data from component “Combustion engine Control unit”	–	O	
158-2	Battery voltage is either too low or too high.	O	–	
158-3	The battery voltage is too high.	–	O	
158-4	The battery voltage is too low.	–	O	
177-2	Component 'Oil temperature sensor' has an electrical fault.	–	O	
177-3	The signal voltage of component 'Oil temperature sensor' is too high.	–	O	
177-4	The signal voltage of component 'Oil temperature sensor' is too low.	–	O	
177-9	Component 'Oil temperature sensor' has an electrical fault.	–	O	
188-19	Out-of-range CAN reception data from component “Combustion engine Control unit”	O	–	
190-19	Out-of-range CAN reception data from component “Combustion engine Control unit”	O	–	
191-2	Component 'Rpm sensor 'Transmission'' has an electrical fault.	–	O	
191-7	Component 'Vehicle speed Sensors, Rpm sensor 'Transmission'' has an electrical fault.	O	–	
191-8	The signal voltage of component 'Rpm sensor 'Transmission'' is too low.	–	O	
191-10	Component 'Vehicle speed Sensors, Rpm sensor 'Transmission'' has an electrical fault.	–	–	
191-12	Component 'Vehicle speed Sensors, Rpm sensor 'Transmission'' has an electrical fault.	–	O	
512-19	Out-of-range CAN reception data from component “Combustion engine Control unit”	O	–	
513-19	Out-of-range CAN reception data from component “Combustion engine Control unit”	O	–	
514-19	Out-of-range CAN reception data from component “Combustion engine Control unit”	O	–	
522-7	Inner clutch slip	–	O	
526-2	Gear ratio double failure	O	–	

https://truckmanualshub.com/

Diagnosis code	Indications made by FUSO diagnosis	Warning given at occurrence of diagnosis code		Remarks
		T/M SYS (red)	T/M SYS (amber)	
544-19	Out-of-range CAN reception data from component “Combustion engine Control unit”	O	–	
563-19	Out-of-range CAN reception data from component “Antilock brake system Control unit”	–	O	
595-19	Out-of-range CAN reception data from component “Combustion engine Control unit”	–	O	
597-19	Out-of-range CAN reception data from component “Brake light Switches”	O	–	
600-19	Out-of-range CAN reception data from component “Combustion engine Control unit”	–	O	
602-19	Out-of-range CAN reception data from component “Combustion engine Control unit”	–	O	
681-12	Out-of-range CAN reception data from component “Shift lock solenoid”	–	O	
684-7	Outer clutch slip	–	O	
740-7	No response of outer clutch torque	–	O	
772-3	Component 'Gear shift unit magnet valve(MV1F)' is constantly on.	O	–	
772-4	Component “Gear shift unit magnet valve(MV1F)” is always OFF.	–	O	
781-7	Gear shift not possible due to low pressure binding of Line pressure control solenoid valve	O	–	
783-3	Component 'Gear shift unit magnet valve(MV1R)' is constantly on.	O	–	
783-4	Component “Gear shift unit magnet valve(MV1R)” is always OFF.	–	O	
785-3	Component 'Line pressure control solenoid valve' is constantly on.	–	O	
785-4	Component “Line pressure control solenoid valve” is always OFF.	–	O	
788-3	Component 'Inner clutch control linear solenoid valve' is constantly on.	–	O	
788-4	Component “Inner clutch control linear solenoid valve” is always OFF.	–	O	
788-7	No response of inner clutch torque	–	O	
788-12	Faulty component 'Inner clutch control linear solenoid valve, Outer clutch control linear solenoid valve'	O	–	
904-19	Out-of-range CAN reception data from component “Antilock brake system Control unit”	–	O	
907-19	Out-of-range CAN reception data from component “Antilock brake system Control unit”	–	O	
908-19	Out-of-range CAN reception data from component “Antilock brake system Control unit”	–	O	
973-19	Out-of-range CAN reception data from component “Combustion engine Control unit”	–	O	
1438-12	Component 'Antilock brake system Control unit' reports a fault.	–	O	
1619-2	Component 'Vehicle speed Sensors' has an electrical fault.	–	O	

https://truckmanualshub.com/

Diagnosis code	Indications made by FUSO diagnosis	Warning given at occurrence of diagnosis code		Remarks
		T/M SYS (red)	T/M SYS (amber)	
1619-8	The signal voltage of component Vehicle speed Sensors' is too low.	–	O	
1810-2	Component 'Acceleration sensor' has an electrical fault.		O	
1810-3	The signal voltage of component 'Acceleration sensor' is too high.	–	O	
1810-4	The signal voltage of component 'Acceleration sensor' is too low.	–	O	
1852-19	Out-of-range CAN reception data from component “Combustion engine Control unit”		O	
1852-31	Internal error: The data record is faulty.	–	–	
2580-2	Component 'Brake pressure sensor' has an electrical fault.	–	O	
2580-3	The signal voltage of component 'Brake pressure sensor' is too high.	–	O	
2580-4	The signal voltage of component 'Brake pressure sensor' is too low.	–	O	
2910-3	Component 'Transmission power take-off 3-way magnetic valve' is constantly on.	–	O	
2910-4	Component “Transmission power take-off 3-way magnetic valve” is always OFF.	–	O	
3187-19	Out-of-range CAN reception data from component “Selector lever”	O	–	
3452-19	Out-of-range CAN reception data from component “Power take-off control switch”	–	O	
3453-19	Out-of-range CAN reception data from component “Transmission power take-off indicator lamp switch”	–	O	
520704-2	M contact voltage is either too low or too high.	–	O	
520705-2	M contact voltage is either too low or too high.	–	O	
520706-2	ACC contact voltage is either too low or too high.	–	O	
520707-3	Component 'Oil cooler flow control solenoid valve' is constantly on.	–	O	
520707-4	Component “Oil cooler flow control solenoid valve” is always OFF.	O	–	
520708-7	Neutral control not possible(MV1F, MV1R)	–	O	
520709-7	Neutral control not possible(MV2F, MV2R)	O	–	
520710-7	Neutral control not possible(MV3F, MV3R)	O	–	
520714-3	Component 'Gear shift unit magnet valve(MV2F)' is constantly on.	O	–	
520714-4	Component “Gear shift unit magnet valve(MV2F)” is always OFF.	–	O	
520715-3	Component 'Gear shift unit magnet valve(MV2R)' is constantly on.	O	–	
520715-4	Component “Gear shift unit magnet valve(MV2R)” is always OFF.	–	O	
520716-3	Component 'Gear shift unit magnet valve(MV3F)' is constantly on.	O	–	
520716-4	Component “Gear shift unit magnet valve(MV3F)” is always OFF.	O	–	
520717-3	Component 'Gear shift unit magnet valve(MV3R)' is constantly on.	O	–	

https://truckmanualshub.com/

Diagnosis code	Indications made by FUSO diagnosis	Warning given at occurrence of diagnosis code		Remarks
		T/M SYS (red)	T/M SYS (amber)	
520717-4	Component “Gear shift unit magnet valve(MV3R)” is always OFF.	O	–	
520718-3	Component 'Outer clutch control linear solenoid valve' is constantly on.	O	–	
520718-4	Component “Outer clutch control linear solenoid valve” is always OFF.	–	O	
520719-2	Incorrect 1st gear ratio	–	O	
520720-2	Incorrect 2nd gear ratio	–	O	
520721-2	Incorrect 3rd gear ratio	–	O	
520722-2	Incorrect 4th gear ratio	–	O	
520723-2	Incorrect 5th gear ratio	–	O	
520724-2	Incorrect 6th gear ratio	–	O	
520725-2	Incorrect RevLo gear ratio	–	O	
520726-2	Incorrect RevHi gear ratio	–	O	
520727-2	Error in CAN reception from component “SAM”	O	–	
520728-2	Error in CAN reception from component “SAM”	O	–	
520729-2	Error in CAN reception from component “SAM”	–	O	
520730-2	Error in CAN reception from component “SAM”	–	O	
520731-19	Out-of-range CAN reception data from component “Economy mode switch”	–	O	
520732-2	Error in CAN reception from component “Combustion engine Control unit”	O	–	
520733-2	Error in CAN reception from component “Combustion engine Control unit”	O	O	Warning shown differs depending on what diagnosis code is active at that time.
520734-2	Out-of-range CAN reception data from component “Combustion engine Control unit”	O	–	
520735-2	Error in CAN reception from component “Combustion engine Control unit”	O	–	
520736-2	Error in CAN reception from component “Combustion engine Control unit”	–	O	
520738-2	Error in CAN reception from component “Antilock brake system Control unit”	–	O	
520739-2	Error in CAN reception from component “Antilock brake system Control unit”	–	O	
520740-3	Component 'Parking gear switch' is constantly on.	O	–	
520740-4	Component “Parking gear switch” is always OFF.	O	–	
520741-2	Error in CAN reception from component “Antilock brake system Control unit”	–	O	
520742-2	Error in CAN reception from component “Combustion engine Control unit”	–	O	
520743-2	Error in CAN reception from component “Combustion engine Control unit”	–	O	
520744-31	Default setting failed to be executed.	–	O	
520745-3	The signal voltage of component 'Acceleration sensor2' is too high.	–	O	

https://truckmanualshub.com/

Diagnosis code	Indications made by FUSO diagnosis	Warning given at occurrence of diagnosis code		Remarks
		T/M SYS (red)	T/M SYS (amber)	
520745-4	The signal voltage of component 'Acceleration sensor2' is too high.	–	O	
520746-3	The signal voltage of component 'Gear shift unit shift stroke sensor1' is too high.	O	–	
520746-4	The signal voltage of component 'Gear shift unit shift stroke sensor1' is too low.	O	–	
520747-3	The signal voltage of component 'Gear shift unit shift stroke sensor2' is too high.	O	–	
520747-4	The signal voltage of component 'Gear shift unit shift stroke sensor2' is too low.	O	–	
520748-3	The signal voltage of component 'Gear shift unit shift stroke sensor3' is too high.	O	–	
520748-4	The signal voltage of component 'Gear shift unit shift stroke sensor3' is too low.	O	–	
520749-2	Error in CAN reception from component “Combustion engine Control unit”	–	O	
520750-2	Faulty component 'DUONIC^{TM} Control unit'	–	O	
520751-7	Forward gear shift not possible(5th,6th)	–	O	
520752-7	Backward gear shift not possible(3$^{rd)}$	–	O	
520753-7	Forward gear shift not possible(1st,6th,RevLo)	–	O	
520754-7	Backward gear shift not possible(4th)	–	O	
520755-7	Forward gear shift not possible(Rev)	O	–	
520756-7	Backward gear shift not possible(1st,2nd)	O	–	

https://truckmanualshub.com/

1.2 Code generation criteria and inspection items

70-19: Out-of-range CAN reception data from component “Parking brake Switches”

Generation condition		• Supply voltage 8 to 16 V with starter switch ON • 3 seconds or more have elapsed since starter switch was turned ON. • CCVS_SSAM was received. • Parking Brake Switch (CAN) signal out of range (Error/SNA)
Recoverability		• System has recovered if signal becomes normal after starter switch is turned OFF and then ON (thus reenergizing electronic control unit) or while starter switch is in ON position
Control effected by electronic control unit		[Upon receiving out-of-range signal] • Normal data last received are retained.
Possible causes		• Defective signal detect and actuation modules
Inspection procedure	Step1	Inspection procedure Perform a diagnosis on the A20 (SAM) side system.

84-19: Out-of-range CAN reception data from component “Combustion engine Control unit”

Generation condition		• Supply voltage 8 to 16 V with starter switch ON • 3 seconds or more have elapsed since starter switch was turned ON. • CCVS_MCM received & Cruise vehicle speed (CAN) out of range (250.996<Cruise vehicle speed)
Recoverability		• System has recovered if signal becomes normal after starter switch is turned OFF and then ON (thus reenergizing electronic control unit) or while starter switch is in ON position.
Control effected by electronic control unit		[Upon receiving out-of-range signal] • Normal data last received are retained. [Upon error judgment] • Cruise speed change mode is exited. • Cruise termination request is continuously issued.
Possible causes		• Defective engine electronic control unit
Inspection procedure	Step1	Inspection procedure Perform a diagnosis on the A4 (Combustion engine Control unit) side system.

86-19: Out-of-range CAN reception data from component “Combustion engine Control unit”

Generation condition		• Supply voltage 8 to 16 V with starter switch ON • 3 seconds or more have elapsed since starter switch was turned ON. • CCVS_MCM received & Cruise target vehicle speed (CAN) out of range (250<Cruise target vehicle speed (CAN))
Recoverability		• System has recovered if signal becomes normal after starter switch is turned OFF and then ON (thus reenergizing electronic control unit) or while starter switch is in ON position.
Control effected by electronic control unit		[Upon receiving out-of-range signal] • Normal data last received are retained. [Upon error judgment] • Cruise speed change mode is exited. • Cruise termination request is continuously issued.
Possible causes		• Defective engine electronic control unit
Inspection procedure	Step1	Inspection procedure Perform a diagnosis on the A4 (Combustion engine Control unit) side system.

https://truckmanualshub.com/

91-19: Out-of-range CAN reception data from component "Position sensor Accelerator pedal"

Generation condition		• Supply voltage 8 to 16 V with starter switch ON • 3 seconds or more have elapsed since starter switch was turned ON. • EEC2_EEC was received. • Accelerator pedal position (CAN) out of range
Recoverability		• System has recovered if signal becomes normal after starter switch is turned OFF and then ON (thus reenergizing electronic control unit) or while starter switch is in ON position.
Control effected by electronic control unit		[Upon receiving out-of-range signal] • Normal data last received are retained. [Diagnosis Codes 520732-2 & 512-19 not generated (Warning indication: Amber)] • Service data name: See Driver's Demand Percent Torque as accelerator position. [Diagnosis Code 520732-2 or 12-19 generated (Warning indication: Red)] • Both clutches are kept disengaged. • All gear shift rails are kept in N. (Target gear locked in N.) • N flashes in meter cluster gear display. (P has priority over N.) • Engine control is terminated.
Possible causes		• Defective engine electronic control unit • Defective accelerator position sensor
Inspection procedure	Step1	Inspection procedure Perform a diagnosis on the A4 (Combustion engine Control unit) side system.

110-19: Out-of-range CAN reception data from component "Combustion engine Control unit"

Generation condition		• Supply voltage 8 to 16 V with starter switch ON • 3 seconds or more have elapsed since starter switch was turned ON. • ET1_MCM was received. • Engine coolant temperature out of range for 10 seconds
Recoverability		• System has recovered if signal becomes normal after starter switch is turned OFF and then ON (thus reenergizing electronic control unit) or while starter switch is in ON position.
Control effected by electronic control unit		• None
Possible causes		• Defective engine electronic control unit
Inspection procedure	Step1	Inspection procedure Perform a diagnosis on the A4 (Combustion engine Control unit) side system.

158-2: Battery voltage is either too low or too high.

Generation condition	• Supply voltage 8 to 16 V with starter switch ON • Battery voltage V01 below 8 V or above 16 V • Battery voltage V02 below 8 V or above 16 V
Recoverability	• Supply voltage 8 to 16 V with starter switch ON • System has recovered if signal becomes normal after starter switch is turned OFF and then ON (thus reenergizing electronic control unit) or if battery voltage V01 or V02 is 8 – 16 V while starter switch is in ON position.
Control effected by electronic control unit	• Both clutches are kept disengaged. • N flashes in meter cluster gear display. (P has priority over N.) • Engine control is terminated.
Possible causes	• Harness between DUONIC^{TM} electronic control unit and battery open or shorted to ground • Malfunction of battery • Defective alternator • Defective DUONIC^{TM} electronic control unit

https://truckmanualshub.com/

Inspection procedure	Step1	Inspection procedure Use the following procedure to check if the source voltage is excessively high or low. Refer to the results of short test of other ECUs. Insert the tester probes into the A28 (DUONIC™ Control unit) harness connector on the vehicle side and measure the voltage between A28.X2.40/117 and A28.X2.40/118 and Ground. Is voltage above 12V (high voltage error)? No: Go to Step2 Yes: Go to Step15
	Step2	Inspection procedure Check that the fuse F36 is not blown out. If any visible damage is found, repair or replace the affected part and interrupt the inspection process. Go to Step3
	Step3	Inspection procedure Is this diagnosis code still active? No: Go to Step13 Yes: Go to Step4
	Step4	Inspection procedure Check if any of other ECUs has stored the diagnosis code representing abnormal power supply (power supply without passing through SAM). Are current fault codes present? No: Go to Step5 Yes: Go to Step7
	Step5	Inspection procedure Turn the starter switch in OFF. Remove the connector of A28 (DUONIC™ Control unit). Remove the connector of G1 (Battery). Check electrical line between pins A28.X2.40/117 and A28.X2.40/118 and Battery terminal + pole for open circuit. Test electrical line between pins A28.X2.40/117 and A28.X2.40/118 and Battery terminal + pole for short circuit to ground. Is any abnormality recognized? No: Go to Step10 Yes: Go to Step6
	Step6	Inspection procedure Repair or replace electrical lines. Reinstall all the removed connectors. Turn the starter switch in ON.
	Step7	Inspection procedure Turn the starter switch in OFF. Remove the connector of A28 (DUONIC™ Control unit). Remove the connector of G1 (Battery). Check electrical line between pins A28.X2.40/117 and A28.X2.40/118 and Battery terminal + pole for open circuit. Test electrical line between pins A28.X2.40/117 and A28.X2.40/118 and Battery terminal + pole for short circuit to ground. Is any abnormality recognized? No: Go to Step8 Yes: Go to Step14
	Step8	Inspection procedure Measure the battery voltage. Specified value: 12V Is any abnormality recognized? No: Go to Step9 Yes: Go to Step12
	Step9	Inspection procedure Check the function of G2 (Alternator). Is any abnormality recognized? For procedures, refer to the Shop Manual No: Go to Step10 Yes: Go to Step11

https://truckmanualshub.com/

Inspection procedure	Step10	Inspection procedure Turn the starter switch in OFF. Reinstall all the removed connectors. Erase fault memory and perform a test drive. If the diagnosis code has occurred even during the test drive, start the operation and then replace the A28 (DUONIC™ Control unit). Go to Step13
	Step11	Inspection procedure Replace component “G2 (Alternator)”. Reinstall all the removed connectors. Turn the starter switch in ON.
	Step12	Inspection procedure Replace component “G1 (Battery)”. Reinstall all the removed connectors. Turn the starter switch in ON. Go to Step10
	Step13	Inspection completed
	Step14	Inspection procedure Repair or replace electrical lines. Reinstall all the removed connectors. Turn the starter switch in ON.
	Step15	Inspection procedure Replace component “G2 (Alternator)”. Reinstall all the removed connectors. Turn the starter switch in ON.

158-3: The battery voltage is too high.

Generation condition		• Supply voltage 8 to 16 V with starter switch ON • Battery voltage V01 or V02 above 16 V
Recoverability		• Supply voltage 8 to 16 V with starter switch ON • System has recovered if signal becomes normal after starter switch is turned OFF and then ON (thus reenergizing electronic control unit) or if battery voltage V01 or V02 is at or below 16 V while starter switch is in ON position.
Control effected by electronic control unit		• Backup by normal voltage
Possible causes		• Defective alternator • Defective DUONIC™ electronic control unit
Inspection procedure	Step1	Inspection procedure Replace component “G2 (Alternator)”. Reinstall all the removed connectors. Turn the starter switch in ON. Go to Step2
	Step2	Inspection procedure Turn the starter switch in OFF. Reinstall all the removed connectors. Erase fault memory and perform a test drive. If the diagnosis code has occurred even during the test drive, start the operation and then replace the A28 (DUONIC™ Control unit). Inspection completed

158-4: The battery voltage is too low.

Generation condition	• Supply voltage 8 to 16 V with starter switch ON • Battery voltage V01 or V02 below 8 V
Recoverability	• Supply voltage 8 to 16 V with starter switch ON • System has recovered if signal becomes normal after starter switch is turned OFF and then ON (thus reenergizing electronic control unit) or if battery voltage V01 or V02 is at or above 8 V while starter switch is in ON position.
Control effected by electronic control unit	• Backup by normal voltage

https://truckmanualshub.com/

Possible causes		• Harness between DUONIC™ electronic control unit and battery open or shorted to ground • Malfunction of battery • Defective alternator • Defective DUONIC™ electronic control unit
Inspection procedure	Step1	Inspection procedure Check that the fuse F36 is not blown out. If any visible damage is found, repair or replace the affected part and interrupt the inspection process. Go to Step2
	Step2	Inspection procedure Is this diagnosis code still active? No: Go to Step12 Yes: Go to Step3
	Step3	Inspection procedure Check if any of other ECUs has stored the diagnosis code representing abnormal power supply (power supply without passing through SAM). Are current fault codes present? No: Go to Step4 Yes: Go to Step6
	Step4	Inspection procedure Turn the starter switch in OFF. Remove the connector of A28 (DUONIC™ Control unit). Remove the connector of G1 (Battery). Check electrical line between pins A28.X2.40/117 and A28.X2.40/118 and Battery terminal + pole for open circuit. Test electrical line between pins A28.X2.40/117 and A28.X2.40/118 and Battery terminal + pole for short circuit to ground. Is any abnormality recognized? No: Go to Step9 Yes: Go to Step5
	Step5	Inspection procedure Repair or replace electrical lines. Reinstall all the removed connectors. Turn the starter switch in ON.
	Step6	Inspection procedure Turn the starter switch in OFF. Remove the connector of A28 (DUONIC™ Control unit). Remove the connector of G1 (Battery). Check electrical line between pins A28.X2.40/117 and A28.X2.40/118 and Battery terminal + pole for open circuit. Test electrical line between pins A28.X2.40/117 and A28.X2.40/118 and Battery terminal + pole for short circuit to ground. Is any abnormality recognized? No: Go to Step7 Yes: Go to Step13
	Step7	Inspection procedure Measure the battery voltage. Specified value: 12V Is any abnormality recognized? No: Go to Step8 Yes: Go to Step11
	Step8	Inspection procedure Check the function of G2 (Alternator). Is any abnormality recognized? For procedures, refer to the Shop Manual No: Go to Step9 Yes: Go to Step10
	Step9	Inspection procedure Turn the starter switch in OFF. Reinstall all the removed connectors. Erase fault memory and perform a test drive. If the diagnosis code has occurred even during the test drive, start the operation and then replace the A28 (DUONIC™ Control unit). Go to Step12

https://truckmanualshub.com/

Inspection procedure	Step10	Inspection procedure Replace component “G2 (Alternator)”. Reinstall all the removed connectors. Turn the starter switch in ON.
	Step11	Inspection procedure Replace component “G1 (Battery)”. Reinstall all the removed connectors. Turn the starter switch in ON. Go to Step9
	Step12	Inspection completed
	Step13	Inspection procedure Repair or replace electrical lines. Reinstall all the removed connectors. Turn the starter switch in ON.

177-2: Component Oil temperature sensor has an electrical fault.

Generation condition		• Supply voltage 8 to 16 V with starter switch ON • Oil temperature sensor signal voltage above 0.04V and below 4.96 V • Input difference of 18.0°C {64.4°F} or more from previous input occurring 3 times over 5 seconds
Recoverability		• System has recovered if signal becomes normal after starter switch is turned OFF and then ON (thus reenergizing electronic control unit).
Control effected by electronic control unit		• TM oil temperature sensor substitute value 70°C {158°F} • Fixed to high oil temperature cooler bypass control • Creep torque cut
Possible causes		• Defective harness between oil temperature sensor and DUONIC^{TM} electronic control unit • Defective oil temperature sensor • Defective DUONIC^{TM} electronic control unit
Inspection procedure	Step1	Inspection procedure Turn the starter switch in OFF. Remove the connector of B48 (Oil temperature sensor). Measure the resistance between terminals 5 and 6. Specified value: 2.31 - 2.59k (20°C {68°F}) Is any abnormality recognized? Special features If any visible damage is found, repair or replace the affected part and interrupt the inspection process. No: Go to Step2 Yes: Go to Step4
	Step2	Inspection procedure Inspect or verify the following items. Repair or replace faulty items as necessary. Replace B48 (Oil temperature sensor) with a normal one and check to see if the fault code occurs. Measure resistance of the harness across A28 (DUONIC^{TM} Control unit) and B48 (Oil temperature sensor) to check for a faulty harness (e.g., incomplete open circuit). Go to Step3
	Step3	Inspection procedure Turn the starter switch in OFF. Reinstall all the removed connectors. Erase fault memory and perform a test drive. If the diagnosis code has occurred even during the test drive, start the operation and then replace the A28 (DUONIC^{TM} Control unit). Inspection completed
	Step4	Inspection procedure Replace component “B48 (Oil temperature sensor)”. Reinstall all the removed connectors. Turn the starter switch in ON. Go to Step3

https://truckmanualshub.com/

177-3: The signal voltage of component Oil temperature sensor is too high.

Generation condition		• Supply voltage 8 to 16 V with starter switch ON • Oil temperature sensor signal voltage at or above 4.96 V
Recoverability		• System has recovered if signal becomes normal after starter switch is turned OFF and then ON (thus reenergizing electronic control unit) or if oil temperature sensor voltage is at or below 4.90 V while starter switch is in ON position.
Control effected by electronic control unit		• TM oil temperature sensor substitute value 70°C {158°F} • Fixed to high oil temperature cooler bypass control • Creep torque cut
Possible causes		• Signal or ground harness between TM oil temperature sensor and DUONIC™ electronic control unit open • Signal harness between TM oil temperature sensor and DUONIC™ electronic control unit shorted to battery • Defective TM oil temperature sensor • Defective DUONIC™ electronic control unit
Inspection procedure	Step1	Inspection procedure Turn the starter switch in OFF. Remove the connector of B48 (Oil temperature sensor). Make a visual check on each connector. Measure the resistance between B48 (Oil temperature sensor) terminals to check for open-circuit. Special features If any visible damage is found, repair or replace the affected part and interrupt the inspection process. No abnormalities? No: Go to Step2 Yes: Go to Step3
	Step2	Inspection procedure Turn the starter switch in OFF. Replace component “B48 (Oil temperature sensor)”. Reinstall all the removed connectors. Erase fault memory and perform a test drive. If the diagnosis code has occurred even during the test drive, start the operation and then replace the A28 (DUONIC™ Control unit). Inspection completed
	Step3	Inspection procedure Turn the starter switch in OFF. Remove the connector of A1 ECU. Check electrical line between pins A28.X1.81/46 and B48.X5.12/8 for open circuit. Check electrical line between pins A28.X1.81/65 and B48.X5.12/7 for open circuit. Check electrical line between pins A28.X1.81/46 and B48.X5.12/8 for short circuit to positive. Is any abnormality recognized? No: Go to Step4 Yes: Go to Step5
	Step4	Inspection procedure Turn the starter switch in OFF. Reinstall all the removed connectors. Erase fault memory and perform a test drive. If the diagnosis code has occurred even during the test drive, start the operation and then replace the A28 (DUONIC™ Control unit). Inspection completed
	Step5	Inspection procedure Repair or replace electrical lines. Reinstall all the removed connectors. Erase fault memory and perform a test drive. If the diagnosis code has occurred even during the test drive, start the operation and then replace the A28 (DUONIC™ Control unit). Inspection completed

https://truckmanualshub.com/

177-4: The signal voltage of component Oil temperature sensor is too low.

Generation condition		• Supply voltage 8 to 16 V with starter switch ON • Oil temperature sensor signal voltage at or below 0.04V
Recoverability		• System has recovered if signal becomes normal after starter switch is turned OFF and then ON (thus reenergizing electronic control unit) or if oil temperature sensor voltage is at or above 0.10 V while starter switch is in ON position.
Control effected by electronic control unit		• TM oil temperature sensor substitute value 70°C {158°F} • Fixed to high oil temperature cooler bypass control • Creep torque cut
Possible causes		• Signal harness between oil temperature sensor and DUONIC^{TM} electronic control unit shorted to ground • Defective oil temperature sensor • Defective DUONIC^{TM} electronic control unit
Inspection procedure	Step1	Inspection procedure Turn the starter switch in OFF. Remove the connector of B48 (Oil temperature sensor). Make a visual check on each connector. Measure the resistance between B48 (Oil temperature sensor) and ground or each terminal to check for short-circuit and electrical leakage. Special features If any visible damage is found, repair or replace the affected part and interrupt the inspection process. No abnormalities? No: Go to Step2 Yes: Go to Step3
	Step2	Inspection procedure Turn the starter switch in OFF. Replace component “B48 (Oil temperature sensor)”. Reinstall all the removed connectors. Erase fault memory and perform a test drive. If the diagnosis code has occurred even during the test drive, start the operation and then replace the A28 (DUONIC^{TM} Control unit). Inspection completed
	Step3	Inspection procedure Turn the starter switch in OFF. Remove the connector of A1 ECU. Check harness between A28 (DUONIC^{TM} Control unit) and B48 (Oil temperature sensor) for short-circuit to another line. Is any abnormality recognized? No: Go to Step4 Yes: Go to Step5
	Step4	Inspection procedure Turn the starter switch in OFF. Reinstall all the removed connectors. Erase fault memory and perform a test drive. If the diagnosis code has occurred even during the test drive, start the operation and then replace the A28 (DUONIC^{TM} Control unit). Inspection completed
	Step5	Inspection procedure Repair or replace electrical lines. Reinstall all the removed connectors. Erase fault memory and perform a test drive. If the diagnosis code has occurred even during the test drive, start the operation and then replace the A28 (DUONIC^{TM} Control unit). Inspection completed

https://truckmanualshub.com/

177-9: Component Oil temperature sensor has an electrical fault.

Generation condition		• Supply voltage 8 to 16 V with starter switch ON • Oil temperature sensor signal voltage above 0.04 V and below 4.96 V • No generation of Diagnosis code 191-8, 191-2, 191-7, 191-10, 191-12, 1619-2, 1619-8 & Vehicle traveling at 40 km/h {24.9 mph} or more for a total of 300 seconds or more • Increase in transmission oil temperature 41°F or less after starter switch turned ON
Recoverability		• System has recovered if signal becomes normal after starter switch is turned OFF and then ON (thus reenergizing electronic control unit).
Control effected by electronic control unit		• Transmission oil temperature sensor substitute value 70°C {158°F} • Fixed to high oil temperature cooler bypass control • Creep torque cut
Possible causes		• Defective harness between oil temperature sensor and DUONIC™ electronic control unit • Defective oil temperature sensor • Defective DUONIC™ electronic control unit
Inspection procedure	Step1	Inspection procedure Turn the starter switch in OFF. Remove the connector of B48 (Oil temperature sensor). Measure the resistance between terminals 5 and 6. Specified value: 2.31 - 2.59k (20°C {68°F}) Is any abnormality recognized? Special features If any visible damage is found, repair or replace the affected part and interrupt the inspection process. No: Go to Step2 Yes: Go to Step4
	Step2	Inspection procedure Inspect or verify the following items. Repair or replace faulty items as necessary. Replace B48 (Oil temperature sensor) with a normal one and check to see if the fault code occurs. Measure resistance of the harness across A28 (DUONIC™ Control unit) and B48 (Oil temperature sensor) to check for a faulty harness (e.g., incomplete open circuit). Go to Step3
	Step3	Inspection procedure Turn the starter switch in OFF. Reinstall all the removed connectors. Erase fault memory and perform a test drive. If the diagnosis code has occurred even during the test drive, start the operation and then replace the A28 (DUONIC™ Control unit). Inspection completed
	Step4	Inspection procedure Replace component “B48 (Oil temperature sensor)”. Reinstall all the removed connectors. Turn the starter switch in ON. Go to Step3

https://truckmanualshub.com/

188-19: Out-of-range CAN reception data from component “Combustion engine Control unit”

Generation condition		• Supply voltage 8 to 16 V with starter switch ON • 3 seconds or more have elapsed since starter switch was turned ON. • Electronic control was received & Out-of-range Engine idle speed (CAN) for 10 seconds
Recoverability		• System has recovered if signal becomes normal after starter switch is turned OFF and then ON (thus reenergizing electronic control unit) or while starter switch is in ON position.
Control effected by electronic control unit		[Upon receiving out-of-range signal] • Normal data last received are retained. • 650 rpm retained if data last received are out of range. [Upon error judgment] • Both clutches are kept disengaged. • All gear shift rails are kept in N. (Target gear locked in N.) • N flashes in meter cluster gear display. (P has priority over N.) • Engine control is terminated.
Possible causes		• Defective engine electronic control unit
Inspection procedure	Step1	Inspection procedure Perform a diagnosis on the A4 (Combustion engine Control unit) side system.

190-19: Out-of-range CAN reception data from component “Combustion engine Control unit”

Generation condition		• Supply voltage 8 to 16 V with starter switch ON • 3 seconds or more have elapsed since starter switch was turned ON. • EEC1_EEC was received. • Engine speed (CAN) out of range
Recoverability		• System has recovered if signal becomes normal after starter switch is turned OFF and then ON (thus reenergizing electronic control unit) or while starter switch is in ON position.
Control effected by electronic control unit		[Upon receiving out-of-range signal] • Normal data last received are retained. [Upon error judgment] • Both clutches are kept disengaged. • All gear shift rails are kept in N. (Target gear locked in N.) • N flashes in meter cluster gear display. (P has priority over N.) • Engine control is terminated.
Possible causes		• Defective engine electronic control unit
Inspection procedure	Step1	Inspect or verify the following items. Repair or replace faulty items as necessary. If all ECUs connected to the common CAN communication line are unable to communicate, check the common CAN communication line for shorting. Go to step2
	Step2	Refer to the help menu for Nos. other than above. *1: M/T *2: DUONIC *3: ISS (With Lock brake) *4: ISS (Without Lock brake) *5: Lock brake (Without ISS) *6: Other than *3,*4,*5 *7: Full-automatic air conditioner *8: Auto leveling *9: Manual leveling Inspection procedure Make a system diagnosis at the ECU2 on the transmission side. Make a system diagnosis at the A4 (Combustion engine Control unit) on the transmission side. Go to step3

https://truckmanualshub.com/

Inspection procedure	Step3	Refer to the help menu for Nos. other than above. *1: M/T *2: DUONIC *3: ISS (With Lock brake) *4: ISS (Without Lock brake) *5: Lock brake (Without ISS) *6: Other than *3,*4,*5 *7: Full-automatic air conditioner *8: Auto leveling *9: Manual leveling Inspection procedure Turn the starter switch in OFF. Remove the ECU connector attached to CAN communication line. Check CAN line for open circuit, short circuit to positive, short circuit to ground or short circuit to another electrical line. Special features If any visible damage is found, repair or replace the affected part and interrupt the inspection process. Is any abnormality recognized? No: Go to step4 Yes: Go to step9
	Step4	Inspection procedure Insert the multimeter probe in the A20 (SAM) connector and measure resistance across A20.X7.18/1 and A20.X7.18/11. Special features Be sure to check the ECU with its connection removed from the connector. Is any abnormality recognized? No: Go to step5 Yes: Go to step8
	Step5	Inspection procedure Insert the multimeter probe in the A4 (Combustion engine Control unit) connector and measure resistance across A4.X2.94/62 and A4.X2.94/61. Special features Be sure to check the ECU with its connection removed from the connector. Is any abnormality recognized? No: Go to step6 Yes: Go to step7
	Step6	Refer to the help menu for Nos. other than above. *1: M/T *2: DUONIC *3: ISS (With Lock brake) *4: ISS (Without Lock brake) *5: Lock brake (Without ISS) *6: Other than *3,*4,*5 *7: Full-automatic air conditioner *8: Auto leveling *9: Manual leveling Inspection procedure The harness from the ECU to CAN communication line is probably faulty or the ECU may have an internal fault. Identify the faulty spot by using the following procedure and repair or replace the faulty part. Use the short test to check for a fault code of the CAN communication failure of the entire vehicle. Remove all related ECUs one at a time and use the short test to check for a fault code of the CAN communication failure. With all related ECUs removed, mount one ECU at a time and check for a defective harness within the ECU. Inspection completed
	Step7	Inspection procedure Turn the starter switch in OFF. Reinstall all the removed connectors. Erase fault memory and perform a test drive. If the diagnosis code has occurred even during the test drive, start the operation and then replace the A4 (Combustion engine Control unit). Inspection completed

https://truckmanualshub.com/

Inspection procedure	Step8	Inspection procedure Turn the starter switch in OFF. Reinstall all the removed connectors. Erase fault memory and perform a test drive. If the diagnosis code has occurred even during the test drive, start the operation and then replace the A4 (Combustion engine Control unit). Inspection completed
	Step9	Refer to the help menu for Nos. other than above. *1: M/T *2: DUONIC *3: ISS (With Lock brake) *4: ISS (Without Lock brake) *5: Lock brake (Without ISS) *6: Other than *3,*4,*5 *7: Full-automatic air conditioner *8: Auto leveling *9: Manual leveling Inspection procedure Repair or replace electrical lines. Reinstall all the removed connectors. Turn the starter switch in ON. Go to step10
	Step10	Inspection procedure Is this diagnosis code still active? No:nGo to step11 Yes:nGo to step3
	Step11	Inspection completed

https://truckmanualshub.com/

191-2: Component 'Rpm sensor Transmission' has an electrical fault.

Generation condition		• Anti-lock brake system-equipped vehicle: ABS Cooperative Control • Supply voltage 8 to 16 V with starter switch ON • Normal anti-lock brake system vehicle speed received • No generation of Diagnosis Code 191-8 • Abnormal condition based on comparison between vehicle speed sensor 1 and Front Axle Speed (CAN)
Recoverability		• System has recovered if signal becomes normal after starter switch is turned OFF and then ON (thus reenergizing electronic control unit).
Control effected by electronic control unit		• Reference made to vehicle speed sensor 2 input • Creep torque cut
Possible causes		• Defective harness between DUONIC™ speed sensor and DUONIC™ electronic control unit • Defective DUONIC™ speed sensor • Defective DUONIC™ electronic control unit
Inspection procedure	Step1	Inspection procedure Turn the starter switch in OFF. Remove the connector of B41 (Rpm sensor Transmission). Apply DC {0} to {1} V between terminals B41.4/3 and B41.4/1. Rotate the shaft of B41 (Rpm sensor Transmission). Check terminals B41.4/2 and B41.4/4 for signals and, if no signals are outputted, replace B41 (Rpm sensor Transmission). Is any abnormality recognized? Special features If any visible damage is found, repair or replace the affected part and interrupt the inspection process. No: Go to Step2 Yes: Go to Step4
	Step2	Inspection procedure Inspect or verify the following items. Repair or replace faulty items as necessary. Replace B41 (Rpm sensor Transmission) with a normal one and check to see if the fault code occurs. Measure resistance of the harness across A28 (DUONIC™ Control unit) and B41 (Rpm sensor Transmission) to check for a faulty harness (e.g., incomplete open circuit). Go to Step3
	Step3	Inspection procedure Turn the starter switch in OFF. Reinstall all the removed connectors. Erase fault memory and perform a test drive. If the diagnosis code has occurred even during the test drive, start the operation and then replace the A28 (DUONIC™ Control unit). Inspection completed
	Step4	Inspection procedure Replace component “B41 (Rpm sensor Transmission)”. Reinstall all the removed connectors. Turn the starter switch in ON. Go to Step3

https://truckmanualshub.com/

191-7: Component Vehicle speed Sensors, Rpm sensor Transmission has an electrical fault

Generation condition		• Simultaneous occurrences of Diagnosis Code 191-8 or 191-2 and Diagnosis Code 1619-8 or 1619-2
Recoverability		• System has recovered if signal becomes normal after starter switch is turned OFF and then ON (thus reenergizing electronic control unit).
Control effected by electronic control unit		• Both clutches are kept disengaged. • Gear shift unit is kept in N. (Target gear locked in N.) • N flashes in meter cluster gear display. (P has priority display.) • Engine control is terminated.
Possible causes		• Defective vehicle speed sensor and DUONIC™ speed sensor • Defective DUONIC™ electronic control unit
Inspection procedure	Step1	Inspection procedure Inspect the suspected factors mentioned above sequentially to locate faulty parts. Repair or replace the faulty part as necessary.

191-8: The signal voltage of component Rpm sensor Transmission is too low.

Generation condition		• Anti-lock brake system-equipped vehicle: ABS Cooperative Control • Supply voltage 8 – 16 V with starter switch ON • Normal Front Axle Speed (CAN) received • Vehicle speed sensor 1 = 0 rpm
Recoverability		• System has recovered if signal becomes normal after starter switch is turned OFF and then ON (thus reenergizing electronic control unit) or vehicle speed sensor 1 is 100 rpm or more with starter switch in ON position
Control effected by electronic control unit		• Reference made to vehicle speed sensor 2 input • Creep torque cut
Possible causes		• Signal harness between DUONIC™ speed sensor and DUONIC™ electronic control unit open, shorted to ground or shorted to battery • Ground harness between DUONIC™ speed sensor and DUONIC™ electronic control unit open or shorted to ground • DUONIC™ speed sensor power supply harness open or shorted to ground • Defective DUONIC™ speed sensor • Defective DUONIC™ electronic control unit
Inspection procedure	Step1	If corresponding fault codes are also present on other components, check the common power supply and common ground point " for open circuit and short circuit. Go to Step2
	Step2	Inspection procedure Turn the starter switch in OFF. Remove the connector of B41 (Rpm sensor Transmission). Make a visual check on each connector. Measure the resistance between B41 (Rpm sensor Transmission) and ground or each terminal to check for short-circuit and electrical leakage. Measure the resistance between B41 (Rpm sensor Transmission) terminals to check for open-circuit. Special features If any visible damage is found, repair or replace the affected part and interrupt the inspection process. No abnormalities? No: Go to Step3 Yes: Go to Step4
	Step3	Inspection procedure Turn the starter switch in OFF. Replace component “B41 (Rpm sensor Transmission)”. Reinstall all the removed connectors. Erase fault memory and perform a test drive. If the diagnosis code has occurred even during the test drive, start the operation and then replace the A28 (DUONIC™ Control unit). Inspection completed

https://truckmanualshub.com/

Inspection procedure	Step4	Inspection procedure Turn the starter switch in OFF. Remove the connector of A28 (DUONIC™ Control unit). Check the circuit across B41 (Rpm sensor Transmission) and A28 (DUONIC™ Control unit) for open or short circuit. Is any abnormality recognized? No: Go to Step5 Yes: Go to Step6
	Step5	Inspection procedure Turn the starter switch in OFF. Reinstall all the removed connectors. Erase fault memory and perform a test drive. If the diagnosis code has occurred even during the test drive, start the operation and then replace the A28 (DUONIC™ Control unit). Inspection completed
	Step6	Inspection procedure Repair or replace electrical lines. Reinstall all the removed connectors. Erase fault memory and perform a test drive. If the diagnosis code has occurred even during the test drive, start the operation and then replace the A28 (DUONIC™ Control unit). Inspection completed

191-10: Component Vehicle speed Sensors, Rpm sensor Transmission has an electrical fault.

Generation condition		• Supply voltage 8 to 16 V with starter switch ON • 3 seconds or more have elapsed since starter switch was turned ON. • Diagnosis Code 191-8, 191-2 not generated or Diagnosis Code 1619-8, 1619-2 not generated • Continuous 15 km/h {9.32 mph} or above & Vehicle speed dropped from 15 km/h {9.32 mph} or above to 0 mph in 0.01 seconds
Recoverability		• System has recovered if signal becomes normal after starter switch is turned OFF and then ON (thus reenergizing electronic control unit), or Diagnosis Code 191-7 generated or vehicle speed of 2 km/h {1.24 mph} or more continued for 1 second or more with starter switch in ON position
Control effected by electronic control unit		• Both clutches are kept disengaged. • Gear shift unit is kept in N. (Target gear locked in N.) • N flashes in meter cluster gear display. (P has priority display.) • Engine control is terminated.
Possible causes		• Defective vehicle speed sensor and DUONIC™ speed sensor • Defective DUONIC™ electronic control unit
Inspection procedure	Step1	Inspection procedure Inspect the suspected factors mentioned above sequentially to locate faulty parts. Repair or replace the faulty part as necessary.

191-12: Component Vehicle speed Sensors, Rpm sensor Transmission has an electrical fault.

Generation condition		• Non-anti-lock brake system vehicle: ABS Cooperative Control • Supply voltage 8 to 16 V with starter switch ON • Difference of 200 rpm or more between vehicle speed sensor 1 and vehicle speed sensor 2 & Abnormal comparative input of vehicle speed sensor 1 and vehicle speed sensor 2
Recoverability		• System has recovered if signal becomes normal after starter switch is turned OFF and then ON (thus reenergizing electronic control unit).
Control effected by electronic control unit		• Reference made to vehicle speed sensor 1 or 2 input, whichever is higher • Creep torque cut
Possible causes		• Defective vehicle speed sensor and DUONIC™ speed sensor • Defective DUONIC™ electronic control unit
Inspection procedure	Step1	Inspection procedure Inspect the suspected factors mentioned above sequentially to locate faulty parts. Repair or replace the faulty part as necessary.

https://truckmanualshub.com/

512-19: Out-of-range CAN reception data from component “Combustion engine Control unit”

Generation condition		• Supply voltage 8 to 16 V with starter switch ON • 3 seconds or more have elapsed since starter switch was turned ON. • EEC1_EEC received & Driver’s Demand Percent Torque (CAN) out of range (125<Driver’s Demand Percent Torque (CAN))
Recoverability		• System has recovered if signal becomes normal after starter switch is turned OFF and then ON (thus reenergizing electronic control unit) or while starter switch is in ON position.
Control effected by electronic control unit		[Upon receiving out-of-range signal] • Normal data last received are retained. [Upon error judgment] • Both clutches are kept disengaged. • All gear shift rails are kept in N. (Target gear locked in N.) • N flashes in meter cluster gear display. (P has priority display.) • Engine control is terminated.
Possible causes		• Defective engine electronic control unit
Inspection procedure	Step1	Inspection procedure Perform a diagnosis on the A4 (Combustion engine Control unit) side system.

513-19: Out-of-range CAN reception data from component “Combustion engine Control unit”

Generation condition		• Supply voltage 8 to 16 V with starter switch ON • 3 seconds or more have elapsed since starter switch was turned ON. • EEC1_EEC received & Actual Engine Percent Torque (CAN) out of range (125<Actual Engine Percent Torque (CAN))
Recoverability		• System has recovered if signal becomes normal after starter switch is turned OFF and then ON (thus reenergizing electronic control unit) or while starter switch is in ON position.
Control effected by electronic control unit		[Upon receiving out-of-range signal] • Normal data last received are retained. [Upon error judgment] • Both clutches are kept disengaged. • All gear shift rails are kept in N. (Target gear locked in N.) • N flashes in meter cluster gear display. (P has priority display.) • Engine control is terminated.
Possible causes		• Defective engine electronic control unit
Inspection procedure	Step1	Inspect or verify the following items. Repair or replace faulty items as necessary. If all ECUs connected to the common CAN communication line are unable to communicate, check the common CAN communication line for shorting. Go to step2
	Step2	Refer to the help menu for Nos. other than above. *1: M/T *2: DUONIC *3: ISS (With Lock brake) *4: ISS (Without Lock brake) *5: Lock brake (Without ISS) *6: Other than *3,*4,*5 *7: Full-automatic air conditioner *8: Auto leveling *9: Manual leveling Inspection procedure Turn the starter switch in OFF. Remove the ECU connector attached to CAN communication line. Check CAN line for open circuit, short circuit to positive, short circuit to ground or short circuit to another electrical line. Special features If any visible damage is found, repair or replace the affected part and interrupt the inspection process. Is any abnormality recognized? No: Go to step3 Yes: Go to step8

https://truckmanualshub.com/

Inspection procedure	Step3	Inspection procedure Insert the multimeter probe in the A20 (SAM) connector and measure resistance across A20.X7.18/1 and A20.X7.18/11. Special features Be sure to check the ECU with its connection removed from the connector. Is any abnormality recognized? No: Go to step4 Yes: Go to step7
	Step4	Inspection procedure Insert the multimeter probe in the A4 (Combustion engine Control unit) connector and measure resistance across A4.X2.94/62 and A4.X2.94/61. Special features Be sure to check the ECU with its connection removed from the connector. Is any abnormality recognized? No: Go to step5 Yes: Go to step6
	Step5	Refer to the help menu for Nos. other than above. *1: M/T *2: DUONIC *3: ISS (With Lock brake) *4: ISS (Without Lock brake) *5: Lock brake (Without ISS) *6: Other than *3,*4,*5 *7: Full-automatic air conditioner *8: Auto leveling *9: Manual leveling Inspection procedure The harness from the ECU to CAN communication line is probably faulty or the ECU may have an internal fault. Identify the faulty spot by using the following procedure and repair or replace the faulty part. Use the short test to check for a fault code of the CAN communication failure of the entire vehicle. Remove all related ECUs one at a time and use the short test to check for a fault code of the CAN communication failure. With all related ECUs removed, mount one ECU at a time and check for a defective harness within the ECU. Inspection completed
	Step6	Inspection procedure Turn the starter switch in OFF. Reinstall all the removed connectors. Erase fault memory and perform a test drive. If the diagnosis code has occurred even during the test drive, start the operation and then replace the A4 (Combustion engine Control unit). Inspection completed
	Step7	Inspection procedure Turn the starter switch in OFF. Reinstall all the removed connectors. Erase fault memory and perform a test drive. If the diagnosis code has occurred even during the test drive, start the operation and then replace the A20 (SAM). Inspection completed
	Step8	Refer to the help menu for Nos. other than above. *1: M/T *2: DUONIC *3: ISS (With Lock brake) *4: ISS (Without Lock brake) *5: Lock brake (Without ISS) *6: Other than *3,*4,*5 *7: Full-automatic air conditioner *8: Auto leveling *9: Manual leveling Inspection procedure Repair or replace electrical lines. Reinstall all the removed connectors. Turn the starter switch in ON. Go to step9

https://truckmanualshub.com/

Inspection procedure	Step9	Inspection procedure Is this diagnosis code still active? No: Go to step10 Yes: Go to step2
	Step10	Inspection completed

514-19: Out-of-range CAN reception data from component “Combustion engine Control unit”

Generation condition		• Supply voltage 8 to 16 V with starter switch ON • 3 seconds or more have elapsed since starter switch was turned ON. • EEC3_EEC received & Friction Percent Torque (CAN) out of range
Recoverability		• System has recovered if signal becomes normal after starter switch is turned OFF and then ON (thus reenergizing electronic control unit) or while starter switch is in ON position.
Control effected by electronic control unit		[Upon receiving out-of-range signal] • Normal data last received are retained. [Upon error judgment] • Both clutches are kept disengaged. • All gear shift rails are kept in N. (Target gear locked in N.) • N flashes in meter cluster gear display. (P has priority display.) • Engine control is terminated.
Possible causes		• Controller area network communication line open, shorted to battery, shorted to ground, or shorted otherwise • Defective controller area network resistor • Defective engine electronic control unit • Defective DUONIC^{TM} electronic control unit
Inspection procedure	Step1	Inspect or verify the following items. Repair or replace faulty items as necessary. If all ECUs connected to the common CAN communication line are unable to communicate, check the common CAN communication line for shorting. Go to step2
	Step2	Refer to the help menu for Nos. other than above. *1: M/T *2: DUONIC *3: ISS (With Lock brake) *4: ISS (Without Lock brake) *5: Lock brake (Without ISS) *6: Other than *3,*4,*5 *7: Full-automatic air conditioner *8: Auto leveling *9: Manual leveling Inspection procedure Turn the starter switch in OFF. Remove the ECU connector attached to CAN communication line. Check CAN line for open circuit, short circuit to positive, short circuit to ground or short circuit to another electrical line. Special features If any visible damage is found, repair or replace the affected part and interrupt the inspection process. Is any abnormality recognized? No: Go to step3 Yes: Go to step8
	Step3	Inspection procedure Insert the multimeter probe in the A20 (SAM) connector and measure resistance across A20.X7.18/1 and A20.X7.18/11. Special features Be sure to check the ECU with its connection removed from the connector. Is any abnormality recognized? No: Go to step4 Yes: Go to step7

https://truckmanualshub.com/

Inspection procedure	Step4	Inspection procedure Insert the multimeter probe in the A4 (Combustion engine Control unit) connector and measure resistance across A4.X2.94/62 and A4.X2.94/61. Special features Be sure to check the ECU with its connection removed from the connector. Is any abnormality recognized? No: Go to step5 Yes: Go to step6
	Step5	Refer to the help menu for Nos. other than above. *1: M/T *2: DUONIC *3: ISS (With Lock brake) *4: ISS (Without Lock brake) *5: Lock brake (Without ISS) *6: Other than *3,*4,*5 *7: Full-automatic air conditioner *8: Auto leveling *9: Manual leveling Inspection procedure The harness from the ECU to CAN communication line is probably faulty or the ECU may have an internal fault. Identify the faulty spot by using the following procedure and repair or replace the faulty part. Use the short test to check for a fault code of the CAN communication failure of the entire vehicle. Remove all related ECUs one at a time and use the short test to check for a fault code of the CAN communication failure. With all related ECUs removed, mount one ECU at a time and check for a defective harness within the ECU. Inspection completed
	Step6	Inspection procedure Turn the starter switch in OFF. Reinstall all the removed connectors. Erase fault memory and perform a test drive. If the diagnosis code has occurred even during the test drive, start the operation and then replace the A4 (Combustion engine Control unit). Inspection completed
	Step7	Inspection procedure Turn the starter switch in OFF. Reinstall all the removed connectors. Erase fault memory and perform a test drive. If the diagnosis code has occurred even during the test drive, start the operation and then replace the A20 (SAM). Inspection completed
	Step8	Refer to the help menu for Nos. other than above. *1: M/T *2: DUONIC *3: ISS (With Lock brake) *4: ISS (Without Lock brake) *5: Lock brake (Without ISS) *6: Other than *3,*4,*5 *7: Full-automatic air conditioner *8: Auto leveling *9: Manual leveling Inspection procedure Repair or replace electrical lines. Reinstall all the removed connectors. Turn the starter switch in ON. Go to step9
	Step9	Inspection procedure Is this diagnosis code still active? No: Go to step10 Yes: Go to step2
	Step10	Inspection completed

https://truckmanualshub.com/

522-7: Inner clutch slip

Generation condition		• Supply voltage 8 to 16 V with starter switch ON • Battery voltage 8 to 16 V • Diagnosis Code 788-4, 788-3 (ON, OFF STUCK error) not generated • Diagnosis Code 785-3 (Magnetic valve (relief) shorted to battery) not generated • Inner clutch current reading 1.15 A or above • Odd gear engaged • Difference of 200 rpm or more for 10 seconds between engine speed (CAN) and inner clutch speed (CAN)
Recoverability		• System has recovered if signal becomes normal after starter switch is turned OFF and then ON (thus reenergizing electronic control unit).
Control effected by electronic control unit		[Prior to vehicle stationary judgment] • Both clutches are kept disengaged. • All gear shift rails are kept in N. (Target gear locked in N.) • N flashes in meter cluster gear display. (P has priority display.) • Engine control is terminated. [Upon vehicle stationary judgment] • Gear pre-select not permitted • Vehicle continuously driven in F-2nd/R-Hi
Possible causes		• Incorrect setting of transfer gear ratio • Defective inner linear magnetic valve • Defective clutch system • Defective DUONIC^{TM} electronic control unit
Inspection procedure	Step1	Inspection procedure Inspect the suspected factors mentioned above sequentially to locate faulty parts. Repair or replace the faulty part as necessary.

526-2: Gear ratio double failure

Generation condition		• Simultaneous occurrences of Diagnosis Code 520719-2 or 520721-2 or 520723-2 or 520725-2 and Diagnosis Code 520720-2 or 520722-2 or 520724-2 or 520726-2
Recoverability		• System has recovered if signal becomes normal after starter switch is turned OFF and then ON (thus reenergizing electronic control unit) or Diagnosis Code 520719-2, 520721-2, 520723-2, 520725-2 not generated or Diagnosis Code 520720-2, 520722-2, 520724-2, 520726-2 not generated while starter switch is in ON position
Control effected by electronic control unit		• Both clutches are kept disengaged. • All gear shift rails are kept in N. (Target gear locked in N.) • N flashes in meter cluster gear display. (P has priority display.) • Engine control is terminated.
Possible causes		• Incorrect gear ratio setting due to incorrect transmission assembly • Defective DUONIC^{TM} electronic control unit
Inspection procedure	Step1	Inspection procedure Inspect the suspected factors mentioned above sequentially to locate faulty parts. Repair or replace the faulty part as necessary.

https://truckmanualshub.com/

544-19: Out-of-range CAN reception data from component "Combustion engine Control unit"

Generation condition		• Supply voltage 8 to 16 V with starter switch ON • 3 seconds or more have elapsed since starter switch was turned ON. • EC received & Engine Reference Torque (CAN) out of range (Engine Reference Torque (CAN)<100 or 1000<Engine Reference Torque (CAN)) for 10 seconds
Recoverability		• System has recovered if signal becomes normal after starter switch is turned OFF and then ON (thus reenergizing electronic control unit) or while starter switch is in ON position.
Control effected by electronic control unit		[Upon receiving out-of-range signal] • Normal data last received are retained. • 400 Nm is retained if data last received are out of range. [Upon error judgment] • Both clutches are kept disengaged. • All gear shift rails are kept in N. (Target gear locked in N.) • N flashes in meter cluster gear display. (P has priority display.) • Engine control is terminated.
Possible causes		• Defective engine electronic control unit
Inspection procedure	Step1	Inspection procedure Perform a diagnosis on the A4 (Combustion engine Control unit) side system.

563-19: Out-of-range CAN reception data from component "Antilock brake system Control unit"

Generation condition		• Anti-lock brake system-equipped vehicle (ABS Cooperative Control Equipped) • Supply voltage 8 to 16 V with starter switch ON • 3 seconds or more have elapsed since starter switch was turned ON. • EBC1_BS received & ABS Control (CAN) out of range (Reserved, SNA)
Recoverability		• System has recovered if signal becomes normal after starter switch is turned OFF and then ON (thus reenergizing electronic control unit) or while starter switch is in ON position.
Control effected by electronic control unit		[Upon receiving out-of-range signal] • Normal data last received are retained. [Upon error judgment] • Auto downshifting not permitted <in Auto Mode> • Shifting to roll-off gear temporarily permitted after detection of vehicle stationary for 3 seconds <in Auto Mode> • Normal gear shifting permitted <in Manual Mode>
Possible causes		• Defective hydraulic unit (electronic control unit)
Inspection procedure	Step1	Inspection procedure Perform a diagnosis on the A1 (Antilock brake system Control unit) side system.

595-19: Out-of-range CAN reception data from component "Combustion engine Control unit"

Generation condition		• Supply voltage 8 to 16 V with starter switch ON • 3 seconds or more have elapsed since starter switch was turned ON. • CCVS_MCM received & Cruise control status (CAN) out of range (Cruise control status (CAN) = 2)
Recoverability		• System has recovered if signal becomes normal after starter switch is turned OFF and then ON (thus reenergizing electronic control unit) or while starter switch is in ON position.
Control effected by electronic control unit		[Cruise control status (CAN) = 2, 3 (Reserved, SNA)] • Cruise control status (CAN) = 0 detection retained [Upon error judgment] • Cruise speed change mode is exited. • Cruise termination request is continuously issued.
Possible causes		• Defective engine electronic control unit
Inspection procedure	Step1	Inspection procedure Perform a diagnosis on the A4 (Combustion engine Control unit) side system.

https://truckmanualshub.com/

597-19: Out-of-range CAN reception data from component “Brake light Switches”

Generation condition		• Supply voltage 8 to 16 V with starter switch ON • 3 seconds or more have elapsed since starter switch was turned ON • CCVS_SSAM received • Brake switch (CAN) out of range (Error, SNA)
Recoverability		• System has recovered if signal becomes normal after starter switch is turned OFF and then ON (thus reenergizing electronic control unit) or while starter switch is in ON position.
Control effected by electronic control unit		[Upon receiving out-of-range signal] • Normal data last received are retained. [Upon error judgment] • Both clutches are kept disengaged. • All gear shift rails are kept in N. (Target gear locked in N.) • N flashes in meter cluster gear display. (P has priority display.) • Engine control is terminated.
Possible causes		• Defective signal detect and actuation modules
Inspection procedure	Step1	Inspection procedure Perform a diagnosis on the A20 (SAM) side system.

600-19: Out-of-range CAN reception data from component “Combustion engine Control unit”

Generation condition		• Supply voltage 8 to 16 V with starter switch ON • 3 seconds or more have elapsed since starter switch was turned ON • CCVS_MCM received & Cruise deceleration switch (CAN) out of range (Cruise deceleration switch (CAN) = Error)
Recoverability		• System has recovered if signal becomes normal after starter switch is turned OFF and then ON (thus reenergizing electronic control unit) or while starter switch is in ON position.
Control effected by electronic control unit		[Cruise deceleration switch (CAN) = Error, SNA] • Cruise deceleration switch (CAN) = OFF detection retained [Upon error judgment] • Cruise speed change mode is exited. • Cruise termination request is continuously issued.
Possible causes		• Defective engine electronic control unit
Inspection procedure	Step1	Inspection procedure Perform a diagnosis on the A4 (Combustion engine Control unit) side system.

602-19: Out-of-range CAN reception data from component “Combustion engine Control unit”

Generation condition		• Supply voltage 8 to 16 V with starter switch ON • 3 seconds or more have elapsed since starter switch was turned ON • CCVS_MCM received & Cruise acceleration switch (CAN) out of range (Cruise acceleration switch (CAN) = Error)
Recoverability		• System has recovered if signal becomes normal after starter switch is turned OFF and then ON (thus reenergizing electronic control unit) or while starter switch is in ON position.
Control effected by electronic control unit		[Cruise acceleration switch (CAN) = Error, SNA)] • Cruise acceleration switch (CAN) = OFF detection retained [Upon error judgment] • Cruise speed change mode is exited. • Cruise termination request is continuously issued.
Possible causes		• Defective engine electronic control unit
Inspection procedure	Step1	Inspection procedure Perform a diagnosis on the A4 (Combustion engine Control unit) side system.

https://truckmanualshub.com/

681-12: Out-of-range CAN reception data from component “Shift lock solenoid”

Generation condition		• Supply voltage 8 to 16 V with starter switch ON • 3 seconds or more have elapsed since starter switch was turned ON • ETC2_SSAM received • Change lever unit in P • SSAM_A01 received • Disagreement between Shift lever unit lock cancellation output (CAN) and Shift lock cancellation feedback
Recoverability		• System has recovered if signal becomes normal after starter switch is turned OFF and then ON (thus reenergizing electronic control unit) or feedback agrees for 3 seconds while starter switch is in ON position.
Control effected by electronic control unit		• None
Possible causes		• Defective signal detect and actuation modules
Inspection procedure	Step1	Inspection procedure Perform a diagnosis on the A20 (SAM) side system.

684-7: Outer clutch slip

Generation condition		• Supply voltage 8 to 16 V with starter switch ON • Battery voltage 8 to 16 V • Diagnosis Code 520718-4, 520718-3 (ON, OFF STUCK error) not generated • Diagnosis Code 785-3 (magnetic valve (relief) shorted to battery) not generated • Outer clutch current reading 1.15 A or above • Even gear engaged • Difference of 200 rpm or more for 10 seconds between engine speed and outer clutch speed
Recoverability		• System has recovered if signal becomes normal after starter switch is turned OFF and then ON (thus reenergizing electronic control unit).
Control effected by electronic control unit		[Prior to vehicle stationary judgment] • Both clutches are kept disengaged. • All gear shift rails are kept in N. (Target gear locked in N.) • N flashes in meter cluster gear display. (P has priority display.) • Engine control is terminated. [Upon vehicle stationary judgment] • Gear pre-select not permitted • Vehicle continuously driven in F-1st/R-Lo
Possible causes		• Incorrect setting of transfer gear ratio • Defective outer linear magnetic valve • Defective clutch • Defective DUONIC^{TM} electronic control unit
Inspection procedure	Step1	Inspection procedure Inspect the suspected factors mentioned above sequentially to locate faulty parts. Repair or replace the faulty part as necessary.

https://truckmanualshub.com/

740-7: No response of outer clutch torque

Generation condition		• Supply voltage 8 to 16 V with starter switch ON • Battery voltage 8 to 16 V • Diagnosis Code 788-4, 788-3 (driver stuck ON, OFF) not generated • Diagnosis Code 785-3 (magnetic valve (relief) shorted to battery) not generated • Even gear engaged • Engine speed higher by 500 rpm or more than inner clutch speed • Despite correct outer clutch current reading, torque output is incorrect for 5 seconds.
Recoverability		• System has recovered if signal becomes normal after starter switch is turned OFF and then ON (thus reenergizing electronic control unit).
Control effected by electronic control unit		[Prior to vehicle stationary judgment] • Both clutches are kept disengaged. • All gear shift rails are kept in N. (Target gear locked in N.) • N flashes in meter cluster gear display. (P has priority display.) • Engine control is terminated. [Upon vehicle stationary judgment] • Gear pre-select not permitted • Vehicle continuously driven in F-1st/R-Lo
Possible causes		• Defective outer clutch control linear magnetic valve • Defective clutch • Defective DUONIC^{TM} electronic control unit
Inspection procedure	Step1	Inspection procedure Inspect the suspected factors mentioned above sequentially to locate faulty parts. Repair or replace the faulty part as necessary.

772-3: Component Gear shift unit magnet valve(MV1F) is constantly on.

Generation condition		• Supply voltage 8 to 16 V with starter switch ON • Battery voltage 8 to 16 V • Magnetic valve stuck ON detected (C1F Failure status ON stuck (MV1F) = Fail)
Recoverability		• System has recovered if signal becomes normal after starter switch is turned OFF and then ON (thus reenergizing electronic control unit) or no detection of magnetic valve stuck on while starter switch is in ON position. (C1F Failure status ON stuck (MV1F) = No Detection)
Control effected by electronic control unit		• Both clutches are kept disengaged. • Control of relevant gear shift rail unit is terminated. • All gear shift rails but relevant gear shift rail are kept in N. (Target gear locked in N.) • N flashes in meter cluster gear display. (P has priority display.) • Engine control is terminated.
Possible causes		• Harness between DUONIC^{TM} electronic control unit and gear shift unit magnetic valve shorted to battery • Defective actuator • Defective DUONIC^{TM} electronic control unit
Inspection procedure	Step1	Inspection procedure Turn the starter switch in OFF. Remove the connector of Y22 (Gear shift unit magnet valve). Make a visual check on each connector. Measure the resistance between Y22 (Gear shift unit magnet valve) and ground or each terminal to check for short-circuit and electrical leakage. Measure the resistance between Y22 (Gear shift unit magnet valve) terminals to check for open-circuit. Special features If any visible damage is found, repair or replace the affected part and interrupt the inspection process. Is any abnormality recognized? No: Go to Step2 Yes: Go to Step3

https://truckmanualshub.com/

Inspection procedure	Step2	Inspection procedure Turn the starter switch in OFF. Replace component “Y22 (Gear shift unit magnet valve)”. Reinstall all the removed connectors. Erase fault memory and perform a test drive. If the diagnosis code has occurred even during the test drive, start the operation and then replace the A28 (DUONIC^{TM} Control unit). Inspection completed
	Step3	Inspection procedure Turn the starter switch in OFF. Remove the connector of A1 ECU. Check electrical line between pins A28.X1.81/24 and Y22.6/3 for short circuit to positive. Is any abnormality recognized? No: Go to Step4 Yes: Go to Step5
	Step4	Inspection procedure Turn the starter switch in OFF. Reinstall all the removed connectors. Erase fault memory and perform a test drive. If the diagnosis code has occurred even during the test drive, start the operation and then replace the A28 (DUONIC^{TM} Control unit). Inspection completed
	Step5	Inspection procedure Repair or replace electrical lines. Reinstall all the removed connectors. Erase fault memory and perform a test drive. If the diagnosis code has occurred even during the test drive, start the operation and then replace the A28 (DUONIC^{TM} Control unit). Inspection completed

772-4: Component “Gear shift unit magnet valve(MV1F)” is always OFF.

Generation condition	• Supply voltage 8 to 16 V with starter switch ON • Battery voltage 8 to 16 V • Magnetic valve stuck OFF detected (C1F Failure status OFF stuck (MV1F) = Fail)
Recoverability	• System has recovered if signal becomes normal after starter switch is turned OFF and then ON (thus reenergizing electronic control unit).
Control effected by electronic control unit	[Prior to vehicle stationary judgment] • Both clutches are kept disengaged. • Control of relevant gear shift rail unit is terminated. • All gear shift rails but relevant gear shift rail are kept in N. (Target gear locked in N.) • N flashes in meter cluster gear display. (P has priority display.) • Engine control is terminated. [Upon vehicle stationary judgment] • Gear pre-select not permitted • Control of relevant gear shift rail unit is terminated. • Vehicle continuously driven in F-2nd/R-Hi
Possible causes	• Harness between DUONIC^{TM} electronic control unit and gear shift unit magnetic valve open or shorted • Defective actuator • Defective DUONIC^{TM} electronic control unit

https://truckmanualshub.com/

Inspection procedure	Step1	Inspection procedure Turn the starter switch in OFF. Remove the connector of Y22 (Gear shift unit magnet valve). Make a visual check on each connector. Measure the resistance between Y22 (Gear shift unit magnet valve) and ground or each terminal to check for short-circuit and electrical leakage. Measure the resistance between Y22 (Gear shift unit magnet valve) terminals to check for open-circuit. Special features If any visible damage is found, repair or replace the affected part and interrupt the inspection process. Is any abnormality recognized? No: Go to Step2 Yes: Go to Step3
	Step2	Inspection procedure Turn the starter switch in OFF. Replace component “Y22 (Gear shift unit magnet valve)”. Reinstall all the removed connectors. Erase fault memory and perform a test drive. If the diagnosis code has occurred even during the test drive, start the operation and then replace the A28 (DUONIC^{TM} Control unit). Inspection completed
	Step3	Inspection procedure Turn the starter switch in OFF. Remove the connector of A1 ECU. Test electrical line between pins A28.X1.81/24 and Y22.6/3 for short circuit to ground. Check electrical line between pins A28.X1.81/24 and Y22.6/3 for open circuit. Check electrical line between pins Ground and Ground for open circuit. Is any abnormality recognized? No: Go to Step4 Yes: Go to Step5
	Step4	Inspection procedure Turn the starter switch in OFF. Reinstall all the removed connectors. Erase fault memory and perform a test drive. If the diagnosis code has occurred even during the test drive, start the operation and then replace the A28 (DUONIC^{TM} Control unit). Inspection completed
	Step5	Inspection procedure Repair or replace electrical lines. Reinstall all the removed connectors. Erase fault memory and perform a test drive. If the diagnosis code has occurred even during the test drive, start the operation and then replace the A28 (DUONIC^{TM} Control unit). Inspection completed

781-7: Gear shift not possible due to low pressure binding of Line pressure control solenoid valve

Generation condition		• Diagnosis Code 785-3 (magnetic valve (relief) pressure too low) generated • 3 attempts to engage gear have failed on gear shift unit cylinder on which rail control is not suspended.
Recoverability		• System has recovered if signal becomes normal after starter switch is turned OFF and then ON (thus reenergizing electronic control unit).
Control effected by electronic control unit		• Both clutches are kept disengaged. • All gear shift rails are kept in N. (Target gear locked in N.) • N flashes in meter cluster gear display. (P has priority display.) • Engine control is terminated.
Possible causes		• Diagnosis Code 785-3 was generated, preventing gear from being engaged.
Inspection procedure	Step1	Inspection procedure Inspect the suspected factors mentioned above sequentially to locate faulty parts. Repair or replace the faulty part as necessary.Yes: Go to Step3

https://truckmanualshub.com/

783-3: Component Gear shift unit magnet valve(MV1R) is constantly on.

Generation condition		• Supply voltage 8 to 16 V with starter switch ON • Battery voltage 8 to 16 V • Magnetic valve stuck ON detected (C1B Failure status ON stuck (MV1R) = Fail)
Recoverability		• System has recovered if signal becomes normal after starter switch is turned OFF and then ON (thus reenergizing electronic control unit) or no detection of magnetic valve stuck on while starter switch is in ON position. (C1B Failure status ON stuck (MV1R) = No Detection)
Control effected by electronic control unit		• Both clutches are kept disengaged. • Control of relevant gear shift rail unit is terminated. • All gear shift rails but relevant gear shift rail are kept in N. (Target gear locked in N.) • N flashes in meter cluster gear display. (P has priority display.) • Engine control is terminated.
Possible causes		• Signal harness between DUONIC™ electronic control unit and gear shift unit magnetic valve shorted to battery • Defective actuator • Defective DUONIC™ electronic control unit
Inspection procedure	Step1	Inspection procedure Turn the starter switch in OFF. Remove the connector of Y22 (Gear shift unit magnet valve). Make a visual check on each connector. Measure the resistance between Y22 (Gear shift unit magnet valve) and ground or each terminal to check for short-circuit and electrical leakage. Measure the resistance between Y22 (Gear shift unit magnet valve) terminals to check for open-circuit. Special features If any visible damage is found, repair or replace the affected part and interrupt the inspection process. Is any abnormality recognized? No: Go to Step2 Yes: Go to Step3
	Step2	Inspection procedure Turn the starter switch in OFF. Replace component “Y22 (Gear shift unit magnet valve)”. Reinstall all the removed connectors. Erase fault memory and perform a test drive. If the diagnosis code has occurred even during the test drive, start the operation and then replace the A28 (DUONIC™ Control unit). Inspection completed
	Step3	Inspection procedure Turn the starter switch in OFF. Remove the connector of A1 ECU. Check electrical line between pins A28.X1.81/62 and Y22.6/6 for short circuit to positive. Is any abnormality recognized? No: Go to Step4 Yes: Go to Step5
	Step4	Inspection procedure Turn the starter switch in OFF. Reinstall all the removed connectors. Erase fault memory and perform a test drive. If the diagnosis code has occurred even during the test drive, start the operation and then replace the A28 (DUONIC™ Control unit). Inspection completed
	Step5	Inspection procedure Repair or replace electrical lines. Reinstall all the removed connectors. Erase fault memory and perform a test drive. If the diagnosis code has occurred even during the test drive, start the operation and then replace the A28 (DUONIC™ Control unit). Inspection completed

https://truckmanualshub.com/

783-4: Component “Gear shift unit magnet valve(MV1R)” is always OFF.

Generation condition		• Supply voltage 8 to 16 V with starter switch ON • Battery voltage 8 to 16 V • Magnetic valve stuck OFF detected (C1B Failure status OFF stuck (MV1R) = Fail)
Recoverability		• System has recovered if signal becomes normal after starter switch is turned OFF and then ON (thus reenergizing electronic control unit).
Control effected by electronic control unit		[Prior to vehicle stationary judgment] • Both clutches are kept disengaged. • Control of relevant gear shift rail unit is terminated. • All gear shift rails but relevant gear shift rail are kept in N. (Target gear locked in N.) • N flashes in meter cluster gear display. (P has priority display.) • Engine control is terminated. [Upon vehicle stationary judgment] • Gear pre-select not permitted • Control of relevant gear shift rail unit is terminated. • Vehicle continuously driven in F-2 nd/R-Hi
Possible causes		• Signal harness between DUONIC^{TM} electronic control unit and gear shift unit magnetic valve open or shorted • Defective actuator • Defective DUONIC^{TM} electronic control unit
Inspection procedure	Step1	Inspection procedure Turn the starter switch in OFF. Remove the connector of Y22 (Gear shift unit magnet valve). Make a visual check on each connector. Measure the resistance between Y22 (Gear shift unit magnet valve) and ground or each terminal to check for short-circuit and electrical leakage. Measure the resistance between Y22 (Gear shift unit magnet valve) terminals to check for open-circuit. Special features If any visible damage is found, repair or replace the affected part and interrupt the inspection process. Is any abnormality recognized? No: Go to Step2 Yes: Go to Step3
	Step2	Inspection procedure Turn the starter switch in OFF. Replace component “Y22 (Gear shift unit magnet valve)”. Reinstall all the removed connectors. Erase fault memory and perform a test drive. If the diagnosis code has occurred even during the test drive, start the operation and then replace the A28 (DUONIC^{TM} Control unit). Inspection completed
	Step3	Inspection procedure Turn the starter switch in OFF. Remove the connector of A1 ECU. Test electrical line between pins A28.X1.81/62 and Y22.6/6 for short circuit to ground. Check electrical line between pins A28.X1.81/62 and Y22.6/6 for open circuit. Check electrical line between pins Ground and Ground for open circuit. Is any abnormality recognized? No: Go to Step4 Yes: Go to Step5
	Step4	Inspection procedure Turn the starter switch in OFF. Reinstall all the removed connectors. Erase fault memory and perform a test drive. If the diagnosis code has occurred even during the test drive, start the operation and then replace the A28 (DUONIC^{TM} Control unit). Inspection completed

Inspection procedure	Step5	Inspection procedure Repair or replace electrical lines. Reinstall all the removed connectors. Erase fault memory and perform a test drive. If the diagnosis code has occurred even during the test drive, start the operation and then replace the A28 (DUONIC^{TM} Control unit). Inspection completed

785-3: Component Line pressure control solenoid valve is constantly on.

Generation condition		• Battery voltage 8 to 16 V • Supply voltage with starter switch ON 8 to 16 V • Magnetic valve stuck ON detected (MVR failure status ON stuck = Fail)
Recoverability		• System has recovered if signal becomes normal after starter switch is turned OFF and then ON (thus reenergizing electronic control unit) or no detection of magnetic valve stuck on while starter switch is in ON position. (MVR failure status ON = No Detection)
Control effected by electronic control unit		• None
Possible causes		• Harness between DUONIC^{TM} electronic control unit and line pressure control valve shorted to battery • Defective actuator • Defective electronic control unit
Inspection procedure	Step1	Inspection procedure Turn the starter switch in OFF. Remove the connector of Y25 (Line pressure control solenoid valve). Make a visual check on each connector. Measure the resistance between Y25 (Line pressure control solenoid valve) and ground or each terminal to check for short-circuit and electrical leakage. Measure the resistance between Y25 (Line pressure control solenoid valve) terminals to check for open-circuit. Special features If any visible damage is found, repair or replace the affected part and interrupt the inspection process. Is any abnormality recognized? No: Go to Step2 Yes: Go to Step3
	Step2	Inspection procedure Turn the starter switch in OFF. Replace component “Y25 (Line pressure control solenoid valve)”. Reinstall all the removed connectors. Erase fault memory and perform a test drive. If the diagnosis code has occurred even during the test drive, start the operation and then replace the A28 (DUONIC^{TM} Control unit). Inspection completed
	Step3	Inspection procedure Turn the starter switch in OFF. Remove the connector of A1 ECU. Check electrical line between pins A28.X1.81/20 and Y25.X5.12/4 for short circuit to positive. Is any abnormality recognized? No: Go to Step4 Yes: Go to Step5
	Step4	Inspection procedure Turn the starter switch in OFF. Reinstall all the removed connectors. Erase fault memory and perform a test drive. If the diagnosis code has occurred even during the test drive, start the operation and then replace the A28 (DUONIC^{TM} Control unit). Inspection completed
	Step5	Inspection procedure Repair or replace electrical lines. Reinstall all the removed connectors. Erase fault memory and perform a test drive. If the diagnosis code has occurred even during the test drive, start the operation and then replace the A28 (DUONIC^{TM} Control unit). Inspection completed

https://truckmanualshub.com/

785-4: Component “Line pressure control solenoid valve” is always OFF.

Generation condition		• Battery voltage 8 to 16 V • Supply voltage with starter switch ON 8 to 16 V • Magnetic valve stuck OFF detected (MVR failure status OFF stuck = Fail)
Recoverability		• System has recovered if signal becomes normal after starter switch is turned OFF and then ON (thus reenergizing electronic control unit) or no detection of magnetic valve stuck off while starter switch is in ON position.
Control effected by electronic control unit		• None (System stays under normal control) (MVR failure status OFF stuck = No Detection)
Possible causes		• Harness between DUONIC^{TM} electronic control unit and line pressure control valve open or shorted to ground • Defective actuator • Defective DUONIC^{TM} electronic control unit
Inspection procedure	Step1	Inspection procedure Turn the starter switch in OFF. Remove the connector of Y25 (Line pressure control solenoid valve). Make a visual check on each connector. Measure the resistance between Y25 (Line pressure control solenoid valve) and ground or each terminal to check for short-circuit and electrical leakage. Measure the resistance between Y25 (Line pressure control solenoid valve) terminals to check for open-circuit. Special features If any visible damage is found, repair or replace the affected part and interrupt the inspection process. Is any abnormality recognized? No: Go to Step2 Yes: Go to Step3
	Step2	Inspection procedure Turn the starter switch in OFF. Replace component “Y25 (Line pressure control solenoid valve)”. Reinstall all the removed connectors. Erase fault memory and perform a test drive. If the diagnosis code has occurred even during the test drive, start the operation and then replace the A28 (DUONIC^{TM} Control unit). Inspection completed
	Step3	Inspection procedure Turn the starter switch in OFF. Remove the connector of A1 ECU. Test electrical line between pins A28.X1.81/20 and Y25.X5.12/4 for short circuit to ground. Check electrical line between pins A28.X1.81/20 and Y25.X5.12/4 for open circuit. Check electrical line between pins Ground and Ground for open circuit. Is any abnormality recognized? No: Go to Step4 Yes: Go to Step5
	Step4	Inspection procedure Turn the starter switch in OFF. Reinstall all the removed connectors. Erase fault memory and perform a test drive. If the diagnosis code has occurred even during the test drive, start the operation and then replace the A28 (DUONIC^{TM} Control unit). Inspection completed
	Step5	Inspection procedure Repair or replace electrical lines. Reinstall all the removed connectors. Erase fault memory and perform a test drive. If the diagnosis code has occurred even during the test drive, start the operation and then replace the A28 (DUONIC^{TM} Control unit). Inspection completed

https://truckmanualshub.com/

788-3: Component Inner clutch control linear solenoid valve is constantly on.

Generation condition		• Supply voltage 8 to 16 V with starter switch ON • Battery voltage 8 to 16 V • Magnetic valve stuck ON detected (MVC failure status ON stuck = Fail)
Recoverability		• No detection of magnetic valve stuck ON when starter switch is turned OFF and then ON (thus reenergizing electronic control unit) or while starter switch is in ON position (MVC failure status ON stuck = No Detection)
Control effected by electronic control unit		[Prior to vehicle stationary judgment] • Both clutches are kept disengaged. • All gear shift rails are kept in N. (Target gear locked in N.) • N flashes in meter cluster gear display. (P has priority display.) • Engine control is terminated. [Upon vehicle stationary judgment] • Gear pre-select not permitted • Vehicle continuously driven in F-2nd/R-Hi
Possible causes		• Minus harness between DUONIC™ electronic control unit and inner clutch control linear magnetic valve shorted to ground • Defective actuator • Defective DUONIC™ electronic control unit
Inspection procedure	Step1	Inspection procedure Turn the starter switch in OFF. Remove the connector of Y23 (Inner clutch control linear solenoid valve). Make a visual check on each connector. Measure the resistance between Y23 (Inner clutch control linear solenoid valve) and ground or each terminal to check for short-circuit and electrical leakage. Measure the resistance between Y23 (Inner clutch control linear solenoid valve) terminals to check for open-circuit. Special features If any visible damage is found, repair or replace the affected part and interrupt the inspection process. Is any abnormality recognized? No: Go to step2 Yes: Go to step3
	Step2	Inspection procedure Turn the starter switch in OFF. Replace component “Y23 (Inner clutch control linear solenoid valve)”. Reinstall all the removed connectors. Erase fault memory and perform a test drive. If the diagnosis code has occurred even during the test drive, start the operation and then replace the A28 (DUONIC™ Control unit). Inspection completed
	Step3	Inspection procedure Turn the starter switch in OFF. Remove the connector of A1 ECU. Test electrical line between pins A28.X1.81/4 and Y23.X5.12/2 for short circuit to ground. Is any abnormality recognized? No: Go to step4 Yes: Go to step5
	Step4	Inspection procedure Turn the starter switch in OFF. Reinstall all the removed connectors. Erase fault memory and perform a test drive. If the diagnosis code has occurred even during the test drive, start the operation and then replace the A28 (DUONIC™ Control unit). Inspection completed
	Step5	Inspection procedure Repair or replace electrical lines. Reinstall all the removed connectors. Erase fault memory and perform a test drive. If the diagnosis code has occurred even during the test drive, start the operation and then replace the A28 (DUONIC™ Control unit). Inspection completed

https://truckmanualshub.com/

788-4: Component “Inner clutch control linear solenoid valve” is always OFF.

Generation condition		• Supply voltage 8 to 16 V with starter switch ON • Battery voltage 8 to 16 V • Magnetic valve stuck OFF detected (MVC failure status OFF stuck = Fail)
Recoverability		• No detection of magnetic valve stuck OFF when starter switch is turned OFF and then ON (thus reenergizing electronic control unit) or while starter switch is in ON position (MVC failure status OFF stuck = No Detection)
Control effected by electronic control unit		[Prior to vehicle stationary judgment] • Both clutches are kept disengaged. • All gear shift rails are kept in N. (Target gear locked in N.) • N flashes in meter cluster gear display. (P has priority display.) • Engine control is terminated. [Upon vehicle stationary judgment] • Gear pre-select not permitted • Vehicle continuously driven in F-2nd/R-Hi
Possible causes		• Plus harness between DUONIC^{TM} electronic control unit and inner clutch linear magnetic valve open or shorted to ground • Defective actuator • Defective DUONIC^{TM} electronic control unit
Inspection procedure	Step1	Inspection procedure Turn the starter switch in OFF. Remove the connector of Y23 (Inner clutch control linear solenoid valve). Make a visual check on each connector. Measure the resistance between Y23 (Inner clutch control linear solenoid valve) and ground or each terminal to check for short-circuit and electrical leakage. Measure the resistance between Y23 (Inner clutch control linear solenoid valve) terminals to check for open-circuit. Special features If any visible damage is found, repair or replace the affected part and interrupt the inspection process. Is any abnormality recognized? No: Go to step2 Yes: Go o step3
	Step2	Inspection procedure Turn the starter switch in OFF. Replace component “Y23 (Inner clutch control linear solenoid valve)”. Reinstall all the removed connectors. Erase fault memory and perform a test drive. If the diagnosis code has occurred even during the test drive, start the operation and then replace the A28 (DUONIC^{TM} Control unit). Inspection completed
	Step3	Inspection procedure Turn the starter switch in OFF. Remove the connector of A1 ECU. Check harness between A28 (DUONIC^{TM} Control unit) and Y23 (Inner clutch control linear solenoid valve) for short-circuit to another line. Check electrical line between pins A28.X1.81/4 and Y23.X5.12/2 for short circuit to positive. Check electrical line between pins A28.X1.81/4 and Y23.X5.12/2 for open circuit. Check electrical line between pins A28.X1.81/1 and Y23.X5.12/6 for open circuit. Is any abnormality recognized? No: Go to step4 Yes: Go o step
	Step4	Inspection procedure Turn the starter switch in OFF. Reinstall all the removed connectors. Erase fault memory and perform a test drive. If the diagnosis code has occurred even during the test drive, start the operation and then replace the A28 (DUONIC^{TM} Control unit). Inspection completed

https://truckmanualshub.com/

Inspection procedure	Step5	Inspection procedure Repair or replace electrical lines. Reinstall all the removed connectors. Erase fault memory and perform a test drive. If the diagnosis code has occurred even during the test drive, start the operation and then replace the A28 (DUONIC^{TM} Control unit). Inspection completed

788-7: No response of inner clutch torque

Generation condition		• Supply voltage 8 to 16 V with starter switch ON • Battery voltage 8 to 16 V • Diagnosis Code 788-4, 788-3 (driver stuck ON, OFF) not generated • Diagnosis Code 785-3 (magnetic valve (relief) shorted to battery) not generated • Odd gear engaged • Engine speed higher by 500 rpm or more than inner clutch speed • Despite correct inner clutch current reading, torque output is incorrect for 5 seconds.
Recoverability		• System has recovered if signal becomes normal after starter switch is turned OFF and then ON (thus reenergizing electronic control unit).
Control effected by electronic control unit		[Prior to vehicle stationary judgment] • Both clutches are kept disengaged. • All gear shift rails are kept in N. (Target gear locked in N.) • N flashes in meter cluster gear display. (P has priority display.) • Engine control is terminated. [Upon vehicle stationary judgment] • Gear pre-select not permitted • Vehicle continuously driven in F-2nd/R-Hi
Possible causes		• Defective inner clutch control linear magnetic valve • Defective clutch • Defective DUONIC^{TM} electronic control unit
Inspection procedure	Step1	Inspection procedure Inspect the suspected factors mentioned above sequentially to locate faulty parts. Repair or replace the faulty part as necessary.

788-12: Faulty component Inner clutch control linear solenoid valve, Outer clutch control linear solenoid valve

Generation condition		• Simultaneous occurrences of Diagnosis Code 788-4 or 788-3 or 522-7 or 788-7 and Diagnosis Code 520718-4 or 520718-3 or 684-7 or 740-7
Recoverability		• Diagnosis Code 788-4, 788-3, 522-7, 788-7 not generated or Diagnosis Code 520718-4, 520718-3, 684-7, 740-7 not generated when starter switch is turned OFF and then ON (thus reenergizing electronic control unit) or while starter switch is in ON position.
Control effected by electronic control unit		• Both clutches are kept disengaged. • All gear shift rails are kept in N. (Target gear locked in N.) • N flashes in meter cluster gear display. (P has priority display.) • Engine control is terminated.
Possible causes		• Defective outer or inner linear magnetic valve • Defective clutch • Defective DUONIC^{TM} electronic control unit
Inspection procedure	Step1	Inspection procedure Inspect the suspected factors mentioned above sequentially to locate faulty parts. Repair or replace the faulty part as necessary.

https://truckmanualshub.com/

904-19: Out-of-range CAN reception data from component "Antilock brake system Control unit"

Generation condition		• Anti-lock brake system-equipped vehicle (ABS Cooperative Control equipped) • Supply voltage 8 to 16 V with starter switch ON • 3 seconds or more have elapsed since starter switch was turned ON. • EBC2_BS received & Front Axle Speed (CAN) out of range (250.996<Front Axle Speed (CAN))
Recoverability		• System has recovered if signal becomes normal after starter switch is turned OFF and then ON (thus reenergizing electronic control unit) or while starter switch is in ON position.
Control effected by electronic control unit		• None
Possible causes		• Defective hydraulic unit (electronic control unit)
Inspection procedure	Step1	Inspection procedure Perform a diagnosis on the A1 (Antilock brake system Control unit) side system.

907-19: Out-of-range CAN reception data from component "Antilock brake system Control unit"

Generation condition		• Anti-lock brake system-equipped vehicle (ABS Cooperative Control equipped) • Supply voltage 8 to 16 V with starter switch ON • 3 seconds or more have elapsed since starter switch was turned ON. • EBC2_BS received & Driving Wheel Relative Speed Left Side out of range (7.8125<Driving Wheel Relative Speed Left Side)
Recoverability		• System has recovered if signal becomes normal after starter switch is turned OFF and then ON (thus reenergizing electronic control unit) or while starter switch is in ON position.
Control effected by electronic control unit		• None
Possible causes		• Defective hydraulic unit (electronic control unit)
Inspection procedure	Step1	Inspection procedure Perform a diagnosis on the A1 (Antilock brake system Control unit) side system.

908-19: Out-of-range CAN reception data from component "Antilock brake system Control unit"

Generation condition		• Anti-lock brake system-equipped vehicle (ABS Cooperative Control equipped) • Supply voltage 8 to 16 V with starter switch ON • 3 seconds or more have elapsed since starter switch was turned ON. • EBC2_BS received & Driving Wheel Relative Speed Right Side out of range (7.8125<Driving Wheel Relative Speed Right Side)
Recoverability		• System has recovered if signal becomes normal after starter switch is turned OFF and then ON (thus reenergizing electronic control unit) or while starter switch is in ON position.
Control effected by electronic control unit		• None
Possible causes		• Defective hydraulic unit (electronic control unit)
Inspection procedure	Step1	Inspection procedure Perform a diagnosis on the A1 (Antilock brake system Control unit) side system.

973-19: Out-of-range CAN reception data from component "Combustion engine Control unit"

Generation condition	• Supply voltage 8 to 16 V with starter switch ON • 3 seconds or more have elapsed since starter switch was turned ON. • EBC1_EEC received & Engine Retarder Section (CAN) out of range (100<Engine Retarder Selection (CAN))
Recoverability	• System has recovered if signal becomes normal after starter switch is turned OFF and then ON (thus reenergizing electronic control unit) or while starter switch is in ON position.
Control effected by electronic control unit	[Upon receiving out-of-range signal] • Normal data last received are retained.
Possible causes	• Defective engine electronic control unit

https://truckmanualshub.com/

Inspection procedure	Step1	Inspection procedure Perform a diagnosis on the A4 (Combustion engine Control unit) side system.

1438-12: Component Antilock brake system Control unit reports a fault.

Generation condition		• Anti-lock brake system-equipped vehicle (ABS Cooperative Control equipped) • Supply voltage 8 to 16 V with starter switch ON • 5 seconds have elapsed since starter switch was turned ON. • EBC1_BS received & ABS warning lamp (CAN) not OFF
Recoverability		• System has recovered if signal becomes normal after starter switch is turned OFF and then ON (thus reenergizing electronic control unit) or upon receiving ABS warning lamp (CAN) OFF signal while starter switch is in ON position.
Control effected by electronic control unit		• Auto downshifting not permitted <in Auto Mode> • Shifting to roll-off gear temporarily permitted after detection of vehicle stationary for 3 seconds <in Auto Mode> • Normal gear shifting permitted <in Manual Mode>
Possible causes		• Anti-lock brake system/AMB warning being displayed (which is not a fault) • Defective hydraulic unit (electronic control unit)
Inspection procedure	Step1	Inspection procedure Perform a diagnosis on the A1 (Antilock brake system Control unit) side system.

1619-2: Component Vehicle speed Sensors has an electrical fault.

Generation condition		• Anti-lock brake system-equipped vehicle (Anti-lock Brake System Cooperative Control Equipped Information = 1) • Supply voltage 8 to 16 V with starter switch ON • Normal vehicle speed received from Front Axle speed (CAN) • Normal status Front Axle speed (CAN) and Driving Wheel Relative speed (CAN) • Diagnosis Code 1619-8 not generated • Abnormal status in the vehicle speed sensor 2 signal in comparison with the front axle speed (CAN) signal.
Recoverability		• System has recovered if signal becomes normal after starter switch is turned OFF and then ON (thus reenergizing electronic control unit).
Control effected by electronic control unit		• Reference made to vehicle speed sensor 1 input • Creep torque cut
Possible causes		• Defective harness between vehicle speed sensor and DUONIC^{TM} electronic control unit • Malfunction of vehicle speed sensor • Defective DUONIC^{TM} electronic control unit
Inspection procedure	Step1	Inspection procedure Turn the starter switch in OFF. Remove the connector of B11 (Vehicle speed Sensors). Apply DC {0} to {1} V between terminals B11.4/3 and B11.4/1. Rotate the shaft of B11 (Vehicle speed Sensors). Check terminals B11.4/2 and B11.4/4 for signals and, if no signals are outputted, replace B41 (Rpm sensor Transmission). Is any abnormality recognized? Special features If any visible damage is found, repair or replace the affected part and interrupt the inspection process. No: Go to Step2 Yes: Go to Step4
	Step2	Inspection procedure Inspect or verify the following items. Repair or replace faulty items as necessary. Replace B11 (Vehicle speed Sensors) with a normal one and check to see if the fault code occurs. Measure resistance of the harness across A28 (DUONIC^{TM} Control unit) and B11 (Vehicle speed Sensors) to check for a faulty harness (e.g., incomplete open circuit). Go to Step3

https://truckmanualshub.com/

Inspection procedure	Step3	Inspection procedure Turn the starter switch in OFF. Reinstall all the removed connectors. Erase fault memory and perform a test drive. If the diagnosis code has occurred even during the test drive, start the operation and then replace the A28 (DUONIC™ Control unit). Inspection completed
	Step4	Inspection procedure Replace component “B11 (Vehicle speed Sensors)”. Reinstall all the removed connectors. Turn the starter switch in ON. Go to Step3

1619-8: The signal voltage of component Vehicle speed Sensors is too low.

Generation condition		• Anti-lock brake system-equipped vehicle (Anti-lock Brake System Cooperative Control Equipped Information = 1) • Supply voltage 8 to 16 V with starter switch ON • Normal vehicle speed received from Front Axle Speed (CAN) • Normal status indicated by comparison between Driving Wheel Relative Speed (CAN) (left and right) and Front Axle Speed (CAN) • Vehicle speed sensor 2 = 0rpm
Recoverability		• System has recovered if signal becomes normal after starter switch is turned OFF and then ON (thus reenergizing electronic control unit) or vehicle speed sensor 2 input is 100 rpm or above while starter switch is in ON position
Control effected by electronic control unit		• Reference made to vehicle speed sensor 1 input • Creep torque cut
Possible causes		• Signal (between DUONIC™ electronic control unit and meter cluster) harness between vehicle speed sensor and DUONIC™ electronic control unit open, shorted to ground, or shorted to battery • Signal (between meter cluster and vehicle speed sensor) harness between vehicle speed sensor and DUONIC™ electronic control unit open or shorted to ground • Ground harness between vehicle speed sensor and DUONIC™ electronic control unit open or shorted to battery • Malfunction of vehicle speed sensor • Defective meter cluster • Defective DUONIC™ electronic control unit
Inspection procedure	Step1	Inspection procedure Has a fault code associated with B11 (Vehicle speed Sensors) occurred in any other systems, or is the vehicle speed indication on the meter correct? No: Go to Step2 Yes: Go to Step6
	Step2	Inspection procedure Turn the starter switch in OFF. Remove the connector of B11 (Vehicle speed Sensors). Remove the connector of A28 (DUONIC™ Control unit). Check electrical line between pins A11.18/16 and A28.X2.40/94 for open circuit. Test electrical line between pins A11.18/16 and A28.X2.40/94 for short circuit to ground. Is any abnormality recognized? No: Go to Step3 Yes: Go to Step4
	Step3	Inspection procedure Turn the starter switch in OFF. Reinstall all the removed connectors. Erase fault memory and perform a test drive. If the diagnosis code has occurred even during the test drive, start the operation and then replace the A28 (DUONIC™ Control unit). Go to Step5

https://truckmanualshub.com/

Inspection procedure	Step4	Inspection procedure Repair or replace electrical lines. Reinstall all the removed connectors. Turn the starter switch in ON. Special features Run vehicle Go to Step3
	Step5	Inspection completed
	Step6	Inspection procedure Turn the starter switch in OFF. Remove the connector of B11 (Vehicle speed Sensors). Remove the connector of A11 (Meter cluster). Check electrical line between pins B11.4/2 and A11.18/12 for open circuit. Test electrical line between pins B11.4/2 and A11.18/12 for short circuit to ground. Check electrical line between pins B11.4/3 and A11.18/3 for open circuit. Is any abnormality recognized? No: Go to Step7 Yes: Go to Step9
	Step7	Inspection procedure Turn the starter switch in OFF. Remove B11 (Vehicle speed Sensors) from Transmission. Apply DC 12 V between terminals B11.4/3 and B11.4/1. Rotate the shaft of B11 (Vehicle speed Sensors). Check terminals B11.4/2 and B11.4/4 for signals and, if no signals are outputted, replace B11 (Vehicle speed Sensors). Is any abnormality recognized? No: Go to Step3 Yes: Go to Step8
	Step8	Inspection procedure Replace component “B11 (Vehicle speed Sensors)”. Reinstall all the removed connectors. Turn the starter switch in ON.
	Step9	Inspection procedure Repair or replace electrical lines. Reinstall all the removed connectors. Turn the starter switch in ON.

1810-2: Component Acceleration sensor has an electrical fault.

Generation condition	• Supply voltage 8 to 16 V with starter switch ON • None of diagnosis codes 119 (1810-3), 120 (1810-4), 122 (520745-3) and 123 (520745-4) generated. • Period during which signal voltage difference between G-sensor and G-sensor 2 is not larger than -0.3 V or not smaller than 0.3 V has lasted for 5 seconds.
Recoverability	• The system recovers if any normal signal is input when starter switch is turned OFF and then ON again (electronic control unit is reenergized).
Control effected by electronic control unit	• Road gradient is always deemed to be 0%. • 2-1 downshift control is not effected even if sudden braking is applied during uphill driving. • Automatic gear selection at starting off is fixed at 1st gear. • Vehicle weight calculation function is disabled. • On vehicles without ABS, half-lock detection function is disabled.
Possible causes	• Faulty harness between G-sensor and DUONIC^{TM} electronic control unit • Defective G-sensor • Defective DUONIC^{TM} electronic control unit

https://truckmanualshub.com/

Inspection procedure	Step1	Inspection procedure Turn the starter switch in OFF. Remove the connector of B43 (Acceleration sensor). Apply DC 12 V between terminals B43.3/3 and B43.3/1. Measure the output voltage when B43 (Acceleration sensor) is as illustrated across terminals B43.3/2 and B43.3/1. Standard value Horizontal condition: 2.3 - 2.7V Vertical condition: 3.3 - 3.7V Is any abnormality recognized? Special features If any visible damage is found, repair or replace the affected part and interrupt the inspection process. No: Go to Step2 Yes: Go to Step4
	Step2	Inspection procedure Inspect or verify the following items. Repair or replace faulty items as necessary. Replace B43 (Acceleration sensor) with a normal one and check to see if the fault code occurs. Measure resistance of the harness across A28 (DUONIC^{TM} Control unit) and B43 (Acceleration sensor) to check for a faulty harness (e.g., incomplete open circuit). Go to Step3
	Step3	Inspection procedure Turn the starter switch in OFF. Reinstall all the removed connectors. Erase fault memory and perform a test drive. If the diagnosis code has occurred even during the test drive, start the operation and then replace the A28 (DUONIC^{TM} Control unit). Inspection completed
	Step4	Inspection procedure Replace component “B43 (Acceleration sensor)”. Reinstall all the removed connectors. Turn the starter switch in ON. Wait for 5 seconds after the starter switch is set to ON. Go to Step3

1810-3: The signal voltage of component Acceleration sensor is too high.

Generation condition	• Supply voltage 8 to 16 V with starter switch ON • G sensor signal voltage 4.55 V or above
Recoverability	• System has recovered if signal becomes normal after starter switch is turned OFF and then ON (thus reenergizing electronic control unit) or G sensor signal voltage is 4.50 V or bellow while starter switch is in ON position
Control effected by electronic control unit	• Road gradient substitute value 0% • 2nd to 1st shift down control disabled in braking on the steep climbing slope • Automatic selection of roll-off gear fixed to 1st • Vehicle weight calculation is terminated. • Half lock detection not permitted on non anti-lock brake system-equipped vehicle (ABS Cooperative Control not equipped)
Possible causes	• Signal harness between G sensor and DUONIC^{TM} electronic control unit shorted to battery • Ground harness between G sensor and DUONIC^{TM} electronic control unit open • Defective G sensor • Defective DUONIC^{TM} electronic control unit

https://truckmanualshub.com/

Inspection procedure	Step1	If corresponding fault codes are also present on other components, check the common power supply and common ground point " for open circuit and short circuit. Go to Step2
	Step2	Inspection procedure Turn the starter switch in OFF. Remove the connector of B43 (Acceleration sensor). Make a visual check on each connector. Measure the resistance between B43 (Acceleration sensor) and ground or each terminal to check for short-circuit and electrical leakage. Measure the resistance between B43 (Acceleration sensor) terminals to check for open-circuit. Special features If any visible damage is found, repair or replace the affected part and interrupt the inspection process. No abnormalities? No: Go to Step3 Yes: Go to Step4
	Step3	Inspection procedure Turn the starter switch in OFF. Replace component “B43 (Acceleration sensor)”. Reinstall all the removed connectors. Erase fault memory and perform a test drive. If the diagnosis code has occurred even during the test drive, start the operation and then replace the A28 (DUONIC^{TM} Control unit). Inspection completed
	Step4	Inspection procedure Turn the starter switch in OFF. Remove the connector of A28 (DUONIC^{TM} Control unit). Check the circuit across B43 (Acceleration sensor) and A28 (DUONIC^{TM} Control unit) for open or short circuit. Is any abnormality recognized? No: Go to Step5 Yes: Go to Step6
	Step5	Inspection procedure Turn the starter switch in OFF. Reinstall all the removed connectors. Erase fault memory and perform a test drive. If the diagnosis code has occurred even during the test drive, start the operation and then replace the A28 (DUONIC^{TM} Control unit). Inspection completed
	Step6	Inspection procedure Repair or replace electrical lines. Reinstall all the removed connectors. Erase fault memory and perform a test drive. If the diagnosis code has occurred even during the test drive, start the operation and then replace the A28 (DUONIC^{TM} Control unit). Inspection completed

1810-4: The signal voltage of component Acceleration sensor is too low.

Generation condition	• Supply voltage 8 to 16 V with starter switch ON • G sensor signal voltage 0.45 V or below
Recoverability	• System has recovered if signal becomes normal after starter switch is turned OFF and then ON (thus reenergizing electronic control unit) or G sensor signal voltage is 0.50 V or above while starter switch is in ON position.
Control effected by electronic control unit	• Road gradient substitute value 0% • 2nd to 1st shift down control disabled in braking on steep climbing slope • Automatic selection of starting gear fixed to 1st • Vehicle weight calculation is terminated. • Half lock detection not permitted on non anti-lock brake system-equipped vehicle (ABS Cooperative Control not equipped)

https://truckmanualshub.com/

Possible causes		• Signal harness between G sensor and DUONIC™ electronic control unit open or shorted to ground • Power harness between G sensor and DUONIC™ electronic control unit open • Defective G sensor • Defective DUONIC™ electronic control unit
Inspection procedure	Step1	If corresponding fault codes are also present on other components, check the common power supply and common ground point " for open circuit and short circuit. Go to Step2
	Step2	Inspection procedure Turn the starter switch in OFF. Remove the connector of B43 (Acceleration sensor). Make a visual check on each connector. Measure the resistance between B43 (Acceleration sensor) and ground or each terminal to check for short-circuit and electrical leakage. Measure the resistance between B43 (Acceleration sensor) terminals to check for open-circuit. Special features If any visible damage is found, repair or replace the affected part and interrupt the inspection process. No abnormalities? No: Go to Step3 Yes: Go to Step4
	Step3	Inspection procedure Turn the starter switch in OFF. Replace component “B43 (Acceleration sensor)”. Reinstall all the removed connectors. Erase fault memory and perform a test drive. If the diagnosis code has occurred even during the test drive, start the operation and then replace the A28 (DUONIC™ Control unit). Inspection completed
	Step4	Inspection procedure Turn the starter switch in OFF. Remove the connector of A28 (DUONIC™ Control unit). Check the circuit across B43 (Acceleration sensor) and A28 (DUONIC™ Control unit) for open or short circuit. Is any abnormality recognized? No: Go to Step5 Yes: Go to Step6
	Step5	Inspection procedure Turn the starter switch in OFF. Reinstall all the removed connectors. Erase fault memory and perform a test drive. If the diagnosis code has occurred even during the test drive, start the operation and then replace the A28 (DUONIC™ Control unit). Inspection completed
	Step6	Inspection procedure Repair or replace electrical lines. Reinstall all the removed connectors. Erase fault memory and perform a test drive. If the diagnosis code has occurred even during the test drive, start the operation and then replace the A28 (DUONIC™ Control unit). Inspection completed

https://truckmanualshub.com/

1852-19: Out-of-range CAN reception data from component “Combustion engine Control unit”

Generation condition		• Supply voltage 8 to 16 V with starter switch ON • 3 seconds or more have elapsed since starter switch was turned ON. • There are TC1_MCM inputs but low gear hold data 1st, Rev Hold Request (CAN) = Reserved, SNA) is out of normal range.
Recoverability		• The system recovers if any normal signal is input when starter switch is turned OFF and then ON again (electronic control unit is reenergized) or as soon as any normal data is received when starter switch is turned ON.
Control effected by electronic control unit		[Immediately after data out of effective range is received] • The last normal data is retained.
Possible causes		• Defective engine electronic control unit
Inspection procedure	Step1	Inspection procedure Perform a diagnosis on the A4 (Combustion engine Control unit) side system.

1852-31: Internal error: The data record is faulty.

Generation condition		• Supply voltage 8 to 16 V with starter switch ON • 1st, Rev Hold Request (CAN) = Enable
Recoverability		• System has recovered if signal becomes normal after starter switch is turned OFF and then ON (thus reenergizing electronic control unit) or TC1_MCM received & no 1st, Rev Hold Request (CAN) = Disable while starter switch is in ON position.
Control effected by electronic control unit		• Starting gear fixed to 1st • Upshifting in D range not permitted • Upshifting in M range not permitted
Possible causes		• Diesel exhaust fluid level too low
Inspection procedure	Step1	Inspection procedure Inspect the suspected factors mentioned above sequentially to locate faulty parts. Repair or replace the faulty part as necessary.

https://truckmanualshub.com/

2580-2: Component Brake pressure sensor has an electrical fault.

Generation condition		• Accelerator opening more than 30% • Vehicle running forward at 20 km/h{12.4 mph} or higher • Supply voltage 8 to 16 V with starter switch ON • Engine speed 400 rpm or above • Brake fluid pressure sensor input 2.3 MPa or above for 10 seconds with Stop lamp switch (CAN) OFF (Brake pedal Released)
Recoverability		• System has recovered if signal becomes normal after starter switch is turned OFF and then ON (thus reenergizing electronic control unit) or brake fluid pressure sensor input 0.5 MPa or below for 10 seconds with Stop lamp switch (CAN) OFF (Brake pedal Released) while starter switch is in ON position.
Control effected by electronic control unit		• Brake fluid pressure substitute value 0 MPa
Possible causes		• Defective brake fluid pressure sensor • Defective harness between brake fluid pressure sensor and DUONIC^{TM} electronic control unit • Malfunction of stop lamp switch • Defective DUONIC^{TM} electronic control unit
Inspection procedure	Step1	Inspect or verify the following items. Repair or replace faulty items as necessary. Check to see if Brake light Switches system is fully operational. For procedures, refer to the Shop Manual. Go to Step2
	Step2	Inspection procedure Turn the starter switch in OFF. Remove the connector of B42 (Brake pressure sensor). Apply DC 5 V between terminals B42.3/3 and B42.3/1. Measure the output voltage between terminals B42.3/3 and B42.3/2. Specified value: 0.5V Is any abnormality recognized? Special features If any visible damage is found, repair or replace the affected part and interrupt the inspection process. No: Go to Step3 Yes: Go to Step5
	Step3	Inspection procedure Inspect or verify the following items. Repair or replace faulty items as necessary. Replace B42 (Brake pressure sensor) with a normal one and check to see if the fault code occurs. Measure resistance of the harness across A28 (DUONIC^{TM} Control unit) and B42 (Brake pressure sensor) to check for a faulty harness (e.g., incomplete open circuit). Go to Step4
	Step4	Inspection procedure Turn the starter switch in OFF. Reinstall all the removed connectors. Erase fault memory and perform a test drive. If the diagnosis code has occurred even during the test drive, start the operation and then replace the A28 (DUONIC^{TM} Control unit). Inspection completed
	Step5	Inspection procedure Replace component “B42 (Brake pressure sensor)”. Reinstall all the removed connectors. Turn the starter switch in ON. Wait for 10 seconds after the starter switch is set to ON. Go to Step4

https://truckmanualshub.com/

2580-3: The signal voltage of component Brake pressure sensor is too high.

Generation condition		• Supply voltage 8 to 16 V with starter switch ON • Brake fluid pressure sensor signal voltage 4.8 V or above
Recoverability		• System has recovered if signal becomes normal after starter switch is turned OFF and then ON (thus reenergizing electronic control unit) or brake fluid pressure sensor signal voltage is 4.5 V or below while starter switch is in ON position.
Control effected by electronic control unit		• Brake fluid pressure substitute value 0 MPa
Possible causes		• Signal harness between brake fluid pressure sensor and DUONIC™ electronic control unit shorted to battery or open • Ground/power harness between brake fluid pressure sensor and DUONIC™ electronic control unit open • Defective brake fluid pressure sensor • Defective DUONIC™ electronic control unit
Inspection procedure	Step1	Inspection procedure Turn the starter switch in OFF. Remove the connector of B42 (Brake pressure sensor). Make a visual check on each connector. Measure the resistance between B42 (Brake pressure sensor) and ground or each terminal to check for short-circuit and electrical leakage. Measure the resistance between B42 (Brake pressure sensor) terminals to check for open-circuit. Special features If any visible damage is found, repair or replace the affected part and interrupt the inspection process. No abnormalities? No: Go to Step2 Yes: Go to Step3
	Step2	Inspection procedure Turn the starter switch in OFF. Replace component “B42 (Brake pressure sensor)”. Reinstall all the removed connectors. Erase fault memory and perform a test drive. If the diagnosis code has occurred even during the test drive, start the operation and then replace the A28 (DUONIC™ Control unit). Inspection completed
	Step3	Inspection procedure Turn the starter switch in OFF. Remove the connector of A28 (DUONIC™ Control unit). Check the circuit across B42 (Brake pressure sensor) and A28 (DUONIC™ Control unit) for open or short circuit. Is any abnormality recognized? No: Go to Step4 Yes: Go to Step5
	Step4	Inspection procedure Turn the starter switch in OFF. Reinstall all the removed connectors. Erase fault memory and perform a test drive. If the diagnosis code has occurred even during the test drive, start the operation and then replace the A28 (DUONIC™ Control unit). Inspection completed
	Step5	Inspection procedure Repair or replace electrical lines. Reinstall all the removed connectors. Erase fault memory and perform a test drive. If the diagnosis code has occurred even during the test drive, start the operation and then replace the A28 (DUONIC™ Control unit). Inspection completed

https://truckmanualshub.com/

2580-4: The signal voltage of component Brake pressure sensor is too low.

Generation condition		• Supply voltage 8 to 16 V with starter switch ON • Brake fluid pressure sensor signal voltage 0.2 V or below
Recoverability		• System has recovered if signal becomes normal after starter switch is turned OFF and then ON (thus reenergizing electronic control unit) or brake fluid pressure sensor voltage is 0.5 V or above while starter switch is in ON position.
Control effected by electronic control unit		• Brake fluid pressure substitute value 0 MPa
Possible causes		• Signal harness between brake fluid pressure sensor and DUONIC™ electronic control unit shorted to ground • Defective brake fluid pressure sensor • Defective DUONIC™ electronic control unit
Inspection procedure	Step1	Inspection procedure Turn the starter switch in OFF. Remove the connector of B42 (Brake pressure sensor). Make a visual check on each connector. Measure the resistance between B42 (Brake pressure sensor) and ground or each terminal to check for short-circuit and electrical leakage. Measure the resistance between B42 (Brake pressure sensor) terminals to check for open-circuit. Special features If any visible damage is found, repair or replace the affected part and interrupt the inspection process. No abnormalities? No: Go to Step2 Yes: Go to Step3
	Step2	Inspection procedure Turn the starter switch in OFF. Replace component “B42 (Brake pressure sensor)”. Reinstall all the removed connectors. Erase fault memory and perform a test drive. If the diagnosis code has occurred even during the test drive, start the operation and then replace the A28 (DUONIC™ Control unit). Inspection completed
	Step3	Inspection procedure Turn the starter switch in OFF. Remove the connector of A28 (DUONIC™ Control unit). Check the circuit across B42 (Brake pressure sensor) and A28 (DUONIC™ Control unit) for open or short circuit. Is any abnormality recognized? No: Go to Step4 Yes: Go to Step5
	Step4	Inspection procedure Turn the starter switch in OFF. Reinstall all the removed connectors. Erase fault memory and perform a test drive. If the diagnosis code has occurred even during the test drive, start the operation and then replace the A28 (DUONIC™ Control unit). Inspection completed
	Step5	Inspection procedure Repair or replace electrical lines. Reinstall all the removed connectors. Erase fault memory and perform a test drive. If the diagnosis code has occurred even during the test drive, start the operation and then replace the A28 (DUONIC™ Control unit). Inspection completed

https://truckmanualshub.com/

2910-3: Component Transmission power take-off 3-way magnetic valve is constantly on.

Generation condition		• Supply voltage 8 to 16 V with starter switch ON • Battery voltage 8 to 16 V • Magnetic valve stuck ON detected (PTOCS failure status ON stuck = Fail)
Recoverability		• System has recovered if signal becomes normal after starter switch is turned OFF and then ON (thus reenergizing electronic control unit) or no detection of magnetic valve stuck ON while starter switch is in ON position. (PTOCS failure status ON stuck = No Detection)
Control effected by electronic control unit		• When the power-take off is operated with the gear is in the other position than P and N. • “PTO” flashes on meter • Buzzer ON/OFF (every second)
Possible causes		• Harness between DUONIC^{TM} electronic control unit and power take-off 3-way magnetic valve shorted to battery • Defective actuator • Defective DUONIC^{TM} electronic control unit
Inspection procedure	Step1	Inspection procedure Turn the starter switch in OFF. Remove the connector of Y28 (Transmission power take-off 3-way magnetic valve). Make a visual check on each connector. Measure the resistance between Y28 (Transmission power take-off 3-way magnetic valve) and ground or each terminal to check for short-circuit and electrical leakage. Measure the resistance between Y28 (Transmission power take-off 3-way magnetic valve) terminals to check for open-circuit. Special features If any visible damage is found, repair or replace the affected part and interrupt the inspection process. Is any abnormality recognized? No: Go to Step2 Yes: Go to Step3
	Step2	Inspection procedure Turn the starter switch in OFF. Replace component “Y28 (Transmission power take-off 3-way magnetic valve)”. Reinstall all the removed connectors. Erase fault memory and perform a test drive. If the diagnosis code has occurred even during the test drive, start the operation and then replace the A28 (DUONIC^{TM} Control unit). Inspection completed
	Step3	Inspection procedure Turn the starter switch in OFF. Remove the connector of A1 ECU. Check electrical line between pins A28.X1.81/58 and Y28.2/1 for short circuit to positive. Is any abnormality recognized? No: Go to Step4 Yes: Go to Step5
	Step4	Inspection procedure Turn the starter switch in OFF. Reinstall all the removed connectors. Erase fault memory and perform a test drive. If the diagnosis code has occurred even during the test drive, start the operation and then replace the A28 (DUONIC^{TM} Control unit). Inspection completed
	Step5	Inspection procedure Repair or replace electrical lines. Reinstall all the removed connectors. Erase fault memory and perform a test drive. If the diagnosis code has occurred even during the test drive, start the operation and then replace the A28 (DUONIC^{TM} Control unit). Inspection completed

https://truckmanualshub.com/

2910-4: Component “Transmission power take-off 3-way magnetic valve” is always OFF.

Generation condition		• Vehicle equipped with power take-off (Power take-off Equipped Information=1) • Supply voltage 8 to 16 V with starter switch ON • Battery voltage 8 to 16 V • Magnetic valve stuck OFF detected (PTOCS failure status OFF stuck = Fail)
Recoverability		• System has recovered if signal becomes normal after starter switch is turned OFF and then ON (thus reenergizing electronic control unit) or no detection of magnetic valve stuck OFF while starter switch is in ON position. (PTOCS failure status OFF stuck = No Detection)
Control effected by electronic control unit		• None (System stays under normal control)
Possible causes		• Signal harness between DUONIC™ electronic control unit and power take-off 3-way magnetic valve open or shorted to ground • Defective actuator • Defective DUONIC™ electronic control unit
Inspection procedure	Step1	Inspection procedure Turn the starter switch in OFF. Remove the connector of Y28 (Transmission power take-off 3-way magnetic valve). Make a visual check on each connector. Measure the resistance between Y28 (Transmission power take-off 3-way magnetic valve) and ground or each terminal to check for short-circuit and electrical leakage. Measure the resistance between Y28 (Transmission power take-off 3-way magnetic valve) terminals to check for open-circuit. Special features If any visible damage is found, repair or replace the affected part and interrupt the inspection process. Is any abnormality recognized? No: Go to Step2 Yes: Go to Step3
	Step2	Inspection procedure Turn the starter switch in OFF. Replace component “Y28 (Transmission power take-off 3-way magnetic valve)”. Reinstall all the removed connectors. Erase fault memory and perform a test drive. If the diagnosis code has occurred even during the test drive, start the operation and then replace the A28 (DUONIC™ Control unit). Inspection completed
	Step3	Inspection procedure Turn the starter switch in OFF. Remove the connector of A1 ECU. Test electrical line between pins A28.X1.81/58 and Y28.2/1 for short circuit to ground. Check electrical line between pins A28.X1.81/58 and Y28.2/1 for open circuit. Check electrical line between pins Y28.2/2 and Ground for open circuit. Is any abnormality recognized? No: Go to Step4 Yes: Go to Step5
	Step4	Inspection procedure Turn the starter switch in OFF. Reinstall all the removed connectors. Erase fault memory and perform a test drive. If the diagnosis code has occurred even during the test drive, start the operation and then replace the A28 (DUONIC™ Control unit). Inspection completed
	Step5	Inspection procedure Repair or replace electrical lines. Reinstall all the removed connectors. Erase fault memory and perform a test drive. If the diagnosis code has occurred even during the test drive, start the operation and then replace the A28 (DUONIC™ Control unit). Inspection completed

https://truckmanualshub.com/

3187-19: Out-of-range CAN reception data from component “Selector lever”

Generation condition		• Supply voltage 8 to 16 V with starter switch ON • 3 seconds or more have elapsed since starter switch was turned ON. • ETC2_SSAM received • Shift lever unit signal controller area network out-of-range data (excluding 9, 25, 17, 49, 33, 35, 19, 10, 26, 18, 50, 34, 22, 20) (0: NoError judged as abnormal)
Recoverability		• System has recovered if signal becomes normal after starter switch is turned OFF and then ON (thus reenergizing electronic control unit) or while starter switch is in ON position.
Control effected by electronic control unit		[Upon receiving out-of-range signal] • Normal data last received are retained. [Upon error judgment] • Both clutches are kept disengaged. • All gear shift rails are kept in N. (Target gear locked in N.) • N flashes in meter cluster gear display. (P has priority display.) • Engine control is terminated.
Possible causes		• Defective signal detect and actuation modules
Inspection procedure	Step1	Inspection procedure Perform a diagnosis on the A20 (SAM) side system.

3452-19: Out-of-range CAN reception data from component “Power take-off control switch”

Generation condition		• Supply voltage 8 to 16 V with starter switch ON • 3 seconds or more have elapsed since starter switch was turned ON. • PTO_SSAM received & Power take-off switch data out of range (error)
Recoverability		• System has recovered if signal becomes normal after starter switch is turned OFF and then ON (thus reenergizing electronic control unit) or while starter switch is in ON position.
Control effected by electronic control unit		[Upon receiving out-of-range signal] • Normal data last received are retained.
Possible causes		• Defective signal detect and actuation modules
Inspection procedure	Step1	Inspection procedure Perform a diagnosis on the A20 (SAM) side system.

3453-19: Out-of-range CAN reception data from component “Transmission power take-off indicator lamp switch”

Generation condition		• Supply voltage 8 to 16 V with starter switch ON • 3 seconds or more have elapsed since starter switch was turned ON. • SSAM_A01 received & Power take-off switch data out of range (error)
Recoverability		• System has recovered if signal becomes normal after starter switch is turned OFF and then ON (thus reenergizing electronic control unit) or while starter switch is in ON position.
Control effected by electronic control unit		[Upon receiving out-of-range signal] • Normal data last received are retained.
Possible causes		• Defective signal detect and actuation modules
Inspection procedure	Step1	Inspection procedure Perform a diagnosis on the A20 (SAM) side system.

https://truckmanualshub.com/

520704-2: M contact voltage is either too low or too high.

Generation condition		• Starter switch in ON position being detected • Battery voltage V01 or V02 8 to 16 V • Starter switch ON power V1 below 8 V or above 16 V
Recoverability		• Battery voltage V01 or V02 8 to 16 V • System has recovered if signal becomes normal after starter switch is turned OFF and then ON (thus reenergizing electronic control unit) or starter switch ON power V1 is 8 to 16 V while starter switch is in ON position.
Control effected by electronic control unit		• Backup with V2, V3, V01, V02
Possible causes		• Harness between DUONIC™ electronic control unit and SSAM open or shorted to ground • Defective alternator • Defective signal detect and actuation module relay • Defective starter switch • Defective signal detect and actuation modules • Defective DUONIC™ electronic control unit
Inspection procedure	Step1	Inspection procedure Use the following procedure to check if the source voltage is excessively high or low. Refer to the results of short test of other ECUs. Insert the tester probes into the A28 (DUONIC™ Control unit) harness connector on the vehicle side and measure the voltage between A28.X2.40/119 and Ground. Is voltage above 12V (high voltage error)? No: Go to Step2 Yes: Go to Step12
	Step2	Inspection procedure Check that the fuse F24,HF01 is not blown out. If any visible damage is found, repair or replace the affected part and interrupt the inspection process. Go to Step3
	Step3	Inspection procedure Is this diagnosis code still active? No: Go to Step14 Yes: Go to Step4
	Step4	Inspection procedure Make a system diagnosis if a diagnosis code representing abnormal power supply directly from the battery has occurred. Go to Step5
	Step5	Inspection procedure Check if this ECU or other ECU has stored any of the diagnosis codes associated with the identical power supply system (switched ON through starter switch or for accessories). Are current fault codes present? No: Go to Step6 Yes: Go to Step8
	Step6	Inspection procedure Turn the starter switch in OFF. Remove the connector of A28 (DUONIC™ Control unit). Remove the connector of A20 (SAM). Check electrical line between pins A28.X2.40/119 and A20.X9.14/11 for open circuit. Test electrical line between pins A28.X2.40/119 and A20.X9.14/11 for short circuit to ground. Is any abnormality recognized? No: Go to Step13 Yes: Go to Step7
	Step7	Inspection procedure Repair or replace electrical lines. Reinstall all the removed connectors. Turn the starter switch in ON.

https://truckmanualshub.com/

Inspection procedure	Step8	Make the following inspections. K23 (Starter signal Relays (IGN)) S7 (Starter Switches) For procedures, refer to the Shop Manual. Replace faulty electrical devices. Is this diagnosis code still active? No: Go to Step14 Yes: Go to Step9
	Step9	Inspection procedure Turn the starter switch in OFF. Remove the connector of A20 (SAM). Remove the connector of S7 (Starter Switches). Check electrical line between pins A20.X8.28/3 and S7.6/6 for open circuit. Test electrical line between pins A20.X8.28/3 and S7.6/6 for short circuit to ground. Check electrical line between pins S7.6/4 and A20.X3.14/3 for open circuit. Test electrical line between pins S7.6/4 and A20.X3.14/3 for short circuit to ground. Is any abnormality recognized? No: Go to Step10 Yes: Go to Step11
	Step10	Inspection procedure Turn the starter switch in OFF. Reinstall all the removed connectors. Erase fault memory and perform a test drive. If the diagnosis code has occurred even during the test drive, start the operation and then replace the A20 (SAM).
	Step11	Inspection procedure Repair or replace electrical lines. Reinstall all the removed connectors. Turn the starter switch in ON.
	Step12	Inspection procedure Replace component “Alternator”. Reinstall all the removed connectors. Turn the starter switch in ON.
	Step13	Inspection procedure Turn the starter switch in OFF. Reinstall all the removed connectors. Erase fault memory and perform a test drive. If the diagnosis code has occurred even during the test drive, start the operation and then replace the A28 (DUONIC^{TM} Control unit).
	Step14	Inspection completed

520705-2: M contact voltage is either too low or too high.

Generation condition	• Starter switch in ON position being detected • Battery voltage V01 or V02 8 to 16 V • Starter switch ON power V2 below 8 V or above 16 V
Recoverability	• Battery voltage V01 or V02 8 to 16 V • System has recovered if signal becomes normal after starter switch is turned OFF and then ON (thus reenergizing electronic control unit) or starter switch ON power V2 is 8 to 16 V while starter switch is in ON position.
Control effected by electronic control unit	• Backup with V1, V3, V01, V02
Possible causes	• Harness between DUONIC^{TM} electronic control unit and SSAM open or shorted to ground • Defective alternator • Defective signal detect and actuation module relay • Defective starter switch • Defective signal detect and actuation modules • Defective DUONIC^{TM} electronic control unit

https://truckmanualshub.com/

Inspection procedure	Step1	Inspection procedure Use the following procedure to check if the source voltage is excessively high or low. Refer to the results of short test of other ECUs. Insert the tester probes into the A28 (DUONIC™ Control unit) harness connector on the vehicle side and measure the voltage between A28.X2.40/120 and Ground. Is voltage above 12V (high voltage error)? No: Go to Step2 Yes: Go to Step12
	Step2	Inspection procedure Check that the fuse F24,HF01 is not blown out. If any visible damage is found, repair or replace the affected part and interrupt the inspection process. Go to Step3
	Step3	Inspection procedure Is this diagnosis code still active? No: Go to Step14 Yes: Go to Step4
	Step4	Inspection procedure Make a system diagnosis if a diagnosis code representing abnormal power supply directly from the battery has occurred. Go to Step5
	Step5	Inspection procedure Check if this ECU or other ECU has stored any of the diagnosis codes associated with the identical power supply system (switched ON through starter switch or for accessories). Are current fault codes present? No: Go to Step6 Yes: Go to Step8
	Step6	Inspection procedure Turn the starter switch in OFF. Remove the connector of A28 (DUONIC™ Control unit). Remove the connector of A20 (SAM). Check electrical line between pins A28.X2.40/120 and A20.X9.14/9 for open circuit. Test electrical line between pins A28.X2.40/120 and A20.X9.14/9 for short circuit to ground. Is any abnormality recognized? No: Go to Step13 Yes: Go to Step7
	Step7	Inspection procedure Repair or replace electrical lines. Reinstall all the removed connectors. Turn the starter switch in ON.
	Step8	Make the following inspections. K23 (Starter signal Relays (IGN)) S7 (Starter Switches) For procedures, refer to the Shop Manual. Replace faulty electrical devices. Is this diagnosis code still active? No: Go to Step14 Yes: Go to Step9

https://truckmanualshub.com/

Inspection procedure	Step9	Inspection procedure Turn the starter switch in OFF. Remove the connector of A20 (SAM). Remove the connector of S7 (Starter Switches). Check electrical line between pins A20.X8.28/3 and S7.6/6 for open circuit. Test electrical line between pins A20.X8.28/3 and S7.6/6 for short circuit to ground. Check electrical line between pins S7.6/4 and A20.X3.14/3 for open circuit. Test electrical line between pins S7.6/4 and A20.X3.14/3 for short circuit to ground. Is any abnormality recognized? No: Go to Step10 Yes: Go to Step11
	Step10	Inspection procedure Turn the starter switch in OFF. Reinstall all the removed connectors. Erase fault memory and perform a test drive. If the diagnosis code has occurred even during the test drive, start the operation and then replace the A20 (SAM).
	Step11	Inspection procedure Repair or replace electrical lines. Reinstall all the removed connectors. Turn the starter switch in ON.
	Step12	Inspection procedure Replace component “G2 (Alternator)”. Reinstall all the removed connectors. Turn the starter switch in ON.
	Step13	Inspection procedure Turn the starter switch in OFF. Reinstall all the removed connectors. Erase fault memory and perform a test drive. If the diagnosis code has occurred even during the test drive, start the operation and then replace the A28 (DUONIC^{TM} Control unit).
	Step14	Inspection completed

520706-2: ACC contact voltage is either too low or too high.

Generation condition	• Starter switch in ON position being detected • Battery voltage V01 or V02 8 to 16 V • Starter switch ACC power V3 below 8 V or above 16 V
Recoverability	• Battery voltage V01 or V02 8 to 16 V • System has recovered if signal becomes normal after starter switch is turned OFF and then ON (thus reenergizing electronic control unit) or starter switch ACC power thus reenergizing electronic control unit V3 is 8 to 16 V.
Control effected by electronic control unit	• None
Possible causes	• Harness between DUONIC^{TM} electronic control unit and SSAM open or shorted to ground • Defective alternator • Defective signal detect and actuation module relay • Defective starter switch • Defective signal detect and actuation modules • Defective DUONIC^{TM} electronic control unit

https://truckmanualshub.com/

Inspection procedure	Step1	Inspection procedure Use the following procedure to check if the source voltage is excessively high or low. Refer to the results of short test of other ECUs. Insert the tester probes into the A28 (DUONIC™ Control unit) harness connector on the vehicle side and measure the voltage between A28.X2.40/121 and Ground. Is voltage above 12V (high voltage error)? No: Go to Step2 Yes: Go to Step12
	Step2	Inspection procedure Check that the fuse F24,HF01 is not blown out. If any visible damage is found, repair or replace the affected part and interrupt the inspection process. Go to Step3
	Step3	Inspection procedure Is this diagnosis code still active? No: Go to Step14 Yes: Go to Step4
	Step4	Inspection procedure Make a system diagnosis if a diagnosis code representing abnormal power supply directly from the battery has occurred. Go to Step5
	Step5	Inspection procedure Check if this ECU or other ECU has stored any of the diagnosis codes associated with the identical power supply system (switched ON through starter switch or for accessories). Are current fault codes present? No: Go to Step6 Yes: Go to Step8
	Step6	Inspection procedure Turn the starter switch in OFF. Remove the connector of A28 (DUONIC™ Control unit). Remove the connector of A20 (SAM). Check electrical line between pins A28.X2.40/121 and A20.X10.14/8 for open circuit. Test electrical line between pins A28.X2.40/121 and A20.X10.14/8 for short circuit to ground. Is any abnormality recognized? No: Go to Step13 Yes: Go to Step7
	Step7	Inspection procedure Repair or replace electrical lines. Reinstall all the removed connectors. Turn the starter switch in ON.
	Step8	Make the following inspections. K24 (Starter signal Relays (ACC)) S7 (Starter Switches) For procedures, refer to the Shop Manual. Replace faulty electrical devices. Is this diagnosis code still active? No: Go to Step14 Yes: Go to Step9

https://truckmanualshub.com/

Inspection procedure	Step9	Inspection procedure Turn the starter switch in OFF. Remove the connector of A20 (SAM). Remove the connector of S7 (Starter Switches). Check electrical line between pins A20.X8.28/17 and S7.6/5 for open circuit. Test electrical line between pins A20.X8.28/17 and S7.6/5 for short circuit to ground. Check electrical line between pins S7.6/4 and A20.X3.14/3 for open circuit. Test electrical line between pins S7.6/4 and A20.X3.14/3 for short circuit to ground. Is any abnormality recognized? No: Go to Step10 Yes: Go to Step11
	Step10	Inspection procedure Turn the starter switch in OFF. Reinstall all the removed connectors. Erase fault memory and perform a test drive. If the diagnosis code has occurred even during the test drive, start the operation and then replace the A20 (SAM).
	Step11	Inspection procedure Repair or replace electrical lines. Reinstall all the removed connectors. Turn the starter switch in ON.
	Step12	Inspection procedure Replace component “G2 (Alternator)”. Reinstall all the removed connectors. Turn the starter switch in ON.
	Step13	Inspection procedure Turn the starter switch in OFF. Reinstall all the removed connectors. Erase fault memory and perform a test drive. If the diagnosis code has occurred even during the test drive, start the operation and then replace the A28 (DUONIC^{TM} Control unit).
	Step14	Inspection completed

https://truckmanualshub.com/

520707-3: Component Oil cooler flow control solenoid valve is constantly on.

Generation condition		• Supply voltage 8 to 16 V with starter switch ON • Battery voltage 8 to 16 V • Magnetic valve stuck ON detected (MVC failure status ON stuck = Fail)
Recoverability		• System has recovered if signal becomes normal after starter switch is turned OFF and then ON (thus reenergizing electronic control unit) or no detection of magnetic valve stuck ON while starter switch in ON position. (MVC failure status ON stuck = No Detection)
Control effected by electronic control unit		• None
Possible causes		• Harness between DUONIC™ electronic control unit and oil cooler flow control magnetic valve shorted to battery • Defective actuator • Defective DUONIC™ electronic control unit
Inspection procedure	Step1	Inspection procedure Turn the starter switch in OFF. Remove the connector of Y26 (Oil cooler flow control solenoid valve). Make a visual check on each connector. Measure the resistance between Y26 (Oil cooler flow control solenoid valve) and ground or each terminal to check for short-circuit and electrical leakage. Measure the resistance between Y26 (Oil cooler flow control solenoid valve) terminals to check for open-circuit. Special features If any visible damage is found, repair or replace the affected part and interrupt the inspection process. Is any abnormality recognized? No: Go to Step2 Yes: Go to Step3
	Step2	Inspection procedure Turn the starter switch in OFF. Replace component “Y26 (Oil cooler flow control solenoid valve)”. Reinstall all the removed connectors. Erase fault memory and perform a test drive. If the diagnosis code has occurred even during the test drive, start the operation and then replace the A28 (DUONIC™ Control unit). Inspection completed
	Step3	Inspection procedure Turn the starter switch in OFF. Remove the connector of A1 ECU. Check electrical line between pins A28.X1.81/21 and Y26.X5.12/3 for short circuit to positive. Is any abnormality recognized? No: Go to Step4 Yes: Go to Step5
	Step4	Inspection procedure Turn the starter switch in OFF. Reinstall all the removed connectors. Erase fault memory and perform a test drive. If the diagnosis code has occurred even during the test drive, start the operation and then replace the A28 (DUONIC™ Control unit). Inspection completed
	Step5	Inspection procedure Repair or replace electrical lines. Reinstall all the removed connectors. Erase fault memory and perform a test drive. If the diagnosis code has occurred even during the test drive, start the operation and then replace the A28 (DUONIC™ Control unit). Inspection completed

https://truckmanualshub.com/

520707-4: Component “Oil cooler flow control solenoid valve” is always OFF.

Generation condition		• Supply voltage 8 to 16 V with starter switch ON • Battery voltage 8 to 16 V • Magnetic valve stuck OFF detected (MVC failure status OFF stuck = Fail)
Recoverability		• System has recovered if signal becomes normal after starter switch is turned OFF and then ON (thus reenergizing electronic control unit) or no detection of magnetic valve stuck OFF while starter switch in ON position. (MVC failure status OFF stuck = No Detection)
Control effected by electronic control unit		• Both clutches are kept disengaged. • Gear shift kept in N. (Target gear locked in N.) • N flashes in meter cluster gear display. (P has priority display.) • Engine control is terminated.
Possible causes		• Harness between DUONIC™ electronic control unit and oil cooler flow control magnetic valve open or shorted to ground • Defective actuator • Defective DUONIC™ electronic control unit
Inspection procedure	Step1	Inspection procedure Turn the starter switch in OFF. Remove the connector of Y26 (Oil cooler flow control solenoid valve). Make a visual check on each connector. Measure the resistance between Y26 (Oil cooler flow control solenoid valve) and ground or each terminal to check for short-circuit and electrical leakage. Measure the resistance between Y26 (Oil cooler flow control solenoid valve) terminals to check for open-circuit. Special features If any visible damage is found, repair or replace the affected part and interrupt the inspection process. Is any abnormality recognized? No: Go to Step2 Yes: Go to Step3
	Step2	Inspection procedure Turn the starter switch in OFF. Replace component “Y26 (Oil cooler flow control solenoid valve)”. Reinstall all the removed connectors. Erase fault memory and perform a test drive. If the diagnosis code has occurred even during the test drive, start the operation and then replace the A28 (DUONIC™ Control unit). Inspection completed
	Step3	Inspection procedure Turn the starter switch in OFF. Remove the connector of A1 ECU. Test electrical line between pins A28.X1.81/21 and Y26.X5.12/3 for short circuit to ground. Check electrical line between pins A28.X1.81/21 and Y26.X5.12/3 for open circuit. Check electrical line between pins Ground and Ground for open circuit. Is any abnormality recognized? No: Go to Step4 Yes: Go to Step5
	Step4	Inspection procedure Turn the starter switch in OFF. Reinstall all the removed connectors. Erase fault memory and perform a test drive. If the diagnosis code has occurred even during the test drive, start the operation and then replace the A28 (DUONIC™ Control unit). Inspection completed
	Step5	Inspection procedure Repair or replace electrical lines. Reinstall all the removed connectors. Erase fault memory and perform a test drive. If the diagnosis code has occurred even during the test drive, start the operation and then replace the A28 (DUONIC™ Control unit). Inspection completed

https://truckmanualshub.com/

520708-7: Neutral control not possible(MV1F, MV1R)

Generation condition		• Gear shift unit rail 1 neutral control for 10 seconds
Recoverability		• System has recovered if signal becomes normal after starter switch is turned OFF and then ON (thus reenergizing electronic control unit).
Control effected by electronic control unit		[Prior to vehicle stationary judgment] • Both clutches are kept disengaged. • Control of relevant gear shift rail unit is terminated. • All gear shift rails but relevant gear shift rail are kept in N. (Target gear locked in N.) • N flashes in meter cluster gear display. (P has priority display.) • Engine control is terminated. [Upon vehicle stationary judgment] • Gear pre-select not permitted • Control of relevant gear shift rail unit is terminated. • Vehicle continuously driven in F-2nd/R-Hi
Possible causes		• Defective actuator harness • Defective actuator • Defective transmission • Defective DUONIC^{TM} electronic control unit
Inspection procedure	Step1	Inspection procedure Inspect the suspected factors mentioned above sequentially to locate faulty parts. Repair or replace the faulty part as necessary.

520709-7: Neutral control not possible(MV2F, MV2R)

Generation condition		• Gear shift unit rail 2 neutral control for 10 seconds
Recoverability		• System has recovered if signal becomes normal after starter switch is turned OFF and then ON (thus reenergizing electronic control unit).
Control effected by electronic control unit		• Both clutches are kept disengaged. • Control of relevant gear shift rail unit is terminated. • All gear shift rails but relevant gear shift rail are kept in N. (Target gear locked in N.) • N flashes in meter cluster gear display. (P has priority display.) • Engine control is terminated.
Possible causes		• Defective actuator harness • Defective actuator • Defective transmission • Defective DUONIC^{TM} electronic control unit
Inspection procedure	Step1	Inspection procedure Inspect the suspected factors mentioned above sequentially to locate faulty parts. Repair or replace the faulty part as necessary.

520710-7: Neutral control not possible(MV3F, MV3R)

Generation condition		• Gear shift unit rail 3 neutral control for 10 seconds
Recoverability		• System has recovered if signal becomes normal after starter switch is turned OFF and then ON (thus reenergizing electronic control unit).
Control effected by electronic control unit		• Both clutches are kept disengaged. • Control of relevant gear shift rail unit is terminated. • All gear shift rails but relevant gear shift rail are kept in N. (Target gear locked in N.) • N flashes in meter cluster gear display. (P has priority display.) • Engine control is terminated.
Possible causes		• Defective actuator harness • Defective actuator • Defective transmission • Defective DUONIC^{TM} electronic control unit
Inspection procedure	Step1	Inspection procedure Inspect the suspected factors mentioned above sequentially to locate faulty parts. Repair or replace the faulty part as necessary.

https://truckmanualshub.com/

520714-3: Component “Gear shift unit magnet valve(MV2F)” is constantly on.

Generation condition		• Supply voltage 8 to 16 V with starter switch ON • Battery voltage 8 to 16 V • Magnetic valve stuck ON detected (C2F Failure status ON stuck (MV2F) = Fail)
Recoverability		• System has recovered if signal becomes normal after starter switch is turned OFF and then ON (thus reenergizing electronic control unit) or no detection of magnetic valve stuck on while starter switch in ON position. (C2F Failure status ON stuck (MV2F) = No Detection)
Control effected by electronic control unit		• Both clutches are kept disengaged. • Control of relevant gear shift rail unit is terminated. • All gear shift rails but relevant gear shift rail are kept in N. (Target gear locked in N.) • N flashes in meter cluster gear display. (P has priority display.) • Engine control is terminated.
Possible causes		• Harness between DUONIC™ electronic control unit and gear shift unit magnetic valve shorted to battery • Defective actuator • Defective DUONIC™ electronic control unit
Inspection procedure	Step1	Inspection procedure Turn the starter switch in OFF. Remove the connector of Y22 (Gear shift unit magnet valve). Make a visual check on each connector. Measure the resistance between Y22 (Gear shift unit magnet valve) and ground or each terminal to check for short-circuit and electrical leakage. Measure the resistance between Y22 (Gear shift unit magnet valve) terminals to check for open-circuit. Special features If any visible damage is found, repair or replace the affected part and interrupt the inspection process. Is any abnormality recognized? No: GO to Step2 Yes: Go to Step3
	Step2	Inspection procedure Turn the starter switch in OFF. Replace component “Y22 (Gear shift unit magnet valve)”. Reinstall all the removed connectors. Erase fault memory and perform a test drive. If the diagnosis code has occurred even during the test drive, start the operation and then replace the A28 (DUONIC™ Control unit). Inspection completed
	Step3	Inspection procedure Turn the starter switch in OFF. Remove the connector of A1 ECU. Check electrical line between pins A28.X1.81/23 and Y22.6/2 for short circuit to positive. Is any abnormality recognized? No: GO to Step4 Yes: Go to Step5
	Step4	Inspection procedure Turn the starter switch in OFF. Reinstall all the removed connectors. Erase fault memory and perform a test drive. If the diagnosis code has occurred even during the test drive, start the operation and then replace the A28 (DUONIC™ Control unit).
	Step5	Inspection procedure Repair or replace electrical lines. Reinstall all the removed connectors. Erase fault memory and perform a test drive. If the diagnosis code has occurred even during the test drive, start the operation and then replace the A28 (DUONIC™ Control unit).

https://truckmanualshub.com/

520714-4: Component “Gear shift unit magnet valve(MV2F)” is always OFF.

Generation condition		• Supply voltage 8 to 16 V with starter switch ON • Battery voltage 8 to 16 V • Magnetic valve stuck OFF detected (C2F Failure status OFF stuck (MV2F) = Fail)
Recoverability		• System has recovered if signal becomes normal after starter switch is turned OFF and then ON (thus reenergizing electronic control unit).
Control effected by electronic control unit		[Prior to vehicle stationary judgment] • Both clutches are kept disengaged. • Control of relevant gear shift rail unit is terminated. • All gear shift rails but relevant gear shift rail are kept in N. (Target gear locked in N.) • N flashes in meter cluster gear display. (P has priority display.) • Engine control is terminated. [Upon vehicle stationary judgment] • Gear pre-select not permitted • Control of relevant gear shift rail unit is terminated. • Vehicle continuously driven in F-2nd/R-Hi
Possible causes		• Harness between DUONIC^{TM} electronic control unit and gear shift unit magnetic valve shorted or open • Defective actuator • Defective DUONIC^{TM} electronic control unit
Inspection procedure	Step1	Inspection procedure Turn the starter switch in OFF. Remove the connector of Y22 (Gear shift unit magnet valve). Make a visual check on each connector. Measure the resistance between Y22 (Gear shift unit magnet valve) and ground or each terminal to check for short-circuit and electrical leakage. Measure the resistance between Y22 (Gear shift unit magnet valve) terminals to check for open-circuit. Special features If any visible damage is found, repair or replace the affected part and interrupt the inspection process. Is any abnormality recognized? No: Go to Step2 Yes: Go to Step3
	Step2	Inspection procedure Turn the starter switch in OFF. Replace component “Y22 (Gear shift unit magnet valve)”. Reinstall all the removed connectors. Erase fault memory and perform a test drive. If the diagnosis code has occurred even during the test drive, start the operation and then replace the A28 (DUONIC^{TM} Control unit). Inspection completed
	Step3	Inspection procedure Turn the starter switch in OFF. Remove the connector of A1 ECU. Test electrical line between pins A28.X1.81/23 and Y22.6/2 for short circuit to ground. Check electrical line between pins A28.X1.81/23 and Y22.6/2 for open circuit. Check electrical line between pins Ground and Ground for open circuit. Is any abnormality recognized? No: Go to Step4 Yes: Go to Step5
	Step4	Inspection procedure Turn the starter switch in OFF. Reinstall all the removed connectors. Erase fault memory and perform a test drive. If the diagnosis code has occurred even during the test drive, start the operation and then replace the A28 (DUONIC^{TM} Control unit). Inspection completed

https://truckmanualshub.com/

	Step5	Inspection procedure Repair or replace electrical lines. Reinstall all the removed connectors. Erase fault memory and perform a test drive. If the diagnosis code has occurred even during the test drive, start the operation and then replace the A28 (DUONIC^{TM} Control unit). Inspection completed

520715-3: Component Gear shift unit magnet valve(MV2R) is constantly on.

Generation condition		• Supply voltage 8 to 16 V with starter switch ON • Battery voltage 8 to 16 V • Magnetic valve stuck ON detected (C2B Failure status ON stuck (MV2R) = Fail)
Recoverability		• System has recovered if signal becomes normal after starter switch is turned OFF and then ON (thus reenergizing electronic control unit) or no detection of magnetic valve stuck on while starter switch in ON position. (C2B Failure status ON stuck (MV2R) = No Detection)
Control effected by electronic control unit		• Both clutches are kept disengaged. • Control of relevant gear shift rail unit is terminated. • All gear shift rails but relevant gear shift rail are kept in N. (Target gear locked in N.) • N flashes in meter cluster gear display. (P has priority display.) • Engine control is terminated.
Possible causes		• Harness between DUONIC^{TM} electronic control unit and gear shift unit magnetic valve shorted to battery • Defective actuator • Defective DUONIC^{TM} electronic control unit
Inspection procedure	Step1	Inspection procedure Turn the starter switch in OFF. Remove the connector of Y22 (Gear shift unit magnet valve). Make a visual check on each connector. Measure the resistance between Y22 (Gear shift unit magnet valve) and ground or each terminal to check for short-circuit and electrical leakage. Measure the resistance between Y22 (Gear shift unit magnet valve) terminals to check for open-circuit. Special features If any visible damage is found, repair or replace the affected part and interrupt the inspection process. Is any abnormality recognized? No: Go to Step2 Yes: Go to Step3
	Step2	Inspection procedure Turn the starter switch in OFF. Replace component “Y22 (Gear shift unit magnet valve)”. Reinstall all the removed connectors. Erase fault memory and perform a test drive. If the diagnosis code has occurred even during the test drive, start the operation and then replace the A28 (DUONIC^{TM} Control unit). Inspection completed
	Step3	Inspection procedure Turn the starter switch in OFF. Remove the connector of A1 ECU. Check electrical line between pins A28.X1.81/61 and Y22.6/5 for short circuit to positive. Is any abnormality recognized? No: Go to Step4 Yes: Go to Step5

https://truckmanualshub.com/

Inspection procedure	Step4	Inspection procedure Turn the starter switch in OFF. Reinstall all the removed connectors. Erase fault memory and perform a test drive. If the diagnosis code has occurred even during the test drive, start the operation and then replace the A28 (DUONIC^{TM} Control unit). Inspection completed
	Step5	Inspection procedure Repair or replace electrical lines. Reinstall all the removed connectors. Erase fault memory and perform a test drive. If the diagnosis code has occurred even during the test drive, start the operation and then replace the A28 (DUONIC^{TM} Control unit). Inspection completed

520715-4: Component “Gear shift unit magnet valve(MV2R)” is always OFF.

Generation condition		• Supply voltage 8 to 16 V with starter switch ON • Battery voltage 8 to 16 V • Magnetic valve stuck OFF detected (C2B Failure status OFF stuck (MV2R) = Fail)
Recoverability		• System has recovered if signal becomes normal after starter switch is turned OFF and then ON (thus reenergizing electronic control unit).
Control effected by electronic control unit		[Prior to vehicle stationary judgment] • Both clutches are kept disengaged. • Control of relevant gear shift rail unit is terminated. • All gear shift rails but relevant gear shift rail are kept in N. (Target gear locked in N.) • N flashes in meter cluster gear display. (P has priority display.) • Engine control is terminated. [Upon vehicle stationary judgment] • Gear pre-select not permitted • Control of relevant gear shift rail unit is terminated. • Vehicle continuously driven in F-2nd/R-Hi
Possible causes		• Harness between DUONIC^{TM} electronic control unit and gear shift unit magnetic valve shorted or open • Defective actuator • Defective DUONIC^{TM} electronic control unit
Inspection procedure	Step1	Inspection procedure Turn the starter switch in OFF. Remove the connector of Y22 (Gear shift unit magnet valve). Make a visual check on each connector. Measure the resistance between Y22 (Gear shift unit magnet valve) and ground or each terminal to check for short-circuit and electrical leakage. Measure the resistance between Y22 (Gear shift unit magnet valve) terminals to check for open-circuit. Special features If any visible damage is found, repair or replace the affected part and interrupt the inspection process. Is any abnormality recognized? No: Go to Step2 Yes: Go to Step3
	Step2	Inspection procedure Turn the starter switch in OFF. Replace component “Y22 (Gear shift unit magnet valve)”. Reinstall all the removed connectors. Erase fault memory and perform a test drive. If the diagnosis code has occurred even during the test drive, start the operation and then replace the A28 (DUONIC^{TM} Control unit). Inspection completed

https://truckmanualshub.com/

Inspection procedure	Step3	Inspection procedure Turn the starter switch in OFF. Remove the connector of A1 ECU. Test electrical line between pins A28.X1.81/61 and Y22.6/5 for short circuit to ground. Check electrical line between pins A28.X1.81/61 and Y22.6/5 for open circuit. Check electrical line between pins Ground and Ground for open circuit. Is any abnormality recognized? No: Go to Step4 Yes: Go to Step5
	Step4	Inspection procedure Turn the starter switch in OFF. Reinstall all the removed connectors. Erase fault memory and perform a test drive. If the diagnosis code has occurred even during the test drive, start the operation and then replace the A28 (DUONIC^{TM} Control unit). Inspection completed
	Step5	Inspection procedure Repair or replace electrical lines. Reinstall all the removed connectors. Erase fault memory and perform a test drive. If the diagnosis code has occurred even during the test drive, start the operation and then replace the A28 (DUONIC^{TM} Control unit). Inspection completed

https://truckmanualshub.com/

520716-3: Component Gear shift unit magnet valve(MV3F) is constantly on.

Generation condition		• Supply voltage 8 to 16 V with starter switch ON • Battery voltage 8 to 16 V • Magnetic valve stuck ON detected (C3F Failure status ON stuck (MV3F) = Fail)
Recoverability		• System has recovered if signal becomes normal after starter switch is turned OFF and then ON (thus reenergizing electronic control unit) or no detection of magnetic valve stuck on while starter switch in ON position. (C3F Failure status ON stuck (MV3F) = No Detection)
Control effected by electronic control unit		• Both clutches are kept disengaged. • Control of relevant gear shift rail unit is terminated. • All gear shift rails but relevant gear shift rail are kept in N. (Target gear locked in N.) • N flashes in meter cluster gear display. (P has priority display.) • Engine control is terminated.
Possible causes		• Harness between DUONIC™ electronic control unit and gear shift unit magnetic valve shorted to battery • Defective actuator • Defective DUONIC™ electronic control unit
Inspection procedure	Step1	Inspection procedure Turn the starter switch in OFF. Remove the connector of Y22 (Gear shift unit magnet valve). Make a visual check on each connector. Measure the resistance between Y22 (Gear shift unit magnet valve) and ground or each terminal to check for short-circuit and electrical leakage. Measure the resistance between Y22 (Gear shift unit magnet valve) terminals to check for open-circuit. Special features If any visible damage is found, repair or replace the affected part and interrupt the inspection process. Is any abnormality recognized? No: Go to Step2 Yes: Go to Step3
	Step2	Inspection procedure Turn the starter switch in OFF. Replace component “Y22 (Gear shift unit magnet valve)”. Reinstall all the removed connectors. Erase fault memory and perform a test drive. If the diagnosis code has occurred even during the test drive, start the operation and then replace the A28 (DUONIC™ Control unit). Inspection completed
	Step3	Inspection procedure Turn the starter switch in OFF. Remove the connector of A1 ECU. Check electrical line between pins A28.X1.81/22 and Y22.6/1 for short circuit to positive. Is any abnormality recognized? No: Go to Step4 Yes: Go to Step5
	Step4	Inspection procedure Turn the starter switch in OFF. Reinstall all the removed connectors. Erase fault memory and perform a test drive. If the diagnosis code has occurred even during the test drive, start the operation and then replace the A28 (DUONIC™ Control unit). Inspection completed
	Step5	Inspection procedure Repair or replace electrical lines. Reinstall all the removed connectors. Erase fault memory and perform a test drive. If the diagnosis code has occurred even during the test drive, start the operation and then replace the A28 (DUONIC™ Control unit). Inspection completed

https://truckmanualshub.com/

520716-4: Component “Gear shift unit magnet valve(MV3F)” is always OFF.

Generation condition		• Supply voltage 8 to 16 V with starter switch ON • Battery voltage 8 to 16 V • Magnetic valve stuck OFF detected (C3F Failure status OFF stuck (MV3F) = Fail)
Recoverability		• System has recovered if signal becomes normal after starter switch is turned OFF and then ON (thus reenergizing electronic control unit).
Control effected by electronic control unit		• Both clutches are kept disengaged. • Control of relevant gear shift rail unit is terminated. • All gear shift rails but relevant gear shift rail are kept in N. (Target gear locked in N.) • N flashes in meter cluster gear display. (P has priority display.) • Engine control is terminated.
Possible causes		• Harness between DUONIC^{TM} electronic control unit and gear shift unit magnetic valve open or shorted • Defective actuator • Defective DUONIC^{TM} electronic control unit
Inspection procedure	Step1	Inspection procedure Turn the starter switch in OFF. Remove the connector of Y22 (Gear shift unit magnet valve). Make a visual check on each connector. Measure the resistance between Y22 (Gear shift unit magnet valve) and ground or each terminal to check for short-circuit and electrical leakage. Measure the resistance between Y22 (Gear shift unit magnet valve) terminals to check for open-circuit. Special features If any visible damage is found, repair or replace the affected part and interrupt the inspection process. Is any abnormality recognized? No: Go to Step2 Yes: Go to Step3
	Step2	Inspection procedure Turn the starter switch in OFF. Replace component “Y22 (Gear shift unit magnet valve)”. Reinstall all the removed connectors. Erase fault memory and perform a test drive. If the diagnosis code has occurred even during the test drive, start the operation and then replace the A28 (DUONIC^{TM} Control unit). Inspection completed
	Step3	Inspection procedure Turn the starter switch in OFF. Remove the connector of A1 ECU. Test electrical line between pins A28.X1.81/22 and Y22.6/1 for short circuit to ground. Check electrical line between pins A28.X1.81/22 and Y22.6/1 for open circuit. Check electrical line between pins Ground and Ground for open circuit. Is any abnormality recognized? No: Go to Step4 Yes: Go to Step5
	Step4	Inspection procedure Turn the starter switch in OFF. Reinstall all the removed connectors. Erase fault memory and perform a test drive. If the diagnosis code has occurred even during the test drive, start the operation and then replace the A28 (DUONIC^{TM} Control unit). Inspection completed
	Step5	Inspection procedure Repair or replace electrical lines. Reinstall all the removed connectors. Erase fault memory and perform a test drive. If the diagnosis code has occurred even during the test drive, start the operation and then replace the A28 (DUONIC^{TM} Control unit). Inspection completed

https://truckmanualshub.com/

520717-3: Component Gear shift unit magnet valve(MV3R) is constantly on.

Generation condition		• Supply voltage 8 to 16 V with starter switch ON • Battery voltage 8 to 16 V • Magnetic valve stuck ON detected (C3B Failure status ON stuck (MV3R) = Fail)
Recoverability		• System has recovered if signal becomes normal after starter switch is turned OFF and then ON (thus reenergizing electronic control unit) or no detection of magnetic valve stuck on while starter switch in ON position. (C3B Failure status ON stuck (MV3R) = No Detection)
Control effected by electronic control unit		• Both clutches are kept disengaged. • Control of relevant gear shift rail unit is terminated. • All gear shift rails but relevant gear shift rail are kept in N. (Target gear locked in N.) • N flashes in meter cluster gear display. (P has priority display.) • Engine control is terminated.
Possible causes		• Harness between DUONIC™ electronic control unit and gear shift unit magnetic valve shorted to battery • Defective actuator • Defective DUONIC™ electronic control unit
Inspection procedure	Step1	Inspection procedure Turn the starter switch in OFF. Remove the connector of Y22 (Gear shift unit magnet valve). Make a visual check on each connector. Measure the resistance between Y22 (Gear shift unit magnet valve) and ground or each terminal to check for short-circuit and electrical leakage. Measure the resistance between Y22 (Gear shift unit magnet valve) terminals to check for open-circuit. Special features If any visible damage is found, repair or replace the affected part and interrupt the inspection process. Is any abnormality recognized? No: Go to Step2 Yes: Go to Step3
	Step2	Inspection procedure Turn the starter switch in OFF. Replace component “Y22 (Gear shift unit magnet valve)”. Reinstall all the removed connectors. Erase fault memory and perform a test drive. If the diagnosis code has occurred even during the test drive, start the operation and then replace the A28 (DUONIC™ Control unit). Inspection completed
	Step3	Inspection procedure Turn the starter switch in OFF. Remove the connector of A1 ECU. Check electrical line between pins A28.X1.81/60 and Y22.6/4 for short circuit to positive. Is any abnormality recognized? No: Go to Step4 Yes: Go to Step5
	Step4	Inspection procedure Turn the starter switch in OFF. Reinstall all the removed connectors. Erase fault memory and perform a test drive. If the diagnosis code has occurred even during the test drive, start the operation and then replace the A28 (DUONIC™ Control unit). Inspection completed
	Step5	Inspection procedure Repair or replace electrical lines. Reinstall all the removed connectors. Erase fault memory and perform a test drive. If the diagnosis code has occurred even during the test drive, start the operation and then replace the A28 (DUONIC™ Control unit). Inspection completed

https://truckmanualshub.com/

520717-4: Component “Gear shift unit magnet valve(MV3R)” is always OFF.

Generation condition		• Supply voltage 8 to 16 V with starter switch ON • Battery voltage 8 to 16 V • Magnetic valve stuck OFF detected (C3B Failure status OFF stuck (MV3R) = Fail)
Recoverability		• System has recovered if signal becomes normal after starter switch is turned OFF and then ON (thus reenergizing electronic control unit).
Control effected by electronic control unit		• Both clutches are kept disengaged. • Control of relevant gear shift rail unit is terminated. • All gear shift rails but relevant gear shift rail are kept in N. (Target gear locked in N.) • N flashes in meter cluster gear display. (P has priority display.) • Engine control is terminated.
Possible causes		• Harness between DUONIC^{TM} electronic control unit and gear shift unit magnetic valve open or shorted • Defective actuator • Defective DUONIC^{TM} electronic control unit
Inspection procedure	Step1	Inspection procedure Turn the starter switch in OFF. Remove the connector of Y22 (Gear shift unit magnet valve). Make a visual check on each connector. Measure the resistance between Y22 (Gear shift unit magnet valve) and ground or each terminal to check for short-circuit and electrical leakage. Measure the resistance between Y22 (Gear shift unit magnet valve) terminals to check for open-circuit. Special features If any visible damage is found, repair or replace the affected part and interrupt the inspection process. Is any abnormality recognized? No: Go to Step2 Yes: Go to Step3
	Step2	Inspection procedure Turn the starter switch in OFF. Replace component “Y22 (Gear shift unit magnet valve)”. Reinstall all the removed connectors. Erase fault memory and perform a test drive. If the diagnosis code has occurred even during the test drive, start the operation and then replace the A28 (DUONIC^{TM} Control unit). Inspection completed
	Step3	Inspection procedure Turn the starter switch in OFF. Remove the connector of A1 ECU. Test electrical line between pins A28.X1.81/60 and Y22.6/4 for short circuit to ground. Check electrical line between pins A28.X1.81/60 and Y22.6/4 for open circuit. Check electrical line between pins Ground and Ground for open circuit. Is any abnormality recognized? No: Go to Step4 Yes: Go to Step5
	Step4	Inspection procedure Turn the starter switch in OFF. Reinstall all the removed connectors. Erase fault memory and perform a test drive. If the diagnosis code has occurred even during the test drive, start the operation and then replace the A28 (DUONIC^{TM} Control unit). Inspection completed
	Step5	Inspection procedure Repair or replace electrical lines. Reinstall all the removed connectors. Erase fault memory and perform a test drive. If the diagnosis code has occurred even during the test drive, start the operation and then replace the A28 (DUONIC^{TM} Control unit). Inspection completed

https://truckmanualshub.com/

520718-3: Component Outer clutch control linear solenoid valve is constantly on.

Generation condition		• Supply voltage 8 to 16 V with starter switch ON • Battery voltage 8 to 16 V • Magnetic valve stuck ON detected (Outer Clutch Solenoid Valve Failure Status ON Stuck = Fail)
Recoverability		• No detection of magnetic valve stuck ON when starter switch is turned OFF and then ON (thus reenergizing electronic control unit) or while starter switch is in ON position (Outer Clutch Solenoid Valve Failure Status ON Stuck = No Detection)
Control effected by electronic control unit		• Both clutches are kept disengaged. • All gear shift rails are kept in N. (Target gear locked in N.) • N flashes in meter cluster gear display. (P has priority display.) • Engine control is terminated.
Possible causes		• Minus harness between DUONIC™ electronic control unit and outer clutch control linear magnetic valve shorted to ground • Defective actuator • Defective DUONIC™ electronic control unit
Inspection procedure	Step1	Inspection procedure Turn the starter switch in OFF. Remove the connector of Y27 (Outer clutch control linear solenoid valve). Make a visual check on each connector. Measure the resistance between Y27 (Outer clutch control linear solenoid valve) and ground or each terminal to check for short-circuit and electrical leakage. Measure the resistance between Y27 (Outer clutch control linear solenoid valve) terminals to check for open-circuit. Special features If any visible damage is found, repair or replace the affected part and interrupt the inspection process. Is any abnormality recognized? No: Go to step2 Yes: Go to step3
	Step2	Inspection procedure Turn the starter switch in OFF. Replace component “Y27 (Outer clutch control linear solenoid valve)”. Reinstall all the removed connectors. Erase fault memory and perform a test drive. If the diagnosis code has occurred even during the test drive, start the operation and then replace the A28 (DUONIC™ Control unit). Inspection completed
	Step3	Inspection procedure Turn the starter switch in OFF. Remove the connector of A1 ECU. Test electrical line between pins A28.X1.81/5 and Y27.X5.12/1 for short circuit to ground. Is any abnormality recognized? No: Go to step4 Yes: Go to step5
	Step4	Inspection procedure Turn the starter switch in OFF. Reinstall all the removed connectors. Erase fault memory and perform a test drive. If the diagnosis code has occurred even during the test drive, start the operation and then replace the A28 (DUONIC™ Control unit). Inspection completed
	Step5	Inspection procedure Repair or replace electrical lines. Reinstall all the removed connectors. Erase fault memory and perform a test drive. If the diagnosis code has occurred even during the test drive, start the operation and then replace the A28 (DUONIC™ Control unit). Inspection completed

https://truckmanualshub.com/

520718-4: Component “Outer clutch control linear solenoid valve” is always OFF.

Generation condition		• Supply voltage 8 to 16 V with starter switch ON • Battery voltage 8 to 16 V • Magnetic valve stuck OFF detected (Outer Clutch Solenoid Valve Failure Status OFF Stuck = Fail)
Recoverability		• No detection of magnetic valve stuck OFF when starter switch is turned OFF and then ON (thus reenergizing electronic control unit) or while starter switch is in ON position (Outer Clutch Solenoid Valve Failure Status OFF Stuck = No Detection)
Control effected by electronic control unit		[Prior to vehicle stationary judgment] • Both clutches are kept disengaged. • All gear shift rails are kept in N. (Target gear locked in N.) • N flashes in meter cluster gear display. (P has priority display.) • Engine control is terminated. [Upon vehicle stationary judgment] • Gear pre-select not permitted • Vehicle continuously driven in F-1 st/R-Lo
Possible causes		• Plus harness between DUONIC^{TM} electronic control unit and outer clutch linear magnetic valve open or shorted • Defective actuator • Defective DUONIC^{TM} electronic control unit
Inspection procedure	Step1	Inspection procedure Turn the starter switch in OFF. Remove the connector of Y27 (Outer clutch control linear solenoid valve). Make a visual check on each connector. Measure the resistance between Y27 (Outer clutch control linear solenoid valve) and ground or each terminal to check for short-circuit and electrical leakage. Measure the resistance between Y27 (Outer clutch control linear solenoid valve) terminals to check for open-circuit. Special features If any visible damage is found, repair or replace the affected part and interrupt the inspection process. Is any abnormality recognized? No: Go to step2 Yes: Go to step3
	Step2	Inspection procedure Turn the starter switch in OFF. Replace component “Y27 (Outer clutch control linear solenoid valve)”. Reinstall all the removed connectors. Erase fault memory and perform a test drive. If the diagnosis code has occurred even during the test drive, start the operation and then replace the A28 (DUONIC^{TM} Control unit). Inspection completed
	Step3	Inspection procedure Turn the starter switch in OFF. Remove the connector of A1 ECU. Check harness between A28 (DUONIC^{TM} Control unit) and Y27 (Outer clutch control linear solenoid valve) for short-circuit to another line. Check electrical line between pins A28.X1.81/5 and Y27.X5.12/1 for short circuit to positive. Check electrical line between pins A28.X1.81/5 and Y27.X5.12/1 for open circuit. Check electrical line between pins A28.X1.81/2 and Y27.X5.12/5 for open circuit. Is any abnormality recognized? No: Go to step4 Yes: Go to step5
	Step4	Inspection procedure Turn the starter switch in OFF. Reinstall all the removed connectors. Erase fault memory and perform a test drive. If the diagnosis code has occurred even during the test drive, start the operation and then replace the A28 (DUONIC^{TM} Control unit). Inspection completed

https://truckmanualshub.com/

Inspection procedure	Step5	Inspection procedure Repair or replace electrical lines. Reinstall all the removed connectors. Erase fault memory and perform a test drive. If the diagnosis code has occurred even during the test drive, start the operation and then replace the A28 (DUONIC^{TM} Control unit). Inspection completed

520719-2: Incorrect 1st gear ratio

Generation condition		• Supply voltage 8 to 16 V with starter switch ON • Battery voltage 8 to 16 V • No generation of magnetic valve (relief) shorted to battery • Inner clutch current reading 1.15 A or above • Continuation for 10 seconds in 1st gear of difference of ± 200 rpm or more between engine speed and 1st gear input (inner clutch) speed and difference of less than ± 200 rpm between engine speed and input speed from other gears calculated by electronic control unit (where gear input speed = gear ratio x vehicle speed sensor input)
Recoverability		• System has recovered if signal becomes normal after starter switch is turned OFF and then ON (thus reenergizing electronic control unit).
Control effected by electronic control unit		[Prior to vehicle stationary judgment] • Both clutches are kept disengaged • All gear shift rails are kept in N. (Target gear locked in N.) • N flashes in meter cluster gear display. (P has priority display.) • Engine control is terminated. [Upon vehicle stationary judgment] • Gear pre-select not permitted • Vehicle continuously driven in F-2nd/R-Hi
Possible causes		• Incorrect gear ratio setting due to incorrect transmission assembly • Defective DUONIC^{TM} electronic control unit
Inspection procedure	Step1	Inspection procedure Inspect the suspected factors mentioned above sequentially to locate faulty parts. Repair or replace the faulty part as necessary.

520720-2: Incorrect 2nd gear ratio

Generation condition		• Supply voltage 8 to 16 V with starter switch ON • Battery voltage 8 to 16 V • No generation of magnetic valve (relief) shorted to battery • Outer clutch current reading 1.15 A or above • Continuation for 10 seconds in 2nd gear of difference of ± 200 rpm or more between engine speed and 2nd gear input (outer clutch) speed and difference of less than ± 200 rpm between engine speed and input speed from other gears calculated by electronic control unit (where gear input speed = gear ratio x vehicle speed sensor input)
Recoverability		• System has recovered if signal becomes normal after starter switch is turned OFF and then ON (thus reenergizing electronic control unit).
Control effected by electronic control unit		[Prior to vehicle stationary judgment] • Both clutches are kept disengaged • All gear shift rails are kept in N. (Target gear locked in N.) • N flashes in meter cluster gear display. (P has priority display.) • Engine control is terminated. [Upon vehicle stationary judgment] • Gear pre-select not permitted • Vehicle continuously driven in F-1st/R-Lo
Possible causes		• Incorrect gear ratio setting due to incorrect transmission assembly • Defective DUONIC^{TM} electronic control unit
Inspection procedure	Step1	Inspection procedure Inspect the suspected factors mentioned above sequentially to locate faulty parts. Repair or replace the faulty part as necessary.

https://truckmanualshub.com/

520721-2: Incorrect 3rd gear ratio

Generation condition		• Supply voltage 8 to 16 V with starter switch ON • Battery voltage 8 to 16 V • No generation of magnetic valve (relief) shorted to battery • Inner clutch current reading 1.15 A or above • Continuation for 10 seconds in 3rd gear of difference of ± 200 rpm or more between engine speed and 3rd gear input (inner clutch) speed and difference of less than ± 200 rpm between engine speed and input speed from other gears calculated by electronic control unit (where gear input speed = gear ratio x vehicle speed sensor input)
Recoverability		• System has recovered if signal becomes normal after starter switch is turned OFF and then ON (thus reenergizing electronic control unit).
Control effected by electronic control unit		[Prior to vehicle stationary judgment] • Both clutches are kept disengaged • All gear shift rails are kept in N. (Target gear locked in N.) • N flashes in meter cluster gear display. (P has priority display.) • Engine control is terminated. [Upon vehicle stationary judgment] • Gear pre-select not permitted • Vehicle continuously driven in F-2nd/R-Hi
Possible causes		• Incorrect gear ratio setting due to incorrect transmission assembly • Defective DUONIC™ electronic control unit
Inspection procedure	Step1	Inspection procedure Inspect the suspected factors mentioned above sequentially to locate faulty parts. Repair or replace the faulty part as necessary.

520722-2: Incorrect 4th gear ratio

Generation condition		• Supply voltage 8 to 16 V with starter switch ON • Battery voltage 8 to 16 V • No generation of magnetic valve (relief) shorted to battery • Outer clutch current reading 1.15 A or above • Continuation for 10 seconds in 4th gear of difference of ± 200 rpm or more between engine speed and 4th gear input (outer clutch) speed and difference of less than ± 200 rpm between engine speed and input speed from other gears calculated by electronic control unit (where gear input speed = gear ratio x vehicle speed sensor input)
Recoverability		• System has recovered if signal becomes normal after starter switch is turned OFF and then ON (thus reenergizing electronic control unit).
Control effected by electronic control unit		[Prior to vehicle stationary judgment] • Both clutches are kept disengaged • All gear shift rails are kept in N. (Target gear locked in N.) • N flashes in meter cluster gear display. (P has priority display.) • Engine control is terminated. [Upon vehicle stationary judgment] • Gear pre-select not permitted • Vehicle continuously driven in F-1st/R-Lo
Possible causes		• Incorrect gear ratio setting due to incorrect transmission assembly • Defective DUONIC™ electronic control unit
Inspection procedure	Step1	Inspection procedure Inspect the suspected factors mentioned above sequentially to locate faulty parts. Repair or replace the faulty part as necessary.

https://truckmanualshub.com/

520723-2: Incorrect 5th gear ratio

Generation condition		• Supply voltage 8 to 16 V with starter switch ON • Battery voltage 8 to 16 V • No generation of magnetic valve (relief) shorted to battery • Inner clutch current reading 1.15 A or above • Continuation for 10 seconds in 5th gear of difference of ± 200 rpm or more between engine speed and 5th gear input (inner clutch) speed and difference of less than ± 200 rpm between engine speed and input speed from other gears calculated by electronic control unit (where gear input speed = gear ratio x vehicle speed sensor input)
Recoverability		• System has recovered if signal becomes normal after starter switch is turned OFF and then ON (thus reenergizing electronic control unit).
Control effected by electronic control unit		[Prior to vehicle stationary judgment] • Both clutches are kept disengaged • All gear shift rails are kept in N. (Target gear locked in N.) • N flashes in meter cluster gear display. (P has priority display.) • Engine control is terminated. [Upon vehicle stationary judgment] • Gear pre-select not permitted • Vehicle continuously driven in F-2nd/R-Hi
Possible causes		• Incorrect gear ratio setting due to incorrect transmission assembly • Defective DUONIC™ electronic control unit
Inspection procedure	Step1	Inspection procedure Inspect the suspected factors mentioned above sequentially to locate faulty parts. Repair or replace the faulty part as necessary.

520724-2: Incorrect 6th gear ratio

Generation condition		• Supply voltage 8 to 16 V with starter switch ON • Battery voltage 8 to 16 V • No generation of magnetic valve (relief) shorted to battery • Outer clutch current reading 1.15 A or above • Continuation for 10 seconds in 6th gear of difference of ± 200 rpm or more between engine speed and 6th gear input (outer clutch) speed and difference of less than ± 200 rpm between engine speed and input speed from other gears calculated by electronic control unit (where gear input speed = gear ratio x vehicle speed sensor input)
Recoverability		• System has recovered if signal becomes normal after starter switch is turned OFF and then ON (thus reenergizing electronic control unit).
Control effected by electronic control unit		[Prior to vehicle stationary judgment] • Both clutches are kept disengaged • All gear shift rails are kept in N. (Target gear locked in N.) • N flashes in meter cluster gear display. (P has priority display.) • Engine control is terminated. [Upon vehicle stationary judgment] • Gear pre-select not permitted • Vehicle continuously driven in F-1st/R-Lo
Possible causes		• Incorrect gear ratio setting due to incorrect transmission assembly • Defective DUONIC™ electronic control unit
Inspection procedure	Step1	Inspection procedure Inspect the suspected factors mentioned above sequentially to locate faulty parts. Repair or replace the faulty part as necessary.

https://truckmanualshub.com/

520725-2: Incorrect RevLo gear ratio

Generation condition		• Supply voltage 8 to 16 V with starter switch ON • Battery voltage 8 to 16 V • No generation of magnetic valve (relief) shorted to battery • Inner clutch current reading 1.15 A or above • Continuation for 10 seconds in RevLo gear of difference of ± 200 rpm or more between engine speed and RevLo gear input (inner clutch) speed and difference of less than ± 200 rpm between engine speed and input speed from other gears calculated by electronic control unit (where gear input speed = gear ratio x vehicle speed sensor input)
Recoverability		• System has recovered if signal becomes normal after starter switch is turned OFF and then ON (thus reenergizing electronic control unit).
Control effected by electronic control unit		[Prior to vehicle stationary judgment] • Both clutches are kept disengaged • All gear shift rails are kept in N. (Target gear locked in N.) • N flashes in meter cluster gear display. (P has priority display.) • Engine control is terminated. [Upon vehicle stationary judgment] • Gear pre-select not permitted • Vehicle continuously driven in F-2nd/R-Hi
Possible causes		• Incorrect gear ratio setting due to incorrect transmission assembly • Defective DUONIC^{TM} electronic control unit
Inspection procedure	Step1	Inspection procedure Inspect the suspected factors mentioned above sequentially to locate faulty parts. Repair or replace the faulty part as necessary.

520726-2: Incorrect RevHi gear ratio

Generation condition		• Supply voltage 8 to 16 V with starter switch ON • Battery voltage 8 to 16 V • No generation of magnetic valve (relief) shorted to battery • Outer clutch current reading 1.15 A or above • Continuation for 10 seconds in RevHi gear of difference of ± 200 rpm or more between engine speed and RevHi gear input (outer clutch) speed and difference of less than ± 200 rpm between engine speed and input speed from other gears calculated by electronic control unit (where gear input speed = gear ratio x vehicle speed sensor input)
Recoverability		• System has recovered if signal becomes normal after starter switch is turned OFF and then ON (thus reenergizing electronic control unit).
Control effected by electronic control unit		[Prior to vehicle stationary judgment] • Both clutches are kept disengaged • All gear shift rails are kept in N. (Target gear locked in N.) • N flashes in meter cluster gear display. (P has priority display.) • Engine control is terminated. [Upon vehicle stationary judgment] • Gear pre-select not permitted • Vehicle continuously driven in F-1st/R-Lo
Possible causes		• Incorrect gear ratio setting due to incorrect transmission assembly • Defective DUONIC^{TM} electronic control unit
Inspection procedure	Step1	Inspection procedure Inspect the suspected factors mentioned above sequentially to locate faulty parts. Repair or replace the faulty part as necessary.

https://truckmanualshub.com/

520727-2: Error in CAN reception from Component "SAM"

Generation condition		• Supply voltage 8 to 16 V with starter switch ON • 3 seconds or more have elapsed since starter switch was turned ON. • ETC2_SSAM not received (Unreceived)
Recoverability		• System has recovered if signal becomes normal after starter switch is turned OFF and then ON (thus reenergizing electronic control unit) or while starter switch is in ON position. (Received)
Control effected by electronic control unit		• Both clutches are kept disengaged • All gear shift rails are kept in N. (Target gear locked in N.) • N flashes in meter cluster gear display. (P has priority display.) • Engine control is terminated.
Possible causes		• Controller area network communication line open, shorted to battery, shorted to ground, or shorted otherwise • Defective controller area network resistor • Defective signal detect and actuation modules • Defective DUONIC™ electronic control unit
Inspection procedure	Step1	Inspect or verify the following items. Repair or replace faulty items as necessary. If all ECUs connected to the common CAN communication line are unable to communicate, check the common CAN communication line for shorting. Go to step2
	Step2	Refer to the help menu for Nos. other than above. *1: M/T *2: DUONIC *3: ISS (With Lock brake) *4: ISS (Without Lock brake) *5: Lock brake (Without ISS) *6: Other than *3,*4,*5 *7: Full-automatic air conditioner *8: Auto leveling *9: Manual leveling Inspection procedure Turn the starter switch in OFF. Remove the ECU connector attached to CAN communication line. Check CAN line for open circuit, short circuit to positive, short circuit to ground or short circuit to another electrical line. Special features If any visible damage is found, repair or replace the affected part and interrupt the inspection process. Is any abnormality recognized? No: Go to step3 Yes: Go to step8
	Step3	Inspection procedure Insert the multimeter probe in the A20 (SAM) connector and measure resistance across A20.X7.18/1 and A20.X7.18/11. Special features Be sure to check the ECU with its connection removed from the connector. Is any abnormality recognized? No: Go to step4 Yes: Go to step7
	Step4	Inspection procedure Insert the multimeter probe in the A4 (Combustion engine Control unit) connector and measure resistance across A4.X2.94/62 and A4.X2.94/61. Special features Be sure to check the ECU with its connection removed from the connector. Is any abnormality recognized? No: Go to step5 Yes: Go to step6

https://truckmanualshub.com/

	Step5	Refer to the help menu for Nos. other than above. *1: M/T *2: DUONIC *3: ISS (With Lock brake) *4: ISS (Without Lock brake) *5: Lock brake (Without ISS) *6: Other than *3,*4,*5 *7: Full-automatic air conditioner *8: Auto leveling *9: Manual leveling Inspection procedure The harness from the ECU to CAN communication line is probably faulty or the ECU may have an internal fault. Identify the faulty spot by using the following procedure and repair or replace the faulty part. Use the short test to check for a fault code of the CAN communication failure of the entire vehicle. Remove all related ECUs one at a time and use the short test to check for a fault code of the CAN communication failure. With all related ECUs removed, mount one ECU at a time and check for a defective harness within the ECU. Inspection completed
	Step6	Inspection procedure Turn the starter switch in OFF. Reinstall all the removed connectors. Erase fault memory and perform a test drive. If the diagnosis code has occurred even during the test drive, start the operation and then replace the A4 (Combustion engine Control unit). Inspection completed
	Step7	Inspection procedure Turn the starter switch in OFF. Reinstall all the removed connectors. Erase fault memory and perform a test drive. If the diagnosis code has occurred even during the test drive, start the operation and then replace the A20 (SAM). Inspection completed
	Step8	Refer to the help menu for Nos. other than above. *1: M/T *2: DUONIC *3: ISS (With Lock brake) *4: ISS (Without Lock brake) *5: Lock brake (Without ISS) *6: Other than *3,*4,*5 *7: Full-automatic air conditioner *8: Auto leveling *9: Manual leveling Inspection procedure Repair or replace electrical lines. Reinstall all the removed connectors. Turn the starter switch in ON. Go to step9
	Step9	Inspection procedure Is this diagnosis code still active? No: Go to step10 Yes: Go to step2
	Step10	Inspection completed

https://truckmanualshub.com/

520728-2: Error in CAN reception from Component "SAM"

Generation condition		• Supply voltage 8 to 16 V with starter switch ON • 3 seconds or more have elapsed since starter switch was turned ON. • CCVS_SSAM nor received (Unreceived)
Recoverability		• System has recovered if signal becomes normal after starter switch is turned OFF and then ON (thus reenergizing electronic control unit) or while starter switch is in ON position.(Received)
Control effected by electronic control unit		• Both clutches are kept disengaged • All gear shift rails are kept in N. (Target gear locked in N.) • N flashes in meter cluster gear display. (P has priority display.) • Engine control is terminated.
Possible causes		• Controller area network communication line open, shorted to battery, shorted to ground, or shorted otherwise • Defective controller area network resistor • Defective signal detect and actuation modules • Defective DUONIC™ electronic control unit
Inspection procedure	Step1	Inspect or verify the following items. Repair or replace faulty items as necessary. If all Ictus connected to the common CAN communication line are unable to communicate, check the common CAN communication line for shorting. Go to step2
	Step2	Refer to the help menu for Nos. other than above. *1: M/T *2: DUONIC *3: ISS (With Lock brake) *4: ISS (Without Lock brake) *5: Lock brake (Without ISS) *6: Other than *3,*4,*5 *7: Full-automatic air conditioner *8: Auto leveling *9: Manual leveling Inspection procedure Turn the starter switch in OFF. Remove the ECU connector attached to CAN communication line. Check CAN line for open circuit, short circuit to positive, short circuit to ground or short circuit to another electrical line. Special features If any visible damage is found, repair or replace the affected part and interrupt the inspection process. Is any abnormality recognized? No: Go to step3 Yes: Go to step8
	Step3	Inspection procedure Insert the multimeter probe in the A20 (SAM) connector and measure resistance across A20.X7.18/1 and A20.X7.18/11. Special features Be sure to check the ECU with its connection removed from the connector. Is any abnormality recognized? No: Go to step4 Yes: Go to step7
	Step4	Inspection procedure Insert the multimeter probe in the A4 (Combustion engine Control unit) connector and measure resistance across A4.X2.94/62 and A4.X2.94/61. Special features Be sure to check the ECU with its connection removed from the connector. Is any abnormality recognized? No: Go to step5 Yes: Go to step6

https://truckmanualshub.com/

	Step5	Refer to the help menu for Nos. other than above. *1: M/T *2: DUONIC *3: ISS (With Lock brake) *4: ISS (Without Lock brake) *5: Lock brake (Without ISS) *6: Other than *3,*4,*5 *7: Full-automatic air conditioner *8: Auto leveling *9: Manual leveling Inspection procedure The harness from the ECU to CAN communication line is probably faulty or the ECU may have an internal fault. Identify the faulty spot by using the following procedure and repair or replace the faulty part. Use the short test to check for a fault code of the CAN communication failure of the entire vehicle. Remove all related ECUs one at a time and use the short test to check for a fault code of the CAN communication failure. With all related ECUs removed, mount one ECU at a time and check for a defective harness within the ECU. Inspection completed
	Step6	Inspection procedure Turn the starter switch in OFF. Reinstall all the removed connectors. Erase fault memory and perform a test drive. If the diagnosis code has occurred even during the test drive, start the operation and then replace the A4 (Combustion engine Control unit). Inspection completed
	Step7	Inspection procedure Turn the starter switch in OFF. Reinstall all the removed connectors. Erase fault memory and perform a test drive. If the diagnosis code has occurred even during the test drive, start the operation and then replace the A20 (SAM). Inspection completed
	Step8	Refer to the help menu for Nos. other than above. *1: M/T *2: DUONIC *3: ISS (With Lock brake) *4: ISS (Without Lock brake) *5: Lock brake (Without ISS) *6: Other than *3,*4,*5 *7: Full-automatic air conditioner *8: Auto leveling *9: Manual leveling Inspection procedure Repair or replace electrical lines. Reinstall all the removed connectors. Turn the starter switch in ON. Go to step9
	Step9	Inspection procedure Is this diagnosis code still active? No: Go to step10 Yes: Go to step2
	Step10	Inspection completed

https://truckmanualshub.com/

520729-2: Error in CAN reception from component “SAM”

Generation condition		• Supply voltage 8 to 16 V with starter switch ON • 3 seconds or more have elapsed since starter switch was turned ON. • PTO_SSAM not received (Unreceived)
Recoverability		• System has recovered if signal becomes normal after starter switch is turned OFF and then ON (thus reenergizing electronic control unit) or while starter switch is in ON position. (Received)
Control effected by electronic control unit		• None
Possible causes		• Controller area network communication line open, shorted to battery, shorted to ground, or shorted otherwise • Defective controller area network resistor • Defective signal detect and actuation modules • Defective DUONIC™ electronic control unit
Inspection procedure	Step1	Inspect or verify the following items. Repair or replace faulty items as necessary. If all ECUs connected to the common CAN communication line are unable to communicate, check the common CAN communication line for shorting. Go to step2
	Step2	Refer to the help menu for Nos. other than above. *1: M/T *2: DUONIC *3: ISS (With Lock brake) *4: ISS (Without Lock brake) *5: Lock brake (Without ISS) *6: Other than *3,*4,*5 *7: Full-automatic air conditioner *8: Auto leveling *9: Manual leveling Inspection procedure Turn the starter switch in OFF. Remove the ECU connector attached to CAN communication line. Check CAN line for open circuit, short circuit to positive, short circuit to ground or short circuit to another electrical line. Special features If any visible damage is found, repair or replace the affected part and interrupt the inspection process. Is any abnormality recognized? No: Go to step3 Yes: Go to step8
	Step3	Inspection procedure Insert the multimeter probe in the A20 (SAM) connector and measure resistance across A20.X7.18/1 and A20.X7.18/11. Special features Be sure to check the ECU with its connection removed from the connector. Is any abnormality recognized? No: Go to step4 Yes: Go to step7
	Step4	Inspection procedure Insert the multimeter probe in the A4 (Combustion engine Control unit) connector and measure resistance across A4.X2.94/62 and A4.X2.94/61. Special features Be sure to check the ECU with its connection removed from the connector. Is any abnormality recognized? No: Go to step5 Yes: Go to step6

https://truckmanualshub.com/

Inspection procedure	Step5	Refer to the help menu for Nos. other than above. *1: M/T *2: DUONIC *3: ISS (With Lock brake) *4: ISS (Without Lock brake) *5: Lock brake (Without ISS) *6: Other than *3,*4,*5 *7: Full-automatic air conditioner *8: Auto leveling *9: Manual leveling Inspection procedure The harness from the ECU to CAN communication line is probably faulty or the ECU may have an internal fault. Identify the faulty spot by using the following procedure and repair or replace the faulty part. Use the short test to check for a fault code of the CAN communication failure of the entire vehicle. Remove all related ECUs one at a time and use the short test to check for a fault code of the CAN communication failure. With all related ECUs removed, mount one ECU at a time and check for a defective harness within the ECU. Inspection completed
	Step6	Inspection procedure Turn the starter switch in OFF. Reinstall all the removed connectors. Erase fault memory and perform a test drive. If the diagnosis code has occurred even during the test drive, start the operation and then replace the A4 (Combustion engine Control unit). Inspection completed
	Step7	Inspection procedure Turn the starter switch in OFF. Reinstall all the removed connectors. Erase fault memory and perform a test drive. If the diagnosis code has occurred even during the test drive, start the operation and then replace the A20 (SAM). Inspection completed
	Step8	Refer to the help menu for Nos. other than above. *1: M/T *2: DUONIC *3: ISS (With Lock brake) *4: ISS (Without Lock brake) *5: Lock brake (Without ISS) *6: Other than *3,*4,*5 *7: Full-automatic air conditioner *8: Auto leveling *9: Manual leveling Inspection procedure Repair or replace electrical lines. Reinstall all the removed connectors. Turn the starter switch in ON. Go to step9
	Step9	Inspection procedure Is this diagnosis code still active? No: Go to step10 Yes: Go to step2
	Step10	Inspection completed

https://truckmanualshub.com/

520730-2: Error in CAN reception from component “SAM”

Generation condition		• Supply voltage 8 to 16 V with starter switch ON • 3 seconds or more have elapsed since starter switch was turned ON. • SSAM_A01 not received (Unreceived)
Recoverability		• System has recovered if signal becomes normal after starter switch is turned OFF and then ON (thus reenergizing electronic control unit) or while starter switch is in ON position. (Received)
Control effected by electronic control unit		• None
Possible causes		• Controller area network communication line open, shorted to battery, shorted to ground, or shorted otherwise • Defective controller area network resistor • Defective signal detect and actuation modules • Defective DUONIC™ electronic control unit
Inspection procedure	Step1	Inspect or verify the following items. Repair or replace faulty items as necessary. If all ECUs connected to the common CAN communication line are unable to communicate, check the common CAN communication line for shorting. Go to step2
	Step2	Refer to the help menu for Nos. other than above. *1: M/T *2: DUONIC *3: ISS (With Lock brake) *4: ISS (Without Lock brake) *5: Lock brake (Without ISS) *6: Other than *3,*4,*5 *7: Full-automatic air conditioner *8: Auto leveling *9: Manual leveling Inspection procedure Turn the starter switch in OFF. Remove the ECU connector attached to CAN communication line. Check CAN line for open circuit, short circuit to positive, short circuit to ground or short circuit to another electrical line. Special features If any visible damage is found, repair or replace the affected part and interrupt the inspection process. Is any abnormality recognized? No: Go to step3 Yes: Go to step8
	Step3	Inspection procedure Insert the multimeter probe in the A20 (SAM) connector and measure resistance across A20.X7.18/1 and A20.X7.18/11. Special features Be sure to check the ECU with its connection removed from the connector. Is any abnormality recognized? No: Go to step4 Yes: Go to step7
	Step4	Inspection procedure Insert the multimeter probe in the A4 (Combustion engine Control unit) connector and measure resistance across A4.X2.94/62 and A4.X2.94/61. Special features Be sure to check the ECU with its connection removed from the connector. Is any abnormality recognized? No: Go to step5 Yes: Go to step6

https://truckmanualshub.com/

Inspection procedure	Step5	Refer to the help menu for Nos. other than above. *1: M/T *2: DUONIC *3: ISS (With Lock brake) *4: ISS (Without Lock brake) *5: Lock brake (Without ISS) *6: Other than *3,*4,*5 *7: Full-automatic air conditioner *8: Auto leveling *9: Manual leveling Inspection procedure The harness from the ECU to CAN communication line is probably faulty or the ECU may have an internal fault. Identify the faulty spot by using the following procedure and repair or replace the faulty part. Use the short test to check for a fault code of the CAN communication failure of the entire vehicle. Remove all related ECUs one at a time and use the short test to check for a fault code of the CAN communication failure. With all related ECUs removed, mount one ECU at a time and check for a defective harness within the ECU.
	Step6	Inspection procedure Turn the starter switch in OFF. Reinstall all the removed connectors. Erase fault memory and perform a test drive. If the diagnosis code has occurred even during the test drive, start the operation and then replace the A4 (Combustion engine Control unit). Inspection completed
	Step7	Inspection procedure Turn the starter switch in OFF. Reinstall all the removed connectors. Erase fault memory and perform a test drive. If the diagnosis code has occurred even during the test drive, start the operation and then replace the A20 (SAM). Inspection completed
	Step8	Refer to the help menu for Nos. other than above. *1: M/T *2: DUONIC *3: ISS (With Lock brake) *4: ISS (Without Lock brake) *5: Lock brake (Without ISS) *6: Other than *3,*4,*5 *7: Full-automatic air conditioner *8: Auto leveling *9: Manual leveling Inspection procedure Repair or replace electrical lines. Reinstall all the removed connectors. Turn the starter switch in ON. Go to step9
	Step9	Inspection procedure Is this diagnosis code still active? No: Go to step10 Yes: Go to step2
	Step10	Inspection completed

https://truckmanualshub.com/

520731-19: Out-of-range CAN reception data from component "Economy mode switch"

Generation condition		• Supply voltage 8 to 16 V with starter switch ON • 3 seconds or more have elapsed since starter switch was turned ON. • SSAM_A01 received & economy mode switch (CAN) data out of range (Error, SNA)
Recoverability		• System has recovered if signal becomes normal after starter switch is turned OFF and then ON (thus reenergizing electronic control unit) or while starter switch is in ON position.
Control effected by electronic control unit		[Upon receiving out-of-range signal] • Normal data last received are retained.
Possible causes		• Defective signal detect and actuation modules
Inspection procedure	Step1	Inspection procedure Perform a diagnosis on the A20 (SAM) side system.

520732-2: Error in CAN reception from component "Combustion engine Control unit"

Generation condition		• Supply voltage 8 to 16 V with starter switch ON • 3 seconds or more have elapsed since starter switch was turned ON. • EEC1_EEC not received (Unreceived)
Recoverability		• System has recovered if signal becomes normal after starter switch is turned OFF and then ON (thus reenergizing electronic control unit) or while starter switch is in ON position. (Received)
Control effected by electronic control unit		• Both clutches are kept disengaged • All gear shift rails are kept in N. (Target gear locked in N.) • N flashes in meter cluster gear display. (P has priority display.) • Engine control is terminated.
Possible causes		• Controller area network communication line open, shorted to battery, shorted to ground, or shorted otherwise • Defective controller area network resistor • Defective engine electronic control unit • Defective DUONIC™ electronic control unit
Inspection procedure	Step1	Inspect or verify the following items. Repair or replace faulty items as necessary. If all ECUs connected to the common CAN communication line are unable to communicate, check the common CAN communication line for shorting. Go to step2
	Step2	Refer to the help menu for Nos. other than above. *1: M/T *2: DUONIC *3: ISS (With Lock brake) *4: ISS (Without Lock brake) *5: Lock brake (Without ISS) *6: Other than *3,*4,*5 *7: Full-automatic air conditioner *8: Auto leveling *9: Manual leveling Inspection procedure Turn the starter switch in OFF. Remove the ECU connector attached to CAN communication line. Check CAN line for open circuit, short circuit to positive, short circuit to ground or short circuit to another electrical line. Special features If any visible damage is found, repair or replace the affected part and interrupt the inspection process. Is any abnormality recognized? No: Go to step3 Yes: Go to step8

https://truckmanualshub.com/

Inspection procedure	Step3	Inspection procedure Insert the multimeter probe in the A20 (SAM) connector and measure resistance across A20.X7.18/1 and A20.X7.18/11. Special features Be sure to check the ECU with its connection removed from the connector. Is any abnormality recognized? No: Go to step4 Yes: Go to step7
	Step4	Inspection procedure Insert the multimeter probe in the A4 (Combustion engine Control unit) connector and measure resistance across A4.X2.94/62 and A4.X2.94/61. Special features Be sure to check the ECU with its connection removed from the connector. Is any abnormality recognized? No: Go to step5 Yes: Go to step6
	Step5	Refer to the help menu for Nos. other than above. *1: M/T *2: DUONIC *3: ISS (With Lock brake) *4: ISS (Without Lock brake) *5: Lock brake (Without ISS) *6: Other than *3,*4,*5 *7: Full-automatic air conditioner *8: Auto leveling *9: Manual leveling Inspection procedure The harness from the ECU to CAN communication line is probably faulty or the ECU may have an internal fault. Identify the faulty spot by using the following procedure and repair or replace the faulty part. Use the short test to check for a fault code of the CAN communication failure of the entire vehicle. Remove all related ECUs one at a time and use the short test to check for a fault code of the CAN communication failure. With all related ECUs removed, mount one ECU at a time and check for a defective harness within the ECU. Inspection completed
	Step6	Inspection procedure Turn the starter switch in OFF. Reinstall all the removed connectors. Erase fault memory and perform a test drive. If the diagnosis code has occurred even during the test drive, start the operation and then replace the A4 (Combustion engine Control unit). Inspection completed
	Step7	Inspection procedure Turn the starter switch in OFF. Reinstall all the removed connectors. Erase fault memory and perform a test drive. If the diagnosis code has occurred even during the test drive, start the operation and then replace the A20 (SAM). Inspection completed
	Step8	Refer to the help menu for Nos. other than above. *1: M/T *2: DUONIC *3: ISS (With Lock brake) *4: ISS (Without Lock brake) *5: Lock brake (Without ISS) *6: Other than *3,*4,*5 *7: Full-automatic air conditioner *8: Auto leveling *9: Manual leveling Inspection procedure Repair or replace electrical lines. Reinstall all the removed connectors. Turn the starter switch in ON. Go to step9

https://truckmanualshub.com/

Inspection procedure	Step9	Inspection procedure Is this diagnosis code still active? No: Go to step10 Yes: Go to step2
	Step10	Inspection completed

520733-2: Error in CAN reception from component “Combustion engine Control unit”

Generation condition		• Supply voltage 8 to 16 V with starter switch ON • 3 seconds or more have elapsed since starter switch was turned ON. • EEC2_EEC not received (Unreceived)
Recoverability		• System has recovered if signal becomes normal after starter switch is turned OFF and then ON (thus reenergizing electronic control unit) or while starter switch is in ON position. (Received)
Control effected by electronic control unit		[Diagnosis Codes 520732-2 and 512-19 not generated (Warning indication: Amber)] • Service data name: See Driver’s Demand Percent Torque as accelerator position. [Diagnosis Code 520732-2 or 512-19 generated (Warning indication: Red)] • Both clutches are kept disengaged • All gear shift rails are kept in N. (Target gear locked in N.) • N flashes in meter cluster gear display. (P has priority display.) • Engine control is terminated.
Possible causes		• Controller area network communication line open, shorted to battery, shorted to ground, or shorted otherwise • Defective controller area network resistor • Defective engine electronic control unit • Defective DUONIC^{TM} electronic control unit
Inspection procedure	Step1	Inspect or verify the following items. Repair or replace faulty items as necessary. If all ECUs connected to the common CAN communication line are unable to communicate, check the common CAN communication line for shorting. Go to step2
	Step2	Refer to the help menu for Nos. other than above. *1: M/T *2: DUONIC *3: ISS (With Lock brake) *4: ISS (Without Lock brake) *5: Lock brake (Without ISS) *6: Other than *3,*4,*5 *7: Full-automatic air conditioner *8: Auto leveling *9: Manual leveling Inspection procedure Turn the starter switch in OFF. Remove the ECU connector attached to CAN communication line. Check CAN line for open circuit, short circuit to positive, short circuit to ground or short circuit to another electrical line. Special features If any visible damage is found, repair or replace the affected part and interrupt the inspection process. Is any abnormality recognized? No: Go to step3 Yes: Go to step8
	Step3	Inspection procedure Insert the multimeter probe in the A20 (SAM) connector and measure resistance across A20.X7.18/1 and A20.X7.18/11. Special features Be sure to check the ECU with its connection removed from the connector. Is any abnormality recognized? No: Go to step4 Yes: Go to step7

https://truckmanualshub.com/

Inspection procedure	Step4	Inspection procedure Insert the multimeter probe in the A4 (Combustion engine Control unit) connector and measure resistance across A4.X2.94/62 and A4.X2.94/61. Special features Be sure to check the ECU with its connection removed from the connector. Is any abnormality recognized? No: Go to step5 Yes: Go to step6
	Step5	Refer to the help menu for Nos. other than above. *1: M/T *2: DUONIC *3: ISS (With Lock brake) *4: ISS (Without Lock brake) *5: Lock brake (Without ISS) *6: Other than *3,*4,*5 *7: Full-automatic air conditioner *8: Auto leveling *9: Manual leveling Inspection procedure The harness from the ECU to CAN communication line is probably faulty or the ECU may have an internal fault. Identify the faulty spot by using the following procedure and repair or replace the faulty part. Use the short test to check for a fault code of the CAN communication failure of the entire vehicle. Remove all related ECUs one at a time and use the short test to check for a fault code of the CAN communication failure. With all related ECUs removed, mount one ECU at a time and check for a defective harness within the ECU. Inspection completed
	Step6	Inspection procedure Turn the starter switch in OFF. Reinstall all the removed connectors. Erase fault memory and perform a test drive. If the diagnosis code has occurred even during the test drive, start the operation and then replace the A4 (Combustion engine Control unit). Inspection completed
	Step7	Inspection procedure Turn the starter switch in OFF. Reinstall all the removed connectors. Erase fault memory and perform a test drive. If the diagnosis code has occurred even during the test drive, start the operation and then replace the A20 (SAM). Inspection completed
	Step8	Refer to the help menu for Nos. other than above. *1: M/T *2: DUONIC *3: ISS (With Lock brake) *4: ISS (Without Lock brake) *5: Lock brake (Without ISS) *6: Other than *3,*4,*5 *7: Full-automatic air conditioner *8: Auto leveling *9: Manual leveling Inspection procedure Repair or replace electrical lines. Reinstall all the removed connectors. Turn the starter switch in ON. Go to step9
	Step9	Inspection procedure Is this diagnosis code still active? No: Go to step10 Yes: Go to step2
	Step10	Inspection completed

https://truckmanualshub.com/

520734-2: Out-of-range CAN reception data from component “Combustion engine Control unit”

Generation condition		• Supply voltage 8 to 16 V with starter switch ON • 3 seconds or more have elapsed since starter switch was turned ON. • EEC3_EEC not received (Unreceived)
Recoverability		• System has recovered if signal becomes normal after starter switch is turned OFF and then ON (thus reenergizing electronic control unit) or while starter switch is in ON position. (Received)
Control effected by electronic control unit		• Both clutches are kept disengaged • All gear shift rails are kept in N. (Target gear locked in N.) • N flashes in meter cluster gear display. (P has priority display.) • Engine control is terminated.
Possible causes		• Controller area network communication line open, shorted to battery, shorted to ground, or shorted otherwise • Defective controller area network resistor • Defective engine electronic control unit • Defective DUONIC^{TM} electronic control unit
Inspection procedure	Step1	Inspect or verify the following items. Repair or replace faulty items as necessary. If all ECUs connected to the common CAN communication line are unable to communicate, check the common CAN communication line for shorting. Go to step2
	Step2	Refer to the help menu for Nos. other than above. *1: M/T *2: DUONIC *3: ISS (With Lock brake) *4: ISS (Without Lock brake) *5: Lock brake (Without ISS) *6: Other than *3,*4,*5 *7: Full-automatic air conditioner *8: Auto leveling *9: Manual leveling Inspection procedure Turn the starter switch in OFF. Remove the ECU connector attached to CAN communication line. Check CAN line for open circuit, short circuit to positive, short circuit to ground or short circuit to another electrical line. Special features If any visible damage is found, repair or replace the affected part and interrupt the inspection process. Is any abnormality recognized? No: Go to step3 Yes: Go to step8
	Step3	Inspection procedure Insert the multimeter probe in the A20 (SAM) connector and measure resistance across A20.X7.18/1 and A20.X7.18/11. Special features Be sure to check the ECU with its connection removed from the connector. Is any abnormality recognized? No: Go to step4 Yes: Go to step7
	Step4	Inspection procedure Insert the multimeter probe in the A4 (Combustion engine Control unit) connector and measure resistance across A4.X2.94/62 and A4.X2.94/61. Special features Be sure to check the ECU with its connection removed from the connector. Is any abnormality recognized? No: Go to step5 Yes: Go to step6

https://truckmanualshub.com/

Inspection procedure	Step5	Refer to the help menu for Nos. other than above. *1: M/T *2: DUONIC *3: ISS (With Lock brake) *4: ISS (Without Lock brake) *5: Lock brake (Without ISS) *6: Other than *3,*4,*5 *7: Full-automatic air conditioner *8: Auto leveling *9: Manual leveling Inspection procedure The harness from the ECU to CAN communication line is probably faulty or the ECU may have an internal fault. Identify the faulty spot by using the following procedure and repair or replace the faulty part. Use the short test to check for a fault code of the CAN communication failure of the entire vehicle. Remove all related ECUs one at a time and use the short test to check for a fault code of the CAN communication failure. With all related ECUs removed, mount one ECU at a time and check for a defective harness within the ECU. Inspection completed
	Step6	Inspection procedure Turn the starter switch in OFF. Reinstall all the removed connectors. Erase fault memory and perform a test drive. If the diagnosis code has occurred even during the test drive, start the operation and then replace the A4 (Combustion engine Control unit). Inspection completed
	Step7	Inspection procedure Turn the starter switch in OFF. Reinstall all the removed connectors. Erase fault memory and perform a test drive. If the diagnosis code has occurred even during the test drive, start the operation and then replace the A20 (SAM). Inspection completed
	Step8	Refer to the help menu for Nos. other than above. *1: M/T *2: DUONIC *3: ISS (With Lock brake) *4: ISS (Without Lock brake) *5: Lock brake (Without ISS) *6: Other than *3,*4,*5 *7: Full-automatic air conditioner *8: Auto leveling *9: Manual leveling Inspection procedure Repair or replace electrical lines. Reinstall all the removed connectors. Turn the starter switch in ON. Go to step9
	Step9	Inspection procedure Is this diagnosis code still active? No: Go to step10 Yes: Go to step2
	Step10	Inspection completed

https://truckmanualshub.com/

520735-2: Error in CAN reception from component “Combustion engine Control unit”

Generation condition		• Supply voltage 8 to 16 V with starter switch ON • 3 seconds or more have elapsed since starter switch was turned ON. • EC not received (Unreceived) for 10 seconds
Recoverability		• System has recovered if signal becomes normal after starter switch is turned OFF and then ON (thus reenergizing electronic control unit) or while starter switch is in ON position. (Received)
Control effected by electronic control unit		• Both clutches are kept disengaged • All gear shift rails are kept in N. (Target gear locked in N.) • N flashes in meter cluster gear display. (P has priority display.) • Engine control is terminated.
Possible causes		• Controller area network communication line open, shorted to battery, shorted to ground, or shorted otherwise • Defective controller area network resistor • Defective engine electronic control unit • Defective DUONIC™ electronic control unit
Inspection procedure	Step1	Inspect or verify the following items. Repair or replace faulty items as necessary. If all ECUs connected to the common CAN communication line are unable to communicate, check the common CAN communication line for shorting. Go to step2
	Step2	Refer to the help menu for Nos. other than above. *1: M/T *2: DUONIC *3: ISS (With Lock brake) *4: ISS (Without Lock brake) *5: Lock brake (Without ISS) *6: Other than *3,*4,*5 *7: Full-automatic air conditioner *8: Auto leveling *9: Manual leveling Inspection procedure Turn the starter switch in OFF. Remove the ECU connector attached to CAN communication line. Check CAN line for open circuit, short circuit to positive, short circuit to ground or short circuit to another electrical line. Special features If any visible damage is found, repair or replace the affected part and interrupt the inspection process. Is any abnormality recognized? No: Go to step3 Yes: Go to step8
	Step3	Inspection procedure Insert the multimeter probe in the A20 (SAM) connector and measure resistance across A20.X7.18/1 and A20.X7.18/11. Special features Be sure to check the ECU with its connection removed from the connector. Is any abnormality recognized? No: Go to step4 Yes: Go to step7
	Step4	Inspection procedure Insert the multimeter probe in the A4 (Combustion engine Control unit) connector and measure resistance across A4.X2.94/62 and A4.X2.94/61. Special features Be sure to check the ECU with its connection removed from the connector. Is any abnormality recognized? No: Go to step5 Yes: Go to step6

https://truckmanualshub.com/

Inspection procedure	Step5	Refer to the help menu for Nos. other than above. *1: M/T *2: DUONIC *3: ISS (With Lock brake) *4: ISS (Without Lock brake) *5: Lock brake (Without ISS) *6: Other than *3,*4,*5 *7: Full-automatic air conditioner *8: Auto leveling *9: Manual leveling Inspection procedure The harness from the ECU to CAN communication line is probably faulty or the ECU may have an internal fault. Identify the faulty spot by using the following procedure and repair or replace the faulty part. Use the short test to check for a fault code of the CAN communication failure of the entire vehicle. Remove all related ECUs one at a time and use the short test to check for a fault code of the CAN communication failure. With all related ECUs removed, mount one ECU at a time and check for a defective harness within the ECU. Inspection completed
	Step6	Inspection procedure Turn the starter switch in OFF. Reinstall all the removed connectors. Erase fault memory and perform a test drive. If the diagnosis code has occurred even during the test drive, start the operation and then replace the A4 (Combustion engine Control unit). Inspection completed
	Step7	Inspection procedure Turn the starter switch in OFF. Reinstall all the removed connectors. Erase fault memory and perform a test drive. If the diagnosis code has occurred even during the test drive, start the operation and then replace the A20 (SAM). Inspection completed
	Step8	Refer to the help menu for Nos. other than above. *1: M/T *2: DUONIC *3: ISS (With Lock brake) *4: ISS (Without Lock brake) *5: Lock brake (Without ISS) *6: Other than *3,*4,*5 *7: Full-automatic air conditioner *8: Auto leveling *9: Manual leveling Inspection procedure Repair or replace electrical lines. Reinstall all the removed connectors. Turn the starter switch in ON. Go to step9
	Step9	Inspection procedure Is this diagnosis code still active? No: Go to step10 Yes: Go to step2
	Step10	Inspection completed

https://truckmanualshub.com/

520736-2: Error in CAN reception from component “Combustion engine Control unit”

Generation condition		• Supply voltage 8 to 16 V with starter switch ON • 3 seconds or more have elapsed since starter switch was turned ON. • EBC1_EEC not received (Unreceived)
Recoverability		• System has recovered if signal becomes normal after starter switch is turned OFF and then ON (thus reenergizing electronic control unit) or while starter switch is in ON position. (Received)
Control effected by electronic control unit		• None
Possible causes		• Controller area network communication line open, shorted to battery, shorted to ground, or shorted otherwise • Defective controller area network resistor • Defective engine electronic control unit • Defective DUONIC™ electronic control unit
Inspection procedure	Step1	Inspect or verify the following items. Repair or replace faulty items as necessary. If all ECUs connected to the common CAN communication line are unable to communicate, check the common CAN communication line for shorting. Go to step2
	Step2	Refer to the help menu for Nos. other than above. *1: M/T *2: DUONIC *3: ISS (With Lock brake) *4: ISS (Without Lock brake) *5: Lock brake (Without ISS) *6: Other than *3,*4,*5 *7: Full-automatic air conditioner *8: Auto leveling *9: Manual leveling Inspection procedure Turn the starter switch in OFF. Remove the ECU connector attached to CAN communication line. Check CAN line for open circuit, short circuit to positive, short circuit to ground or short circuit to another electrical line. Special features If any visible damage is found, repair or replace the affected part and interrupt the inspection process. Is any abnormality recognized? No: Go to step3 Yes: Go to step8
	Step3	Inspection procedure Insert the multimeter probe in the A20 (SAM) connector and measure resistance across A20.X7.18/1 and A20.X7.18/11. Special features Be sure to check the ECU with its connection removed from the connector. Is any abnormality recognized? No: Go to step4 Yes: Go to step7
	Step4	Inspection procedure Insert the multimeter probe in the A4 (Combustion engine Control unit) connector and measure resistance across A4.X2.94/62 and A4.X2.94/61. Special features Be sure to check the ECU with its connection removed from the connector. Is any abnormality recognized? No: Go to step5 Yes: Go to step6

https://truckmanualshub.com/

Inspection procedure	Step5	Refer to the help menu for Nos. other than above. *1: M/T *2: DUONIC *3: ISS (With Lock brake) *4: ISS (Without Lock brake) *5: Lock brake (Without ISS) *6: Other than *3,*4,*5 *7: Full-automatic air conditioner *8: Auto leveling *9: Manual leveling Inspection procedure The harness from the ECU to CAN communication line is probably faulty or the ECU may have an internal fault. Identify the faulty spot by using the following procedure and repair or replace the faulty part. Use the short test to check for a fault code of the CAN communication failure of the entire vehicle. Remove all related ECUs one at a time and use the short test to check for a fault code of the CAN communication failure. With all related ECUs removed, mount one ECU at a time and check for a defective harness within the ECU. Inspection completed
	Step6	Inspection procedure Turn the starter switch in OFF. Reinstall all the removed connectors. Erase fault memory and perform a test drive. If the diagnosis code has occurred even during the test drive, start the operation and then replace the A4 (Combustion engine Control unit). Inspection completed
	Step7	Inspection procedure Turn the starter switch in OFF. Reinstall all the removed connectors. Erase fault memory and perform a test drive. If the diagnosis code has occurred even during the test drive, start the operation and then replace the A20 (SAM). Inspection completed
	Step8	Refer to the help menu for Nos. other than above. *1: M/T *2: DUONIC *3: ISS (With Lock brake) *4: ISS (Without Lock brake) *5: Lock brake (Without ISS) *6: Other than *3,*4,*5 *7: Full-automatic air conditioner *8: Auto leveling *9: Manual leveling Inspection procedure Repair or replace electrical lines. Reinstall all the removed connectors. Turn the starter switch in ON. Go to step9
	Step9	Inspection procedure Is this diagnosis code still active? No: Go to step10 Yes: Go to step2
	Step10	Inspection completed

https://truckmanualshub.com/

520738-2: Error in CAN reception from component “Antilock brake system Control unit”

Generation condition		• Anti-lock brake system-equipped vehicle (ABS Cooperative Control Equipped) • Supply voltage 8 to 16 V with starter switch ON • 3 seconds or more have elapsed since starter switch was turned ON. • EBC1_BS not received (Unreceived)
Recoverability		• System has recovered if signal becomes normal after starter switch is turned OFF and then ON (thus reenergizing electronic control unit) or while starter switch is in ON position. (Received)
Control effected by electronic control unit		• Auto downshifting not permitted <in Auto Mode> • Shifting to roll-off gear temporarily permitted after detection of vehicle stationary for 3 seconds <in Auto Mode> • Normal gear shifting permitted <in Manual Mode>
Possible causes		• Controller area network communication line open, shorted to battery, shorted to ground, or shorted otherwise • Defective controller area network resistor • Defective hydraulic unit (electronic control unit) • Defective DUONIC™ electronic control unit
Inspection procedure	Step1	Inspect or verify the following items. Repair or replace faulty items as necessary. If all ECUs connected to the common CAN communication line are unable to communicate, check the common CAN communication line for shorting. Go to step2
	Step2	Refer to the help menu for Nos. other than above. *1: M/T *2: DUONIC *3: ISS (With Lock brake) *4: ISS (Without Lock brake) *5: Lock brake (Without ISS) *6: Other than *3,*4,*5 *7: Full-automatic air conditioner *8: Auto leveling *9: Manual leveling Inspection procedure Turn the starter switch in OFF. Remove the ECU connector attached to CAN communication line. Check CAN line for open circuit, short circuit to positive, short circuit to ground or short circuit to another electrical line. Special features If any visible damage is found, repair or replace the affected part and interrupt the inspection process. Is any abnormality recognized? No: Go to step3 Yes: Go to step
	Step3	Inspection procedure Insert the multimeter probe in the A20 (SAM) connector and measure resistance across A20.X7.18/1 and A20.X7.18/11. Special features Be sure to check the ECU with its connection removed from the connector. Is any abnormality recognized? No: Go to step4 Yes: Go to step7
	Step4	Inspection procedure Insert the multimeter probe in the A4 (Combustion engine Control unit) connector and measure resistance across A4.X2.94/62 and A4.X2.94/61. Special features Be sure to check the ECU with its connection removed from the connector. Is any abnormality recognized? No: Go to step5 Yes: Go to step6

https://truckmanualshub.com/

Inspection procedure	Step5	Refer to the help menu for Nos. other than above. *1: M/T *2: DUONIC *3: ISS (With Lock brake) *4: ISS (Without Lock brake) *5: Lock brake (Without ISS) *6: Other than *3,*4,*5 *7: Full-automatic air conditioner *8: Auto leveling *9: Manual leveling Inspection procedure The harness from the ECU to CAN communication line is probably faulty or the ECU may have an internal fault. Identify the faulty spot by using the following procedure and repair or replace the faulty part. Use the short test to check for a fault code of the CAN communication failure of the entire vehicle. Remove all related ECUs one at a time and use the short test to check for a fault code of the CAN communication failure. With all related ECUs removed, mount one ECU at a time and check for a defective harness within the ECU. Inspection completed
	Step6	Inspection procedure Turn the starter switch in OFF. Reinstall all the removed connectors. Erase fault memory and perform a test drive. If the diagnosis code has occurred even during the test drive, start the operation and then replace the A4 (Combustion engine Control unit). Inspection completed
	Step7	Inspection procedure Turn the starter switch in OFF. Reinstall all the removed connectors. Erase fault memory and perform a test drive. If the diagnosis code has occurred even during the test drive, start the operation and then replace the A20 (SAM). Inspection completed
	Step8	Refer to the help menu for Nos. other than above. *1: M/T *2: DUONIC *3: ISS (With Lock brake) *4: ISS (Without Lock brake) *5: Lock brake (Without ISS) *6: Other than *3,*4,*5 *7: Full-automatic air conditioner *8: Auto leveling *9: Manual leveling Inspection procedure Repair or replace electrical lines. Reinstall all the removed connectors. Turn the starter switch in ON. Go to step9
	Step9	Inspection procedure Is this diagnosis code still active? No: Go to step10 Yes: Go to step2
	Step10	Inspection completed

https://truckmanualshub.com/

520739-2: Error in CAN reception from component “Antilock brake system Control unit”

Generation condition		• Anti-lock brake system-equipped vehicle (ABS Cooperative Control Equipped) • Supply voltage 8 to 16 V with starter switch ON • 3 seconds or more have elapsed since starter switch was turned ON. • TSC1_AREX_BS not received (Unreceived)
Recoverability		• System has recovered if signal becomes normal after starter switch is turned OFF and then ON (thus reenergizing electronic control unit) or while starter switch is in ON position. (Received)
Control effected by electronic control unit		• Auto downshifting not permitted <in Auto Mode> • Shifting to roll-off gear temporarily permitted after detection of vehicle stationary for 3 seconds <in Auto Mode> • Normal gear shifting permitted <in Manual Mode>
Possible causes		• Controller area network communication line open, shorted to battery, shorted to ground, or shorted otherwise • Defective controller area network resistor • Defective hydraulic unit (electronic control unit) • Defective DUONIC™ electronic control unit
Inspection procedure	Step1	Inspect or verify the following items. Repair or replace faulty items as necessary. If all ECUs connected to the common CAN communication line are unable to communicate, check the common CAN communication line for shorting. Go to step2
	Step2	Refer to the help menu for Nos. other than above. *1: M/T *2: DUONIC *3: ISS (With Lock brake) *4: ISS (Without Lock brake) *5: Lock brake (Without ISS) *6: Other than *3,*4,*5 *7: Full-automatic air conditioner *8: Auto leveling *9: Manual leveling Inspection procedure Turn the starter switch in OFF. Remove the ECU connector attached to CAN communication line. Check CAN line for open circuit, short circuit to positive, short circuit to ground or short circuit to another electrical line. Special features If any visible damage is found, repair or replace the affected part and interrupt the inspection process. Is any abnormality recognized? No: Go to step3 Yes: Go to step8
	Step3	Inspection procedure Insert the multimeter probe in the A20 (SAM) connector and measure resistance across A20.X7.18/1 and A20.X7.18/11. Special features Be sure to check the ECU with its connection removed from the connector. Is any abnormality recognized? No: Go to step4 Yes: Go to step7
	Step4	Inspection procedure Insert the multimeter probe in the A4 (Combustion engine Control unit) connector and measure resistance across A4.X2.94/62 and A4.X2.94/61. Special features Be sure to check the ECU with its connection removed from the connector. Is any abnormality recognized? No: Go to step5 Yes: Go to step6

https://truckmanualshub.com/

Inspection procedure	Step5	Refer to the help menu for Nos. other than above. *1: M/T *2: DUONIC *3: ISS (With Lock brake) *4: ISS (Without Lock brake) *5: Lock brake (Without ISS) *6: Other than *3,*4,*5 *7: Full-automatic air conditioner *8: Auto leveling *9: Manual leveling Inspection procedure The harness from the ECU to CAN communication line is probably faulty or the ECU may have an internal fault. Identify the faulty spot by using the following procedure and repair or replace the faulty part. Use the short test to check for a fault code of the CAN communication failure of the entire vehicle. Remove all related ECUs one at a time and use the short test to check for a fault code of the CAN communication failure. With all related ECUs removed, mount one ECU at a time and check for a defective harness within the ECU. Inspection completed
	Step6	Inspection procedure Turn the starter switch in OFF. Reinstall all the removed connectors. Erase fault memory and perform a test drive. If the diagnosis code has occurred even during the test drive, start the operation and then replace the A4 (Combustion engine Control unit). Inspection completed
	Step7	Inspection procedure Turn the starter switch in OFF. Reinstall all the removed connectors. Erase fault memory and perform a test drive. If the diagnosis code has occurred even during the test drive, start the operation and then replace the A20 (SAM). Inspection completed
	Step8	Refer to the help menu for Nos. other than above. *1: M/T *2: DUONIC *3: ISS (With Lock brake) *4: ISS (Without Lock brake) *5: Lock brake (Without ISS) *6: Other than *3,*4,*5 *7: Full-automatic air conditioner *8: Auto leveling *9: Manual leveling Inspection procedure Repair or replace electrical lines. Reinstall all the removed connectors. Turn the starter switch in ON. Go to step9
	Step9	Inspection procedure Is this diagnosis code still active? No: Go to step10 Yes: Go to step2
	Step10	Inspection completed

https://truckmanualshub.com/

520740-3: Component Parking gear switch is constantly on.

Generation condition		• Supply voltage 8 to 16 V with starter switch ON • Change lever out of P • Parking gear switch ON
Recoverability		• System has recovered if signal becomes normal after starter switch is turned OFF and then ON (thus reenergizing electronic control unit) or parking gear switch OFF while starter switch is in ON position.
Control effected by electronic control unit		• None
Possible causes		• Wire between shift change lever and control lever out of adjustment • Harness between parking gear switch and DUONIC™ electronic control unit shorted to battery of open • Defective parking gear switch • Defective transmission • Defective DUONIC™ electronic control unit
Inspection procedure	Step1	Inspect or verify the following items. Repair or replace faulty items as necessary. Wire between A26 (Selector lever) and Control lever For procedures, refer to the Shop Manual. Go to Step2
	Step2	Inspection procedure Turn the starter switch in OFF. Remove the connector of S20 (Parking gear switch). Make a visual check on each connector. Measure the resistance between S20 (Parking gear switch) terminals to check for open-circuit. Special features If any visible damage is found, repair or replace the affected part and interrupt the inspection process. No abnormalities? No: Go to Step3 Yes: Go to Step4
	Step3	Inspection procedure Turn the starter switch in OFF. Replace component “S20 (Parking gear switch)”. Reinstall all the removed connectors. Erase fault memory and perform a test drive. If the diagnosis code has occurred even during the test drive, start the operation and then replace the A28 (DUONIC™ Control unit). Inspection completed
	Step4	Inspection procedure Turn the starter switch in OFF. Remove the connector of A1 ECU. Check electrical line between pins A28.X2.40/108 and S20.2/1 for open circuit. Check electrical line between pins S20.2/2 and Ground for open circuit. Is any abnormality recognized? No: Go to Step5 Yes: Go to Step7
	Step5	Inspect or verify the following items. Repair or replace faulty items as necessary. Transmission For procedures, refer to the Shop Manual Go to Step6
	Step6	Inspection procedure Turn the starter switch in OFF. Reinstall all the removed connectors. Erase fault memory and perform a test drive. If the diagnosis code has occurred even during the test drive, start the operation and then replace the A28 (DUONIC™ Control unit). Inspection completed

https://truckmanualshub.com/

Inspection procedure	Step7	Inspection procedure Repair or replace electrical lines. Reinstall all the removed connectors. Erase fault memory and perform a test drive. If the diagnosis code has occurred even during the test drive, start the operation and then replace the A28 (DUONIC^{TM} Control unit). Inspection completed

520740-4: Component “Parking gear switch” is always OFF.

Generation condition		• Supply voltage 8 to 16 V with starter switch ON • Change lever in P • Parking gear switch OFF
Recoverability		• System has recovered if signal becomes normal after starter switch is turned OFF and then ON (thus reenergizing electronic control unit) or parking gear switch ON while starter switch is in ON position.
Control effected by electronic control unit		• None
Possible causes		• Wire between shift change lever and control lever out of adjustment • Harness between parking gear switch and DUONIC^{TM} electronic control unit shorted to ground • Defective parking gear switch • Defective transmission • Defective DUONIC^{TM} electronic control unit
Inspection procedure	Step1	Inspect or verify the following items. Repair or replace faulty items as necessary. Wire between A26 (Selector lever) and Control lever For procedures, refer to the Shop Manual. Go to Step2
	Step2	Inspection procedure Turn the starter switch in OFF. Remove the connector of S20 (Parking gear switch). Make a visual check on each connector. Measure the resistance between S20 (Parking gear switch) and ground or each terminal to check for short-circuit and electrical leakage. Special features If any visible damage is found, repair or replace the affected part and interrupt the inspection process. No abnormalities? No: Go to Step3 Yes: Go to Step4
	Step3	Inspection procedure Turn the starter switch in OFF. Replace component “S20 (Parking gear switch)”. Reinstall all the removed connectors. Erase fault memory and perform a test drive. If the diagnosis code has occurred even during the test drive, start the operation and then replace the A28 (DUONIC^{TM} Control unit). Inspection completed
	Step4	Inspection procedure Turn the starter switch in OFF. Remove the connector of A1 ECU. Test electrical line between pins A28.X2.40/108 and S20.2/1 for short circuit to ground. Is any abnormality recognized? No: Go to Step5 Yes: Go to Step7
	Step5	Inspect or verify the following items. Repair or replace faulty items as necessary. Transmission For procedures, refer to the Shop Manual Go to Step6

https://truckmanualshub.com/

Inspection procedure	Step6	Inspection procedure Turn the starter switch in OFF. Reinstall all the removed connectors. Erase fault memory and perform a test drive. If the diagnosis code has occurred even during the test drive, start the operation and then replace the A28 (DUONIC™ Control unit). Inspection completed
	Step7	Inspection procedure Repair or replace electrical lines. Reinstall all the removed connectors. Erase fault memory and perform a test drive. If the diagnosis code has occurred even during the test drive, start the operation and then replace the A28 (DUONIC™ Control unit). Inspection completed

520741-2: Error in CAN reception from component “Antilock brake system Control unit”

Generation condition		• Anti-lock brake system-equipped vehicle (ABS Cooperative Control Equipped) • Supply voltage 8 to 16 V with starter switch ON • 3 seconds or more have elapsed since starter switch was turned ON. • EBC2_BS not received (Unreceived)
Recoverability		• System has recovered if signal becomes normal after starter switch is turned OFF and then ON (thus reenergizing electronic control unit) or while starter switch is in ON position. (Received)
Control effected by electronic control unit		• None
Possible causes		• Controller area network communication line open, shorted to battery, shorted to ground, or shorted otherwise • Defective controller area network resistor • Defective hydraulic unit (electronic control unit) • Defective DUONIC™ electronic control unit
Inspection procedure	Step1	Inspect or verify the following items. Repair or replace faulty items as necessary. If all ECUs connected to the common CAN communication line are unable to communicate, check the common CAN communication line for shorting. Go to step2
	Step2	Refer to the help menu for Nos. other than above. *1: M/T *2: DUONIC *3: ISS (With Lock brake) *4: ISS (Without Lock brake) *5: Lock brake (Without ISS) *6: Other than *3,*4,*5 *7: Full-automatic air conditioner *8: Auto leveling *9: Manual leveling Inspection procedure Turn the starter switch in OFF. Remove the ECU connector attached to CAN communication line. Check CAN line for open circuit, short circuit to positive, short circuit to ground or short circuit to another electrical line. Special features If any visible damage is found, repair or replace the affected part and interrupt the inspection process. Is any abnormality recognized? No: Go to step3 Yes: Go to Step8
	Step3	Inspection procedure Insert the multimeter probe in the A20 (SAM) connector and measure resistance across A20.X7.18/1 and A20.X7.18/11. Special features Be sure to check the ECU with its connection removed from the connector. Is any abnormality recognized? No: Go to step4 Yes: Go to Step7

https://truckmanualshub.com/

Inspection procedure	Step4	Inspection procedure Insert the multimeter probe in the A4 (Combustion engine Control unit) connector and measure resistance across A4.X2.94/62 and A4.X2.94/61. Special features Be sure to check the ECU with its connection removed from the connector. Is any abnormality recognized? No: Go to step5 Yes: Go to Step6
	Step5	Refer to the help menu for Nos. other than above. *1: M/T *2: DUONIC *3: ISS (With Lock brake) *4: ISS (Without Lock brake) *5: Lock brake (Without ISS) *6: Other than *3,*4,*5 *7: Full-automatic air conditioner *8: Auto leveling *9: Manual leveling Inspection procedure The harness from the ECU to CAN communication line is probably faulty or the ECU may have an internal fault. Identify the faulty spot by using the following procedure and repair or replace the faulty part. Use the short test to check for a fault code of the CAN communication failure of the entire vehicle. Remove all related ECUs one at a time and use the short test to check for a fault code of the CAN communication failure. With all related ECUs removed, mount one ECU at a time and check for a defective harness within the ECU. Inspection completed
	Step6	Inspection procedure Turn the starter switch in OFF. Reinstall all the removed connectors. Erase fault memory and perform a test drive. If the diagnosis code has occurred even during the test drive, start the operation and then replace the A4 (Combustion engine Control unit). Inspection completed
	Step7	Inspection procedure Turn the starter switch in OFF. Reinstall all the removed connectors. Erase fault memory and perform a test drive. If the diagnosis code has occurred even during the test drive, start the operation and then replace the A20 (SAM). Inspection completed
	Step8	Refer to the help menu for Nos. other than above. *1: M/T *2: DUONIC *3: ISS (With Lock brake) *4: ISS (Without Lock brake) *5: Lock brake (Without ISS) *6: Other than *3,*4,*5 *7: Full-automatic air conditioner *8: Auto leveling *9: Manual leveling Inspection procedure Repair or replace electrical lines. Reinstall all the removed connectors. Turn the starter switch in ON. Go to step9
	Step9	Inspection procedure Is this diagnosis code still active? No: Go to step10 Yes: Go to step2
	Step10	Inspection completed

https://truckmanualshub.com/

520742-2: Error in CAN reception from component “Combustion engine Control unit”

Generation condition		• Supply voltage 8 to 16 V with starter switch ON • 3 seconds or more have elapsed since starter switch was turned ON. • CCVS_MCM not received (Unreceived)
Recoverability		• System has recovered if signal becomes normal after starter switch is turned OFF and then ON (thus reenergizing electronic control unit) or while starter switch is in ON position. (Received)
Control effected by electronic control unit		• Cruise speed change mode is exited. • Cruise termination request is continuously issued.
Possible causes		• Controller area network communication line open, shorted to battery, shorted to ground, or shorted otherwise • Defective controller area network resistor • Defective engine electronic control unit • Defective DUONIC™ electronic control unit
Inspection procedure	Step1	Inspect or verify the following items. Repair or replace faulty items as necessary. If all ECUs connected to the common CAN communication line are unable to communicate, check the common CAN communication line for shorting. Go to step2
	Step2	Refer to the help menu for Nos. other than above. *1: M/T *2: DUONIC *3: ISS (With Lock brake) *4: ISS (Without Lock brake) *5: Lock brake (Without ISS) *6: Other than *3,*4,*5 *7: Full-automatic air conditioner *8: Auto leveling *9: Manual leveling Inspection procedure Turn the starter switch in OFF. Remove the ECU connector attached to CAN communication line. Check CAN line for open circuit, short circuit to positive, short circuit to ground or short circuit to another electrical line. Special features If any visible damage is found, repair or replace the affected part and interrupt the inspection process. Is any abnormality recognized? No: Go to step3 Yes: Go to step8
	Step3	Inspection procedure Insert the multimeter probe in the A20 (SAM) connector and measure resistance across A20.X7.18/1 and A20.X7.18/11. Special features Be sure to check the ECU with its connection removed from the connector. Is any abnormality recognized? No: Go to step4 Yes: Go to step7
	Step4	Inspection procedure Insert the multimeter probe in the A4 (Combustion engine Control unit) connector and measure resistance across A4.X2.94/62 and A4.X2.94/61. Special features Be sure to check the ECU with its connection removed from the connector. Is any abnormality recognized? No: Go to step5 Yes: Go to step6

https://truckmanualshub.com/

	Step5	Refer to the help menu for Nos. other than above. *1: M/T *2: DUONIC *3: ISS (With Lock brake) *4: ISS (Without Lock brake) *5: Lock brake (Without ISS) *6: Other than *3,*4,*5 *7: Full-automatic air conditioner *8: Auto leveling *9: Manual leveling Inspection procedure The harness from the ECU to CAN communication line is probably faulty or the ECU may have an internal fault. Identify the faulty spot by using the following procedure and repair or replace the faulty part. Use the short test to check for a fault code of the CAN communication failure of the entire vehicle. Remove all related ECUs one at a time and use the short test to check for a fault code of the CAN communication failure. With all related ECUs removed, mount one ECU at a time and check for a defective harness within the ECU. Inspection completed
	Step6	Inspection procedure Turn the starter switch in OFF. Reinstall all the removed connectors. Erase fault memory and perform a test drive. If the diagnosis code has occurred even during the test drive, start the operation and then replace the A4 (Combustion engine Control unit). Inspection completed
	Step7	Inspection procedure Turn the starter switch in OFF. Reinstall all the removed connectors. Erase fault memory and perform a test drive. If the diagnosis code has occurred even during the test drive, start the operation and then replace the A20 (SAM). Inspection completed
	Step8	Refer to the help menu for Nos. other than above. *1: M/T *2: DUONIC *3: ISS (With Lock brake) *4: ISS (Without Lock brake) *5: Lock brake (Without ISS) *6: Other than *3,*4,*5 *7: Full-automatic air conditioner *8: Auto leveling *9: Manual leveling Inspection procedure Repair or replace electrical lines. Reinstall all the removed connectors. Turn the starter switch in ON. Go to step9
	Step9	Inspection procedure Is this diagnosis code still active? No: Go to step10 Yes: Go to step2
	Step10	Inspection completed

https://truckmanualshub.com/

520743-2: Error in CAN reception from component “Combustion engine Control unit”

Generation condition		• Supply voltage 8 to 16 V with starter switch ON • 3 seconds or more have elapsed since starter switch was turned ON. • ET1_MCM not received for 10 seconds (Unreceived)
Recoverability		• System has recovered if signal becomes normal after starter switch is turned OFF and then ON (thus reenergizing electronic control unit) or while starter switch is in ON position. (Received)
Control effected by electronic control unit		• None
Possible causes		• Controller area network communication line open, shorted to battery, shorted to ground, or shorted otherwise • Defective controller area network resistor • Defective engine electronic control unit • Defective DUONIC^{TM} electronic control unit
Inspection procedure	Step1	Inspect or verify the following items. Repair or replace faulty items as necessary. If all ECUs connected to the common CAN communication line are unable to communicate, check the common CAN communication line for shorting. Go to step2
	Step2	Refer to the help menu for Nos. other than above. *1: M/T *2: DUONIC *3: ISS (With Lock brake) *4: ISS (Without Lock brake) *5: Lock brake (Without ISS) *6: Other than *3,*4,*5 *7: Full-automatic air conditioner *8: Auto leveling *9: Manual leveling Inspection procedure Turn the starter switch in OFF. Remove the ECU connector attached to CAN communication line. Check CAN line for open circuit, short circuit to positive, short circuit to ground or short circuit to another electrical line. Special features If any visible damage is found, repair or replace the affected part and interrupt the inspection process. Is any abnormality recognized? No: Go to step3 Yes: Go to step8
	Step3	Inspection procedure Insert the multimeter probe in the A20 (SAM) connector and measure resistance across A20.X7.18/1 and A20.X7.18/11. Special features Be sure to check the ECU with its connection removed from the connector. Is any abnormality recognized? No: Go to step4 Yes: Go to step7
	Step4	Inspection procedure Insert the multimeter probe in the A4 (Combustion engine Control unit) connector and measure resistance across A4.X2.94/62 and A4.X2.94/61. Special features Be sure to check the ECU with its connection removed from the connector. Is any abnormality recognized? No: Go to step5 Yes: Go to step6

https://truckmanualshub.com/

Inspection procedure	Step5	Refer to the help menu for Nos. other than above. *1: M/T *2: DUONIC *3: ISS (With Lock brake) *4: ISS (Without Lock brake) *5: Lock brake (Without ISS) *6: Other than *3,*4,*5 *7: Full-automatic air conditioner *8: Auto leveling *9: Manual leveling Inspection procedure The harness from the ECU to CAN communication line is probably faulty or the ECU may have an internal fault. Identify the faulty spot by using the following procedure and repair or replace the faulty part. Use the short test to check for a fault code of the CAN communication failure of the entire vehicle. Remove all related ECUs one at a time and use the short test to check for a fault code of the CAN communication failure. With all related ECUs removed, mount one ECU at a time and check for a defective harness within the ECU. Inspection completed
	Step6	Inspection procedure Turn the starter switch in OFF. Reinstall all the removed connectors. Erase fault memory and perform a test drive. If the diagnosis code has occurred even during the test drive, start the operation and then replace the A4 (Combustion engine Control unit). Inspection completed
	Step7	Inspection procedure Turn the starter switch in OFF. Reinstall all the removed connectors. Erase fault memory and perform a test drive. If the diagnosis code has occurred even during the test drive, start the operation and then replace the A20 (SAM). Inspection completed
	Step8	Refer to the help menu for Nos. other than above. *1: M/T *2: DUONIC *3: ISS (With Lock brake) *4: ISS (Without Lock brake) *5: Lock brake (Without ISS) *6: Other than *3,*4,*5 *7: Full-automatic air conditioner *8: Auto leveling *9: Manual leveling Inspection procedure Repair or replace electrical lines. Reinstall all the removed connectors. Turn the starter switch in ON. Go to step9
	Step9	Inspection procedure Is this diagnosis code still active? No: Go to step10 Yes: Go to step2
	Step10	Inspection completed

https://truckmanualshub.com/

520744-31:Default setting failed to be executed.

Generation condition		• Supply voltage 8 to 16 V with starter switch ON • 5 seconds have elapsed since starter switch was turned ON.
Recoverability		• System has recovered if signal becomes normal after starter switch is turned OFF and then ON (thus reenergizing electronic control unit) or initialization completed while starter switch is in ON position.
Control effected by electronic control unit		• None
Possible causes		• Initialization not completed yet • Incorrect initialization
Inspection procedure	Step1	Inspection procedure Perform the appropriate settings. Set items Default settings of the DUONIC™ system. For procedures, refer to the Shop Manual. Inspection completed

https://truckmanualshub.com/

520745-3: The signal voltage of component Acceleration sensor2 is too high.

Generation condition		• Supply voltage 8 to 16 V with starter switch ON • Signal voltage of G-sensor 2 has been higher than 4.55 V at least for 3 seconds.
Recoverability		• The system recovers if any normal signal is input when starter switch is turned OFF and then ON again (electronic control unit is reenergized) or if signal voltage of G-sensor 2 lowers below 4.50 V when starter switch is in ON position.
Control effected by electronic control unit		• None
Possible causes		• Signal harness between G-sensor 2 and DUONIC™ electronic control unit shorted to battery • Ground harness between G-sensor 2 and DUONIC™ electronic control unit open • Defective G-sensor 2 • Defective DUONIC™ electronic control unit
Inspection procedure	Step1	If corresponding fault codes are also present on other components, check the common power supply and common ground point " for open circuit and short circuit. Go to step2
	Srep2	Srep2 Inspection procedure Turn the starter switch in OFF. Remove the connector of B49 (Acceleration sensor2). Make a visual check on each connector. Measure the resistance between B49 (Acceleration sensor2) and ground or each terminal to check for short-circuit and electrical leakage. Measure the resistance between B49 (Acceleration sensor2) terminals to check for open-circuit. Special features If any visible damage is found, repair or replace the affected part and interrupt the inspection process. No abnormalities? No: Go to step3 Yes: Go to step4
	Step3	Inspection procedure Turn the starter switch in OFF. Replace component “B49 (Acceleration sensor2)”. Reinstall all the removed connectors. Erase fault memory and perform a test drive. If the diagnosis code has occurred even during the test drive, start the operation and then replace the A28 (DUONIC™ Control unit). Inspection completed
	Step4	Inspection procedure Turn the starter switch in OFF. Remove the connector of A28 (DUONIC™ Control unit). Check the circuit across B49 (Acceleration sensor2) and A28 (DUONIC™ Control unit) for open or short circuit. Is any abnormality recognized? No: Go to step5 Yes: Go to step6
	Step5	Inspection procedure Turn the starter switch in OFF. Reinstall all the removed connectors. Erase fault memory and perform a test drive. If the diagnosis code has occurred even during the test drive, start the operation and then replace the A28 (DUONIC™ Control unit). Inspection completed
	Step6	Inspection procedure Repair or replace electrical lines. Reinstall all the removed connectors. Erase fault memory and perform a test drive. If the diagnosis code has occurred even during the test drive, start the operation and then replace the A28 (DUONIC™ Control unit). Inspection completed

https://truckmanualshub.com/

520745-4: The signal voltage of component Acceleration sensor2 is too high.

Generation condition		• Supply voltage 8 to 16 V with starter switch ON • Signal voltage of G-sensor 2 has been lower than 0.45 V at least for 3 seconds.
Recoverability		• The system recovers if any normal signal is input when starter switch is turned OFF and then ON again (electronic control unit is reenergized) or if signal voltage of G-sensor 2 rises to 0.50 V or higher when starter switch is in ON position.
Control effected by electronic control unit		• None
Possible causes		• Signal harness between G-sensor 2 and DUONIC™ electronic control unit open or shorted to ground • Power harness between G-sensor 2 and DUONIC™ electronic control unit open • Defective G-sensor 2 • Defective DUONIC™ electronic control unit
Inspection procedure	Step1	If corresponding fault codes are also present on other components, check the common power supply and common ground point " for open circuit and short circuit. Go to step2
	Step2	Inspection procedure Turn the starter switch in OFF. Remove the connector of B49 (Acceleration sensor2). Make a visual check on each connector. Measure the resistance between B49 (Acceleration sensor2) and ground or each terminal to check for short-circuit and electrical leakage. Measure the resistance between B49 (Acceleration sensor2) terminals to check for open-circuit. Special features If any visible damage is found, repair or replace the affected part and interrupt the inspection process. No abnormalities? No: Go to step3 Yes: Go to step4
	Step3	Inspection procedure Turn the starter switch in OFF. Replace component “B49 (Acceleration sensor2)”. Reinstall all the removed connectors. Erase fault memory and perform a test drive. If the diagnosis code has occurred even during the test drive, start the operation and then replace the A28 (DUONIC™ Control unit). Inspection completed
	Step4	Inspection procedure Turn the starter switch in OFF. Remove the connector of A28 (DUONIC™ Control unit). Check the circuit across B49 (Acceleration sensor2) and A28 (DUONIC™ Control unit) for open or short circuit. Is any abnormality recognized? No: Go to step5 Yes: Go to step6
	Step5	Inspection procedure Turn the starter switch in OFF. Reinstall all the removed connectors. Erase fault memory and perform a test drive. If the diagnosis code has occurred even during the test drive, start the operation and then replace the A28 (DUONIC™ Control unit). Inspection completed
	Step6	Inspection procedure Repair or replace electrical lines. Reinstall all the removed connectors. Erase fault memory and perform a test drive. If the diagnosis code has occurred even during the test drive, start the operation and then replace the A28 (DUONIC™ Control unit). Inspection completed

https://truckmanualshub.com/

520746-3: The signal voltage of component Gear shift unit shift stroke sensor1 is too high.

Generation condition		• Supply voltage 8 to 16 V with starter switch ON • Shift Position of cylinder 1 96% or above
Recoverability		• System has recovered if signal becomes normal after starter switch is turned OFF and then ON (thus reenergizing electronic control unit) or Shift Position of cylinder 1 92% or below while starter switch is in ON position.
Control effected by electronic control unit		• Both clutches are kept disengaged. • All gear shift rails but relevant gear shift rail are kept in N. (Target gear locked in N.) • N flashes in meter cluster gear display. (P has priority display.) • Engine control is terminated.
Possible causes		• Signal harness between gear shift unit shift stroke sensor 1 and DUONIC^{TM} electronic control unit shorted to battery or open • Ground/power harness between gear shift unit shift stroke sensor 1 and DUONIC^{TM} electronic control unit open • Defective gear shift unit shift stroke sensor 1 • Defective DUONIC^{TM} electronic control unit
Inspection procedure	Step1	If corresponding fault codes are also present on other components, check the common power supply and common ground point " for open circuit and short circuit. Go to Step2
	Step2	Inspection procedure Turn the starter switch in OFF. Remove the connector of B45 (Gear shift unit shift stroke sensor1). Make a visual check on each connector. Measure the resistance between B45 (Gear shift unit shift stroke sensor1) and ground or each terminal to check for short-circuit and electrical leakage. Measure the resistance between B45 (Gear shift unit shift stroke sensor1) terminals to check for open-circuit. Special features If any visible damage is found, repair or replace the affected part and interrupt the inspection process. No abnormalities? No: Go to Step3 Yes: Go to Step4
	Step3	Inspection procedure Turn the starter switch in OFF. Replace component “B45 (Gear shift unit shift stroke sensor1)”. Reinstall all the removed connectors. Erase fault memory and perform a test drive. If the diagnosis code has occurred even during the test drive, start the operation and then replace the A28 (DUONIC^{TM} Control unit). Inspection completed
	Step4	Inspection procedure Turn the starter switch in OFF. Remove the connector of A28 (DUONIC^{TM} Control unit). Check the circuit across B45 (Gear shift unit shift stroke sensor1) and A28 (DUONIC^{TM} Control unit) for open or short circuit. Is any abnormality recognized? No: Go to Step5 Yes: Go to Step6
	Step5	Inspection procedure Turn the starter switch in OFF. Reinstall all the removed connectors. Erase fault memory and perform a test drive. If the diagnosis code has occurred even during the test drive, start the operation and then replace the A28 (DUONIC^{TM} Control unit). Inspection completed
	Step6	Inspection procedure Repair or replace electrical lines. Reinstall all the removed connectors. Erase fault memory and perform a test drive. If the diagnosis code has occurred even during the test drive, start the operation and then replace the A28 (DUONIC^{TM} Control unit). Inspection completed

https://truckmanualshub.com/

520746-4: The signal voltage of component Gear shift unit shift stroke sensor1 is too low.

Generation condition		• Supply voltage 8 to 16 V with starter switch ON • Shift Position of cylinder 1 4% or below
Recoverability		• System has recovered if signal becomes normal after starter switch is turned OFF and then ON (thus reenergizing electronic control unit) or Shift Position of cylinder 1 8% or above while starter switch is in ON position.
Control effected by electronic control unit		• Both clutches are kept disengaged. • All gear shift rails but relevant gear shift rail are kept in N. (Target gear locked in N.) • N flashes in meter cluster gear display. (P has priority display.) • Engine control is terminated.
Possible causes		• Signal harness between gear shift unit shift stroke sensor 1 and DUONIC^{TM} electronic control unit shorted to ground • Defective gear shift unit shift stroke sensor 1 • Defective DUONIC^{TM} electronic control unit
Inspection procedure	Step1	If corresponding fault codes are also present on other components, check the common power supply and common ground point " for open circuit and short circuit. Go to Step2
	Step2	Inspection procedure Turn the starter switch in OFF. Remove the connector of B45 (Gear shift unit shift stroke sensor1). Make a visual check on each connector. Measure the resistance between B45 (Gear shift unit shift stroke sensor1) and ground or each terminal to check for short-circuit and electrical leakage. Measure the resistance between B45 (Gear shift unit shift stroke sensor1) terminals to check for open-circuit. Special features If any visible damage is found, repair or replace the affected part and interrupt the inspection process. No abnormalities? No: Go to Step3 Yes: Go to Step4
	Step3	Inspection procedure Turn the starter switch in OFF. Replace component “B45 (Gear shift unit shift stroke sensor1)”. Reinstall all the removed connectors. Erase fault memory and perform a test drive. If the diagnosis code has occurred even during the test drive, start the operation and then replace the A28 (DUONIC^{TM} Control unit). Inspection completed
	Step4	Inspection procedure Turn the starter switch in OFF. Remove the connector of A28 (DUONIC^{TM} Control unit). Check the circuit across B45 (Gear shift unit shift stroke sensor1) and A28 (DUONIC^{TM} Control unit) for open or short circuit. Is any abnormality recognized? No: Go to Step5 Yes: Go to Step6
	Step5	Inspection procedure Turn the starter switch in OFF. Reinstall all the removed connectors. Erase fault memory and perform a test drive. If the diagnosis code has occurred even during the test drive, start the operation and then replace the A28 (DUONIC^{TM} Control unit). Inspection completed
	Step6	Inspection procedure Repair or replace electrical lines. Reinstall all the removed connectors. Erase fault memory and perform a test drive. If the diagnosis code has occurred even during the test drive, start the operation and then replace the A28 (DUONIC^{TM} Control unit). Inspection completed

https://truckmanualshub.com/

520747-3: The signal voltage of component Gear shift unit shift stroke sensor2 is too high.

Generation condition		• Supply voltage 8 to 16 V with starter switch ON • Shift Position of cylinder 2 96% or above
Recoverability		• System has recovered if signal becomes normal after starter switch is turned OFF and then ON (thus reenergizing electronic control unit) or Shift Position of cylinder 2 92% or below while starter switch is in ON position.
Control effected by electronic control unit		• Both clutches are kept disengaged. • All gear shift rails but relevant gear shift rail are kept in N. (Target gear locked in N.) • N flashes in meter cluster gear display. (P has priority display.) • Engine control is terminated.
Possible causes		• Signal harness between gear shift unit shift stroke sensor 2 and DUONIC^{TM} electronic control unit shorted to battery or open • Ground / power harness between gear shift unit shift stroke sensor 2 and DUONIC^{TM} electronic control unit open • Defective gear shift unit shift stroke sensor 2 • Defective DUONIC^{TM} electronic control unit
Inspection procedure	Step1	If corresponding fault codes are also present on other components, check the common power supply and common ground point " for open circuit and short circuit. Go to Step2
	Step2	Inspection procedure Turn the starter switch in OFF. Remove the connector of B46 (Gear shift unit shift stroke sensor2). Make a visual check on each connector. Measure the resistance between B46 (Gear shift unit shift stroke sensor2) and ground or each terminal to check for short-circuit and electrical leakage. Measure the resistance between B46 (Gear shift unit shift stroke sensor2) terminals to check for open-circuit. Special features If any visible damage is found, repair or replace the affected part and interrupt the inspection process. No abnormalities? No: Go to Step3 Yes: Go to Step4
	Step3	Inspection procedure Turn the starter switch in OFF. Replace component “B46 (Gear shift unit shift stroke sensor2)”. Reinstall all the removed connectors. Erase fault memory and perform a test drive. If the diagnosis code has occurred even during the test drive, start the operation and then replace the A28 (DUONIC^{TM} Control unit). Inspection completed
	Step4	Inspection procedure Turn the starter switch in OFF. Remove the connector of A28 (DUONIC^{TM} Control unit). Check the circuit across B46 (Gear shift unit shift stroke sensor2) and A28 (DUONIC^{TM} Control unit) for open or short circuit. Is any abnormality recognized? No: Go to Step5 Yes: Go to Step6
	Step5	Inspection procedure Turn the starter switch in OFF. Reinstall all the removed connectors. Erase fault memory and perform a test drive. If the diagnosis code has occurred even during the test drive, start the operation and then replace the A28 (DUONIC^{TM} Control unit). Inspection completed
	Step6	Inspection procedure Repair or replace electrical lines. Reinstall all the removed connectors. Erase fault memory and perform a test drive. If the diagnosis code has occurred even during the test drive, start the operation and then replace the A28 (DUONIC^{TM} Control unit). Inspection completed

https://truckmanualshub.com/

520747-4: The signal voltage of component Gear shift unit shift stroke sensor2 is too low.

Generation condition		• Supply voltage 8 to 16 V with starter switch ON • Shift Position of cylinder 2 4% or below
Recoverability		• System has recovered if signal becomes normal after starter switch is turned OFF and then ON (thus reenergizing electronic control unit) or Shift Position of cylinder 2 8% or above while starter switch is in ON position.
Control effected by electronic control unit		• Both clutches are kept disengaged. • All gear shift rails but relevant gear shift rail are kept in N. (Target gear locked in N.) • N flashes in meter cluster gear display. (P has priority display.) • Engine control is terminated.
Possible causes		• Signal harness between gear shift unit shift stroke sensor 2 and DUONIC™ electronic control unit shorted to ground • Defective gear shift unit shift stroke sensor 2 • Defective DUONIC™ electronic control unit
Inspection procedure	Step1	If corresponding fault codes are also present on other components, check the common power supply and common ground point " for open circuit and short circuit. Go to Step2
	Step2	Inspection procedure Turn the starter switch in OFF. Remove the connector of B46 (Gear shift unit shift stroke sensor2). Make a visual check on each connector. Measure the resistance between B46 (Gear shift unit shift stroke sensor2) and ground or each terminal to check for short-circuit and electrical leakage. Measure the resistance between B46 (Gear shift unit shift stroke sensor2) terminals to check for open-circuit. Special features If any visible damage is found, repair or replace the affected part and interrupt the inspection process. No abnormalities? No: Go to Step3 Yes: Go to Step4
	Step3	Inspection procedure Turn the starter switch in OFF. Replace component “B46 (Gear shift unit shift stroke sensor2)”. Reinstall all the removed connectors. Erase fault memory and perform a test drive. If the diagnosis code has occurred even during the test drive, start the operation and then replace the A28 (DUONIC™ Control unit). Inspection completed
	Step4	Inspection procedure Turn the starter switch in OFF. Remove the connector of A28 (DUONIC™ Control unit). Check the circuit across B46 (Gear shift unit shift stroke sensor2) and A28 (DUONIC™ Control unit) for open or short circuit. Is any abnormality recognized? No: Go to Step5 Yes: Go to Step6
	Step5	Inspection procedure Turn the starter switch in OFF. Reinstall all the removed connectors. Erase fault memory and perform a test drive. If the diagnosis code has occurred even during the test drive, start the operation and then replace the A28 (DUONIC™ Control unit). Inspection completed
	Step6	Inspection procedure Repair or replace electrical lines. Reinstall all the removed connectors. Erase fault memory and perform a test drive. If the diagnosis code has occurred even during the test drive, start the operation and then replace the A28 (DUONIC™ Control unit). Inspection completed

https://truckmanualshub.com/

520748-3: The signal voltage of component Gear shift unit shift stroke sensor3 is too high.

Generation condition		• Supply voltage 8 to 16 V with starter switch ON • Shift Position of cylinder 3 96% or above
Recoverability		• System has recovered if signal becomes normal after starter switch is turned OFF and then ON (thus reenergizing electronic control unit) or Shift Position of cylinder 3 92% or below while starter switch is in ON position.
Control effected by electronic control unit		• Both clutches are kept disengaged. • All gear shift rails but relevant gear shift rail are kept in N. (Target gear locked in N.) • N flashes in meter cluster gear display. (P has priority display.) • Engine control is terminated.
Possible causes		• Signal harness between gear shift unit shift stroke sensor 3 and DUONIC^{TM} electronic control unit shorted to battery or open • Ground/power harness between gear shift unit shift stroke sensor 3 and DUONIC^{TM} electronic control unit open • Defective gear shift unit shift stroke sensor 3 • Defective DUONIC^{TM} electronic control unit
Inspection procedure	Step1	If corresponding fault codes are also present on other components, check the common power supply and common ground point " for open circuit and short circuit. Go to Step2
	Step2	Inspection procedure Turn the starter switch in OFF. Remove the connector of B47 (Gear shift unit shift stroke sensor3). Make a visual check on each connector. Measure the resistance between B47 (Gear shift unit shift stroke sensor3) and ground or each terminal to check for short-circuit and electrical leakage. Measure the resistance between B47 (Gear shift unit shift stroke sensor3) terminals to check for open-circuit. Special features If any visible damage is found, repair or replace the affected part and interrupt the inspection process. No abnormalities? No: Go to Step3 Yes: Go to Step4
	Step3	Inspection procedure Turn the starter switch in OFF. Replace component “B47 (Gear shift unit shift stroke sensor3)”. Reinstall all the removed connectors. Erase fault memory and perform a test drive. If the diagnosis code has occurred even during the test drive, start the operation and then replace the A28 (DUONIC^{TM} Control unit). Inspection completed
	Step4	Inspection procedure Turn the starter switch in OFF. Remove the connector of A28 (DUONIC^{TM} Control unit). Check the circuit across B47 (Gear shift unit shift stroke sensor3) and A28 (DUONIC^{TM} Control unit) for open or short circuit. Is any abnormality recognized? No: Go to Step5 Yes: Go to Step6
	Step5	Inspection procedure Turn the starter switch in OFF. Reinstall all the removed connectors. Erase fault memory and perform a test drive. If the diagnosis code has occurred even during the test drive, start the operation and then replace the A28 (DUONIC^{TM} Control unit). Inspection completed
	Step6	Inspection procedure Repair or replace electrical lines. Reinstall all the removed connectors. Erase fault memory and perform a test drive. If the diagnosis code has occurred even during the test drive, start the operation and then replace the A28 (DUONIC^{TM} Control unit). Inspection completed

https://truckmanualshub.com/

520748-4: The signal voltage of component Gear shift unit shift stroke sensor3 is too low.

Generation condition		• Supply voltage 8 to 16 V with starter switch ON • Shift Position of cylinder 3 4% or below
Recoverability		• System has recovered if signal becomes normal after starter switch is turned OFF and then ON (thus reenergizing electronic control unit) or Shift Position of cylinder 3 8% or above while starter switch is in ON position.
Control effected by electronic control unit		• Both clutches are kept disengaged. • All gear shift rails but relevant gear shift rail are kept in N. (Target gear locked in N.) • N flashes in meter cluster gear display. (P has priority display.) • Engine control is terminated.
Possible causes		• Signal harness between gear shift unit shift stroke sensor 3 and DUONIC™ electronic control unit shorted to ground • Defective gear shift unit shift stroke sensor 3 • Defective DUONIC™ electronic control unit
Inspection procedure	Step1	If corresponding fault codes are also present on other components, check the common power supply and common ground point " for open circuit and short circuit. Go to Step2
	Step2	Inspection procedure Turn the starter switch in OFF. Remove the connector of B47 (Gear shift unit shift stroke sensor3). Make a visual check on each connector. Measure the resistance between B47 (Gear shift unit shift stroke sensor3) and ground or each terminal to check for short-circuit and electrical leakage. Measure the resistance between B47 (Gear shift unit shift stroke sensor3) terminals to check for open-circuit. Special features If any visible damage is found, repair or replace the affected part and interrupt the inspection process. No abnormalities? No: Go to Step3 Yes: Go to Step4
	Step3	Inspection procedure Turn the starter switch in OFF. Replace component “B47 (Gear shift unit shift stroke sensor3)”. Reinstall all the removed connectors. Erase fault memory and perform a test drive. If the diagnosis code has occurred even during the test drive, start the operation and then replace the A28 (DUONIC™ Control unit). Inspection completed
	Step4	Inspection procedure Turn the starter switch in OFF. Remove the connector of A28 (DUONIC™ Control unit). Check the circuit across B47 (Gear shift unit shift stroke sensor3) and A28 (DUONIC™ Control unit) for open or short circuit. Is any abnormality recognized? No: Go to Step5 Yes: Go to Step6
	Step5	Inspection procedure Turn the starter switch in OFF. Reinstall all the removed connectors. Erase fault memory and perform a test drive. If the diagnosis code has occurred even during the test drive, start the operation and then replace the A28 (DUONIC™ Control unit). Inspection completed
	Step6	Inspection procedure Repair or replace electrical lines. Reinstall all the removed connectors. Erase fault memory and perform a test drive. If the diagnosis code has occurred even during the test drive, start the operation and then replace the A28 (DUONIC™ Control unit). Inspection completed

https://truckmanualshub.com/

520749-2: Error in CAN reception from component "Combustion engine Control unit"

Generation condition		• Supply voltage 8 to 16 V with starter switch ON • 3 seconds or more have elapsed since starter switch was turned ON. • There are no TC1_MCM inputs. (Unreceived)
Recoverability		• The system recovers if any normal signal is input when starter switch is turned OFF and then ON again (electronic control unit is reenergized) or if the relevant signal is received when starter switch is in ON position. (Received)
Control effected by electronic control unit		• None
Possible causes		• CAN communication line open or shorted to battery, ground or another circuit • Defective CAN resistor • Defective engine electronic control unit • Defective DUONIC™ electronic control unit
Inspection procedure	Step1	Inspect or verify the following items. Repair or replace faulty items as necessary. If all ECUs connected to the common CAN communication line are unable to communicate, check the common CAN communication line for shorting. Go to step2
	Step2	Refer to the help menu for Nos. other than above. *1: M/T *2: DUONIC *3: ISS (With Lock brake) *4: ISS (Without Lock brake) *5: Lock brake (Without ISS) *6: Other than *3,*4,*5 *7: Full-automatic air conditioner *8: Auto leveling *9: Manual leveling Inspection procedure Turn the starter switch in OFF. Remove the ECU connector attached to CAN communication line. Check CAN line for open circuit, short circuit to positive, short circuit to ground or short circuit to another electrical line. Special features If any visible damage is found, repair or replace the affected part and interrupt the inspection process. Is any abnormality recognized? No: Go to step3 Yes: Go to step8
	Step3	Inspection procedure Insert the multimeter probe in the A20 (SAM) connector and measure resistance across A20.X7.18/1 and A20.X7.18/11. Special features Be sure to check the ECU with its connection removed from the connector. Is any abnormality recognized? No: Go to step4 Yes: Go to step7
	Step4	Inspection procedure Insert the multimeter probe in the A4 (Combustion engine Control unit) connector and measure resistance across A4.X2.94/62 and A4.X2.94/61. Special features Be sure to check the ECU with its connection removed from the connector. Is any abnormality recognized? No: Go to step5 Yes: Go to step6

https://truckmanualshub.com/

Inspection procedure	Step5	Refer to the help menu for Nos. other than above. *1: M/T *2: DUONIC *3: ISS (With Lock brake) *4: ISS (Without Lock brake) *5: Lock brake (Without ISS) *6: Other than *3,*4,*5 *7: Full-automatic air conditioner *8: Auto leveling *9: Manual leveling Inspection procedure The harness from the ECU to CAN communication line is probably faulty or the ECU may have an internal fault. Identify the faulty spot by using the following procedure and repair or replace the faulty part. Use the short test to check for a fault code of the CAN communication failure of the entire vehicle. Remove all related ECUs one at a time and use the short test to check for a fault code of the CAN communication failure. With all related ECUs removed, mount one ECU at a time and check for a defective harness within the ECU. Inspection completed
	Step6	Inspection procedure Turn the starter switch in OFF. Reinstall all the removed connectors. Erase fault memory and perform a test drive. If the diagnosis code has occurred even during the test drive, start the operation and then replace the A4 (Combustion engine Control unit). Inspection completed
	Step7	Inspection procedure Turn the starter switch in OFF. Reinstall all the removed connectors. Erase fault memory and perform a test drive. If the diagnosis code has occurred even during the test drive, start the operation and then replace the A20 (SAM). Inspection completed
	Step8	Refer to the help menu for Nos. other than above. *1: M/T *2: DUONIC *3: ISS (With Lock brake) *4: ISS (Without Lock brake) *5: Lock brake (Without ISS) *6: Other than *3,*4,*5 *7: Full-automatic air conditioner *8: Auto leveling *9: Manual leveling Inspection procedure Repair or replace electrical lines. Reinstall all the removed connectors. Turn the starter switch in ON. Go to step9
	Step9	Inspection procedure Is this diagnosis code still active? No: Go to step10 Yes: Go to step2
	Step10	Inspection completed

https://truckmanualshub.com/

520750-2: Faulty component DUONIC™ Control unit

Generation condition		• Supply voltage 8 to 16 V with starter switch ON • EEPROM checksum error (EEPROM failure status = Fail)
Recoverability		• System has recovered if signal becomes normal after starter switch is turned OFF and then ON (thus reenergizing electronic control unit).
Control effected by electronic control unit		• Abnormal checksum data are replaced with normal data. • Initialization if both main and sub memory regions are abnormal.
Possible causes		• Harness between DUONIC™ electronic control unit and battery open or shorted to ground • Malfunction of battery • Defective alternator • Defective DUONIC™ electronic control unit
Inspection procedure	Step1	Inspection procedure Check that the fuse F36 is not blown out. If any visible damage is found, repair or replace the affected part and interrupt the inspection process. Go to Step2
	Step2	Inspection procedure Is this diagnosis code still active? No: Go to Step12 Yes: Go to Step3
	Step3	Inspection procedure Check if any of other ECUs has stored the diagnosis code representing abnormal power supply (power supply without passing through SAM). Are current fault codes present? No: Go to Step4 Yes: Go to Step6
	Step4	Inspection procedure Turn the starter switch in OFF. Remove the connector of A28 (DUONIC™ Control unit). Remove the connector of G1 (Battery). Check electrical line between pins A28.X2.40/117 and A28.X2.40/118 and Battery terminal + pole for open circuit. Test electrical line between pins A28.X2.40/117 and A28.X2.40/118 and Battery terminal + pole for short circuit to ground. Is any abnormality recognized No: Go to Step9 Yes: Go to Step5
	Step5	Inspection procedure Repair or replace electrical lines. Reinstall all the removed connectors. Turn the starter switch in ON.
	Step6	Inspection procedure Turn the starter switch in OFF. Remove the connector of A28 (DUONIC™ Control unit). Remove the connector of G1 (Battery). Check electrical line between pins A28.X2.40/117 and A28.X2.40/118 and Battery terminal + pole for open circuit. Test electrical line between pins A28.X2.40/117 and A28.X2.40/118 and Battery terminal + pole for short circuit to ground. Is any abnormality recognized? No: Go to Step7 Yes: Go to Step13
	Step7	Inspection procedure Measure the battery voltage. Specified value: 12V Is any abnormality recognized? No: Go to Step8 Yes: Go to Step11

https://truckmanualshub.com/

Inspection procedure	Step8	Inspection procedure Check the function of G2 (Alternator). Is any abnormality recognized? For procedures, refer to the Shop Manual No: Go to Step9 Yes: Go to Step10
	Step9	Inspection procedure Turn the starter switch in OFF. Reinstall all the removed connectors. Erase fault memory and perform a test drive. If the diagnosis code has occurred even during the test drive, start the operation and then replace the A28 (DUONIC^{TM} Control unit). Go to Step12
	Step10	Inspection procedure Replace component “G2 (Alternator)”. Reinstall all the removed connectors. Turn the starter switch in ON.
	Step11	Inspection procedure Replace component “G1 (Battery)”. Reinstall all the removed connectors. Turn the starter switch in ON. Go to Step9
	Step12	Inspection completed
	Step13	Inspection procedure Repair or replace electrical lines. Reinstall all the removed connectors. Turn the starter switch in ON.

520751-7: Forward gear shift not possible(5th,6th)

Generation condition		• Diagnosis Code 785-3 not generated • 3 attempts to engage 5th/6th gear on cylinder 1 failed.
Recoverability		• System has recovered if signal becomes normal after starter switch is turned OFF and then ON (thus reenergizing electronic control unit).
Control effected by electronic control unit		[Prior to vehicle stationary judgment] • Both clutches are kept disengaged • All gear shift rails are kept in N. (Target gear locked in N.) • N flashes in meter cluster gear display. (P has priority display.) • Engine control is terminated. [Upon vehicle stationary judgment] • Gear pre-select not permitted • Vehicle continuously driven in F-2nd/R-Hi
Possible causes		• Gear position initialization not completed yet • Defective gear shift unit magnetic valve • Defective transmission • Defective DUONIC^{TM} electronic control unit
Inspection procedure	Step1	Inspection procedure Inspect the suspected factors mentioned above sequentially to locate faulty parts. Repair or replace the faulty part as necessary.

https://truckmanualshub.com/

520752-7: Backward gear shift not possible(3rd)

Generation condition		• Diagnosis Code 785-3 not generated • 3 attempts to engage 3rd gear on cylinder 1 failed.
Recoverability		• System has recovered if signal becomes normal after starter switch is turned OFF and then ON (thus reenergizing electronic control unit).
Control effected by electronic control unit		[Prior to vehicle stationary judgment] • Both clutches are kept disengaged • All gear shift rails are kept in N. (Target gear locked in N.) • N flashes in meter cluster gear display. (P has priority display.) • Engine control is terminated. [Upon vehicle stationary judgment] • Gear pre-select not permitted • Vehicle continuously driven in F-2nd/R-Hi
Possible causes		• Gear position initialization not completed yet • Defective gear shift unit magnetic valve • Defective transmission • Defective DUONIC™ electronic control unit
Inspection procedure	Step1	Inspection procedure Inspect the suspected factors mentioned above sequentially to locate faulty parts. Repair or replace the faulty part as necessary.

520753-7: Forward gear shift not possible(1st,6th,RevLo)

Generation condition		• Diagnosis Code 785-3 not generated • 3 attempts to engage 1st/6th RevLo gear on cylinder 2 failed.
Recoverability		• System has recovered if signal becomes normal after starter switch is turned OFF and then ON (thus reenergizing electronic control unit).
Control effected by electronic control unit		[Prior to vehicle stationary judgment] • Both clutches are kept disengaged • All gear shift rails are kept in N. (Target gear locked in N.) • N flashes in meter cluster gear display. (P has priority display.) • Engine control is terminated. [Upon vehicle stationary judgment] • Gear pre-select not permitted • Vehicle continuously driven in F-2nd/R-Hi
Possible causes		• Gear position initialization not completed yet • Defective gear shift unit magnetic valve • Defective transmission • Defective DUONIC™ electronic control unit
Inspection procedure	Step1	Inspection procedure Inspect the suspected factors mentioned above sequentially to locate faulty parts. Repair or replace the faulty part as necessary.

https://truckmanualshub.com/

520754-7: Backward gear shift not possible(4th)

Generation condition		• Diagnosis Code 785-3 not generated • 3 attempts to engage 4th gear on cylinder 2 failed.
Recoverability		• System has recovered if signal becomes normal after starter switch is turned OFF and then ON (thus reenergizing electronic control unit).
Control effected by electronic control unit		[Prior to vehicle stationary judgment] • Both clutches are kept disengaged • All gear shift rails are kept in N. (Target gear locked in N.) • N flashes in meter cluster gear display. (P has priority display.) • Engine control is terminated. [Upon vehicle stationary judgment] • Gear pre-select not permitted • Vehicle continuously driven in F-2nd/R-Hi
Possible causes		• Gear position initialization not completed yet • Defective gear shift unit magnetic valve • Defective transmission • Defective DUONIC™ electronic control unit
Inspection procedure	Step1	Inspection procedure Inspect the suspected factors mentioned above sequentially to locate faulty parts. Repair or replace the faulty part as necessary.

520755-7: Forward gear shift not possible(Rev)

Generation condition		• Diagnosis Code 785-3 not generated • 3 attempts to engage Rev gear on cylinder 3 failed.
Recoverability		• System has recovered if signal becomes normal after starter switch is turned OFF and then ON (thus reenergizing electronic control unit).
Control effected by electronic control unit		• Both clutches are kept disengaged • All gear shift rails are kept in N. (Target gear locked in N.) • N flashes in meter cluster gear display. (P has priority display.) • Engine control is terminated.
Possible causes		• Gear position initialization not completed yet • Defective gear shift unit magnetic valve • Defective transmission • Defective DUONIC™ electronic control unit
Inspection procedure	Step1	Inspection procedure Inspect the suspected factors mentioned above sequentially to locate faulty parts. Repair or replace the faulty part as necessary.

520756-7: Backward gear shift not possible(1st,2nd)

Generation condition		• Diagnosis Code 785-3 not generated • 3 attempts to engage 1st/2nd gear on cylinder 3 failed.
Recoverability		• System has recovered if signal becomes normal after starter switch is turned OFF and then ON (thus reenergizing electronic control unit).
Control effected by electronic control unit		• Both clutches are kept disengaged • All gear shift rails are kept in N. (Target gear locked in N.) • N flashes in meter cluster gear display. (P has priority display.) • Engine control is terminated.
Possible causes		• Gear position initialization not completed yet • Defective gear shift unit magnetic valve • Defective transmission • Defective DUONIC™ electronic control unit
Inspection procedure	Step1	Inspection procedure Inspect the suspected factors mentioned above sequentially to locate faulty parts. Repair or replace the faulty part as necessary.

https://truckmanualshub.com/

2. Service Data (Actual Measurements) of FUSO Diagnostics

- The data given or the expressions used by the FUSO Diagnostics may be different from those shown in the Service Manual since the contents of the FUSO Diagnostics are updated periodically. If any discrepancies are found, always use the information from the FUSO Diagnostics which is the latest.

Actual values	Description	Value	Remarks
Voltages	Power Supply 1 M Contact Voltage V1	8 to 16 V	Power supply voltage across M contact (V1) is indicated. (Supply voltage 8 to 16 V with starter switch ON)
	Power Supply 1 M Contact Voltage V2	8 to 16 V	Power supply voltage across M contact (V2) is indicated. (Supply voltage 8 to 16 V with starter switch ON)
	Power Supply 2 Power Supply Voltage V01	8 to 16 V	Voltage of power supplied directly from battery (V01) is indicated.
	Power Supply 2 Power Supply Voltage V02	8 to 16 V	Voltage of power supplied directly from battery (V02) is indicated.
	Power Supply 3 ACC Contact Voltage	8 to 16 V	Power supply voltage across ACC contact is indicated.
	Power Supply 3 TCU Activated Status	Not Active/ Active	ECU-activated status hold command output is indicated.
	Power Supply 3 Key ON Status	Key ON/Key OFF	Key ON status recognition information is indicated.
	Measured Voltage of Temperature Sensor for Transmission Oil	0.16 to 4.93 V	Transmission oil temperature (calculated from signal voltage) is indicated.
	Measured Voltage of G Sensor	0.45 to 4.55 V	G acting on vehicle in longitudinal direction (calculated from G-sensor 1 signal voltage) is indicated.
	Measured Voltage of G Sensor2	0.45 to 4.55 V	G acting on vehicle in longitudinal direction (calculated from G-sensor 2 signal voltage) is indicated.
Positions of switches	Shift Lever Position	P Position: 9 P to R Position: 25 R Position: 33 or 35 N to R Position: 49 N Position: 17 N to D Position: 19 D Position: 18 + to D Position: 26 + Position: 10 D to - Position: 50 - Position: 34 D-A/M Position: 22 A/M Position: 20	Selected shift lever position is indicated.
	Parking Brake Switch	Parking Brake Not Set/ Parking Brake Set/ Error/ SNA	Parking brake operation status (applied/released) is indicated.
	Brake Switch	Brake Pedal Released/ Brake Pedal Depressed/ Error/ SNA	Foot brake switch status (ON/OFF) is indicated.
	Driver Door Status	Close/ Open/ Error/ SNA	Driver door status (open/closed) is indicated.
	Passenger Door Status	Close/ Open/ Error/ SNA	Assistant driver door status (open/closed) is indicated.
	PTO Operation Switch Status	ON/OFF	PTO operation switch status (information on truck side) is indicated.

https://truckmanualshub.com/

Actual values	Description	Value	Remarks
Positions of switches	PTO Switch Status (CAN)	PTO Disengage/Error PTO Engage/SNA	PTO switch status (information on PTO proper) is indicated.
	ECO Mode Switch Status (CAN)	OFF/ ON/ Error/ SNA	ECO mode switch status is indicated. (for meter)
	Switching Activation Status of PTO	PTO Not Active Not Active	PTO activation output is indicated.
	Door Status Information for Bus	Close/Open	Door status (open/closed) information (for bus) is indicated.
Brake	Braking Force of Service Brake	0 to 2530 psi	Braking force is indicated
	Measured Voltage of Pressure Sensor for Service Brake	0.5 to 4.6 V	Braking force (signal voltage measurements) is indicated.
Operating statuses	D Lamp Indicator Status (CAN)	ON/OFF	D lamp indicator output is indicated.
	Oil Temperature Warning Status (CAN)	ON/OFF	Oil temperature warning output is indicated.
	PTO Lamp Indicator Status (CAN)	Non Display/ “PTO Lock” Display/ “PTO Unlock” Display/ “PTO” Display	PTO indicator output is indicated.
	PTO Ready Lamp Status (CAN)	ON/OFF	[PTO ready] indicator output is indicated.
	Buzzer Status (CAN)	Inactive/ Active ON/ Active OFF	Warning buzzer output is indicated.
	ECO Mode Lamp Status (CAN)	ON/OFF	ECO mode indicator output is indicated. (for meter)
	Red Warning Lamp Status	ON/OFF	Red warning lamp output is indicated.
	Amber Warning Lamp Status	ON/OFF	Amber warning lamp output is indicated.
	1st Rev Hold Request	Disable/ Enable/ Reserved/ SNA	1st/Rev Hold request information is indicated.
	Demand of Idle Up Cancel (CAN)	ON/OFF	Idle-up cancel request output is indicated.
	GSU Duty Output shift duty 16rl	0.0 %	Gear-in MV duty output “shift_duty_16rl” (coding data) is indicated.
	GSU Duty Output shift duty 4th	0.0 %	Gear-in MV duty output “shift_duty_4^{th}” (coding data) is indicated.
	GSU Duty Output shift duty rev	0.0 %	Gear-in MV duty output “shift_duty_rev” (coding data) is indicated.
	GSU Duty Output shift duty 12	0.0 %	Gear-in MV duty output “shift_duty_12” (coding data) is indicated.
	GSU Duty Output shift duty 56	0.0 %	Gear-in MV duty output “shift_duty_56” (coding data) is indicated.
	GSU Duty Output shift duty 3rd	0.0 %	Gear-in MV duty output “shift_duty_3^{rd}” (coding data) is indicated.
	Truck Bus Identification	Truck/Bus	Truck/bus identification (coding data) is indicated.

https://truckmanualshub.com/

Actual values	Description	Value	Remarks
Operating statuses	PTO Equipped Information	Not Equipped PTO/ Equipped PTO	“With/without PTO” information (coding data) is indicated.
	ABS Cooperative Control Equipped Information	Not Equipped Cooperative Control/Equipped Cooperative Control	Availability of ABS cooperative control (coding data) is indicated.
	Final Gear Ratio(HEX)	00 00	Final gear ratio (coding data of hexadecimal) is indicated.
	GSU Duty Output shift duty 16rl(HEX)	00 00	Gear-in MV duty output “shift_duty_16rl” (coding data of hexadecimal) is indicated.
	GSU Duty Output shift duty 4th(HEX)	00 00	Gear-in MV duty output “shift_duty_4th” (coding data of hexadecimal) is indicated.
	GSU Duty Output shift duty rev(HEX)	00 00	Gear-in MV duty output “shift_duty_rev” (coding data of hexadecimal) is indicated.
	GSU Duty Output shift duty 12(HEX)	00 00	Gear-in MV duty output “shift_duty_12” (coding data of hexadecimal) is indicated.
	GSU Duty Output shift duty 56(HEX)	00 00	Gear-in MV duty output “shift_duty_56” (coding data of hexadecimal) is indicated.
	GSU Duty Output shift duty 3rd(HEX)	00 00	Gear-in MV duty output “shift_duty_3rd” (coding data of hexadecimal) is indicated.
Status	Received condition of ETC2 SSAM CAN	Unreceived/ Received	Receiving condition of ETC2_SSAM through CAN communication is indicated.
	Received condition of CCVS SSAM CAN	Unreceived/ Received	Receiving condition of CCVS_SSAM through CAN communication is indicated.
	Received condition of EEC1EEC CAN	Unreceived/ Received	Receiving condition of EEC1_EEC through CAN communication is indicated.
	Received condition of ET1 MCM CAN	Unreceived/ Received	Receiving condition of ET1_MCM through CAN communication is indicated.
	Received condition of EBC2 BS CAN	Unreceived/ Received	Receiving condition of EBC2_BS through CAN communication is indicated.
	Received condition of DC2 CAN	Unreceived/ Received	Receiving condition of DC2 through CAN communication is indicated.
	Received condition of	Unreceived/ Received	Receiving condition of PTO_SSAM through CAN communication is indicated.
	Received condition of	Unreceived/ Received	Receiving condition of SSAM_A01 through CAN communication is indicated.
	Received condition of EBC1 EEC CAN	Unreceived/ Received	Receiving condition of EBC1_EEC through CAN communication is indicated.
	Received condition of EC CAN	Unreceived/ Received	Receiving condition of EC through CAN communication is indicated.
	Received condition of EEC2 EEC CAN	Unreceived/ Received	Receiving condition of EEC2_EEC through CAN communication is indicated.
	Received condition of EEC3 EEC CAN	Unreceived/ Received	Receiving condition of EEC3_EEC through CAN communication is indicated.
	Received condition of EBC1 BS CAN	Unreceived/ Received	Receiving condition of EBC1_BS through CAN communication is indicated.
	Received condition of TSC1 AREX BS CAN	Unreceived/ Received	Receiving condition of TSC1_AREX_BS through CAN communication is indicated.
	Received condition of CCVS MCM CAN	Unreceived/ Received	Receiving condition of CCVS_MCM through CAN communication is indicated.
	Received condition of TC1 MCM CAN	Unreceived/ Received	Receiving condition of TC1_MCM through CAN communication is indicated.

https://truckmanualshub.com/

Actual values	Description	Value	Remarks
Status	Feedback signal of shift lock status	Solenoid Not Active (Shift Locked)/ Solenoid Active (Shift Unlocked)/ Reserved/ SNA	Shift lock status (locked/unlocked) is indicated.
	Shift unlock signal	Solenoid Not Active (Shift Locked)/ Solenoid Active (Shift Locked)	Shift lock release output is indicated.
	Shift in process	Not in Process/ In Process	Shifting process condition (in progress or not) is indicated.
	Driveline engaged status	Disengaged/ Engaged	Torque transmitting condition (driveline engagement) is indicated.
	Parking Gear Selection Status	ON/OFF	Parking gear ON/OFF information is indicated.
	MVR failure status OFF stuck	No Detection/ Fail	Line pressure control MV failure (stuck OFF) detection is indicated.
	MVR failure status ON stuck	No Detection/ Fail	Line pressure control MV failure (stuck ON) detection is indicated.
	MVC failure status OFF stuck	No Detection/ Fail	Oil cooler control MV failure (stuck OFF) detection is indicated.
	MVC failure status ON stuck	No Detection/ Fail	Oil cooler control MV failure (stuck ON) detection is indicated.
	PTOCS failure status ON stuck	No Detection/ Fail	PTO connection solenoid failure (stuck OFF) detection is indicated.
	PTOCS failure status OFF stuck	No Detection/ Fail	PTO connection solenoid failure (stuck ON) detection is indicated.
	C1F Failure status OFF stuck(MV1F)	No Detection/ Fail	Shift cylinder1 front MV failure (stuck OFF) detection is indicated.
	C1F Failure status ON stuck(MV1F)	No Detection/ Fail	Shift cylinder1 front MV failure (stuck ON) detection is indicated.
	C1B Failure status OFF stuck(MV1R)	No Detection/ Fail	Shift cylinder1 rear MV failure (stuck OFF) detection is indicated.
	C1B Failure status ON stuck(MV1R)	No Detection/ Fail	Shift cylinder1 rear MV failure (stuck ON) detection is indicated.
	C2F Failure status OFF stuck(MV2F)	No Detection/ Fail	Shift cylinder2 front MV failure (stuck OFF) detection is indicated.
	C2F Failure status ON stuck(MV2F)	No Detection/ Fail	Shift cylinder2 front MV failure (stuck ON) detection is indicated.
	C2B Failure status OFF stuck(MV2R)	No Detection/ Fail	Shift cylinder2 rear MV failure (stuck OFF) detection is indicated.
	C2B Failure status ON stuck(MV2F)	No Detection/ Fail	Shift cylinder2 rear MV failure (stuck ON) detection is indicated.
	C3F Failure status OFF stuck(MV3F)	No Detection/ Fail	Shift cylinder3 front MV failure (stuck OFF) detection is indicated.
	C3F Failure status ON stuck(MV3F)	No Detection/ Fail	Shift cylinder3 front MV failure (stuck ON) detection is indicated.
	C3B Failure status OFF stuck(MV3R)	No Detection/ Fail	Shift cylinder3 rear MV failure (stuck OFF) detection is indicated.
	C3B Failure status ON stuck(MV3R)	No Detection/ Fail	Shift cylinder3 rear MV failure (stuck ON) detection is indicated.

https://truckmanualshub.com/

Actual values	Description	Value	Remarks
Status	Request Engine Control Mode (CAN)	OFF/ Speed Control/ Torque Control/ Limited Speed/Torque	Information on engine control mode requested by DUONIC™ is indicated.
	Request Retarder Control Mode (CAN)	OFF/ Speed Control/ Torque Control/ Limited Speed/Torque	Information on auxiliary brake (retarder) control mode requested by DUONIC™ is indicated.
	Switching Reduction of Line Pressure	Normal Line Pressure/ Reduction of Line Pressure	Control command of line pressure switching is indicated.
	Switching circulation of oil cooler	Inhibit Circulation of Oil Cooler/ Circulation of Oil Cooler	Switching command of oil cooler circulation is indicated.
	Override Permit Flag	Prohibit for Reprogramming and Reset/ Permit for Reprogramming and Reset	Information on prohibition/permission of reprogramming and ECU resetting is indicated.
	EEPROM failure status	No Detection/ Fail	Information on EEPROM failure is indicated.
	Test Mode	Test Mode No.001 (Gear Shift Mode)/ Test Mode No.002 (Line Pressure High Control Mode)/ Test Mode No.003 (Line Pressure Low Control Mode)/ Test Mode No.004 (Oil Cooler Control ON Mode)/ Test Mode No.005 (Oil Cooler Control OFF Mode)/ Test Mode No.006 (Inner Clutch ON Mode)/ Test Mode No.007 (Outer Clutch ON Mode)/ Test Mode No.008 (Shift Lock OFF Mode)	Information on actuator test modes is indicated.
	OBD compliant status	Not for OBD/For OBD	Information on compatibility with OBD is indicated.
	Gear Position Shift Cylinder 1	-1: Rear side gear in engagement 0: Neutral condition 1: Front side gear in engagement 0.5: No appropriate gear position	Information on shift cylinder 1 gear position is indicated.
	Shift cylinder 1driving duty front side position	0 to 100 %	Front side MV drive duty output for shift cylinder 1 is indicated.
	Shift cylinder 1driving duty Rear side position	0 to 100 %	Rear side MV drive duty output for shift cylinder 1 is indicated.
	Gear Position Shift Cylinder 2	-1: Rear side gear in engagement 0: Neutral condition 1: Front side gear in engagement 0.5: No appropriate gear position	Information on shift cylinder 2 gear position is indicated.

https://truckmanualshub.com/

Actual values	Description	Value	Remarks
Status	Shift cylinder 2driving duty front side position	0 to 100 %	Front side MV drive duty output for shift cylinder 2 is indicated.
	Shift cylinder 2driving duty rear side position	0 to 100 %	Rear side MV drive duty output for shift cylinder 2 is indicated.
	Gear Position Shift Cylinder 3	-1: Rear side gear in engagement 0: Neutral condition 1: Front side gear in engagement 0.5: No appropriate gear position	Information on shift cylinder 3 gear position is indicated.
	Shift cylinder 3driving duty front side position	0 to 100 %	Front side MV drive duty output for shift cylinder 3 is indicated.
	Shift cylinder 3driving duty rear side position	0 to 100 %	Rear side MV drive duty output for shift cylinder 3 is indicated.
	Inner Clutch Solenoid Valve Failure Status OFF Stuck	No Detection/ Fail	Information on inner clutch solenoid failure (stuck OFF) detection is indicated.
	Inner Clutch Solenoid Valve Failure Status ON Stuck	No Detection/ Fail	Information on inner clutch solenoid failure (stuck ON) detection is indicated.
	Outer Clutch Solenoid Valve Failure Status OFF Stuck	No Detection/ Fail	Information on outer clutch solenoid failure (stuck OFF) detection is indicated.
	Outer Clutch Solenoid Valve Failure Status ON Stuck	No Detection/ Fail	Information on outer clutch solenoid failure (stuck ON) detection is indicated.
	Clutch engage/disengage (CAN)	Engaged (Paritially, Fully)/ Disengaged	Information on clutch engagement failure detection is indicated.
	Engine retarder selection (CAN)	0 to 100 %	Information on auxiliary brake (engine retarder) selector switch is indicated.
	Permission of engine start	Disable/ Enable	Engine starting permission output is indicated.
	Cruise acceleration SW status (CAN)	OFF/ON/Error/SNA	Auto-cruising acceleration switch status is indicated.
	Cruise deceleration SW status (CAN)	OFF/ON/Error/SNA	Auto-cruising deceleration switch status is indicated.
	Cruise control status (CAN)	OFF/ON/Reserved/SNA	Cruise control status is indicated.
	Cruise pause output (CAN)	ON/OFF	Auto-cruising pause output is indicated.
	Cruise target vehicle speed (CAN)	0 to 250 km/h	Cruise control target vehicle speed is indicated.
	Cruise vehicle speed (CAN)	0 to 250.996 km/h	Vehicle speed information sent from engine ECU is indicated.
	ABS control status (CAN)	Passive/ Active/ Reserved/ SNA	Information on main brake control with ABS activated is indicated.
	ABS warning lamp status (CAN)	ON/OFF/Reserveed/ SNA	ABS warning lamp status is indicated.
	Slip delectation status	Not Slip Detection/Slip Detection	Information on wheel slip detection is indicated.
	Truck Bus Identification(HEX)	00/01	Truck/bus identification (coding data of hexadecimal) is indicated.
	PTO Equipped Information(HEX)	00/01	Information on availability of PTO (equipped or not) (coding data of hexadecimal) is indicated.
	ABS Cooperative Control Equipped Information(HEX)	00/01	Availability of ABS cooperative control (coding data of hexadecimal) is indicated.

https://truckmanualshub.com/

Actual values	Description	Value	Remarks
Engine speeds	Output Shaft Speed Speed Sensor 1	0 to 8032 rpm	Transmission output shaft speed (measurements by vehicle speed sensor 1) is indicated.
	Output Shaft Speed Speed Sensor 2	0 to 8032 rpm	Transmission output shaft speed (measurements by vehicle speed sensor 2) is indicated.
	Output Shaft Speed with Direction of Vehicle Movement	-8032 to 8032 rpm	Transmission output shaft speed (with sign of driving direction) is indicated.
	Output Shaft Speed (CAN)	0 to 8031.875 rpm	Output shaft speed (output through CAN communication) is indicated.
	Inner Clutch Speed	0rpm	Inner clutch speed is indicated.
	Outer Clutch Speed	0rpm	Outer clutch speed is indicated.
	Engine Speed	0 to 8031.875 rpm	Engine speed is indicated.
	Engine Idle Speed	400 to 5000 rpm	Engine idle speed is indicated.
Vehicle speeds	Front Axle Speed	0 to 156.0 mph	Front axle speed sent from ABS ECU is indicated.
	Driving Wheel Relative Speed Left Side	-4.8545 to 4.8545 km/h	Relative speed of left driving wheel sent from ABS ECU is indicated.
	Driving Wheel Relative Speed Right Side	-4.8545 to 4.8545 km/h	Relative speed of right driving wheel sent from ABS ECU is indicated.
Transmission	Odd gear engage status	Gear in engagement	Selected odd-numbered gear is indicated.
	Even gear engage status	Gear in engagement	Selected even-numbered gear is indicated.
	Driven gear position	Gear in engagement	Selected gear is indicated.
	Current gear position (CAN) (For engine electronic control unit)	R (Reverse) N (Neutral) 1st/ 2nd/ 3rd/ 4th/ 5th/ 6th/ P(Parking)	Current gear position determined based on CAN communication outputs is indicated.
	Current gear ratio (CAN)	0 to 64.255	Currently selected gear ratio determined based on CAN communication outputs is indicated.
	Position of cylinder 1 front	78.2 to 96 %	Learned front gear position of cylinder 1 is indicated.
	Position of cylinder 1 rear	6 to 21.8 %	Learned rear gear position of cylinder 1 is indicated.
	Position of cylinder 2 front	78.2 to 96 %	Learned front gear position of cylinder 2 is indicated.
	Position of cylinder 2 rear	6 to 21.8 %	Learned rear gear position of cylinder 2 is indicated.
	Position of cylinder 3 front	78.2 to 96 %	Learned front gear position of cylinder 3 is indicated.
	Position of cylinder 3 rear	6 to 21.8 %	Learned rear gear position of cylinder 3 is indicated.
	Shift position of cylinder 1	6 to 94 %	Shift position of cylinder 1 is indicated.
	Shift position of cylinder 2	6 to 94 %	Shift position of cylinder 2 is indicated.
	Shift position of cylinder 3	6 to 94 %	Shift position of cylinder 3 is indicated.
	Current gear position (CAN) (For meter)	R (Reverse)/ N (Neutral)/ 1st/ 2nd/ 3rd/ 4th/ 5th/ 6th/ P (Parking)/	Gear position output for indication on meter cluster is indicated.

https://truckmanualshub.com/

Actual values	Description	Value	Remarks
Temperatures	Temperature of Transmission Oil	-40 to 140 °C	Transmission oil temperature is indicated.
	Engine Coolant Temperature	-40 to 210 °C	Engine coolant temperature is indicated.
Clutch	Time for Filling Learning Value Inner Clutch	0 sec	Learned value of inner clutch filling time is indicated.
	Time for Filling Learning Value Outer Clutch	0 sec	Learned value of outer clutch filling time is indicated.
	Inner Clutch Current at 5kgfm Clutch Torque	0 A	Current flow at an inner clutch torque of 5 kgfm is indicated.
	Inner Clutch Current at 25kgfm Clutch Torque	0 A	Current flow at an inner clutch torque of 25 kgfm is indicated.
	Outer Clutch Current at 5kgfm Clutch Torque	0 A	Current flow at an outer clutch torque of 5 kgfm is indicated.
	Outer Clutch Current at 25kgfm Clutch Torque	0 A	Current flow at an outer clutch torque of 25 kgfm is indicated.
	Inner Clutch Current at Kiss Point	0 A	Current flow at a point where inner clutch is put in partial engagement is indicated.
	Outer Clutch Current at Kiss Point	0 A	Current flow at a point where outer clutch is put in partial engagement is indicated.
	Demand Current Output for Inner Clutch	0 to 1.2 A	Command value of current applied to inner clutch is indicated.
	Demand Current Output for Outer Clutch	0 to 1.2 A	Command value of current applied to outer clutch is indicated.
	Inner Clutch Torque	0 kgf·m	Torque of inner clutch is indicated.
	Outer Clutch Torque	0 kgf·m	Torque of outer clutch is indicated.
	Time for Filling Inner Clutch	0 sec	Time required for filling inner clutch with oil is indicated.
	Time for Filling Outer Clutch	0 sec	Time required for filling outer clutch with oil is indicated.
Torques	Drivers Demand Percent Torque	0 to 125 %	Torque demanded by driver is indicated in percentage.
	Actual Engine Percent Torque (CAN)	0 to 125 %	Engine torque actually being generated is indicated in percentage.
	Friction Percent Torque (CAN)	0 to 125 %	Friction torque actually being generated is indicated in percentage.
Accelerator pedal	Accelerator Pedal Position (CAN)	0 to 100 %	Accelerator opening is indicated in percentage.
Retarder	Engine Reference Torque (CAN)	100 to 1000 N·m	Engine reference torque (torque data used as a reference when calculating engine torque) is indicated.
Acceleration	Longitudinal Acceleration of Vehicle	-2.05 to 2.05 G	G acting on vehicle in longitudinal direction is indicated.
	Road Incline	Road Incline %	Road gradient is indicated in percentage.
Calibration values	Tire Radius	0.000 ft	Tire radius (coding data) is indicated.
	Final Ratio	0.000	Final drive gear ratio (coding data) is indicated.
	Transfer Ratio	0.000	Transfer gear ratio (coding data) is indicated.
	Transfer Ratio(HEX)	00 00	Transfer gear ratio (coding data of hexadecimal) is indicated.
Pressure values	Line Pressure Threshold spc_thres_crt_hi	0.000	High threshold of original pressure switching during driving “spc_thres_crt_hi” (coding data) is indicated.
	Line Pressure Threshold spc_thres_crt_lo	0.000	Low threshold of original pressure switching during driving “spc_thres_crt_lo” (coding data) is indicated.
	Line Pressure Threshold spc_thres_crt_start_hi	0.000	High threshold of original pressure switching during starting “spc_thres_crt _start_hi” (coding data) is indicated.

https://truckmanualshub.com/

Actual values	Description	Value	Remarks
Pressure values	Line Pressure Threshold spc_thres_crt_start_lo	0.000	Low threshold of original pressure switching during starting “spc_thres_crt _start_lo” (coding data) is indicated.
	Line Pressure Threshold spc_thres_crt_hi(HEX)	00 00	High threshold of original pressure switching during driving “spc_thres_crt_hi” (coding data of hexadecimal) is indicated.
	Line Pressure Threshold spc_thres_crt_lo(HEX)	00 00	Low threshold of original pressure switching during driving “spc_thres_crt_lo” (coding data of hexadecimal) is indicated.
	Line Pressure Threshold spc_thres_crt_start_hi(HEX)	00 00	High threshold of original pressure switching during starting “spc_thres_crt _start_hi” (coding data of hexadecimal) is indicated.
	Line Pressure Threshold spc_thres_crt_start_lo(HEX)	00 00	Low threshold of original pressure switching during starting “spc_thres_crt _start_lo” (coding data of hexadecimal) is indicated.
Reifen-abroll-umfang	Tire Radius(HEX)	00 00	Tire radius (coding data of hexadecimal) is indicated.

https://truckmanualshub.com/

3. Actuator tests available in FUSO Diagnostics

- The data given or the expressions used by the FUSO Diagnostics may be different from those shown in the Service Manual since the contents of the FUSO Diagnostics are updated periodically. If any discrepancies are found, always use the information from the FUSO Diagnostics which is the latest.
- The actuator tests must be performed with the vehicle stationary, the engine stopped and the starter switch in ON position unless otherwise specified.

Item	Description
Gear shift	Cancels the limitation of manual shifting into forward gears with vehicle stationary (allows selection of every forward gear including 6th gear when starting).
Line pressure high control	Forces the line pressure to be held high.
Line pressure low control	Forces the line pressure to be held low.
Oil cooler control ON	Forces the cooler lubrication to be held ON.
Oil cooler control OFF	Forces the cooler lubrication to be held OFF.
Inner clutch ON	Forces the clutch 1 power to be held ON (1.2 A).
Outer clutch ON	Forces the clutch 2 power to be held ON (1.2 A).
Shift lock OFF	Issues a command requesting shift lock release.

https://truckmanualshub.com/

4. Inputs and Outputs to/from Electronic Control Unit

- For positions of each signal terminal and grounding terminal, refer to the ECU connection diagram.

Devices to be connected	Terminal	Input/output	Voltage and wave form
Power Supply	B36-Ground B37-Ground	Input	Continuously: About 12 V (battery voltage)
Power Supply 1 M Contact	B38-Ground B39-Ground	Input	Starter switch ON: About 12 V (battery voltage) Starter switch OFF: 0 V
Parking gear switch	B27-Ground	Input	Parking gear switch ON (Other range): 0 V Parking gear switch OFF (P range): About 12 V (battery voltage)
Transmission power take-off switch	B19-Ground	Input	Transmission PTO switch ON: About 12 V (battery voltage) Transmission PTO switch OFF: 0 V
Vehicle speed sensor	B29-B21	Input	When sensor shaft is rotated: Low pulse: 0 V High pulse: 5 V
Oil temperature	A46-Ground	Input	20°C{68°F}: 2.31 to 2.59 kΩ
G Sensor (main)	B10-Ground	Input	When vehicle is parked on a level ground: 2.3 to 2.7 V
G Sensor (sub)	A66-Ground	Input	When vehicle is parked on a level ground: 2.3 to 2.7 V
Brake fluid pressure sensor	B25-Ground	Output	5 V
	B9-Ground	Input	0.5 V
Geat shift solenoid	A24-Ground (MV1F)	Output	0 to 100%
	A62-Ground (MV1R)	Output	0 to 100%
	A23-Ground (MV2F)	Output	0 to 100%
	A61-Ground (MV2R)	Output	0 to 100%
	A22-Ground (MV3F)	Output	0 to 100%
	A60-Ground (MV3R)	Output	0 to 100%

https://truckmanualshub.com/

5. Coding Data in Electronic Control Unit

5.1 General

- Each electronic control unit of a vehicle contains information of the vehicle including component configurations, which is collectively called coding data.
- When an electronic control unit is replaced with a new part or one that has been used on another vehicle, or when the vehicle specifications are changed, relevant data must be downloaded and/or coding data rewritten using FUSO Diagnostics.

5.2 Rewriting coding data

- When electronic control units are replaced or the vehicle specifications are changed, the following coding data must be rewritten. For details about rewriting operation, contact your nearest authorized dealer or distributor.

Coding data / Treatment	Final gear ratio	Tire diameter	transfer gear ratio	With or Without power take-off	Truck/bus indentification	In drive source pressure changeover threshold	With or without coordinated anti-lock brake system control
Replace DUONIC^{TM} electronic control unit	O	O	O	O	O	O	O
Final gear ratio is change	O						
Tire diameter change		O					
Transfer gear ratio change			O				
Replace power take-off				O			

https://truckmanualshub.com/

6. Initialization of DUONIC™ System

- In the initialization of the DUONIC™ system, the following initial settings are memorized by the DUONIC™ electronic control unit: gear shift unit's gear position, clutch fill time, learned clutch torque value, and G sensor equal pressure value on flat road. All of these settings are initialized with a single initialization operation, which must be performed every time the vehicle is serviced.
- Initialization of the DUONIC™ system may help improve degradation of roll-off, creep or gear shift quality if that is experienced.
- The vehicle must be warmed up before performing initialization. With a cold engine or transmission, initialization may not be successfully completed when attempted.

- If any of the following service is performed, initialization must be performed following the procedure described.

Service	Initialization procedure
Replacement of automatic transmission fluid	After replacement of automatic transmission fluid, start the engine and cycle the shift lever to D and R several times to sufficiently circulate automatic transmission fluid before performing initialization. After initialization, test drive the vehicle.
Replacement of gear oil	After replacement of gear oil, perform initialization followed by test drive.
Work on engine or transmission	After any service on the engine or transmission, the DUONIC™ system must be initialized to prevent any possible degradation of driving quality due to possible change in the engine or transmission characteristics.

6.1 Initialization standby mode

- Prior to starting initialization, the vehicle must be placed in the initialization standby mode.

Ensure that the vehicle meets all of the following conditions.
- Software installation and coding have been completed on the engine and DUONIC™ electronic control units.
- The engine is stopped.
- The vehicle is stationary (with the brakes released) on a flat road and unloaded.
- The tire pressure has been set to specification.
- The cab tilt is locked.
- The starter key is in the ON position.
- The accelerator pedal is in the ON (50% or above) position.
- The foot brake is applied.
- The systems that are powered by the engine such as the air conditioner, the compressor for the freezer and the exhaust brake are stopped.
- The change lever is moved to D for one second and then set to A/M.
- The parking brake is applied for one second, then released for one second and then applied (pulled rather hard) again.

↓

"1" flashes on the gear shift indicator, which means that the vehicle is now in the initialization standby mode.

Initialization (See "1.2 Initialization")

↓

The vehicle goes back to the normal mode if the parking brake is released or the starter key is turned to the OFF position.

https://truckmanualshub.com/

6.2 Initialization

Operator action	Vehicle action

With the vehicle in the initialization standby mode, set the accelerator pedal to OFF and the change lever to P before starting the engine.	• The progress of initialization process is indicated on the gear shift indicator as a flashing “2”, “3”, “4”, “5” and “N”.
	• Initialization progress indicated on the gear shift indicator is as follows:
	  • “2”: The gear shift unit’s gear position is being detected.
	  • “3”: Clutch is being warmed up. G sensor voltage value is being corrected.
	  • “4”: Clutch fill time is being learned.
	  • “5”: Clutch torque is being learned.
	  • “N”: Initialization is completed.

–	• “R” flashes on the gear shift indicator. → Initialization failed. → Release the parking brake or turn the starter key to OFF to go back to the normal mode before retrying initialization. • If “2” and then “R” flashes on the gear shift indicator, this indicates a problem, which may be resolved by driving the vehicle for a while before retrying initialization. • If initialization fails again, check the clutch or the transmission. (See Gr21 or Gr22.)

CAUTION ⚠

- **For safety, keep the foot brake applied after the engine is started.**

6.3 Resetting the initialization

- The DUONIC^{TM} system offers the possibility to reset the initialization values of gear shift unit’s gear position, clutch fill time, learned clutch torque, and G sensor voltage on flat road so that these values are defaulted to those before the initialization. (This feature is designed to be used such as when driving quality has deteriorated after initialization.)

Operator action	Vehicle action
With the vehicle in the initialization standby mode, set the change lever to “-“.	“6” flashes on the gear shift indicator, meaning that the reset process has been completed.

https://truckmanualshub.com/

M E M O

https://truckmanualshub.com/

INSPECTION OF ELECTRICAL PARTS

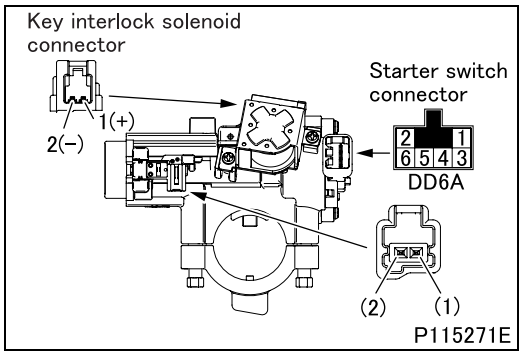

#002 Inspection of starter switch

- Perform the following checks, and if any fault is found, replace the switch. (See Gr37.)

(1) Starter switch

Switch position		Continuity terminal
LOCK	without key	–
	with key	(1)–(2)
ACC		(1)–(2), 4–5
ON		(1)–(2), 4–5–6
START		(1)–(2), 3–4–5–6

(2) Key interlock solenoid

- Check that the key will not turn in the “LOCK” direction when the battery voltage is applied between terminals 1 and 2.

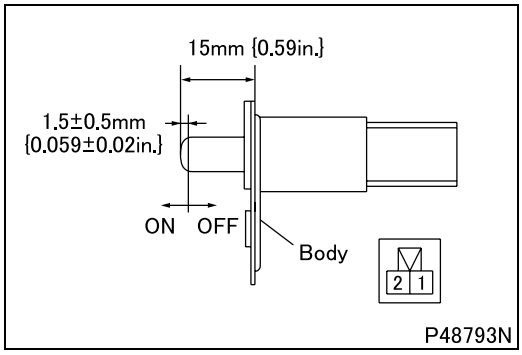

#035 Inspection of door switch

Switch position	Continuity terminal
OFF	–
ON	1-body, 2-body

- If any fault is found, replace the switch. (See Gr43.)

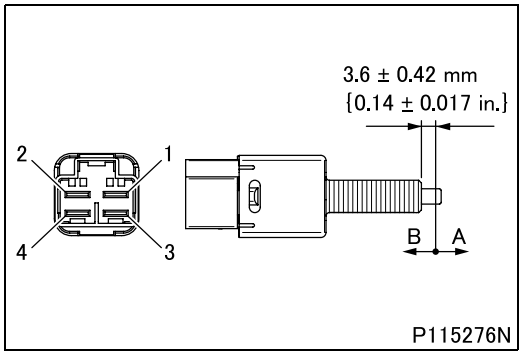

#042 Inspection of stop lamp switch

Switch position	Continuity terminal
A	1–2
B	3–4

- If any fault is found, replace the switch. (See Gr35A.)

#054 Inspection of switch

- Perform the following checks, and if any fault is found, replace the switch.

Switch position	Continuity terminal
OFF	–
ON	1–2

https://truckmanualshub.com/

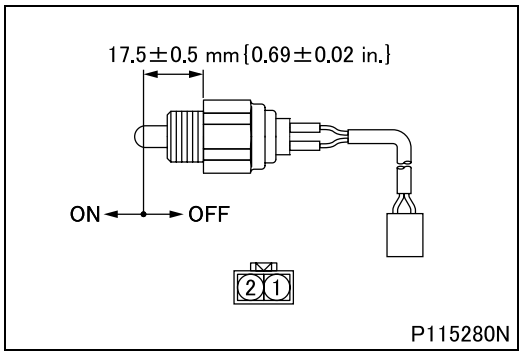

- Parking gear switch. (See Gr22.)

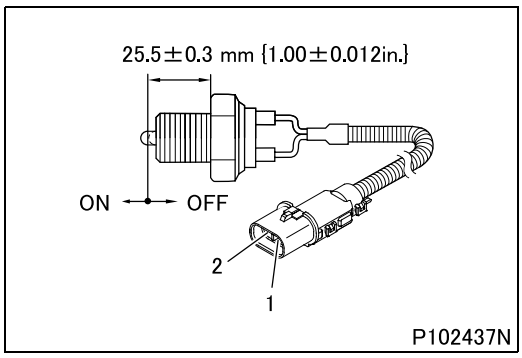

- Power take-off control switch. (See Gr22.)

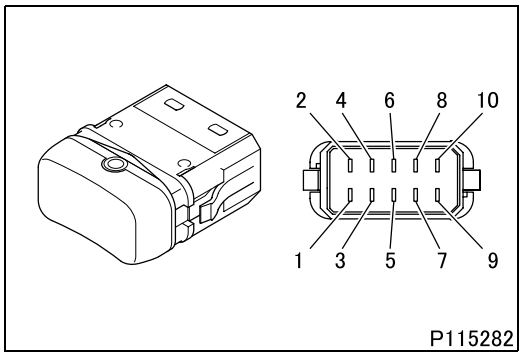

#089 Inspection of switch

- Perform the following checks, and if any fault is found, replace the switch.
  - Transmission power take-off switch

Switch position	Continuity terminal	Night illumination
OFF	–	(+) 1–10 (–)
ON	3–7	

  - ECO mode switch

Switch position	Continuity terminal	Night illumination
OFF	5–7	(+) 1–10 (–)
ON	3–7	

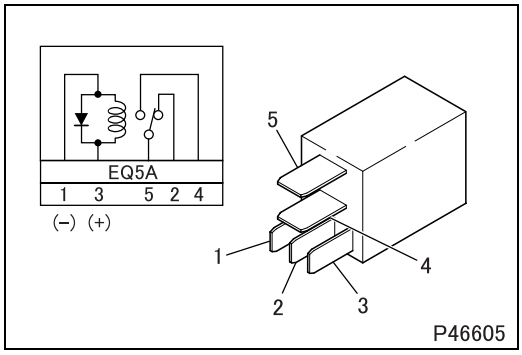

#201 Inspection of relay (normally open type 5 pin)

- Perform continuity check and operation check, and if any fault is found, replace the relay.

https://truckmanualshub.com/

INSPECTION OF ELECTRICAL PARTS

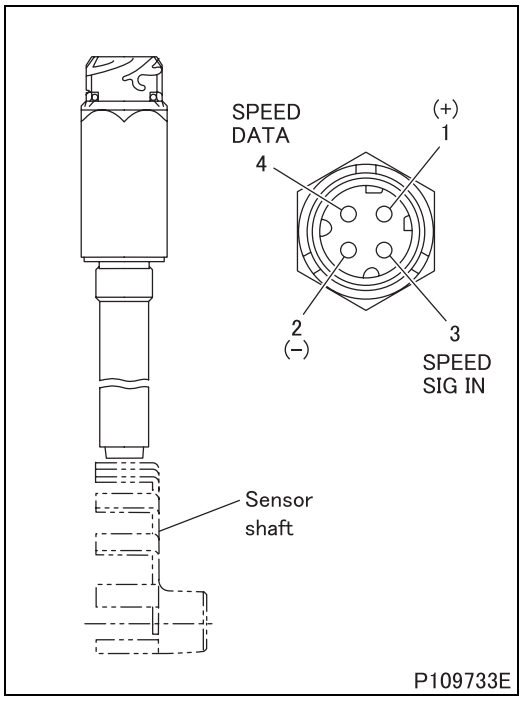

#265 Inspection of vehicle speed sensor

- While applying a voltage of 6.5 to 9 V between terminals 1 and 2, rotate the sensor shaft.
- Check the signals of terminal 3 (SPEED SIG IN) and terminal 4 (SPEED DATA). If no signals are found, replace the sensor. (See Gr22.)

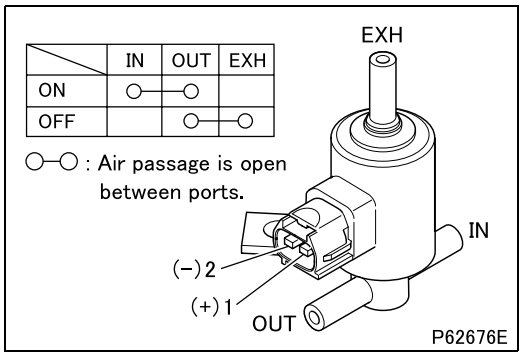

#565 Inspection of 3-way magnetic valve

- Perform the following checks, and if any fault is found, replace the 3-way magnetic valve.

(1) Operation check

- Gradually apply DC current between each terminal starting from 0 V.
- Measure the voltage at which the 3-way magnetic valve operates. (Determine ON/OFF of the magnetic valve by operating noises.)

Standard value (minimum operating voltage)	11 V or less

(2) Inspection of continuity and air tightness

- Negative pressure when inspected: –99.99 kPa {–29.5 in.Hg, –750 mmHg}

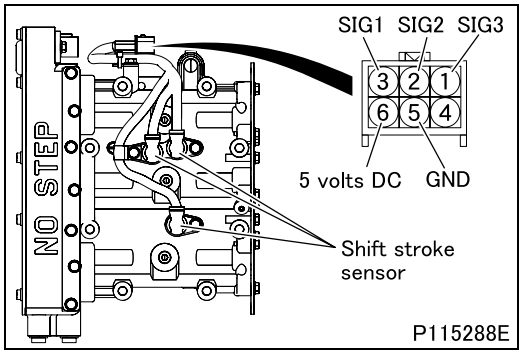

#296 Inspection of shift stroke sensor

- Because it is not easy to independently check the sensor for the functions, check the FUSO Diagnostics service data using the FUSO Diagnostics.
- Replace the gear shift unit if there is any fault in the sensor.

https://truckmanualshub.com/

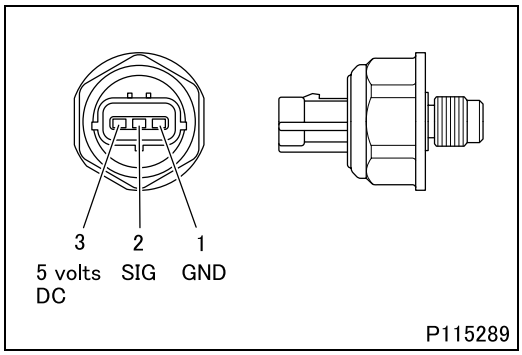

#302 Inspection of brake fluid pressure sensor

- Apply 5 volts DC to terminals 1 and 3.
- Measure the output voltage occurring at terminals 2 and 3.

Standard value	0.5 V

- If the measured value deviates from the standard value, replace the sensor.

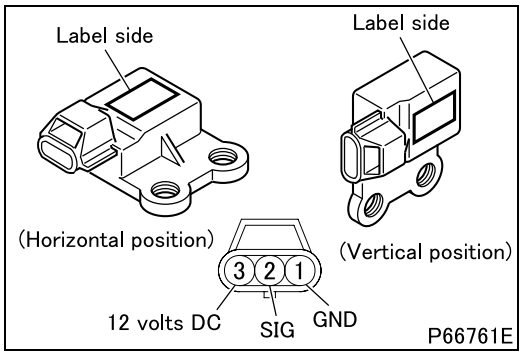

#327 Inspection of G sensor

- Apply a 12 volts DC across terminals 3 and 1 of the G sensor.
- Measure the G sensor output voltage between terminals 2 and 1 for both when the sensor is in a horizontal position and when it is in a vertical position.

Standard value	Horizontal position	2.3 to 2.7 V
	Vertical position	3.3 to 3.7 V

- If any of the measurements is not within the standard value range, replace the sensor.

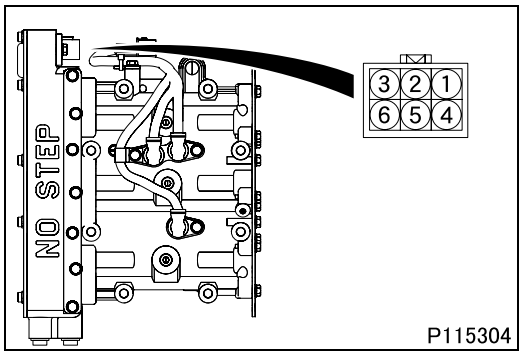

#534 Inspection of gear shift unit

- Because it is not easy to independently check the sensor for the functions, check the FUSO Diagnostics service data using the FUSO Diagnostics. (See Gr22.)
- Replace the gear shift unit if there is any fault in the sensor. (See Gr22.)

https://truckmanualshub.com/

INSPECTION OF ELECTRICAL PARTS

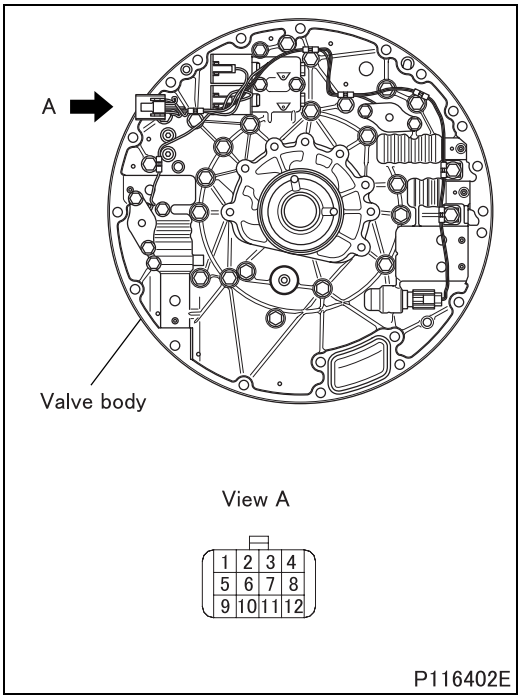

#535 Inspection of valve body (connector)

(1) Inspection of solenoid valve 1, 2

- Measure the resistance between terminals 3 and 7, and terminals 4 and 8.

Standard value (at 20°C {68°F})	5.3 ± 0.5 Ω

- If the measured value deviates from the standard value, replace the valve body. (See Gr22.)

(2) Inspection of solenoid valve (cooling) and solenoid valve (relief)

- Gradually apply DC current between each terminals starting from 0 V.
- Measure the voltage at which the cooling valve and relief valve operates.

Standard value (minimum operating voltage)	Solenoid valve (cooling)	1-body	8 V or less
	Solenoid valve (relief)	2-body	

- If the measured value deviates from the standard value, replace the valve body.

(3) Inspection of oil temperature sensor

- Measure the resistance between terminals 5 and 6.

Standard value (at 20°C {68°F})	2.31 to 2.59 kΩ

- If the measured value deviates from the standard value, replace the valve body. (See Gr22.)

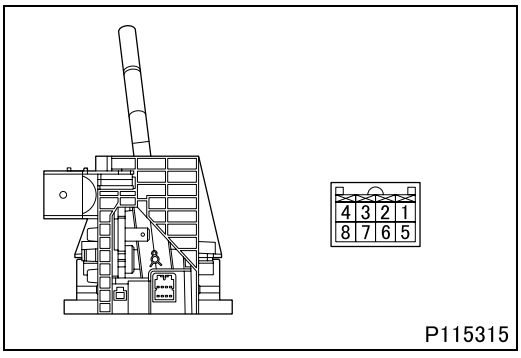

#825 Inspection of shift lever unit

- Because it is not easy to check these shift lever unit individually, determine quality of shift lever unit indirectly by checking related parts, such as harnesses, etc. in the system.
- If any fault is not found in the related parts, and the problem still remains in the system, replace the shift lever unit. (See Gr22.)

https://truckmanualshub.com/

M E M O

https://truckmanualshub.com/

INSTALLED LOCATIONS OF PARTS

A01 to 06 (Switch)

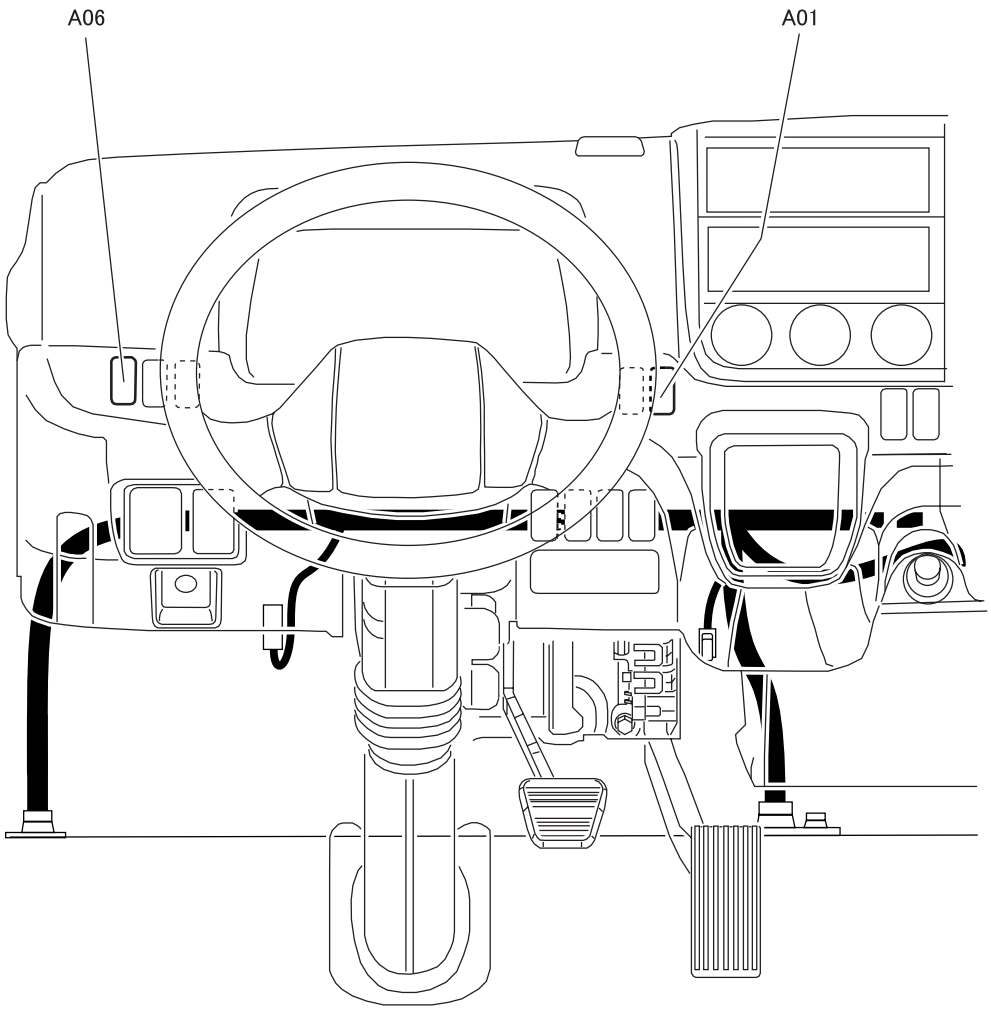

A01 ECO mode switch ＜DUONIC＞
A06 Transmission power take-off switch

https://truckmanualshub.com/

A18 to 21 (Switch)

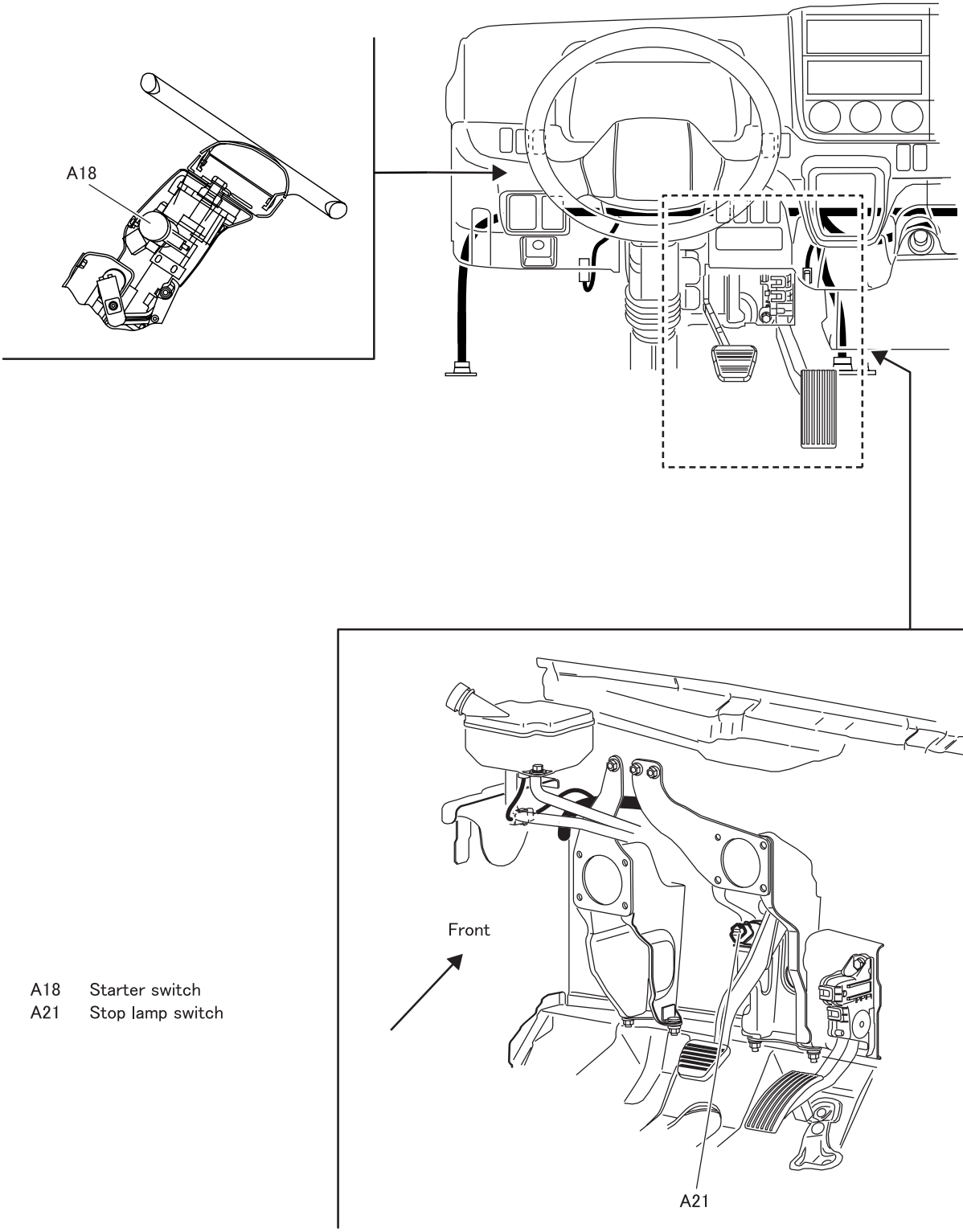

A18 Starter switch
A21 Stop lamp switch

https://truckmanualshub.com/

INSTALLED LOCATIONS OF PARTS

A31 to 33 (Switch)

＜Except crew cab＞

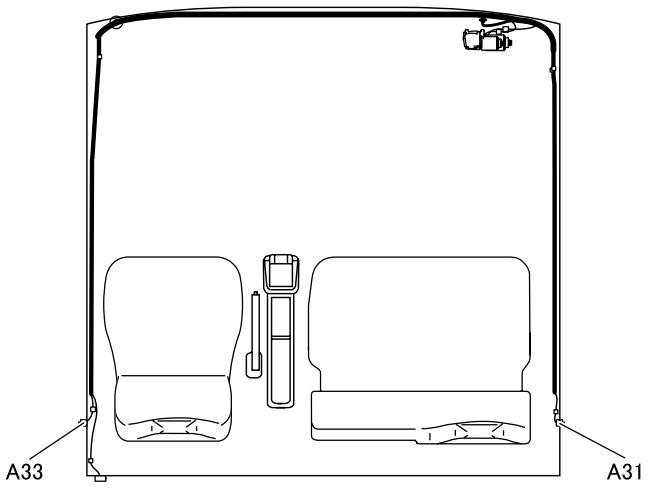

＜Crew cab＞

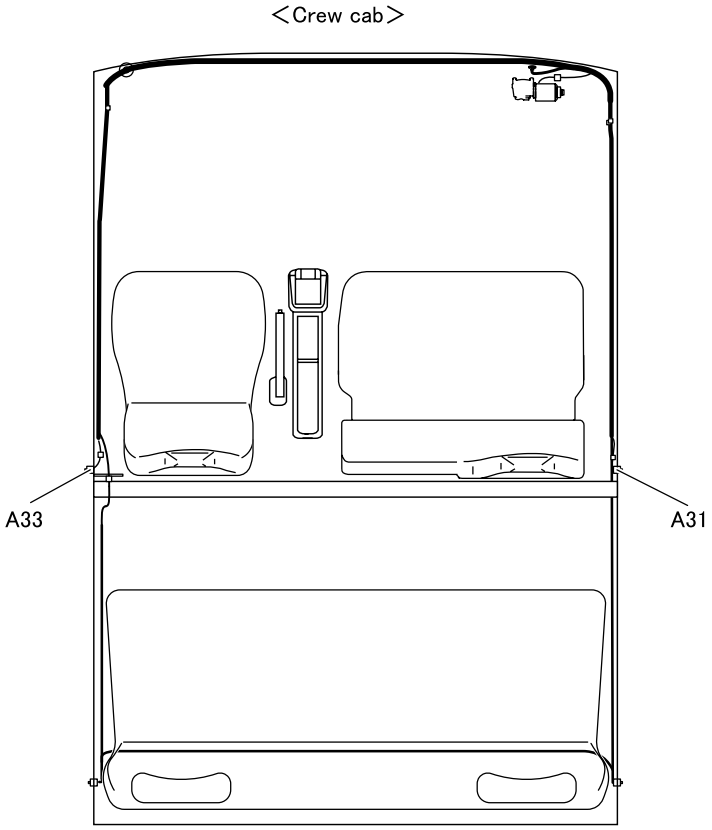

A31 Front door switch, RH
A33 Front door switch, LH

22E-L05232A-3

https://truckmanualshub.com/

A43 to 45 (Sensor)

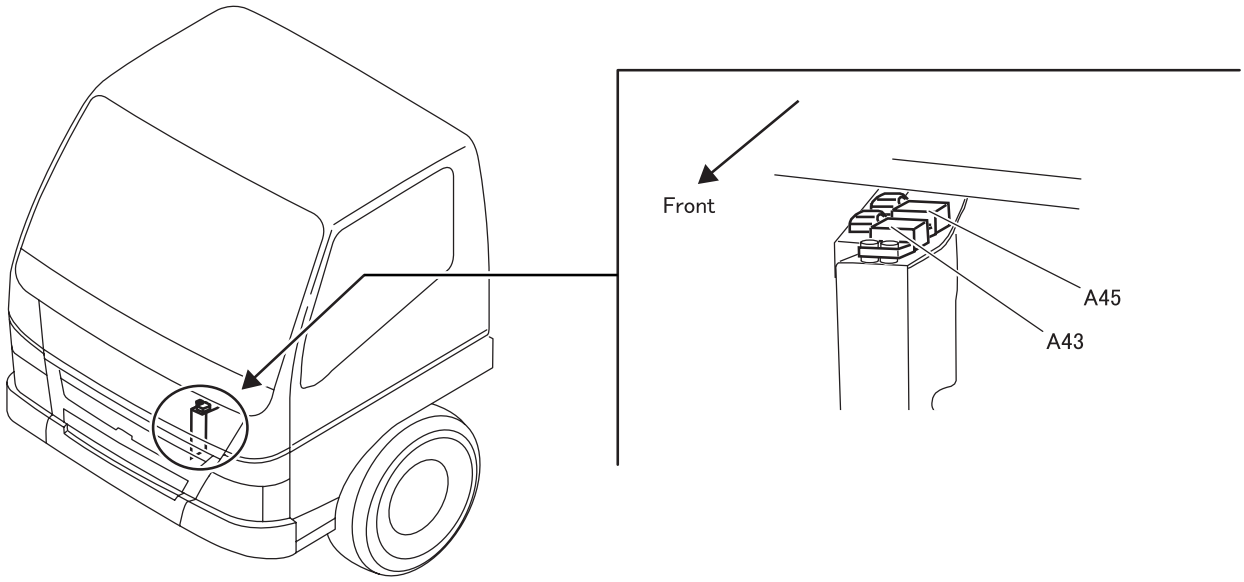

A43 G sensor (main) ＜DUONIC＞
A45 G sensor (sub) ＜DUONIC(FEC5)＞

https://truckmanualshub.com/

INSTALLED LOCATIONS OF PARTS

B11 to 17

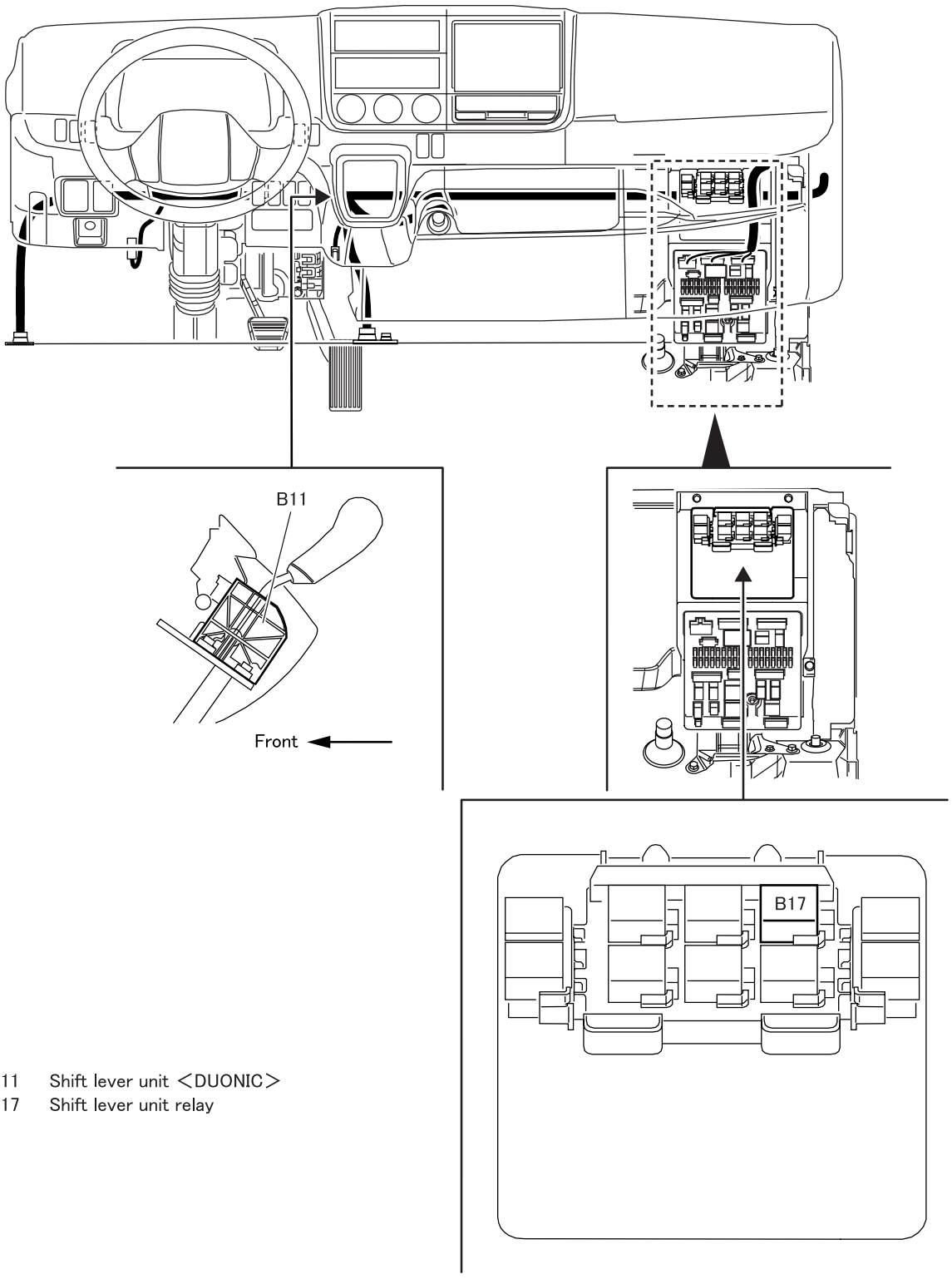

B11 Shift lever unit ＜DUONIC＞
B17 Shift lever unit relay

22E-L05232B-1

https://truckmanualshub.com/

B40

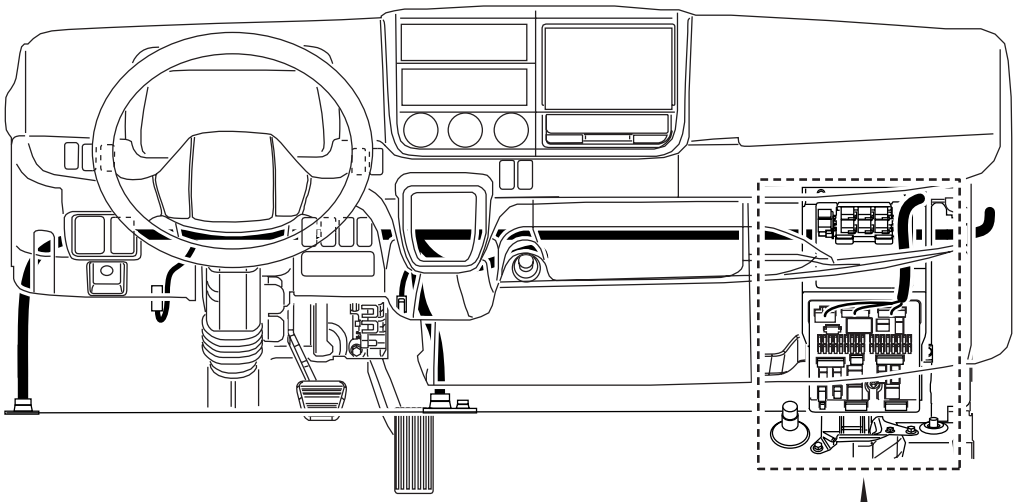

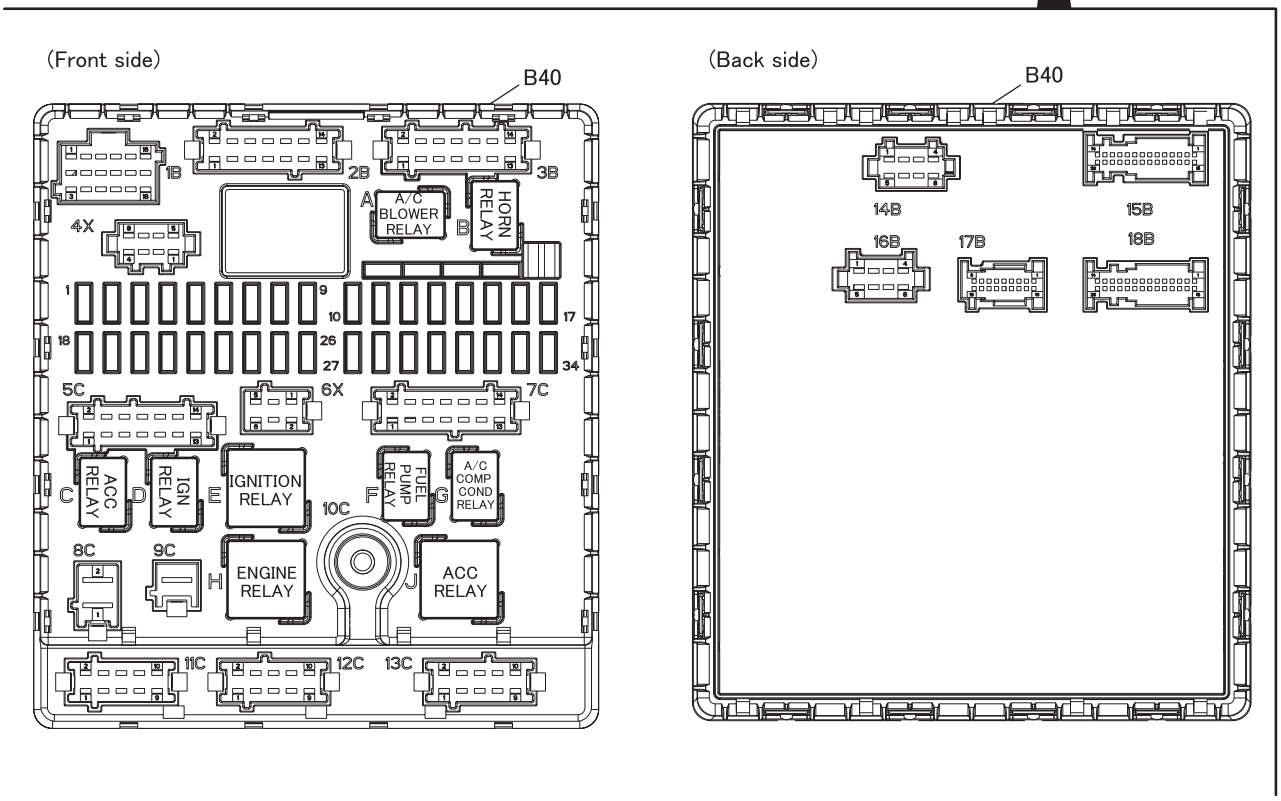

B40 SAM

SAM : Signal detect and actuation modules

https://truckmanualshub.com/

C01

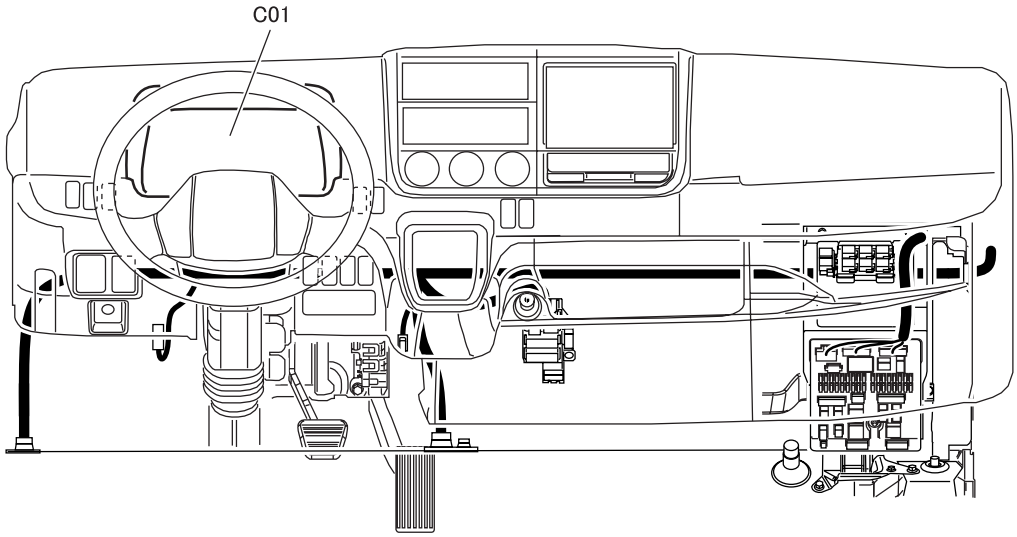

C01 Meter cluster

https://truckmanualshub.com/

M E M O

https://truckmanualshub.com/

INSTALLED LOCATIONS OF PARTS

J01 to 14

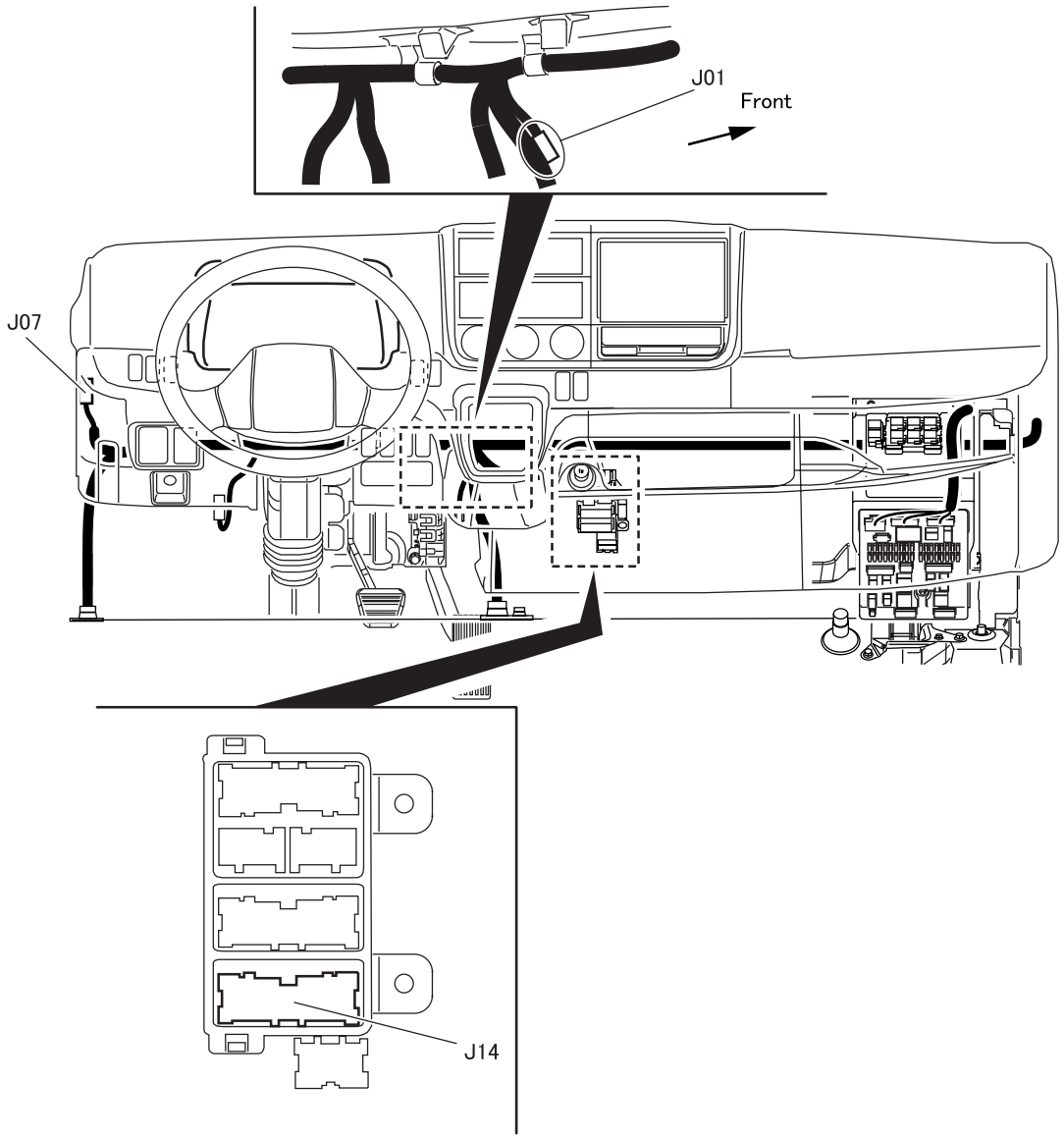

J01 Joint connector (EAB1LG) ＜Ground＞
J14 Connection of cab harness and instrument panel harness : [AK22A]

Indicate by connector type [ ].

https://truckmanualshub.com/

J20 to 21

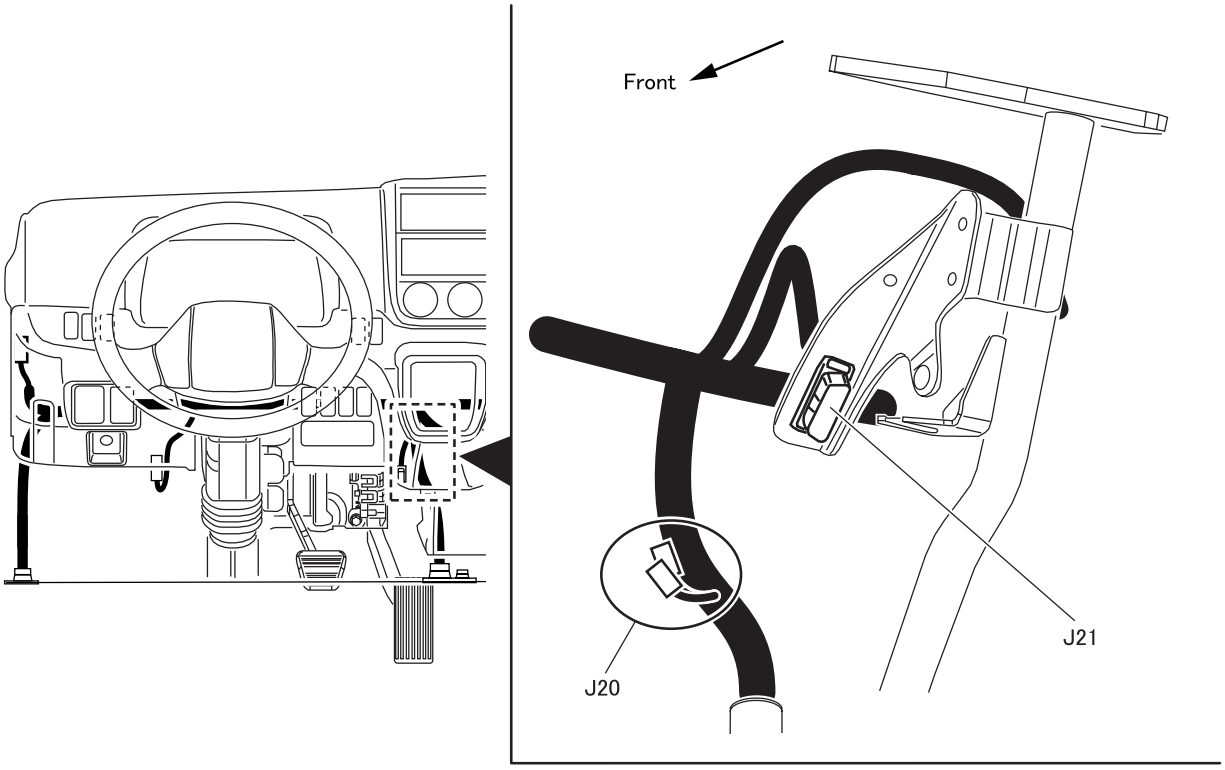

J20 Joint connector (CAN-H) <Meter cluster>
Joint connector (CAN-L) <Meter cluster>
J21 Diagnosis connector

Indicate by connector type [ ].

https://truckmanualshub.com/

INSTALLED LOCATIONS OF PARTS

S04 to 15

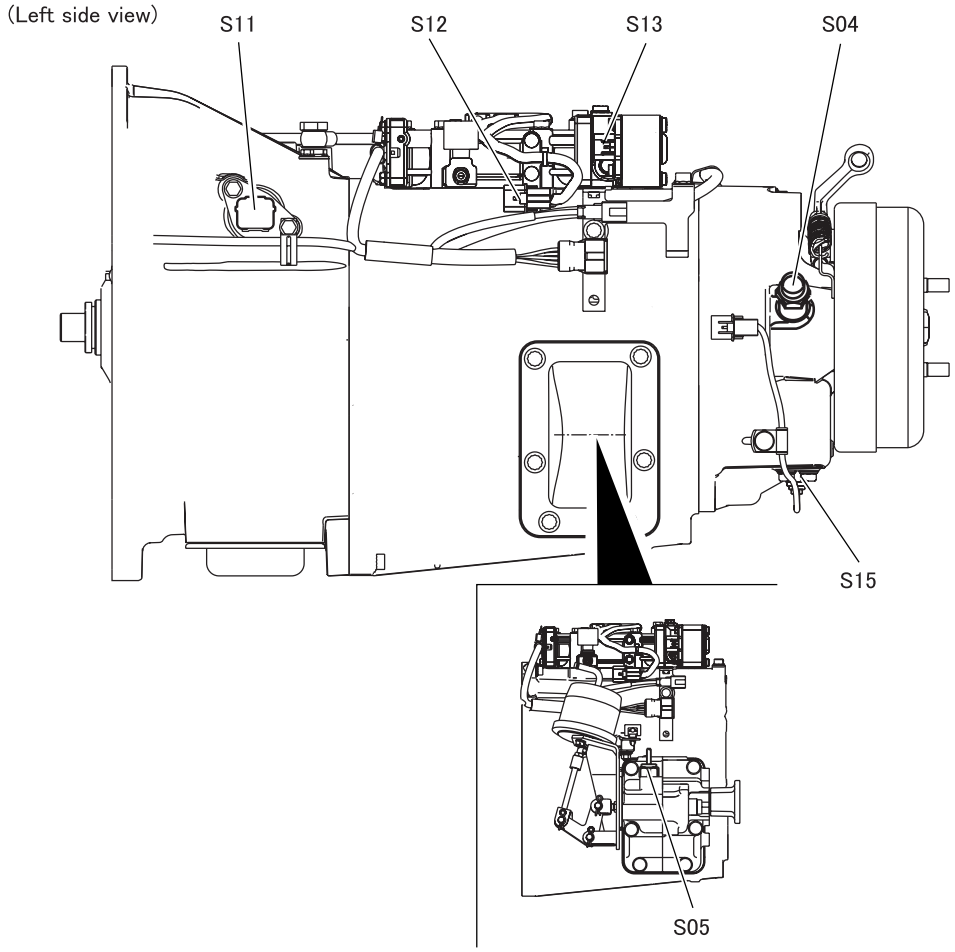

S04 Vehicle speed sensor
S05 Power take-off control switch
S11 Valve body (connector)
S12 Shift stroke sensor (connector)
S13 Gear shift unit
S14 Vehicle speed sensor＜DUONIC＞
S15 Parking gear switch

22E-L05232S-1

https://truckmanualshub.com/

S04 to 14 <Transfer (FG)>

(Upper view)

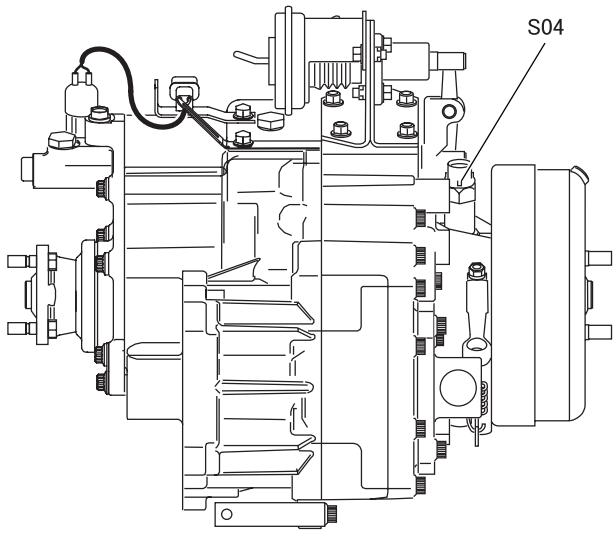

(Left side view)

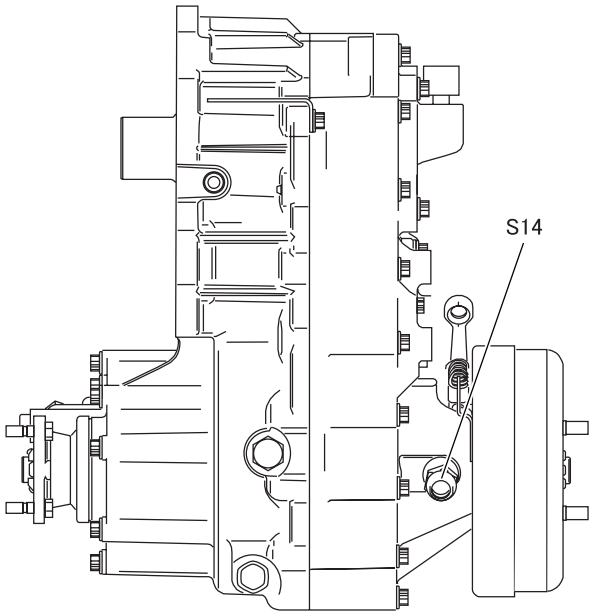

S04 Vehicle speed sensor
S14 Vehicle speed sensor

https://truckmanualshub.com/

INSTALLED LOCATIONS OF PARTS

T06 (Sensor)

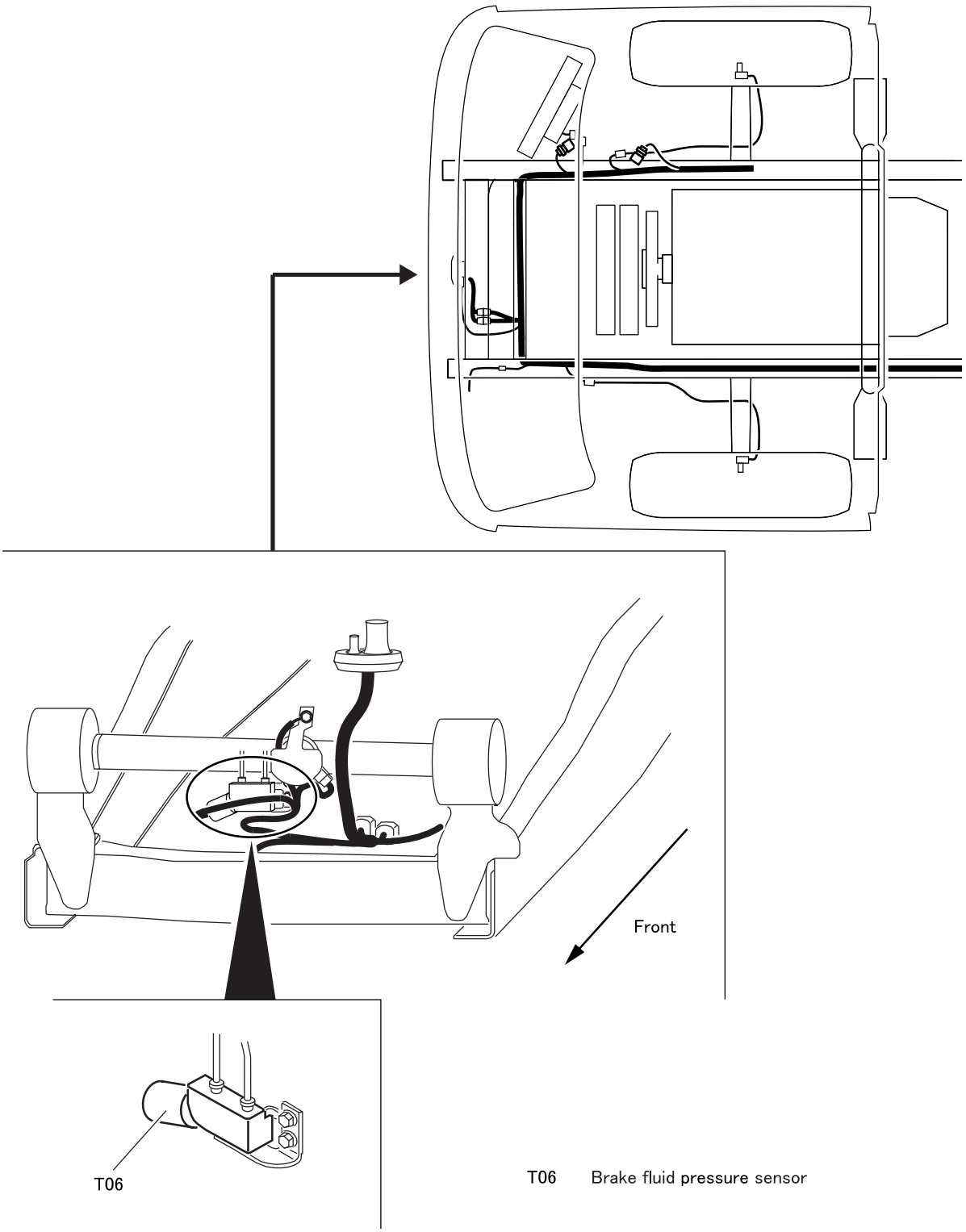

T06 Brake fluid pressure sensor

https://truckmanualshub.com/

M E M O

https://truckmanualshub.com/

U02

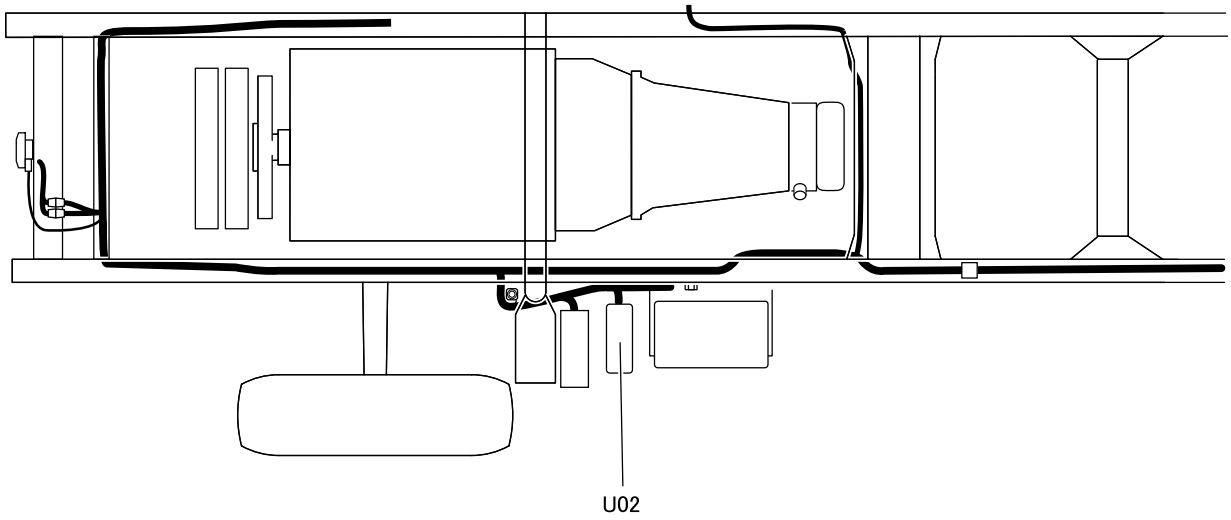

U02 High-current fuse box

https://truckmanualshub.com/

U07

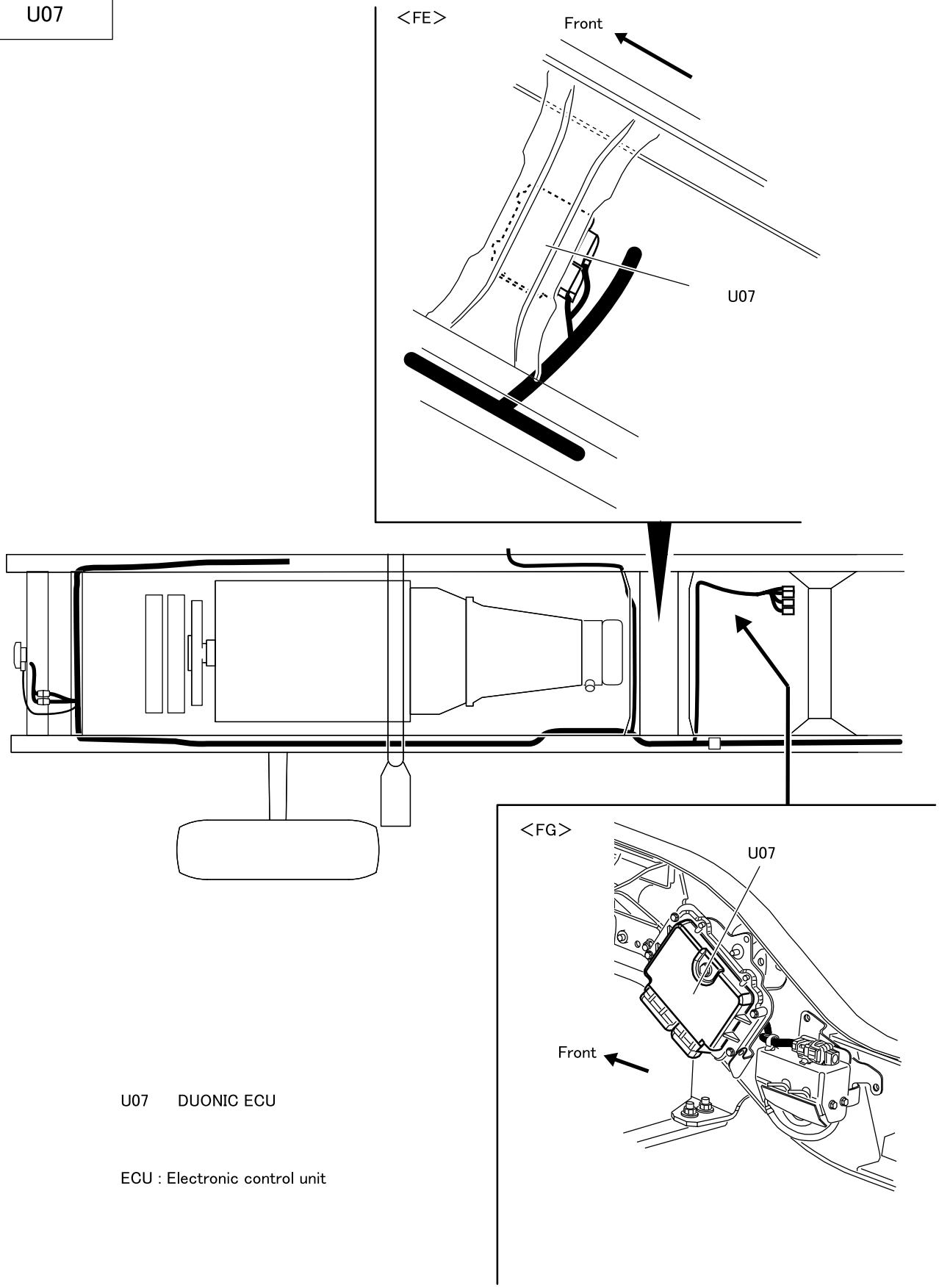

U07 DUONIC ECU

ECU : Electronic control unit

https://truckmanualshub.com/

V02

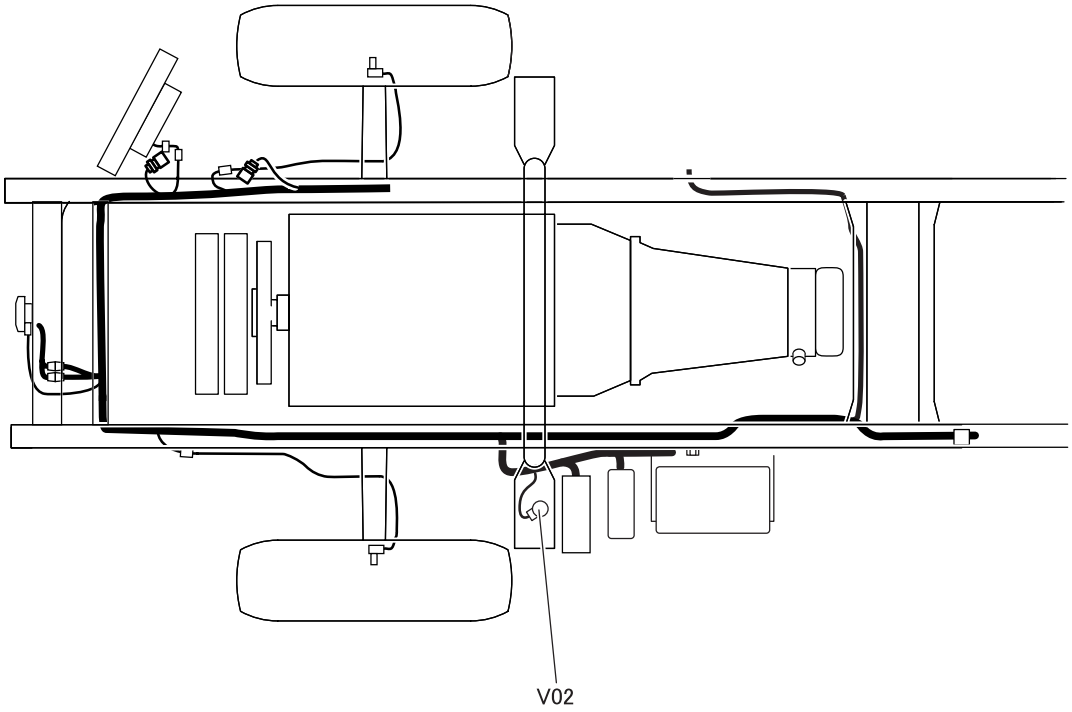

V02 Transmission power take-off 3-way magnetic valve

https://truckmanualshub.com/

M E M O

https://truckmanualshub.com/

INSTALLED LOCATIONS OF PARTS

W01 to 09

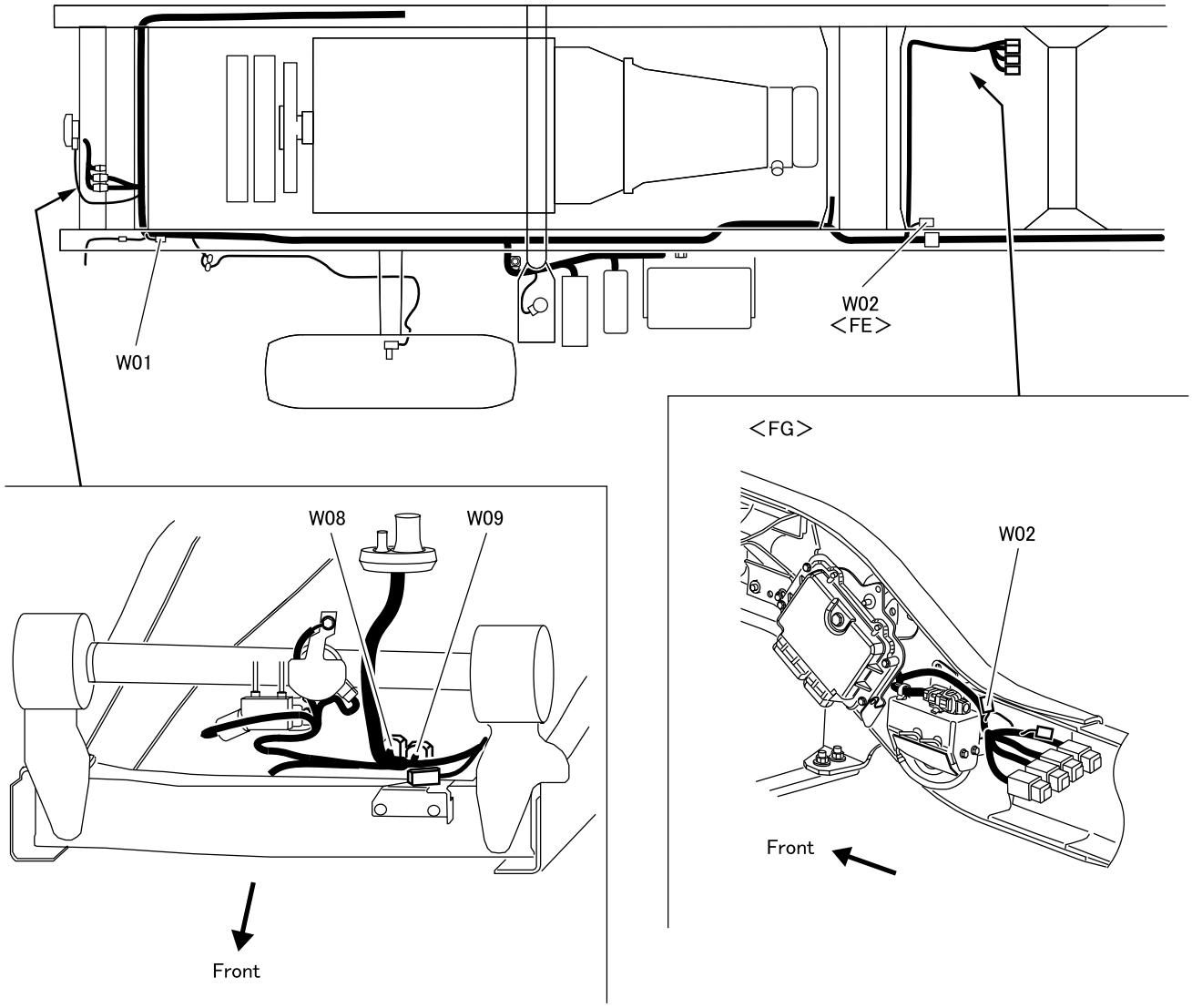

W01 Joint connector (CAN) <ABS>
W02 Joint connector (CAN) <DUONIC>
W08 Connection of cab harness and chassis harness : [AB16A]
W09 Connection of cab harness and chassis harness : [AB12A]

ABS : Anti-lock brake system
Indicate by connector type [ ].

22E-L05232W-1

https://truckmanualshub.com/

W20

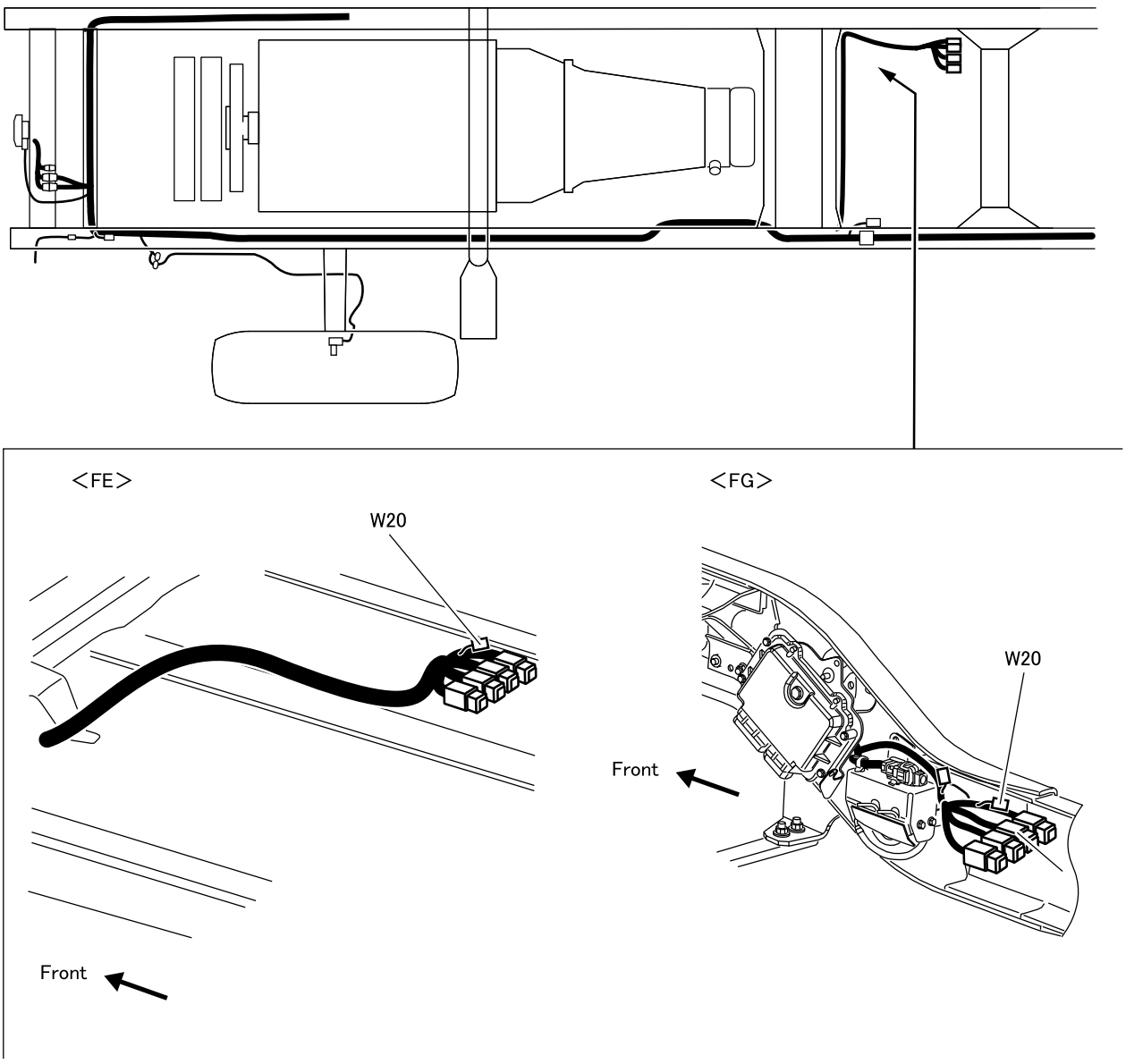

W20 Joint connector (CAN) <Engine control>

https://truckmanualshub.com/

INSTALLED LOCATIONS OF PARTS

W27

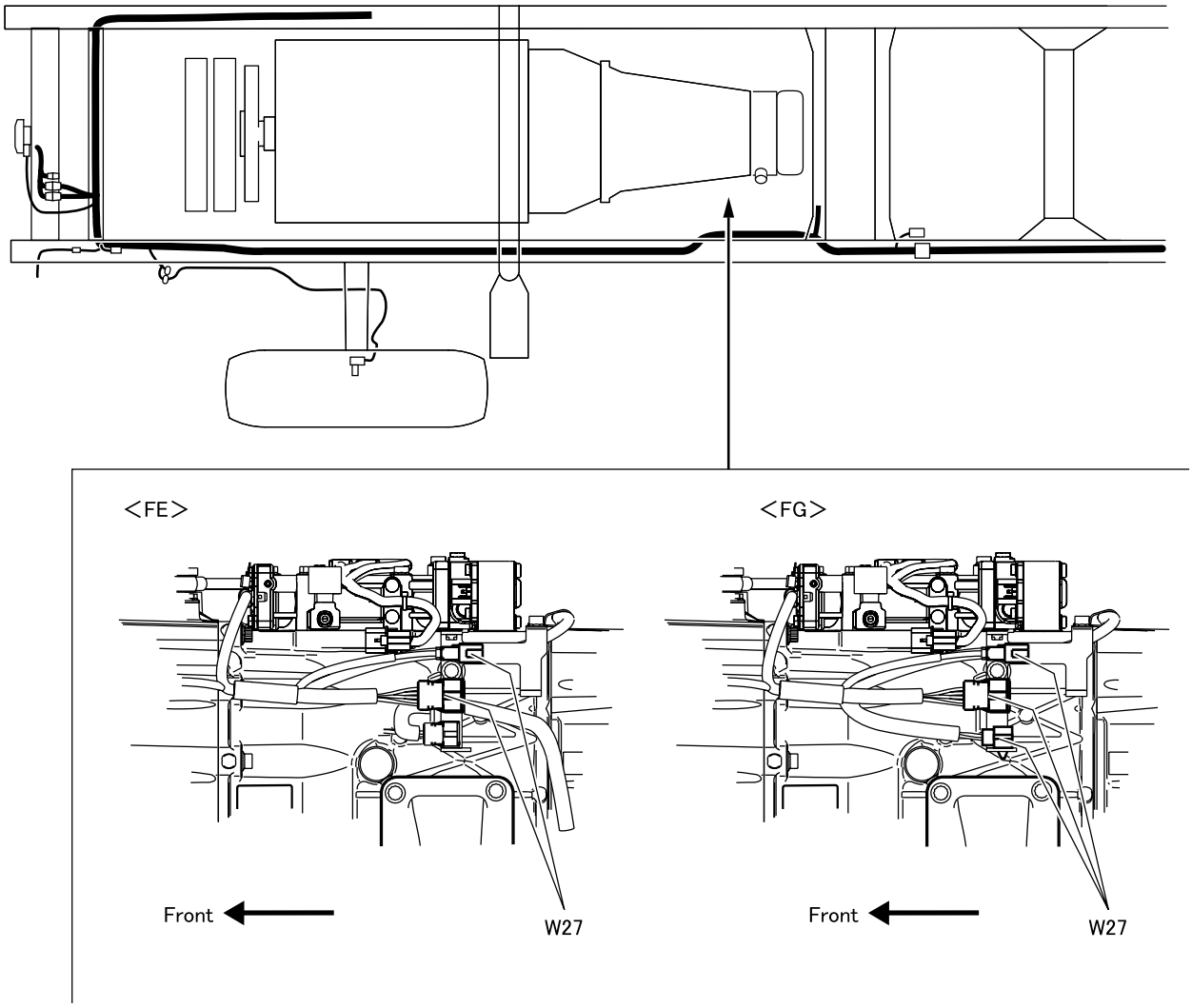

W27 Connection of chassis harness and DUONIC harness
: [AB6A] <FG>, [AB8A]

Indicate by connector type [ ].

https://truckmanualshub.com/

[12] to [14] Chassis ground

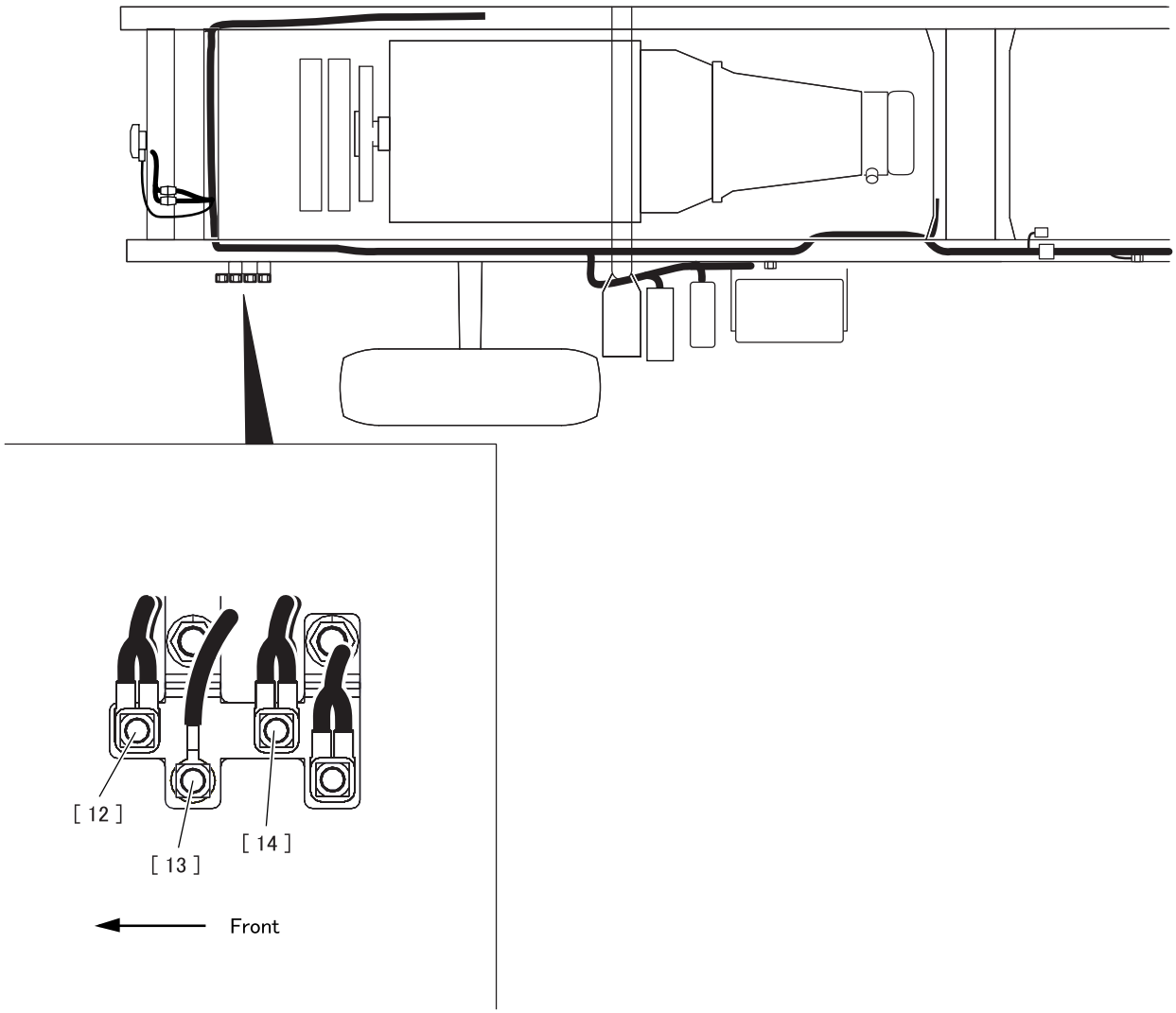

Location	Circuit No.	Wire diameter - wire color	Destination	Remarks
[12]	EAC1	1.25-B	JOINT (EAC1)	
[13]	EAB1	8-B	SAM	
[14]	AME1	1.25-B	DUONIC ECU	
	AME2	1.25-B		

SAM : Signal detect and actuation modules
ECU : Electronic control unit

https://truckmanualshub.com/

ELECTRIC CIRCUIT DIAGRAM

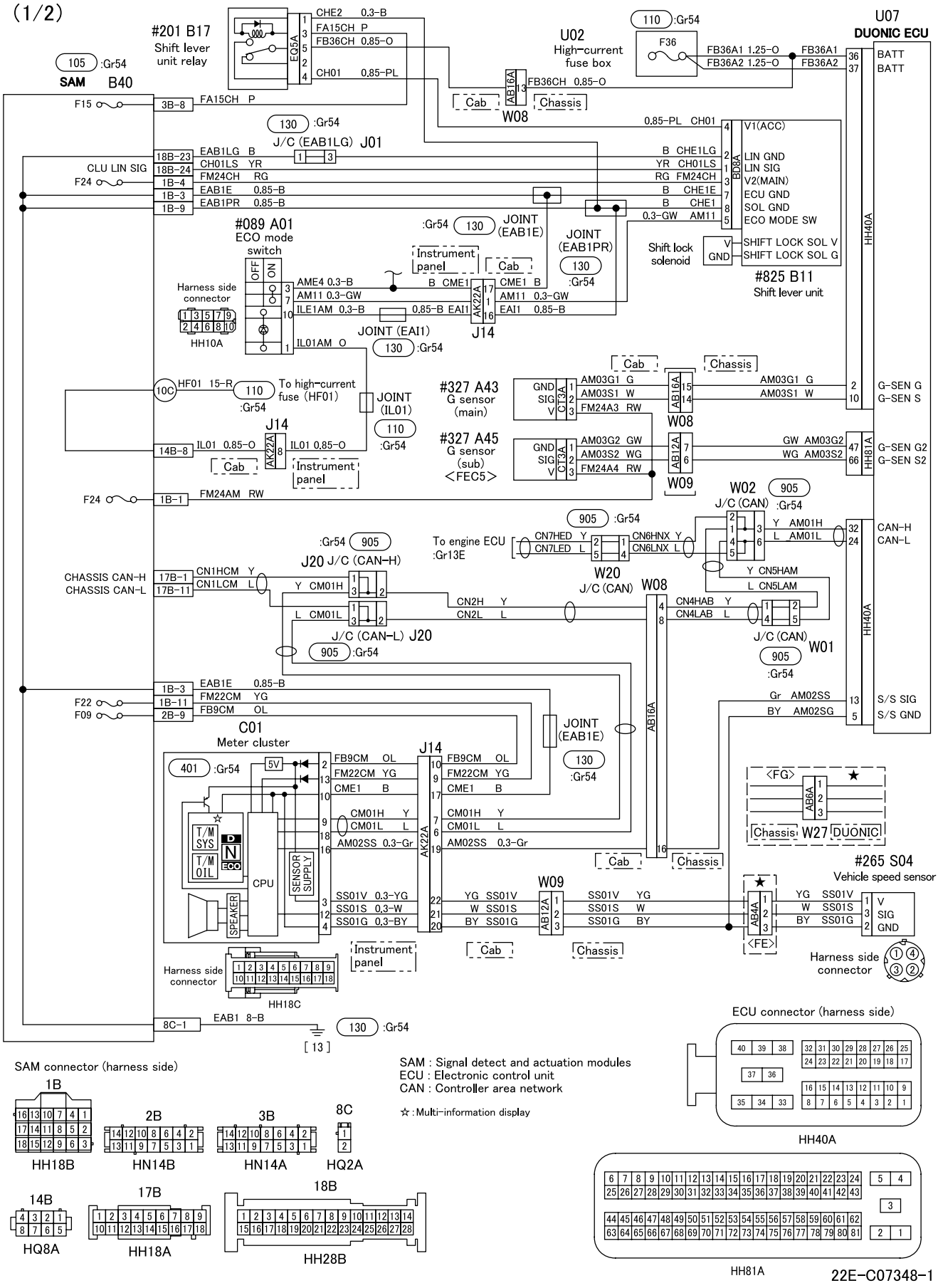

22E-C07348-1

(2/2)

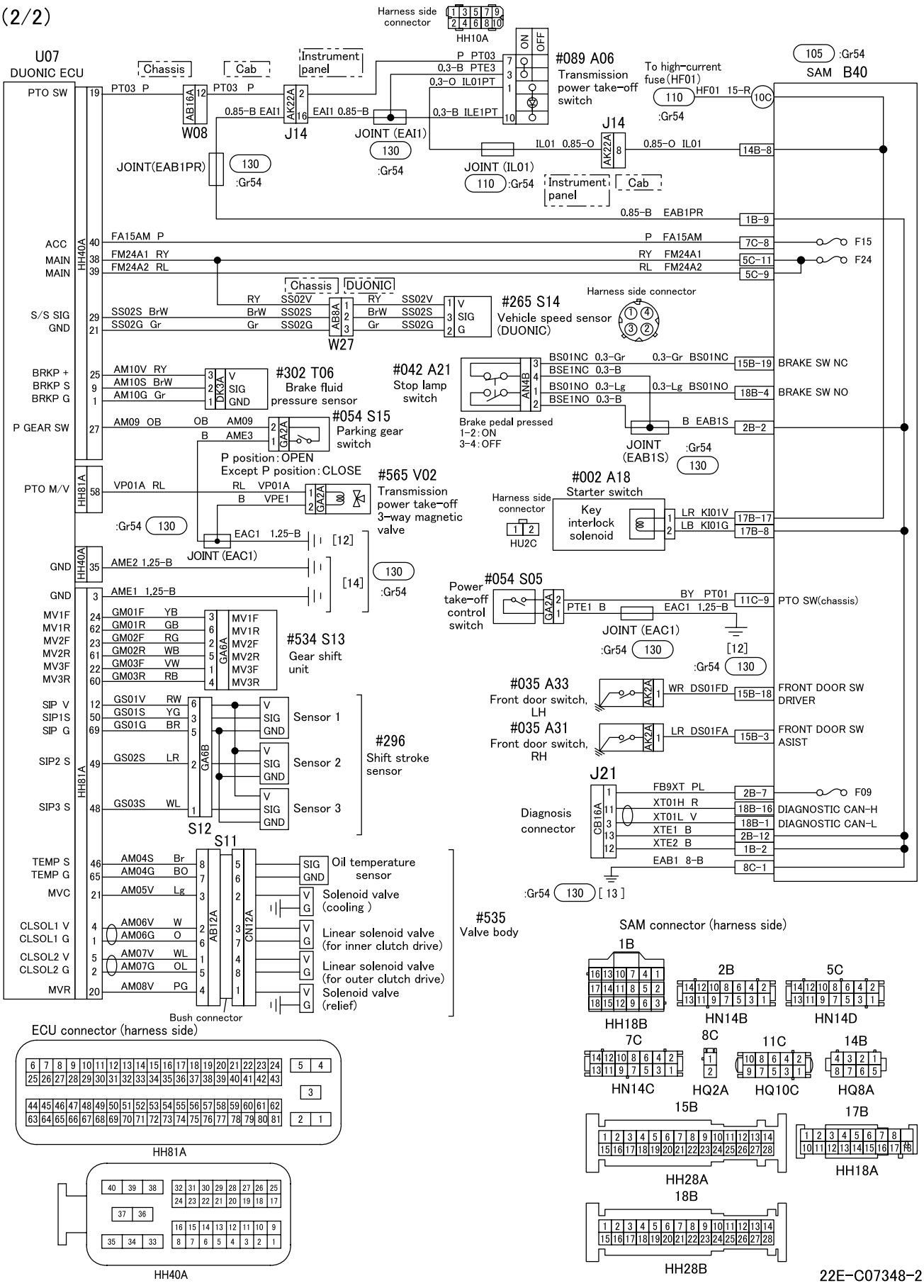

22E-C07348-2

https://truckmanualshub.com/

FUSO

Group 24

Transfer

MITSUBISHI FUSO TRUCK OF AMERICA, Inc.

Pub.No.00ELT0001-24

https://truckmanualshub.com/

INDEX

SPECIFICATIONS **24-2**

STRUCTURE AND OPERATION
1. **Transfer** **24-3**

TROUBLESHOOTING **24-4**

ON-VEHICLE INSPECTION AND ADJUSTMENT
1. **Inspection of Transmission and Transfer Oil Leakage** **24-6**
2. **Inspection of Looseness in Transmission and Transfer Mounting Bolts** **24-6**
3. **Inspection of Play and Looseness in Companion Flange** **24-7**
4. **Inspection and Replacement of Transfer Oil** **24-8**

REMOVAL AND INSTALLATION OF TRANSMISSION (WITH TRANSFER) **24-10**

REMOVAL AND INSTALLATION OF TRANSFER **24-16**

FRONT DRIVE **24-18**

REAR DRIVE **24-24**

TRANSFER **24-28**

https://truckmanualshub.com/

SPECIFICATIONS

Item			Specifications
Model			TF3
Transfer type			Part-time
Drive type			Gear
Gear ratio			1.090
Transfer oil	Gear oil		API GL-3 SAE 80
	Oil quantity	L {qts.}	Approx. 3.6 {3.8}
Mass (including transmission body)		kg {lb}	Approx. 189 {417}
Control			Electric and vacuum type

https://truckmanualshub.com/

1. Transfer

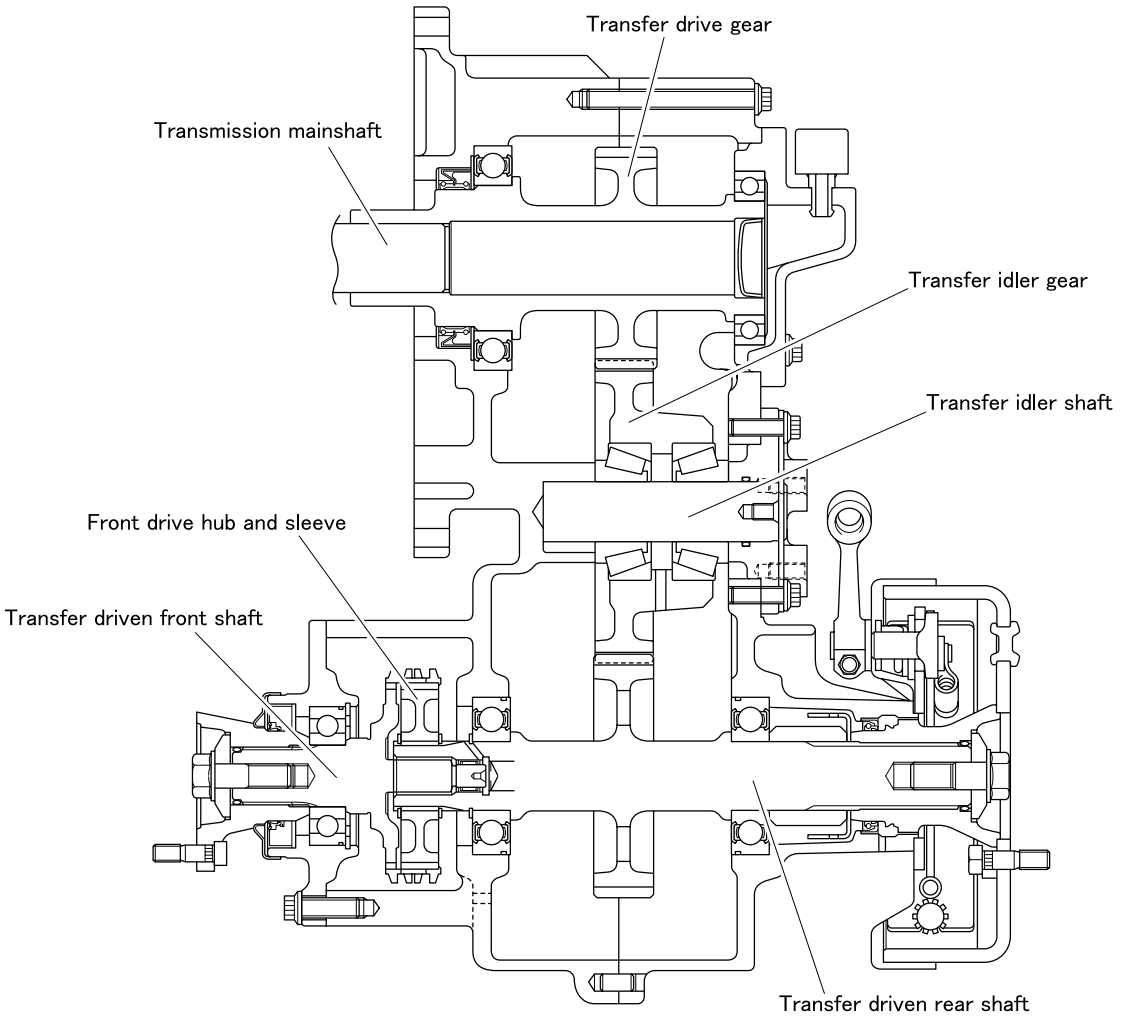

P115937E

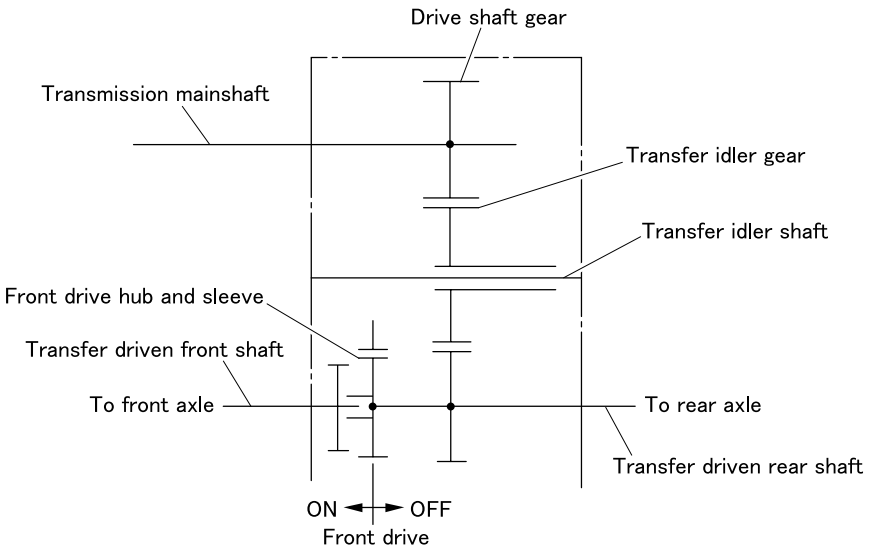

P115938E

- The transfer has two functions of distribution of all-wheel drive and a sub transmission with a reduction gear.
- The transfer is of a three-shaft constant-mesh type.
- The switch of a driver seat enables switching between engagement and disengagement of the front drive.

https://truckmanualshub.com/

Possible causes \ Symptoms		Noise when cruising	Gears cannot be engaged when switching to front drive	Gears slip out of engagement during driving with front drive engaged	Gears slip out of engagement during driving	Gears cannot be disengaged when switching to front drive	Indicator does not light though front drive is engaged	Indicator lights though front drive is not engaged
Transfer body faulty	Transfer driven front shaft and spline of synchronizer sleeve worn			O				
	Hub and spline of high and low constant sleeve worn				O			
	Transfer idler bearing worn or damaged	O						
	Transfer drive gear bearing worn or damaged	O						
	Transfer driven rear shaft bearing worn or damaged	O						
	Transfer driven rear shaft needle bearing worn or damaged	O						
	Gears damaged	O						
	Backlash of drive shaft gear and transfer idler gear excessive	O						
	Transfer oil insufficient	O						
	Transfer oil viscosity inadequate	O						
	Synchronizer sleeve and dog clutch broken		O	O				
	Synchronizer sleeve and hub broken				O			
Control mechanism faulty	Shift rail bent		O					
	Shift rail sliding movement faulty		O					
	Shift fork bent		O					
	Shift fork claws worn		O					
Transfer control system faulty	Transfer four-wheel drive switch faulty						O	O
	Blowout of fuse and high-current fuse		O				O	
	Battery overcharge		O					
	3-way magnet valve faulty		O	O		O		
	Broken wire, poor connection						O	
	Air leakage in vacuum piping		O	O				
	Vacuum actuator faulty		O	O		O		

https://truckmanualshub.com/

M E M O

https://truckmanualshub.com/

ON-VEHICLE INSPECTION AND ADJUSTMENT

1. Inspection of Transmission and Transfer Oil Leakage

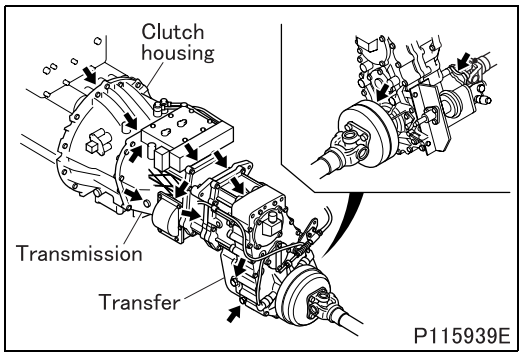

1.1 Inspection of oil leakage at each part of transmission body and transfer

- Check the oil leakage at each part of transmission body and transfer in visual.
  If the oil leakage is found, replace the defective part.

1.2 Inspection of oil leakage around transmission mounting part

- Check there is not oil stain on transmission mounting part caused by oil leakage from engine.
- If there is the oil stain, remove the transmission and clean the mounting surface of clutch housing and flywheel housing using brake cleaner etc. after repairing oil leakage part. Because the oil stain may loosen the transmission mounting bolts. (See “REMOVAL AND INSTALLATION OF TRANSMISSION (WITH TRANSFER)”.)

2. Inspection of Looseness in Transmission and Transfer Mounting Bolts

Tightening torque (Unit: N·m {ft.lbs, kgf·m})

Mark	Parts to be tightened	Tightening torque	Remarks
–	Bolt A (transfer mounting)	45.8 {34, 4.7}	–
–	Bolt B (transmission mounting)	47.1 {35, 4.8}	–

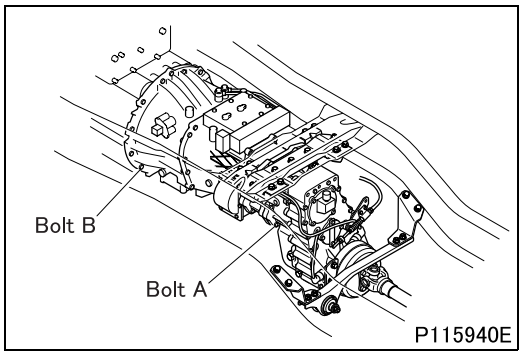

- Check the transmission and transfer mounting bolts for looseness.
- Retighten any loose bolt to the specified torque.

https://truckmanualshub.com/

3. Inspection of Play and Looseness in Companion Flange

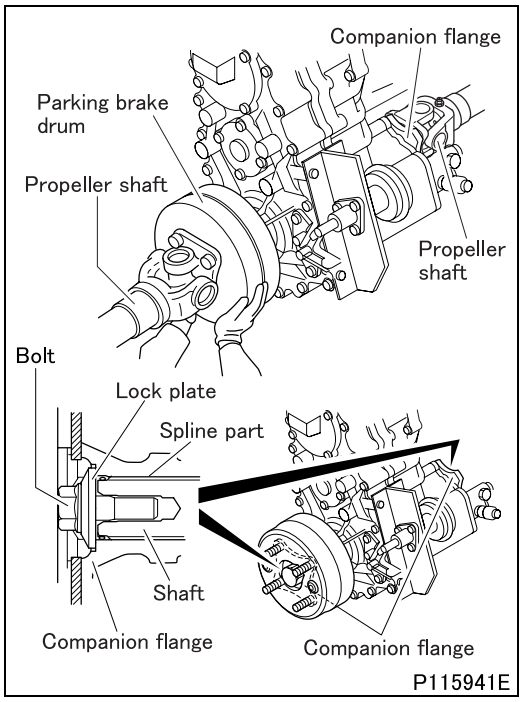

- Check for looseness in the propeller shaft mounting bolts. (See Gr25.)
- Move the parking brake drum (on the rear drive side) and the companion flange (on the front drive side) in axial and vertical directions to check for excessive play between the companion flange and the shaft.
- If excessive play is detected, remove the propeller shaft, then check the companion flange mounting bolts for looseness and the splines on companion flange and shaft for abnormalities. If any part is found defective, replace the part. (See FRONT DRIVE and REAR DRIVE sections.)

https://truckmanualshub.com/

4. Inspection and Replacement of Transfer Oil

WARNING ⚠

- **Temperature of transfer oil is high immediately after driving. Perform work when oil is cold.**

Tightening torque (Unit: N·m {ft.lbs, kgf·m})

Mark	Parts to be tightened	Tightening torque	Remarks
–	Inspection plug	68.6 ± 14.7 {51 ± 11, 7.0 ± 1.5}	–
	Drain plug (magnet type)		

Lubricant and/or sealant

Mark	Points of application	Specified lubricant and/or sealant	Quantity
–	Thread area of inspection plug	ThreeBond 1105	As required
	Thread area of drain plug		
–	Transfer case	General: API GL-3 SAE 80 Warm region: API GL-3 SAE 90 Tropical region: API GL-4 SAE 90	3.6 L {3.8 qts.}

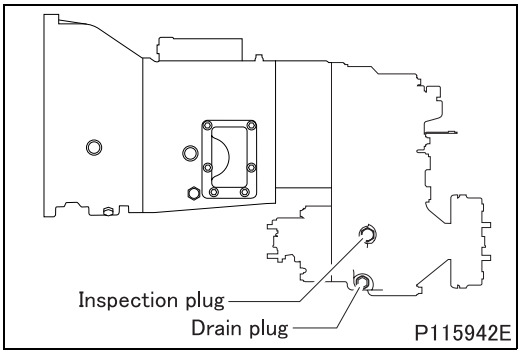

[Inspection]

(1) Inspection of oil quantity

- Remove the inspection plug, and check that transfer oil is filled up to the neck.
- If oil is not sufficient, fill oil from the inspection plug hole up to the neck.
- After filling, apply sealant to the inspection plug and tighten it to the specified torque.

(2) Inspection of oil quality and inclusions

- When draining transfer oil, check for oil quality, metal chips and metal powder.
- If an abnormally large amount of metal chips and metal powder is found, disassemble the transfer assembly for service, as abnormalities may be caused inside.

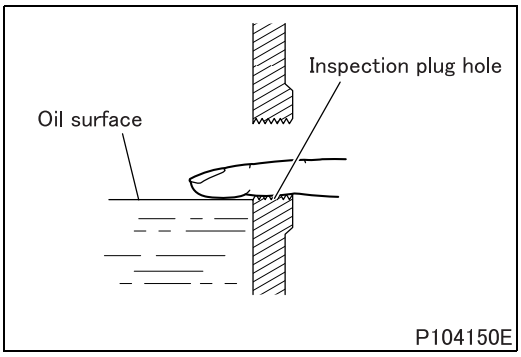

[Replacement]

- Remove the drain plug to drain transfer oil. Drainage can be made quickly with the inspection plug removed.
- After draining transfer oil, apply sealant to the drain plug and tighten it to the specified torque. In case of the drain plug of magnet type, clean it before installation.
- Fill transfer oil in the specified quantity from the inspection plug hole.
- After filling, wait for 1 minute or more to check that oil is filled up to the neck of the inspection plug hole by inserting a finger to the inspection plug hole. If oil is not sufficient, replenish it.
- After completing work, apply sealant to the inspection plug and tighten it to the specified torque.

https://truckmanualshub.com/

M E M O

https://truckmanualshub.com/

REMOVAL AND INSTALLATION OF TRANSMISSION (WITH TRANSFER)

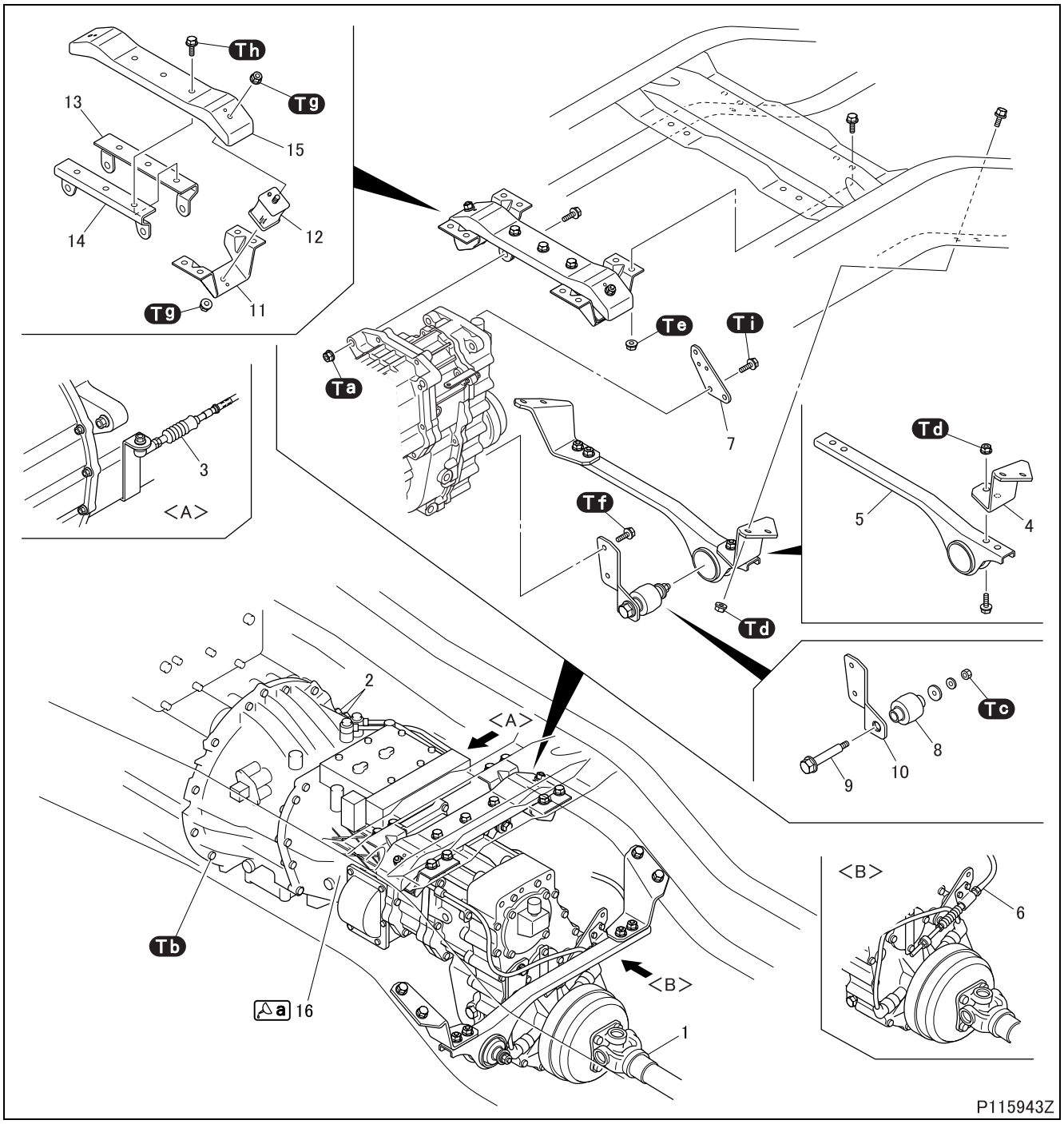

● Removal sequence

1 Propeller shaft (See Gr25.)
2 Transmission oil cooler hose (See Gr22.)
3 P-range cable (See Gr22.)
4 Frame under bracket
5 Roll stopper cross member
6 Parking brake cable (See Gr36.)
7 Parking brake cable bracket
8 Insulator
9 Shaft bolt
10 Roll stopper bracket
11 Rear engine mounting bracket
12 Cushion rubber
13 Transfer mounting support C
14 Transfer mounting support B
15 Transfer mounting support A
16 Transmission

- Do not remove the insulator unless it is defective.
- When the oil stain is found inside of clutch housing after removing the transmission, check the oil leakage portion of transmission or engine and replace the defective part.

https://truckmanualshub.com/

● Installation sequence

Follow the removal sequence in reverse.

- Check and adjust the parking brake lever after the installation. (See Gr36.)

Tightening torque (Unit: N·m {ft.lbs, kgf·m})

Mark	Parts to be tightened	Tightening torque	Remarks
Ta	Nut (transmission mounting)	235 ± 35 {175 ± 26, 24.0 ± 3.6}	–
Tb	Bolt (transmission mounting)	47.1 {35, 4.8}	–
Tc	Nut (insulator mounting)	46 ± 8 {34.0 ± 5.9, 4.7 ± 0.8}	–
Td	Nut (frame under bracket mounting)	146.5 ± 13.5 {110 ± 10, 15.0 ± 1.4}	–
	Nut (roll stopper cross member mounting)		
Te	Nut (rear engine mounting bracket mounting)	$58.7^{+6.3}_{-8.7}$ {$43^{+4.6}_{-6.4}$, $6.0^{+0.6}_{-0.9}$}	–
Tf	Bolt (roll stopper bracket mounting)	55 ± 10 {41.0 ± 7.4, 5.6 ± 1.0}	–
Tg	Nut (cushion rubber mounting)	50 ± 5 {37.0 ± 3.7, 5.1 ± 0.5}	–
Th	Bolt (transfer mounting support mounting)	145 ± 25 {105 ± 18, 15.0 ± 2.5}	–
Ti	Bolt (parking brake cable bracket mounting)	75 ± 10 {55 ± 7.4, 7.6 ± 1.0}	–

Lubricant and/or sealant

Mark	Points of application	Specified lubricant and/or sealant	Quantity
a	Mating surface of clutch housing and engine	ThreeBond 1215	As required

https://truckmanualshub.com/

◆Removal procedure◆

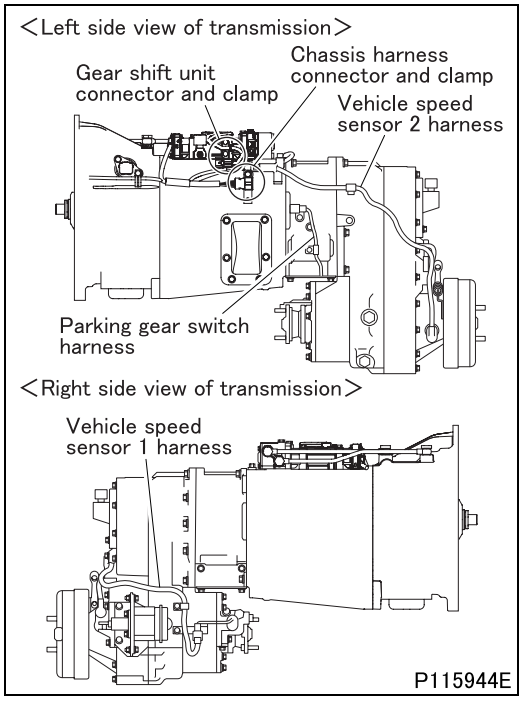

■ **Removal: Harness**

- Remove the harnesses shown in the illustrations from the transmission. As to the portion of harness that cannot be removed from under the vehicle, remove it in the process of removal of the transmission from the engine.

CAUTION ⚠

- **The harnesses are clamped to the transmission at places. An attempt to remove them by pulling with connector only removed could result in a damaged harness.**

- Remove the gear shift unit harness connector and clamp.

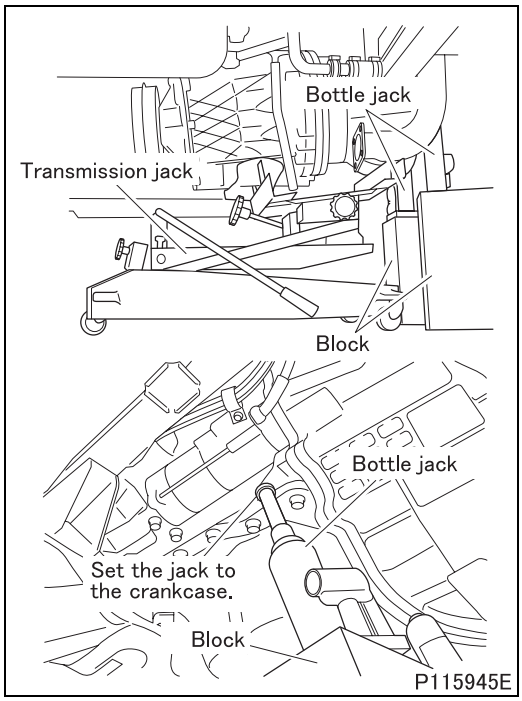

■ **Removal: Transmission**

- Apply the transmission jack and two bottle jacks to the transmission and engine block respectively as shown in the drawing before removing the transmission mounting bolts (to the engine and mounting support).
- Place a block under the jacks to apply bottle jacks to the engine block.

CAUTION ⚠

- **If the engine is not supported by the bottle jack, it will fall when the transmission is removed.**

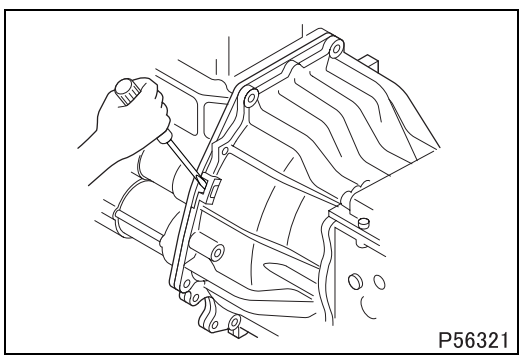

- Insert a screwdriver into the three removal grooves and pry the transmission from the engine.
- Move the transmission backward until the spline of the drive pinion is detached from the clutch.

CAUTION ⚠

- **Make sure that you pull the transmission out in a straight line. If you seesaw the transmission violently, you will damage the spline that connects the drive pinion and the clutch.**

https://truckmanualshub.com/

◆Inspection procedure◆

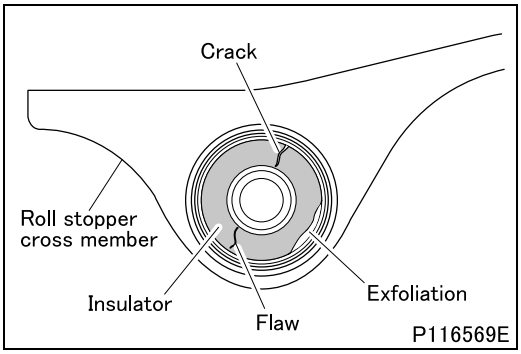

■ Inspection: Insulator

- Inspect the insulator, as fitted to the roll stopper bracket, for flaw, crack, exfoliation or any other defect in the rubber. Replace the insulator if it is defective.

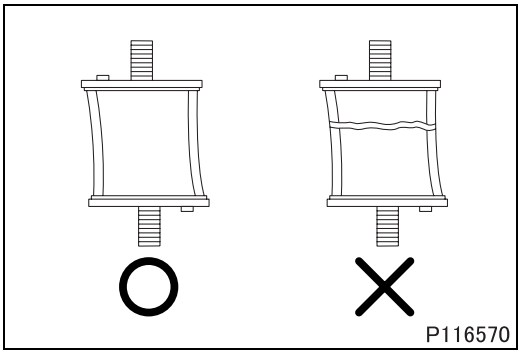

■ Inspection: Cushion rubber

- Check the entire periphery of the cushion rubber for crack, breakage, oily stains or any other defect.
- Replace the cushion rubber if it is defective.

◆Installation procedure◆

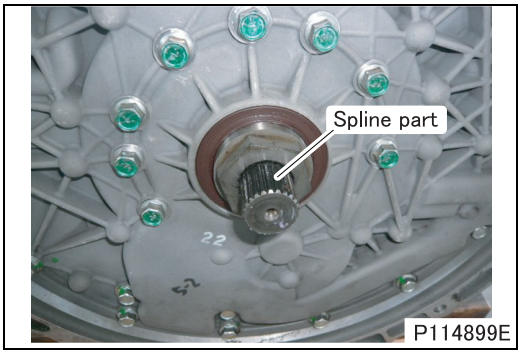

■ Installation: Transmission

- Check the spline of the drive pinion of dual clutch for rust.
- If rust is found, remove it using a wire brush.

CAUTION ⚠

- **Do not apply grease to the drive pinion as it may cause abnormal noise.**

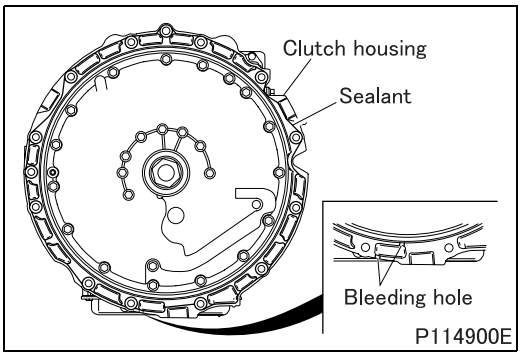

[Applying sealant]

- Apply sealant following manners shown below.

CAUTION ⚠

- **Take care not to apply sealant under any of the following conditions. Otherwise it causes water infiltration.**
  - **There is dust, oil, grease, etc. on the mating surface.**
  - **The diameter or thickness of the applied sealant is extremely different at each part.**
  - **The applied sealant has some breaks.**
  - **The applied sealant covers the bleeding hole of the clutch housing and engine parts.**

<Case of using nozzle gun>

- Clean the mating surfaces of each part.
- Apply sealant on the width center of the mating surfaces so that the diameter of the applied sealant is the same as the diameter of the nozzle. The line of applying sealant is illustrated.

https://truckmanualshub.com/

<Case of using spatula, etc.>

- Clean the mating surfaces of each part.
- Apply sealant evenly on the entire mating surfaces.

[Installation]

- After applying the sealant, install the transmission before the sealant dries. Be sure not to allow the sealant to be displaced.
- Do not start the engine within one hour after installing the transmission.
- When loosing or removing transmission mounting bolts, be sure to reapply the sealant.

- Support the transmission on the transmission jack, and insert the transmission into the pilot bearing of the flywheel paying attention to the drive pinion spline.
- Tighten transmission mounting bolts to the specified torque.

https://truckmanualshub.com/

M E M O

https://truckmanualshub.com/

REMOVAL AND INSTALLATION OF TRANSFER

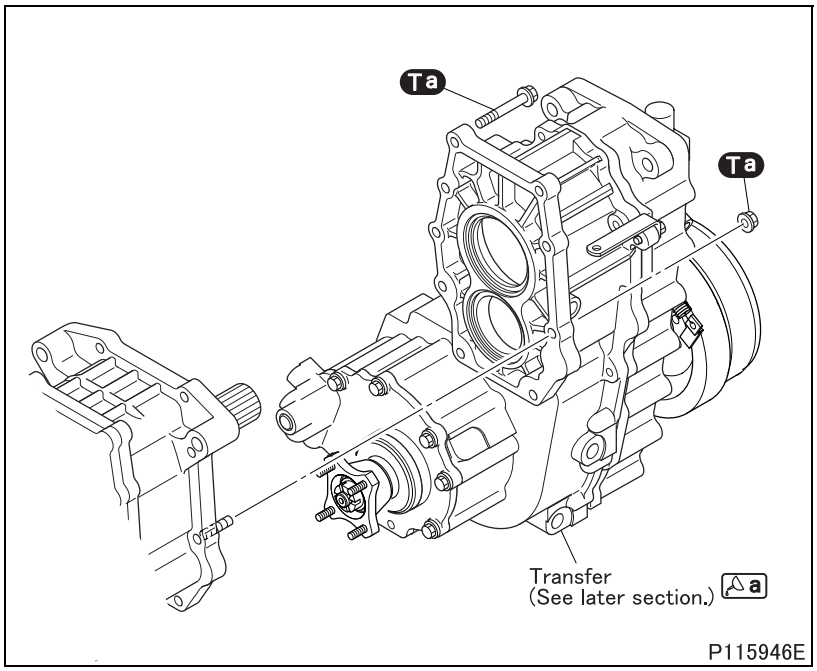

CAUTION ⚠

- **Do not shake the transmission violently when removing the transfer from it, as doing so may damage the mainshaft end and gears.**

Tightening torque (Unit: N·m {ft.lbs, kgf·m})

Mark	Parts to be tightened	Tightening torque	Remarks
Ta	Bolt (transfer mounting)	45.8 {34, 4.7}	–

Lubricant and/or sealant

Mark	Points of application	Specified lubricant and/or sealant	Quantity
a	Transmission mounting surface of transfer	ThreeBond 1215	As required

https://truckmanualshub.com/

◆Installation procedure◆

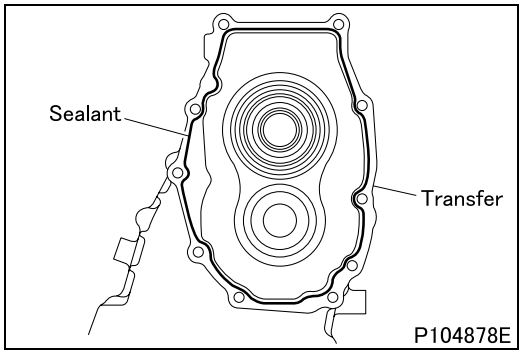

■ **Installation: Transfer**

[Applying sealant]

- Apply sealant following manners shown below.

CAUTION ⚠

- **Take care not to apply sealant under any of the following conditions. Otherwise it causes oil leak.**
  - **There is dust, oil, grease, etc. on the mating surface.**
  - **The diameter or thickness of the applied sealant is extremely different at each part.**
  - **The applied sealant has some breaks.**

<Case of using nozzle gun>

- Clean the mating surfaces of each part.
- Apply sealant on the width center of the mating surfaces so that the diameter of the applied sealant is the same as the diameter of the nozzle. The line of applying sealant is illustrated.

<Case of using spatula, etc.>

- Clean the mating surfaces of each part.
- Apply sealant evenly on the entire mating surfaces.

[Installation]

- After applying the sealant, install the transfer before the sealant dries. Be sure not to allow the sealant to be displaced.
- Do not start the engine within one hour after installing the transfer.
- When loosing or removing transfer mounting bolts, be sure to reapply the sealant.

https://truckmanualshub.com/

FRONT DRIVE

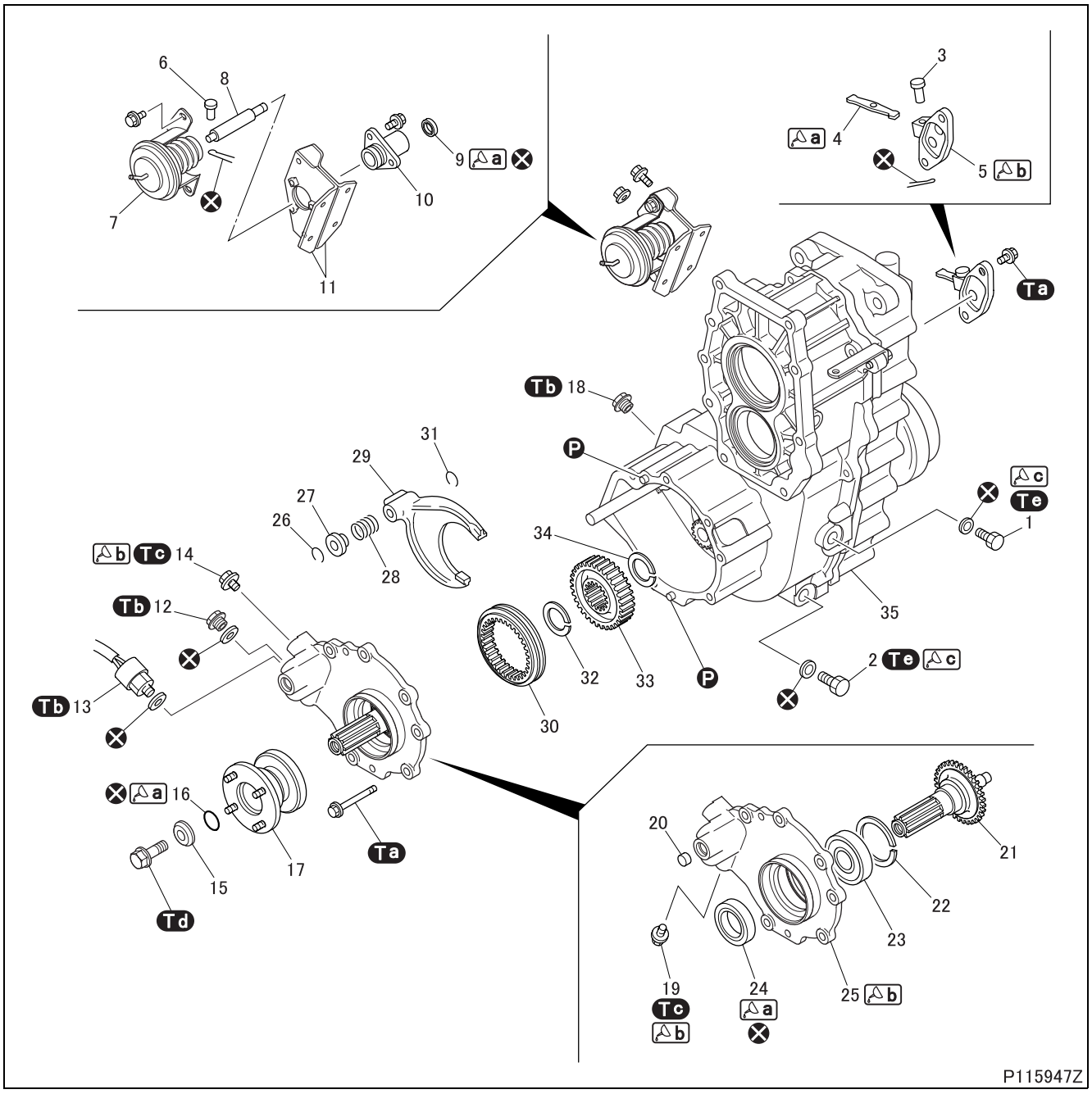

● **Disassembly sequence**

1 Inspection plug
2 Drain plug
3 Clevis pin
4 Transfer gear shift lever
5 Shift lever bracket
6 Clevis pin
7 Vacuum actuator
8 Shift rod
9 Oil seal
10 Shift rod bracket
11 Actuator bracket
12 Plug
13 Transfer four-wheel drive switch
14 Screw plug
15 Lock plate
16 O-ring
17 Companion flange
18 Plug
19 Screw plug
20 Dust plug
21 Transfer driven front shaft
22 Snap ring
23 Bearing
24 Oil seal
25 Front drive case cover
26 Snap ring
27 Lug spring retainer
28 Shift lug spring
29 Front drive shift fork
30 Synchronizer sleeve
31 Snap ring
32 Snap ring
33 Front drive hub
34 Snap ring
35 Transfer
(See later section.)

⊗: Non-reusable parts
Ⓟ: Locating pin

https://truckmanualshub.com/

● **Assembly sequence**

Follow the disassembly sequence in reverse.

Service standards (Unit: mm {in.})

Location	Maintenance item	Standard value	Limit	Remedy
7	Airtightness of vacuum actuator (Applying negative pressure: 66.7 kPa {19.7 in.Hg, 500 mmHg}, measure after 15 sec.)	Negative pressure: 63 kPa {18.6 in.Hg, 473 mmHg} or more	–	Replace
28	Shift lug spring installed load (installed length 20.6 {0.81})	22 ± 2.26 N {5.0 ± 0.2 lbs, 2.2 ± 0.23 kgf}	18 N {4.0 lbs, 1.8 kgf}	Replace
29	Tilt of front drive shift fork claws	0 to 0.1 {0 to 0.0039}	0.2 {0.0079}	Replace
29, 30	Clearance between front drive shift fork and synchronizer sleeve	0.3 to 0.5 {0.012 to 0.020}	1.0 {0.039}	Replace

Tightening torque (Unit: N·m {ft.lbs, kgf·m})

Mark	Parts to be tightened	Tightening torque	Remarks
Ta	Bolt (shift lever bracket mounting)	44.5 {33, 4.5}	–
	Bolt (front drive case cover mounting)		
Tb	Transfer low switch	34.3 ± 4.9 {25 ± 3.6, 3.5 ± 0.5}	–
	Transfer four-wheel drive switch		
	Plug		
Tc	Screw plug	39.2 {29, 4}	–
Td	Bolt (companion flange mounting)	145 to 200 {105 to 145, 14.8 to 20.4}	–
Te	Inspection plug	68.6 ± 14.7 {51 ± 11, 7.0 ± 1.5}	–
	Drain plug		

Lubricant and/or sealant

Mark	Points of application	Specified lubricant and/or sealant	Quantity
a	Both ends and fulcrum of transfer gear shift lever	Wheel bearing grease [NLGI No. 2 (Li soap)]	As required
	Lip area of oil seal		
	O-ring		
b	Transfer mounting surface of shift lever bracket	ThreeBond 1215	As required
	Thread area of screw plug		
	Transfer mounting surface of front drive case cover		
c	Thread area of inspection plug	ThreeBond 1105	As required
	Thread area of drain plug		

https://truckmanualshub.com/

Special tools (Unit: mm {in.})

Mark	Tool name and shape	Part No.	Application
a	Oil seal installer A: ϕ35 {1.38}, B: ϕ15.5 {0.61}, C: 9 {0.35} 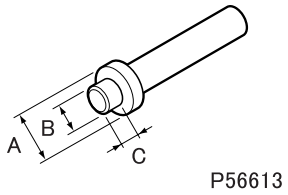 P56613	MH061923	Installation of oil seal
b	Bearing installer A: ϕ52 {2.05}, B: ϕ42 {1.65} 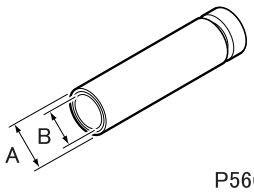 P56614	MB999104	Installation of oil seal
c	Differential bearing inner race installer adapter A: ϕ88 {3.46}, B: ϕ50 {1.97} 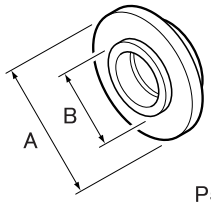 P56615	MB999105	
d	Snap ring expander 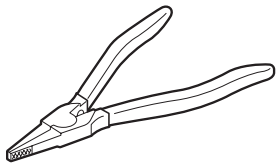 P01137	MH061268	Removal and installation of snap ring
e	Flange puller A: ϕ95 {3.74}, B: ϕ100 {3.94}, C: ϕ90 {3.54} 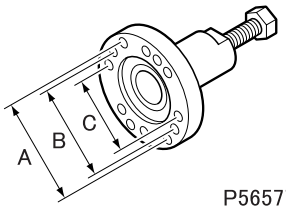 P56577	MH061848	Removal of companion flange

◆Removal procedure◆

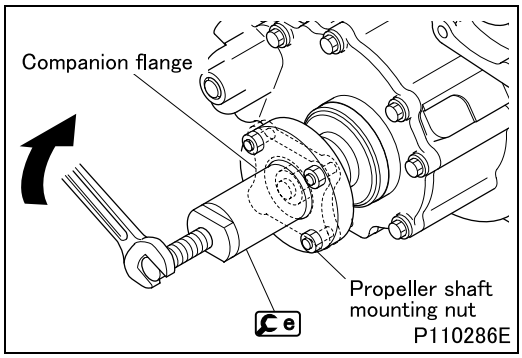

■ **Removal: Companion flange**

https://truckmanualshub.com/

◆Inspection procedure◆

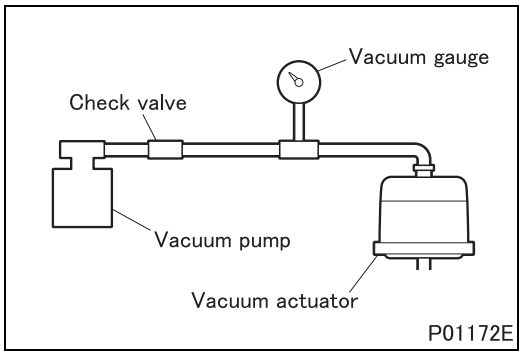

■ **Inspection: Vacuum actuator**

- Pipe the vacuum pump, check valve and vacuum gauge, apply negative pressure of 66.7 kPa {19.7 in.Hg, 500 mmHg} to the vacuum actuator, and stop the vacuum pump. After 15 seconds, measure the negative pressure with the vacuum gauge.
- If the measured value deviates from the standard value, replace the vacuum actuator.

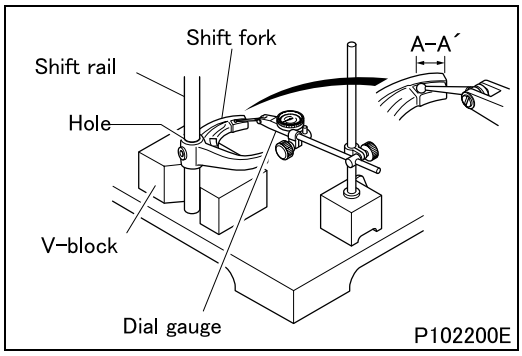

■ **Inspection: Tilt of front drive shift fork claws**

- Measure the tilt (difference between A and A') of claw A–A' against the front drive shift rail hole of front drive shift fork with pressing the rail to V-block and standing it vertically.
- If the measurement exceeds the limit, replace the front drive shift fork.

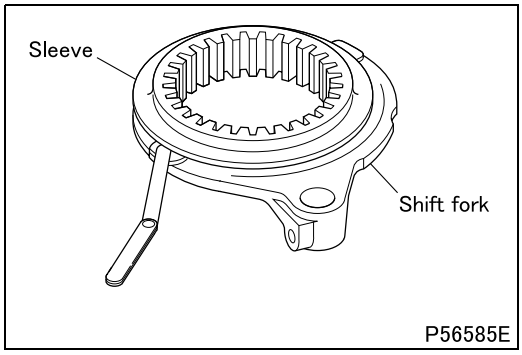

■ **Inspection: Clearance between front drive shift fork and synchronizer sleeve**

- If the measured value exceeds the limit, replace defective parts.

https://truckmanualshub.com/

◆Installation procedure◆

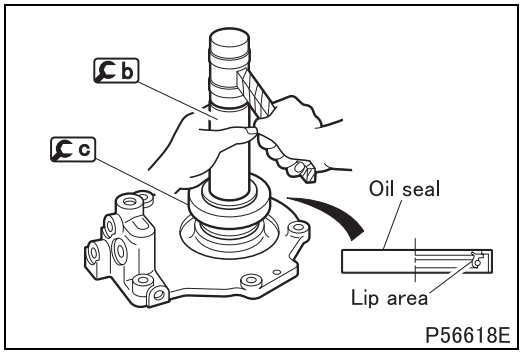

■ Installation: Oil seal

- Apply grease to the lip area of the oil seal and install it on the front drive case cover in the illustrated direction.

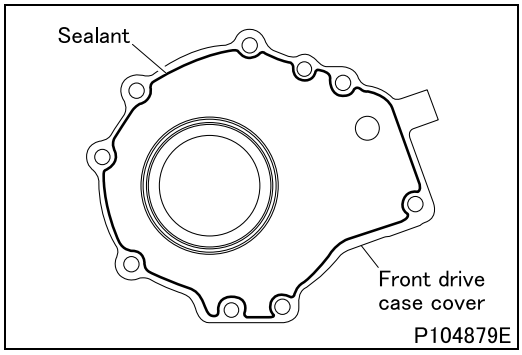

■ Installation: Front drive case cover

[Applying sealant]

- Apply sealant following manners shown below.

CAUTION ⚠

- **Take care not to apply sealant under any of the following conditions. Otherwise it causes oil leak.**
  - **There is dust, oil, grease, etc. on the mating surface.**
  - **The diameter or thickness of the applied sealant is extremely different at each part.**
  - **The applied sealant has some breaks.**

<Case of using nozzle gun>

- Clean the mating surfaces of each part.
- Apply sealant on the width center of the mating surfaces so that the diameter of the applied sealant is the same as the diameter of the nozzle. The line of applying sealant is illustrated.

<Case of using spatula, etc.>

- Clean the mating surfaces of each part.
- Apply sealant evenly on the entire mating surfaces.

[Installation]

- After applying the sealant, install the front drive case cover before the sealant dries. Be sure not to allow the sealant to be displaced.
- Do not start the engine within one hour after installing the front drive case cover.
- When loosing or removing front drive case cover mounting bolts, be sure to reapply the sealant.

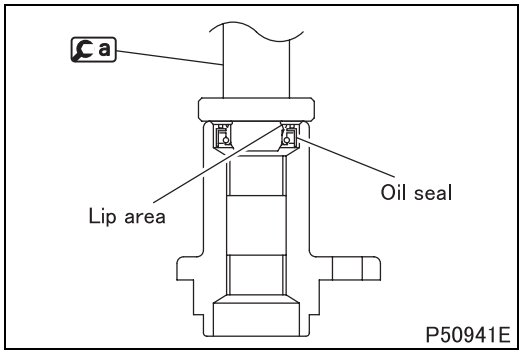

■ Installation: Oil seal

- Apply grease to the lip area of the oil seal and install it in the illustrated direction.

https://truckmanualshub.com/

M E M O

https://truckmanualshub.com/

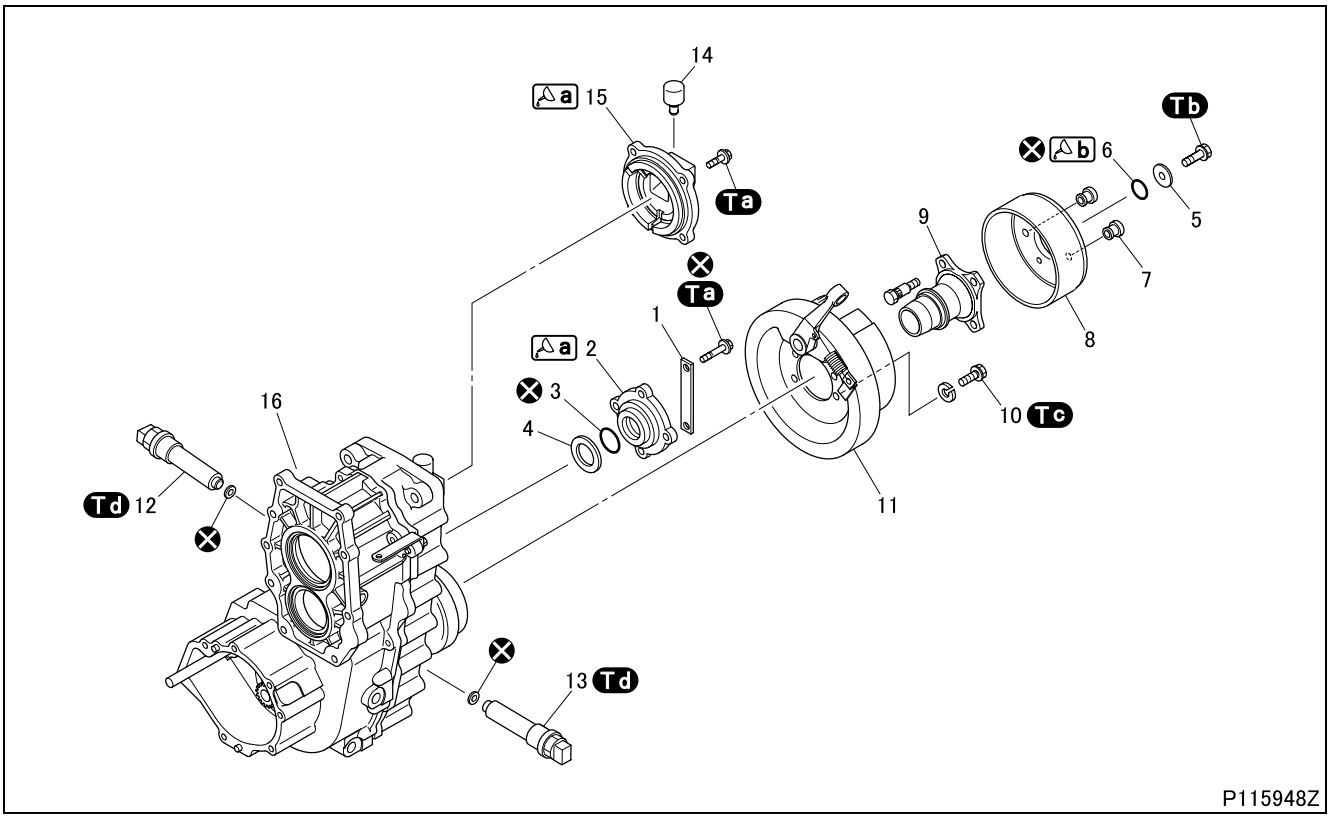

● **Disassembly sequence**

1 Plate
2 Idler rear cover
3 O-ring
4 Shim
5 Lock plate
6 O-ring
7 Dust plug
8 Parking brake drum
9 Companion flange
10 Reamer bolt
11 Parking brake (See Gr36.)
12 Vehicle speed sensor 1
13 Vehicle speed sensor 2
14 Air breather
15 Input rear cover
16 Transfer (See later section.)

⊗: Non-reusable parts

● **Assembly sequence**

Follow the disassembly sequence in reverse.

Service standards (Unit: mm {in.})

Location	Maintenance item	Standard value	Limit	Remedy
–	Startup torque of idler gear bearing (measure with tangential force at outer diameter position of parking brake drum)	0 to 2 N·m {0 to 1.5 ft.lbs, 0 to 0.2 kgf·m} Tangential force: 0 to 26.9 N {0 to 20 ft.lbs, 0 to 2.7 kgf}	–	Adjust or replace
9	Runout at socket portion of companion flange	0 to 0.15 {0 to 0.0059}	0.15 {0.0059}	Replace

https://truckmanualshub.com/

Tightening torque (Unit: N·m {ft.lbs, kgf·m})

Mark	Parts to be tightened	Tightening torque	Remarks
Ta	Bolt (idler rear cover mounting)	44.5 {33, 4.5}	–
	Bolt (input rear cover mounting)		
Tb	Bolt (companion flange mounting)	145 to 200 {105 to 145, 14.8 to 20.4}	–
Tc	Reamer bolt	52.0 to 66.7 {38 to 49, 5.3 to 6.8}	–
Td	Vehicle speed sensor 1	45 to 50 {33 to 37, 4.6 to 5.1}	–
	Vehicle speed sensor 2		

Lubricant and/or sealant

Mark	Points of application	Specified lubricant and/or sealant	Quantity
a	Transfer mating surface of idler rear cover	ThreeBond 1215	As required
	Transfer mating surface of input rear cover		
b	O-ring	Wheel bearing grease [NLGI No. 2 (Li soap)]	As required

Special tools (Unit: mm {in.})

Mark	Tool name and shape	Part No.	Application
Ca	Flange puller A: ϕ95 {3.74} B: ϕ100 {3.94} C: ϕ90 {3.54} 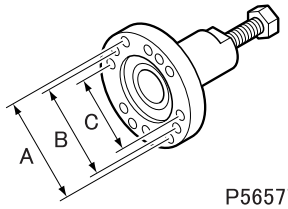 P56577	MH061848	Removal of companion flange

◆Work before removal◆

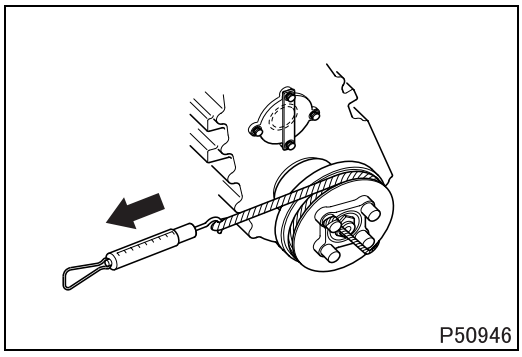
P50946

■ **Inspection: Startup torque of idler gear bearing**

- Measure the tangential force at the outer diameter of the parking brake drum using a spring balance.

◆Removal procedure◆

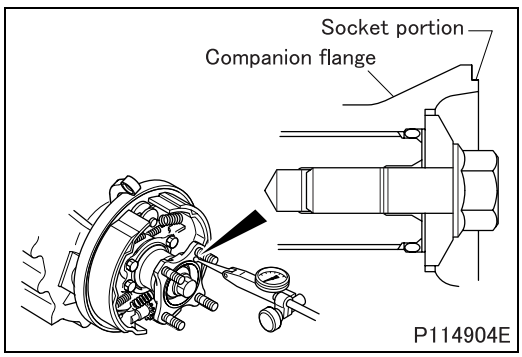

P114904E

■ **Inspection: Runout at socket portion of companion flange**

- After removing the parking brake drum, measure runouts of the companion flange at its socket portion.
- If the measurement exceeds the specified limit, replace the companion flange.

https://truckmanualshub.com/

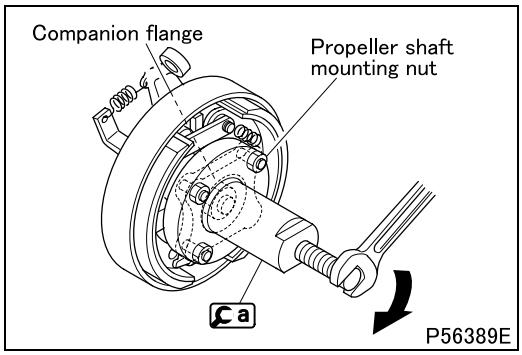

■ **Removal: Companion flange**

◆**Installation procedure**◆

■ **Installation: Companion flange**

- Install the companion flange as follows.

[Heating]

- Heat the companion flange evenly to 140°C {284°F} using one of the following methods.

<Temperature-controlled chamber>

- Heat the companion flange with a temperature setting of 140°C {284°F} for more than 30 minutes.

<Ring heater>

- Repeat a heating process two to three times with a temperature setting of 140°C {284°F} so that the entire companion flange is evenly heated to 140°C {284°F}.
- Measure the temperature on the boss, not on the flange.

CAUTION ⚠

- **Repeat the heating process two to three times because sufficient thermal expansion of the companion flange cannot be achieved in a single heating process.**

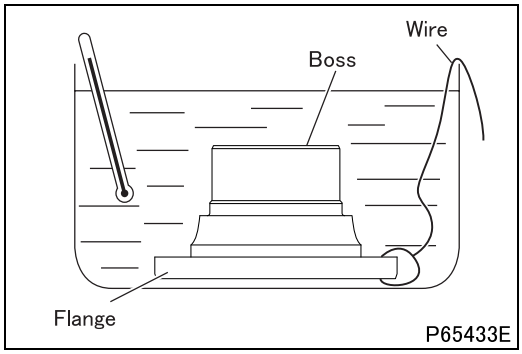

<Oil bath>

- Heat transfer fluid to 140°C {284°F} and immerse the companion flange in the oil bath in the illustrated orientation.

CAUTION ⚠

- **Be sure to put the companion flange in the oil bath with its boss facing up. If the boss is facing down, its edge will make direct contact with the heat source, thus heating the companion flange to higher than 140°C {284°F}.**

- Since the transfer fluid temperature drops when the companion flange is immersed in the oil bath, reheat the fluid to 140°C {284°F} and keep the companion flange immersed in the oil bath for more than 20 minutes while maintaining the fluid temperature at 140°C {284°F}.

https://truckmanualshub.com/

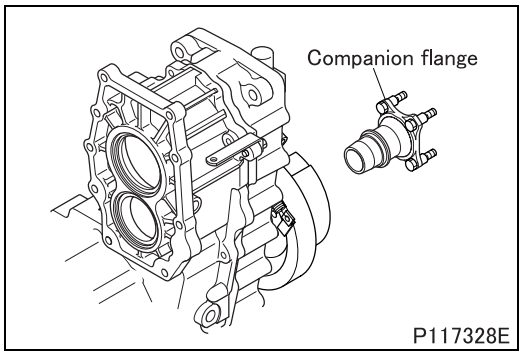

[Installation]

- Install the companion flange.

WARNING ⚠

- **Take care not to burn yourself when installing the hot companion flange.**

CAUTION ⚠

- **If the companion flange is too hot, it may cause damage to the oil seal on the transfer cover. Do not overheat the companion flange.**

◆Work after installation◆

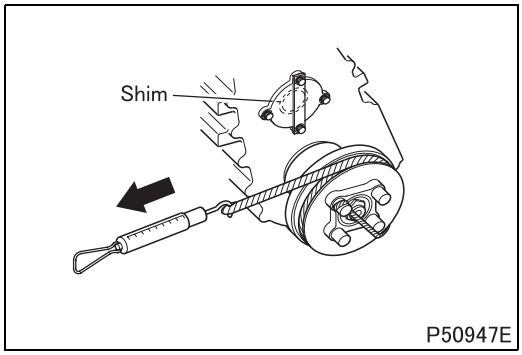

■ Inspection: Starting torque of pinion bearing

- Measure the tangential force at the outer diameter of the parking brake drum using a spring balance.
- If the tangential force meets the specified value, the startup torque becomes the standard value.
- If the measured value deviates from the standard value, adjust by changing thickness of the shim.
  Kinds of shim: 0.10, 0.15, 0.20, 0.50 mm {0.0039, 0.0059, 0.0079, 0.020 in.}

https://truckmanualshub.com/

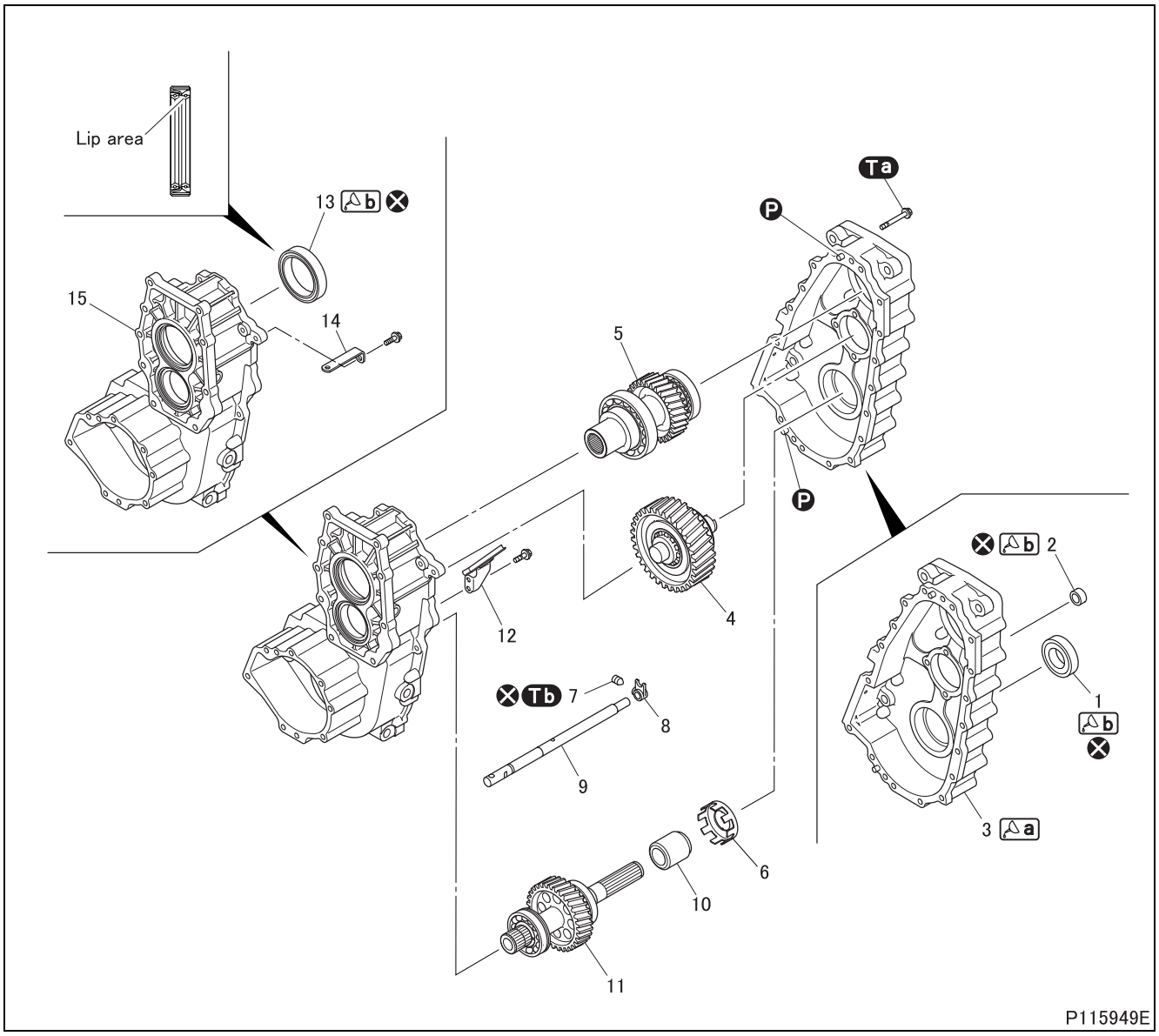

● Disassembly sequence

1 Oil seal
2 Oil seal
3 Transfer cover
4 Transfer idler gear (See later section.)
5 Transfer drive gear (See later section.)
6 Pulse rotor
7 Spacer
8 Set bolt
9 Shift rail stopper
10 Front drive shift rail
11 Transfer driven rear shaft (See later section.)
12 Oil gutter
13 Oil seal
14 Stay
15 Transfer case

Ⓟ: Locating pin
⊗: Non-reusable parts

● Assembly sequence

Follow the disassembly sequence in reverse.

https://truckmanualshub.com/

Service standards (Unit: mm {in.})

Location	Maintenance item	Standard value	Limit	Remedy
10	Bend of front drive shift rail	0 to 0.02 {0 to 0.00079}	0.03 {0.0012}	Replace

Tightening torque (Unit: N·m {ft.lbs, kgf·m})

Mark	Parts to be tightened	Tightening torque	Remarks
Ta	Bolt (transfer cover mounting)	44.5 {33, 4.5}	–
Tb	Set bolt	29.4 {22, 3}	After tightening, caulk it at three locations.

Lubricant and/or sealant

Mark	Points of application	Specified lubricant and/or sealant	Quantity
a	Transfer case mating surface of transfer cover	ThreeBond 1215	As required
b	Lip area of oil seal	Wheel bearing grease [NLGI No. 2 (Li soap)]	As required

Special tools (Unit: mm {in.})

Mark	Tool name and shape	Part No.	Application
Ca	Oil seal installer A: ϕ64 {2.52}, B: ϕ50 {1.97}, C: 17 {0.67} 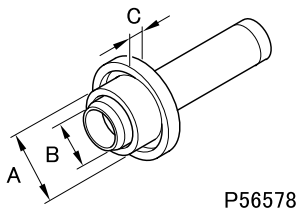 P56578	MH062691	Installation of oil seal
Cb	Oil seal installer A: ϕ35 {1.38}, B: ϕ15.5 {0.61}, C: 9 {0.35} 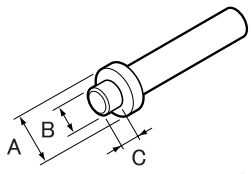 P56613	MH061923	Installation of oil seal

◆Inspection procedure◆

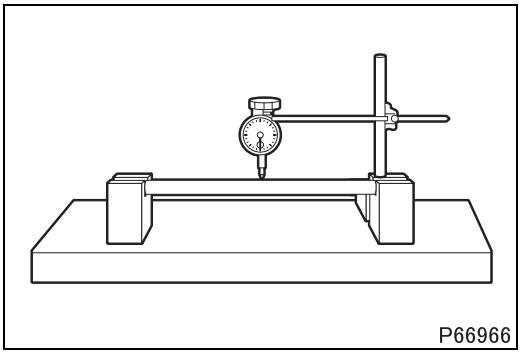
P66966

■ Inspection: Bend of front drive shift rail

- Measure the extent of bending at the middle of the front drive shift rail.
- While rotating the front drive shift rail by one revolution, read how much the dial gauge needle will move. A half of the reading observed represents the bend, if any, of the shaft.
- If measurement exceeds the limit, correct or replace the front drive shift rail.

https://truckmanualshub.com/

◆Installation procedure◆

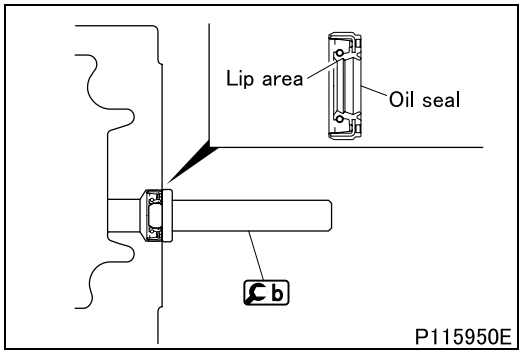

■ **Installation: Oil seal**

- Apply grease to the lip area of the oil seal and install it on the transfer cover in the illustrated direction.

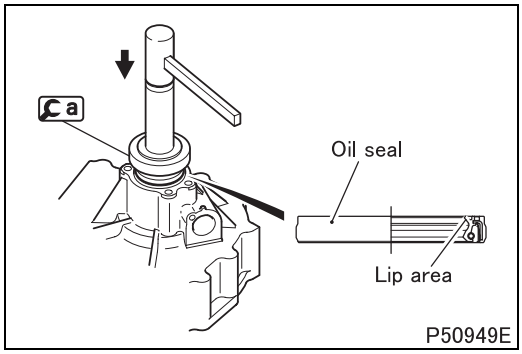

■ **Installation: Oil seal**

- Apply grease to the lip area of the oil seal and install it on the transfer cover in the illustrated direction.

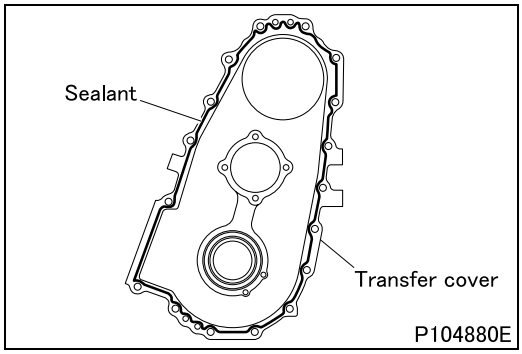

■ **Installation: Transfer cover**

[Applying sealant]

- Apply sealant following manners shown below.

CAUTION ⚠

- **Take care not to apply sealant under any of the following conditions. Otherwise it causes oil leak.**
  - **There is dust, oil, grease, etc. on the mating surface.**
  - **The diameter or thickness of the applied sealant is extremely different at each part.**
  - **The applied sealant has some breaks.**

<Case of using nozzle gun>

- Clean the mating surfaces of each part.
- Apply sealant on the width center of the mating surfaces so that the diameter of the applied sealant is the same as the diameter of the nozzle. The line of applying sealant is illustrated.

<Case of using spatula, etc.>

- Clean the mating surfaces of each part.
- Apply sealant evenly on the entire mating surfaces.

[Installation]

- After applying the sealant, install the transfer cover before the sealant dries. Be sure not to allow the sealant to be displaced.
- Do not start the engine within one hour after installing the transfer cover.
- When loosing or removing transfer cover mounting bolts, be sure to reapply the sealant.

https://truckmanualshub.com/

M E M O

https://truckmanualshub.com/

Transfer Idler Gear

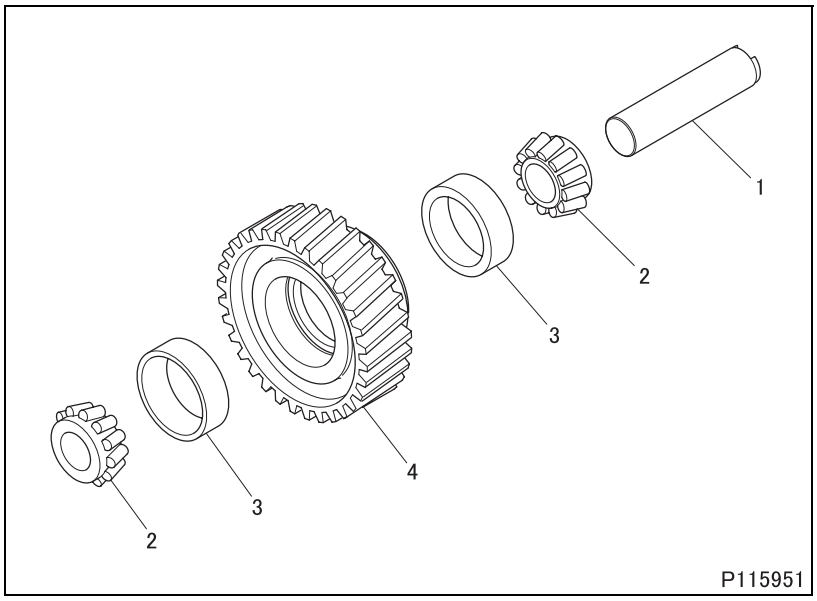

● **Disassembly sequence**

1 Transfer idler shaft
2 Bearing inner race
3 Bearing outer race
4 Transfer idler gear

● **Assembly sequence**

Follow the disassembly sequence in reverse.

◆**Removal procedure**◆

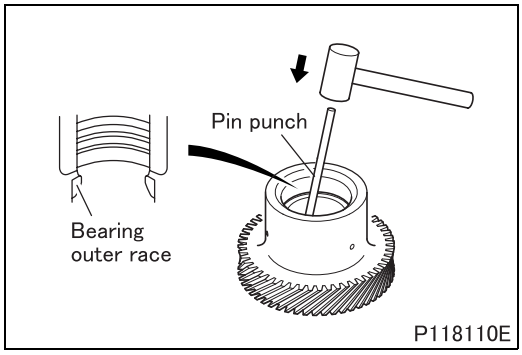

■ **Removal: Bearing outer race**

- Evenly tap the bearing outer race to take it out from the transfer idler gear.

https://truckmanualshub.com/

Transfer Drive Gear

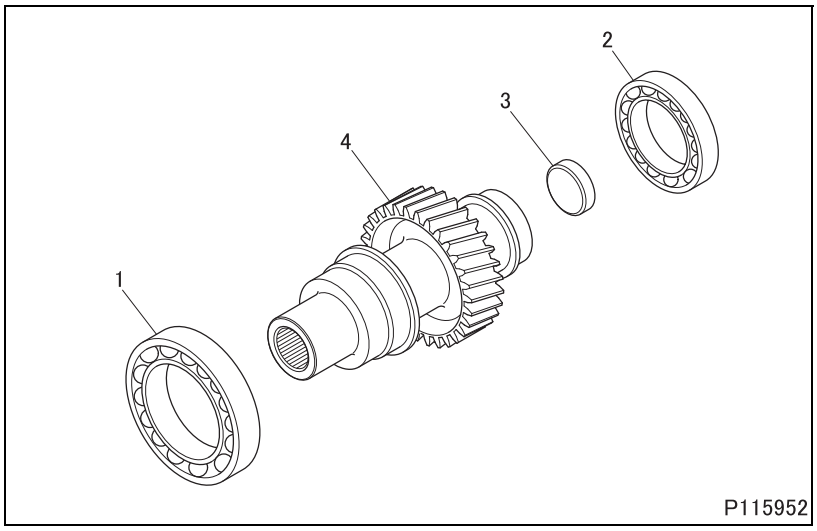

● Disassembly sequence

1 Bearing
2 Bearing
3 Plug
4 Transfer drive gear
5 Bearing

● Assembly sequence

Follow the disassembly sequence in reverse.

https://truckmanualshub.com/

Transfer Driven Rear Shaft

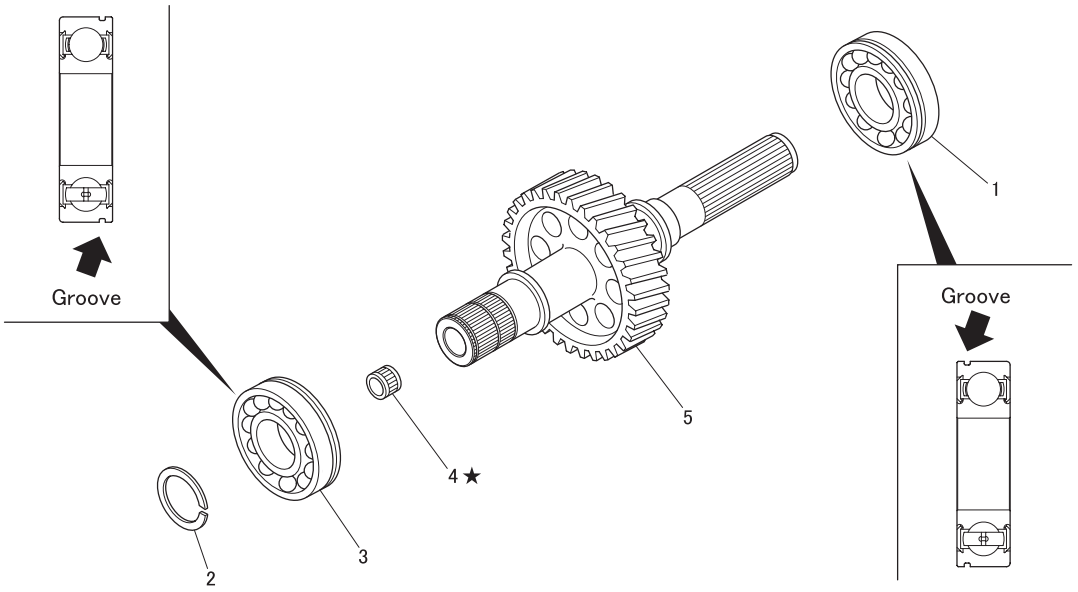

● **Disassembly sequence**

1 Bearing
2 Snap ring
3 Bearing
4 Needle bearing
5 Transfer driven shaft

NOTE

- **Do not remove the needle bearing marked with ★ from the transfer driven rear shaft unless any abnormality is found.**

● **Assembly sequence**

Follow the disassembly sequence in reverse.

Special tools (Unit: mm {in.})

Mark	Tool name and shape	Part No.	Application
a	Snap ring expander 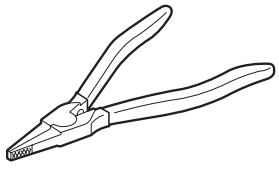 P01137	MH061268	Removal and installation of snap ring
b	Needle roller bearing installer 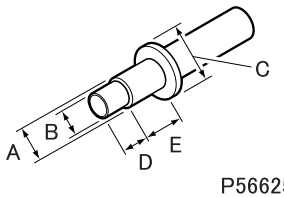 P56625	MH061927	Installation of needle bearing

A	B	C	D	E
ϕ18.5 {0.73}	ϕ13 {0.51}	ϕ40 {1.57}	15 {0.59}	28 {1.10}

https://truckmanualshub.com/

◆Installation procedure◆

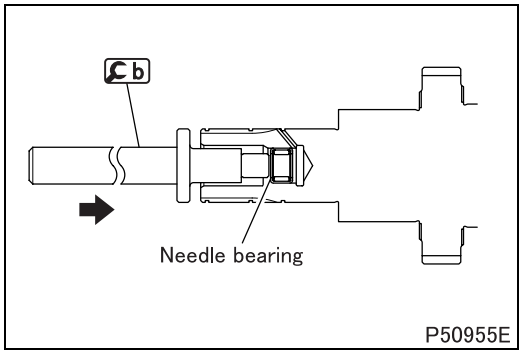

■ **Installation: Needle bearing**

https://truckmanualshub.com/

Group 25

Propeller Shaft

MITSUBISHI FUSO TRUCK OF AMERICA, Inc.

Pub.No.00ELT0001-25

https://truckmanualshub.com/

INDEX

SPECIFICATIONS 25-2

STRUCTURE AND OPERATION
1. Configuration of Propeller Shaft Connection 25-2
2. Propeller Shaft <Without Center Bearing> 25-3

TROUBLESHOOTING 25-5

REMOVAL AND INSTALLATION OF PROPELLER SHAFT
<BETWEEN T/M (OR TRANSFER) AND REAR AXLE> 25-6
<BETWEEN FRONT AXLE AND TRANSFER> 25-8

PROPELLER SHAFT
<P2> 25-10
<P3> 25-16

https://truckmanualshub.com/

SPECIFICATIONS / STRUCTURE AND OPERATION

SPECIFICATIONS

Item		Specifications	
		FG <Front axle>	FE, FG
Propeller shaft	Model	P2	P3

STRUCTURE AND OPERATION

1. Configuration of Propeller Shaft Connection

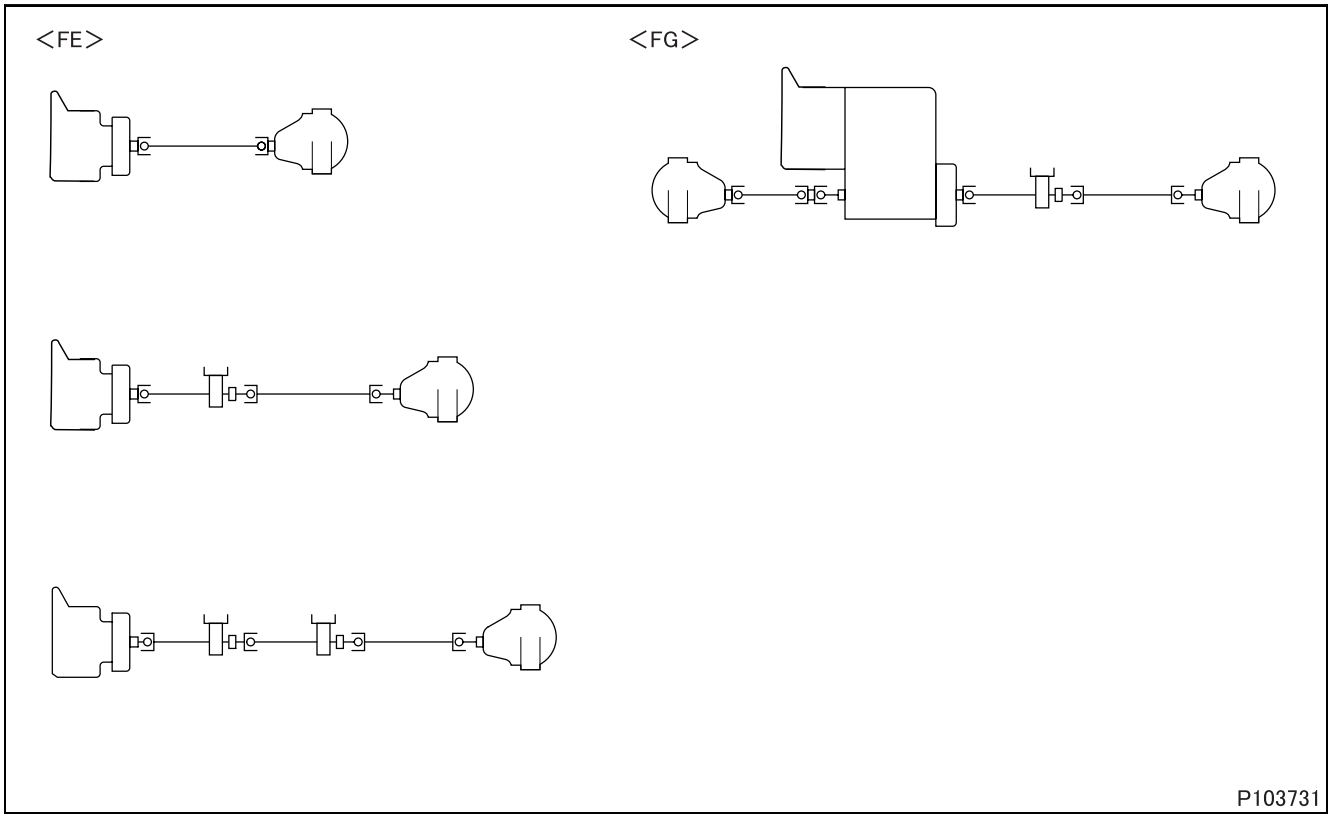

https://truckmanualshub.com/

2. Propeller Shaft <Without Center Bearing>

<Without center bearing (except double cardan type)>

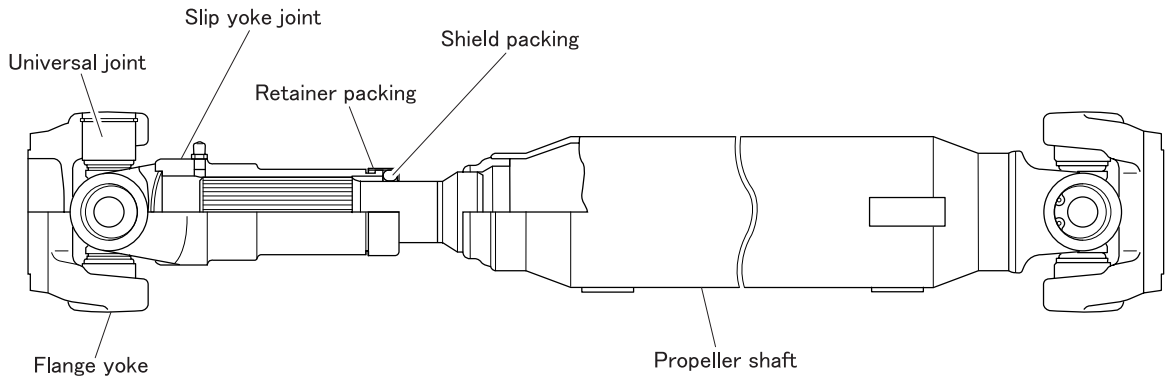

<Without center bearing (double cardan type)>

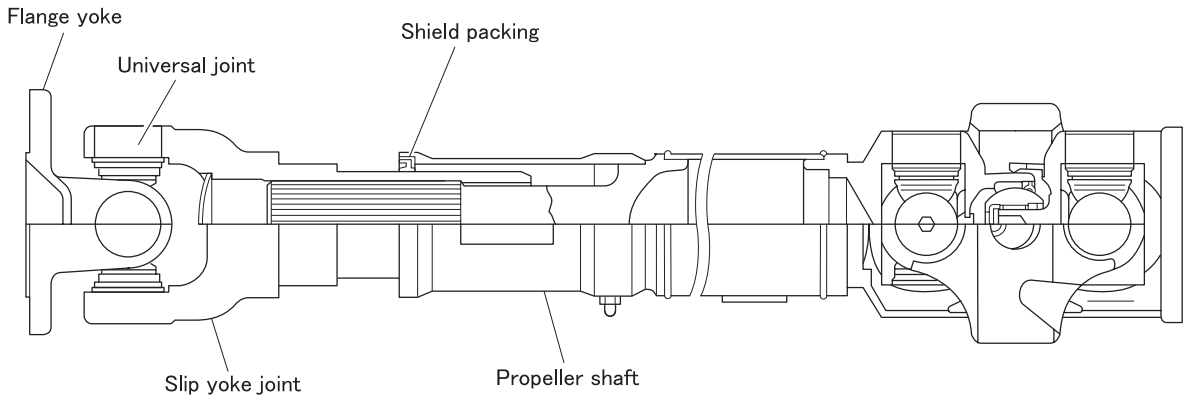

<With center bearing>

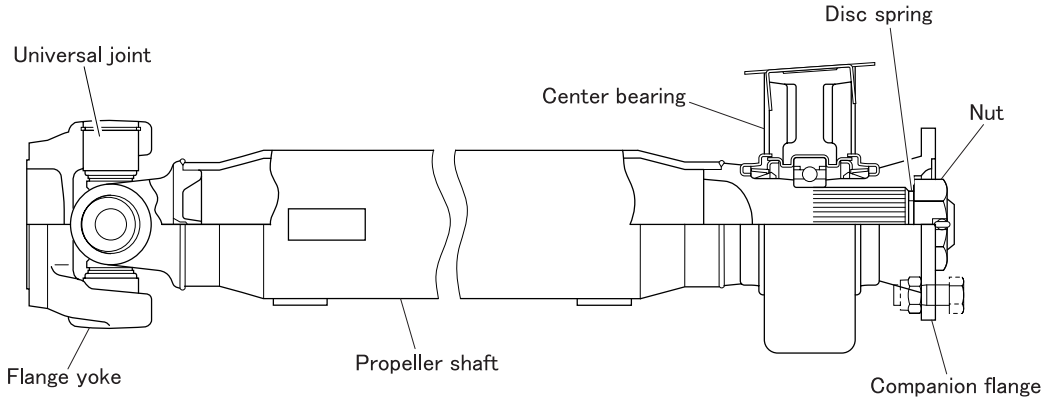

P116444E

- Propeller shafts used with FG front axles are of double cardan type suited for suppressing vibrations caused by angle changes in the universal joint.

https://truckmanualshub.com/

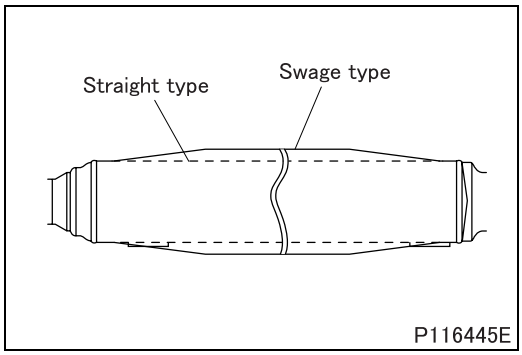

- Propeller shafts are available in straight type and swage type.

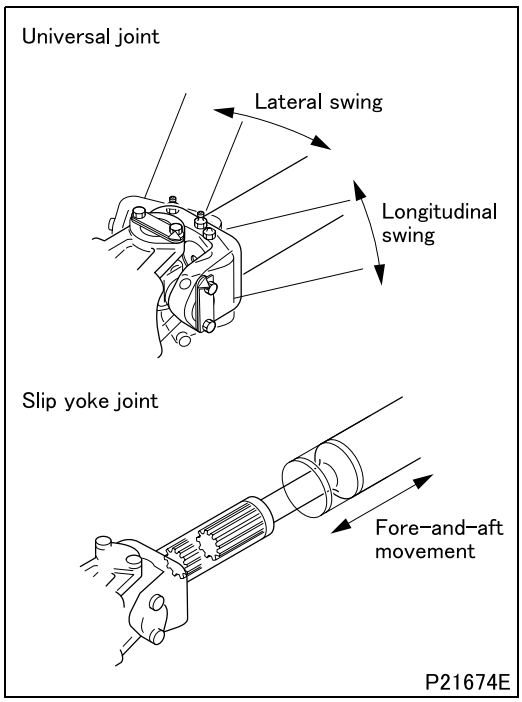

- Relative positions of the transmission and rear axle vary depending upon the unevenness of the road surface and the vibration and load fluctuations that occur during vehicle operation. The universal joint and the slip yoke joint are provided to absorb these influences.

https://truckmanualshub.com/

Symptoms / Possible causes		Propeller shaft vibrates		Abnormal noise from propeller shaft	
		Vibration at high speed	Vibration at low speed	Abnormal noise at acceleration from zero or at coasting	Abnormal noise at a constant speed
Wrong combination of flange yoke directions		O			
Slip yoke joint	Insufficient grease				O
	Excessive play at spline		O	O	
Universal joint	Excessive clearance in axial direction of spider shaft		O		O
	Insufficient needle bearing greasing				O
	Worn out needle bearing	O		O	O
Center bearing	Insufficient grease				O
	Seizure, wear or improper rotation	O			O
	Deteriorated or deformed cushion rubber			O	
	Loose hanger mounting bolt			O	
Propeller shaft	Loose mounting bolts	O		O	
	Bent	O			
	Dynamic balance improper	O			
Transmission in high speed gear			O		

https://truckmanualshub.com/

REMOVAL AND INSTALLATION OF PROPELLER SHAFT <BETWEEN T/M (OR TRANSFER) AND REAR AXLE>

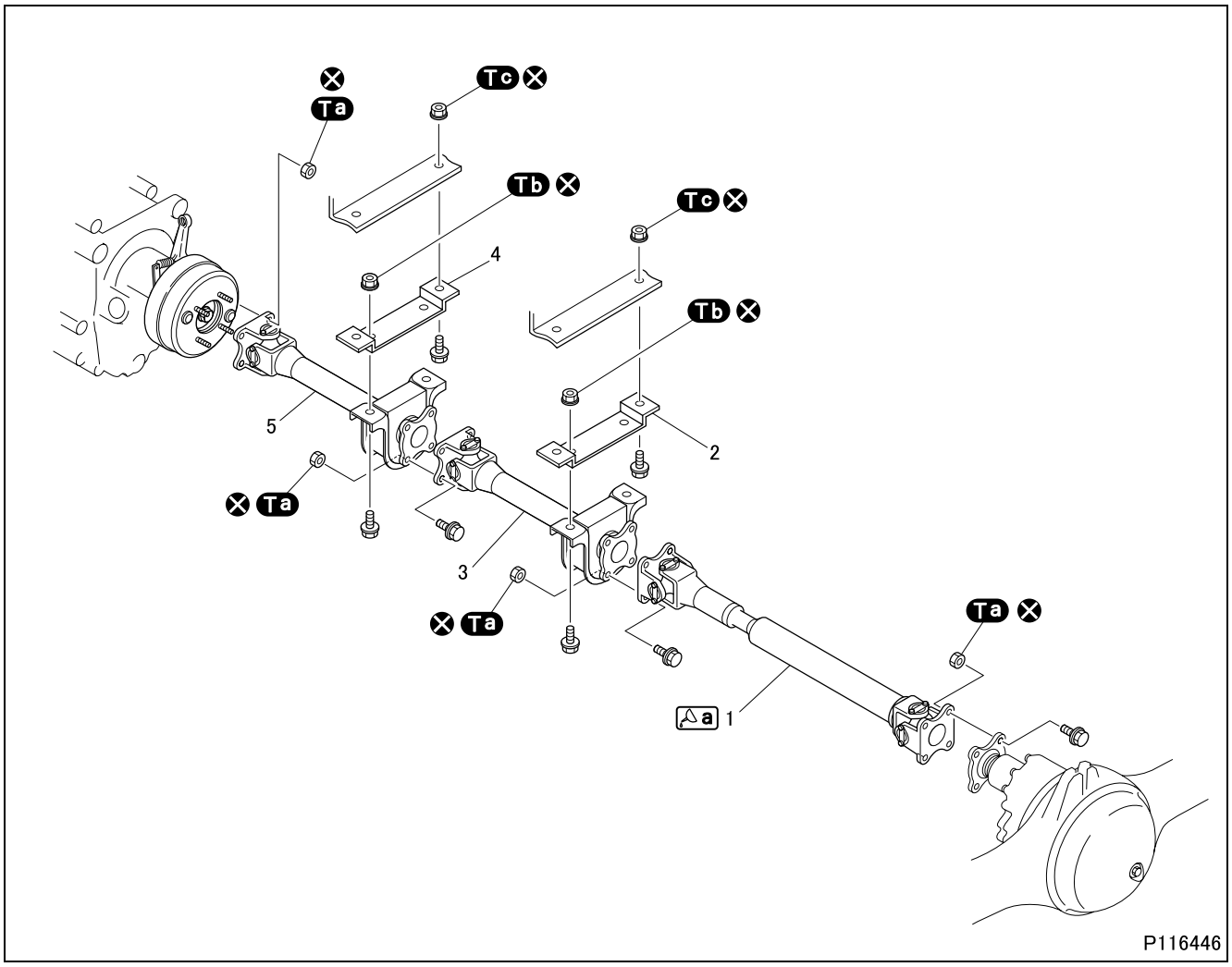

- Shown above is the removal and installation of two-section propeller shaft for FE. The same service procedure applies to other propeller shafts.

● Removal sequence

1 Propeller shaft <Without center bearing> (See later section.)
2 Center bearing bracket <With center bearing>
3 Propeller shaft <With center bearing> (See later section.)
4 Center bearing bracket <With center bearing>
5 Propeller shaft <With center bearing> (See later section.)

⊗: Non-reusable parts

CAUTION ⚠

- **Securely chock the wheels so that the vehicle does not move.**
- **Do not remove the chocks until the entire operation is completed.**

● Installation sequence

Follow the removal sequence in reverse.

https://truckmanualshub.com/

Tightening torque (Unit: N·m {ft.lbs, kgf·m})

Mark	Parts to be tightened	Tightening torque	Remarks
Ta	Nut (propeller shaft mounting)	100 to 120 {74 to 89, 10 to 12}	–
Tb	Nut (front propeller shaft hanger mounting)	47 to 65 {35 to 48, 4.8 to 6.6}	–
Tc	Nut (center bearing bracket mounting)	60 to 80 {44 to 59, 6.0 to 8.0}	–

Lubricant and/or sealant

Mark	Points of application	Specified lubricant and/or sealant	Quantity
a	Supply through grease nipple of propeller shaft	Wheel bearing grease [NLGI No. 2 (Li soap)]	As required

◆Work before removal◆

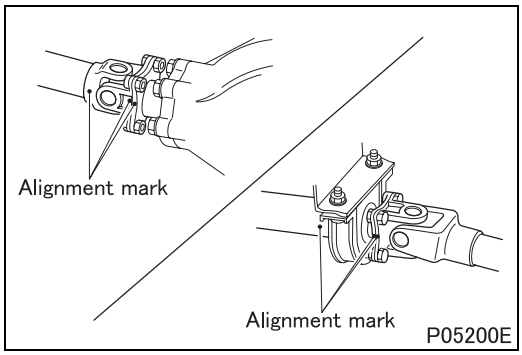

■ **Alignment mark: Propeller shaft**

- Be sure to make alignment marks before removal.

◆Work after installation◆

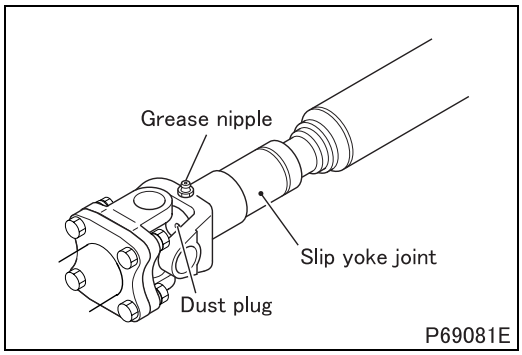

■ **Lubrication: Grease nipple**

- Fill grease through grease nipple until clean grease overflows from the hole in dust plug of slip yoke joint.

https://truckmanualshub.com/

REMOVAL AND INSTALLATION OF PROPELLER SHAFT <BETWEEN FRONT AXLE AND TRANSFER>

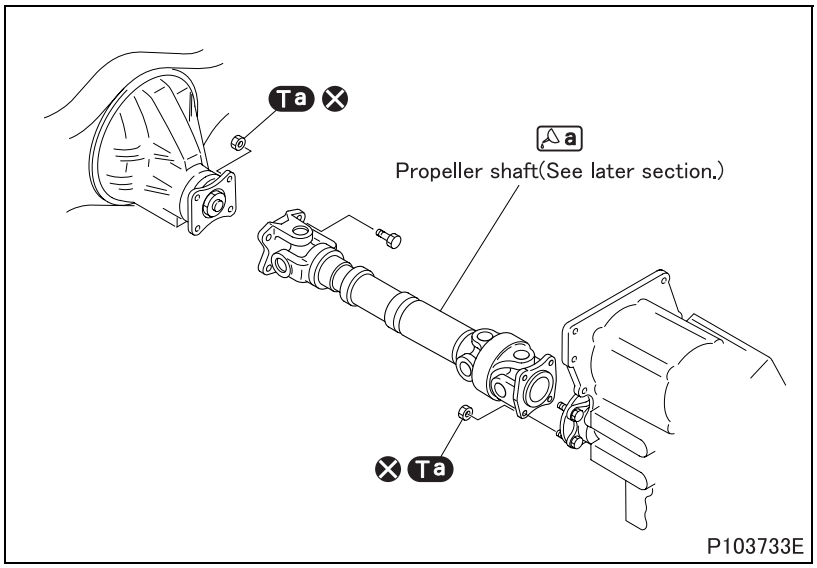

⊗: Non-reusable parts

CAUTION ⚠

- **Securely chock the wheels so that the vehicle does not move.**
- **Do not remove the chocks until the entire operation is completed.**

Tightening torque (Unit: N·m {ft.lbs, kgf·m})

Mark	Parts to be tightened	Tightening torque	Remarks
Ta	Nut (propeller shaft mounting)	60 to 75 {44 to 55, 6.1 to 7.6}	–

Lubricant and/or sealant

Mark	Points of application	Specified lubricant and/or sealant	Quantity
a	Supply through grease nipple of propeller shaft	Wheel bearing grease [NLGI No. 2 (Li soap)]	As required

◆Work before removal◆

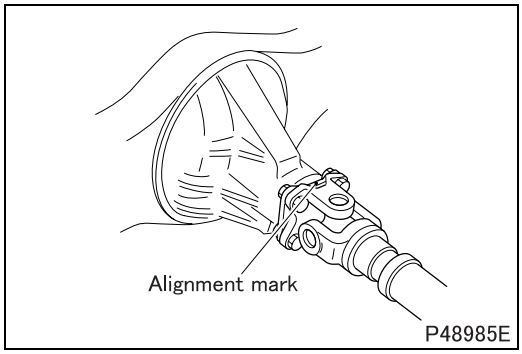

■ Alignment mark: Propeller shaft

- Be sure to make alignment marks before removal.

◆Work after installation◆

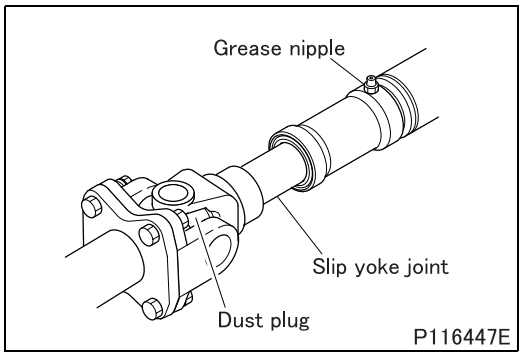

■ Lubrication: Grease nipple

- Fill grease through grease nipple until clean grease overflows from the hole in dust plug of slip yoke joint.

https://truckmanualshub.com/

M E M O

https://truckmanualshub.com/

PROPELLER SHAFT <P2>

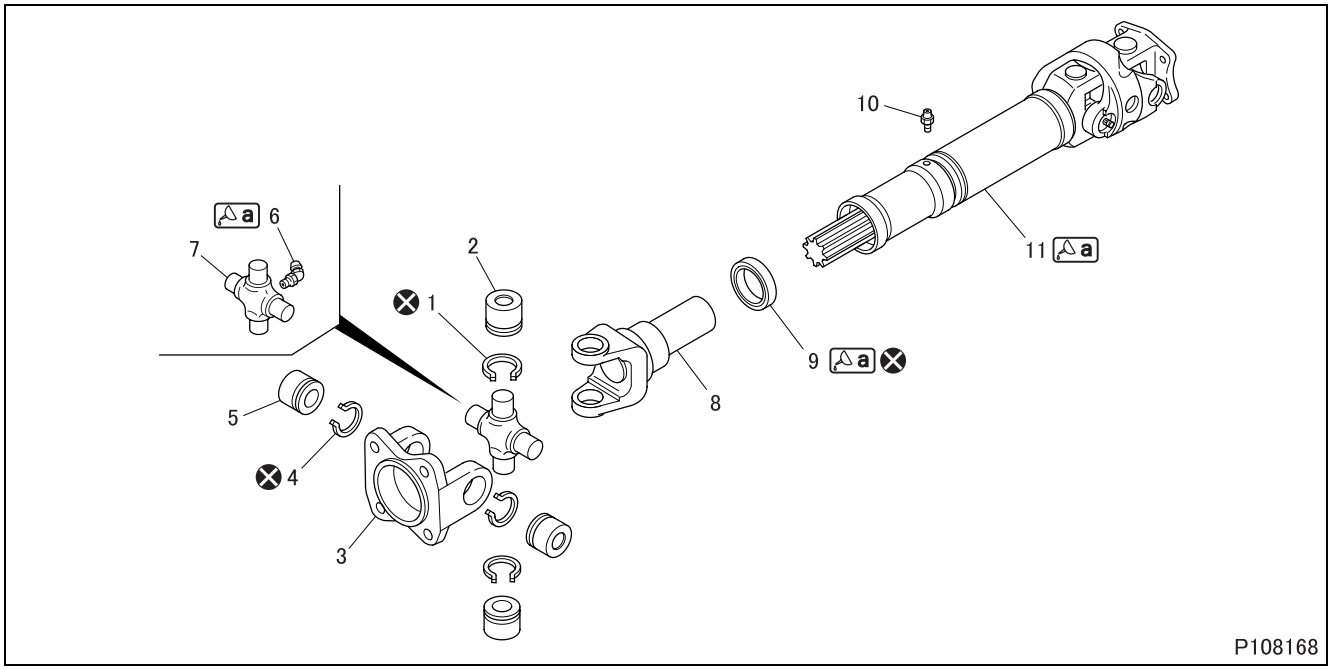

● **Disassembly sequence**

1 Snap ring
2 Needle bearing
3 Flange yoke
4 Snap ring
5 Needle bearing
6 Spider
7 Grease nipple
8 Slip yoke joint
9 Shield packing
10 Grease nipple
11 Propeller shaft

⊗: Non-reusable parts

CAUTION ⚠

- **Be careful not to damage the needle bearing because it is fitted with a seal.**

● **Assembly sequence**

Follow the disassembly sequence in reverse.

Repair kit: Universal joint spider kit

- Be sure to reinstall removed parts at their original positions so that the propeller shaft does not lose balance.
- Correct dynamic balance after replacement of parts.
- Fill grease through the grease nipple of the slip yoke joint after mounting the propeller shaft to the vehicle. (See REMOVAL AND INSTALLATION OF PROPELLER SHAFT.)

https://truckmanualshub.com/

Service standards (Unit: mm {in.})

Location	Maintenance item	Standard value	Limit	Remedy
–	Permissible amount of unbalance of propeller shaft (periphery of pipe portion of shaft)	10 g {0.35 oz.} max./3000 rpm	–	Adjust
–	Axial clearance of spider	0 to 0.06 {0 to 0.0024}	–	Adjust
3, 5	Tightness between needle bearing and flange yoke	0.003 to 0.037 {0.00012 to 0.0015}	0.1 {0.0039}	Replace
2, 5, 6	Play between needle bearing and spider	0.02 to 0.05 {0.00079 to 0.0020}	0.1 {0.0039}	Replace
2, 8	Tightness between needle bearing and slip joint	0.003 to 0.037 {0.00012 to 0.0015}	0.1 {0.0039}	Replace
8, 11	Play in rotating direction between slip yoke joint and propeller shaft spline	0.01 to 0.09 {0.00039 to 0.0035}	0.3 {0.012}	Replace
	Play in vertical/horizontal diametric direction between slip yoke joint and propeller shaft spline	0.02 to 0.16 {0.00079 to 0.0063}	0.3 {0.012}	Replace
11	Bend of propeller shaft	0 to 0.3	0.4 {0.016}	Correct or replace

Lubricant and/or sealant

Mark	Points of application	Specified lubricant and/or sealant	Quantity
a	Supply through grease nipple	Wheel bearing grease [NLGI No. 2 (Li soap)]	As required
	Shield packing contact surface of slip yoke joint		
	Shield packing lips		
	Propeller shaft spline		

Special tools (Unit: mm {in.})

Mark	Tool name and shape	Part No.	Application
a	Universal joint tool set A: Yoke assembly B: Push rod C: Guide D: ϕ29 {1.14}, E: ϕ29 {1.14}, F: ϕ27.7 {1.09} 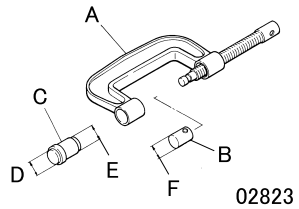	MB999024 A: MB999025 B: MB999026 C: MB999010	Removal and installation of needle bearing

◆Work before removal◆

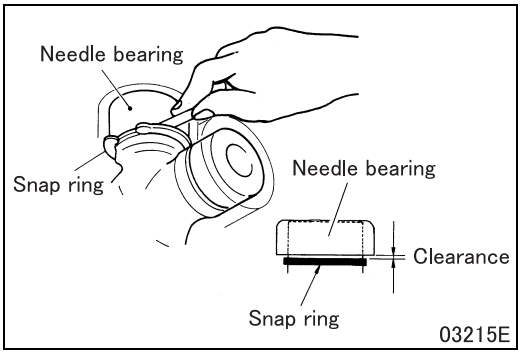

■ Inspection: Axial clearance of spider

- Press down on the needle bearing, and measure clearances between snap ring and flange yoke, slip yoke joint and propeller shaft.
- If the measured value exceeds the standard value, change snap ring thickness for adjustment.
  To adjust, use snap rings for both ends with the same thickness. Select an optimal combination of snap rings from the table below if necessary.

https://truckmanualshub.com/

Variety and combination of snap rings (solid line indicates best combination)

Thickness	Identification color	Combination	Thickness	Identification color
1.5 mm {0.059 in.}	None		1.5 mm {0.059 in.}	None
1.55 mm {0.061 in.}	Yellow		1.55 mm {0.061 in.}	Yellow
1.6 mm {0.063 in.}	Blue		1.6 mm {0.063 in.}	Blue
1.65 mm {0.065 in.}	Purple		1.65 mm {0.065 in.}	Purple

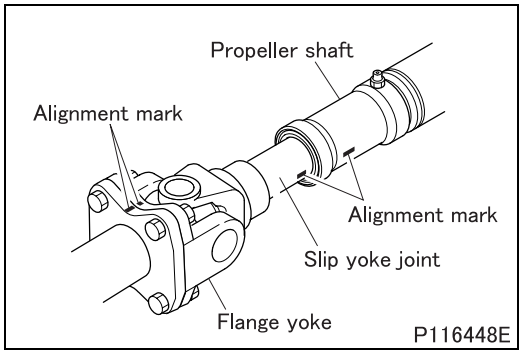

■ **Alignment mark: Propeller shaft**

- To prevent assembly of wrong parts, make alignment marks on the flange yoke, slip yoke joint and propeller shaft.

◆Removal procedure◆

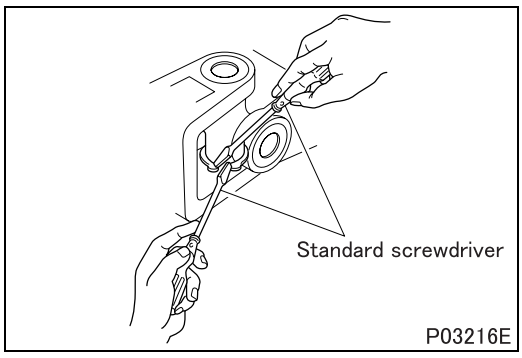

■ **Removal: Snap ring**

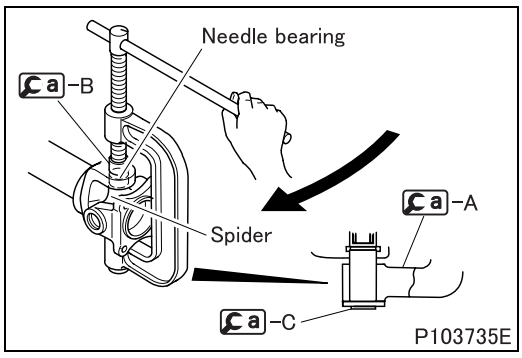

■ **Removal: Needle bearing**

- Fit a -C into a -A from outside.
- Apply a -B to the spider, screw a -A to force out spider and remove needle bearing.

https://truckmanualshub.com/

◆Inspection procedure◆

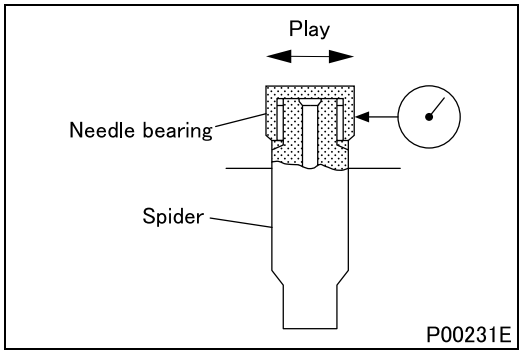

■ **Inspection: Clearance between needle bearing and spider**

- If the measurement exceeds the limit, replace with the universal joint spider kit.

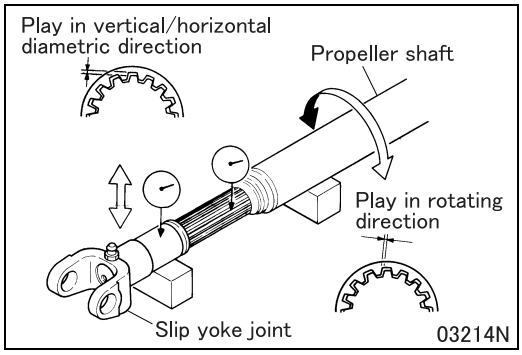

■ **Inspection: Play between slip yoke joint and propeller shaft spline**

- Check the following, and if the measurement is higher than the limit, replace the faulty part.

(1) Play of spline in rotating direction

(2) Play of spline in vertical/horizontal diametric direction

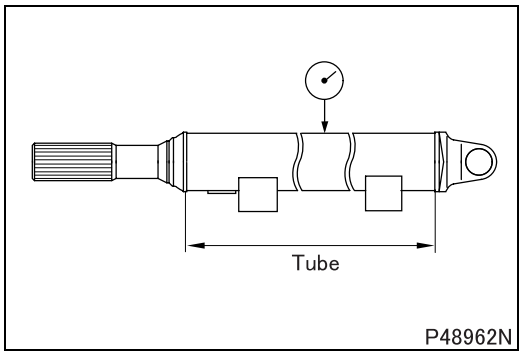

■ **Inspection: Bend of propeller shaft**

- Measure bend of propeller shaft at the center of its tube.
- If the measurement is higher than the limit, correct the bend with a press or replace the propeller shaft.

NOTE

- **To measure the bend of propeller shaft, turn it fully once and read the dial gauge indicator. The bend is one half of the indicated value.**
- **Check the propeller shaft for cracks in the welded area after correcting the bend using a press. If cracking is found, replace the shaft.**

◆Installation procedure◆

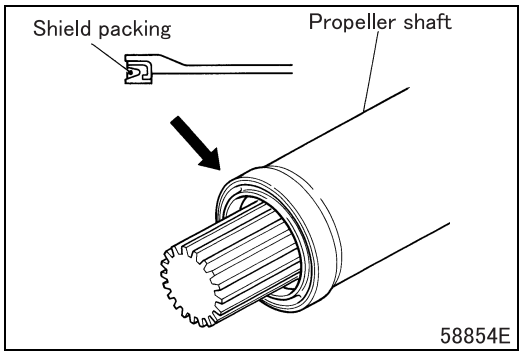

■ **Installation: Shield packing**

- Install shield packing flush onto propeller shaft in the illustrated direction.

https://truckmanualshub.com/

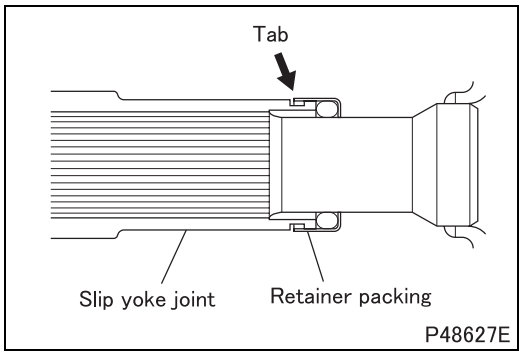

■ **Installation: Retainer packing <Except double Cardan type>**

- Hold the retainer packing against the slip yoke joint and crimp the tabs (in eight places).

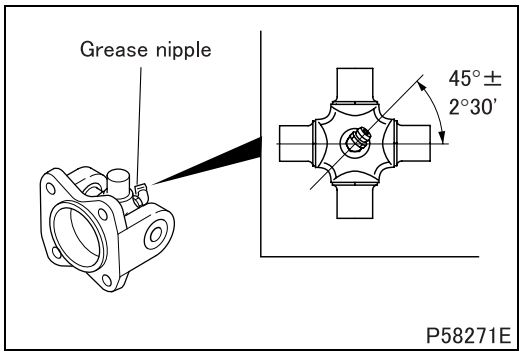

■ **Installation: Grease nipple**

- Install the grease nipple on the spider at an angle conforming to the indication in the illustration.

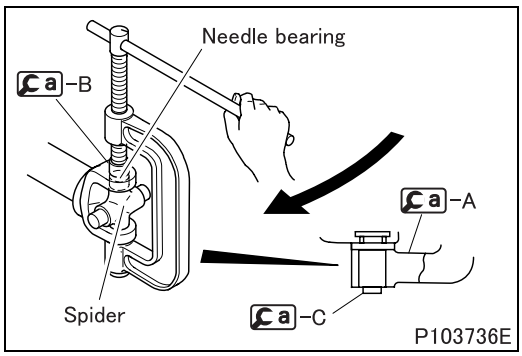

■ **Installation: Needle bearing**

- Fit a-C into a-A from inside.
- Apply a-B to the spider, screw a-A to install needle bearing into place.

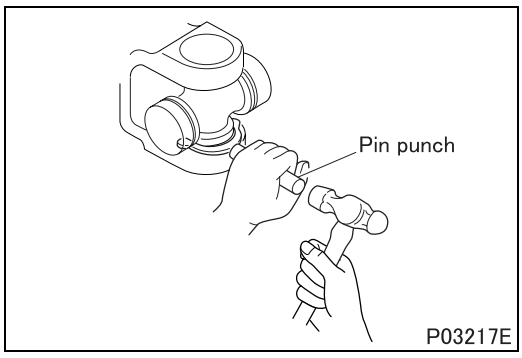

■ **Installation: Snap ring**

https://truckmanualshub.com/

◆Work after installation◆

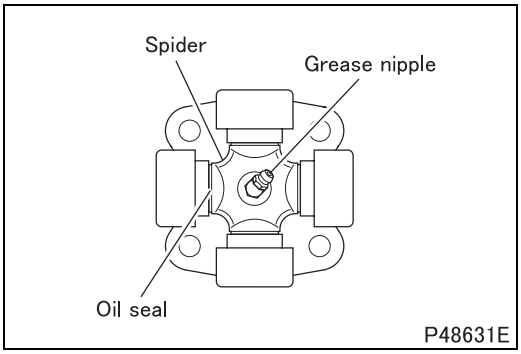

■ **Lubrication: Grease nipple**

- Fill grease through grease nipple until clean grease overflows from all of the four oil seals of the spider.
- If grease does not overflow from all of the four oil seals or rust, water and dirt come out with the grease, replace the spider with a spider kit.

◆Inspection procedure◆

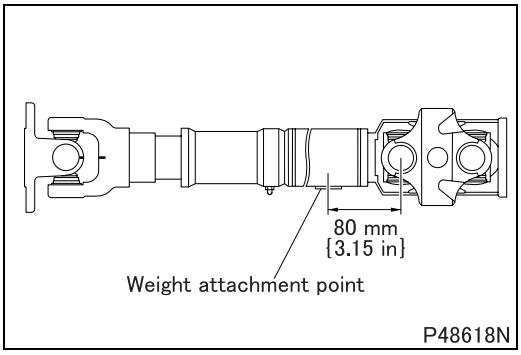

■ **Inspection: Propeller shaft**

[Inspection]

- Measure the amount of balance (dynamic balance) of completed propeller shaft assembly on a balancing machine.
- If the measured value exceeds the standard value, make adjustments as follows.

[Adjustment]

- Attach appropriate weights at the illustrated points so that the amount of unbalance comes within the specified standard value.
- Maximum weight allowance for one point is 100 g {3.53 oz.}.
- Use a combination that keeps the number of balance pieces to a minimum.

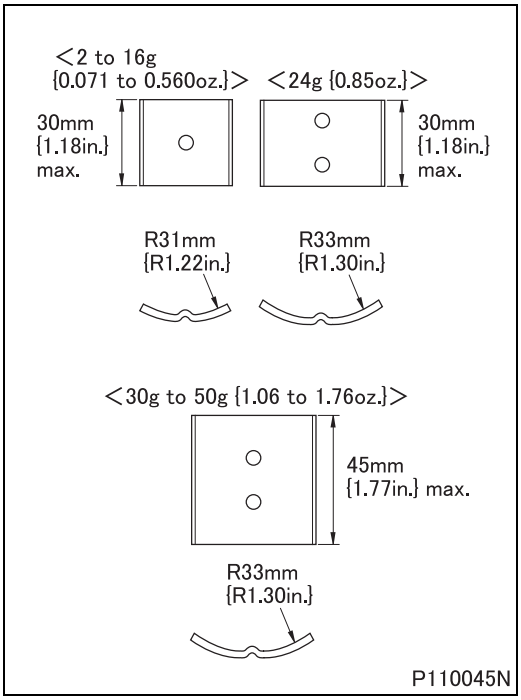

- Available weights

Mass
2 g {0.071 oz.}
4 g {0.14 oz.}
6 g {0.21 oz.}
8 g {0.28 oz.}
10 g {0.35 oz.}
12 g {0.42 oz.}
16 g {0.56 oz.}
24 g {0.85 oz.}
30 g {1.06 oz.}
35 g {1.23 oz.}
40 g {1.41 oz.}
45 g {1.59 oz.}
50 g {1.76 oz.}

https://truckmanualshub.com/

PROPELLER SHAFT <P3>

<Without Center Bearing>

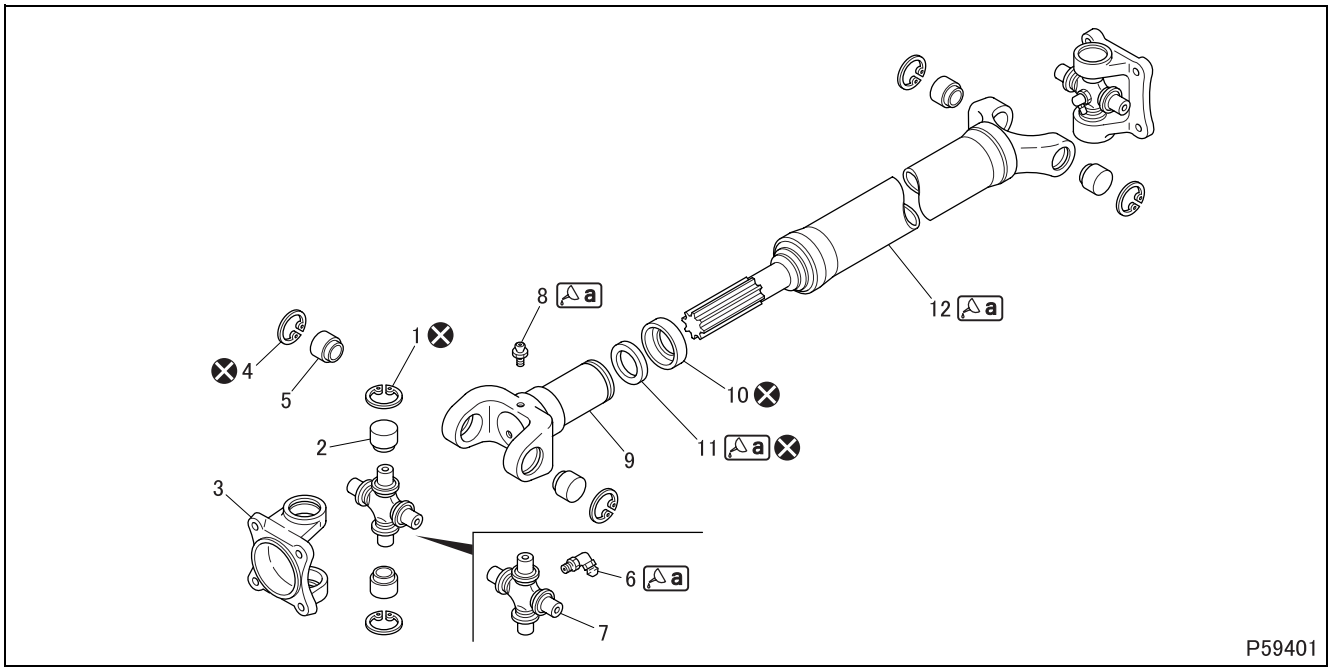

● Disassembly sequence

1 Snap ring
2 Needle bearing
3 Flange yoke
4 Snap ring
5 Needle bearing
6 Grease nipple
7 Spider
8 Grease nipple
9 Slip yoke joint
10 Retainer packing
11 Shield packing
12 Propeller shaft

⊗: Non-reusable parts

CAUTION ⚠

- **Be careful not to damage the needle bearing because it is fitted with a seal.**

● Assembly sequence

Follow the disassembly sequence in reverse, with the following exception:
12→10→11→9

Repair kit: Universal joint spider kit

- Be sure to reinstall removed parts at their original positions so that the propeller shaft does not lose balance.
- Correct dynamic balance after replacement of parts.
- Fill grease through the grease nipple of the slip yoke joint after mounting the propeller shaft to the vehicle. (See REMOVAL AND INSTALLATION OF PROPELLER SHAFT.)

https://truckmanualshub.com/

Service standards (Unit: mm {in.})

Location	Maintenance item	Standard value	Limit	Remedy
–	Permissible amount of unbalance of propeller shaft (periphery of pipe portion of shaft)	10 g {0.35 oz.} max./3000 rpm	–	Adjust
–	Axial clearance of spider	0 to 0.06 {0 to 0.0024}	–	Adjust
2, 3	Clearance between needle bearing and flange yoke “–” indicates interference.	0.008 to –0.033 {0.00031 to –0.0013}	0.1 {0.0039}	Replace
2, 5, 6	Play between needle bearing and spider	0.01 to 0.06 {0.00039 to 0.0024}	0.1 {0.0039}	Replace
5, 9	Clearance between needle bearing and slip joint “–” indicates interference.	0.008 to –0.033 {0.00031 to –0.0013}	0.1 {0.0039}	Replace
9, 12	Play in rotating direction between slip yoke joint and propeller shaft spline	0.01 to 0.09 {0.00039 to 0.0035}	0.3 {0.012}	Replace
	Play in vertical/horizontal diametric direction between slip yoke joint and propeller shaft spline	0.02 to 0.16 {0.00079 to 0.0063}	0.3 {0.012}	Replace
12	Bend of propeller shaft	0 to 0.3	0.4 {0.016}	Correct or replace

Lubricant and/or sealant

Mark	Points of application	Specified lubricant and/or sealant	Quantity
a	Supply through grease nipple	Wheel bearing grease [NGLI No. 2 (Li soap)]	As required
	Shield packing lips		
	Propeller shaft spline		

Special tools (Unit: mm {in.})

Mark	Tool name and shape	Part No.	Application
a	Universal joint tool set A: Yoke assembly B: Push rod C: Guide D: ϕ29 {1.14} E: ϕ29 {1.14} F: ϕ27.7 {1.09} 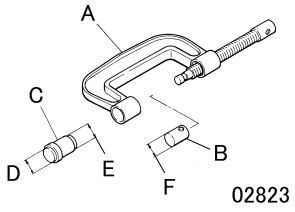	MB999024 A: MB999025 B: MB999026 C: MB999010	Removal and installation of needle bearing

◆Work before removal◆

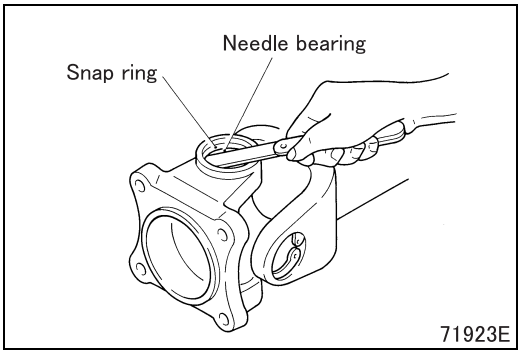

■ Inspection: Axial clearance of spider

- Press down on the needle bearing, and measure clearance between the snap ring and needle bearing.
- If the measured value exceeds the standard value, change snap ring thickness for adjustment.
  To adjust, use snap rings for both ends with the same thickness. Select an optimal combination of snap rings from the table below if necessary.

https://truckmanualshub.com/

Variety and combination of snap rings (solid line indicates best combination)

Thickness	Identification color	Combination	Thickness	Identification color
1.49 mm {0.059 in.}	None		1.49 mm {0.059 in.}	None
1.52 mm {0.060 in.}	Black		1.52 mm {0.060 in.}	Black
1.55 mm {0.061 in.}	Blue		1.55 mm {0.061 in.}	Blue
1.58 mm {0.062 in.}	Yellow		1.58 mm {0.062 in.}	Yellow
1.61 mm {0.063 in.}	Purple		1.61 mm {0.063 in.}	Purple
1.64 mm {0.065 in.}	None		1.64 mm {0.065 in.}	None
1.67 mm {0.066 in.}	Black		1.67 mm {0.066 in.}	Black
1.70 mm {0.067 in.}	Blue		1.70 mm {0.067 in.}	Blue

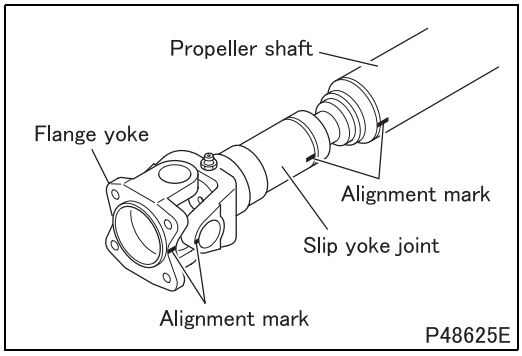

■ **Alignment mark: Propeller shaft**

- To prevent assembly of wrong parts, make alignment marks on flange yoke, slip yoke joint and propeller shaft.

◆Removal procedure◆

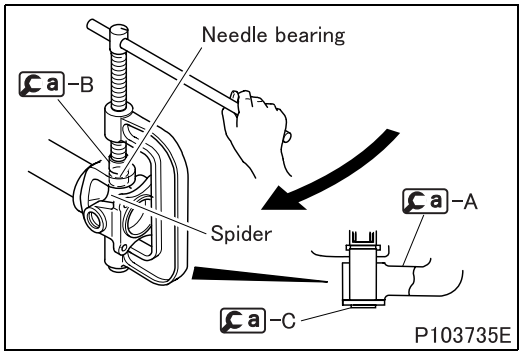

■ **Removal: Needle bearing**

- Fit Ca-C into Ca-A from outside.
- Apply Ca-B to the spider, screw Ca-A to force out spider and remove needle bearing.

https://truckmanualshub.com/

◆Inspection procedure◆

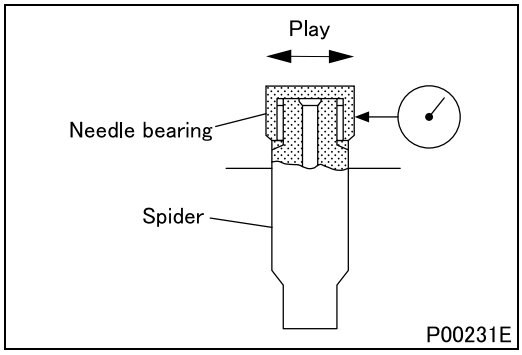

■ **Inspection: Clearance between needle bearing and spider**

- If the measurement is higher than the limit, replace with the universal joint spider kit.

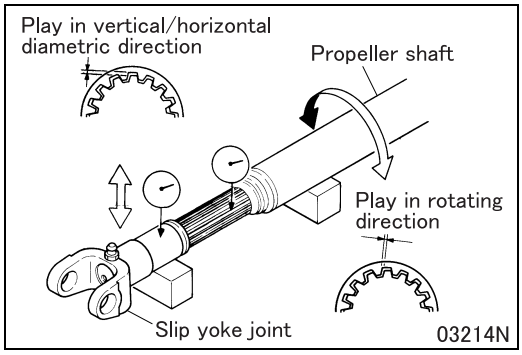

■ **Inspection: Play between slip yoke joint and propeller shaft spline**

- Check the following, and if the measurement is higher than the limit, replace the faulty part.

(1) Play of spline in rotating direction

(2) Play of spline in vertical/horizontal diametric direction

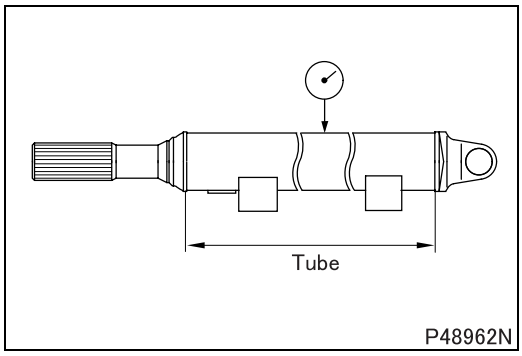

■ **Inspection: Bend of propeller shaft**

- Measure bend of propeller shaft at the center of its tube.
- If the measurement is higher than the limit, correct the bend with a press or replace the propeller shaft.

CAUTION ⚠

- **To measure the bend of propeller shaft, turn it fully once and read the dial gauge indicator. The bend is one half of the indicated value.**
- **Check the propeller shaft for cracks in the welded area after correcting the bend using a press. If cracking is found, replace the shaft.**

◆Installation procedure◆

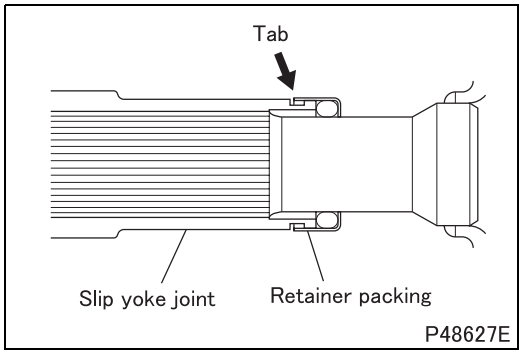

■ **Installation: Retainer packing**

- Hold retainer packing against slip yoke joint and caulk tabs (at eight places).

https://truckmanualshub.com/

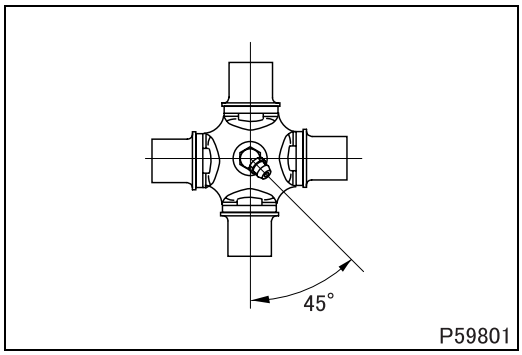

■ **Installation: Spider**

- Install the grease nipple on the spider at an angle conforming to the indication in the illustration.

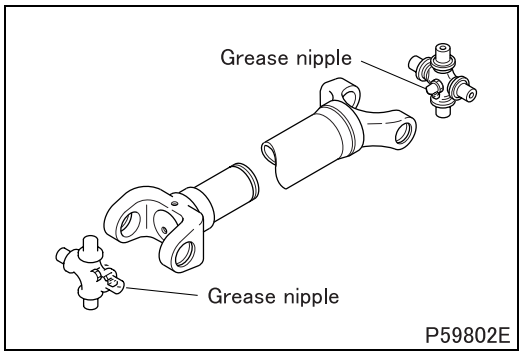

- Install the spiders on the both ends of propeller shaft so that the direction of grease nipples must be the same.

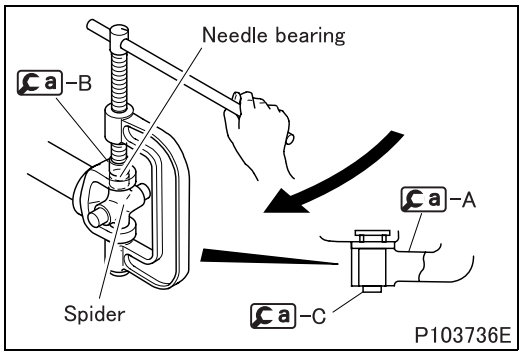

■ **Installation: Needle bearing**

- Fit a -C into a -A from inside.
- Apply a -B to the spider, screw a -A to install needle bearing into place.

◆**Work after installation**◆

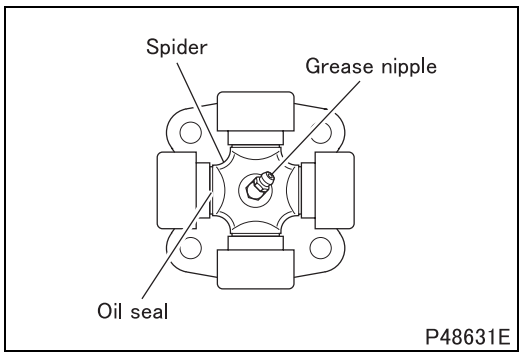

■ **Lubrication: Grease nipple**

- Fill grease through the grease nipple until clean grease overflows from all of the four oil seals of spider.
- If grease does not overflow from all of the four oil seals or rust, water and dirt come out with grease, replace the spider with a spider kit.

https://truckmanualshub.com/

◆Inspection procedure◆

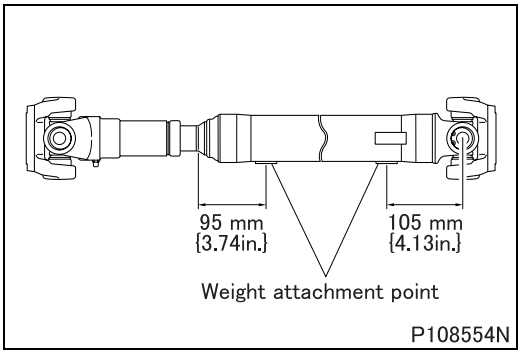

■ Inspection: Propeller shaft

[Inspection]

- Measure the amount of balance (dynamic balance) of the completed propeller shaft on a balancing machine.
- If measured value exceeds the standard value, make adjustments as follows.

[Adjustment]

- Attach appropriate weights at the illustrated points so that the amount of unbalance comes within the specified standard value.
- Maximum weight allowance for one point is 100 g {3.53 oz.}.
- Use a combination that keeps the number of balance pieces to a minimum.

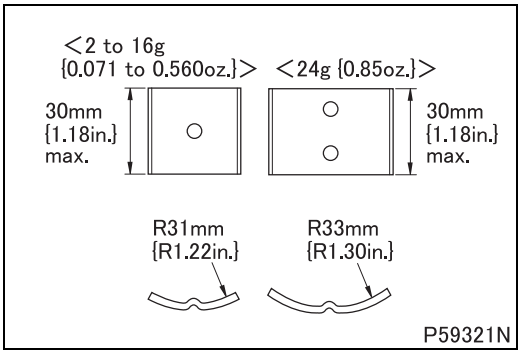

Available weights

Mass
2 g {0.071 oz.}
4 g {0.14 oz.}
6 g {0.21 oz.}
8 g {0.28 oz.}
10 g {0.35 oz.}
12 g {0.42 oz.}
16 g {0.56 oz.}
24 g {0.85 oz.}

https://truckmanualshub.com/

PROPELLER SHAFT <P3>

<With Center Bearing>

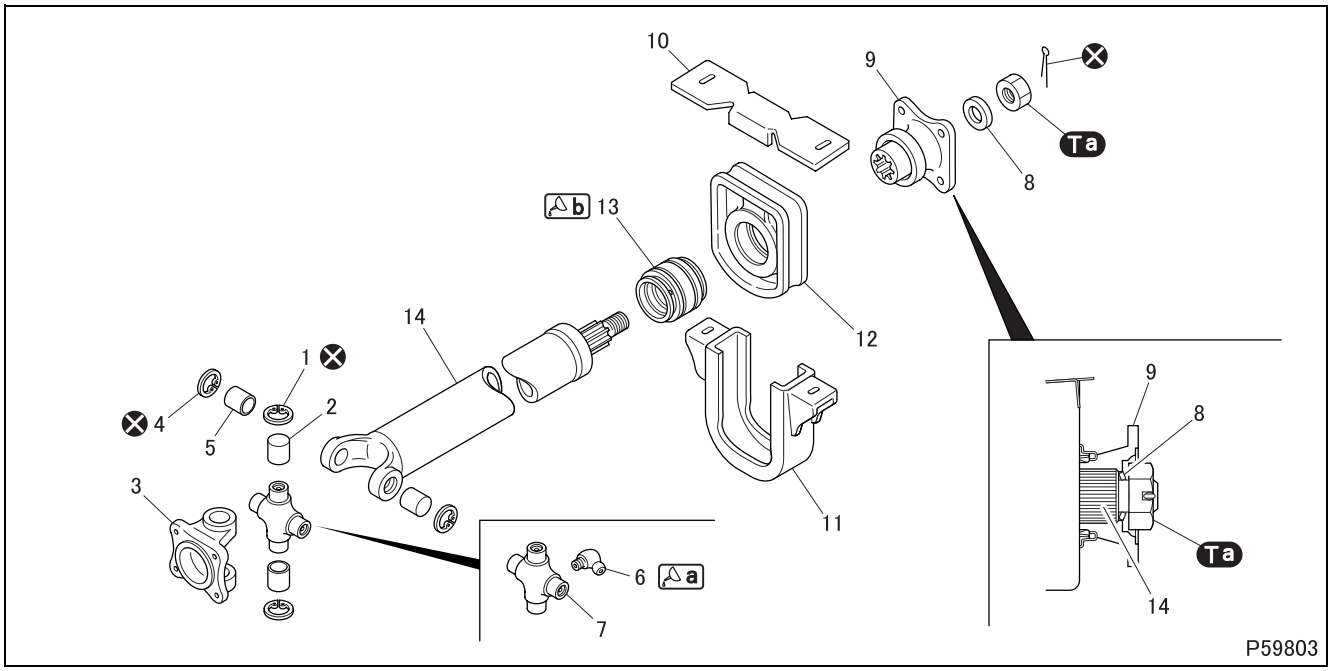

● Disassembly sequence

1 Snap ring
2 Needle bearing
3 Flange yoke
4 Snap ring
5 Needle bearing
6 Grease nipple
7 Spider
8 Disc spring
9 Companion flange
10 Hanger
11 Holder
12 Cushion rubber
13 Center bearing
14 Propeller shaft

⊗: Non-reusable parts

CAUTION ⚠

- **Be careful not to damage the needle bearing because it is fitted with a seal.**

● Assembly sequence

Follow the disassembly sequence in reverse.

Repair kit: Universal joint spider kit

- Be sure to reinstall removed parts at their original positions so that the propeller shaft does not lose balance.
- Correct dynamic balance after replacement of parts.

https://truckmanualshub.com/

Service standards (Unit: mm {in.})

Location	Maintenance item	Standard value	Limit	Remedy
–	Permissible amount of unbalance of propeller shaft (periphery of pipe portion of shaft)	5 g {0.18 oz.} max./3000 rpm	–	Adjust
–	Axial clearance of spider	0 to 0.06 {0 to 0.0024}	–	Adjust
2, 3	Clearance between needle bearing and flange yoke "–" indicates interference.	0.008 to –0.033 {0.00031 to –0.0013}	0.1 {0.0039}	Replace
2, 5, 6	Play between needle bearing and spider	0.01 to 0.06 {0.00039 to 0.0024}	0.1 {0.0039}	Replace
5, 14	Clearance between needle bearing and propeller shaft "–" indicates interference.	0.008 to –0.033 {0.00031 to –0.0013}	0.1 {0.0039}	Replace
14	Bend of propeller shaft	0 to 0.3	0.4 {0.016}	Correct or replace

Tightening torque (Unit: N·m {kgf·m})

Mark	Parts to be tightened	Tightening torque	Remarks
Ta	Nut (companion flange mounting)	290 to 390 {215 to 285, 30 to 40}	–

Lubricant and/or sealant

Mark	Points of application	Specified lubricant and/or sealant	Quantity
a	Supply through grease nipple	Wheel bearing grease [NLGI No. 2 (Li soap)]	As required
b	Fill space in center bearing housing	Heat-resisting grease [NLGI No. 3]	70 to 100% of space capacity (20 to 29 g) {0.71 to 1.0 oz.}
	Center bearing seal lips		As required

Special tools (Unit: mm {in.})

Mark	Tool name and shape	Part No.	Application
Ca	Universal joint tool set A: Yoke assembly B: Push rod C: Guide D: φ29 {1.14} E: φ29 {1.14} F: φ27.7 {1.09} 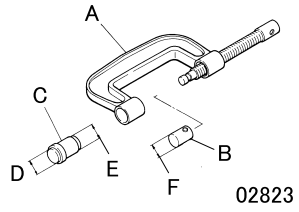	MB999024 A: MB999025 B: MB999026 C: MB999010	Removal and installation of needle bearing

◆Work before removal◆

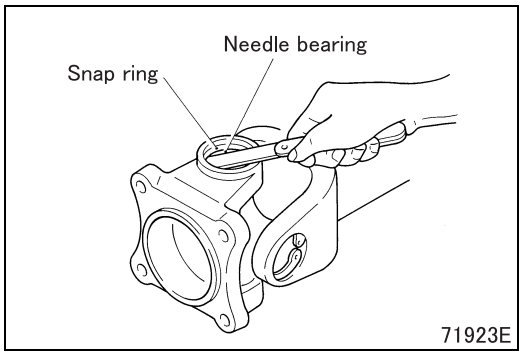

■ Inspection: Axial clearance of spider

- Press down on the needle bearing, and measure clearance between the snap ring and needle bearing.
- If the measured value exceeds the standard value, change snap ring thickness for adjustment.
  To adjust, use snap rings for both ends with the same thickness. Select an optimal combination of snap rings from the table below if necessary.

https://truckmanualshub.com/

Variety and combination of snap rings (solid line indicates best combination).

Thickness	Identification color	Combination	Thickness	Identification color
1.49 mm {0.059 in.}	None		1.49 mm {0.059 in.}	None
1.52 mm {0.060 in.}	Black		1.52 mm {0.060 in.}	Black
1.55 mm {0.061 in.}	Blue		1.55 mm {0.061 in.}	Blue
1.58 mm {0.062 in.}	Yellow		1.58 mm {0.062 in.}	Yellow
1.61 mm {0.063 in.}	Purple		1.61 mm {0.063 in.}	Purple
1.64 mm {0.065 in.}	None		1.64 mm {0.065 in.}	None
1.67 mm {0.066 in.}	Black		1.67 mm {0.066 in.}	Black
1.70 mm {0.067 in.}	Blue		1.70 mm {0.067 in.}	Blue

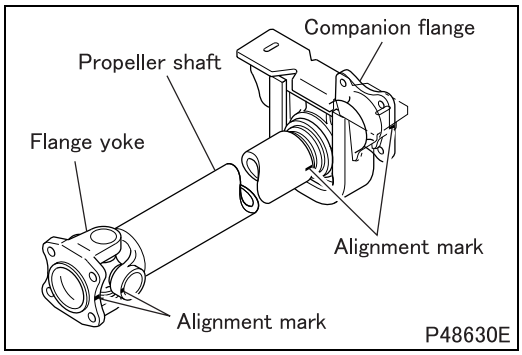

■ **Alignment mark: Propeller shaft**

- To prevent assembly of wrong parts, make alignment marks on the flange yoke, companion flange and propeller shaft.

◆Removal procedure◆

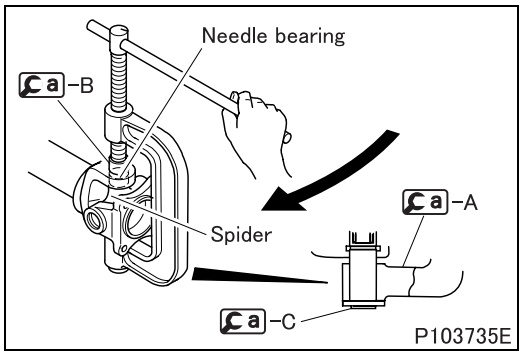

■ **Removal: Needle bearing**

- Fit a-C into a-A from outside.
- Apply a-B to the spider, screw a-A to force out spider and remove needle bearing.

https://truckmanualshub.com/

◆Inspection procedure◆

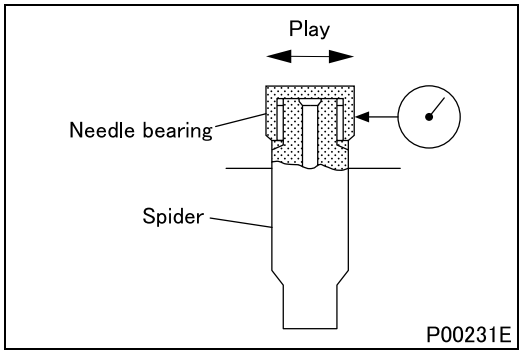

■ **Inspection: Clearance between needle bearing and spider**

- If the measurement is higher than the limit, replace with the universal joint spider kit.

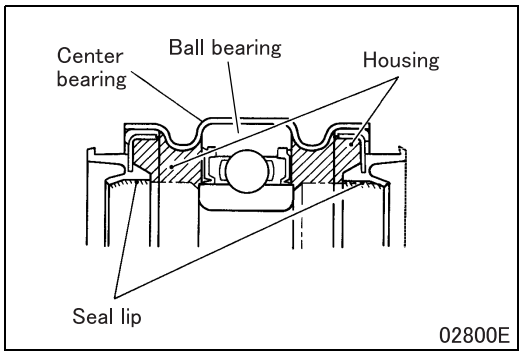

■ **Inspection: Center bearing**

- Check at every 50,000 km {31,070 miles} or each official vehicle inspection. If excessive grease outflow is evident, pack grease in center bearing housing up to 70 to 100% (20 to 29 g {0.71 to 1.02 oz.}) of space capacity.
- Apply grease to seal lips.

NOTE

- **The ball bearing portion of center bearing is provided with an oil seal and requires no supply of grease.**

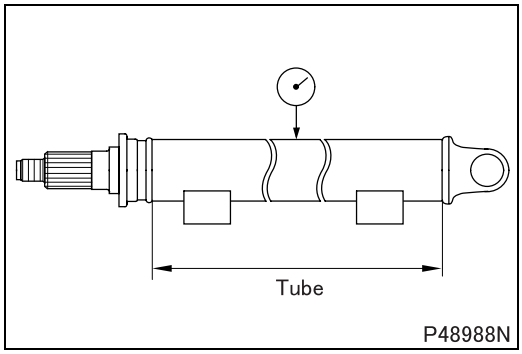

■ **Inspection: Bend of propeller shaft**

- Measure end of propeller shaft at the center of its tube.
- If the measurement is higher than the limit, correct the bend with a press or replace propeller shaft.

NOTE

- **To measure the bend of propeller shaft, turn it fully once and read the dial gauge indicator. The bend is one half of the indicated value.**
- **Check propeller shaft for cracks in welded area after correcting the bend with a press. If cracking is found, replace propeller shaft.**

◆Installation procedure◆

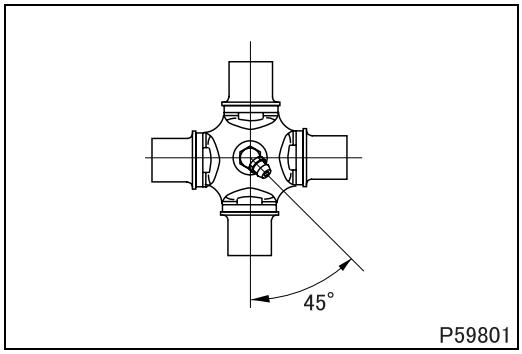

■ **Inspection: Grease nipple**

- Install the grease nipple on the spider at an angle conforming to the indication in the illustration.

https://truckmanualshub.com/

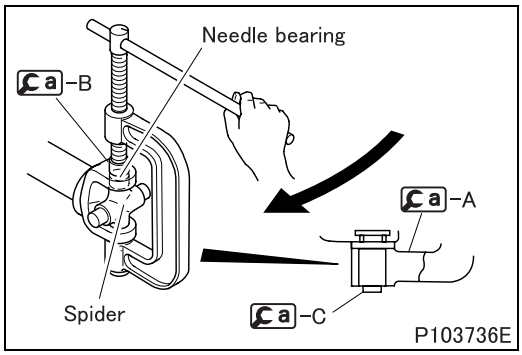

■**Installation: Needle bearing**

- Fit Ca-C into Ca-A from inside.
- Apply Ca-B to the spider, screw Ca-A to install needle bearing into place.

◆**Work after installation**◆

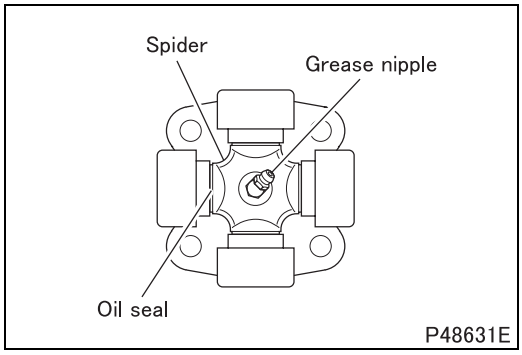

■ **Lubrication: Grease nipple**

- Fill grease through grease nipple until grease overflows from oil seal of spider.

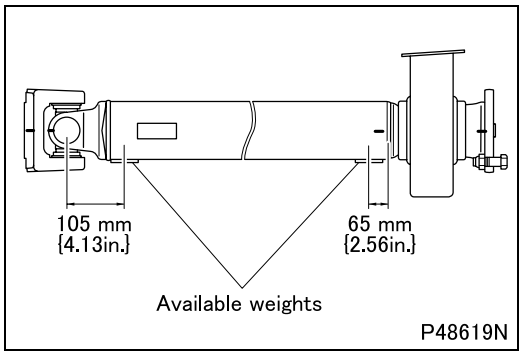

■ **Inspection: Propeller shaft**

[Inspection]

- Measure the amount of balance (dynamic balance) of completed propeller shaft on a balancing machine.
- If measured value exceeds the standard value, make adjustments as follows.

[Adjustment]

- Attach appropriate weights at the illustrated points so that the amount of unbalance comes within the standard value.
- Maximum weight allowance for one point is 100 g {3.53 oz.}.
- Use a combination that keeps the number of weights to a minimum.

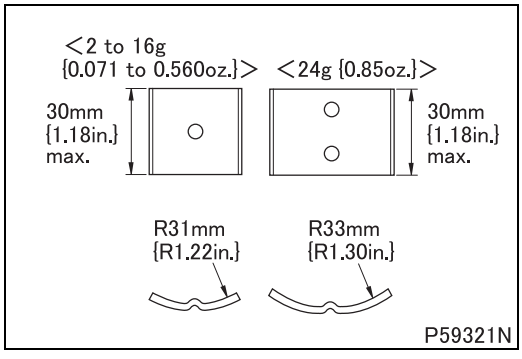

Available weights

Mass
2 g {0.071 oz.}
4 g {0.14 oz.}
6 g {0.21 oz.}
8 g {0.28 oz.}
10 g {0.35 oz.}
12 g {0.42 oz.}
16 g {0.56 oz.}
24 g {0.85 oz.}

https://truckmanualshub.com/

Group 26A

Front Axle <FE>

MITSUBISHI FUSO TRUCK OF AMERICA, Inc.

Pub.No.00ELT0001-26A

https://truckmanualshub.com/

INDEX

SPECIFICATIONS 26A-2

STRUCTURE AND OPERATION
1. **Wheel Hub and Rotor 26A-3**
2. **Knuckle and Kingpin, Front Axle..... 26A-4**

TROUBLESHOOTING..... 26A-5

ON-VEHICLE INSPECTION AND ADJUSTMENT
1. **Inspection and Adjustment of Wheel Alignment..... 26A-6**
2. **Inspection and Adjustment of Steering Angle 26A-10**
3. **Inspection of Side Slip 26A-10**
4. **Inspection of Tie Rod End Ball Joint 26A-11**
5. **Inspection of Wheel Bearing for Play 26A-11**
6. **Inspection of Knuckle Joint for Play..... 26A-11**

WHEEL HUB AND ROTOR..... 26A-12

KNUCKLE AND KINGPIN, FRONT AXLE..... 26A-22

TIE ROD..... 26A-32

https://truckmanualshub.com/

SPECIFICATIONS

Item			Specifications	
			FEC5	FEC7, FEC9
Front axle	Model		F200T	F350T
	Type		Reverse Elliot, “I” beam	
Kingpin Outer diameter × Length		mm {in.}	28 × 180 {1.10 × 7.09}	
Tread (dimension notified to the authorities)		mm {in.}	1665 {65.6}	
Mass		kg {lb}	Approx. 145 {320}	Approx. 160 {350}

https://truckmanualshub.com/

1. Wheel Hub and Rotor

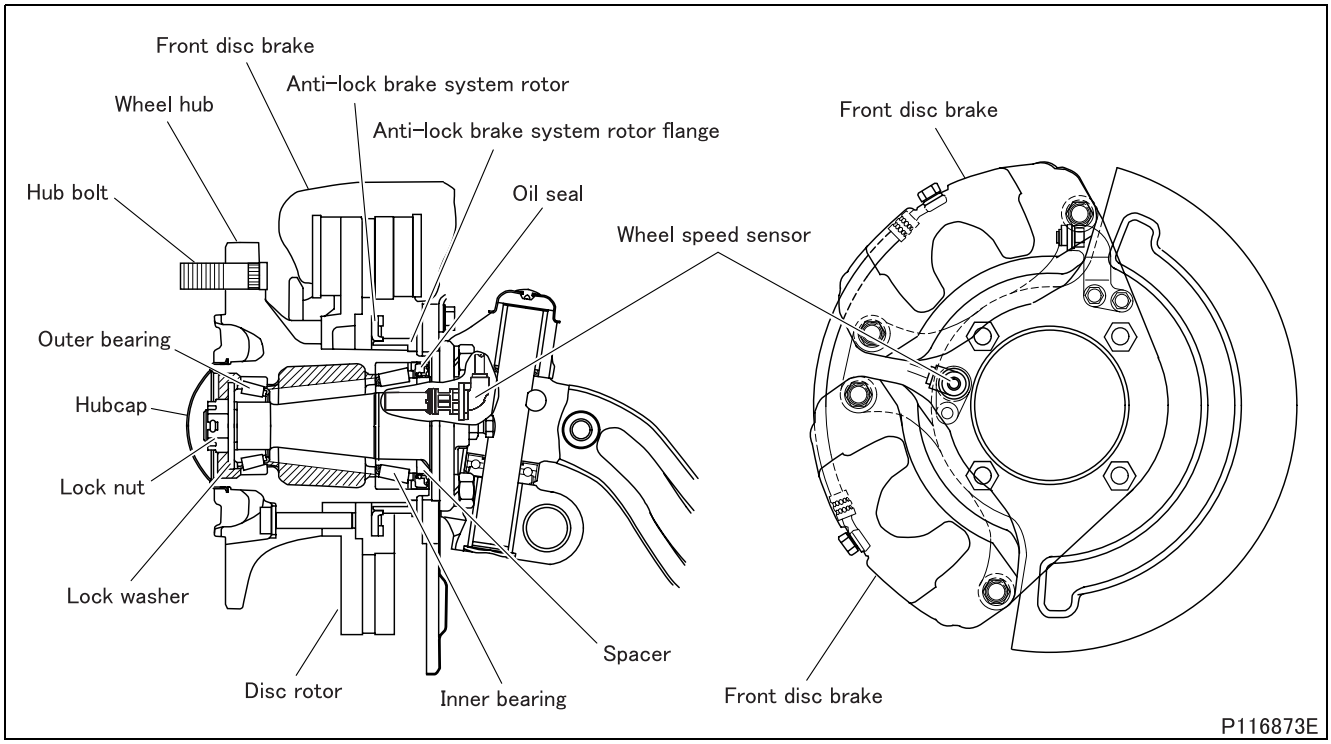

https://truckmanualshub.com/

2. Knuckle and Kingpin, Front Axle

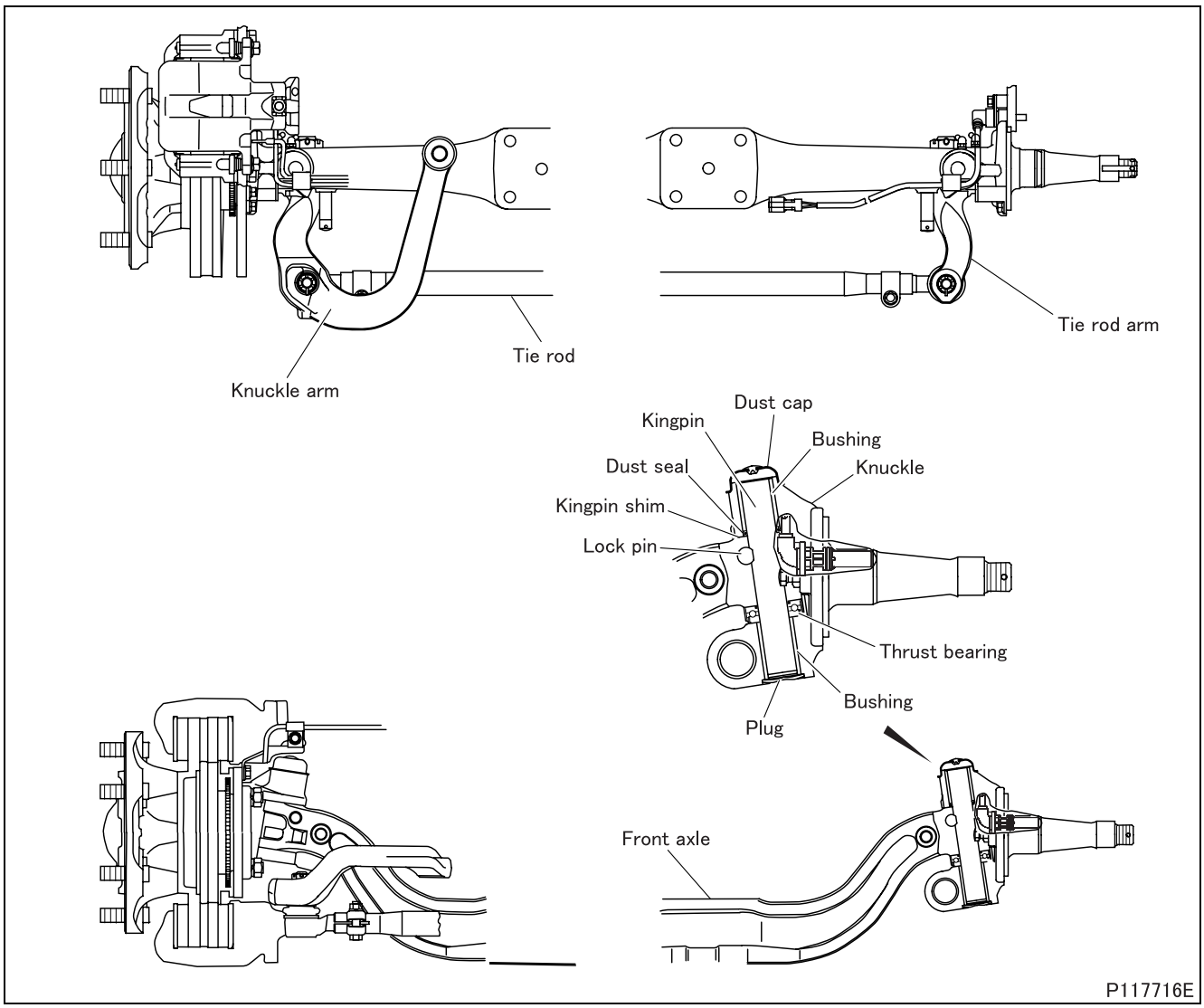

https://truckmanualshub.com/

Possible causes \ Symptoms		Continuous noise while at a constant speed	Intermittent noise while at a constant speed	Steering wheel shakes	Steering feels stiff	Steering wheel return poor	Unable to steer the steering wheel	Steering pulls to one side	Uneven wear or early wear of front tires	Reference Gr
Wheel hub, knuckle and kingpin, front axle	Wheel alignment misaligned			O	O	O			O	
	Steering angle adjustment faulty						O			
	Wheel hub bearing seized, worn or rotation faulty	O		O				O		
	Wheel hub bearing broken		O							
	Kingpin worn			O						
	Clearance between kingpin and kingpin bushing excessive			O	O					
	Greasing to kingpin insufficient				O	O				
	Kingpin thrust bearing seized, worn or rotation faulty				O	O				
	Vertical clearance between knuckle and front axle excessive			O						
	Knuckle arm and tie rod arm tightening nuts loose			O						
	Ball stud tightening nut of tie rod end loose			O						
	Tie rod end ball stud worn			O						
	Tie rod bent						O			
	Knuckle bent							O		
	Front axle bent							O		
	Various parts of front axle tightened excessively					O				
Front suspension	U-bolt nut of front suspension loose			O						Gr33
	One of front springs worn-out or broken							O		
Tire	Tire inflation pressure uneven			O					O	Gr31
	Tire inflation pressure insufficient				O					
	Inflation pressure uneven for right and left tires							O		
	Size and type of right and left tires different							O	O	
	Outer diameters of right and left tires remarkably different							O		
	Handling of tires inadequate								O	

https://truckmanualshub.com/

ON-VEHICLE INSPECTION AND ADJUSTMENT

1. Inspection and Adjustment of Wheel Alignment

Before carrying out inspection and adjustment of wheel alignment, set the vehicle to the following condition.

- Park the vehicle unloaded on a level surface.
- The vehicle needs to be equipped with proper size tires.
- If the wear condition of tires on the right is remarkably different from that of tires on the left, replace tires.
- Inflate tires to specified pressure.
- Correct if the vehicle tilts due to faulty suspension.
- Service all parts of the front axle and ensure that there is no fault such as the following.
  - Play at or loose kingpin
  - Loose front wheel hub
  - Bolts used for tightening various parts of tie rod arm, knuckle arm and tie rod are loose
  - Bend of knuckle and front axle
- Adjust play at steering wheel properly.
- For wheel alignment, which is related to the side slip amount, both wheel alignment and the side slip amount must conform to the standard values.

Service standards (Unit: mm {in.})

Location	Maintenance item	Standard value	Limit	Remedy
–	Toe-in	0 to 6 (3 ± 3) {0 to 0.24 (0.12 ± 0.12)}	–	Adjust
	Camber	0°15' ± 1°00'	–	Replace
	Caster	1°15' ± 1°00'	–	Replace
	Kingpin inclination angle	8°45' ± 30'	–	Replace

Tightening torque (Unit: N·m {ft.lbs, kgf·m})

Mark	Parts to be tightened	Tightening torque	Remarks
–	Clamp nut (tie rod end clamp fastening)	25 ± 5 {18 ± 3.6, 2.5 ± 0.5}	–
–	Alignment gauge adapter	113 ± 15 {83 ± 11, 11.5 ± 1.5}	–

Special tools (Unit: mm {in.})

Mark	Tool name and shape	Part No.	Application
a	Hubcap wrench 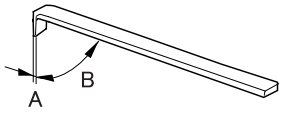 P49261 A: 0.5 {0.020}, B: 78°	MB999108	Removal of hubcap
b	Alignment gauge adapter 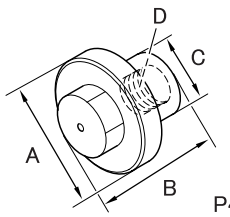 P48604 A: ϕ80 {3.15}, B: 69 {2.72}, C: ϕ45 {1.77}, D: M24 × 1.5	MH063428	Measurement of camber, caster and kingpin inclination angle

https://truckmanualshub.com/

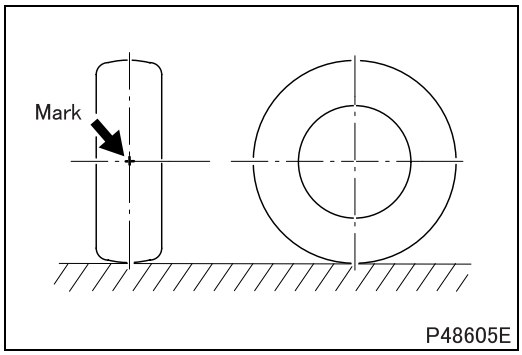

1.1 Inspection and adjustment of toe-in

[Inspection]

- Position the front wheels exactly to forward running position.
- Mark each tire at the center height in the middle of the tire tread.

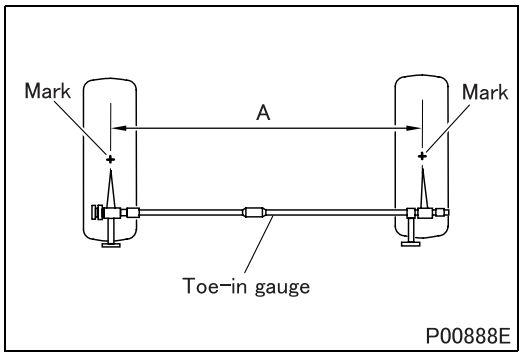

- Align the two points of the toe-in gauge with respective marks and measure distance A between the marks.

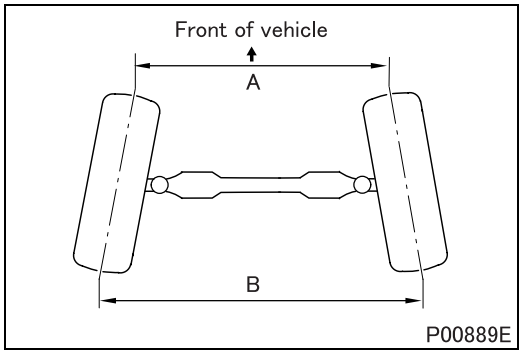

- Push the vehicle to roll the tires 180 degrees.
- Measure distance B between the marks that are now facing the rear of the vehicle.
- If toe-in (difference between A and B) deviates from the standard value, adjust.

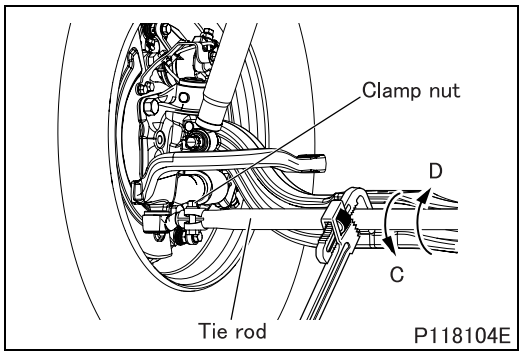

[Adjustment]

- Loosen the clamp nuts on the right and left.
- Turn the tie rod with a pipe wrench to adjust the toe-in.
  C: When adjusting to the toe-out direction
  D: When adjusting to the toe-in direction
- After adjustment, tighten the clamp nut to the specified torque.

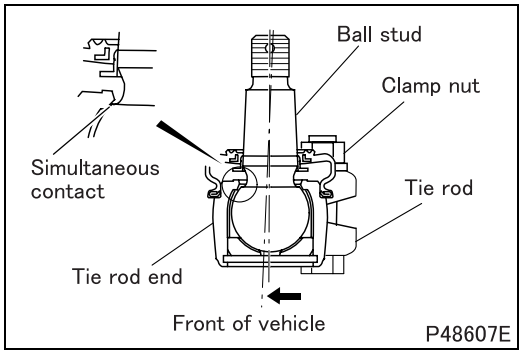

CAUTION ⚠

- **Hold down the tie rod end toward the front of the vehicle with the front wheels positioned to forward running position so that the right and left tie rod ends are in contact with the ball studs at the same time. In this state adjust so that the specified toe-in is achieved and tighten the clamp nut to secure the tie rod.**

https://truckmanualshub.com/

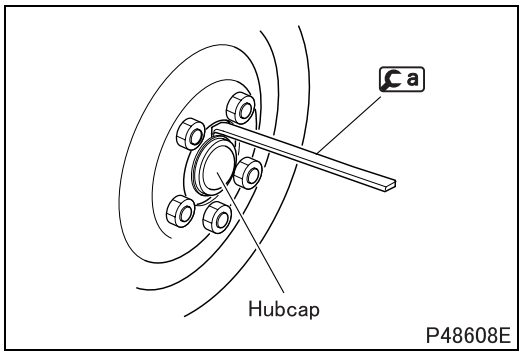

P48608E

1.2 Inspection of camber

- Position the front wheels exactly to forward running position.
- Remove the hubcap using a.

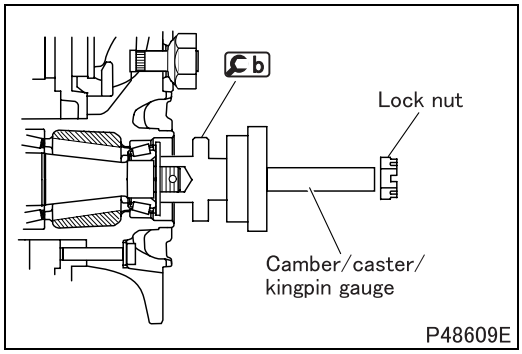

P48609E

- Remove the lock nut.

CAUTION ⚠

- **Do not apply vehicle weight to the hub bearing with the lock nut loosened.**

- Wipe off grease from the knuckle end, attach b and tighten it to the specified torque.
- Attach the camber/caster/kingpin gauge.

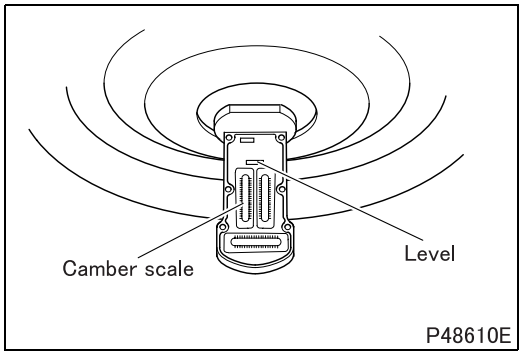

P48610E

- Place the level in order to have bubble stay in the middle.
- Read center of bubble on camber scale to find the camber. Do the same way for the right and left front tires.
- If the measured value deviates from the standard value, abnormalities such as wear of kingpin and kingpin bushing, loose hub bearing, and bend of knuckle and front axle are suspected. Inspect each part and replace defective parts.

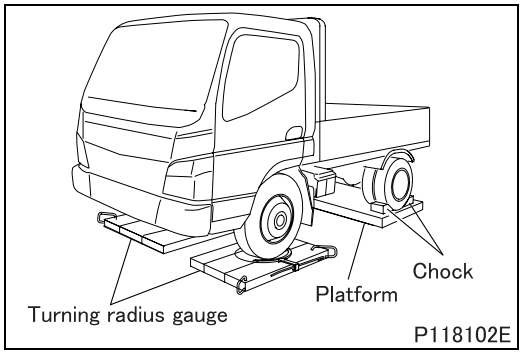

P118102E

1.3 Inspection of caster and kingpin inclination angle

- Prepare a platform with the same height as the turning radius gauge and place it under the rear wheels so that the vehicle may be placed level.
- Apply chocks to the rear wheels.
- Keep the turning radius gauge locked.
- Jack up the vehicle, and set the right and left front wheels so that respective ground contact area centers of two wheels and turn table centers may meet.

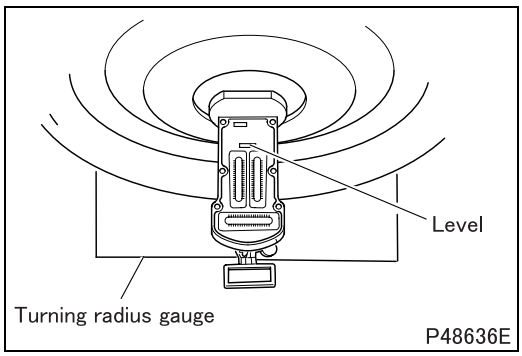

P48636E

- Unfasten locking of the turning radius gauge, and set the scale to 0 degrees.
- In the same manner as in case of measuring camber in Section **1.2**, attach the camber/caster/kingpin gauge, and set the level so that the bubble comes in the middle.

https://truckmanualshub.com/

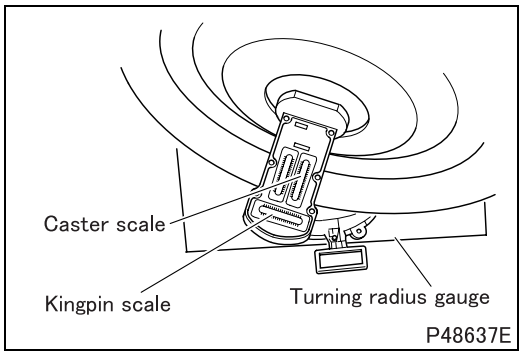

- With the brake pedal depressed turn steering wheel slowly from the point of 0 degrees on the turning radius gauge, until the direction is changed by 20 degrees each to the right side in case of the right front wheel and to the left in case of the left front wheel.

NOTE

- **It is not possible to make exact measurement unless brake is kept applied, because otherwise wheels will turn slightly.**

- At the point where the wheel has been turned 20 degrees, set the caster scale and the center of the bubble of the kingpin scale to 0 degrees by turning the adjuster.

NOTE

- **Pay attention to the kingpin scale because it has scales for right and left: align the right kingpin scale in case of the right front wheel, and left kingpin scale in case of the left front wheel.**

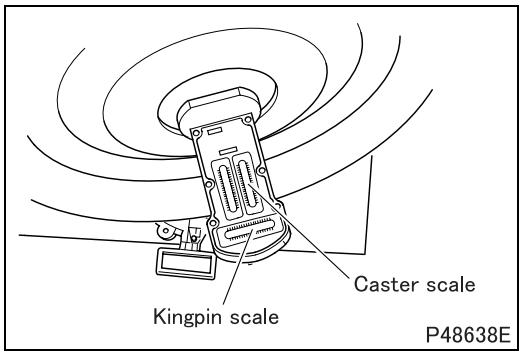

- Reverse this position, turn the steering wheel slowly until the direction of the front wheels changes by 20 degrees in the opposite direction.
- Read the center of bubbles at this position at the caster scale and kingpin scale to find caster and kingpin inclination angles.
- If the measured value deviates from the standard value, disassemble the front axle for service.

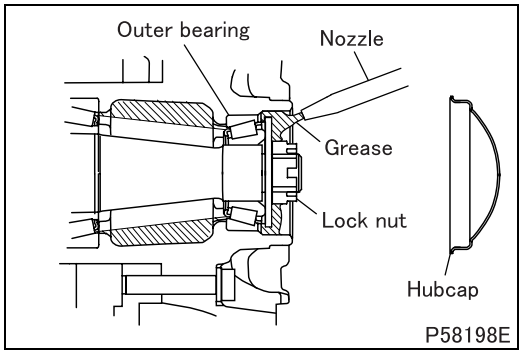

- After inspection, install the lock nut and measure the starting torque of the wheel hub bearing. (See later section.)
- If the starting torque deviates from the standard value, check the wheel bearings and perform the necessary adjustment. (See later section.)
- Fill the specified amount of grease into wheel hub using a nozzle so that the outer bearing is covered with the grease and then install a new hubcap. (See later section.)

https://truckmanualshub.com/

2. Inspection and Adjustment of Steering Angle

- Perform steering angle inspection and adjustment only after wheel alignment inspection and adjustment has been completed.

Service standards

Location	Maintenance item			Standard value	Limit	Remedy
–	Steering angle	Inside (outside steering angle is for reference only)	FEC5	49° $^{+0°}_{-2°}$ (36°)	–	Adjust
			FEC7, FEC9	45° $^{+0°}_{-2°}$ (34°)	–	Adjust

Tightening torque (Unit: N·m {ft.lbs, kgf·m})

Mark	Parts to be tightened	Tightening torque	Remarks
–	Lock nut (knuckle stopper bolt mounting)	46.5 ± 7 {34 ± 5.4, 4.75 ± 0.75}	–

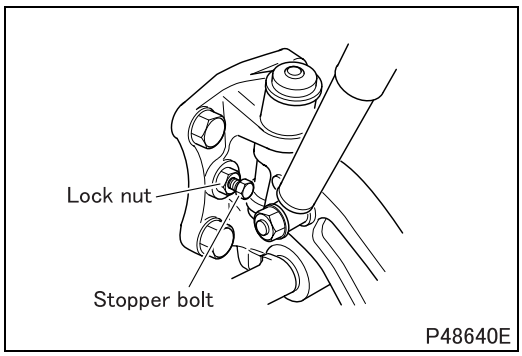

- Set the turning radius gauge and a platform on the vehicle in the same manner as the caster and kingpin inclination angle measurement performed in Section **1.3**.
- Turn the steering wheel right or left completely from the position where the turning radius gauge is set to 0 degrees, and read the scale of the turning radius gauge to measure the steering angle.
- If the measured value deviates from the standard value, adjust with the knuckle stopper bolt and tighten the lock nut to the specified torque.

3. Inspection of Side Slip

- Perform side slip inspection only after wheel alignment inspection and adjustment has been completed.
- For the side slip amount, which is related to wheel alignment, both the side slip amount and wheel alignment must conform to the standard values.

Service standards (Unit: mm {in.})

Location	Maintenance item	Standard value	Limit	Remedy
–	Side slip amount (per 1 m {39.4})	0 to 3 {0 to 0.12}	–	Adjust

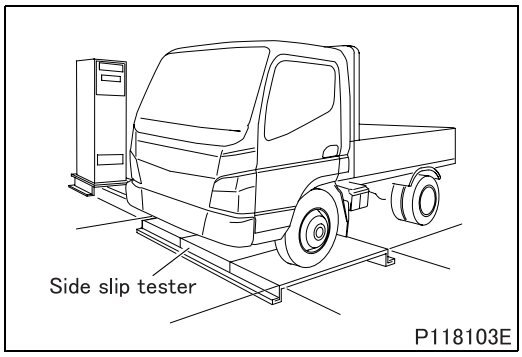

- Position the front wheels exactly to forward running position.
- Move the vehicle forward past the side slip tester as slowly as possible to inspect side slip.

NOTE

- **Pay attention to the following when moving over the side slip tester.**
- **Be sure to hold steering exactly at the forward running position, and make no turns.**
- **Do not apply the brakes.**
- **Keep the speed constant.**

- If the measured value deviates from the standard value, inspect and adjust wheel alignment.

https://truckmanualshub.com/

4. Inspection of Tie Rod End Ball Joint

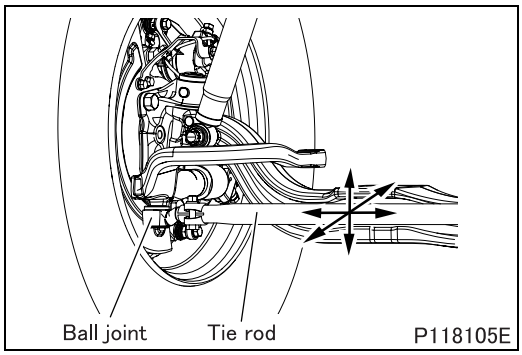

4.1 Play of tie rod end ball joint

- Hold the tie rod section of the tie rod with the vehicle kept stationary, and move it back-and-forth, up-and-down and right-and-left to check for play at the ball joints of the tie rod end.

NOTE

- **Be sure to check for play at ball joints of both right and left sides of the tie rod.**

- If there is any play, replace the tie rod end of the tie rod.

4.2 Dust cover

- Check that there is no wear, cracking or damage. Any such abnormalities can cause water to enter the ball joint, resulting in premature wear.
- If wear, cracking, or damage is present, inspect for traces of water entry and rust in the ball joint. If any abnormality is found, replace the tie rod end. If no abnormality is found, replace the dust cover and reapply grease.

5. Inspection of Wheel Bearing for Play

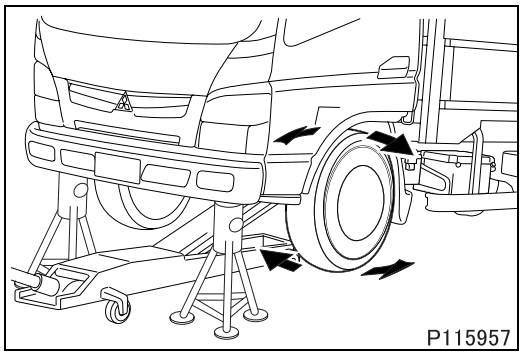

- Jack up the vehicle.
- Try to move the top and bottom of the front tire by hand in the illustrated directions to inspect the wheel bearing for play.
- If play is found with the feel of hands, repeat the inspection procedure while having the brake pedal depressed by another person. When the play is eliminated by applying the brake pedal, the symptom indicates that there is play in the wheel bearing. Then inspect the turning torque of the wheel bearing and adjust it as required. (See “WHEEL HUB AND ROTOR”.)
- If the turning torque of the wheel bearing cannot be adjusted correctly or play still remains after the adjustment, replace the wheel bearing with a new one. (See “WHEEL HUB AND ROTOR”.)

6. Inspection of Knuckle Joint for Play

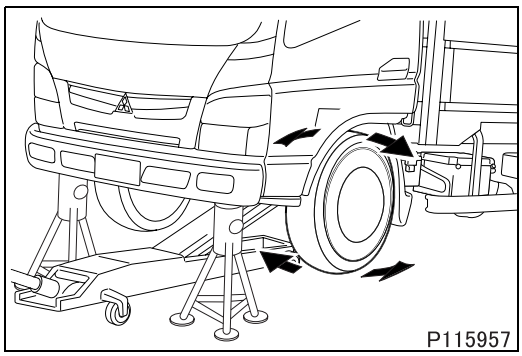

- Jack up the vehicle.
- Try to move the top and bottom of the front tire by hand in the illustrated directions to inspect the knuckle joint for play.
- If play is found with the feel of hands, repeat the inspection procedure while having the brake pedal depressed by another person. If there is any play, it may be caused by play in the knuckle joint. Check each part and replace a defective part. (See “KNUCKLE AND KING PIN, FRONT AXLE”.)

https://truckmanualshub.com/

WHEEL HUB AND ROTOR

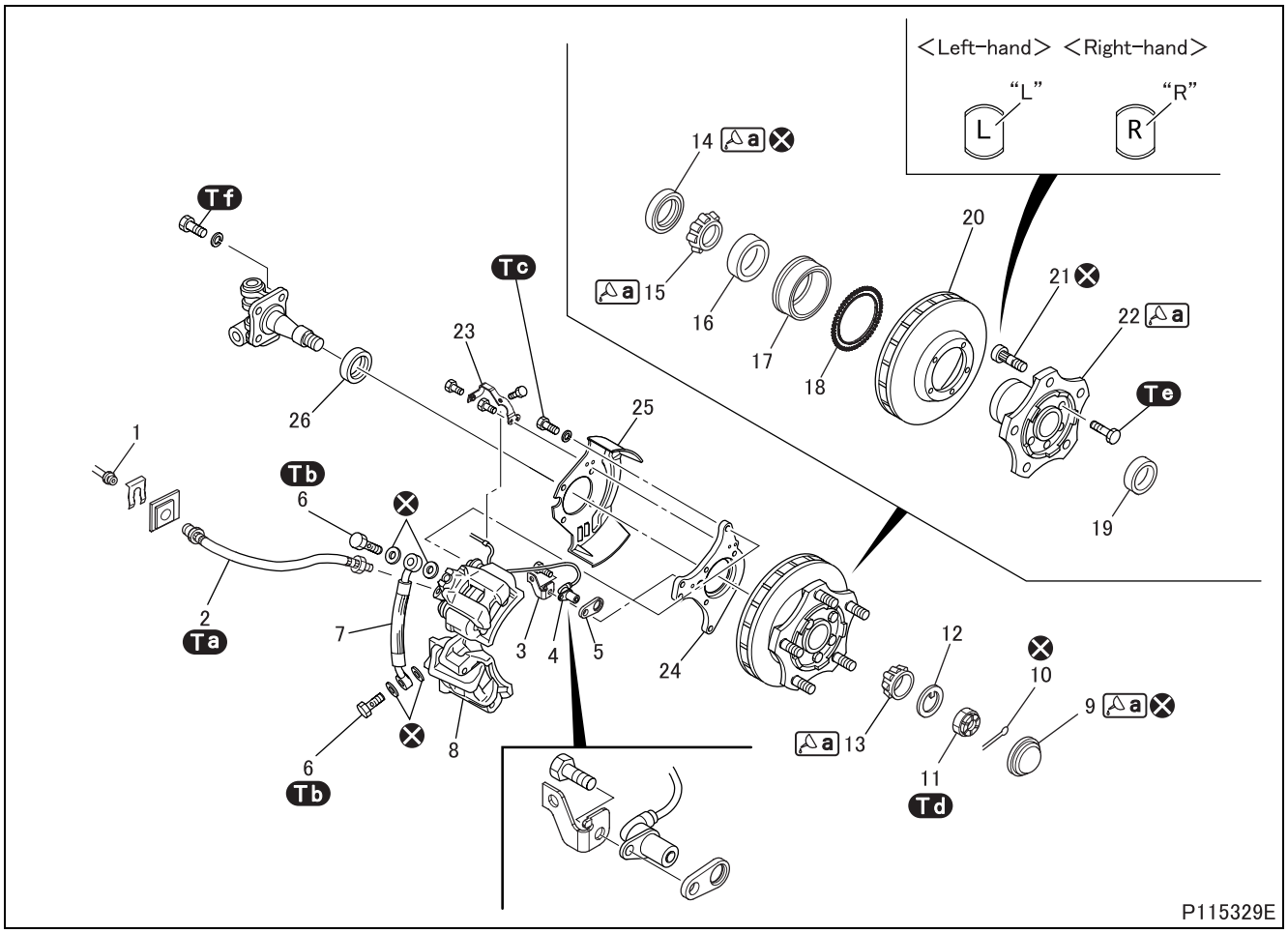

● **Disassembly sequence**

1 Brake pipe
2 Brake hose A
3 Sensor bracket
4 Wheel speed sensor
5 Spacer
6 Eyebolt
7 Brake hose B
8 Front disc brake (See Gr35A.)
9 Hubcap
10 Split pin
11 Lock nut
12 Lock washer
13 Outer bearing inner race
14 Oil seal
15 Inner bearing inner race
16 Inner bearing outer race
17 Anti-lock brake system rotor flange
18 Anti-lock brake system rotor
19 Outer bearing outer race
20 Disc rotor
21 Hub bolt
22 Wheel hub
23 Bracket
24 Adapter
25 Dust cover
26 Spacer

⊗: Non-reusable parts

CAUTION ⚠

- **Plug the brake hose to prevent entry of dust and dirt after it has been removed.**
- **When removing the wheel speed sensor, do not apply excessive force on the sensor, such as by hitting with a hammer, prying with a screwdriver or pulling the harness, since these actions can result in the open-circuit of the sensor.**
- **Be careful not to damage the tip of the wheel speed sensor after removing it.**

https://truckmanualshub.com/

● **Assembly sequence**

Follow the disassembly sequence in reverse.

CAUTION ⚠

- **Make sure that the disc rotor surface and disc brake pad surface are free from grease to avoid malfunction of the brakes.**
- **Make sure that dust does not enter the brake hose when installing the hose.**
- **Make sure that the brake hose is not twisted when installing it.**
- **Make sure that the brake hose does not interfere with any of surrounding parts when installed.**

- Inspect the drag torque of disc brakes after assembly. (See Gr35.)
- Bleed air from the brake system after assembly. (See Gr35.)

Service standards (Unit: mm {in.})

Location	Maintenance item	Standard value	Limit	Remedy
–	Starting torque of wheel hub bearing (tangential force at hub bolt position with oil seal assembled)	1 to 3.5 N·m {0.7 to 2.6 ft.lbs, 0.10 to 0.35 kgf·m} (tangential force: 8.8 to 28.4 N {2.0 to 6.4 lbs., 0.9 to 2.9 kgf})	–	Adjust or replace

Tightening torque (Unit: N·m {ft.lbs, kgf·m})

Mark	Parts to be tightened		Tightening torque	Remarks
Ta	Brake hose		13 to 17 {9.6 to 13, 1.3 to 1.7}	–
Tb	Eyebolt		22 ± 2 {16 ± 1.5, 2.25 ± 0.25}	–
Tc	Bolt (front disc brake mounting)		152 ± 25 {112 ± 18, 15.5 ± 2.5}	–
Td	Lock nut	Primary tightening	113 ± 15 {83 ± 11, 11.5 ± 1.5}	–
		Secondary tightening after primary tightening	59 {44, 6}	Back-off angle 45° (1/8 of a turn)
Te	Bolt (wheel hub and disc rotor mounting)		85.8 ± 12 {63 ± 8.9, 8.75 ± 1.25}	–
Tf	Bolt (adapter mounting)		118 ± 20 {87 ± 1.5, 12 ± 2}	–

Lubricant and/or sealant

Mark	Points of application		Specified lubricant and/or sealant	Quantity
a	Pack outside of wheel hub	5 studs	Wheel bearing grease [NLGI No. 2 (Li soap)]	※65 ± 10 g {2.29 ± 0.35 oz}
		6 studs		※90 ± 10 g {3.17 ± 0.35 oz}
	Pack inside of wheel hub	5 studs		※210 ± 20 g {7.41 ± 0.71 oz}
		6 studs		※155 ± 10 g {5.47 ± 0.35 oz}
	Pack space between rollers of outer bearing inner race and inner bearing inner race			As required
	Lip area of oil seal			

※: For a wheel hub

https://truckmanualshub.com/

Special tools (Unit: mm {in.})

<table>
<tr><th>Mark</th><th>Tool name and shape</th><th>Part No.</th><th>Application</th></tr>
<tr><td>a</td><td>Hubcap wrench
<table><tr><th>A</th><th>B</th></tr><tr><td>0.5
{0.020}</td><td>78°</td></tr></table> 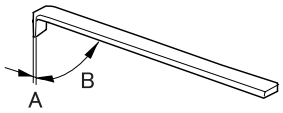
P49261</td><td>MB999108</td><td>Removal of hubcap</td></tr>
<tr><td>b</td><td>Oil seal installer
<table><tr><th>A</th><th>B</th></tr><tr><td>ϕ84
{3.31}</td><td>ϕ70
{2.76}</td></tr></table> 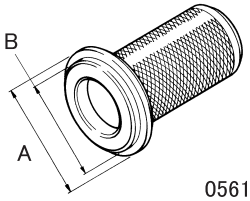
05619</td><td>MB999097</td><td rowspan="2">Installation of oil seal (to be used in combination)</td></tr>
<tr><td>c</td><td>Bearing installer
<table><tr><th>A</th><th>B</th><th>C</th></tr><tr><td>ϕ94.5
{3.72}</td><td>ϕ92.5
{3.64}</td><td>ϕ60
{2.36}</td></tr></table> 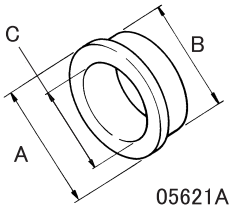
05621A</td><td>MB999069</td></tr>
<tr><td>d</td><td>Bearing installer
<table><tr><th>A</th><th>B</th></tr><tr><td>ϕ70
{2.76}</td><td>ϕ57
{2.24}</td></tr></table> 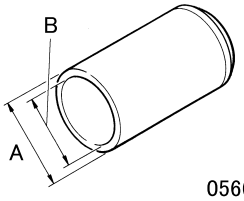
05668</td><td>MB999100</td><td rowspan="2">Installation of inner bearing outer race and outer bearing outer race (to be used in combination)</td></tr>
<tr><td>e</td><td>Bearing installer
<table><tr><th>A</th><th>B</th><th>C</th></tr><tr><td>ϕ88.5
{3.48}</td><td>ϕ71
{2.80}</td><td>ϕ51
{2.01}</td></tr></table> 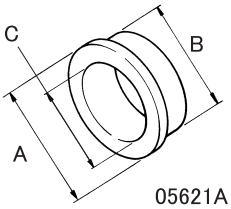
05621A</td><td>MB999099</td></tr>
</table>

https://truckmanualshub.com/

◆Removal procedure◆

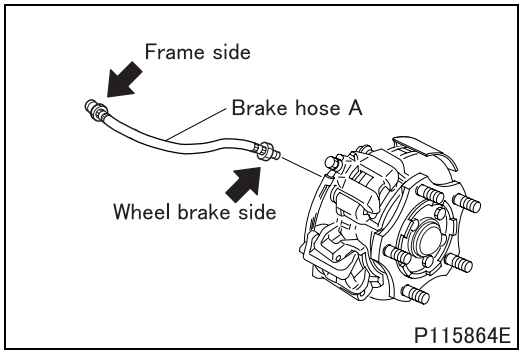

■ Removal: Brake hose

- When removing brake hose A, remove it from the frame side first, and then from the wheel brake side.

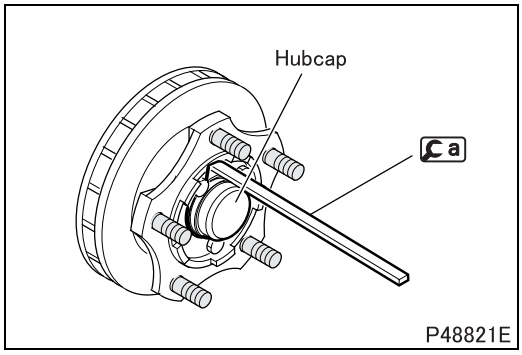

■ Removal: Hubcap

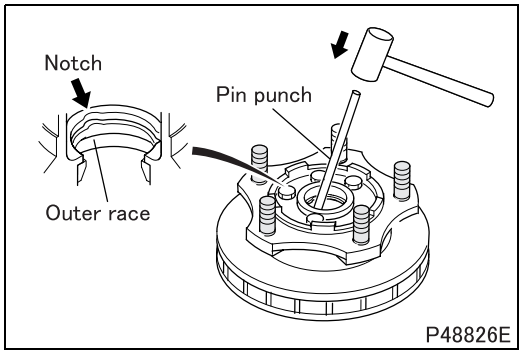

■ Removal: Inner bearing outer race

- Drive out the inner bearing outer race by tapping evenly at the three notches in the wheel hub.

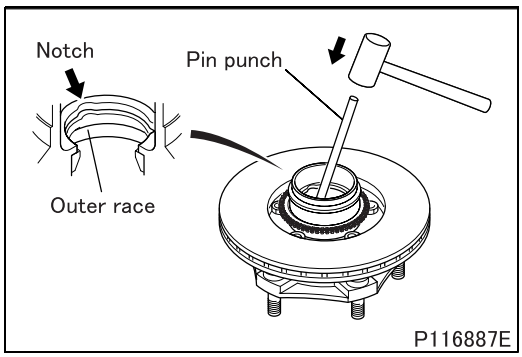

■ Removal: Outer bearing outer race

- Drive out the outer bearing outer race by tapping evenly at the three notches in the wheel hub.

https://truckmanualshub.com/

◆Inspection procedure◆

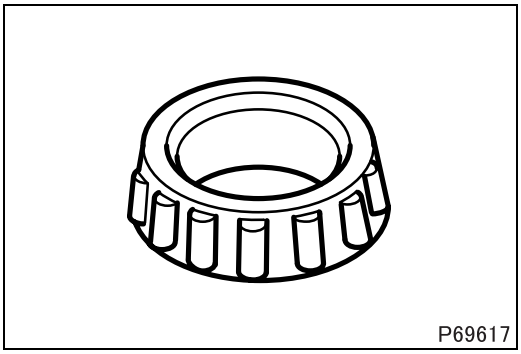
P69617

■ Inspection: Outer bearing inner race

- Inspect the outer bearing inner race after cleaning the bearing to remove grease completely.
- If any damage, wear, or a poor rotating conditions are evident in the inner race, replace it with a new one.
- The inner race and outer race should be replaced as a set.

■ Inspection: Inner bearing inner race

- Inspect the inner bearing inner race in the same manner as the outer bearing inner race.
  (See **"■ Inspection: Outer bearing inner race".**)

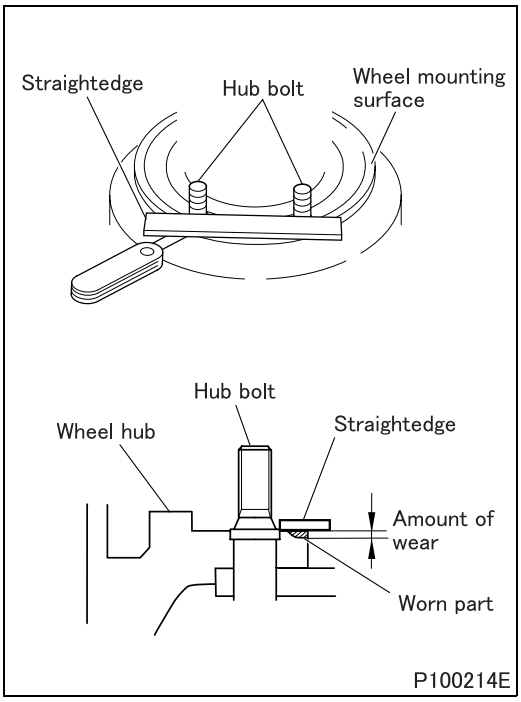

P100214E

■ Inspection: Wheel hub

(1) Visual inspection

- Visually and physically inspect the disc wheel mounting surface. If there is damage or cracking on it, replace the wheel hub.
- Make sure that there is no rust, dust, paint or foreign material on the disc wheel mounting surface of the wheel hub to prevent the wheel nut from becoming loose.
- If any abnormality is found, remove it with sandpaper.

(2) Wear in disc wheel mounting part of wheel hub

- Clean the wheel mounting surface of the wheel hub before inspection.
- Place a straightedge against two hub bolts on the disc wheel mounting surface.

CAUTION ⚠

- **Make sure that the straightedge does not run onto the hub bolt.**

- Use feeler gauges to measure the amount of wear at the outer periphery of the wheel hub.
  Measure the amount of wear at every hub bolt.
- If the amount of wear at any point exceeds the following standard value, inspect the wheel hub for cracks.
  Wear standard value: 0.8 mm {0.0031 in.}

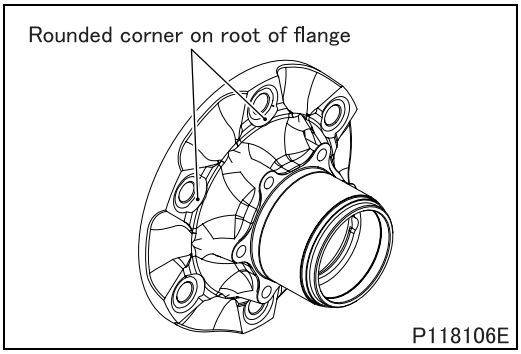

P118106E

(3) Crack check

- Inspect for any cracks in the rounded corner on the root of the flange using magnetic particle or liquid penetrant testing. If any cracks are found, replace the wheel hub.
- If any cracks are found in a wheel hub bolt, replace it.
- If there is cracking or stepped wear on the wheel hub mounting surface of the wheel disc, replace it. (See Gr31.)

https://truckmanualshub.com/

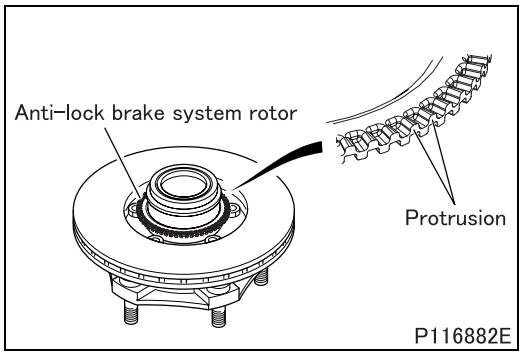

■ **Inspection: Anti-lock brake system rotor**

[Inspection]

- Check the protrusions of the anti-lock brake system rotor for chipping and flattening.
- If any abnormality is found, replace the anti-lock brake system rotor.

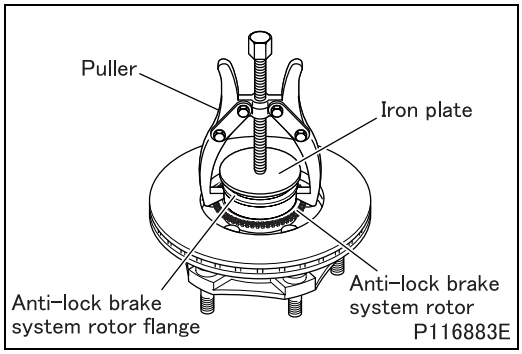

[Removal]

- Hook the puller on the ABS rotor flange and remove the flange and the ABS rotor.
- Remove the ABS rotor from the ABS rotor flange.

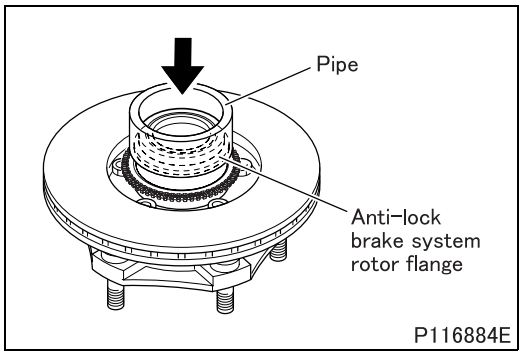

[Installation]

- Install the ABS rotor on the ABS rotor flange.
- Warm the anti-lock brake system rotor flange to approximately 150°C {302°F}.
- Install the anti-lock brake system rotor flange and wheel hub evenly using a pipe so as not to allow them to tilt.

WARNING ⚠

- **Handling the warmed rotor with bare hands may cause burns.**

https://truckmanualshub.com/

◆Installation procedure◆

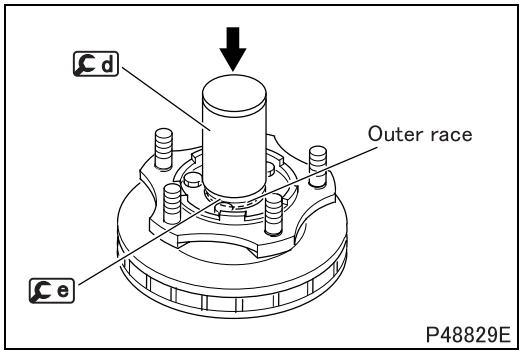

■ Installation: Outer bearing outer race

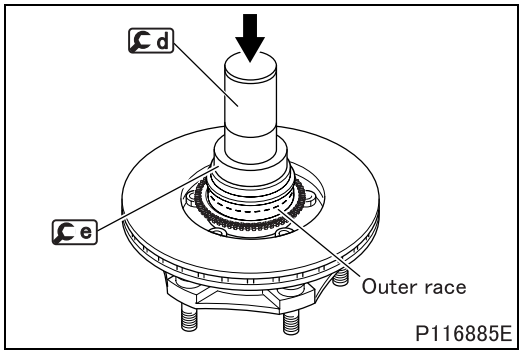

■ Installation: Inner bearing outer race

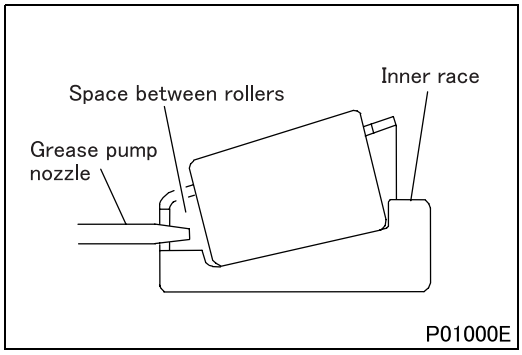

■ Installation: Packing grease in inner bearing inner race

- Insert the grease pump nozzle into the space between the rollers of the inner bearing inner race to pack grease sufficiently.

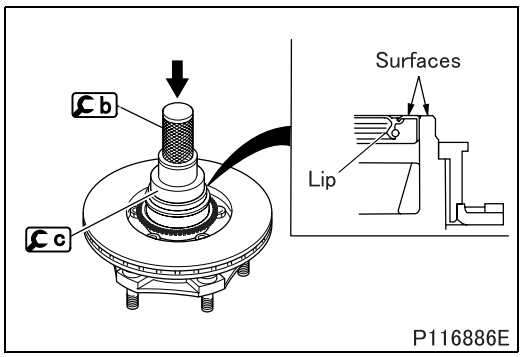

■ Installation: Oil seal

- Apply grease to the lip area of the oil seal and install it on the wheel hub as illustrated.

■ Installation: Packing grease in outer bearing inner race

- Follow the same procedure as packing the inner bearing inner race with grease.
  (See **"■ Installation: Packing grease in inner bearing inner race".**)

https://truckmanualshub.com/

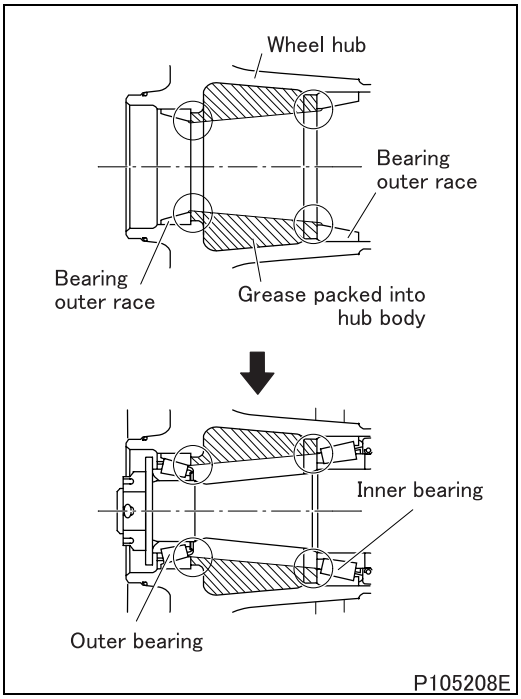

■ **Installation: Packing grease inside of wheel hub**

CAUTION ⚠

- **The wheel bearing may seize if these instructions are not followed.**
- **Apply the specified amount of grease.**

- As shown in the illustration at the left, fill grease inside of the hub body in such a manner that grease covers the outer bearing and inner bearing outer races. Make sure that grease reaches the outer bearing and inner bearing.

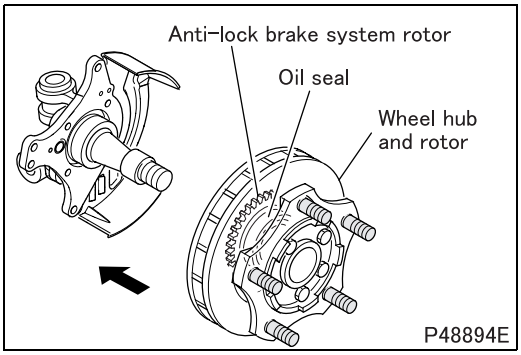

■ **Installation: Wheel hub and rotor**

- Slowly install the wheel hub and rotor assembly so as not to cause damage to the oil seal and anti-lock brake system rotor.

CAUTION ⚠

- **If the anti-lock brake system rotor is damaged, wheel speed sensor signals become abnormal, causing the anti-lock brake system to malfunction.**

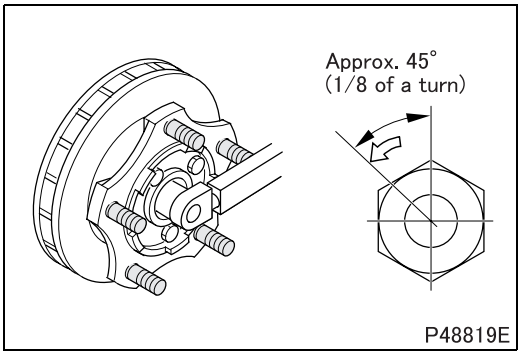

■ **Adjustment: Starting torque of wheel hub bearing**

CAUTION ⚠

- **Unless this adjustment procedure is performed, the wheel bearing may seize.**

[Adjustment]

- Tighten the lock nut to the specified torque (primary tightening) while turning the wheel hub and rotor, and then loosen it completely.
- Ensure smooth operation of the outer bearing and inner bearing by turning the wheel hub and rotor several times, and then tighten the lock nut to the specified torque (secondary tightening).
- Loosen the lock nut by approximately 45 degrees (1/8 of a turn) and secure it with a split pin. If pin holes do not align, align them while loosening. Make sure that there is no play in the axial direction.

https://truckmanualshub.com/

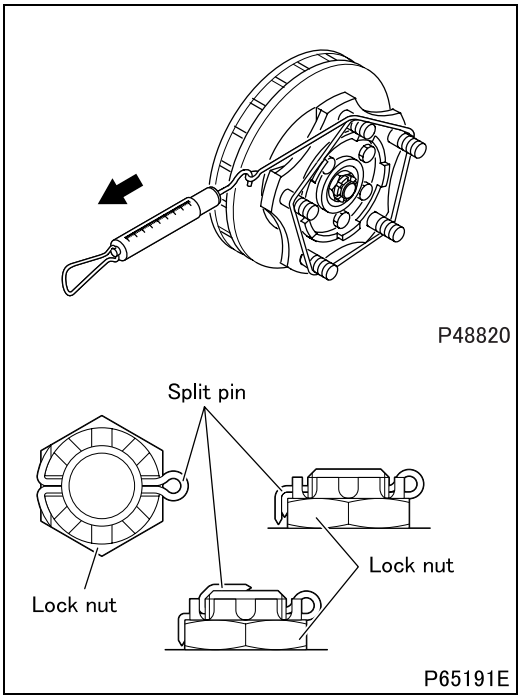

[Inspection]

- After installing the lock nut, perform the following inspection.
- Measure the tangential force at the hub bolt position using a spring gauge.
- If the tangential force is within the specified value, the starting torque conforms to the standard value. When the measured value is the specified value, install the split pin following either of method in the illustration.
- If the measured value deviates from the specified value, repeat the adjustment of the lock nut as it may be insufficient.
- If the result is found to be abnormal, replace the outer and inner bearings.

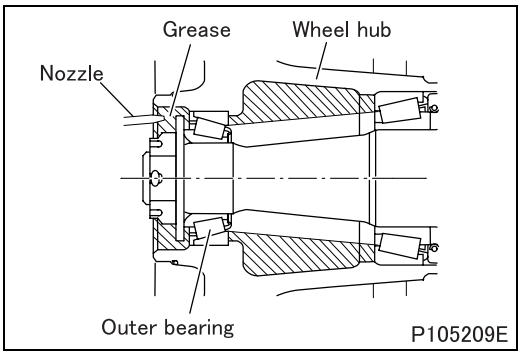

■ Installation: Packing grease outside of wheel hub

- After installing the lock nut, insert the grease pump nozzle into the outside of the wheel hub and fill specified amount of grease, making a grease barrier on the outside of the outer bearing.

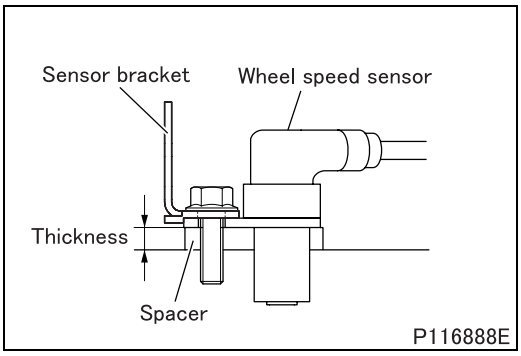

■ Installation: Spacer, sensor bracket, wheel speed sensor

- Install a spacer, sensor bracket and wheel speed sensor in the position shown in the illustration.
  Thickness of spacer: 4.5 mm {0.18 in.}

CAUTION ⚠

- **When installing the wheel speed sensor, never apply a force to it such as tapping it with a hammer, prying it with a screwdriver and pulling the harness, as doing so may damage the wiring.**
- **Be sure to install the specified spacer in the correct place. Using a spacer of an incorrect thickness or installing the spacer in an incorrect place could cause the ABS to malfunction.**
- **Be careful not to damage the O-ring of the wheel speed sensor when installing the sensor.**

https://truckmanualshub.com/

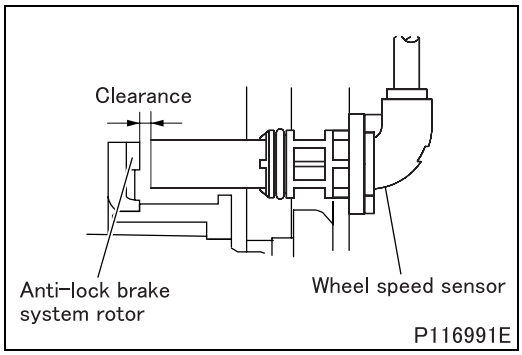

- After installing the wheel speed sensor, check that the clearance between the end of the sensor and ABS rotor is the following dimension.
  Clearance: 1 ± 0.7 mm {0.039 ± 0.028 in.}

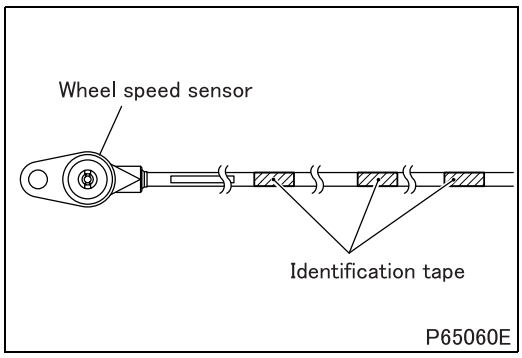

- Using clips, secure the wheel speed sensor harness in place at the identification tape portions, ensuring that the harness is free of kinks, slack and/or interference with other parts.

https://truckmanualshub.com/

KNUCKLE AND KINGPIN, FRONT AXLE

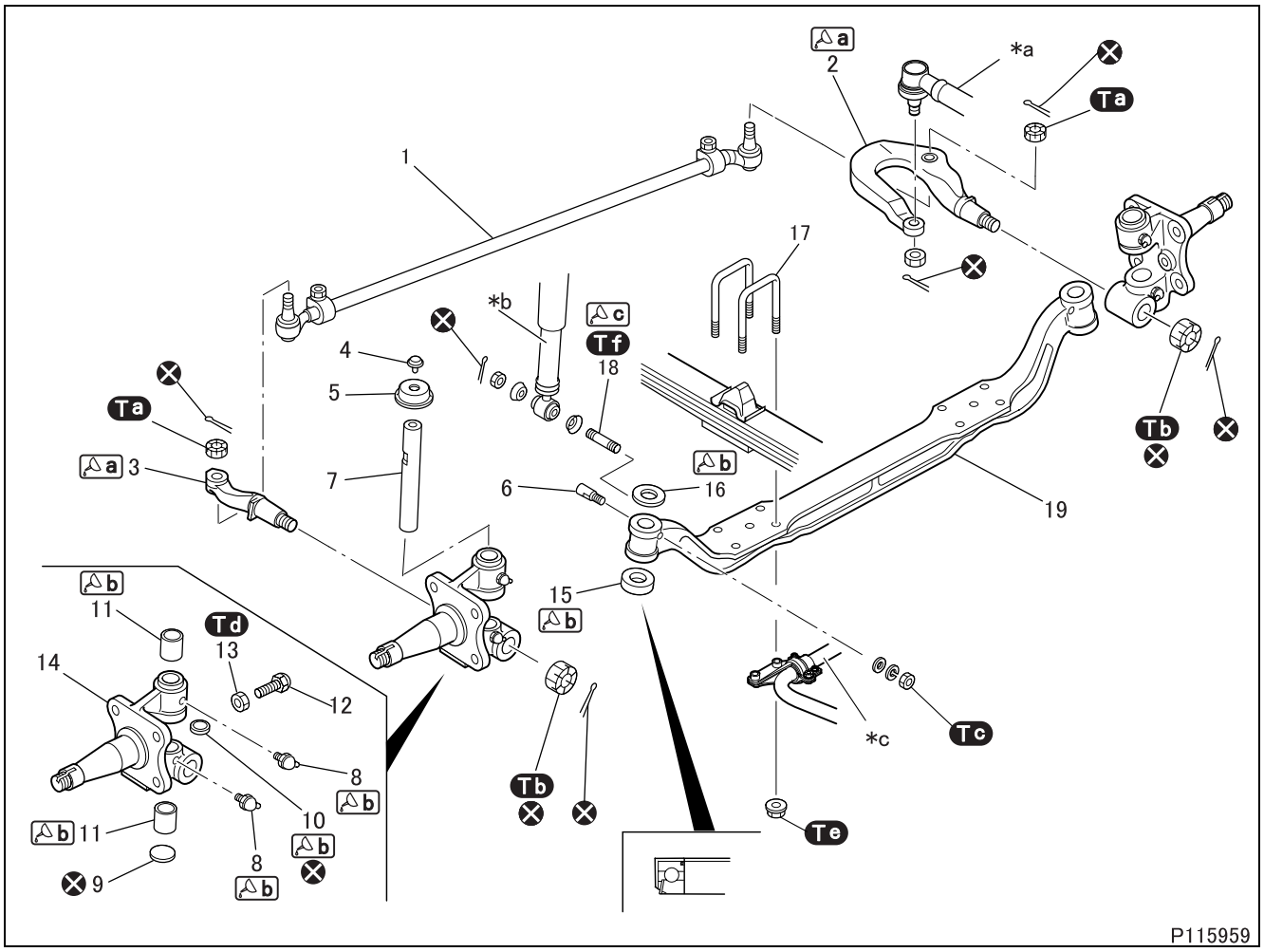

● **Disassembly sequence**

1 Tie rod (See later section.)
2 Knuckle arm
3 Tie rod arm
4 Dust plug
5 Dust cap
6 Lock pin
7 Kingpin
8 Grease nipple
9 Plug
10 Dust seal
11 Bushing
12 Knuckle stopper bolt
13 Lock nut
14 Knuckle
15 Thrust bearing
16 Kingpin shim
17 U-bolt
18 Stud bolt
19 Front axle

***a**: Drag link
***b**: Shock absorber
***c**: Stabilizer
⊗: Non-reusable parts

CAUTION ⚠

- **When removing the tie rod, take care not to deform or damage the dust cover.**

● **Assembly sequence**

Follow the disassembly sequence in reverse.

Repair kit: Kingpin kit

https://truckmanualshub.com/

Service standards (Unit: mm {in.})

Location	Maintenance item		Standard value	Limit	Remedy
7	Outer diameter of kingpin		27.947 to 27.980 {1.100 to 1.102}	27.9 {1.098}	Replace
7, 11	Clearance between kingpin and bushing		0.020 to 0.086 {0.00079 to 0.0034}	0.15 {0.0059}	Replace
7, 19	Clearance between kingpin and front axle		0.020 to 0.074 {0.00079 to 0.0029}	0.1 {0.0039}	Replace
11	Inner diameter of bushing (after having been pressed into knuckle)		28.000 to 28.033 {1.102 to 1.103}	–	Replace
14, 19	Vertical clearance between knuckle and front axle		0.02 to 0.10 {0.00079 to 0.0039}	0.20 {0.0079}	Adjust
19	Front axle	Horizontal bend	–	2 {0.079}	Replace
		Vertical bend	–	2 {0.079}	
		Kingpin inclination angle	8° 45’ ± 30’	–	

Tightening torque (Unit: N·m {ft.lbs, kgf·m})

Mark	Parts to be tightened		Tightening torque	Remarks
Ta	Nut (tie rod mounting)		93 ± 25 {69 ± 18, 9.5 ± 2.5}	–
Tb	Nut (knuckle arm mounting)		345 ± 49 {254 ± 36, 35 ± 5}	–
	Nut (tie rod arm mounting)			
Tc	Nut (lock pin mounting)		33 ± 5 {25 ± 3.6, 3.4 ± 0.5}	–
Td	Lock nut (knuckle stopper bolt tightening)		46.5 ± 7 {34 ± 5.4, 4.75 ± 0.75}	–
Te	Nut (U-bolt mounting)		162 ± 15 {120 ± 11, 16.5 ± 1.5}	–
Tf	Stud bolt	Stud	88 {65, 9} or more	–
		Nut (return)	137 {101, 14} or more	–

Lubricant and/or sealant

Mark	Points of application	Specified lubricant and/or sealant	Quantity
a	Knuckle arm and tie rod arm threads	Wheel bearing grease [NLGI No. 2 (Li soap)]	As required when parts are reused
b	Lip area of dust seal	Chassis grease [NLGI No. 1 (Li soap)]	As required
	Inside surface of bushing		
	Top face of thrust bearing		
	Both sides of kingpin shim		
	Fill from grease nipple		Until grease starts overflowing from dust plug
c	Stud threads of stud bolt	Loctite 271	As required

https://truckmanualshub.com/

KNUCKLE AND KINGPIN, FRONT AXLE

Special tools (Unit: mm {in.})

Mark	Tool name and shape	Part No.	Application
a	Kingpin puller A: Pipe B: Bolt C: Cap D: Nut 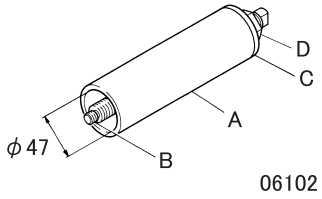 06102	MB999013 A: MB999014 B: MB999015 C: MB999016 D: MB999017	Removal of kingpin
b	Bushing installer A: Bushing installer A B: Bushing installer B 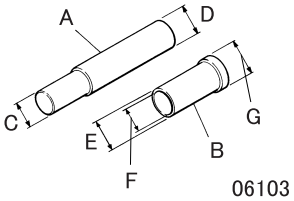 06103 C: ϕ25 {0.98} D: ϕ30 {1.18} E: ϕ28 {1.10} F: ϕ25 {0.98} G: ϕ32.8 {1.29}	MB999066 A: MB999067 B: MB999068	Removal and installation of kingpin bushing

◆Removal procedure◆

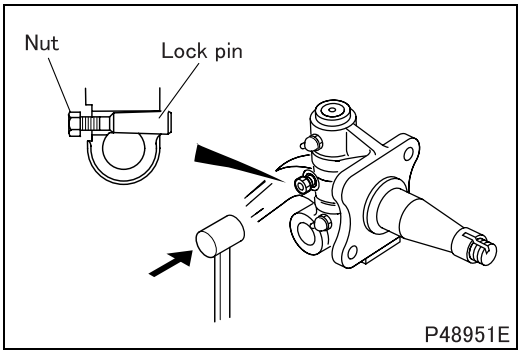

P48951E

■ **Removal: Lock pin**

- Remove the nut, spring washer and washer.
- Screw in the nut again until just before it is flush with the lock pin, and lightly tap the nut to loosen the lock pin.

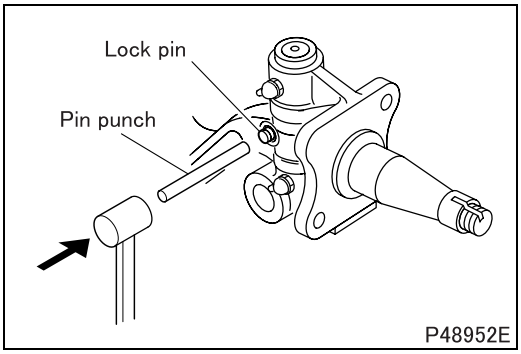

P48952E

- Remove the nut, apply a pin punch to the lock pin and lightly tap it to remove.

https://truckmanualshub.com/

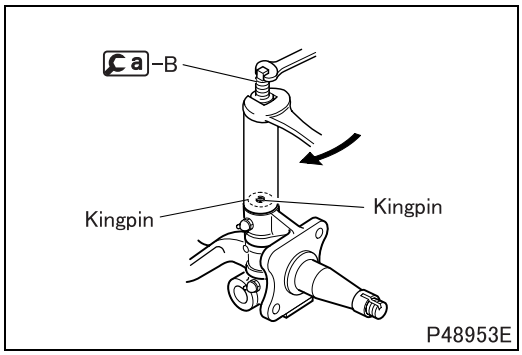

■ **Removal: Kingpin**

- Screw a -B into the kingpin threads to remove the kingpin.

◆Inspection procedure◆

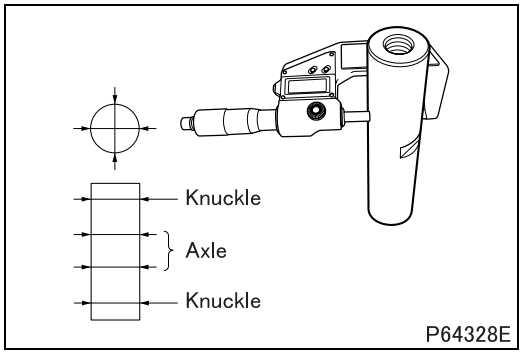

■ **Inspection: Outer diameter of kingpin**

- Take measurement at a total of four levels on the kingpin: two levels for the axle fitting portion and one level each for the upper and lower knuckle fitting portions.
- If the measured value is under the limit, replace the kingpin with a new one.

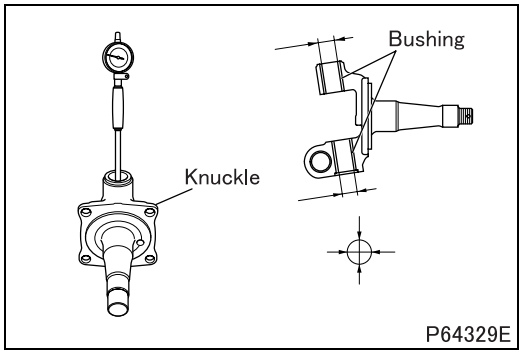

■ **Inspection: Clearance between kingpin and bushing**

- Measure the inner diameter of the upper and lower bushings using a cylinder gauge and calculate the clearance by subtracting the outer diameter of the kingpin from the inner diameter of the bushing.
  If the clearance exceeds the limit, replace the bushings with new ones.

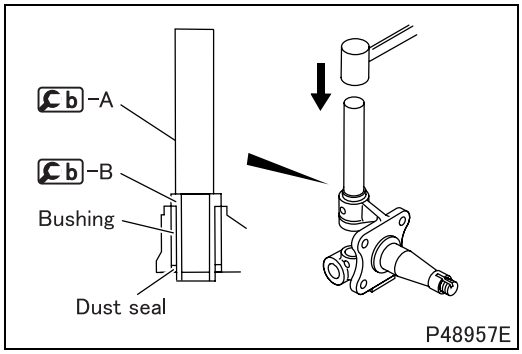

Replacement of bushing
[Removal]

- Remove the bushing and the dust seal at the same time using b.

https://truckmanualshub.com/

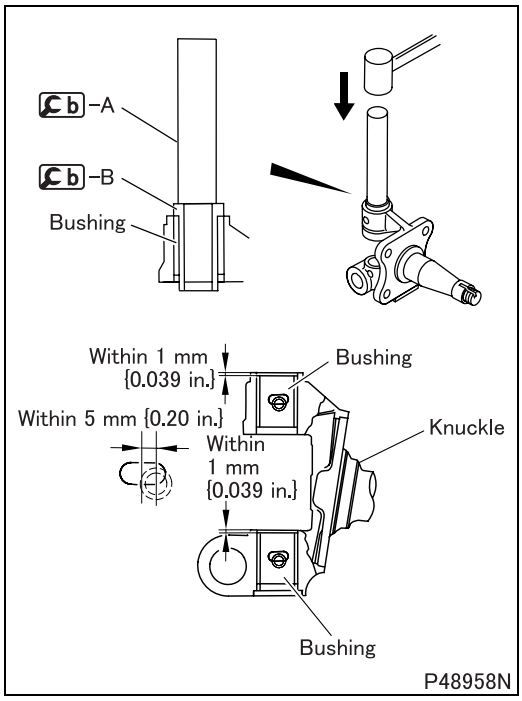

[Installation]

- Install the bushing using Cb so that a step height between the bushing and knuckle is within 1 mm {0.039 in.}.
- The oil hole of the bushing must not deviate from the screw hole of the knuckle more than 5 mm {0.20 in.}.

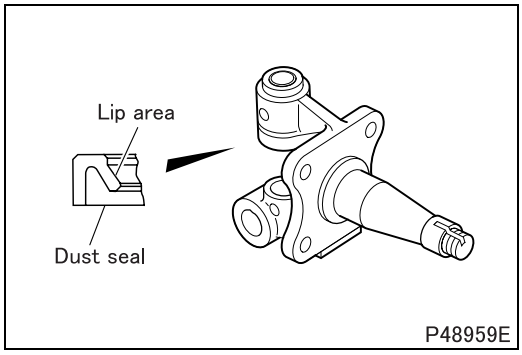

- Apply grease to the lip area of the dust seal and install it on the knuckle in the illustrated direction.

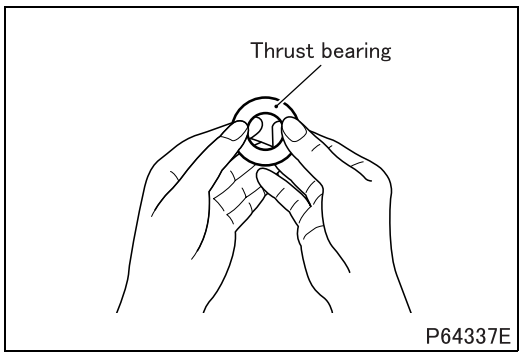

■ Inspection: Thrust bearing

- Inspect the condition and turning of the thrust bearing. If any cracks, damage, or rough turning is found, replace the thrust bearing with a new one.

https://truckmanualshub.com/

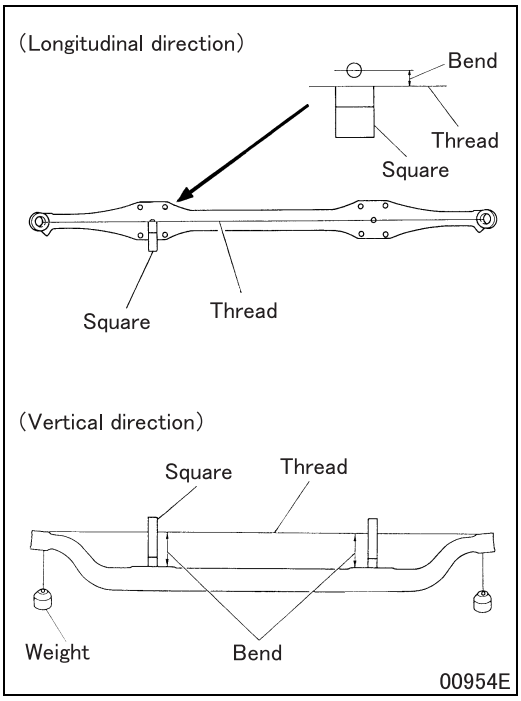

■ **Inspection: Front axle**

(1) Bend of front axle in the back-and-forth direction and vertical direction

- Put a piece of thread through kingpin holes of the front axle and hang weights at both ends.
- Use a square to find bend to each of back-and-forth and vertical directions.
- If the measured value exceeds the limit, replace the front axle.

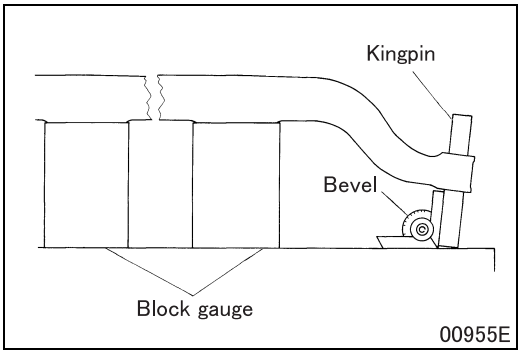

(2) Kingpin inclination angle

- Set the kingpin on the front axle as illustrated to measure the angle.
- If the measured value deviates from the standard value, replace the front axle.

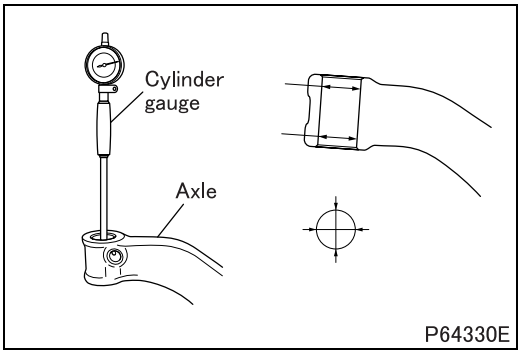

(3) Clearance between kingpin and front axle

- Measure the inner diameter of the axle's hole where the kingpin is inserted using a cylinder gauge and calculate the clearance by subtracting the outer diameter of the kingpin from the inner diameter.
  If the clearance exceeds the limit, replace the axle or the kingpin with a new one.

https://truckmanualshub.com/

KNUCKLE AND KINGPIN, FRONT AXLE

◆Installation procedure◆

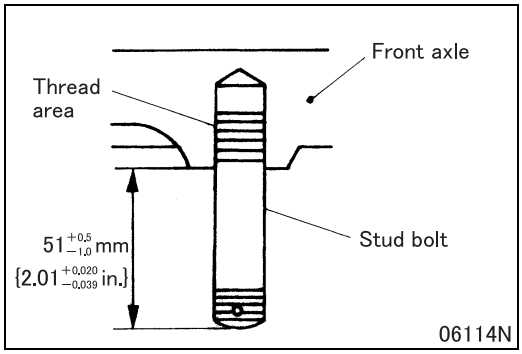

■ **Installation: Stud bolt**

- Apply Loctite to the front axle mounting threads of the stud bolt.
- Install the stud bolt according to the dimension specified in the illustration.

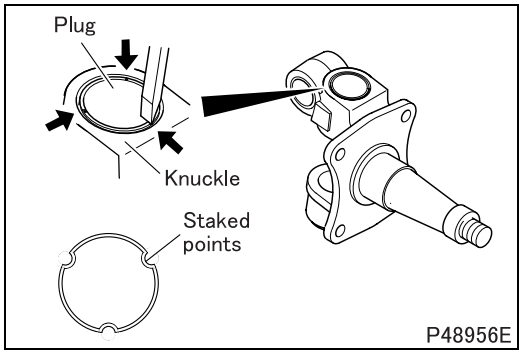

■ **Installation: Plug**

- After installing the plug, stake the knuckle at three evenly spaced points of the plug circumference avoiding previously staked points.

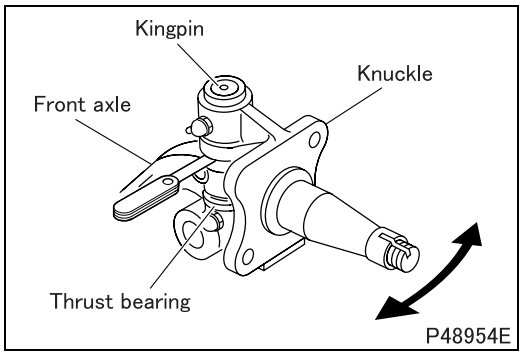

■ **Installation: Knuckle**

- After temporarily assembling the thrust bearing, knuckle and kingpin into the front axle, move the knuckle several times to smooth its operation.
- Measure clearance between the front axle top face and the knuckle bottom.

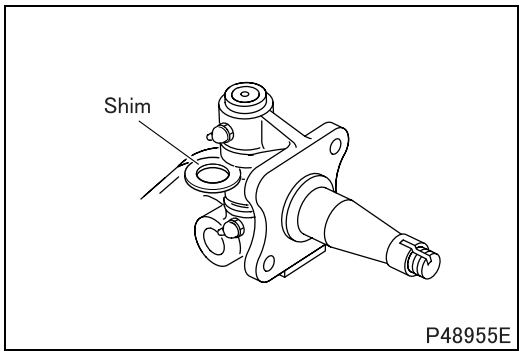

- If the measured value exceeds the limit, adjust with a kingpin shim.
  Thickness of kingpin shims available
  0.15, 0.40, 0.50, 0.60, 0.70 mm
  {0.0059, 0.016, 0.020, 0.023, 0.028 in.} (five thickness)

CAUTION ⚠

- **Select a kingpin shim so that the clearance is as small as possible within the range of the standard value.**
- **After assembly, make sure that the knuckle moves smoothly.**

https://truckmanualshub.com/

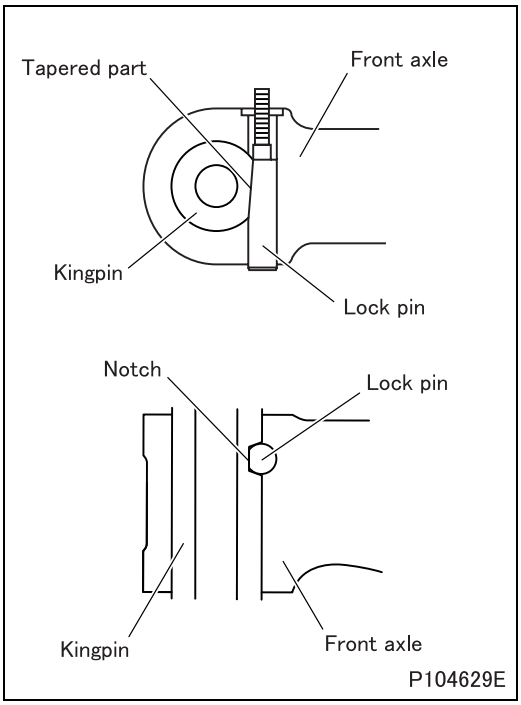

■ **Installation: Lock pin**

- Install the lock pin so that the tapered part of the lock pin is aligned with the notch of the kingpin.

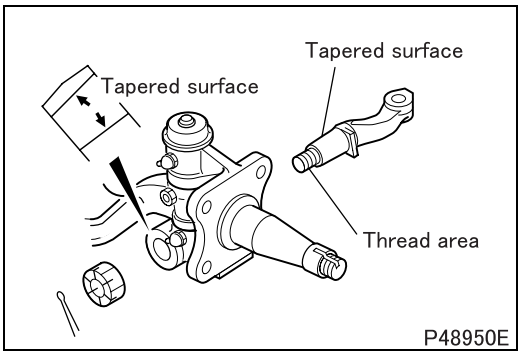

■ **Installation: Tie rod arm and knuckle**

(1) When the tie rod arm and knuckles are reassembled using existing parts

- Remove all rust and corrosion from the tapered surfaces of the tie rod arm and knuckle using 120-glit sandpaper or finer. (This does not apply to new replacement parts.)
- Clean the tapered surfaces and thread areas of the tie rod arm and knuckle.

NOTE

- **Use acetone, cleaning fluid for color check, or equivalent as solvent.**

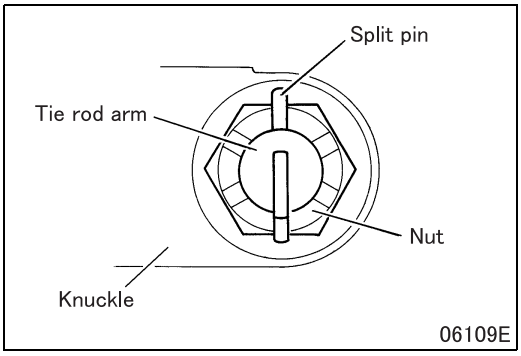

- Apply grease to the thread area of the tie rod arm and install it.

CAUTION ⚠

- **When installing the tie rod arm, make sure that the tapered surfaces of the tie rod arm and knuckle are free from grease.**

- Tighten the nut to the specified torque. Be sure to align the pin holes when tightening and insert the split pin as illustrated.

(2) When the tie rod arm and knuckles are assembled using new parts

- Clean the tapered surfaces and thread areas of the tie rod arm and knuckle.
- Tighten the nut to the specified torque. Be sure to align the pin holes when tightening and insert the split pin as illustrated.

https://truckmanualshub.com/

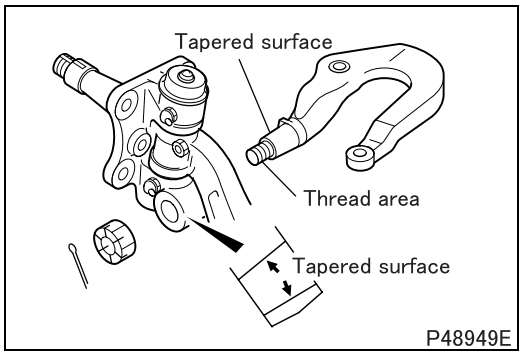

■ **Installation: Knuckle arm and knuckle**

(1) When the knuckle arms and knuckles are reassembled using existing parts

- Remove all rust and corrosion from the tapered surfaces of the knuckle arm and knuckle using 120-glit sandpaper or finer. (This does not apply to new replacement parts.)
- Clean the tapered surfaces and thread areas of the knuckle arm and knuckle.

NOTE

- **Use acetone, cleaning fluid for color check, or equivalent as solvent.**

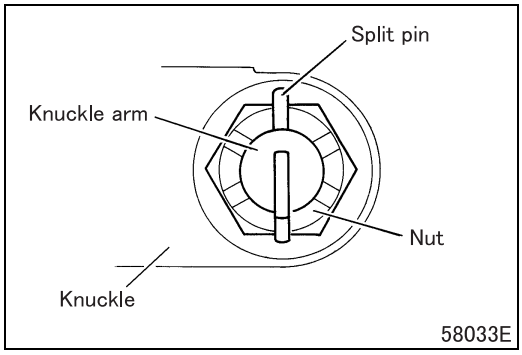

- Apply grease to the thread area of the knuckle arm and install it.

CAUTION ⚠

- **When installing the knuckle arm, make sure that the tapered surfaces of the knuckle arm and knuckle are free from grease.**

- Tighten the nut to the specified torque. Be sure to align the pin holes when tightening and insert the split pin as illustrated.

(2) When the knuckle arms and knuckles are assembled using new parts

- Clean the tapered surfaces and thread areas of the knuckle arm and knuckle.
- Tighten the nut to the specified torque. Be sure to align the pin holes when tightening and insert the split pin as illustrated.

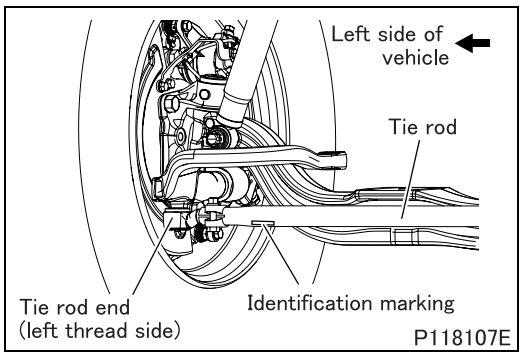

■ **Installation: Tie rod**

- Install the tie rod with its identification marking, which is applied to the left thread tie rod end side of the rod, toward the left side of the vehicle.
- Identification marking: Blue

https://truckmanualshub.com/

M E M O

https://truckmanualshub.com/

TIE ROD

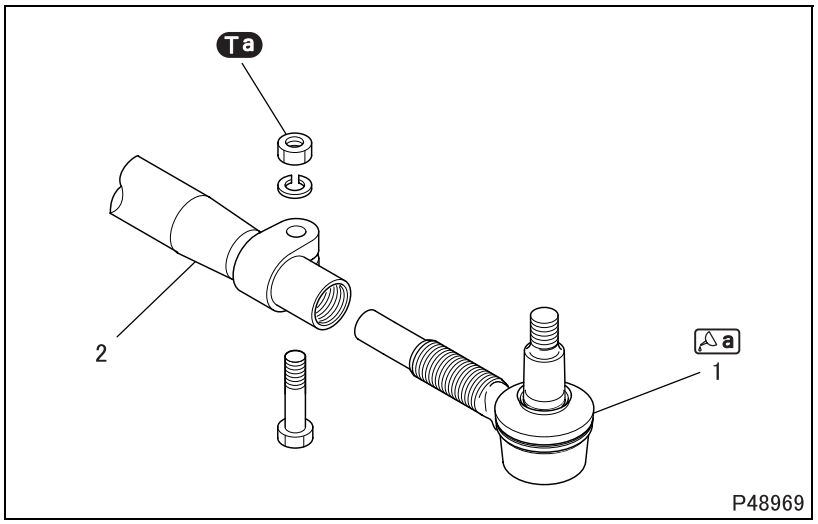

● **Disassembly sequence**

1 Tie rod end
2 Tie rod

CAUTION ⚠

- **If any abnormality such as tearing is found in the dust boot of the tie rod end, replace the tie rod end.**

NOTE

- **Do not disassemble the tie rod end, as it is of non-disassembly type.**

● **Assembly sequence**

Follow the disassembly sequence in reverse.

Service standards (Unit: mm {in.})

Location	Maintenance item		Standard value	Limit	Remedy
1	Ball joint of tie rod end	Play (± 980 N {± 220 lbs, ± 100 kgf} loaded)	0 to 0.15 {0 to 0.0059}	–	Replace
		Rotation torque	1.0 to 5.9 N·m {0.7 to 4.4 ft.lbs, 0.1 to 0.6 kgf·m}	–	
2	Bend of tie rod		–	1 {0.039}	Correct or replace

Tightening torque (Unit: N·m {ft.lbs, kgf·m})

Mark	Parts to be tightened	Tightening torque	Remarks
Ta	Nut (tie rod end tightening)	25 ± 5 {18 ± 3.7, 2.5 ± 0.5}	–

Lubricant and/or sealant

Mark	Points of application	Specified lubricant and/or sealant	Quantity
a	Lip area of dust cover of tie rod end	Wheel bearing grease [NLGI No. 2 (Li soap)]	As required

◆Inspection procedure◆

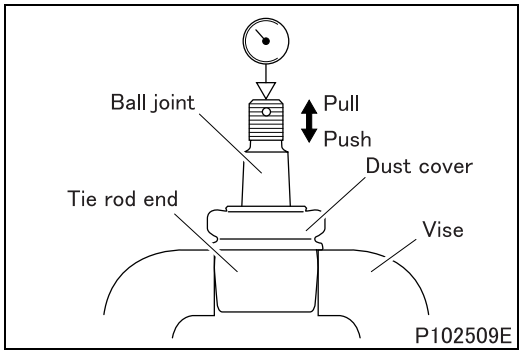

■ **Inspection: Tie rod end**

(1) Play

- Secure the tie rod end with a vise.

CAUTION ⚠

- **Take care not to deform or damage the dust cover when fixing it with a vise.**

- If the measured value deviates from the standard value when applying the specified load (push and pull) to the ball joint, replace the tie rod end.

https://truckmanualshub.com/

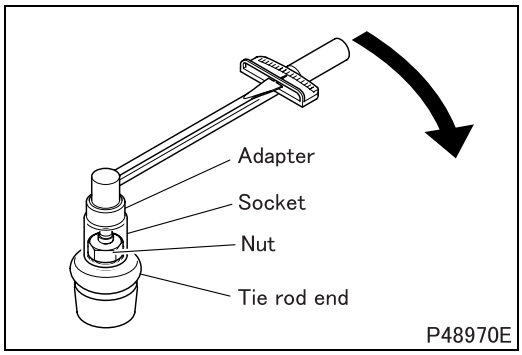

(2) Rotation torque

- Install the tie rod mounting nut on the tie rod end.
- Install the socket, adapter and torque wrench to measure the rotation torque.
- If the measured value deviates from the standard value, replace the tie rod end.

(3) Dust cover

- Check the dust cover for wear, cracks and other damage. These abnormalities may cause water infiltration to the ball joint and result in premature wear.
- If wear, crack, or damage is present, inspect traces of water entry and occurrence of rust in the ball joint. If any abnormality is found, replace the tie rod end. If no abnormality is found, replace the dust cover and reapply grease.

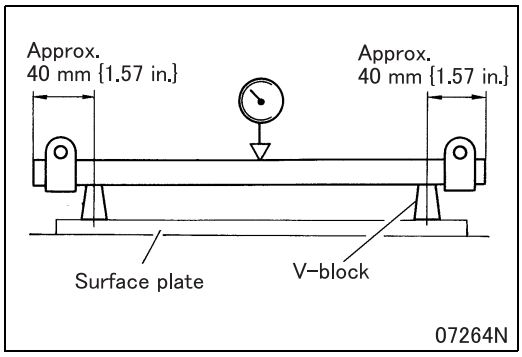

■ Inspection: Bend of tie rod

- Measure the bend of the tie rod at its center.

NOTE

- **Give the tie rod one complete turn and read the dial gauge at this time. The bend is one half of the reading.**

- If the measured value exceeds the limit, correct or replace the tie rod.

◆Installation procedure◆

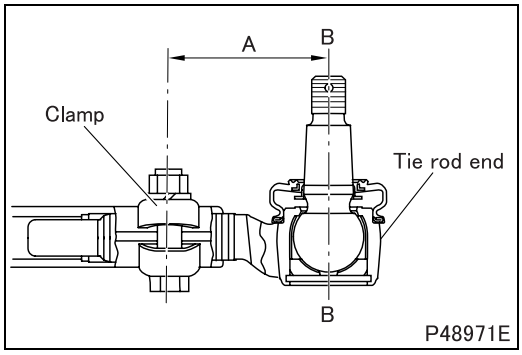

■ Installation: Tie rod end

- Screw in the tie rod end so that the difference of dimension A between the tie rod end and the clamp is within 1.5 mm {0.059 in.} between right and left.
  A: Approximately 74 mm {2.91 in.}

CAUTION ⚠

- **Ensure that the number of turns needed to install the right and left tie rod ends are within one turn of each other.**
- **Secure the tie rod ends so that the illustrated axis B-B on the right is parallel to that on the left.**

https://truckmanualshub.com/

FUSO

Group 26B

Front Axle <FG>

MITSUBISHI FUSO TRUCK OF AMERICA, Inc.

Pub.No.00ELT0001-26B

https://truckmanualshub.com/

INDEX

SPECIFICATIONS 26B-2

STRUCTURE AND OPERATION
1. **Wheel Hub and Brake Drum 26B-2**
2. **Free Wheel Hub 26B-3**
3. **Drive Shaft and Steering Knuckle, Axle Housing 26B-4**
4. **Reduction and Differential 26B-5**

TROUBLESHOOTING 26B-6

ON-VEHICLE INSPECTION AND ADJUSTMENT
1. **Inspection and Adjustment of Wheel Alignment 26B-10**
2. **Inspection and Adjustment of Steering Angle 26B-14**
3. **Inspection of Side Slip 26B-14**
4. **Inspection of Tie Rod End Ball Joint 26B-15**
5. **Inspection and Replacement of Differential Oil 26B-16**
6. **Inspection of Wheel Bearing for Play 26B-17**
7. **Inspection of Knuckle Joint for Play 26B-17**

WHEEL HUB AND BRAKE DRUM 26B-18

DRIVE SHAFT AND STEERING KNUCKLE 26B-32

TIE ROD 26B-38

AXLE HOUSING 26B-40

REDUCTION AND DIFFERENTIAL 26B-42

https://truckmanualshub.com/

SPECIFICATIONS / STRUCTURE AND OPERATION

SPECIFICATIONS

Item		Specifications
Front axle	Model	F200TW
	Type	Banjo type, full floating, with Birfield joint
Tread (dimension notified to the authorities) mm {in.}		1650 {65.0}
Reduction	Model	D1H modified
	Type	Single-reduction hypoid gear
	Gear ratio	5.285 5.714
Differential	Tooth shape	Straight bevel gear
Gear oil	Grade	Normal: Maximum air temperature during operation below 40°C {104°F} API GL-5 SAE 90 Hot area: Maximum air temperature during operation above 40°C {104°F} API GL-5 SAE 140
	Quantity L {qts.}	3.0 {3.2}
Mass kg {lb.}		Approx. 250 {550}

- Use gear oil with a SAE viscosity grade of 140 when a vehicle is used under heavily-loaded, severe conditions such as continuous driving on uphill grades. However, the air temperature must be above 10°C {50°F}.

STRUCTURE AND OPERATION

1. Wheel Hub and Brake Drum

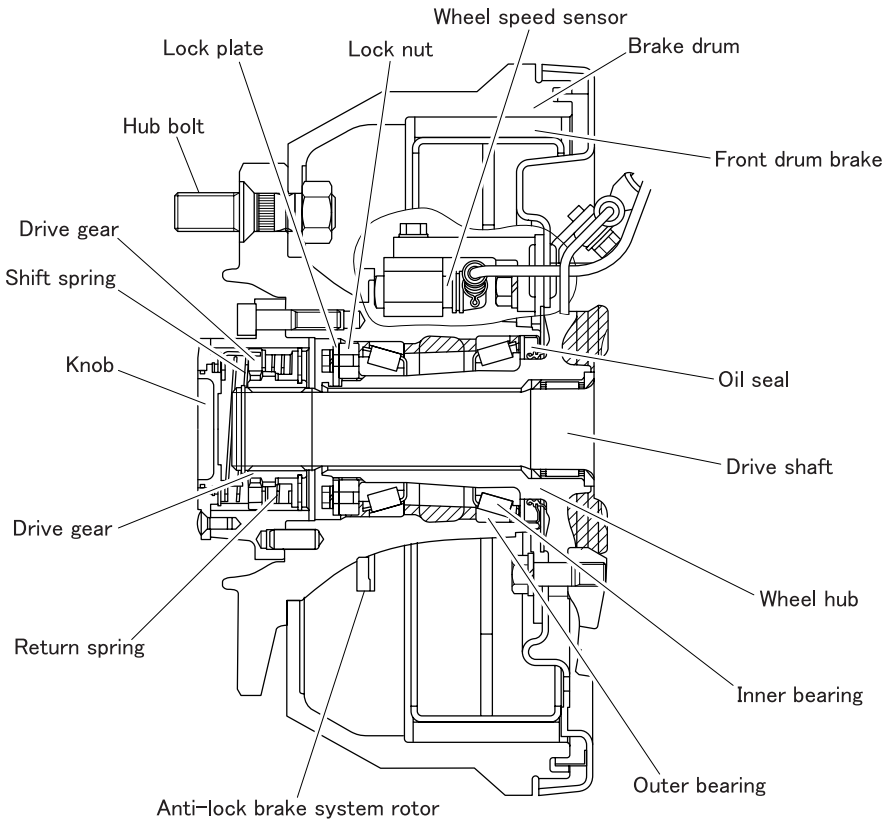

https://truckmanualshub.com/

2. Free Wheel Hub

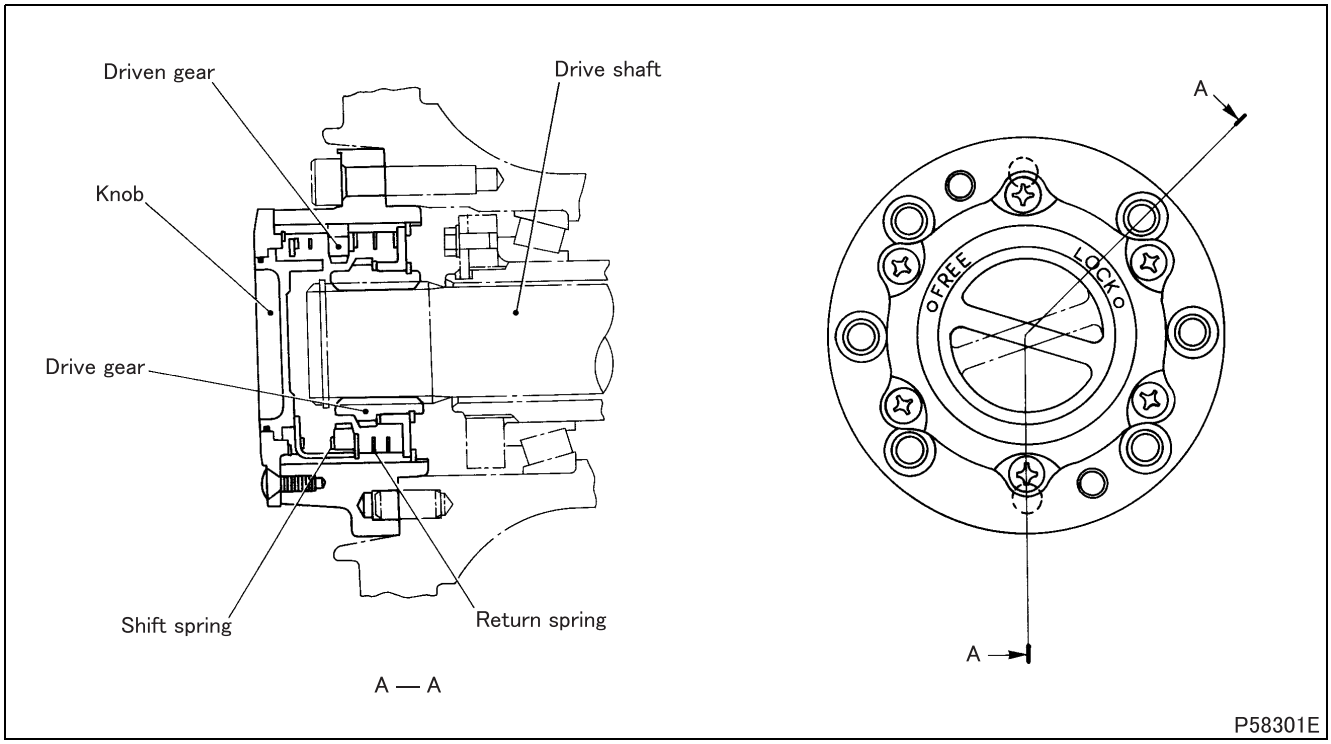

- In the case of a four-wheel drive vehicle, even when it is running in rear-wheel drive only, the drive shaft, differential, propeller shaft, and driving parts of the transfer front drive shaft continue to run due to transmission of rotation from the wheels. This subjects the vehicle drive to a load, and it causes loss of driving power.
  Now, with a free wheel hub, transmission of rotation from the front wheels to the drive shaft is cut, reducing driving loss when running in rear-wheel drive only. This improves fuel efficiency and reduces vibration and noise.
- With a free wheel hub, FREE (cutting of driving power) ↔ LOCK (transmission of driving power) is made easily by manual operation.

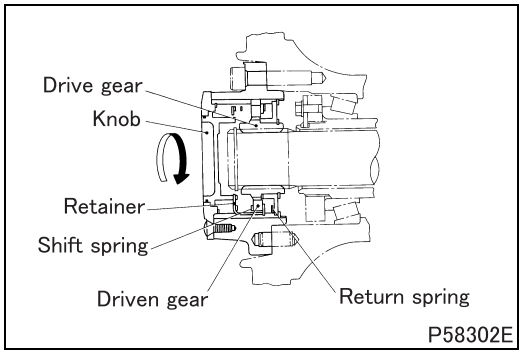

Operating mechanism

● From FREE to LOCK

When knob is turned to LOCK, retainer shifts to the inside along with the shape of the knob, pressing return spring. At this instance, driven gear, being pressed by shift spring, engages with drive gear at the spline, and transmits the driving power.

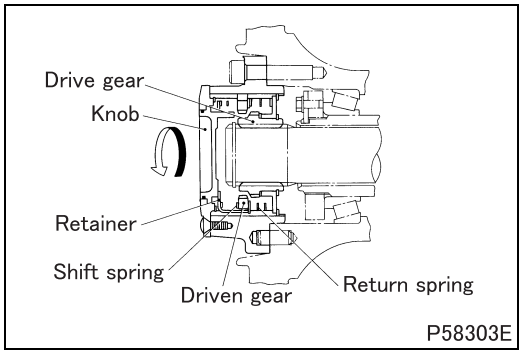

● From LOCK to FREE

When knob is turned to FREE, the action is the reverse of FREE to LOCK, and the driving power is disengaged.

https://truckmanualshub.com/

3. Drive Shaft and Steering Knuckle, Axle Housing

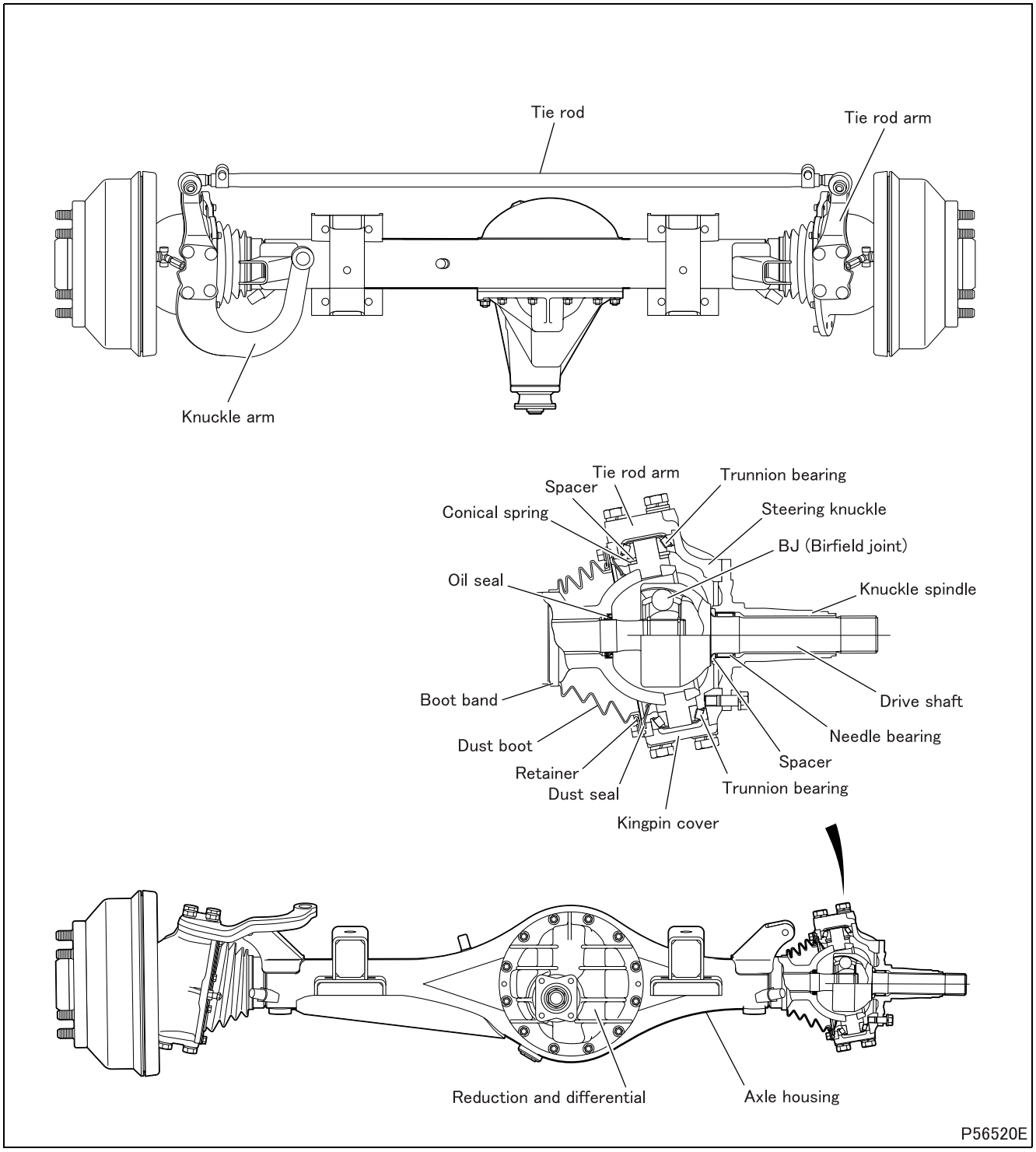

- The drive shaft must transfer power according to rotation speed fluctuations caused by change of steering angle when a vehicle is steered. Therefore, a constant velocity universal joint, which eliminates rotation speed fluctuations between the drive shaft and the driven shaft and transfers power evenly, is used for the Birfield joint of the drive shaft.

https://truckmanualshub.com/

4. Reduction and Differential

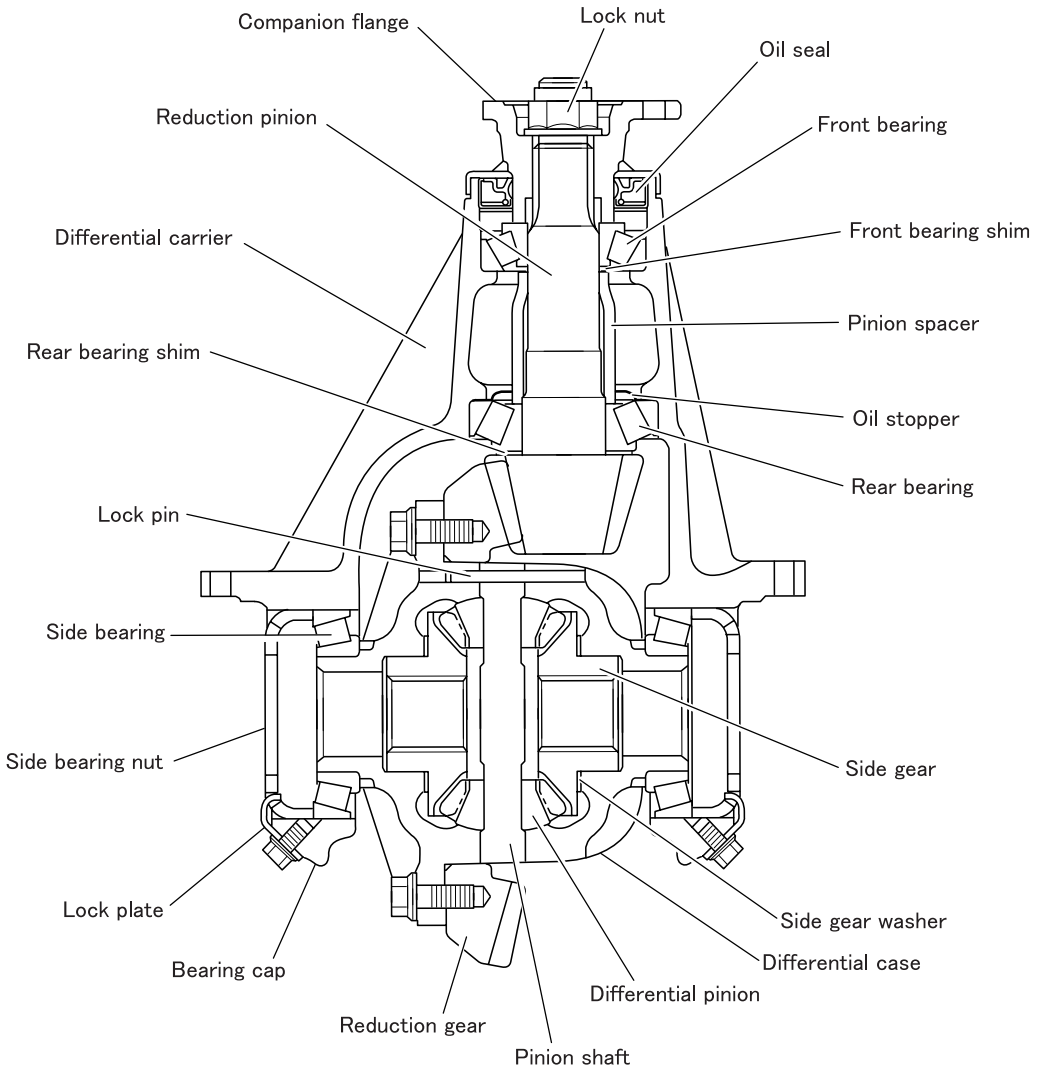

https://truckmanualshub.com/

Possible causes \ Symptoms		Power transmission insufficient																
		Noise when starting and changing gears	Continuous noise while at a constant speed	Intermittent noise while at a constant speed	Noise while cornering	Tires drag while cornering	Propeller shaft turns but front tires do not turn (on a bench tester)	Oil leakage from companion flange	Oil leakage from differential carrier and axle housing	Oil leakage from drive shaft	Steering wheel shakes	Steering feels stiff	Steering wheel return poor	Unable to steer the steering wheel	Steering pulls to one side	Uneven wear or early wear of front tires	Reference Gr
Free wheel hub, wheel hub, drive shaft and steering knuckle, axle housing	Wheel alignment misaligned										O	O	O			O	
	Steering angle adjustment faulty													O			
	Free wheel hub loose	O	O	O													
	Spline of free wheel hub loose	O															
	Wheel hub bearing seized, worn or rotation faulty		O												O		
	Wheel hub bearing broken			O													
	Drive shaft bent		O														
	Drive shaft broken						O										
	Drive shaft slips out of spline of side gear						O										
	Drive shaft to spline of side gear backlash excessive	O															
	Birfield joint of drive shaft faulty	O	O				O										
	Trunnion bearing loose				O												
	Trunnion bearing seized, worn or rotation faulty											O	O				
	Needle bearing of knuckle spindle worn		O														
	Knuckle spindle bent														O		
	Oil seal faulty									O							
	Knuckle arm and tie rod arm tightening nuts loose										O						
	Ball stud tightening nut of tie rod end loose										O						
	Ball stud of tie rod end worn										O						
	Tie rod bent													O			
	Axle housing bent		O														
	Inspection plug and drain plug loose								O								
	Vent plug clogged							O		O							

https://truckmanualshub.com/

Symptoms / Possible causes		Power transmission insufficient: Noise when starting and changing gears	Power transmission insufficient: Continuous noise while at a constant speed	Power transmission insufficient: Intermittent noise while at a constant speed	Power transmission insufficient: Noise while cornering	Power transmission insufficient: Tires drag while cornering	Power transmission insufficient: Propeller shaft turns but front tires do not turn (on a bench tester)	Oil leakage from companion flange	Oil leakage from differential carrier and axle housing	Oil leakage from drive shaft	Steering wheel shakes	Steering feels stiff	Steering wheel return poor	Unable to steer the steering wheel	Steering pulls to one side	Uneven wear or early wear of front tires	Reference Gr
Reduction and differential	Gear oil excessive							O									
	Gear oil insufficient	O	O														
	Oil seal faulty							O									
	Sealant faulty								O								
	Reduction and differential assembly mounting nuts loose			O					O								
	Differential carrier cracked or damaged								O								
	Bearing cap mounting bolts loose			O													
	Side bearing seized, worn or rotation faulty		O		O												
	Side bearing broken			O													
	Side bearing preload adjusted incorrectly		O														
	Reduction pinion or reduction gear broken	O		O	O		O										
	Reduction pinion or reduction gear worn		O		O												
	Reduction pinion or reduction gear damaged		O														
	Reduction gear backlash excessive	O															
	Reduction gear backlash or tooth contact adjusted incorrectly		O														
	Starting torque of pinion bearing faulty	O	O														
	Lock nut loose	O	O														
	Front and rear bearings seized		O														
	Front and rear bearings worn		O														
	Front and rear bearings broken			O													

https://truckmanualshub.com/

Possible causes \ Symptoms		Power transmission insufficient															Reference Gr
		Noise when starting and changing gears	Continuous noise while at a constant speed	Intermittent noise while at a constant speed	Noise while cornering	Tires drag while cornering	Propeller shaft turns but front tires do not turn (on a bench tester)	Oil leakage from companion flange	Oil leakage from differential carrier and axle housing	Oil leakage from drive shaft	Steering wheel shakes	Steering feels stiff	Steering wheel return poor	Unable to steer the steering wheel	Steering pulls to one side	Uneven wear or early wear of front tires	
Reduction and differential	Reduction gear and differential case mounting bolts loose	O		O													
	Side gear backlash excessive	O															
	Side gear or differential pinion broken			O	O	O	O										
	Side gear or differential pinion seized					O	O										
	Side gear or differential pinion worn				O	O											
	Side gear washer worn or damaged			O	O	O											
Front suspension	U-bolt nut of front suspension loose										O						
	One of front springs worn-out or broken														O		Gr33
Tire	Tire inflation pressure uneven										O					O	
	Tire inflation pressure insufficient											O					
	Inflation pressure uneven for right and left tires														O		
	Size and type of right and left tires different														O	O	Gr31
	Outer diameters of right and left tires remarkably different														O		
	Handling of tires inadequate															O	

https://truckmanualshub.com/

M E M O

https://truckmanualshub.com/

ON-VEHICLE INSPECTION AND ADJUSTMENT

1. Inspection and Adjustment of Wheel Alignment

Before performing inspection and adjustment of wheel alignment, set the vehicle to the following condition.

- Park the vehicle unloaded on a level surface.
- The vehicle needs to be equipped with proper size tires.
- If the wear condition of tires on the right is remarkably different from that of tires on the left, replace tires.
- Inflate tires to specified pressure.
- Correct if the vehicle tilts due to faulty suspension.
- Service all parts of the front axle and ensure that there is no fault such as the following.
  - Loose trunnion bearing
  - Loose front wheel hub
  - Bolts used for tightening various parts of tie rod arm, knuckle arm and tie rod are loose
  - Bend of knuckle spindle and axle housing
- Adjust play at steering wheel properly
- For wheel alignment, which is related to the side slip amount, both wheel alignment and the side slip amount must conform to the standard values.

Service standards (Unit: mm {in.})

Location	Maintenance item	Standard value	Limit	Remedy
–	Toe-in	0 to 6 (3 ± 3) {0 to 0.24 (0.12 ± 0.12)}	–	Adjust
	Camber	1°00’ ± 1°00’	–	*
	Caster	0°30’ ± 1°00’	–	Replace
	Kingpin inclination angle	9°30’ ± 30’	–	Replace

*: If the measured value deviates from the standard value, abnormalities such as loose trunnion bearing, loose hub bearing and bend of knuckle and front axle housing are suspected. Inspect each part and replace defective parts.

Tightening torque (Unit: N·m {ft.lbs, kgf·m})

Mark	Parts to be tightened	Tightening torque	Remarks
–	Clamp nut (tie rod end clamp fastening)	25 ± 5 {18 ± 3.7, 2.5 ± 0.5}	–

Special tools (Unit: mm {in.})

Mark	Tool name and shape	Part No.	Application
Ca	Alignment gauge adapter 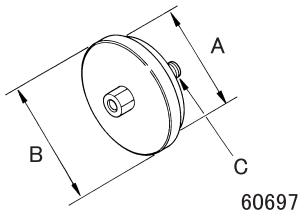 60697	MH062337 or MH061994	Measurement of camber, caster and kingpin inclination angle

Part No.	A	B	C
MH062337	ϕ56.5 {2.22}	ϕ95 {3.74}	M10 × 1.25
MH061994	ϕ75.2 {2.96}		

https://truckmanualshub.com/

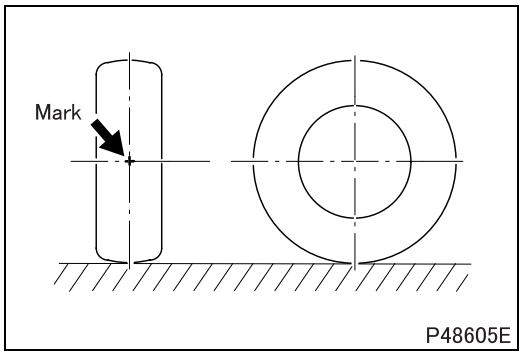

1.1 Inspection and adjustment of toe-in

[Inspection]

- Position the front wheels exactly to forward running position.
- Mark each tire at the center height in the middle of the tire tread.

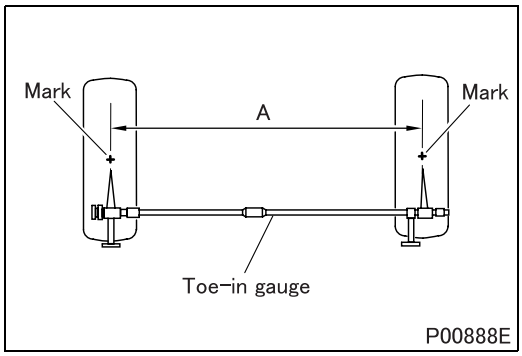

- Align the two points of the toe in gauge with respective marks and read distance A between the marks.

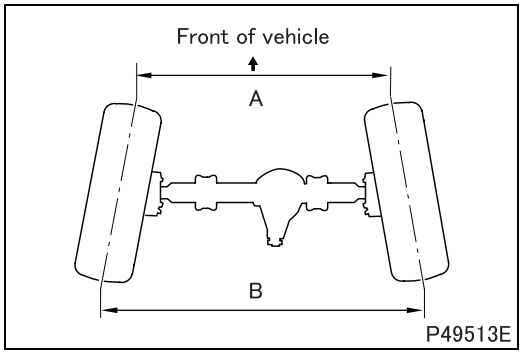

- Push the vehicle to roll the tires 180 degrees.
- Measure distance B between the marks that are now facing the rear of the vehicle.
- If toe-in (difference between A and B) deviates from the standard value, adjust.

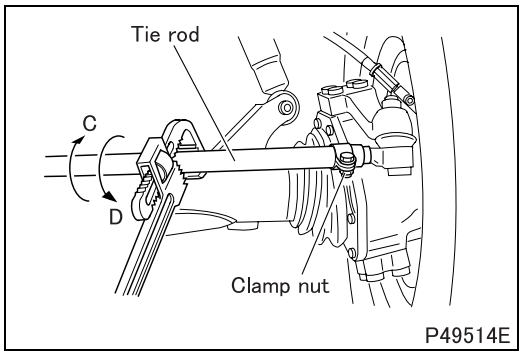

[Adjustment]

- Loosen the clamp nuts on the right and left.
- Turn the tie rod with a pipe wrench to adjust the toe-in.
  C: When adjusting to the toe-out direction
  D: When adjusting to the toe-in direction
- After adjustment, tighten the clamp nut to the specified torque.

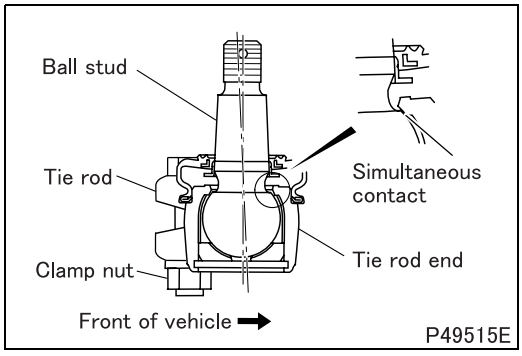

CAUTION ⚠

- **Hold down the tie rod end toward the front of the vehicle with the front wheels positioned to forward running position so that the right and left tie rod ends are in contact with the ball studs at the same time. In this state adjust so that the specified toe-in is achieved and tighten the clamp nut to secure the tie rod.**

https://truckmanualshub.com/

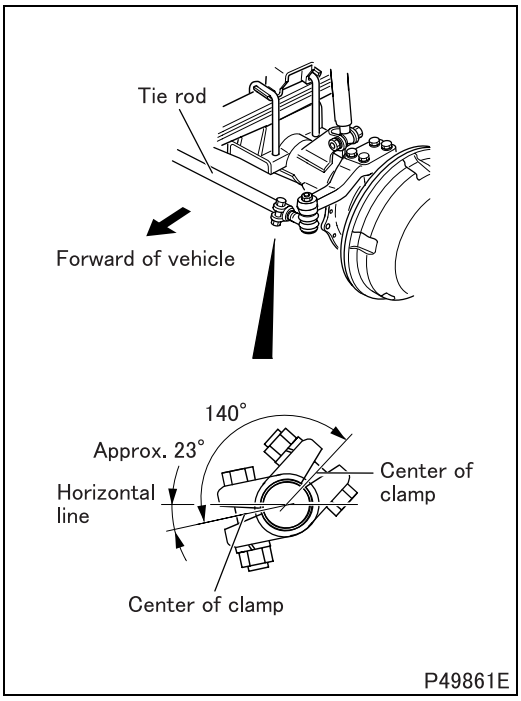

- Make sure that the center of the tie rod clamp is within the illustrated range.
- If it is out of the illustrated range, change the center position of the clamp.

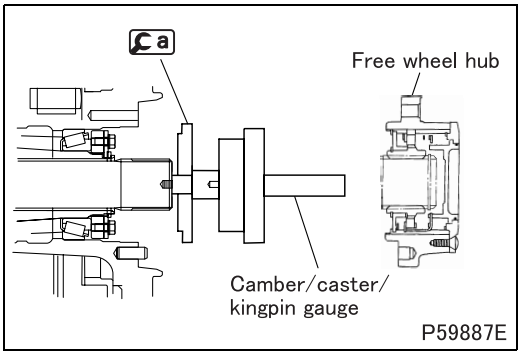

1.2 Inspection of camber

- Position the front wheels exactly to forward running position.
- Remove the free wheel hub.
- Install Ca on the drive shaft tip.
- Install the camber/caster/kingpin gauge.

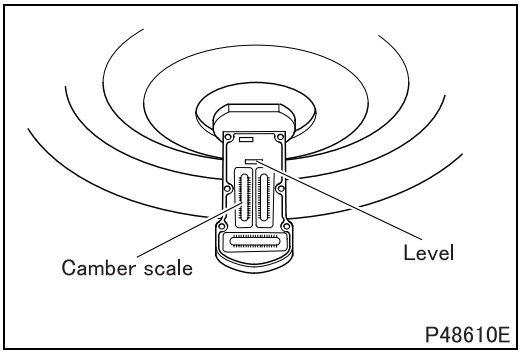

- Place the level in order to have bubble stay in the middle.
- Read center of bubble on camber scale to find the camber. Do the same way for the right and left front tires.
- If the measured value deviates from the standard value, disassemble the front axle for service.

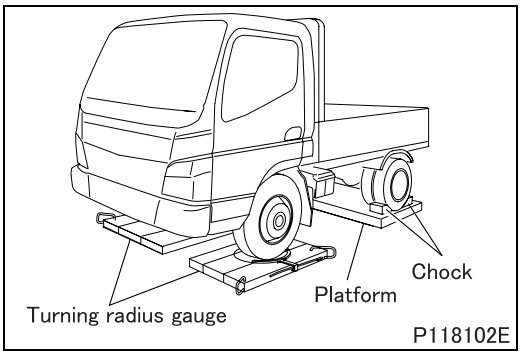

1.3 Inspection of caster and kingpin inclination angle

- Prepare a platform with the same height as the turning radius gauge and place it under the rear wheels so that the vehicle may be placed level.
- Apply chocks to the rear wheels.
- Keep the turning radius gauge locked.
- Jack up the vehicle, and set the right and left front wheels so that respective ground contact area centers of two wheels and turntable centers may meet.

https://truckmanualshub.com/

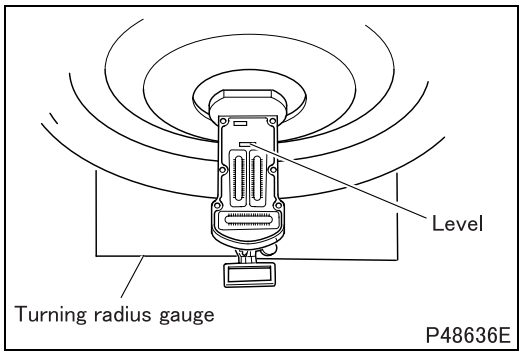

- Unfasten locking of the turning radius gauge, and set the scale to 0 degrees.
- In the same manner as in case of measuring camber in Section **1.2**, attach the camber/caster/kingpin gauge, and set the level so that the bubble comes in the middle.

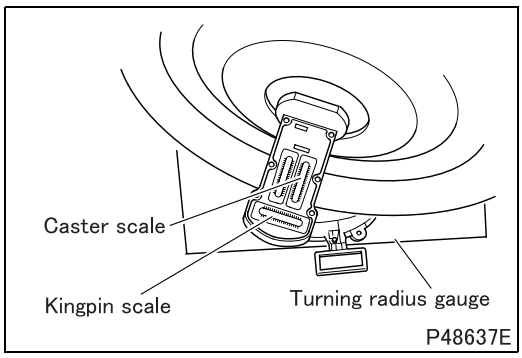

- With the brake pedal depressed, turn steering wheel slowly from the point of 0 degrees on the turning radius gauge, until the direction is changed by 20 degrees each to the right side in case of the right front wheel and to the left in case of the left front wheel.

NOTE

- **It is not possible to make exact measurement unless brake is kept applied, because otherwise wheels will turn slightly.**

- At the point where the wheel has been turned 20 degrees, set the caster scale and the center of the bubble of the kingpin scale to 0 degrees by turning the adjuster.

NOTE

- **Pay attention to the kingpin scale because it has scales for right and left: align the right kingpin scale in case of the right front wheel, and left kingpin scale in case of the left front wheel.**

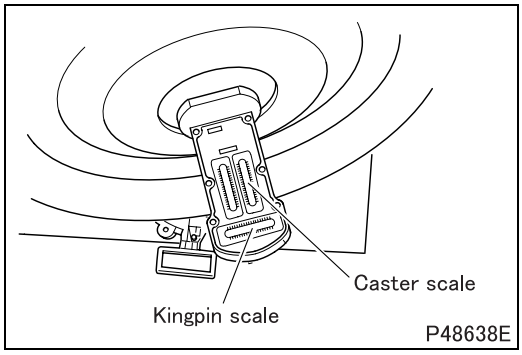

- Reverse this position, turn the steering wheel slowly until the direction of the front wheels changes by 20 degrees in the opposite direction.
- Read the center of bubbles at this position at the caster scale and kingpin scale to find caster and kingpin inclination angles.
- If the measured value deviates from the standard value, disassemble the front axle for service.

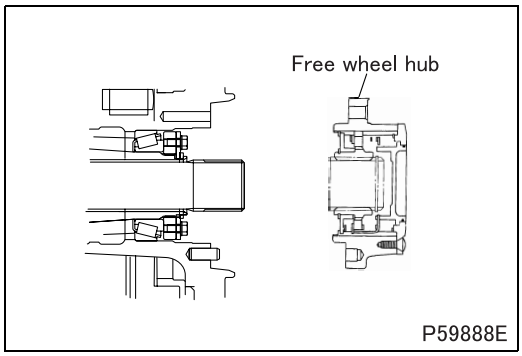

- After inspection, install the free wheel hub.

https://truckmanualshub.com/

ON-VEHICLE INSPECTION AND ADJUSTMENT

2. Inspection and Adjustment of Steering Angle

- Perform steering angle inspection and adjustment only after wheel alignment inspection and adjustment has been completed.

Service standards

Location	Maintenance item		Standard value	Limit	Remedy
–	Steering angle	Inside (outside steering angle is for reference only)	35° $^{0}_{-2}$° (34°)	–	Adjust

Tightening torque (Unit: N·m {ft.lbs, kgf·m})

Mark	Parts to be tightened	Tightening torque	Remarks
–	Lock nut (knuckle stopper bolt tightening)	96 ± 12 {71 ± 9, 9.75 ± 1.25}	–

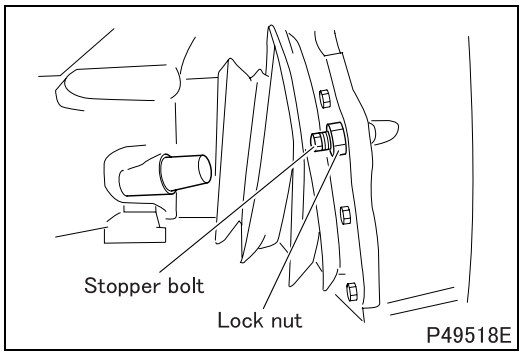

- Set the turning radius gauge and a platform on the vehicle in the same manner as the caster and kingpin inclination angle measurement performed in Section **1.3**.
- Turn the steering wheel right or left completely from the position where the turning radius gauge is set to 0 degrees, and measure the steering angle, reading the scale of the turning radius gauge.
- If the measured value deviates from the standard value, adjust with the knuckle stopper bolt and tighten the lock nut to the specified torque.

3. Inspection of Side Slip

- Perform side slip inspection only after wheel alignment inspection and adjustment has been completed.
- For the side slip amount, which is related to wheel alignment, both the side slip amount and wheel alignment must conform to the standard values.

Service standards (Unit: mm {in.})

Location	Maintenance item	Standard value	Limit	Remedy
–	Side slip amount (per 1 m {3.3 ft})	3 {0.12} or less	–	Adjust

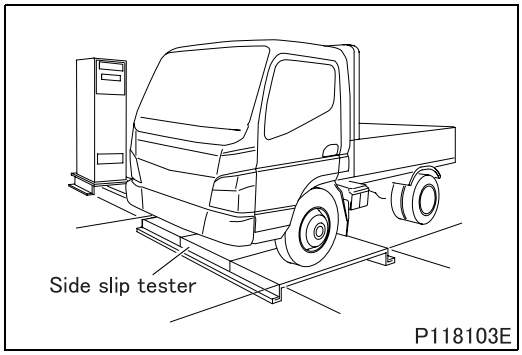

- Position the front wheels exactly to forward running position.
- Move the vehicle forward past the side slip tester as slowly as possible to inspect side slip.

NOTE

- **Pay attention to the following when moving over the side slip tester.**
- **Be sure to hold steering exactly at the forward running position, and make no turns.**
- **Do not apply the brakes.**
- **Keep the speed constant.**

- If the measured value deviates from the standard value, inspect and adjust wheel alignment.

https://truckmanualshub.com/

4. Inspection of Tie Rod End Ball Joint

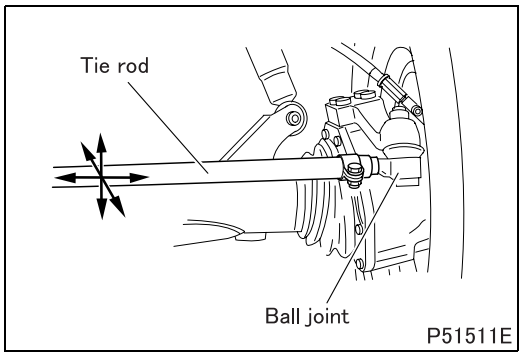

4.1 Play

- Hold the tie rod section of the tie rod with the vehicle kept stationary, and move it back-and-forth, up-and-down and right-and-left to check for play at the ball joints of the tie rod end.

NOTE

- **Be sure to check for play at ball joints of both right and left sides of the tie rod.**

- If there is any play, replace the tie rod end of the tie rod.

4.2 Dust cover

- Check that there is no wear, cracking or damage. Any such abnormalities can cause water to enter the ball joint, resulting in premature wear.
- If wear, cracking or damage is present, inspect for traces of water entry and rust in the ball joint. If any abnormality is found, replace the tie rod end. If no abnormality is found, replace the dust cover and reapply grease.

https://truckmanualshub.com/

5. Inspection and Replacement of Differential Oil

WARNING ⚠

- **The oil temperature is high immediately after the vehicle has stopped, so take care not to scald yourself.**

Tightening torque (Unit: N·m {ft.lbs, kgf·m})

Mark	Parts to be tightened	Tightening torque	Remarks
–	Inspection plug	110 ± 10 {81 ± 7.4, 11 ± 1}	–
	Drain plug		

Lubricant and/or sealant

Mark	Points of application	Specified lubricant and/or sealant	Quantity
–	Axle housing	Normal: Maximum air temperature during operation below 40°C {104°F} API GL-5 SAE 90 Hot area: Maximum air temperature during operation above 40°C {104°F} API GL-5 SAE 140	3 L {3.2 qts.}

- Use gear oil with a SAE viscosity grade of 140 when a vehicle is used under heavily-loaded, severe conditions such as continuous driving on uphill grades. However, the air temperature must be above 10°C {50°F}.

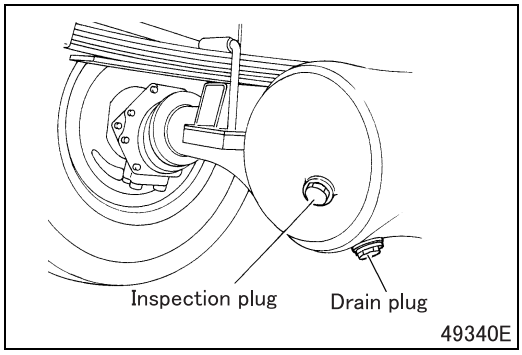

[Inspection]

(1) Inspection of oil quantity

- Remove the inspection plug, and check that gear oil is filled up to the neck.
- If gear oil is not sufficient, fill oil from the inspection plug hole up to the neck.

(2) Inspection of oil quality and contaminants

- When draining gear oil, check for oil quality, metal chips and metal powder.
- If an abnormally large amount of metal chips and metal powder is found, disassemble the assembly for service, as abnormalities may be caused inside.

[Replacement]

- Remove the drain plug to drain gear oil. Drainage can be made quickly with the inspection plug removed.
- As the drain plug is a magnet, clean it before installation.
- Fill the specified quantity of gear oil from the inspection plug hole.
- After filling, check that gear oil is filled up to the neck. If oil is not sufficient, replenish it.

https://truckmanualshub.com/

6. Inspection of Wheel Bearing for Play

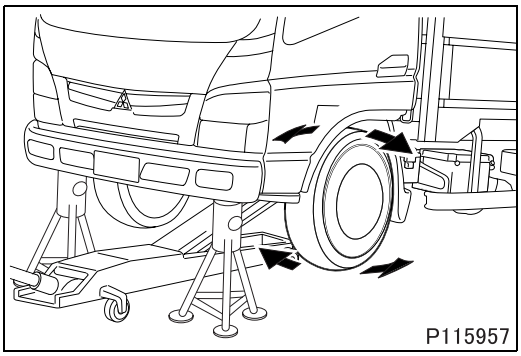

- Jack up the vehicle.
- Try to move the top and bottom of the front tire by hands in the illustrated directions to inspect the wheel bearing for play.
- If play is found with the feel of hands, repeat the inspection procedure while having the brake pedal pressed by another personnel. When the play is removed by operating the brake pedal, the symptom indicates that there is play in the wheel bearing, not in the suspension or other related parts. Then inspect the turning torque of the wheel bearing and adjust it as required. (See “WHEEL HUB AND BRAKE DRUM”.)
- If the turning torque of the wheel bearing cannot be adjusted correctly or the play still remains after the adjustment, replace the wheel bearing with a new one. (See “WHEEL HUB AND BRAKE DRUM”.)

7. Inspection of Knuckle Joint for Play

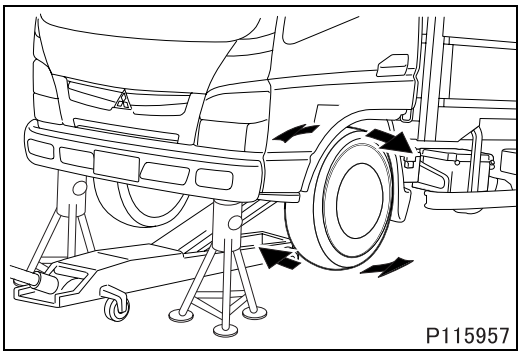

- Jack up the vehicle.
- Try to move the top and bottom of the front tire by hands in the illustrated directions to inspect the knuckle joint for play.
- If play is found with the feel of hands, repeat the inspection procedure while having the brake pedal pressed by another personnel. If there is any play, it may be caused by the play in the knuckle joint. Check each part and replace a defective part. (See “KNUCKLE AND KING PIN, FRONT AXLE”.)

https://truckmanualshub.com/

WHEEL HUB AND BRAKE DRUM

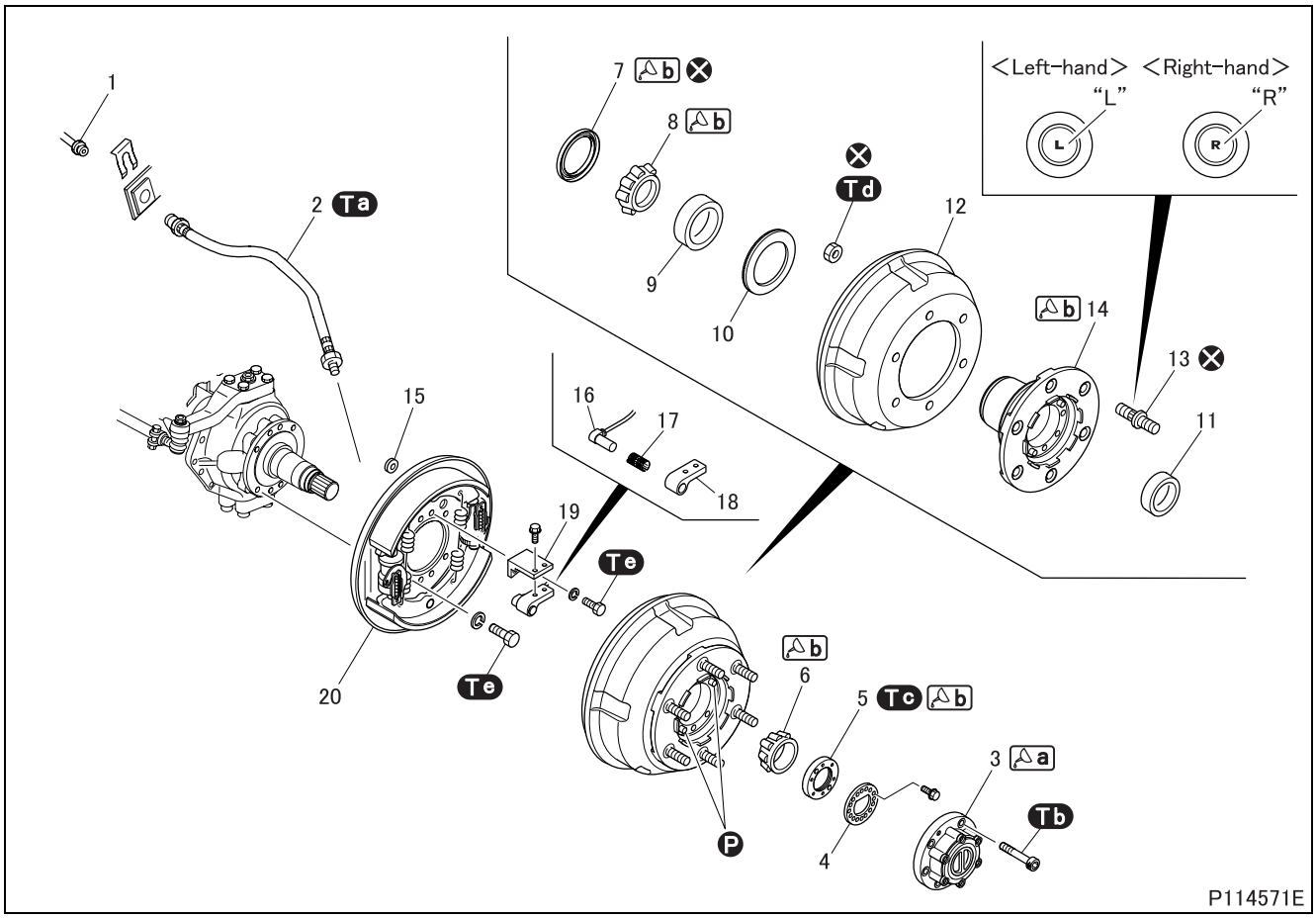

● **Disassembly sequence**

1 Brake pipe
2 Brake hose
3 Free wheel hub (See later section.)
4 Lock washer
5 Lock nut
6 Outer bearing inner race
7 Oil seal
8 Inner bearing inner race
9 Inner bearing outer race
10 Anti-lock brake system rotor
11 Outer bearing outer race
12 Brake drum
13 Hub bolt
14 Wheel hub
15 Grommet
16 Wheel speed sensor
17 Spring spacer
18 Sensor holder
19 Bracket
20 Front drum brake (See Gr35.)

Ⓟ: Locating pin
⊗: Non-reusable parts

CAUTION ⚠

- **Plug the brake hose to prevent entry of dust and dirt after it has been removed.**

● **Assembly sequence**

Follow the disassembly sequence in reverse.

https://truckmanualshub.com/

CAUTION ⚠

- **Make sure that the brake lining surface of the front drum brake and the inner surface of the brake drum are free from grease to avoid malfunction of the brakes.**
- **Make sure that the brake hose is not twisted when installing it.**
- **Make sure that the brake hose does not interfere with any of surrounding parts when installed.**

- Adjust brake shoe clearance after assembly. (See Gr35.)
- Bleed air from the brake system after assembly. (See Gr35.)

Service standards

Location	Maintenance item	Standard value	Limit	Remedy
–	Starting torque of wheel hub bearing (tangential force at hub bolt position with oil seal assembled)	3 ± 1 N·m {2.2 ± 0.7 ft.lbs, 0.3 ± 0.1 kgf·m} (tangential force: 25.3 ± 7.7 N {5.7 ± 1.7 lbs., 2.5 ± 0.7 kgf})	–	Adjust or replace

Tightening torque (Unit: N·m {ft.lbs, kgf·m})

Mark	Parts to be tightened		Tightening torque	Remarks
Ta	Brake hose		12.7 to 16.7 {9.4 to 12, 1.3 to 1.7}	–
Tb	Bolt (free wheel hub mounting)		68.6 ± 4.9 {51 ± 3.6, 7.0 ± 0.5}	–
Tc	Lock nut	Primary tightening	113 ± 15 {83 ± 11, 11.5 ± 1.5}	–
		Secondary tightening after primary tightening	25 ± 5 {18 ± 3.6, 2.5 ± 0.5}	–
Td	Nut (brake drum and wheel hub mounting)		343 ± 39 {253 ± 29, 35 ± 4}	–
Te	Bolt (bracket mounting)		123 ± 5 {90 ± 3.6, 12.5 ± 0.5}	–
	Bolt (front drum brake mounting)			

Lubricant and/or sealant

Mark	Points of application	Specified lubricant and/or sealant	Quantity
a	Wheel hub contact surface of free wheel hub	ThreeBond 1194 or 1215	As required
b	Thread area of lock nut	Wheel bearing grease [NLGI No. 2 (Li soap)]	As required
	Pack space between rollers of outer bearing inner race and inner bearing inner race		
	Lip area of oil seal		
	Pack inside of wheel hub		※60 ± 10 g {2.12 ± 0.35 oz.}

※ For a wheel hub

https://truckmanualshub.com/

WHEEL HUB AND BRAKE DRUM

Special tools (Unit: mm {in.})

Mark	Tool name and shape	Part No.	Application
a	Lock nut adjust tool A: 70 {2.76} B: □12.7 {0.50} 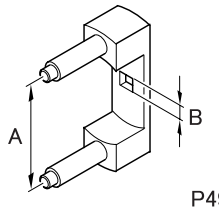 P49612	MB999151	Removal and installation of lock nut
b	Hub puller A: Hub puller body B: Attachment C: Bolt D: ϕ50 {1.97} E: 165 {6.50} 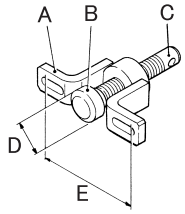 05618	MB999070 A: MB999071 B: MB999073 C: MB999072	Removal of wheel hub and brake drum
c	Oil seal installer A: ϕ84 {3.31} B: ϕ70 {2.76} 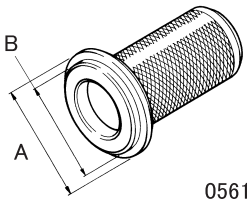 05619	MB999097	Installation of oil seal (to be used in combination)
d	Oil seal installer A: ϕ105 {4.13} B: ϕ84 {3.31} C: ϕ71 {2.80} 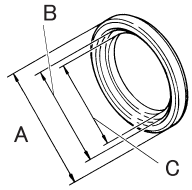 51038	MB999153	
e	Bearing installer A: ϕ70 {2.76} B: ϕ57 {2.24} 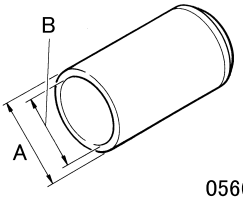 05668	MB999100	Installation of inner bearing outer race (to be used in combination with f) Installation of outer bearing outer race (to be used in combination with g)
f	Bearing installer A: ϕ94.5 {3.72} B: ϕ60 {2.36} C: ϕ92.5 {3.64} 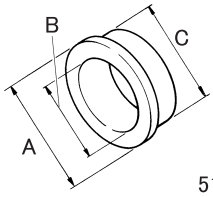 51039	MB999069	Installation of inner bearing outer race (to be used in combination with e)
g	Bearing installer A: ϕ88.5 {3.48} B: ϕ51 {2.01} C: ϕ71 {2.80} 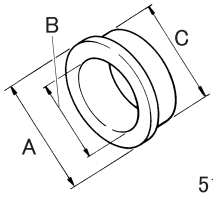 51039	MB999099	Installation of outer bearing outer race (to be used in combination with e)

https://truckmanualshub.com/

◆Removal procedure◆

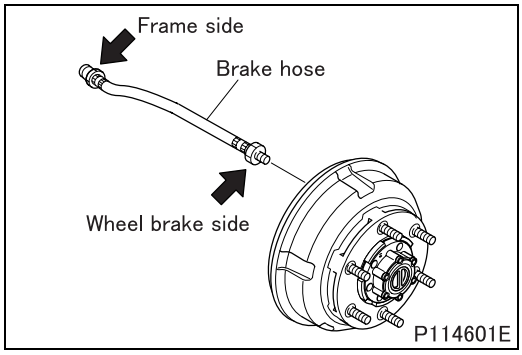

■ **Removal: Brake hose**

- When removing brake hose, remove it from the frame side first, and then from the brake wheel brake side.

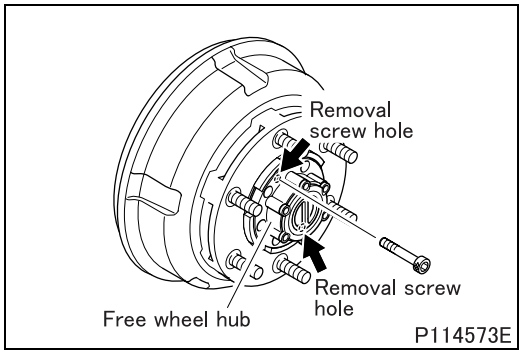

■ **Removal: Free wheel hub**

- Screw two bolts evenly into the free wheel hub removal screw holes to remove the free wheel hub.

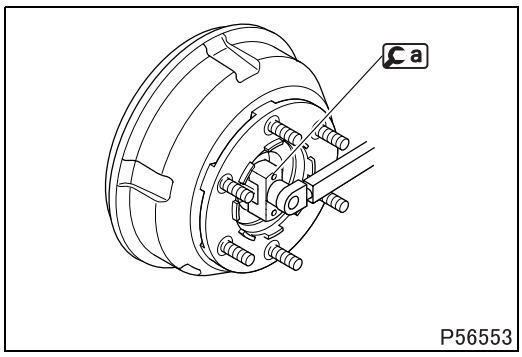

■ **Removal: Lock nut**

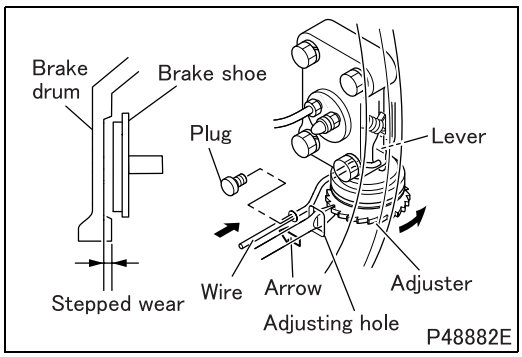

■ **Removal: Wheel hub and brake drum**

- If the brake drum has stepped wear and the wear prevents the wheel hub and brake drum from being removed, removal can still be performed with the following procedure.
  - Insert a wire of approx. ϕ2 mm {0.079 in.} into the hole from which the plug has been removed, and lift up the adjust lever of the wheel cylinder.
  - Turn the adjuster from the adjust hole in the opposite direction to the arrow on the backing plate to increase the clearance between the brake drum and the brake shoe. Then, remove the wheel hub and brake drum.

CAUTION ⚠

- **Correct or replace the brake drum if any fault is found.**

https://truckmanualshub.com/

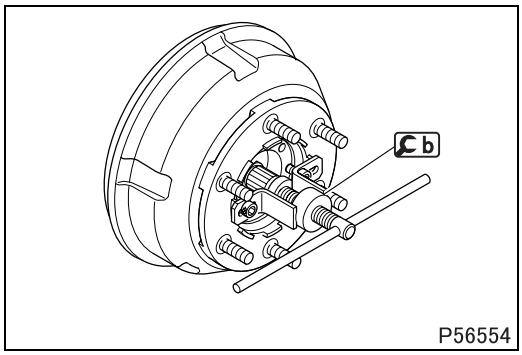

- Install b using free wheel hub mounting bolts to remove the wheel hub and brake drum.

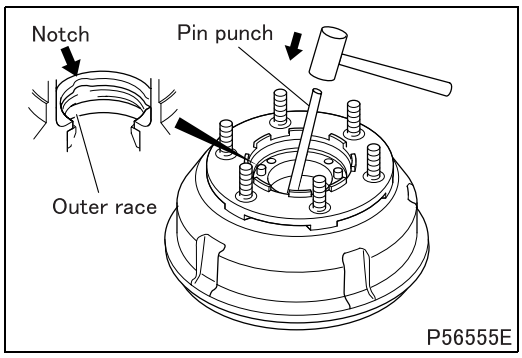

■ Removal: Inner bearing outer race

- Drive out the inner bearing outer race by tapping evenly at the three notches in the wheel hub.

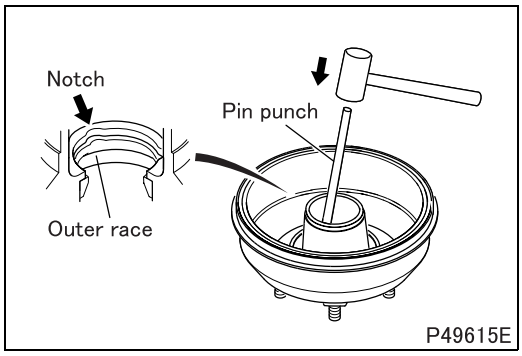

■ Removal: Outer bearing outer race

- Drive out the outer bearing outer race by tapping evenly at the three notches in the wheel hub.

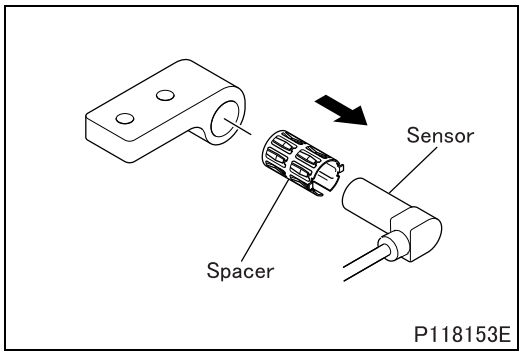

■ Removal: Wheel speed sensor

CAUTION ⚠

- **When removing the wheel speed sensor, do not apply excessive force on the sensor, such as hitting it with a hammer, prying with a screwdriver or pulling the harness, since these actions can result in an open-circuit of the sensor.**
- **If the wheel speed sensor can be removed easily, replace the spring spacer.**

https://truckmanualshub.com/

◆Inspection procedure◆

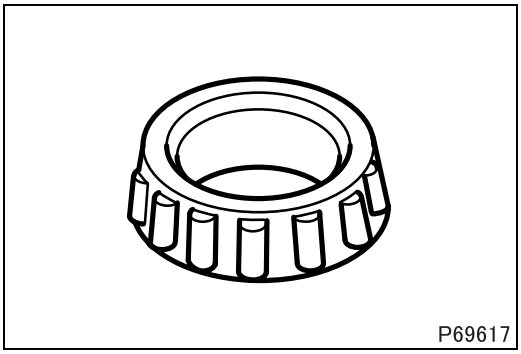

■ Inspection: Outer bearing inner race

- Inspect the outer bearing inner race after cleaning the bearing to remove grease completely.
- If any damage, wear, or a poor rotating conditions are evident in the inner race, replace it with a new one.
- The inner race and outer race should be replaced as a set.

■ Inspection: Inner bearing inner race

- Inspect the inner bearing inner race in the same manner as the outer bearing inner race.
  (See **"■ Inspection: Outer bearing inner race".**)

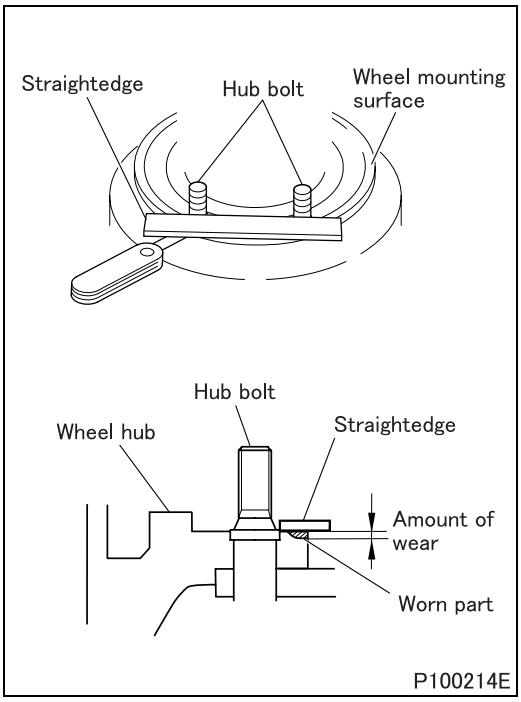

■ Inspection: Wheel hub

(1) Visual inspection

- Visually and physically inspect the disc wheel mounting surface. If there is damage or cracking on it, replace the wheel hub.
- Make sure that there is no rust, dust, paint or foreign material on the disc wheel mounting surface of the wheel hub to prevent the wheel nut from becoming loose.
- If any abnormality is found, remove it with sandpaper.

(2) Wear in disc wheel mounting part of wheel hub

- Clean the wheel mounting surface of the wheel hub before inspection.
- Place a straightedge against two hub bolts on the disc wheel mounting surface.

CAUTION ⚠

- **Make sure that the straightedge does not run onto the hub bolt.**

- Use feeler gauges to measure the amount of wear at the outer periphery of the wheel hub.
  Measure the amount of wear at every hub bolt.
- If the amount of wear at any point exceeds the following standard value, inspect the wheel hub for cracks.
  Wear standard value: 0.8 mm

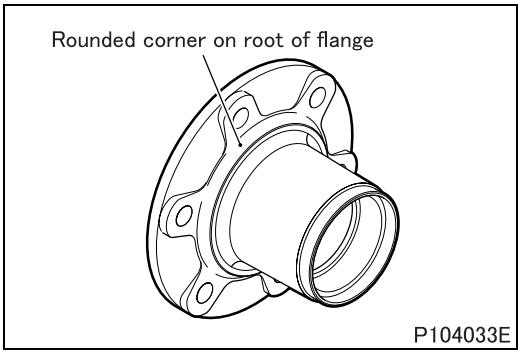

(3) Crack check

- Inspect for any cracks in the rounded corner on the root of the flange using magnetic particle or liquid penetrant testing. If any cracks are found, replace the wheel hub.
- If any cracks are found in a wheel hub bolt, replace it.
- If there is cracking or stepped wear on the wheel hub mounting surface of the wheel disc, replace it. (See Gr31.)

https://truckmanualshub.com/

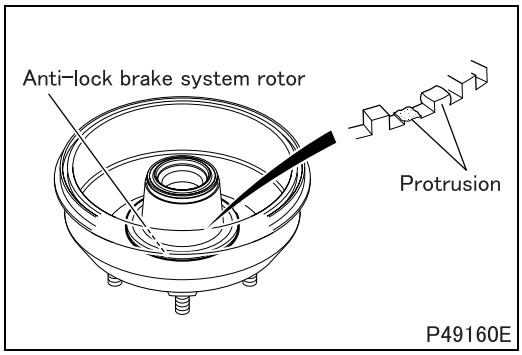

■ **Inspection: Anti-lock brake system rotor**

[Inspection]

- Check the protrusions of the anti-lock brake system rotor for chipping and flattening.
- If any abnormality is found, replace the anti-lock brake system rotor.

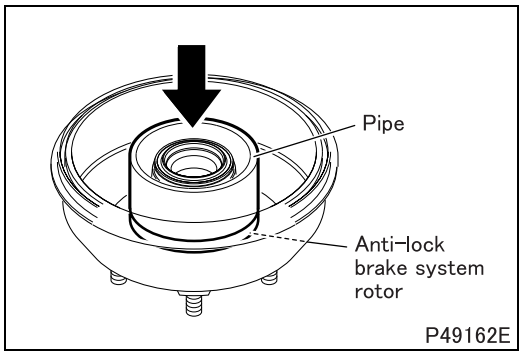

[Installation]

- Warm the anti-lock brake system rotor to approximately 150°C {302°F}.
- Install the anti-lock brake system rotor and wheel hub evenly using a pipe so as not to allow them to tilt.

WARNING ⚠

- **Handling the warmed rotor with bare hands may cause burns.**

◆Installation procedure◆

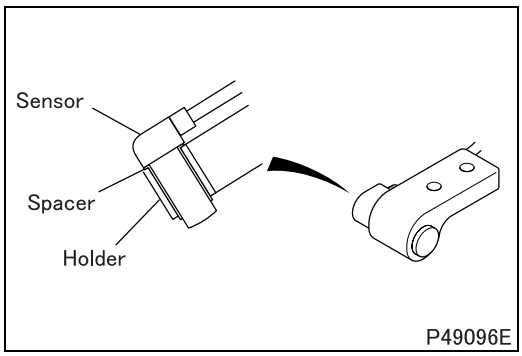

■ **Installation: Wheel speed sensor**

- Install the wheel speed sensor so that it securely contacts the sensor holder together with the spring spacer.

CAUTION ⚠

- **When installing the wheel speed sensor, never apply a force to it such as tapping it with a hammer, prying it with a screwdriver and pulling the harness, as doing so causes the wire to be broken.**

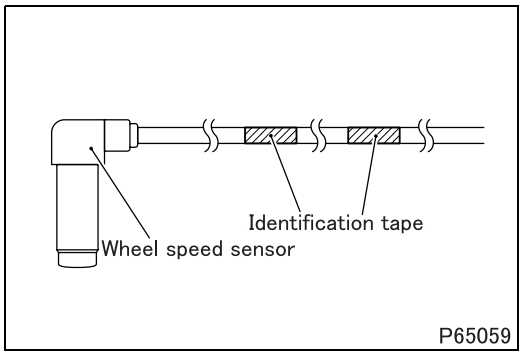

- Using clips, secure the wheel speed sensor harness in place at the identification tape portions, ensuring that the harness is free of kinks, slack and/or interference with other parts.

https://truckmanualshub.com/

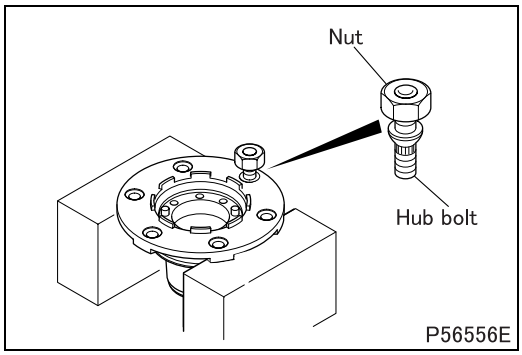

■ **Installation: Hub bolt**

- Screw the nut into the hub bolt until just before they become flush.
- Drive the hub bolt into the wheel hub vertically by hitting the end face of the nut.

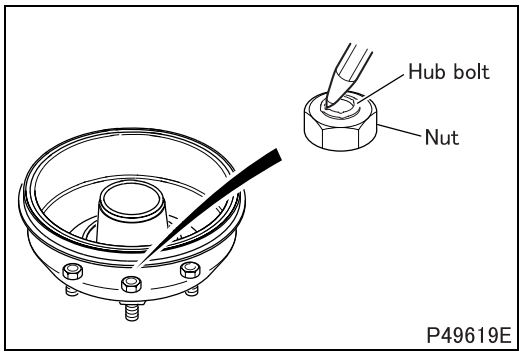

- Assemble the brake drum and wheel hub with the hub bolt. After tightening the nut to the specified torque, stake it with a punch.

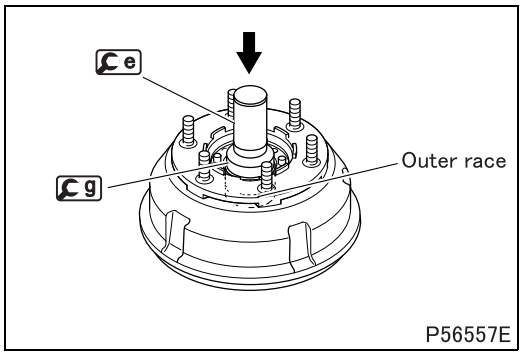

■ **Installation: Outer bearing outer race**

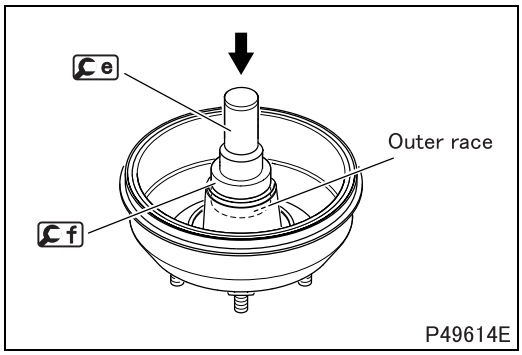

■ **Installation: Inner bearing outer race**

https://truckmanualshub.com/

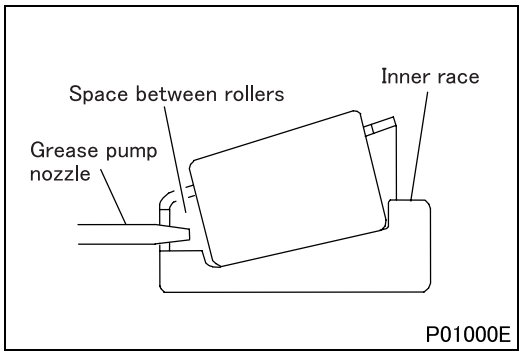

■ Installation: Packing grease in inner bearing inner race

- Insert the grease pump nozzle into the space between the rollers of the inner bearing inner race to pack grease sufficiently.

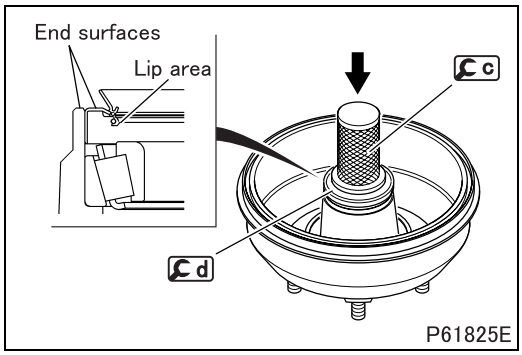

■ Installation: Oil seal

- Apply grease to the lip area of the oil seal and insert it onto the wheel hub until the end surface of the oil seal is flush with the end surface of the wheel hub.

■ Installation: Packing grease in outer bearing inner race

- Follow the same procedure as packing the inner bearing inner race with grease.
  (See **"■ Installation: Packing grease in inner bearing inner race"**.)

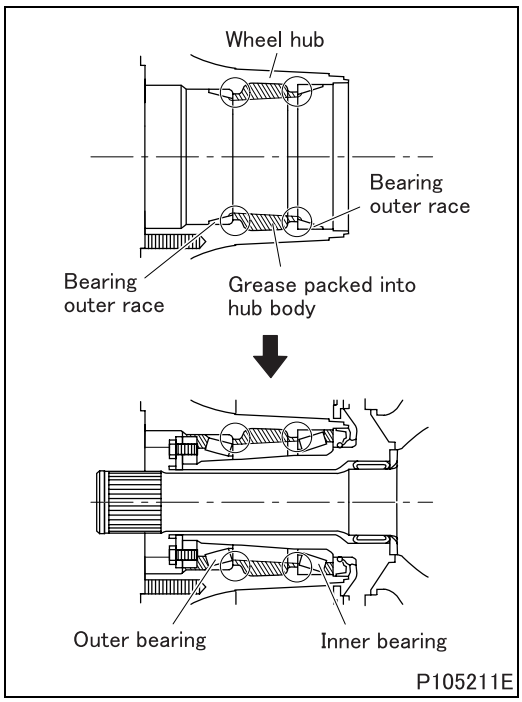

■ Installation: Packing grease inside of wheel hub

CAUTION ⚠

- **The wheel bearing may seize if these instructions are not followed.**
- **Apply the specified amount of grease.**

- As shown in the illustrations at the left, fill grease inside of the hub body in such a manner that grease covers the outer bearing and inner bearing outer races. Make sure that grease reaches the outer bearing and inner bearing.

https://truckmanualshub.com/

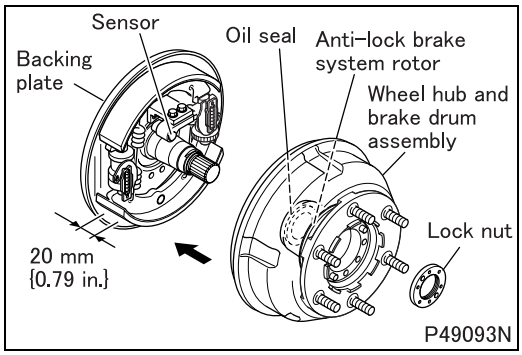

■ **Installation: Wheel hub and brake drum**

- Slowly install the wheel hub and brake drum assembly so as not to cause damage to the oil seal and anti-lock brake system rotor.

CAUTION ⚠

- **If the anti-lock brake system rotor is damaged, wheel speed sensor signals become abnormal, causing the anti-lock brake system to malfunction.**

- Position the wheel hub and brake drum assembly only 20 mm {0.79 in.} before the backing plate, and hereafter slowly tighten the lock nut to install the wheel hub and brake drum assembly.

CAUTION ⚠

- **Be careful that installing the wheel hub and brake drum assembly without leaving a clearance with the backing plate may damage the wheel speed sensor.**

■ **Adjustment: Starting torque of wheel hub bearing**

CAUTION ⚠

- **Unless this adjustment procedure is performed, the wheel bearing may seize.**

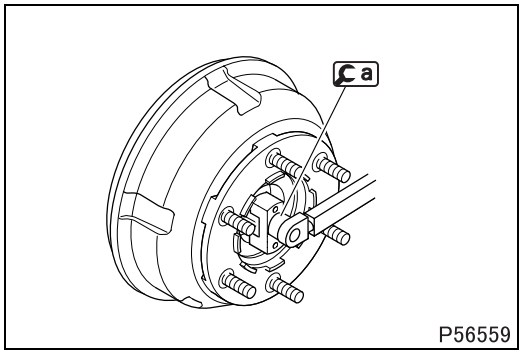

[Adjustment]

- Tighten the lock nut to the specified torque (primary tightening) while turning the wheel hub and brake drum assembly, and then loosen it completely.
- Ensure smooth operation of the outer bearing and inner bearing by turning the wheel hub and brake drum assembly several times, and then tighten the lock nut to the specified torque (secondary tightening).

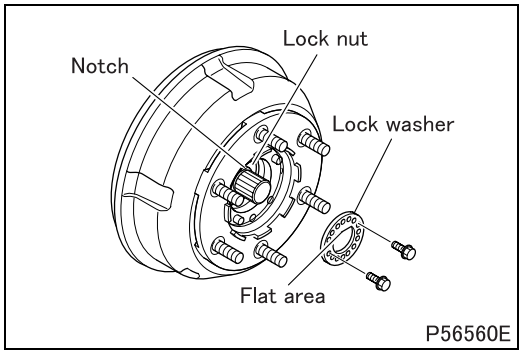

- Insert the flat area of the lock washer, aligning it with the notch of the knuckle spindle, and mount two bolts diagonally to the lock nut.
- If the lock nut does not align with a screw hole of the lock washer, align by loosening the lock nut. Make sure that there is no play in the axial direction.

https://truckmanualshub.com/

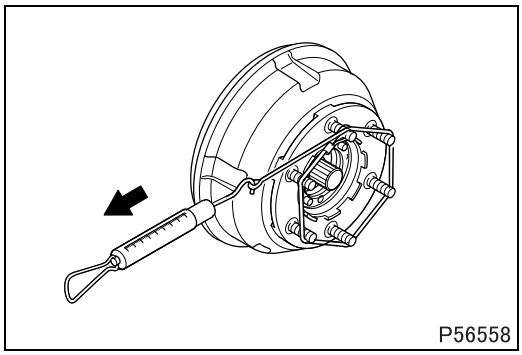

[Inspection]

- Make sure that there is no drag in the brake lining and brake drum.
- If any abnormality is found, adjust the brake shoe clearance.
- Measure the tangential force at the hub bolt position using a spring gauge.

CAUTION ⚠

- **Do not assemble the free wheel hub when inspecting.**

- If the tangential force is within the specified value, the starting torque conforms to the standard value. If the measured value deviates from the specified value, repeat adjustment because the adjustment of the lock nut may be insufficient.
- If the result is found to be abnormal, replace the outer and inner bearings.

■ Installation: Brake hose

- To install the brake hose, follow the removal procedure in reverse. (See "■ **Removal: Brake hose**".)
- After installing, make sure that the brake hose does not interfere in the peripheral parts.

CAUTION ⚠

- **Make sure that the brake hose is not twisted when installing it.**

https://truckmanualshub.com/

M E M O

https://truckmanualshub.com/

WHEEL HUB AND BRAKE DRUM

Free Wheel Hub

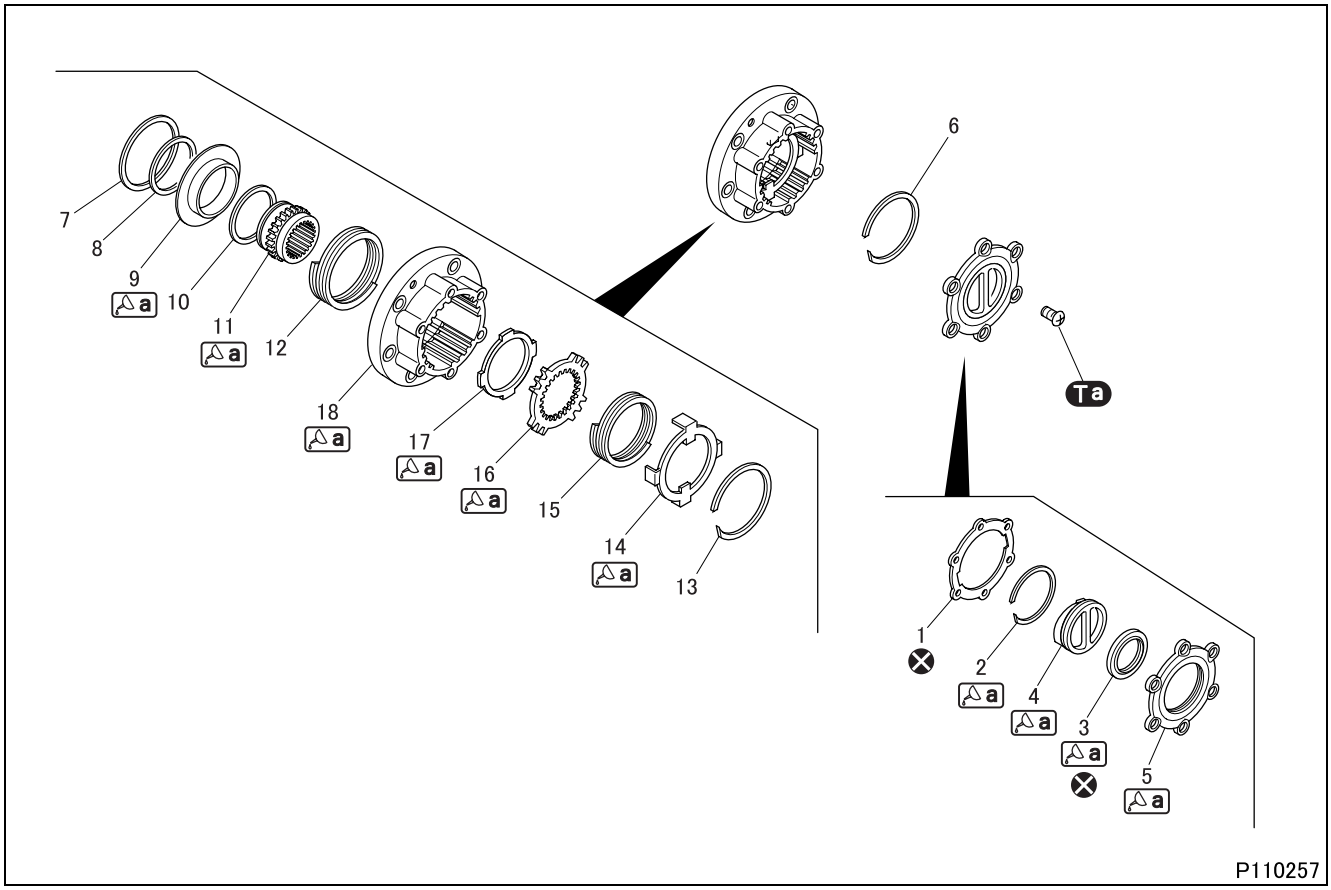

● Disassembly sequence

1 Gasket
2 Snap ring
3 X-ring
4 Knob
5 Cover
6 Snap ring
7 Snap ring
8 Snap ring
9 Center ring plate
10 Thrust washer
11 Drive gear
12 Return spring
13 Snap ring
14 Retainer
15 Shift spring
16 Driven gear
17 Retainer washer
18 Housing

⊗: Non-reusable parts

● Assembly sequence

Follow the disassembly sequence in reverse.

Tightening torque (Unit: N·m {ft.lbs, kgf·m})

Mark	Parts to be tightened	Tightening torque	Remarks
Ta	Screw (cover mounting)	4.5 ± 0.5 {3.3 ± 0.37, 0.45 ± 0.05}	–

https://truckmanualshub.com/

Lubricant and/or sealant

Mark	Points of application	Specified lubricant and/or sealant	Quantity
a	Mating surface of snap ring and knob	Chassis grease [NLGI No. 1 (Li soap)]	As required
	X-ring		
	Mating surface of knob and retainer		
	Mating surface of cover and knob		
	Mating surface of drive gear and driven gear		
	Retainer		
	Retainer washer		
	Inner surface of housing		
	Mating surface of center ring plate and drive gear		3 to 5 g {0.11 to 0.18 oz.}

https://truckmanualshub.com/

DRIVE SHAFT AND STEERING KNUCKLE

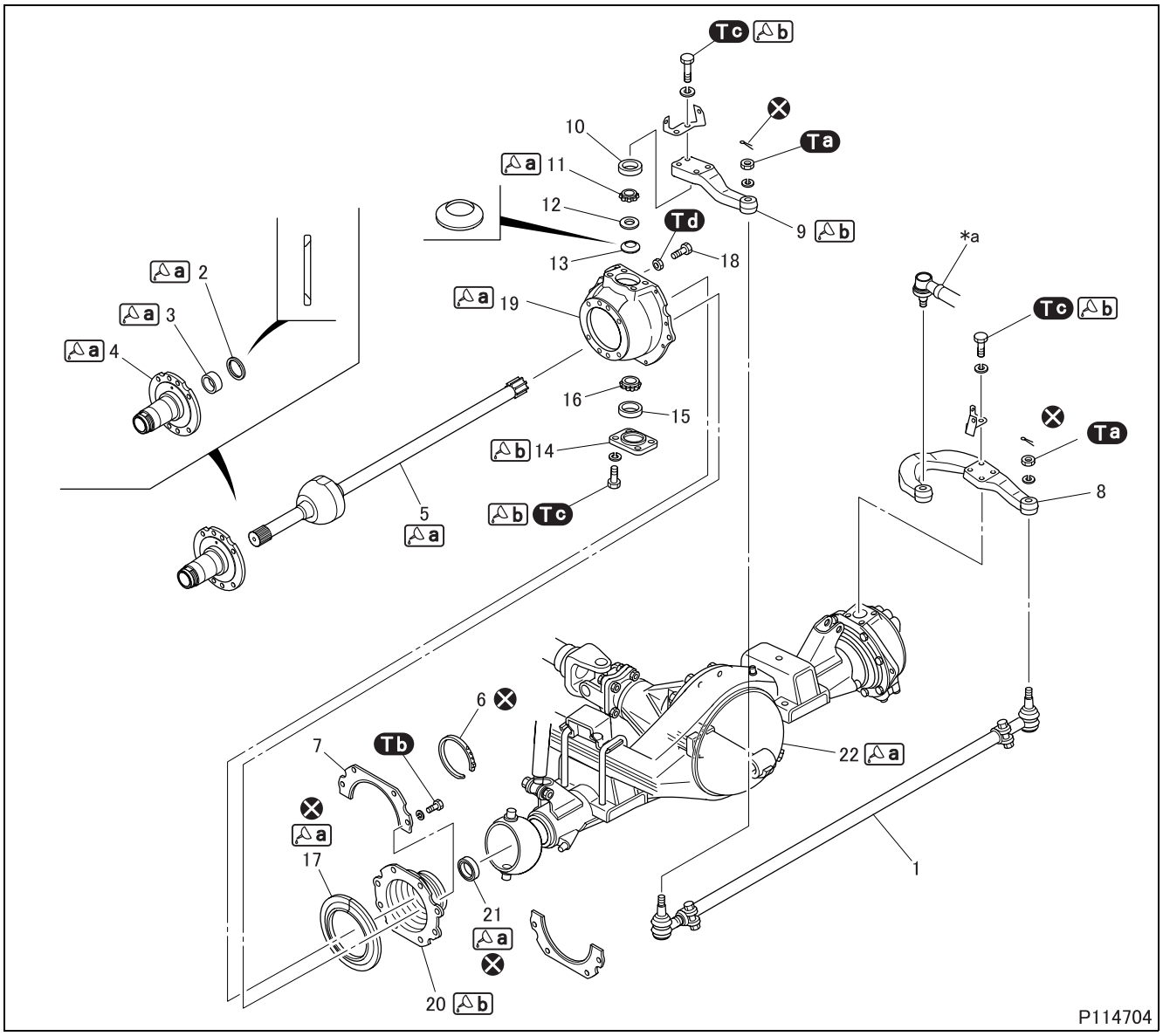

● **Disassembly sequence**

1 Tie rod (See later section.)
2 Spacer
3 Needle bearing
4 Knuckle spindle
5 Drive shaft
6 Boot band
7 Retainer
8 Knuckle arm
9 Tie rod arm
10 Trunnion bearing outer race
11 Trunnion bearing inner race
12 Spacer
13 Conical spring
14 Kingpin cover
15 Trunnion bearing outer race
16 Trunnion bearing inner race
17 Dust seal
18 Knuckle stopper bolt
19 Steering knuckle
20 Dust boot
21 Oil seal
22 Axle housing (See later section.)

***a**: Drag link
⊗: Non-reusable parts

CAUTION ⚠

- **When removing the tie rod, take care not to deform or damage the dust cover. Damaging the dust cover may cause water infiltration and wear-out the early stage.**

NOTE

- **Do not disassemble the drive shaft.**

https://truckmanualshub.com/

● Assembly sequence

Follow the disassembly sequence in reverse.

- After assembly, check and adjust the toe-in. (See “ON-VEHICLE INSPECTION AND ADJUSTMENT”.)

Repair kit: Repair kit grease

Service standards (Unit: mm {in.})

Location	Maintenance item		Standard value	Limit	Remedy
–	Starting torque of steering knuckle (tangential force at knuckle arm and tie rod arm end on tie rod)		4.8 ± 1.3 N·m {3.57 ± 0.98 ft.lbs, 0.49 ± 0.136 kgf·m} (tangential force: 28 ± 7.8 N {6.3 ± 1.8 lbs, 2.9 ± 0.8 kgf})	–	Adjust or replace
5	Drive shaft	Bend (inner shaft)	0 to 0.75 {0 to 0.030}	1.5 {0.059}	Replace
		Play in Birfield joint axial direction	0 to 0.8 {0 to 0.031}	–	Replace

Tightening torque (Unit: N·m {ft.lbs, kgf·m})

Mark	Parts to be tightened	Tightening torque	Remarks
Ta	Nut (tie rod mounting)	93.2 ± 24.5 {69 ± 18, 9.5 ± 2.5}	–
Tb	Bolt (retainer and dust boot mounting)	4 ± 1 {2.9 ± 0.7, 0.4 ± 0.1}	–
Tc	Bolt (knuckle arm and tie rod arm mounting)	191 ± 15 {140 ± 11, 19.5 ± 1.5}	Sealant
	Bolt (kingpin cover mounting)		
Td	Lock nut (knuckle stopper bolt tightening)	96 ± 12 {71 ± 9, 9.75 ± 1.25}	–

Lubricant and/or sealant

Mark	Points of application	Specified lubricant and/or sealant	Quantity
a	Chamfered side of inside surface of spacer in knuckle spindle	Wheel bearing grease [NLGI No. 2 (Li soap)]	As required
	Pack space between rollers of needle bearing		
	Pack space between rollers of trunnion bearing inner race		
	Lip area of dust seal		
	Lip area of oil seal		
	Periphery of trunnion bearing mounting area of axle housing ball yoke and outside surface of ball		
	Pack inside of steering knuckle		365 ± 35 g {12.87 ± 1.23 oz.}
	Pack inside of Birfield joint of drive shaft		120 ± 10 g {4.23 ± 0.35 oz.}
b	Steering knuckle mounting surface of knuckle spindle	ThreeBond 1194 or 1215	As required
	Thread area of bolt mounting knuckle arm and tie rod arm		
	Steering knuckle mounting surface of knuckle arm		
	Steering knuckle mounting surface of tie rod arm		
	Steering knuckle mounting surface of kingpin cover		
	Steering knuckle mounting surface of dust boot		

https://truckmanualshub.com/

Special tools (Unit: mm {in.})

Mark	Tool name and shape	Part No.	Application
a	Oil seal installer A: ϕ55 {2.17}, B: ϕ34 {1.34} 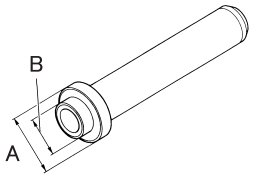 51042	MB999152	Installation of oil seal

◆Inspection procedure◆

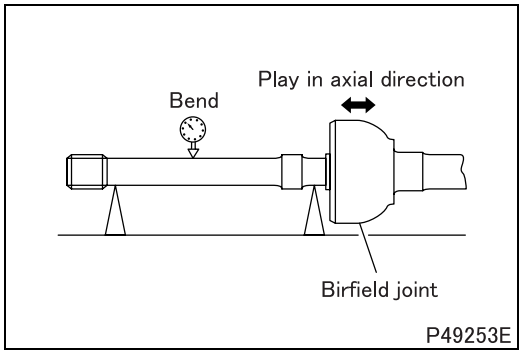

P49253E

■ **Inspection: Drive shaft**

- Carry out the following inspections. If any abnormality is found, replace the drive shaft.

(1) Bend of drive shaft

- Measure the bend at the center of the inner shaft of the drive shaft.

NOTE

- **Give the drive shaft one complete turn and read the dial gauge at this time. The bend is one half of the reading.**

(2) Play in Birfield joint axial direction

◆Installation procedure◆

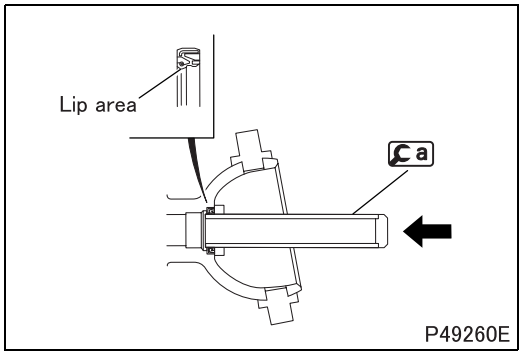

P49260E

■ **Installation: Oil seal**

- Apply grease to the lip area of the oil seal and install it on the axle housing in the illustrated direction.

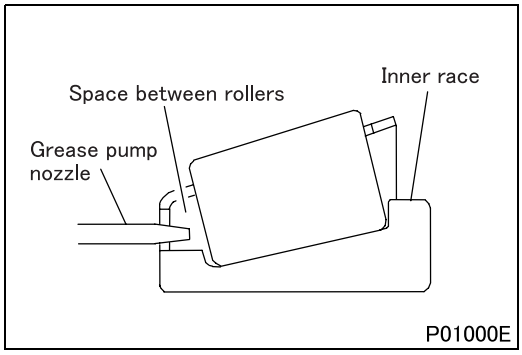

P01000E

■ **Installation: Packing grease in trunnion bearing inner race**

- Insert the grease pump nozzle into the space between rollers of the trunnion bearing inner race to pack grease sufficiently.

https://truckmanualshub.com/

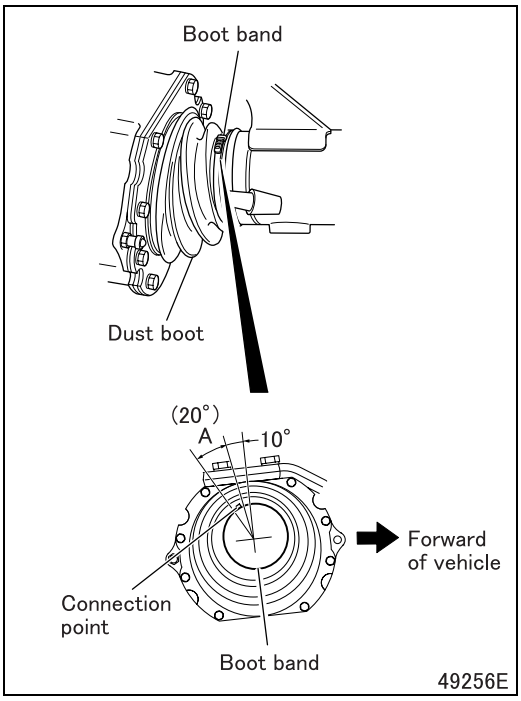

■ **Installation: Boot band**

- Install the boot band within illustrated range A.

CAUTION ⚠

- **When installing the boot band, do not tighten the dust boot excessively so as not to allow the dust boot to stick out of the mating surface remarkably.**

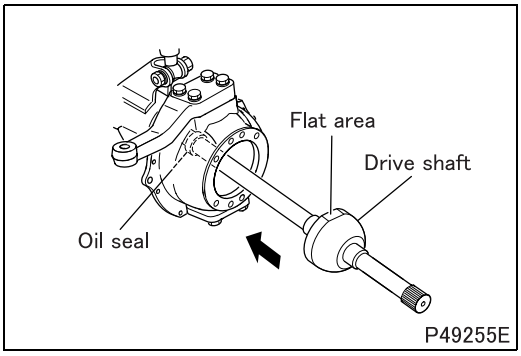

■ **Installation: Drive shaft**

- Install the drive shaft with the flat area of the Birfield joint of the drive shaft placed in a vertical direction.
- Slowly install the drive shaft to avoid damage to the oil seal.

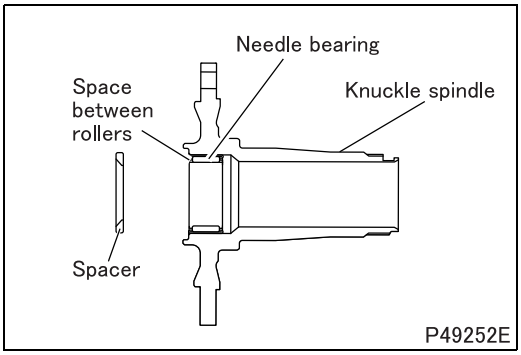

■ **Installation: Spacer and needle bearing**

- Pack grease sufficiently in the space between rollers of the needle bearing, and install the needle bearing so that it is flush with the end face of the knuckle spindle.

CAUTION ⚠

- **Do not drive in the needle bearing excessively.**

- Install the spacer on the knuckle spindle in the illustrated direction.

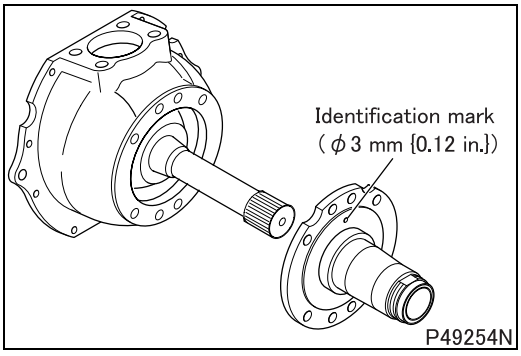

■ **Installation: Knuckle spindle**

- Install the knuckle spindle on the steering knuckle in the illustrated direction.

https://truckmanualshub.com/

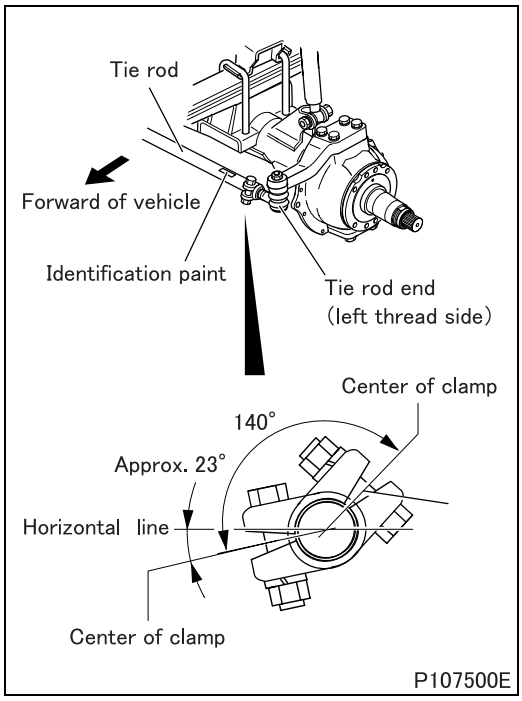

■ **Installation: Tie rod**

- Install the tie rod with its identification marking, which is applied to the left thread side tie rod end, coming to the left side of the vehicle.
  Identification marking: White
- If it is out of the illustrated range, change the center position by loosening the clamp.

◆Work after installation◆

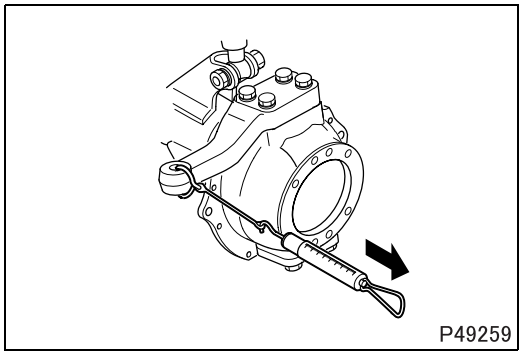

■ **Inspection: Starting torque of steering knuckle**

[Inspection]

- Measure the tangential force at the tie rod arm and knuckle arm end on the tie rod side using a spring balancer.

CAUTION ⚠

- **Do not assemble the dust boot and dust seal when measuring.**

- If the tangential force is within the specified value, the starting torque conforms to the standard value.
  If the measured value deviates from the specified value, adjust.
- Perform measurement again after adjustment. If any fault is found, replace the trunnion bearing.

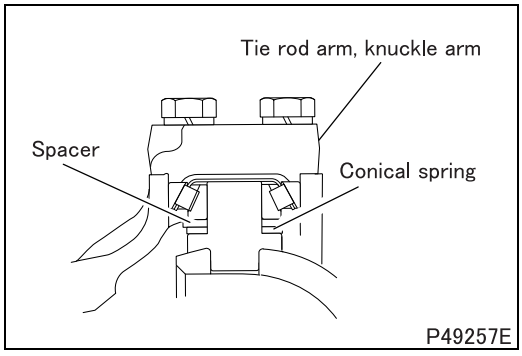

[Adjustment]

- Insert the conical spring and spacer (t = 3.2 mm {0.13 in.}) as illustrated and assemble the tie rod arm and knuckle arm as illustrated. Then, temporarily tighten them with bolts.

https://truckmanualshub.com/

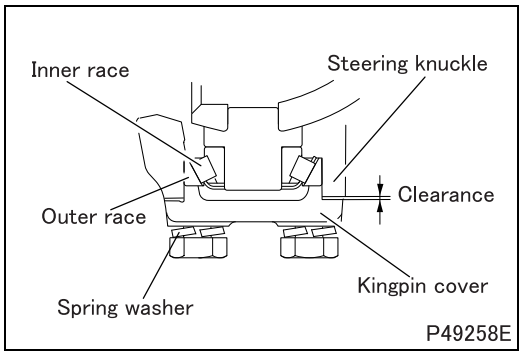

- Install the kingpin cover on the steering knuckle and tighten bolts to such extent that no tension is applied to the spring washers.
- Lift up the kingpin cover by hand until it securely contacts the trunnion bearing outer race and trunnion bearing inner race.
- Measure clearance between the steering knuckle and kingpin cover and select a spacer.
  When clearance is 0.6 mm {0.024 in.} or more: Spacer of 3.2 mm {0.13 in.}
  When clearance is less than 0.6 mm {0.024 in.}: Spacer of 3.6 mm {0.14 in.}
- Install the selected spacer and tighten bolts to the specified torque.

https://truckmanualshub.com/

TIE ROD

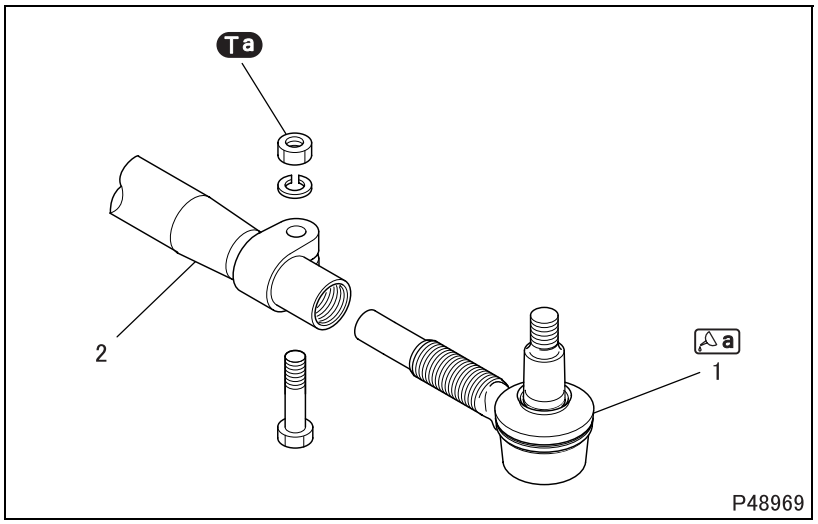

● **Disassembly sequence**

1 Tie rod end
2 Tie rod

CAUTION ⚠

- **If any abnormality such as tearing is found in the dust boot of the tie rod end, replace the tie rod end.**

NOTE

- **Do not disassemble the tie rod end, as it is of non-disassembly type.**

● **Assembly sequence**

Follow the disassembly sequence in reverse.

Service standards (Unit: mm {in.})

Location	Maintenance item		Standard value	Limit	Remedy
1	Ball joint of tie rod end	Play (± 980 N {± 220 lbs, ± 100 kgf} loaded)	0 to 0.15 {0 to 0.0059}	–	Replace
		Rotation torque	1.0 to 5.9 N·m {0.7 to 4.4 ft.lbs, 0.1 to 0.6 kgf·m}	–	
2	Bend of tie rod		–	1 {0.039}	Correct or replace

Tightening torque (Unit: N·m {ft.lbs, kgf·m})

Mark	Parts to be tightened	Tightening torque	Remarks
Ta	Nut (tie rod end tightening)	25 ± 5 {18 ± 3.7, 2.5 ± 0.5}	–

Lubricant and/or sealant

Mark	Points of application	Specified lubricant and/or sealant	Quantity
a	Lip area of dust cover of tie rod end	Wheel bearing grease [NLGI No. 2 (Li soap)]	As required

◆Inspection procedure◆

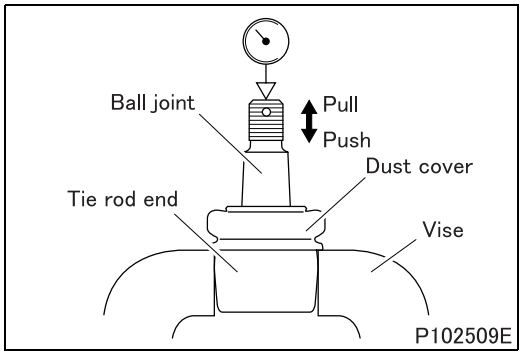

■ **Inspection: Tie rod end**

(1) Play

- Secure the tie rod end with a vise.

CAUTION ⚠

- **Take care not to deform or damage the dust cover when fixing it with a vise.**

- If the measured value deviates from the standard value when applying the specified load (push and pull) to the ball joint, replace the tie rod end.

https://truckmanualshub.com/

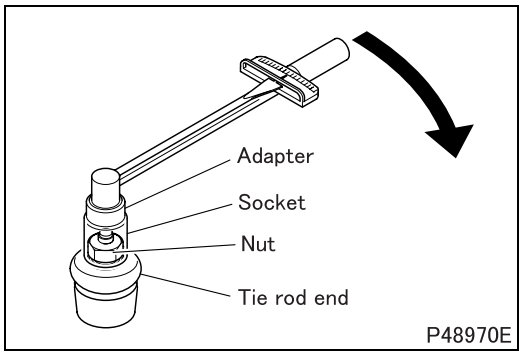

(2) Rotation torque

- Install the tie rod mounting nut on the tie rod end.
- Install the socket, adapter and torque wrench to measure the rotation torque.
- If the measured value deviates from the standard value, replace the tie rod end.

(3) Dust cover

- Check the dust cover for wear, cracks and other damage. These abnormalities may cause water infiltration to the ball joint and result in premature wear.
- If wear, crack, or damage is present, inspect traces of water entry and occurrence of rust in the ball joint. If any abnormality is found, replace the tie rod end. If no abnormality is found, replace the dust cover and reapply grease.

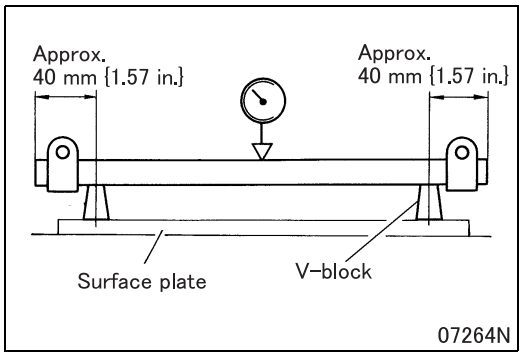

■ Inspection: Bend of tie rod

- Measure the bend of the tie rod at its center.

NOTE

- **Give the tie rod one complete turn and read the dial gauge at this time. The bend is one half of the reading.**

- If the measured value exceeds the standard value, correct or replace the tie rod.

◆Installation procedure◆

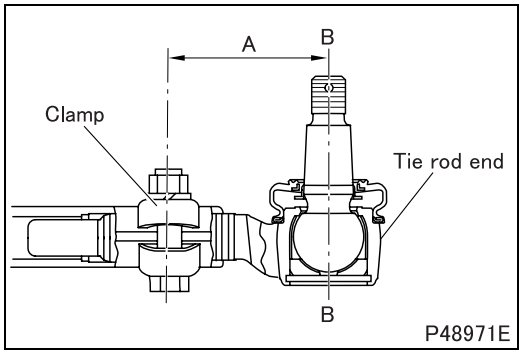

■ Installation: Tie rod end

- Screw in the tie rod end so that the difference of dimension A between the tie rod end and the clamp is within 1.5 mm {0.059 in.} between right and left.
  A: Approximately 74 mm {2.91 in.}

CAUTION ⚠

- **Ensure that the number of turns needed to install the right and left tie rod ends are within one turn of each other.**
- **Secure the tie rod ends so that the illustrated axis B-B on the right is parallel to that on the left.**

https://truckmanualshub.com/

AXLE HOUSING

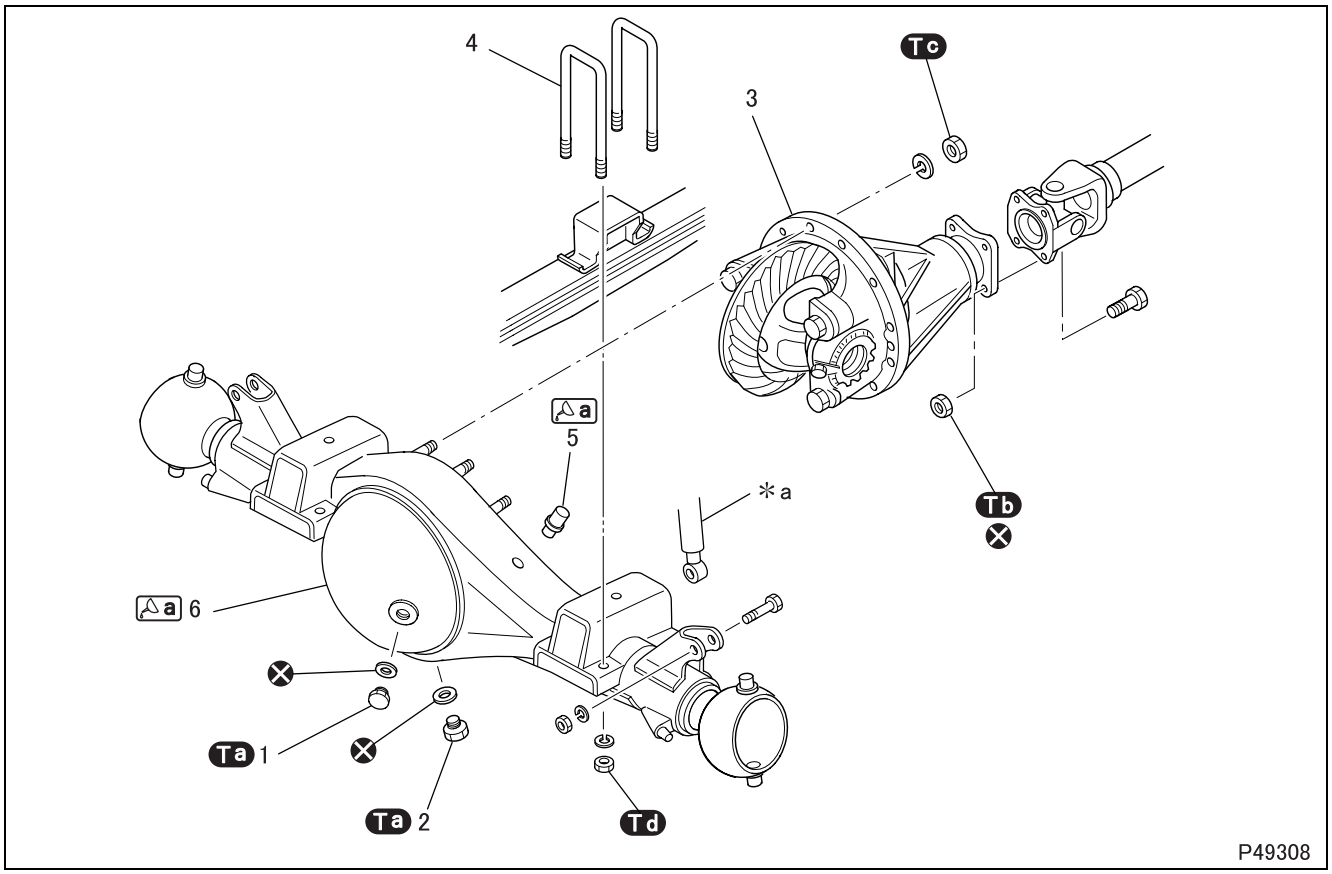

● **Disassembly sequence**

1 Inspection plug
2 Drain plug
3 Reduction and differential (See later section.)
4 U-bolt
5 Vent plug
6 Axle housing

***a**: Shock absorber
⊗: Non-reusable parts

NOTE

- **Do not remove the axle housing unless any abnormality is found.**

● **Assembly sequence**

Follow the disassembly sequence in reverse.

Service standards

Location	Maintenance item	Standard value	Limit	Remedy
5	Injection-valve opening pressure of vent plug	4.9 kPa {0.7 psi, 0.05 kgf/cm^2} or less	–	Replace

Tightening torque (Unit: N·m {ft.lbs, kgf·m})

Mark	Parts to be tightened	Tightening torque	Remarks
Ta	Inspection plug	110 ± 10 {81 ± 7.4, 11 ± 1}	–
	Drain plug		
Tb	Nut (propeller shaft mounting)	60 to 75 {44 to 55, 6 to 7.5}	–
Tc	Nut (reduction and differential mounting)	41 ± 6 {30 ± 4.4, 4.15 ± 0.65}	–
Td	Nut (U-bolt mounting)	113 ± 8 {83.7 ± 5.9, 11.5 ± 0.8}	–

https://truckmanualshub.com/

Lubricant and/or sealant

Mark	Points of application	Specified lubricant and/or sealant	Quantity
a	Axle housing mounting surface of vent plug	ThreeBond 1215	As required
	Reduction and differential mounting surface of axle housing		

Special tools (Unit: mm {in.})

Mark	Tool name and shape	Part No.	Application
a	Differential carrier base A: ϕ28 {1.1} 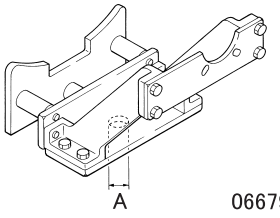	MB999102	Removal and installation of reduction and differential assembly

◆Work before removal◆

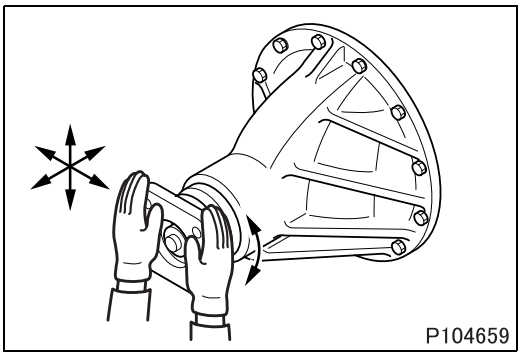

■ Inspection: Play at companion flange

- Move the companion flange in the back-and-forth, up-and-down, right-and-left and rotation direction to check for play.
- If there is play in either of directions, replace the following all parts.
  - Front bearing and rear bearing
  - Pinion spacer
  - Reduction gear set (reduction pinion and reduction gear)
  - Companion flange

◆Removal procedure◆

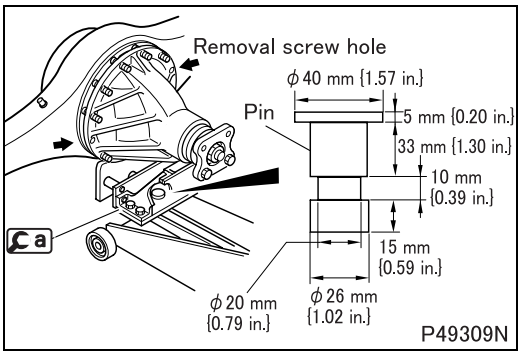

■ Removal: Reduction and differential

- Remove the saucer of the garage jack and place a on it. Fabricate the pin as illustrated, insert and fix it with bolts that have fixed the saucer.
- Screw two M10 × 1.25 mm bolts evenly into the reduction and differential removal screw holes (as shown in illustration) to remove the reduction and differential.

◆Installation procedure◆

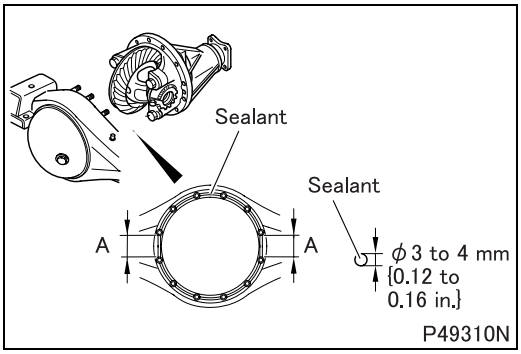

■ Installation: Reduction and differential

- Clean a seal surface of each part.
- Apply sealant to the reduction and differential mounting surface of the axle housing evenly and without breaks. Apply sealant in a straight line direction for illustrated position A.

https://truckmanualshub.com/

REDUCTION AND DIFFERENTIAL

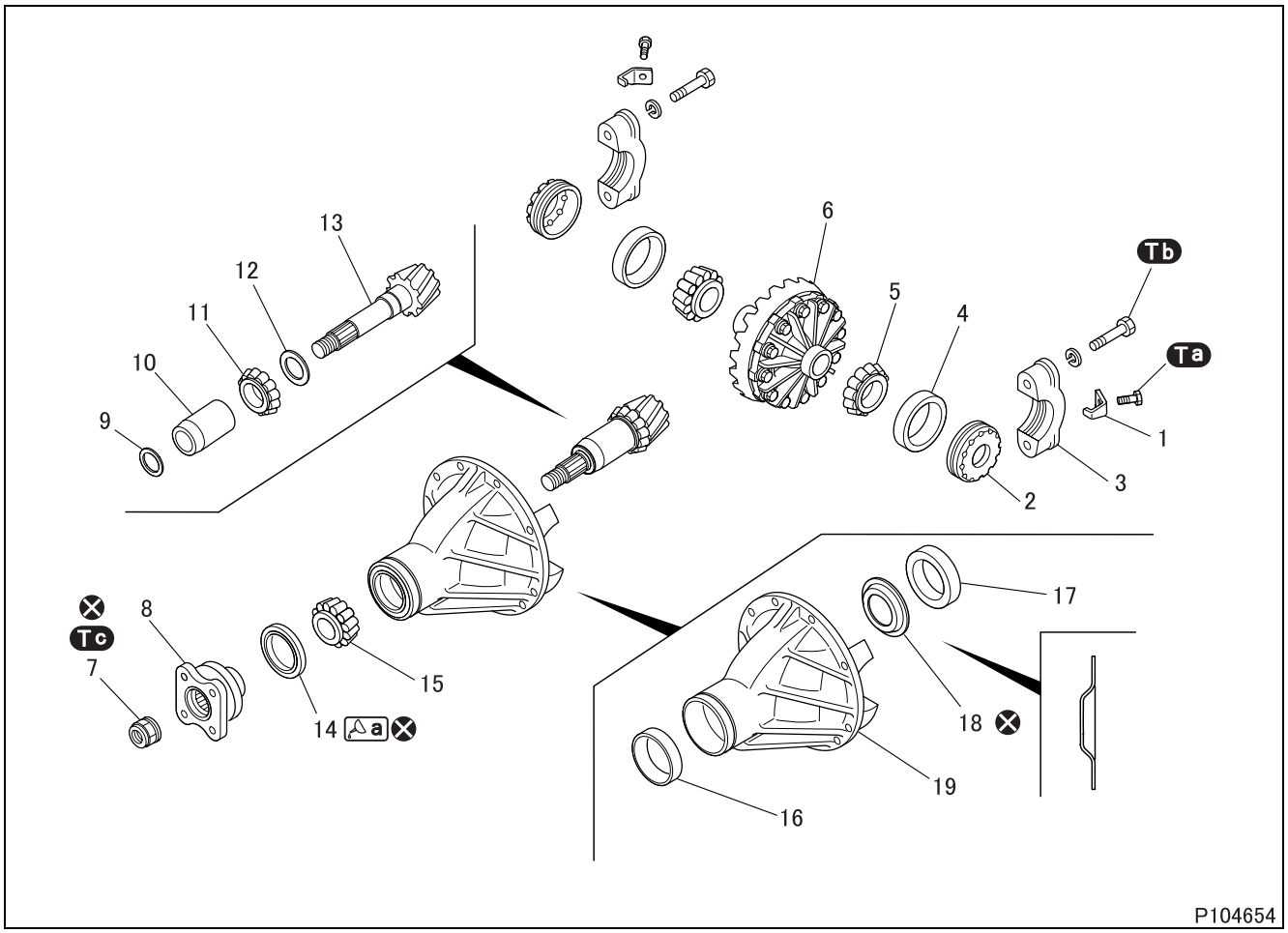

● **Disassembly sequence**

1 Lock plate
2 Side bearing nut
3 Bearing cap
4 Side bearing outer race
5 Side bearing inner race
6 Differential (See later section.)
7 Lock nut
8 Companion flange
9 Front bearing shim
10 Pinion spacer
11 Rear bearing inner race
12 Rear bearing shim
13 Reduction pinion
14 Oil seal
15 Front bearing inner race
16 Front bearing outer race
17 Rear bearing outer race
18 Oil stopper
19 Differential carrier

⊗: Non-reusable parts

CAUTION ⚠

- **Be sure to replace the bearing cap, differential carrier and bolts as a differential carrier set.**
- **Be sure to replace the reduction pinion and the reduction gear of the differential as a reduction gear set.**

- Keep side bearings that have been removed separated from each other and ensure that during installation each one is placed back in its original position.
- Record the number, thickness and height of the front bearing shims, pinion spacers and rear bearing shims to use them as a reference at assembly.

https://truckmanualshub.com/

● **Assembly sequence**

Follow the disassembly sequence in reverse except the following sequence.
16 → **13** → **12** → **11** → **10** → **9** → **15** → **14** → **8**

Service standards (Unit: mm {in.})

Location	Maintenance item	Standard value	Limit	Remedy
–	Starting torque of pinion bearing (with no oil seal installed)	0.69 to 1.27 N·m {0.5 to 0.94 ft.lbs, 0.07 to 0.13 kgf·m}	–	Adjust or replace
6	Wobble at back face of reduction gear	0 to 0.1 {0 to 0.0039}	–	Replace
6, 13	Backlash between reduction gear and reduction pinion	0.15 to 0.20 {0.0059 to 0.0079}	–	Adjust or replace

Tightening torque (Unit: N·m {ft.lbs, kgf·m})

Mark	Parts to be tightened	Tightening torque	Remarks
Ta	Bolt (lock plate mounting)	19.6 to 26.5 {14.5 to 19.5, 2.0 to 2.7}	–
Tb	Bolt (bearing cap mounting)	68.6 to 78.4 {50.6 to 57.8, 7 to 8}	–
Tc	Lock nut (companion flange mounting)	313.6 to 411.6 {231 to 304, 32 to 42}	–

Lubricant and/or sealant

Mark	Points of application	Specified lubricant and/or sealant	Quantity
a	Lip area of oil seal	Wheel bearing grease [NLGI No. 2 (Li soap)]	As required

https://truckmanualshub.com/

Special tools (Unit: mm {in.})

<table>
<tr><th>Mark</th><th>Tool name and shape</th><th>Part No.</th><th>Application</th></tr>
<tr><td>a</td><td>Differential working base assembly
 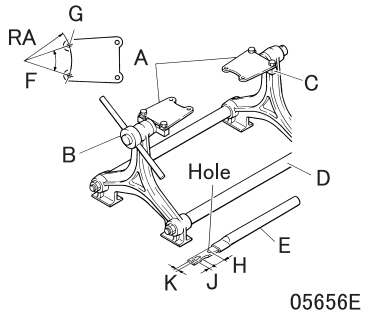

05656E
<table>
<tr><th colspan="4">Component</th><th>Part No.</th></tr>
<tr><td rowspan="2">A</td><td colspan="3">Attachment</td><td>–</td></tr>
<tr><td>RA</td><td>F</td><td>G</td><td>–</td></tr>
<tr><td></td><td>R134.5
{5.30}</td><td>30°</td><td>ϕ13
{0.51}</td><td>MB999074</td></tr>
<tr><td>B</td><td colspan="3">Holder</td><td>MB999036</td></tr>
<tr><td>C</td><td colspan="3">Holder</td><td>MB999037</td></tr>
<tr><td>D</td><td colspan="3">Working base</td><td>MB999035</td></tr>
<tr><td>E</td><td colspan="3">Flange stopper</td><td>MB999096</td></tr>
</table>
<table>
<tr><th>H</th><th>J</th><th>K</th></tr>
<tr><td>40
{1.57}</td><td>20
{0.79}</td><td>11
{0.43}</td></tr>
</table></td><td>MB999117</td><td>Workbench for reduction and differential

Flange stopper to be used for removal and installation of companion flange</td></tr>
<tr><td>c</td><td>Differential side bearing adjust tool
<table>
<tr><th>A</th></tr>
<tr><td>ϕ83.5
{3.29}</td></tr>
</table>
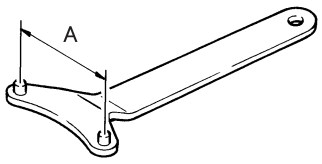

05657</td><td>MB999012</td><td>Removal and installation of side bearing nut</td></tr>
<tr><td>d</td><td>Adapter
<table>
<tr><th>A</th><th>B</th></tr>
<tr><td>ϕ44
{1.73}</td><td>ϕ53
{2.1}</td></tr>
</table>
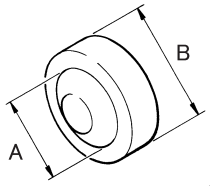

05658</td><td>MB999077</td><td>Removal of side bearing inner race (to be used in combination with commercial bearing puller)</td></tr>
<tr><td>e</td><td>Bearing installer
<table>
<tr><th>A</th><th>B</th></tr>
<tr><td>ϕ46
{1.81}</td><td>ϕ56
{2.20}</td></tr>
</table>
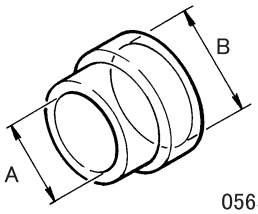

05659</td><td>MB999079</td><td>Installation of side bearing inner race</td></tr>
<tr><td>f</td><td>Pinion rear bearing remover
<table>
<tr><th>A</th><th>B</th></tr>
<tr><td>0.5
{0.020}</td><td>25.5
{1.0}</td></tr>
</table>
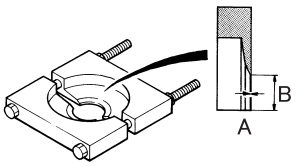

02956</td><td>MB999045</td><td>Removal of rear bearing inner race</td></tr>
</table>

https://truckmanualshub.com/

<table>
<tr><th>Mark</th><th>Tool name and shape</th><th>Part No.</th><th>Application</th></tr>
<tr><td>g</td><td>Bearing installer
<table><tr><th>A</th><th>B</th></tr><tr><td>ϕ52
{2.05}</td><td>ϕ42
{1.65}</td></tr></table> 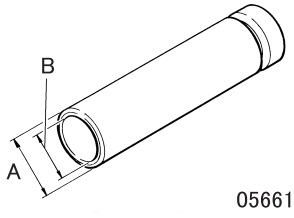 </td><td>MB990104</td><td>Installation of rear bearing inner race (to be used in combination with h)
Installation of oil seal (to be used in combination with j)
Installation of front bearing inner race</td></tr>
<tr><td>h</td><td>Bearing installer
<table><tr><th>A</th><th>B</th></tr><tr><td>ϕ57
{2.24}</td><td>ϕ46
{1.81}</td></tr></table> 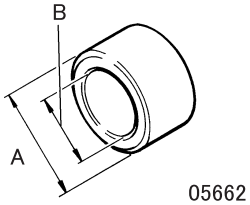 </td><td>MB999044</td><td>Installation of rear bearing inner race (to be used in combination with g)</td></tr>
<tr><td>i</td><td>Reduction pinion setting gauge set
 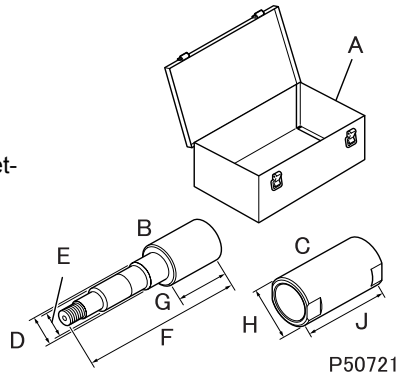
<table><tr><th colspan="2">Component</th><th>Part No.</th></tr><tr><td>A</td><td>Tool box</td><td>MB990824</td></tr><tr><td rowspan="3">B</td><td>Pinion gauge</td><td>–</td></tr><tr><td>D: ϕ39.9 {1.57}
E: ϕ34.8 {1.37}
F: 254.5 {10.02}
G: 73 {2.87}</td><td>MB999086</td></tr><tr><td></td></tr><tr><td rowspan="3">C</td><td>Cylinder gauge</td><td>–</td></tr><tr><td>H: ϕ100 {3.94}
J: 184 {7.24}</td><td>MB999087</td></tr><tr><td></td></tr></table></td><td>MB999084</td><td>Selection of rear bearing shim (pinion height adjustment)</td></tr>
<tr><td>j</td><td>Bearing installer adapter
<table><tr><th>A</th><th>B</th></tr><tr><td>ϕ88
{3.46}</td><td>ϕ50
{1.97}</td></tr></table> 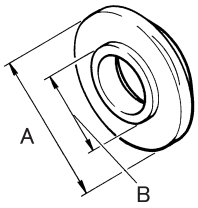 </td><td>MB999015</td><td>Installation of oil seal (to be used in combination with g)</td></tr>
</table>

https://truckmanualshub.com/

REDUCTION AND DIFFERENTIAL

Mark	Tool name and shape	Part No.	Application
k	Bearing installer A: ϕ70 {2.76}, B: ϕ57 {2.24} 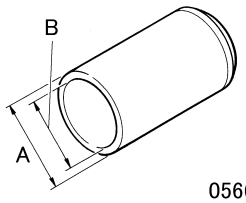	MB999100	Installation of front bearing outer race and rear bearing outer race (to be used in combination)
l	Bearing installer A: ϕ89 {3.50}, B: ϕ79 {3.11} 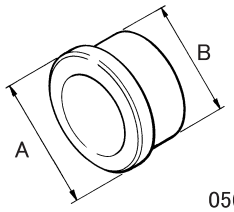	MB999089	

◆Work before removal◆

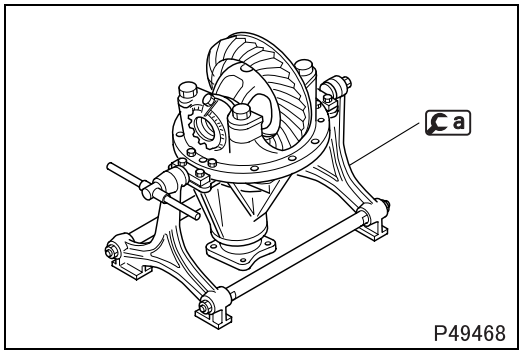

■ **Preparatory work: Installation of differential working base assembly**

- Install the reduction and differential on a.

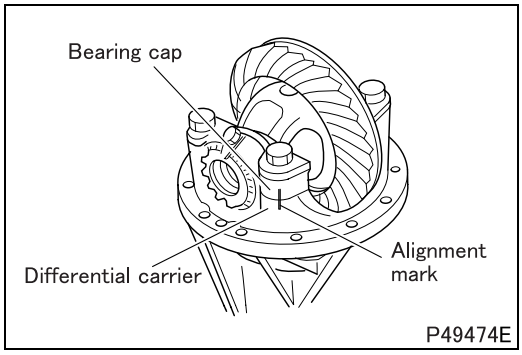

■ **Alignment marks: Bearing cap and differential carrier**

- Put alignment marks on the bearing cap and differential carrier for correct identification of right and left parts.

◆Removal procedure◆

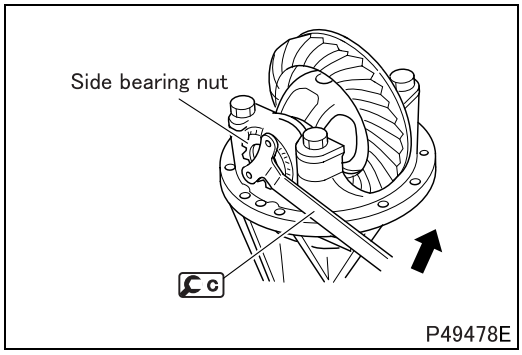

■ **Removal: Side bearing nut**

https://truckmanualshub.com/

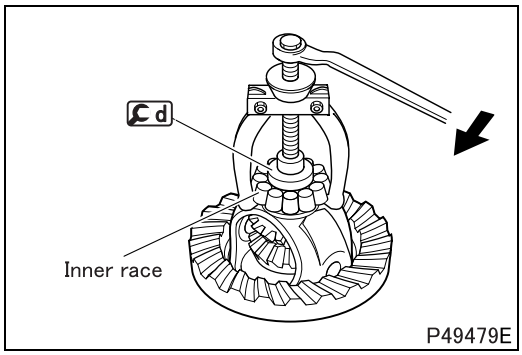

■ **Removal: Side bearing inner race**

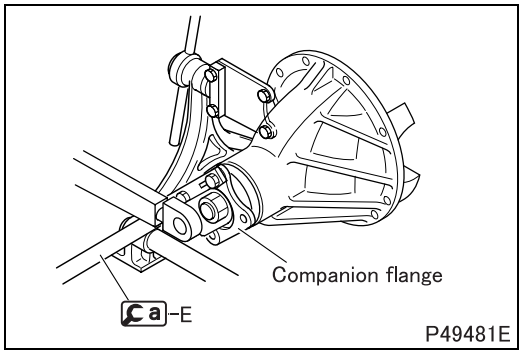

■ **Removal: Companion flange**

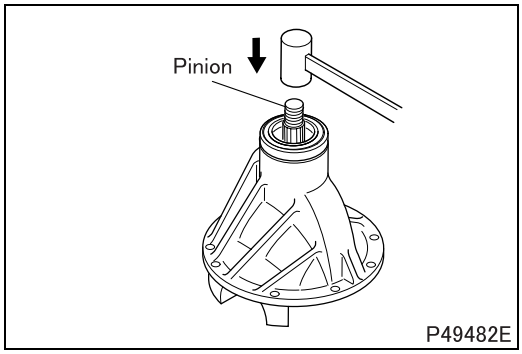

■ **Removal: Reduction pinion**

- Tap the reduction pinion with a plastic hammer and hold the reduction pinion with your hand to prevent it from falling.

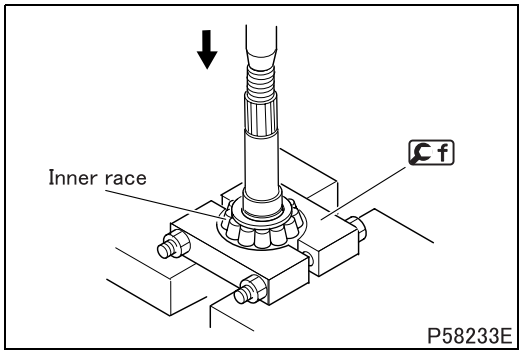

■ **Removal: Rear bearing inner race**

https://truckmanualshub.com/

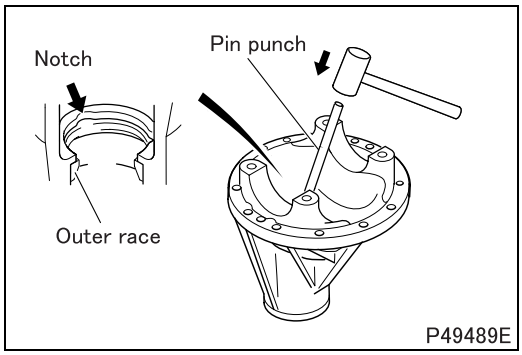

■ **Removal: Front bearing outer race**

- Drive out the front bearing outer race by tapping evenly at three indented parts in the differential carrier.

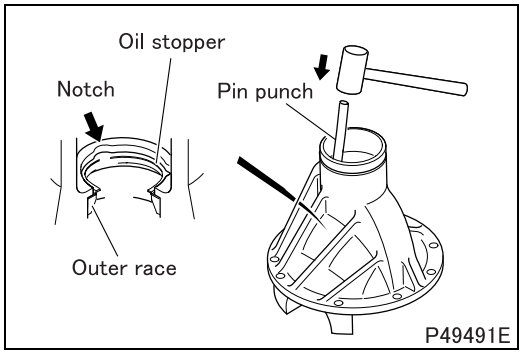

■ **Removal: Rear bearing outer race**

- Drive out the rear bearing outer race, together with the oil stopper, by tapping evenly at three indented parts in the differential carrier.

◆Installation procedure◆

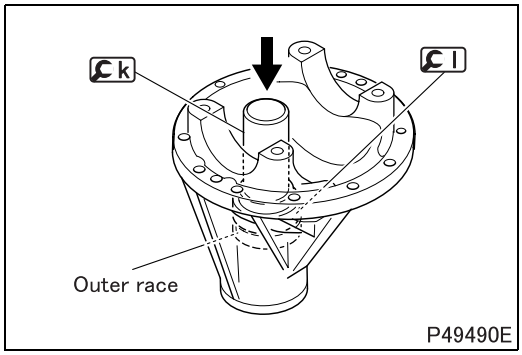

■ **Installation: Rear bearing outer race**

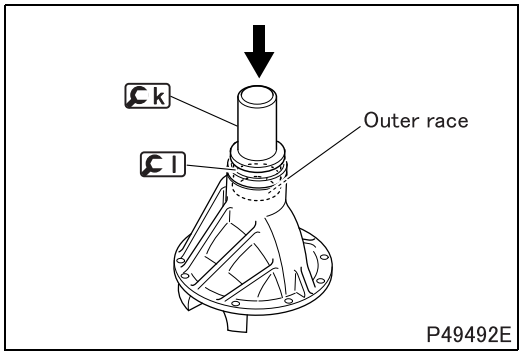

■ **Installation: Front bearing outer race**

https://truckmanualshub.com/

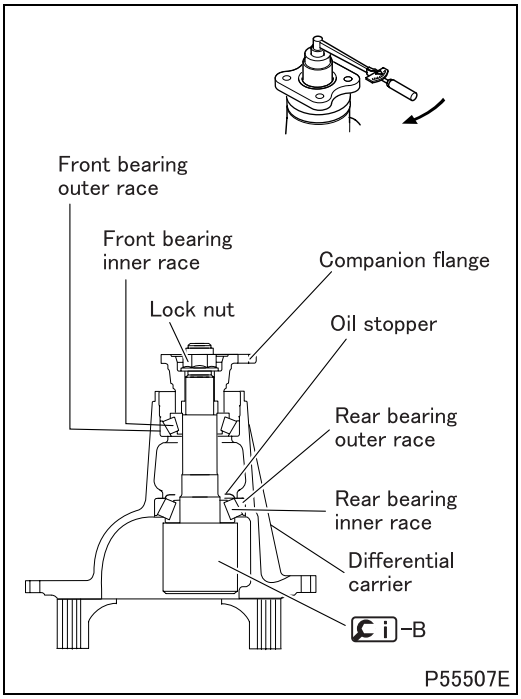

■ **Installation: Rear bearing shim**

[Selection (pinion height adjustment)]

- After installing the front bearing outer race, temporarily assemble i-B together with the illustrated parts into the differential carrier.

CAUTION ⚠

- **Do not assemble parts except the illustrated ones.**

- Tighten the lock nut so that the starting torque of the pinion bearing at i-B conforms to the standard value.

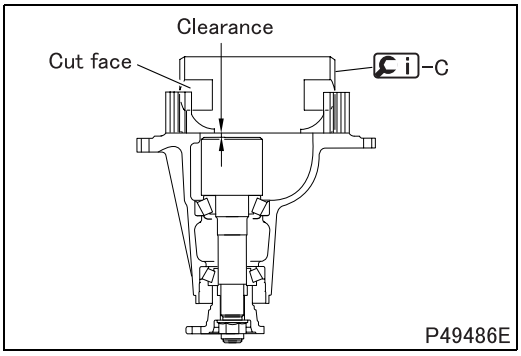

- Set i-C in the illustrated direction and measure clearance as illustrated.
- Select shims so that clearance becomes 1.5 mm {0.059 in.}.
  Thickness of shims available
  0.30 and 1.38 to 1.65 mm {0.012 and 0.054 to 0.065 in.} (10 thickness in 0.03 mm {0.012 in.} increments)

CAUTION ⚠

- **Select the number of rear bearing shims as least as possible.**

[Installation]

- If using a shim of 0.30 mm {0.012 in.} in thickness in combination with a shim of other thickness for installing rear bearing shims, install a shim of 0.30 mm {0.012 in.} in thickness on the rear bearing inner race to prevent wear-out.

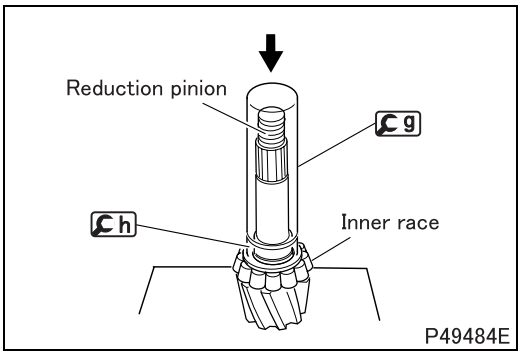

■ **Installation: Rear bearing inner race**

- Install the rear bearing inner race with the shim selected by the pinion height adjustment.

https://truckmanualshub.com/

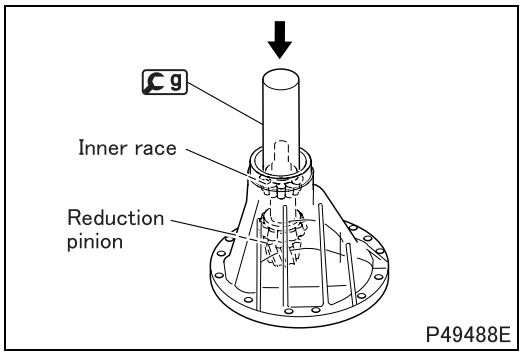

■ **Installation: Front bearing inner race**

- Install the front bearing inner race with the reduction pinion assembled into the differential carrier.

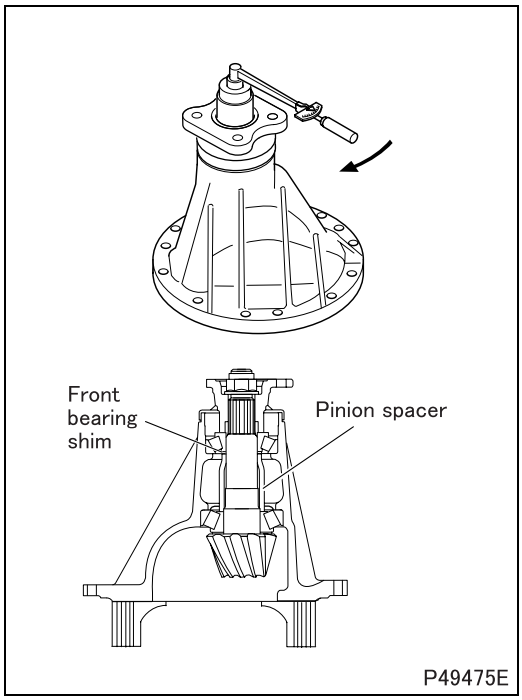

■ **Inspection: Starting torque of pinion bearing**

- After installing front bearing shims, measure the starting torque of the pinion bearing with no oil seal assembled.
- If the measured value deviates from the standard value, adjust by changing a pinion spacer and front bearing shims.
  Thickness of pinion spacers available
  64.07, 64.40 mm {2.52, 2.54 in.} (painted in white)
  Thickness of front bearing shims available
  0.03 and 2.00 to 2.33 mm {0.0012 and 0.079 to 0.092 in.} (12 thickness in 0.03 mm {0.012 in.} increments)

CAUTION ⚠

- **Select a pinion spacer so that the number of front bearing shims becomes as least as possible.**

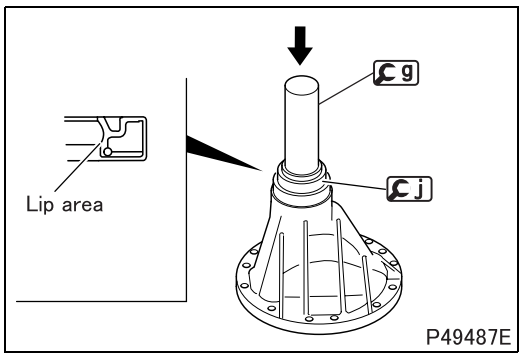

■ **Installation: Oil seal**

- Apply grease to the lip area of the oil seal and install it on the differential carrier in the illustrated direction.

■ **Installation: Companion flange**

- Install the companion flange in the same manner as for removal. (See **"■ Removal: Companion flange"**.)

https://truckmanualshub.com/

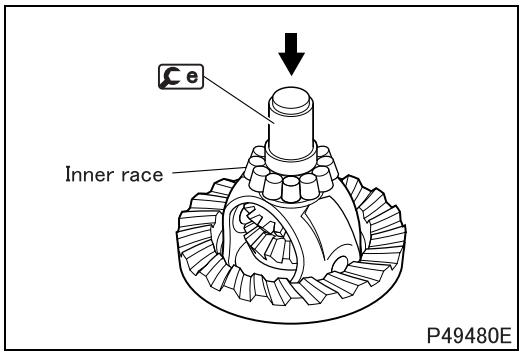

■ **Installation: Side bearing inner race**

■ **Installation: Side bearing nut**

- Install the side bearing nut in the same manner as for removal. (See **"■ Removal: Side bearing nut"**.)

◆Work after installation◆

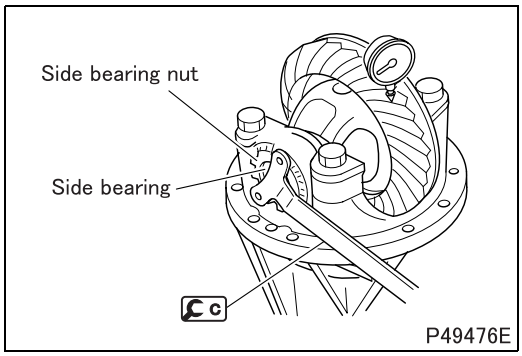

■ **Adjustment: Backlash between reduction gear and reduction pinion**

- Tighten the side bearing nut for adjustment to such extent that no preload is applied to the side bearing.

CAUTION ⚠

- **When one side bearing nut is loosened, be sure to tighten the other one the same amount to prevent the side bearing preload from changing.**

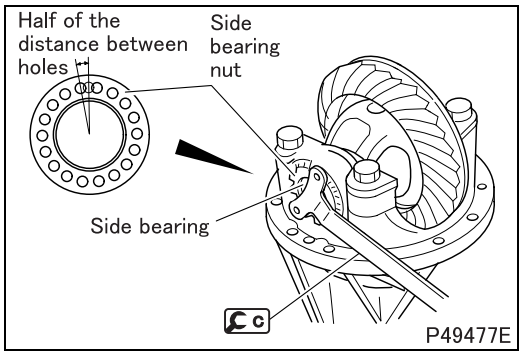

■ **Adjustment: Side bearing preload**

- After adjusting backlash between the reduction gear and reduction pinion, further tighten both of the side bearing nuts within the range of backlash to provide preload to the side bearing.
- The tightening amount of preload must be limited to the distance between two holes for combination of right and left sides.

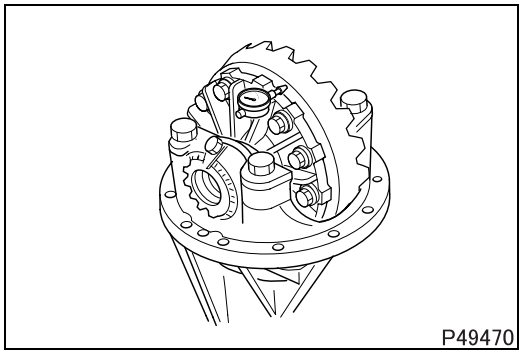

■ **Inspection: Wobble at back face of reduction gear**

- Measure wobble at the illustrated position of the reduction gear.
- If the measured value deviates from the standard value, replace the reduction gear and reduction pinion of the differential as a set.

https://truckmanualshub.com/

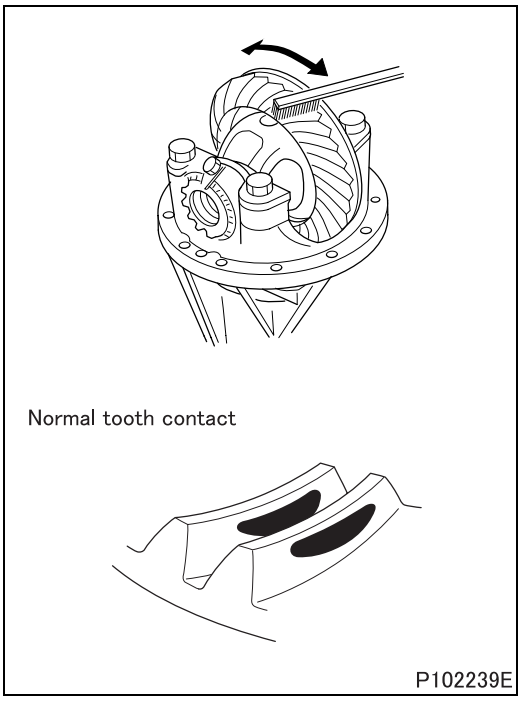

■ **Inspection: Tooth contact of reduction gear**

[Inspection]

- Apply red lead to three to four teeth at three equally spaced points of the reduction gear.
- Turn the reduction gear several times to ensure proper tooth contact.
  Tooth contact off-center to the small end side under no load moves toward to the center under a load.
- Adjust tooth contact if it is remarkably offset.

https://truckmanualshub.com/

[Adjustment]

- Optimize tooth contact by increasing or decreasing shim thickness or adjusting backlash between reduction gear and reduction pinion (using the side bearing nut).

CAUTION ⚠

- **If teeth are abnormally worn or tooth contact is excessively concentrated at the large end or small end side, always replace both the reduction gear and reduction pinion as a reduction gear set.**

Tooth contact on reduction gear	Adjustment procedure
Concentrated at addendum 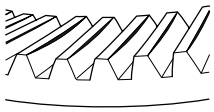 P102240	Advance reduction pinion to reduction gear (shims are added) 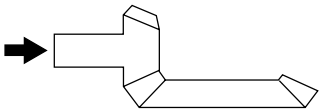 P55497
Concentrated at dedendum  P102241	Retard reduction pinion from reduction gear (shims are reduced) 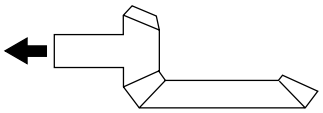 P55498
Concentrated at large end side 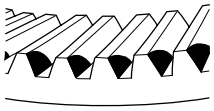 P102242	Advance reduction gear to reduction pinion center (less backlash) 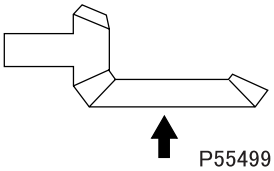 P55499
Concentrated at small end side 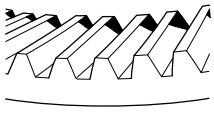 P102243	Retard reduction gear from reduction pinion center (more backlash) 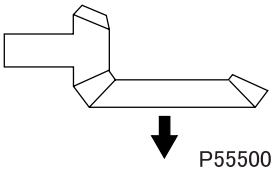 P55500

https://truckmanualshub.com/

REDUCTION AND DIFFERENTIAL

Differential

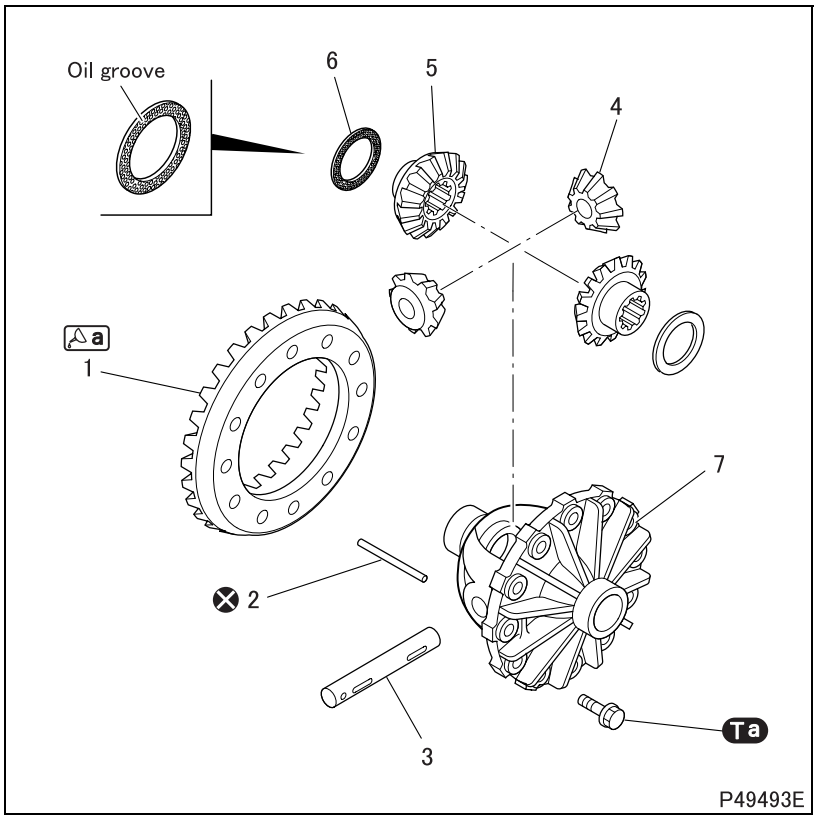

● Disassembly sequence

1 Reduction gear
2 Lock pin
3 Pinion shaft
4 Differential pinion
5 Side gear
6 Side gear washer
7 Differential case

⊗: Non-reusable parts

CAUTION ⚠

- **Be sure to replace the differential pinion and the side gear as a side gear set.**

● Assembly sequence

Follow the disassembly sequence in reverse.

Service standards (Unit: mm {in.})

Location	Maintenance item	Standard value	Limit	Remedy
4, 5	Backlash between differential pinion and side gear	0.15 to 0.20 {0.0059 to 0.0078}	0.3 {0.012}	Adjust or replace
5	Backlash between side gear and spline of drive shaft	0.07 to 0.16 {0.0028 to 0.0063}	0.5 {0.020}	Replace

Tightening torque (Unit: N·m {ft.lbs, kgf·m})

Mark	Parts to be tightened	Tightening torque	Remarks
Ta	Bolt (reduction gear mounting)	137.2 to 166.6 {101 to 122, 14 to 17}	–

Lubricant and/or sealant

Mark	Points of application	Specified lubricant and/or sealant	Quantity
a	Bolt threads of reduction gear	Loctite 271	As required

◆Work before removal◆

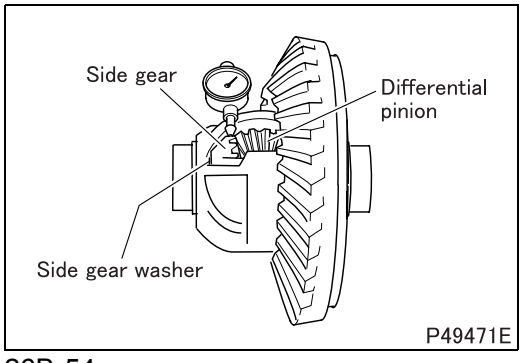

■ Inspection: Backlash between differential pinion and side gear

- If backlash is found faulty, thickness of the side gear washer is probably inappropriate.

https://truckmanualshub.com/

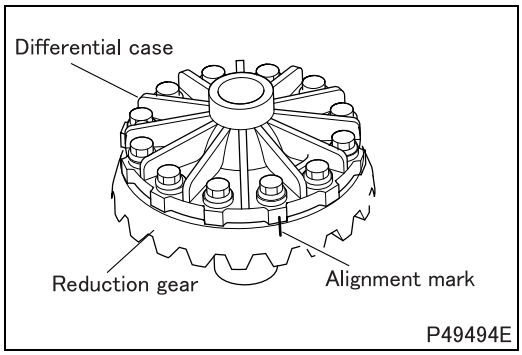

■ **Alignment marks: Reduction gear and differential case**

- Put alignment marks on the reduction gear and the differential case.

◆Inspection procedure◆

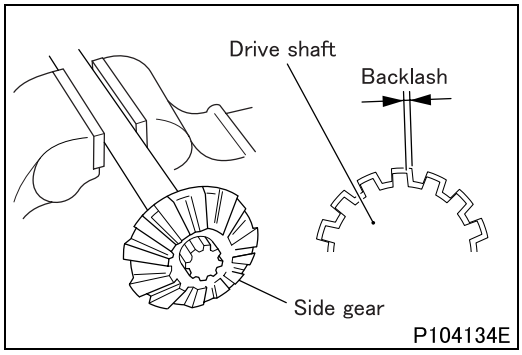

■ **Inspection: Backlash between side gear and spline of drive shaft**

- If the measured value exceeds the limit, replace defective parts.

◆Installation procedure◆

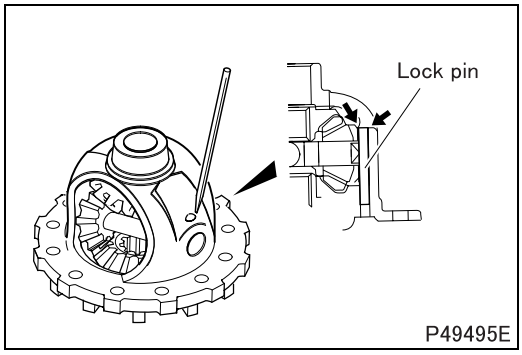

■ **Installation: Lock pin**

- After installing the lock pin, caulk it with a punch (two locations).

◆Work after installation◆

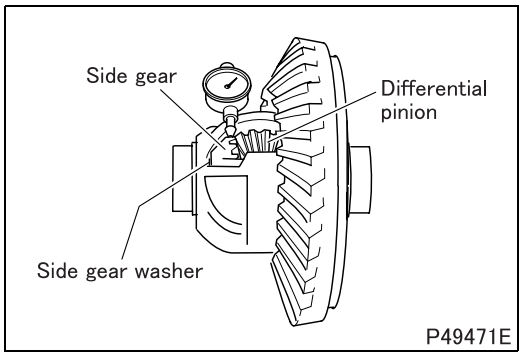

■ **Inspection: Backlash between differential pinion and side gear**

- If the measured value deviates from the standard value, adjust by changing thickness of the side gear washer.
  Thickness of side gear washers available
  1.4, 1.5, 1.6 mm {0.055, 0.059, 0.063 in.} (three thickness)

CAUTION ⚠

- **Use side gear washers of the same thickness for the right and left sides.**

https://truckmanualshub.com/

FUSO

Group 27

Rear Axle

MITSUBISHI FUSO TRUCK OF AMERICA, Inc.

Pub.No.00ELT0001-27

https://truckmanualshub.com/

INDEX

SPECIFICATIONS 27-2

STRUCTURE AND OPERATION
1. Wheel Hub and Rotor 27-3
2. Wheel Hub and Brake Drum 27-4
3. Reduction and Differential 27-5
4. Limited Slip Differential 27-6

TROUBLESHOOTING 27-8

ON-VEHICLE INSPECTION AND ADJUSTMENT
1. Inspection and Replacement of Axle Oil 27-10
2. Inspection of Wheel Bearing for Play 27-11

WHEEL HUB AND ROTOR
<FE52> 27-12
<FEC7, FEC9> 27-24

WHEEL HUB AND BRAKE DRUM 27-36

AXLE HOUSING 27-46

REDUCTION AND DIFFERENTIAL 27-50

https://truckmanualshub.com/

SPECIFICATIONS

Item		Specifications		
		FEC5	FEC7, FG	FEC9
Rear axle	Model	R033T	R035T	
	Type	Banjo type, full floating		
Reduction	Model	D033H	D035H	
	Type	Single-reduction hypoid gear		
	Gear ratio	4.875 5.285	5.285 5.714	6.166
Differential	Tooth shape	Straight bevel gear		
Gear oil	Grade	Normal: Maximum air temperature during operation below 40°C {104°F} API GL-5 SAE 90 Hot area: Maximum air temperature during operation above 40°C {104°F} API GL-5 SAE 140		
	Quantity L {qts}	4.5 {4.8}		
Mass kg {lb}		225 {495} (approximately)	250 {550} (approximately)	

- Use gear oil with a SAE viscosity of 140 when a vehicle is used under heavily-loaded, severe conditions such as continuous driving on uphill grades. However, the air temperature must be above 10°C {50°F}.
- Limited slip differential oil API GL-5 SAE 90 is used for models with a LSD (Limited Slip Differential).
- The mass differs between vehicle models.

https://truckmanualshub.com/

1. Wheel Hub and Rotor

<FEC5>

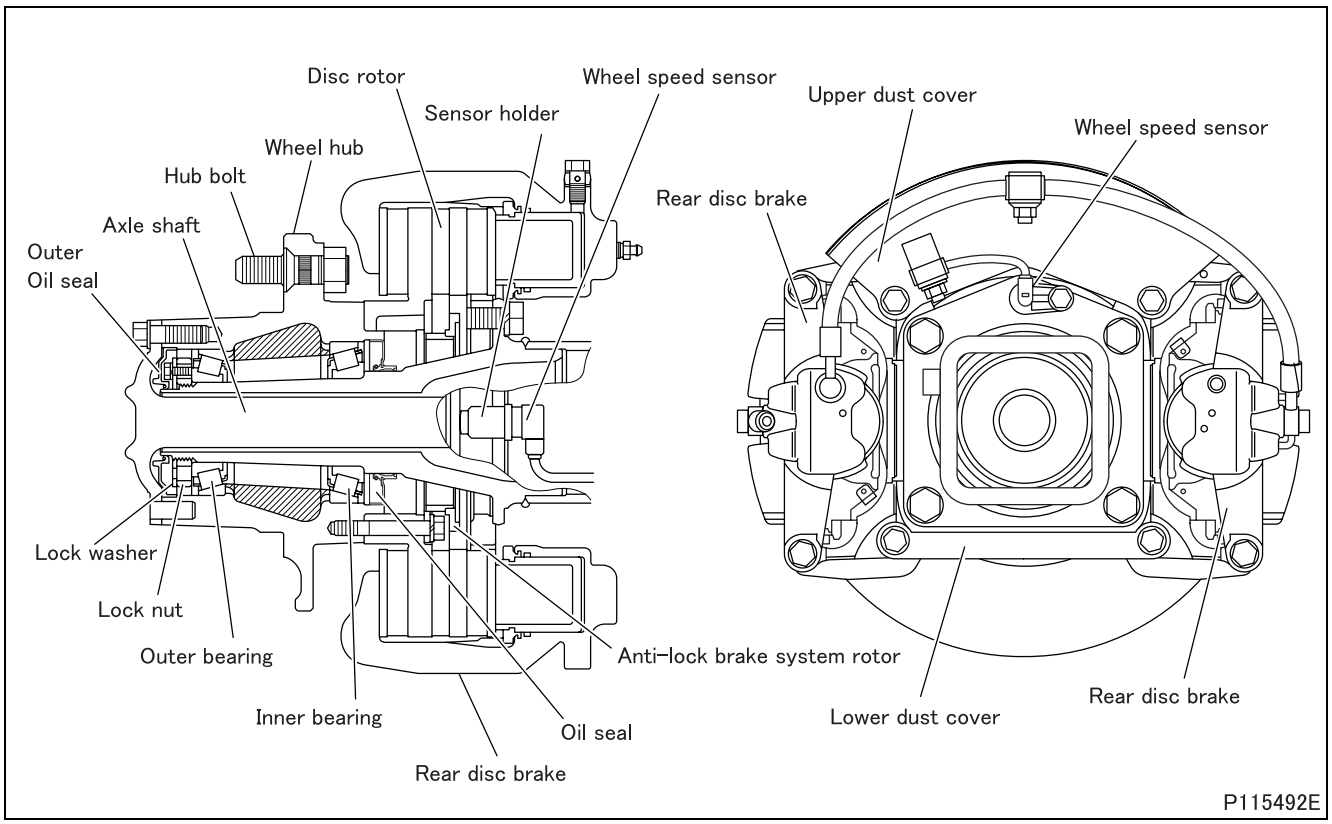

<FEC7, FEC9>

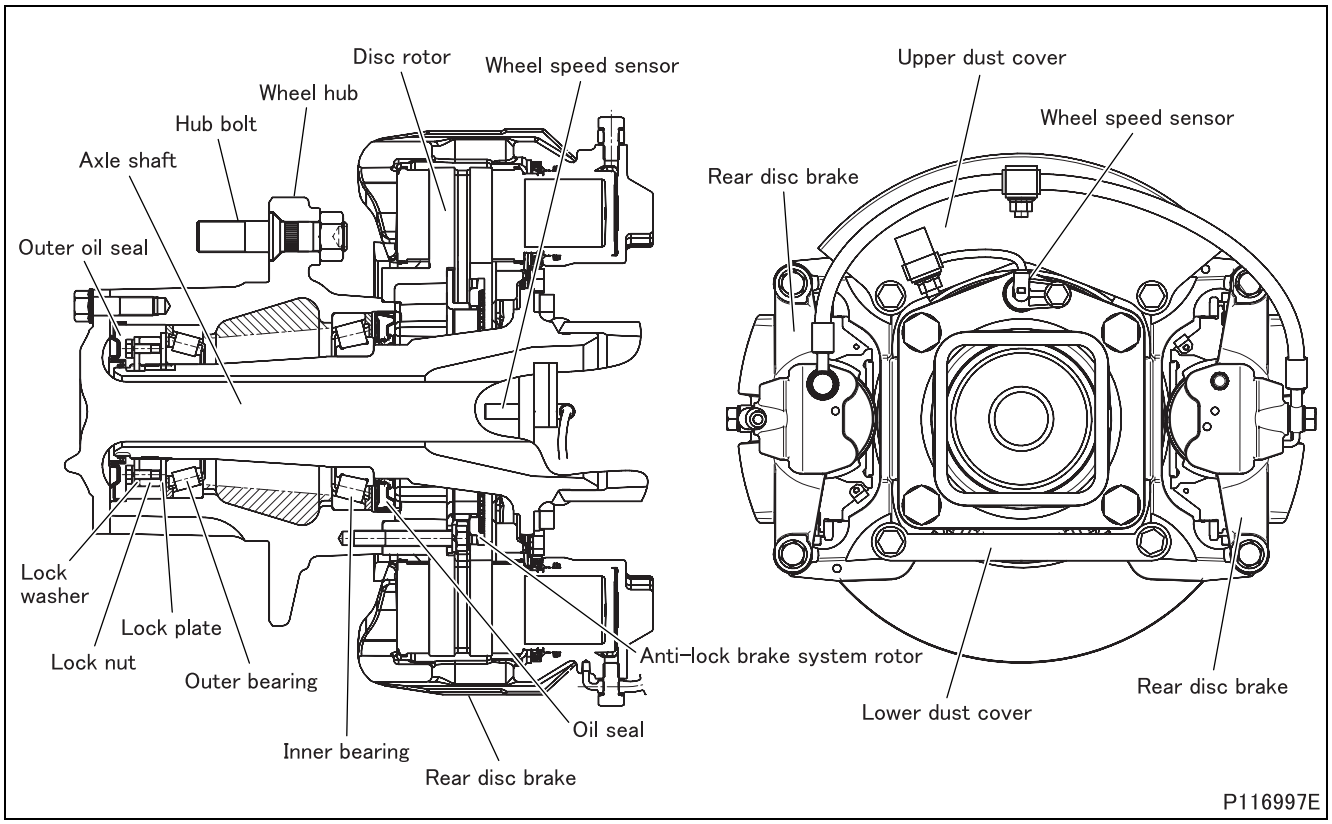

https://truckmanualshub.com/

2. Wheel Hub and Brake Drum

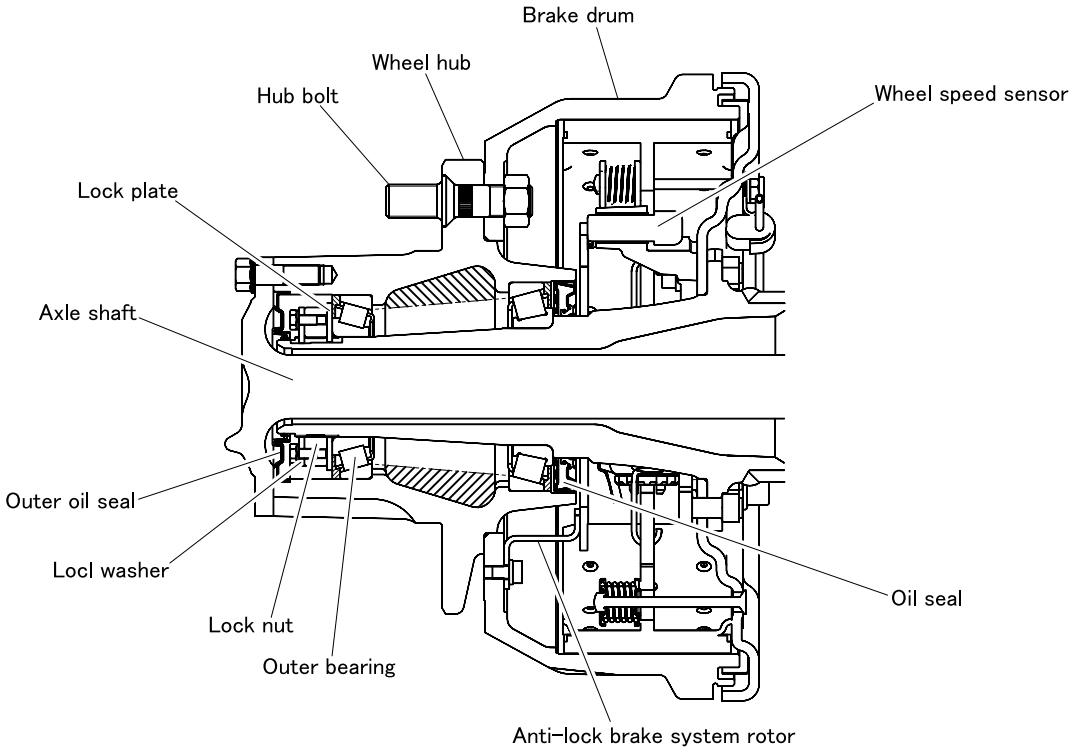

https://truckmanualshub.com/

3. Reduction and Differential

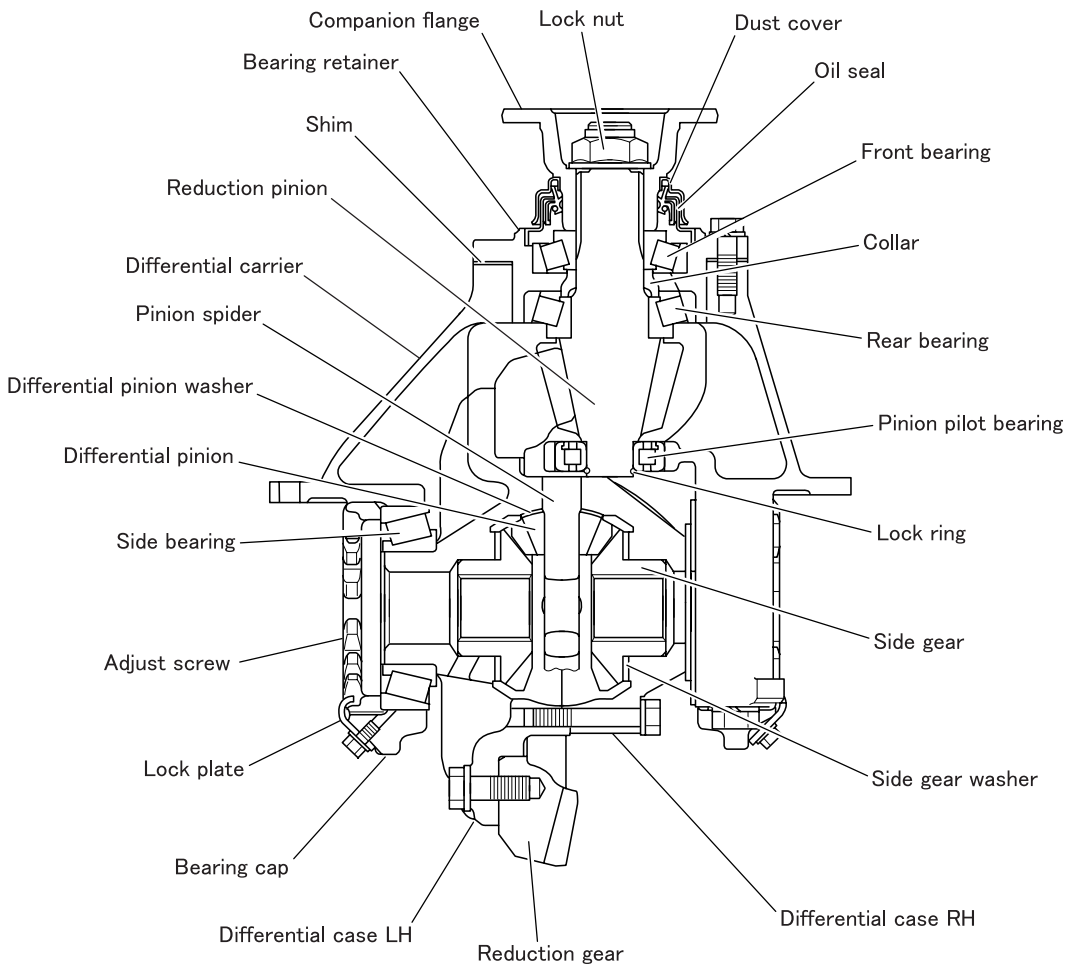

Limited slip differential

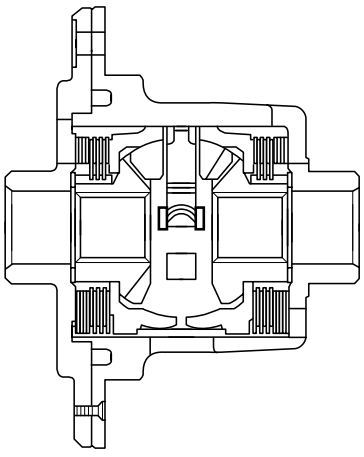

P58332E

https://truckmanualshub.com/

4. Limited Slip Differential

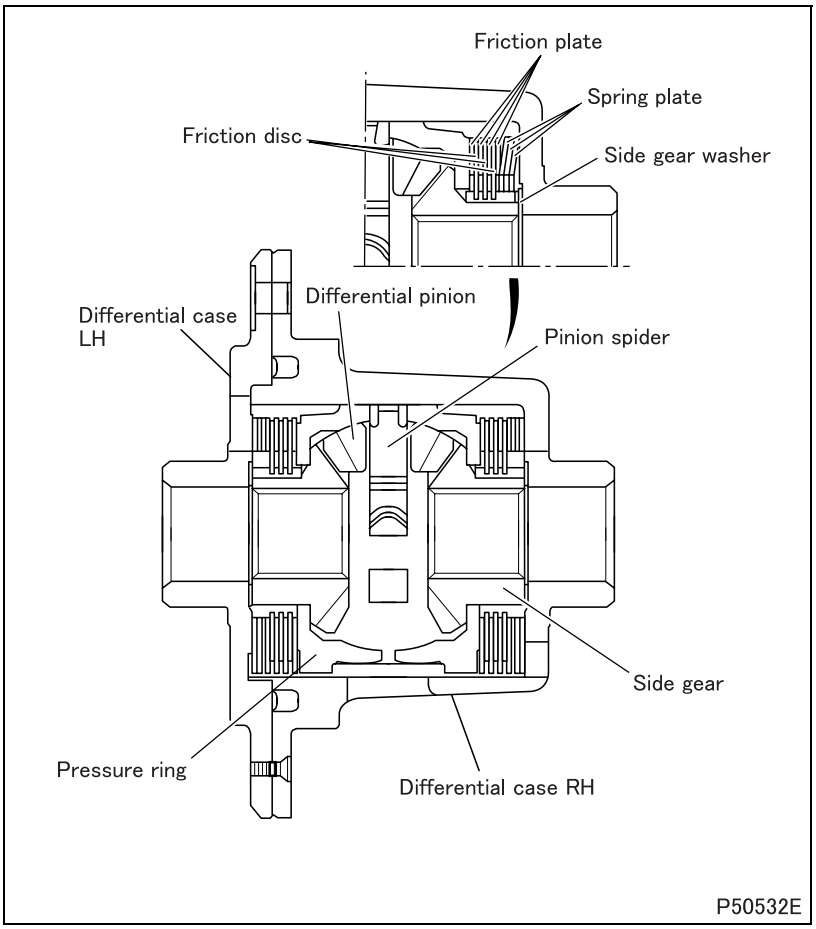

- The friction discs and spring discs, which are fitted in the side gears, and the friction plates, which are fitted in the differential case RH, are pushed against the pressure rings by the spring plates.
- The pressure rings fit in the groove inside the differential case RH and always rotate at the same speed.

4.1 Operating mechanism

- When one wheel spins, a difference in the revolution speed generates between the side gear and the differential case, LH and RH, which causes the friction discs, spring discs and friction plates to revolve relative to each other. This relative revolution produces a friction torque between the friction discs and friction plates.

https://truckmanualshub.com/

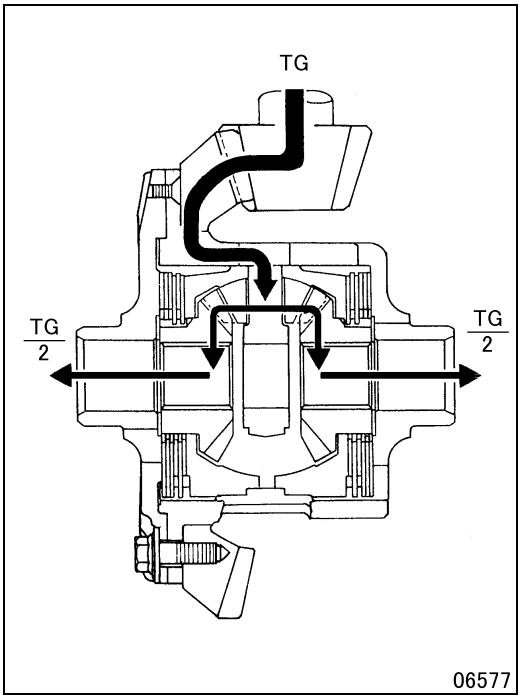

4.2 Operation during straight driving

- During straight driving, the right and left axle shafts rotate at the same speed, and no friction torque generates.
  TG: input torque

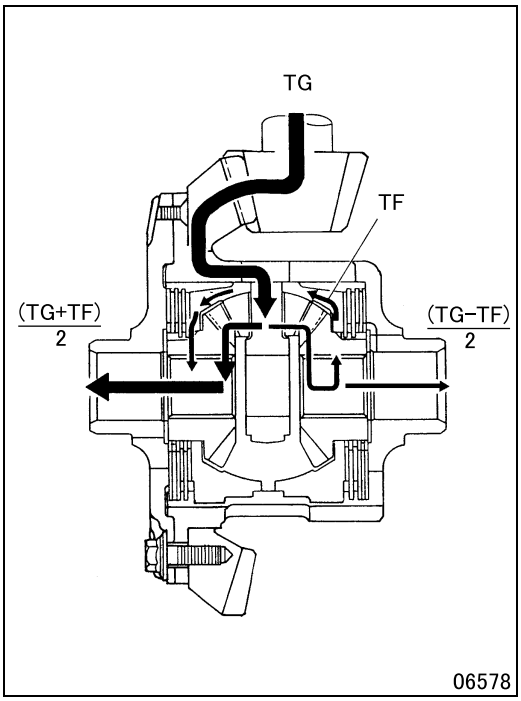

4.3 Operation when there is a difference in rotation speed between right and left wheels

- If one wheel is on a slippery surface such as mud and the other wheel is not, the differential function becomes effective due to a difference in surface resistance. In this state, friction torque TF is generated and this torque works in such a manner as to reduce the difference in rotations between right and left wheels. That is, the faster axle shaft is forced to slow down, and the slower axle shaft is forced to turn faster.
  If one wheel spins on a slippery surface, a large friction torque generates because such spinning makes a large rotational speed difference. Accordingly, a small torque is distributed to the spinning wheel while a large torque is distributed to the non-spinning wheel, which makes it easier for the vehicle to drive over the slippery surface.

$\frac{TG-TF}{2}$ High-speed side (spinning side)

$\frac{TG+TF}{2}$ Low-speed side

https://truckmanualshub.com/

Symptoms / Possible causes		Power transmission insufficient						Oil leakage from companion flange assembly	Oil leakage from differential carrier and axle housing	Oil leakage from axle shaft	Reference Gr
		Noise when starting and changing gears	Continuous noise while at a constant speed	Intermittent noise while at a constant speed	Noise while cornering	Tires drag while cornering	Propeller shaft turns but vehicle does not move				
Wheel hub, axle shaft, axle housing	Wheel hub bearing seized, worn or rotation faulty		O								
	Wheel hub bearing broken			O							
	Axle shaft mounting bolts loose			O						O	
	Axle shaft broken						O				
	Axle shaft slips out of spline of side gear						O				
	Axle shaft to spline of side gear backlash excessive	O									
	Oil seal faulty									O	
	Axle housing bent		O								
	Inspection plug and drain plug loose								O		
	Air breather and vent plug clogged							O		O	
Reduction and differential	Gear oil excessive							O			
	Gear oil insufficient	O	O								
	Oil seal faulty							O			
	Sealant faulty								O		
	Reduction and differential assembly mounting nuts and bolts loose			O					O		
	Differential carrier cracked or damaged								O		
	Bearing cap mounting bolts loose			O							
	Side bearing seized, worn or rotation faulty		O		O						
	Side bearing broken			O							
	Side bearing preload adjusted incorrectly		O								
	Reduction pinion or reduction gear broken	O		O	O		O				
	Reduction pinion or reduction gear worn		O		O						
	Reduction pinion or reduction gear damaged		O								
	Reduction gear backlash excessive	O									
	Reduction gear backlash or tooth contact adjusted incorrectly		O								

https://truckmanualshub.com/

Symptoms / Possible causes		Power transmission insufficient						Oil leakage from companion flange assembly	Oil leakage from differential carrier and axle housing	Oil leakage from axle shaft	Reference Gr
		Noise when starting and changing gears	Continuous noise while at a constant speed	Intermittent noise while at a constant speed	Noise while cornering	Tires drag while cornering	Propeller shaft turns but vehicle does not move				
Reduction and differential	Starting torque of pinion bearing faulty	O	O								
	Lock nut loose	O	O								
	Front and rear bearings seized		O								
	Front and rear bearings worn		O								
	Front and rear bearings broken			O							
	Pinion pilot bearing worn		O								
	Pinion pilot bearing seized or broken			O							
	Pinion shaft and pinion spider broken						O				
	Reduction gear and differential case mounting bolt and nut loose	O		O							
	Side gear backlash excessive	O									
	Side gear or differential pinion broken			O	O	O	O				
	Side gear or differential pinion seized					O	O				
	Side gear or differential pinion worn				O	O					
	Side gear washer worn or damaged			O	O	O					
	Limited Slip Differential (LSD) broken <With LSD>	O	O	O	O		O				

https://truckmanualshub.com/

ON-VEHICLE INSPECTION AND ADJUSTMENT

1. Inspection and Replacement of Axle Oil

Tightening torque (Unit: N·m {ft.lbs, kgf·m})

Mark	Parts to be tightened	Tightening torque	Remarks
–	Inspection plug	110 ± 10 {81 ± 7.4, 11 ± 1}	–
	Drain plug		

Lubricant and/or sealant

Mark	Points of application		Specified lubricant and/or sealant	Quantity
–	Axle housing	D033H, D035H	Gear oil: Normal: Maximum air temperature during operation below 40°C {104°F} API GL-5 SAE 90 Hot area: Maximum air temperature during operation above 40°C {104°F} API GL-5 SAE 140	4.5 L {4.8 qts}

- Use the gear oil with a SAE viscosity of 140 under heavily-loaded, severe conditions such as continuous driving on uphill grades. However, the air temperature must be above 10°C {50°F}.
- Limited slip differential oil API GL-5 SAE 90 is used for models with limited slip differential.

WARNING ⚠

- **The oil temperature is high immediately after the vehicle has stopped, so take care not to scald yourself.**

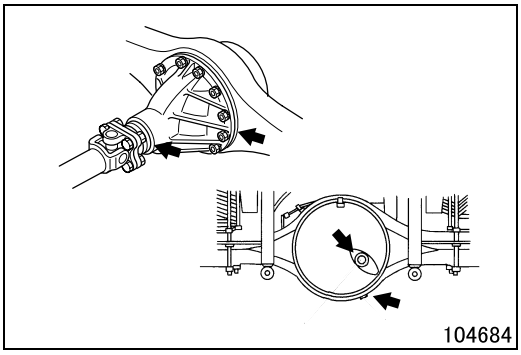
104684

[Inspection]

(1) Inspection of oil quantity

- Remove the inspection plug, and check that oil is filled up to the neck.
- If oil is not sufficient, fill oil from the inspection plug hole up to the neck.

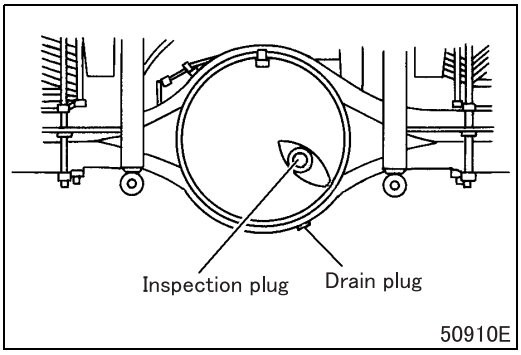

50910E

(2) Inspection of oil quality and contaminants

- When draining gear oil, check for oil quality, metal chips and metal powder.
- If an abnormally large amount of metal chips and metal powder is found, disassemble the assembly for service, as abnormalities may be caused inside.

[Replacement]

- Remove the drain plug to drain gear oil. Drainage can be made quickly with the inspection plug removed.
- As the drain plug (magnet type) is a magnet, clean it before installation.
- Fill the specified quantity of gear oil from the inspection plug hole.
- After filling, check that oil is filled up to the neck. If oil is not sufficient, replenish it.

https://truckmanualshub.com/

2. Inspection of Wheel Bearing for Play

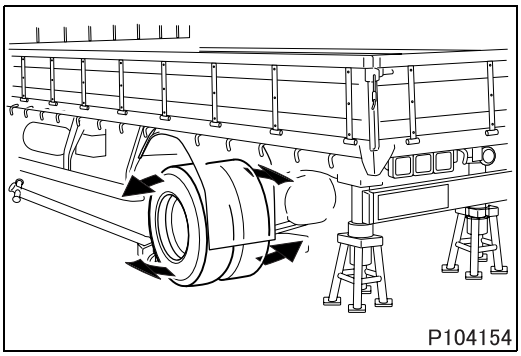

- Jack up the vehicle.
- Try to move the top and bottom of the rear tire by hand in the illustrated directions to inspect the wheel bearing for play.
- If play is found with the feel of hands, repeat the inspection procedure while having the brake pedal depressed by another person. When play is eliminated by applying the brake pedal, the symptom indicates that there is play in the wheel bearing. Then inspect the turning torque of the wheel bearing and adjust it as required. (See “WHEEL HUB AND BRAKE DRUM”.)
- If the turning torque of the wheel bearing cannot be adjusted correctly or play still remains after the adjustment, replace the wheel bearing with a new one. (See “WHEEL HUB AND BRAKE DRUM”.)

https://truckmanualshub.com/

WHEEL HUB AND ROTOR <FE52>

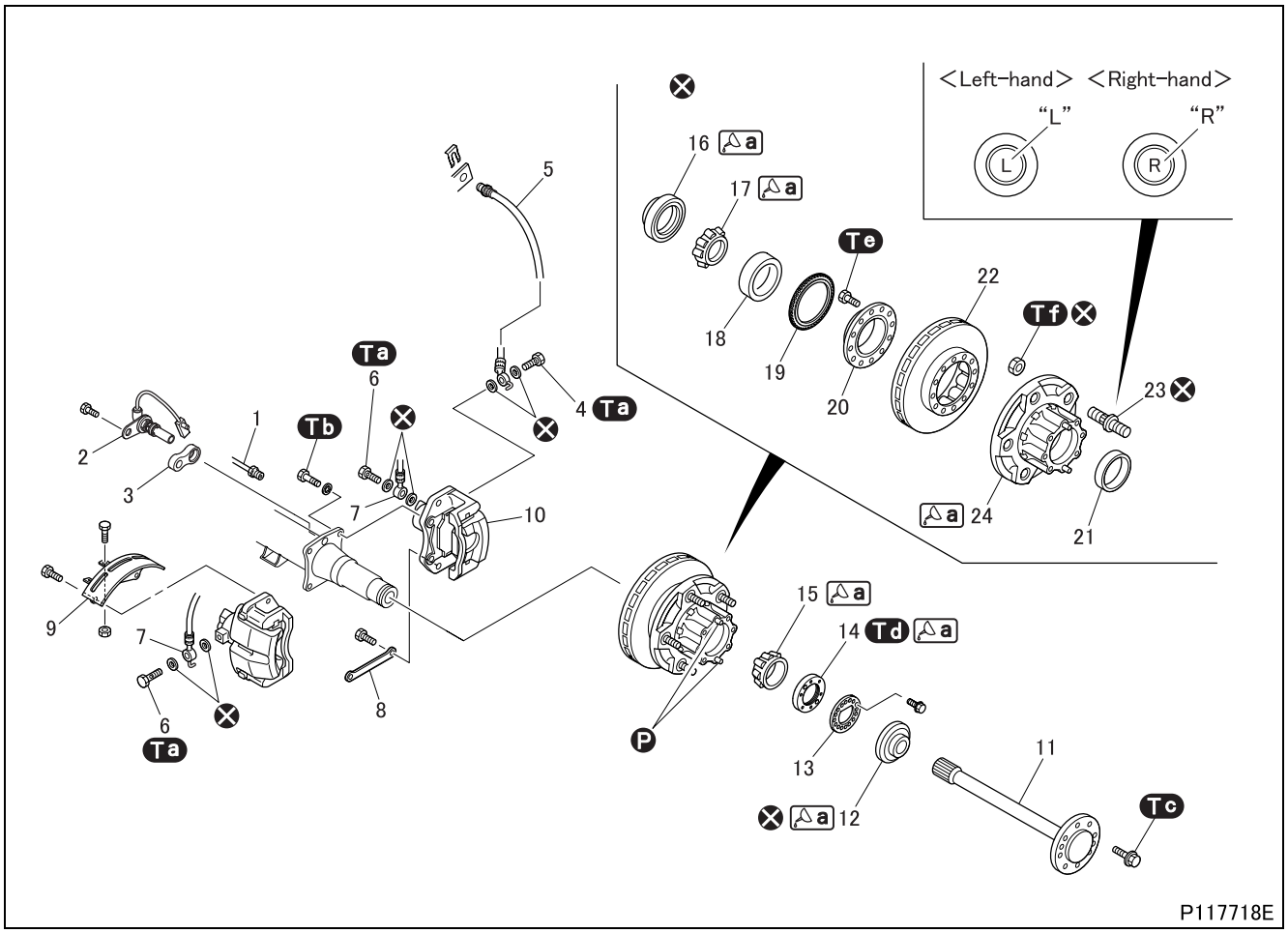

● **Disassembly sequence**

1 Brake pipe
2 Wheel speed sensor
3 Spacer
4 Eyebolt
5 Brake hose
6 Eyebolt
7 Brake hose
8 Lower dust cover
9 Upper dust cover
10 Rear disc brake (See Gr35.)
11 Axle shaft
12 Outer oil seal
13 Lock plate
14 Lock nut
15 Outer bearing inner race
16 Oil seal
17 Inner bearing inner race
18 Inner bearing outer race
19 Anti-lock brake system rotor
20 Anti-lock brake system rotor flange
21 Outer bearing outer race
22 Disc rotor
23 Hub bolt
24 Wheel hub

Ⓟ: Locating pin
⊗: Non-reusable parts

CAUTION ⚠

- **Plug the brake hose and brake pipe to prevent entry of dust and dirt after it has been removed.**

https://truckmanualshub.com/

● Assembly sequence

Follow the disassembly sequence in reverse.

CAUTION ⚠

- **Make sure that the disc rotor surface and disc brake pad surface are free from grease to avoid malfunction of the brakes.**
- **When installing the brake hose, take necessary steps to prevent entry of dust and dirt into the hose.**
- **Make sure that the brake hose is not twisted when installing it.**
- **Make sure that the brake hose does not interfere with any of surrounding parts when installed.**

- Inspect the drag torque of the disc brakes after assembly. (See Gr35.)
- Bleed air from the brake system after assembly. (See Gr35.)

Service standards (Unit: mm {in.})

Location	Maintenance item		Standard value	Limit	Remedy
–	Starting torque of wheel hub bearing (tangential force at hub bolt position with oil seal assembled)		2.0 to 3.9 N·m {1.4 to 2.9 ft.lbs, 0.2 to 0.4 kgf·m} (tangential force: 17.5 to 34.2 N {3.9 to 7.7 lbs, 1.8 to 3.5 kgf})	–	Adjust or replace
12	Axle shaft	Bend	0 to 1 {0 to 0.039}	2 {0.079}	Replace
		Bend at flange face	0 to 0.03 {0 to 0.0012}	0.05 {0.0020}	

Tightening torque (Unit: N·m {ft.lbs, kgf·m})

Mark	Parts to be tightened		Tightening torque	Remarks
Ta	Eyebolt		22 ± 2 {16 ± 1.5, 2.24 ± 0.20}	–
Tb	Bolt (rear disc brake mounting)		98 to 140 {72 to 103, 10 to 14}	–
Tc	Bolt (axle shaft mounting)		98 to 120 {72 to 87, 10 to 12}	–
Td	Lock nut	Primary tightening	98 to 130 {72 to 96, 10 to 13}	–
		Secondary tightening after primary tightening	30 to 40 {22 to 29, 3 to 4}	–
Te	Bolt (wheel hub and disc rotor mounting)		45 to 60 {33 to 44, 4.6 to 6.1}	–
Tf	Nut (hub bolt mounting)		340 ± 40 {251 ± 30, 35 ± 4}	–

Lubricant and/or sealant

Mark	Points of application	Specified lubricant and/or sealant	Quantity
a	Lip area of outer oil seal	Wheel bearing grease [NLGI No. 2 (Li soap)]	As required
	Thread area of lock nut		
	Pack space between rollers of outer bearing inner race and inner bearing inner race		
	Lip area of oil seal		
	Pack interior of wheel hub		370 ± 37 g ※ {13.1 ± 1.31 oz}

※: For a wheel hub

https://truckmanualshub.com/

Special tools (Unit: mm {in.})

Mark	Tool name and shape	Part No.	Application
a	Lock nut adjust tool 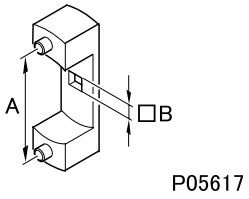 P05617 A: 70 {2.76} B: □12.7 {0.50}	MB999150	Removal and installation of lock nut
b	Hub puller A: Hub puller body B: Attachment C: Bolt 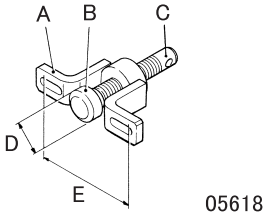 05618 D: ϕ50 {1.97} E: 165 {6.50}	MB999070 A: MB999071 B: MB999073 C: MB999072	Removal of wheel hub and rotor
c	Oil seal installer 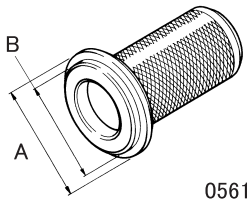 05619 A: ϕ84 {3.31} B: ϕ70 {2.76}	MB999097	Installation of inner and outer bearing outer races (to be used in combination)
d	Bearing installer 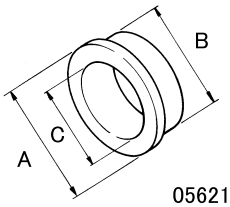 05621 A: ϕ109 {4.29} B: ϕ99 {3.90} C: ϕ77 {3.03}	MB999098	
e	Oil seal installer 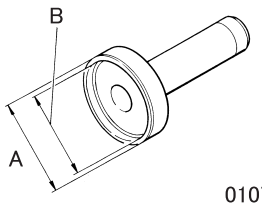 01076 A: ϕ130 {5.12} B: ϕ100 {3.94}	MH061752	Installation of oil seal (to be used in combination)

https://truckmanualshub.com/

◆Removal procedure◆

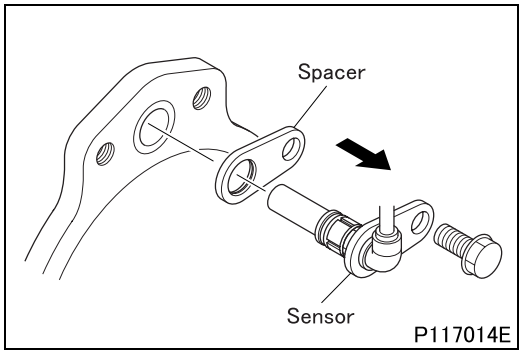

■ **Removal: Wheel speed sensor**

CAUTION ⚠

- **When removing the wheel speed sensor, never apply a force to it such as tapping it with a hammer, prying it with a screwdriver and pulling the harness, as doing so may damage the wiring.**
- **Be careful not to damage the tip of the wheel speed sensor after removing it.**

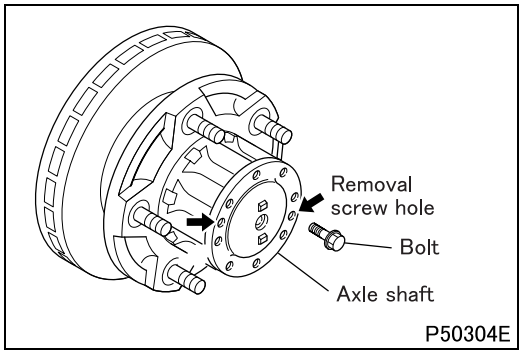

■ **Removal: Axle shaft**

- Screw two axle shaft mounting bolts evenly into the axle shaft removal screw holes to remove the axle shaft.

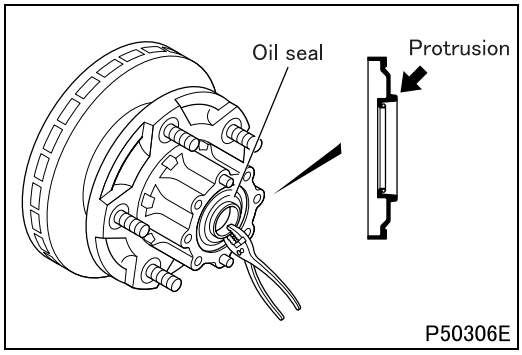

■ **Removal: Outer oil seal**

- To remove the outer oil seal, pull the protrusion on the outer periphery of the outer oil seal evenly around the whole circumference with pliers.

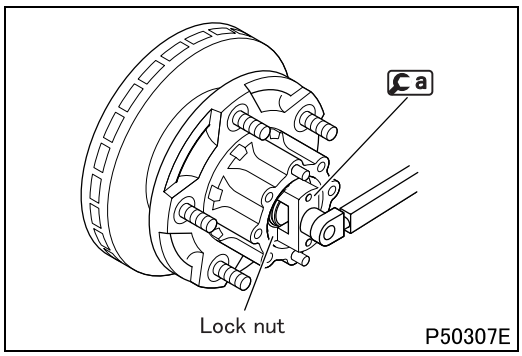

■ **Removal: Lock nut**

https://truckmanualshub.com/

WHEEL HUB AND ROTOR <FE52>

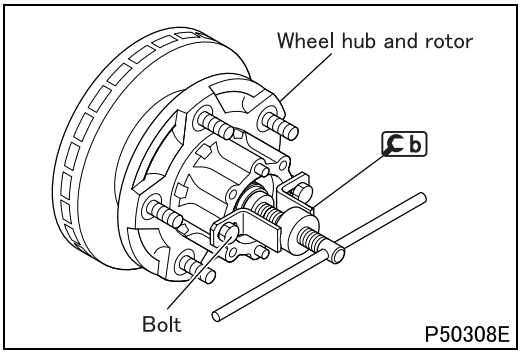

P50308E

■ **Removal: Wheel hub and rotor**

• Install b using axle shaft mounting bolts and remove the wheel hub and rotor assembly.

CAUTION ⚠

• **If the wheel hub and rotor assembly was removed from the axle housing, replace the oil seal with a new one.**

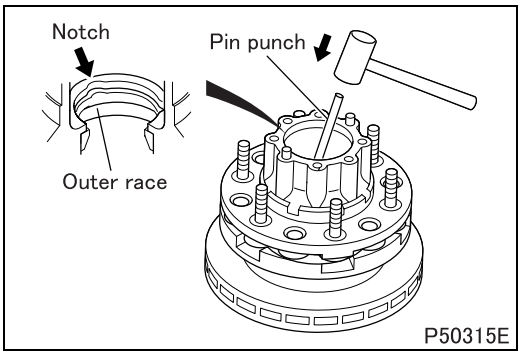

P50315E

■ **Removal: Inner bearing outer race**

• Drive out the inner bearing outer race by tapping evenly at the three notches in the wheel hub.

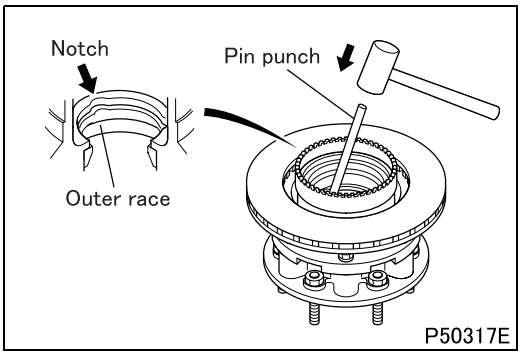

P50317E

■ **Removal: Outer bearing outer race**

• Drive out the outer bearing outer race by tapping evenly at the three notches in the wheel hub.

◆Inspection procedure◆

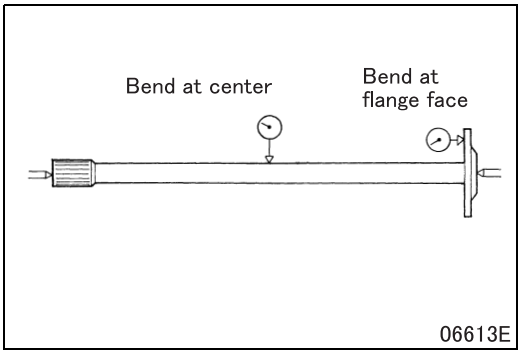

06613E

■ **Inspection: Axle shaft**

• Measure the bend of the axle shaft at its center.

NOTE

• **Give the axle shaft one complete turn and read the dial gauge at this time. The bend is one half of the reading.**

• If the measured value exceeds the limit, replace the axle shaft.
• Measure the bend of the flange face of the axle shaft.
• If the measured value exceeds the limit, replace the axle shaft.

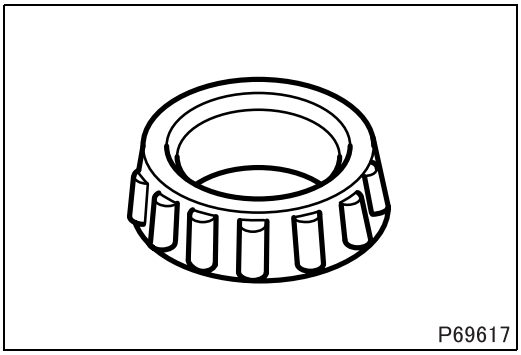
P69617

■ **Inspection: Outer bearing inner race**

• Inspect the outer bearing inner race after cleaning the bearing to remove grease completely.
• If any damage, wear, or a poor rotating conditions are evident in the inner race, replace it with a new one.
• The inner race and outer race should be replaced as a set.

https://truckmanualshub.com/

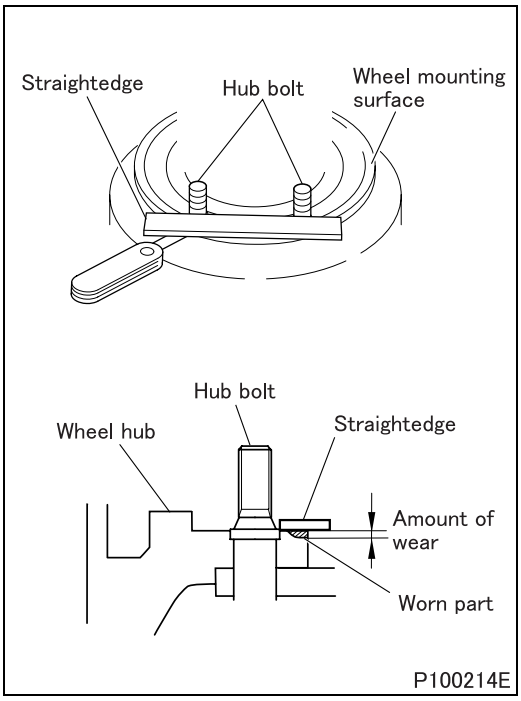

■ **Inspection: Wheel hub**

(1) Visual inspection

- Visually and physically inspect the disc wheel mounting surface. If there is damage or cracking on it, replace the wheel hub.
- Make sure that there is no rust, dust, paint or foreign material on the disc wheel mounting surface of the wheel hub to prevent the wheel nut from becoming loose.
- If any abnormality is found, remove it with sandpaper.

(2) Wear in disc wheel mounting part of wheel hub

- Clean the wheel mounting surface of the wheel hub before inspection.
- Place a straightedge against two hub bolts on the disc wheel mounting surface.

CAUTION ⚠

- **Make sure that the straightedge does not run onto the hub bolt.**

- Use feeler gauges to measure the amount of wear at the outer periphery of the wheel hub.
  Measure the amount of wear at every hub bolt.
- If the amount of wear at any point exceeds the following standard value, inspect the wheel hub for cracks.
  Wear standard value: 0.8 mm {0.031 in.}

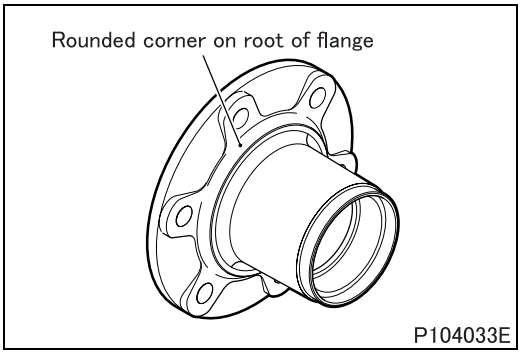

(3) Crack check

- Inspect for any cracks in the rounded corner on the root of the flange using magnetic particle or liquid penetrant testing.
  If any cracks are found, replace the wheel hub.
- If any cracks are found in a wheel hub bolt, replace it.
- If there is cracking or stepped wear on the wheel hub mounting surface of the wheel disc, replace it. (See Gr31.)

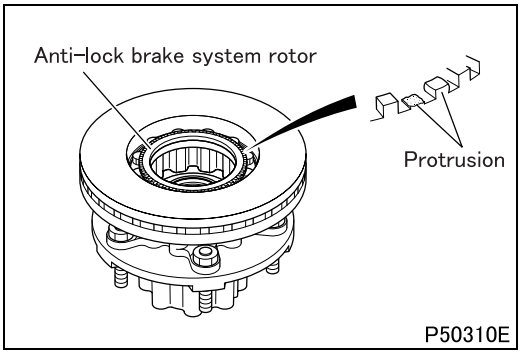

■ **Inspection: Anti-lock brake system rotor**

[Inspection]

- Remove any debris on the anti-lock brake system rotors and check the protrusions of the anti-lock brake system rotor for chipping and flattening.
- If any abnormality is found, replace the anti-lock brake system rotor.

Replacement of anti-lock brake system rotor

[Removal]

- Remove the wheel hub and disc rotor, taking care not to damage them.

https://truckmanualshub.com/

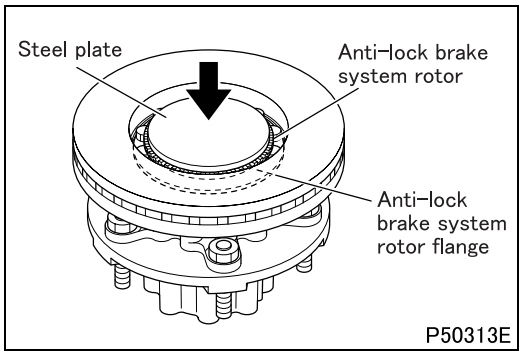

[Installation]

- Warm the anti-lock brake system rotor to approximately 150°C {302°F}.
- Install the anti-lock brake system rotor and anti-lock brake system rotor flange evenly using a steel plate so as not to allow them to tilt.

WARNING ⚠

- **Handling the warmed rotor with bare hands may cause burns.**

■ Inspection: Inner bearing inner race

- Inspect the inner bearing inner race in the same manner as the outer bearing inner race.
  (See **"■ Inspection: Outer bearing inner race".**)

◆Installation procedure◆

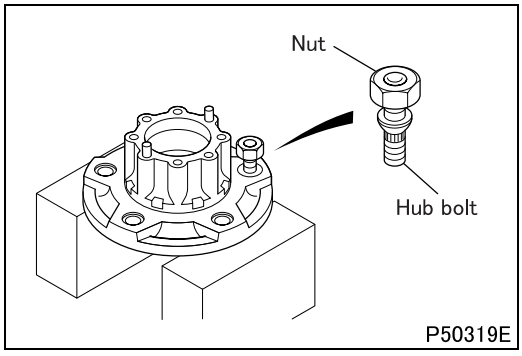

■ Installation: Hub bolt

- Screw the nut into the hub bolt until just before they become flush.
- Drive the hub bolt into the wheel hub vertically by hitting the end face of the nut with a brass punch or the like.

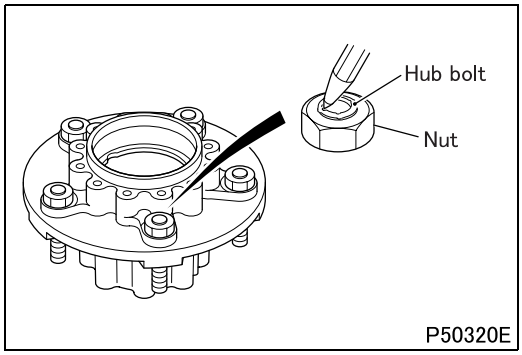

- After tightening the nut to the specified torque, stake it with a punch.

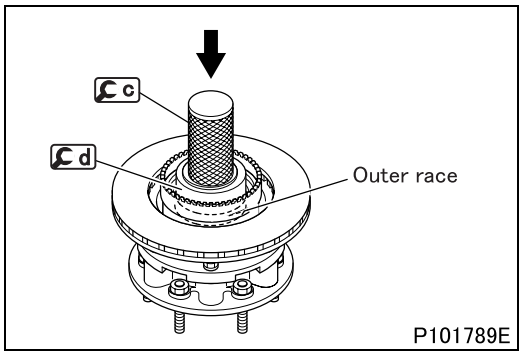

■ Installation: Outer bearing outer race

https://truckmanualshub.com/

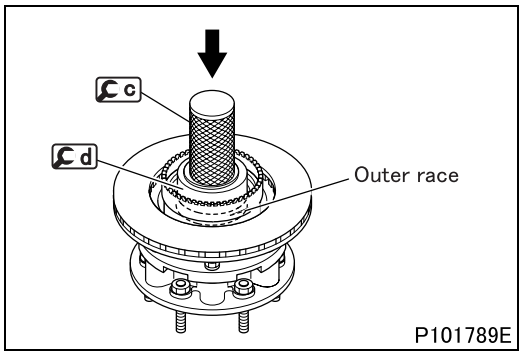

■ **Installation: Inner bearing outer race**

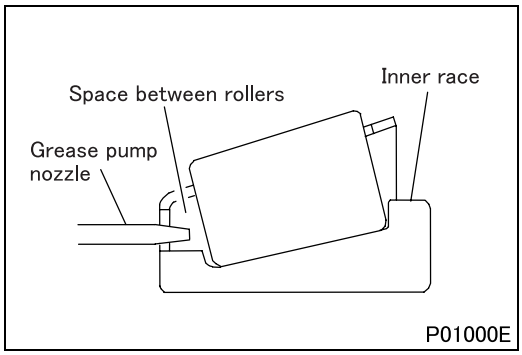

■ **Installation: Packing grease in inner bearing inner race**

- Insert the grease pump nozzle into the space between the rollers of the inner bearing inner race to pack grease sufficiently.

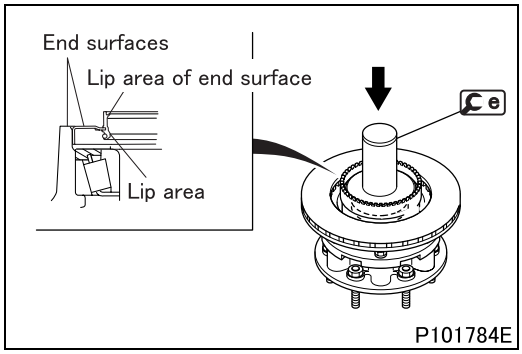

■ **Installation: Oil seal**

- Apply grease to the lip area of the oil seal and install the oil seal in the wheel hub so that the oil seal faces the illustrated direction and the end surface of the oil seal is flush with the end surface of the wheel hub.

■ **Installation: Packing grease in outer bearing inner race**

- Follow the same procedure as packing the inner bearing inner race with grease.
  (See **"■ Installation: Packing grease in inner bearing inner race"**.)

https://truckmanualshub.com/

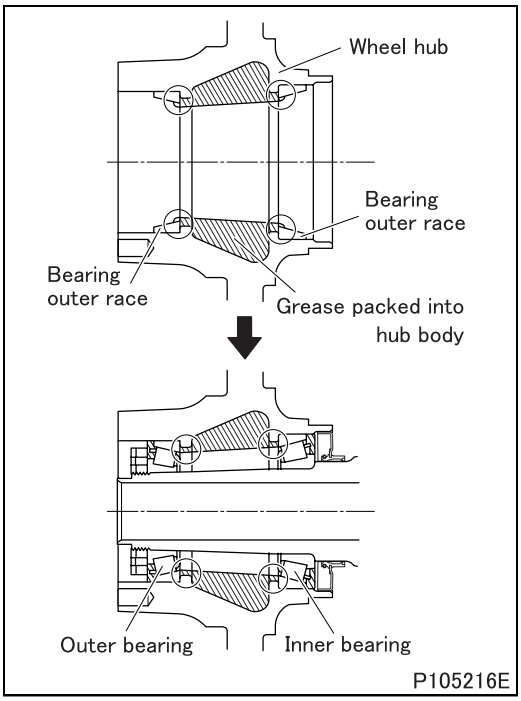

■ **Installation: Packing grease in wheel hub**

CAUTION ⚠

- **The wheel bearing may seize if these instructions are not followed.**
- **Apply the specified amount of grease.**

- As shown in the illustrations at the left, fill grease inside of the hub body in such a manner that grease covers the outer bearing and inner bearing outer races. Make sure that grease reaches the outer bearing and inner bearing.

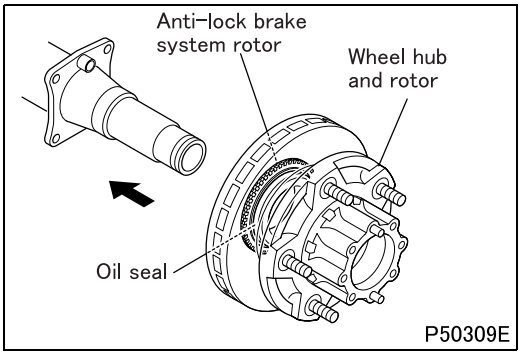

■ **Installation: Wheel hub and rotor**

- Slowly install the wheel hub and rotor assembly so as not to cause damage to the oil seal and anti-lock brake system rotor.

CAUTION ⚠

- **If the anti-lock brake system rotor is damaged, wheel speed sensor signals become abnormal, causing the anti-lock brake system to malfunction.**

■ **Adjustment: Starting torque of wheel hub bearing**

CAUTION ⚠

- **Unless this adjustment procedure is performed, the wheel bearing may seize.**

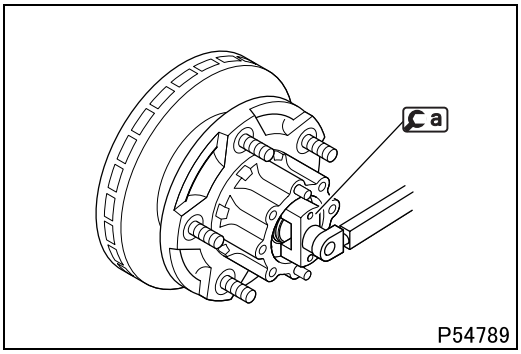

[Adjustment]

- Tighten the lock nut to the specified torque (primary tightening) while turning the wheel hub and rotor, and then loosen it completely.
- Smooth operation of the outer bearing and inner bearing by turning the wheel hub and rotor several times, and then tighten the lock nut to the specified torque (secondary tightening).

https://truckmanualshub.com/

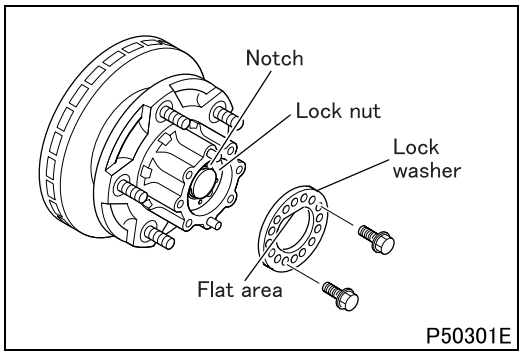

- Insert the flat area of the lock washer, aligning it with the notch of the axle housing, and mount two bolts diagonally to the lock nut.
- If the lock nut does not align with a screw hole of the lock washer, align by loosening the lock nut. Make sure that there is no play in the axial direction.

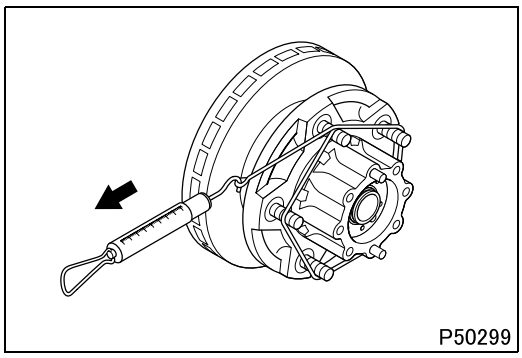

[Inspection]

- After installing the lock washer, carry out the following inspections.
- Measure the tangential force at the hub bolt position using a spring gauge.
- If the tangential force is within the specified value, the starting torque conforms to the standard value. If the measured value deviates from the specified value, repeat adjustment because the adjustment of the lock nut may be insufficient.
- If the result is found to be abnormal, replace the outer and inner bearings.

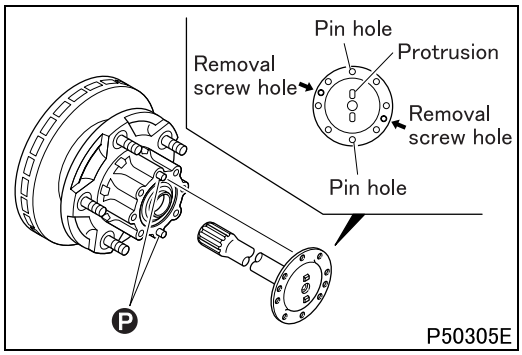

■ Installation: Axle shaft

- Align the pin hole of the locating pin with that of the axle shaft to install the axle shaft.

NOTE

- **A pin hole is not necessarily located at the position of a protrusion on the axle shaft flange face as illustrated. The second hole from a removal screw hole clockwise is a pin hole.**

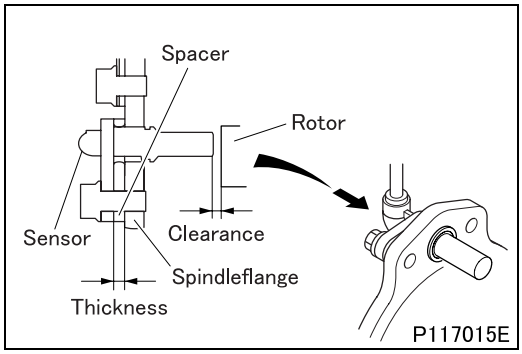

■ Installation: Wheel speed sensor

- Install the wheel speed sensor so that the sensor and spacer are firmly in contact with the holder.
  Spacer thickness: 8 mm {0.31 in.}

CAUTION ⚠

- **Be sure to install the specified spacer in the correct position. Using a spacer with an incorrect thickness or installing the spacer in an incorrect position could cause ABS malfunction.**
- **When installing the wheel speed sensor, be careful not to damage the O-ring of the sensor.**
- **When installing the wheel speed sensor, never apply a force to it such as tapping it with a hammer, prying it with a screwdriver and pulling the harness, as doing so may damage the wiring.**

https://truckmanualshub.com/

- After installing the wheel speed sensor, check that the clearance between the end of the sensor and the ABS rotor is the following dimension:
  Clearance: 1 ± 0.7 mm {0.039 ± 0.028 in.}

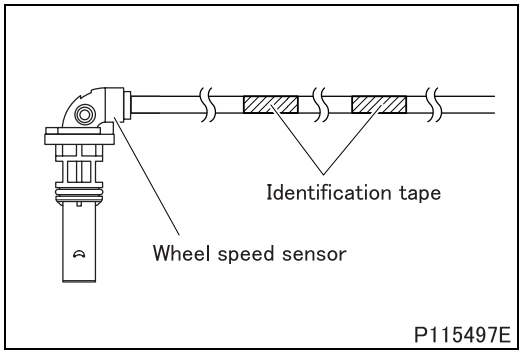

- Using clips, secure the wheel speed sensor harness in place at the identification tape portions, ensuring that the harness is free of kinks, slack and/or interference with other parts.

https://truckmanualshub.com/

M E M O

https://truckmanualshub.com/

WHEEL HUB AND ROTOR <FEC7, FEC9>

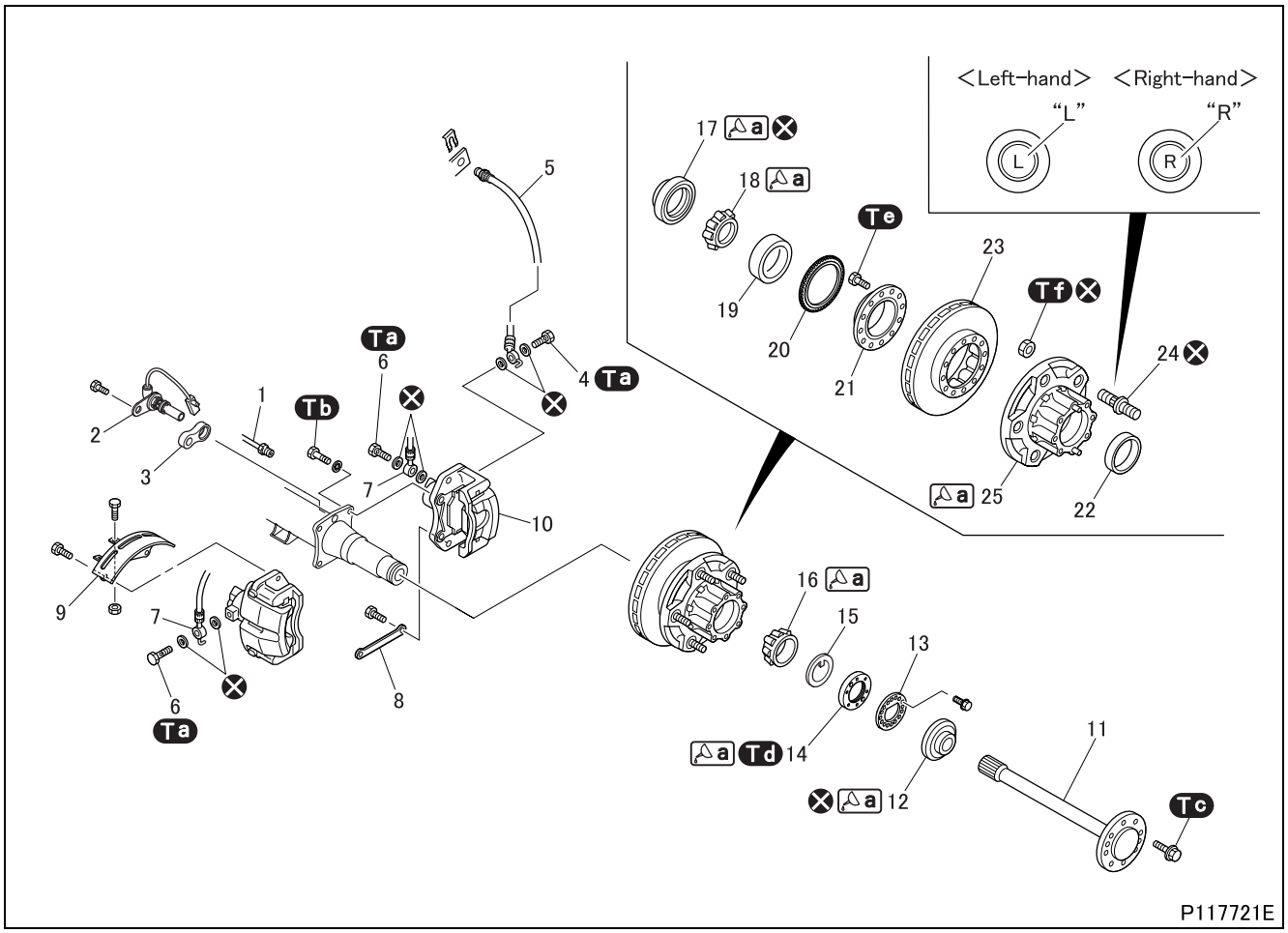

● **Disassembly sequence**

1 Brake pipe
2 Wheel speed sensor
3 Spacer
4 Eyebolt
5 Brake hose
6 Eyebolt
7 Brake hose
8 Lower dust cover
9 Upper dust cover
10 Rear disc brake (See Gr35.)
11 Axle shaft
12 Outer oil seal
13 Lock plate
14 Lock nut
15 Lock washer
16 Outer bearing inner race
17 Oil seal
18 Inner bearing inner race
19 Inner bearing outer race
20 Anti-lock brake system rotor
21 Anti-lock brake system rotor flange
22 Outer bearing outer race
23 Disc rotor
24 Hub bolt
25 Wheel hub

Ⓟ: Locating pin
⊗: Non-reusable parts

CAUTION ⚠

- **Plug the brake hose and brake pipe to prevent entry of dust and dirt after it has been removed.**

https://truckmanualshub.com/

● Assembly sequence

Follow the disassembly sequence in reverse.

CAUTION ⚠

- **Make sure that the disc rotor surface and disc brake pad surface are free from grease to avoid malfunction of the brakes.**
- **When installing the brake hose, take necessary steps to prevent entry of dust and dirt into the hose.**
- **Make sure that the brake hose is not twisted when installing it.**
- **Make sure that the brake hose does not interfere with any of surrounding parts when installed.**

- Inspect the drag torque of the disc brakes after assembly. (See Gr35.)
- Bleed air from the brake system after assembly. (See Gr35.)

Service standards (Unit: mm {in.})

Location	Maintenance item		Standard value	Limit	Remedy
–	Starting torque of wheel hub bearing (tangential force at hub bolt position with oil seal assembled)		2.0 to 3.9 N·m {1.4 to 2.9 ft.lbs, 0.2 to 0.4 kgf·m} (tangential force: 16.5 to 32.2 N {3.7 to 7.2 lbs, 1.7 to 3.3 kgf})	–	Adjust or replace
11	Axle shaft	Bend	0 to 1 {0 to 0.039}	2 {0.079}	Replace
		Bend at flange face	0 to 0.03 {0 to 0.0012}	0.05 {0.0020}	

Tightening torque (Unit: N·m {ft.lbs, kgf·m})

Mark	Parts to be tightened		Tightening torque	Remarks
Ta	Eyebolt		22 ± 2 {16 ± 1.5, 2.24 ± 0.20}	–
Tb	Bolt (rear disc brake mounting)		98 to 140 {72 to 103, 10 to 14}	–
Tc	Bolt (axle shaft mounting)		98 to 120 {72 to 87, 10 to 12}	–
Td	Lock nut	Primary tightening	150 to 180 {110 to 130, 15 to 18}	–
		Secondary tightening after primary tightening	50 to 60 {37 to 44, 5 to 6}	–
Te	Bolt (wheel hub and disc rotor mounting)		45 to 60 {33 to 44, 4.6 to 6.1}	–
Tf	Nut (hub bolt mounting)		340 ± 40 {251 ± 30, 35 ± 4}	–

Lubricant and/or sealant

Mark	Points of application	Specified lubricant and/or sealant	Quantity
a	Lip area of outer oil seal	Wheel bearing grease [NLGI No. 2 (Li soap)]	As required
	Thread area of lock nut		
	Pack space between rollers of outer bearing inner race and inner bearing inner race		
	Lip area of oil seal		
	Pack interior of wheel hub		370 ± 37 g ※ {13.1 ± 1.31 oz}

※: For a wheel hub

https://truckmanualshub.com/

Special tools (Unit: mm {in.})

Mark	Tool name and shape	Part No.	Application
a	Lock nut adjust tool 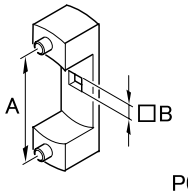 P05617 A: 80 {3.15} B: □12.7 {0.50}	MC888793	Removal and installation of lock nut
b	Hub puller A: Hub puller body B: Attachment C: Bolt 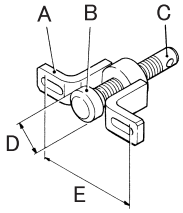 05618 D: ϕ50 {1.97} E: 165 {6.50}	MB999070 A: MB999071 B: MB999073 C: MB999072	Removal of wheel hub and rotor
c	Oil seal installer 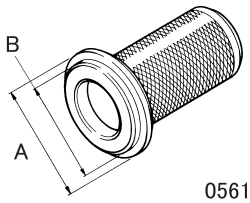 05619 A: ϕ84 {3.31} B: ϕ70 {2.76}	MB999097	Installation of inner and outer bearing outer races (to be used in combination)
d	Bearing installer 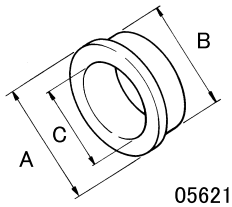 05621 A: ϕ124 {4.88} B: ϕ109 {4.29} C: ϕ77 {3.03}	MH063629	
e	Oil seal installer 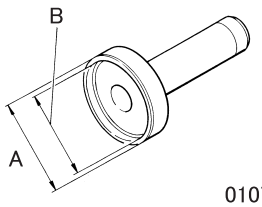 01076 A: ϕ130 {5.12} B: ϕ100 {3.94}	MH061752	Installation of oil seal (to be used in combination)

https://truckmanualshub.com/

◆Removal procedure◆

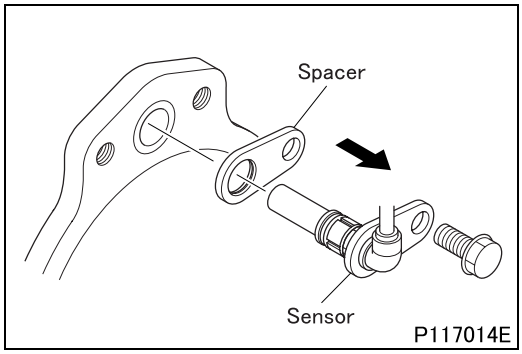

■ **Removal: Wheel speed sensor**

CAUTION ⚠

- **When removing the wheel speed sensor, never apply a force to it such as tapping it with a hammer, prying it with a screwdriver and pulling the harness, as doing so may damage the wiring.**
- **Be careful not to damage the tip of the wheel speed sensor after removing it.**

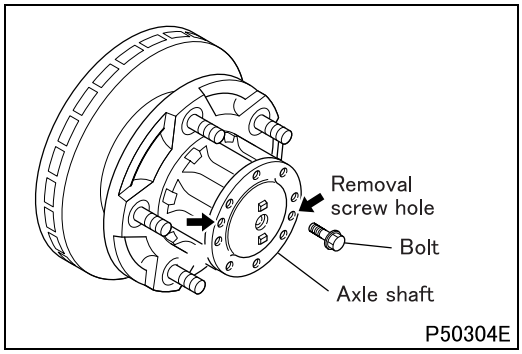

■ **Removal: Axle shaft**

- Screw two axle shaft mounting bolts evenly into the axle shaft removal screw holes to remove the axle shaft.

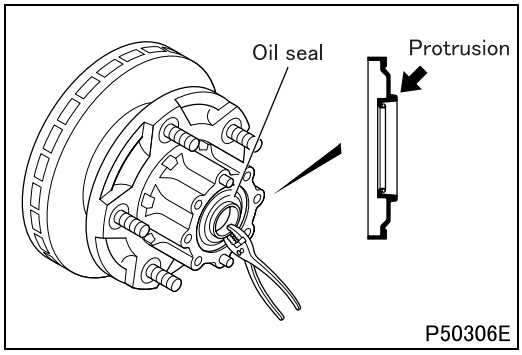

■ **Removal: Outer oil seal**

- To remove the outer oil seal, pull the protrusion on the outer periphery of the outer oil seal evenly around the whole circumference with pliers.

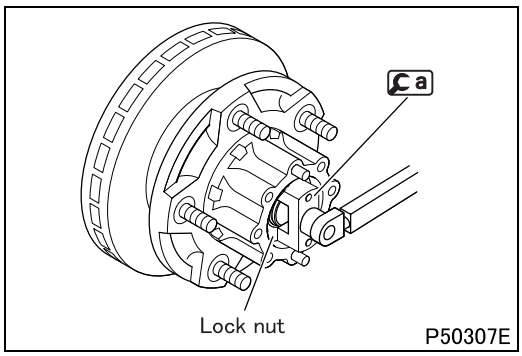

■ **Removal: Lock nut**

https://truckmanualshub.com/

WHEEL HUB AND ROTOR <FEC7, FEC9>

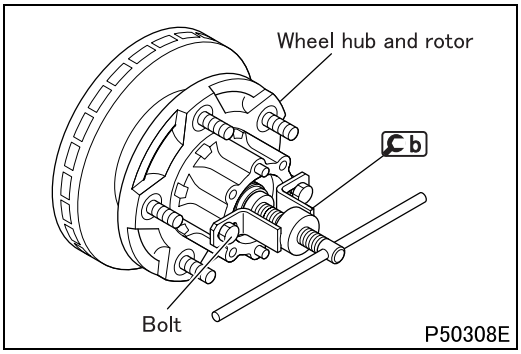

■ **Removal: Wheel hub and rotor**

- Install b using axle shaft mounting bolts and remove the wheel hub and rotor assembly.

CAUTION ⚠

- **If the wheel hub and rotor assembly was removed from the axle housing, replace the oil seal with a new one.**

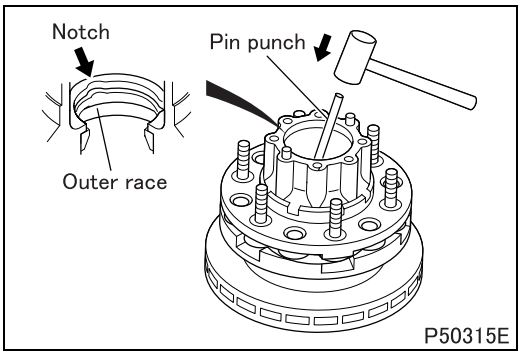

■ **Removal: Inner bearing outer race**

- Drive out the inner bearing outer race by tapping evenly at the three notches in the wheel hub.

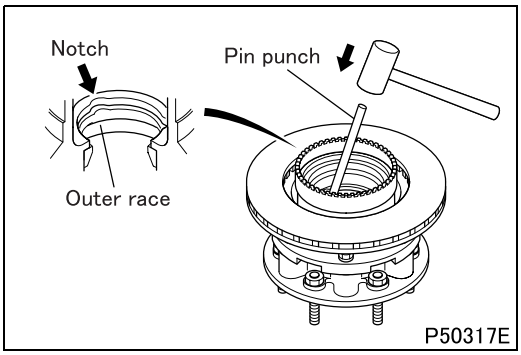

■ **Removal: Outer bearing outer race**

- Drive out the outer bearing outer race by tapping evenly at the three notches in the wheel hub.

◆Inspection procedure◆

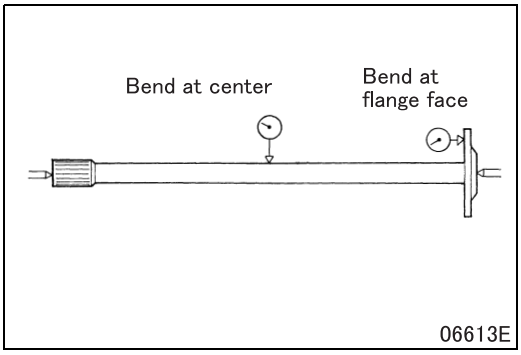

■ **Inspection: Axle shaft**

- Measure the bend of the axle shaft at its center.

NOTE

- **Give the axle shaft one complete turn and read the dial gauge at this time. The bend is one half of the reading.**

- If the measured value exceeds the limit, replace the axle shaft.
- Measure the bend of the flange face of the axle shaft.
- If the measured value exceeds the limit, replace the axle shaft.

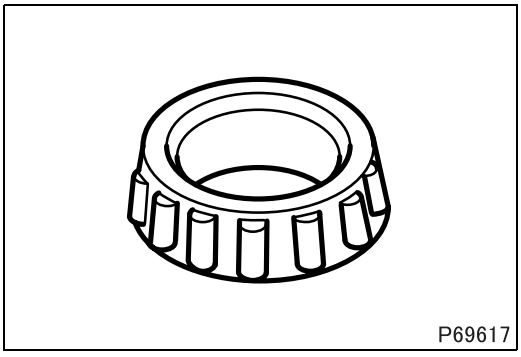

■ **Inspection: Outer bearing inner race**

- Inspect the outer bearing inner race after cleaning the bearing to remove grease completely.
- If any damage, wear, or a poor rotating conditions are evident in the inner race, replace it with a new one.
- The inner race and outer race should be replaced as a set.

https://truckmanualshub.com/

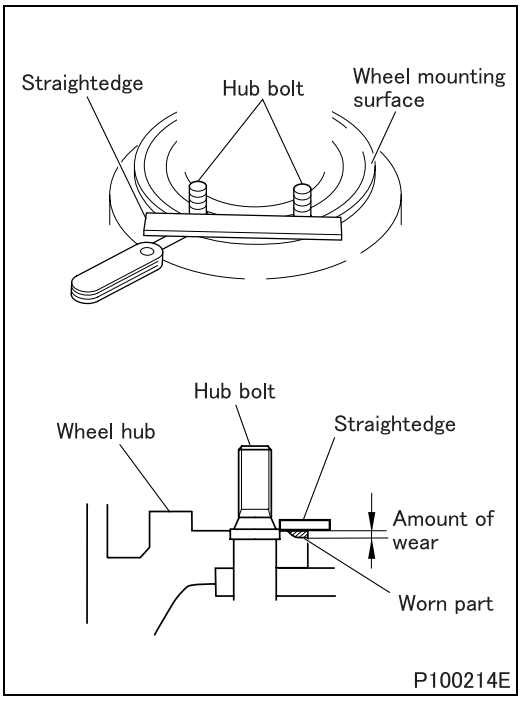

■ **Inspection: Wheel hub**

(1) Visual inspection

- Visually and physically inspect the disc wheel mounting surface. If there is damage or cracking on it, replace the wheel hub.
- Make sure that there is no rust, dust, paint or foreign material on the disc wheel mounting surface of the wheel hub to prevent the wheel nut from becoming loose.
- If any abnormality is found, remove it with sandpaper.

(2) Wear in disc wheel mounting part of wheel hub

- Clean the wheel mounting surface of the wheel hub before inspection.
- Place a straightedge against two hub bolts on the disc wheel mounting surface.

CAUTION ⚠

- **Make sure that the straightedge does not run onto the hub bolt.**

- Use feeler gauges to measure the amount of wear at the outer periphery of the wheel hub.
  Measure the amount of wear at every hub bolt.
- If the amount of wear at any point exceeds the following standard value, inspect the wheel hub for cracks.
  Wear standard value: 0.8 mm {0.031 in.}

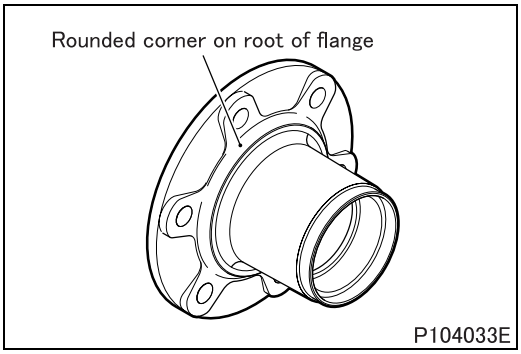

(3) Crack check

- Inspect for any cracks in the rounded corner on the root of the flange using magnetic particle or liquid penetrant testing.
  If any cracks are found, replace the wheel hub.
- If any cracks are found in a wheel hub bolt, replace it.
- If there is cracking or stepped wear on the wheel hub mounting surface of the wheel disc, replace it. (See Gr31.)

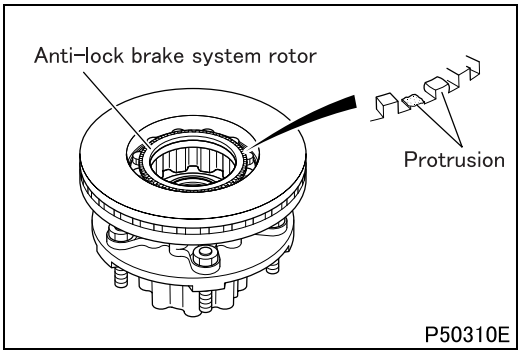

■ **Inspection: Anti-lock brake system rotor**

[Inspection]

- Remove any debris on the anti-lock brake system rotors and check the protrusions of the anti-lock brake system rotor for chipping and flattening.
- If any abnormality is found, replace the anti-lock brake system rotor.

Replacement of anti-lock brake system rotor

[Removal]

- Remove the wheel hub and disc rotor, taking care not to damage them.

https://truckmanualshub.com/

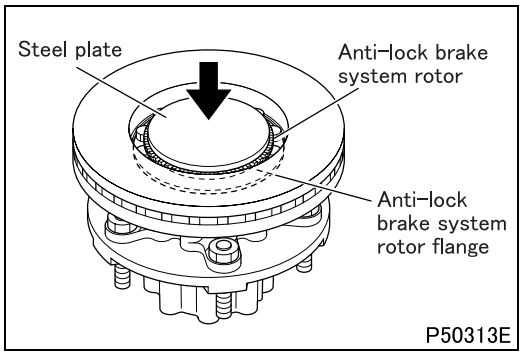

[Installation]

- Warm the anti-lock brake system rotor to approximately 150°C {302°F}.
- Install the anti-lock brake system rotor and anti-lock brake system rotor flange evenly using a steel plate so as not to allow them to tilt.

WARNING ⚠

- **Handling the warmed rotor with bare hands may cause burns.**

■ Inspection: Inner bearing inner race

- Inspect the inner bearing inner race in the same manner as the outer bearing inner race.
  (See **"■ Inspection: Outer bearing inner race".**)

◆Installation procedure◆

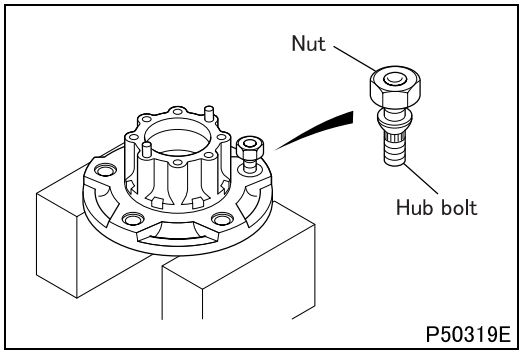

■ Installation: Hub bolt

- Screw the nut into the hub bolt until just before they become flush.
- Drive the hub bolt into the wheel hub vertically by hitting the end face of the nut with a brass punch or the like.

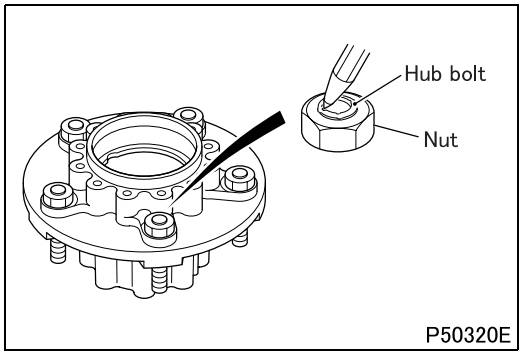

- After tightening the nut to the specified torque, stake it with a punch.

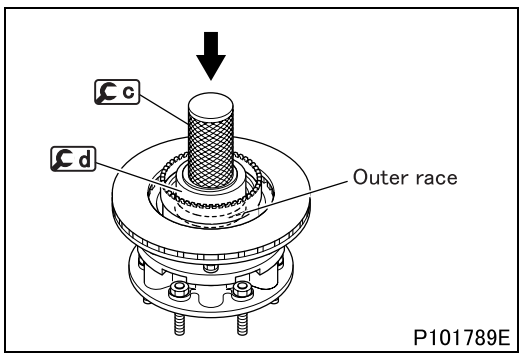

■ Installation: Outer bearing outer race

https://truckmanualshub.com/

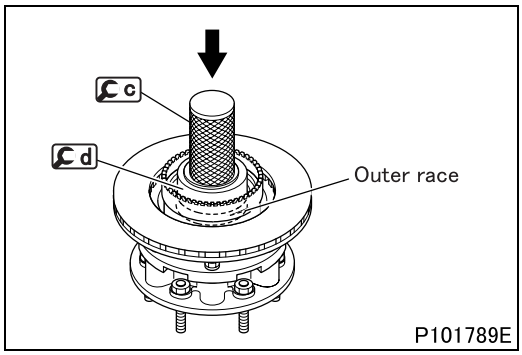

■ **Installation: Inner bearing outer race**

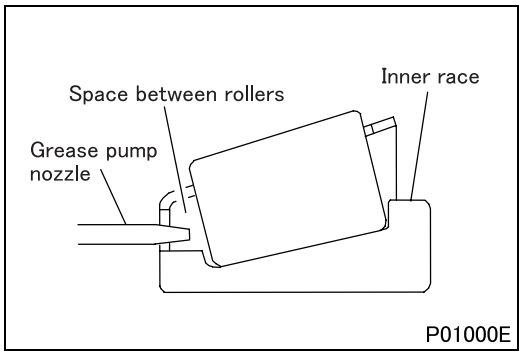

■ **Installation: Packing grease in inner bearing inner race**

- Insert the grease pump nozzle into the space between the rollers of the inner bearing inner race to pack grease sufficiently.

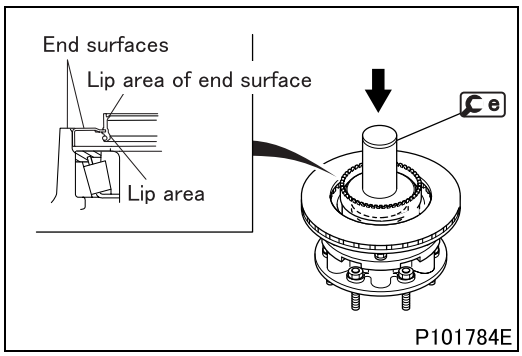

■ **Installation: Oil seal**

- Apply grease to the lip area of the oil seal and install the oil seal in the wheel hub so that the oil seal faces the illustrated direction and the end surface of the oil seal is flush with the end surface of the wheel hub.

■ **Installation: Packing grease in outer bearing inner race**

- Follow the same procedure as packing the inner bearing inner race with grease.
  (See **"■ Installation: Packing grease in inner bearing inner race"**.)

https://truckmanualshub.com/

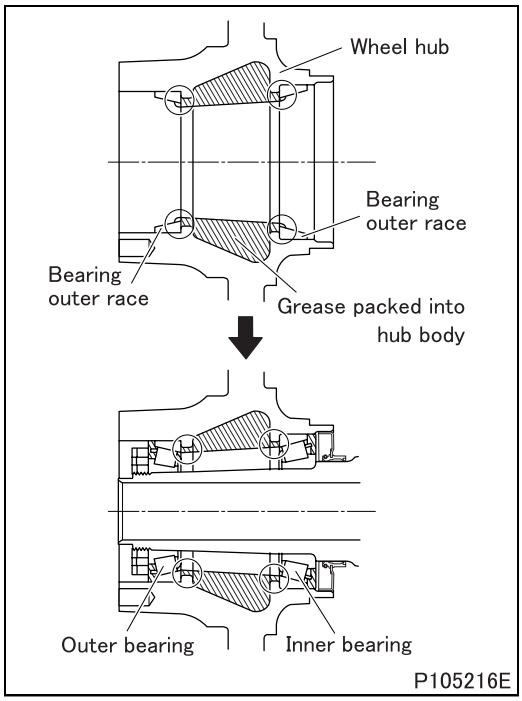

■ **Installation: Packing grease in wheel hub**

CAUTION ⚠

- **The wheel bearing may seize if these instructions are not followed.**
- **Apply the specified amount of grease.**

- As shown in the illustrations at the left, fill grease inside of the hub body in such a manner that grease covers the outer bearing and inner bearing outer races. Make sure that grease reaches the outer bearing and inner bearing.

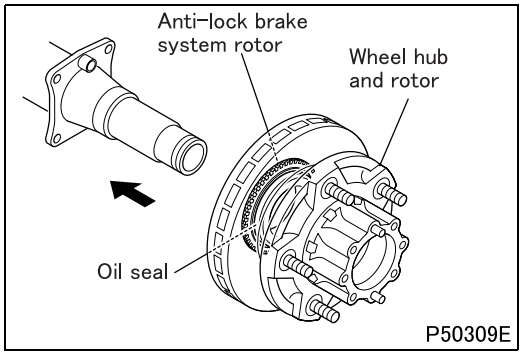

■ **Installation: Wheel hub and rotor**

- Slowly install the wheel hub and rotor assembly so as not to cause damage to the oil seal and anti-lock brake system rotor.

CAUTION ⚠

- **If the anti-lock brake system rotor is damaged, wheel speed sensor signals become abnormal, causing the anti-lock brake system to malfunction.**

■ **Adjustment: Starting torque of wheel hub bearing**

CAUTION ⚠

- **Unless this adjustment procedure is performed, the wheel bearing may seize.**

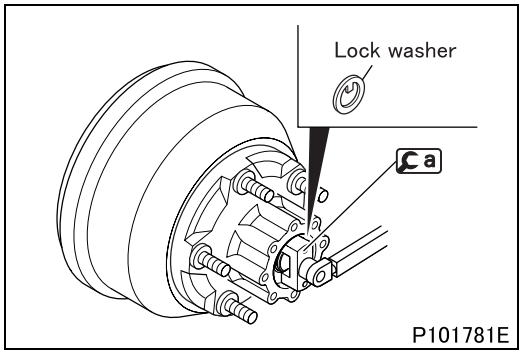

[Adjustment]

- Mount the lock washer.
- Tighten the lock nut to the specified torque (primary tightening) while turning the wheel hub and rotor, and then loosen it completely.
- Smooth operation of the outer bearing and inner bearing by turning the wheel hub and rotor several times, and then tighten the lock nut to the specified torque (secondary tightening).

https://truckmanualshub.com/

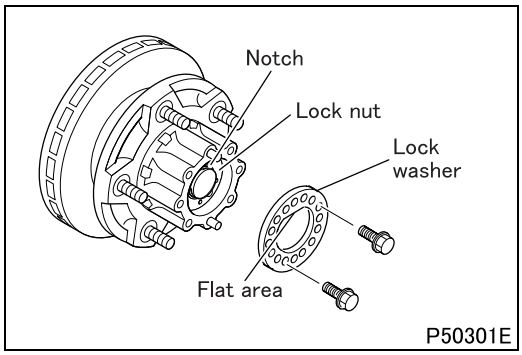

- Insert the flat area of the lock washer, aligning it with the notch of the axle housing, and mount two bolts diagonally to the lock nut.
- If the lock nut does not align with a screw hole of the lock washer, align by loosening the lock nut. Make sure that there is no play in the axial direction.

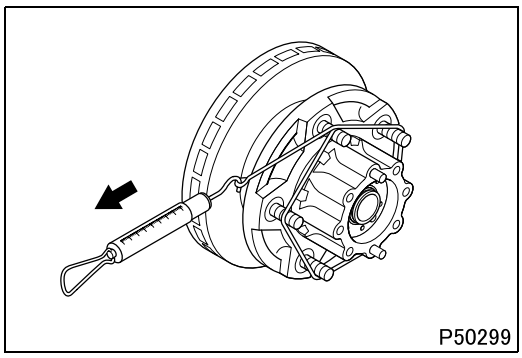

[Inspection]

- After installing the lock washer, carry out the following inspections.
- Measure the tangential force at the hub bolt position using a spring gauge.
- If the tangential force is within the specified value, the starting torque conforms to the standard value. If the measured value deviates from the specified value, repeat adjustment because the adjustment of the lock nut may be insufficient.
- If the result is found to be abnormal, replace the outer and inner bearings.

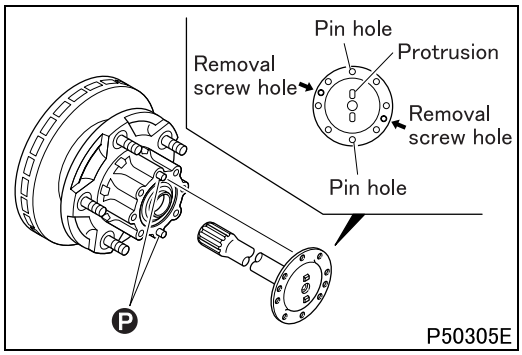

■ Installation: Axle shaft

- Align the pin hole of the locating pin with that of the axle shaft to install the axle shaft.

NOTE

- **A pin hole is not necessarily located at the position of a protrusion on the axle shaft flange face as illustrated. The second hole from a removal screw hole clockwise is a pin hole.**

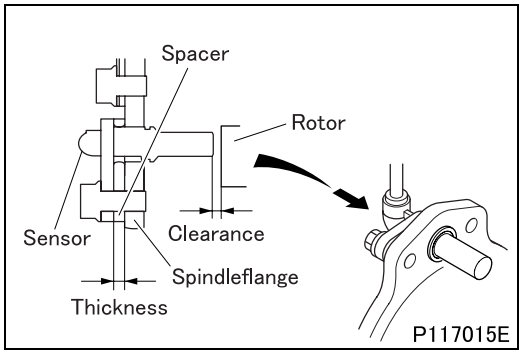

■ Installation: Wheel speed sensor

- Install the wheel speed sensor so that the sensor and spacer are firmly in contact with the holder.
  Spacer thickness: 9.5 mm {0.37 in.}

CAUTION ⚠

- **Be sure to install the specified spacer in the correct position. Using a spacer with an incorrect thickness or installing the spacer in an incorrect position could cause ABS malfunction.**
- **When installing the wheel speed sensor, be careful not to damage the O-ring of the sensor.**
- **When installing the wheel speed sensor, never apply a force to it such as tapping it with a hammer, prying it with a screwdriver and pulling the harness, as doing so may damage the wiring.**

https://truckmanualshub.com/

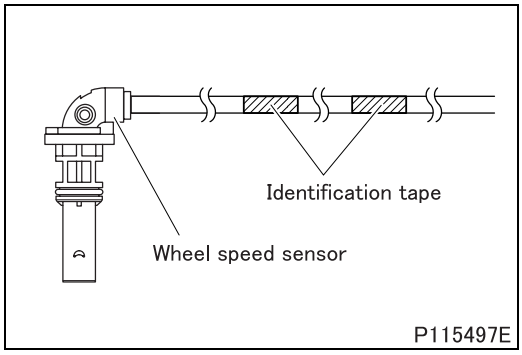

- After installing the wheel speed sensor, check that the clearance between the end of the sensor and the ABS rotor is the following dimension:
  Clearance: 1 ± 0.7 mm {0.039 ± 0.028 in.}

- Using clips, secure the wheel speed sensor harness in place at the identification tape portions, ensuring that the harness is free of kinks, slack and/or interference with other parts.

https://truckmanualshub.com/

M E M O

https://truckmanualshub.com/

WHEEL HUB AND BRAKE DRUM

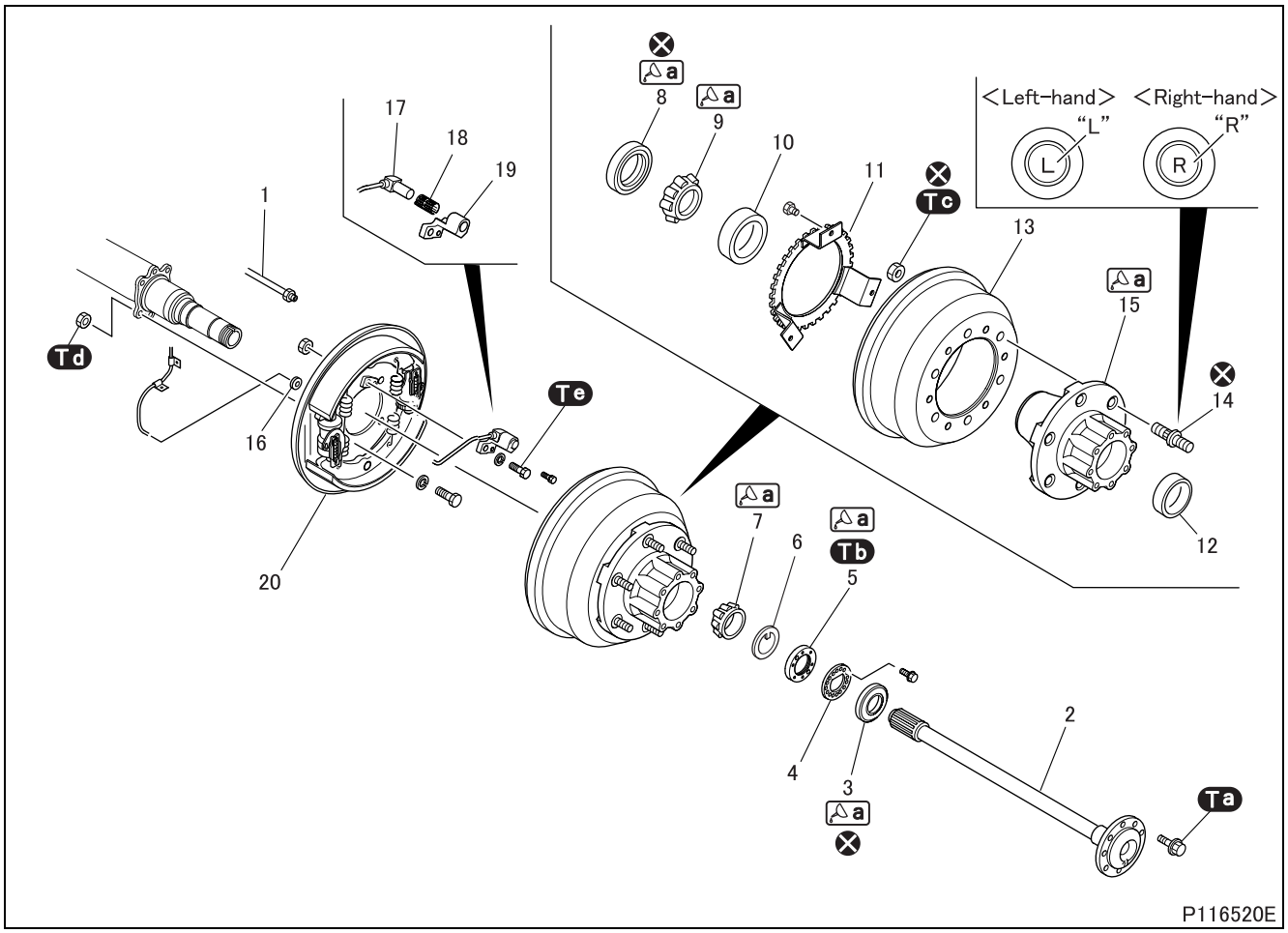

● Disassembly sequence

1 Brake pipe
2 Axle shaft
3 Outer oil seal
4 Lock plate
5 Lock nut
6 Lock washer
7 Outer bearing inner race
8 Oil seal
9 Inner bearing inner race
10 Inner bearing outer race
11 Anti-lock brake system rotor
12 Outer bearing outer race
13 Brake drum
14 Hub bolt
15 Wheel hub (See Gr35.)
16 Grommet
17 Wheel speed sensor
18 Spring spacer
19 Sensor holder
20 Rear drum brake (See Gr35.)

Ⓟ: Locating pin
⊗: Non-reusable parts

CAUTION ⚠

- **Be careful not to damage the tip of the wheel speed sensor after removing it.**

NOTE

- **Plug the brake pipe to prevent entry of dust and dirt after it has been removed.**

● Assembly sequence

Follow the disassembly sequence in reverse.

https://truckmanualshub.com/

CAUTION ⚠

- **Make sure that the brake lining surface of the rear drum brake and the inner surface of the brake drum are free from grease to avoid malfunction of the brakes.**

- Bleed air from the brake system after assembly. (See Gr35.)
- Adjust brake shoe clearance after assembly. (See Gr35.)

Service standards (Unit: mm {in.})

Location	Maintenance item		Standard value	Limit	Remedy
–	Starting torque of wheel hub bearing (tangential force at hub bolt position with oil seal assembled)		2.0 to 3.9 N·m {1.4 to 2.9 ft.lbs, 0.2 to 0.4 kgf·m} (tangential force: 16.5 to 32.2 N {3.7 to 7.2 lbs., 1.7 to 3.3 kgf})	–	Adjust or replace
2	Axle shaft	Bend at center	0 to 1 {0 to 0.039}	2 {0.079}	Replace
		Bend at flange face	0 to 0.03 {0 to 0.0012}	0.05 {0.0020}	Replace
11	Anti-lock brake system rotor shakes		0.1 {0.0039}	–	Replace

Tightening torque (Unit: N·m {ft.lbs, kgf·m})

Mark	Parts to be tightened		Tightening torque	Remarks
Ta	Bolt (axle shaft mounting)		98 to 120 {72 to 89, 10 to 12}	–
Tb	Lock nut	Primary tightening	150 to 180 {110 to 130, 15 to 18}	–
		Secondary tightening after primary tightening	50 to 60 {37 to 44, 5.1 to 6.1}	–
Tc	Nut (brake drum and wheel hub mounting)		340 ± 40 {250 ± 30, 35 ± 4}	–
Td	Nut (rear drum brake mounting)		64 to 83 {47 to 61, 6.5 to 8.5}	–
Te	Bolt (sensor holder mounting)		8.8 to 13.7 {6.5 to 10, 0.9 to 1.4}	–

Lubricant and/or sealant

Mark	Points of application	Specified lubricant and/or sealant	Quantity
a	Lip area of outer oil seal	Wheel bearing grease [NLGI No. 2 (Li soap)]	As required
	Thread area of lock nut		
	Pack space between rollers of outer bearing inner race and inner bearing inner race		
	Lip area of oil seal		
	Pack interior of wheel hub		370 ± 37 g ※ {13.1 ± 1.31 oz}

※: For a wheel hub

https://truckmanualshub.com/

Special tools (Unit: mm {in.})

Mark	Tool name and shape	Part No.	Application
a	Lock nut adjust tool A: 80 {3.15} B: 12.7 {0.50} 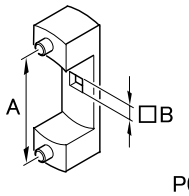 P05617	MC888793	Removal and installation of lock nut
b	Hub puller A: Hub puller body B: Attachment C: Bolt D: ϕ50 {1.97} E: 16.5 {6.50} 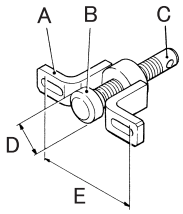 05618	MB999070 A: MB999071 B: MB999073 C: MB999072	Removal of wheel hub and brake drum
c	Oil seal installer A: ϕ84 {3.31} B: ϕ70 {2.76} 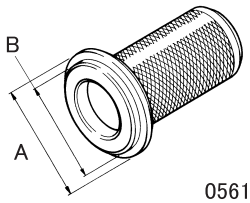 05619	MB999097	Installation of inner and outer bearing outer races (to be used in combination)
d	Bearing installer A: ϕ109 {4.29} B: ϕ99 {3.90} C: ϕ77 {3.03} 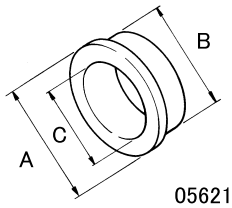 05621	MB999098	
e	Oil seal installer A: ϕ130 {5.12} B: ϕ100 {3.94} 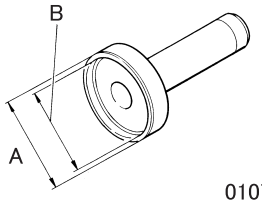 01076	MH061752	Installation of oil seal

https://truckmanualshub.com/

◆Removal procedure◆

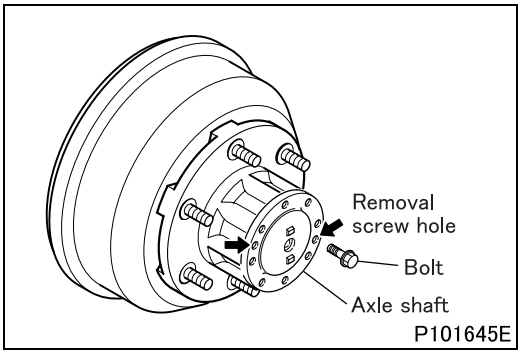

■ **Removal: Axle shaft**

- Screw two axle shaft mounting bolts evenly into the axle shaft removal screw holes to remove the axle shaft.

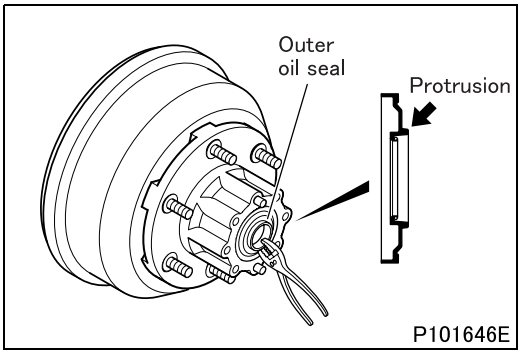

■ **Removal: Outer oil seal**

- To remove the outer oil seal, pull the protrusion on the outer periphery of the outer oil seal evenly around the whole circumference with pliers.

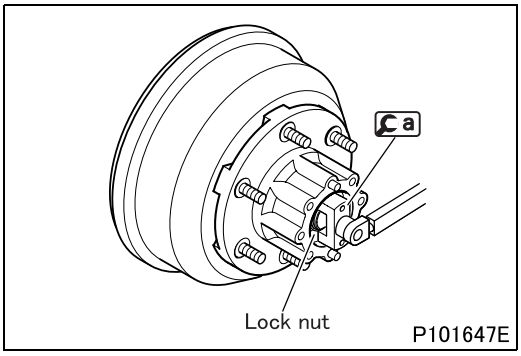

■ **Removal: Lock nut**

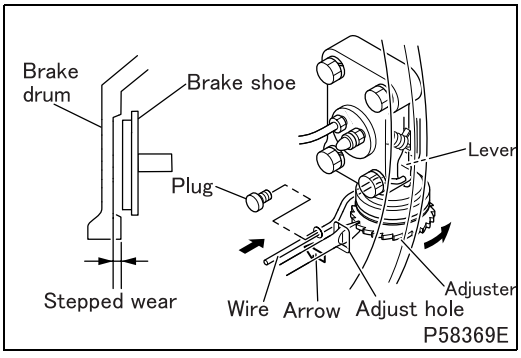

■ **Removal: Wheel hub and brake drum**

- If the brake drum has stepped wear and the wear prevents the wheel hub and brake drum assembly from being removed, removal can still be performed with the following procedure.
- Insert a wire of approx. ϕ2 mm {0.079 in.} into the hole from which the plug has been removed, and lift up the adjust lever of the wheel cylinder.
- Turn the adjuster from the adjust hole in the opposite direction to the arrow on the backing plate to increase the clearance between the brake drum and the brake shoe. Then, remove the wheel hub and brake drum assembly.

CAUTION ⚠

- **Correct or replace the brake drum if any fault is found.**

https://truckmanualshub.com/

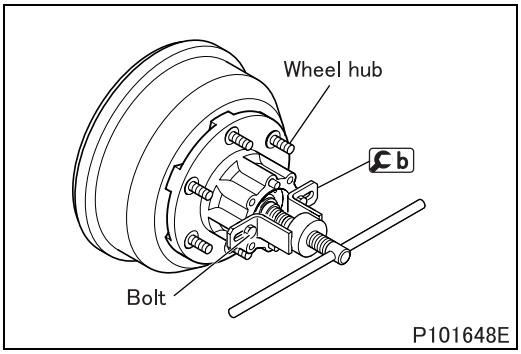

P101648E

- Install b using axle shaft mounting bolts to remove the wheel hub and brake drum assembly.

CAUTION ⚠

- **If the wheel hub and brake drum assembly was removed from the axle housing, replace the oil seal with a new one.**

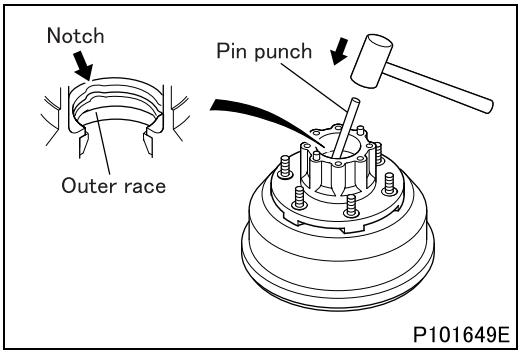

P101649E

■ Removal: Inner bearing outer race

- Drive out the inner bearing outer race by tapping evenly at the three or four notches in the wheel hub.

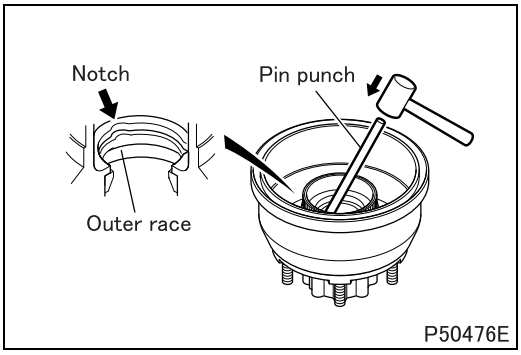

P50476E

■ Removal: Outer bearing outer race

- Drive out the outer bearing outer race by tapping evenly at the three or four notches in the wheel hub.

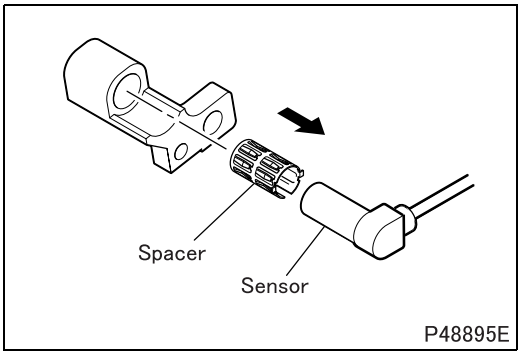

P48895E

■ Removal: Wheel speed sensor

CAUTION ⚠

- **When removing the wheel speed sensor, do not apply excessive force on the sensor, such as hitting it with a hammer, prying with a screwdriver or pulling the harness, since these actions can result in an open-circuit of the sensor.**
- **If the wheel speed sensor can be removed easily, replace the spring spacer.**

◆Inspection procedure◆

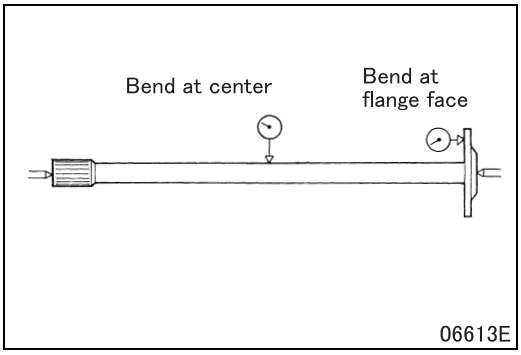

06613E

■ Inspection: Axle shaft

- Perform the following inspection. If the measurement is out of the standard value, replace the axle shaft.

(1) Bend at shaft center

- Give the axle shaft one complete turn and read the dial gauge at this time. The bend is one half of the reading.

(2) Lateral runout at flange face

https://truckmanualshub.com/

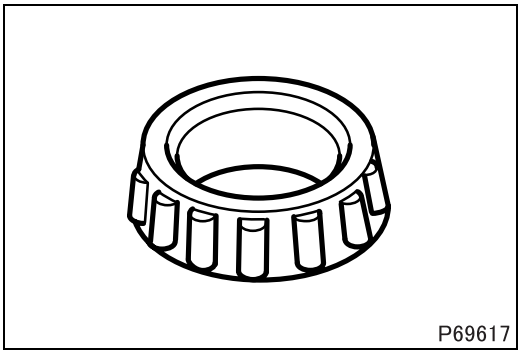
P69617

■ **Inspection: Outer bearing inner race**

- Inspect the outer bearing inner race after cleaning the bearing to remove grease completely.
- If any damage, wear, or a poor rotating conditions are evident in the inner race, replace it with a new one.
- The inner race and the outer race should be replaced as a set.

■ **Inspection: Inner bearing inner race**

- Inspect the inner bearing inner race in the same manner as the outer bearing inner race.
  (See **"■ Inspection: Outer bearing inner race"**.)

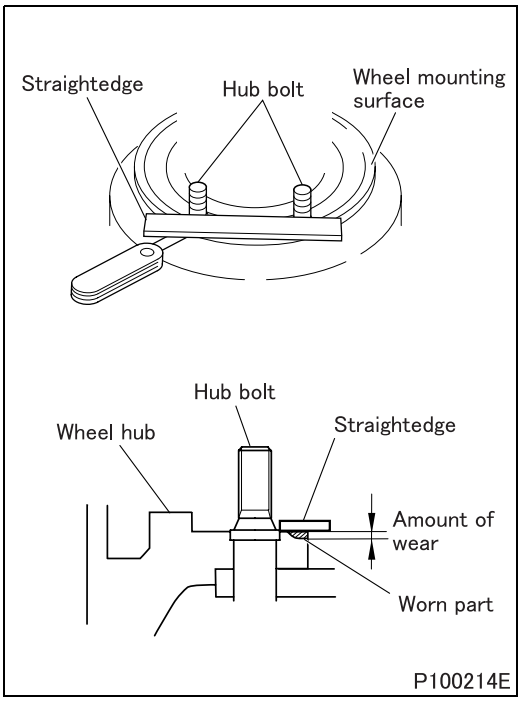

P100214E

■ **Inspection: Wheel hub**

(1) Visual inspection

- Visually and physically inspect the disc wheel mounting surface. If there is damage or cracking on it, replace the wheel hub.
- Make sure that there is no rust, dust, paint or foreign material on the disc wheel mounting surface of the wheel hub to prevent the wheel nut from becoming loose.
- If any abnormality is found, remove it with sandpaper.

(2) Wear in disc wheel mounting part of wheel hub

- Clean the wheel mounting surface of the wheel hub before inspection.
- Place a straightedge against two hub bolts on the disc wheel mounting surface.

CAUTION ⚠

- **Make sure that the straightedge does not run onto the hub bolt.**

- Use feeler gauges to measure the amount of wear at the outer periphery of the wheel hub.
  Measure the amount of wear at every hub bolt.
- If the amount of wear at any point exceeds the following standard value, inspect the wheel hub for cracks.
  Wear standard value: 0.8 mm {0.031 in.}

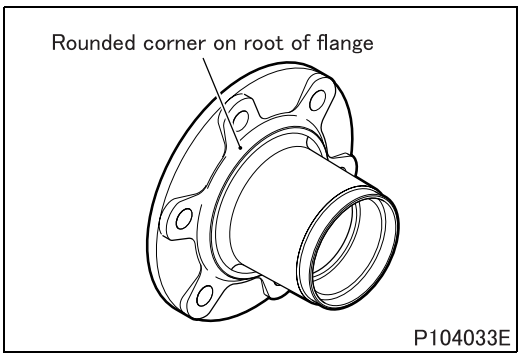

P104033E

(3) Crack check

- Inspect for any cracks in the rounded corner on the root of the flange using magnetic particle or liquid penetrant testing.
  If any cracks are found, replace the wheel hub.
- If any cracks are found in a wheel hub bolt, replace it.
- If there is cracking or stepped wear on the wheel hub mounting surface of the wheel disc, replace it. (See Gr31.)

https://truckmanualshub.com/

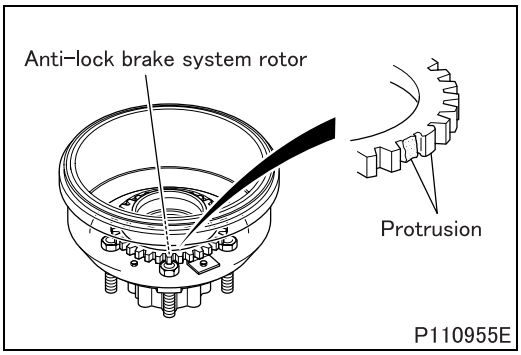

■ **Inspection: Anti-lock brake system rotor**

- Check the protrusions of the anti-lock brake system rotor for chipping and flattening.
- If any abnormality is found, replace the anti-lock brake system rotor.

◆Installation procedure◆

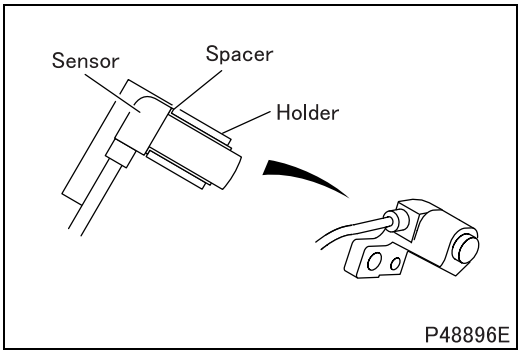

■ **Installation: Wheel speed sensor**

- Insert the wheel speed sensor with the spring spacer into the holder until they are seated firmly in the holder.

CAUTION ⚠

- **When installing the wheel speed sensor, do not apply excessive force on the sensor, such as hitting with a hammer, prying with a screwdriver or pulling the harness, since these actions can result in an open-circuit of the sensor.**

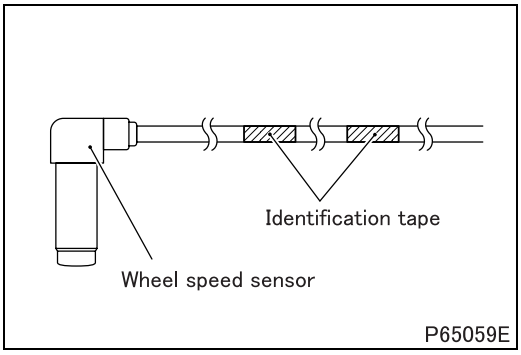

- Using clips, secure the wheel speed sensor harness in place at the identification tape portions, ensuring that the harness is free of kinks, slack and/or interference with other parts.

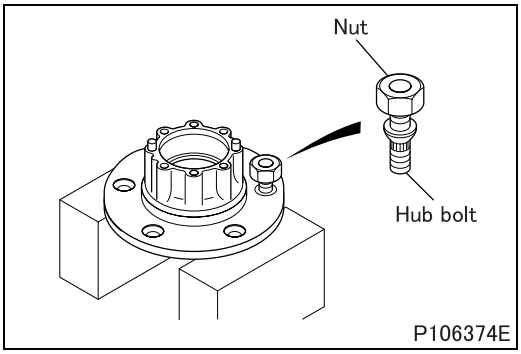

■ **Installation: Hub bolt**

- Screw the nut into the hub bolt until just before they become flush.
- Drive the hub bolt into the wheel hub vertically by hitting the end face of the nut.

https://truckmanualshub.com/

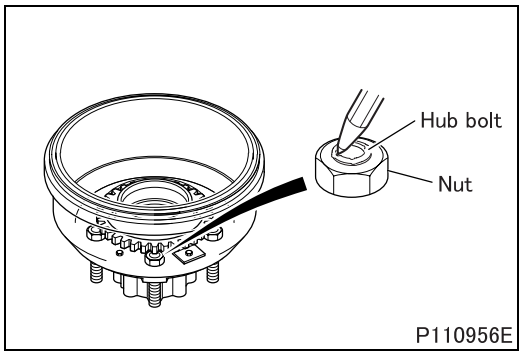

- Assemble the brake drum and wheel hub with the hub bolt. After tightening the nut to the specified torque, stake it with a punch.

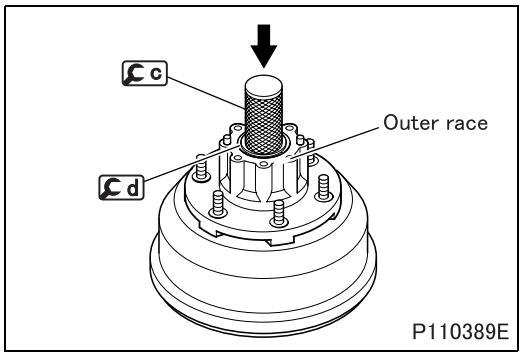

■ **Installation: Outer bearing outer race**

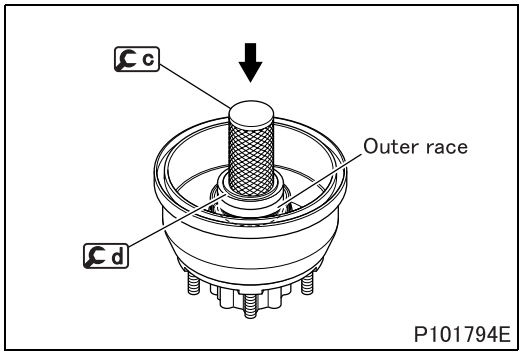

■ **Installation: Inner bearing outer race**

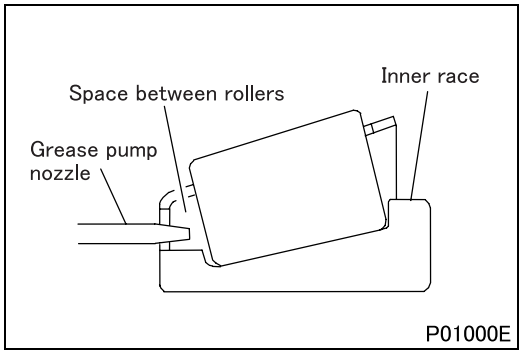

■ **Installation: Packing grease in inner bearing inner race**

- Insert the grease pump nozzle into the space between the rollers of the inner bearing inner race to pack grease sufficiently.

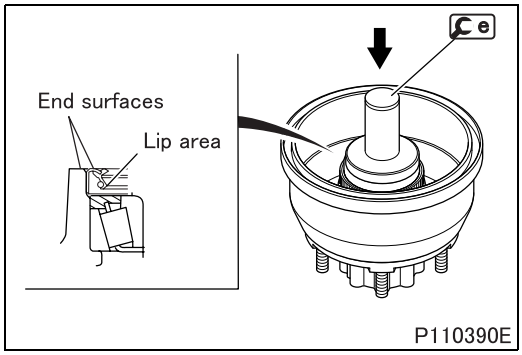

■ **Installation: Oil seal**

- Apply grease to the lip area of oil seal and install the oil seal in the wheel hub so that the oil seal faces in the illustrated direction and the end surface of oil seal is flush with the end surface of wheel hub.

https://truckmanualshub.com/

■ **Installation: Packing grease in outer bearing inner race**

- Follow the same procedure as packing the inner bearing inner race with grease.
  (See **"■ Installation: Packing grease in inner bearing inner race"**.)

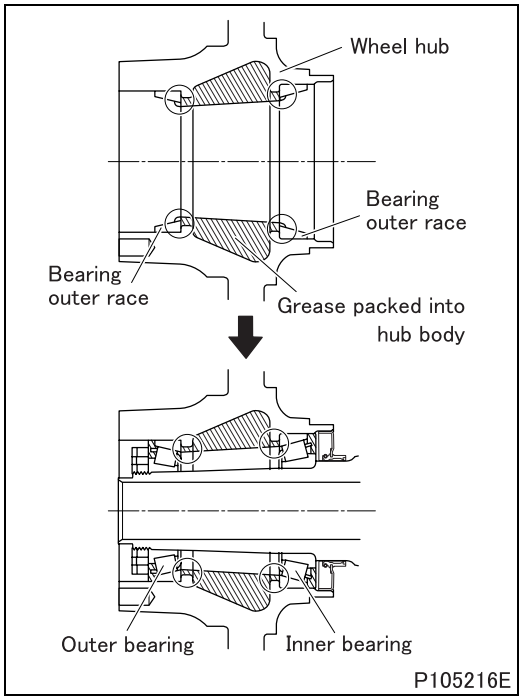

■ **Installation: Parking grease in wheel hub**

CAUTION ⚠

- **The wheel bearing may seize if these instructions are not followed.**
- **Apply the specified amount of grease.**

- As shown in the illustrations at the left, fill grease inside of the hub body in such a manner that grease covers the outer bearing and inner bearing outer races. Make sure that grease reaches the outer bearing and inner bearing.

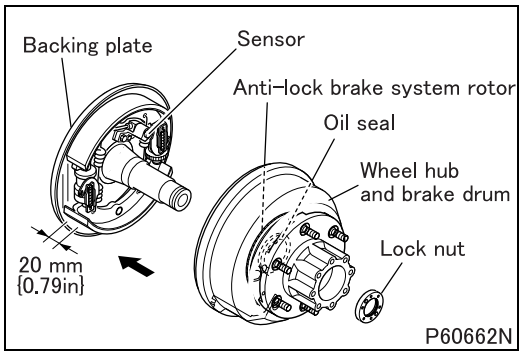

■ **Installation: Wheel hub and brake drum**

- Slowly install the wheel hub and brake drum so as not to cause damage to the oil seal and anti-lock brake system rotor.

CAUTION ⚠

- **If the anti-lock brake system rotor is damaged, the wheel speed sensor signals become abnormal, causing the anti-lock brake system to malfunction.**

- Mount the wheel hub and brake drum without jiggling until the backing plate extends 20 mm {0.79 in.} from the edge of the brake drum. Then, tighten the lock nut slowly.

CAUTION ⚠

- **Do not install the wheel hub and the brake drum without adjusting the clearance between the drum and backing plate, since it can damage the wheel speed sensor.**

https://truckmanualshub.com/

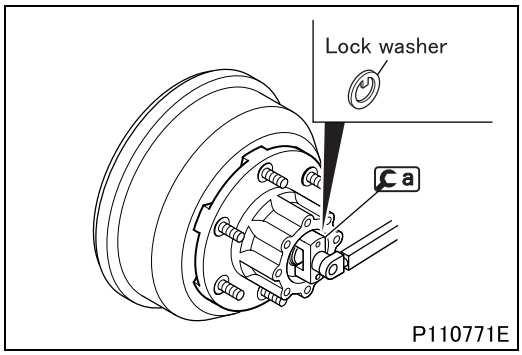

■ **Adjustment: Starting torque of wheel hub bearing**

CAUTION ⚠

- **Unless this adjustment procedure is performed, the wheel bearing may seize.**

[Adjustment]

- Tighten the lock nut to the specified torque (primary tightening) while turning the wheel hub and rotor, and then loosen it completely.
- Smooth operation of the outer bearing and inner bearing by turning the wheel hub and rotor several times, and then tighten the lock nut to the specified torque (secondary tightening).

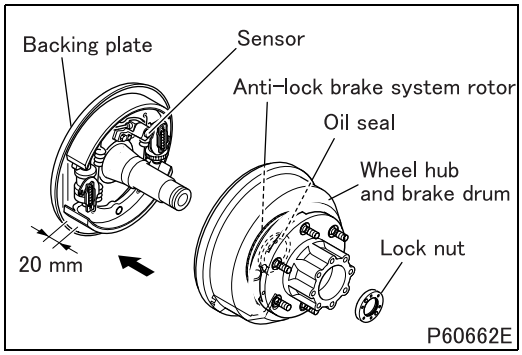

- Insert the flat area of the lock plate, aligning it with the notch of the axle housing, and mount two bolts diagonally to the lock nut.
- If the lock nut does not align with a screw hole of the lock plate, align by loosening the lock nut. Make sure that there is no play in the axial direction.

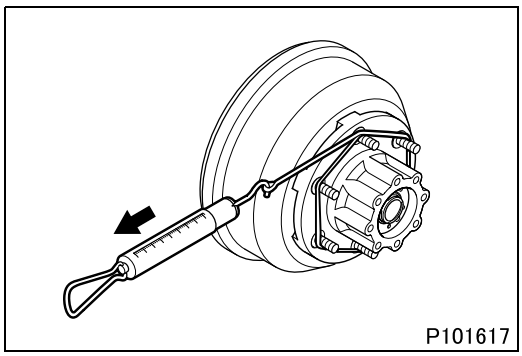

[Inspection]

- After installing the lock plate, carry out the following inspections.
- Make sure that there is no drag in the brake lining and brake drum.
- If any abnormality is found, adjust the brake shoe clearance.
- Measure the tangential force at the hub bolt position using a spring gauge.
- If the tangential force is within the specified value, the starting torque conforms to the standard value. If the measured value deviates from the specified value, repeat adjustment because the adjustment of the lock nut may be insufficient.
- If the result is found to be abnormal, replace the outer and inner bearings.

https://truckmanualshub.com/

AXLE HOUSING

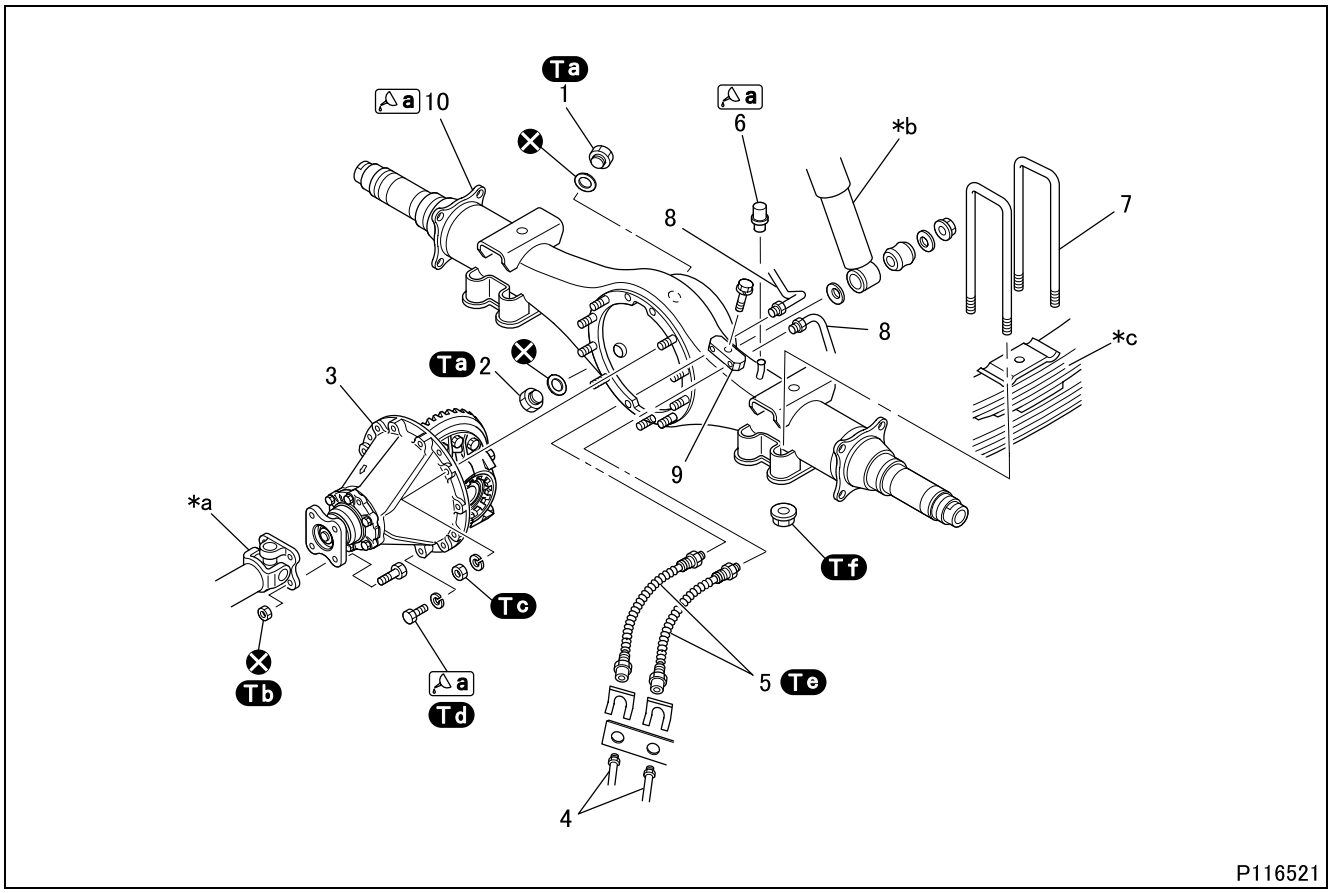

● **Removal sequence**

1 Inspection plug
2 Drain plug
3 Reduction and differential (See later sections.)
4 Brake pipe
5 Brake hose
6 Vent plug
7 U-bolt
8 Brake pipe
9 Connector
10 Axle housing

***a**: Propeller shaft
***b**: Shock absorber
***c**: Leaf spring

⊗: Non-reusable parts

CAUTION ⚠

- **Plug the brake hose and the brake pipe to prevent entry of dust and dirt after they have been removed.**
- **When installing and removing the axle housing, take care not to damage the brake hose, brake pipe and anti-lock brake system wheel speed sensor harness.**

NOTE

- **Do not remove the axle housing unless it is found faulty.**

● **Installation sequence**

Follow the removal sequence in reverse.

https://truckmanualshub.com/

Service standards (Unit: mm {in.})

Location	Maintenance item		Standard value	Limit	Remedy
6	Injection-valve opening pressure of vent plug		4.9 kPa {0.7 psi, 0.05 kgf/cm^2} or less	–	Replace
10	Axle housing	Runout at outer bearing portion	0 to 0.5 {0 to 0.020}	1 {0.039}	Replace
		Difference between before and after rotation at center	0 to 1 {0 to 0.039}	5 {0.20}	

Tightening torque (Unit: N·m {ft.lbs, kgf·m})

Mark	Parts to be tightened		Tightening torque	Remarks
Ta	Inspection plug		110 ± 10 {81 ± 7.4, 11 ± 1}	–
	Drain plug			
Tb	Nut (propeller shaft mounting)		100 to 120 {74 to 89, 10 to 12}	M12
Tc	Nut (reduction and differential mounting)		69 to 93 {51 to 69, 7 to 9.5}	–
Td	Bolt (reduction and differential mounting)		83 to 108 {61 to 80, 8.5 to 11}	–
Te	Brake hose		25.5 to 34.3 {18.8 to 25.3, 2.6 to 3.5}	–
Tf	Nut (U-bolt mounting)	M16	240 ± 15 {175 ± 11, 24.5 ± 1.5}	–
		M18	340 ± 50 {250 ± 37, 34.6 ± 5.2}	–

Lubricant and/or sealant

Mark	Points of application	Specified lubricant and/or sealant	Quantity
a	Thread area of bolt	ThreeBond 1215	As required
	Reduction and differential mounting surface of axle housing		
b	Axle housing mounting surface of vent plug		

Special tools (Unit: mm {in.})

Mark	Tool name and shape	Part No.	Application
Ca	Differential carrier base A: ϕ28 {1.10} 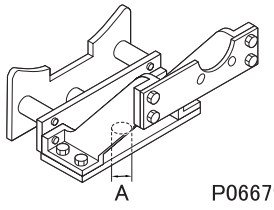	MB999102	Removal and installation of reduction and differential

◆Work before removal◆

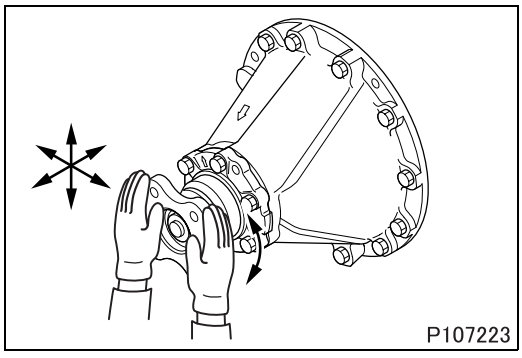

■ Inspection: Play of companion flange

- If there is play in the forward, backward, vertical, lateral or rotating direction, replace all of the following parts.
  - Front bearing and rear bearing
  - Pinion pilot bearing
  - Pinion bearing collar
  - Reduction gear set <Reduction pinion and reduction gear>
  - Companion flange

https://truckmanualshub.com/

AXLE HOUSING

◆Removal procedure◆

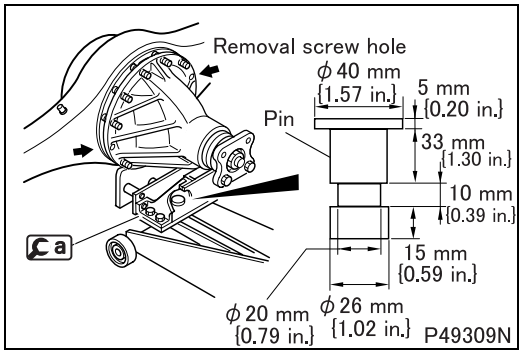

■ **Removal: Reduction and differential**

- Remove the saucer of the garage jack and place [a] on it. Fabricate the pin as illustrated, insert and fix it with bolts that have fixed the saucer.
- Screw two bolts evenly into the reduction and differential removal screw holes (as shown in illustration) to remove the reduction and differential.
  Bolt size: M12 × 1.25 mm

◆Inspection procedure◆

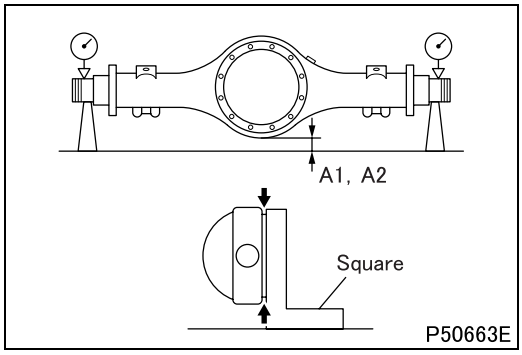

■ **Inspection: Axle housing**

- Horizontally support the inner bearing fittings at both ends of the housing spindle of the axle housing.
- Apply a dial gauge to the outer bearing fitting and turn it 360 degrees to measure runout.
- For measurement of A1 and A2, place the axle housing at right angles to the floor using a square and measure A1. Then, turn it 180 degrees and measure A2.
- If the measured value exceeds the limit, replace the axle housing.

◆Installation procedure◆

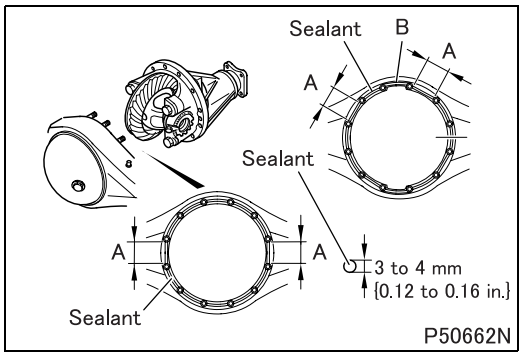

■ **Installation: Reduction and differential**

- Clean the sealing surface of each part.
- Apply sealant to the reduction and differential mounting surface of the axle housing evenly and without any gaps. Apply sealant in a straight line direction for illustrated position A and along the outer periphery for notches of illustrated position B.

https://truckmanualshub.com/

M E M O

https://truckmanualshub.com/

REDUCTION AND DIFFERENTIAL

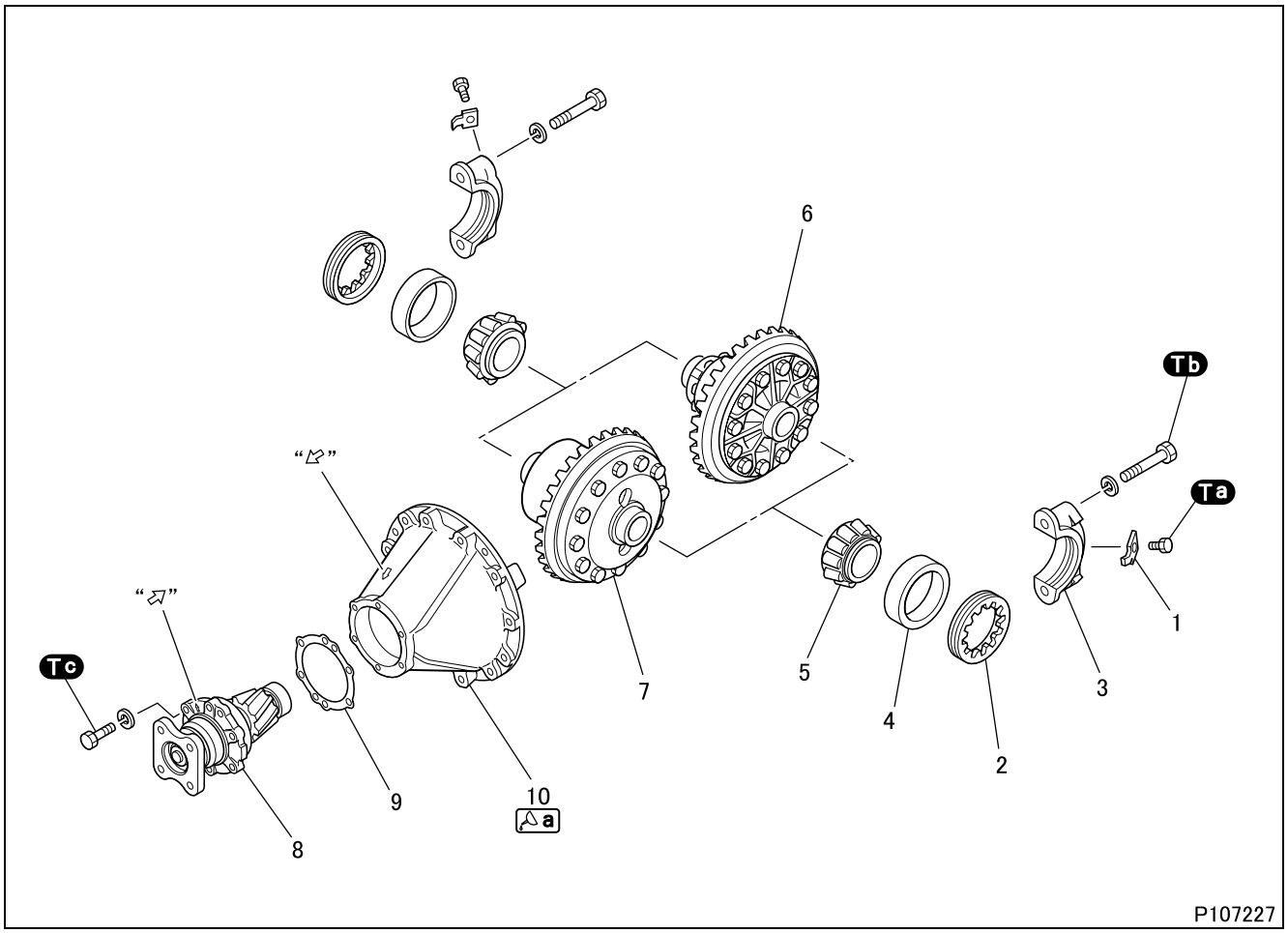

● **Disassembly sequence**

1 Lock plate
2 Side bearing nut
3 Bearing cap
4 Side bearing outer race
5 Side bearing inner race
6 Differential (See later sections.)
7 Limited slip differential (See later sections.)
8 Reduction pinion (See later sections.)
9 Shim
10 Differential carrier

CAUTION ⚠

- **Be sure to replace the bearing cap, differential carrier and bolts as a differential carrier set.**
- **Be sure to replace the reduction pinion and the reduction gear of the differential as a reduction gear set.**

- Keep side bearings that have been removed separated from each other and ensure that during installation each one is placed back in its original position.
- Record the number and thickness of the shims to use them as a reference at assembly.

● **Assembly sequence**

Follow the disassembly sequence in reverse.

https://truckmanualshub.com/

Service standards (Unit: mm {in.})

Location	Maintenance item	Standard value	Limit	Remedy
8, 9	Starting torque of side bearing	2.0 to 2.9 N·m {1.4 to 2.2 ft.lbs, 0.2 to 0.3 kgf·m}	–	Adjust
10	Wobble at back face of reduction gear	0 to 0.1 {0 to 0.0039}	–	Replace
	Backlash between reduction gear and reduction pinion	0.20 to 0.28 {0.0079 to 0.011}	0.5 {0.020}	Adjust or replace

Tightening torque (Unit: N·m {ft.lbs, kgf·m})

Mark	Parts to be tightened	Tightening torque	Remarks
Ta	Bolt (lock plate mounting)	19.6 to 26.5 {14 to 20, 2.0 to 2.7}	–
Tb	Bolt (bearing cap mounting)	200.9 {150, 20.5}	–
Tc	Bolt (pinion mounting)	66.6 to 90.2 {49 to 67, 6.8 to 9.2}	–

Lubricant and/or sealant

Mark	Points of application	Specified lubricant and/or sealant	Quantity
a	Pinion pilot bearing mounting surface of differential carrier	Loctite 601	As required

https://truckmanualshub.com/

Special tools (Unit: mm {in.})

<table>
<tr><th>Mark</th><th>Tool name and shape</th><th>Part No.</th><th>Application</th></tr>
<tr><td>a</td><td>Differential working base assembly
 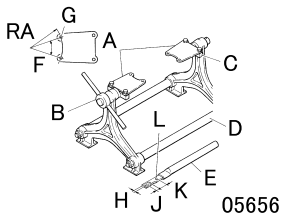

05656
<table>
<tr><th colspan="4">Component</th><th>Part No.</th></tr>
<tr><td rowspan="2">A</td><td colspan="3">Attachment</td><td>–</td></tr>
<tr><td>RA</td><td>F</td><td>G</td><td>–</td></tr>
<tr><td></td><td>R158 {6.22}</td><td>30°</td><td>ϕ13 {0.51}</td><td>MB999040</td></tr>
<tr><td>B</td><td colspan="3">Holder</td><td>MB999036</td></tr>
<tr><td>C</td><td colspan="3">Holder</td><td>MB999037</td></tr>
<tr><td>D</td><td colspan="3">Working base</td><td>MB999035</td></tr>
<tr><td>E</td><td colspan="3">Flange stopper</td><td>MB999096</td></tr>
</table>
<table>
<tr><th>H</th><th>J</th><th>K</th><th>L</th></tr>
<tr><td>11 {0.43}</td><td>20 {0.79}</td><td>40 {1.57}</td><td>ϕ11 {0.43}</td></tr>
</table></td><td>MB999034</td><td>Workbench for reduction and differential

(flange stopper is unused)</td></tr>
<tr><td>b</td><td>Adapter
<table>
<tr><th>A</th><th>B</th></tr>
<tr><td>ϕ45 {1.77}</td><td>ϕ59 {2.32}</td></tr>
</table>
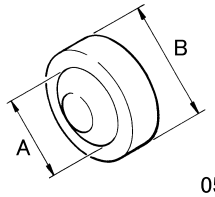

05658</td><td>MB999076</td><td>Removal of side bearing inner race (to be used in combination with commercial bearing puller)</td></tr>
<tr><td>c</td><td>Bearing installer
<table>
<tr><th>A</th><th>B</th></tr>
<tr><td>ϕ80 {3.15}</td><td>ϕ70 {2.76}</td></tr>
</table>
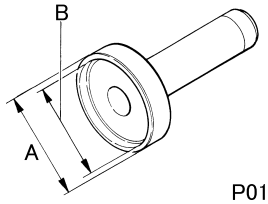

P01039</td><td>MH061748</td><td>Installation of side bearing inner race</td></tr>
<tr><td>d</td><td>Bearing retainer guide pin
 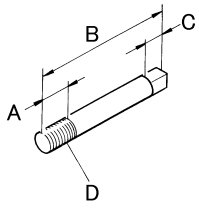

P01041
<table>
<tr><th>A</th><th>B</th><th>C</th><th>D</th></tr>
<tr><td>18 {0.71}</td><td>85 {3.35}</td><td>12 {0.47}</td><td>M12 × 1.25</td></tr>
</table></td><td>MH061745</td><td>Installation of reduction pinion (two pieces are used)</td></tr>
</table>

https://truckmanualshub.com/

◆Work before removal◆

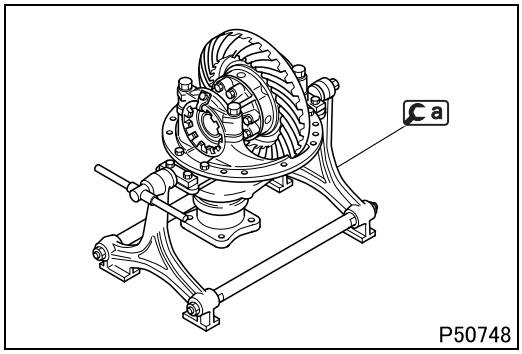

■ **Preparatory work: Installation of differential working base assembly**

- Install the reduction and differential on a.

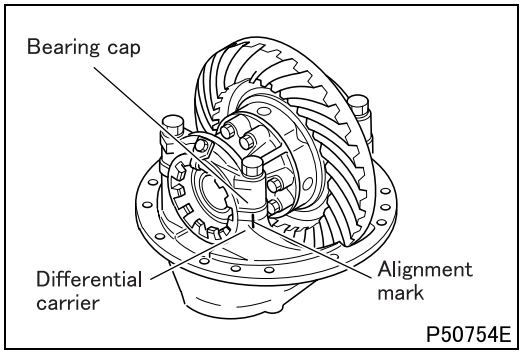

■ **Alignment marks: Bearing cap and differential carrier**

- Put alignment marks on the bearing cap and differential carrier for correct identification of right and left parts.

◆Removal procedure◆

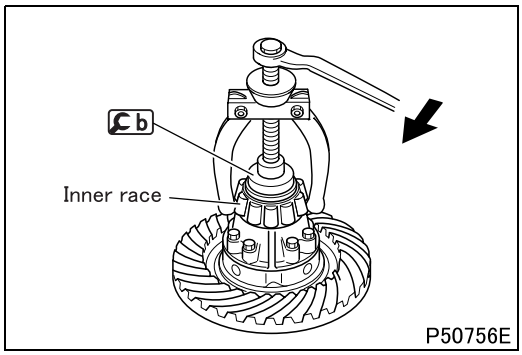

■ **Removal: Side bearing inner race**

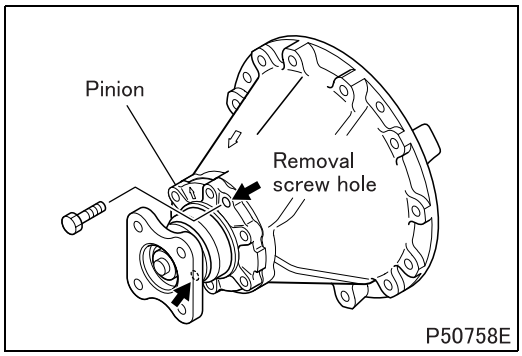

■ **Removal: Pinion**

- Screw two bolts evenly into the pinion removal screw holes to remove the pinion.

https://truckmanualshub.com/

◆Adjustment procedure◆

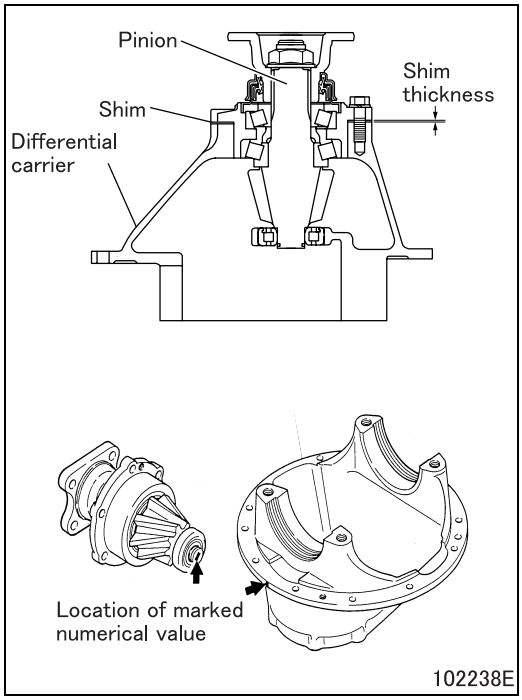

■ **Selection: Shim**

- Calculate shim thickness by using the following formula based on the machining error data stamped on pinion and differential carrier.
- Formula: Shim thickness = 0.5 mm {0.020 in.} – a + b + 0.2 mm {0.0079 in.}
  a: 1/100 of numeral stamped on outer periphery of flange of differential carrier flange
  b: Numeral stamped on top of pinion
- Select the shim(s) based on the calculated shim thickness.
  Thickness of shims available: 0.1 and 0.2 mm {0.0039 and 0.0079 in.} (2 types)

◆Installation procedure◆

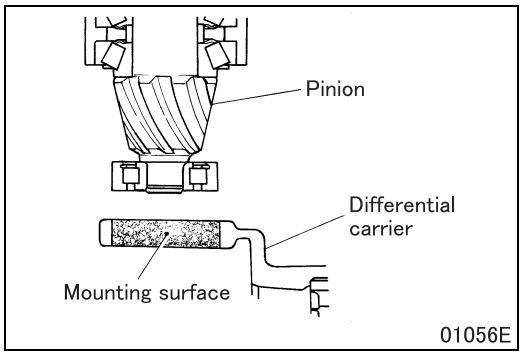

■ **Installation: Reduction pinion**

- Apply sealant to the pilot bearing mounting surface of the differential carrier.

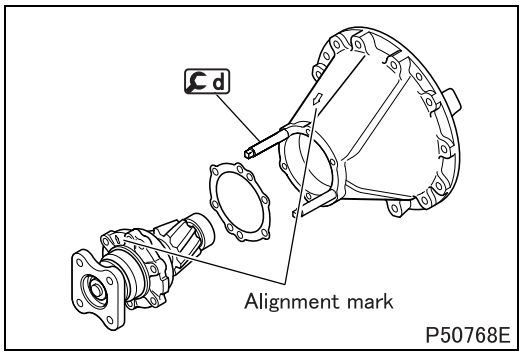

- Aligning the embossed alignment mark on the bearing retainer of the pinion assembly with that on the differential carrier, mount the pinion assembly.

CAUTION ⚠

- **Leave for 30 minutes to 2 hours after installation to let the sealant harden.**
- **Wait at least three hours or, if feasible 24 hours, before running the vehicle to let the sealant harden.**

https://truckmanualshub.com/

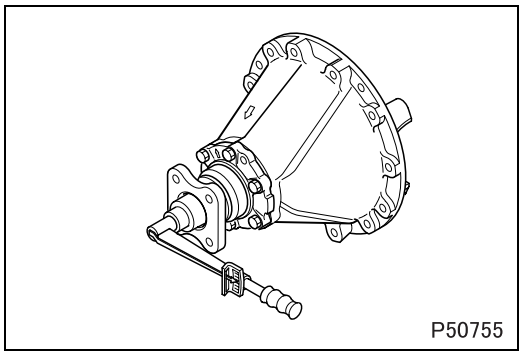
P50755

■ **Inspection: Starting torque of pinion bearing**

- The starting torque of the pinion in single unit should be the standard value.
- With the pinion installed, measure the starting torque of the pinion bearing using a torque wrench installed at the pinion.
- Record the measured starting torque for reference when the starting torque of the side bearing calculated.

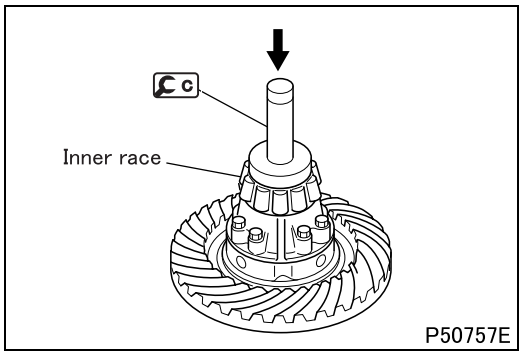

P50757E

■ **Installation: Side bearing inner race**

◆Work after installation◆

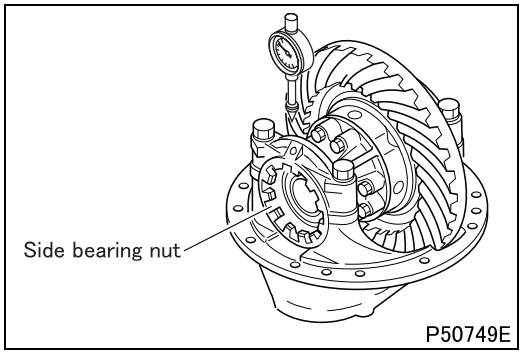

P50749E

■ **Adjustment: Backlash between reduction gear and reduction pinion**

- Adjust backlash with the side bearing nut, taking care not to allow the side bearing starting torque to change.
- When one side bearing nut is loosened, be sure to tighten the other one by the same amount to prevent the side bearing starting torque from changing.

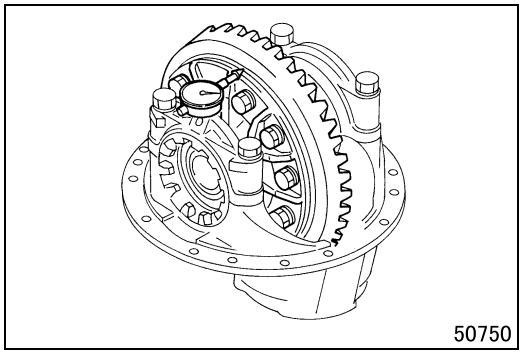
50750

■ **Inspection: Wobble at back face of reduction gear**

- Measure wobble at the illustrated position of the reduction gear.
- If the measured value deviates from the standard value, replace the reduction gear and reduction pinion of the differential as a set.

https://truckmanualshub.com/

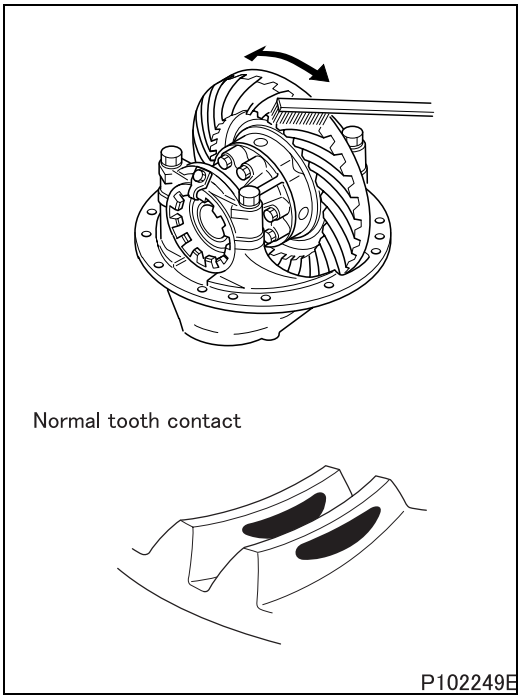

■ **Inspection: Tooth contact of reduction gear**

[Inspection]

- Apply red lead to three to four teeth at three equally spaced points of the reduction gear.
- Turn the reduction gear several times to ensure proper tooth contact.
- Tooth contact off-center to the small end side under no load moves toward to the center under a load.
- Adjust tooth contact if it is remarkably offset.

[Adjustment]

- Optimize tooth contact by increasing or decreasing shim thickness or adjusting backlash between reduction gear and reduction pinion (using the side bearing nut).

CAUTION ⚠

- **If teeth are abnormally worn or tooth contact is excessively concentrated at the large end or small end side, always replace both the reduction gear and reduction pinion as a reduction gear set.**

Tooth contact on reduction gear	Adjustment procedure
Concentrated at addendum 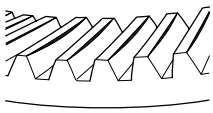 P102240	Advance reduction pinion to reduction gear (shims are reduced) 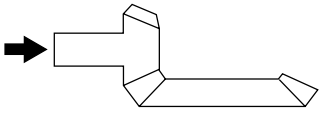 P55497
Concentrated at dedendum  P102241	Retard reduction pinion from reduction gear (shims are added) 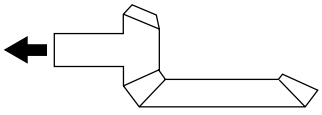 P55498

https://truckmanualshub.com/

Tooth contact on reduction gear	Adjustment procedure
Concentrated at large end side 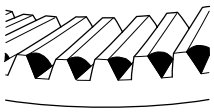 P102242	Advance reduction gear to reduction pinion center (less backlash) 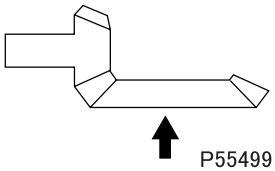 P55499
Concentrated at small end side 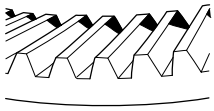 P102243	Retard reduction gear from reduction pinion center (more backlash) 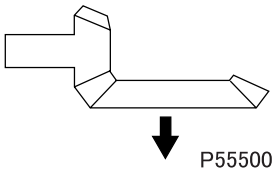 P55500

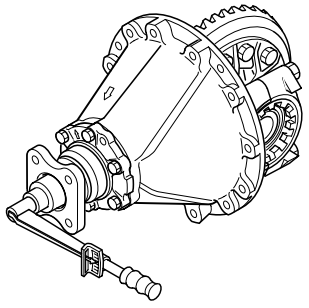
P50752

■ **Inspection: Starting torque of side bearing**

[Inspection]

- Measure the total starting torque of the pinion assembly using a torque wrench and calculate the starting torque of the side bearing using the following formula. The pinion bearing starting torque is the value obtained at the earlier measurement of the pinion bearing starting torque.
  (Total starting torque – Starting torque of the pinion bearing) × Final ratio = Starting torque of side bearing
- If the calculated value of the side bearing starting torque deviates from the standard value, adjust.

[Adjustment]

- Adjust by means of the right- and left-hand adjusting screws.
- Always adjust both adjusting screws by the same amount.
- The starting torque must be adjusted without causing the backlash between the reduction gear and reduction pinion to deviate from the standard value.

https://truckmanualshub.com/

Differential

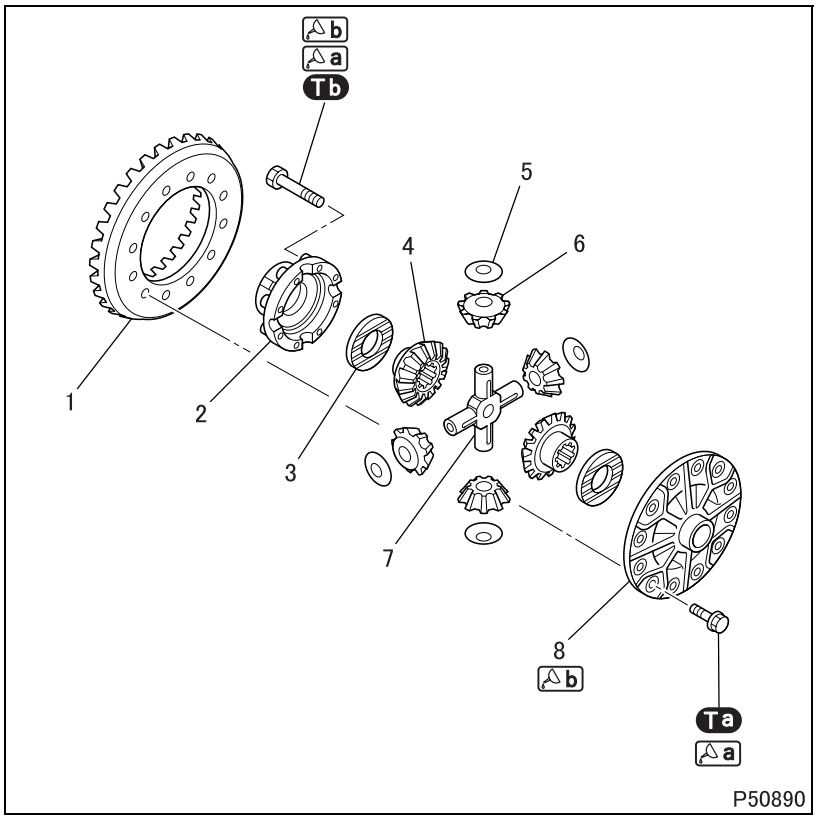

● Disassembly sequence

1 Reduction gear
2 Differential case RH
3 Side gear washer
4 Side gear
5 Pinion washer
6 Differential pinion
7 Pinion spider
8 Differential case LH

CAUTION ⚠

- **Be sure to replace the differential case RH and the differential case LH as a differential case set.**
- **Be sure to replace the side gear and the differential pinion as a side gear set.**

● Assembly sequence

Follow the disassembly sequence in reverse.

Service standards (Unit: mm {in.})

Location	Maintenance item	Standard value	Limit	Remedy
4	Backlash between side gear and spline of axle shaft	0.05 to 0.15 {0.0020 to 0.0059}	0.5 {0.020}	Replace
4, 6	Backlash between side gear and differential pinion	0.15 to 0.20 {0.0059 to 0.0079}	0.5 {0.020}	Replace
6, 7	Clearance between differential pinion and pinion spider	0.17 to 0.27 {0.0067 to 0.011}	0.5 {0.020}	Replace

Tightening torque (Unit: N·m {ft.lbs, kgf·m})

Mark	Parts to be tightened	Tightening torque	Remarks
Ta	Bolt (reduction gear mounting)	166.6 to 225.4 {120 to 165, 17 to 23}	–
Tb	Bolt (differential case RH and differential case LH mounting)	83.3 to 112.7 {61 to 83, 8.5 to 11.5}	–

Lubricant and/or sealant

Mark	Points of application	Specified lubricant and/or sealant	Quantity
a	Entire bolt	Rust preventive	As required
b	Thread area of bolt	Loctite 271	As required
	Bolt tip of differential case LH		

https://truckmanualshub.com/

◆Work before removal◆

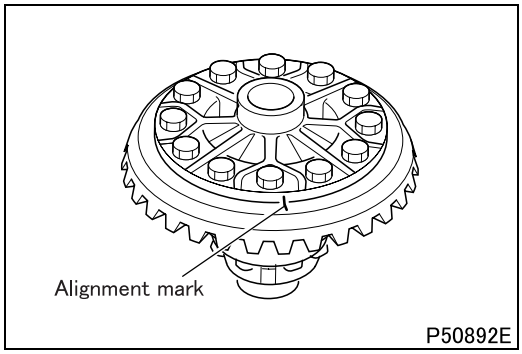

■ **Alignment marks: Reduction gear and differential case LH**

- Put alignment marks on the reduction gear and differential case LH.

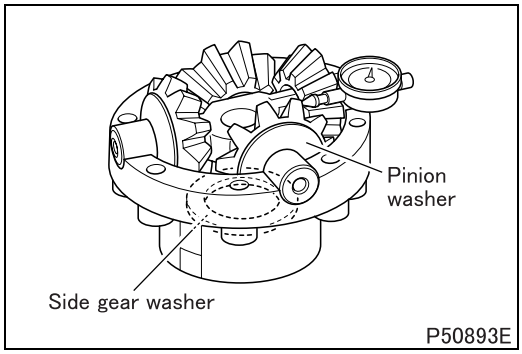

■ **Inspection: Backlash between side gear and differential pinion**

- If backlash is found faulty, the thickness of the side gear washer and pinion washer may be inappropriate.

◆Inspection procedure◆

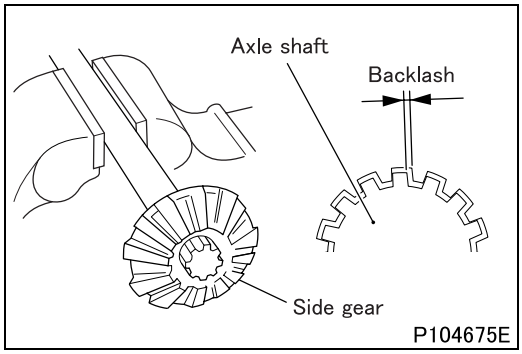

■ **Inspection: Backlash between side gear and axle shaft**

- If the measured value exceeds the limit, replace defective parts.

◆Installation procedure◆

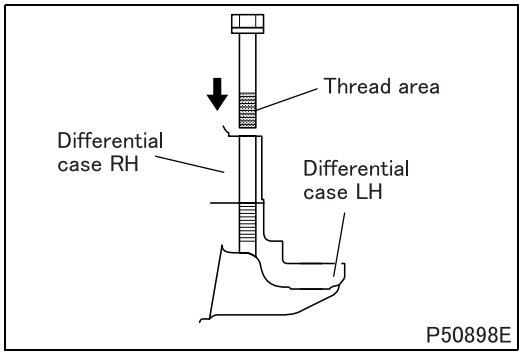

■ **Installation: Differential case RH and differential case LH**

- Apply rust preventive to the entire surface of the bolt. After applying it, blow off the excess rust preventive on the bolt using compressed air.
- Apply thread lock cement to the bolt threads.
- Tighten the bolt to the specified torque.

CAUTION ⚠

- **Make sure to apply rust preventive when tightening the bolt to the specified torque.**
- **Wait at least one hour after installation before actually running the vehicle to let the thread lock cement harden.**
- **Wait at least four hours after installation before operating the vehicle at full torque to let the thread lock cement harden.**

https://truckmanualshub.com/

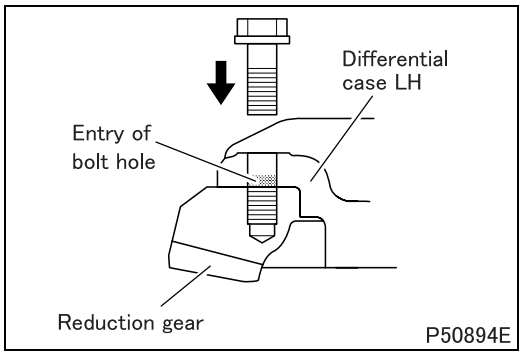

■ Installation: Reduction gear and differential case LH

- Apply rust preventive to the entire surface of the bolt. After applying it, blow off the excess rust preventive on the bolt using compressed air.
- Apply thread lock cement at the entry of bolt holes on differential case LH.
- Tighten the bolt to the specified torque.

CAUTION ⚠

- **Make sure to apply rust preventive when tightening the bolt to the specified torque.**
- **Wait at least one hour after installation before actually running the vehicle to let the thread lock cement harden.**
- **Wait at least four hours after installation before operating the vehicle at full torque to let the thread lock cement harden.**

◆Work after installation◆

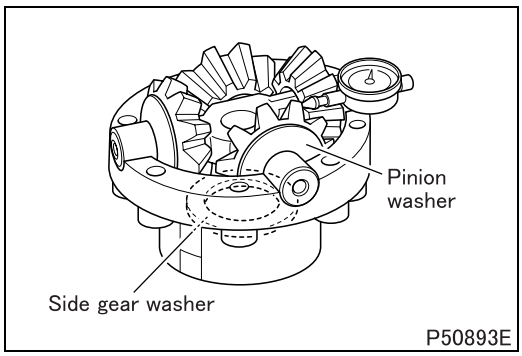

■ Inspection: Backlash between side gear and differential pinion

- If the measured value deviates from the standard value, replace the side gear washer and pinion washer.
  Thickness of side gear washers available
  3.0 mm {0.11 in.} (one thickness)
  Thickness of pinion washers available
  1.6 mm {0.063 in.} (one thickness)

CAUTION ⚠

- **Use side gear washers of the same thickness for the right and left sides.**
- **Use pinion washers of the same thickness at four locations.**

https://truckmanualshub.com/

M E M O

https://truckmanualshub.com/

Pinion

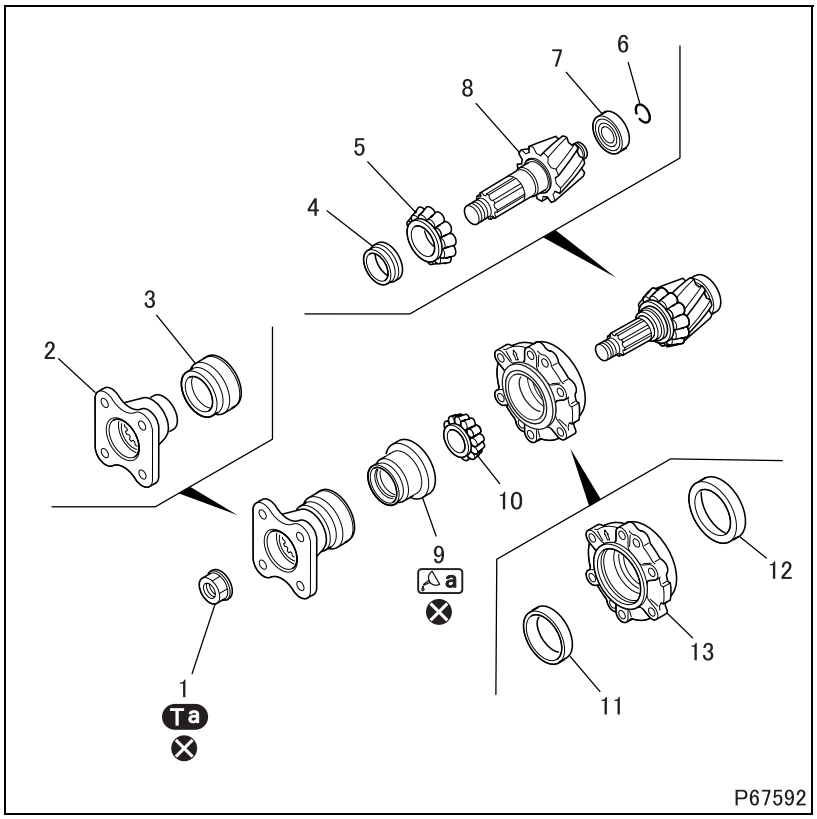

● Disassembly sequence

1 Lock nut
2 Companion flange
3 Dust cover
4 Collar
5 Rear bearing inner race
6 Lock ring
7 Pinion pilot bearing
8 Reduction pinion
9 Oil seal
10 Front bearing inner race
11 Front bearing outer race
12 Rear bearing outer race
13 Bearing retainer

⊗: Non-reusable parts

NOTE

- **Record the height of the collar to use it as a reference at assembly.**

● Assembly sequence

Follow the disassembly sequence in reverse except for the following sequence.
11 → 8 → 7 → 6 → 5 → 4 → 10 → 9 → 3

Service standards (Unit: mm {in.})

Location	Maintenance item		Standard value	Limit	Remedy
–	Starting torque of pinion bearing (tangential force at outer periphery point of bearing retainer)	When a new bearing is used	2.0 to 2.9 N·m {1.4 to 2.2 ft.lbs, 0.20 to 0.30 kgf·m} (tangential force: 34 to 52 N {7.6 to 11 lbs., 3.5 to 5.3 kgf})	–	Adjust or replace
		When an old bearing is reused	1.6 to 2.4 N·m {1.2 to 1.7 ft.lbs, 0.16 to 0.24 kgf·m} (tangential force: 27 to 41 N {6.1 to 9.2 lbs., 2.8 to 4.2 kgf})	–	Adjust or replace
7	Play in radial direction of pinion pilot bearing		–	0.2	Replace

Tightening torque (Unit: N·m {ft.lbs, kgf·m})

Mark	Parts to be tightened	Tightening torque	Remarks
Ta	Lock nut (companion flange mounting)	372.4 to 470.4 {275 to 345, 38 to 48}	–

Lubricant and/or sealant

Mark	Points of application	Specified lubricant and/or sealant	Quantity
a	Lip area of oil seal	Wheel bearing grease [NLGI No. 2 (Li soap)]	As required

https://truckmanualshub.com/

Special tools (Unit: mm {in.})

Mark	Tool name and shape	Part No.	Application
a	Pinion bearing remover A: 0.5 {0.020}, B: 25.6 {1.00} 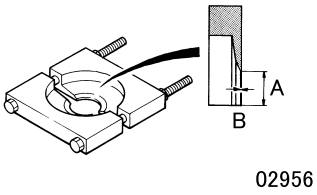 02956	MB999045	Removal of rear bearing inner race
b	Pinion bearing installer A: ϕ62 {2.44}, B: ϕ52 {2.05}, C: 125 {4.92} 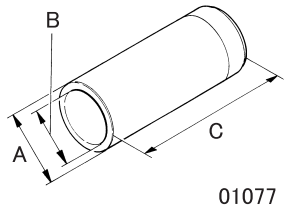 01077	MH061005	Installation of rear bearing inner race and front bearing inner race
c	Pinion pilot bearing installer A: ϕ45.2 {1.78}, B: ϕ39.2 {1.54} 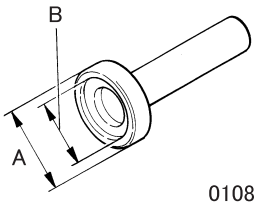 01081	MH061976	Installation of pinion pilot bearing
d	Oil seal installer A: ϕ112 {4.41}, B: ϕ88 {3.46} 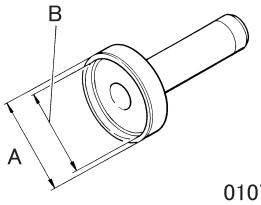 01076	MH061750	Installation of oil seal
e	Pinion bearing installer A: ϕ89 {3.50}, B: ϕ78 {3.07} 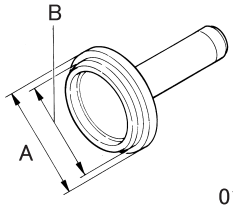 01078	MH061977	Installation of front bearing outer race
f	Pinion bearing installer A: ϕ99 {3.90}, B: ϕ88 {3.46} 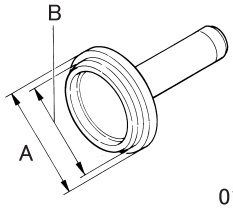 01078	MH061264	Installation of rear bearing outer race

https://truckmanualshub.com/

◆Work before removal◆

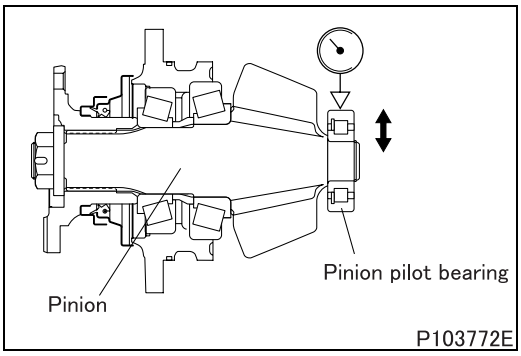

■ **Inspection: Play in radial direction of pinion pilot bearing**

- Hold the pinion and measure the play when moving the pinion pilot bearing in a radial direction.
- If the measured value exceeds the limit, replace the pinion pilot bearing.

◆Removal procedure◆

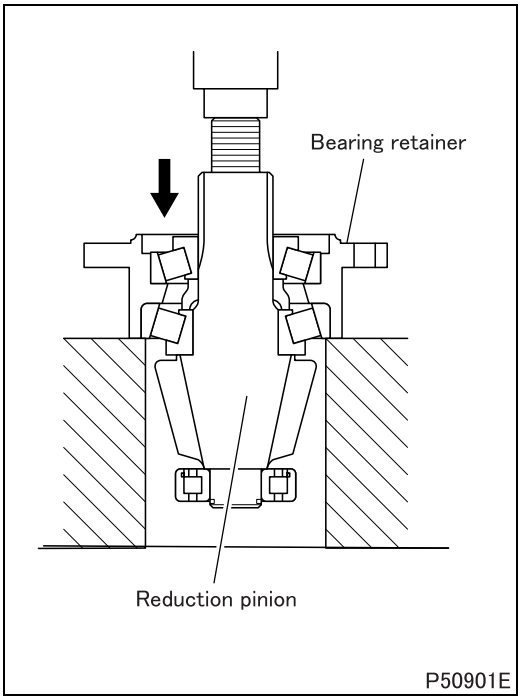

■ **Removal: Reduction pinion**

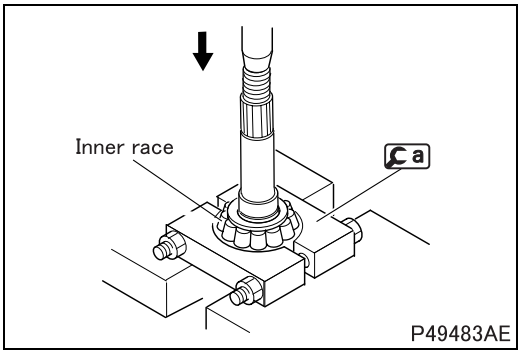

■ **Removal: Rear bearing inner race**

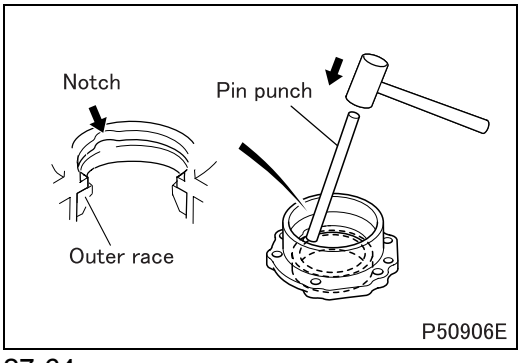

■ **Removal: Front bearing outer race**

- Drive out the front bearing outer race by tapping evenly at the three notches in the bearing retainer.

https://truckmanualshub.com/

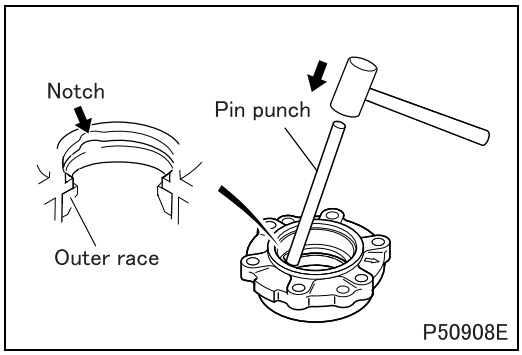

■ **Removal: Rear bearing outer race**

- Drive out the rear bearing outer race by tapping evenly at the three notches in the bearing retainer.

◆**Installation procedure**◆

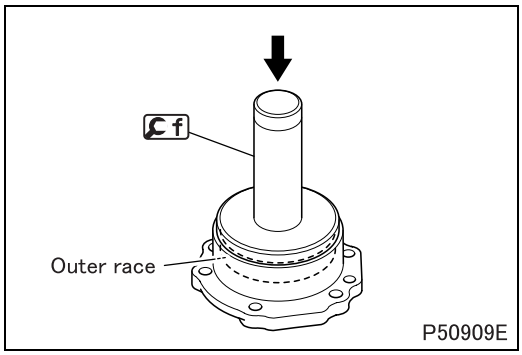

■ **Installation: Rear bearing outer race**

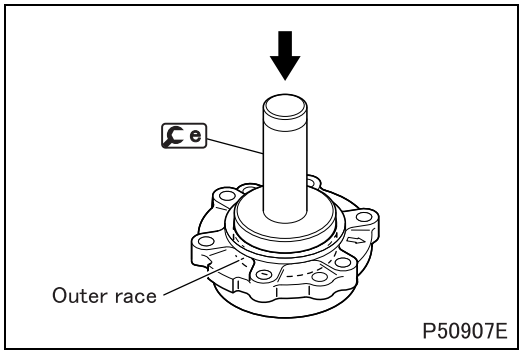

■ **Installation: Front bearing outer race**

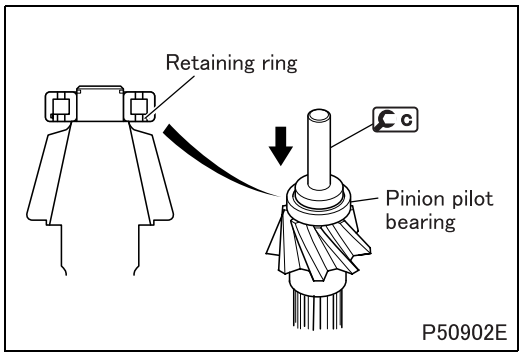

■ **Installation: Pinion pilot bearing**

- Install the pinion pilot bearing with its retaining ring placed on the gear.

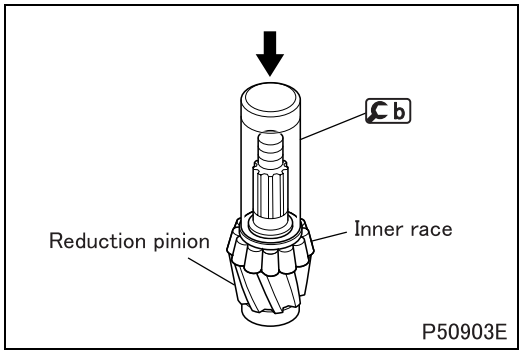

■ **Installation: Rear bearing inner race**

https://truckmanualshub.com/

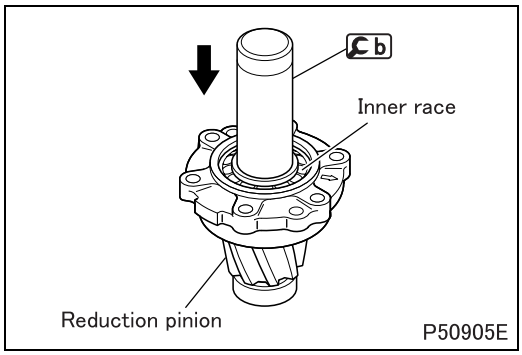

■ **Installation: Front bearing inner race**

- Install the front bearing inner race with the pinion assembled into the bearing retainer.

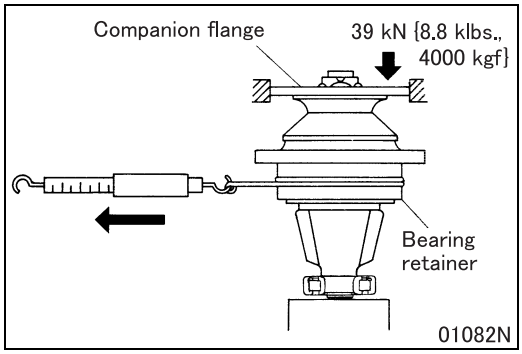

■ **Inspection: Starting torque of pinion bearing**

- Apply the specified load to the companion flange or tighten the lock nut to the specified torque.
- Measure the tangential force at outer periphery point of the bearing retainer using a spring gauge.

CAUTION ⚠

- **Secure the companion flange to measure.**
- **Do not assemble the oil seal when measuring the tangential force.**

- If the measured tangential force is within the specified value, the starting torque conforms to the standard value.
- If the measured value deviates from the standard value, adjust by changing a collar.
  Thickness of collars available
  15.600 to 16.200 mm {0.61 to 0.64 in.} (25 thicknesses in 0.025 mm {0.00098 in.} increments)

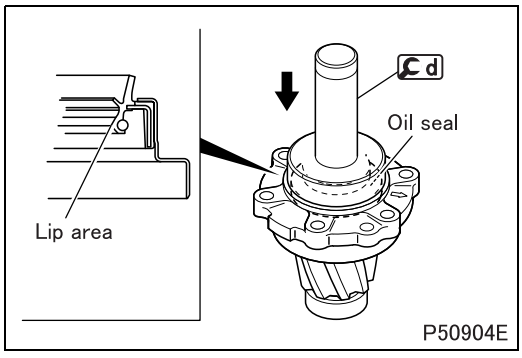

■ **Installation: Oil seal**

- Apply grease to the lip area of the oil seal and install it on the bearing retainer in the illustrated direction.

https://truckmanualshub.com/

M E M O

https://truckmanualshub.com/

LSD (Limited Slip Differential)

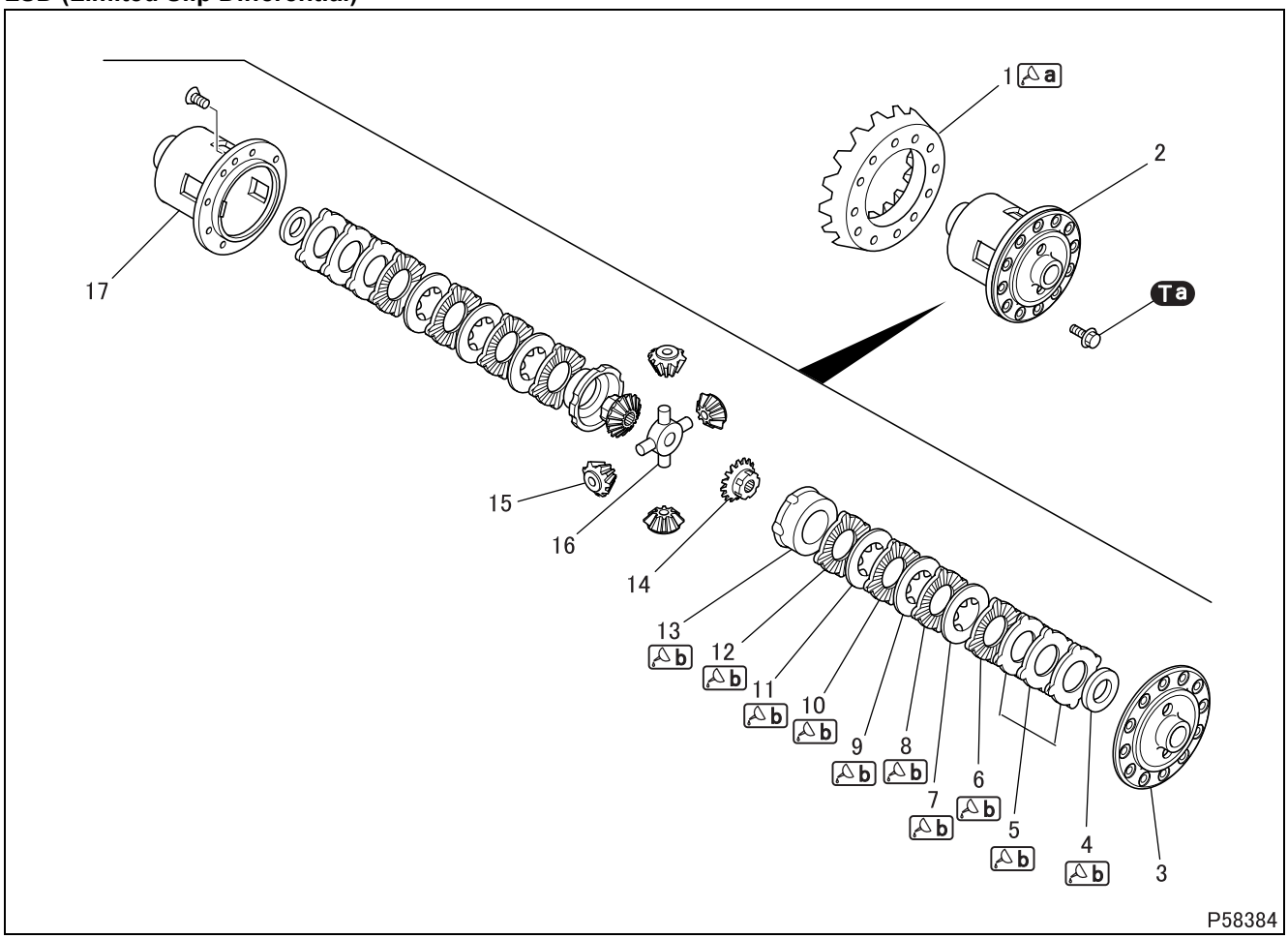

● **Disassembly sequence**

1 Reduction gear
2 LSD (Limited Slip Differential)
3 Differential case LH
4 Side gear washer
5 Spring plate
6 Friction plate
7 Friction disc
8 Friction plate
9 Friction disc
10 Friction plate
11 Friction disc
12 Friction plate
13 Pressure ring
14 Side gear
15 Differential pinion
16 Pinion spider
17 Differential case RH

CAUTION ⚠

- **Make sure to replace the side gear and the differential pinion as a side gear set.**

● **Assembly sequence**

Follow the disassembly sequence in reverse.

https://truckmanualshub.com/

Service standards (Unit: mm {in.})

Location	Maintenance item			Standard value	Limit	Remedy
2	LSD	Rotation torque of clutch plate	When a new clutch plate is assembled	201 to 298 N·m {150 to 220 ft.lbs, 20.5 to 30.0 kgf·m}	–	Replace
			When an old clutch plate is reassembled	117 to 298 N·m {86 to 220 ft.lbs, 12 to 30 kgf·m}	–	
		Clearance in side gear axial direction		0.05 to 0.20 {0.0020 to 0.0079}	–	
		Clearance in differential case axial direction		0.05 to 0.20 {0.0020 to 0.0079}	–	
4, 13 to 16	Difference in dimensions from side gear washer end face to pressure ring back face between right and left			0 to 0.05 {0 to 0.0020}	–	Replace
6 to 12	Friction disc and friction plate		Distortion	–	0.08 {0.0031}	Replace
			Wear	–	0.1 {0.0039}	
			Difference in thickness of right and left combination	0 to 0.05 {0 to 0.0020}	–	Adjust

Tightening torque (Unit: N·m {ft.lbs, kgf·m})

Mark	Parts to be tightened	Tightening torque	Remarks
Ta	Bolt (reduction gear mounting)	166.6 to 225.4 {120 to 165, 17 to 23}	–

Lubricant and/or sealant

Mark	Points of application	Specified lubricant and/or sealant	Quantity
a	Bolt threads of reduction gear	Loctite 271	As required
b	Each part	Limited slip differential oil API GL-5 SAE 90	As required

https://truckmanualshub.com/

Special tools (Unit: mm {in.})

<table>
<tr><th>Mark</th><th>Tool name and shape</th><th>Part No.</th><th>Application</th></tr>
<tr><td>a</td><td>
Side gear holding tool set
<table>
<tr><th>D</th></tr>
<tr><td>20
{0.79}</td></tr>
</table>
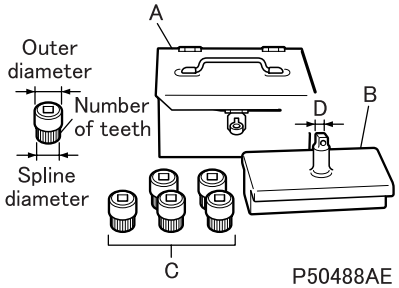

P50488AE
<table>
<tr><th colspan="2">Component</th><th>Part No.</th><th>Applied type</th></tr>
<tr><td>A</td><td>Gauge case</td><td>MB990551</td><td>–</td></tr>
<tr><td>B</td><td>Side gear holding base</td><td>MB999141</td><td>–</td></tr>
<tr><td rowspan="4">C</td><td>Side gear holding tool</td><td>–</td><td>–</td></tr>
<tr><td>Outer diameter / Number of teeth / Spline diameter</td><td>–</td><td>–</td></tr>
<tr><td>ϕ39 {1.54} / 16 {0.63} / ϕ35.6 {1.40}</td><td>MH063422</td><td>–</td></tr>
<tr><td>ϕ42 {1.65} / 18 {0.71} / ϕ39.6 {1.56}</td><td>MB999142</td><td>D033H</td></tr>
<tr><td></td><td>ϕ42 {1.65} / 20 {0.79} / ϕ42 {1.65}</td><td>MH063423</td><td>D035H</td></tr>
</table>
</td><td>MB999140</td><td>Measure rotation torque of LSD clutch plate</td></tr>
</table>

◆Work before removal◆

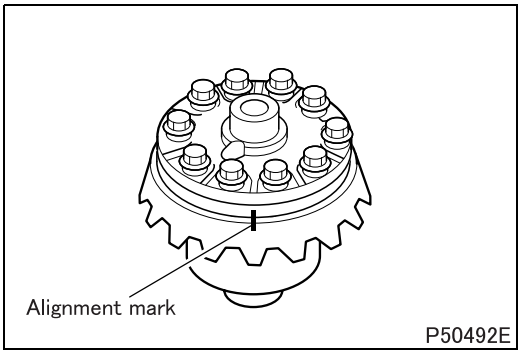

P50492E

■ **Alignment marks: Reduction gear and limited slip differential**

- Put alignment marks on the reduction gear and limited slip differential.

◆Inspection procedure◆

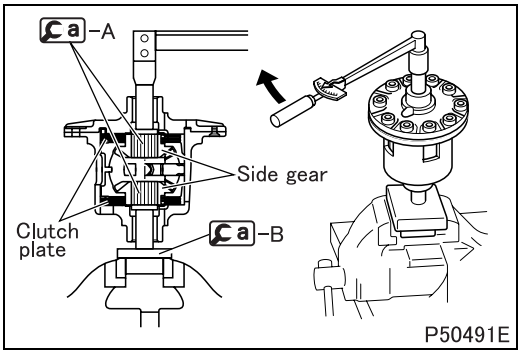

P50491E

■ **Inspection: Rotation torque of LSD clutch plate**

- After removing the reduction gear, carry out the following inspection.
- Measure the rotation torque to check for the friction force of the clutch plate.

NOTE

- **For measurement of the rotation torque, rotate the side gears to sufficiently smooth their operation and measure the value during their rotation.**

https://truckmanualshub.com/

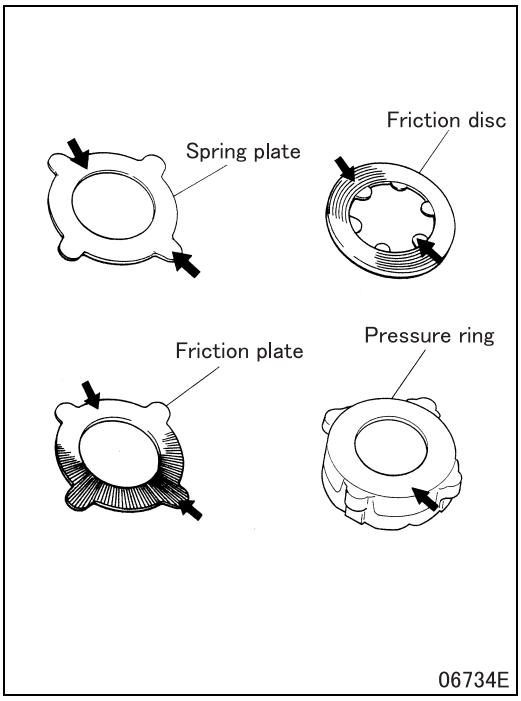

■ **Inspection: Limited slip differential**

(1) Inspection of contacting and sliding surfaces

- If heat discoloration and remarkable wear are found on friction surfaces and sliding surfaces of the spring plates, spring discs, friction discs and friction plates, replace defective parts.

NOTE

- **Strong contact on the inner periphery of friction surfaces is caused by the spring force of each plate and disc. Do not mistake that it is caused by abnormal wear.**

- If cracks and damage are found on the protrusions on the inside and outside periphery of the spring plates, friction discs and friction plates, replace defective parts.
- If dents and damage are found on the friction surfaces and sliding surfaces of the pressure rings to friction discs, polish them with an oilstone, and lap and correct them with a compound on a surface plate.

NOTE

- **Strong contact on the inner periphery of friction surfaces is caused by the spring force of each plate and disc. Do not mistake that it is caused by abnormal wear.**
- Inspect contacting and sliding areas ⬅ of the differential case LH, side gear washers, pressure rings, side gears, differential pinion, pinion spider and differential case RH, and correct burrs and dents with an oilstone.

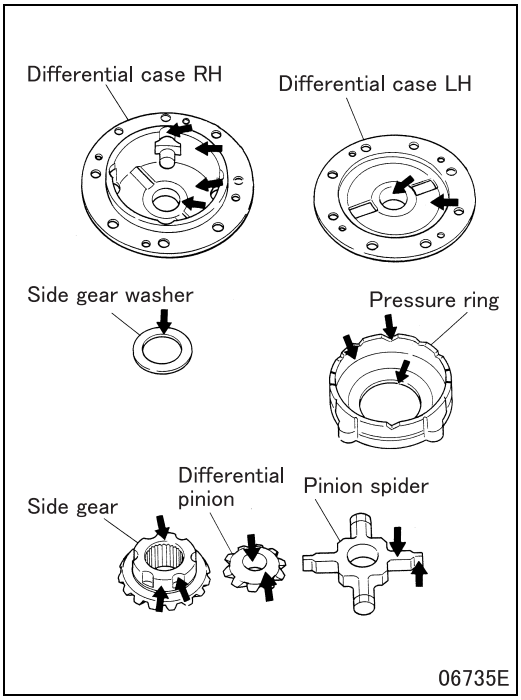

(2) Inspection of distortion

- Apply a dial gauge to the friction disc and friction plate on a surface plate and measure their distortion (flatness) while turning them. If the measured value exceeds the limit, replace.

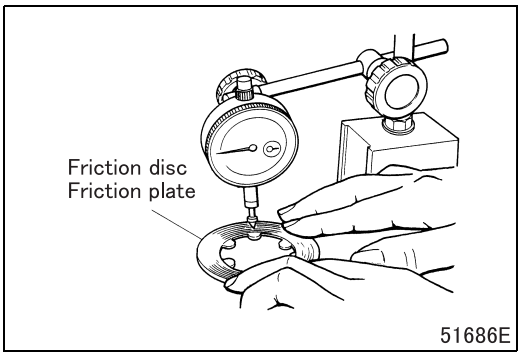

https://truckmanualshub.com/

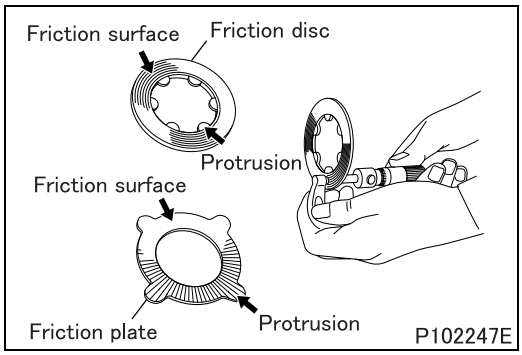

(3) Inspection of thickness

- Measure thickness of the friction surfaces and protrusions ⬅ of the spring plate, friction disc and friction plate, and find the difference. If it exceeds the limit, replace defective parts.

NOTE

- **Take measurements at several points for each part.**

◆Work before assembly◆

■ Adjustment: Dimensional difference and clearance

- Before assembling the limited slip differential, adjust the dimensional difference (friction force of clutch plate) in the axial direction and the clearance in the side gear axial direction, when assembling integral parts of the differential cases LH and RH, in the following procedure.

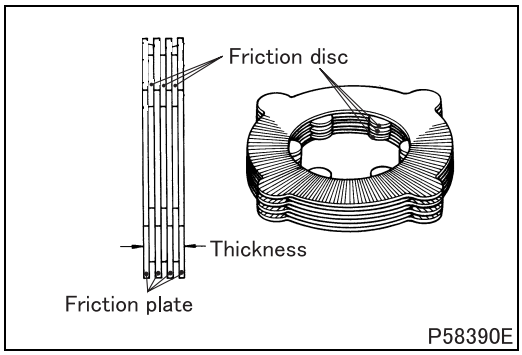

- Stack the friction discs and friction plates as illustrated and measure thickness with a micrometer. Select the combination so that the difference in thickness between the right and left combination falls within the range of the standard value.
  Thickness of friction discs available
  1.9, 2.0, 2.1 mm {0.075, 0.079, 0.083 in.} (three sizes)
  Thickness of friction plates available
  2.0 mm {0.079 in.} (one size)

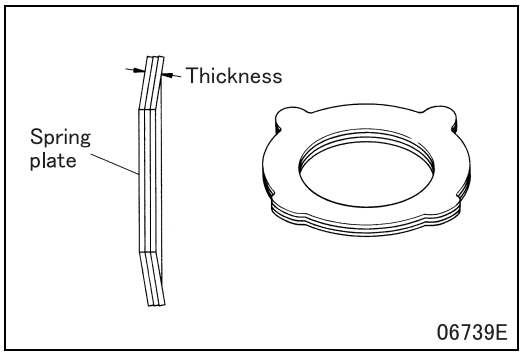

- Stack a spring plate and a spring disc as illustrated and measure the thickness with a micrometer. Select the combination so that the difference in thickness between the right and left combination is as small as possible.
  Thickness of spring plates available
  2.0 mm {0.079 in.} (one size)

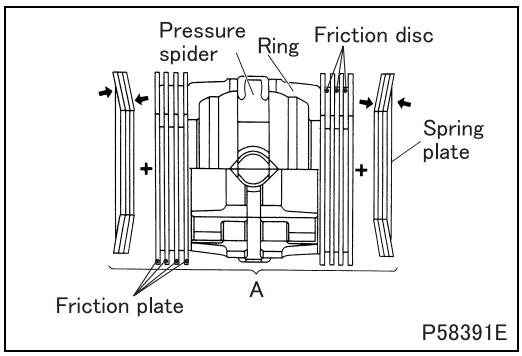

- Assemble the pressure rings, pinion spiders, friction discs, friction plates, spring plates and spring discs and measure overall width A with a micrometer.

NOTE

- **Measure the overall width with the V-shaped groove of the pressure ring pressed against the pinion spider from both sides to obtain secure contact.**

https://truckmanualshub.com/

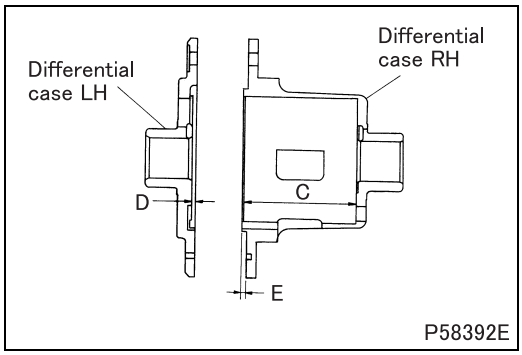

- Find dimension B between the spring plate contact faces when the differential cases LH and RH are combined.
  B=C+D–E

- If overall width A measured in the previous item and the clearance (B-A) between the differential cases LH and RH deviate from the standard value, adjust by changing a friction plate.
  Thickness of friction plates available
  1.9, 2.0, 2.1 mm {0.075, 0.079, 0.083 in.} (three sizes)

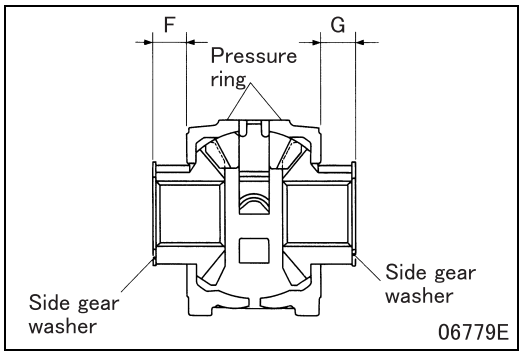

- After installing the side gear washers as illustrated, make sure that the difference between F and G dimensions from the back face of the pressure rings to the end face of the side gear washers falls within the range of the standard value.

NOTE

- **Measure the dimensions with the V-shaped groove of the pressure ring pressed against the pinion spider from both sides to obtain secure contact.**

- If the difference in dimension deviates from the standard value, adjust by changing the side gear washer.
  Thickness of side gear washers available
  1.5, 1.6, 1.7 mm {0.059, 0.063, 0.067 in.} (three sizes)

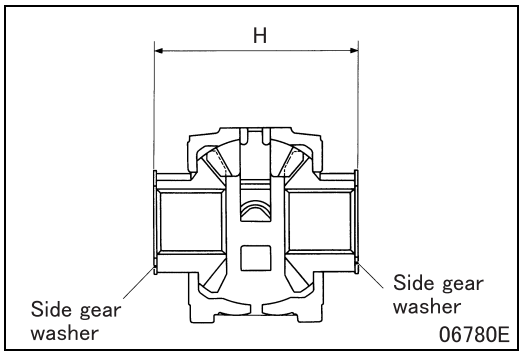

- Measure overall width H.

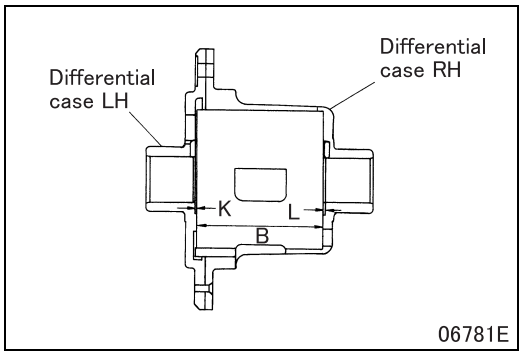

- Find dimension J between side gear washer contact faces when the differential cases LH and RH are combined.
  J=B+K+L

NOTE

- **For dimension B, refer to the difference between spring plate contact surfaces found in the previous item when the differential cases LH and RH are combined.**

- Check that clearance in the side gear axial direction is within the range of the standard value.
- If the clearance deviates from the standard value, adjust by changing the side gear washer.
  Thickness of side gear washers available
  1.5, 1.6, 1.7 mm {0.059, 0.063, 0.067 in.} (three sizes)

NOTE

- **Select side gear washers so that the right and left dimensional difference from the back face of the pressure rings to the end face of the side gear washers conforms to the standard value.**

https://truckmanualshub.com/

◆Assembly procedure◆

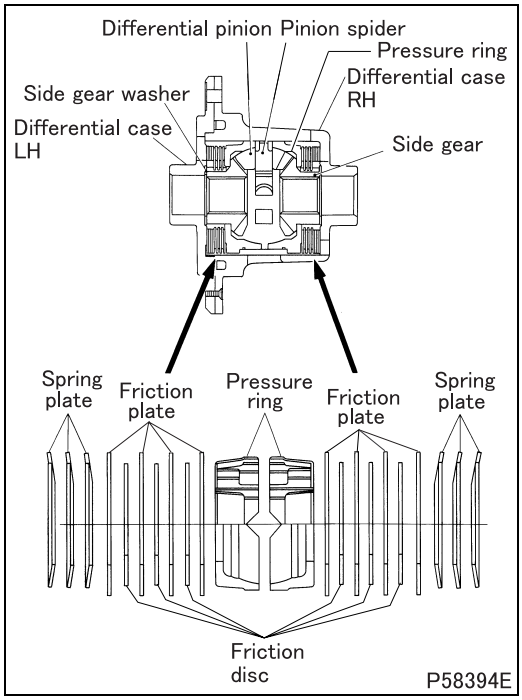

■ **Assembly: LSD (Limited Slip Differential)**

- Assemble each part into the differential case RH in the illustrated direction.

NOTE

- **Take care not to install the friction discs and friction plates in a wrong sequence and the spring plates in a wrong direction.**
- **When assembling, apply gear oil to each part. Especially, apply gear oil carefully to contact surfaces and sliding surfaces.**

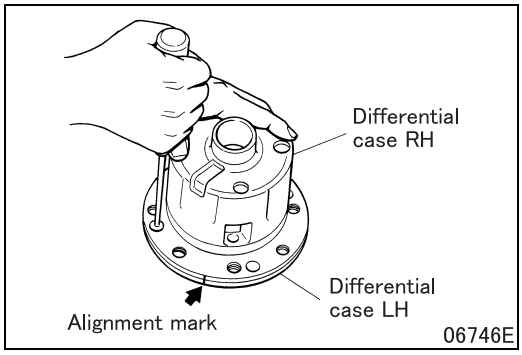

- Aligning the alignment mark (the same Arabic numeral) of the differential case LH with that of the differential case RH, tighten the screws in the diagonal sequence gradually and evenly.

NOTE

- **If the differential cases LH and RH do not align properly with each other even after the screws have been tightened fully, improperly assembled side gear washers and spring plates are suspected. In that case, reassemble these parts.**

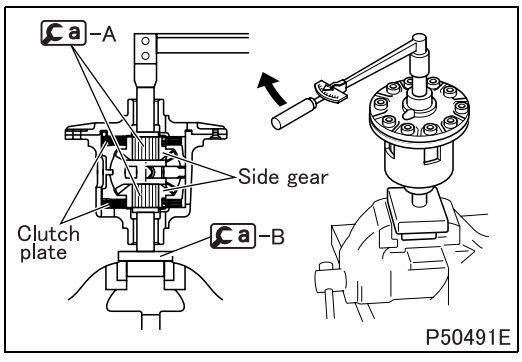

■ **Inspection: Rotation torque of limited slip differential clutch plate**

- After assembling LSD, carry out the following inspection.
- Measure the rotation torque to check for the friction force of the clutch plate.

NOTE

- **For measurement of rotation torque, rotate the side gears to sufficiently smooth their operation and measure the value during their rotation.**

- If the measured value deviates from the standard value, replace defective parts of the internal components.

https://truckmanualshub.com/

FUSO

Group 31

Wheel and Tire

MITSUBISHI FUSO TRUCK OF AMERICA, Inc.

Pub.No.00ELT0001-31

https://truckmanualshub.com/

INDEX

SPECIFICATIONS **31-2**

TROUBLESHOOTING **31-3**

ON-VEHICLE INSPECTION AND ADJUSTMENT

1. **Inspection of Looseness in Wheel Nuts** **31-4**
2. **Inspection of Tire** **31-5**

WHEEL AND TIRE **31-8**

https://truckmanualshub.com/

SPECIFICATIONS

Tire size	Wheel type
215/85R16	16 × 6K-127
215/75R17.5	17.5 × 6.00-127
235/85R16	16 × 6K-135

- Tire pressures specified for each tire size are shown on the tire pressure label.

https://truckmanualshub.com/

Symptoms / Possible causes			Tire tread wear										Reference Gr
			Both shoulders worn	Center worn	Outside worn	Inside worn	Worn in feather pattern from outside in	Worn in feather pattern from inside out	Worn in wave pattern	Worn in concave (one spot or more)	Worn in pit over the entire circumference	Worn in serration	
Overload			O										
Tire pressure		Too low	O						O	O	O	O	
		Too high		O									
Wheel alignment	Toe-in	Excessive			O		O						Gr26A, B
		Insufficient				O							
	Camber	Excessive			O								
		Insufficient				O							
	Excessive toe-out					O		O					
	Multiple misalignment		O		O	O	O	O	O	O	O		
Knuckle arm bent					O	O	O	O					
Left and right tie-rods different in length							O						
Wheels out of balance									O	O	O	O	
Wheel bearing loose									O	O	O	O	Gr26A, B, 27
Ball joint loose										O			Gr26A, B
Tie-rod end loose										O			Gr26A, B
Brake drum eccentrically mounted <Drum brake>										O	O		Gr26B, 27
Axle bent									O	O			Gr26A, B, 27
Left and right wheels steered at improper angles												O	Gr26A, B
Hard acceleration, braking, or steering												O	
Specific road surface conditions					O	O							

https://truckmanualshub.com/

ON-VEHICLE INSPECTION AND ADJUSTMENT

1. Inspection of Looseness in Wheel Nuts

Tightening torque (Unit: N·m {ft.lbs, kgf·m})

Mark	Parts to be tightened	Tightening torque	Remarks
–	Wheel nut	490 ± 49 {360 ± 36, 50 ± 5}	–

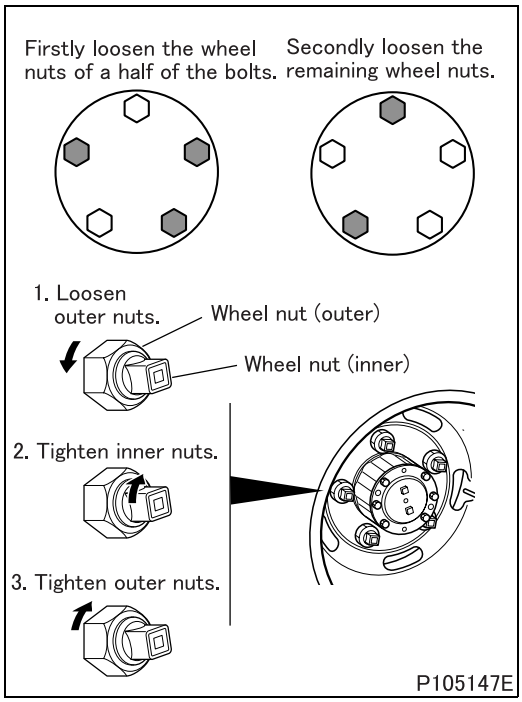

(1) Single tire

- Tighten the wheel nuts to the specified torque using a torque wrench.
- If frequent loosening of tightened wheel nuts or other similar abnormalities are found, check the wheel nuts, hub bolts, and disc wheel for cracks or other damage which may cause the abnormal condition. (See “WHEEL AND TIRE.”)

(2) Double tire

- Loosen outer wheel nuts of half of the wheel bolts (alternately) and then tighten the inner wheel nuts to the specified torque using a torque wrench. Only the 5-stud type wheel is shown in the drawing.
- Retighten the loosened outer wheel nut to the specified torque using a torque wrench.
- Follow the same procedure for the remaining outer wheel nuts and inner wheel nuts of half of the wheel bolts.
- If frequent loosening of tightened wheel nuts or other similar abnormalities are found, check the wheel nuts, hub bolts, and disc wheel for cracks or other damage which may cause the abnormal condition. (See “WHEEL AND TIRE.”)

https://truckmanualshub.com/

2. Inspection of Tire

Service standards (Unit: mm {in.})

Location	Maintenance item	Standard value	Limit	Remedy
–	Depth of tire tread grooves	–	1.6 {0.063}	Replace

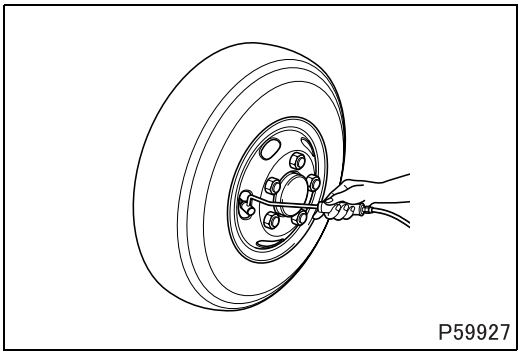
P59927

2.1 Air pressure

Tire air pressure should be checked before the vehicle is driven, while the tires are still cool.

Item / Vehicle model	Tire size	Air pressure kPa {psi, kgf/cm^2}
FEC5	LT215/85R16-10PR (load range E)	550 {80, 5.5}
FEC7 FEC9	215/75R17.5 124/123L (load range F)	690 {100, 7.0}
FG	LT235/85R16-10PR (load range E)	550 {80, 5.5}

CAUTION ⚠

- **Make certain that there is no difference in the air pressure between the inner and outer rear tires.**
- **Make certain you use valve caps on the air valves.**
- **It is not necessary to increase the air pressure for high-speed driving.**

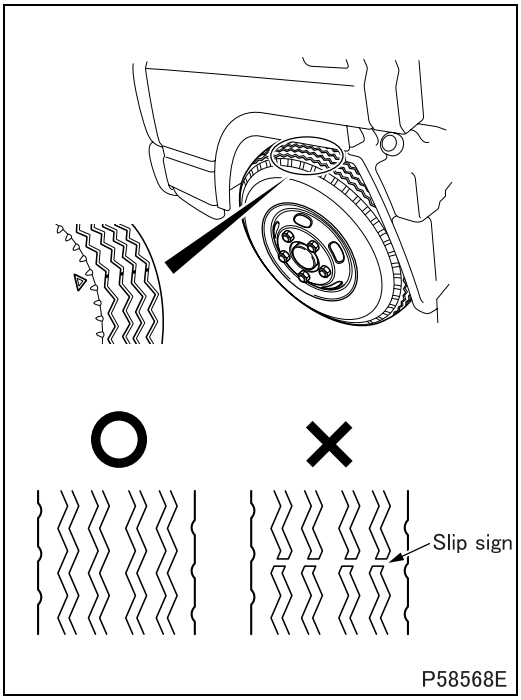

P58568E

2.2 Checking tread depth

- Check all around the tire treads to make sure that the depth of the tread grooves is above the wear limit.
- If the tread grooves are not deep enough, slip sign appears at the position of the ⧋ mark, where the tread groove has worn away.

WARNING ⚠

- **If the depth of the tread grooves is not adequate, the tires will slip on wet roads and present a hazard. Such tires are also extremely dangerous because they are more susceptible to hydroplaning when the vehicle is running at high speeds in the rain. Such tires must be replaced with new ones as soon as possible.**

https://truckmanualshub.com/

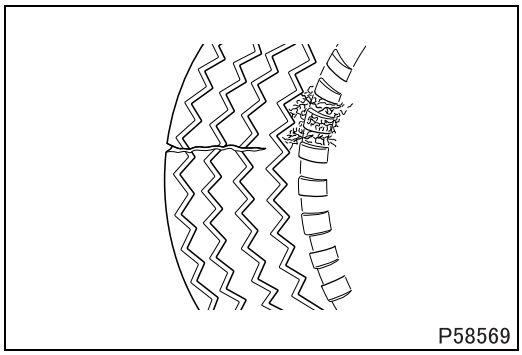
P58569

2.3 Checking for cracks, damage, and objects embedded in the treads

- Check the tire treads and walls for cracks and damage.
- Check tire treads for uneven wear or other abnormal wear.
- Check if metal objects or nails have penetrated the tires.
- Check for stones embedded between double tires.

WARNING ⚠

- **Badly damaged or worn tires are extremely dangerous, because they can be punctured more easily when the vehicle is running, they must be replaced with new ones as soon as possible.**

https://truckmanualshub.com/

M E M O

https://truckmanualshub.com/

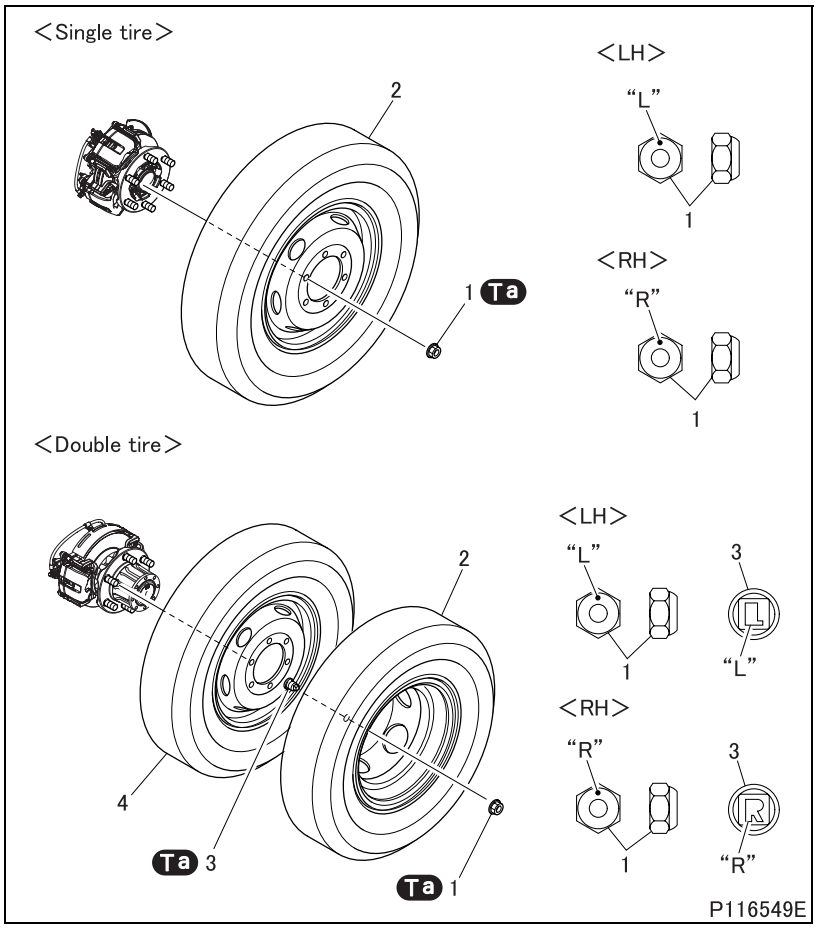

CAUTION ⚠

- **Use right-hand threaded wheel nuts marked "R" for right side wheels and left-hand threaded wheel nuts marked "L" for left side wheels.**

●Removal sequence

1 Wheel nut <Single tire>
Wheel nut (outer) <Double tire>
2 Tire (See later section.)
3 Wheel nut (inner) <Double tire>
4 Tire <Double tire>
(See later section.)

●Installation sequence

Follow the removal sequence in reverse.

CAUTION ⚠

- **The wheel nuts are designed to be tightened without any coating of grease. Never grease the wheel nuts. Even if tightened to the specified torques, greased wheel nuts can loosen.**
- **Always use genuine replacement wheel nuts and tighten them to the specified torque to prevent damage to hub bolts and loosening of wheel nuts.**

Service standards (Unit: mm {in.})

Location	Maintenance item	Standard value	Limit	Remedy
2, 4	Tire lateral runout (sideway deflection)	3.5 {0.14} or less	–	Correct or replace

Tightening torque (Unit: N·m {ft.lbs, kgf·m})

Mark	Parts to be tightened	Tightening torque	Remarks
Ta	Wheel nut	490 ± 49 {360 ± 36, 50 ± 5.0}	–

https://truckmanualshub.com/

◆Removal procedure◆

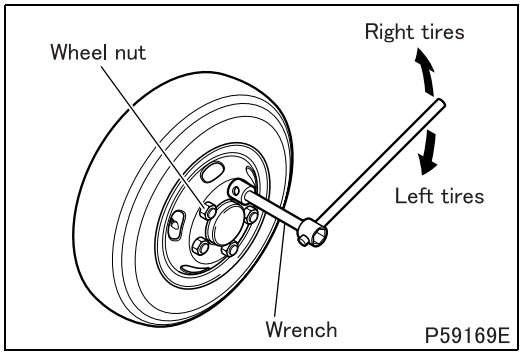

■Removal: Tires

- Loosen wheel nuts slightly. The wheel nuts for right tires have right-hand threads “R”, and the wheel nuts for left tires have left-hand threads “L”.

WARNING ⚠

- **Make certain that wheel nut wrench is fully engaged, all the way to the back of nuts. If it is not, it could slip.**

CAUTION ⚠

- **Only loosen wheel nuts slightly. Do not remove them.**

- Jack up the vehicle carefully, until the tire is slightly off the ground.
  Remove wheel nuts, then remove the tire.
- When working on the double tires at the rear of the vehicle, first remove the outside tire, then lower the vehicle and loosen the nuts on the inside tire. After doing this, jack the vehicle back up and remove the tire.

◆Inspection procedure◆

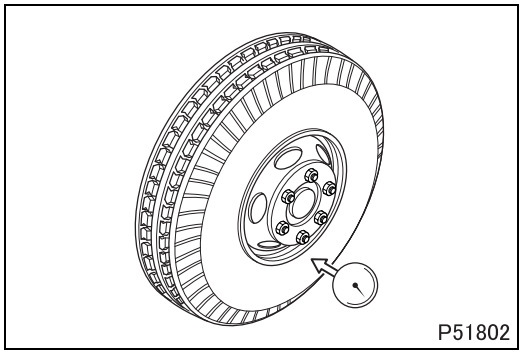

■ Inspection: Tire

- Measure the tire for lateral runout (sideway deflection).
- If the measured value is equal to or exceeds the standard value, correct as follows.

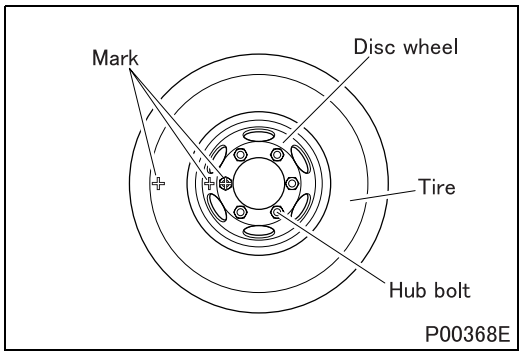

■ Correction: Tire

- Mark the tire, disc wheel, and one of the hub bolts in the illustrated locations.
- Remove the tire from the disc wheel.

https://truckmanualshub.com/

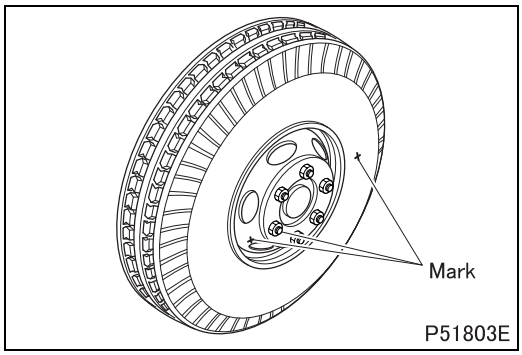

- Measure the disc wheel for lateral runout.
- If the disc wheel's maximum runout is located near the mark on the wheel, install the tire such that the mark on the tire is 180° away from the mark on the disc wheel.
- Measure the tire again for lateral runout.
- If the measured value still does not conform to the standard value, replace the tire.

◆Installation procedure◆

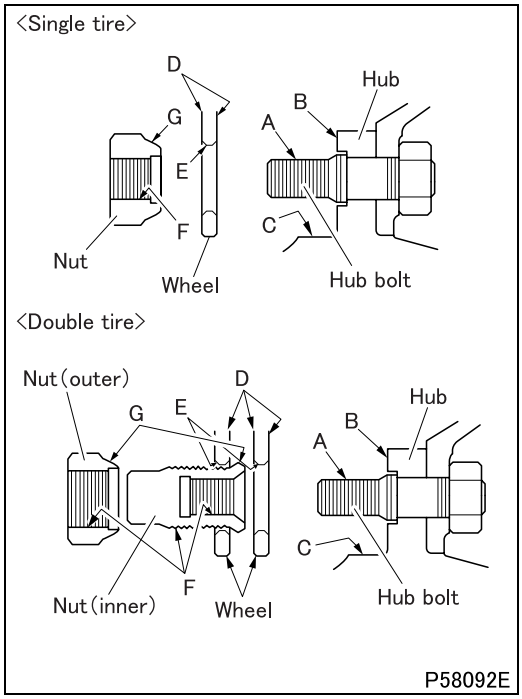

■ Installation: Tire

- To prevent hardware and parts from becoming loose and/or damaged, thoroughly clean the following areas, removing rust, dirt, paint and foreign material, before installing the tire.
  - A: Threaded portion of hub bolt
  - B: Wheel mounting surface of hub
  - C: Wheel alignment area of hub
  - D: Mating surfaces of disc wheel
  - E: Wheel nut mounting surface of disc wheel
  - F: Threaded portion of wheel nut
  - G: Spherical portion of wheel nut

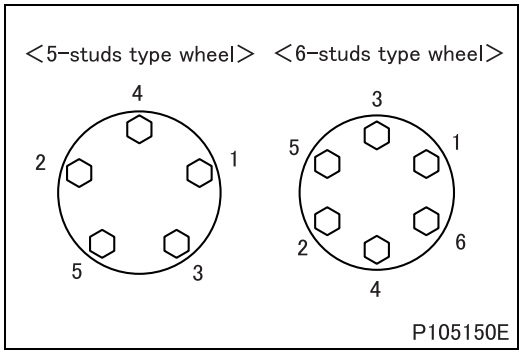

- Install the wheel nuts by hand, tightening them as far as they go to ensure that they turn smoothly. If there is any abnormality such as a sticking point, replace the hub bolt. (See Gr26A, B and 27.)
- The wheel nuts should be tightened in the diagonal sequence in a few steps. Lastly, use a torque wrench to retighten them to the specified torque.
- When tightening the nuts with an impact wrench, be aware of tightening duration, compressed air pressure intensity, etc. to prevent overtightening and use a torque wrench to retighten them in the final step.

WARNING ⚠

- **Always use the specified torque when tightening the wheel nuts. If the wheel nuts are not tightened properly, the wheels could come loose while the vehicle is being driven, which could result in life threatening accidents or the truck being disabled.**

https://truckmanualshub.com/

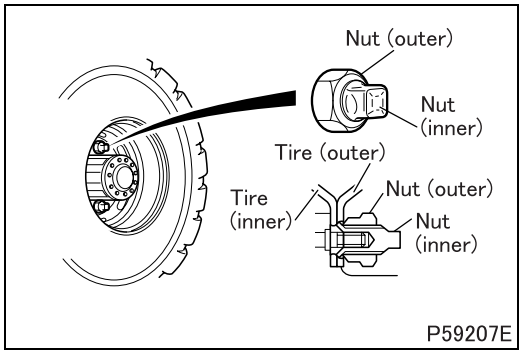

CAUTION ⚠

- **Over-tightening the wheel nuts can damage them.**

- Install the dual rear tires as follows:
  - After mounting inner tire and fully tightening inner wheel nuts, jack the vehicle up and mount on outer tire, then tighten outer wheel nuts.
  - Even if only outside tire is to be changed, do not mount it until inner wheel nuts have been fastened at the specified torque.
  - Slide the air valves on the inside and outside tires down when mounting the tires.

WARNING ⚠

- **If the threads are scored, or the disc wheel is deformed or cracked, change bolts, nuts and disc. Driving the truck before correcting such problems can cause the tire in question to come loose, which could be the source of major accidents.**

CAUTION ⚠

- **Check hub bolt threads carefully for damage before putting the tire on.**

- Place the tapered end of wheel nuts towards the disc wheel and fasten temporarily. Center so that there is no eccentricity between bolts and the disc wheel bolt holes.
- Lower the vehicle.

https://truckmanualshub.com/

Tire

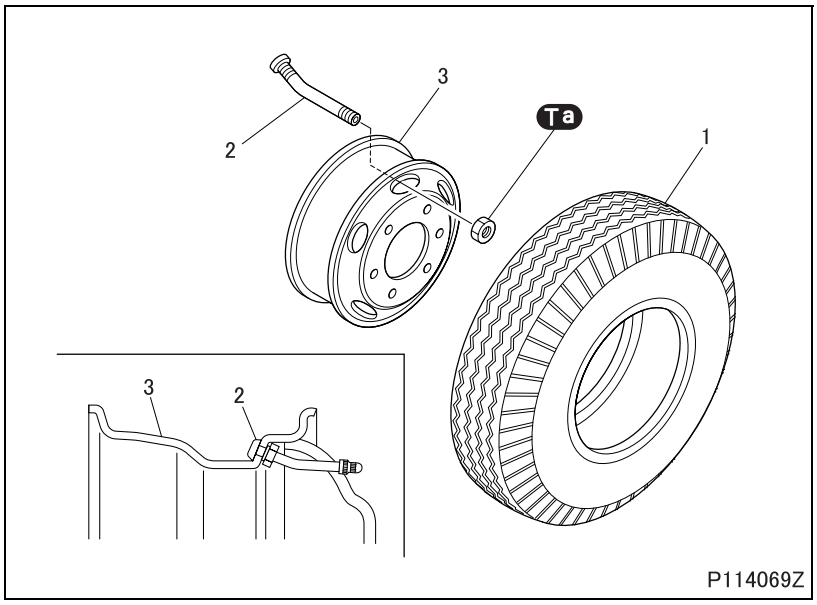

● **Disassembly sequence**

1 Tire
2 Air valve
3 Disc wheel

● **Assembly sequence**

Follow the disassembly sequence in reverse.

Service standards (Unit: mm {in.})

Location	Maintenance item		Standard value	Limit	Remedy
–	Tire assembly static unbalance tolerance		70 g {2.47 oz} or less	–	Correct
3	Disc wheel	Flatness (at hub surface)	0.4 {0.016} or less	–	Replace
		Lateral runout (sideway deflection)	1.5 {0.059} or less	–	
		Radial runout (vertical deflection)	1.5 {0.059} or less	–	

Tightening torque (Unit: N·m {ft.lbs, kgf·m})

Mark	Parts to be tightened	Tightening torque	Remarks
Ta	Nut	12.8 ± 1.4 {9.4 ± 1.0, 1.3 ± 0.14}	–

https://truckmanualshub.com/

◆Inspection procedure◆

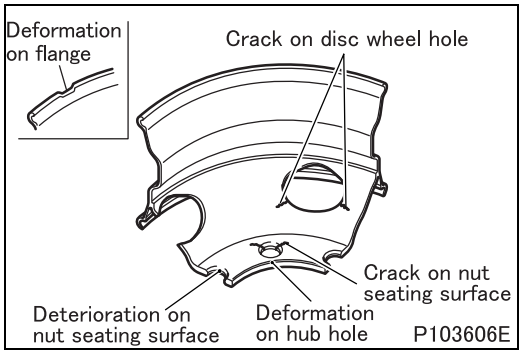

■ Inspection: Disc wheel

(1) Visual inspection

- Visually inspect the disc wheel for deformation, crack, deterioration, stepped wear on the wheel hub mounting surface. If any abnormality is found, replace the disc wheel with a new one.
- If any abnormality is found on the disc wheel, inspect the wheel hub. (See Gr26A, B and 27.)

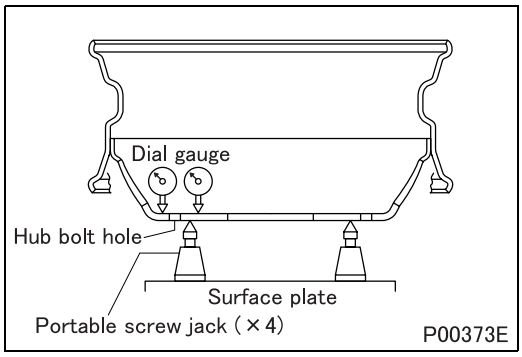

(2) Flatness

- Measure flatness around the inner and outer circumferences of hub bolt holes in the disc wheel.
- If the measured value is equal to or exceeds the standard value, replace the disc wheel.

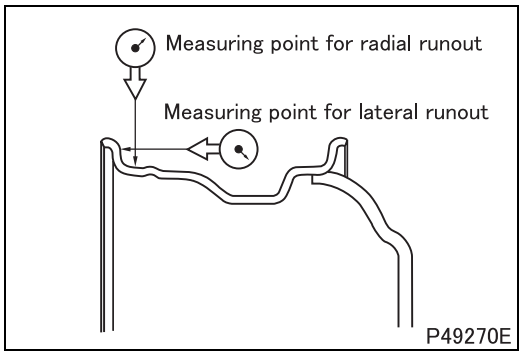

(3) Runout

- If the measured value is equal to or exceeds the standard value, replace the disc wheel.

◆Installation procedure◆

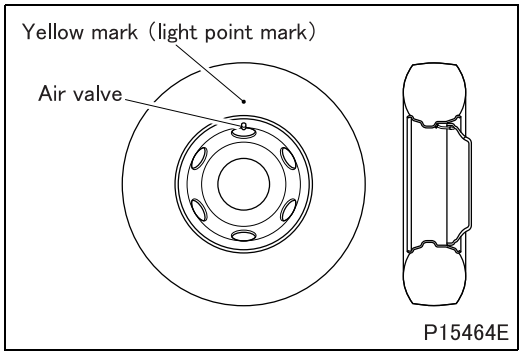

■ Installation: Tire

<Tire with no red mark>

- Install the tire such that the yellow mark (light point mark) on the tire is aligned with the air valve on the disc wheel.

https://truckmanualshub.com/

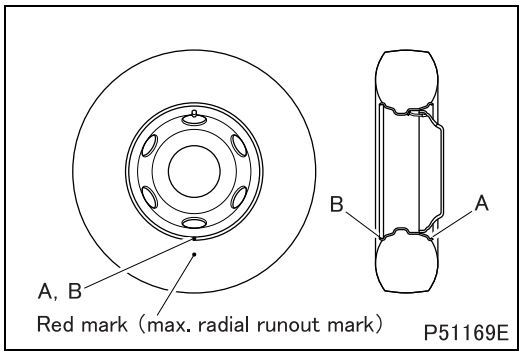

<Tire with red mark>

- Install the tire such that the red mark (max. radial runout mark) on the tire is aligned with mark A or B on the disc wheel.
  A: Front face of disc wheel <16-inch wheel>
  B: Back face of disc wheel <17.5-inch wheel>

◆Installation procedure◆

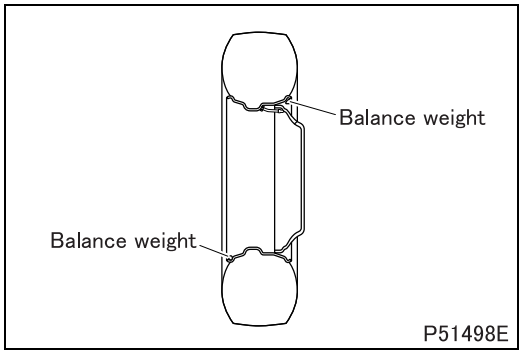

■ Installation: Balance weight

- Install balance weights onto the front and back sides of the disc of the tires listed in the table below. Ensure that the static unbalance of the tire being balanced remains within the standard value.

Tires being balanced	Vehicle model
Tires on front axle	FE
Tires on front axle, tires on rear axle	FG

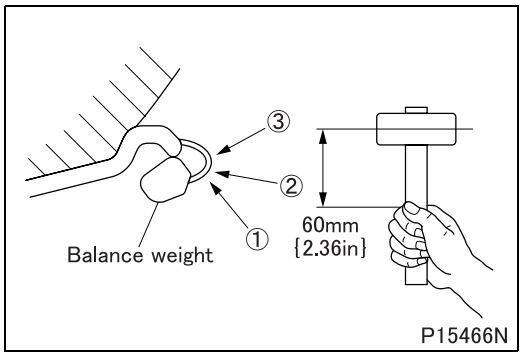

- Use a 1-pound plastic resin hammer to drive balance weights into position.
- To install a balance weight, tap the clip of the weight in the center at 1, 2 and 3 in that order.

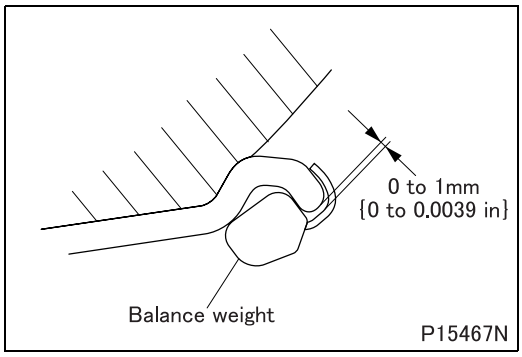

- Leave a clearance of approx. 0 to 1 mm {0 to 0.039 in.} between the clip and the disc wheel. Ensure that the balance weight is not loose after installation.
- Do not use a balance weight that has been improperly tapped or dropped to the floor during installation attempt.
- When 2 weights are being installed, these weights should be as much equal to each other as possible in weight. Also remember that the center point between the weights will become the support point for a balancer.

https://truckmanualshub.com/

FUSO

Group 33

Front Suspension

MITSUBISHI FUSO TRUCK OF AMERICA, Inc.

Pub.No.00ELT0001-33

https://truckmanualshub.com/

INDEX

STRUCTURE AND OPERATION
1. Front Suspension Elements 33-2

TROUBLESHOOTING 33-3

STABILIZER <FE> 33-4

SHOCK ABSORBER
<FE> 33-6
<FG> 33-8

LEAF SPRING
<FE> 33-10
<FG> 33-18

https://truckmanualshub.com/

1. Front Suspension Elements

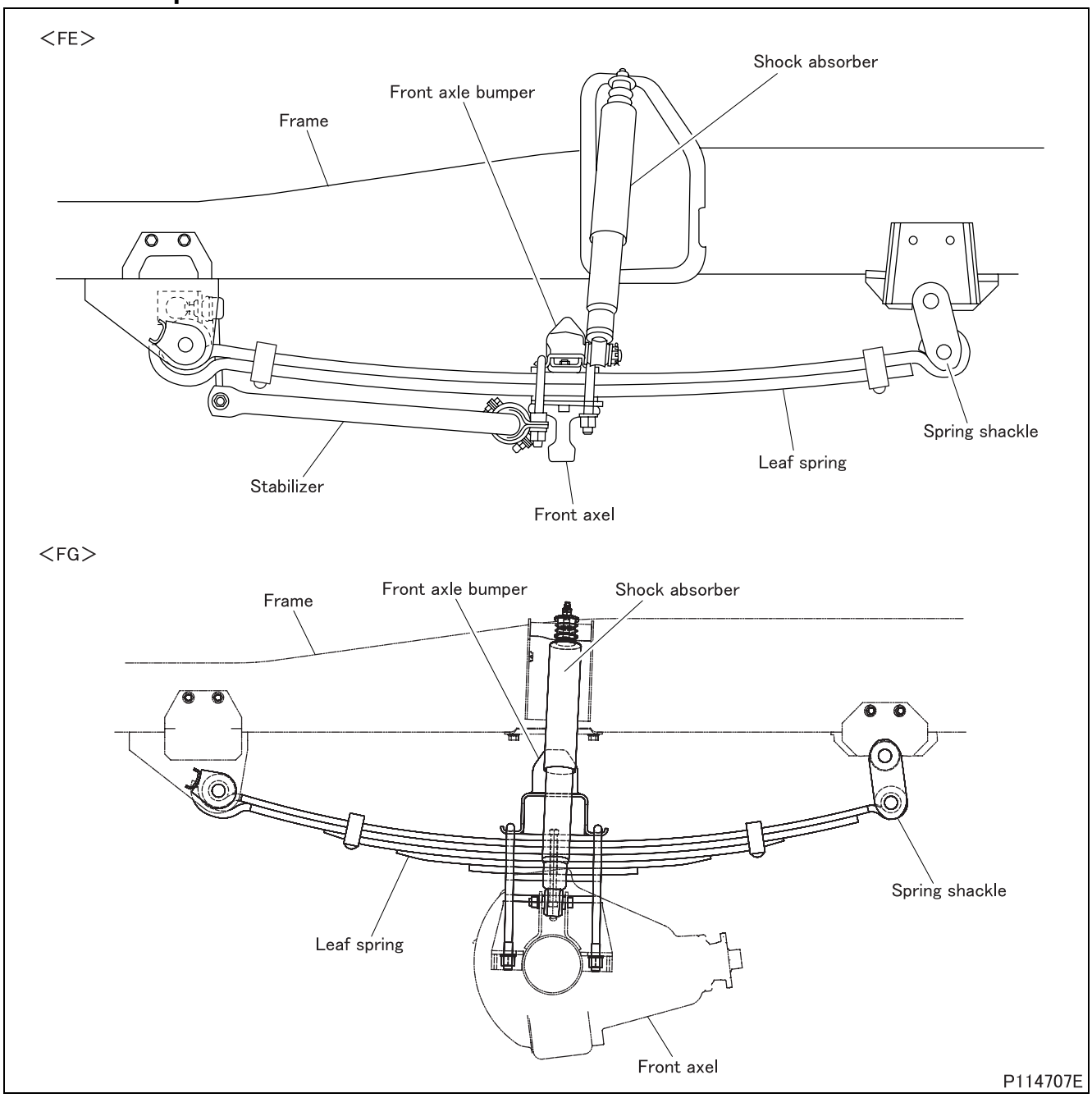

- The front suspensions shown above both use a spring shackle connected to the rear end of the leaf spring (shackle-link type suspension).
- The stabilizer prevents the vehicle from pitching, keeping it parallel with the ground. <FE>

https://truckmanualshub.com/

Symptoms / Possible causes		Feels as if floating	Tends to be noisy	Road bumps/pot holes cause excessive shock	Suspension unstable	Recurring cyclical shock from under vehicle	Vehicle tilted	Inability to keep truck straight on roadway	Reference Gr
Deformed stabilizer bar or link					O				
Shock absorber	Substantial loss of oil and damping capacity	O							
	Rubber bushing worn		O						
	Loose fitting		O						
Leaf spring	Cracks or other damage			O			O		
	Broken		O				O		
	Loose U-bolt		O				O		
	Spring bushing worn		O				O		
Tire	Uneven wear				O			O	Gr31
	Tire and wheel needs balancing					O		O	
	Excessive tire pressure			O					
Wheels out of alignment								O	Gr26A, B

https://truckmanualshub.com/

STABILIZER <FE>

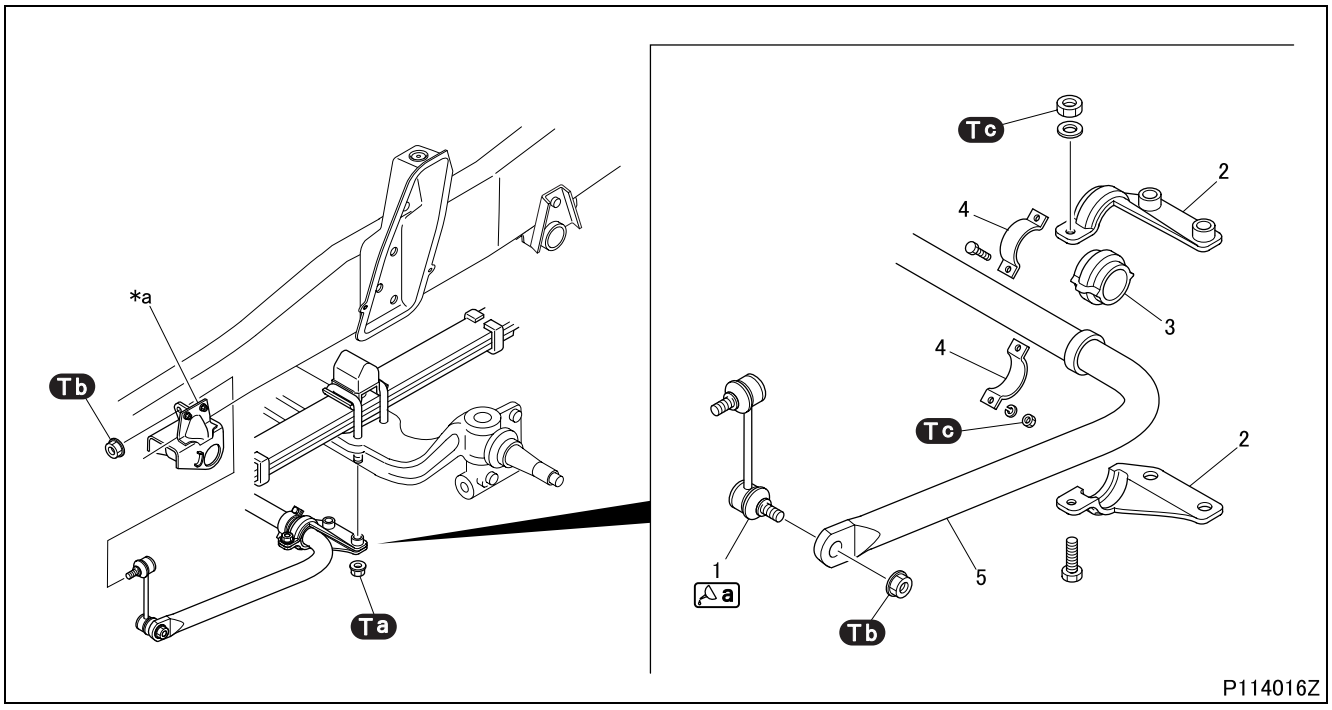

● **Removal sequence**

1 Stabilizer link
2 Stabilizer clamp
3 Stabilizer bushing
4 Stabilizer retainer
5 Stabilizer bar

***a**: Front spring hanger

● **Installation sequence**

Follow the removal sequence in reverse.

Service standards (Unit: mm {in.})

Location	Maintenance item		Standard value	Limit	Remedy
1	Stabilizer link	Starting torque	0.68 to 1.96 N·m {0.5 to 1.4 ft.lbs, 0.07 to 0.2 kgf·m}	0.5 N·m {0.4 ft.lbs, 0.05 kgf·m}	Replace
		Play	0 to 0.1 {0 to 0.0039}	0.2 {0.0079}	

Tightening torque (Unit: N·m {ft.lbs, kgf·m})

Mark	Parts to be tightened	Tightening torque	Remarks
Ta	Nut (U-bolt mounting)	162 ± 15 {120 ± 11, 16.5 ± 1.5}	–
Tb	Nut (stabilizer mounting)	90 to 120 {66 to 89, 9.0 to 12}	–
	Nut (stabilizer link mounting)		
Tc	Nut (stabilizer clamp mounting)	35 to 55 {26 to 41, 3.5 to 5.5}	–
	Nut (stabilizer retainer mounting)		

Lubricant and/or sealant

Mark	Points of application	Specified lubricant and/or sealant	Quantity
a	Dust cover lips on stabilizer link	Wheel bearing grease [NLGI No. 2 (Li soap)]	As required

https://truckmanualshub.com/

◆Inspection procedure◆

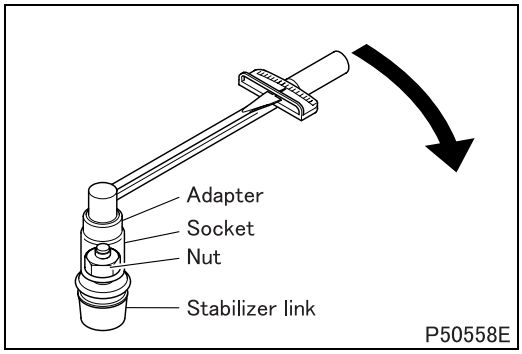

■ **Inspection: Stabilizer link**

(1) Starting torque

- Install a nut onto the stabilizer link.
- Install a socket, an adapter and a torque wrench onto the nut. Measure the starting torque of the stabilizer link.
- If the measured value does not conform to the standard value, replace the stabilizer link.

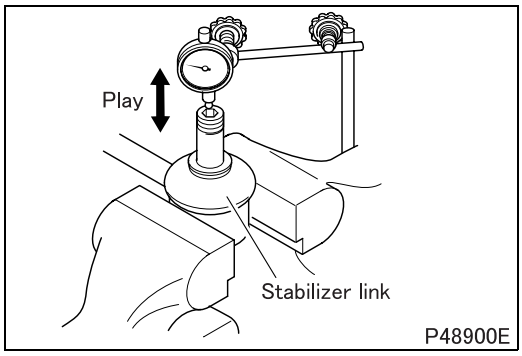

(2) Play

- If the measured value does not conform to the standard value, replace the stabilizer link.

(3) Dust cover

- Check the dust cover for wear, cracks, and damage. These abnormalities can cause water to enter the ball joint, resulting in premature wear.
- If any abnormality is found, replace the stabilizer link.

◆Installation procedure◆

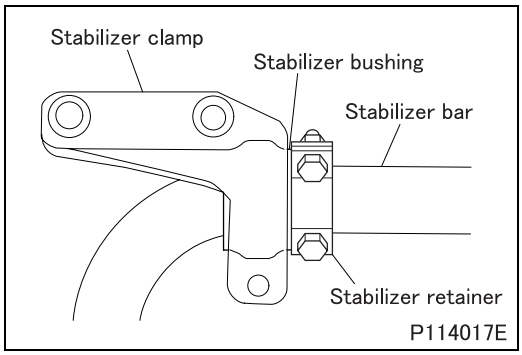

■ **Installation: Stabilizer clamp and bushing**

- Install the stabilizer bushing so that its end surface is aligned with the stabilizer retainer and clamp them in place with the stabilizer clamp.

https://truckmanualshub.com/

SHOCK ABSORBER <FE>

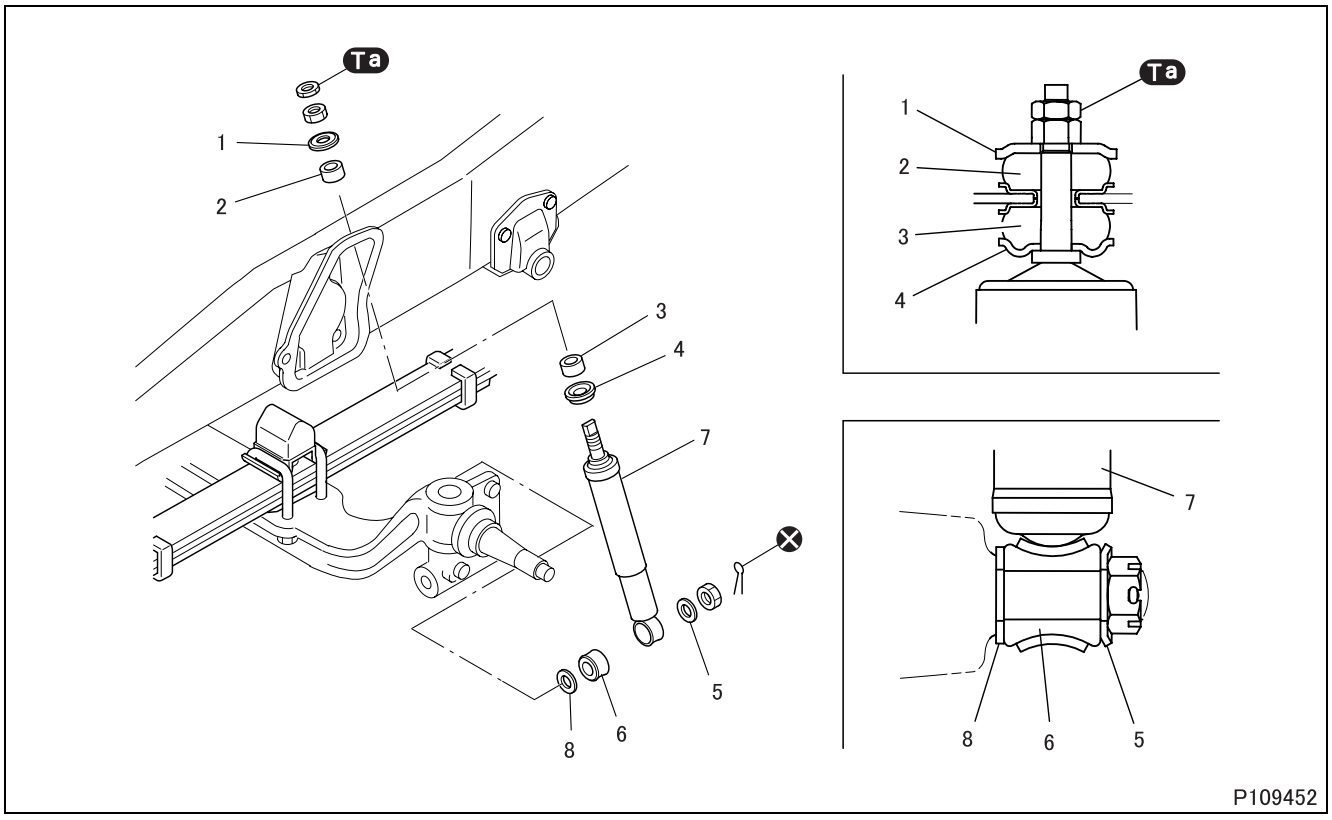

● **Removal sequence**

1 Washer
2 Rubber bushing
3 Rubber bushing
4 Washer
5 Washer
6 Rubber bushing
7 Shock absorber
8 Washer

⊗: Non-reusable parts

● **Installation sequence**

Follow the removal sequence in reverse.

Tightening torque (Unit: N·m {ft.lbs, kgf·m})

Mark	Parts to be tightened	Tightening torque	Remarks
Ta	Nut (rubber bushing mounting)	13 to 17 {9.6 to 13, 1.3 to 1.7}	–

https://truckmanualshub.com/

◆Installation procedure◆

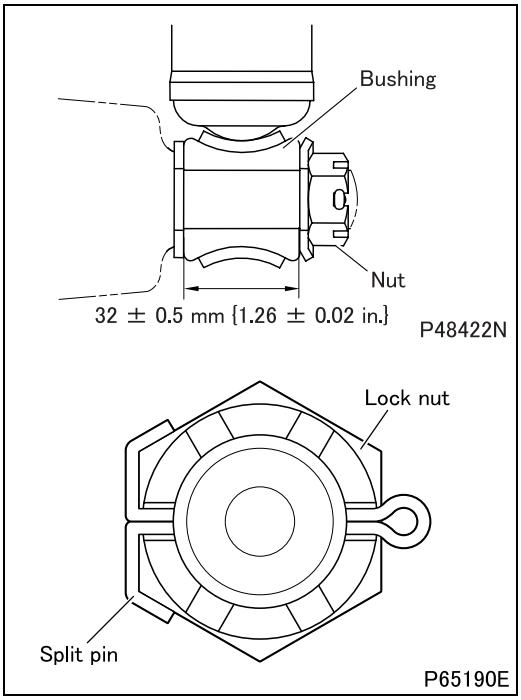

■ **Installation: Rubber bushing**

- Tighten the nut until the rubber bushing is squeezed to the illustrated dimension.
- Install the split pin as shown in the illustration.

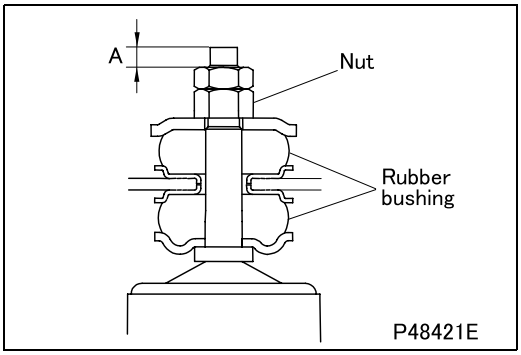

■ **Installation: Rubber bushing**

- Tighten the nuts until dimension A in the illustration equals the following value.
  A: 4.7 mm {0.19 in.}

https://truckmanualshub.com/

SHOCK ABSORBER <FG>

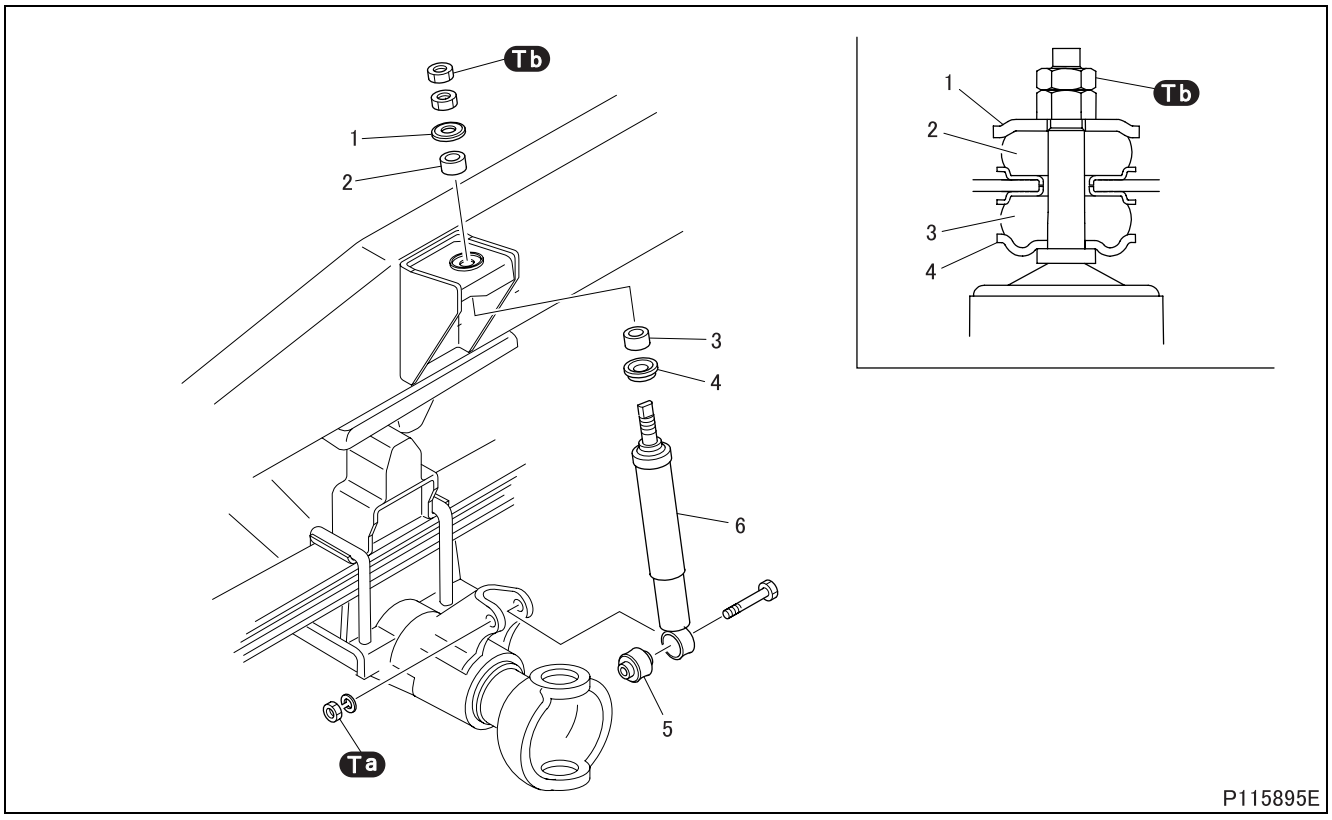

●Removal sequence

1 Washer
2 Rubber bushing
3 Rubber bushing
4 Washer
5 Rubber bushing
6 Shock absorber

●Installation sequence

Follow the removal sequence in reverse.

Tightening torque (Unit: N·m {ft.lbs, kgf·m})

Mark	Parts to be tightened	Tightening torque	Remarks
Ta	Nut (shock absorber mounting)	33 to 49 {24 to 36, 3.4 to 5.0}	–
Tb	Lock nut (rubber bushing mounting)	13 to 17 {9.6 to 13, 1.3 to 1.7}	–

◆Installation procedure◆

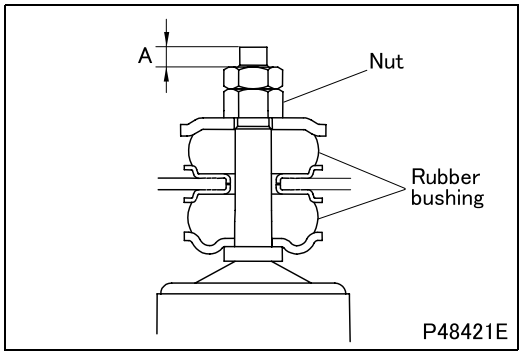

■ Installation: Rubber bushing

- Tighten the nuts until dimension A in the illustration becomes equals to the following value.
  A: 5.5 mm {0.22 in.}

https://truckmanualshub.com/

M E M O

https://truckmanualshub.com/

LEAF SPRING <FE>

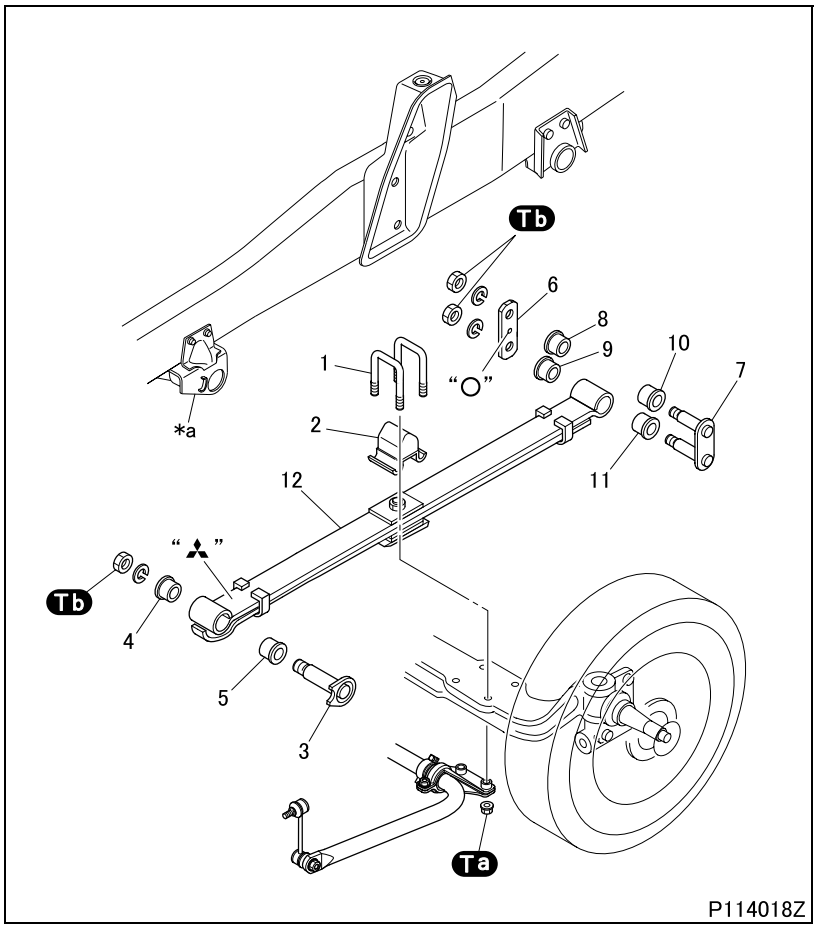

●Removal sequence

1 U-bolt
2 Front axle bumper
3 Spring pin
4 Rubber bushing
5 Rubber bushing
6 Shackle plate
7 Spring shackle
8 Rubber bushing
9 Rubber bushing
10 Rubber bushing
11 Rubber bushing
12 Leaf spring (See later section.)

***a**: Front spring hanger

●Installation sequence

Follow the removal sequence in reverse.

CAUTION ⚠

- **Make sure to jack the vehicle up when tightening the U-bolt mounting nut to specified torque.**
- **Make sure to install the U-bolt mounting nuts dry. Never put oil or solvent on the nuts.**

NOTE

- **The right-hand and left-hand leaf spring assemblies have different cambers from each other. Ensure that both assemblies are installed correctly. Reversed installation results in a slanted vehicle.**

Service standards (Unit: mm {in.})

Location	Maintenance item	Standard value	Limit	Remedy
3 to 5	Radial clearance between spring pin and rubber bushings	0 to 0.04 {0 to 0.0016}	0.5 {0.020}	Replace
3 to 5, *a	Axial clearance between spring pin, rubber bushings and front spring hanger	0 {0}	0.5 {0.020}	Replace
6 to 11	Axial clearance between shackle plate, spring shackle and rubber bushings	0 {0}	0.5 {0.020}	Replace
7 to 11	Radial clearance between spring shackle and rubber bushings	0 to 0.04 {0 to 0.0016}	0.5 {0.020}	Replace

https://truckmanualshub.com/

Tightening torque (Unit: N·m {ft.lbs, kgf·m})

Mark	Parts to be tightened	Tightening torque	Remarks
Ta	Nut (U-bolt mounting)	162 ± 15 {119 ± 11, 16.5 ± 1.5}	–
Tb	Nut (spring pin mounting)	93 to 127 {69 to 94, 9.5 to 13.0}	–
	Nut (spring shackle mounting)		–

◆Work before removal◆

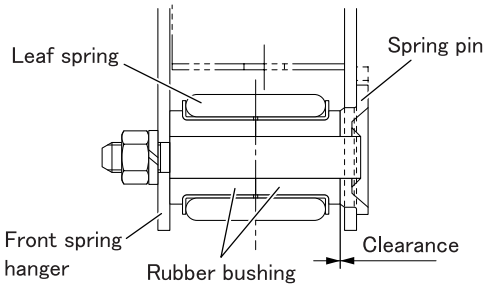

■ **Inspection: Axial clearance between spring pin, rubber bushings and front spring hanger**

- Measure the indicated clearances using a feeler gauge.
- If the measurement exceeds the limit, replace the rubber bushing.

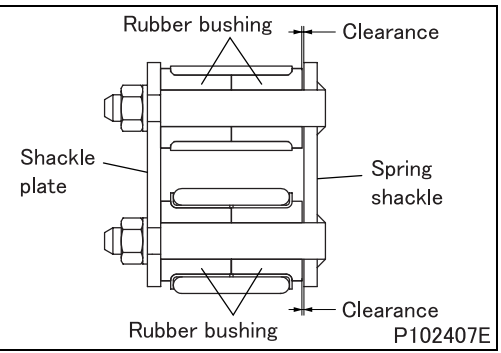

■ **Inspection: Axial clearance between shackle plate, spring shackle and rubber bushings**

- Measure the indicated clearances using a feeler gauge.
- If the measurement exceeds the limit, replace the rubber bushing.

◆Installation procedure◆

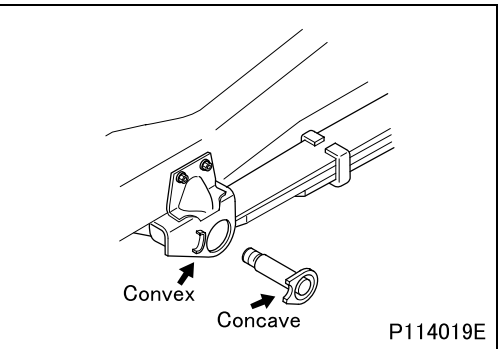

■ **Installation: Spring pin**

- Install the spring pin so that the concave side of the pin engages with the convex on the frame.

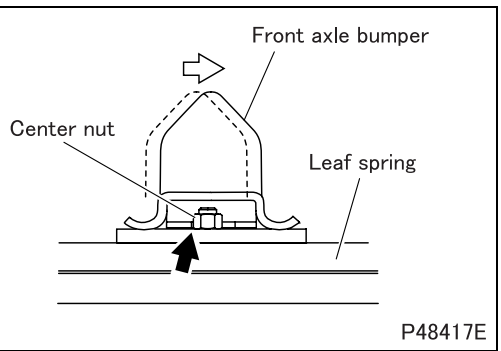

■ **Installation: Front axle bumper**

- With the vehicle unloaded, slide the front axle bumper on the leaf spring to the rear of the vehicle until it is against the center nut of the leaf spring. Then, install the bumper using U-bolts.

https://truckmanualshub.com/

LEAF SPRING <FE>

Leaf Spring <Except Crew Cab>

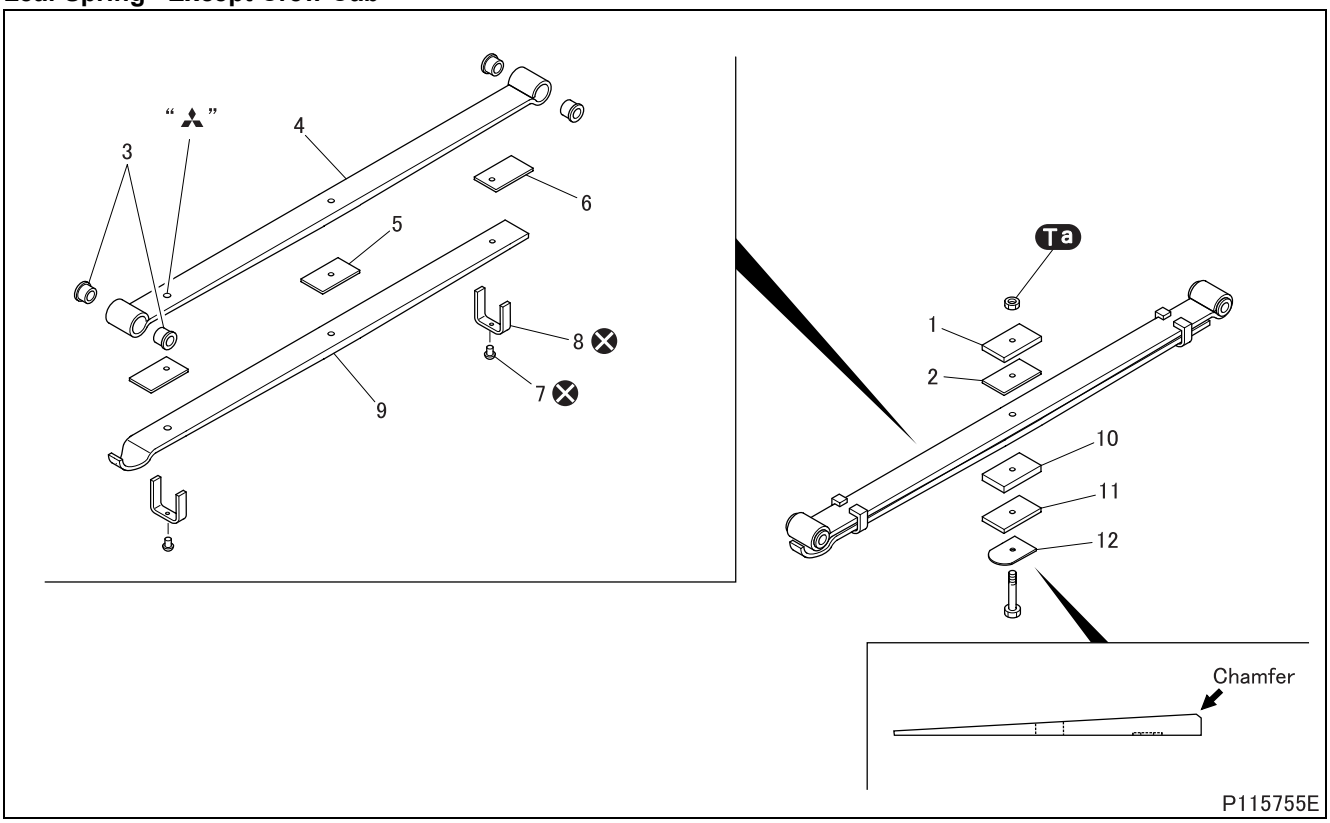

●Disassembly sequence

1 Spacer (thickness: 8 mm {0.31 in.})
2 Center spacer (thickness: 1 mm {0.039 in.})
3 Collar
4 Leaf spring (No. 1)
5 Center spacer (thickness: 1 mm {0.039 in.})
6 Silencer
7 Rivet
8 Clip
9 Leaf spring (No. 2)
10 Spacer (thickness: 8 mm {0.31 in.})
11 Spacer (thickness: 8 mm {0.31 in.}) <FEC7, FEC9>
12 Caster shim

⊗: Non-reusable parts

●Assembly sequence

Follow the disassembly sequence in reverse.

Tightening torque (Unit: N·m {ft.lbs, kgf·m})

Mark	Parts to be tightened	Tightening torque	Remarks
Ta	Nut (assembly of leaf spring)	35 to 52 {26 to 38, 3.5 to 5.5}	–

https://truckmanualshub.com/

◆Removal procedure◆

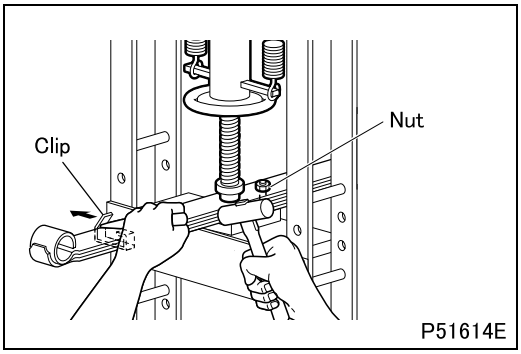

■ **Compression: Leaf spring**

- Using a press, compress the leaf spring as illustrated for subsequent operations.
- Using a chisel or equivalent, open the ends of the clip.

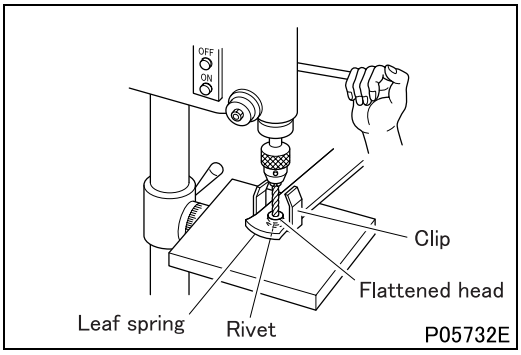

■ **Removal: Clip**

- Using a drill press, break the flattened head of the rivet and remove the clip from the leaf spring (No. 2).

◆Installation procedure◆

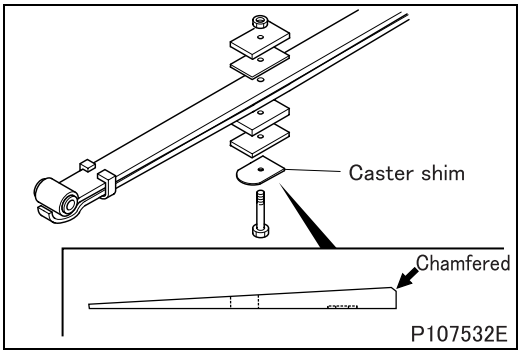

■ **Installation: Caster shim**

- Install the caster shim with the chamfered (or rounded) portion facing upward in order not to damage the seat and spring.

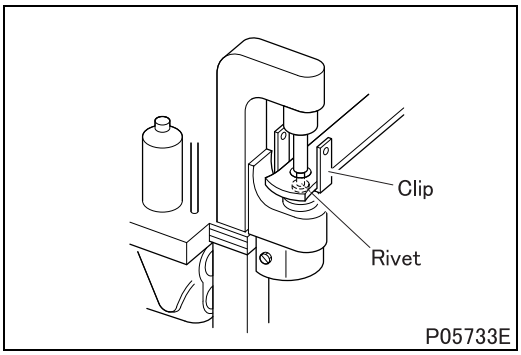

■ **Installation: Clip**

- Using a riveting machine, rivet a clip onto the leaf spring.

https://truckmanualshub.com/

LEAF SPRING <FE>

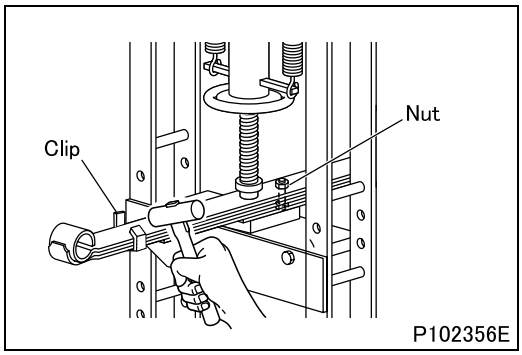

■ **Installation: Leaf spring**

- Temporarily tighten the leaf spring with the bolt.
- Compress the leaf spring using a press and tighten the nut to the specified torque.
- After installing the nut, bend the clip with a hammer.

https://truckmanualshub.com/

Leaf Spring <Crew Cab>

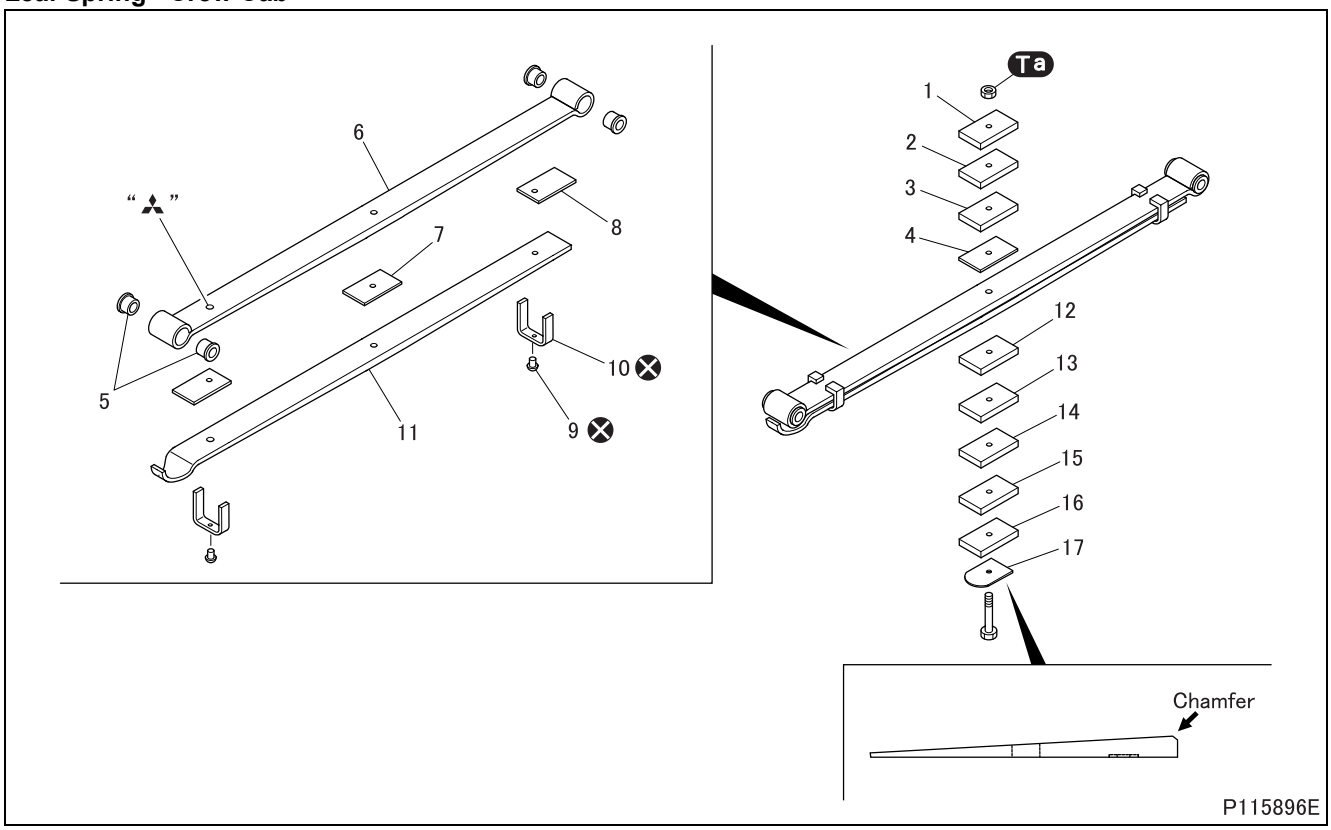

●Disassembly sequence

1 Spacer (thickness: 8 mm {0.31 in.})
2 Spacer (thickness: 10 mm {0.39 in.})
3 Spacer (thickness: 10 mm {0.39 in.})
4 Center spacer (thickness: 1 mm {0.039 in.})
5 Collar
6 Leaf spring (No. 1)
7 Center spacer (thickness: 1 mm {0.039 in.})
8 Silencer
9 Rivet
10 Clip
11 Leaf spring (No. 2)
12 Spacer (thickness: 10 mm {0.39 in.})
13 Spacer (thickness: 10 mm {0.39 in.})
14 Spacer (thickness: 10 mm {0.39 in.})
15 Spacer (thickness: 10 mm {0.39 in.})
16 Spacer (thickness: 10 mm {0.39 in.})
17 Caster shim

⊗: Non-reusable parts

●Assembly sequence

Follow the disassembly sequence in reverse.

Tightening torque (Unit: N·m {ft.lbs, kgf·m})

Mark	Parts to be tightened	Tightening torque	Remarks
Ta	Nut (assembly of leaf spring)	35 to 52 {26 to 38, 3.5 to 5.5}	–

https://truckmanualshub.com/

◆Work before removal◆

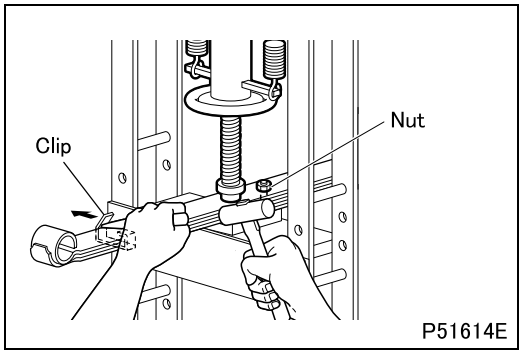

■ **Compression: Leaf spring assembly**

- Using a press, compress the leaf spring as illustrated for subsequent operations.
- Using a chisel or equivalent, open the ends of the clip.

◆Removal procedure◆

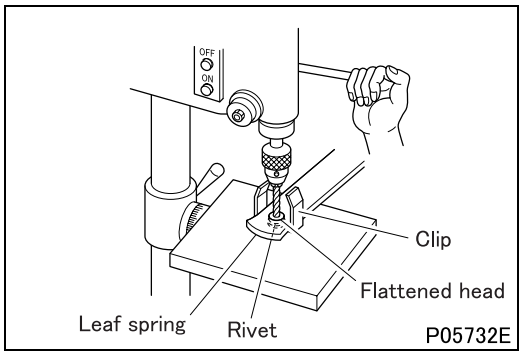

■ **Removal: Clip**

- Using a drill press, break the flattened head of the rivet and remove the clip from the leaf spring (No. 2).

◆Installation procedure◆

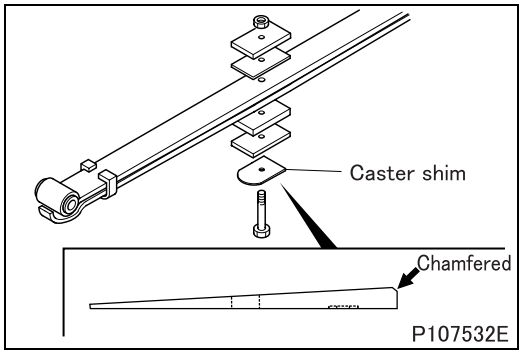

■ **Installation: Caster shim**

- Install the caster shim with the chamfered (or rounded) portion facing upward in order not to damage the seat and spring.

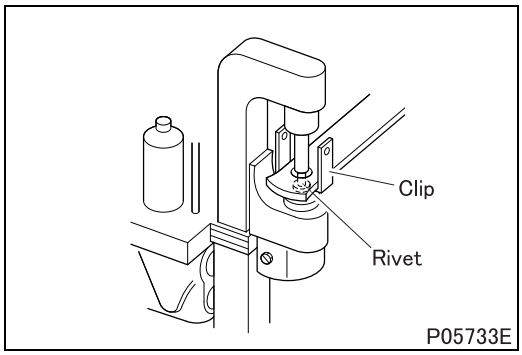

■ **Installation: Clip**

- Using a riveting machine, rivet a clip onto the leaf spring.

https://truckmanualshub.com/

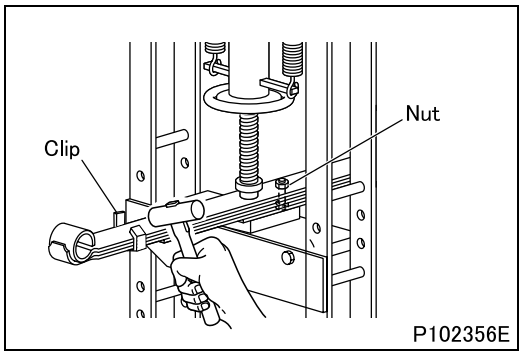

■ **Installation: Leaf spring**

- Temporarily tighten the leaf spring with the bolt.
- Compress the leaf spring using a press and tighten the nut to the specified torque.
- After installing the nut, bend the clip with a hammer.

https://truckmanualshub.com/

LEAF SPRING <FG>

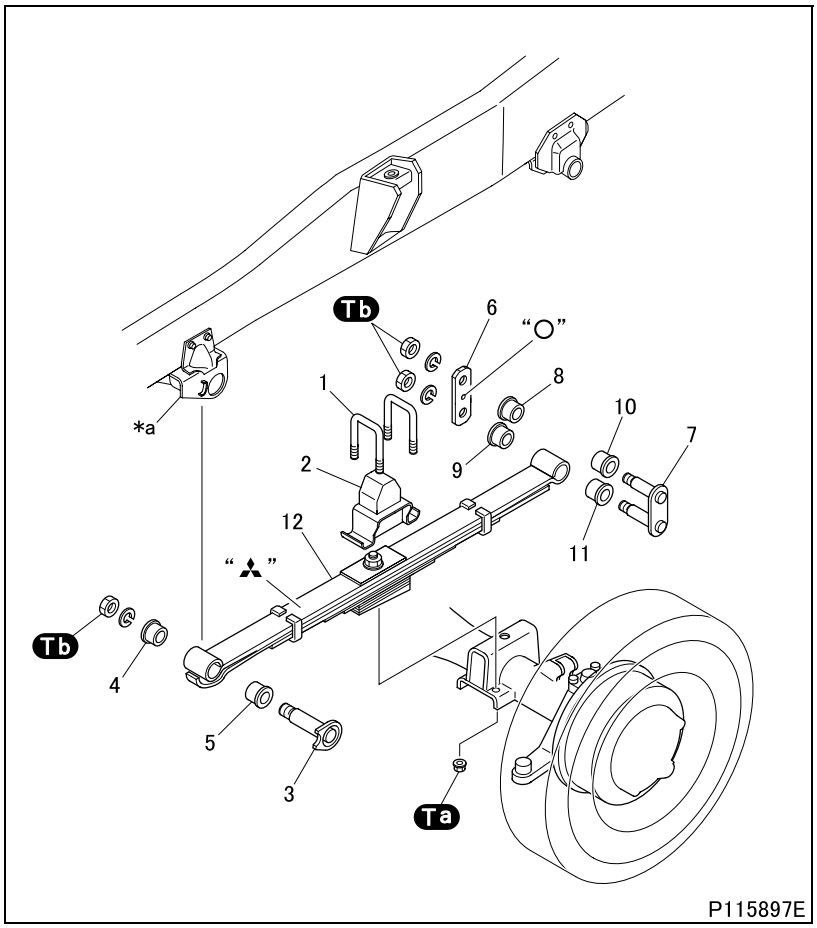

●Removal sequence

1 U-bolt
2 Front spring pad
3 Spring pin
4 Rubber bushing
5 Rubber bushing
6 Shackle plate
7 Spring shackle
8 Rubber bushing
9 Rubber bushing
10 Rubber bushing
11 Rubber bushing
12 Leaf spring (See later section.)

***a**: Front spring hanger

●Installation sequence

Follow the removal sequence in reverse.

CAUTION ⚠

- **Make sure to jack the vehicle up when tightening the U-bolt mounting nut to specified torque.**
- **Make sure to install the U-bolt mounting nuts dry. Never put oil or solvent on the nuts.**

NOTE

- **The right-hand and left-hand leaf spring assemblies have different cambers from each other. Ensure that both assemblies are installed correctly. Reversed installation results in a slanted vehicle.**

Service standards (Unit: mm {in.})

Location	Maintenance item	Standard value	Limit	Remedy
3 to 5	Radial clearance between spring pin and rubber bushings	0 to 0.04 {0 to 0.0016}	0.5 {0.020}	Replace
3 to 5, *a	Axial clearance between spring pin, rubber bushings and front spring hanger	0 {0}	0.5 {0.020}	Replace
6 to 11	Axial clearance between shackle plate, spring shackle and rubber bushings	0 {0}	0.5 {0.020}	Replace
7 to 11	Radial clearance between spring shackle and rubber bushings	0 to 0.04 {0 to 0.0016}	0.5 {0.020}	Replace

https://truckmanualshub.com/

Tightening torque (Unit: N·m {ft.lbs, kgf·m})

Mark	Parts to be tightened	Tightening torque	Remarks
Ta	Nut (U-bolt mounting)	113 ± 8 {83 ± 5.9, 11.5 ± 0.8}	–
Tb	Nut (spring pin mounting)	93 to 127 {69 to 94, 9.5 to 13.0}	–
	Nut (spring shackle mounting)		–

◆Work before removal◆

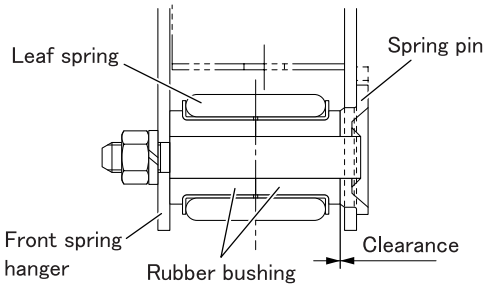

■ **Inspection: Axial clearance between spring pin, rubber bushings and front spring hanger**

- Measure the indicated clearances using a feeler gauge.
- If the measurement exceeds the limit, replace the rubber bushing.

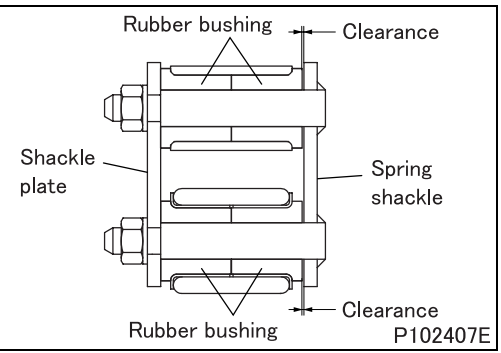

■ **Inspection: Axial clearance between shackle plate, spring shackle and rubber bushings**

- Measure the indicated clearances using a feeler gauge.
- If the measurement exceeds the limit, replace the rubber bushing.

◆Installation procedure◆

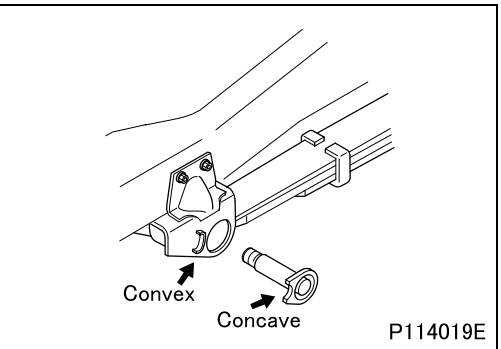

■ **Installation: Spring pin**

- Install the spring pin so that the concave side of the pin engages with the convex on the frame.

https://truckmanualshub.com/

LEAF SPRING <FG>

Leaf Spring

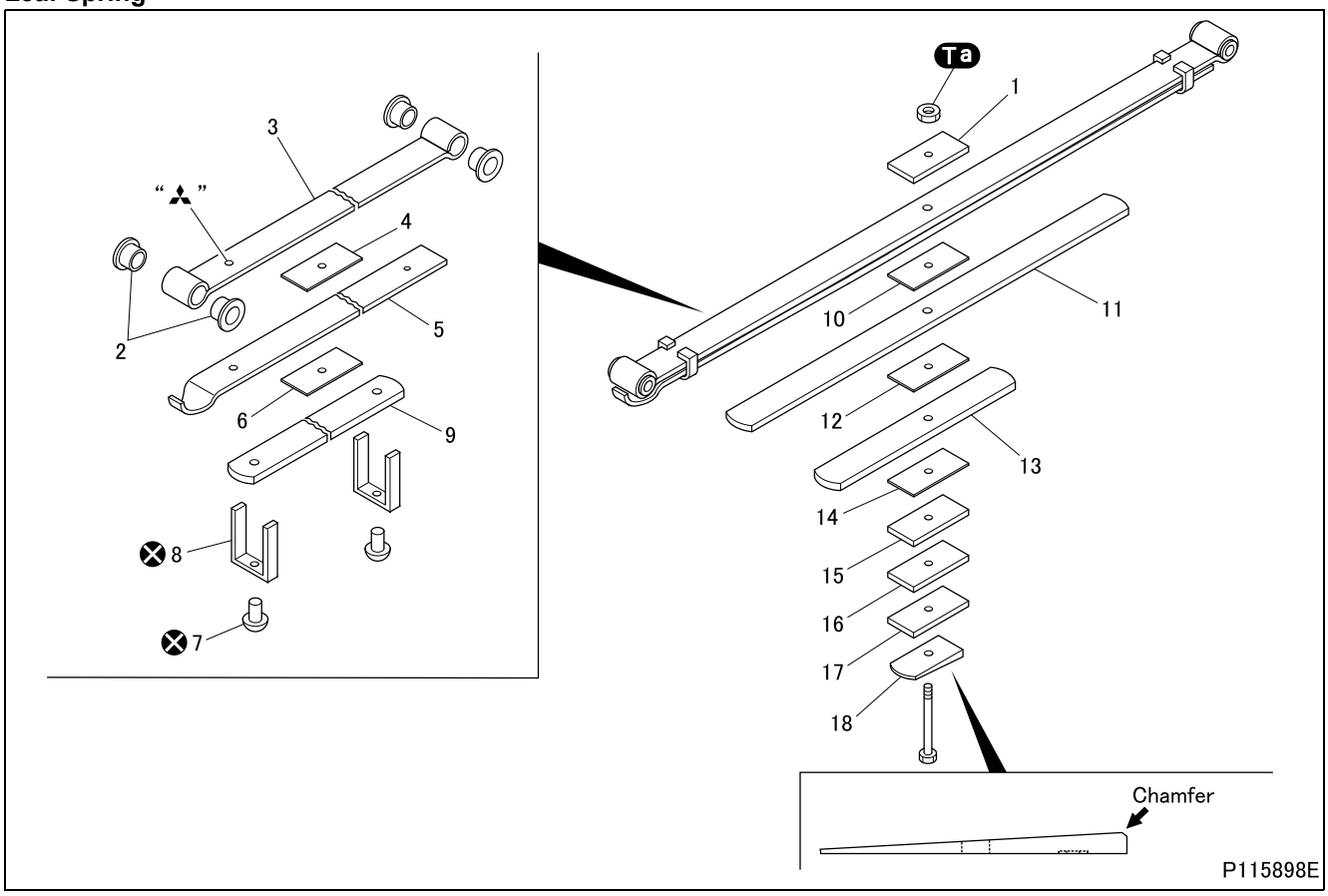

●Disassembly sequence

1 Spacer (thickness: 10 mm {0.39 in.})
2 Collar
3 Leaf spring (No. 1)
4 Center spacer (thickness: 0.5 mm {0.020 in.})
5 Leaf spring (No. 2)
6 Center spacer (thickness: 0.5 mm {0.020 in.})
7 Rivet
8 Clip
9 Leaf spring (No. 3)
10 Center spacer (thickness: 0.5 mm {0.020 in.})
11 Leaf spring (No. 4)
12 Center spacer (thickness: 0.5 mm {0.020 in.})
13 Leaf spring (No. 5)
14 Center spacer (thickness: 1.5 mm {0.059 in.})
15 Spacer (thickness: 12 mm {0.47 in.})
16 Spacer (thickness: 12 mm {0.47 in})
17 Spacer (thickness: 12 mm {0.47 in})
18 Caster shim

⊗: Non-reusable parts

●Assembly sequence

Follow the disassembly sequence in reverse.

Tightening torque (Unit: N·m {ft.lbs, kgf·m})

Location	Parts to be tightened	Tightening torque	Remarks
Ta	Nut (assembly of leaf spring)	35 to 52 {26 to 38, 3.5 to 5.5}	–

https://truckmanualshub.com/

◆Removal procedure◆

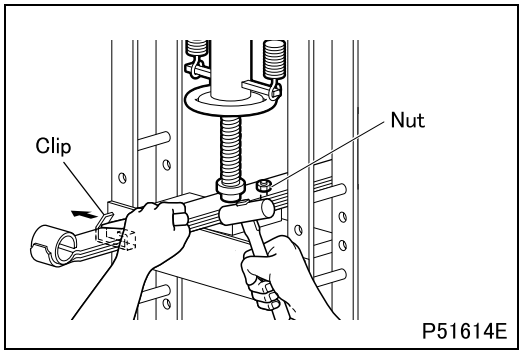

■ **Compression: Leaf spring**

- Using a press, compress the leaf spring as illustrated for subsequent operations.
- Using a chisel or equivalent, open the ends of the clip.

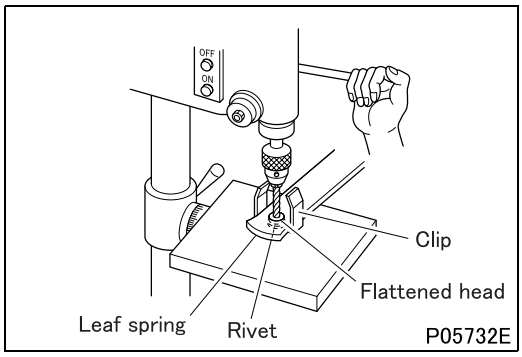

■ **Removal: Clip**

- Using a drill press, break the flattened head of the rivet and remove the clip from the leaf spring (No. 3 or 4).

◆Installation procedure◆

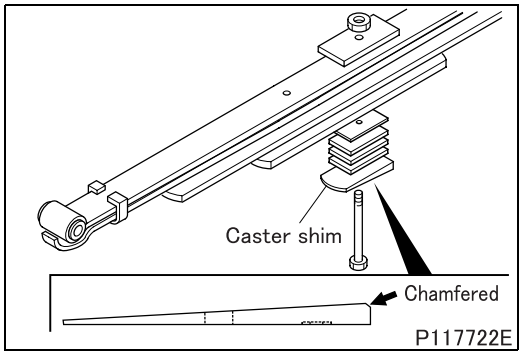

■ **Installation: Caster shim**

- Install the caster shim with the chamfered (or rounded) portion facing upward in order not to damage the seat and spring.

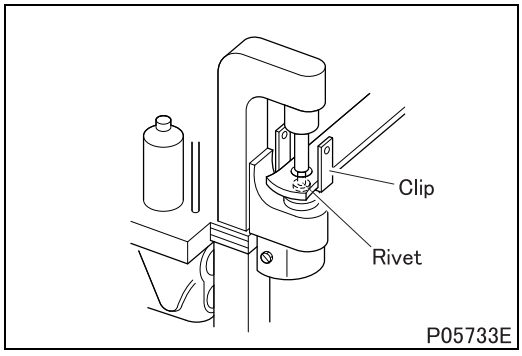

■ **Installation: Clip**

- Using a riveting machine, rivet a clip onto the leaf spring.

https://truckmanualshub.com/

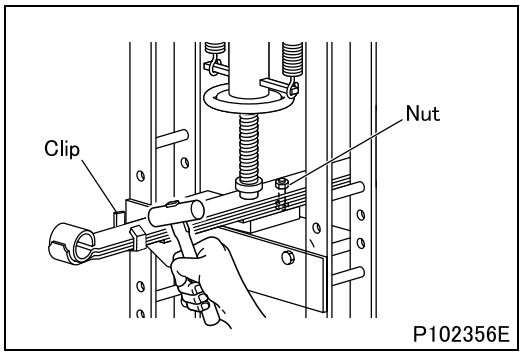

■ **Installation: Leaf spring**

- Temporarily tighten the leaf spring with the bolt.
- Compress the leaf spring using a press and tighten the nut to the specified torque.
- After installing the nut, bend the clip with a hammer.

https://truckmanualshub.com/

FUSO

Group 34

Rear Suspension

MITSUBISHI FUSO TRUCK OF AMERICA, Inc.

Pub.No.00ELT0001-34

https://truckmanualshub.com/

INDEX

STRUCTURE AND OPERATION
1. Rear Suspension Elements 34-2

TROUBLESHOOTING 34-3

STABILIZER <FEC7, FEC9> 34-4

SHOCK ABSORBER 34-5

LEAF SPRING 34-6

https://truckmanualshub.com/

1. Rear Suspension Elements

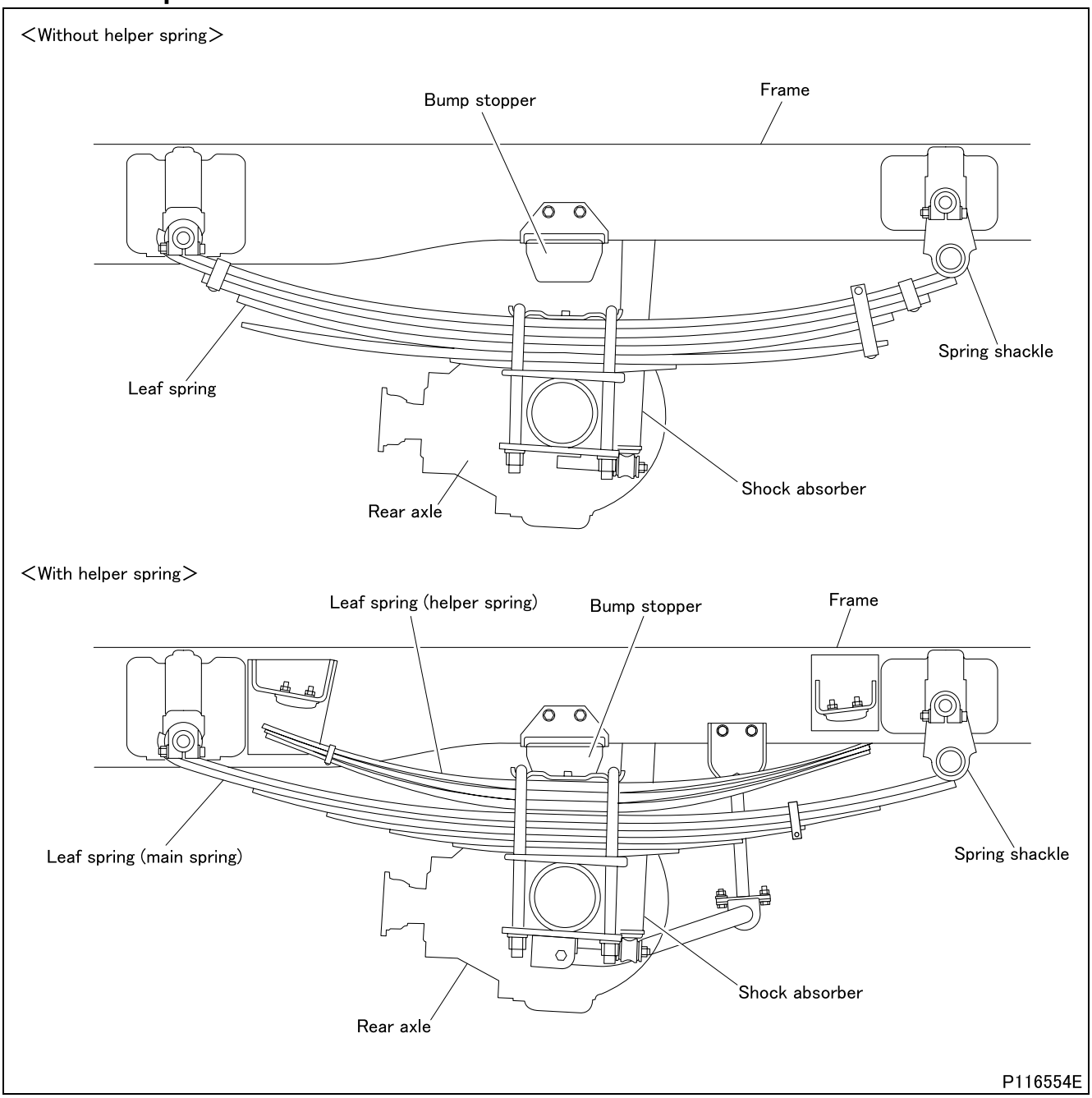

- The rear suspensions shown above both use a spring shackle connected to the rear end of the leaf spring (shackle-link type suspension).
- The above schematics are only examples. Details may differ depending on vehicle models, such as the number of spring leaves.

https://truckmanualshub.com/

Possible causes \ Symptoms		Feels as if floating	Tends to be noisy	Road bumps/pot holes cause excessive shock	Recurring cyclical shock from under vehicle	Unstable suspension while traveling at a constant speed	Reference Gr
Leaf spring	Cracks or other damage			O			
	Broken		O				
	Loose U-bolt		O				
	Spring bushing worn		O				
Thrust clearance of metal bushing-type spring pin or shackle pin			O				
Bump stopper or helper spring stopper damaged or broken			O				
Spring pin over-tightened			O				
Shock absorber	Substantial loss of oil and damping capacity	O					
	Rubber bushing worn		O				
	Loose fitting		O				
Stabilizer deformed, bushing worn						O	
Tire	Tire and wheel needs balancing				O		Gr31
	Excessive tire pressure			O			

https://truckmanualshub.com/

STABILIZER <FEC7, FEC9>

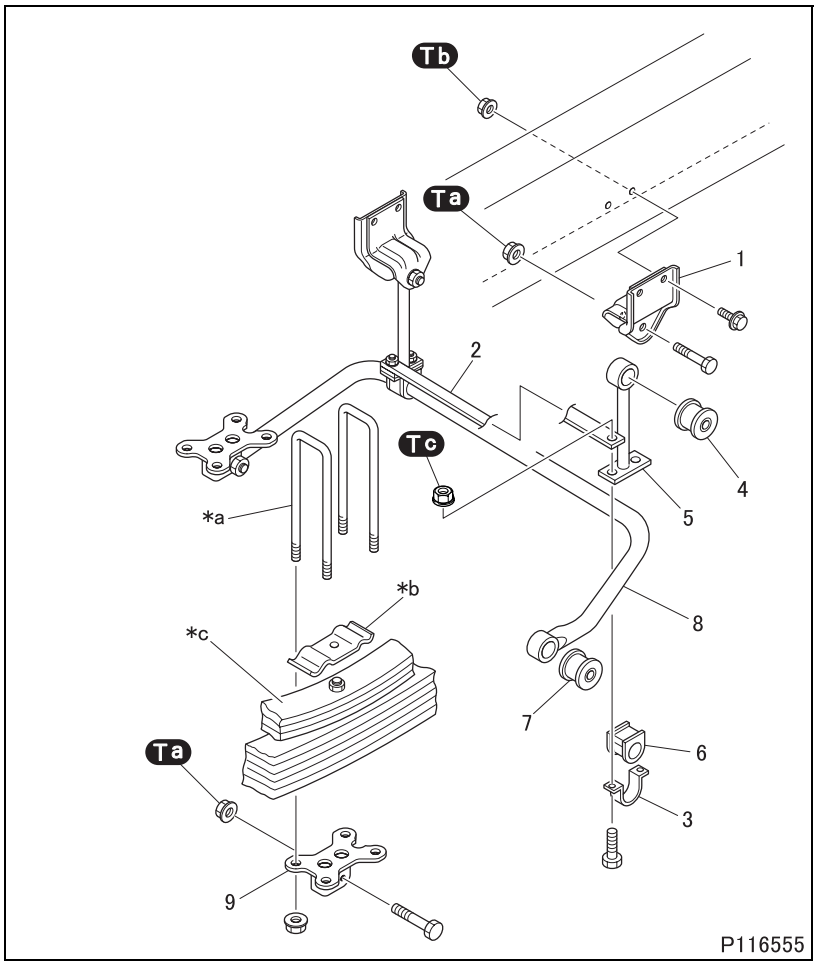

●Removal sequence

1 Stabilizer bar bracket
2 Plate
3 Clamp
4 Bushing
5 Stabilizer hanger
6 Stabilizer bushing
7 Bushing
8 Stabilizer bar
9 Stabilizer bracket

***a**: U-bolt
***b**: Spring pad
***c**: Leaf spring

●Installation sequence

Follow the removal sequence in reverse.

Tightening torque (Unit: N·m {ft.lbs, kgf·m})

Mark	Parts to be tightened	Tightening torque	Remarks
Ta	Nut (stabilizer hanger and stabilizer bar mounting)	80 to 105 {59 to 77, 8.2 to 11}	–
Tb	Nut (stabilizer bar bracket mounting)	80 to 105 {59 to 77, 8.2 to 10.7}	–
Tc	Nut (plate, clamp and stabilizer hanger mounting)	10 to 15 {7.4 to 11, 1.0 to 1.5}	–

◆Installation procedure◆

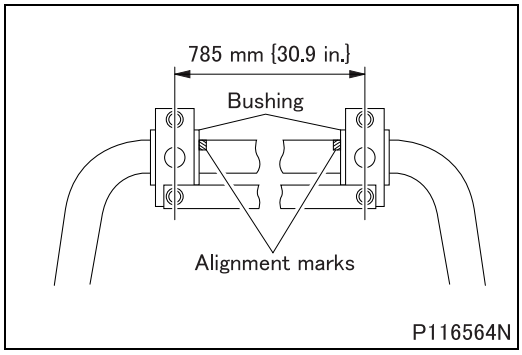

■ Installation: Stabilizer bushing

- Mount stabilizer bushings with their end surfaces aligned with marks on stabilizer bar.

https://truckmanualshub.com/

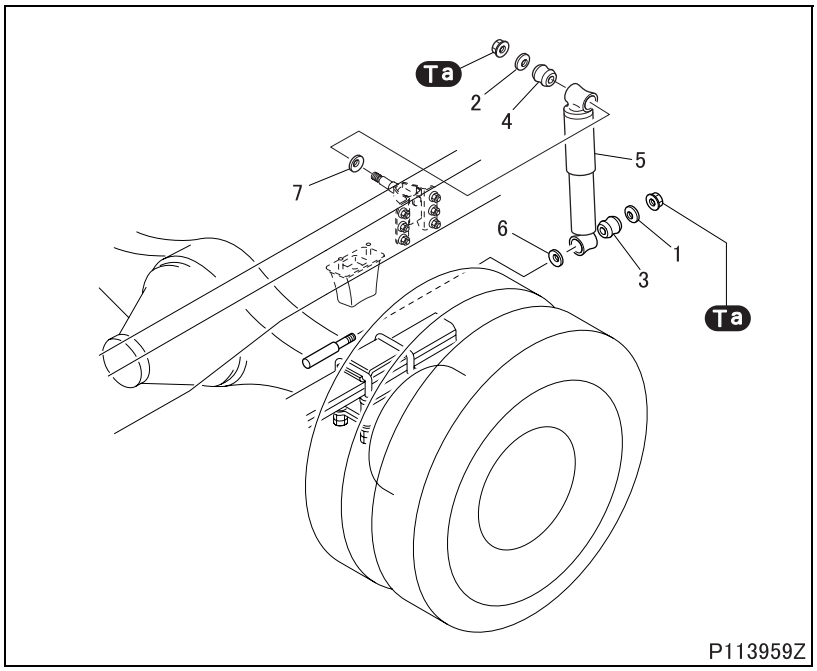

●Removal sequence

1 Washer
2 Washer
3 Rubber bushing
4 Rubber bushing
5 Shock absorber
6 Washer
7 Washer

●Installation sequence

Follow the removal sequence in reverse.

Tightening torque (Unit: N·m {ft.lbs, kgf·m})

Mark	Parts to be tightened	Tightening torque	Remarks
Ta	Nut (shock absorber mounting)	26 to 33 {19 to 24, 2.7 to 3.4}	–

https://truckmanualshub.com/

LEAF SPRING

Leaf Spring Assembly Layout

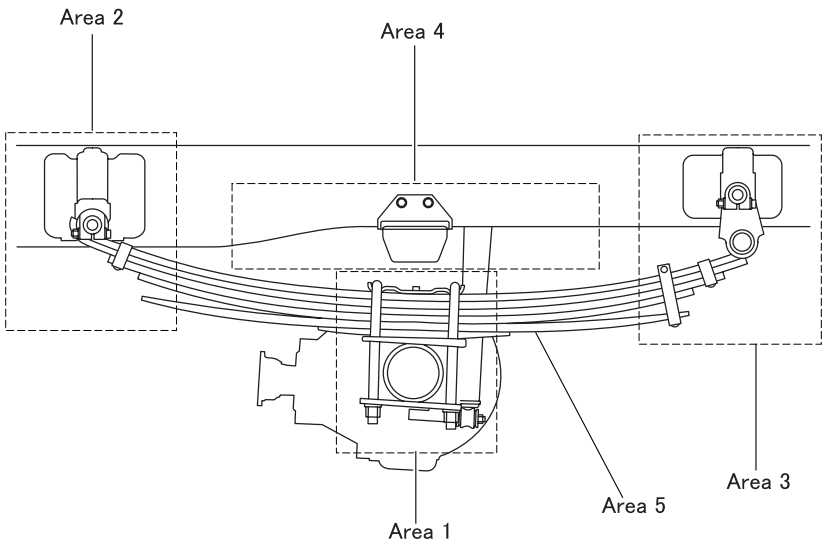

P118143E

- This section divides the leaf spring in 5 areas and describes removal and installation procedures for each area. For information on specific components, refer to the corresponding area descriptions.

U-bolt U-bolt nut	Area 1 (center section of leaf spring)
Spring pin Bushing	Area 2 (front section of leaf spring)
Spring shackle Bushing	Area 3 (rear section of leaf spring)
Helper rubber Helper spring stopper	Area 4 (stoppers)
Leaf spring	Area 5 (leaf springs)

https://truckmanualshub.com/

Area 1 (center section of leaf spring)

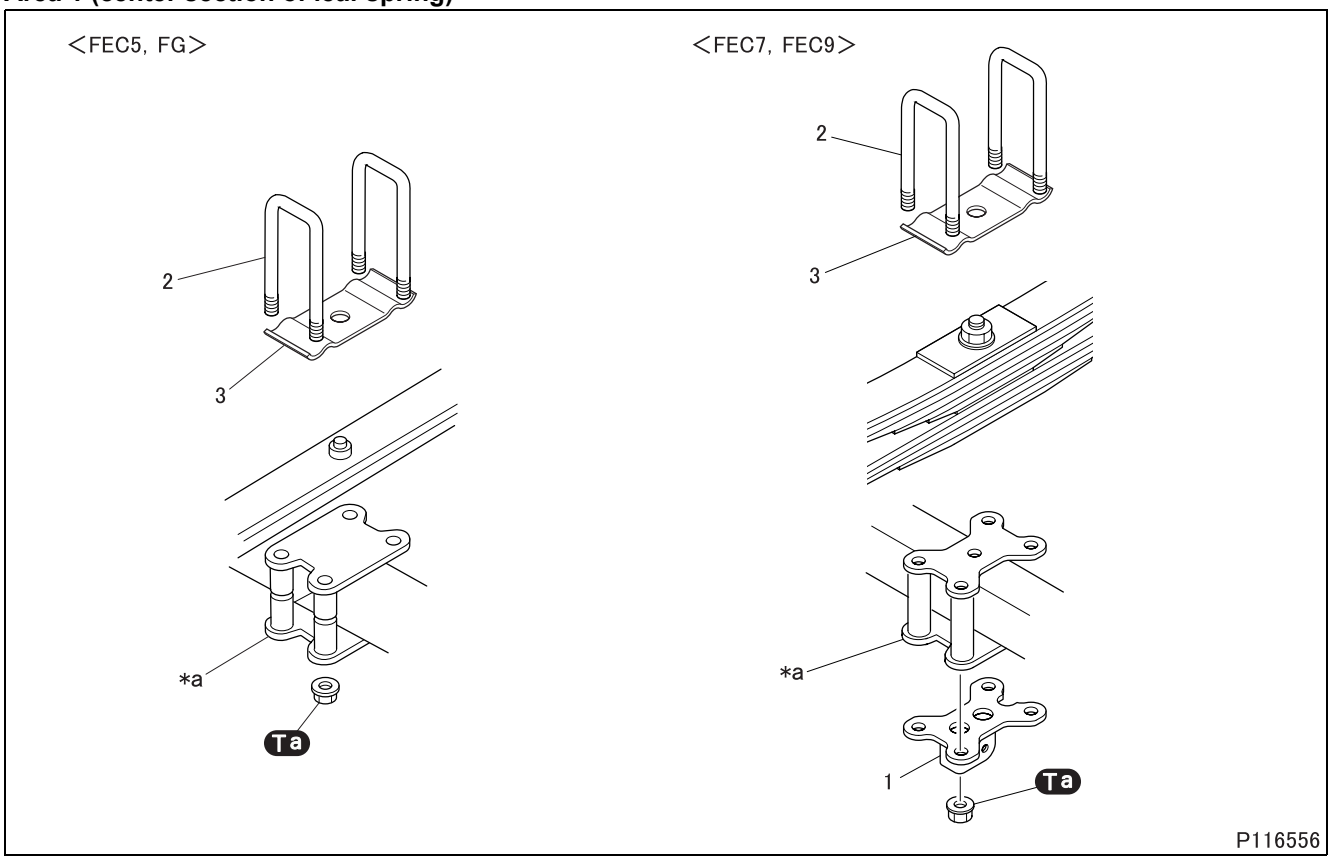

●Removal sequence

1 Stabilizer bracket lower <FEC7, FEC9>
2 U-bolt
3 Spring pad
***a**: Rear axle

●Installation sequence

Follow the removal sequence in reverse.

Tightening torque (Unit: N·m {ft.lbs, kgf·m})

Mark	Parts to be tightened		Tightening torque	Remarks
Ta	Nut (U-bolt mounting)	FEC5	240 ± 15 {175 ± 11, 24.5 ± 1.5}	M16
		FEC7, FEC9, FG	340 ± 50 {250 ± 38, 34.6 ± 5.2}	M18

https://truckmanualshub.com/

Area 2 (front section of leaf spring)

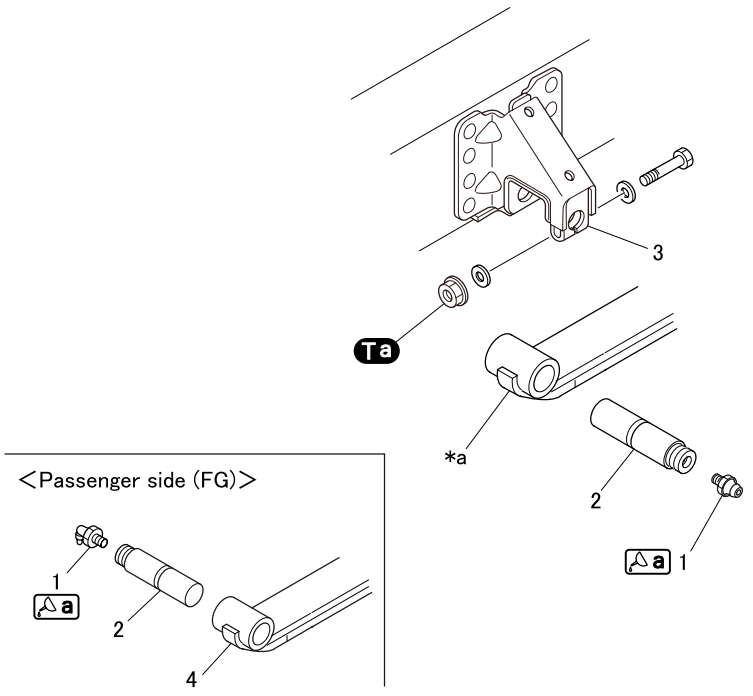

P116557E

● **Removal sequence**

1 Grease nipple
2 Spring pin
3 Rear spring hanger

***a**: Leaf spring

● **Installation sequence**

Follow the removal sequence in reverse.

Service standards (Unit: mm {in.})

Location	Maintenance item	Standard value	Limit	Remedy
2, 3	Radial clearance between spring pin and rear spring hanger	0 to 0.04 {0.0016}	0.3 {0.012}	Replace
2, *a	Radial clearance between spring pin and leaf spring bushing	0.04 to 0.14 {0.0016 to 0.0055}	0.5 {0.020}	Replace
3, *a	Axial clearance between rear spring hanger and leaf spring	0.1 to 1.0 {0.0039 to 0.039}	1.0 {0.039}	Replace

Tightening torque (Unit: N·m {ft.lbs, kgf·m})

Mark	Parts to be tightened	Tightening torque	Remarks
Ta	Nut (spring pin mounting)	29 to 37 {21 to 27, 3.0 to 3.8}	–

Lubricant and/or sealant

Mark	Points of application	Specified lubricant and/or sealant	Quantity
a	Supply from grease nipple	Chassis grease [NLGI No. 1 (Li soap)]	As required

https://truckmanualshub.com/

Special tools (Unit: mm {in.})

Mark	Tool name and shape	Part No.	Application
[a]	Spring pin remover A: M22 × 1.5 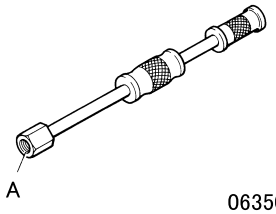 06350	MB999112	Removal of spring pin

◆Work before procedure◆

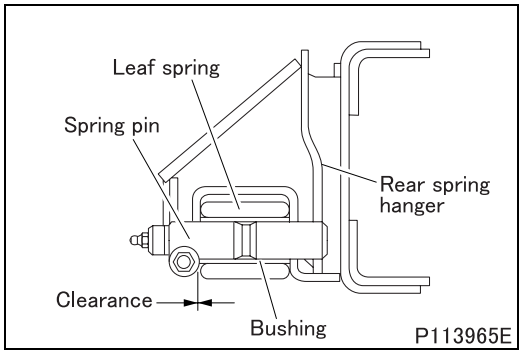

■ Inspection: Axial clearance between rear spring hanger and leaf spring

- Measure the clearance using feeler gauge.
- If the measurement exceeds the limit, replace defective part.

◆Removal procedure◆

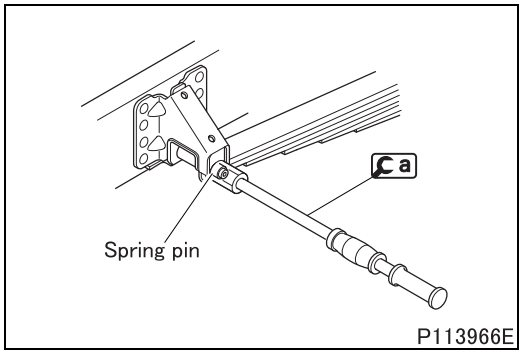

■ Removal: Spring pin

- Attach [a] to the grease nipple fitting hole in the spring pin, and remove the spring pin while hitting it with the slide hammer part of [a].

◆Installation procedure◆

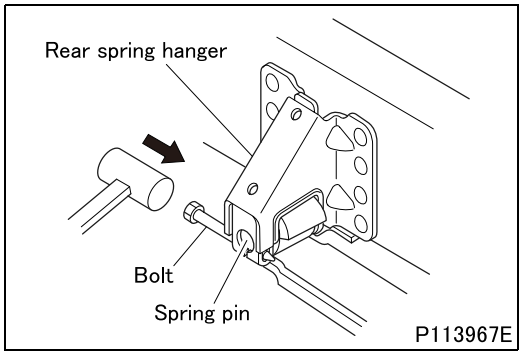

■ Installation: Spring pin

- Using proper bolt, align the bolt hole in the rear spring hanger with the bolt groove in the spring pin.

CAUTION ⚠

- **Do not use the spring pin mounting bolt for this purpose.**

https://truckmanualshub.com/

LEAF SPRING

Area 3 (rear section of leaf spring)

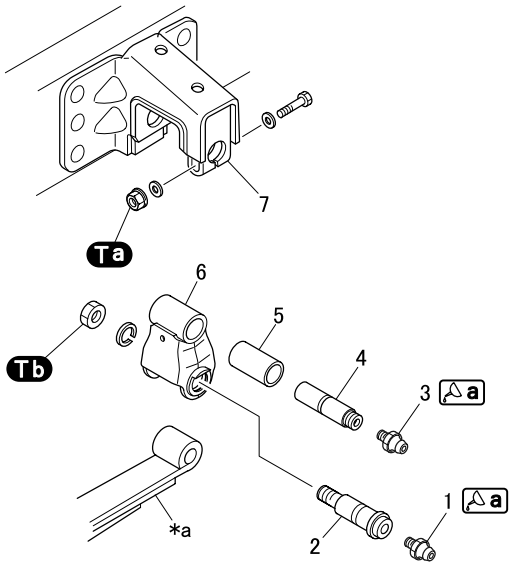

P116558

●Removal sequence

1 Grease nipple
2 Spring pin
3 Grease nipple
4 Spring pin
5 Bushing
6 Spring shackle
7 Rear shackle hanger

***a**: Leaf spring

●Installation sequence

Follow the disassembly sequence in reverse.

Service standards (Unit: mm {in.})

Location	Maintenance item	Standard value	Limit	Remedy
2, 6	Radial clearance between spring pin and spring shackle	0 to 0.04 {0.0016}	0.3 {0.012}	Replace
2, *a	Radial clearance between spring pin and bushing of leaf spring	0.04 to 0.14 {0.0016 to 0.0055}	0.5 {0.020}	Replace
4, 5	Radial clearance between spring pin and bushing	0.04 to 0.14 {0.0016 to 0.0055}	0.5 {0.020}	Replace
4, 7	Radial clearance between spring pin and rear shackle hanger	0 to 0.04 {0.0016}	0.3 {0.012}	Replace
6, 7	Axial clearance between spring shackle and rear shackle hanger	0.1 to 0.7 {0.0039 to 0.028}	1.0 {0.039}	Adjust or replace
6, *a	Axial clearance between spring shackle and leaf spring	0.1 to 0.7 {0.0039 to 0.028}	1.0 {0.039}	Adjust or replace

Tightening torque (Unit: N·m {ft.lbs, kgf·m})

Mark	Parts to be tightened	Tightening torque	Remarks
Ta	Nut (spring pin mounting)	29 to 37 {22 to 27, 3.0 to 3.8}	–
Tb	Nut (spring pin mounting)	148 to 201 {110 to 150, 15.1 to 20.5}	–

https://truckmanualshub.com/

Lubricant and/or sealant

Mark	Points of application	Specified lubricant and/or sealant	Quantity
a	Supply from grease nipple	Chassis grease [NLGI No. 1 (Li soap)]	As required

Special tools (Unit: mm {in.})

Mark	Tool name and shape	Part No.	Application
a	Spring pin remover A: M22 × 1.5 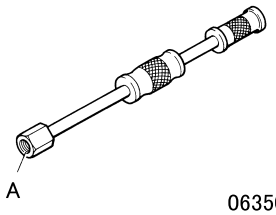	MB999112	Removal of spring pin
b	Spring pin remover A: PT 1/8 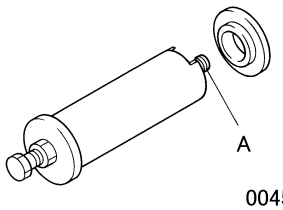	MH061452	

◆Work before removal◆

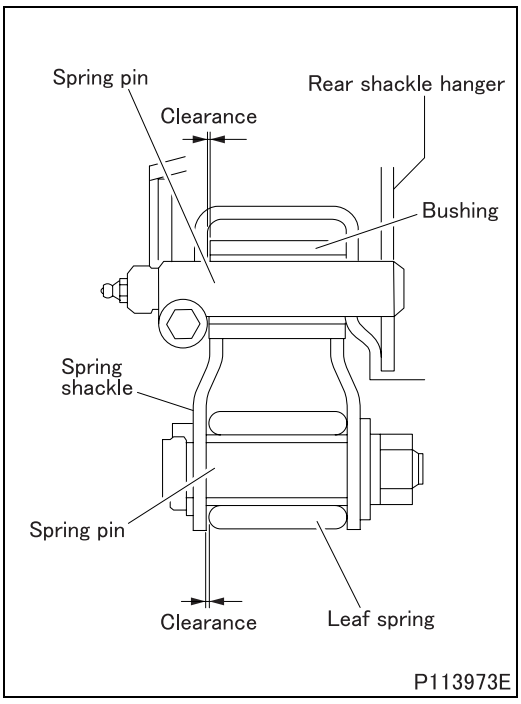

■ **Inspection: Clearance between spring shackle and each part**

- Measure the clearance using feeler gauge.
- If the measurement exceeds the limit, replace defective parts.

(1) Axial clearance between spring shackle and rear shackle hanger

(2) Axial clearance between spring shackle and leaf spring

https://truckmanualshub.com/

◆Removal procedure◆

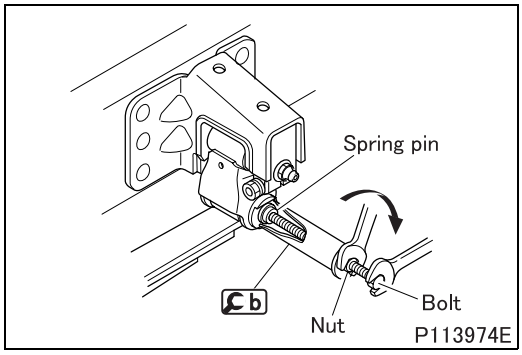

■ **Removal: Spring pin**

- Install the bolt of b in the grease nipple fitting hole.
- Hold the bolt of b, and extract the spring pin while screwing in the nut.

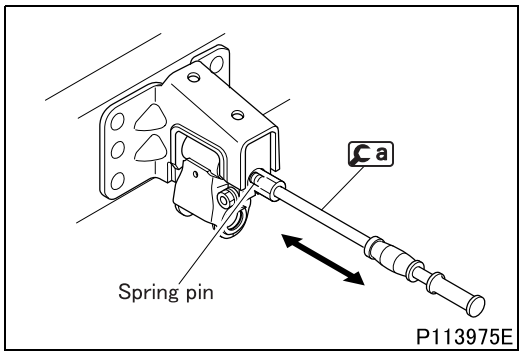

■ **Removal: Spring pin**

- Attach a to the grease nipple fitting hole in the spring pin, and remove the spring pin while hitting it with the slide hammer part of a.

◆Installation procedure◆

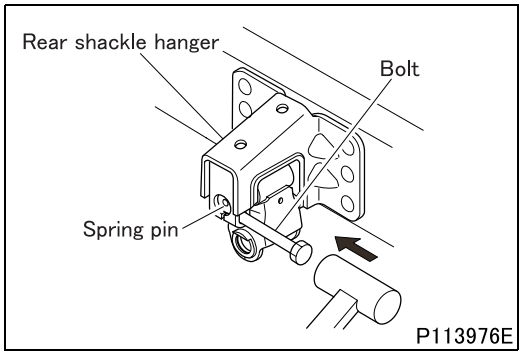

■ **Installation: Spring pin**

- Using proper bolt, align the bolt hole in the shackle hanger with the bolt groove in the spring pin.

CAUTION ⚠

- **Do not use the spring pin mounting bolt for this purpose.**

https://truckmanualshub.com/

Area 4 (stoppers)

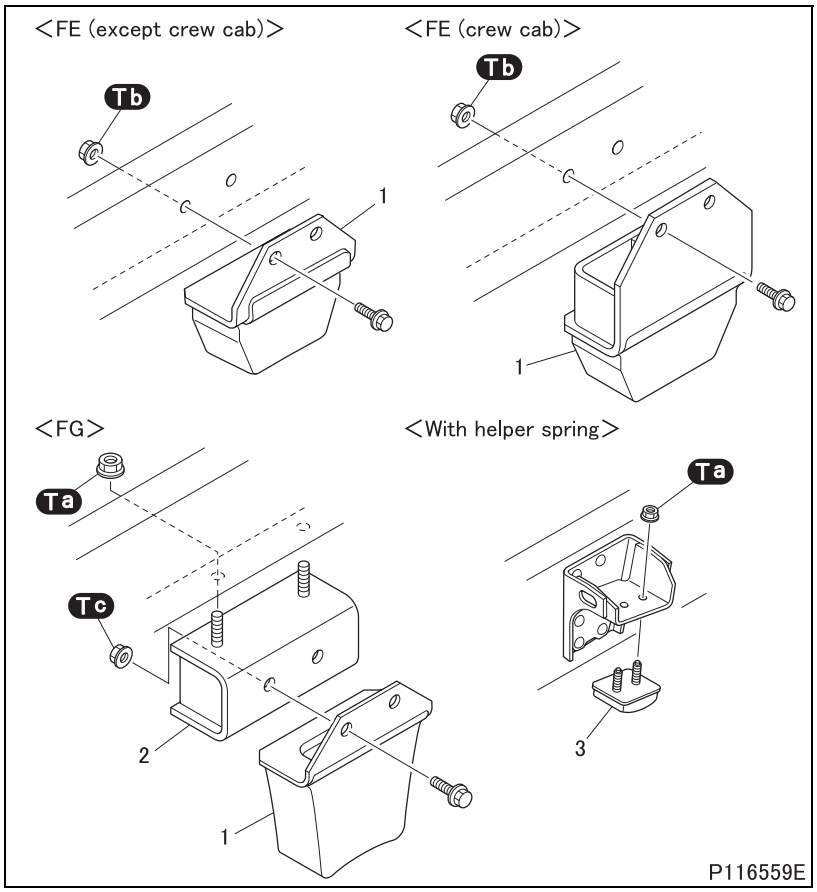

●Removal sequence

1 Bump stopper
2 Bump stopper bracket
3 Helper spring stopper

●Installation sequence

Follow the removal sequence in reverse.

Tightening torque (Unit: N·m {ft.lbs, kgf·m})

Mark	Parts to be tightened	Tightening torque	Remarks
Ta	Nut (bump stopper bracket mounting)	12 to 15 {8.9 to 11, 1.2 to 1.5}	–
	Nut (helper spring stopper mounting)		
Tb	Nut (bump stopper mounting) <except FG>	45 to 55 {33 to 41, 4.6 to 5.6}	–
Tc	Nut (bump stopper mounting) <FG>	21 to 31 {15 to 23, 2.1 to 3.2}	–

◆Installation procedure◆

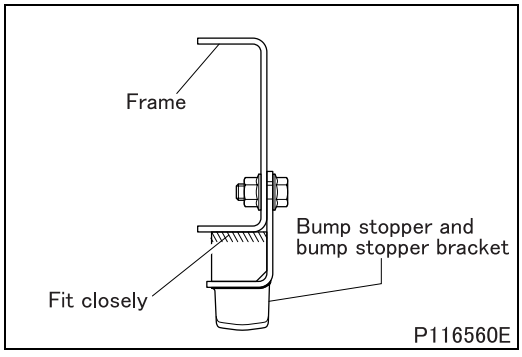

■ Installation: Bump stopper, bump stopper bracket

- Fit bump stopper and bump stopper bracket to the lower face of frame closely as illustrated, then tighten installation bolt and nut.

https://truckmanualshub.com/

LEAF SPRING

Area 5 (leaf springs)
<FEC5>

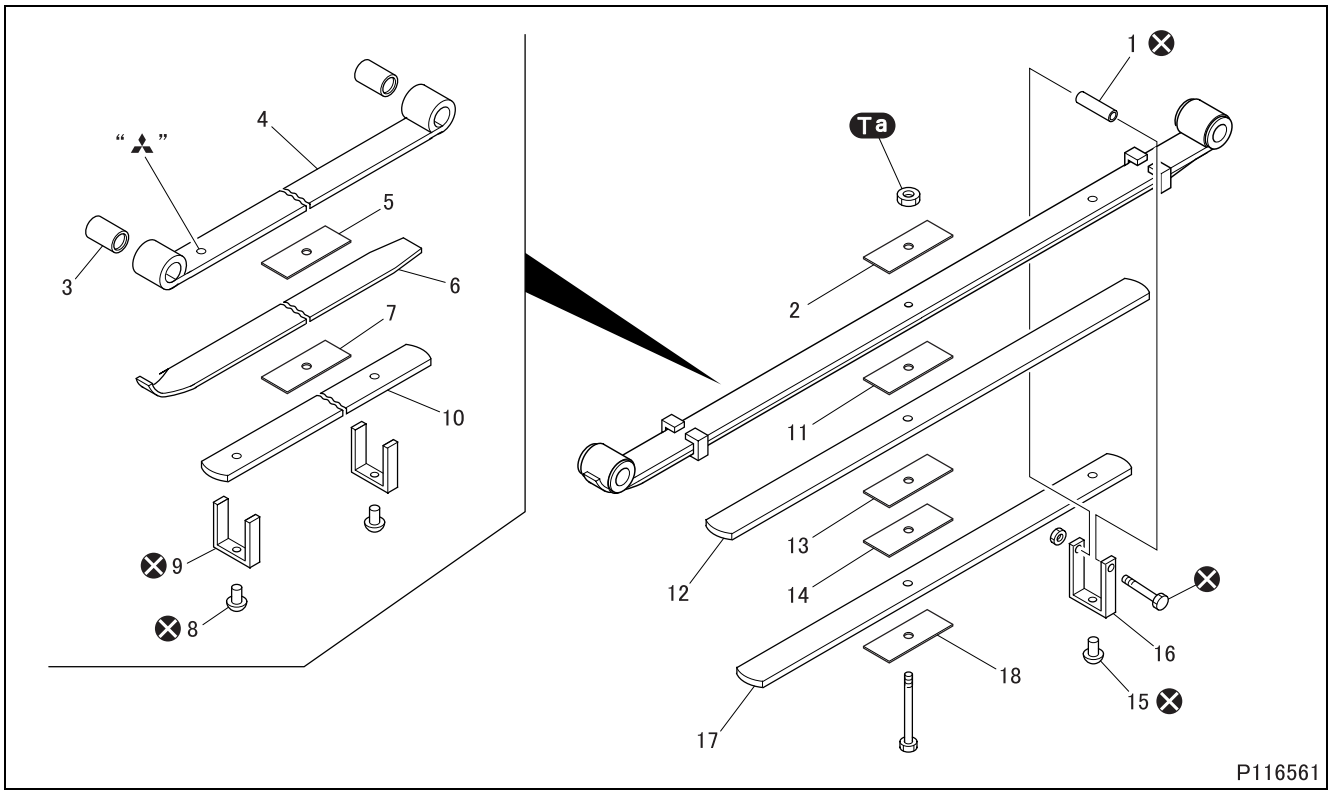

●Disassembly sequence

1 Pipe
2 Center spacer
3 Metal bushing
4 Leaf spring (No. 1)
5 Center spacer
6 Leaf spring (No. 2)
7 Center spacer
8 Rivet
9 Clip
10 Leaf spring (No. 3)
11 Center spacer
12 Leaf spring (No. 4)
13 Center spacer
14 Center spacer
15 Rivet
16 Clip
17 Leaf spring (No. 5)
18 Center spacer

⊗: Non-reusable parts

●Assembly sequence

Follow the disassembly sequence in reverse.

Tightening torque (Unit: N·m {ft.lbs, kgf·m})

Mark	Parts to be tightened	Tightening torque	Remarks
Ta	Nut (assembly of leaf springs)	70 to 95 {52 to 70, 7.1 to 9.7}	–

https://truckmanualshub.com/

Special tools (Unit: mm {in.})

Mark	Tool name and shape	Part No.	Application
Ca	Bushing installer A: Bushing installer A B: Bushing installer B 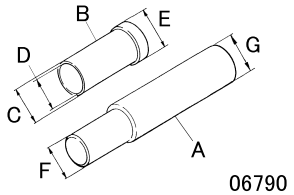 06790 C: ϕ28 {1.10} D: ϕ25 {0.98} E: ϕ32.8 {1.29} F: ϕ25 {0.98} G: ϕ30 {1.18}	MB999066 A: MB999067 B: MB999068	Removal and installation of metal bushing

◆Work before removal◆

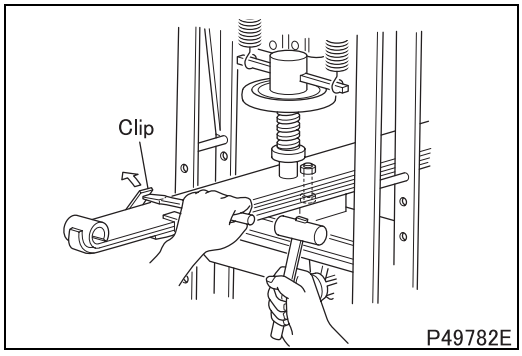

■ **Compression: Leaf spring**

- Using a press, compress the leaf spring as illustrated for subsequent operations.
- Using a chisel or equivalent, open the ends of the clip.

◆Removal procedure◆

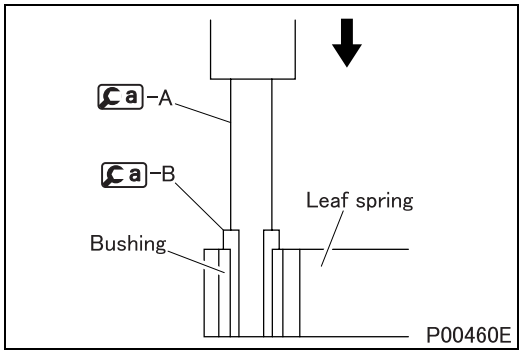

■ **Removal: Metal bushing**

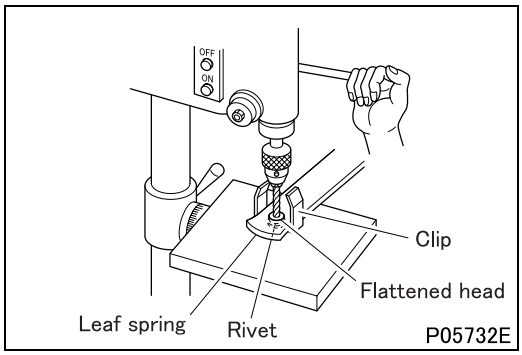

■ **Removal: Clip**

- Using a drill press, break the flattened head of the rivet and remove the clip from the leaf spring.

https://truckmanualshub.com/

◆Installation procedure◆

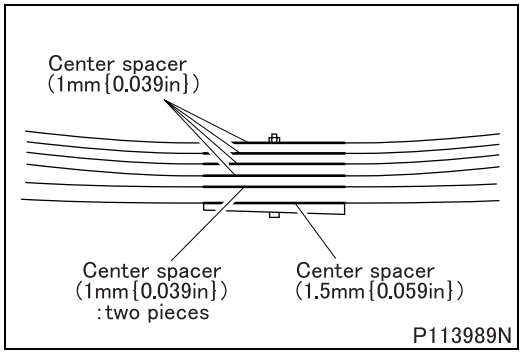

■ Installation: Center spacer

- The center spacers are of two types that are different in thickness. They should be installed in the correct locations as shown in the illustration.

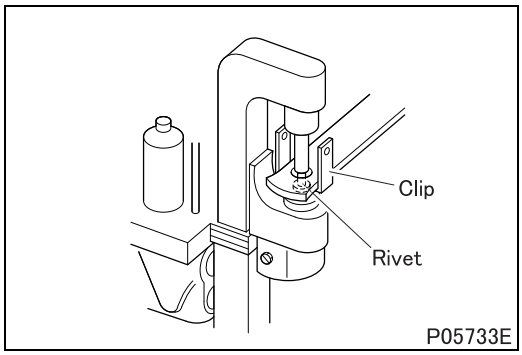

■ Installation: Clip

- Using a riveting machine, rivet a clip onto the leaf spring.

■ Installation: Metal bushing

- Install the metal bushing in a manner similar to that of removal. (See **"■Removal: Metal bushing"**.)

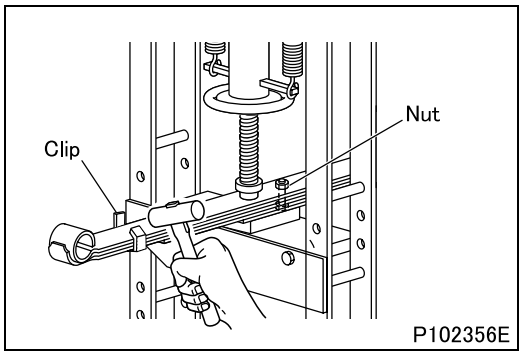

■ Installation: Leaf spring

- Temporarily tighten the leaf spring with the bolt.
- Compress the leaf spring using press and tighten the nut to the specified torque.
- Bend the clip with a hammer.

https://truckmanualshub.com/

<FE7, FE9, FG>

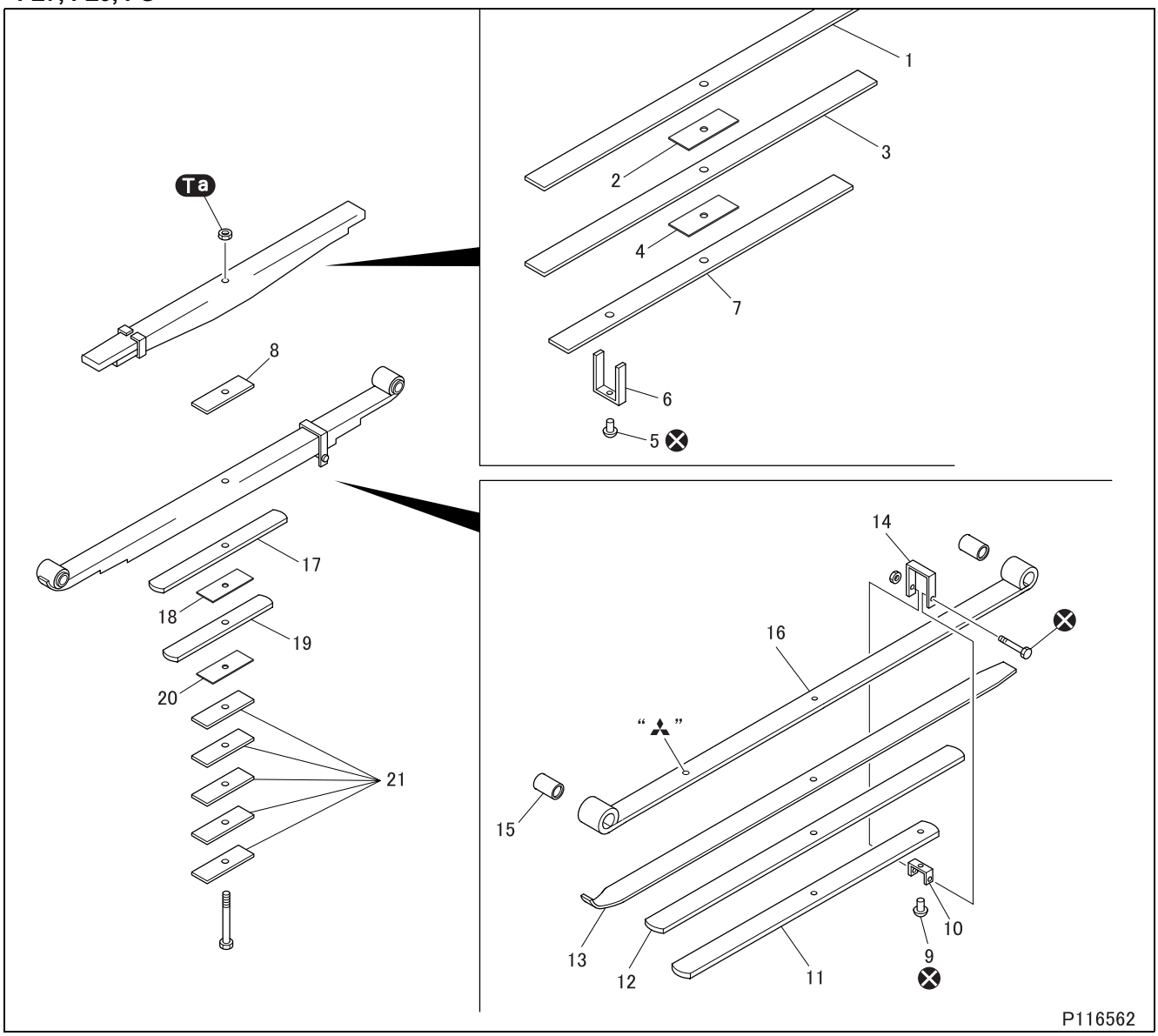

- The above schematic is only an example. Details may differ depending on vehicle models, such as the number of spring leaves, spacers, and the parts used.

●Disassembly sequence

1 Leaf spring (helper No. 1)
2 Center spacer
3 Leaf spring (helper No. 2)
4 Center spacer
5 Rivet
6 Clip
7 Leaf spring (helper No. 3)
8 Spacer
9 Rivet
10 Clip
11 Leaf spring (main No. 4)
12 Leaf spring (main No. 3)
13 Leaf spring (main No. 2)
14 Clip
15 Metal bushing
16 Leaf spring (main No. 1)
17 Leaf spring (main No. 5)
18 Center spacer
19 Leaf spring (main No. 6)
20 Center spacer
21 Spacer <FE (crew cab), FG>

⊗: Non-reusable parts

https://truckmanualshub.com/

LEAF SPRING

●Assembly sequence

Follow the disassembly sequence in reverse.

Tightening torque (Unit: N·m {ft.lbs, kgf·m})

Mark	Parts to be tightened	Tightening torque	Remarks
Ta	Nut (assembly of leaf spring)	70 to 95 {52 to 70, 7.1 to 9.7}	–

Special tools (Unit: mm {in.})

Mark	Tool name and shape	Part No.	Application
Ca	Bushing installer A: Bushing installer A B: Bushing installer B 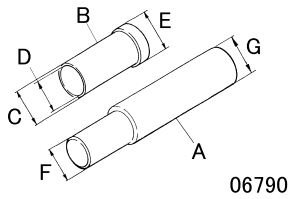 06790 C: ϕ28 {1.10}, D: ϕ25 {0.98}, E: ϕ32.8 {1.29}, F: ϕ25 {0.98}, G: ϕ30 {1.18}	MB999066 A: MB999067 B: MB999068	Removal and installation of metal bushing

◆Work before removal◆

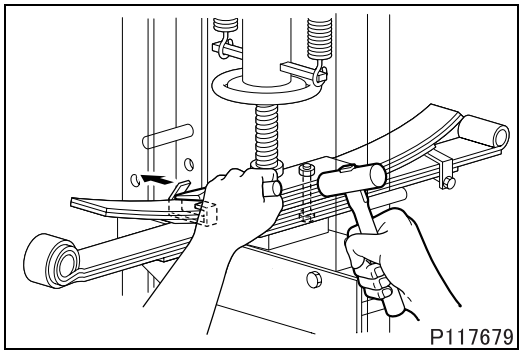

■ **Compression: Leaf spring**

- Using a press, compress the leaf spring as illustrated for subsequent operations.
- Using a chisel or equivalent, open the ends of the clip. <Bent type>

◆Removal procedure◆

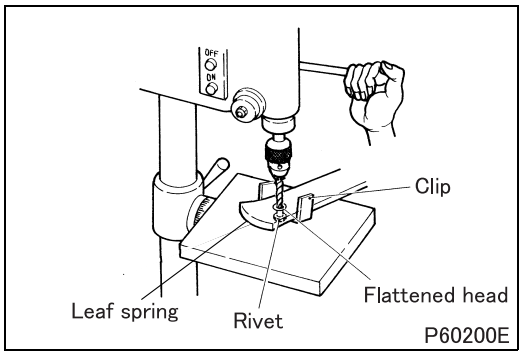

■ **Removal: Clip**

- Using a drill press, break the flattened head of the rivet and remove the clip from the leaf spring.

https://truckmanualshub.com/

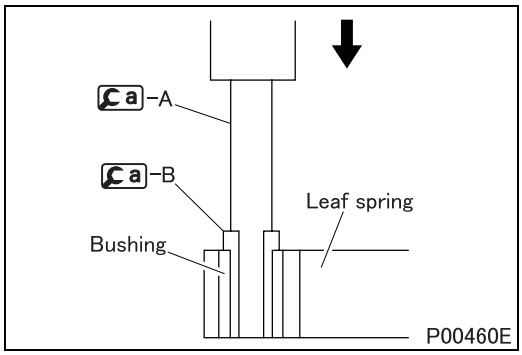

■ **Removal: Metal bushing**

◆**Installation procedure**◆

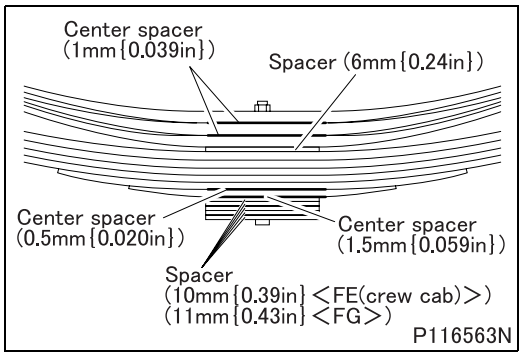

■ **Installation: Center spacer**

- The center spacers are of three types that are different in thickness. They should be installed in the correct locations as shown in the illustration.
- The spacers are of two types that are different in thickness. They should be installed in the correct locations as shown in the illustration.

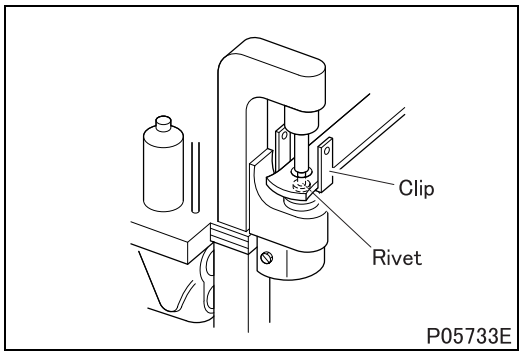

■ **Installation: Clip**

- Using a riveting machine, rivet a clip onto the leaf spring.

■ **Installation: Metal bushing**

- Install the metal bushing in a manner similar to that for removal. (See **"■Removal: Metal bushing"**.)

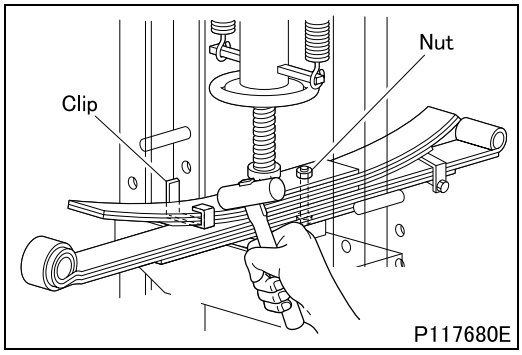

■ **Installation: Leaf spring**

- Temporarily tighten the leaf spring with the bolt.
- Compress the leaf spring using press and tighten the nut to the specified torque.
- Bend the clip with a hammer.

https://truckmanualshub.com/

FUSO

Group 35

Brake

MITSUBISHI FUSO TRUCK OF AMERICA, Inc.

Pub.No.00ELT0001-35

https://truckmanualshub.com/

INDEX

SPECIFICATIONS 35-2

STRUCTURE AND OPERATION
1. Brake System.....35-4
2. Vacuum Pump.....35-5
3. Vacuum Booster and Brake Master Cylinder 35-6
4. Front Disc Brake <FE> 35-10
5. Front Drum Brake <FG> 35-11
6. Rear Disc Brake <FE> 35-14
7. Rear Drum Brake <FG> 35-15

TROUBLESHOOTING.....35-16

ON-VEHICLE INSPECTION AND ADJUSTMENT
1. Replacement of Brake Fluid 35-20
2. Air Bleeding of Brake System 35-22
3. Inspection and Adjustment of Brake Pedal.....35-26
4. Inspection and Replacement of Disc Brake Pad <FE>.....35-28
5. Measurement of Disc Brake Drag Torque <FE>.....35-30
6. Inspection of Drum Brake Lining Thickness <FG> 35-30
7. Initial Setting of Clearance between Brake Drum and Shoe <FG>.....35-31
8. Inspection of Check Valve in Vacuum Line Hose 35-32
9. Inspection of Vacuum Pump 35-33
10. Inspection of Vacuum Booster.....35-33

BRAKE MASTER CYLINDER.....35-38

BRAKE PEDAL & VACUUM BOOSTER.....35-40

FRONT DISC BRAKE.....35-44

FRONT DRUM BRAKE.....35-50

REAR DISC BRAKE.....35-58

REAR DRUM BRAKE.....35-64

https://truckmanualshub.com/

SPECIFICATIONS

Vacuum Booster and Brake Master Cylinder

Item				Specifications
Vacuum booster	Boosting type			Vacuum type
	Diaphragm diameter		inch	ϕ10.5
	Manufacturer			Bosch
Brake master cylinder	Inner diameter		mm {in.}	ϕ25.4 {1.00}
	Stroke	Front	mm {in.}	25 {0.98}
		Rear	mm {in.}	25 {0.98}
	Manufacturer			Bosch

Front Disc Brake

Item		Specifications	
		FEC52	FEC72, FEC92
Brake type		Twin caliper type	
Effective diameter for braking	mm {in.}	ϕ235 {9.25}	ϕ252 {9.92}
Disc rotor outer diameter × thickness	mm {in.}	ϕ293 × 40 {11.5 × 1.57}	ϕ310 × 40 {12.2 × 1.57}
Caliper piston inner diameter	mm {in.}	ϕ51.1 {2.01}	ϕ54 {2.13}
Thickness of pad	mm {in.}	14 {0.55}	14 {0.55}

Front Drum Brake

Item		Specifications
		FG
Brake type		2-leading type (with auto adjuster)
Wheel cylinder inner diameter	mm {in.}	ϕ31.75 {1.25}
Brake drum inner diameter	mm {in.}	ϕ320 {12.6}
Brake lining width × thickness	mm {in.}	75 × 8.8 {2.95 × 0.35}

https://truckmanualshub.com/

Rear Disc Brake

Item		Specifications	
		FEC52	FEC72, FEC92
Brake type		Twin caliper type	
Effective diameter for braking	mm {in.}	ϕ235 {9.25}	ϕ252 {9.92}
Disc rotor outer diameter × thickness	mm {in.}	ϕ293 × 40 {11.5 × 1.57}	ϕ310 × 40 {12.2 × 1.57}
Caliper piston inner diameter	mm {in.}	ϕ51.1 {2.01}	ϕ54 {2.13}
Thickness of pad	mm {in.}	14 {0.55}	14 {0.55}

Rear Drum Brake

Item		Specifications
		FG
Brake type		Dual 2-leading type (with auto adjuster)
Wheel cylinder inner diameter	mm {in.}	ϕ31.75 {1.25}
Brake drum inner diameter	mm {in.}	ϕ320 {12.6}
Brake lining width × thickness	mm {in.}	110 × 10.4 {4.33 × 0.41}

Vacuum Pump

Item		Specifications
Type		Radial blades type
Output	cm^3 {cu.in.}/rev.	150 {9.15}

https://truckmanualshub.com/

1. Brake System

1.1 Brake fluid line

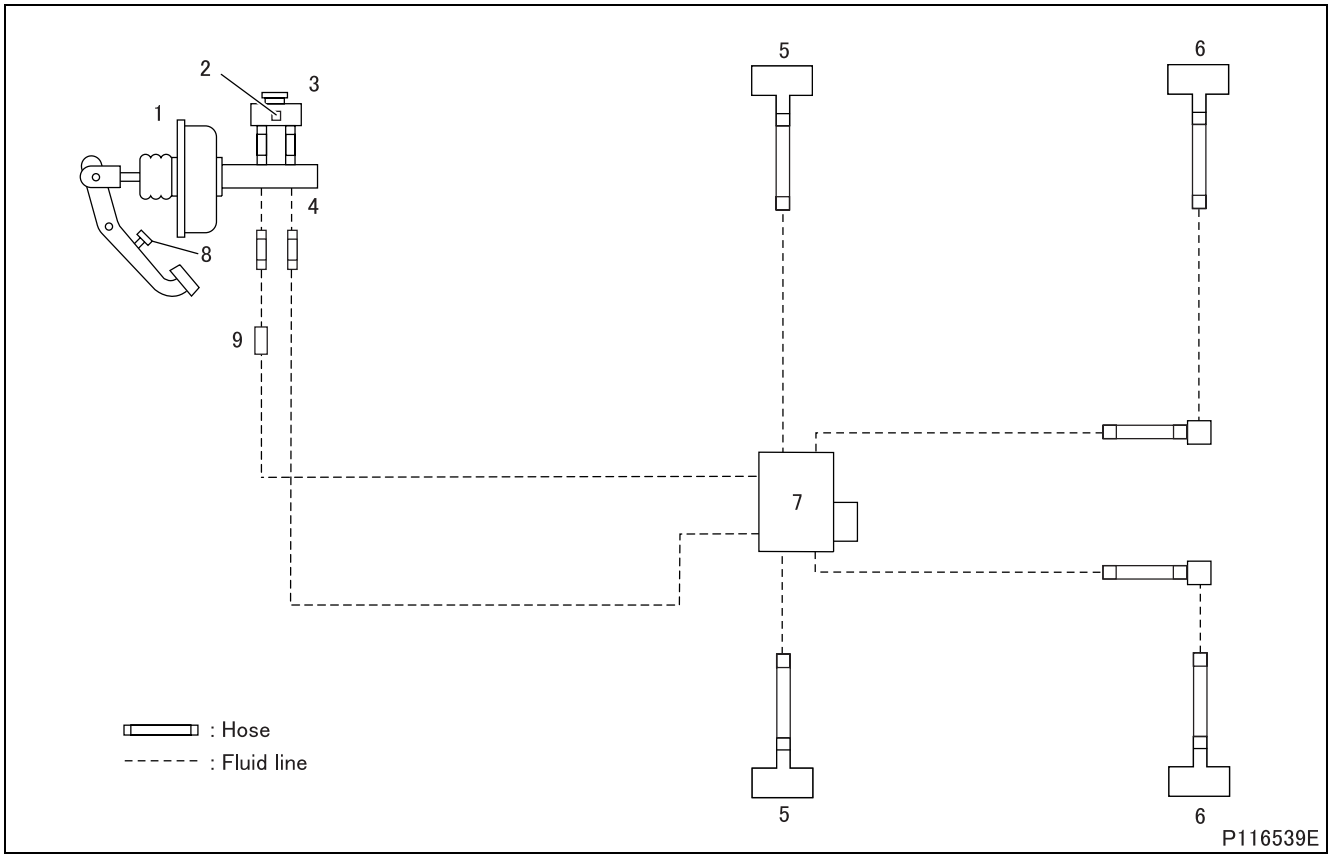

1 Vacuum booster
2 Brake fluid level switch
3 Brake fluid tank
4 Brake master cylinder
5 Front wheel brake
6 Rear wheel brake
7 Hydraulic unit (anti-lock brake system)
8 Stop lamp switch
9 Brake fluid pressure sensor

- The brake system incorporating the vacuum booster uses vacuum to provide servo-assisted braking to all wheels of the vehicle onto which it is mounted.

https://truckmanualshub.com/

1.2 Vacuum booster line

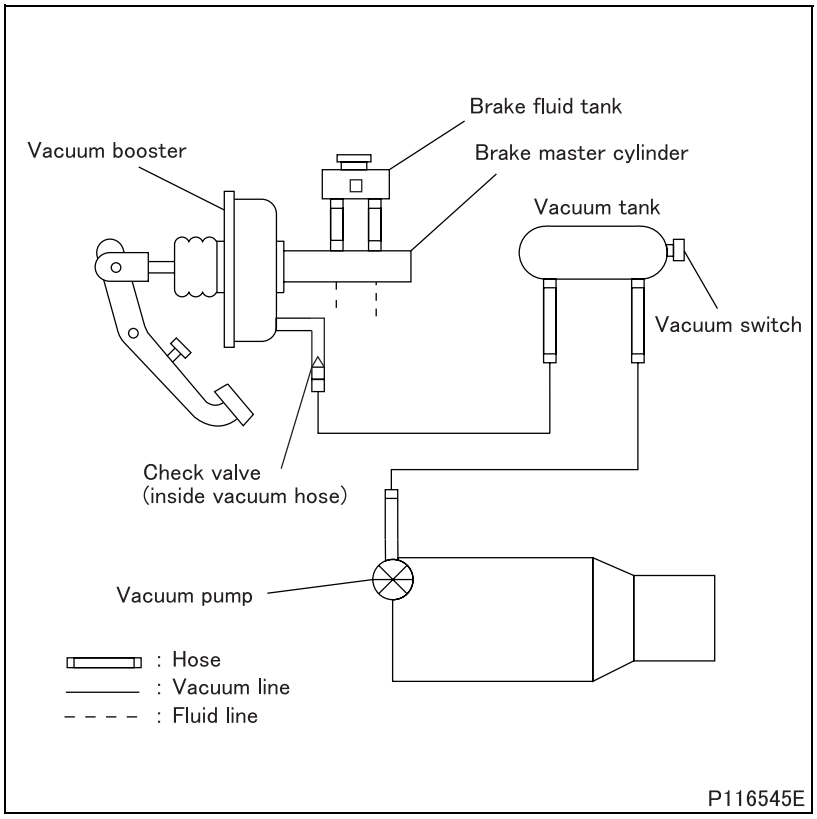

2. Vacuum Pump

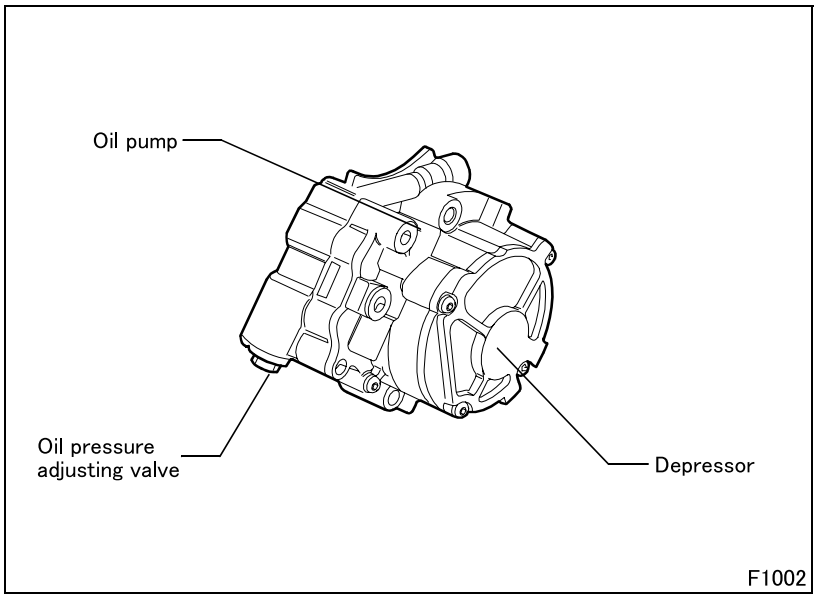

- The vacuum pump (Depressor), with radial blades, is also incorporated in the Gear of oil pump with built-in depressor (GPOD). It is driven directly by the oil pump.

https://truckmanualshub.com/

3. Vacuum Booster and Brake Master Cylinder

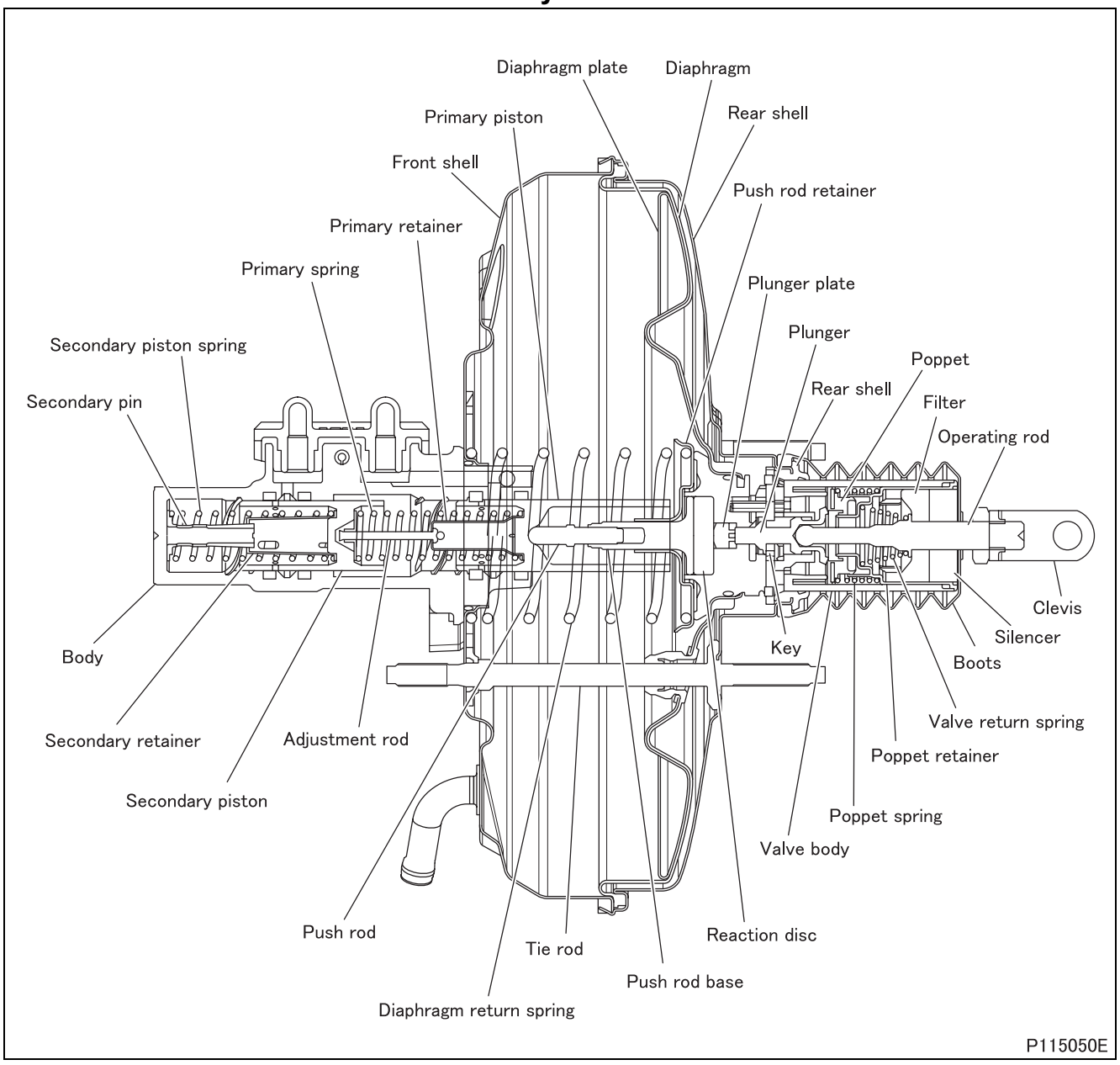

- The vacuum booster boosts the brake force exerted at the brake pedal using pressure created by the difference between the vacuum generated and atmospheric pressure, thereby reducing the operator's pedal effort.
- The brake master cylinder serves both the front and rear brake systems that are independent of each other. Should fluid leakage occur in either the front or rear brake system, stopping power can still be provided by the intact system.

https://truckmanualshub.com/

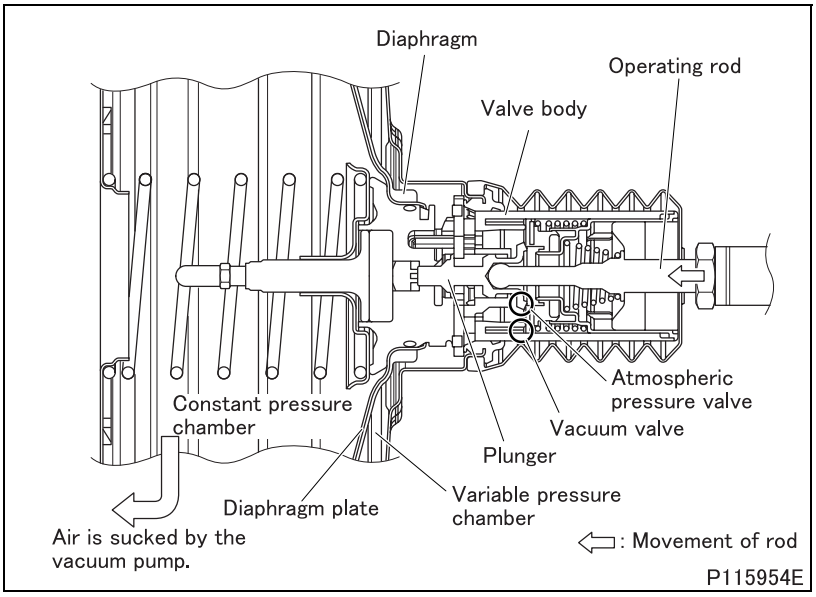

3.1 When brake pedal is not operative

- With vacuum supplied to the constant pressure and variable pressure chambers and no brake pedal force, both the atmospheric pressure valve and vacuum valve close. The vacuum booster system balances and provides no boosting action.

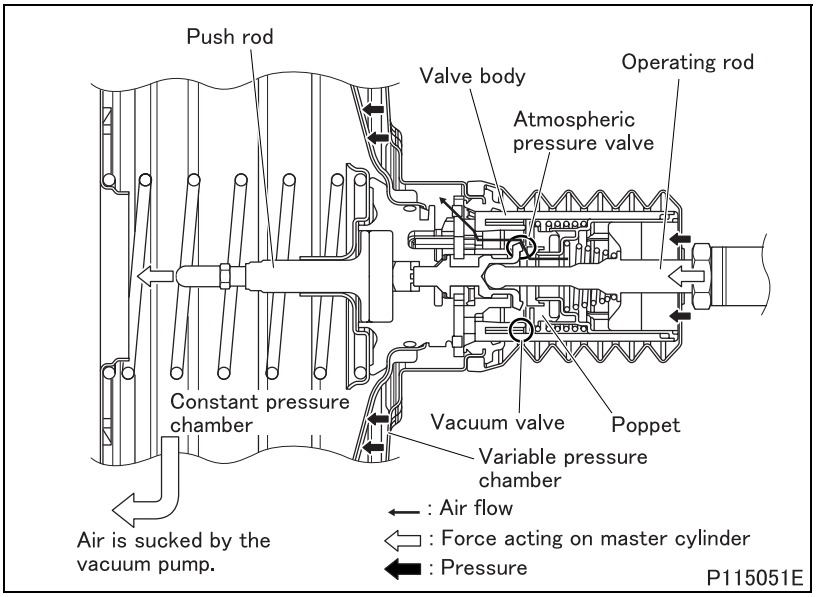

3.2 When brake pedal is depressed

3.2.1 Vacuum booster operation

- As the brake pedal is depressed, the pedal force acts on the operating rod. This opens the atmospheric pressure valve, allowing outside air into the variable pressure chamber. There is now a pressure difference between the constant and variable pressure chambers. The pedal force, which is boosted as a result of the pressure difference between the chambers works on the brake master cylinder via the push rod.

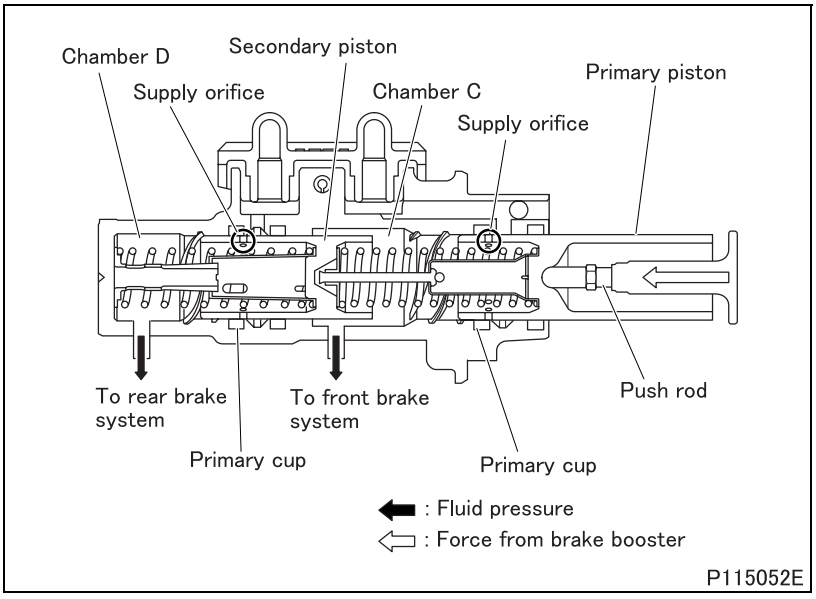

3.2.2 Brake master cylinder operation

- The push rod moves to push in the primary and secondary pistons. The supply orifice of the secondary piston goes over the primary cup and the fluid passage to the reservoir tank is blocked. As a result, fluid pressure builds up in the chamber D in front of the secondary piston.
- The fluid pressure is sent to the rear brake system.
- At the same time, the supply orifice of the primary piston goes over the primary cup and the fluid passage to the reservoir tank is blocked. As a result, fluid pressure builds up in the chamber C. The fluid pressure is sent to the front brake system.

https://truckmanualshub.com/

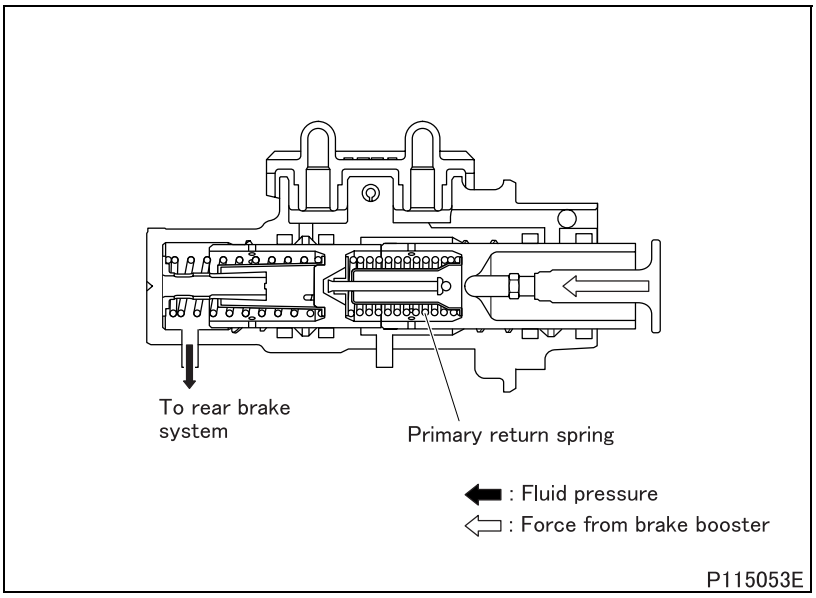

3.3 When fluid leaks in the front brake system

- As the brake pedal is depressed, the push rod moves to push in the primary piston. Due to fluid leakage in the front brake system, however, no fluid pressure builds up in that system.
- As the brake pedal is further depressed, the primary piston overcomes the force of the primary piston return spring and pushes the secondary piston via the primary retainer. As a result, fluid pressure is sent to the rear brake system only.

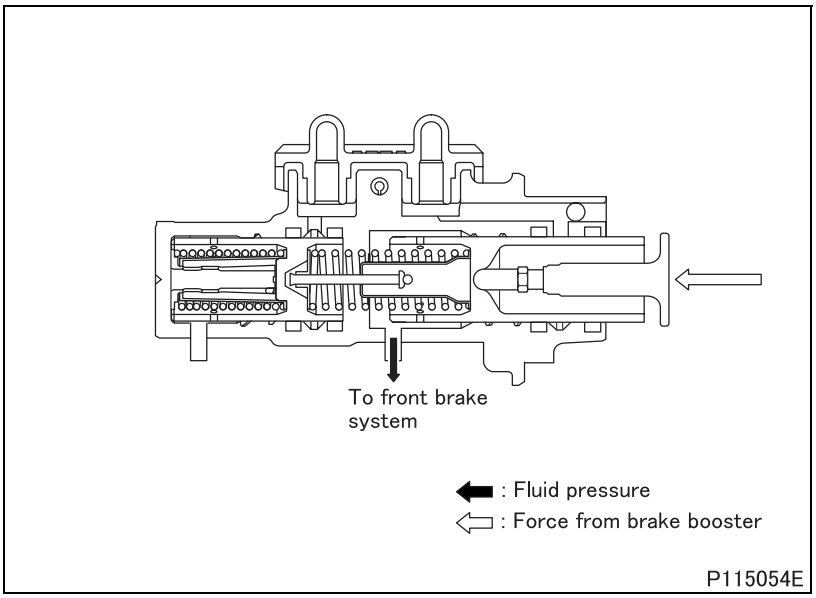

3.4 When fluid leaks in the rear brake system

- As the brake pedal is depressed, the push rod moves to push in the primary and secondary pistons. Due to fluid leakage in the rear brake system, however, no pressure builds up in that system.
- As the brake pedal is further depressed, the end of the secondary piston contacts the cylinder body. When the primary piston continues to be pushed, fluid pressure builds up further in the front brake system only.

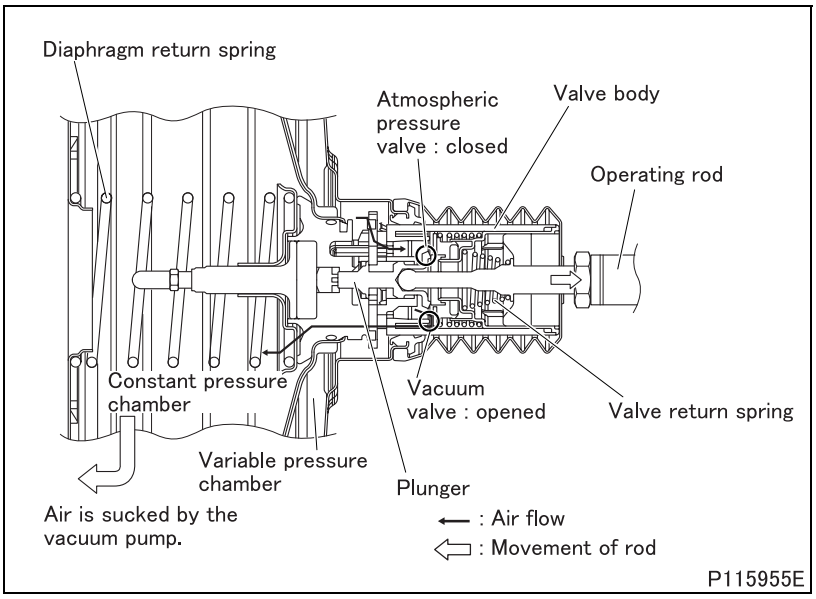

3.5 When brake pedal is released

3.5.1 Vacuum booster operation

- With the brake pedal released, the operating rod and the plunger are pushed back by the force of the valve return spring, closing the atmospheric pressure valve and opening the vacuum valve.
  This lets vacuum into the variable pressure chamber, reducing the pressure difference between the constant and variable pressure chambers.

https://truckmanualshub.com/

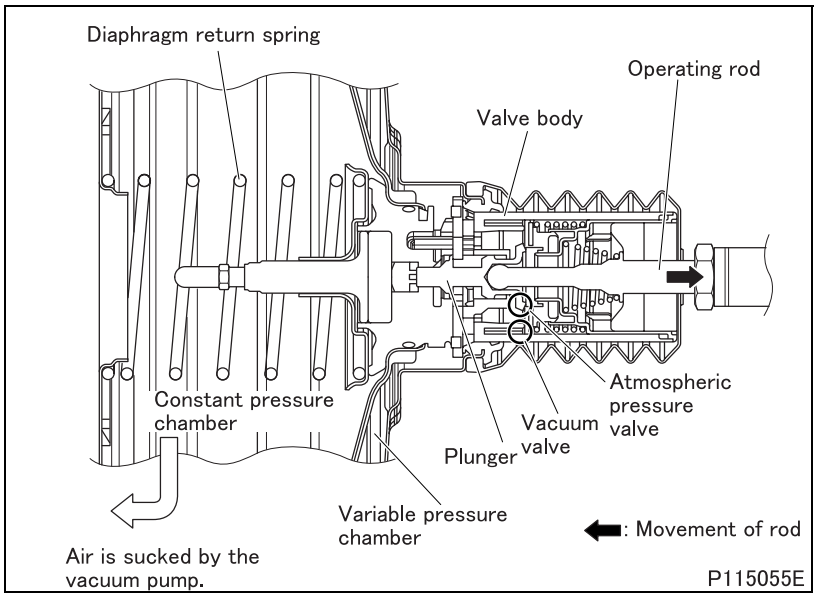

- With the pressure difference reduced between constant and variable pressure chambers, the valve body is pushed back by the force of the diaphragm return spring until it reaches a set position to come when the brake pedal is not operated. In that position, both the atmospheric pressure and vacuum valves are closed and the system is maintained in a balanced condition.

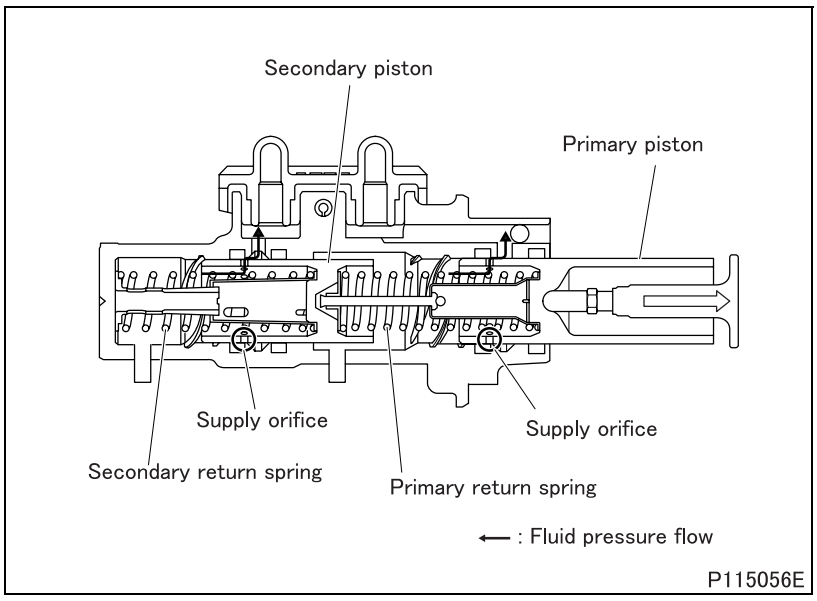

3.5.2 Brake master cylinder operation

- With the brake pedal released, the primary piston starts to be pushed back by the force of the primary return spring. The supply orifice of the primary piston moves back to the primary cup to open the fluid flow to the fluid passage to the reservoir tank, allowing the fluid pressure in the brake line to return into the reservoir tank.
- At the same time, the secondary piston starts to be pushed as well by the force of the secondary return spring. The supply orifice of the secondary piston moves back to the primary cup to open fluid flow to the fluid passage to the reservoir tank, allowing the fluid pressure in the brake line to return into the reservoir tank.

https://truckmanualshub.com/

4. Front Disc Brake <FE>

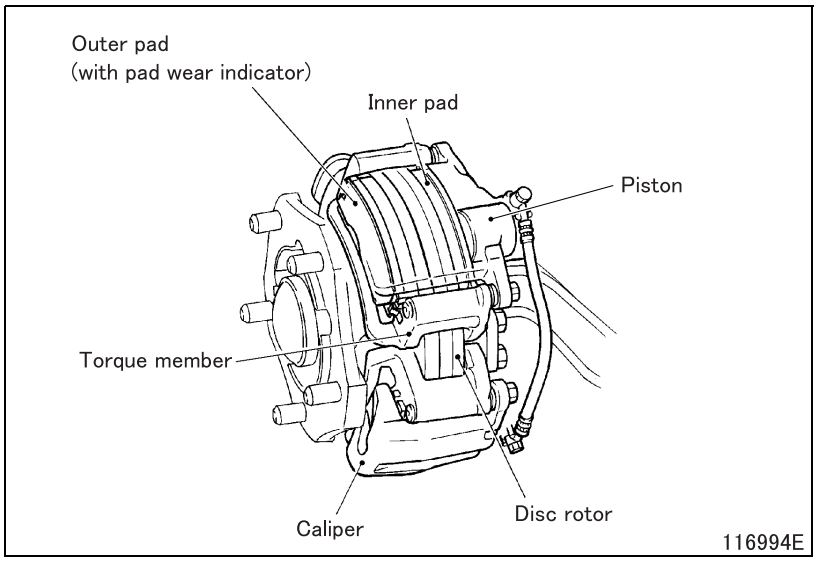

- The front disc brake uses twin floating-type calipers.
- Each caliper houses a cylinder and piston.
- The disc brake generates braking force by pushing two pads onto the disc rotor from both sides. The inner pad is pushed by the piston while the outer pad is pressed against the disc rotor in reaction.
- The outer pad is fitted with a pad wear indicator. A sound occurs when the pad wear indicator contacts the disc rotor to tell the operator that the pads need replacement.
- The front disc brake is equipped with a self-adjusting mechanism that compensates for pad wear to maintain correct clearance between the disc rotor and the outer and inner pads each time the brake is operated.

4.1 Self-adjusting mechanism

4.1.1 Operation

(1) When brake pedal is depressed

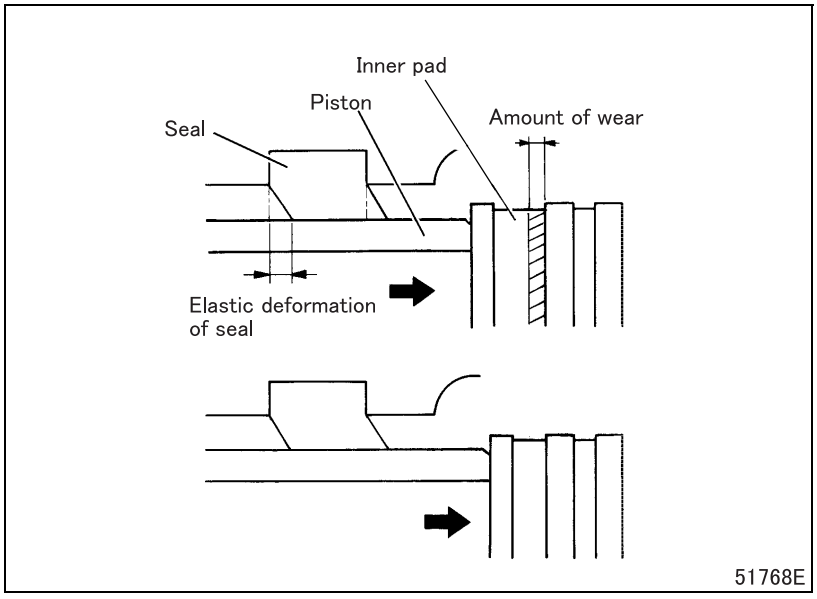

- The piston extends in excess of the seal's elastic deformation by the amount of inner pad wear (shown hatched).

(2) When brake pedal is released

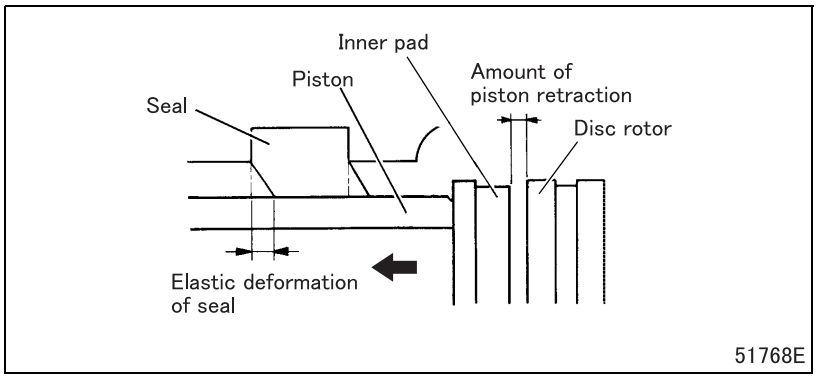

- The piston retracts as much as the amount of the seal's elastic deformation, thus maintaining the correct clearance between the disc rotor and the inner pad.

https://truckmanualshub.com/

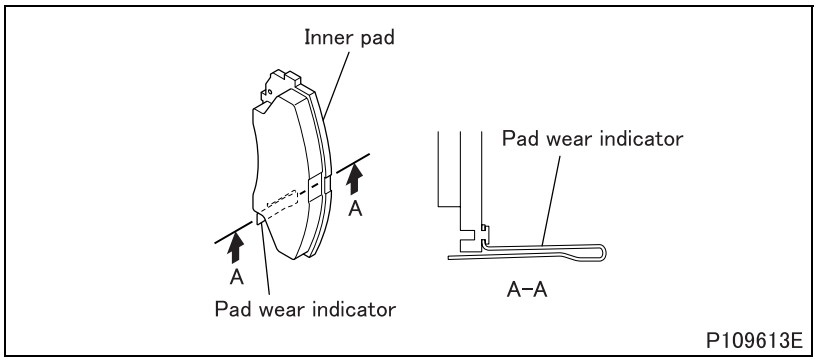

4.2 Pad wear indicator

- The pad wear indicator is affixed to the outer pad.
- When pad wear reaches the limit, the pad wear indicator and the disc rotor contact to give off the warning sound.

5. Front Drum Brake <FG>

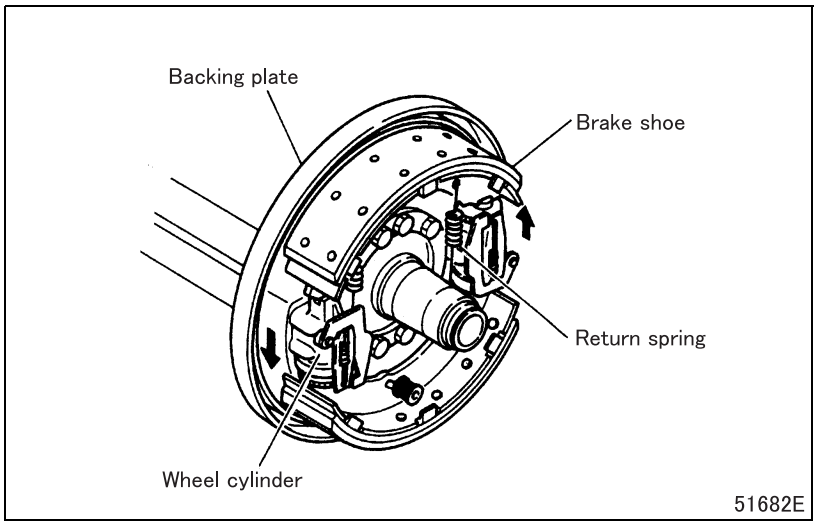

- The front drum brake is of a 2-leading type.
- Single-acting wheel cylinders activate brake shoes, both as a leading shoe, in forward-travel braking. By self-boosting effect, the 2-leading shoe brake generates appropriate stopping power.

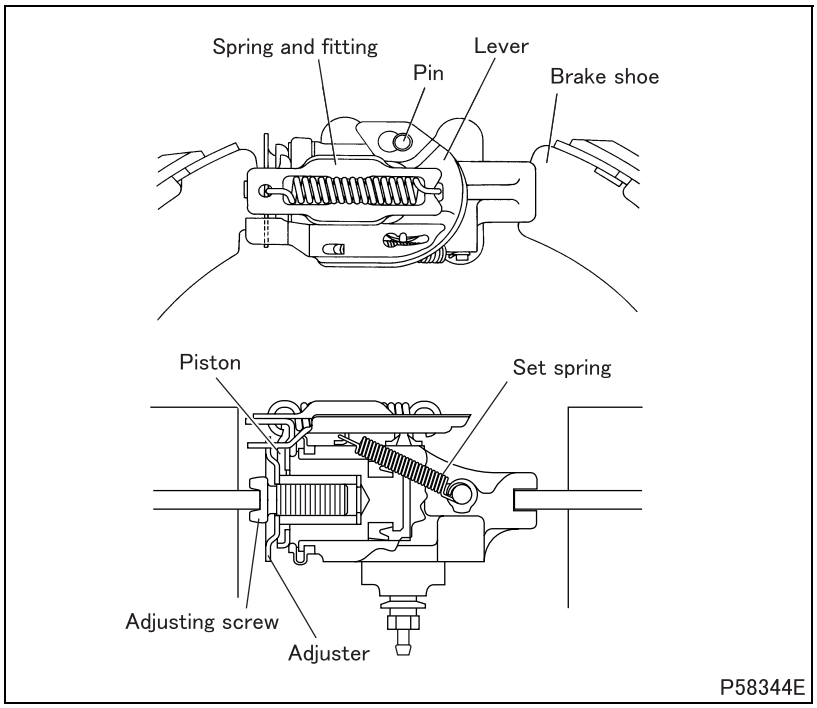

5.1 Wheel cylinder

- The wheel cylinder is equipped with a self-adjusting mechanism to compensate for lining wear and maintain the correct clearance between the lining and the drum. The adjustment is made each time braking is performed.

https://truckmanualshub.com/

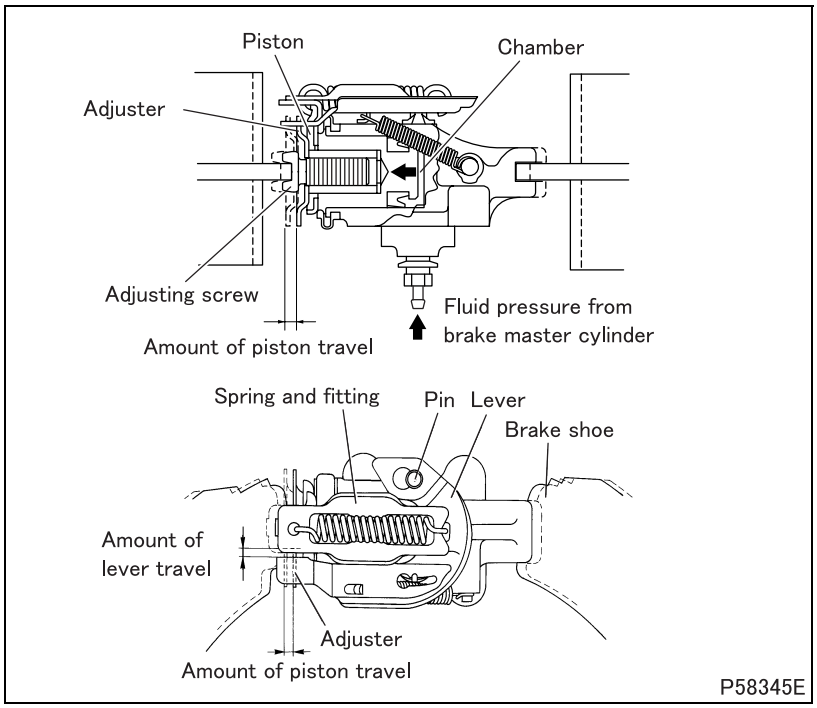

5.2 Self-adjusting mechanism

(1) Operation

- When the brake pedal is depressed, fluid pressure from the brake master cylinder enters into the chamber and pushes the piston, which then extends the spring and fitting. The lever, which is connected to the spring and fitting, pivots on the pin.

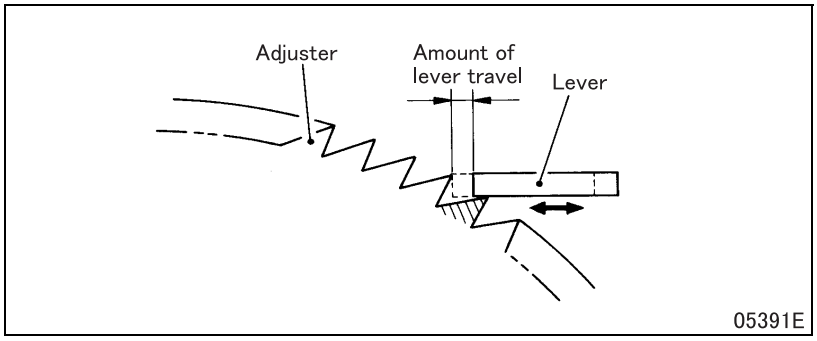

- When the brake drum-to-lining clearance is correct, the amount of lever travel when the brake pedal is depressed is not enough to turn the adjuster which therefore remains in the same place.

https://truckmanualshub.com/

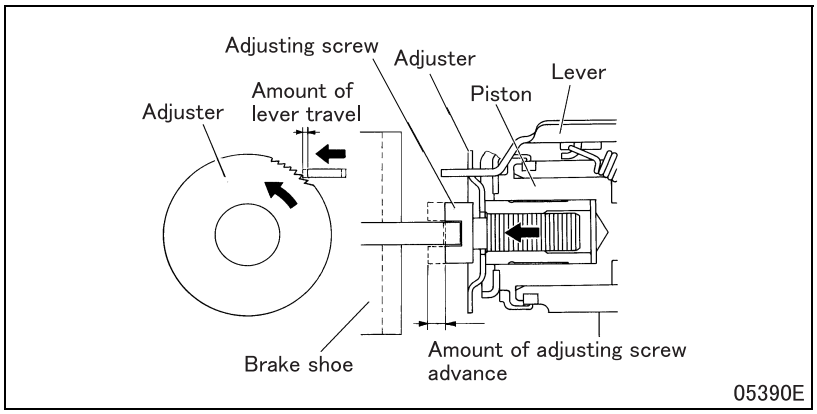

- As the brake drum-to-lining clearance grows, the amount of piston travel, and therefore the amount of lever travel, becomes greater.
- When the lever travels far enough to turn the adjuster, the threads on the adjuster causes the adjusting screw to advance. As a result, the brake shoe extends.

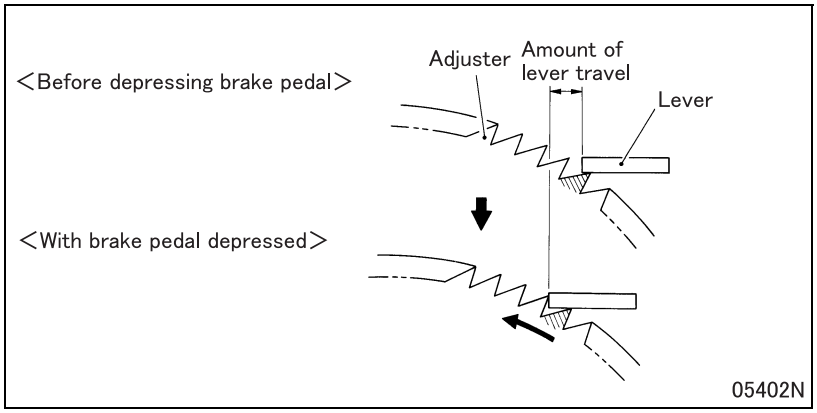

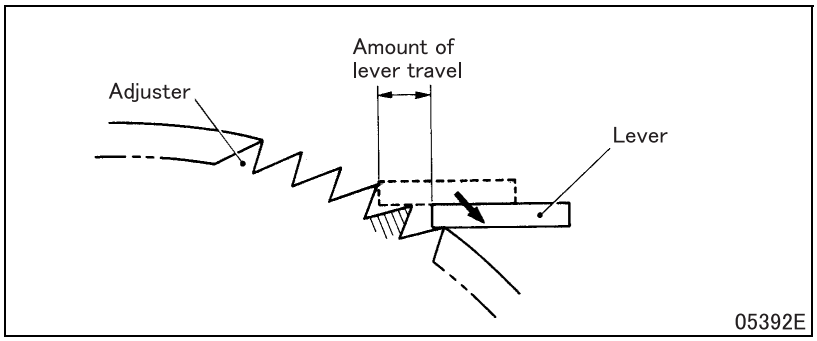

- As the brake pedal is released, the adjuster remains in the new position while the lever retracts by one tooth. The brake drum-to-lining clearance is now correctly adjusted.

https://truckmanualshub.com/

6. Rear Disc Brake <FE>

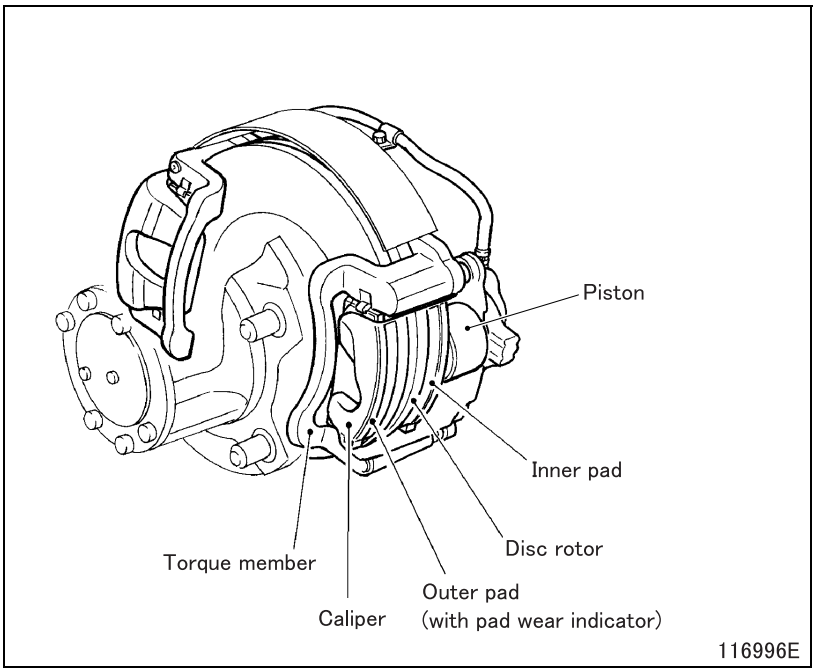

- The rear disc brake uses a twin floating-type calipers.
- The caliper houses one each of cylinder and piston.
- The disc brake generates braking force by pushing two pads onto the disc rotor from both sides. The inner pad is pushed by the piston while the outer pad is pressed against the disc rotor in reaction.
- The outer pad is fitted with a pad wear indicator. A sound occurs when the pad wear indicator contacts the disc rotor to tell the operator that the each caliper houses a cylinder and piston need replacement.
- The rear disc brake is equipped with a self-adjusting mechanism to compensate for pad wear and maintain the correct clearances between the disc rotor and the inner and outer pads. The adjustment is made each time braking is performed.
- The self-adjusting mechanism operates in the same manner as that of the front disc brake.

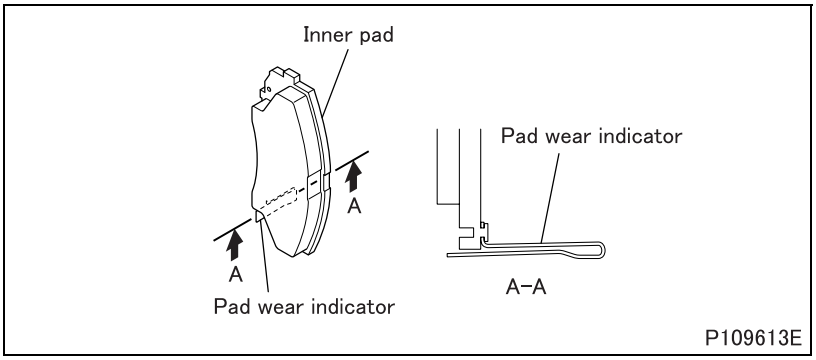

6.1 Pad wear indicator

- The pad wear indicator is affixed to the outer pad.
- When pad wear reaches the limit, the pad wear indicator and disc rotor contact to give off the warning sound.

https://truckmanualshub.com/

7. Rear Drum Brake <FG>

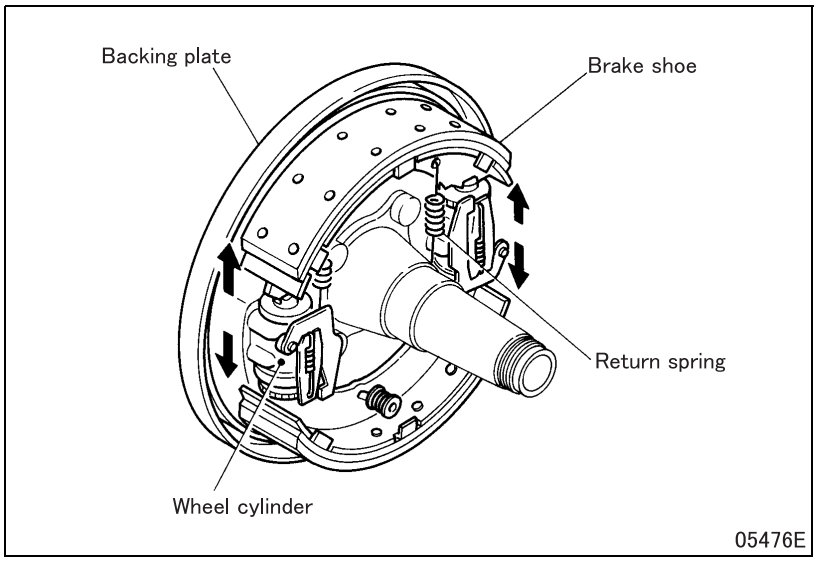

- The rear drum brake is of a dual 2-leading type.
- Double-acting wheel cylinders activate brake shoes, both as a leading shoe, in forward- and rearward-travel braking. By self-boosting effect, the dual 2-leading shoe brake generates appropriate stopping power.

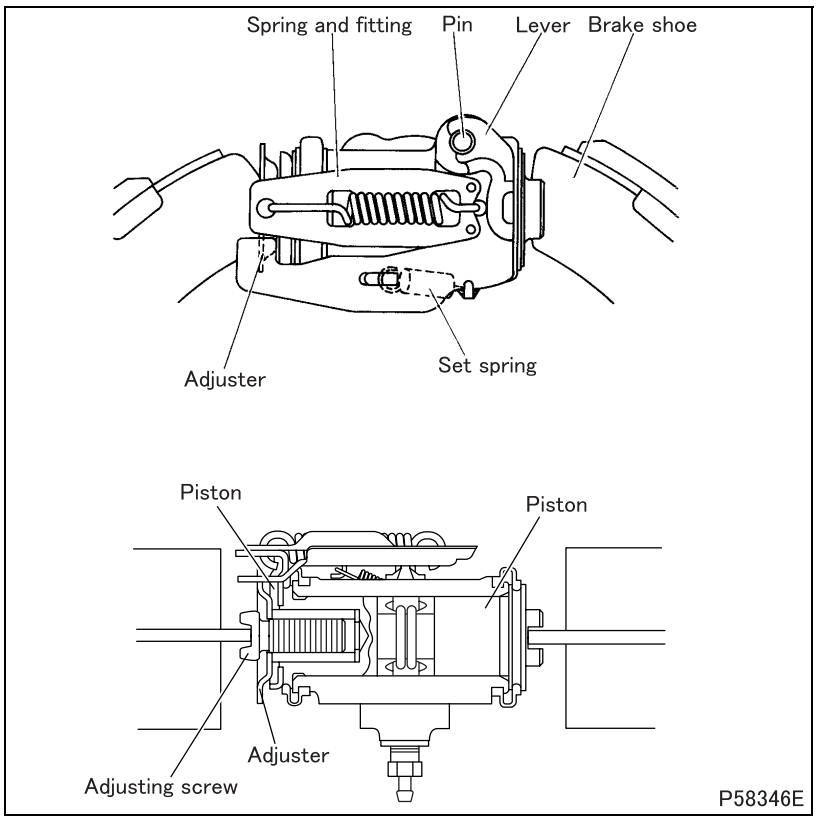

7.1 Wheel cylinder

- The wheel cylinder is equipped with a self-adjusting mechanism to compensate for lining wear and maintain the correct clearance between the lining and the drum. The adjustment is made each time braking is performed.
- The self-adjusting mechanism operates in the same manner as the front drum brake.

https://truckmanualshub.com/

Wheel Brake

Symptoms / Possible causes		Brake application one sided							Noise and shock when brake pedal depressed			Reference Gr
		Brake drag (slow disengagement after pedal release)	Stopping power different from right to left	Unstable stopping power	Locking point varies	Other	Insufficient stopping power	Reduced pedal travel	Noise generated when wheels are turned with vehicle jacked up	Continuous noise during brake application (at low vehicle speed)	Other	
Wheel brake	Backing plate surface rough			O								
	Backing plate deformed or incorrectly installed			O								
	Lubricant or moisture on brake pad/lining surface		O		O							
	Deterioration or incorrect material used for brake pad/lining		O									
	Brake pad/lining unevenly worn or with rough surface		O									
	Fade (pad/lining surface deterioration)				O							
	Brake pad/lining worn to limit									O		
	Incorrect contact of brake pad/lining		O		O		O					
	Brake lining worn radius uneven				O							
	Wheel cylinder malfunction	O	O					O	O			
	Shoe return spring fatigued or broken	O							O			
	Disc rotor/brake drum worn unevenly		O									
	Disc rotor/brake drum deformed			O								
	Disc rotor/brake drum worn				O							
	Disc rotor/brake drum surface rough						O					
	Disc rotor/brake drum inaccurately machined										O	
	Brake drum cracked										O	
	Foreign material in brake drum							O				
	Brake shoe deformed or damaged							O				
	Shoe hold cup broken								O			
	Movable parts insufficiently lubricated										O	

https://truckmanualshub.com/

Possible causes \ Symptoms		Brake application one sided							Noise and shock when brake pedal pressed			Reference Gr
		Brake drag (slow disengagement after pedal release)	Stopping power different from right to left	Unstable stopping power	Locking point varies	Other	Insufficient stopping power	Reduced pedal travel	Noise generated when wheels are turned with vehicle jacked up	Continuous noise during brake application (at low vehicle speed)	Other	
Brake pedal	Incorrect pedal travel						O					
	Incorrectly adjusted, too much play							O				
Brake fluid	Fluid level low							O				
	Fluid leakage							O				
	Air entry							O				
	Vapor lock							O				
Vacuum system	Vacuum drop						O					
Vacuum booster	Faulty						O	O				
Tire	Tire pressure uneven between wheels					O						Gr31
	Different tire sizes from left to right					O						
Axle	Wheel hub bearing incorrectly adjusted					O				O		Gr26A, B, 27
	Wheelbase different from left to right					O						
	Incorrect wheel alignment					O						Gr26A, B

https://truckmanualshub.com/

Possible causes \ Symptoms		Brake drum/ disc rotor overheating		Brake noise						Reference Gr
		Overheating on all wheels	Overheating on specific wheel(s)	Noisy when vehicle is new, or after brake lining/pad replacement	Brakes used under severe conditions	Other	Brake shudder	Abnormal brake pedal return	Brake drag	
Wheel brake	Backing plate surface rough								O	
	Shoe trapped on backing plate surface		O							
	Backing plate deformed or incorrectly installed				O					
	Brake pad/lining surface deterioration				O					
	Wear powder attached on brake pad/lining					O				
	Brake pad/lining worn					O				
	Incorrect contact of brake pad/lining			O						
	Wheel cylinder malfunction		O						O	
	Faulty wheel cylinder piston cup		O						O	
	Shoe return spring fatigued or broken		O						O	
	Disc rotor/brake drum glazed				O					Gr26A, B, 27
	Brake drum deformed or center deviation						O			Gr26B, 27
	Disc rotor thickness uneven						O			Gr26A, 27
	Brake shoe deformed or damaged				O					
	Brake shoe twisted or sagged		O							
Brake pedal	Abnormal pedal return	O								
	Pedal play insufficient								O	
	Linkage rusted or deformed							O		
	Return spring fatigued or broken							O		
	Vacuum booster operating rod thrust							O		
Brake fluid	Brake pipe over-tightened, resulting in poor fluid return		O							
Vacuum booster	Faulty	O								
Brake master cylinder	Faulty piston cup								O	
	Clogged return port	O								
Axle	Wheel hub bearing incorrectly adjusted		O			O	O			Gr26A, B, 27
	King pin bushing worn						O			Gr26A
	Trunnion bearing worn						O			Gr26B

https://truckmanualshub.com/

M E M O

https://truckmanualshub.com/

ON-VEHICLE INSPECTION AND ADJUSTMENT

1. Replacement of Brake Fluid

Tightening torque (Unit: N·m {ft.lbs, kgf·m})

Mark	Parts to be tightened		Tightening torque	Remarks
–	Air bleeder	Disc brake	8.8 to 12.7 {6.5 to 9.4, 0.9 to 1.3}	–
		Drum brake	6.86 to 8.83 {5.1 to 6.5, 0.7 to 0.9}	–

Lubricant and/or sealant

Mark	Points of application	Specified lubricant and/or sealant	Quantity
–	Brake fluid tank	Brake fluid (SAE J1703 or FMVSS No. 116 DOT3)	As required

WARNING ⚠

- **Be sure to use new brake fluid. Do not mix it with brake fluid of different properties or mineral oil (gas oil, engine oil, gear oil, automatic transmission fluid, etc.). This will alter the original properties of FUSO Brake Fluid, causing the boiling point to drop as well as the brake rubber parts to swell. Faulty operation of the brake system will result.**
- **Ensure that no foreign matter or water enter into the brake fluid when refilling it, as they will cause faulty brake operation.**
- **Use a container used exclusively for the specified brake fluid. This ensures that no brake fluid of different properties or mineral oil enter into the system.**

CAUTION ⚠

- **Brake fluid is corrosive on paintwork. Be careful not to spill it onto the paintwork. If brake fluid is spilled onto the paintwork, immediately wipe it off.**

NOTE

- **During brake fluid replacement operation, a change in color of the brake fluid being discharged indicates that the old brake fluid in the system has been replaced with new brake fluid.**
- **During the replacement, be sure to keep the brake fluid level at the “MAX” mark on the tank.**

https://truckmanualshub.com/

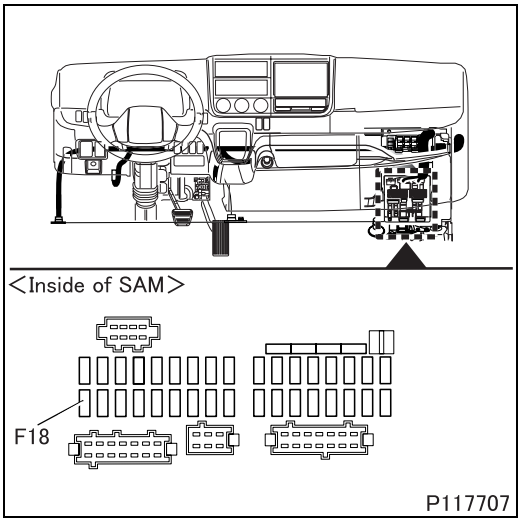

1.1 Work before replacement

- Remove the power fuse (F18) for the electronic control unit of anti-lock brake system.

WARNING ⚠

- **Do not install the power fuse until after the brake fluid replacement is completed. Otherwise, the initial system check starts, possibly causing air to enter into the secondary system (anti-lock brake system operating circuit).**

- In order to ensure that the vacuum booster functions properly, start the engine and keep it running at idle until the replacement is completed.

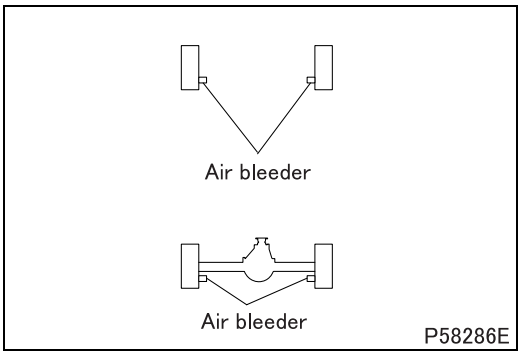

- Install one end of a vinyl pipe onto each air bleeder. Place the loose end into a container.

1.2 Replacement of brake fluid

- Loosen each bleeder screw, and depress and release the brake pedal repetitively until brake fluid is no longer discharged from the pipes.
- While filling the brake fluid tank with new brake fluid up to the “MAX” mark, cycle the brake pedal repetitively until the old brake fluid being discharged is replaced with new brake fluid. Tighten each air bleeder to the specified torque.
- Proceed to Air Bleeding of Brake System.

https://truckmanualshub.com/

2. Air Bleeding of Brake System

Tightening torque (Unit: N·m {ft.lbs, kgf·m})

Mark	Parts to be tightened		Tightening torque	Remarks
–	Air bleeder	Disc brake	8.8 to 12.7 {6.5 to 9.4, 0.9 to 1.3}	–
		Drum brake	6.86 to 8.83 {5.1 to 6.5, 0.7 to 0.9}	–

Lubricant and/or sealant

Mark	Points of application	Specified lubricant and/or sealant	Quantity
–	Brake fluid tank	Brake fluid (SAE J1703 or FMVSS No. 116 DOT3)	As required

WARNING ⚠

- **Be sure to use new brake fluid. Do not mix it with brake fluid of different properties or mineral oil (gas oil, engine oil, gear oil, automatic transmission fluid, etc.). This will alter the original properties of FUSO Brake Fluid, causing the boiling point to drop as well as the brake rubber parts to swell. Faulty operation of the brake will result.**
- **Ensure that no foreign material or water enter into the brake fluid when refilling it, as they will cause faulty brake operation.**
- **Use a container used exclusively for the specified brake fluid. This ensures that no brake fluid of different properties or mineral oil enter into the system.**
- **If the hydraulic unit was replaced, perform air bleeding of both the primary and secondary brake systems.**

CAUTION ⚠

- **Brake fluid is corrosive on paintwork. Be careful not to spill it onto the paintwork. If brake fluid is spilled onto the paintwork, immediately wipe it off.**

NOTE

- **Brake fluid level drops during the air bleeding operation. Be sure to keep the brake fluid level at the "MAX" mark on the tank.**

https://truckmanualshub.com/

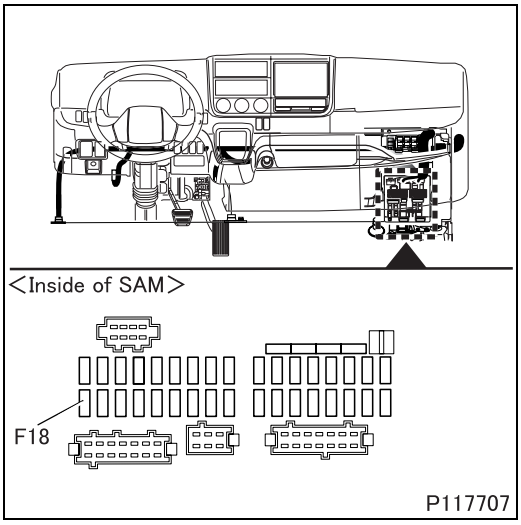

2.1 Work before replacement

- Remove the power fuse (F18) for the electronic control unit of anti-lock brake system.

WARNING ⚠

- **Do not install the power fuse until after the air bleeding of the primary brake system (normal circuit) is completed. Otherwise, the initial system check starts, possibly causing air to enter into the secondary system (anti-lock brake system operating circuit).**

- In order to ensure that the vacuum booster functions properly, start the engine and keep it running at idle until the replacement is completed.

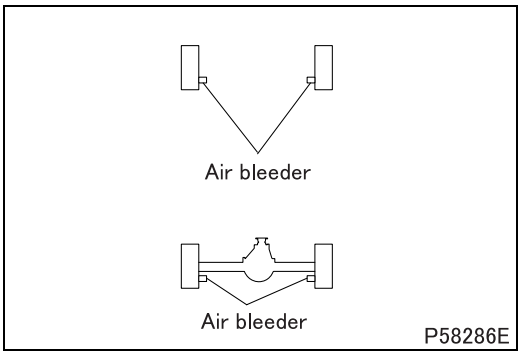

- Install one end of a vinyl pipe onto each air bleeder. Place the loose end into a container.

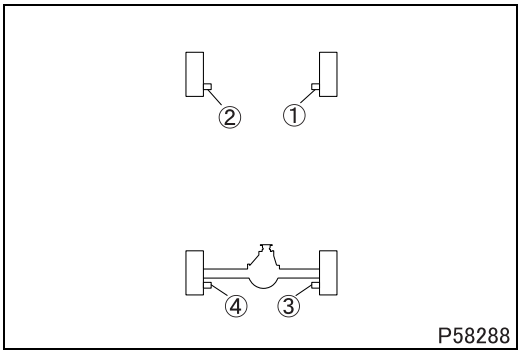

2.2 Air bleeding of brake system

(1) Air bleeding of primary brake system (normal circuit)

- Perform the air bleeding sequence described below on each of the 4 wheels in the order of the following table.

Order of air bleeding	Brake system	Wheel
(1)	Front	Front right
(2)		Front left
(3)	Rear	Rear right
(4)		Rear left

CAUTION ⚠

- **If air has entered into the secondary brake system (anti-lock brake system operating circuit), bleed air from the secondary system after completing the air bleeding of the primary system (normal circuit).**
- **Normally, during air bleeding operation, air cannot enter into the secondary system (anti-lock brake system operating circuit) which is filled with brake fluid and is closed off. Therefore, only the primary system (anti-lock brake system operating circuit) needs to be bled of air.**

https://truckmanualshub.com/

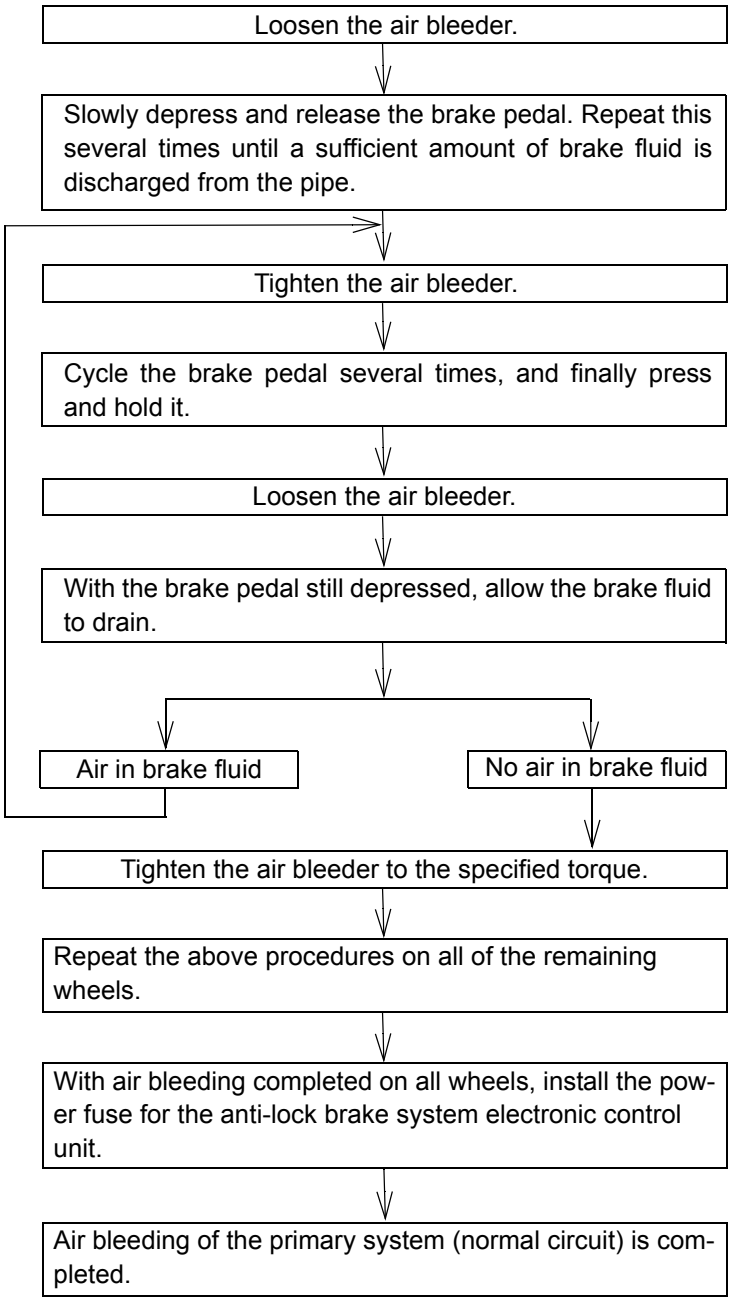

(2) Air bleeding of secondary brake system (ABS operating circuit)

- Perform a FUSO diagnostics actuator test (manual air bleeding) as part of the air bleeding procedures. (See Gr 35E.)

CAUTION ⚠

- **If the ABS system activates with air still remaining in the primary brake system, air can enter the secondary brake system (ABS operating circuit).**
- **If air has entered the secondary brake system (ABS operating circuit), that air can also flow into the primary system (normal circuit) when the ABS system activates, possibly causing the brake pedal stroke to extend.**

https://truckmanualshub.com/

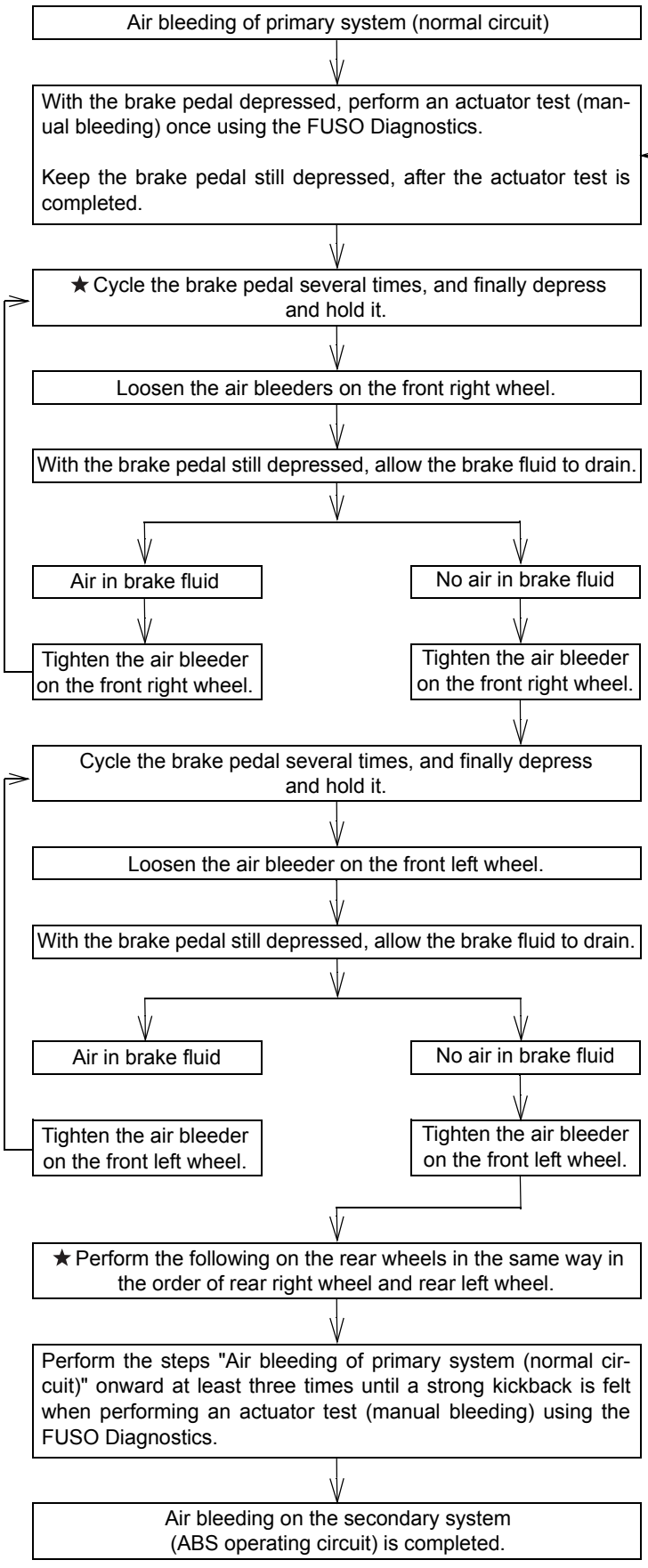

CAUTION ⚠

- **Do not repeat the test more than once in a row. Otherwise, air purged from the secondary system (ABS operating circuit) and sent into the primary system (normal circuit) can return to the secondary system.**

https://truckmanualshub.com/

3. Inspection and Adjustment of Brake Pedal

CAUTION ⚠

- **Securely chock the wheels so that the vehicle does not move. Do not remove the chocks until the entire operation is completed.**

- Inspection and adjustment of the brake pedal must be carried out after those of the following are completed.
  - Bleeding of brake system
  - Measurement of drag torque of disc brake

Service standards (Unit: mm {in.})

Location	Maintenance item	Standard value	Limit	Remedy
–	Installed height of brake pedal	169 to 177	–	Adjust
–	Clearance between floor and brake pedal (when depressed with a force of 490 N {110 lbs, 50 kgf})	10 {0.39} or more	–	Adjust
–	Brake pedal free play	0.1 to 3 {0.0034 to 0.12}	–	Adjust
–	Clearance between threaded end of stop lamp switch and brake pedal	1.5 to 2.5 {0.059 to 0.098}	–	Adjust

Tightening torque (Unit: N·m {ft.lbs, kgf·m})

Mark	Parts to be tightened	Tightening torque	Remarks
–	Lock nut (operating rod securing)	20.4 to 30.6 {15 to 23, 2.1 to 3.1}	–

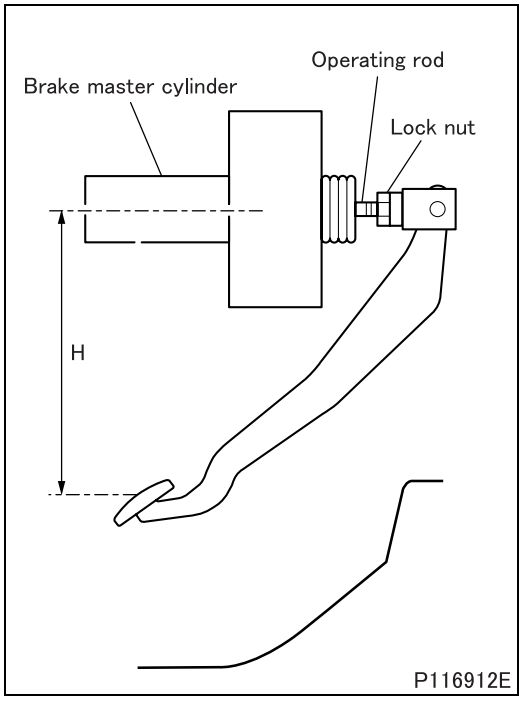

3.1 Brake pedal installed height

[Inspection]

- Remove the center lower cover of the instrument panel so that measurement can be performed.
- With the engine stopped and the brake pedal released, measure the height (H) from the center of the brake master cylinder to the center of the brake pedal.
  H: 228 ± 3 mm {8.98 ± 0.12 in.}
- If the measurement deviates from the standard value, adjust the height by turning the operating rod of the vacuum booster.

[Adjustment]

- Loosen the lock nut and turn the operating rod to bring the installed height of the brake pedal into the standard value range.
- Tighten the lock nut to the specified torque.
- After tightening the lock nut, press the brake pedal and check the brake pedal play and clearance between the brake pedal and floor.

https://truckmanualshub.com/

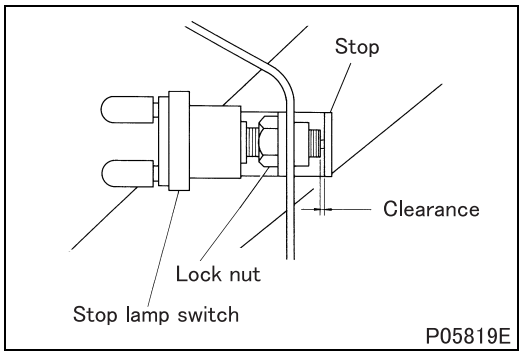

- After adjustment, check the clearance between the threaded end of the stop lamp switch and brake pedal.

CAUTION ⚠

- **When the pedal is fully depressed, the vacuum booster operating rod functions as a stopper for the brake pedal.**

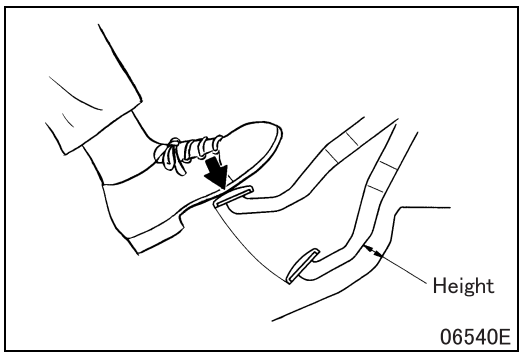

3.2 Clearance between depressed brake pedal and floor

[Inspection]

- Remove the floor mat to prepare for the measurement.
- With the engine idling, depress the brake pedal with a force of 490N {110 lbs, 50kgf} and measure the clearance between the brake pedal and floor.
- If the measurement deviates from the standard value, adjust the brake pedal height by turning the operating rod of the vacuum booster.

[Adjustment]

- See “3.1 Brake pedal installed height”.

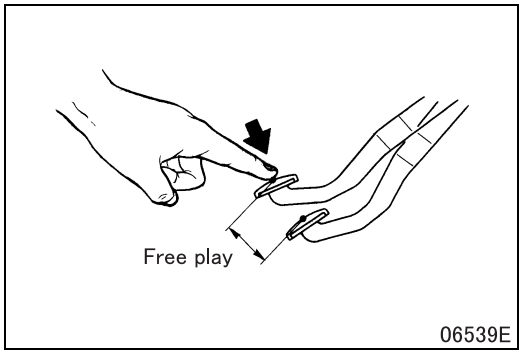

3.3 Brake pedal play

- Check the brake pedal play with the vehicle in the following state.
- Stop the engine and set the starter switch to ON.
- With the parking brake applied, depress the brake pedal several times until the pedal requires too much efforts.
- Depress the brake pedal several more times.

[Inspection]

- Depress the center of the brake pedal pad with a finger until you feel resistance to measure the brake pedal play.
- If the measurement deviates from the standard value, adjust the installed height of the brake pedal.

[Adjustment]

- See “3.1 Brake pedal installed height”.

https://truckmanualshub.com/

4. Inspection and Replacement of Disc Brake Pad <FE>

Service standards (Unit: mm {in.})

Location	Maintenance item	Standard value	Limit	Remedy
–	Thickness of outer/inner pad	14 {0.55}	4 {0.16}	Replace

Tightening torque (Unit: N·m {ft.lbs, kgf·m})

Mark	Parts to be tightened	Tightening torque	Remarks
–	Pin bolt	40 to 50 {30 to 37, 4.0 to 5.0}	–

Special tools (Unit: mm {in.})

Mark	Tool name and shape	Part No.	Application
Ⓐ	Piston expander A: 50 {1.97}, B: 5 {0.20} 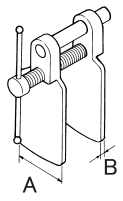 06815	MB990520	Pressing piston during brake pad replacement

[Inspection]

- When a brake pad has worn down to a thickness of approximately 4 mm {0.16 in.}, the pad wear indicator contacts the disc rotor. A squeaking sound is given off as the wheels rotate to indicate the operator that the brake pads need replacement.
- Through the inspection hole in the caliper, measure the brake pad thickness. If the measured value is less than the limit, replace all of the brake pads on that axle with a new kit.

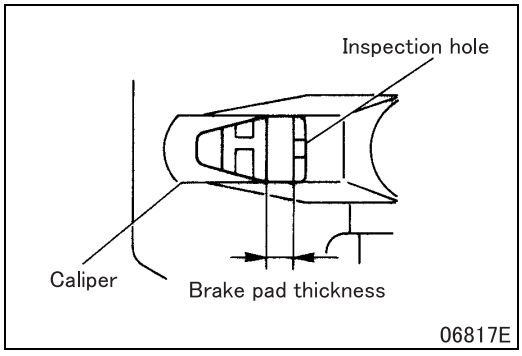

06817E

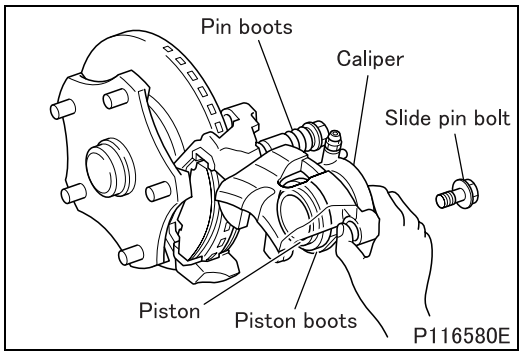

P116580E

[Replacement]

- Remove the slide pin bolt. Then, rotate the caliper and fix it at a place away from the disc rotor using a wire or similar device. Following show the specific slide pin bolt to be removed and the direction of rotation of the caliper.

Brake	Front/rear wheels		Pin bolt to be removed	Direction of rotation of caliper
235, 252 disc	Front wheels	Upper side	Upper side	Downward
		Lower side	Lower side	Upward
	Rear wheels	Front side	Lower side	Upward
		Rear side	Lower side	Upward

https://truckmanualshub.com/

CAUTION ⚠

- **The caliper needs to be suspended firmly in place so that it does not drop, without stretching, squeezing or otherwise forcing the brake hosing or harness.**

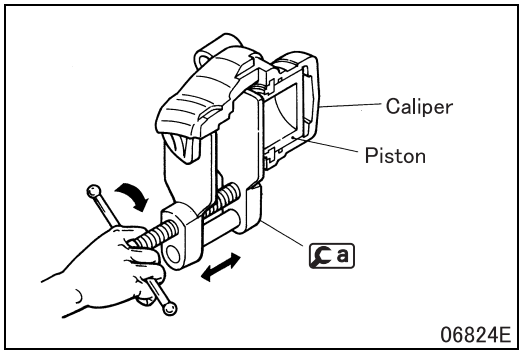

- Inspect the piston for fluid leakage. Inspect the piston boots for damage. Faulty parts must be replaced.
- Using a, screw in the piston of the caliper until it bottoms on the back of the caliper.

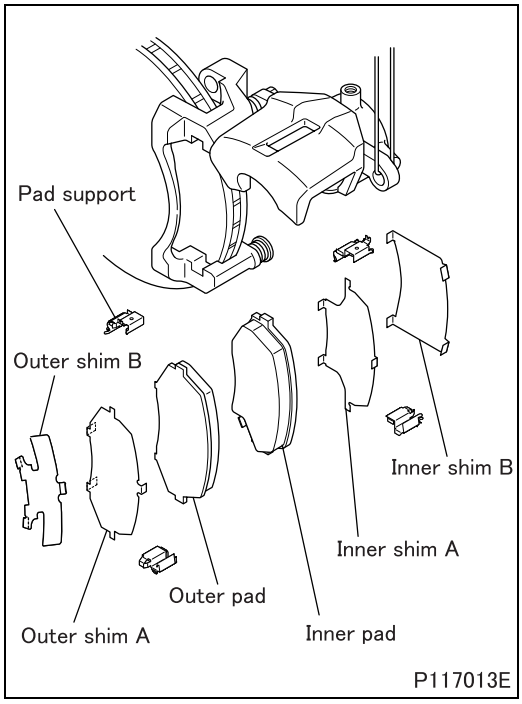

- For removal and installation of the pads, see FRONT DISC BRAKE and REAR DISC BRAKE.

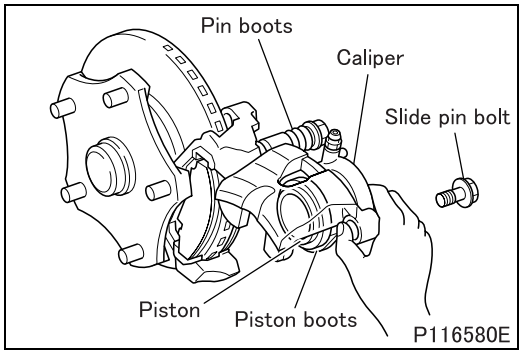

- Move the caliper back to the original position while taking care not to damage the piston boots.
- Bleed the pin boots of air.
- Ensure that the pin boots are firmly attached into the groove on the slide pin.
- Tighten the pin bolt to the specified torque.
- Measure the drag torque of the disc brake.
- Cycle the brake pedal several times, and check the brake fluid level in the tank. The fluid level should be at the “MAX” mark on the tank. Add brake fluid as required.

https://truckmanualshub.com/

5. Measurement of Disc Brake Drag Torque <FE>

Service standards

Location	Maintenance item		Standard value	Limit	Remedy
–	Disc brake drag torque (tangential force at hub bolts)	Approx. 5 sec. after releasing brake pedal	9.8 N·m {7.2 ft.lbs, 1.0 kgf·m} or less	–	Inspect
		After turning disc rotor 10 revolutions	6.9 N·m {5.1 ft.lbs, 0.7 kgf·m} or less	–	

Table of tangential forces

	Approx. 5 sec. after releasing brake pedal	After turning disc rotor 10 revolutions
ϕ235 mm {9.25 in.} disc	94 N {21 lbs, 9.6 kgf}	66 N {15 lbs, 6.7 kgf}
ϕ252 mm {9.92 in.} disc	88 N {20 lbs, 9 kgf}	62 N {14 lbs, 6.3 kgf}

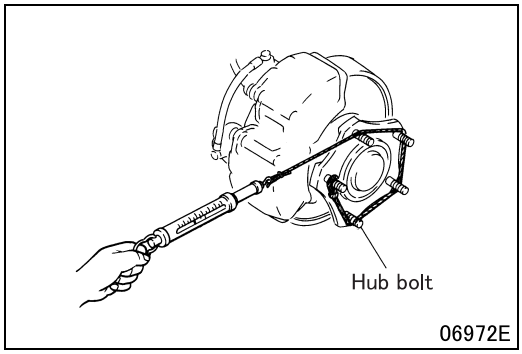

- Ensure that the starting torque of the wheel hub bearings conforms to the standard value.
- Using a spring gauge, measure the tangential force at the hub bolts.
- The tangential force is calculated by the following formula.
  Tangential force = Dragging torque / (hub bolt P.C.D. / 2)
- If the measured tangential force conforms to the specified value, this means that the drag torque of the disc brake conforms to the standard value.
- If the measured value does not conform to the specified torque, check the sliding portions of the piston and piston seal.

6. Inspection of Drum Brake Lining Thickness <FG>

CAUTION ⚠

- **To ensure correct operation of the brakes, be sure to inspect both linings on each wheel.**

Service standards (Unit: mm {in.})

Location	Maintenance item	Standard value	Limit	Remedy
–	Brake lining thickness	–	4.0 {0.16} (side shoulder means wear limit)	Replace

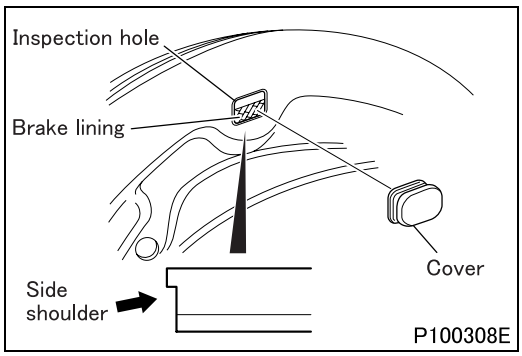

- Remove the cover from the backing plate. Through the inspection hole, check the thickness of the brake lining.
- If any lining is worn down to the step on the side face, replace all linings on that axle.
- After the inspection, be sure to install the cover.

https://truckmanualshub.com/

7. Initial Setting of Clearance between Brake Drum and Shoe <FG>

CAUTION ⚠

- **To ensure correct operation of the brakes, be sure to inspect both shoes on each wheel.**

Service standards (Unit: mm {in.})

Location	Maintenance item	Standard value	Limit	Remedy
–	Clearance between brake drum and shoe	0.2 {0.0079}	–	Inspect, and adjust as required

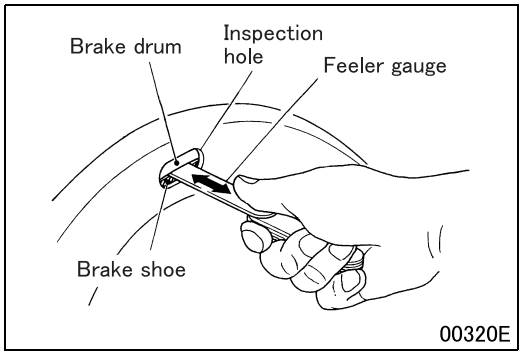

[Inspection]

- Cycle the brake pedal a couple of times to bring the brake shoes to conditions appropriate for the inspection.
- Through the inspection hole, insert a feeler gauge between the brake drum and lining. The gauge should be able to be inserted and removed with slight resistance.
- If the clearance does not conform to the standard value, perform the following adjustment.

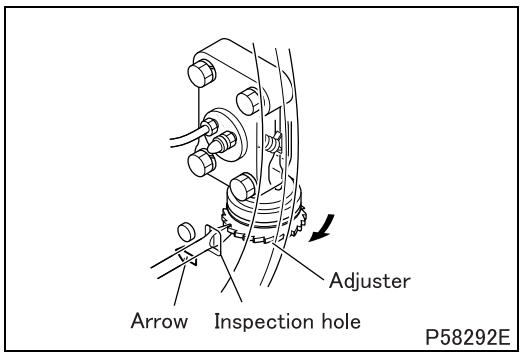

[Adjustment]

- Jack up the wheel being adjusted. Ensure that the wheel hub bearings are not loose.
- With a 0.2 mm {0.0079 in.} feeler gauge inserted through the inspection hole, adjust the drum-to-lining clearance in the following manners such that the gauge can be inserted and removed with slight resistance.
- If the feeler gauge can be inserted and removed with no resistance, turn the adjuster through the inspection hole in the direction of the arrow on the backing plate.

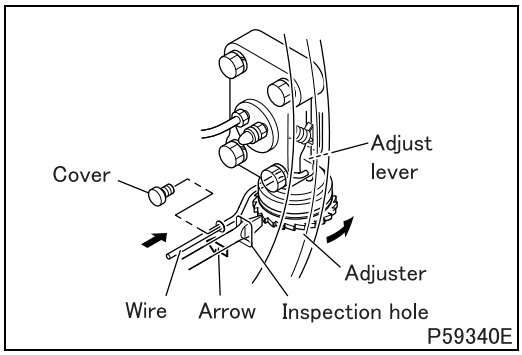

- If the clearance is too small to insert the feeler gauge or there is considerable resistance when inserting the gauge, remove the cover and insert a ϕ2 mm {0.079 in.} wire through the hole to lift the adjust lever for the wheel cylinder. Then, through the inspection hole turn the adjuster in the direction opposite to the arrow on the backing plate to increase the clearance between the brake drum and shoe.
- Then, cycle the brake pedal a couple of times. This will automatically bring the brake drum-to-shoe clearance to 0.2 mm {0.0079 in.}.
- Insert a 0.2 mm {0.0079 in.} feeler gauge between the brake drum and lining. It should be able to be inserted and removed with slight resistance.
- Check the disc brake for normal operation. If faulty, disassemble and inspect the wheel cylinders.

https://truckmanualshub.com/

8. Inspection of Check Valve in Vacuum Line Hose

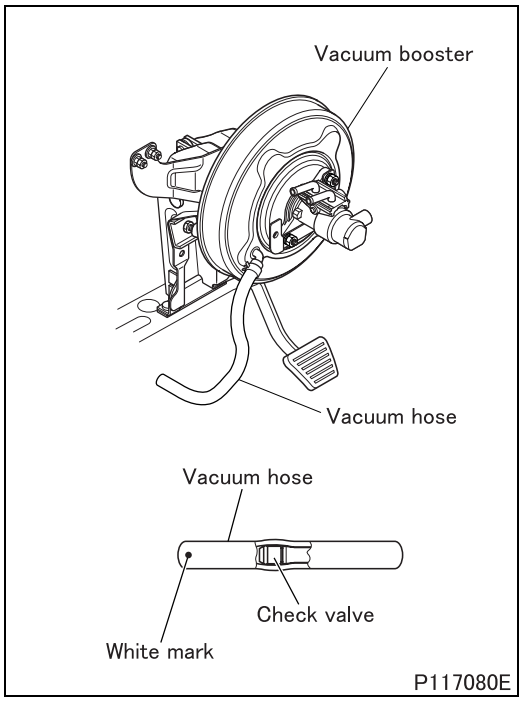

- Remove the vacuum hose from the vacuum booster and check the vacuum hose as follows. Replace the vacuum hose (check valve incorporated) if it is faulty.
  - Blow air into the hose from its marked end. Confirm the air will not pass through the hose.
  - Apply suction to the hose from its marked end. Confirm the air will pass through the hose.

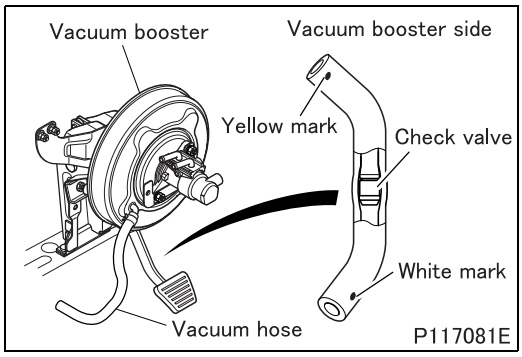

- Attach the yellow-marked end of the vacuum hose to the vacuum booster. Connect the white-marked end of the vacuum hose to the piping in alignment with the match marking on the piping.

CAUTION ⚠

- **Make sure that the brake hose is not twisted when you install it.**

https://truckmanualshub.com/

9. Inspection of Vacuum Pump

Service standards

Location	Maintenance item	Standard value	Limit	Remedy
–	Time to reach vacuum of 50 kPa {14.7 in.Hg, 375 mmHg}	Within 4.5 sec.	–	Replace
	Time to reach vacuum of 80 kPa {23.6 in.Hg, 600 mmHg}	Within 12.5 sec.	–	

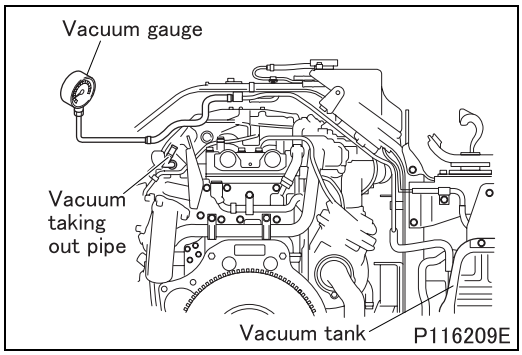

- Install a vacuum gauge between the vacuum tank and the vacuum removal pipe in the back of engine.
- Start the engine and measure the time taken to reach the specified level of vacuum at an engine speed of 780 rpm (994 rpm in pump speed).
- If the measured time does not conform to the standard value, replace the vacuum pump.

10. Inspection of Vacuum Booster

- The vacuum booster can be inspected in 2 ways: one without using any tester and the other using a simplified tester. Either way, ensure that the brake piping and hosing and their connections are free of leakage, damage, or other faults.

Service standards

Location	Maintenance item		Standard value	Limit	Remedy
–	Fluid pressure at vacuum of 67 kPa {19.8 in.Hg, 500 mmHg}	FEC5 FEC7	5380 kPa {780 psi, 55 kgf/cm^2} (pedal depressed with a force of 98 N {22.0 lbs, 10 kgf})	–	Replace
			8560 kPa {1240 psi, 87kgf/cm^2} (pedal depressed with a force of 295 N {66.3 lbs, 30 kgf})	–	
		FEC9 FG	6070 kPa {880 psi, 62 kgf/cm^2} (pedal depressed with a force of 98 N {22.0 lbs, 10 kgf})	–	
			8790 kPa {1270 psi, 90/cm^2} (pedal depressed with a force of 295 N {66.3 lbs, 30 kgf})	–	
–	Fluid pressure at vacuum of 0 kPa {0 in.Hg, 0 mmHg}	FEC5 FEC7	90 Pa {13 psi, 0.9 cm^2} (pedal depressed with a force of 98 N {22.0 lbs, 10 kgf})	–	Replace
			1330 kPa {190 psi, 14 kgf/cm^2} (pedal depressed with a force of 295 N {66.3 lbs, 30 kgf})	–	
		FEC9 FG	160 kPa {23 psi, 1.6 kgf/cm^2} (pedal depressed with a force of 98 N {22.0 lbs, 10 kgf})	–	
			1560 kPa {225 psi, 16 kgf/cm^2} (pedal depressed with a force of 295 N {66.3 lbs, 30 kgf})	–	

https://truckmanualshub.com/

10.1 Operational check of vacuum booster

CAUTION ⚠

- **The vacuum booster operational checks described below are only of summary nature. If the vacuum booster continues to malfunction, perform a bench test specified by a service station of the manufacturer on the vacuum booster after removing it from the vehicle.**
- **If the vacuum booster is found to be faulty during the specified testing, ask the service station of the manufacturer for repair.**

(1) Operational check without any tester

- Inspect the check valve in the vacuum hose for normal operation.
- Perform the checks described below. If any fault is found during these checks, inspect the following parts.
  - Vacuum booster
  - Vacuum pump

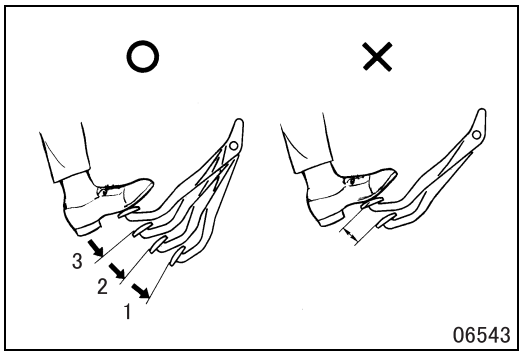

[Check 1]

- Start the engine and run it for 1 to 2 minutes. Stop the engine.
- Depress the brake pedal repetitively with the normal depressing force.
- The pedal stroke should become shorter each time the pedal is depressed.

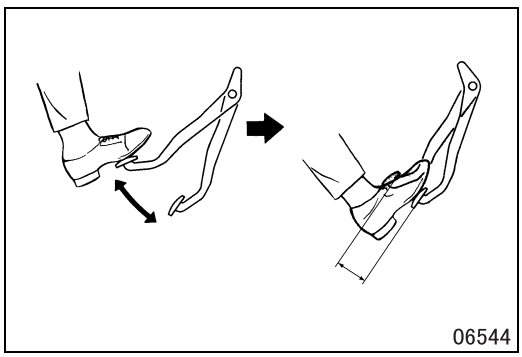

[Check 2]

- With the engine stationary, depress the brake pedal several times.
- With the brake pedal depressed, start the engine. The pedal should sink slightly.

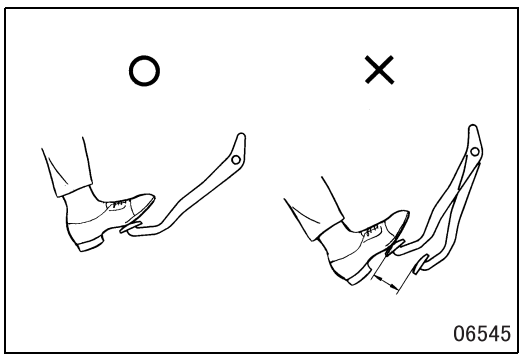

[Check 3]

- With the engine running and the brake pedal depressed, stop the engine.
- The brake pedal should maintain the same height for approximately 30 seconds.

https://truckmanualshub.com/

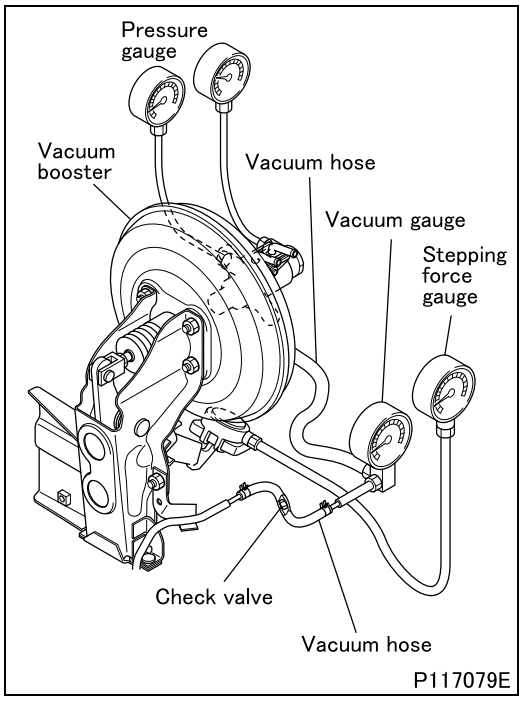

(2) Operational check with a simplified tester

(2.1) Airtightness check

- Inspect the check valve in the vacuum hose for normal operation.
- Remove the vacuum hose from the vacuum booster and connect it to the vacuum gauge.
- Connect another hose (not equipped with a check valve) onto the vacuum booster and the vacuum gauge.
- Install 2 pressure gauges and 1 stepping-force gauge as illustrated. Bleed the pressure gauges of air.
- Perform the following checks. If any fault is encountered during these checks, inspect the vacuum booster.

[Check 1]

- Start the engine. When the reading on the vacuum gauge has reached 67 kPa {19.8 in.Hg, 500 mmHg}, stop the engine.
- The vacuum lost in approximately 15 seconds of the engine stop should conform to the standard value.

[Check 2]

- Start the engine, and depress the brake pedal. When the reading on the vacuum gauge has reached 67 kPa {19.8 in.Hg, 500 mmHg}, stop the engine.
- The vacuum lost in approximately 15 seconds of the engine stop should conform to the standard value.

(2.2) System characteristics check

- Perform the following system characteristics checks after the airtightness check described above is completed.
- Perform the following checks. If any fault is encountered during these checks, inspect the vacuum booster.

[Check 1]

- Start the engine. When the reading on the vacuum gauge has reached 67 kPa {19.8 in.Hg, 500 mmHg}, depress the brake pedal with the specified depressing forces.
- The fluid pressures indicated on the pressure gauges should conform to the specified values.

[Check 2]

- Start the engine. When the reading on the vacuum gauge has reached 0 kPa {0 in.Hg, 0 mmHg}, press the brake pedal with the specified stepping forces.
- The fluid pressures indicated on the pressure gauges should conform to the specified values.

https://truckmanualshub.com/

(2.3) Vacuum booster performance graph

<FEC5, FEC7>

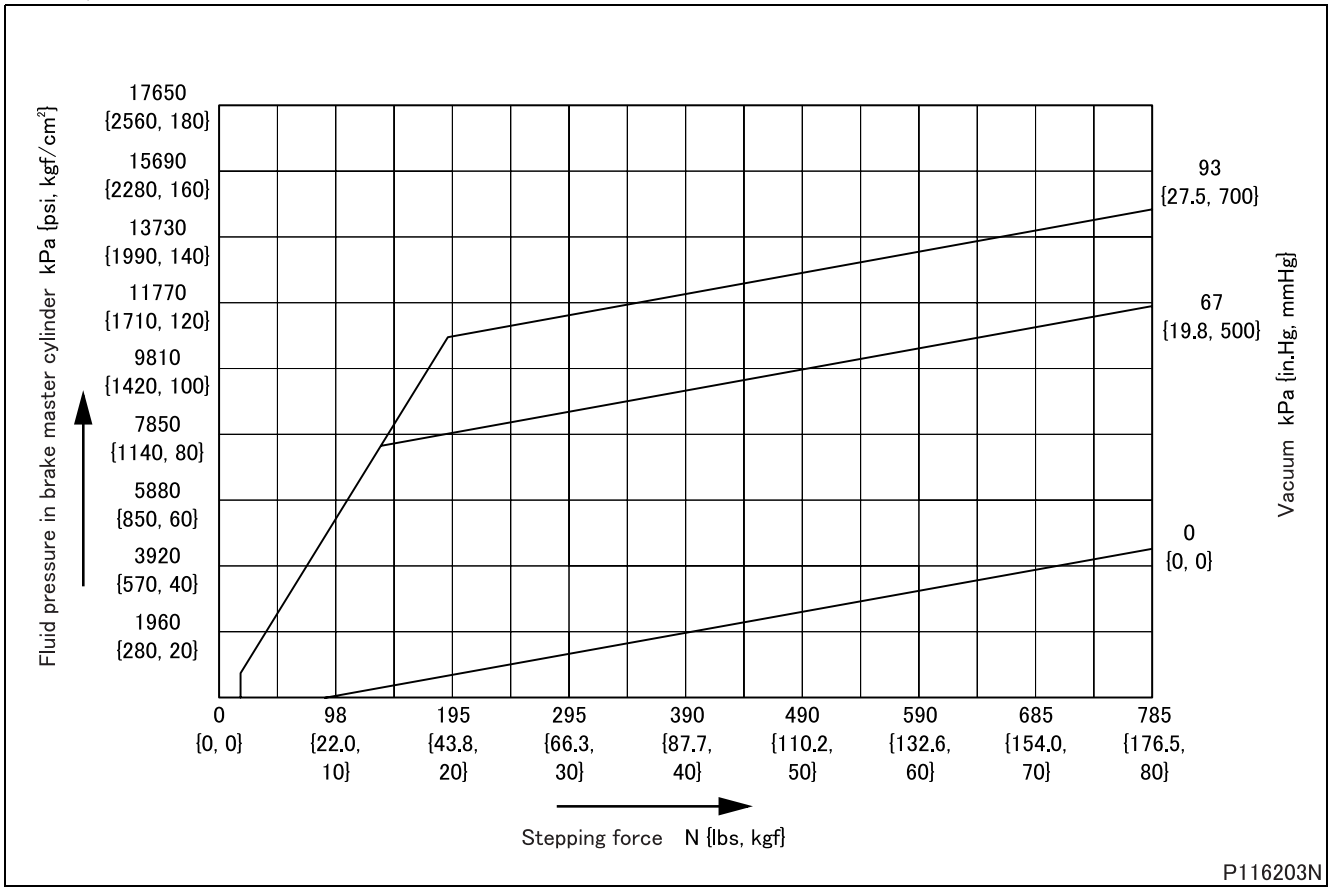

https://truckmanualshub.com/

<FEC9, FG>

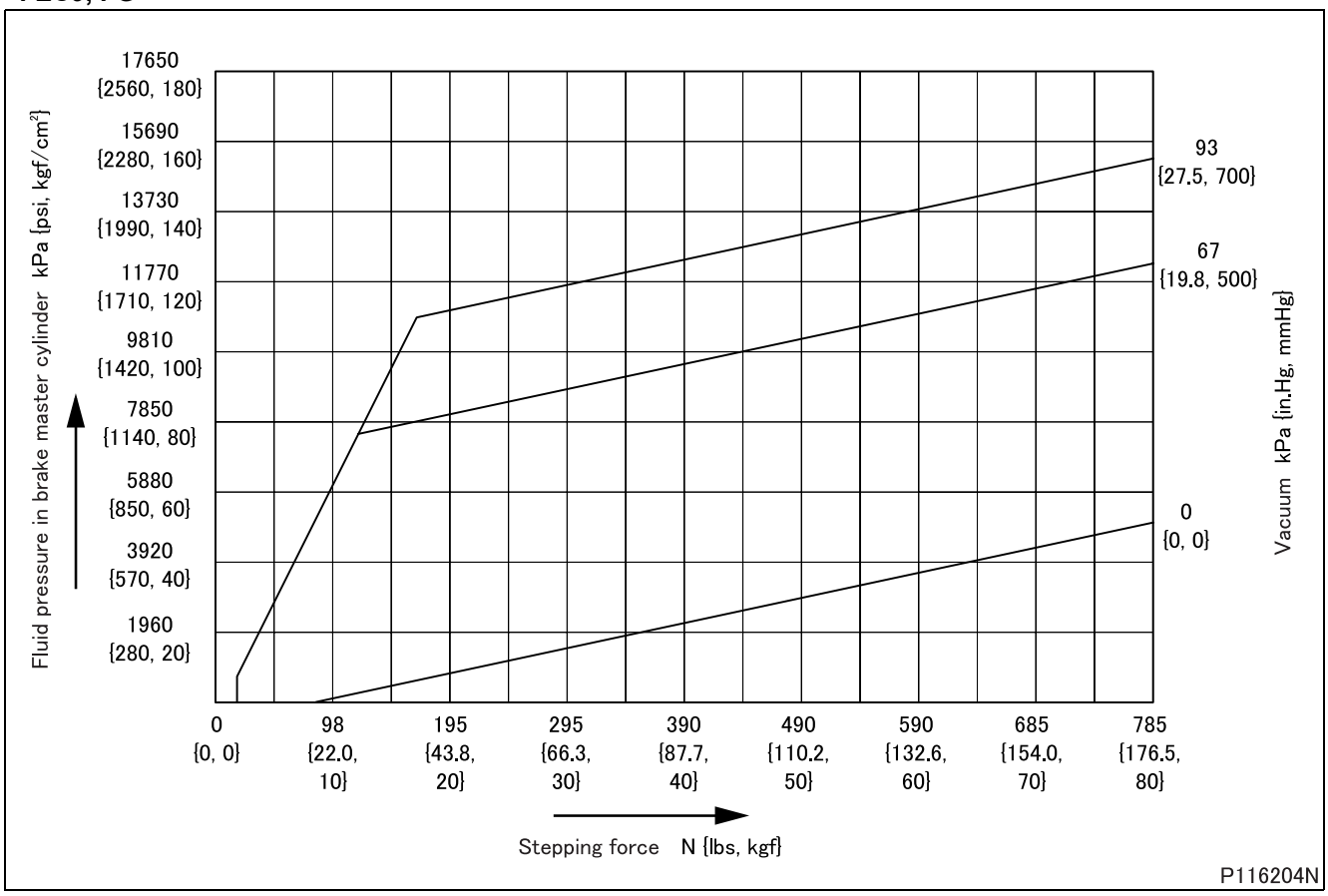

https://truckmanualshub.com/

BRAKE MASTER CYLINDER

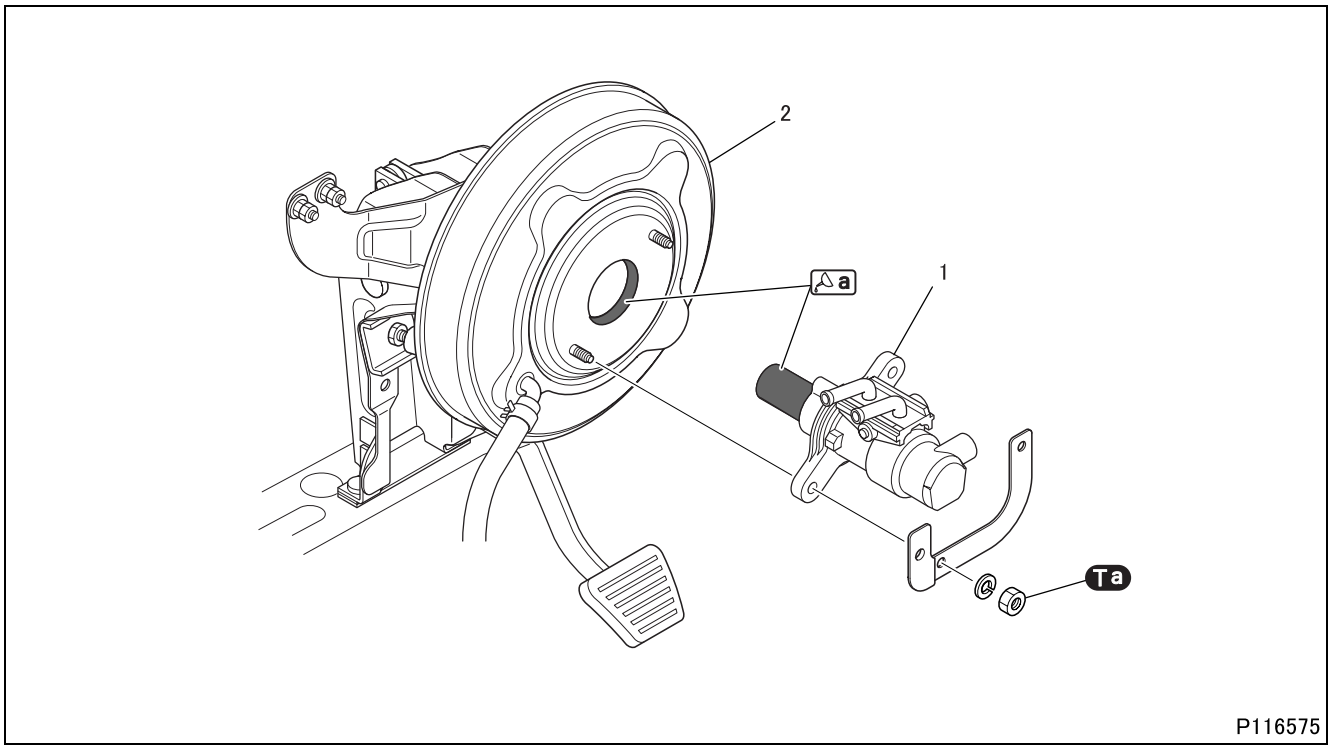

● **Disassembly sequence**

1 Brake master cylinder

2 Vacuum booster

● **Assembly sequence**

Follow the disassembly sequence in reverse.

Tightening torque (Unit: N·m {ft.lbs, kgf·m})

Mark	Parts to be tightened	Tightening torque	Remarks
Ta	Nut (brake master cylinder mounting)	9.8 to 15.7 {7.2 to 12, 1 to 1.6}	–

Lubricant and/or sealant

Mark	Points of application	Specified lubricant and/or sealant	Quantity
a	Inner surface of mounting hole of the brake master cylinder in the vacuum booster	Rubber grease	As required
	Periphery of piston rod of brake master cylinder		

https://truckmanualshub.com/

◆Installation procedure◆

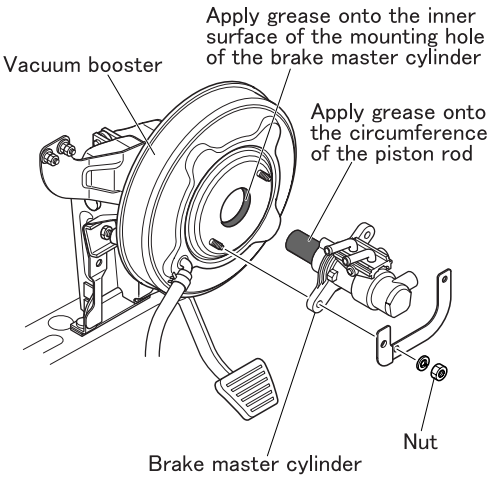

■Installation: Brake master cylinder

- Apply grease onto the circumference of the piston rod of the brake master cylinder and the inner surface of the mounting hole of the brake master cylinder in the vacuum booster.

CAUTION ⚠

- **Be sure to use the grease included in the furnished spare parts kit for the brake master cylinder.**

- Install the brake master cylinder to the vacuum booster.

■Work after installation

- After the installation, inspect and adjust the brake pedal.

https://truckmanualshub.com/

BRAKE PEDAL & VACUUM BOOSTER

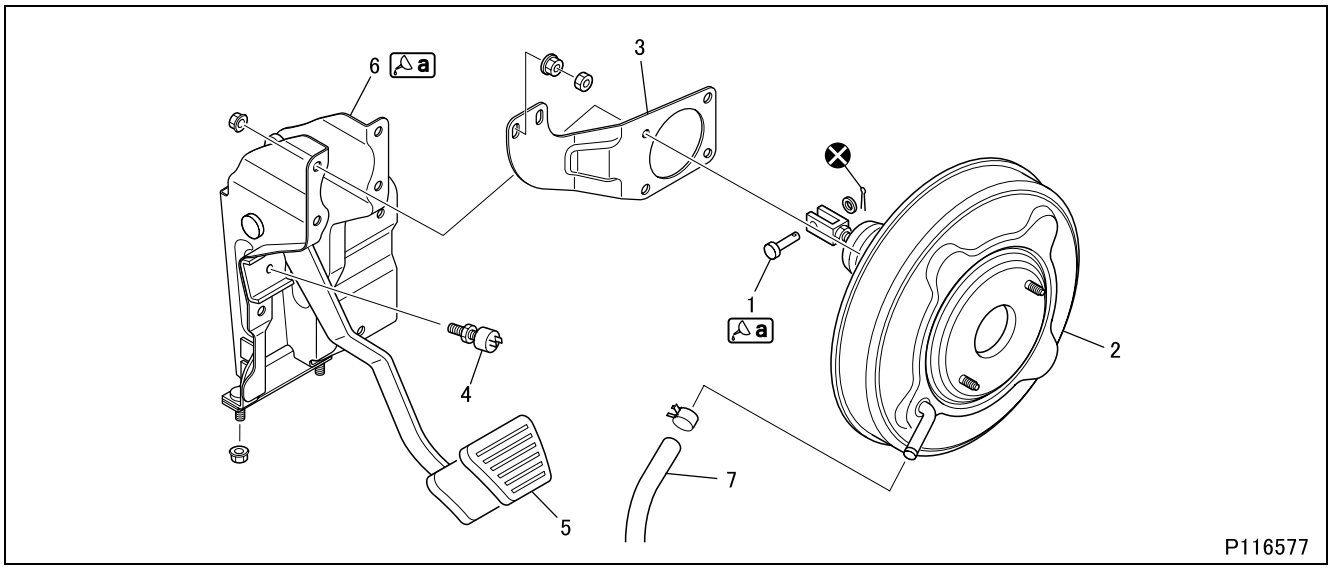

● **Disassembly sequence**

1 Clevis pin
2 Vacuum booster
3 Bracket
4 Stop lamp switch
5 Pedal pad
6 Brake pedal & pedal support
7 Vacuum hose

⊗: Non-reusable parts

CAUTION ⚠

- **Do not attempt to disassemble the vacuum booster.**

● **Assembly sequence**

Follow the disassembly sequence in reverse.

Service standards (Unit: mm {in.})

Location	Maintenance item	Standard value	Limit	Remedy
–	Clearance between threaded end of stop lamp switch and brake pedal	1.5 to 2.5 {0.059 to 0.098}	–	Adjust

Tightening torque (Unit: N·m {ft.lbs, kgf·m})

Mark	Parts to be tightened	Tightening torque	Remarks
–	Lock nut (stop lamp switch)	21.6 {16, 2.2}	–

Lubricant and/or sealant

Mark	Points of application	Specified lubricant and/or sealant	Quantity
a	Return spring of brake pedal & pedal support; Inner periphery of clevis pin hole	Chassis grease [NLGI No. 1 (Li soap)]	As required

https://truckmanualshub.com/

◆Installation procedure◆

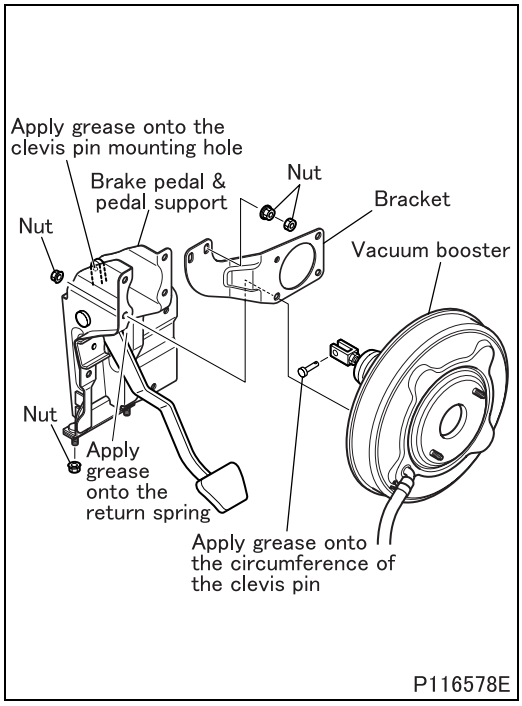

■**Installation: Brake pedal & pedal support, bracket, vacuum booster**

- Apply chassis grease onto the return spring and the inner surface of the clevis pin mounting hole of the brake pedal & pedal support. Also, apply the grease onto the circumference of the clevis pin.

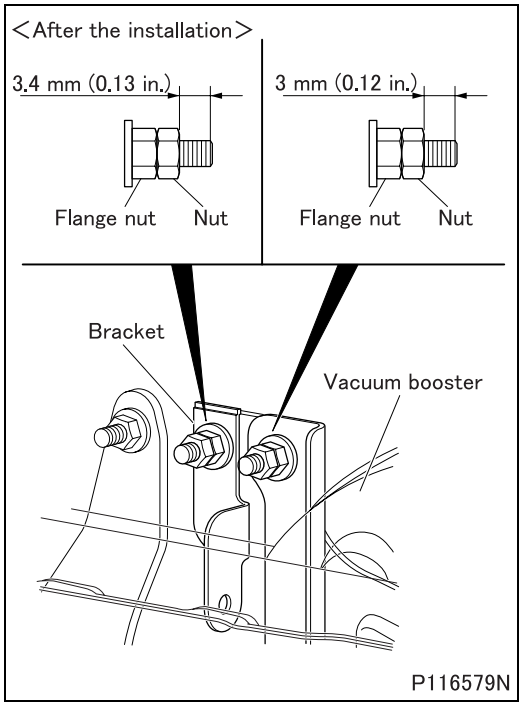

- Tighten the bracket mounting double nut so that the amount of bolt protrusion from the nut is as shown in the illustration.

https://truckmanualshub.com/

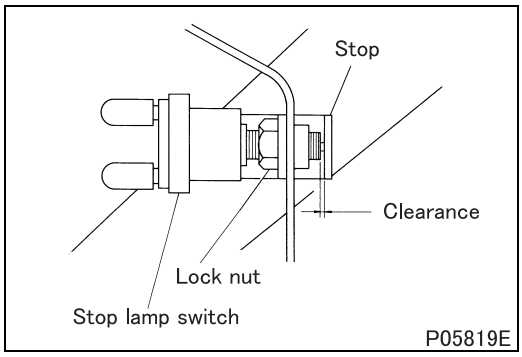

■ **Installation: Stop lamp switch**

- After the installation, measure the clearance between the threaded end of the stop lamp switch and the brake pedal stopper. If the measurement deviates from the standard value, loosen the lock nut and adjust by turning the operating rod for the specified clearance.
- After adjustment, secure the switch with the lock nut.

CAUTION ⚠

- **To prevent brake drag, ensure that the threaded end of the stop lamp switch does not interfere with the stop for the brake pedal.**

https://truckmanualshub.com/

M E M O

https://truckmanualshub.com/

FRONT DISC BRAKE

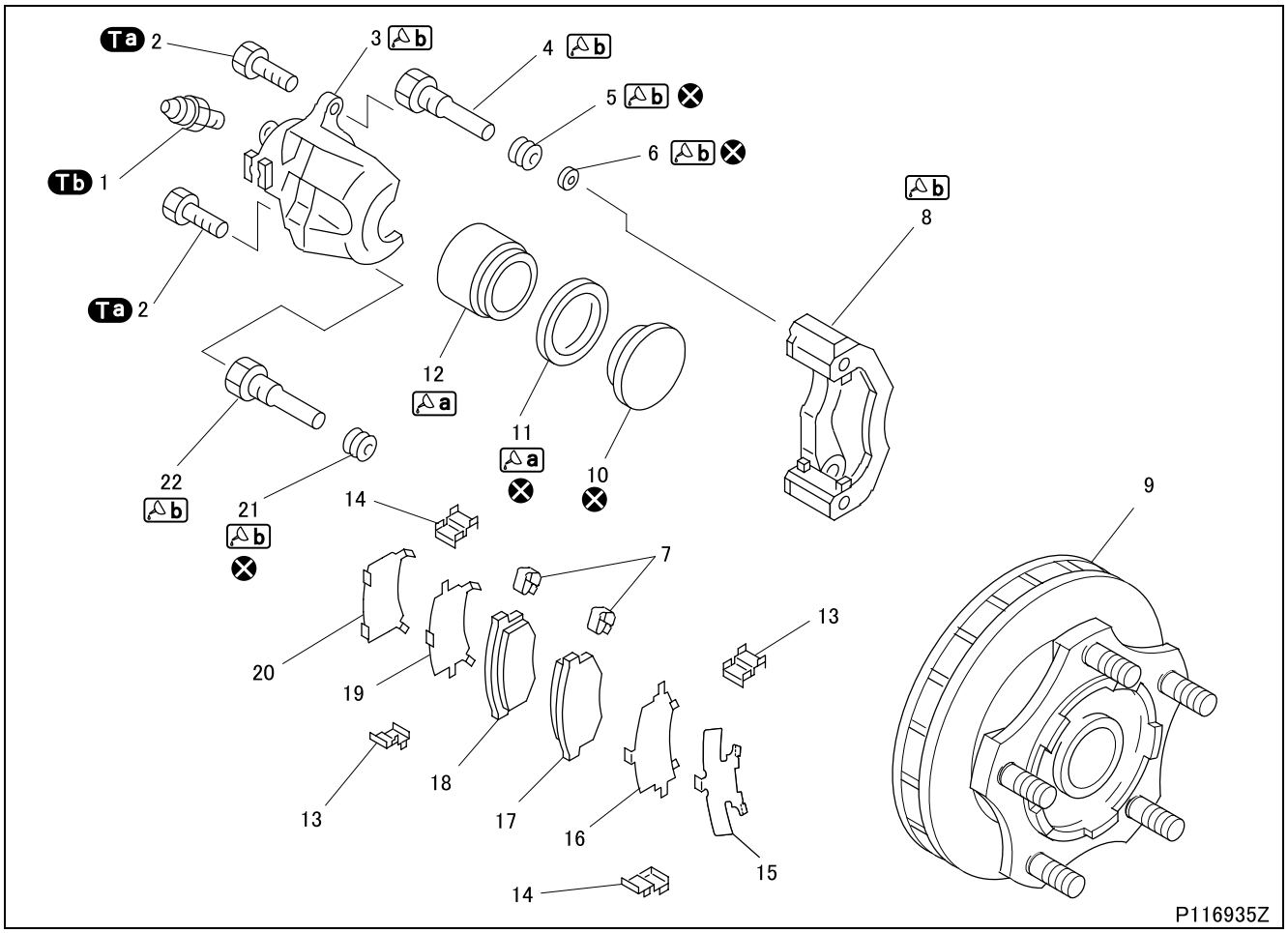

● **Disassembly sequence**

1 Air bleeder (lower side)
2 Slide pin bolts
3 Caliper
4 Sub slide pin
5 Pin boots
6 Slide pin bush
7 Pad spring
8 Torque member
9 Disc rotor (See Gr26A.)
10 Piston boots
11 Piston seal
12 Piston
13 Pad support B
14 Pad support A
15 Outer shim A
16 Outer shim B
17 Outer pad (with pad wear indicator)
18 Inner pad
19 Inner shim B
20 Inner shim A
21 Pin boots
22 Main slide pin

⊗: Non-reusable parts

NOTE

- **For removal and installation of the front disc brake and disc rotor, see Gr26A.**

● **Assembly sequence**

Follow the disassembly sequence in reverse.

Repair kit: Pad kit, Seal kit

https://truckmanualshub.com/

CAUTION ⚠

- **Rubber parts that are disassembled must be replaced as a seal kit.**
- **Items included in a seal kit must be lubricated with grease supplied with the kit before installation.**
- **Do not apply lubricant to the surface of the outer or inner pad and disc rotor. Otherwise, braking performance will be adversely affected.**
- **Do not use gasoline, engine oil, nitro phenycorol thinner, and other chlorine-based detergents for cleaning of parts, as a damaged rubber part could result.**
- **Measure disc brake drag torque after installing the disc brake. (See ON-VEHICLE INSPECTION AND ADJUSTMENT.)**

Service standards (Unit: mm {in.})

Location	Maintenance item		Standard value	Limit	Remedy
17, 18	Thickness of outer/inner pad		14 {0.55}	4 {0.16}	Replace
9	Disc rotor	Thickness	40 {1.57}	38 {1.50}	Replace
		Runout (measure, assembling it into knuckle)	0.07 {0.0028} or less	0.10 {0.0039}	Replace

Tightening torque (Unit: N·m {ft.lbs, kgf·m})

Mark	Parts to be tightened	Tightening torque	Remarks
Ta	Slide pin bolt	40 to 50 {30 to 37, 4.0 to 5.0}	–
Tb	Air bleeder	8.8 to 12.7 {6.5 to 9.4, 0.9 to 1.3}	–

Lubricant and/or sealant

Mark	Points of application	Specified lubricant and/or sealant	Quantity
a	Outer circumference of piston	Brake fluid (SAE J1703 or FMVSS No. 116 DOT3)	As required
b	Inner circumference of caliper cylinder lips	Rubber grease	As required
	Outer circumference of main and sub slide pins		
	Pin boots mating surfaces with slide pins		
	Torque member grooves and guide holes for pin boots		

◆Inspection procedure◆

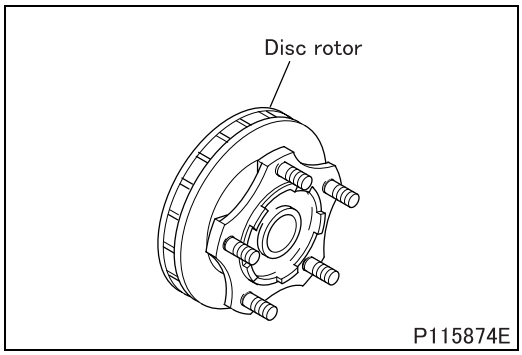

■ Inspection: Disc rotor

(1) Visual check

- If the disc rotor is abnormally worn or damaged, replace it.

(2) Thickness

- If the measurement exceeds the limit, replace the disc rotor.

(3) Runout

- Assemble the disc rotor onto the knuckle and measure the runout of the rotor.
- If the measurement exceeds the limit, replace the defective part with a new one.

https://truckmanualshub.com/

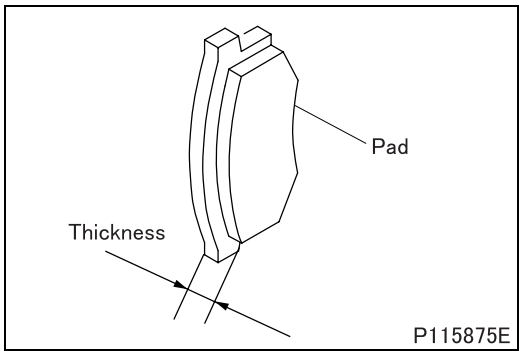

■**Inspection: Outer pad and inner pad**

- Measure thicknesses of the outer and inner pads.
- If the measurement is less than the limit, replace the defective part with a new one.

◆**Installation procedure**◆

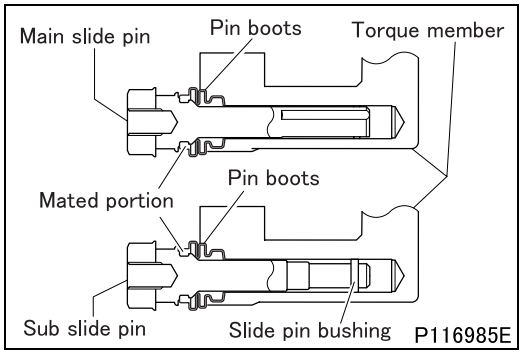

■ **Installation: Main slide pin, sub slide pin, pin boots, and slide pin bush**

- Apply rubber grease onto the lips of the pin boots, pin boot fitting grooves on the torque member and the entire inner circumference of the slide pins. Then, install the pin boots into the fitting grooves on the torque member.
- Apply rubber grease onto the slide pin bushing and the bushing groove on the sub slide pin. Then, install the slide pin bushing to the sub slide pin.
- Apply rubber grease along the outer circumference of the main slide pin and sub slide pin and at the joints of the pin boots with the slide pins. Insert the slide pins in the mating holes in the torque member, then install the pin boots in place.
- Make sure that pin boot seals are fitted at the joints of the main slide pins and sub slide pins with the pin boots.

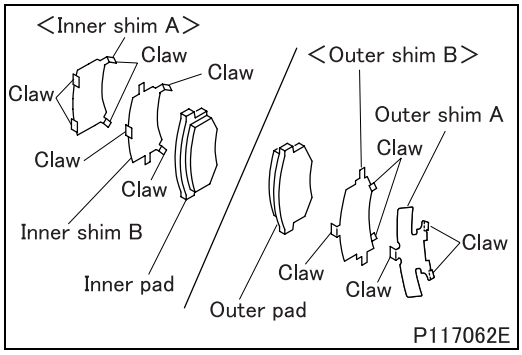

■ **Installation: Shims**

- Position shims such that they face the illustrated directions before installing them onto the pads.

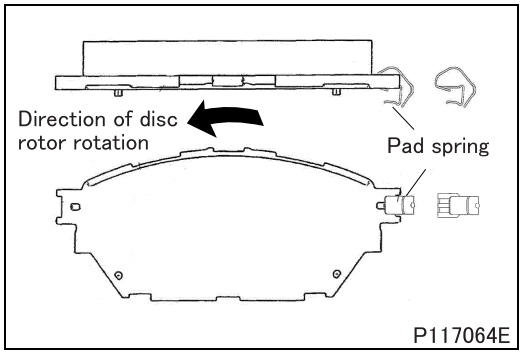

■ **Installation: Outer pad and inner pad**

- Install the outer and inner pads in such a way that the pad spring sits in the illustrated position relative to the rotational direction of the disc rotor in forward motion.

https://truckmanualshub.com/

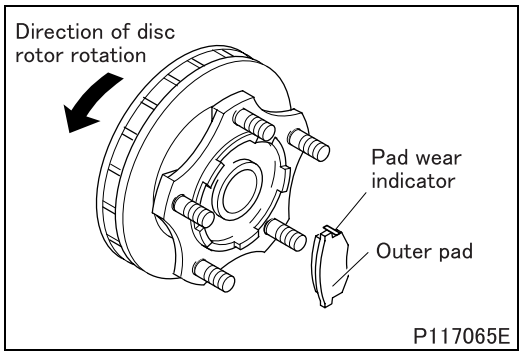

■ **Installation: Outer pad**

- Install the outer pad so that the pad wear indicator comes in the illustrated position relative to the rotating direction of the disc rotor during forward travel.

CAUTION ⚠

- **Install the outer pad so that the pad wear indicator always comes into the designated position. If not, the braking force will be decreased.**

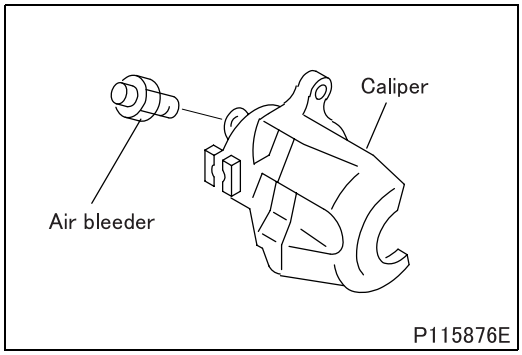

■ **Installation: Air bleeder**

- Install the air bleeder on the caliper.

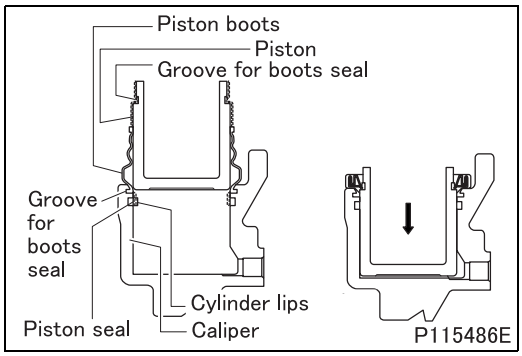

■ **Installation: Piston boots, piston, and piston seal**

- Apply brake fluid onto the outer circumference of the piston. Then, insert the piston boots over the piston.
- On the piston seal, spread the grease, already applied on it, evenly over the seal. Then, install the seal into the groove on the caliper.
- Apply grease evenly along the inner circumference of the cylinder lips on the caliper.
- Install the caliper-end seal of the piston boots into the groove on the caliper.
- Press fit the piston further into the boots. Ensure that the piston-end seal of the piston boots is engaged in the groove on the piston.

https://truckmanualshub.com/

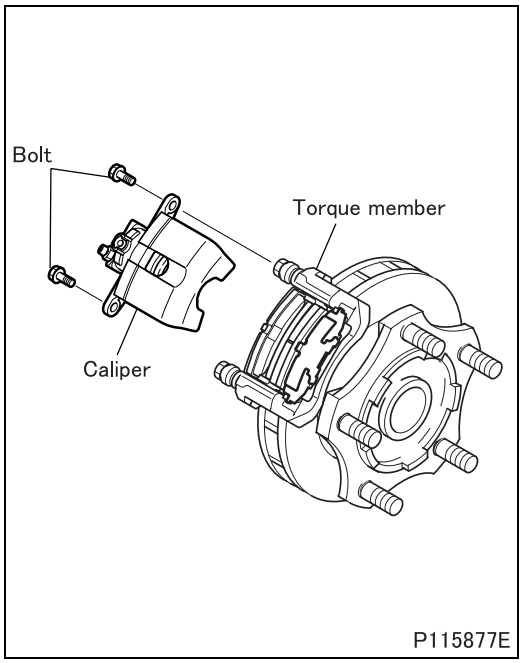

■ **Installation: Caliper**

- Install the caliper to the torque member.

https://truckmanualshub.com/

M E M O

https://truckmanualshub.com/

FRONT DRUM BRAKE

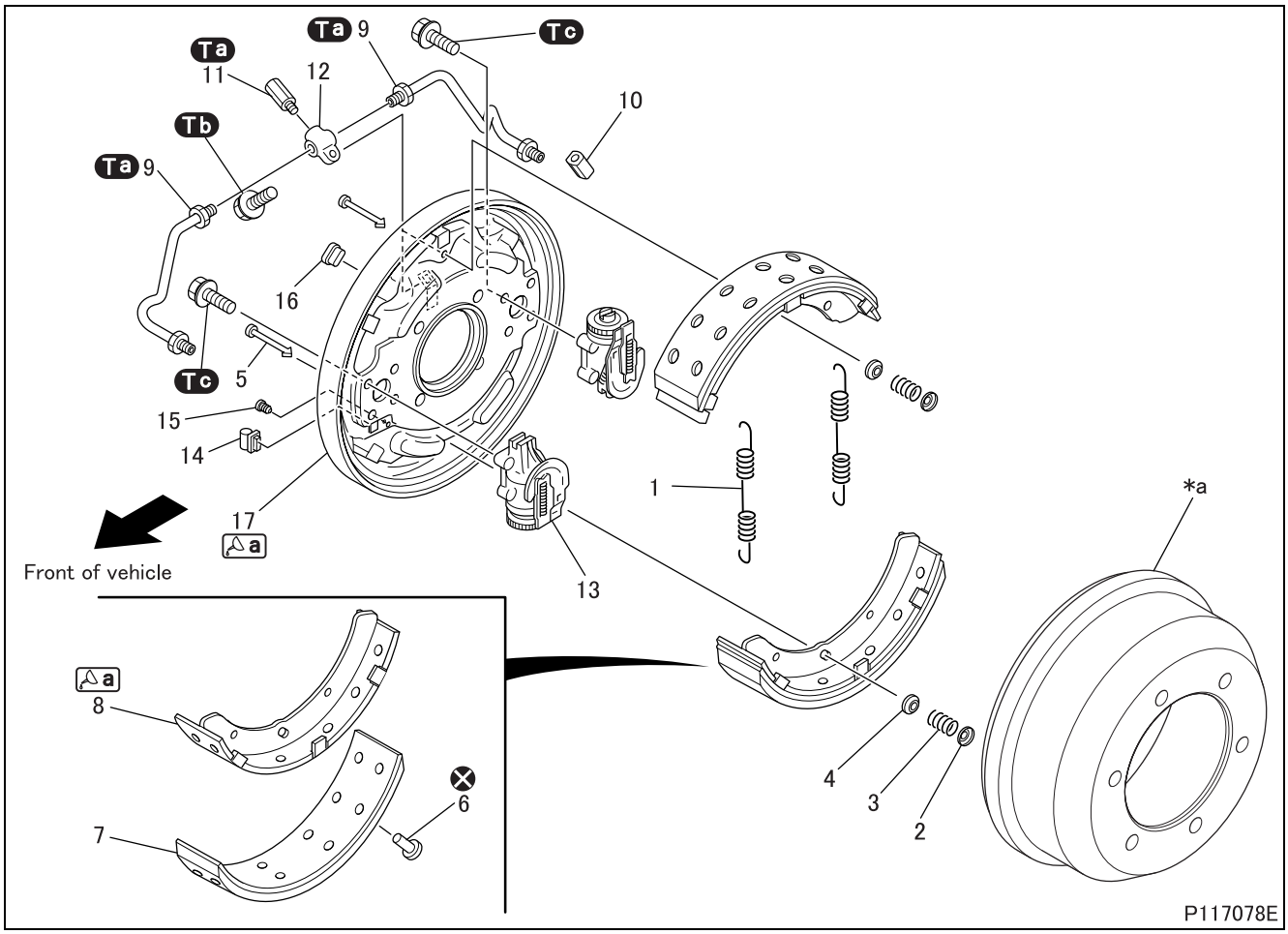

● Disassembly sequence

1 Return spring
2 Shoe hold-down cup
3 Shoe hold-down spring
4 Shoe hold-down cup
5 Shoe hold-down pin
6 Rivet
7 Brake lining
8 Brake shoe
9 Brake pipe
10 Spacer
11 Extension
12 Connector
13 Wheel cylinder (See later section.)
14 Cover
15 Cover
16 Cover
17 Backing plate

***a**: Brake drum (See Gr26B.)
⊗: Non-reusable parts

NOTE

- **For removal and installation procedures of the front drum brake and brake drum, see Gr26B.**

● Assembly sequence

Follow the disassembly sequence in reverse.

Repair kit: Brake lining kit

https://truckmanualshub.com/

CAUTION ⚠

- **Do not apply lubricant to the surface of the brake lining and disc rotor. Otherwise, braking performance will be adversely affected.**
- **When replacing the brake lining, clean the threaded portions of the wheel cylinder adjuster and adjust screw and coat them with rubber grease.**
- **Adjust clearance between brake drum and shoe after installing the drum brake. (See ON-VEHICLE INSPECTION AND ADJUSTMENT.)**

Service standards (Unit: mm {in.})

Location	Maintenance item		Standard value	Limit	Remedy
1	Return spring load (installed length 190 {7.48})		195 to 235 N {44 to 53 lbs, 19.8 to 24.2 kgf}	175 N {39 lbs, 18.0 kgf}	Replace
7	Brake lining thickness		8.8 {0.35}	4.0 {0.16} (side shoulder means wear limit)	Replace
*a	Brake drum	Inside diameter	320 {12.6}	322 {12.7} (※321 {12.6})	Repair or Replace
		Cylinder	0.05 {0.002}	0.2 {0.008}	

※: Shows the correction limit value.

Tightening torque (Unit: N·m {ft.lbs, kgf·m})

Mark	Parts to be tightened	Tightening torque	Remarks
Ta	Brake pipe	13 to 15 {9.6 to 11, 1.3 to 1.5}	–
	Extension		
Tb	Bolt (connector mounting)	7.8 to 12 {5.8 to 8.9, 0.8 to 1.2}	–
Tc	Bolt (wheel cylinder mounting)	37 to 49 {27 to 36, 3.8 to 5.0}	–

Lubricant and/or sealant

Mark	Points of application	Specified lubricant and/or sealant	Quantity
a	Contact areas between brake shoe and wheel cylinder	Brake grease	As required
	Contact areas between backing plate and brake shoe		

◆Removal procedure◆

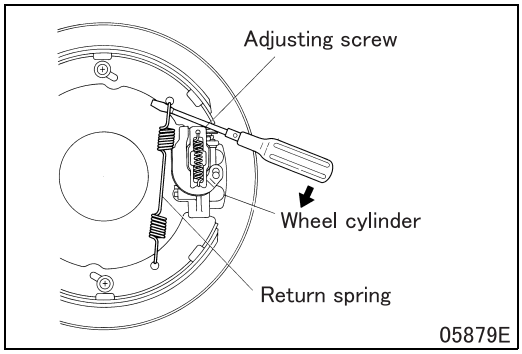

■ Removal: Return spring

- Using a flat-head screwdriver, remove the return spring. To do this, rest the screwdriver on the wheel cylinder adjusting screw. Then, with the adjusting screw as a fulcrum, engage the screwdriver into the spring hook and pry away the spring.

https://truckmanualshub.com/

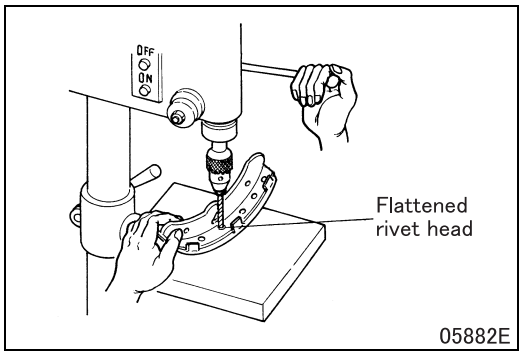

■ **Removal: Brake lining**

- Using a drill, break the flattened rivet heads on the brake shoe side to release the brake lining.

◆**Inspection procedure**◆

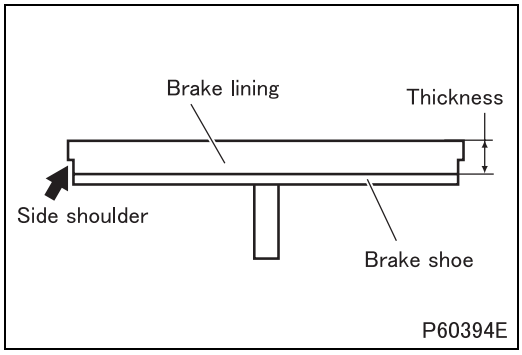

■ **Inspection: Brake lining thickness**

- If any brake lining has worn to the side shoulder, replace the brake linings of both brakes on the same axle.

■ **Inspection: Brake drum**

(1) Visual inspection

- If an abnormal wear or damage is found on the inside circumference of the brake drum, resurface the brake drum inner surface with the wheel hub as a set within the correction limit or replace the drum.

(2) Inner diameter

- If the measured value exceeds the limit, replace the brake drum.

(3) Cylindricity

- If the measured value exceeds the limit, resurface the brake drum inner circumference within the correction limit or replace the drum.

◆**Installation procedure**◆

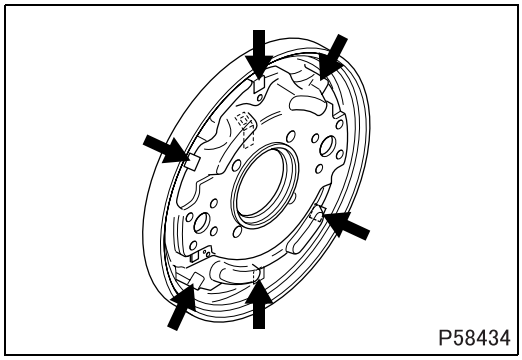

■ **Installation: Backing plate**

- Grease the backing plate at the illustrated locations.

https://truckmanualshub.com/

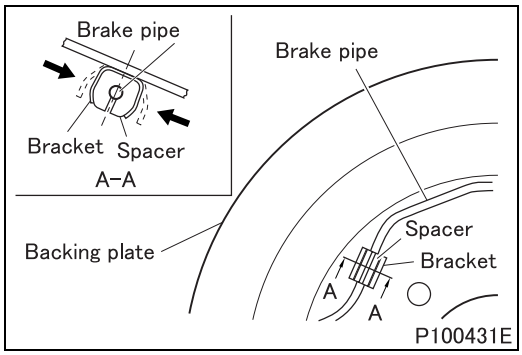

■ **Installation: Brake pipe**

- Position the spacer correctly on the bracket so that the brake pipe and spacer assembly will not clear the backing plate surface.
- After making sure that the brake pipe and spacer assembly is centered on the bracket, close the bracket to secure the brake pipe in such a way that the brake pipe is retained evenly by the spacer.

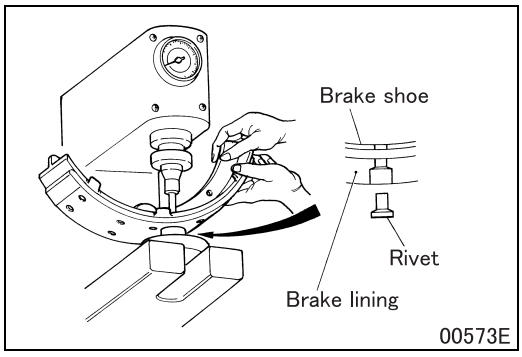

■ **Installation: Brake lining**

- Using cleaning fluid, clean the surface of the brake shoe to which the brake lining is to be mounted. Dry the brake shoe.
- Insert rivets from the lining to the shoe. Stake them, starting from the center of the shoe and moving towards the ends. Ensure that the shoe-to-lining clearances conform to the following specifications.
  - Around the rivets: 0.05 {0.0020 in.} mm or less
  - Along the shoe/lining:
    0.2 mm {0.0079 in.} or less
- Stake the rivets with a force of 17650 ± 980 N {3970 ± 220 lbs, 1800 ± 100 kgf}.

CAUTION ⚠

- **Replace all of the brake linings on the same axle and the brake linings should be in the same size and have the same identification mark. Otherwise, braking performance can be different from left to right.**

- After assembly, check the drum-to-lining contact. Correct as required.

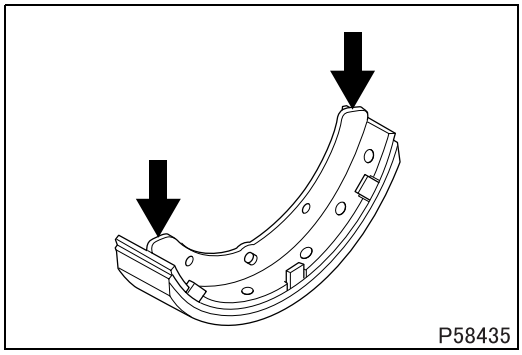

■ **Installation: Brake shoe**

- Grease the brake shoe at the illustrated locations.

https://truckmanualshub.com/

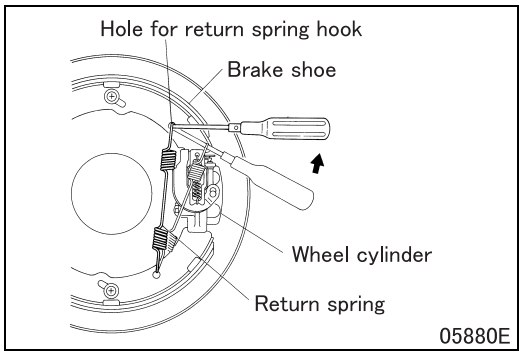

■ **Installation: Return spring**

- Hook the end of the return spring that has a smaller number of coils onto the brake shoe on the adjust screw side of the wheel cylinder.
- Engage a small Phillips screwdriver into the return spring hook. Then, using the screwdriver insert the spring hook into the hook hole in the brake shoe and attach the hook onto the shoe.

https://truckmanualshub.com/

M E M O

https://truckmanualshub.com/

FRONT DRUM BRAKE

Wheel Cylinder

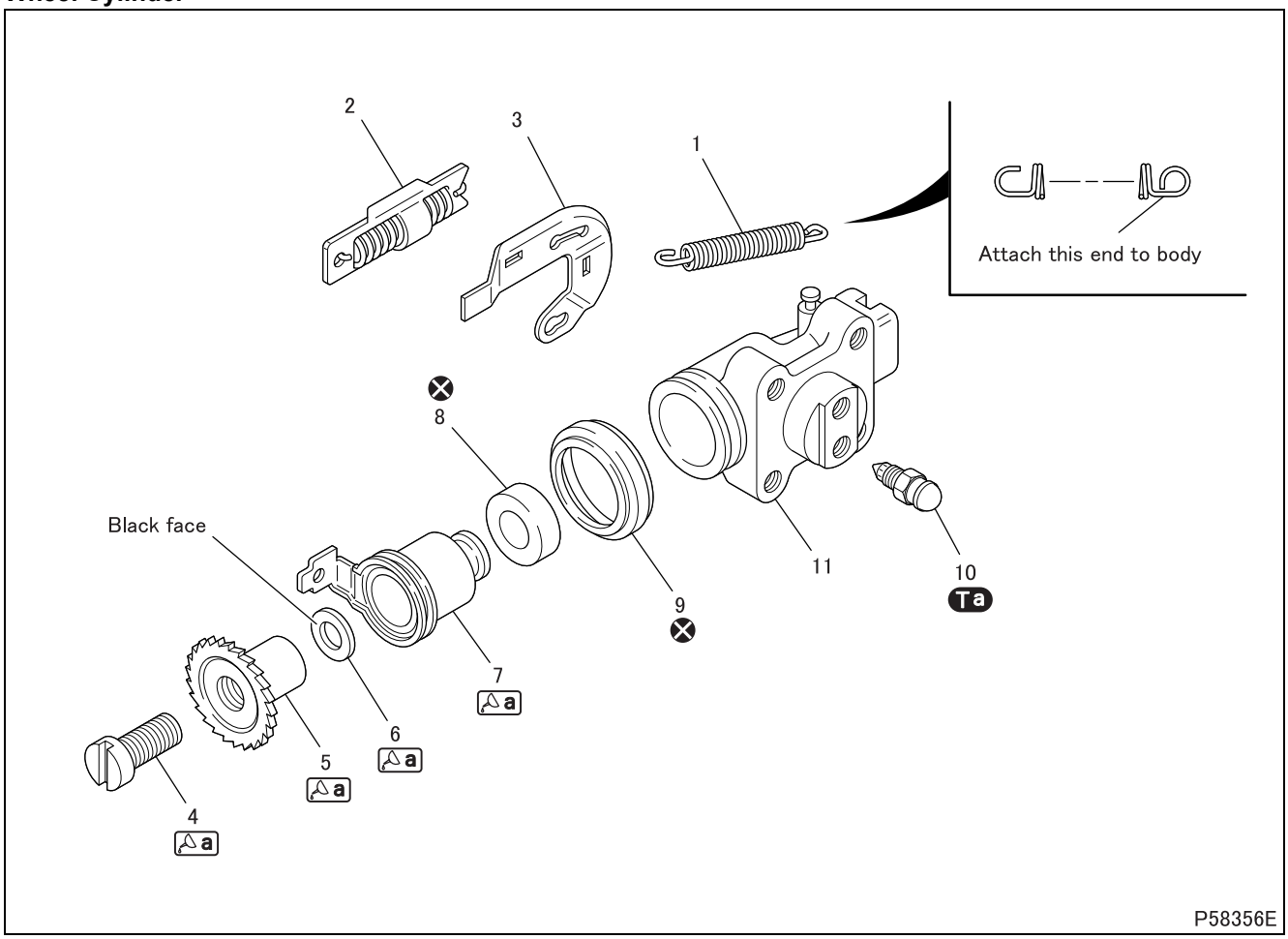

● **Disassembly sequence**

1 Spring
2 Spring & fitting
3 Lever
4 Adjust screw
5 Adjuster
6 Washer
7 Piston
8 Wheel cylinder cup
9 Boots
10 Air bleeder
11 Body

⊗: Non-reusable parts

● **Assembly sequence**

Follow the disassembly sequence in reverse.

Repair kit: Wheel cylinder kit

Service standards (Unit: mm {in.})

Location	Maintenance item	Standard value	Limit	Remedy
8, 11	Piston-to-body clearance	0.02 to 0.08 {0.00079 to 0.031}	0.2 {0.0079}	Replace

Tightening torque (Unit: N·m {ft.lbs, kgf·m})

Mark	Parts to be tightened	Tightening torque	Remarks
Ta	Air bleeder	6.9 to 8.8 {5.1 to 6.5, 0.7 to 0.9}	–

https://truckmanualshub.com/

Lubricant and/or sealant

Mark	Points of application	Specified lubricant and/or sealant	Quantity
a	Threaded portion of adjust screw	Rubber grease	As required
	Sliding face of adjuster		
	Both sides of washer		
	Sliding face of piston		

https://truckmanualshub.com/

REAR DISC BRAKE

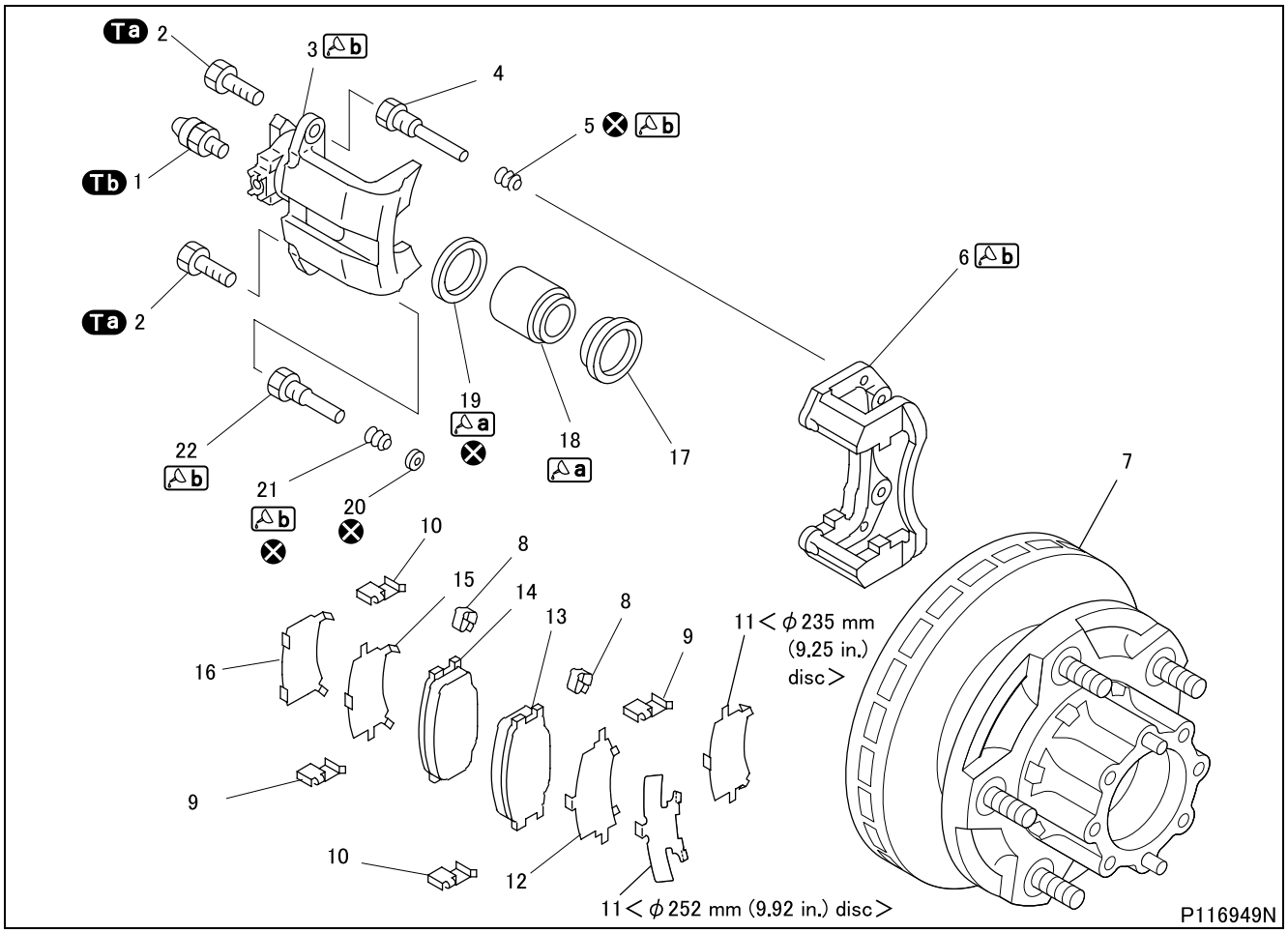

● Disassembly sequence

1 Air bleeder (lower side)
2 Slide pin bolts
3 Caliper
4 Main slide pin
5 Pin boots
6 Torque member
7 Disc rotor (See Gr27.)
8 Pad spring
9 Pad support B
10 Pad support A
11 Outer shim A
12 Outer shim B
13 Outer pad (with pad wear indicator)
14 Inner pad
15 Inner shim A
16 Inner shim B
17 Piston boots
18 Piston
19 Piston seal
20 Slide pin bush
21 Pin boots
22 Sub slide pin

⊗: Non-reusable parts

NOTE

- **For removal and installation of the rear disc brake and disc rotor, see Gr27.**

● Assembly sequence

Follow the disassembly sequence in reverse.

Repair kit: Pad kit, Seal kit

https://truckmanualshub.com/

CAUTION ⚠

- **Rubber parts that are disassembled must be replaced as a seal kit.**
- **Items included in a seal kit must be lubricated with grease supplied with the kit before installation.**
- **Do not apply lubricant to the surface of the outer or inner pad. Otherwise, braking performance will be adversely affected.**
- **Do not use gasoline, engine oil, nitro phenycorol thinner, and other chlorine-based detergents for cleaning of parts, as a damaged rubber part could result.**
- **Measure disc brake drag torque after installing the disc brake. (See ON-VEHICLE INSPECTION AND ADJUSTMENT.)**

Service standards (Unit: mm {in.})

Location	Maintenance item		Standard value	Limit	Remedy
13, 14	Thickness of outer/inner pad		14 {0.55}	4 {0.16}	Replace
***a**	Disc rotor	Thickness	40 {1.57}	38 {1.50}	Replace
		Runout (measure, assembling it into knuckle)	0.07 {0.0028} or less	0.10 {0.0039}	Replace

Tightening torque (Unit: N·m {ft.lbs, kgf·m})

Mark	Parts to be tightened	Tightening torque	Remarks
Ta	Slide pin bolt	40 to 50 {30 to 37, 4.1 to 5.1}	–
Tb	Air bleeder	8.8 to 12.7 {6.5 to 9.4, 0.9 to 1.3}	–

Lubricant and/or sealant

Mark	Points of application	Specified lubricant and/or sealant	Quantity
a	Outer circumference of piston	Brake fluid (SAE J1703 or FMVSS No. 116 DOT3)	As required
b	Inner circumference of caliper cylinder lips	Rubber grease	As required
	Outer circumference of main and sub slide pins		
	Pin boots mating surfaces with slide pins		
	Torque member grooves and guide holes for pin boots		

◆Inspection procedure◆

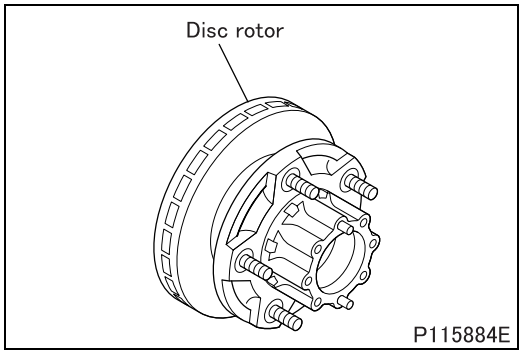

■ Inspection: Disc rotor

(1) Visual check

- If the disc rotor is abnormally worn or damaged, replace it.

(2) Thickness

- If the measurement exceeds the limit, replace the disc rotor.

(3) Runout

- Assemble the disc rotor onto the knuckle and measure the runout of the rotor.
- If the measurement exceeds the limit, replace the defective part with a new one.

https://truckmanualshub.com/

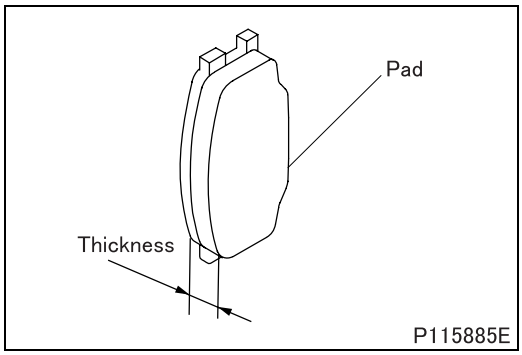

■**Inspection: Outer pad and inner pad**

- Measure thicknesses of the outer and inner pads.
- If the measurement is less than the limit, replace the defective part with a new one.

◆Installation procedure◆

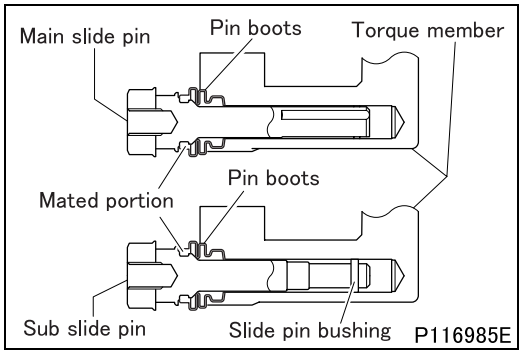

■**Installation: Main slide pin, sub slide pin, pin boots, and slide pin bush**

- Apply rubber grease onto the lips of the pin boots, pin boot fitting grooves on the torque member and the entire inner peripheries of the slide pins. Then, install the pin boots into the fitting grooves on the torque member.
- Apply rubber grease onto the slide pin bushing and the bushing groove on the sub slide pin. Then, install the slide pin bushing to the sub slide pin.
- Apply rubber grease along the outer peripheries of the main slide pin and sub slide pin and at the joints of the pin boots with the slide pins. Insert the slide pins in the mating holes in the torque member, then install the pin boots in place.
- Make sure that pin boot seals are fitted at the joints of the main slide pins and sub slide pins with the pin boots.

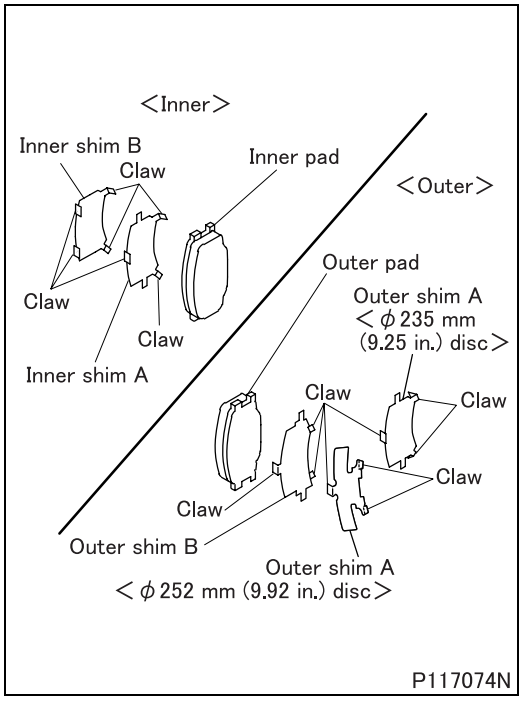

■**Installation: Shims**

- Position shims such that they face the illustrated directions before installing them onto the pads.

https://truckmanualshub.com/

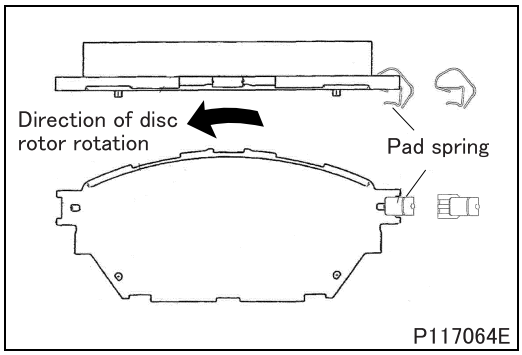

■ **Installation: Outer pad and inner pad**

- Install the outer and inner pads in such a way that the pad spring sits in the illustrated position relative to the rotational direction of the disc rotor in forward motion.

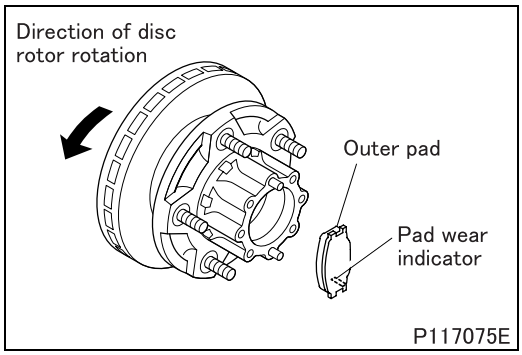

■ **Installation: Outer pad**

- Install the outer pad so that the pad wear indicator sits in the illustrated position relative to the rotating direction of the disc rotor during forward travel.

CAUTION ⚠

- **Install the outer pad so that the pad wear indicator always sits in the designated position. If not, the braking force will be decrease.**

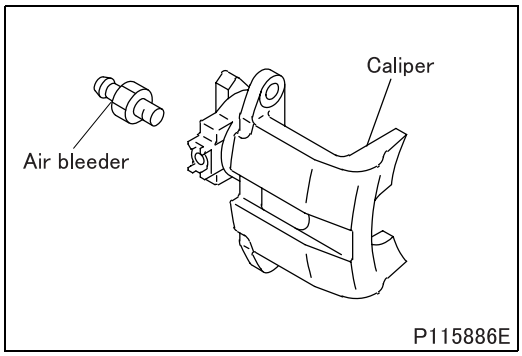

■ **Installation: Air bleeder**

- Install the air bleeder on the caliper.

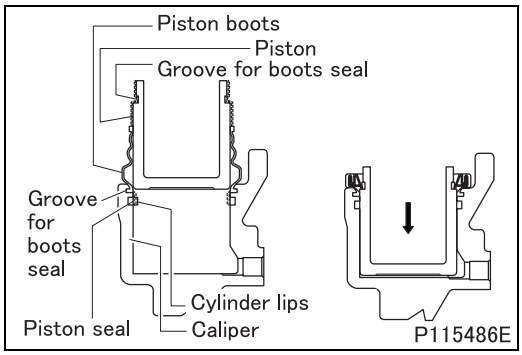

■ **Installation: Piston boots, piston, and piston seal**

- Apply brake fluid onto the outer periphery of the piston. Then, insert the piston boots over the piston.
- On the piston seal, spread the grease, already applied on it, evenly over the seal. Then, install the seal into the groove on the caliper.
- Apply grease evenly along the inner circumference of the cylinder lips on the caliper.
- Install the caliper-end seal of the piston boots into the groove on the caliper.
- Press fit the piston further into the boots. Ensure that the piston-end seal of the piston boots is engaged in the groove on the piston.

https://truckmanualshub.com/

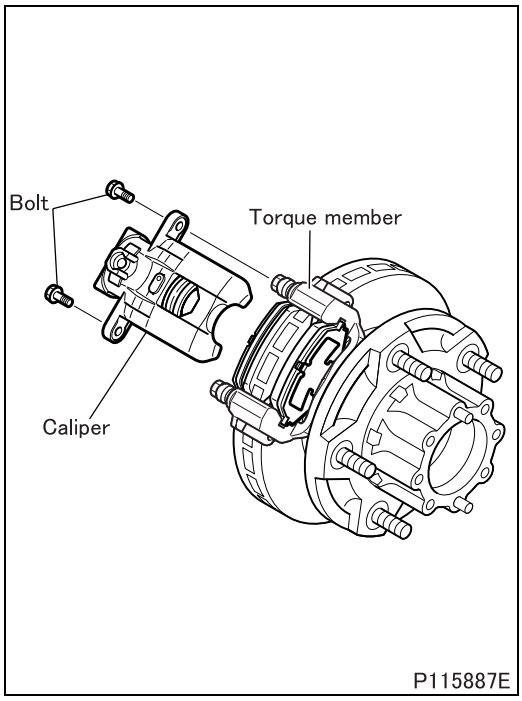

■ **Installation: Caliper**

- Install the caliper to the torque member.

https://truckmanualshub.com/

M E M O

https://truckmanualshub.com/

REAR DRUM BRAKE

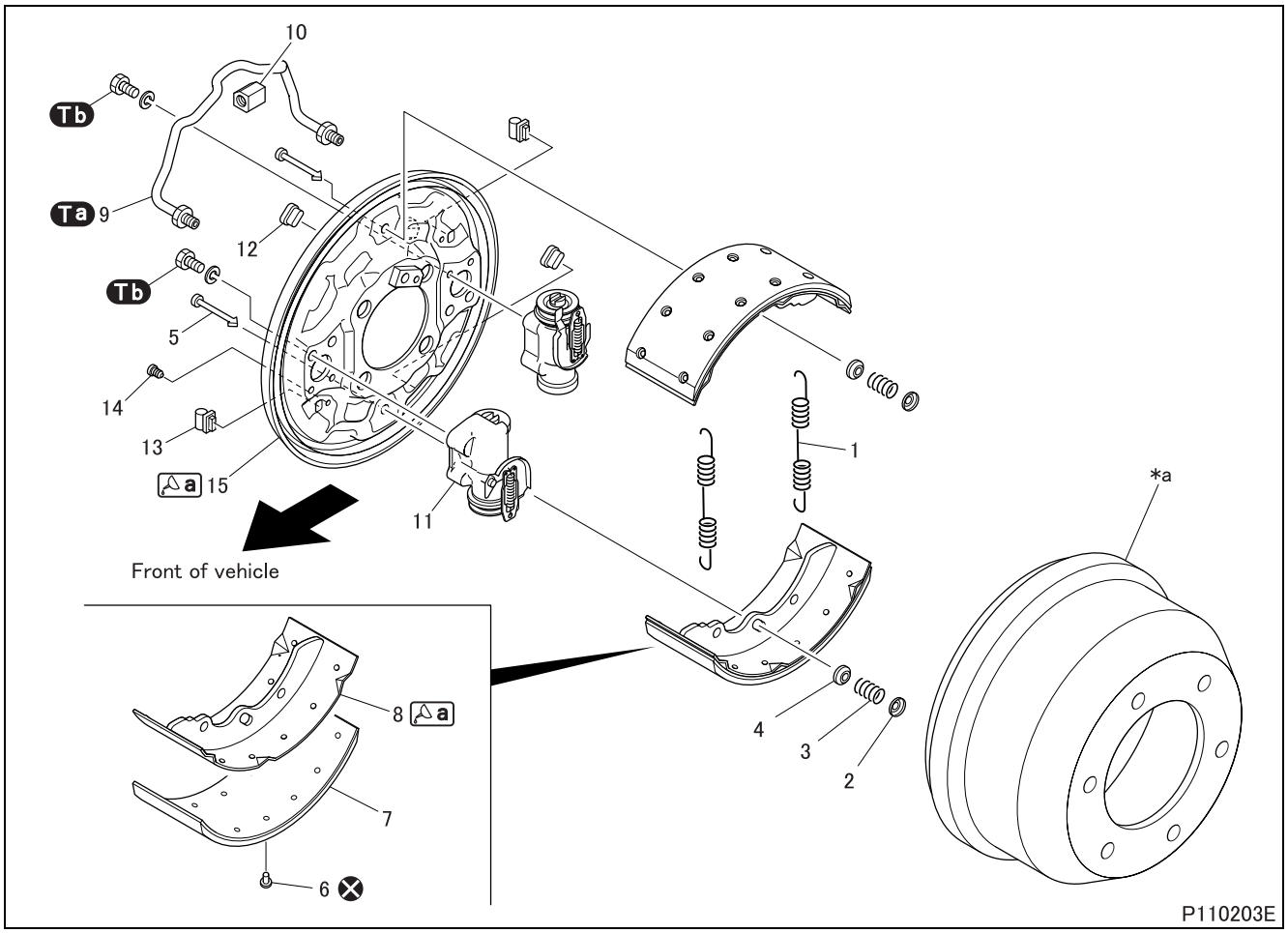

● **Disassembly sequence**

1 Return spring
2 Shoe hold-down cup
3 Shoe hold-down spring
4 Shoe hold-down cup
5 Shoe hold-down pin
6 Rivet
7 Brake lining
8 Brake shoe
9 Brake pipe
10 Spacer
11 Wheel cylinder (See later section.)
12 Cover
13 Cover
14 Cover
15 Backing plate

***a**: Brake drum (See Gr27.)
⊗: Non-reusable parts

CAUTION ⚠

- **For removal and installation of the rear drum brake and brake drum, see Gr27.**

● **Assembly sequence**

Follow the disassembly sequence in reverse.

https://truckmanualshub.com/

CAUTION ⚠

- **Do not apply lubricant to the surface of the brake lining. Otherwise, braking performance will be adversely affected.**
- **When replacing the brake lining, clean the threaded portions of the wheel cylinder adjuster and adjusting screw and coat them with rubber grease.**
- **Adjust clearance between brake drum and shoe after installing the drum brake. (See ON-VEHICLE INSPECTION AND ADJUSTMENT.)**

Service standards (Unit: mm {in.})

Location	Maintenance item		Standard value	Limit	Remedy
1	Return spring load (installed length 190 {7.48})		195 to 235 N {44 to 53 lbs, 19.8 to 24.2 kgf}	175 N {39 lbs, 18.0 kgf}	Replace
7	Brake lining thickness		10.4 {0.41}	4.0 {0.16} (side shoulder means wear limit)	Replace
*a	Brake drum	Inside diameter	320 {12.6}	322 {12.7} (※321 {12.6})	Repair or Replace
		Cylinder	0.05 {0.002}	0.2 {0.008}	

※: Shows the correction limit value.

Tightening torque (Unit: N·m {ft.lbs, kgf·m})

Mark	Parts to be tightened	Tightening torque	Remarks
Ta	Brake pipe	13 to 15 {9.6 to 11, 1.3 to 1.5}	–
Tb	Bolt (wheel cylinder mounting)	79 to 108 {58 to 80, 8.1 to 11.0}	–

Lubricant and/or sealant

Mark	Points of application	Specified lubricant and/or sealant	Quantity
a	Contact areas between brake shoe and wheel cylinder	Brake grease	As required
	Contact areas between backing plate and brake shoe		

◆Removal procedure◆

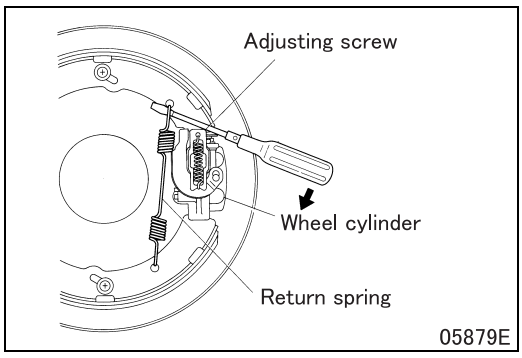

■ Removal: Return spring

- Using a flat-head screwdriver, remove the return spring. To do this, rest the screwdriver on the wheel cylinder adjusting screw. Then, with the adjusting screw as a fulcrum, engage the screwdriver with the spring hook and pry away the spring.

https://truckmanualshub.com/

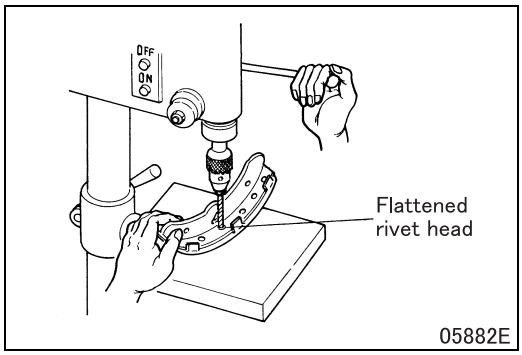

■ **Removal: Brake lining**

- Using a drill, break the flattened rivet heads on the brake shoe side to release the brake lining.

◆**Inspection procedure**◆

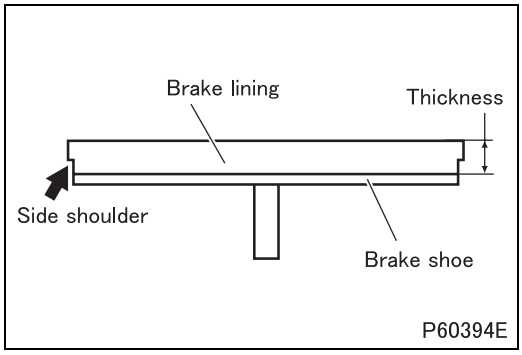

■ **Inspection: Brake lining thickness**

- If any brake lining has worn to the side shoulder, replace the brake linings of both brakes on the same axle.

■ **Inspection: Brake drum**

(1) Visual inspection

- If abnormal wear or damage is found on the inside of the brake drum, resurface the brake drum inner circumference with the wheel hub as a set within the correction limit or replace the drum.

(2) Inner diameter

- If the measured value exceeds the limit, replace the brake drum.

(3) Cylindricity

- If the measured value exceeds the limit, regrind the brake drum inner surface within the correction limit or replace the drum.

◆**Installation procedure**◆

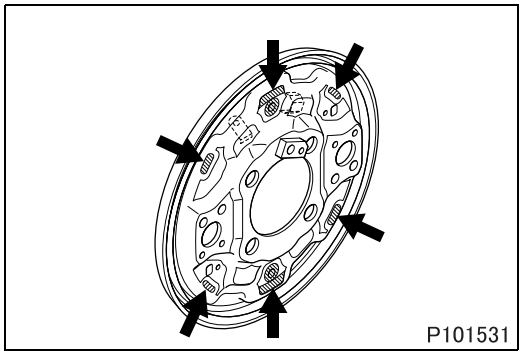

■ **Installation: Backing plate**

- Grease the backing plate at the illustrated locations.

https://truckmanualshub.com/

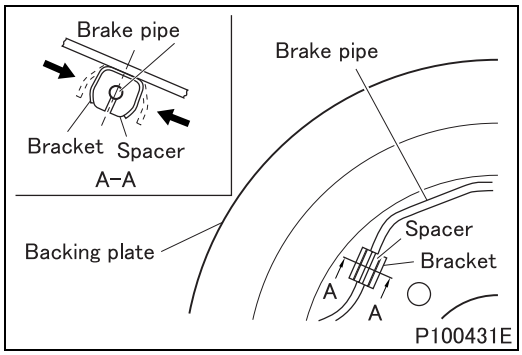

■ **Installation: Brake pipe**

- Position the spacer correctly on the bracket so that the brake pipe and spacer assembly will not clear the backing plate surface.
- After making sure that the brake pipe and spacer assembly is centered on the bracket, close the bracket to secure the brake pipe in such a way that the brake pipe is retained evenly by the spacer.

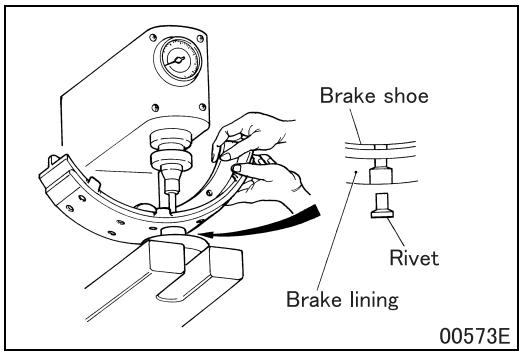

■ **Installation: Brake lining**

- Using cleaning fluid, clean the surface of the brake shoe to which the brake lining is to be mounted. Dry the brake shoe.
- Insert rivets from the lining to the shoe. Stake them, starting from the center of the shoe and moving towards the ends. Ensure that the shoe-to-lining clearances conform to the following specifications.
  - Around the rivets: 0.05 mm {0.0020 in.} or less
  - Along the shoe/lining:
    0.2 mm {0.0079 in.}
- Stake the rivets with a force of 17650 ± 980 N {3970 ± 220 lbs, 1800 ± 100 kgf}.

CAUTION ⚠

- **Replace all of the brake linings on the same axle and the brake linings should be in the same size and have the same identification mark. Otherwise, braking performance can be different from left to right.**

- After assembly, check the drum-to-lining contact. Correct as required.

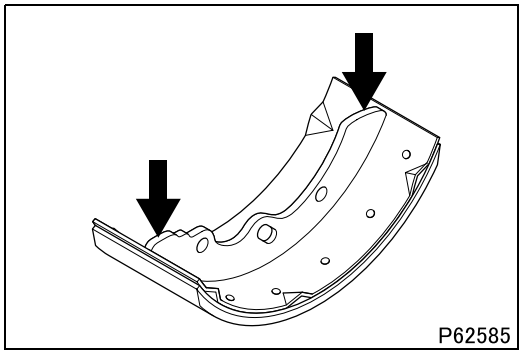

■ **Installation: Brake shoe**

- Grease the brake shoe at the illustrated locations.

https://truckmanualshub.com/

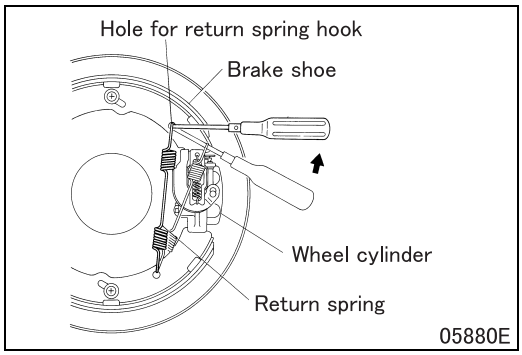

■ **Installation: Return spring**

- Engage a small Phillips screwdriver into the return spring hook. Then, using the screwdriver insert the spring hook into the hook hole in the brake shoe and attach the hook onto the shoe.

https://truckmanualshub.com/

Wheel Cylinder

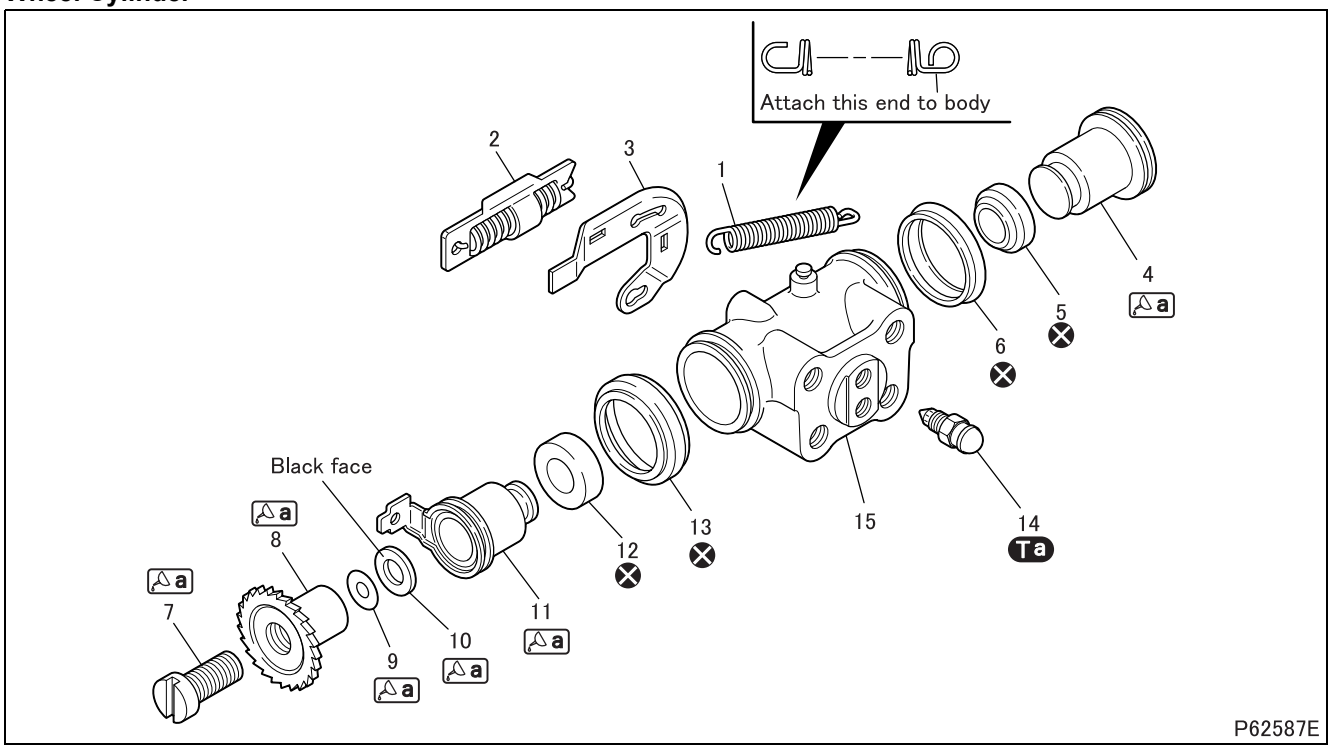

● **Disassembly sequence**

1 Spring
2 Spring & fitting
3 Lever
4 Piston
5 Piston cup
6 Boots
7 Adjust screw
8 Adjuster
9 Washer
10 Washer
11 Piston
12 Piston cup
13 Boots
14 Air bleeder (front-side cylinder only)
15 Body

⊗: Non-reusable parts

● **Assembly sequence**

Follow the disassembly sequence in reverse.

Repair kit: Wheel cylinder kit

Service standards (Unit: mm {in.})

Location	Maintenance item	Standard value	Limit	Remedy
4, 11, 15	Piston-to-body clearance	0.02 to 0.08 {0.00079 to 0.031}	0.2 {0.0079}	Replace

Tightening torque (Unit: N·m {ft.lbs, kgf·m})

Mark	Parts to be tightened	Tightening torque	Remarks
Ta	Air bleeder	6.9 to 8.8 {5.1 to 6.5, 0.7 to 0.9}	–

Lubricant and/or sealant

Mark	Points of application	Specified lubricant and/or sealant	Quantity
a	Sliding face of piston	Rubber grease	As required
	Threaded portion of adjust screw		
	Sliding face of adjuster		
	Both sides of washer		

https://truckmanualshub.com/

FUSO

Group 35E

Anti-lock Brake System (ABS)

MITSUBISHI FUSO TRUCK OF AMERICA, Inc.

Pub.No.00ELT0001-35E

https://truckmanualshub.com/

INDEX

SPECIFICATIONS 35E-2

STRUCTURE AND OPERATION
1. **Overview 35E-4**
2. **Electronic Control System 35E-21**
3. **Electronic Control Unit Schematic Diagram 35E-24**

TROUBLESHOOTING
1. **Inspections According to Diagnosis Codes 35E-26**
2. **FUSO Diagnostics Service Data (Measured Values) 35E-48**
3. **Actuator Test (Control) Using FUSO Diagnostics 35E-49**
4. **Electronic Control Unit Coding 35E-50**
5. **Rewriting of Coding Data 35E-50**
6. **Electronic Control Unit Input/Output Table 35E-50**

ON-VEHICLE INSPECTION AND ADJUSTMENT
1. **Functional Check 35E-52**
2. **Inspection of Hydraulic Unit (Electronic Control Unit) Operation 35E-53**
3. **Inspection after Replacing or Removing/Installing Hydraulic Unit (Electronic Control Unit) 35E-54**

HYDRAULIC UNIT (ELECTRONIC CONTROL UNIT) 35E-56

INSPECTION OF ELECTRICAL PARTS 35E-60

INSTALLED LOCATIONS OF PARTS 35E-62

ELECTRICAL CIRCUIT DIAGRAM 35E-74

https://truckmanualshub.com/

SPECIFICATIONS

Item			Specifications
Hydraulic unit (electronic control unit)	Manufacturer		TRW AUTOMOTIVE
	Rated voltage	V	DC13.5
	Working voltage range	V	DC10 to 16
*Wheel speed sensor	Manufacturer		SUMITOMO ELECTRIC or Bosch
G sensor <FG>	Manufacturer		MITSUBISHI ELECTRIC
	Rated voltage	V	DC12
	Working voltage range	V	DC8 to 16

https://truckmanualshub.com/

M E M O

https://truckmanualshub.com/

1. Overview

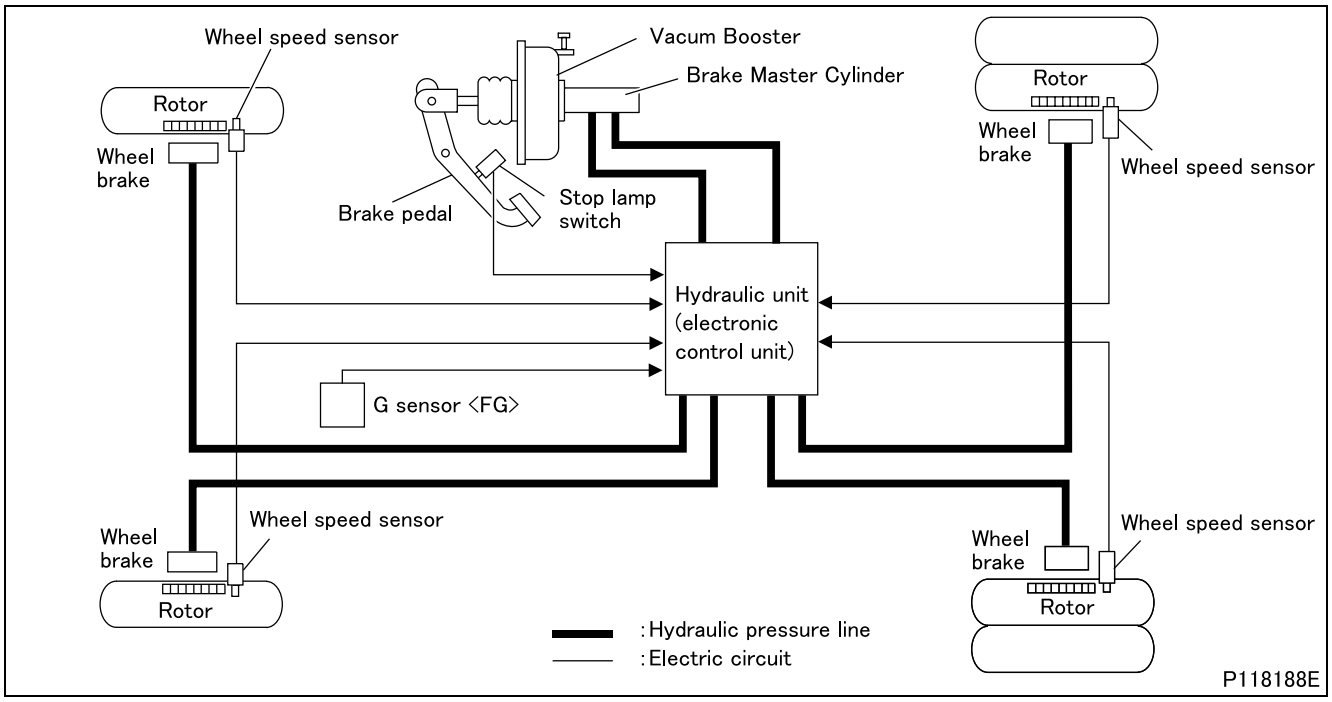

- The illustration shown above is intended to explain the structure and operation only and parts of it may differ from that of the actual piping diagram. For the details, see the piping diagram in Gr35.
- The anti-lock brake system (ABS) prevents wheel lock-up and resultant skid when braking hard or on slippery roads, thus maintain vehicle stability and steerability.

1.1 Outline of anti-lock brake system

- Wheels will roll along on the road in the direction of their rotation. Therefore, the driver can steer the vehicle as he/she wishes by maneuvering the steering wheel.
  However, on vehicles not equipped with ABS, applying the brakes hard can cause wheel lock-up. Once tires are locked up, they are simply a piece of rubber in contact with the road surface and steering control will be lost. The vehicle will skid in the direction of inertia irrespective of the steering angle.
  In other words, vehicle stability and steerability are lost and the vehicle is out of the driver's control.
- On vehicles equipped with anti-lock brake system, the system prevents wheel lock-up by reducing the braking power to the wheel that is about to lock up and, thereby, maintain vehicle stability and steerability.

(1) Wheel lock-up when cornering on slippery road

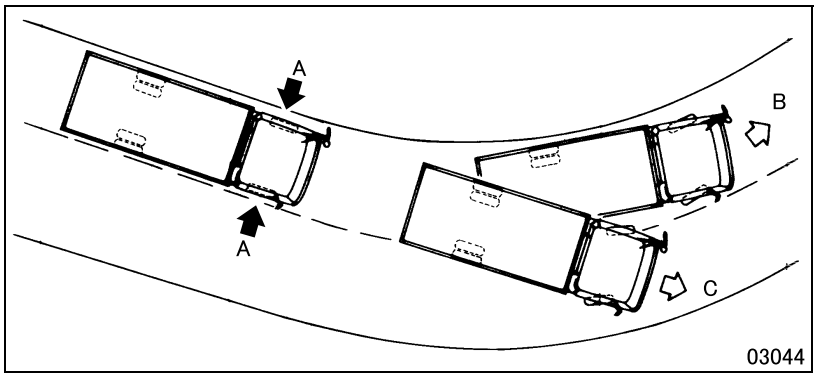

- If wheel lock-up occurs during braking on a slippery curve, steering control will be lost. If this happens, the vehicle may deviate, while skidding, from the intended course no matter how the driver maneuvers the steering wheel.
  A: Application of brakes (wheel lock-up)
  B: Intended course
  C: Actual course

https://truckmanualshub.com/

(2) Wheel lock-up in trying to avoid obstacle ahead on slippery straight road

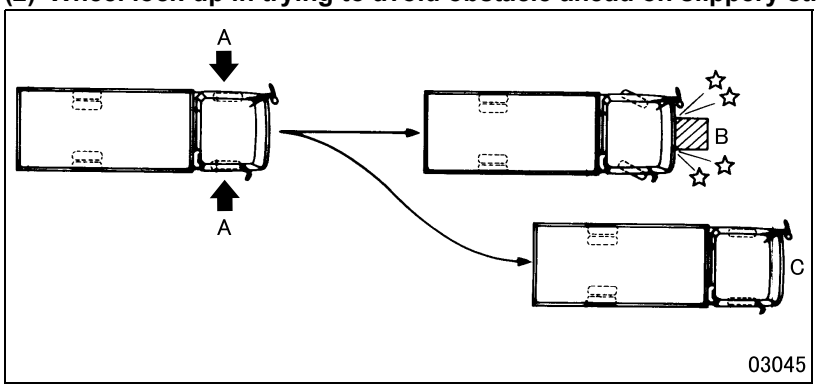

- If wheel lock-up occurs during hard braking on a slippery straight road in trying to avoid an obstacle ahead, steering control will be lost. If this happens, the vehicle will not be able to avoid the obstacle no matter how the driver maneuvers the steering wheel.
  A: Application of brakes (wheel lock-up)
  B: Obstacle
  C: Intended course

(3) Split μ (wheel lock-up on asymmetrical road surface, with higher friction of coefficient on one side and lower friction of coefficient on the other side)

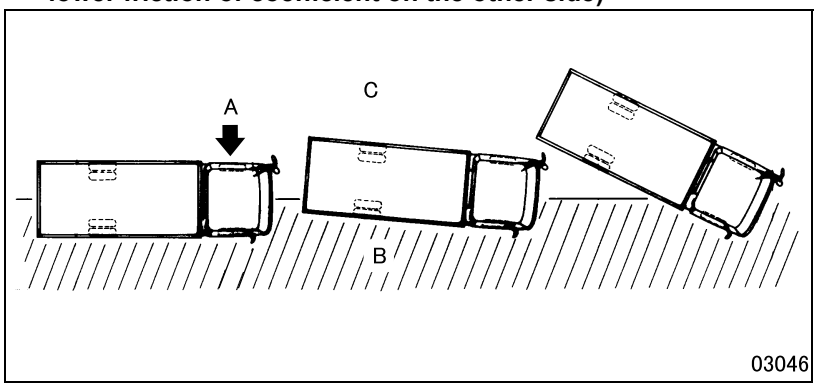

- If the front and rear wheels on one side of the vehicle are on the side of the road that has a lower friction of coefficient and therefore is more slippery than the other side of the road, these wheels are more likely to lock up and slip than the wheels on the other side of the vehicle. When the brakes are applied under such conditions, the braking efficiency will be different between the right and left sides of the vehicle and the vehicle will lose stability. Braking hard under such conditions can even cause the vehicle to spin.
  A: Application of brakes (wheel lock-up)
  B: Less slippery road surface
  C: More slippery road surface

- As mentioned above, the system prevents wheel lock-up by providing controlled braking force to each wheel. This prevents wheel slip and skid and ensures steering control and vehicle stability even during hard braking.

https://truckmanualshub.com/

1.2 Anti-lock brake system control process

- Anti-lock brake system ensures controlled yet optimum braking in a given road surface condition by placing the braking force within a certain range of slip rate determined by the wheel speed - vehicle speed relation.
- Stepping on the brake pedal causes the wheel speed to slow down and, as a result, the vehicle also slows down. However, the vehicle will still try to move on due to the inertia that has built up. This causes a difference between the wheel speed and the vehicle speed, or, in other words, slip. The amount of slip can be expressed as slip rate, as follows.

$$\text{Slip rate (\%)} = \frac{\text{Vehicle speed} - \text{Wheel speed}}{\text{Vehicle speed}} \times 100$$

- A slip ratio of 0% means that there is no slip between the wheel and the road surface. A slip rate of 100% means that the wheel is locked up.

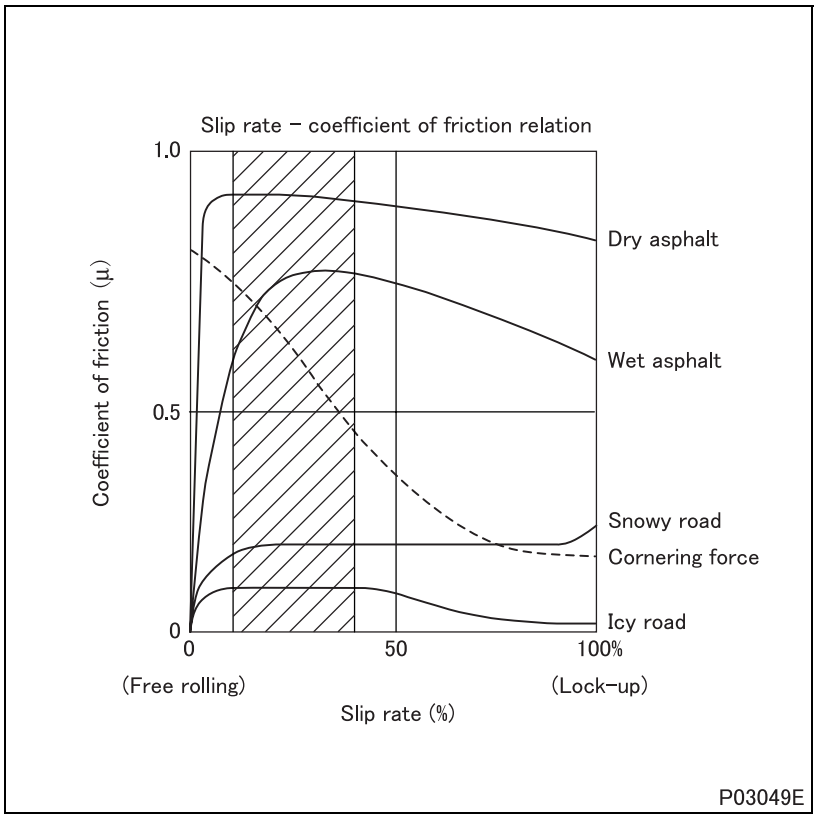

- The graph shows the variation in the tire's coefficient of friction from free rolling to lock-up. As the brake pedal is slowly pressed, the tires continue to rotate but start slipping.
- As the application force on the brake pedal increases, the tires will stop rotating and the vehicle will just skid. This is wheel lock-up.
- As the graph shows, the coefficient of friction peaks within the hatched area.
- In other words, the maximum coefficient of friction can be achieved, not by stepping on the brake pedal with full force, but by doing so moderately to try to place the slip rate within the hatched area.
- On vehicles equipped with anti-lock brake system, the hydraulic control unit (electronic control unit) controls the braking force so that it falls within the hatched area. This will ensure that the tires do not lock up but have the maximum coefficient of friction, thus achieving efficient braking performance.

https://truckmanualshub.com/

(1) Anti-lock brake system control cycle

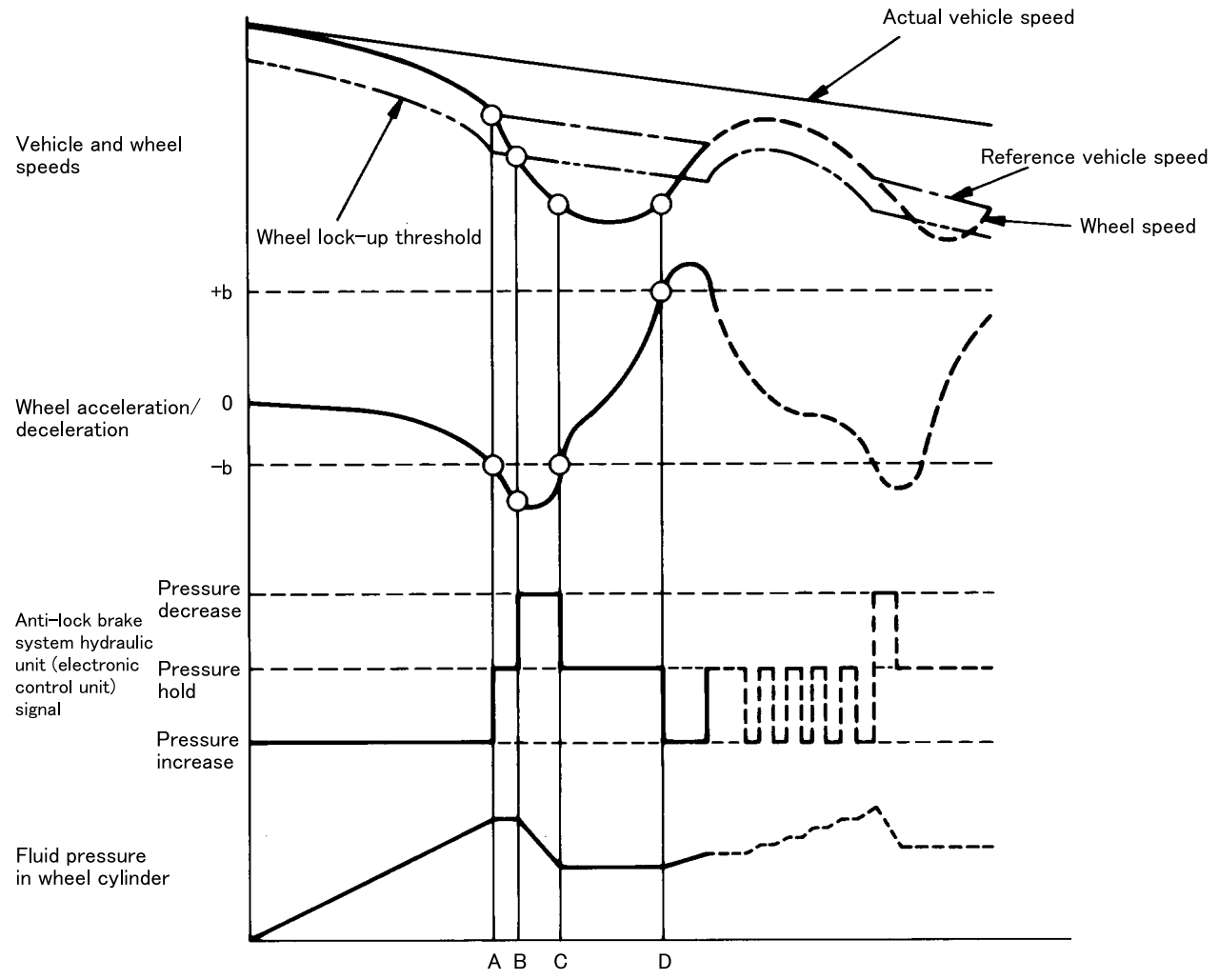

- The chart above shows the typical control cycle of anti-lock brake system following the application of brakes, detailing in time series the variation in wheel speed, wheel speed acceleration/deceleration and fluid pressure in the wheel cylinder.
- When the wheel speed acceleration/deceleration drops to the “–b” threshold at A, the hydraulic unit (electronic control unit) sends “pressure hold” signal to maintain the fluid pressure in the wheel cylinder.
  At the same time, the hydraulic unit (electronic control unit) calculates the reference vehicle speed.
- When the vehicle decelerates to the wheel lock-up threshold at B, the hydraulic unit (electronic control unit) interprets this as imminent wheel lock-up and sends “pressure decrease” signal to reduce the fluid pressure in the wheel cylinder.
- When the wheel speed picks up and exceeds the “–b” threshold at C, the hydraulic unit (electronic control unit) sends “pressure hold” signal to maintain the fluid pressure in the wheel cylinder at the current level.
- When the wheel speed exceeds the “+b” threshold at D, the hydraulic unit (electronic control unit) determines that the imminent wheel lock-up has gone and sends “pressure increase” signal to increase the fluid pressure in the wheel cylinder.
- The pressure hold-decrease-increase cycle is repeated to keep the slip rate at optimum levels to prevent wheel lock-up.

https://truckmanualshub.com/

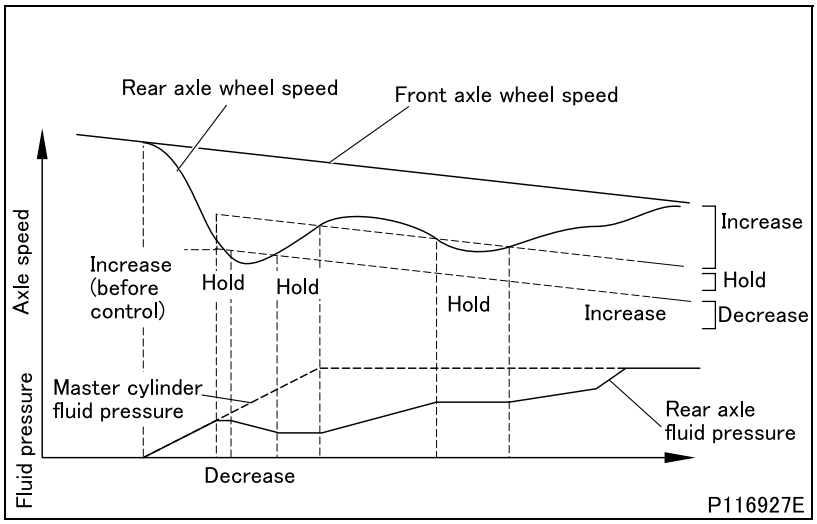

1.3 Electronic Brake force Distribution (EBD)

- The Electronic Brake force Distribution limits increase in brake fluid pressure to rear axle wheels with an increased skid/slip tendency so that braking forces appropriate for loads on the axles are distributed.
- Through this control, activation of the anti-lock brake system (ABS) is delayed near the critical limit.

https://truckmanualshub.com/

M E M O

https://truckmanualshub.com/

1.4 Hydraulic unit (electronic control unit)

(1) Schematic circuit diagram

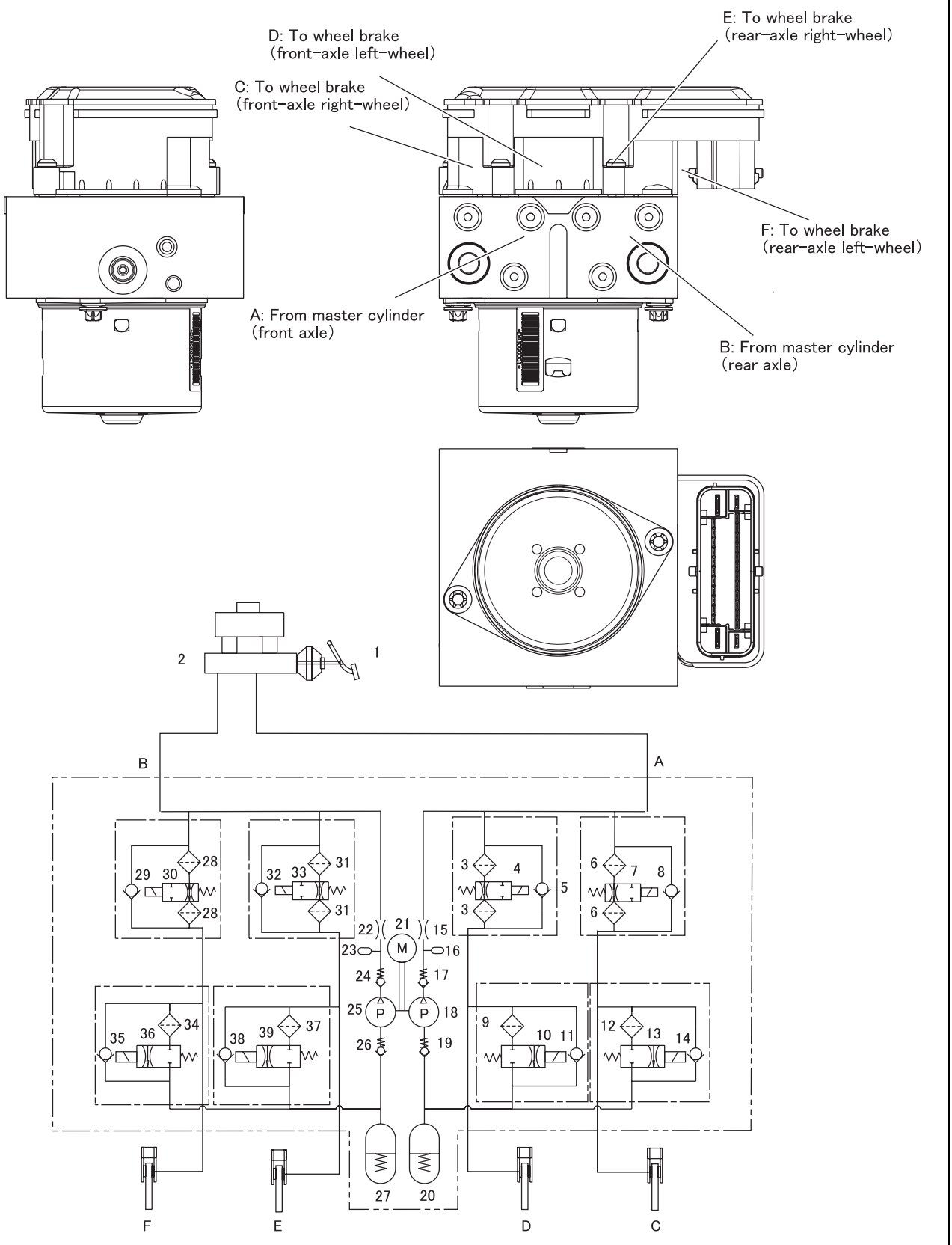

https://truckmanualshub.com/

1 Brake Pedal
2 Brake master cylinder
3 Filter (front-axle left-wheel)
4 Magnetic valve (front-axle left-wheel HOLD)
5 Check valve (front-axle left-wheel)
6 Filter (front-axle right-wheel)
7 Magnetic valve (front-axle right-wheel HOLD)
8 Check valve (front-axle right-wheel)
9 Filter (front-axle left-wheel)
10 Magnetic valve (front-axle left-wheel DECREASE)
11 Check valve (front-axle left-wheel)
12 Filter (front-axle right-wheel)
13 Magnetic valve (front-axle right-wheel DECREASE)
14 Check valve (front-axle right-wheel)
15 Orifice (front axle)
16 Damper (front axle)
17 Outlet valve (front axle)
18 Plunger pump (front axle)
19 Inlet valve (front axle)
20 Reservoir (front axle)
21 Motor
22 Orifice (rear axle)
23 Damper (rear axle)
24 Outlet valve (rear axle)
25 Plunger pump (rear axle)
26 Inlet valve (rear axle)
27 Reservoir (rear axle)
28 Filter (rear-axle right-wheel)
29 Check valve (front-axle left-wheel)
30 Magnetic valve (rear-axle left-wheel HOLD)
31 Filter (rear-axle right-wheel)
32 Check valve (rear-axle right-wheel)
33 Magnetic valve (rear-axle right-wheel HOLD)
34 Filter (rear-axle left-wheel)
35 Check valve (rear-axle left-wheel)
36 Magnetic valve (rear-axle left-wheel DECREASE)
37 Filter (rear-axle right-wheel)
38 Check valve (rear-axle right-wheel)
39 Magnetic valve (rear-axle left-wheel DECREASE)

A: From master cylinder (front axle)
B: From master cylinder (rear axle)
C: To wheel brake (front-axle right-wheel)
D: To wheel brake (front-axle left-wheel)
E: To wheel brake (rear-axle right-wheel)
F: To wheel brake (rear-axle left-wheel)

- The hydraulic unit (electronic control unit) is the heart of anti-lock brake system and Electronic Brake force Distribution control, energizing/de-energizing the magnetic valves and turning ON/OFF the motor. The table below shows how each magnetic valve and the motor are controlled in each phase.

		Anti-lock brake system control											
		Front-axle right-wheel			Front-axle left-wheel			Rear-axle right-wheel			Rear-axle left-wheel		
		DECREASE	HOLD	INCREASE	DECREASE	HOLD	INCREASE	DECREASE	HOLD	INCREASE	DECREASE	HOLD	INCREASE
Magnetic valve	Front-axle right-wheel DECREASE	O	×	×	–	–	–	–	–	–	–	–	–
	Front-axle right-wheel HOLD	O	O	×	–	–	–	–	–	–	–	–	–
	Front-axle left-wheel DECREASE	–	–	–	O	×	×	–	–	–	–	–	–
	Front-axle left-wheel HOLD	–	–	–	O	O	×	–	–	–	–	–	–
	Rear-axle right-wheel DECREASE	–	–	–	–	–	–	O	×	×	–	–	–
	Rear-axle right-wheel HOLD	–	–	–	–	–	–	O	O	×	–	–	–
	Rear-axle left-wheel DECREASE	–	–	–	–	–	–	–	–	–	O	×	×
	Rear-axle left-wheel HOLD	–	–	–	–	–	–	–	–	–	O	O	×
Motor		O											

O: On
×: OFF

https://truckmanualshub.com/

		Electronic Brake force Distribution		
		Rear-axle right-wheel Rear-axle left-wheel		
		HOLD	DECREASE	INCREASE
Magnetic valve	Rear-axle right-wheel DECREASE	×	O	×
	Rear-axle right-wheel HOLD	O	O	×
	Rear-axle left-wheel DECREASE	×	O	×
	Rear-axle left-wheel HOLD	O	O	×
Motor		×*		

O: On

× : OFF

* : The motor will operate only when brake fluid accumulates in the secondary circuit during pressure reduction.

https://truckmanualshub.com/

(2) Normal braking (anti-lock brake system not in operation)

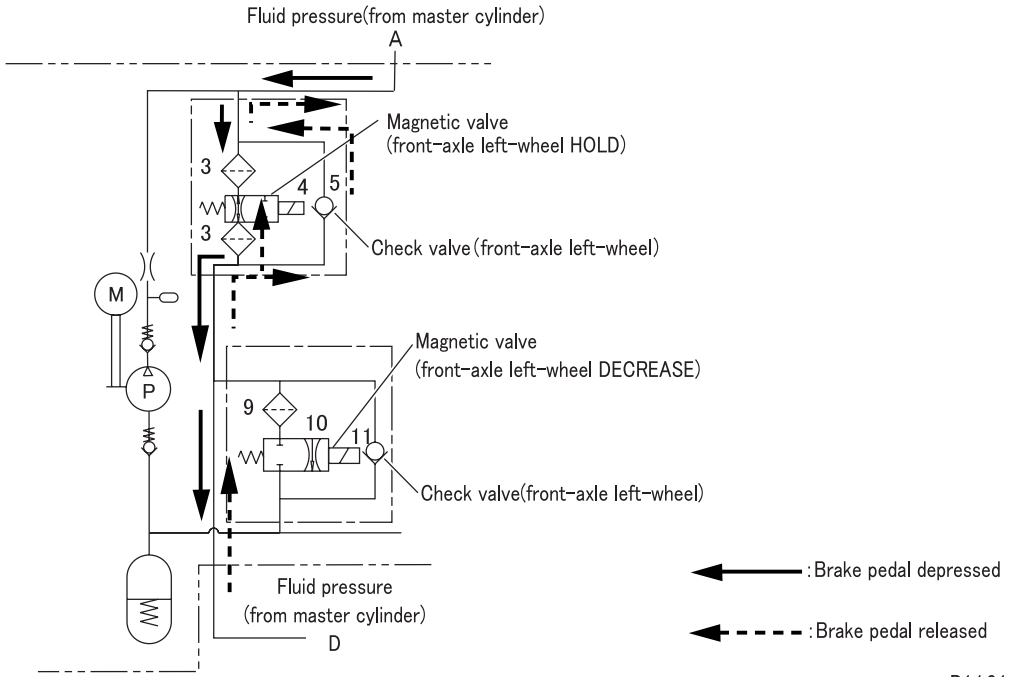

The diagram shows the operation of front-axle left-wheel line.

P116162E

- When the brake pedal is depressed and there is no imminent wheel lock-up, the hydraulic unit (electronic control unit) will not send any control signal to the magnetic valve (front-axle left-wheel DECREASE) or to the magnetic valve (front-axle left-wheel HOLD). The former valve remains closed while the latter valve stays open.
- Pressure fluid A from the brake master cylinder flows past the magnetic valve (front-axle left-wheel HOLD) and to the wheel brake D.
- When the brake pedal is released, pressure fluid A from the brake master cylinder drops. Pressure fluid from the wheel brake D now flows past the magnetic valve (front-axle left-wheel HOLD) and the check valve (front-axle left-wheel) and returns to the brake master cylinder.

https://truckmanualshub.com/

(3) Anti-lock braking (pressure decrease)

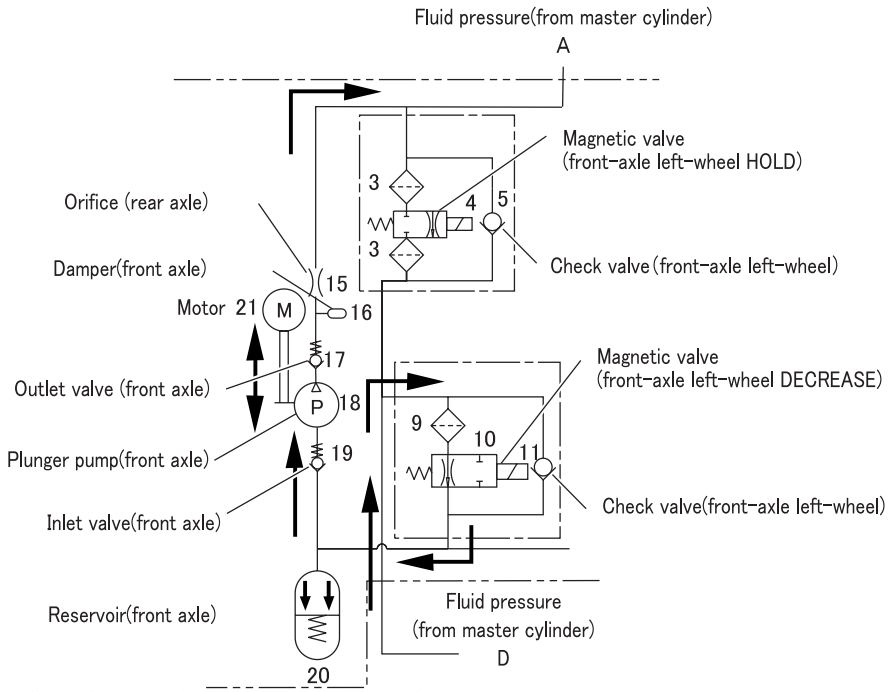

The diagram shows the operation of front-axle left-wheel line. P116163E

- When the brake pedal is depressed and there is imminent wheel lock-up, the hydraulic unit (electronic control unit) sends control signal to the magnetic valve (front-axle left-wheel DECREASE) and the magnetic valve (front-axle left-wheel HOLD). The former valve will open while the latter valve will close.
- Pressure fluid form the wheel brake D now flows past the magnetic valve (front-axle left-wheel DECREASE) and to the reservoirs. The line pressure will drop.
- When the hydraulic unit (electronic control unit) sends control signal to the magnetic valve (front-axle left-wheel DECREASE) and the magnetic valve (front-axle left-wheel HOLD), it also sends control signal to the motor at the same time, causing the plunger pump (front axle) to start pumping. Pressure fluid in the reservoirs now flows past the inlet valve (front axle), the outlet valve (front axle), the damper (front axle) and the orifice (front axle) and returns to the master cylinder.
- During this process, the check valve (front-axle left-wheel) remains closed by the fluid pressure A from the brake master cylinder. As a result, no pressure fluid from the master cylinder flows to the wheel brake.

https://truckmanualshub.com/

(4) Anti-lock braking (pressure hold)

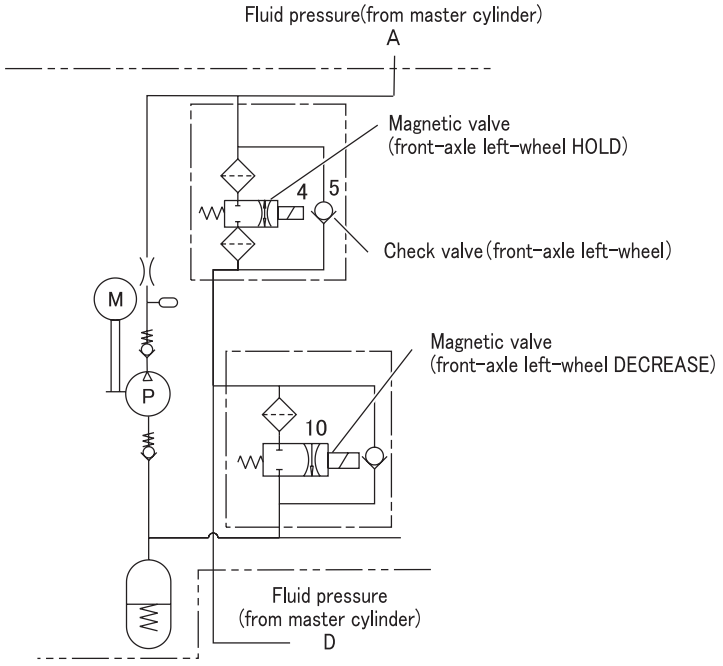

The diagram shows the operation of front-axle left-wheel line. P116164E

- When it becomes necessary to hold the fluid pressure D in the wheel brake at the same level as part of anti-lock brake system control, the hydraulic unit (electronic control unit) sends a “HOLD” signal to the magnetic valve (front-axle left-wheel HOLD). As a result, both the magnetic valve (front-axle left-wheel HOLD) and the magnetic valve (front-axle left-wheel DECREASE) will be closed, which holds the fluid pressure in the wheel brake at the current level.
- The check valve (front-axle left-wheel) remains closed by the fluid pressure A from the brake master cylinder.

https://truckmanualshub.com/

(5) Anti-lock braking (pressure increase)

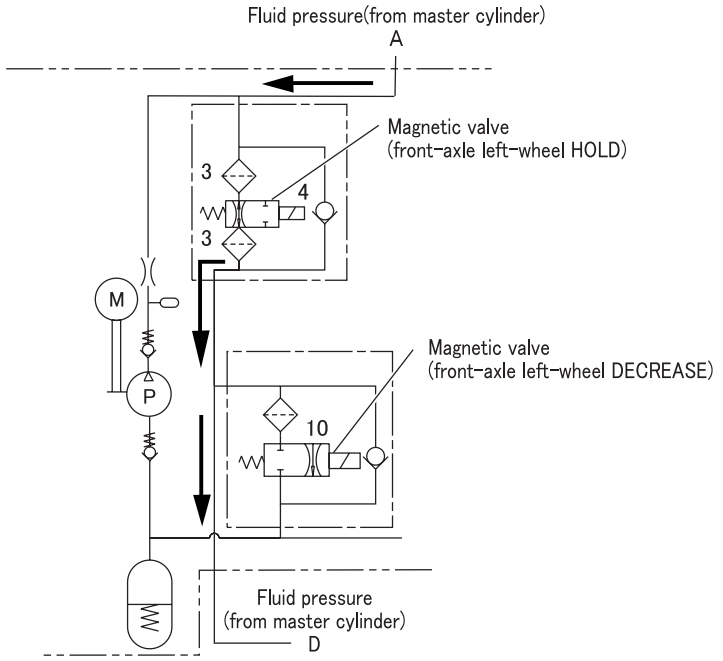

The diagram shows the operation of front-axle left-wheel line.

P116165E

- When it becomes necessary to increase the fluid pressure D in the wheel brake, control signal from the hydraulic unit (electronic control unit) to the magnetic valve (front-axle left-wheel HOLD) and to the magnetic valve (front-axle left-wheel DECREASE) will be cut off.
- As a result, the magnetic valve (front-axle left-wheel HOLD) will open while the magnetic valve (front-axle left-wheel DECREASE) will close. Both valves are now in their normal-braking positions. Fluid pressure A being generated by the depression of the brake pedal is now applied to the wheel brake to increase the braking force.

https://truckmanualshub.com/

(6) Electronic Brake force Distribution (pressure hold)

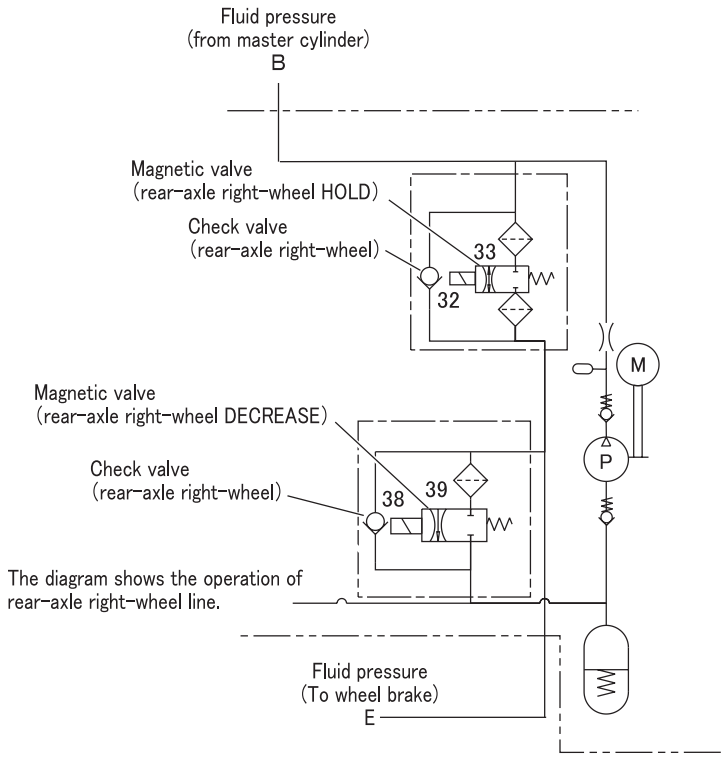

- When it becomes necessary for the electronic control of brake force distribution to hold wheel brake fluid pressure E, the electronic control unit sends a hold control signal to the magnetic valve (rear-axle right-wheel HOLD) of the hydraulic unit. As a result, the magnetic valves (rear-axle right-wheel HOLD and rear-axle right wheel DE-CREASE) are closed, so the fluid pressure is held.
- In this state, the magnetic valve (front-axle right-wheel HOLD) is kept closed by fluid pressure B from the master cylinder, so the fluid pressure from the brake master cylinder is not distributed to the wheel brakes.

https://truckmanualshub.com/

(7) Electronic Brake force Distribution (pressure decrease)

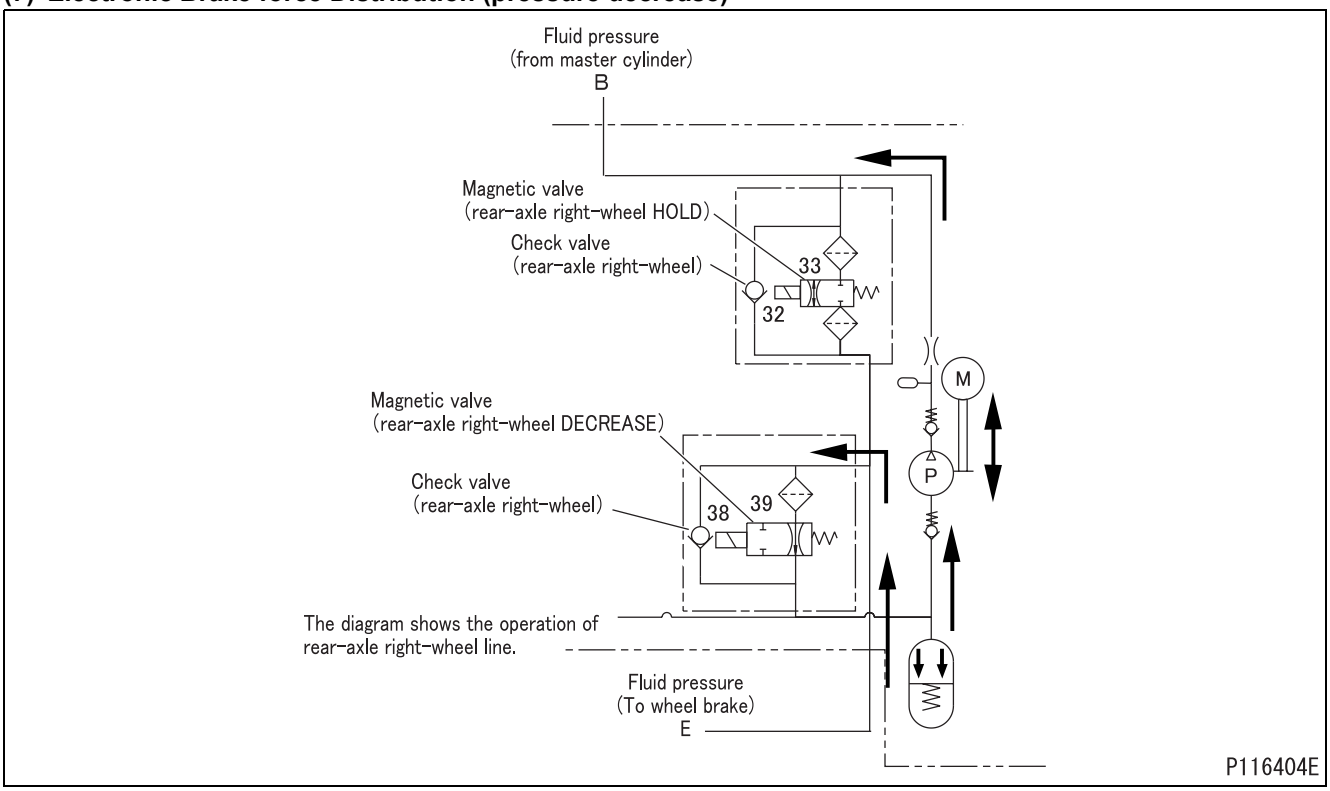

- If wheels are about to lock, the hydraulic unit (electronic control unit) sends a control signal to the relevant magnetic valves (rear-axle right-wheel DECREASE and rear-axle right-wheel HOLD). As a result, the magnetic valve (rear-axle right-wheel DECREASE) opens and the magnetic valve (rear-axle right-wheel HOLD) closes.
- Fluid pressure E from wheel brakes flows to the reservoir (rear axle) via the magnetic valve (rear-axle right-wheel DECREASE). The fluid pressure is thus decreased.
- In this state, the check valve (rear-axle right-wheel) is kept closed by fluid pressure B from the brake master cylinder, so the fluid pressure from the brake master cylinder is not distributed to the wheel brakes.

https://truckmanualshub.com/

(8) Electronic Brake force Distribution (pressure increase)

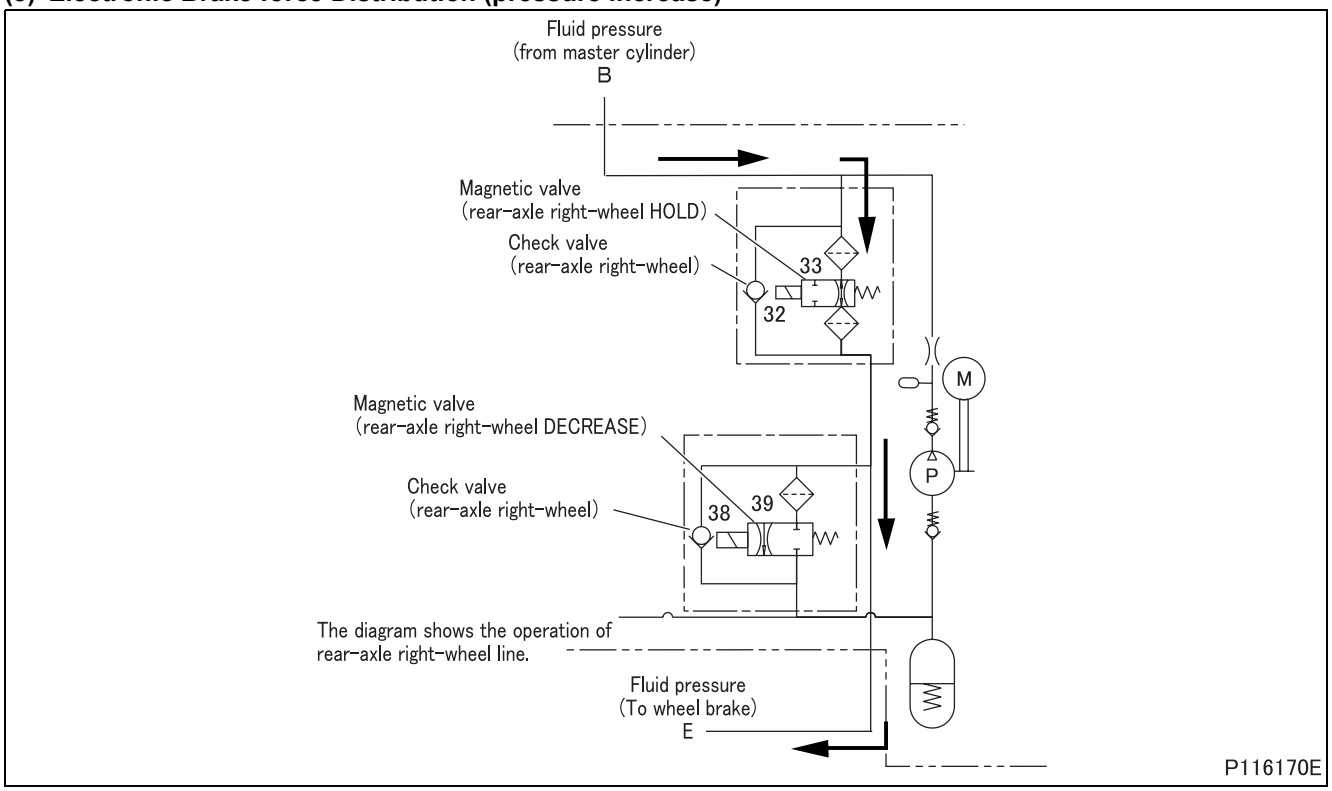

- When it becomes necessary to increase fluid pressure E to wheel brakes, electronic control unit stops sending the control signal to the magnetic valve (rear-axle right-wheel HOLD).
- As a result, the magnetic valve (rear-axle right-wheel HOLD) opens and the magnetic valve (rear-axle right-wheel DECREASE) closes. This creates the same condition as the one established when the Electronic Brake force Distribution is not working (normal brake condition), so brake pressure B produced by pressing the brake pedal works directly on wheel brakes (brake line pressure increases).

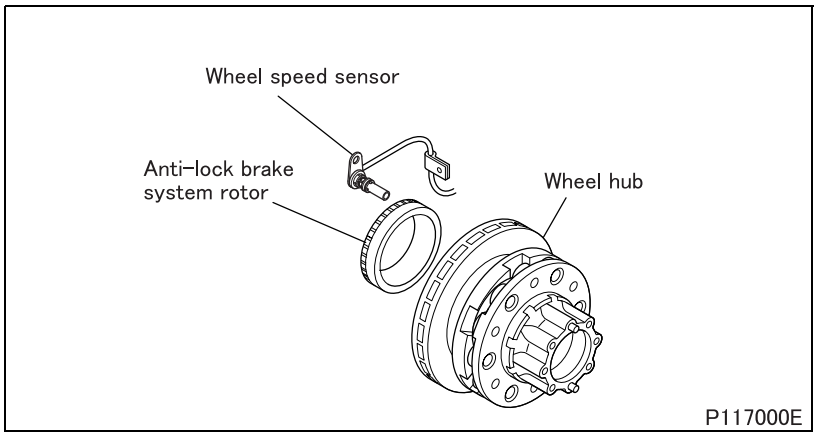

1.5 Wheel speed sensor

- Each wheel speed sensor detects wheel speed and sends this as a signal to the hydraulic unit (electronic control unit). The sensor is essentially a magnetic pickup unit, consisting of a permanent magnet core and a coil of wire wound around the core.
- A rotor is fitted onto the wheel hub. This rotor, like a ring gear, has a set of evenly-spaced teeth directly facing the sensor. As the wheel rotates, these teeth pass through the magnetic flux of the sensor, inducing potential difference in the coil which is then sent as a signal (alternating voltage proportional to the wheel speed) to the hydraulic unit (electronic control unit).

https://truckmanualshub.com/

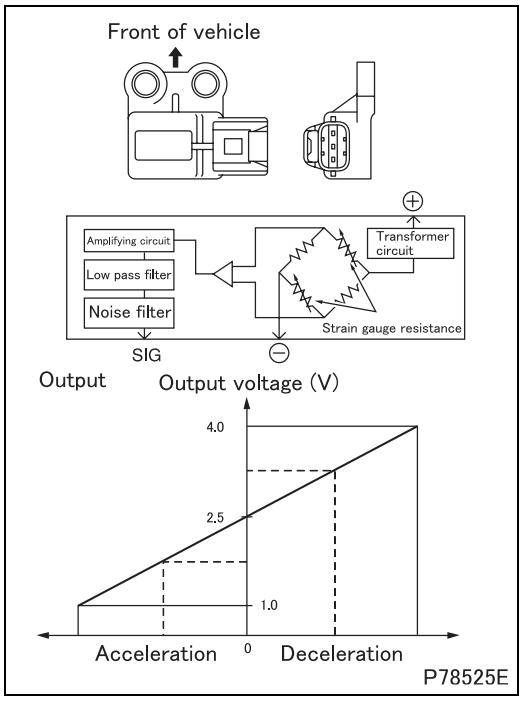

1.6 G sensor <FG>

- On slippery roads, trucks can experience wheel lock-up due to the inertia of the powertrain. This makes it difficult for the anti-lock brake system to perform controlled braking.
- To avoid this, in addition to the wheel speed sensors, a G sensor is also used to detect acceleration/deceleration and assist anti-lock brake system control.
- The G sensor is a semiconductor-type strain gauge. It detects acceleration or deceleration by converting acceleration/deceleration inertia into resistance and further converting this into voltage.

https://truckmanualshub.com/

2. Electronic Control System

2.1 Block diagram

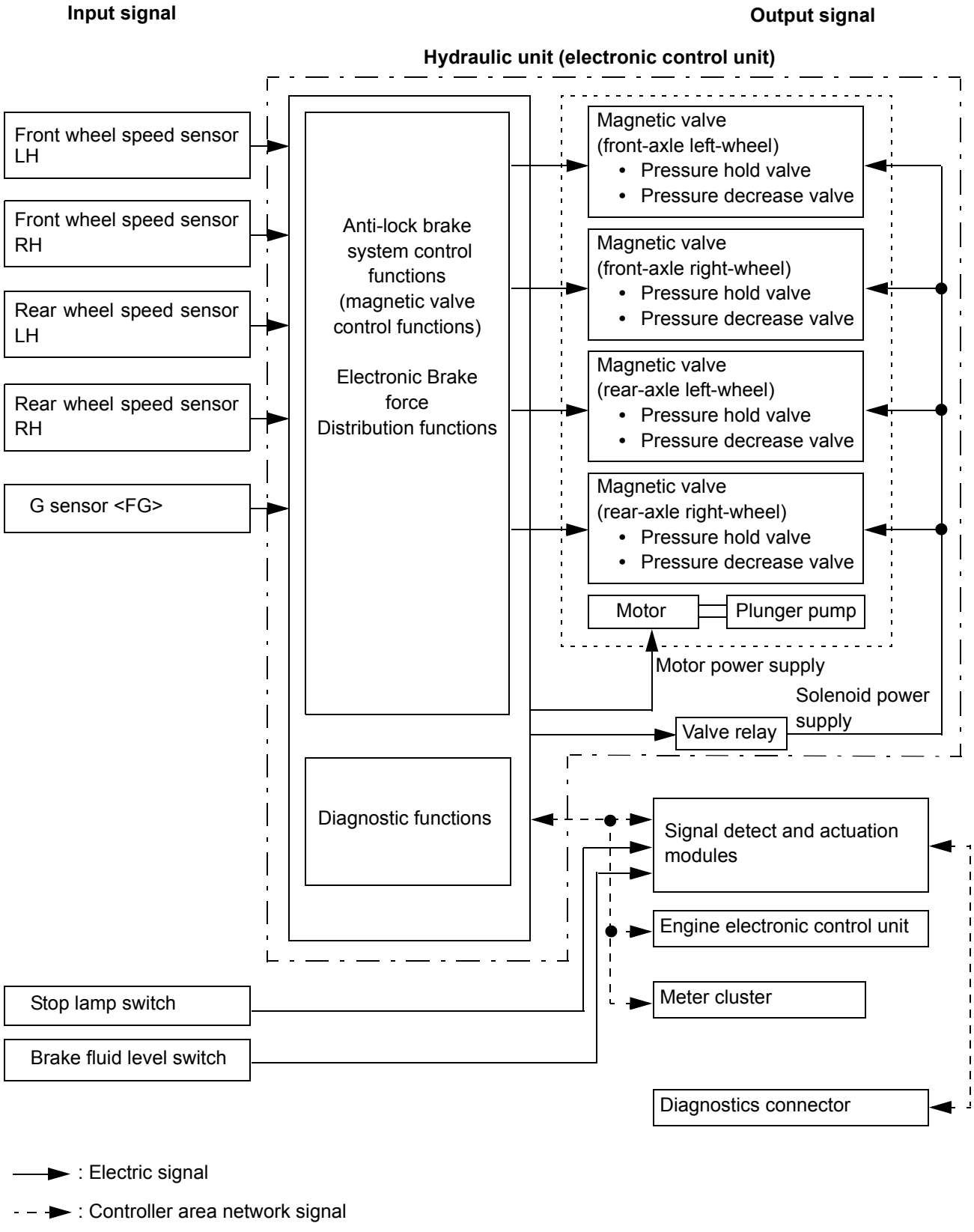

https://truckmanualshub.com/

Part	Primary function or operation
Wheel speed sensor	Senses wheel speed
Engine electronic control unit	Cuts off exhaust brake in anti-lock braking mode
SAM*	Manages power supply to system components
	Inputs stop lamp signal (indicating that brake pedal is in pressed position)
	Inputs brake fluid level signal (from brake fluid level switch indicating that brake fluid level is too low)
Meter cluster	Displays anti-lock brake system faults
G sensor <FG>	Senses acceleration/deceleration
FUSO Diagnostics (diagnostics connector)	Provides communication between FUSO diagnostics and the hydraulic unit (electronic control unit)

*: SAM (Signal detect and actuation modules)

2.2 Anti-lock brake system control functions

- The hydraulic unit (electronic control unit) continuously monitors signals from the wheel speed sensors. The unit sends signals to magnetic valves.

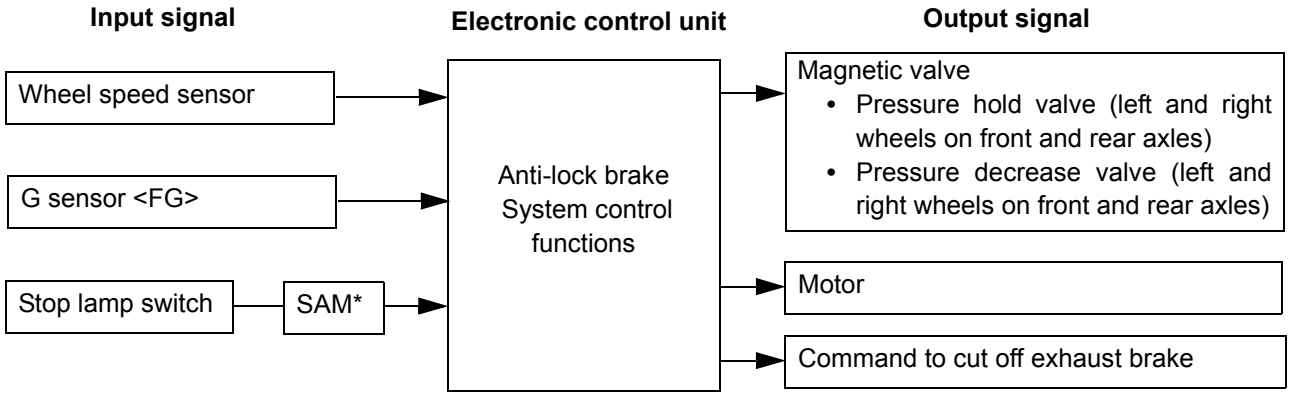

*: SAM (Signal detect and actuation modules)

(1) Anti-lock brake system fail-safe

- If any fault occurs in the anti-lock brake system, the warning lamp illuminates to warn the driver of the fault and normal braking will resume in place of the anti-lock braking which will be disabled.

(2) Electronic Brake force Distribution functions

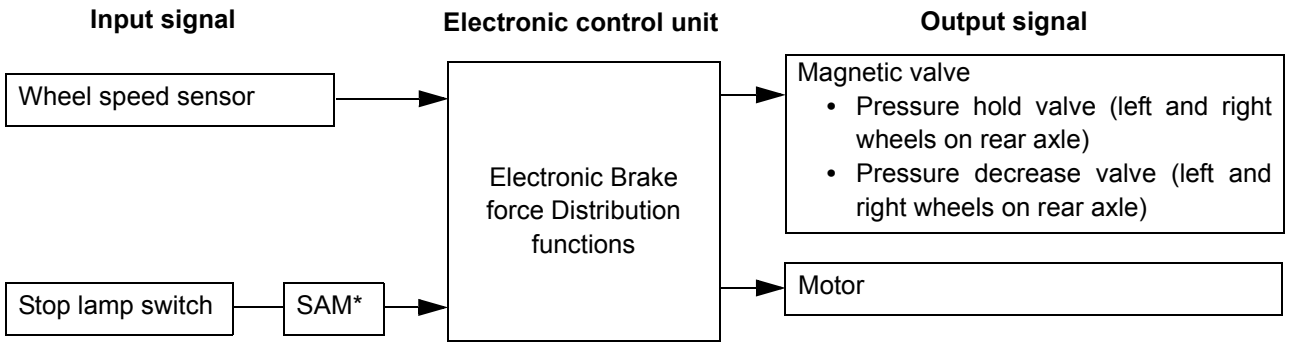

*: SAM (Signal detect and actuation modules)

https://truckmanualshub.com/

- When active, this function switches the control mode as follows to prevent further increase in slip factor of the rear wheel tires and appropriately distributes braking force to wheels according to the load on each axle.

Control mode	Description	State of actuator		
		HOLD valve	DECREASE valve	Motor
Mode 1 (HOLD)	When the slip factor of the rear wheel tires increases beyond the reference value, the system applies a control to hold the rear wheel brake pressure.	ON (closed)	OFF (closed)	OFF
Mode 2 (DECREASE)	When the slip factor of the rear wheel tires increases beyond the reference value, the system applies a control to decrease the rear wheel brake pressure.	ON (closed)	ON (closed)	OFF*
Mode 3 (INCREASE)	When the slip factor of the rear wheel tires decreases, the system applies a control to increase the rear wheel brake pressure.	OFF (open)	OFF (closed)	OFF

*: ON if brake fluid collects in the secondary circuit.

(3) Anti-lock brake system and exhaust brake

- On slippery roads, wheel lock-up can result even from application of the exhaust brake. In the anti-lock braking mode, activation of the exhaust brake makes it difficult for anti-lock brake system to perform controlled braking. To avoid this, the exhaust brake will be disabled upon activation of anti-lock brake system even when the exhaust brake switch is in the “ON” position.
  The exhaust brake will automatically be enabled upon deactivation of anti-lock brake system.

2.3 Diagnostic functions

- When the starter switch is in the ON position, the system continuously monitors the sensors and other system components. If any fault is detected, the system warns the driver of this by displaying the relevant fault information on the meter cluster. At the same time, the system also stores a relevant diagnosis code in the memory and starts operation in the fault mode.
- In the fault-mode operation, the system functions are limited to ensure safety for the driver and the vehicle. Stored diagnosis codes can be accessed using Scanning tool or can be read by observing the flashing of the warning lamp.

https://truckmanualshub.com/

3. Electronic Control Unit Schematic Diagram

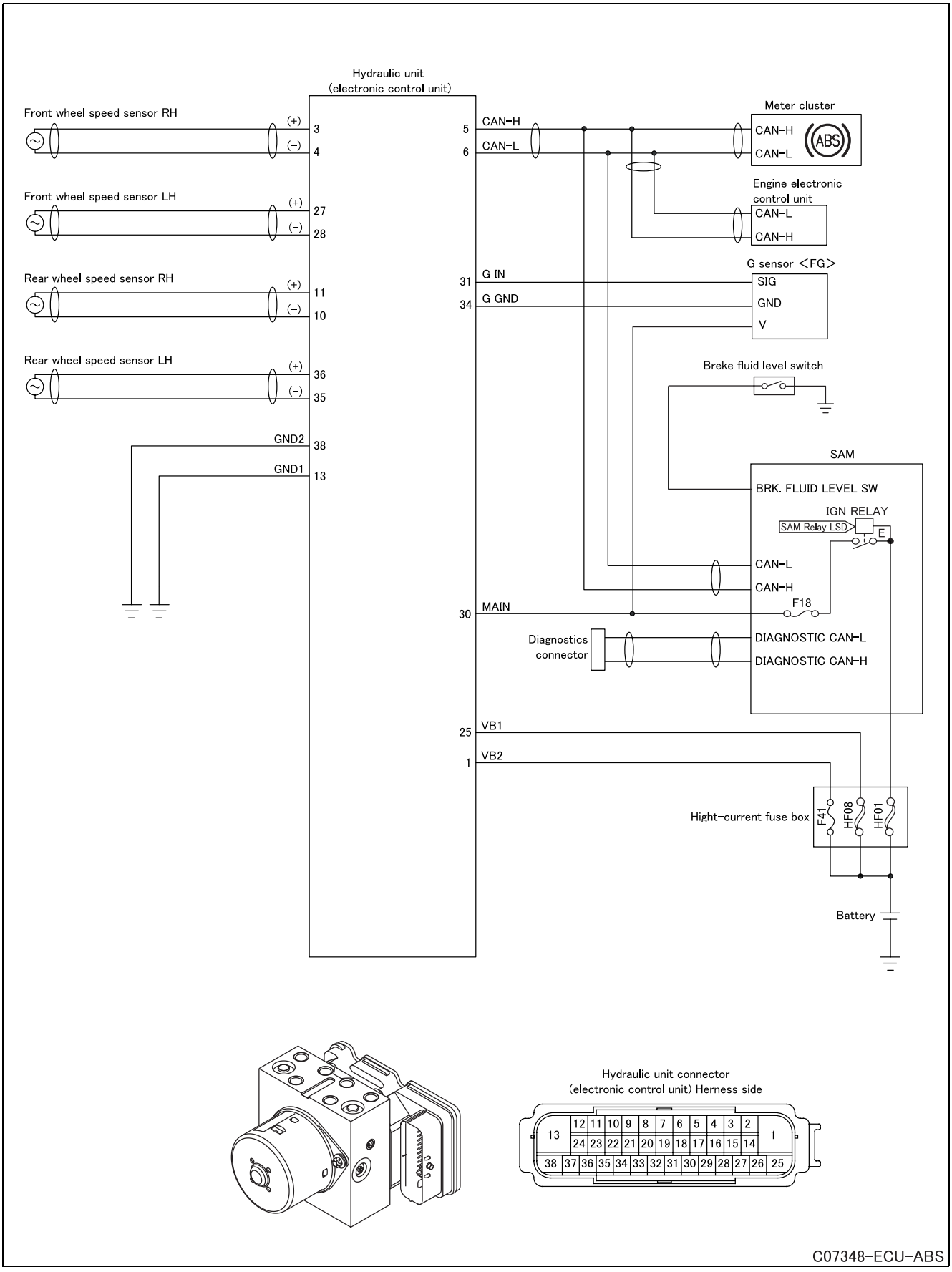

https://truckmanualshub.com/

M E M O

https://truckmanualshub.com/

1. Inspections According to Diagnosis Codes

- Since the contents of the FUSO Diagnostics are regularly updated, the descriptions and expressions may differ from those given in the service manuals. Check the latest information with the FUSO Diagnostics.

1.1 List of diagnosis codes

Code	Message	Warning lamp indication ((ABS))	Remarks
96-7	The brake fluid level is too low.	O	
789-2	The signal from component ‘B3 (Wheel speed sensor (Left front axle))’ is faulty.	O	
789-3	Component ‘B3 (Wheel speed sensor (Left front axle))’ has a short circuit to positive.	O	
789-5	Component ‘B3 (Wheel speed sensor (Left front axle))’ has an open circuit.	O	
789-7	No feedback was received from component ‘B3 (Wheel speed sensor (Left front axle))’	O	
789-9	An implausible left front wheel speed signal was received.	O	
789-10	No signal from component ‘B3 (Wheel speed sensor (Left front axle))’	O	
790-2	The signal from component ‘B4 (Wheel speed sensor (Right front axle))’ is faulty.	O	
790-3	Component ‘B4 (Wheel speed sensor (Right front axle))’ has a short circuit to positive.	O	
790-5	Component ‘B4 (Wheel speed sensor (Right front axle))’ has an open circuit.	O	
790-7	No feedback was received from component ‘B4 (Wheel speed sensor (Right front axle))’.	O	
790-9	An implausible right front wheel speed signal was received.	O	
790-10	No signal from component ‘B4 (Wheel speed sensor (Right front axle))’	O	
791-2	The signal from component ‘B5 (Wheel speed sensor (Left rear axle))’ is faulty.	O	
791-3	Component ‘B5 (Wheel speed sensor (Left rear axle))’ has a short circuit to positive.	O	
791-5	Component ‘B5 (Wheel speed sensor (Left rear axle))’ has an open circuit.	O	
791-7	No feedback was received from component ‘B5 (Wheel speed sensor (Left rear axle))’.	O	
791-9	An implausible left rear wheel speed signal was received.	O	
791-10	No signal from component ‘B5 (Wheel speed sensor (Left rear axle))’	O	
792-2	The signal from component ‘B6 (Wheel speed sensor (Right rear axle))’ is faulty.	O	
792-3	Component ‘B6 (Wheel speed sensor (Right rear axle))’ has a short circuit to positive.	O	
792-5	Component ‘B6 (Wheel speed sensor (Right rear axle))’ has an open circuit.	O	
792-7	No feedback was received from component ‘B6 (Wheel speed sensor (Right rear axle))’.	O	
792-9	An implausible right rear wheel speed signal was received.	O	
792-10	No signal from component ‘B6 (Wheel speed sensor (Right rear axle))’	O	
932-3	Component ‘Solenoid (Antilock brake system Control unit)’ has a short circuit to positive.	O	
932-5	Component ‘Solenoid (Antilock brake system Control unit)’ has an open circuit.	O	
932-6	Component ‘Solenoid (Antilock brake system Control unit)’ has an open circuit or short circuit.	O	
932-12	Component ‘Solenoid (Antilock brake system Control unit)’ or the signal lines to the component are defective.	O	
933-3	Component ‘Solenoid (Antilock brake system Control unit)’ has a short circuit to positive.	O	

https://truckmanualshub.com/

Code	Message	Warning lamp indication ((ABS))	Remarks
933-5	Component 'Solenoid (Antilock brake system Control unit)' opens too early.	O	
933-6	Component 'Solenoid (Antilock brake system Control unit)' has an open circuit or short circuit.	O	
933-12	Component 'Solenoid (Antilock brake system Control unit)' or the signal lines to the component are defective.	O	
934-3	Component 'Solenoid (Antilock brake system Control unit)' has a short circuit to positive.	O	
934-5	Component 'Solenoid (Antilock brake system Control unit)' opens too early.	O	
934-6	Component 'Solenoid (Antilock brake system Control unit)' has an open circuit or short circuit.	O	
934-12	Component 'Solenoid (Antilock brake system Control unit)' or the signal lines to the component are defective.	O	
935-3	Component 'Solenoid (Antilock brake system Control unit)' has a short circuit to positive.	O	
935-5	Component 'Solenoid (Antilock brake system Control unit)' opens too early.	O	
935-6	Component 'Solenoid (Antilock brake system Control unit)' has an open circuit or short circuit.	O	
935-12	Component 'Solenoid (Antilock brake system Control unit)' or the signal lines to the component are defective.	O	
938-3	Component 'Solenoid (Antilock brake system Control unit)' has a short circuit to positive.	O	
938-5	Component 'Solenoid (Antilock brake system Control unit)' opens too early.	O	
938-6	Component 'Solenoid (Antilock brake system Control unit)' has an open circuit or short circuit.	O	
938-12	Component 'Solenoid (Antilock brake system Control unit)' or the signal lines to the component are defective.	O	
939-3	Component 'Solenoid (Antilock brake system Control unit)' has a short circuit to positive.	O	
939-5	Component 'Solenoid (Antilock brake system Control unit)' opens too early.	O	
939-6	Component 'Solenoid (Antilock brake system Control unit)' or the signal lines to the component are defective.	O	
939-12	Component 'Solenoid (Antilock brake system Control unit)' has an open circuit or short circuit.	O	
940-3	Component 'Solenoid (Antilock brake system Control unit)' has a short circuit to positive.	O	
940-5	Component 'Solenoid (Antilock brake system Control unit)' opens too early.	O	
940-6	Component 'Solenoid (Antilock brake system Control unit)' has an open circuit or short circuit.	O	
940-12	Component 'Solenoid (Antilock brake system Control unit)' or the signal lines to the component are defective.	O	
941-3	Component 'Solenoid (Antilock brake system Control unit)' has a short circuit to positive.	O	
941-5	Component 'Solenoid (Antilock brake system Control unit)' opens too early.	O	
941-6	Component 'Solenoid (Antilock brake system Control unit)' has an open circuit or short circuit.	O	
941-12	Component 'Solenoid (Antilock brake system Control unit)' or the signal lines to the component are defective.	O	
1044-5	Component 'Drive of high pressure fuel pump' has an open circuit.	O	
1044-6	Component 'Drive of high pressure fuel pump' is sluggish or blocked.	O	
1044-12	The power supply of component 'Drive of high pressure fuel pump' has an open circuit.	O	

https://truckmanualshub.com/

Code	Message	Warning lamp indication ((ABS))	Remarks
521216-12	Faulty component ‘Antilock brake system Control unit’	–	
521217-12	Faulty component ‘Antilock brake system Control unit’	O	
521218-12	Faulty component ‘Antilock brake system Control unit’	O	
521219-12	Faulty component ‘Antilock brake system Control unit’	O	
521220-12	Faulty component ‘Antilock brake system Control unit’	O	
521221-12	Faulty component ‘Antilock brake system Control unit’	O	
521280-12	Faulty component ‘Antilock brake system Control unit’	O	
521281-12	Faulty component ‘Antilock brake system Control unit’	O	
521282-12	Faulty component ‘Antilock brake system Control unit’	O	
521283-12	Faulty component ‘Antilock brake system Control unit’	O	
521284-12	Faulty component ‘Antilock brake system Control unit’	O	
521285-12	Faulty component ‘Antilock brake system Control unit’	O	
521287-12	Faulty component ‘Antilock brake system Control unit’	O	
521288-12	Faulty component ‘Antilock brake system Control unit’	O	
521289-12	Faulty component ‘Antilock brake system Control unit’	O	
521290-12	Faulty component ‘Antilock brake system Control unit’	O	
521291-12	Faulty component ‘Antilock brake system Control unit’	O	
521292-12	Faulty component ‘Antilock brake system Control unit’	O	
521293-12	Faulty component ‘Antilock brake system Control unit’	O	
521294-12	Faulty component ‘Antilock brake system Control unit’	O	
521295-12	Faulty component ‘Antilock brake system Control unit’	O	
521296-0	The battery voltage is too high.	O	
521296-1	The battery voltage is too low.	O	
521296-3	The battery voltage is too high.	O	
521296-4	The battery voltage is too low.	O	
521296-5	Faulty component ‘Antilock brake system Control unit’	O	
521296-6	Faulty component ‘Antilock brake system Control unit’	O	
521297-12	The internal voltage is outside the permissible range.	O	
521314-2	One or more rpm sensors supply implausible values.	O	
521315-7	Faulty wheel speed sensor detected on both sides of one axle	O	
521331-7	Component ‘B62 (Acceleration sensor)’ is mechanically damaged or it sticks.	–	
521331-10	Component ‘B62 (Acceleration sensor)’ has an electrical fault.	–	
521332-2	The offset value of component ‘B62 (Acceleration sensor)’ is faulty.	–	
521333-2	The offset value of component ‘B62 (Acceleration sensor)’ is faulty.	–	
521334-2	The signal voltage of component ‘B62 (Acceleration sensor)’ is too low.	–	
521349-7	Different types of tires are installed on the vehicle.	O	
521354-12	A RAM fault was detected in the CAN controller.	O	
521356-12	CAN communications is faulty or disrupted.	O	
521367-3	Error in CAN reception from component “A20 (SAM)”	O	
521395-13	Coding failed to be executed	O	
521403-12	Faulty component ‘Antilock brake system Control unit’	O	
521404-2	Component ‘B62 (Acceleration sensor)’ has an electrical fault.	–	

https://truckmanualshub.com/

1.2 Code generation criteria and inspection items

96-7: The brake fluid level is too low.

Generation condition	• Brake fluid low signal is received
Recoverability	• System recovers on recognition of normal status
Control effected by electronic control unit	• Half system-control of anti-lock brake system is effected.
Possible causes	• Brake fluid level is lower than specified.

789-2: The signal from component 'B3 (Wheel speed sensor (Left front axle))' is faulty.

Generation condition	• Abnormal Front wheel speed sensor LH lasts longer than specified time during running
Recoverability	• System recovers if signal becomes normal after the starter switch is turned OFF and then ON.
Control effected by electronic control unit	• Anti-lock brake system control is disabled. (Electronic Brake force Distribution remains controllable.)
Possible causes	• Anti-lock brake system rotor is dented or is missing a tooth. • Wheel speed sensor is not installed properly. • Radio interference

789-3: Component 'B3 (Wheel speed sensor (Left front axle))' has a short circuit to positive.

Generation condition	• Front wheel speed sensor LH circuit is shorted.
Recoverability	• System recovers if signal becomes normal after the starter switch is turned OFF and then ON.
Control effected by electronic control unit	• Anti-lock brake system control is disabled. (Electronic Brake force Distribution remains controllable.)
Possible causes	• Signal harness between hydraulic unit (electronic control unit) and wheel speed sensor is short circuited. • Ground harness between hydraulic unit (electronic control unit) and wheel speed sensor is short circuited. • Defective wheel speed sensor • Defective hydraulic unit (electronic control unit)

789-5: Component 'B3 (Wheel speed sensor (Left front axle))' has an open circuit.

Generation condition	• Electric continuity is lost in Front wheel speed sensor LH circuit.
Recoverability	• System recovers if signal becomes normal after the starter switch is turned OFF and then ON.
Control effected by electronic control unit	• Anti-lock brake system control is disabled. (Electronic Brake force Distribution remains controllable.)
Possible causes	• Signal harness between hydraulic unit (electronic control unit) and wheel speed sensor is open-circuited. • Ground harness between hydraulic unit (electronic control unit) and wheel speed sensor is open-circuited. • Signal harness between hydraulic unit (electronic control unit) and wheel speed sensor is shorted to higher-potential point. • Defective wheel speed sensor • Defective hydraulic unit (electronic control unit)

789-7: No feedback was received from component 'B3 (Wheel speed sensor (Left front axle))'

Generation condition	• Wheel speed is lower than specified.
Recoverability	• System recovers if signal becomes normal after the starter switch is turned OFF and then ON.
Control effected by electronic control unit	• Anti-lock brake system control is disabled. (Electronic Brake force Distribution remains controllable.)
Possible causes	• Defective anti-lock brake system rotor (Improper air gap.) • Anti-lock brake system rotor is not provided. • Wheel speed sensor not installed properly

https://truckmanualshub.com/

789-9: An implausible left front wheel speed signal was received.

Generation condition	• Wheel acceleration becomes abnormal during operation.
Recoverability	• System recovers if signal becomes normal after the starter switch is turned OFF and then ON.
Control effected by electronic control unit	• Anti-lock brake system control is disabled. (Electronic Brake force Distribution remains controllable.)
Possible causes	• Wheel speed sensor not installed properly • Anti-lock brake system rotor dented or is missing a tooth • Defective wheel speed sensor • Defective harness

789-10: No signal from component 'B3 (Wheel speed sensor (Left front axle))'

Generation condition	• Wheel speed (front-axle left-wheel) does not become higher than specified at initial start.
Recoverability	• System recovers if signal becomes normal after the starter switch is turned OFF and then ON.
Control effected by electronic control unit	• Anti-lock brake system control is disabled. (Electronic Brake force Distribution remains controllable.)
Possible causes	• Wheel speed sensor not installed properly • Defective wheel speed sensor • Defective hydraulic unit (electronic control unit)

790-2: The signal from component 'B4 (Wheel speed sensor (Right front axle))' is faulty.

Generation condition	• Abnormal Front wheel speed sensor RH lasts longer than specified time during running.
Recoverability	• System recovers if signal becomes normal after the starter switch is turned OFF and then ON.
Control effected by electronic control unit	• Anti-lock brake system control is disabled. (Electronic Brake force Distribution remains controllable.)
Possible causes	• Anti-lock brake system rotor dented or lacks a tooth. • Wheel speed sensor not installed properly • Radio interference

790-3: Component 'B4 (Wheel speed sensor (Right front axle))' has a short circuit to positive.

Generation condition	• Wheel speed sensor circuit is shorted.
Recoverability	• System recovers if signal becomes normal after the starter switch is turned OFF and then ON.
Control effected by electronic control unit	• Anti-lock brake system control is disabled. (Electronic Brake force Distribution remains controllable.)
Possible causes	• Signal harness between hydraulic unit (electronic control unit) and wheel speed sensor is short-circuited. • Ground harness between hydraulic unit (electronic control unit) and wheel speed sensor is short-circuited. • Defective wheel speed sensor • Defective hydraulic unit (electronic control unit)

https://truckmanualshub.com/

790-5: Component 'B4 (Wheel speed sensor (Right front axle))' has an open circuit.

Generation condition	• Electric continuity is lost in wheel speed sensor circuit.
Recoverability	• System recovers if signal becomes normal after the starter switch is turned OFF and then ON.
Control effected by electronic control unit	• Anti-lock brake system control is disabled. (Electronic Brake force Distribution remains controllable.)
Possible causes	• Signal harness between hydraulic unit (electronic control unit) and wheel speed sensor is open-circuited. • Ground harness between hydraulic unit (electronic control unit) and wheel speed sensor is open-circuited. • Signal harness between hydraulic unit (electronic control unit) and wheel speed sensor is shorted to higher potential point. • Defective wheel speed sensor • Defective hydraulic unit (electronic control unit)

790-7: No feedback was received from component 'B4 (Wheel speed sensor (Right front axle))'.

Generation condition	• Wheel speed does not become higher than specified.
Recoverability	• System recovers if signal becomes normal after the starter switch is turned OFF and then ON.
Control effected by electronic control unit	• Anti-lock brake system control is disabled. (Electronic Brake force Distribution remains controllable.)
Possible causes	• Defective anti-lock brake system rotor (Improper gap.) • Anti-lock brake system rotor is missing. • Wheel speed sensor not installed properly

790-9: An implausible right front wheel speed signal was received.

Generation condition	• Abnormal wheel acceleration is detected during operation.
Recoverability	• System recovers if signal becomes normal after the starter switch is turned OFF and then ON.
Control effected by electronic control unit	• Anti-lock brake system control is disabled. (Electronic Brake force Distribution remains controllable.)
Possible causes	• Wheel speed sensor not installed properly • Anti-lock brake system rotor dented or is missing a tooth • Defective wheel speed sensor • Defective harness

790-10: No signal from component 'B4 (Wheel speed sensor (Right front axle))'

Generation condition	• Wheel speed (front-axle left-wheel) does not become higher than specified at initial start.
Recoverability	• System recovers if signal becomes normal after the starter switch is turned OFF and then ON.
Control effected by electronic control unit	• Anti-lock brake system control is disabled. (Electronic Brake force Distribution remains controllable.)
Possible causes	• Wheel speed sensor not installed properly • Defective wheel speed sensor • Defective hydraulic unit (electronic control unit)

791-2: The signal from component 'B5 (Wheel speed sensor (Left rear axle))' is faulty.

Generation condition	• Abnormal Rear wheel speed sensor LH lasts longer than specified time during running.
Generation condition	• System recovers if signal becomes normal after the starter switch is turned OFF and then ON.
Control effected by electronic control unit	• Anti-lock brake system control is disabled. (Electronic Brake force Distribution remains controllable.)
Possible causes	• Anti-lock brake system rotor dented or is missing a tooth • Wheel speed sensor not installed properly • Radio interference

https://truckmanualshub.com/

791-3: Component 'B5 (Wheel speed sensor (Left rear axle))' has a short circuit to positive.

Generation condition	• Wheel speed sensor circuit is shorted.
Recoverability	• System recovers if signal becomes normal after the starter switch is turned OFF and then ON.
Control effected by electronic control unit	• Anti-lock brake system control is disabled. (Electronic Brake force Distribution remains controllable.)
Possible causes	• Signal harness between hydraulic unit (electronic control unit) and wheel speed sensor is short-circuited. • Ground harness between hydraulic unit (electronic control unit) and wheel speed sensor is short-circuited. • Defective wheel speed sensor • Defective hydraulic unit (electronic control unit)

791-5: Component 'B5 (Wheel speed sensor (Left rear axle))' has an open circuit.

Generation condition	• Electric continuity is lost in wheel speed sensor circuit.
Recoverability	• System recovers if signal becomes normal after the starter switch is turned OFF and then ON.
Control effected by electronic control unit	• Anti-lock brake system control is disabled. (Electronic Brake force Distribution remains controllable.)
Possible causes	• Signal harness between hydraulic unit (electronic control unit) and wheel speed sensor is open-circuited. • Ground harness between hydraulic unit (electronic control unit) and wheel speed sensor is open-circuited. • Signal harness between hydraulic unit (electronic control unit) and wheel speed sensor is shorted to higher potential point. • Defective wheel speed sensor • Defective hydraulic unit (electronic control unit)

791-7: No feedback was received from component 'B5 (Wheel speed sensor (Left rear axle))'.

Generation condition	• Wheel speed does not become higher than specified.
Recoverability	• System recovers if signal becomes normal after the starter switch is turned OFF and then ON.
Control effected by electronic control unit	• Anti-lock brake system control is disabled. (Electronic Brake force Distribution remains controllable.)
Possible causes	• Defective anti-lock brake system rotor (Improper air gap.) • Anti-lock brake system rotor is missing. • Wheel speed sensor not installed properly

791-9: An implausible left rear wheel speed signal was received.

Generation condition	• Abnormal wheel acceleration is detected during operation.
Recoverability	• System recovers if signal becomes normal after the starter switch is turned OFF and then ON.
Control effected by electronic control unit	• Anti-lock brake system control is disabled. (Electronic Brake force Distribution remains controllable.)
Possible causes	• Wheel speed sensor not installed properly • Anti-lock brake system rotor dented or is missing a tooth • Defective wheel speed sensor • Defective harness

https://truckmanualshub.com/

791-10: No signal from component 'B5 (Wheel speed sensor (Left rear axle))'

Generation condition	• Wheel speed (front-axle left-wheel) does not become higher than specified at initial start.
Recoverability	• System recovers if signal becomes normal after the starter switch is turned OFF and then ON.
Control effected by electronic control unit	• Anti-lock brake system control is disabled. (Electronic Brake force Distribution remains controllable.)
Possible causes	• Wheel speed sensor not installed properly • Defective wheel speed sensor • Defective hydraulic unit (electronic control unit)

792-2: The signal from component 'B6 (Wheel speed sensor (Right rear axle))' is faulty.

Generation condition	• Abnormal Rear wheel speed sensor RH lasts longer than specified length of time during running.
Recoverability	• System recovers if signal becomes normal after the starter switch is turned OFF and then ON.
Control effected by electronic control unit	• Anti-lock brake system control is disabled. (Electronic Brake force Distribution remains controllable.)
Possible causes	• Anti-lock brake system rotor dented or is missing a tooth • Wheel speed sensor not installed properly • Radio interference

792-3: Component 'B6 (Wheel speed sensor (Right rear axle))' has a short circuit to positive.

Generation condition	• Wheel speed sensor circuit is shorted.
Recoverability	• System recovers if signal becomes normal after the starter switch is turned OFF and then ON.
Control effected by electronic control unit	• Anti-lock brake system control is disabled. (Electronic Brake force Distribution remains controllable.)
Possible causes	• Signal harness between hydraulic unit (electronic control unit) and wheel speed sensor is short-circuited. • Ground harness between hydraulic unit (electronic control unit) and wheel speed sensor is short-circuited. • Defective wheel speed sensor • Defective hydraulic unit (electronic control unit)

792-5: Component 'B6 (Wheel speed sensor (Right rear axle))' has an open circuit.

Generation condition	• Electric continuity is lost in wheel speed sensor circuit.
Recoverability	• System recovers if signal becomes normal after the starter switch is turned OFF and then ON.
Control effected by electronic control unit	• Anti-lock brake system control is disabled. (Electronic Brake force Distribution remains controllable.)
Possible causes	• Signal harness between hydraulic unit (electronic control unit) and wheel speed sensor is open-circuited. • Ground harness between hydraulic unit (electronic control unit) and wheel speed sensor is open-circuited. • Signal harness between hydraulic unit (electronic control unit) and wheel speed sensor is shorted to higher potential point. • Defective wheel speed sensor • Defective hydraulic unit (electronic control unit)

https://truckmanualshub.com/

792-7: No feedback was received from component 'B6 (Wheel speed sensor (Right rear axle))'.

Generation condition	• Wheel speed does not become higher than specified.
Recoverability	• System recovers if signal becomes normal after the starter switch is turned OFF and then ON.
Control effected by electronic control unit	• Anti-lock brake system control is disabled. (Electronic Brake force Distribution remains controllable.)
Possible causes	• Defective anti-lock brake system rotor (Improper air gap.) • Anti-lock brake system rotor is missing. • Wheel speed sensor not installed properly

792-9: An implausible right rear wheel speed signal was received.

Generation condition	• Abnormal wheel acceleration is detected during running.
Recoverability	• System recovers if signal becomes normal after the starter switch is turned OFF and then ON.
Control effected by electronic control unit	• Anti-lock brake system control is disabled. (Electronic Brake force Distribution remains controllable.)
Possible causes	• Wheel speed sensor not installed properly • Anti-lock brake system rotor dented or is missing a tooth • Defective wheel speed sensor • Defective harness

792-10: No signal from component 'B6 (Wheel speed sensor (Right rear axle))'

Generation condition	• Wheel speed signal (front-axle right-wheel) does not become higher than specified at initial start.
Recoverability	• System recovers if signal becomes normal after the starter switch is turned OFF and then ON.
Control effected by electronic control unit	• Anti-lock brake system control is disabled. (Electronic Brake force Distribution remains controllable.)
Possible causes	• Wheel speed sensor not installed properly • Defective wheel speed sensor • Defective hydraulic unit (electronic control unit)

932-3: Component 'Solenoid (Antilock brake system Control unit)' has a short circuit to positive.

Generation condition	• Abnormal value of monitor voltage remains for specified time against activation command for magnetic valve (front-axle left-wheel) in hydraulic unit (electronic control unit).
Recoverability	• System recovers if signal becomes normal after the starter switch is turned OFF and then ON.
Control effected by electronic control unit	• Anti-lock brake system control is disabled. (Electronic Brake force Distribution remains controllable.)
Possible causes	• Defective hydraulic unit (electronic control unit)

932-5: Component 'Solenoid (Antilock brake system Control unit)' has an open circuit.

Generation condition	• Abnormal value of monitor voltage remains for specified time against activation commend for magnetic valve (front-axle left-wheel) in hydraulic unit (electronic control unit).
Recoverability	• System recovers if signal becomes normal after the starter switch is turned OFF and then ON.
Control effected by electronic control unit	• Anti-lock brake system control is disabled. (Electronic Brake force Distribution remains controllable.)
Possible causes	• Defective hydraulic unit (electronic control unit)

https://truckmanualshub.com/

932-6: Component 'Solenoid (Antilock brake system Control unit)' has an open circuit or short circuit.

Generation condition	• Magnetic valve (front-axle left-wheel) in hydraulic unit (electronic control unit) are both short- and open-circuited.
Recoverability	• System recovers on recognition of normal status.
Control effected by electronic control unit	• Anti-lock brake system control is disabled.
Possible causes	• Defective hydraulic unit (electronic control unit)

932-12: Component 'Solenoid (Antilock brake system Control unit)' or the signal lines to the component are defective.

Generation condition	• Abnormal value of monitor voltage remains for specified time against activation command for magnetic valve (front-axle left-wheel) in hydraulic unit (electronic control unit).
Recoverability	• System recovers if signal becomes normal after the starter switch is turned OFF and then ON.
Control effected by electronic control unit	• Anti-lock brake system control is disabled.
Possible causes	• Defective hydraulic unit (electronic control unit)

933-3: Component 'Solenoid (Antilock brake system Control unit)' has a short circuit to positive.

Generation condition	• Abnormal value of monitor voltage remains for specified time against activation commend for magnetic valve (front-axle right-wheel) in hydraulic unit (electronic control unit).
Recoverability	• System recovers if signal becomes normal after the starter switch is turned OFF and then ON.
Control effected by electronic control unit	• Anti-lock brake system control is disabled. (Electronic Brake force Distribution remains controllable.)
Possible causes	• Defective hydraulic unit (electronic control unit)

933-5: Component 'Solenoid (Antilock brake system Control unit)' opens too early.

Generation condition	• Abnormal value of monitor voltage remains for specified time against activation command for magnetic valve (front-axle right-wheel) in hydraulic unit (electronic control unit).
Recoverability	• System recovers if signal becomes normal after the starter switch is turned OFF and then ON.
Control effected by electronic control unit	• Anti-lock brake system control is disabled. (Electronic Brake force Distribution remains controllable.)
Possible causes	• Defective hydraulic unit (electronic control unit)

933-6: Component 'Solenoid (Antilock brake system Control unit)' has an open circuit or short circuit.

Generation condition	• Magnetic valve (front-axle right-wheel) in hydraulic unit (electronic control unit) is both short- and open-circuited.
Recoverability	• System recovers on recognition of normal status.
Control effected by electronic control unit	• Anti-lock brake system control is disabled.
Possible causes	• Defective hydraulic unit (electronic control unit)

933-12: Component 'Solenoid (Antilock brake system Control unit)' or the signal lines to the component are defective.

Generation condition	• Abnormal value of monitor voltage remains for specified length of time against activation command for magnetic valve (front-axle right-wheel) in hydraulic unit (electronic control unit)
Recoverability	• System recovers if signal becomes normal after the starter switch is turned OFF and then ON.
Control effected by electronic control unit	• Anti-lock brake system control is disabled.
Possible causes	• Defective hydraulic unit (electronic control unit)

https://truckmanualshub.com/

934-3: Component 'Solenoid (Antilock brake system Control unit)' has a short circuit to positive.

Generation condition	• Abnormal value of monitor voltage remains for specified time against activation command for magnetic valve (rear-axle left-wheel) in hydraulic unit (electronic control unit).
Recoverability	• System recovers if signal becomes normal after the starter switch is turned OFF and then ON.
Control effected by electronic control unit	• Anti-lock brake system control is disabled.
Possible causes	• Defective hydraulic unit (electronic control unit)

934-5: Component 'Solenoid (Antilock brake system Control unit)' opens too early.

Generation condition	• Abnormal value of monitor voltage remains for specified time against activation command for magnetic valve (rear-axle left-wheel) in hydraulic unit (electronic control unit).
Recoverability	• System recovers if signal becomes normal after the starter switch is turned OFF and then ON.
Control effected by electronic control unit	• Anti-lock brake system control is disabled.
Possible causes	• Defective hydraulic unit (electronic control unit)

934-6: Component 'Solenoid (Antilock brake system Control unit)' has an open circuit or short circuit.

Generation condition	• Magnetic valve (rear-axle right-wheel) in hydraulic unit (electronic control unit) are both short- and open-circuited.
Recoverability	• System recovers on recognition of normal status.
Control effected by electronic control unit	• Anti-lock brake system control is disabled.
Possible causes	• Defective hydraulic unit (electronic control unit)

934-12: Component 'Solenoid (Antilock brake system Control unit)' or the signal lines to the component are defective.

Generation condition	• Abnormal value of monitor voltage remains for specified time against activation command for magnetic valve (rear-axle left-wheel) in hydraulic unit (electronic control unit).
Recoverability	• System recovers if signal becomes normal after the starter switch is turned OFF and then ON.
Control effected by electronic control unit	• Anti-lock brake system control is disabled.
Possible causes	• Defective hydraulic unit (electronic control unit)

935-3: Component 'Solenoid (Antilock brake system Control unit)' has a short circuit to positive.

Generation condition	• Abnormal value of monitor voltage remains for specified time against activation commend for magnetic valve (rear-axle right-wheel) in hydraulic unit (electronic control unit).
Recoverability	• System recovers if signal becomes normal after the starter switch is turned OFF and then ON.
Control effected by electronic control unit	• Anti-lock brake system control is disabled.
Possible causes	• Defective hydraulic unit (electronic control unit)

935-5: Component 'Solenoid (Antilock brake system Control unit)' opens too early.

Generation condition	• Abnormal value of monitor voltage remains for specified time against activation command for magnetic valve (rear-axle right-wheel) in hydraulic unit (electronic control unit).
Recoverability	• System recovers if signal becomes normal after the starter switch is turned OFF and then ON.
Control effected by electronic control unit	• Anti-lock brake system control is disabled.
Possible causes	• Defective hydraulic unit (electronic control unit)

https://truckmanualshub.com/

935-6: Component 'Solenoid (Antilock brake system Control unit)' has an open circuit or short circuit.

Generation condition	• Magnetic valve (rear-axle right-wheel) in hydraulic unit (electronic control unit) are both short- and open-circuited.
Recoverability	• System recovers on recognition of normal status.
Control effected by electronic control unit	• Anti-lock brake system control is disabled.
Possible causes	• Defective hydraulic unit (electronic control unit)

935-12: Component 'Solenoid (Antilock brake system Control unit)' or the signal lines to the component are defective.

Generation condition	• Abnormal value of monitor voltage remains for specified time against activation command for magnetic valve (rear-axle right-wheel) in hydraulic unit (electronic control unit).
Recoverability	• System recovers if signal becomes normal after the starter switch is turned OFF and then ON.
Control effected by electronic control unit	• Anti-lock brake system control is disabled.
Possible causes	• Defective hydraulic unit (electronic control unit)

938-3: Component 'Solenoid (Antilock brake system Control unit)' has a short circuit to positive.

Generation condition	• Abnormal value of monitor voltage remains for specific time against activation command for magnetic valve (front-axle left-wheel) in hydraulic unit (electronic control unit).
Recoverability	• System recovers if signal becomes normal after the starter switch is turned OFF and then ON.
Control effected by electronic control unit	• Anti-lock brake system control is disabled. (Electronic Brake force Distribution remains controllable.)
Possible causes	• Defective hydraulic unit (electronic control unit)

938-5: Component 'Solenoid (Antilock brake system Control unit)' opens too early.

Generation condition	• Abnormal value of monitor voltage remains for specific time against activation command for magnetic valve (front-axle left-wheel) in hydraulic unit (electronic control unit).
Recoverability	• System recovers if signal becomes normal after the starter switch is turned OFF and then ON.
Control effected by electronic control unit	• Anti-lock brake system control is disabled. (Electronic Brake force Distribution normally remains controllable.)
Possible causes	• Defective hydraulic unit (electronic control unit)

938-6: Component 'Solenoid (Antilock brake system Control unit)' has an open circuit or short circuit.

Generation condition	• Magnetic valve (front-axle left-wheel) in hydraulic unit (electronic control unit) is both short- and open- circuited.
Recoverability	• System recovers on recognition of normal status.
Control effected by electronic control unit	• Anti-lock brake system control is disabled.
Possible causes	• Defective hydraulic unit (electronic control unit)

938-12: Component 'Solenoid (Antilock brake system Control unit)' or the signal lines to the component are defective.

Generation condition	• Abnormal value of monitor voltage remains for specific time against activation command for magnetic valve (front-axle left-wheel) in hydraulic unit (electronic control unit).
Recoverability	• System recovers if signal becomes normal after the starter switch is turned OFF and then ON.
Control effected by electronic control unit	• Anti-lock brake system control is disabled.
Possible causes	• Defective hydraulic unit (electronic control unit)

https://truckmanualshub.com/

939-3: Component 'Solenoid (Antilock brake system Control unit)' has a short circuit to positive.

Generation condition	• Abnormal value of monitor voltage remains for specific time against activation command for magnetic valve (front-axle right-wheel) in hydraulic unit (electronic control unit).
Recoverability	• System recovers if signal becomes normal after the starter switch is turned OFF and then ON.
Control effected by electronic control unit	• Anti-lock brake system control is disabled. (Electronic Brake force Distribution remains controllable.)
Possible causes	• Defective hydraulic unit (electronic control unit)

939-5: Component 'Solenoid (Antilock brake system Control unit)' opens too early.

Generation condition	• Abnormal value of monitor voltage remains for specific time against activation command for magnetic valve (front-axle right-wheel) in hydraulic unit (electronic control unit).
Recoverability	• System recovers if signal becomes normal after the starter switch is turned OFF and then ON.
Control effected by electronic control unit	• Anti-lock brake system control is disabled. (Electronic Brake force Distribution remains controllable.)
Possible causes	• Defective hydraulic unit (electronic control unit)

939-6: Component 'Solenoid (Antilock brake system Control unit)' or the signal lines to the component are defective.

Generation condition	• Magnetic valve (front-axle right-wheel) in hydraulic unit (electronic control unit) is both short- and open- circuited.
Recoverability	• System recovers on recognition of normal status.
Control effected by electronic control unit	• Anti-lock brake system control is disabled.
Possible causes	• Defective hydraulic unit (electronic control unit)

939-12: Component 'Solenoid (Antilock brake system Control unit)' has an open circuit or short circuit.

Generation condition	• Abnormal value of monitor voltage remains for specific time against activation command for magnetic valve (front-axle right-wheel) in hydraulic unit (electronic control unit).
Recoverability	• System recovers if signal becomes normal after the starter switch is turned OFF and then ON.
Control effected by electronic control unit	• Anti-lock brake system control is disabled.
Possible causes	• Defective hydraulic unit (electronic control unit)

940-3: Component 'Solenoid (Antilock brake system Control unit)' has a short circuit to positive.

Generation condition	• Abnormal value of monitor voltage remains for specific time against activation command for magnetic valve (rear-axle left-wheel) in hydraulic unit (electronic control unit).
Recoverability	• System recovers if signal becomes normal after the starter switch is turned OFF and then ON.
Control effected by electronic control unit	• Anti-lock brake system control is disabled. (Limited control of Electronic Brake force Distribution effected.)
Possible causes	• Defective hydraulic unit (electronic control unit)

940-5: Component 'Solenoid (Antilock brake system Control unit)' opens too early.

Generation condition	• Abnormal value of monitor voltage remains for specific time against activation command for magnetic valve (rear-axle left-wheel) in hydraulic unit (electronic control unit).
Recoverability	• System recovers if signal becomes normal after the starter switch is turned OFF and then ON.
Control effected by electronic control unit	• Anti-lock brake system control is disabled.
Possible causes	• Defective hydraulic unit (electronic control unit)

https://truckmanualshub.com/

940-6: Component 'Solenoid (Antilock brake system Control unit)' has an open circuit or short circuit.

Generation condition	• Magnetic valve (rear-axle right-wheel) in hydraulic unit (electronic control unit) is both short- and open-circuited.
Recoverability	• System recovers on recognition of normal status.
Control effected by electronic control unit	• Anti-lock brake system control is disabled.
Possible causes	• Defective hydraulic unit (electronic control unit)

940-12: Component 'Solenoid (Antilock brake system Control unit)' or the signal lines to the component are defective.

Generation condition	• Abnormal value of monitor voltage remains for specific time against activation command for magnetic valve (rear-axle left-wheel) in hydraulic unit (electronic control unit).
Recoverability	• System recovers if signal becomes normal after the starter switch is turned OFF and then ON.
Control effected by electronic control unit	• Anti-lock brake system control is disabled.
Possible causes	• Defective hydraulic unit (electronic control unit)

941-3: Component 'Solenoid (Antilock brake system Control unit)' has a short circuit to positive.

Generation condition	• Abnormal value of monitor voltage remains for specific time against activation command for magnetic valve (rear-axle right-wheel) in hydraulic unit (electronic control unit).
Recoverability	• System recovers if signal becomes normal after the starter switch is turned OFF and then ON.
Control effected by electronic control unit	• Anti-lock brake system control is disabled. (Limited control of Electronic Brake force Distribution effected.)
Possible causes	• Defective hydraulic unit (electronic control unit)

941-5: Component 'Solenoid (Antilock brake system Control unit)' opens too early.

Generation condition	• Abnormal value of monitor voltage remains for specific time against activation command for magnetic valve (rear-axle right-wheel) in hydraulic unit (electronic control unit).
Recoverability	• System recovers if signal becomes normal after the starter switch is turned OFF and then ON.
Control effected by electronic control unit	• Anti-lock brake system control is disabled.
Possible causes	• Defective hydraulic unit (electronic control unit)

941-6: Component 'Solenoid (Antilock brake system Control unit)' has an open circuit or short circuit.

Generation condition	• Magnetic valve (rear-axle left-wheel) in hydraulic unit (electronic control unit) is both short- and open-circuited.
Recoverability	• System recovers on recognition of normal status.
Control effected by electronic control unit	• Anti-lock brake system control is disabled.
Possible causes	• Defective hydraulic unit (electronic control unit)

941-12: Component 'Solenoid (Antilock brake system Control unit)' or the signal lines to the component are defective.

Generation condition	• Abnormal value of monitor voltage remains for specific time against activation commend for magnetic valve (rear-axle right-wheel) in hydraulic unit (electronic control unit).
Recoverability	• System recovers if signal becomes normal after the starter switch is turned OFF and then ON.
Control effected by electronic control unit	• Anti-lock brake system control is disabled.
Possible causes	• Defective hydraulic unit (electronic control unit)

https://truckmanualshub.com/

1044-5: Component 'Drive of high pressure fuel pump' has an open circuit.

Generation condition	• Feedback voltage is higher than specified when motor in hydraulic unit (electronic control unit) is off.
Recoverability	• System recovers if signal becomes normal after the starter switch is turned OFF and then ON.
Control effected by electronic control unit	• Anti-lock brake system control is disabled. (Electronic Brake force Distribution remains controllable.)
Possible causes	• Defective motor in hydraulic unit (electronic control unit) • Defective hydraulic unit (electronic control unit)

1044-6: Component 'Drive of high pressure fuel pump' is sluggish or blocked.

Generation condition	• Motor in hydraulic unit (electronic control unit) is inoperative.
Recoverability	• System recovers if signal becomes normal after the starter switch is turned OFF and then ON.
Control effected by electronic control unit	• Anti-lock brake system control is disabled. (Electronic Brake force Distribution remains controllable.)
Possible causes	• Defective motor in hydraulic unit (electronic control unit) • Defective hydraulic unit (electronic control unit)

1044-12: The power supply of component 'Drive of high pressure fuel pump' has an open circuit.

Generation condition	• Terminal voltage of motor in hydraulic unit (electronic control unit) is lower than battery voltage.
Recoverability	• System recovers if signal becomes normal after the starter switch is turned OFF and then ON.
Control effected by electronic control unit	• Anti-lock brake system control is disabled. (Electronic Brake force Distribution normally remains controllable.)
Possible causes	• Power harness between battery and hydraulic unit (electronic control unit) is open-circuited or shorted to ground. • Malfunction of battery • Defective alternator • Defective hydraulic unit (electronic control unit)

521216-12: Faulty component 'Antilock brake system Control unit'

Generation condition	• Minor error not affecting control, such as interruption of controller area network communication (CAN) signal not used for control, occurs.
Recoverability	• System recovers on recognition of normal status.
Control effected by electronic control unit	• Normal control is effected.
Possible causes	• Electronic control unit is internally faulty. • Controller area network communication (CAN) signal is abnormal.

521217-12: Faulty component 'Antilock brake system Control unit'

Generation condition	• Internal abnormality occurs in hydraulic unit (electronic control unit)
Recoverability	• System recovers if signal becomes normal after the starter switch is turned OFF and then ON.
Control effected by electronic control unit	• Anti-lock brake system control is disabled.
Possible causes	• Defective hydraulic unit (electronic control unit)

521218-12: Faulty component 'Antilock brake system Control unit'

Generation condition	• Internal abnormality occurs in hydraulic unit (electronic control unit)
Recoverability	• System recovers if signal becomes normal after the starter switch is turned OFF and then ON.
Control effected by electronic control unit	• Anti-lock brake system control is disabled.
Possible causes	• Defective hydraulic unit (electronic control unit)

https://truckmanualshub.com/

521219-12: Faulty component 'Antilock brake system Control unit'

Generation condition	• Internal abnormality occurs in hydraulic unit (electronic control unit)
Recoverability	• System recovers if signal becomes normal after the starter switch is turned OFF and then ON.
Control effected by electronic control unit	• Anti-lock brake system control is disabled.
Possible causes	• Defective hydraulic unit (electronic control unit)

521220-12: Faulty component 'Antilock brake system Control unit'

Generation condition	• Internal abnormality occurs in hydraulic unit (electronic control unit)
Recoverability	• System recovers if signal becomes normal after the starter switch is turned OFF and then ON.
Control effected by electronic control unit	• Anti-lock brake system control is disabled.
Possible causes	• Defective hydraulic unit (electronic control unit)

521221-12: Faulty component 'Antilock brake system Control unit'

Generation condition	• Internal abnormality occurs in hydraulic unit (electronic control unit)
Recoverability	• System recovers if signal becomes normal after the starter switch is turned OFF and then ON.
Control effected by electronic control unit	• Anti-lock brake system control is disabled.
Possible causes	• Defective hydraulic unit (electronic control unit)

521280-12: Faulty component 'Antilock brake system Control unit'

Generation condition	• Internal abnormality occurs in hydraulic unit (electronic control unit)
Recoverability	• System recovers if signal becomes normal after the starter switch is turned OFF and then ON.
Control effected by electronic control unit	• Anti-lock brake system control is disabled.
Possible causes	• Defective hydraulic unit (electronic control unit)

521281-12: Faulty component 'Antilock brake system Control unit'

Generation condition	• Internal abnormality occurs in hydraulic unit (electronic control unit)
Recoverability	• System recovers if signal becomes normal after the starter switch is turned OFF and then ON.
Control effected by electronic control unit	• Anti-lock brake system control is disabled.
Possible causes	• Defective hydraulic unit (electronic control unit)

521282-12: Faulty component 'Antilock brake system Control unit'

Generation condition	• Internal abnormality occurs in hydraulic unit (electronic control unit)
Recoverability	• System recovers if signal becomes normal after the starter switch is turned OFF and then ON.
Control effected by electronic control unit	• Anti-lock brake system control is disabled.
Possible causes	• Defective hydraulic unit (electronic control unit)

521283-12: Faulty component 'Antilock brake system Control unit'

Generation condition	• Internal abnormality occurs in hydraulic unit (electronic control unit)
Recoverability	• System recovers if signal becomes normal after the starter switch is turned OFF and then ON.
Control effected by electronic control unit	• Anti-lock brake system control is disabled.
Possible causes	• Defective hydraulic unit (electronic control unit)

https://truckmanualshub.com/

521284-12: Faulty component 'Antilock brake system Control unit'

Generation condition	• Internal abnormality occurs in hydraulic unit (electronic control unit)
Recoverability	• System recovers if signal becomes normal after the starter switch is turned OFF and then ON.
Control effected by electronic control unit	• Anti-lock brake system control is disabled.
Possible causes	• Defective hydraulic unit (electronic control unit)

521285-12: Faulty component 'Antilock brake system Control unit'

Generation condition	• Internal abnormality occurs in hydraulic unit (electronic control unit)
Recoverability	• System recovers if signal becomes normal after the starter switch is turned OFF and then ON.
Control effected by electronic control unit	• Anti-lock brake system control is disabled.
Possible causes	• Defective hydraulic unit (electronic control unit)

521287-12: Faulty component 'Antilock brake system Control unit'

Generation condition	• Internal abnormality occurs in hydraulic unit (electronic control unit)
Recoverability	• System recovers if signal becomes normal after the starter switch is turned OFF and then ON.
Control effected by electronic control unit	• Anti-lock brake system control is disabled.
Possible causes	• Defective hydraulic unit (electronic control unit)

521288-12: Faulty component 'Antilock brake system Control unit'

Generation condition	• Internal abnormality occurs in hydraulic unit (electronic control unit)
Recoverability	• System recovers if signal becomes normal after the starter switch is turned OFF and then ON.
Control effected by electronic control unit	• Anti-lock brake system control is disabled.
Possible causes	• Defective hydraulic unit (electronic control unit)

521289-12: Faulty component 'Antilock brake system Control unit'

Generation condition	• Internal abnormality occurs in hydraulic unit (electronic control unit)
Recoverability	• System recovers if signal becomes normal after the starter switch is turned OFF and then ON.
Control effected by electronic control unit	• Anti-lock brake system control is disabled.
Possible causes	• Defective hydraulic unit (electronic control unit)

521290-12: Faulty component 'Antilock brake system Control unit'

Generation condition	• Internal abnormality occurs in hydraulic unit (electronic control unit)
Recoverability	• System recovers if signal becomes normal after the starter switch is turned OFF and then ON.
Control effected by electronic control unit	• Anti-lock brake system control is disabled.
Possible causes	• Defective hydraulic unit (electronic control unit)

521291-12: Faulty component 'Antilock brake system Control unit'

Generation condition	• Internal abnormality occurs in hydraulic unit (electronic control unit)
Recoverability	• System recovers if signal becomes normal after the starter switch is turned OFF and then ON.
Control effected by electronic control unit	• Anti-lock brake system control is disabled.
Possible causes	• Defective hydraulic unit (electronic control unit)

https://truckmanualshub.com/

521292-12: Faulty component 'Antilock brake system Control unit'

Generation condition	• Internal abnormality occurs in hydraulic unit (electronic control unit)
Recoverability	• System recovers if signal becomes normal after the starter switch is turned OFF and then ON.
Control effected by electronic control unit	• Anti-lock brake system control is disabled.
Possible causes	• Defective hydraulic unit (electronic control unit)

521293-12: Faulty component 'Antilock brake system Control unit'

Generation condition	• Internal abnormality occurs in hydraulic unit (electronic control unit)
Recoverability	• System recovers if signal becomes normal after the starter switch is turned OFF and then ON.
Control effected by electronic control unit	• Anti-lock brake system control is disabled.
Possible causes	• Defective hydraulic unit (electronic control unit)

521294-12: Faulty component 'Antilock brake system Control unit'

Generation condition	• Internal abnormality occurs in hydraulic unit (electronic control unit)
Recoverability	• System recovers if signal becomes normal after the starter switch is turned OFF and then ON.
Control effected by electronic control unit	• Anti-lock brake system control is disabled.
Possible causes	• Defective hydraulic unit (electronic control unit)

521295-12: Faulty component 'Antilock brake system Control unit'

Generation condition	• Internal abnormality occurs in hydraulic unit (electronic control unit)
Recoverability	• System recovers if signal becomes normal after the starter switch is turned OFF and then ON.
Control effected by electronic control unit	• Anti-lock brake system control is disabled.
Possible causes	• Defective hydraulic unit (electronic control unit)

521296-0: The battery voltage is too high.

Generation condition	• System voltage is higher than 19 V.
Recoverability	• System recovers if signal becomes normal after the starter switch is turned OFF and then ON.
Control effected by electronic control unit	• Anti-lock brake system control is disabled.
Possible causes	• Defective alternator • Defective hydraulic unit (electronic control unit)

521296-1: The battery voltage is too low.

Generation condition	• System voltage is lower than 8 V.
Recoverability	• System recovers on recognition of normal status.
Control effected by electronic control unit	• Anti-lock brake system control is disabled.
Possible causes	• ON power line between starter switch and hydraulic unit (electronic control unit) is open-circuited or shorted to ground. • Malfunction of battery • Defective alternator • Defective relay of signal detect and actuation modules • Defective starter switch • Defective signal detect and actuation modules • Defective hydraulic unit (electronic control unit)

https://truckmanualshub.com/

521296-3: The battery voltage is too high.

Generation condition	• System voltage is higher than 16 V.
Recoverability	• System recovers on recognition of normal status.
Control effected by electronic control unit	• Anti-lock brake system control is disabled. (Electronic Brake force Distribution remains controllable.)
Possible causes	• Defective alternator • Defective hydraulic unit (electronic control unit)

521296-4: The battery voltage is too low.

Generation condition	• System voltage is lower than 9 V.
Recoverability	• System recovers on recognition of normal status.
Control effected by electronic control unit	• Anti-lock brake system control is disabled.
Possible causes	• ON power line between starter switch and hydraulic unit (electronic control unit) is open-circuited or shorted to ground. • Malfunction of battery • Defective alternator • Defective relay of signal detect and actuation modules • Defective starter switch • Defective signal detect and actuation modules • Defective hydraulic unit (electronic control unit)

521296-5: Faulty component 'Antilock brake system Control unit'

Generation condition	• Solenoid coil voltage lowers below 80% of battery voltage when power switch in hydraulic unit (electronic control unit) is ON.
Recoverability	• System recovers if signal becomes normal after the starter switch is turned OFF and then ON.
Control effected by electronic control unit	• Anti-lock brake system control is disabled.
Possible causes	• Defective hydraulic unit (electronic control unit)

521296-6: Faulty component 'Antilock brake system Control unit'

Generation condition	• Solenoid coil voltage lowers below 80% of battery voltage when power switch in hydraulic unit (electronic control unit) is ON.
Recoverability	• System recovers if signal becomes normal after the starter switch is turned OFF and then ON.
Control effected by electronic control unit	• Anti-lock brake system control is disabled.
Possible causes	• Defective hydraulic unit (electronic control unit)

521297-12: The internal voltage is outside the permissible range.

Generation condition	• Voltage in hydraulic unit (electronic control unit) is abnormal.
Recoverability	• System recovers if signal becomes normal after the starter switch is turned OFF and then ON.
Control effected by electronic control unit	• Anti-lock brake system control is disabled.
Possible causes	• Defective hydraulic unit (electronic control unit)

521314-2: One or more rpm sensors supply implausible values.

Generation condition	• Wheel speed error involving two or more wheels is detected.
Recoverability	• System recovers on recognition of normal status.
Control effected by electronic control unit	• Anti-lock brake system control is disabled.
Possible causes	• Wheel speed sensor not installed properly • Defective wheel speed sensor

https://truckmanualshub.com/

521315-7: Faulty wheel speed sensor detected on both sides of one axle

Generation condition	• Simultaneous failure of wheel speed sensors for left and right wheels on one axle is detected
Recoverability	• System recovers on recognition of normal status.
Control effected by electronic control unit	• Anti-lock brake system control is disabled.
Possible causes	• Wheel speed sensor not installed properly • Defective wheel speed sensor

521331-7: Component 'B62 (Acceleration sensor)' is mechanically damaged or it sticks.

Generation condition	• Signal does not change for the specified period of time, or signal that exceeds the specified upper limit is detected.
Recoverability	• System recovers if signal becomes normal after the starter switch is turned OFF and then ON.
Control effected by electronic control unit	• Normal control is effected.
Possible causes	• Defective G sensor • Defective harness • Defective hydraulic unit (electronic control unit)

521331-10: Component 'B62 (Acceleration sensor)' has an electrical fault.

Generation condition	• Variation that exceeds the specified value is detected in the next signal.
Recoverability	• System recovers if signal becomes normal after the starter switch is turned OFF and then ON.
Control effected by electronic control unit	• Normal control is effected.
Possible causes	• Defective G sensor • Defective harness • Defective hydraulic unit (electronic control unit)

521332-2: The offset value of component 'B62 (Acceleration sensor)' is faulty.

Generation condition	• Zero-point offset that exceeds the specified value is detected when the vehicle is stopped.
Recoverability	• System recovers if signal becomes normal after the starter switch is turned OFF and then ON.
Control effected by electronic control unit	• Normal control is effected.
Possible causes	• Defective G sensor • Defective harness • Defective hydraulic unit (electronic control unit)

521333-2: The offset value of component 'B62 (Acceleration sensor)' is faulty.

Generation condition	• Zero-point offset that exceeds the specified value is detected when the vehicle is running.
Recoverability	• System recovers if signal becomes normal after the starter switch is turned OFF and then ON.
Control effected by electronic control unit	• Normal control is effected.
Possible causes	• Defective G sensor • Defective harness • Defective hydraulic unit (electronic control unit)

https://truckmanualshub.com/

521334-2: The signal voltage of component 'B62 (Acceleration sensor)' is too low.

Generation condition	• Variation that exceeds the specified value is detected through comparison with theoretical value.
Recoverability	• System recovers if signal becomes normal after the starter switch is turned OFF and then ON.
Control effected by electronic control unit	• Normal control is effected.
Possible causes	• Harness between hydraulic unit (electronic control unit) and battery open or shorted to ground • Signal harness between hydraulic unit (electronic control unit) and G sensor is open-circuited. • Ground harness between hydraulic unit (electronic control unit) and G sensor is open-circuited. • Signal harness between hydraulic unit (electronic control unit) and G sensor is shorted to higher-potential point. • Defective G sensor • Defective hydraulic unit (electronic control unit)

521349-7: Different types of tires are installed on the vehicle.

Generation condition	• Speed of one wheel differs from that of others by more than 25%.
Recoverability	• System recovers if signal becomes normal after the starter switch is turned OFF and then ON.
Control effected by electronic control unit	• Anti-lock brake system control is disabled.
Possible causes	• Tire is not as specified in size. • Anti-lock brake system rotor is not as specified.

521354-12: A RAM fault was detected in the CAN controller.

Generation condition	• Specified controller area network communication (CAN) signal is not received.
Recoverability	• System recovers on recognition of normal status.
Control effected by electronic control unit	• Half-system control of anti-lock brake system is effected.
Possible causes	• Controller area network communication (CAN) line is open-circuited, shorted to higher potential point, shorted to ground or short circuited. • Defective hydraulic unit (electronic control unit)

521356-12: CAN communications is faulty or disrupted.

Generation condition	• Specified controller area network communication (CAN) signal is not received.
Recoverability	• System recovers on recognition of normal status.
Control effected by electronic control unit	• Half-system control of anti-lock brake system is effected.
Possible causes	• Controller area network communication (CAN) line is open-circuited, shorted to higher potential point, shorted to ground or short circuited. • Defective hydraulic unit (electronic control unit)

521367-3: Error in CAN reception from component “A20 (SAM)”

Generation condition	• Necessary controller area network communication (CAN) from signal detect and actuation module is lost.
Recoverability	• System recovers on recognition of normal status.
Control effected by electronic control unit	• Half-system control of anti-lock brake system is effected.
Possible causes	• Controller area network communication (CAN) line is open-circuited, shorted to higher potential point, shorted to ground or short circuited. • Defective signal detect and actuation modules. • Defective hydraulic unit (electronic control unit)

https://truckmanualshub.com/

521395-13: Coding failed to be executed

Generation condition	• Conditioning has not been done.
Recoverability	• System recovers on recognition of normal status.
Control effected by electronic control unit	• Anti-lock brake system control is disabled.
Possible causes	• Conditioning has not been done. • Conditioning is not sufficient.

521403-12: Faulty component 'Antilock brake system Control unit'

Generation condition	• Internal abnormality occurs in hydraulic unit (electronic control unit).
Recoverability	• System recovers if signal becomes normal after the starter switch is turned OFF and then ON.
Control effected by electronic control unit	• Anti-lock brake system control is disabled.
Possible causes	• Defective hydraulic unit (electronic control unit)

521404-2: Component 'B62 (Acceleration sensor)' has an electrical fault.

Generation condition	• Intermittent open- or short-range output is detected.
Recoverability	• System recovers if signal becomes normal after the starter switch is turned OFF and then ON.
Control effected by electronic control unit	• Normal control is effected.
Possible causes	• Harness between hydraulic unit (electronic control unit) and battery open or shorted to ground • Signal harness between hydraulic unit (electronic control unit) and G sensor is open-circuited. • Ground harness between hydraulic unit (electronic control unit) and G sensor is open-circuited. • Signal harness between hydraulic unit (electronic control unit) and G sensor is shorted to higher-potential point. • Defective G sensor • Defective hydraulic unit (electronic control unit)

https://truckmanualshub.com/

2. FUSO Diagnostics Service Data (Measured Values)

- Since the contents of the FUSO Diagnostics are regularly updated, the descriptions and expressions may differ from those given in the service manuals. Check the latest information with the FUSO Diagnostics.

Current value group	Description	Value	Explanation
Voltages	Supply voltage: High pressure and return pump	9 to 18 V	Shows the motor supply voltage in the hydraulic unit (electronic control unit).
	Power supply of valves	9 to 18 V	Shows the magnetic valve supply voltage in the hydraulic unit (electronic control unit).
	Supply voltage: Relay 'Solenoid valve'	9 to 18 V	Shows the magnetic valve relay voltage in the hydraulic unit (electronic control unit).
	Uecu unfiltered	9 to 18 V	Indicates the supply voltage of hydraulic unit (electronic control unit) (unfiltered).
	Uecu filtered	9 to 18 V	Indicates the supply voltage of hydraulic unit (electronic control unit) (filtered).
Vehicle speed	Wheel speed at left rear axle	0 to 155.4 mph	Shows the wheel speed sensor (rear-axle left-wheel) value.
	Wheel speed at right rear axle	0 to 155.4 mph	Shows the wheel speed sensor (rear-axle right-wheel) value.
	Wheel speed at left front axle	0 to 155.4 mph	Shows the wheel speed sensor (front-axle left-wheel) value.
	Wheel speed at right front axle	0 to 155.4 mph	Shows the wheel speed sensor (front-axle right-wheel) value.
Switches	Exhaust Brake Switch Status	ON/OFF	Indicates state of exhaust brake switch.
	Exhaust brake cut status	ON/OFF	Shows the exhaust brake cutoff state.
	Intake valve ABS Rear axle RIGHT	ON/OFF	Shows the magnetic valve (rear-axle right-wheel) HOLD valve status.
	Intake valve ABS Rear axle LEFT	ON/OFF	Shows the magnetic valve (rear-axle left-wheel) HOLD valve status.
	Outlet valve ABS Rear axle RIGHT	ON/OFF	Shows the magnetic valve (rear-axle right-wheel) DECREASE valve status.
	Outlet valve ABS Rear axle LEFT	ON/OFF	Shows the magnetic valve (rear-axle left-wheel) DECREASE valve status.
	Intake valve ABS Front axle RIGHT	ON/OFF	Shows the magnetic valve (front-axle right-wheel) HOLD valve status.
	Intake valve ABS Front axle LEFT	ON/OFF	Shows the magnetic valve (front-axle left-wheel) HOLD valve status.
	Outlet valve ABS Front axle RIGHT	ON/OFF	Shows the magnetic valve (front-axle right-wheel) DECREASE valve status.
	Outlet valve ABS Front axle LEFT	ON/OFF	Shows the magnetic valve (front-axle left-wheel) DECREASE valve status.
	Switch 'Brake lights' Low	ON/OFF	Shows the brake switch 1 status.
	Switch 'Brake lights' High	ON/OFF	Shows the brake switch 2 status.
	Status of component 'Relay Solenoid valve'	OK/NOT OK	Shows the valve relay status.
	Switch 'Brake fluid level'	ON/OFF	Shows the brake fluid level switch status.
	High pressure and return pump	ON/OFF	Shows the motor status.
Control unit information	Total number of ignition sequences	0 to 65535	Shows the cumulative number of times the starter switch was turned ON.

https://truckmanualshub.com/

Current value group	Description	Value	Explanation
On-board actual values	Indicator lamp 'ABS'	ON/OFF	Shows the anti-lock brake system indicator lamp state.
	ABS ACTIVE	ON/OFF	Shows the anti-lock brake system operation state.
	EBD ACTIVE	ON/OFF	Shows the Electronic Brake force Distribution operation state.
Other actual value	2WD_4WD info	0/1/2/3/4	Indicates vehicle specification information.

3. Actuator Test (Control) Using FUSO Diagnostics

- Since the contents of the FUSO Diagnostics are regularly updated, the descriptions and expressions may differ from those given in the service manuals. Check the latest information with the FUSO Diagnostics.
- The basic conditions for performing the actuator test: Vehicle stopped, engine stopped, starter switch ON, DUONIC™ system in P range, and accelerator pedal and brake pedal released.

Selection	Description
Solenoid valve Rear axle RIGHT Solenoid valve Front axle LEFT Solenoid valve Front axle RIGHT Solenoid valve Rear axle LEFT	Activate the magnetic valve (for the wheel being tested) and the motor. [Additional condition for performing actuator test] There is no error in the magnetic valve and motor when the starter switch is ON. 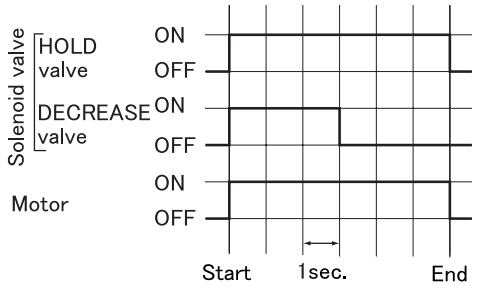 P116880E
Hydraulic pump	Activate the motor. [Additional condition for performing actuator test] There is no error in the motor when the starter switch is ON. 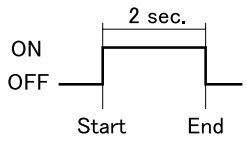 P118190E
Manual bleeding	Perform control of manual bleeding. Connect a vacuum measuring instrument to the component "Diagnosis tool". [Additional condition for performing actuator test] Engine starting. [Test method] Press the brake pedal to perform air bleeding. (See Gr35.)

https://truckmanualshub.com/

4. Electronic Control Unit Coding

- The anti-brake system electronic control unit has various kinds of information such as technical data of vehicle and equipment registered as coding data.
- Therefore, each time the anti-brake system electronic control unit is replaced or some specification changes are made, the coding data must surely be rewritten using FUSO diagnostics.

5. Rewriting of Coding Data

- If specification changes have been made, be sure to rewrite the relevant coding data. For details of the rewriting procedure, consult an authorized dealer or distributor.

Remedy \ Hydraulic unit (electronic control unit) data		Overall data (latest record data set for applicable vehicles)	Remarks
Coding	Replacement of electronic control unit	O	

6. Electronic Control Unit Input/Output Table

- See the Electronic Control Unit Schematic Diagram for the pin locations of each signal and ground.

Device to be connected	Terminal	Input/output	Voltage and wave form
High-current fuse box (VB1)	25-Ground	In	[Measurement condition] Disconnect the electronic control unit and harness, then inspect on the vehicle-side connector. [Judgment criteria] 10 to 16 V
High-current fuse box (VB2)	1-Ground	In	[Measurement condition] Disconnect the electronic control unit and harness, then perform inspection on the vehicle-side connector. [Judgment criteria] 10 to 16 V
Front wheel speed sensor RH	3-4	In	[Measurement condition] Disconnect the electronic control unit and harness, then perform inspection on the vehicle-side connector. For the method of connecting the oscilloscope, see #329 “Inspection of wheel speed sensor” in “INSPECTION OF ELECTRICAL PARTS”. [Judgment criteria]
Front wheel speed sensor LH	27-28	In	
Rear wheel speed sensor RH	11-10	In	
Rear wheel speed sensor LH	36-35	In	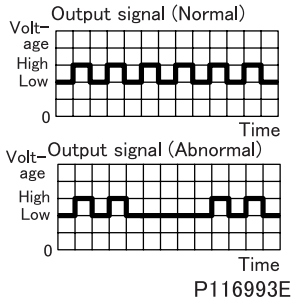 P116993E • If the spacing between adjacent pulses is wider in part of the waveform, there may be a dent or missing tooth in the rotor. • Visually inspect the rotor for defects and replace if necessary. • (See Gr26A, 26B and 27.)

https://truckmanualshub.com/

M E M O

https://truckmanualshub.com/

ON-VEHICLE INSPECTION AND ADJUSTMENT

1. Functional Check

1.1 Inspection with vehicle stationary

- While depressing the brake pedal, check the hydraulic unit (electronic control unit) and the brake pipes and connections for fluid leakage.
- If fluid is leaking from the hydraulic unit (electronic control unit), replace the unit. If fluid is leaking from the brake pipes or connections, retighten the hardware.

1.2 Inspection using brake tester

- Using the brake tester, check each wheel for braking force following the normal procedures.
- If faulty, check the wheel brake in question, the service brake system and the hydraulic unit (electronic control unit).

1.3 Inspection of anti-lock brake system operation while driving the vehicle

WARNING ⚠

- **During this inspection, do not allow any other vehicle or anyone into the test course.**

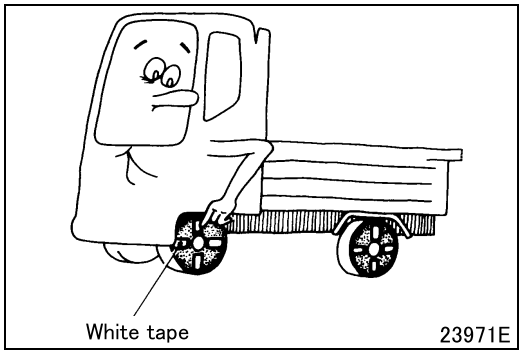

- The vehicle being tested should be unloaded.
- Apply white tape onto the walls of front and rear tires to aid the observation of wheel rotation.
- Turn the starter switch from LOCK to ON. The warning lamp should illuminate and, in several seconds, extinguish.
- Drive the vehicle at 20 to 30 km/h {12 to 19 mph} and apply the brakes hard. The wheels should not lock up.

https://truckmanualshub.com/

2. Inspection of Hydraulic Unit (Electronic Control Unit) Operation

2.1 Inspection using Multi-Use Tester

- The hydraulic unit (electronic control unit) cannot be inspected for operation during control effected by the electronic control unit at the time of a fault which will cause a diagnosis code to occur. The inspection should be performed after system recovery from the control through troubleshooting.
- Jack up the vehicle and support it on jack stands, or place the vehicle on the rollers of a brake tester.
- Apply the parking brake when testing the front brake. Apply chocks to the front wheels when testing the rear brake.
- During inspection, keep the brake tester rollers and the tires dry.
- With the parking brake released, feel the brake drag of each wheel. When the brake tester is used, read the brake drag indicated in the tester.
- Connect the Multi-Use Tester. (See Gr00.)
- With the transmission in neutral, start the engine.

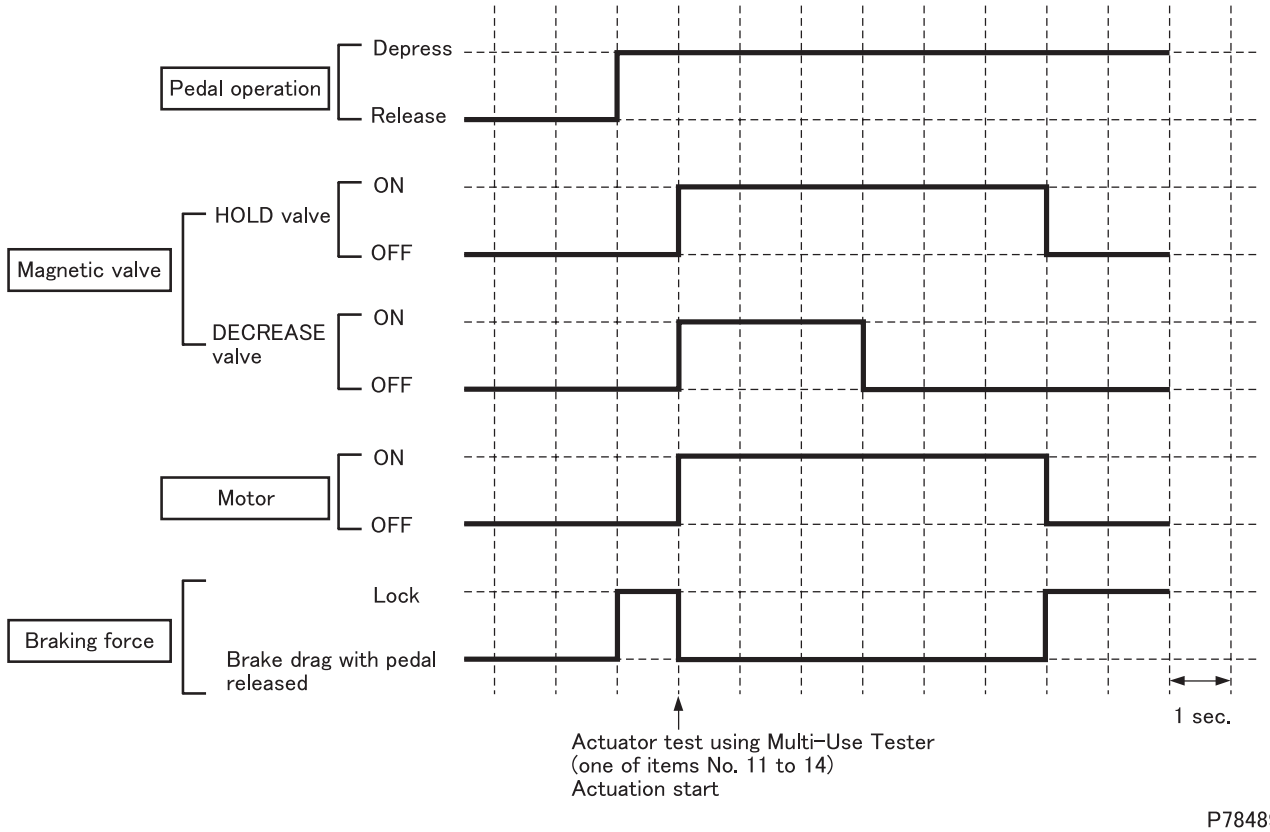

- When abnormality is found as a result of inspection, take a remedial action in accordance with the table below.

Symptom	Cause	Remedial action
Wheel will not lock up when brake pedal is pressed.	Clogged brake line outside hydraulic unit (electronic control unit)	Inspect and clean brake line
	Clogged line inside hydraulic unit (electronic control unit)	Replace hydraulic unit (electronic control unit)
Braking force will not drop.	Incorrectly connected hydraulic unit (electronic control unit) brake piping	Connect piping correctly
	Faulty hydraulic unit (electronic control unit) magnetic valve	Replace hydraulic unit (electronic control unit)

https://truckmanualshub.com/

3. Inspection after Replacing or Removing/Installing Hydraulic Unit (Electronic Control Unit)

- Check the hydraulic unit (electronic control unit) for normal operation.
- After replacing or removing/installing the hydraulic unit (electronic control unit), always check the system for normal operation. Controlled braking will not be available if the piping is incorrect.
- After replacement or reinstallation of the hydraulic unit (electronic control unit), be sure to bleed the brake system. (See Gr35.)
- The vehicle harness connector is equipped with a locking device. For correct use of the device, see “HYDRAULIC UNIT CONNECTOR COUPLING AND UNCOUPLING” in this manual.

https://truckmanualshub.com/

M E M O

https://truckmanualshub.com/

HYDRAULIC UNIT (ELECTRONIC CONTROL UNIT)

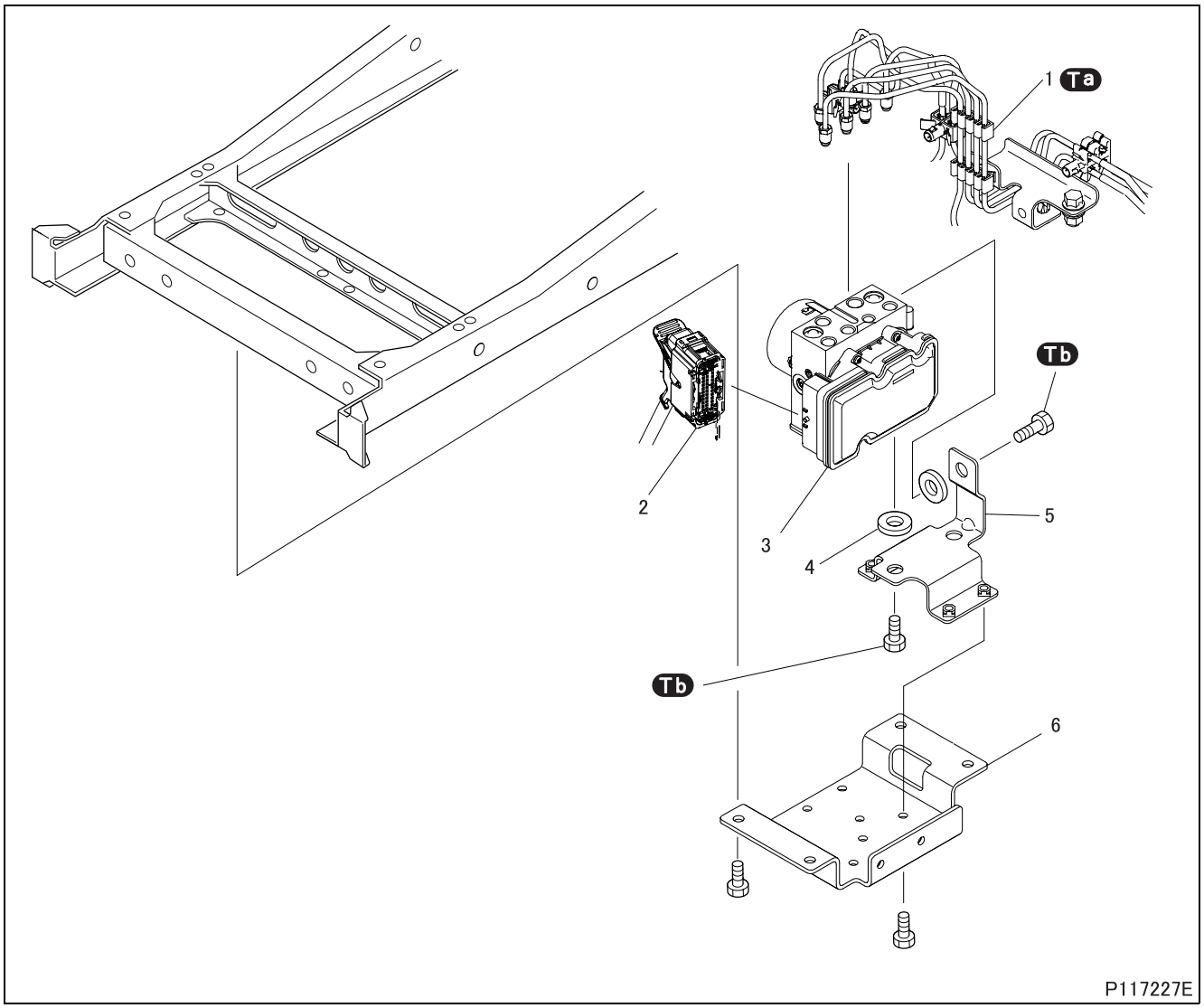

● **Removal sequence**

1 Brake pipe
2 Harness connector
3 Hydraulic unit (electronic control unit)
4 Grommet
5 Hydraulic unit bracket A
6 Hydraulic unit bracket B

● **Installation sequence**

Follow the removal sequence in reverse.

CAUTION ⚠

- **After the hydraulic unit (electronic control unit) is replaced with a new one, air bleeding should be performed for the secondary side circuit (anti-lock brake system circuit) in addition to the primary side circuit. (See Gr35.)**

Tightening torque (Unit: N·m {ft.lbs, kgf·m})

Mark	Parts to be tightened	Tightening torque	Remarks
Ta	Brake pipe mounting	17.5 ± 2.7 {13 ± 2.0, 1.8 ± 0.3}	–
Tb	Hydraulic unit (electronic control unit) mounting	14.7 to 15.8 {11 to 12, 1.5 to 1.6}	–

https://truckmanualshub.com/

◆Removal procedure◆

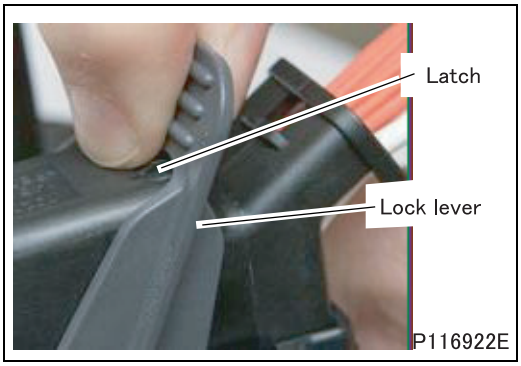

■ **Removal: Harness connector**

- Press the latch to unlock the lock lever.

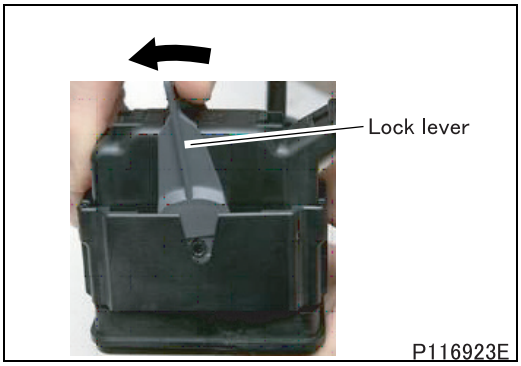

- Move the lock lever in the direction shown in the illustration to unlock the harness connector.
- Remove the harness connector by pulling it upwards.

◆Installation procedure◆

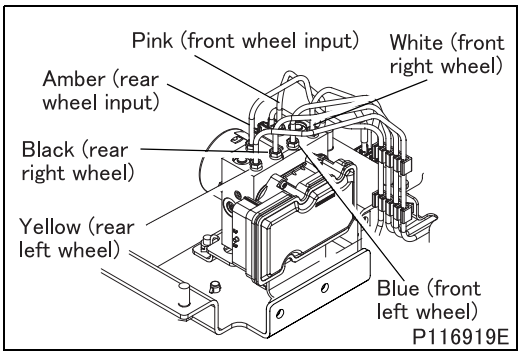

■ **Installation: Brake pipe**

- Confirm the location to be connected using marking colors on the brake pipes and connect the pipes to the correct connectors on the hydraulic unit (electronic control unit) as shown in the figure.

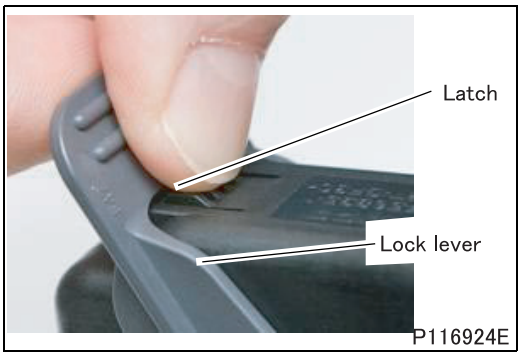

■ **Installation: Harness connector**

- Push the lock lever toward the left to latch it.
- Insert the harness connector straight into the hydraulic unit (electric control unit).
- Press the latch to unlock the lever.

https://truckmanualshub.com/

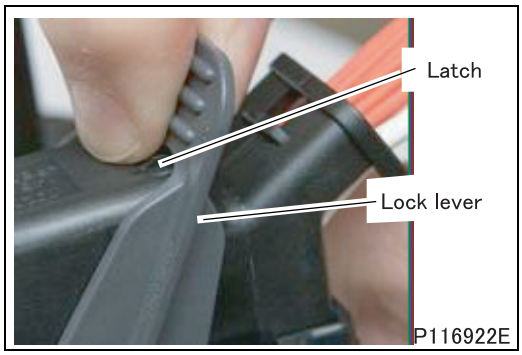

- Move the lock lever in the direction opposite to the installation to lock the harness connector.
- Push the lock lever toward the right to latch it.
- Check that the harness connector is securely locked.

https://truckmanualshub.com/

M E M O

https://truckmanualshub.com/

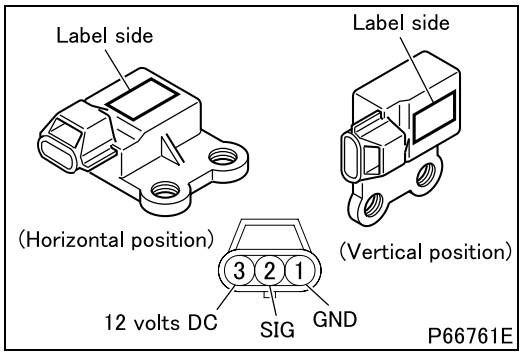

#327 Inspection of G sensor

- Apply a 12 volts DC across terminals 3 and 1 of the G sensor.
- Measure the G sensor output voltage between terminals 2 and 1 for both when the sensor is in a horizontal position and when it is in a vertical position.

Standard value	Horizontal position	2.3 to 2.7 V
	Vertical position	3.3 to 3.7 V

- If any of the measurements is not within the standard value range, replace the sensor.

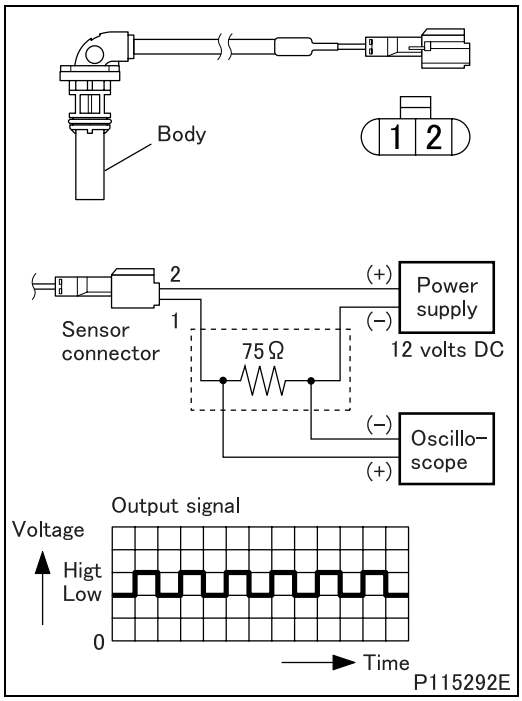

#329 Inspection of wheel speed sensor
<FE>

- Perform the following check. Replace the wheel speed sensor if any fault is found.

CAUTION ⚠

- **The wheel speed sensor has a magnet in it. Be careful not to allow metal pieces to attach the sensor.**

(1) Output voltage

- Because output check using the anti-lock brake system rotor is required, follow the steps below to measure the output voltage with the sensor mounted on the vehicle.
- Jack up the wheel to be measured, then remove the connector of the wheel speed sensor.
- Connect the terminals of the removed connector to an oscilloscope as shown in the circuit diagram, then check the voltage on the oscilloscope while rotating the wheel by hand at a constant speed.

Standard value	High	$1.05^{+0.21}_{-0.16}$ V
	Low	$0.53^{+0.10}_{-0.09}$ V

(2) Insulation resistance

- Measure the resistance between terminal 1 and body and between terminal 2 and body.

Standard value	5 MΩ or above

(3) Open circuit

- If there is an open circuit, remove the clamp on the harness from the vehicle, then check for transient open circuit while bending and stretching the harness at the clamp. Also, check the connection conditions of the connector terminals.

https://truckmanualshub.com/

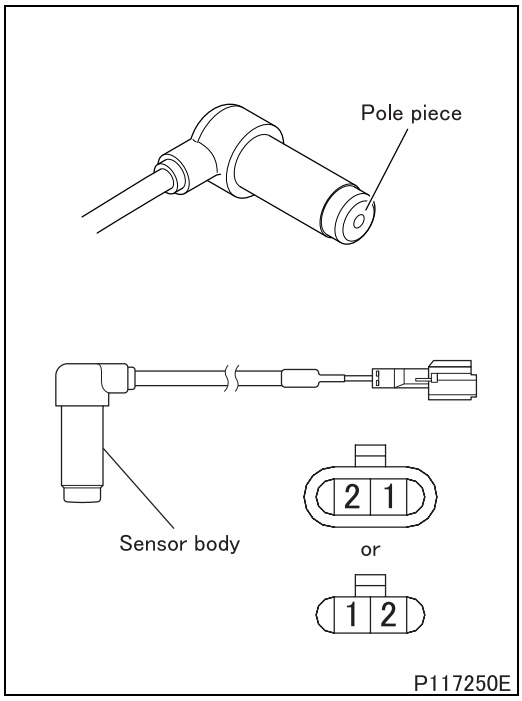

<FG>

- Carry out the following checks. If faulty, replace the wheel speed sensor.

CAUTION ⚠

- **The pole piece is magnetized by the magnet housed in the wheel speed sensor. Be careful not to allow metal parts to stick onto the pole piece.**

(1) Resistance between terminals

Standard value	1.4 ± 0.2 kΩ

(2) Insulation resistance (between the sensor body and each terminal)

Standard value	1 MΩ or above

(3) Open circuit

- If open circuit is suspected, remove the harness clamps and wiggle the harness to determine whether it is an intermittent fault or not. Check also the connector terminals for proper connection.

https://truckmanualshub.com/

INSTALLED LOCATIONS OF PARTS

A45	(Sensor)

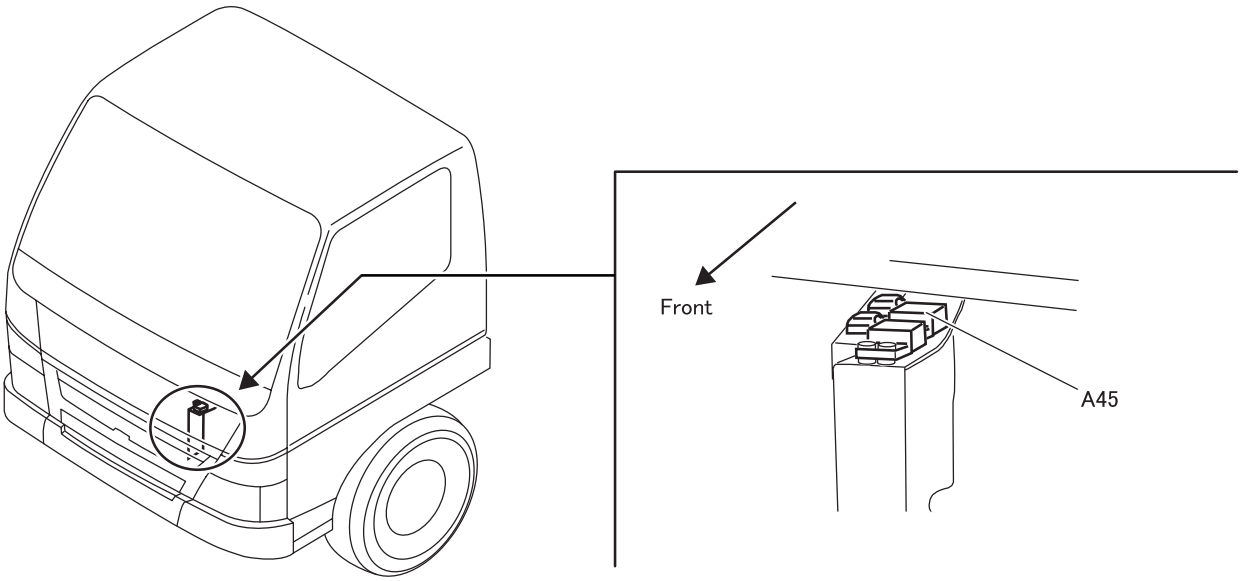

A45　G sensor ＜FG＞

https://truckmanualshub.com/

B40

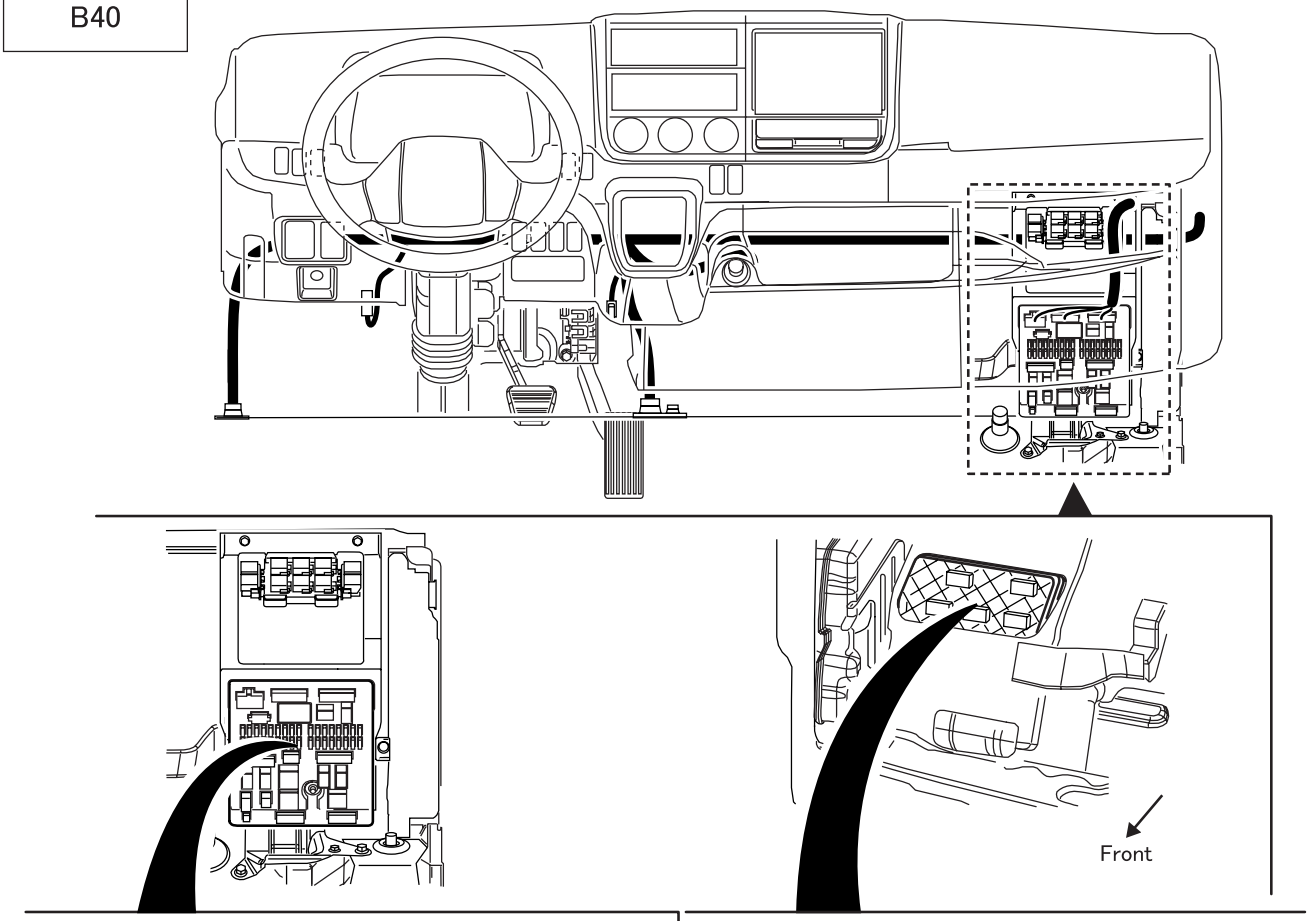

B40 SAM

SAM : Signal detect and actuation modules

https://truckmanualshub.com/

INSTALLED LOCATIONS OF PARTS

C01

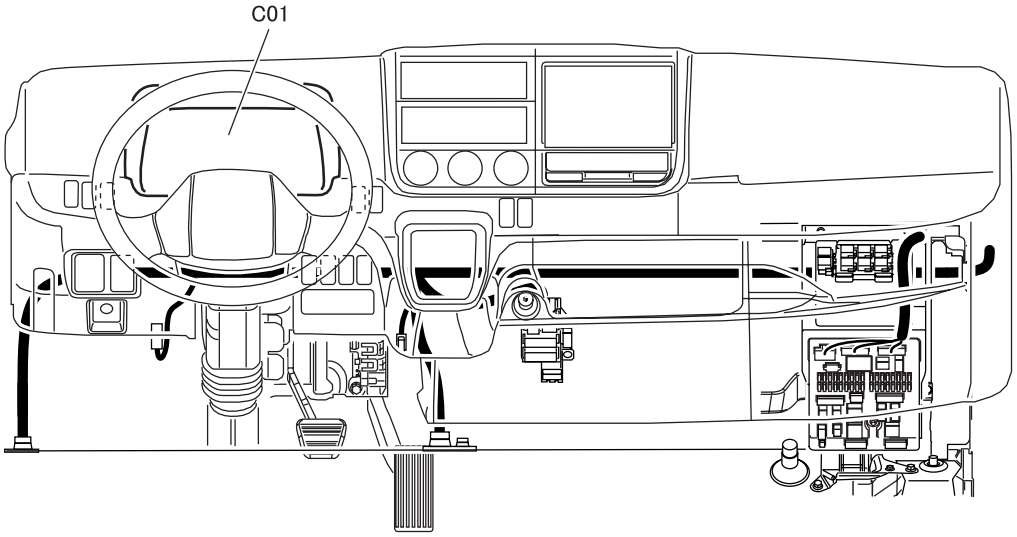

C01 Meter cluster

https://truckmanualshub.com/

J14

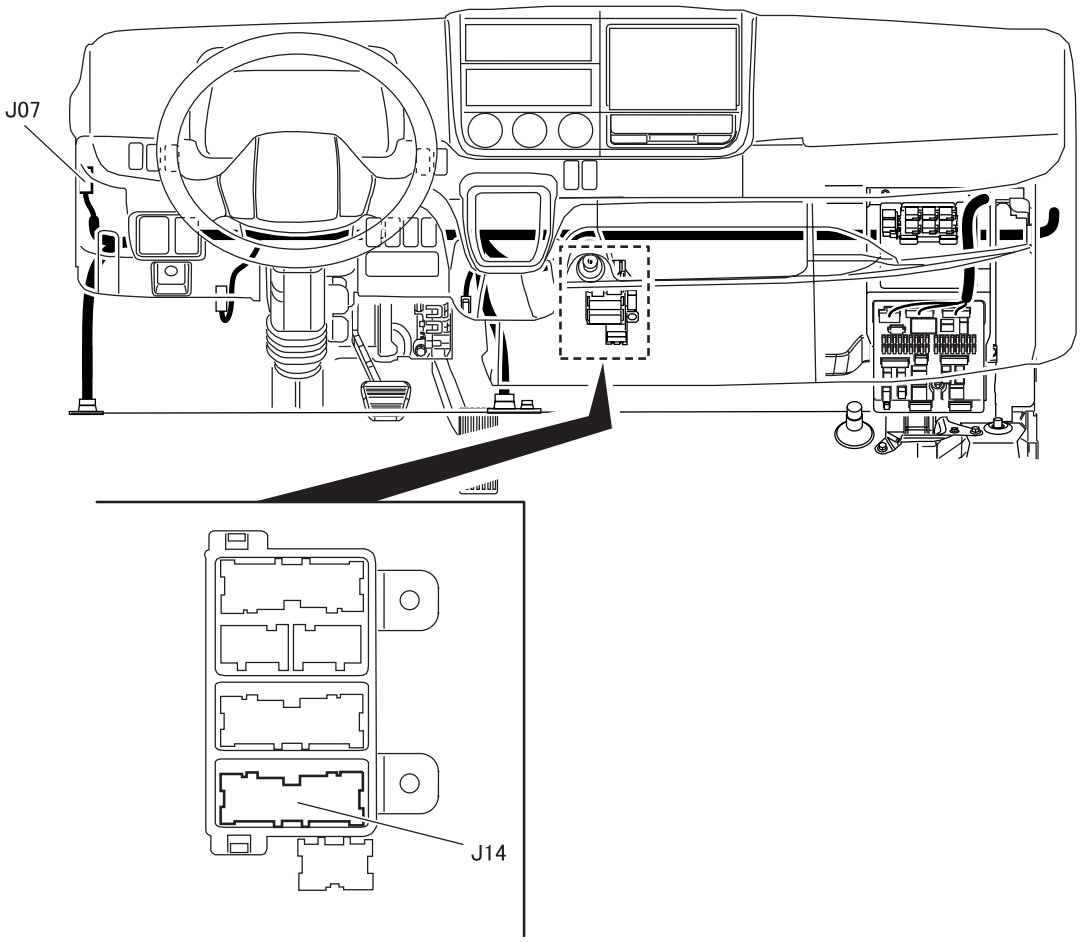

J14　Connection of cab harness and instrument panel harness : [AK22A]

Indicate by connector type [ ].

https://truckmanualshub.com/

INSTALLED LOCATIONS OF PARTS

J20 to 21

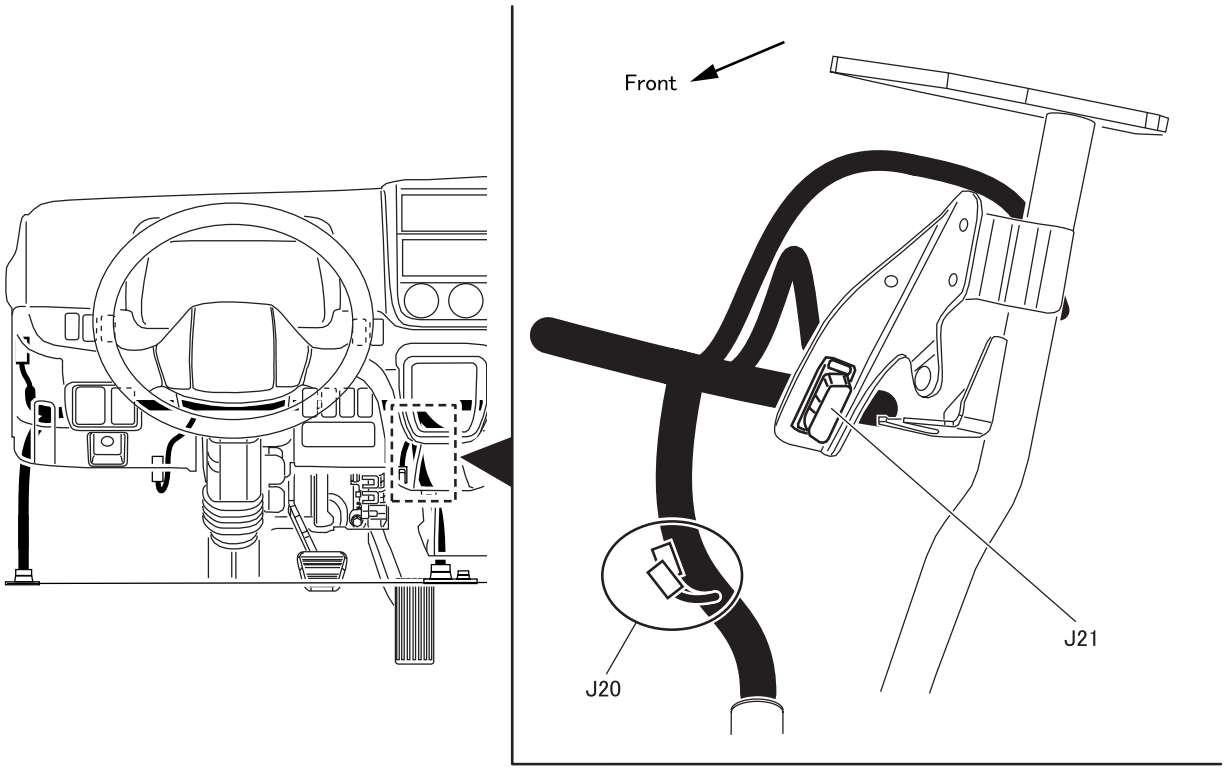

J20 Joint connector (CAN-H) <Meter cluster>
Joint connector (CAN-L) <Meter cluster>
J21 Diagnosis connector

CAN : Controller area network communication
Indicate by connector type [ ].

https://truckmanualshub.com/

U02

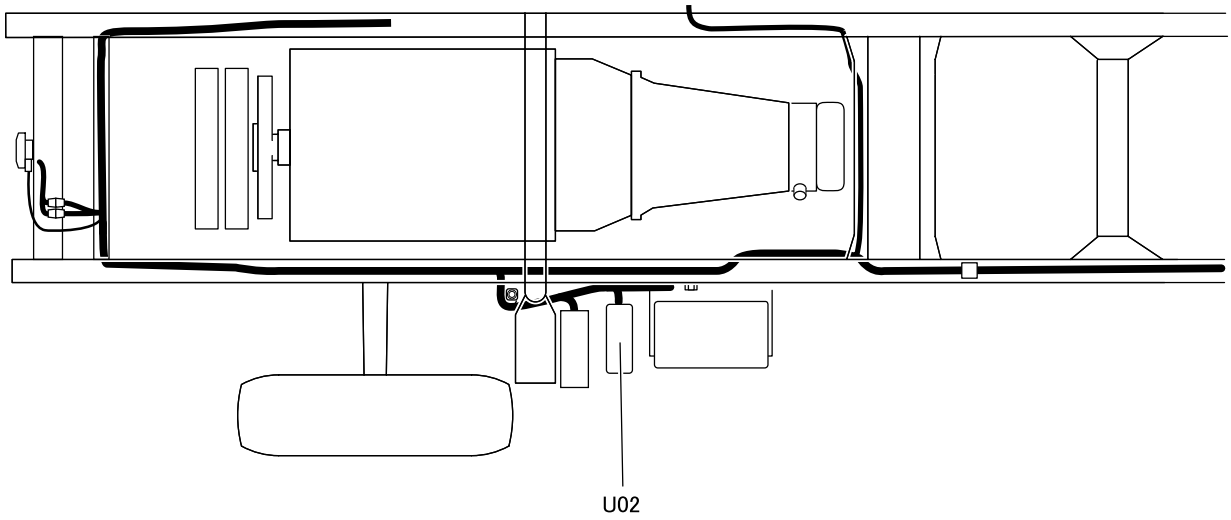

U02 High-current fuse box

https://truckmanualshub.com/

INSTALLED LOCATIONS OF PARTS

U07

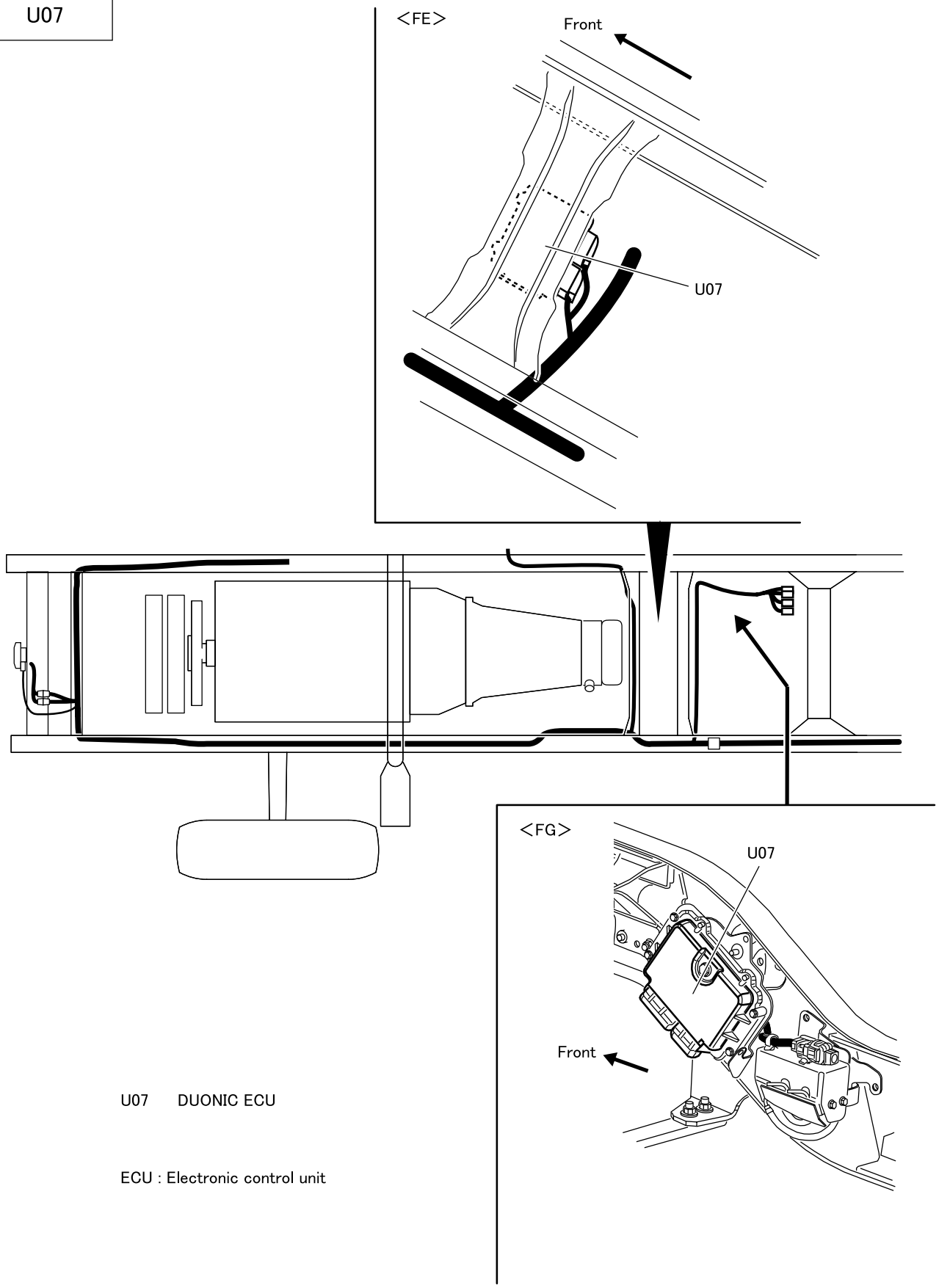

U07 DUONIC ECU

ECU : Electronic control unit

35E-L05232U-2

https://truckmanualshub.com/

W01 to 09

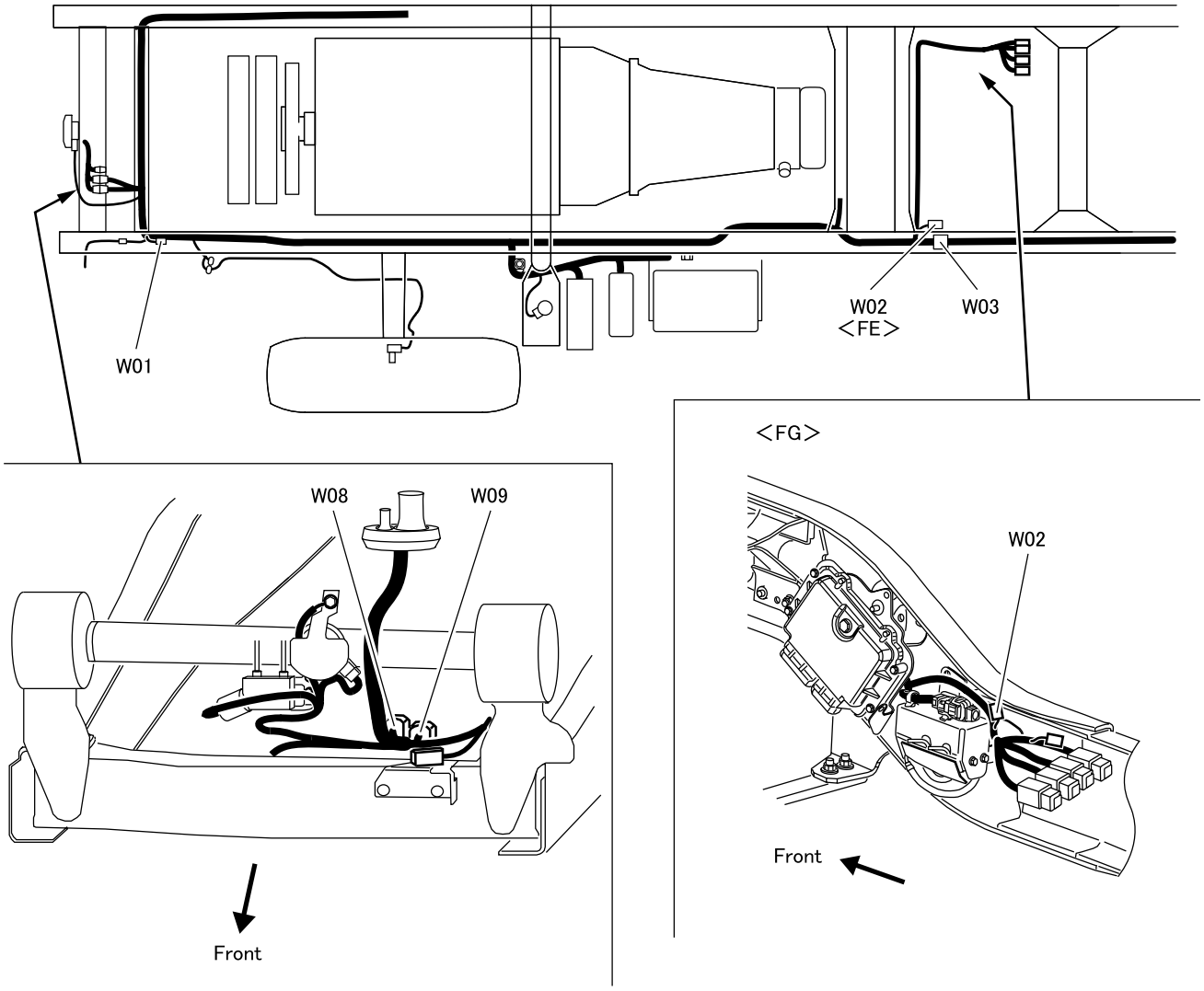

W01 Joint connector (CAN) <ABS>
W02 Joint connector (CAN) <DUONIC>
W03 Connection of chassis harness and rear chassis harness : [AB16A]
W08 Connection of cab harness and chassis harness : [AB16A]
W09 Connection of cab harness and chassis harness : [AB12A]

CAN : Controller area network communication
ABS : Anti-lock brake system
Indicate by connector type [ ].

https://truckmanualshub.com/

INSTALLED LOCATIONS OF PARTS

W20

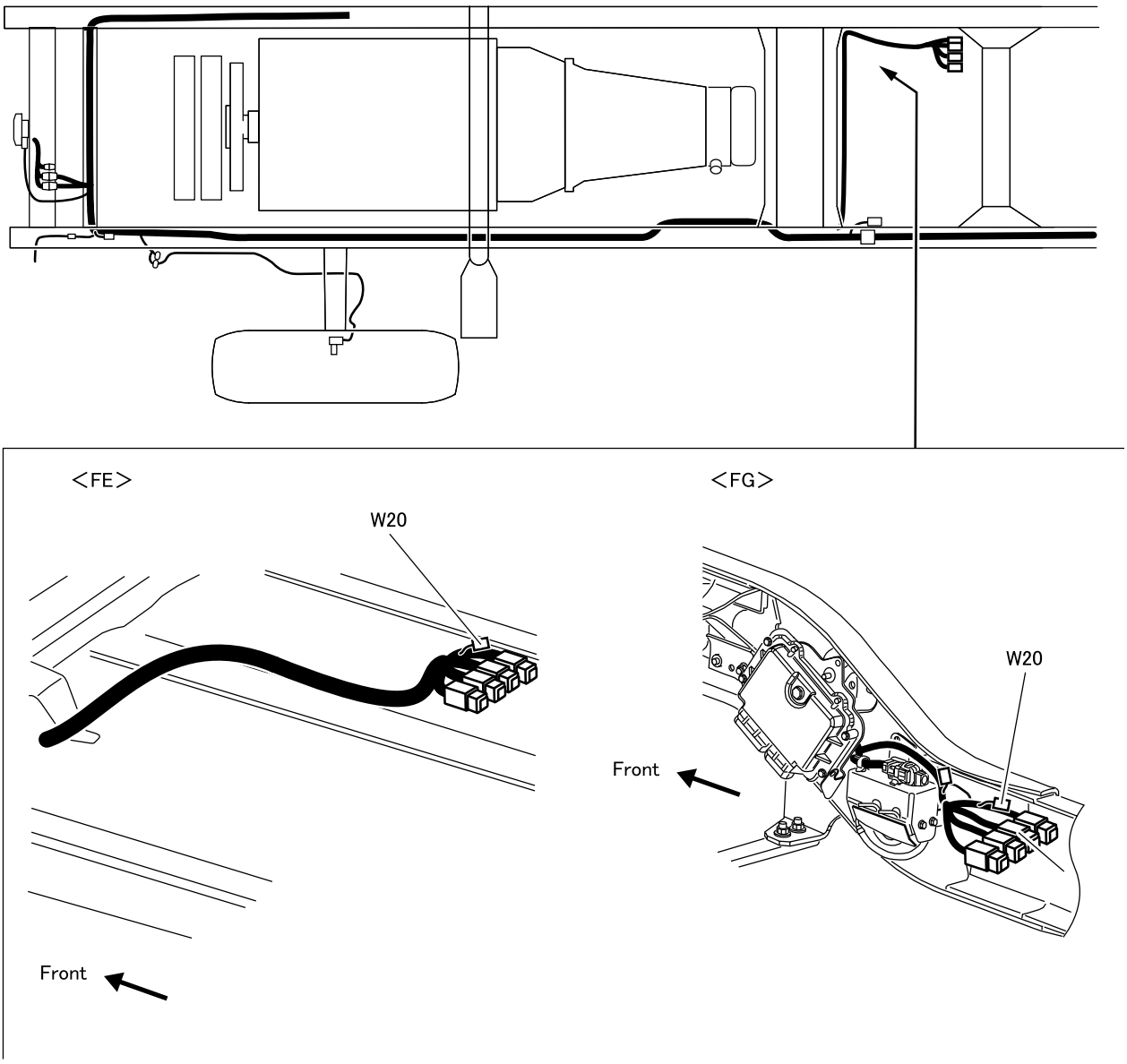

W20 Joint connector (CAN) <Engine control NX>

CAN : Controller area network communication

https://truckmanualshub.com/

X01 to 05 <ABS>

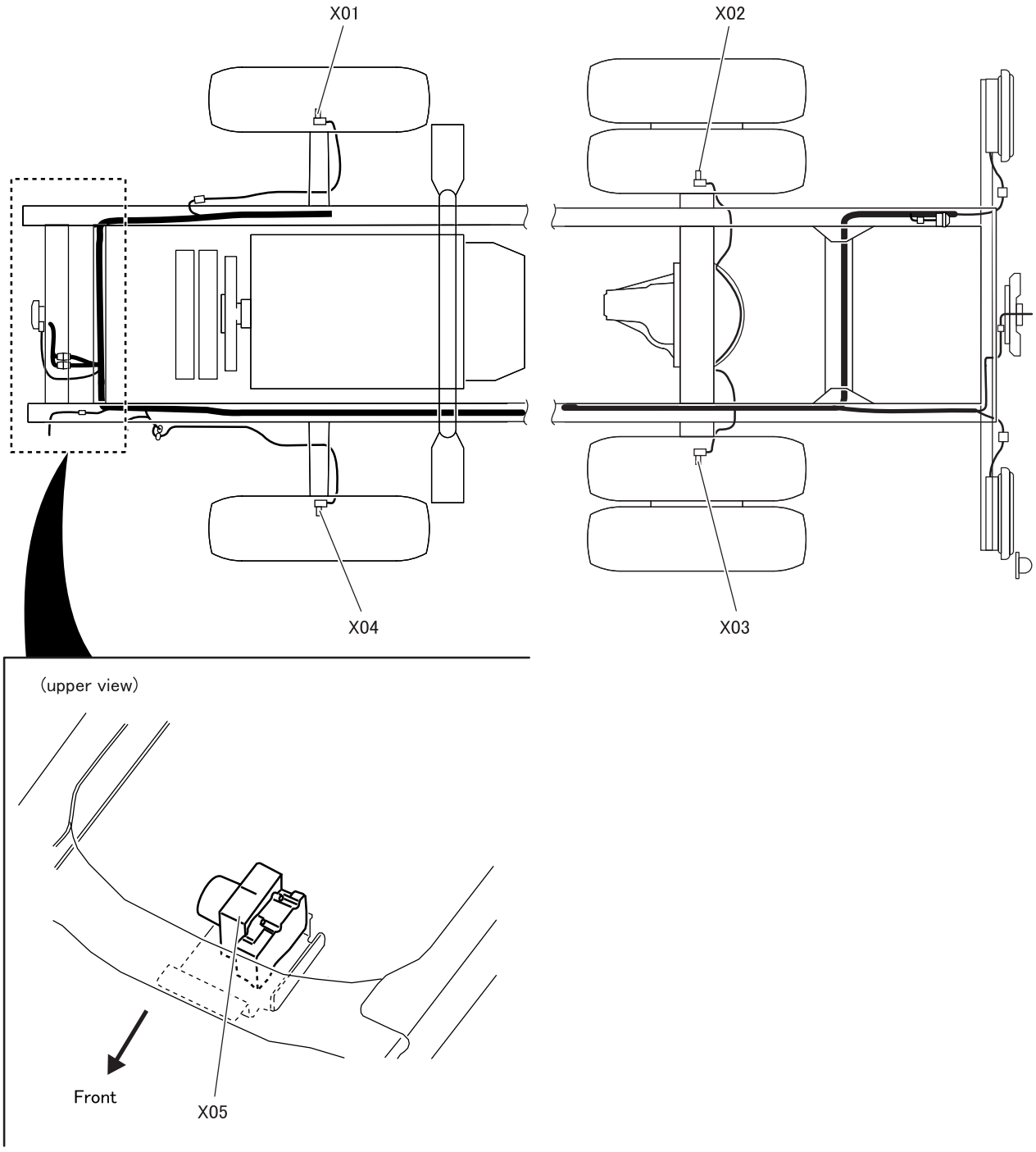

X01	Front wheel speed sensor, RH	
X02	Rear wheel speed sensor, RH	
X03	Rear wheel speed sensor, LH	
X04	Front wheel speed sensor, LH	
X05	Hydraulic unit	ABS : Anti-lock brake system

https://truckmanualshub.com/

INSTALLED LOCATIONS OF PARTS

[13] to [14] Chassis ground

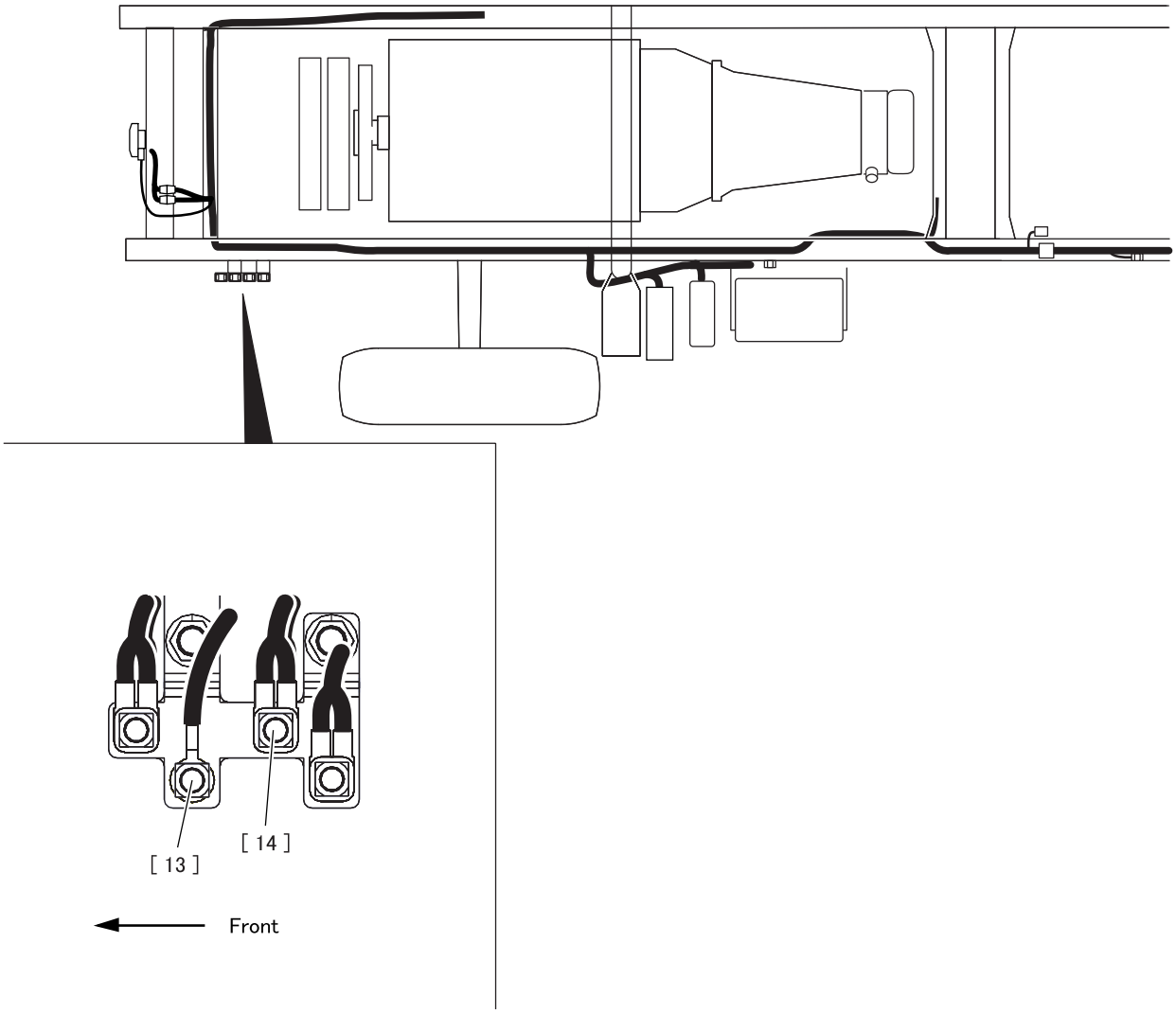

Location	Circuit No.	Wire diameter - wire color	Destination	Remarks
[13]	EAB1	8-B	SAM	
[14]	ABE1	3-B	Hydraulic unit	ABS
	ABE2	3-B		

SAM : Signal detect and actuation modules
ABS : Anti-lock brake system

https://truckmanualshub.com/

M E M O

https://truckmanualshub.com/

ELECTRICAL CIRCUIT DIAGRAM

(1/2)

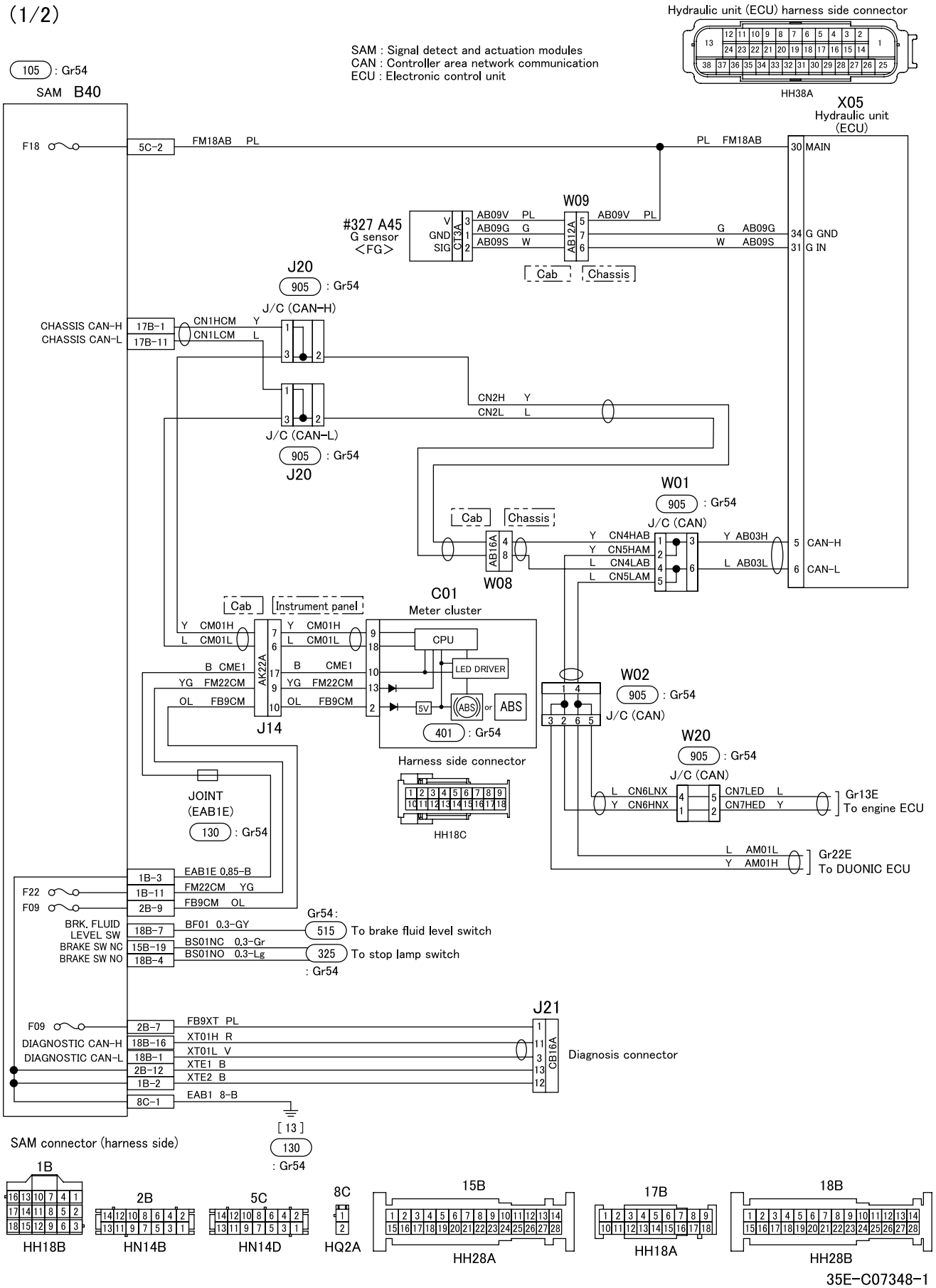

https://truckmanualshub.com/

(2/2)

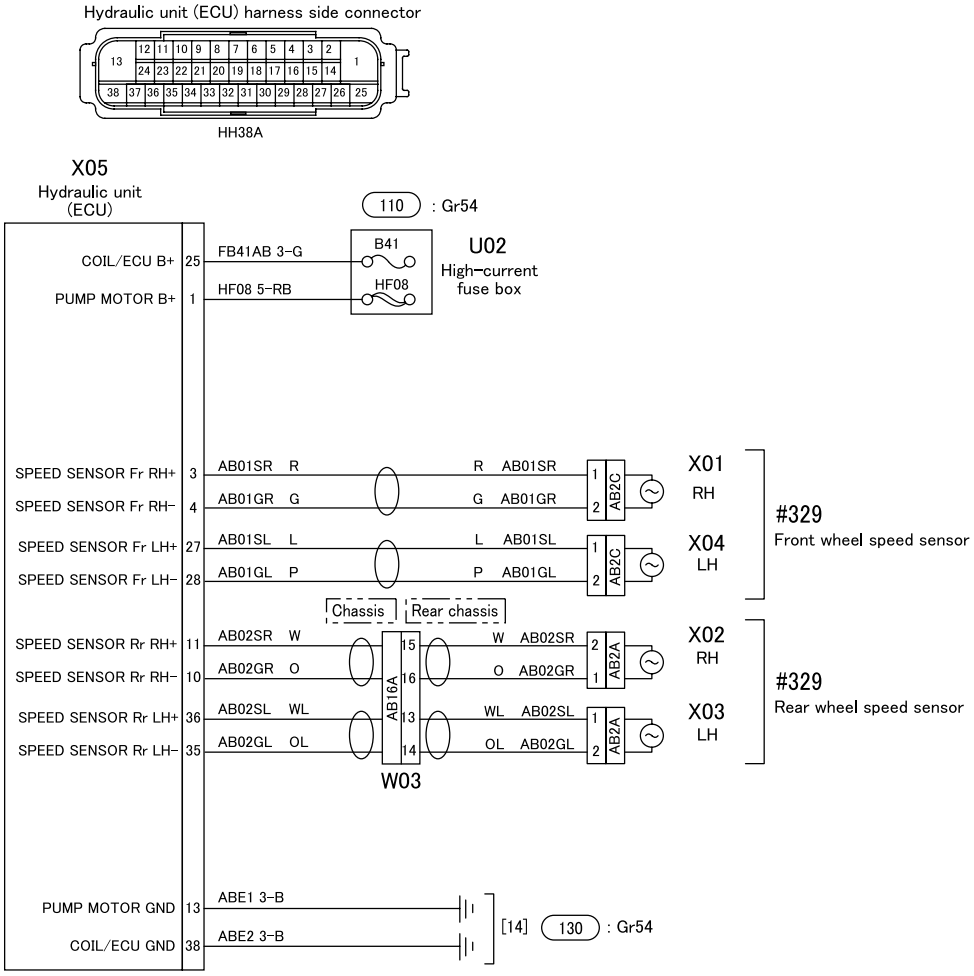

ECU : Electronic control unit

https://truckmanualshub.com/

FUSO

Group 36

Parking Brake

MITSUBISHI FUSO TRUCK OF AMERICA, Inc.

Pub.No.00ELT0001-36

https://truckmanualshub.com/

INDEX

SPECIFICATIONS **36-2**

STRUCTURE AND OPERATION
1. **Components and Parts** **36-3**
2. **Parking Brake Lever** **36-3**
3. **Parking Brake** **36-4**

TROUBLESHOOTING **36-5**

ON-VEHICLE INSPECTION AND ADJUSTMENT
1. **Inspection of Parking Brake Drum Mounting for Looseness** **36-6**
2. **Adjustment of Parking Brake Shoe Clearance** **36-6**
3. **Inspection and Adjustment of Parking Brake Lever** **36-7**

PARKING BRAKE CONTROL **36-10**

PARKING BRAKE **36-12**

https://truckmanualshub.com/

SPECIFICATIONS

Item			Specifications
Brake	Type		Internal expanding type acting on propeller shaft
	Operation type		Mechanical cable type
Parking brake	Type		Duo servo type
	Brake drum I.D.	mm {in.}	ϕ203.2 {8.00}
	Lining width × thickness	mm {in.}	50 × 4.0 {1.97 × 0.16}

https://truckmanualshub.com/

1. Components and Parts

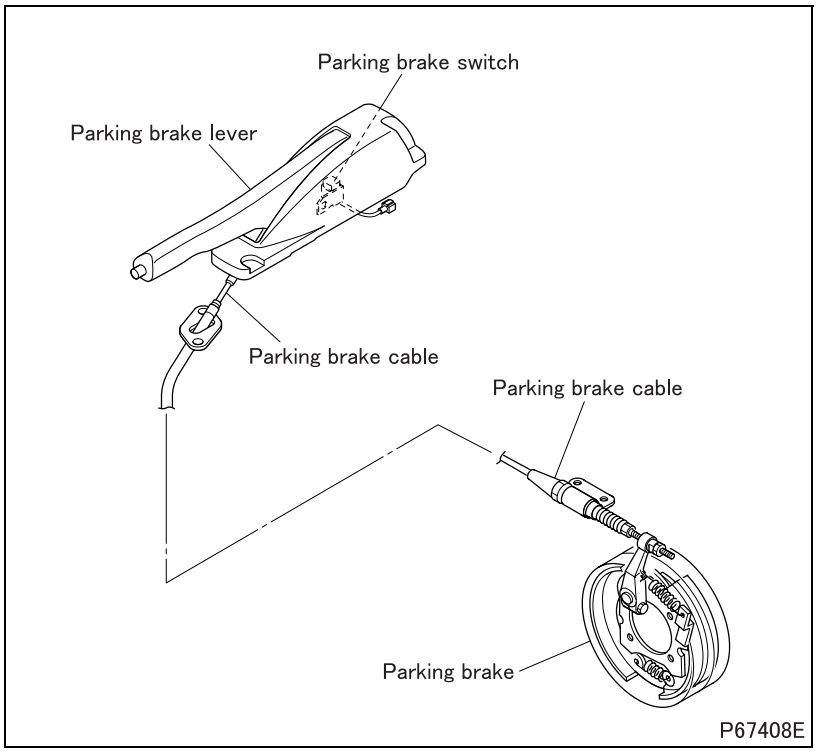

2. Parking Brake Lever

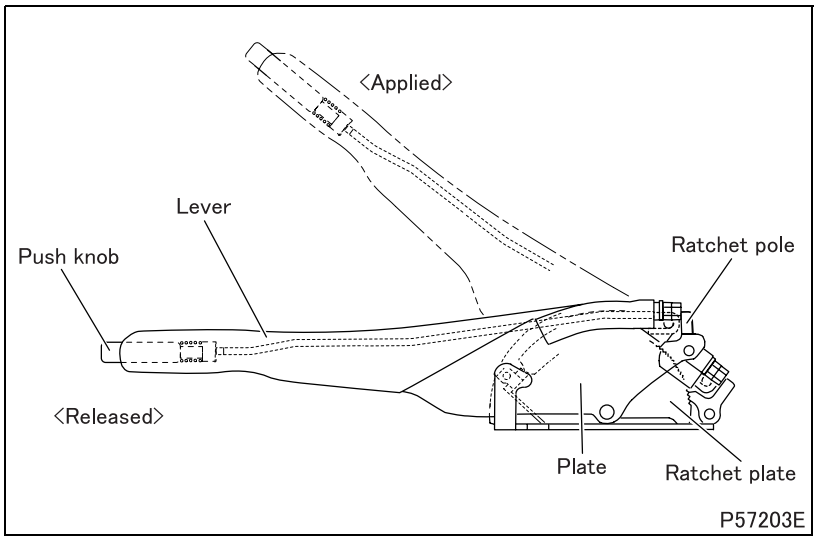

- Pulling the parking brake lever makes the parking brake work, at which point the ratchet pole engages with the ratchet plate and the lever is locked.
- To release the parking brake lever, slightly pull it up while pushing the release knob. This disengages the ratchet pole from the ratchet plate, allowing the parking brake lever to return to the released position.

https://truckmanualshub.com/

3. Parking Brake

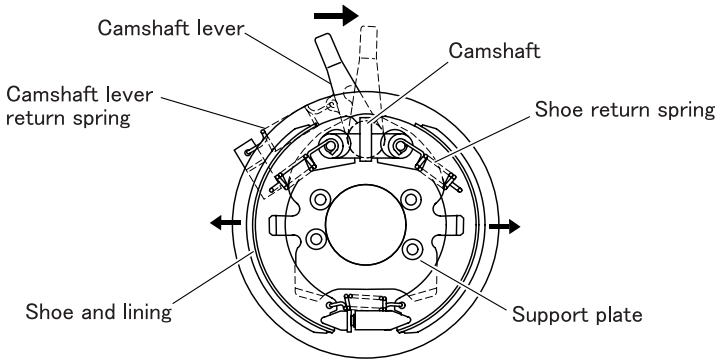

P56131E

- The camshaft lever, which is used to actuate the shoes/linings, is built into the parking brake unit. Pulling the parking brake lever actuates the camshaft lever via the parking brake cable.
- Actuation of the camshaft lever causes the camshaft to rotate, which expands both shoes/linings onto the brake drum. In this case, both shoes/drums function as a leading shoe.
- As the parking brake lever (camshaft lever) is released, the forces of the shoe and camshaft lever return springs restore the components to their home positions. This releases the parking brake.

https://truckmanualshub.com/

Possible causes \ Symptoms		Parking brake does not work	Parking brake release not smooth (dragging)	Parking brake lever operating physical force insufficient	Parking brake lever operating physical force excessive	Reference Gr
Parking brake cable	Inner cable stretched or damaged	O	O	O	O	
	Inner cable improperly adjusted	O	O	O	O	
Parking brake lever	Ratchet pole and ratchet plate pawl engaged improperly	O				
	Pulling stroke insufficient		O		O	
	Pulling stroke excessive	O		O		
Parking brake	Shoe clearance insufficient		O		O	
	Shoe clearance excessive	O		O		
	Parking brake drum inner surface deformed or warped	O		O		
	Lining worn unevenly	O		O		
	Brake drum inner surface greasy or oily	O				
	Lining surface greasy or oily	O				
	Camshaft lever return spring fatigued or fractured		O			
	Shoe return spring fatigued or fractured		O			

https://truckmanualshub.com/

ON-VEHICLE INSPECTION AND ADJUSTMENT

1. Inspection of Parking Brake Drum Mounting for Looseness

Tightening torque (Unit: N·m {ft.lbs, kgf·m}

Mark	Parts to be tightened	Tightening torque	Remarks
–	Nut (parking brake drum mounting)	100 to 120 {74 to 89, 10 to 12}	–

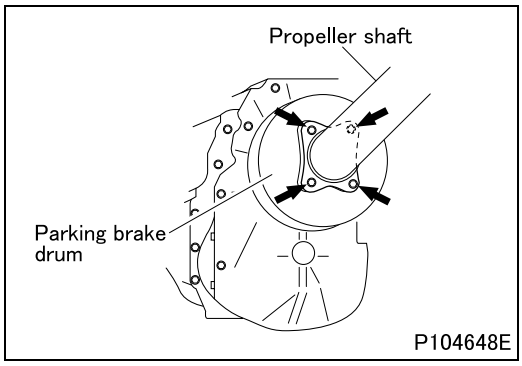

- Check the parking brake drum mounting nuts for looseness with a spanner or the similar tool.
- If looseness is found, tighten the nuts to the specified torque.

2. Adjustment of Parking Brake Shoe Clearance

Service standards (Unit: mm {in.})

Location	Maintenance item	Standard value	Limit	Remedy
–	Brake shoe clearance	0.1 to 0.25 {0.0039 to 0.0098}	–	Adjust

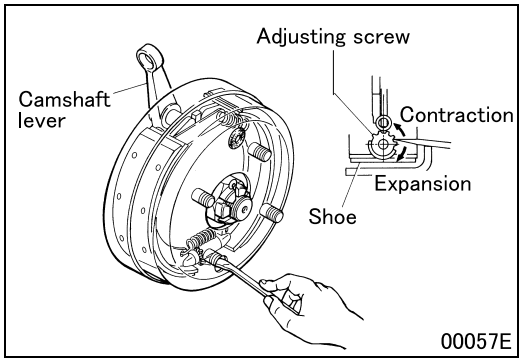

- Apply chocks to the front wheels and raise the rear wheels with a jack.
- Operate the parking brake lever to release the parking brake.
- Using a screwdriver or similar tool inserted through the shoe adjusting hole in the parking brake drum, turn the adjusting screw in the shoe expanding direction until the shoes closely contact the brake drum.
- From the above point, turn the screw in the shoe contracting direction by 8 notches; the shoe-to-drum clearance is now adjusted to the standard value.

https://truckmanualshub.com/

3. Inspection and Adjustment of Parking Brake Lever

Service standards

Location	Maintenance item	Standard value	Limit	Remedy
–	Parking brake lever pulling stroke (with an operating physical force of 294 N {66 lbs, 30 kgf})	7 to 9 notches	–	Adjust or inspect

Tightening torque (Unit: N·m {ft.lbs, kgf·m})

Mark	Parts to be tightened	Tightening torque	Remarks
–	Lock nut	12.5 ± 2.5 {9.2 ± 1.8, 1.3 ± 0.3}	–

Lubricant and/or sealant

Mark	Point of application	Specified lubricant and/or sealant	Quantity
–	Camshaft lever (on sliding face with parking brake cable and on contact face with ball bushing)	Chassis grease [NLGI No. 1 (Li soap)]	As required

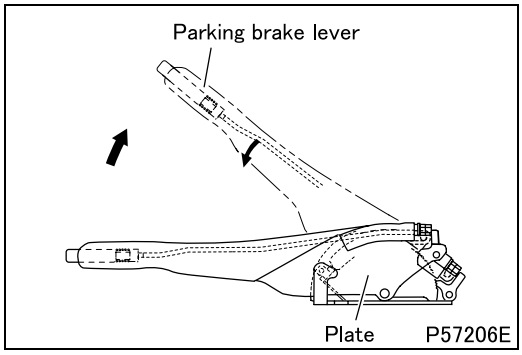

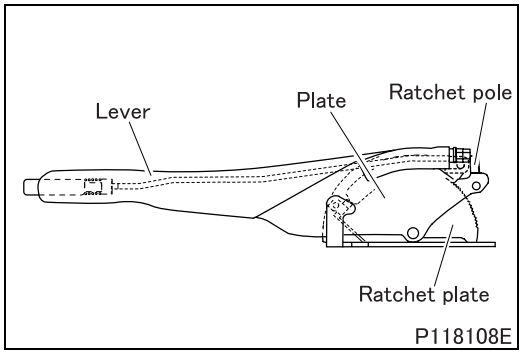

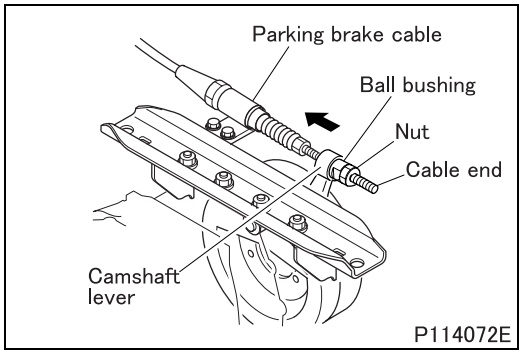

3.1 Inspection

(1) Parking brake lever pulling stroke

- Pull the parking brake lever from the released position with an operating physical force of 294 N {66 lbs, 30 kgf} and count the number of cleared notches.
- If the count of notches deviates from the specified range of standard values, adjust the length of the parking brake cable.
- If the count of notches (pulling stroke) is still out of the specified range after the cable length adjustment, check the parking brake shoe clearance.

(2) Condition of ratchet

- Operate the parking brake lever and check to see if the ratchet is properly engaged.
- Check the ratchet plate and ratchet pole for nicked or broken teeth.
- If these parts are defective, replace the parking brake lever.

3.2 Adjustment

- Pull on the parking brake cable end with a force of 100 N {22 lbs, 10 kgf} to remove any slack from the cable.
- Apply grease onto the camshaft lever, on the sliding face with the parking brake cable and on the contact face with the ball bushing.
- While pulling the cable end of the camshaft lever in the direction of the arrow with a force of 45 to 50 N {10 to 11 lbs, 4.6 to 5.1 kgf}, rotate the ball bushing until it contacts the cable end of the camshaft lever.

CAUTION ⚠

- **Do not rotate the ball bushing so much as to cause the camshaft lever to move.**

https://truckmanualshub.com/

- Pull the parking brake lever 3 times with a force of 500 N {110 lbs, 51 kgf}.
- This operation causes the cable to extend. Rotate the ball bushing again until it contacts the camshaft lever. Then, pull the parking brake lever with a force of 45 to 50 N {10 to 11 lbs, 4.6 to 5.1 kgf}. The camshaft lever should not move more than 1 mm {0.039 in.}.
- Pull the parking brake lever from the released position with a force of 294 N {66 lbs, 30 kgf}. The lever should travel past the specified number of notches. Tighten the nut.

https://truckmanualshub.com/

M E M O

https://truckmanualshub.com/

PARKING BRAKE CONTROL

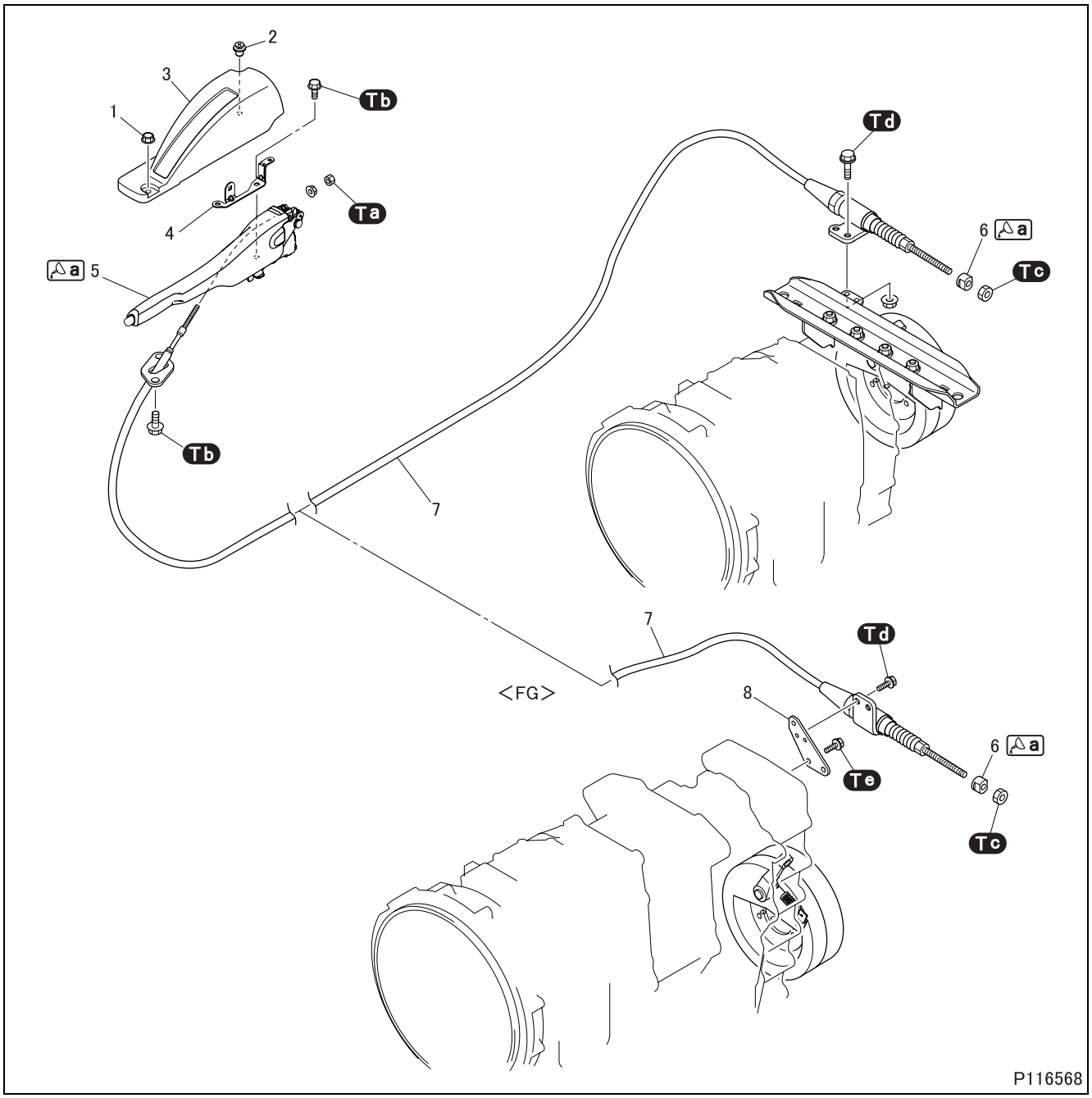

● **Removal sequence**

1 Push nut
2 Push turn rivet
3 Cover
4 Cover bracket
5 Parking brake lever
6 Ball bushing
7 Parking brake cable
8 Parking brake cable bracket <FG>

● **Installation sequence**

Follow the removal sequence in reverse.

CAUTION ⚠

- **Perform the adjustment of the parking brake lever after installation. (See ON-VEHICLE INSPECTION AND ADJUSTMENT.)**

https://truckmanualshub.com/

Tightening torque (Unit: N·m {ft.lbs, kgf·m})

Mark	Parts to be tightened	Tightening torque	Remarks
Ta	Nut (parking brake cable attaching)	5 ± 1 {3.7 ± 0.7, 0.5 ± 0.1}	–
Tb	Bolt (parking brake lever mounting)	13.5 ± 1.5 {10.0 ± 1.1, 1.4 ± 0.2}	–
	Bolt (parking brake cable attaching)		
Tc	Nut (ball bushing mounting)	12.5 ± 2.5 {9.2 ± 1.8, 1.3 ± 0.3}	–
Td	Bolt (parking brake cable attaching)	23.5 ± 9.5 {17.0 ± 3.3, 2.4 ± 0.5}	–
Te	Bolt (parking brake cable bracket mounting)	75 ± 10 {55 ± 7.4, 7.6 ± 1.0}	–

Lubricant and/or sealant

Mark	Point of application	Specified lubricant and/or sealant	Quantity
a	Contact surfaces of parking brake lever	Chassis grease [NLGI No. 1 (Li soap)]	As required
	Spherical face of ball bushing		

◆Installation procedure◆

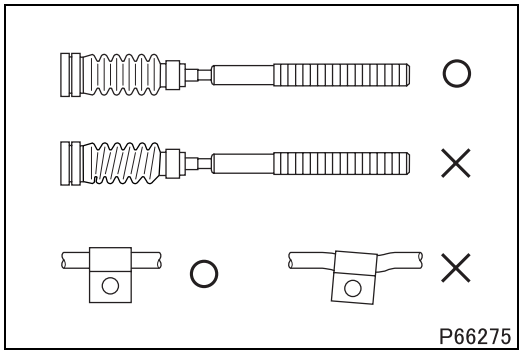

■ Installation: Parking brake cable

- Lay the parking brake cable along the frame while paying attention to the following:
- The cable must not be bent at the clamped portions.
- There must not be torsion in the boot.
- Avoid any interference with other components when routing the cable.

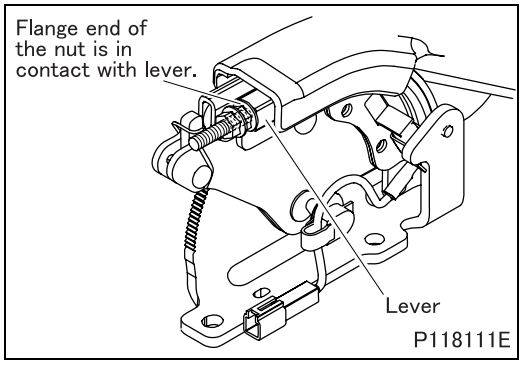

- Tighten the mounting nut of the parking brake cable fully until it reaches the thread end of the parking brake cable. Adjust the cable position as necessary to ensure that flanged end of the nut is in contact with the parking lever.

CAUTION ⚠

- **The nut should not be tightened too far beyond the thread end of the parking brake cable. Overtightening the nut can cause the cable to slip out of the nut or the cable end to be damaged.**

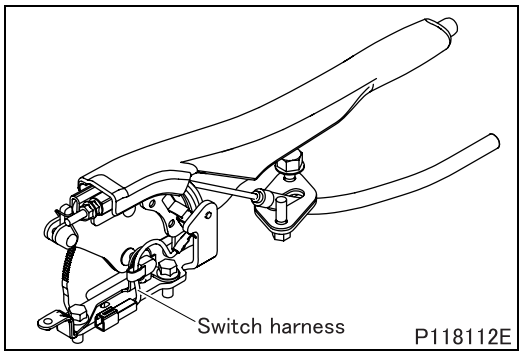

■ Installation: Parking brake lever

- Attach the cover bracket to the parking brake lever and install the assembly on the floor. Route the switch harness as illustrated. Operate the parking brake lever to verify that the harness can neither interfere with the lever nor be overtensioned.

https://truckmanualshub.com/

PARKING BRAKE

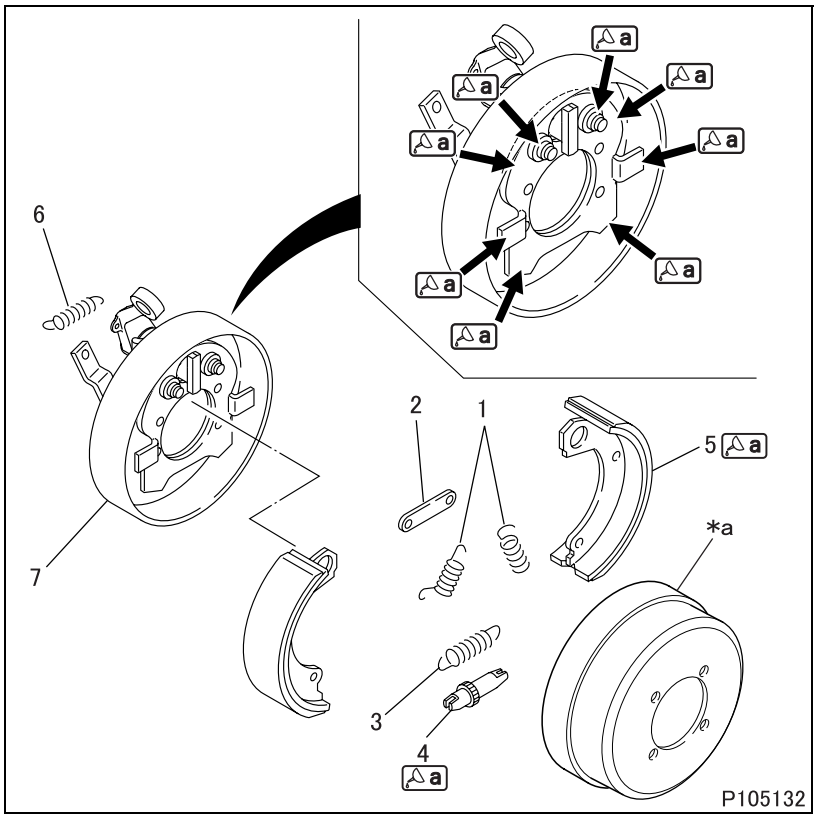

● **Disassembly sequence**

1 Shoe return spring
2 Anchor pin brace
3 Adjuster wheel return spring
4 Adjuster screw
5 Shoe and lining
6 Camshaft lever return spring
7 Support plate and dust cover

***a:** Parking brake drum

- For removal and installation of the parking brake and parking brake drum, see Gr22, Gr24.

● **Assembly sequence**

Follow the disassembly sequence in reverse.

CAUTION ⚠

- **To prevent poor working of the brake, do not smear the surface of shoe and lining with grease or oil.**

- After reassembly, perform an inspection and adjustment of the brake shoe clearance. (See “ON-VEHICLE INSPECTION AND ADJUSTMENT”.)

Service standards (Unit: mm {in.})

Location	Maintenance item		Standard value	Limit	Remedy
1	Installed load of shoe return spring (installed length: 57.5 {2.26})		157 ± 15.7 N {135 ± 3.5 lbs, 16 ± 1.6 kgf}	126 N {28 lbs, 13 kgf}	Replace
3	Installed load of adjuster wheel return spring (installed length: 59 {2.32})		128 ± 12.8 N {29 ± 2.9 lbs, 13 ± 1.3 kgf}	62 N {14 lbs, 6.3 kgf}	Replace
5	Lining thickness of shoe and lining		3.75 {0.15}	1.4 {0.055}	Replace
6	Installed load of camshaft lever return spring (installed length: 85 {3.35})		49 ± 4.9 N {11 ± 1.1 lbs, 5.0 ± 0.5 kgf}	39 N {8.8 lbs, 4.0 kgf}	Replace
***a**	Parking brake drum	Inner diameter	$\phi 203.2\ ^{+0.3}_{0}$ {$\phi 8.00\ ^{+0.012}_{0}$}	ϕ205 {8.07}	Replace
		Squareness	0 to 0.05 {0 to 0.0020}	–	
		Concentricity	0 to 0.2 {0 to 0.0079}	–	
		Cylindricity	0 to 0.05 {0 to 0.0020}	–	
		Static rotation imbalance	0.0088 N·m {0.007 ft.lbs, 0.9 gf·m} or less	–	

https://truckmanualshub.com/

Lubricant and/or sealant

Mark	Points of application	Specified lubricant and/or sealant	Quantity
a	Shoe and lining contact points on both ends of adjuster screw	Brake grease AKB100	As required
	Shoe and lining contact surface of camshaft on support plate		
	Anchor pins and shoe and lining contact surface on support plate		

◆Inspection procedure◆

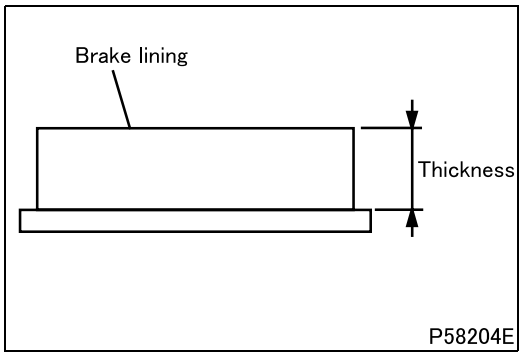

■ Inspection: Lining thickness of shoe and lining

- If the measured value is lower than the limit, replace the shoe and lining.

■ Inspection: Parking brake drum

(1) Visual inspection

- If abnormal wear or damage is found on the parking brake drum, replace the parking brake drum.

(2) Inner diameter, squareness, concentricity, cylindricity and static rotation imbalance

- If the measured value exceeds the limit or deviates from the standard value, replace the parking brake drum.

https://truckmanualshub.com/

FUSO

Group 37

Steering

MITSUBISHI FUSO TRUCK OF AMERICA, Inc.

Pub.No.00ELT0001-37

https://truckmanualshub.com/

INDEX

SPECIFICATIONS **37-2**

STRUCTURE AND OPERATION
1. **Steering System** **37-4**
2. **Oil Flow** **37-4**
3. **Power Steering Gear Assembly** **37-5**
4. **Power Steering Oil Pump** **37-7**

TROUBLESHOOTING **37-8**

ON-VEHICLE INSPECTION AND ADJUSTMENT
1. **Steering Wheel Play** **37-10**
2. **Steering Column Looseness** **37-10**
3. **Inspection of Rods and Arms for Looseness** **37-10**
4. **Inspection of Power Steering System Mounts for Looseness** **37-11**
5. **Inspection and Replacement of Power Steering Oil** **37-11**
6. **Performance Verification Test of Power Steering System** **37-13**
7. **Inspection of Drag Link Ball Joint** **37-14**
8. **Inspection of Steering Wheel Operation during Running** **37-14**

STEERING COLUMN **37-16**

POWER STEERING GEAR ASSEMBLY AND DRAG LINK **37-22**

POWER STEERING OIL TANK **37-38**

https://truckmanualshub.com/

SPECIFICATIONS

Steering wheel, steering shaft and power steering gear

Item		Specifications	
		FE	FG
Steering wheel	Type	2-spoke type	
	Outer diameter mm {in.}	400 {15.7}	
Steering shaft	Type	Universal joint type (tilt and telescopic type)	
Power steering gear assembly	Manufacturer	Unisia JKC Steering Systems	
	Type	Ball nut type	
	Form	Integral form	
	Item number	455-00011	454-00011
	Gear ratio	22.7	22.2
	Cylinder diameter mm {in.}	85 {3.35}	80 {3.15}

Power steering oil pump

Item	Specifications	
	FEC7, FEC9	FEC5, FG
Manufacturer	Fiat Powertrain Technologies S.p.A.	
Type	Vane type	
Delivery rate cm^3 {cu.in.}/rev.	11.5 {0.93}	
Adjusted flow volume L {qts.}/min.	6 to 8 {6.3 to 8.5}	
Adjusted pressure (relief valve) MPa {psi, kgf/cm^2}	$12.5\,^{0}_{-1}$ {$1810\,^{0}_{-140}$, $127\,^{0}_{-10}$}	$11.0\,^{0}_{-1}$ {$1590\,^{0}_{-140}$, $112\,^{0}_{-10}$}
Permissible revolutions rpm	500 to 4900	

https://truckmanualshub.com/

M E M O

https://truckmanualshub.com/

1. Steering System

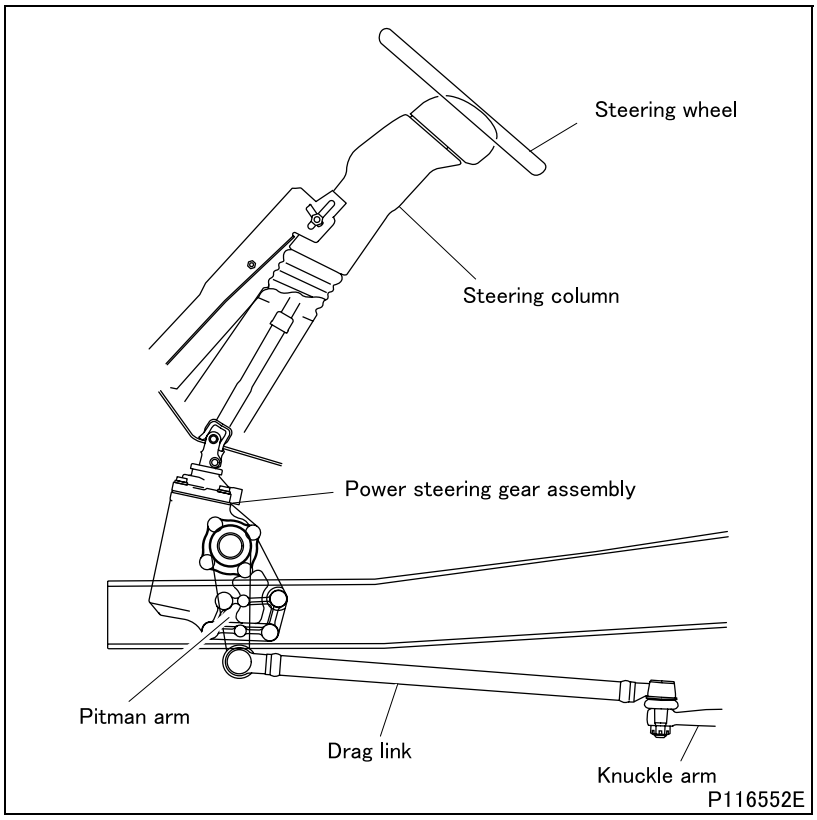

2. Oil Flow

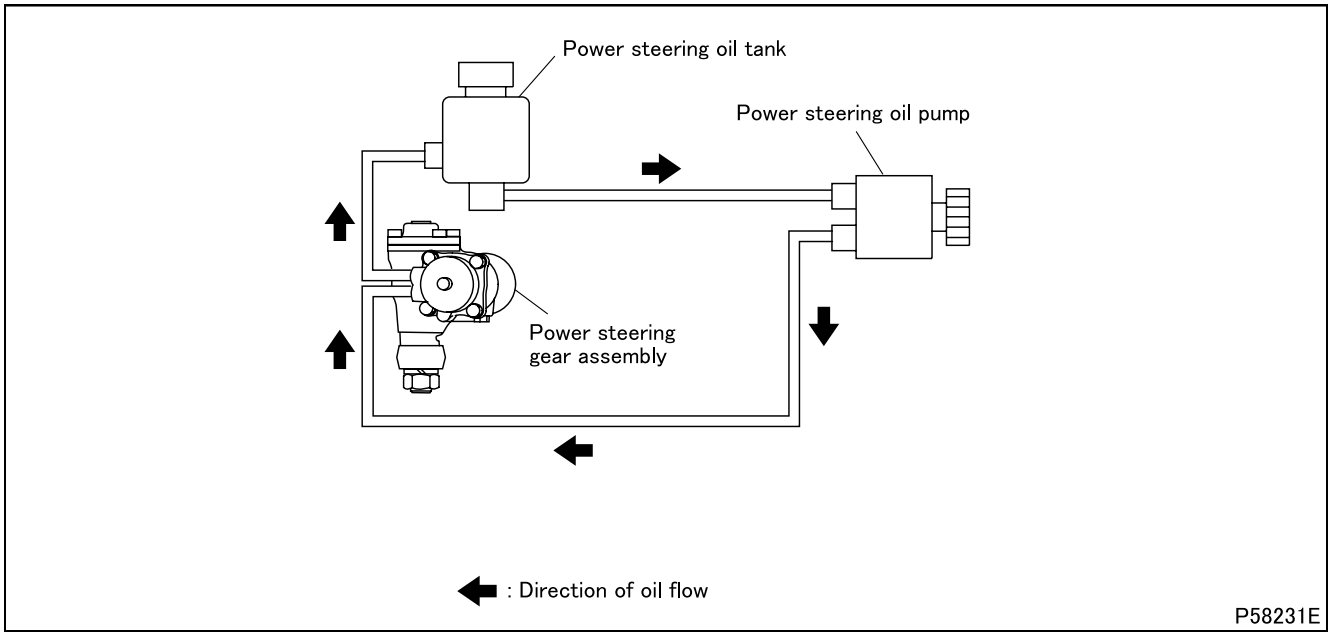

https://truckmanualshub.com/

3. Power Steering Gear Assembly

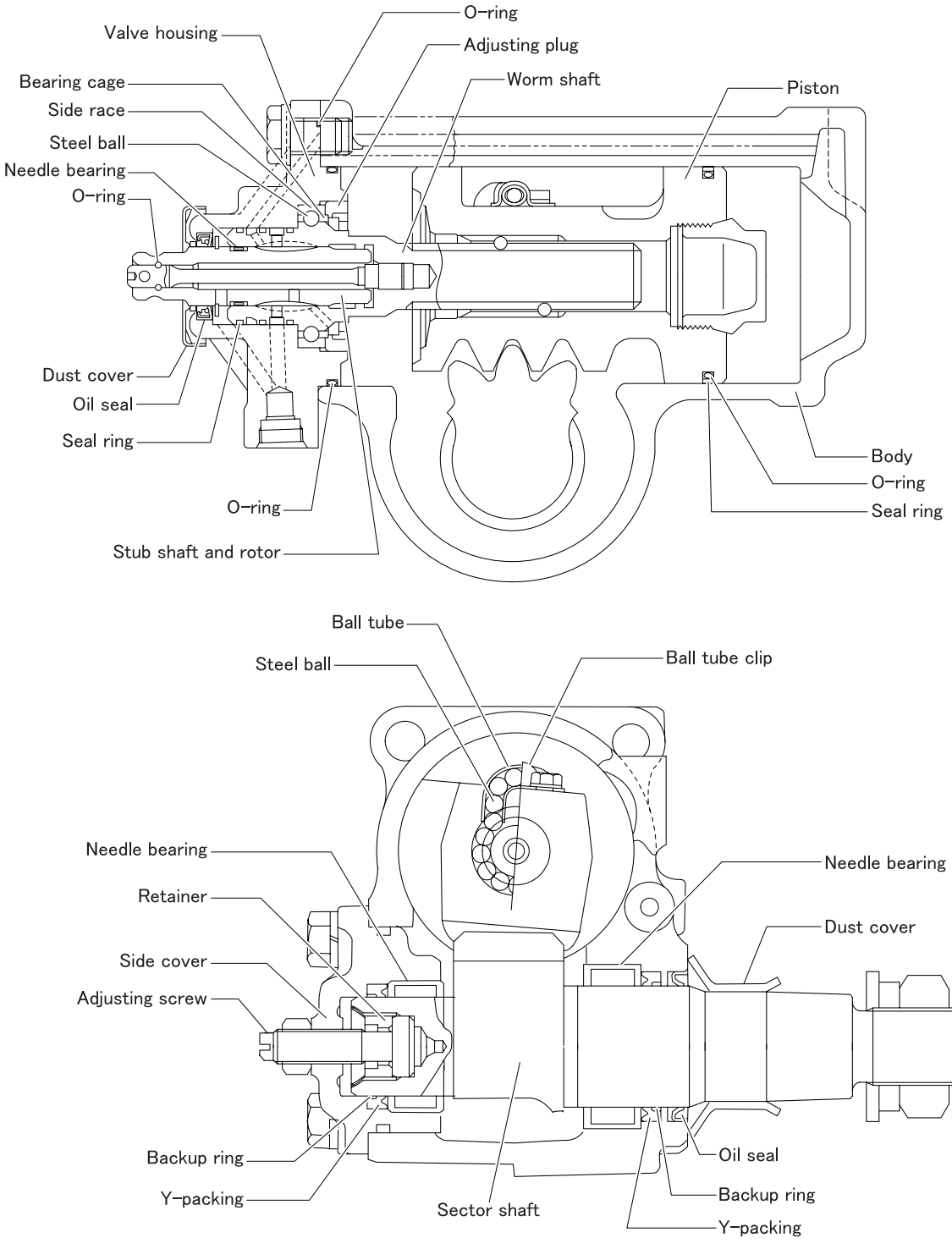

- The power steering gear assembly utilizes a rotary valve and torsion bar to ensure light and smooth operation at low speeds and stable steering feel at high speeds.

https://truckmanualshub.com/

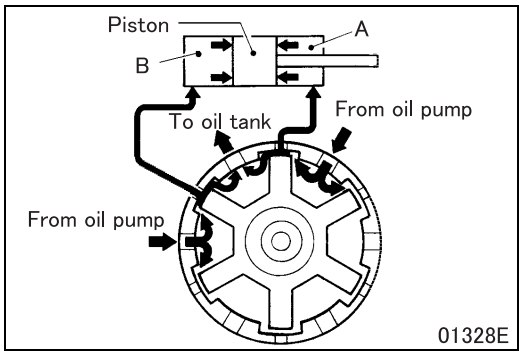

3.1 When moving straight forward

- As equal pressure is applied to cylinder chambers A and B on both sides of the piston, the piston rests in a neutral position.

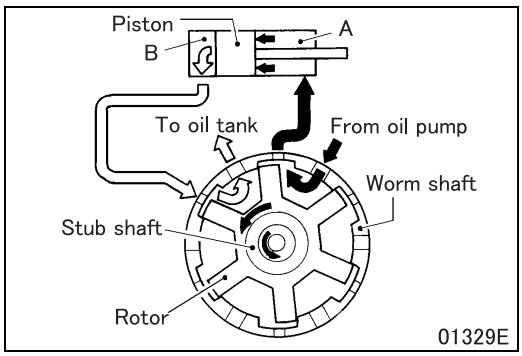

3.2 When turning the steering wheel

- When the steering wheel is turned, the stub shaft is twisted, which causes the rotor to shut off oil supply passages to cylinder chamber B. As a result, a pressure difference is created between cylinder chamber A and cylinder chamber B, and the piston moves, facilitating rotation of the worm shaft.
  The illustration shows a condition when the steering wheel is turned to the left.

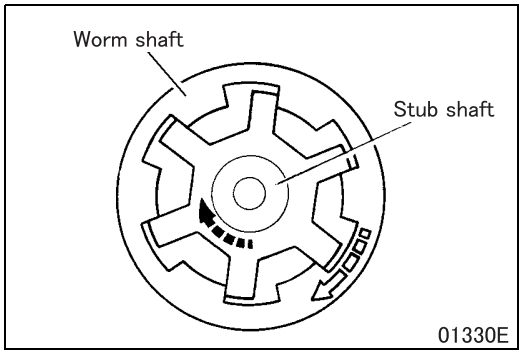

3.3 When hydraulic circuit fails

- The turning force of the stub shaft alone turns the worm shaft.

https://truckmanualshub.com/

4. Power Steering Oil Pump

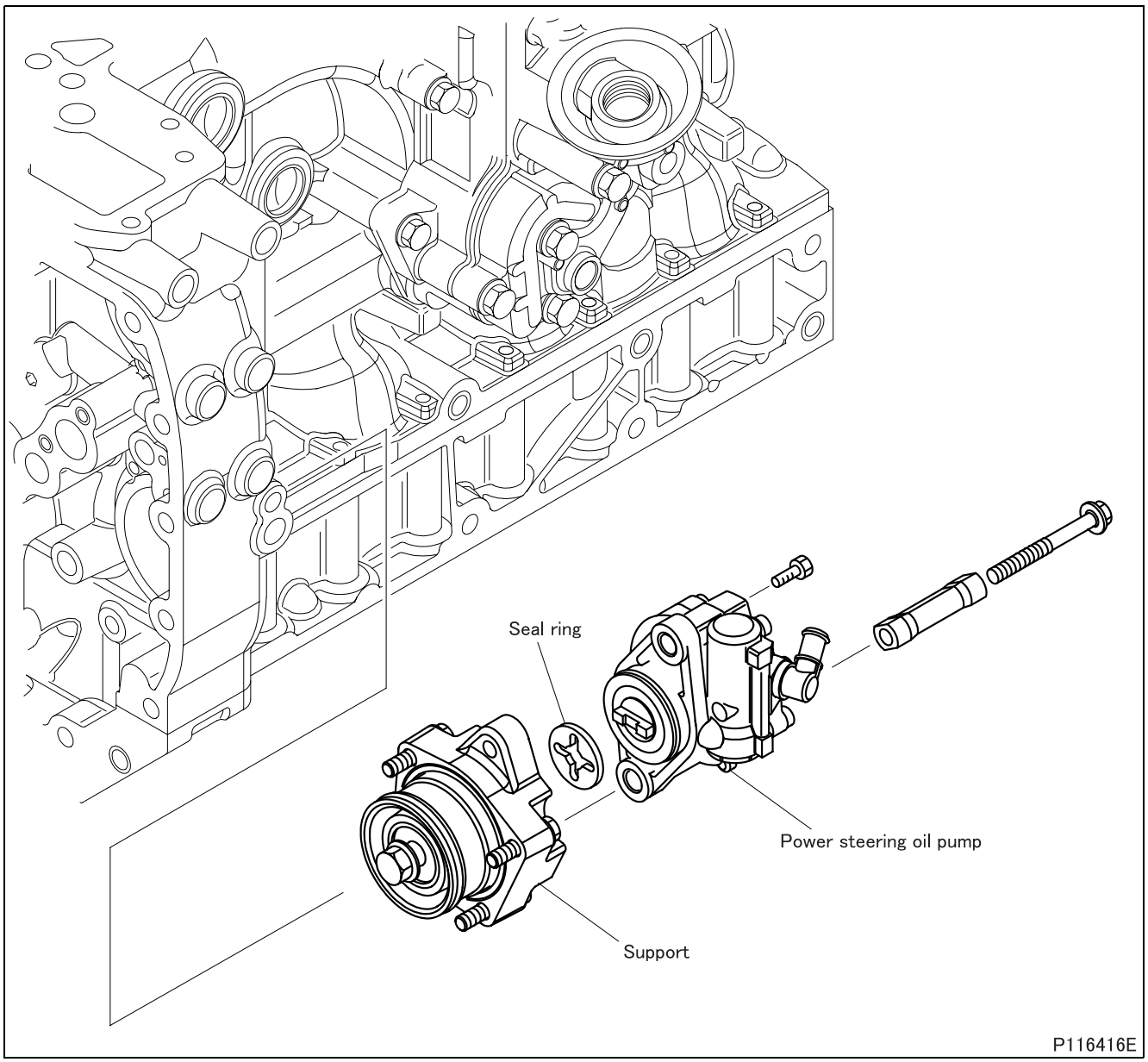

- The power steering pump incorporated in the engine block generates hydraulic pressure for steering assistance. The pump is driven by the engine via the timing gear chain.
- The power steering pump cannot be disassembled. To remove and reinstall it, see Gr11.

https://truckmanualshub.com/

TROUBLESHOOTING

Possible causes \ Symptoms		Steering wheel heavy to operate	Steering wheel play excessive and unstable	Steering wheel pulls to one side	Steering wheel vibration	Steering wheel return not smooth	Steering wheel does not turn	Steering angle insufficient or different between right and left	Oil leakage	Oil pump oil pressure abnormal	Noise from oil pump (grinding)	Noise from oil pump (squeaking)	Noise from oil pump (low whirring)	Reference Gr
Faulty power steering mechanism	Oil quantity insufficient	O	O											
	Oil quantity excessive								O					
	Air bleeding insufficient	O	O						O					
	Oil viscosity unsuitable	O												
	Hydraulic circuit clogged	O												
	Power steering gear assembly faulty	O	O	O	O	O	O							
	Power steering gear assembly improperly installed	O	O			O								
	Gear engagement rotating torque incorrectly adjusted	O				O								
	Pitman mounting position incorrect							O						
Faulty steering column and link mechanism	Steering shaft universal joint abnormally worn, or damaged	O	O											
	Link deformed	O						O						
	Drag link ball joint abnormally worn or damaged	O	O											
	Tie rod ball joint abnormally worn or damaged	O	O											
	Steering angle off center between left and right			O										
	Tie rod bent						O							Gr26A, B
Faulty front axle, etc.	King pin poorly greased	O				O								
	Front wheel alignment (toe-in, camber and caster) incorrect	O		O	O	O								
	Thrust bearing damaged	O												
	Wheel hub bearing worn out or damaged		O	O	O									
	King pin or bushing worn out or damaged		O	O	O									
	Front axle deformed			O	O									
	Knuckle arm, tie rod arm, knuckle, etc. improperly tightened				O									
	Front spring U-bolt, nut, etc. loose				O									Gr33
	Front tire radial and lateral runout; static and dynamic balance incorrect				O									Gr31
	Front axle parts overtightened					O								Gr26A, B
	Steering angle incorrectly adjusted						O	O						
	Mounted parts, connections loose		O											
	Knuckle stopper bolt improperly adjusted							O						

https://truckmanualshub.com/

Possible causes \ Symptoms		Steering wheel heavy to operate	Steering wheel play excessive and unstable	Steering wheel pulls to one side	Steering wheel vibration	Steering wheel return not smooth	Steering wheel does not turn	Steering angle insufficient or different between right and left	Oil leakage	Oil pump oil pressure abnormal	Noise from oil pump (grinding)	Noise from oil pump (squeaking)	Noise from oil pump (low whirring)	Reference Gr
Faulty oil pump	Oil pump housing faulty								O					
	O-ring, oil seal faulty								O					
	Bolt improperly tightened								O					
	Maximum generated oil pressure insufficient									O				
	Oil line crushed or clogged									O				
	Air caught in oil pump										O			
	Oil pump interior seized									O	O	O		
	Mounting bolt and nut loose												O	
	Pump body faulty												O	
	Valve malfunctioning									O				
Other abnormalities	Load excessive forward of load-carrying platform	O												
	Load excessive rearward of load-carrying platform		O											
	Load excessive on one side of loading bed			O										
	Difference excessive in wheelbase between left and right			O										
	Propeller shaft runout excessive				O									Gr25
	Rear axle housing bent			O										Gr27
	Final drive gear and final drive pinion damaged or improperly engaged				O									Gr26B, 27
	Tire pressure insufficient	O												Gr31
	Tire pressure excessive		O											
	Difference excessive in degree of wear between left and right tires			O										
	Left and right tires different in outer diameter			O										
	Front tire radial and lateral runout, static and dynamic balance incorrect				O									
	Braking force unbalanced			O										Gr35E

https://truckmanualshub.com/

ON-VEHICLE INSPECTION AND ADJUSTMENT

1. Steering Wheel Play

Service standards (Unit: mm {in.})

Location	Maintenance item		Standard value	Limit	Remedy
–	Steering wheel play (measured at outer periphery of wheel)	At engine start	5 to 50 {0.2 to 2.0}	–	Replace
		Engine stopped	10 to 20 {0.39 to 0.79}	–	Adjust

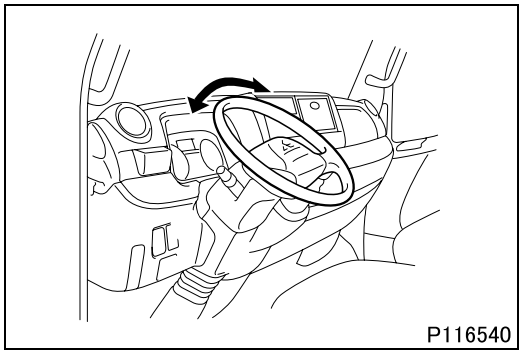

- With the vehicle placed straight forward, perform the following checks.

1.1 At engine start

- Start the engine and gently turn the steering wheel left and right to measure its peripheral play.
- If the play deviates from the standard value check tightening points of steering shaft and steering linkage parts as pitman arm to knuckle, and replace those parts if they have any looseness.

1.2 When engine is stopped

- Stop the engine and turn the steering wheel left and right within the range where the drag link does not move (tangential force on the periphery: 5 N {1.1 lbs, 0.5 kgf}) to measure its peripheral play.
- If the play deviates from the standard value, adjust the play with the adjusting screw of the power steering booster.

2. Steering Column Looseness

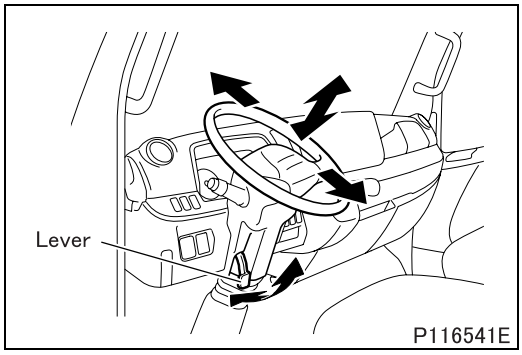

- Push and pull the steering wheel by hand to check the steering column for looseness.
- With the steering column tilted all the way forward, pull the steering wheel backward and check the steering column for looseness.
- If the steering column is loose, adjust the tilting and telescoping lever.

3. Inspection of Rods and Arms for Looseness

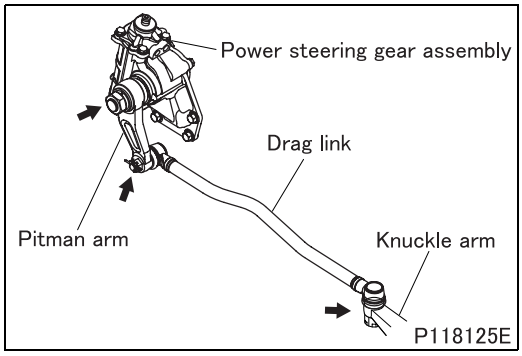

- Check the rods and arms of drag link, pitman arm for damage and looseness.
- If any abnormality is found, replace the faulty parts or tighten the parts to the specified torque.

https://truckmanualshub.com/

4. Inspection of Power Steering System Mounts for Looseness

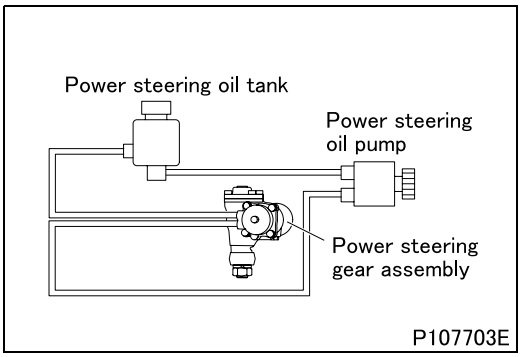

- Check the mounting sections of power steering oil tank, power steering oil pump and power steering gear assembly for looseness.
- Check the connections of hose and pipe for looseness.
- If any looseness is found, tighten the loose parts to the specified torque.

5. Inspection and Replacement of Power Steering Oil

Tightening torque (Unit: N·m {ft.lbs, kgf·m})

Mark	Parts to be tightened	Tightening torque	Remarks
–	Feed pipe and return pipe	11.8 to 17.6 {8.7 to 13, 1.2 to 1.8}	–

Lubricant and/or sealant

Mark	Points of application	Specified lubricant and/or sealant	Quantity
–	Power steering oil tank	Automatic transmission fluid (DEXRON II, DEXRON III type)	Between MIN and MAX of power steering oil tank

5.1 Oil leakage

- Check the power steering oil tank, power steering oil pump, power steering gear assembly and hose and pipe connections for oil leaks. Check also the hoses for blistering due to deterioration, damage and crack.
- If any oil leaks are found, tighten the connection or replace the faulty parts.

5.2 Oil level check

- Confirm that the hydraulic fluid is within the specified oil level range.
- Pour additional fluid if necessary.

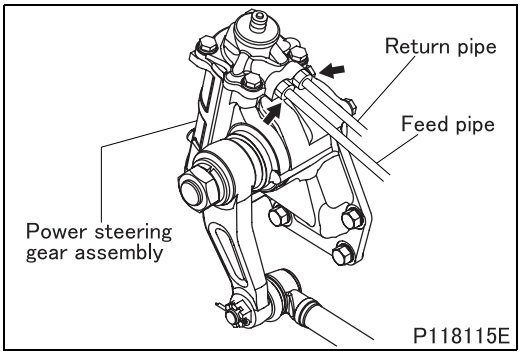

5.3 Replacement

[Draining]

- Jack up the front wheels.
- Clean the port areas of feed and return pipes to prevent entry of dirt, dust, and other foreign material inside the power steering gear assembly.
- Loosen feed and return pipes connected to the power steering gear assembly.
- Repeatedly turn the steering wheel fully left and right to drain the fluid from the power steering gear assembly.
- After draining the fluid, tighten the feed and return pipes to specified torque.

https://truckmanualshub.com/

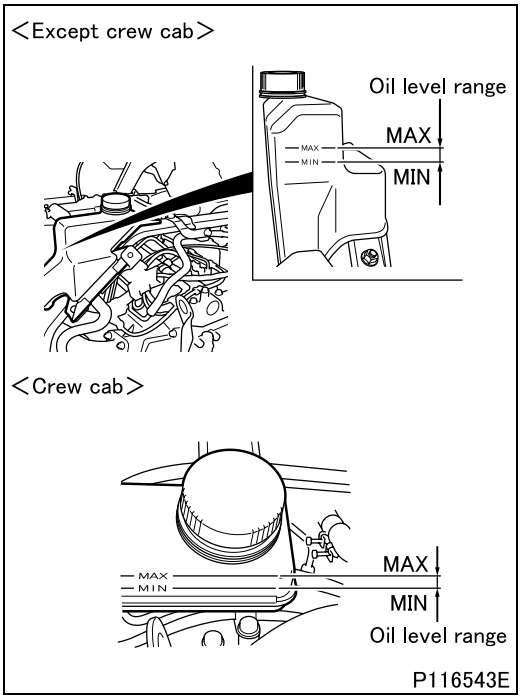

[Filling]

- Pour fluid into the power steering oil tank up to the specified oil level range.
- Bleed the power steering system of air.

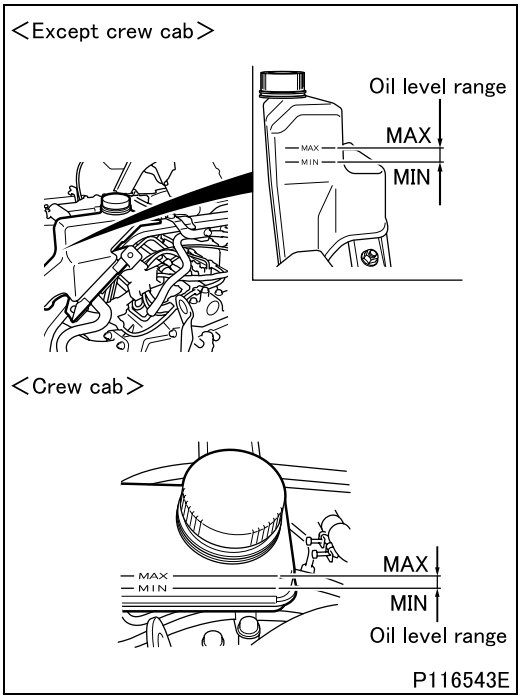

5.4 Air bleeding

- Pour fluid into the power steering oil tank up to the specified oil level range.
- With the engine stopped, jack up the front wheels.
- Repeatedly turn the steering wheel fully left and right. When the fluid level has dropped, add sufficient fluid to maintain the fluid level within the specified range.
- Start the engine to idle.
- When the fluid level has dropped, stop the engine and add sufficient fluid to maintain the fluid level within the specified range.
- Restart the engine. While checking for a drop in fluid level, turn the steering wheel fully left and right and add fluid as much as necessary. Repeat this practice until the fluid level is stabilized within the specified range.
- Turn the steering wheel fully left and right repeatedly.

CAUTION ⚠

- **To avoid seizure of the power steering oil pump, do not keep the steering wheel turned fully to left or right for more than 10 seconds when the engine is running.**
- **Do not rev the engine during air bleeding; otherwise, the power steering pipe may break. Run the engine at idle.**

- If there is any abnormal noise or a fluid level fluctuation, there is likely still some air trapped in the power steering system. Turn the steering wheel several times to raise the fluid temperature to approximately 60 to 80°C {140 to 176°F}.
- Stop the engine and wait for approximately five minutes.
- Lower the front wheels and turn the steering wheel several times. If there is no noise or fluid level fluctuation, the bleeding of the power steering system is completed.
- Repeat starting and stopping the engine several times to remove small air bubbles left in the power steering oil tank.

https://truckmanualshub.com/

- If air bubbles are not removed completely, drive the vehicle for a while, then check for abnormal noise and oil level fluctuation.
- When bleeding is finished, check that fluid in the power steering oil tank is within the specified level range. Also check pipe and hose connections for fluid leaks.

6. Performance Verification Test of Power Steering System

Service standards

Location	Maintenance item		Standard value	Limit	Remedy
–	Power steering system fluid pressure (with hands off steering wheel)		490 kPa {71 psi, 5 kgf/cm^2} or less	–	Repair or replace
–	Relief set pressure	FEC7 FEC9	12.5 $^{0}_{-0}$ {1810 $^{0}_{-140}$ psi, 127 $^{0}_{-10}$ kgf/cm^2}	–	Replace
		FEC5 FG	11.0 $^{0}_{-0}$ MPa {1590 $^{0}_{-140}$ psi, 112 $^{0}_{-10}$ kgf/cm^2}		

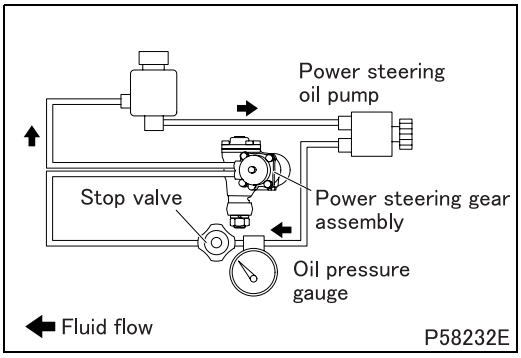

- Perform the inspection with the following measuring conditions to verify normal operation of the power steering gear assembly and power steering oil pump.
- Install oil pressure gauge capable of measuring upward of 13.5 MPa {1950 psi, 137 kgf/cm^2} and stop valve between power steering oil pump and power steering gear assembly, then bleed air.
- Start engine to idle with stop value fully opened.
- Turn steering wheel left and right several times to raise fluid temperature up to 50 to 60°C {122 to 140°F}.

CAUTION ⚠

- **To avoid seizure of the power steering oil pump, never close the stop valve for more than 10 seconds.**

6.1 Steering wheel operation check

- With the front wheels jacked up, turn the steering wheel all the way in both directions to check that it smoothly moves.
- If any abnormality is found, disassemble and repair defective parts.

6.2 Power steering system fluid pressure check

- Measure the fluid pressure with hands off the steering wheel. If the measurement deviates from the standard value, check the power steering gear assembly and hydraulic circuit for clogging. If clogging is not found, check the power steering oil pump and replace defective parts.

6.3 Relief set pressure check

- With the engine speed gradually increased up to 1000 to 1500 rpm, close the stop valve and measure the maximum fluid pressure. Do not leave the stop valve closed for any longer than 10 seconds.
- If the measurement deviates from the standard value, replace the power steering oil pump.

https://truckmanualshub.com/

7. Inspection of Drag Link Ball Joint

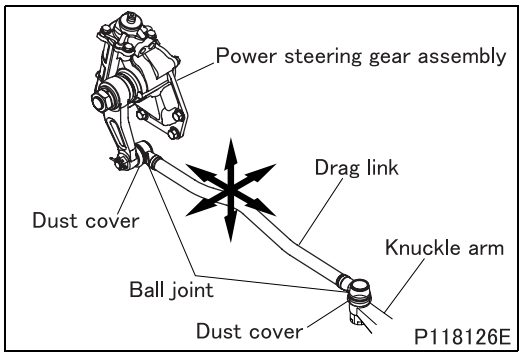

7.1 Backlash

- With the vehicle stationary, move the drag link by the rod in the forward, backward, vertical and lateral directions and check for play at the ball joints with power steering gear assembly and knuckle arm.
- If play is excessive, replace the drag link.

7.2 Dust cover

- Check the dust cover for excessive wear, cracks and other damage.
- Replace the drag link if it is defective.

8. Inspection of Steering Wheel Operation during Running

- Check to see if the steering wheel wobbles continuously while the vehicle is running (at a constant vehicle speed).
- The steering wheel should not pull to one side: Check to see if the steering wheel pulls to right or left while the vehicle is running straight on a flat road.
- Steering should not be excessively hard: Check that the steering effort is moderate with no excessive fluctuations throughout the entire operating range.
- Quick steering wheel return: Check to see if the steering wheel is hard to return or binds as it is returned from turned to center position.

https://truckmanualshub.com/

M E M O

https://truckmanualshub.com/

STEERING COLUMN

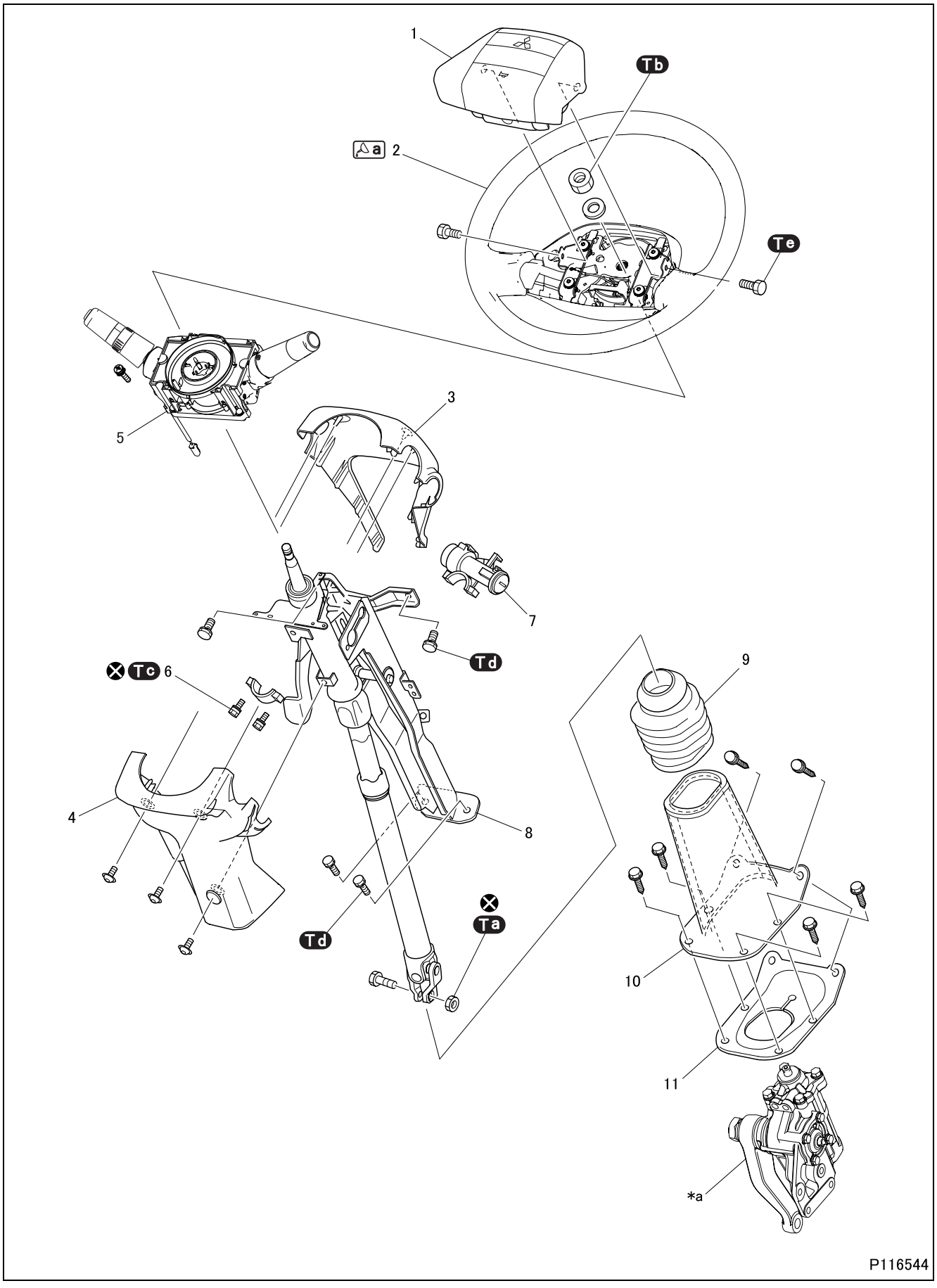

https://truckmanualshub.com/

● **Removal sequence**

1 Horn pad
2 Steering wheel
3 Front column cover
4 Rear column cover
5 Combination switch
6 Twist-off bolt
7 Starter switch
8 Steering column
(For details, see later pages.)
9 Dust cover
10 Dust cover
11 Dust cover

***a**: Power steering gear assembly
⊗: Non-reusable parts

● **Installation sequence**

Follow the removal sequence in reverse.

- After installation, check the steering column for looseness. (See ON-VEHICLE INSPECTION AND ADJUSTMENT.)

Tightening torque (Unit: N·m {ft.lbs, kgf·m})

Mark	Parts to be tightened	Tightening torque	Remarks
Ta	Nut (steering column and power steering gear mounting)	22 to 31 {16 to 23, 2.2 to 3.2}	–
Tb	Nut (steering wheel mounting)	39 to 49 {29 to 36, 4.0 to 5.0}	–
Tc	Twist-off bolt (starter switch mounting)	14.2 ± 1.5 {10 ± 1.1, 1.4 ± 0.2}	–
Td	Bolt (steering column assembly mounting)	17 to 25 {12 to 19, 1.7 to 2.6}	–
Te	Bolt (horn pad mounting)	7 to 11 {5.2 to 8.1, 0.7 to 1.1}	–

Lubricant and/or sealant

Mark	Points of application	Specified lubricant and/or sealant	Quantity
a	Horn contact ring under steering wheel	Wheel bearing grease [NLGI No. 2 (Li soap)]	As required

◆**Work before removal**◆

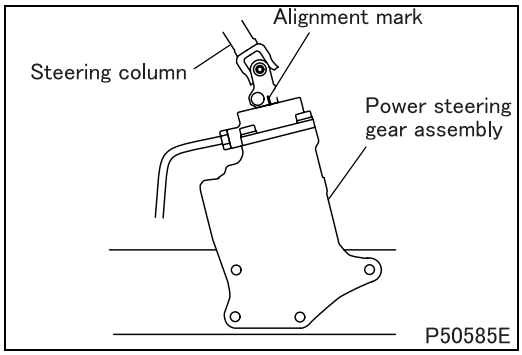

■ **Alignment mark: Steering column and power steering gear assembly**

- Provide alignment marks on the steering column and power steering gear assembly.

https://truckmanualshub.com/

◆Removal procedure◆

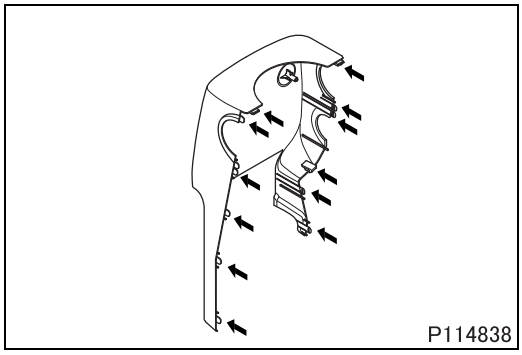

■ **Removal: Front column cover**

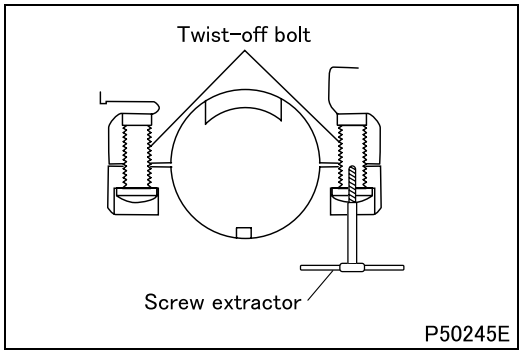

■ **Removal: Starter switch**

- Drill a hole of 5.5 to 6 mm {0.22 to 0.24 in.} in diameter to a depth of 10 to 15 mm {0.39 to 0.59 in.} in the twist-off bolt.
- Using the drilled hole, screw the screw extractor counterclockwise into the twist-off bolt and remove it.

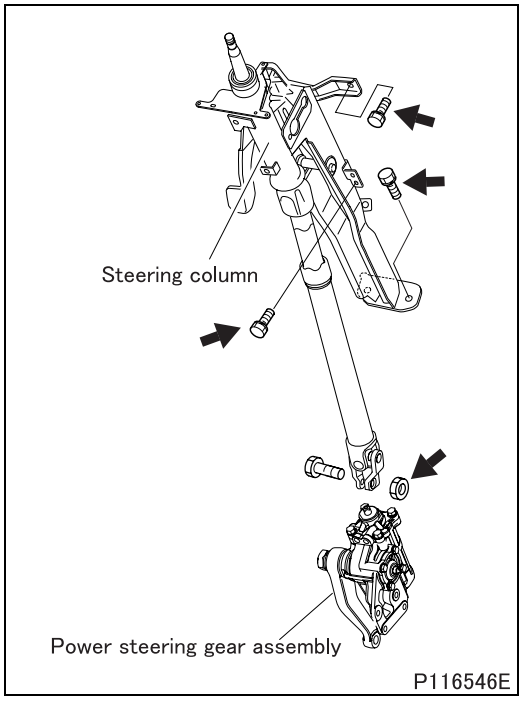

■ **Removal: Steering column**

- To remove the steering column, remove the nut connecting it to the power steering gear, in addition to mounting bolts in the cab.

https://truckmanualshub.com/

◆Installation procedure◆

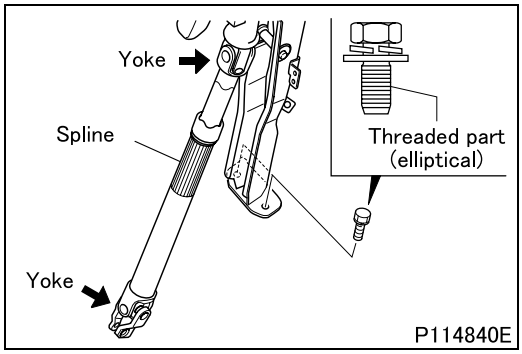

■ Installation: Steering column

- If the spline is off the steering column, assemble them with the yokes facing in the same direction.
- Install the steering column using the illustrated bolts. The threaded portion of these bolts is elliptical for grounding the horn circuit properly.

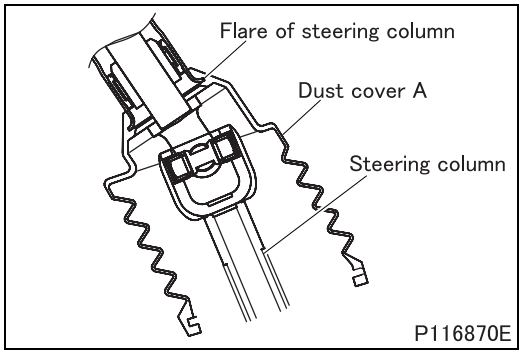

■ Installation: Dust cover A

- Install the dust cover A with the inside groove fit to the flare of the steering column.

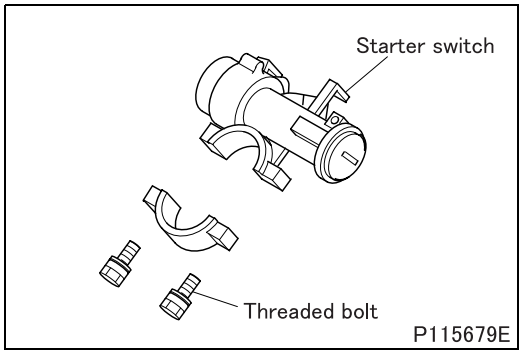

■ Installation: Starter switch

- Install the starter switch using new twist-off bolts. Tighten the bolts to specified torque to snap off their heads.

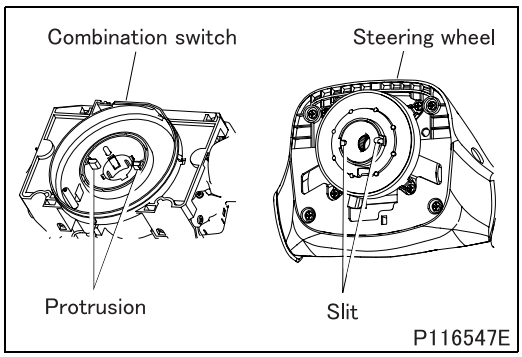

■ Installation: Steering wheel

- Align two slits of the steering wheel with two protrusions of the cancel cam on the combination switch to attach the steering wheel.

https://truckmanualshub.com/

◆Inspection after installation◆

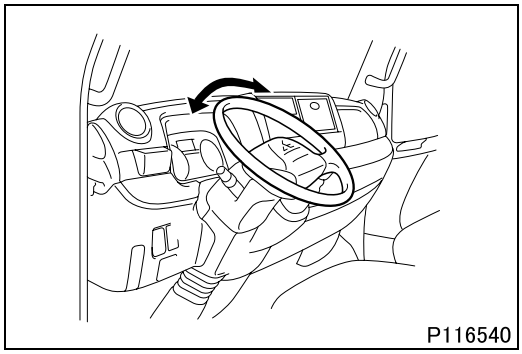

■ **Inspection: Noise from steering wheel**

- Lightly turn the steering wheel left and right and check for noise and other abnormalities.
- If any abnormality is found, disassemble the steering wheel, remove the cause and reinstall.

https://truckmanualshub.com/

M E M O

https://truckmanualshub.com/

POWER STEERING GEAR ASSEMBLY AND DRAG LINK

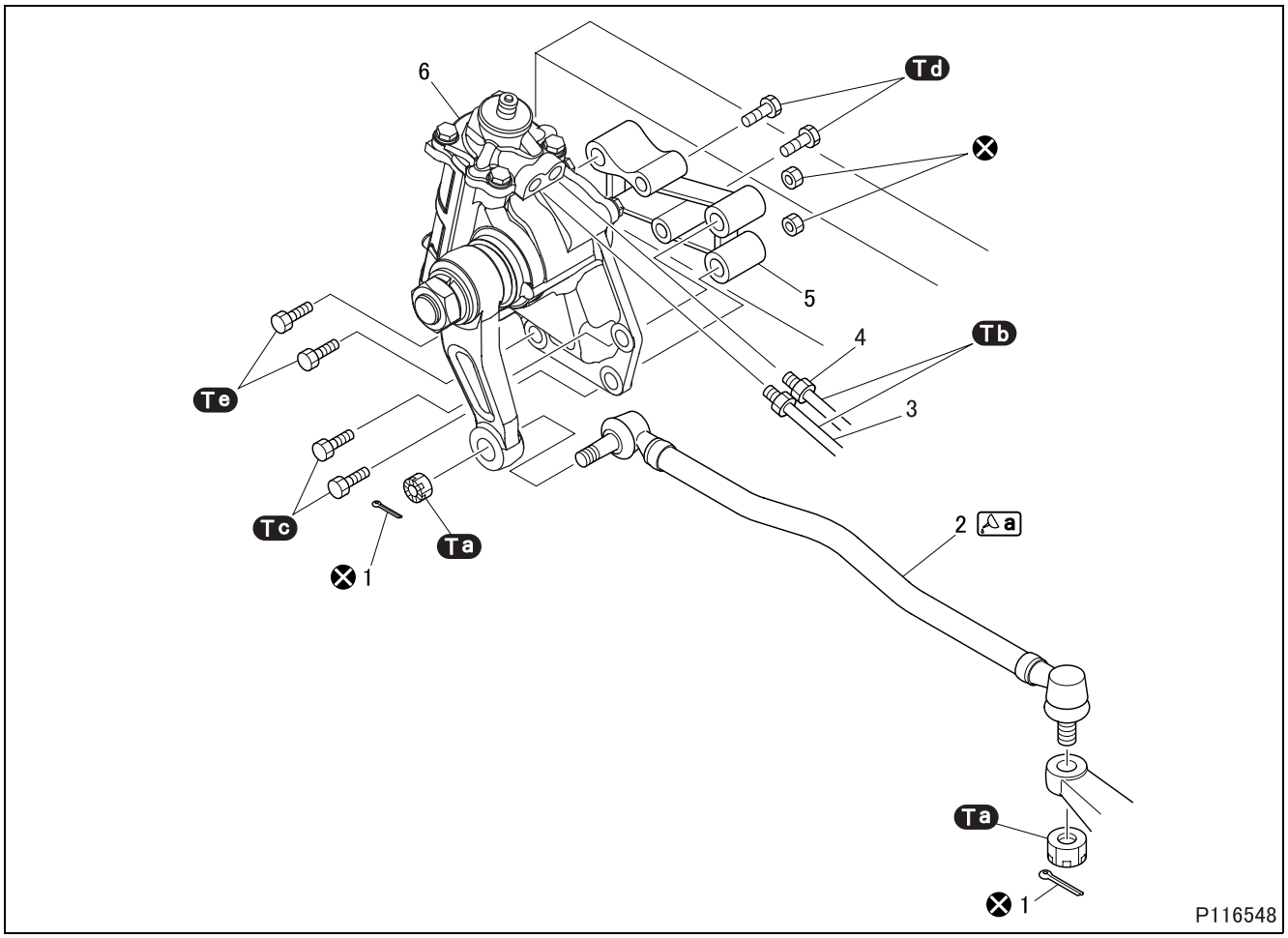

● **Removal sequence**

1 Split pin
2 Drag link
3 Feed pipe
4 Return pipe
5 Bracket
6 Power steering gear assembly

⊗: Non-reusable parts

CAUTION ⚠

- **When removing the drag link, take care not to deform or damage the dust cover.**

- Do not attempt to disassemble the drag link because it is of a unit construction.

● **Installation sequence**

Follow the removal sequence in reverse.

Service standards (Unit: mm {in.})

Location	Maintenance item		Standard value	Limit	Remedy
1	Ball joint of drag link	Play (± 980 N {± 220 lbs, ± 100 kgf} loaded)	0 to 0.15 {0 to 0.0059}	–	Replace
		Rotation torque	0.1 to 5.9 N·m {0.1 to 4.4 ft.lbs, 0.01 to 0.6 kgf·m}	–	

https://truckmanualshub.com/

Tightening torque (Unit: N·m {ft.lbs, kgf·m})

Mark	Parts to be tightened	Tightening torque	Remarks
Ta	Nut (drag link mounting)	137 to 196 {100 to 145, 14 to 20}	–
Tb	Feed pipe and return pipe	11.8 to 17.6 {8.7 to 13, 1.2 to 1.8}	–
Tc	Nut (power steering gear mounting)	130 to 160 {96 to 120, 13 to 16}	–
Td	Bolt (bracket mounting)	45 to 55 [33 to 41, 4.6 to 5.6]	–
Te	Bolt (power steering gear mounting)	230 to 260 {170 to 190, 23 to 27}	–

Lubricant and/or sealant

Mark	Points of application	Specified lubricant and/or sealant	Quantity
a	Lip area of drag link ball joint dust cover	Wheel bearing grease [NLGI No. 2 (Li soap)]	As required

◆Inspection procedure◆

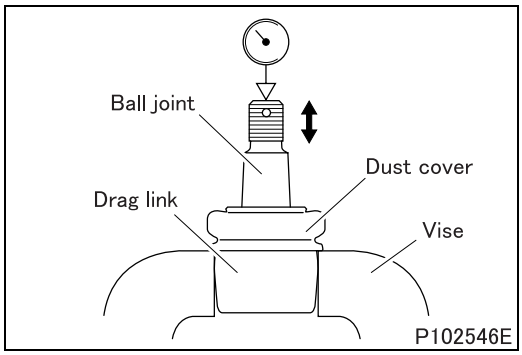

■ Inspection: Drag link

(1) Play

- Fix the tie drag link with a vise.

CAUTION ⚠

- **Take care not to deform or damage the dust cover when fixing it with a vise.**

- If measured value deviates from the standard value with applying the specified load (push and pull) to the ball joint, replace the drag link.

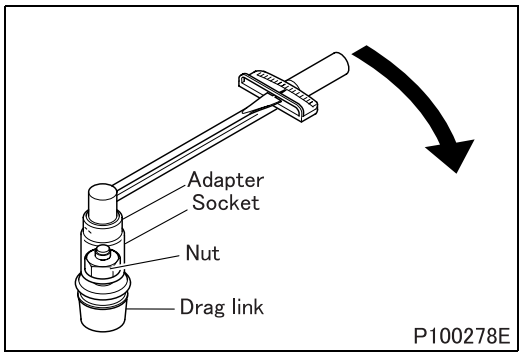

(2) Rotation torque

- Install the drag link mounting nut on the drag link.
- Install the socket, adapter and torque wrench to measure the rotation torque.
- If the measured value deviates from the standard value, replace the drag link.

(3) Dust cover

- Check the dust cover for wear, cracks and other damage. These abnormalities may cause water infiltration to the ball joint and wearing it out prematurely.
- If any abnormality is found in the dust cover, replace the drag link.

◆Installation procedure◆

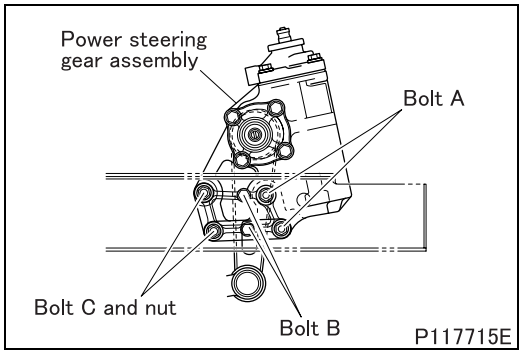

■ Installation: Power steering gear assembly

- Attach the bracket on the frame with the bolts B.
- Install the power steering gear assembly with bolts A (width across flats: 22 mm {0.87 in.}) on the vehicle front side and bolts C and nuts (width across flats: 19 mm {0.75 in.}) on the vehicle rear side by securing it together with the frame.

https://truckmanualshub.com/

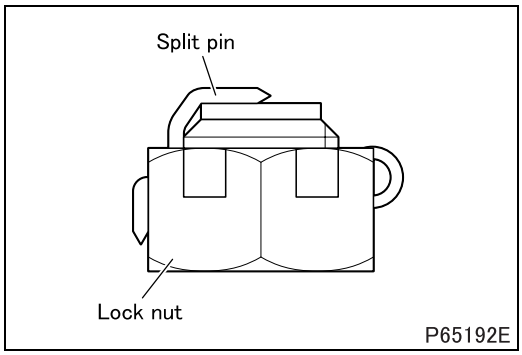

■ **Installation: Drag link**

- Align the slot in the lock nut with the split pin hole in the ball joint by turning the lock nut in the tightening direction while checking the torque is within the specified range, then install the split pin as shown in the illustration.

https://truckmanualshub.com/

M E M O

https://truckmanualshub.com/

POWER STEERING GEAR ASSEMBLY AND DRAG LINK

Power Steering Gear Assembly

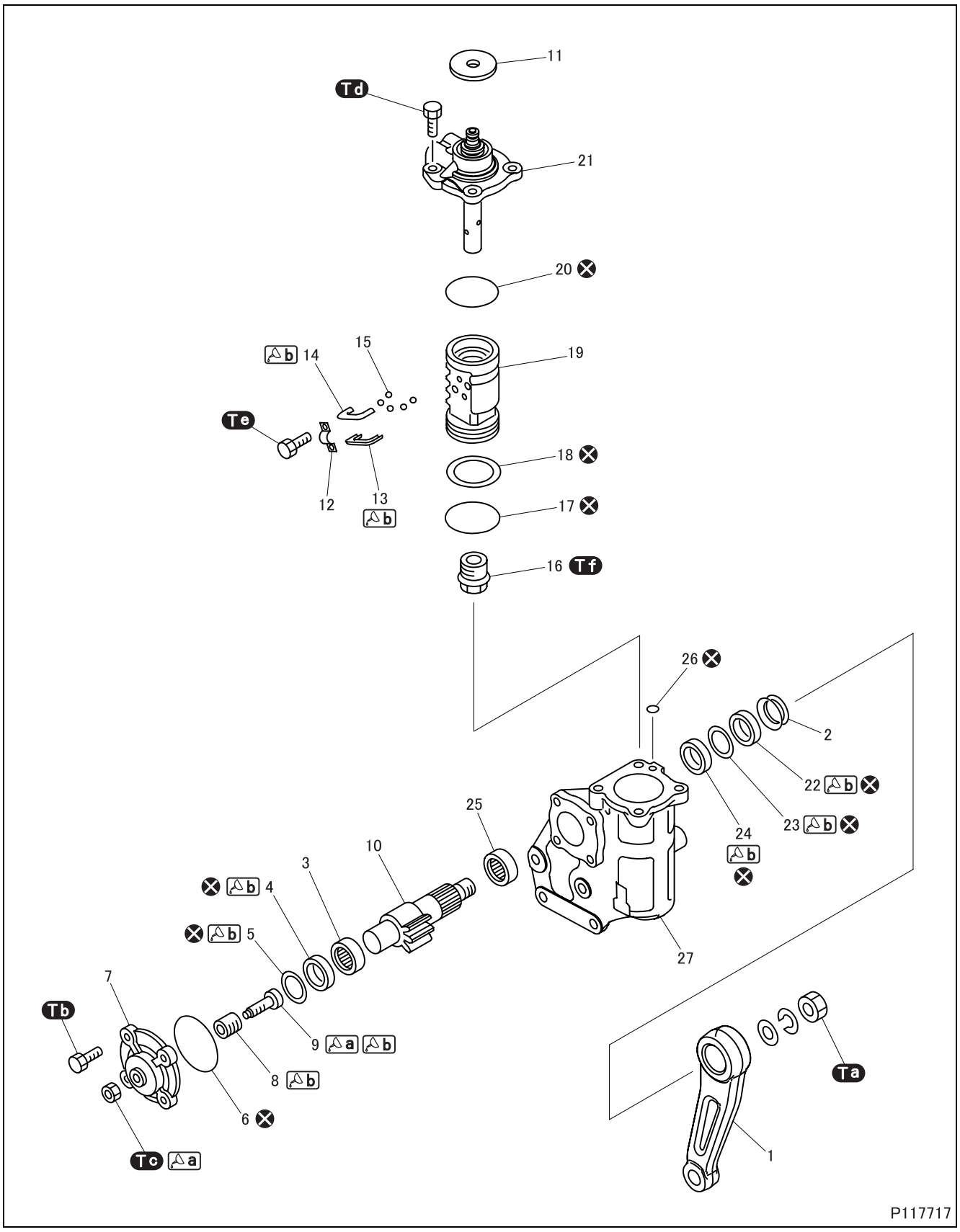

https://truckmanualshub.com/

● **Disassembly sequence**

1 Pitman arm
2 Dust cover
★**3** Needle bearing
4 Y-packing
5 Backup ring
6 O-ring
7 Side cover
★**8** Retainer
★**9** Adjusting screw
10 Sector shaft
11 Dust cover
12 Ball tube clip
13 Ball tube
14 Ball tube
15 Steel ball
★**16** Plug
17 O-ring
18 Seal ring
19 Piston
20 Oil seal
21 Screw and housing
22 Oil seal
23 Backup ring
24 Y-packing
★**25** Needle bearing
26 O-ring
27 Body

⊗: Non-reusable parts

- Do not remove parts marked ★ unless absolutely necessary.

● **Assembly sequence**

Follow the disassembly sequence in reverse.

Repair kit: Repair kit

Service standards (Unit: mm {in.})

Location	Maintenance item		Standard value	Limit	Remedy
–	Power steering gear	Starting torque	0.88 N·m {0.6 ft.lbs, 0.1 kgf·m} or less	–	Adjust
		Engagement torque	0 to 0.25 N·m {0 to 0.2 ft.lbs, 0 to 0.03 kgf·m}	–	
		Normal turning torque	0.15 to 0.78 N·m {0.1 to 0.6 ft.lbs, 0.02 to 0.1 kgf·m}	–	
9, 10	End play between sector shaft and adjusting screw		0 to 0.1 {0 to 0.0039}	–	Replace
10	Sector shaft outer diameter	Adjusting screw side	ϕ34.975 {1.38}	ϕ34.875 {1.37}	Replace
		Pitman side	ϕ44.975 {1.77}	ϕ44.875 {1.77}	
21	Play in diametric direction between screw and housing		0 to 0.5 {0 to 0.020}	–	Replace
19, 27	Clearance between piston and body		0.11 {0.0043}	0.16 {0.0063}	Replace

Tightening torque (Unit: N·m {ft.lbs, kgf·m})

Mark	Parts to be tightened		Tightening torque	Remarks
Ta	Lock nut (pitman arm fastening)		294 to 343 {215 to 255, 30 to 35}	–
Tb	Bolt (sector shaft mounting)		53.9 to 63.7 {40 to 47, 5.5 to 6.5}	–
Tc	Nut (adjusting screw tightening)		63.7 to 73.5 {47 to 54, 6.5 to 7.5}	–
Td	Bolt (valve housing attaching)	FE	98.1 to 107.9 {72 to 80, 10 to 11}	–
		FG	53.9 to 63.7 {40 to 47, 5.5 to 6.5}	–
Te	Screw (ball tube clip fitting)		4.41 to 5.39 {3.3 to 4.0, 0.4 to 0.5}	–
Tf	Plug		147 to 166 {110 to 120, 15 to 17}	–

https://truckmanualshub.com/

Lubricant and/or sealant

Mark	Points of application	Specified lubricant and/or sealant	Quantity
a	Nut threads and contact surface of side cover	Hermetic seal 101Y or ThreeBond 1102	As required
	Adjusting screw threads		
b	Inner circumference of backup ring	Multi-purpose type grease [NLGI No. 2 (Li soap)]	As required
	Inner circumference of Y-packing		
	Inner circumference of retainer		
	Adjusting screw threads and contact surface of sector shaft		
	Inner surface of ball tube		

Special tools (Unit: mm {in.})

Mark	Tool name and shape	Part No.	Application
a	Preload socket 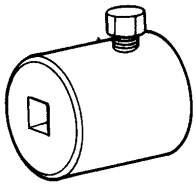 10028	MB991006	Measurement of power steering gear assembly starting torque
b	Pitman arm puller 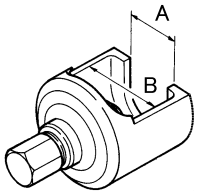 01355 <table><tr><th>A</th><th>B</th></tr><tr><td>49 {1.93}</td><td>76 {2.99}</td></tr></table>	MH062472	Removal of pitman arm
c	Insert tool assembly 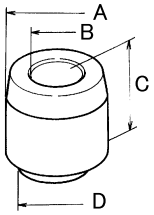 01358 <table><tr><th>A</th><th>B</th><th>C</th><th>D</th></tr><tr><td>ϕ35 {1.38}</td><td>ϕ25 {0.98}</td><td>53.5 {2.11}</td><td>ϕ33 {1.30}</td></tr></table>	MH062881 *910-21719	Forming of backup ring
d	Insert tool assembly 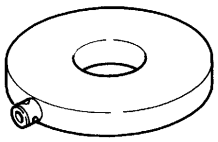 01356	MH063814 *910-11004	Forming of backup ring and installation of oil seal

*: Unisia JKC Steering Systems part numbers

https://truckmanualshub.com/

Mark	Tool name and shape	Part No.	Application
e	Needle 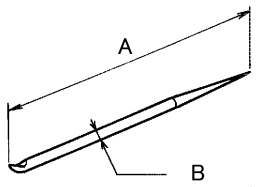 02288 A: 120 {4.72}; B: φ3 {0.12}	MC811948 *910-21200	Removal of O-ring and seal ring
f	Bar 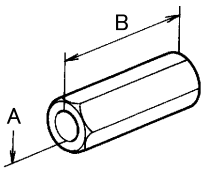 01360 A: φ12.5 {0.49}; B: 40 {1.57}	MH063815 *910-22813	Turning of retainer
g	Squeeze tool 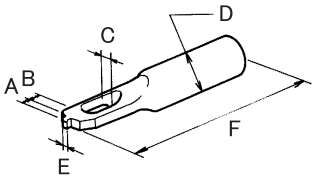 67927 A: 5 {0.20}; B: 8 {0.31}; C: 18 {0.71}; D: φ30 {1.18}; E: 4 {0.16}; F: 160 {6.30}	MH063816 *910-21803	Crimping of retainer
h	Insert tool 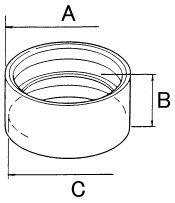 02289 A: φ98 {3.86}; B: 52 {2.05}; C: φ85.05 {3.35}	MH063812 *910-21730	Forming of piston seal ring
o	Insert tool 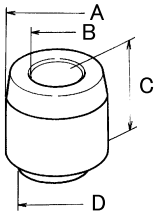 55473 A: φ45 {1.77}; B: φ20 {0.79}; C: 45 {1.77}; D: φ33 {1.30}	MH062880 *910-21716	Forming of backup ring

*: Unisia JKC Steering Systems part numbers

https://truckmanualshub.com/

◆Inspection before removal◆

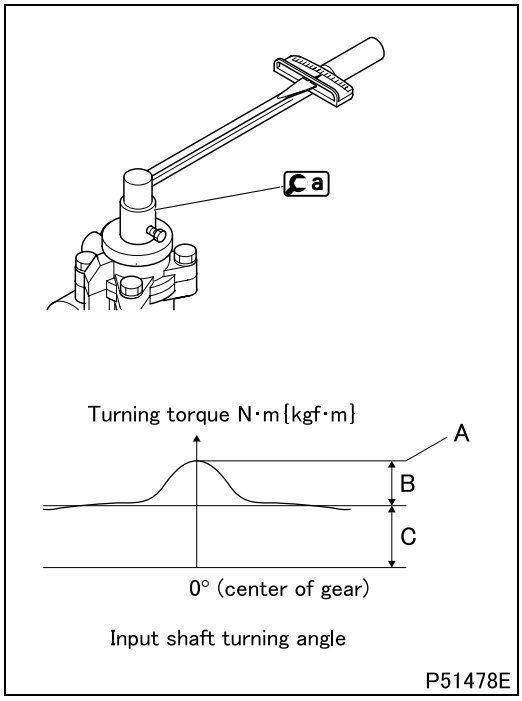

■ **Inspection: Starting torque**

- Using a, measure the starting torque of the power steering gear assembly for reference at the time of reassembly before removal.
  - A: Starting torque (= engagement torque + normal turning torque)
  - B: Engagement torque
  - C: Normal turning torque

◆Removal procedure◆

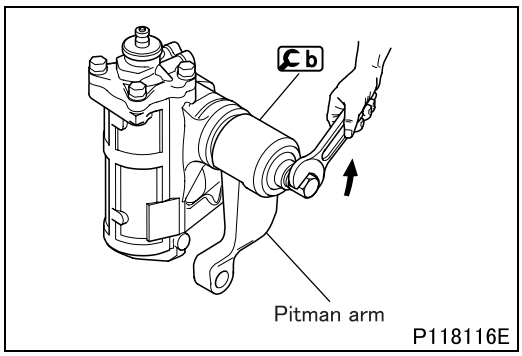

■ **Removal: Pitman arm**

https://truckmanualshub.com/

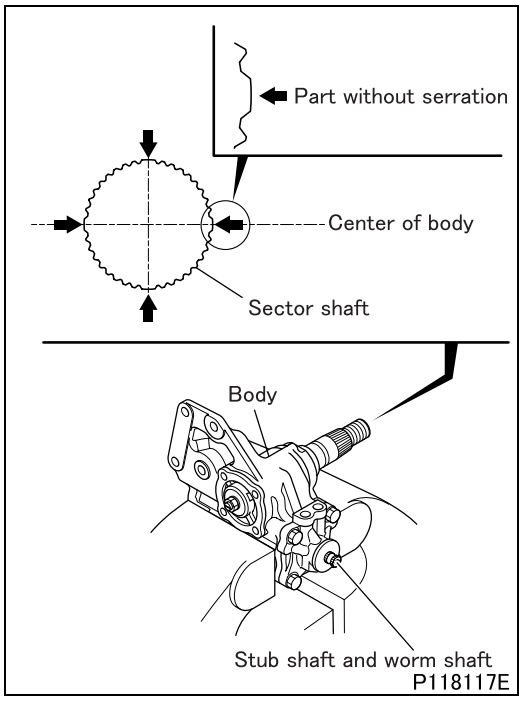

■ **Removal: Sector shaft**

- Before removing, set the sector shaft in neutral position as follows.
- Turn the stub shaft and worm shaft counterclockwise into the lock position, then back it up roughly 2.6 turns to bring the serration missing part of the serrated portion of the sector shaft into parallelism with the center of the body as shown.

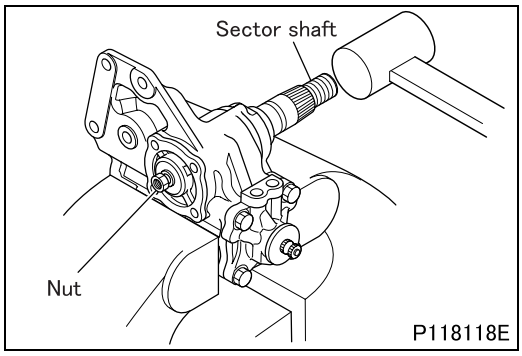

- Loosen nut, and remove the sector shaft by tapping the shaft end with a plastic hammer.
- If the sector shaft is stuck, it could be out of neutral position. In such a case, do not attempt to force it out by hammering but redo the neutral positioning procedure.

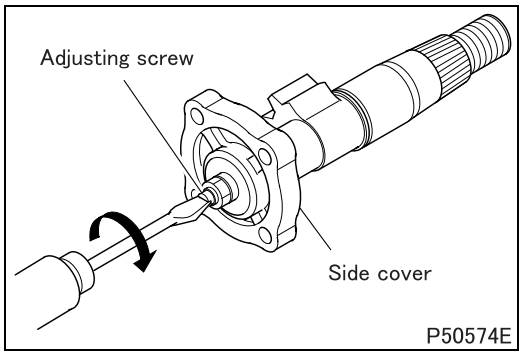

■ **Removal: Side cover**

- Remove the side cover by screwing in the adjusting screw.

https://truckmanualshub.com/

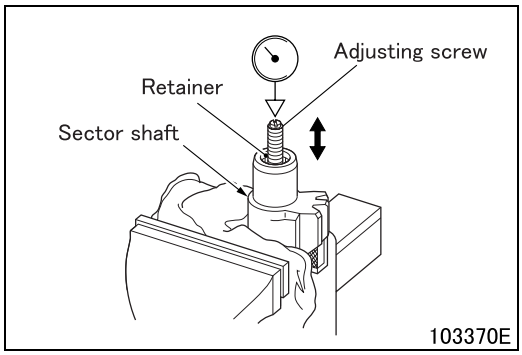

■ **Inspection: Play between sector shaft and adjusting screw**

- Remove the side cover and measure the axial play between the sector shaft and adjusting screw.

[Inspection]

- Hold the sector shaft with a vise.

CAUTION ⚠

- **When holding the sector shaft with a vice, be sure to cover it with a cloth or equivalent for protection.**

- Measure the axial play between the sector shaft and adjusting screw.
- If the measurement deviates from the standard value, replace defective parts.

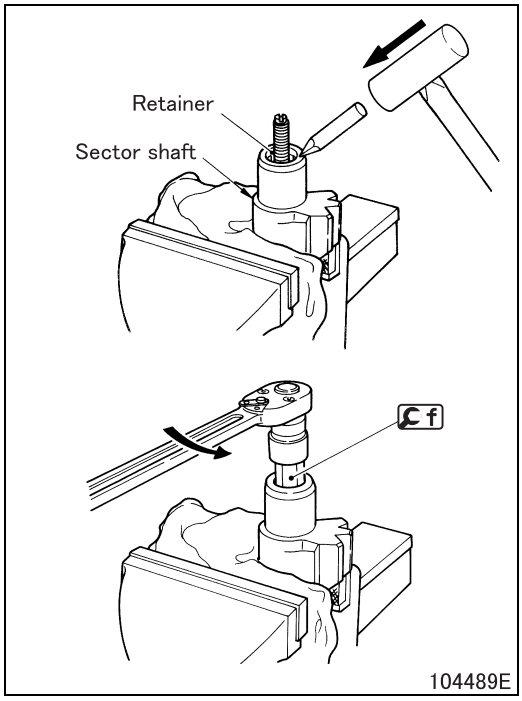

■ **Removal: Retainer**

- Undo the crimp of the retainer (at 2 points) using a chisel.
- Remove the retainer by f.

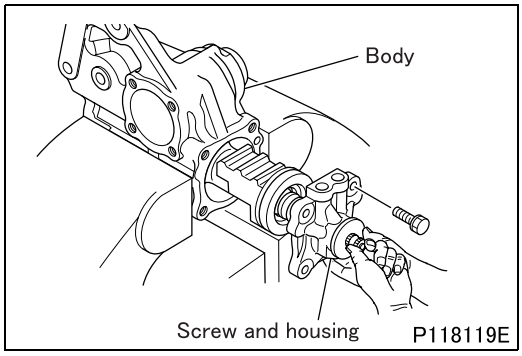

■ **Removal: Screw and housing**

- Remove the worm screw and housing from the body.

CAUTION ⚠

- **Take care so that balls in the worm screw and housing do not pop out.**
- **Take care not to scratch or otherwise damage the inner surface of the body and piston.**

https://truckmanualshub.com/

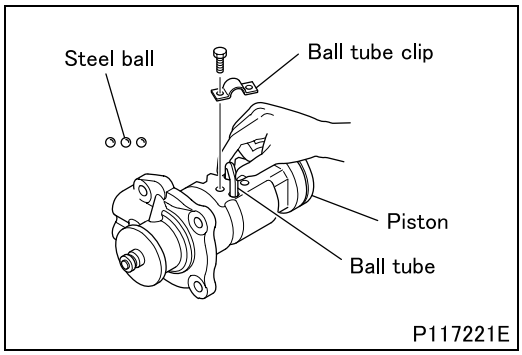

■ **Removal: Ball tube and steel ball**

- First remove steel balls from the piston, then remove ball tube clip. Hold the ball tube between fingers and remove it from the piston moving it lightly.

CAUTION ⚠

- **Be careful not to lose the steel balls (28 pieces in all).**

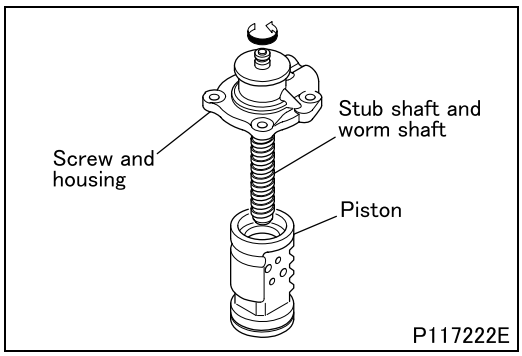

■ **Removal: Piston**

- Holding the screw and housing with the piston downward, turn the worm and stub shaft and remove the piston.

CAUTION ⚠

- **Be careful not to tilt the piston during removal. If it is tilted, steel balls will fall off the race of the piston and worm and stub shaft into the piston.**

◆Inspection procedure◆

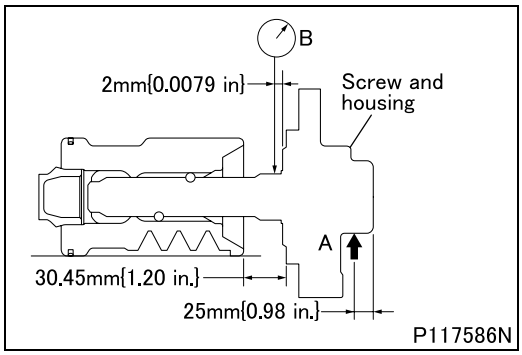

■ **Inspection: Side play of piston and worm and stub shaft**

- Apply a force of 49 N {11 lbs, 5.0 kgf} to the illustrated point A and measure play B (play in the diametric direction) of the screw and housing.
- If the measurement exceeds the limit, replace the faulty parts.

https://truckmanualshub.com/

◆Installation procedure◆

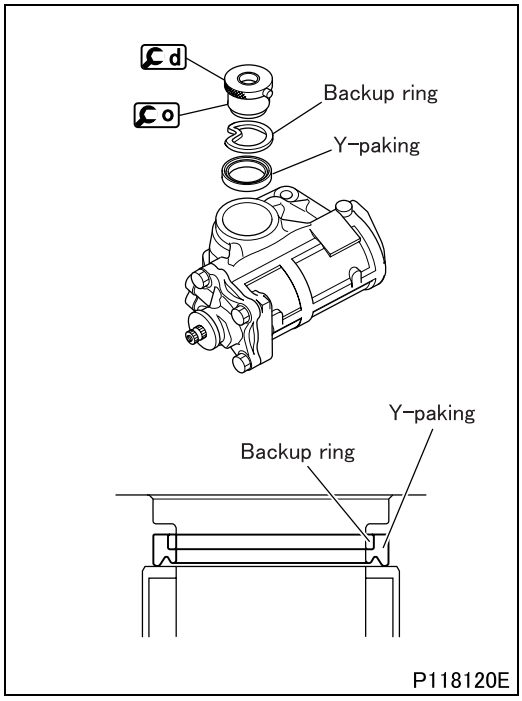

■ **Installation: Backup ring and Y-packing**

- Fill grease in the groove of Y-packing and install Y-packing in the illustrated direction.
- Install backup ring, formed as shown, using d and o.

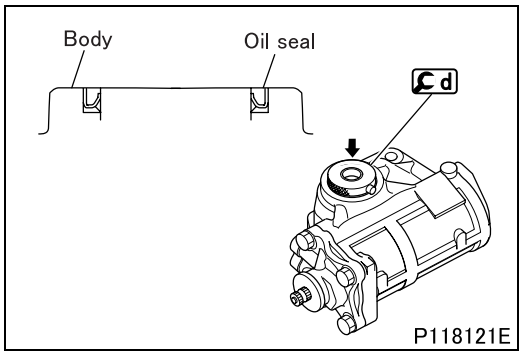

■ **Installation: Oil seal**

- Install the oil seal to the body in the illustrated direction.

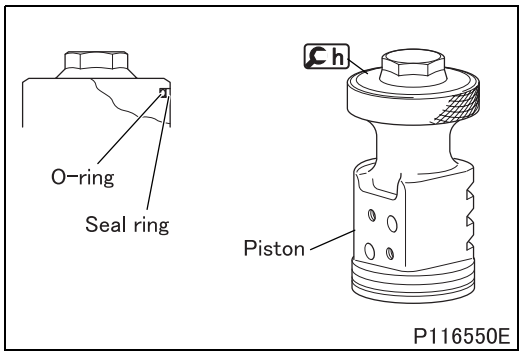

■ **Installation: Seal ring and O-ring**

- Install seal ring and O-ring in the outer surface grooves of the piston, and form the seal ring to fit in place using h.

https://truckmanualshub.com/

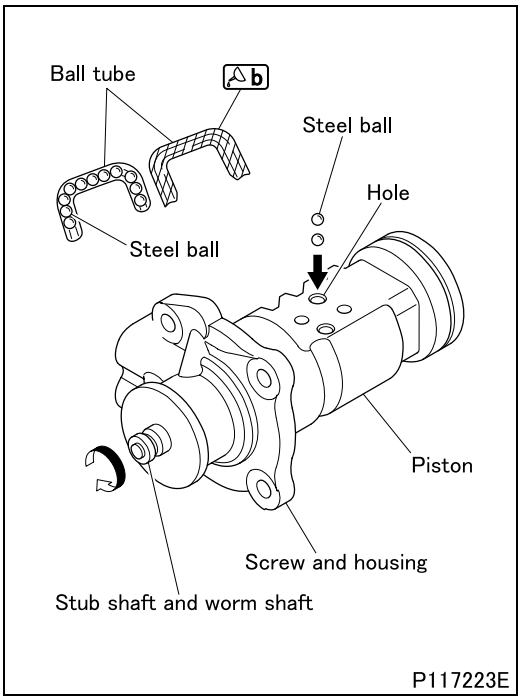

■ **Installation: Ball tube**

- Pack grease in one half of the ball tube, place 10 to 11 steel balls in it and put the other half ON it.
- Place the piston on a flat workbench, align the positions of the screw and housing and piston ball race, then while turning the worm and stub shaft, let steel balls fall from the ball tube hole.

CAUTION ⚠

- **Do not draw out the screw and housing until its end passes over the ball tube hole during installation. Otherwise the steel balls will come out of the ball race.**

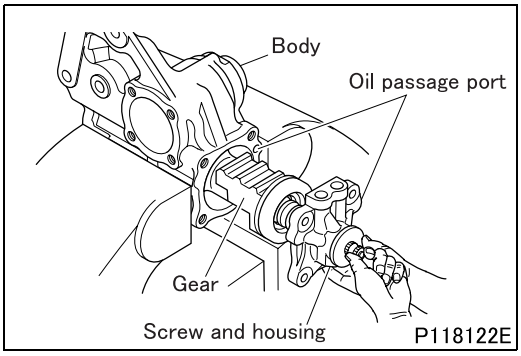

■ **Installation: Screw and housing**

- Position the gear toothed portion of the screw and housing in the illustrated direction so that it engages with the sector shaft.
- Install the screw and housing to the body, lightly holding it with hand so that its gear portion does not turn out of position. When installing, align the oil passage ports of the screw and housing and body.

CAUTION ⚠

- **Be careful not to damage the seal ring on the piston and the inner surface of the body.**

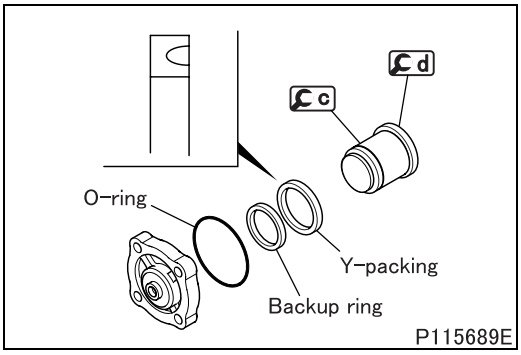

■ **Assembly: Side cover and center shaft**

- Install the O-ring on the side cover.
- Apply b to the inside circumference of the backup ring and fill b in the inside circumference of the Y-packing, then install them on the side cover in the direction shown. After installation, straighten them up using c and d.
- Install the needle bearing on the side cover.

https://truckmanualshub.com/

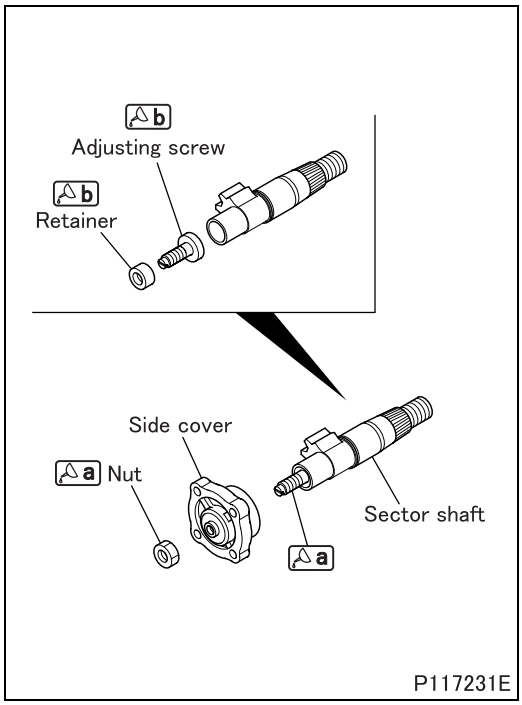

- Fill b in the inside circumference of the retainer and the mating surfaces of the adjusting screw and center shaft, then install each part of the center shaft.
- Apply b to the threads of the adjusting screw and the mating surfaces of the nut and side cover, then install the side cover on the center shaft.

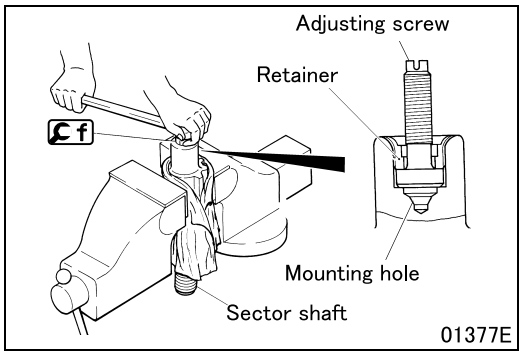

■ **Installation: Retainer**

- Pack grease in the adjusting screw mounting hole on the sector shaft.
- Install the adjusting screw into the sector shaft.
- Using f, tighten the retainer into place in the sector shaft.
- Back up the retainer by 180°, retighten it to a torque of 39 N·m {29 ft.lbs, 4 kgf·m}, then back it up again by 20°.
- Check that the adjusting screw turns smoothly.

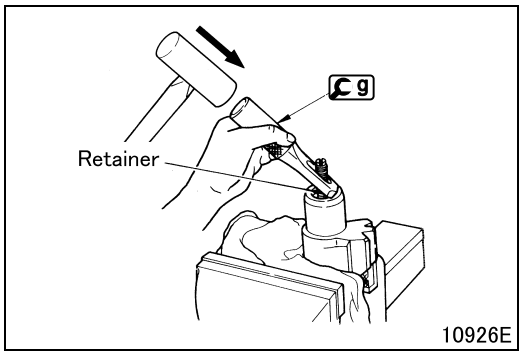

- Using g, crimp the retainer at two places.

https://truckmanualshub.com/

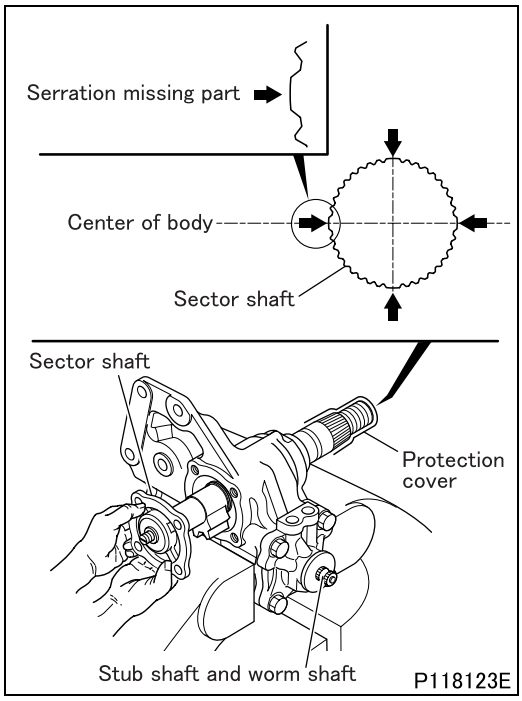

■ **Installation: Sector shaft**

- Set the sector shaft in the neutral position and install it into the body.
- When installing the sector shaft, cover up its threaded end and serrated portions for protection.
- Turn the worm and stub shaft to check that it makes roughly five turns lock to lock.
- If the number of turns is lower, check engagement of the stub shaft and worm shaft with the sector shaft, and correct if necessary.

◆Adjustment after installation◆

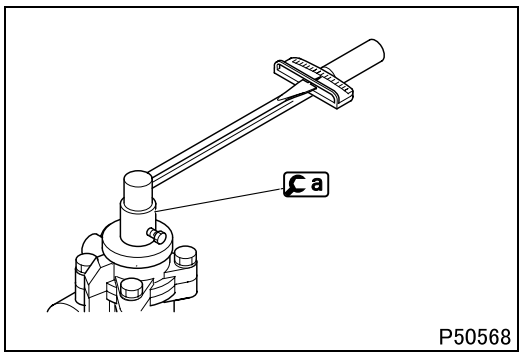

■ **Inspection: Starting torque**

[Inspection]

- Using a, measure the starting torque of the power steering gear assembly in the same manner as the measurement before removal. If the measurement deviates from the standard value, adjust the power steering gear assembly for proper starting torque or replace.

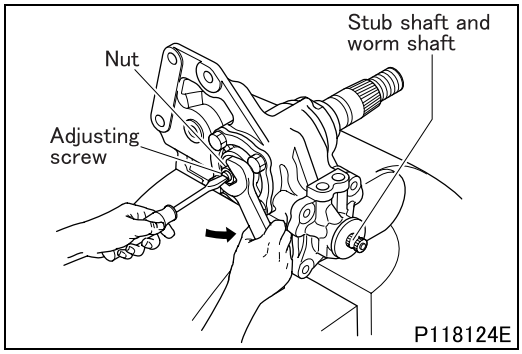

[Adjustment]

- Loosen nut.
- While rotating the stub shaft and worm shaft approximately 1/4 turn left and right, adjust for proper starting torque with the adjusting screw.

https://truckmanualshub.com/

POWER STEERING OIL TANK

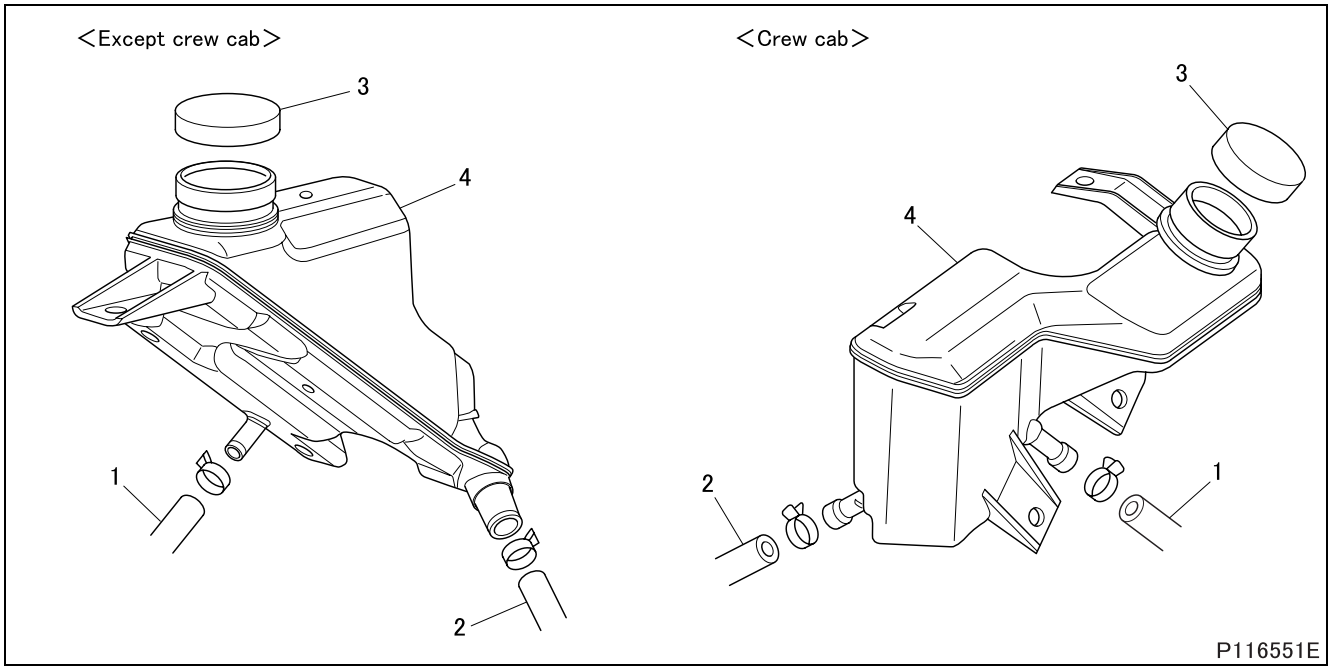

● **Disassembly sequence**

1 Return hose
2 Supply hose
3 Cap
4 Tank body

● **Assembly sequence**

Follow the disassembly sequence in reverse.

https://truckmanualshub.com/

FUSO

Group 41

Bumper And Frame

MITSUBISHI FUSO TRUCK OF AMERICA, Inc.

Pub.No.00ELT0001-41

https://truckmanualshub.com/

INDEX

SPECIFICATIONS 41-2

STRUCTURE AND OPERATION 41-3

FRONT BUMPER 41-4

FRAME 41-6

https://truckmanualshub.com/

SPECIFICATIONS

Item	Specifications	
	Except 4WD	4WD
Frame type	Ladder type	
Cross section configuration of side rail	⊐ shaped (open) channel section	

https://truckmanualshub.com/

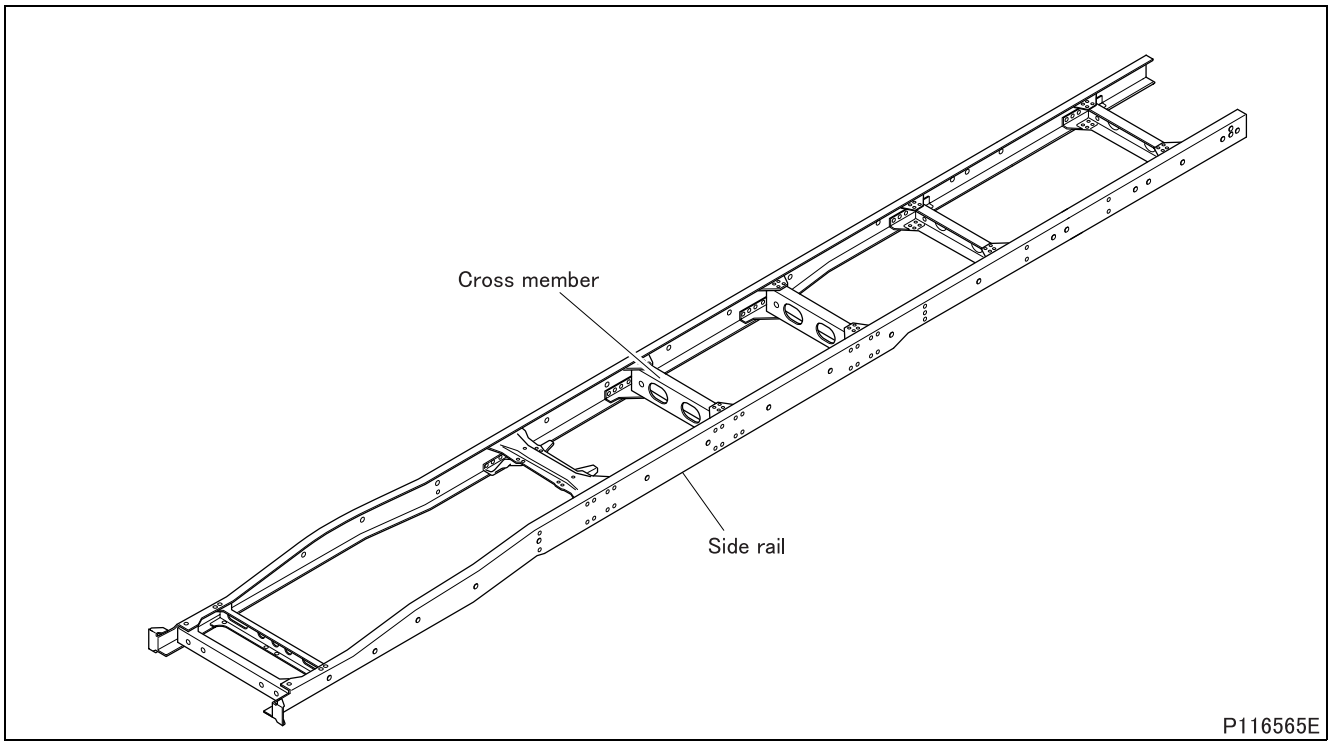

- The frame has cross members fastened to the web of side rails (lateral linkage) so that stress on the joints is very small. This allows joint rivets to maintain tightness and ensures long-lasting high torsional stiffness.
- Unlike vertical linkage where cross members are fastened to the flange of side rails, no rivets appear on top of the frame, making the body mounting greatly easier.

https://truckmanualshub.com/

FRONT BUMPER

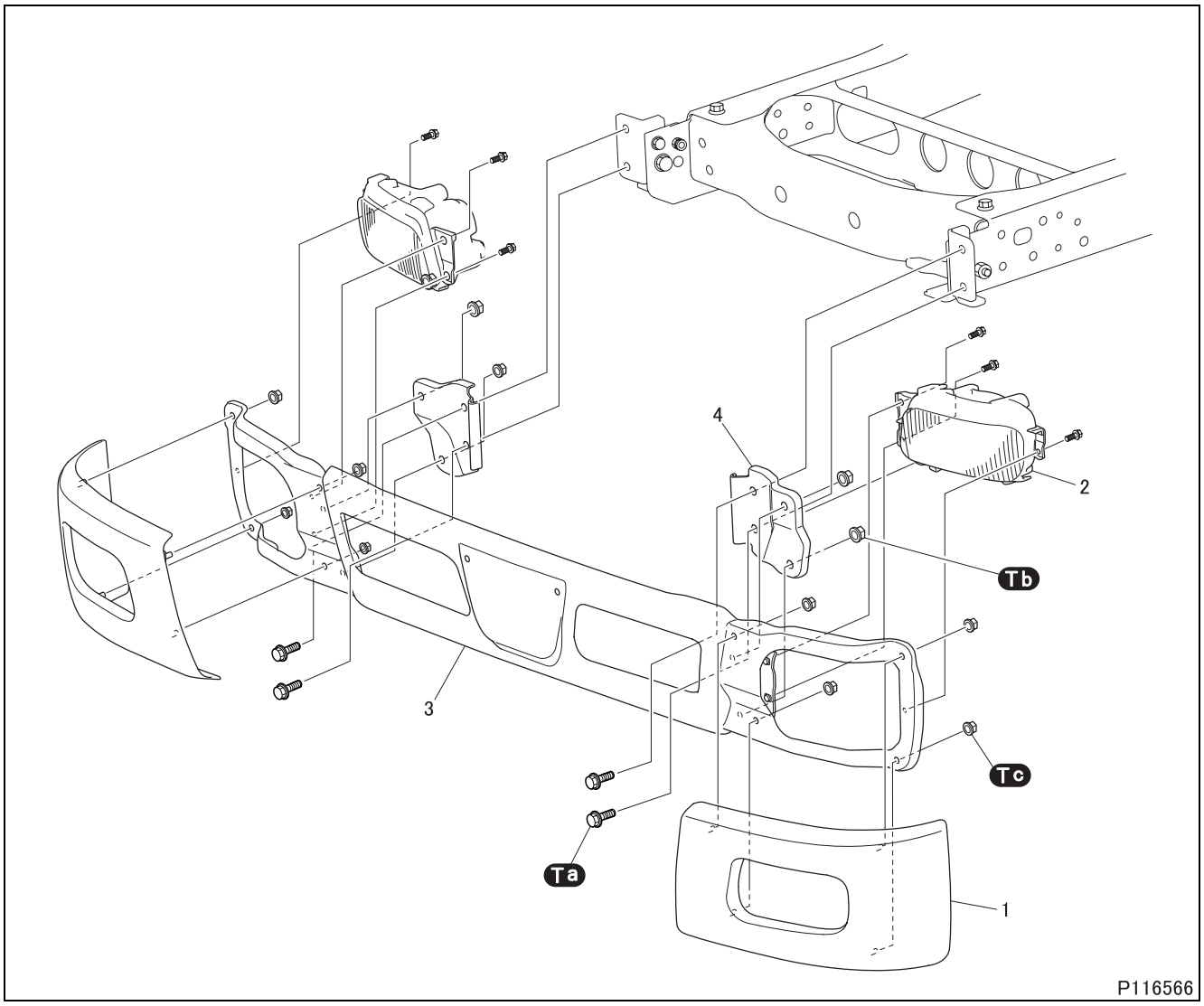

● **Removal sequence**

1 Front bumper corner cover
2 Front bumper
3 Fog lamp
4 Bumper stay

● **Installation sequence**

Follow the removal sequence in reverse.

Tightening torque (Unit: N·m {ft.lbs, kgf·m})

Mark	Parts to be tightened	Tightening torque	Remarks
Ta	Bolt (bumper stay mounting)	45 to 54 {33 to 40, 4.6 to 5.5}	–
Tb	Nut (front bumper mounting)	26 to 31 {19 to 23, 2.7 to 3.2}	–
Tc	Nut (front bumper corner cover mounting)	4 to 6 {3.0 to 4.4, 0.4 to 0.6}	–

https://truckmanualshub.com/

◆Installation procedure◆

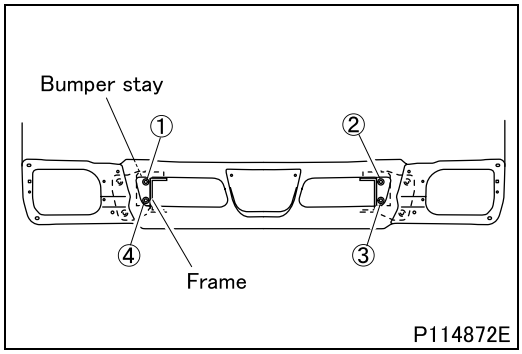

■ **Installation: Bumper stay**

- Install the bumper stay on the frame by tightening the bolts (four places) to the specified torque in the order of the numbers (1 to 4) indicated in the illustration.

https://truckmanualshub.com/

FRAME

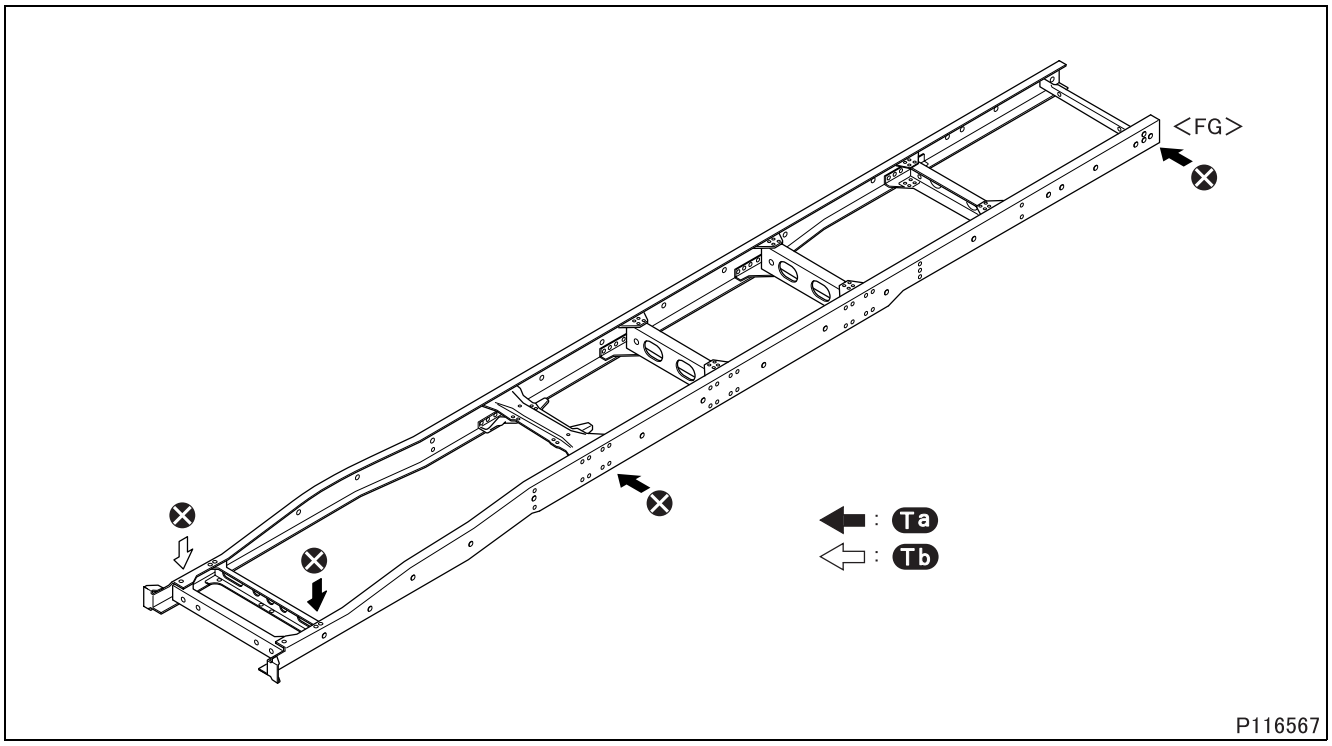

⊗: Non-reusable parts

CAUTION ⚠

- **Since the mounting bolts and nuts are tightened by a torque-to-yield method, they must not be reused.**

Tightening torque (Unit: N·m {ft.lbs, kgf·m})

Mark	Parts to be tightened	Tightening torque	Remarks
Ta	M10 bolt or nut	60 to 80 {43 to 58, 6 to 8}	–
Tb	M12 bolt or nut	98 to 120 {72 to 87, 10 to 12}	–

◆Cleaning procedure◆

■ Cleaning: Frame

- Thoroughly remove mud, grease, rust etc. from the outer and inner surfaces of the frame.

◆Inspection procedure◆

■ Inspection: Frame

(1) Inspection for deformation

- If deformation or any other defect is found, repair the frame.

(2) Inspection for cracks

- Remove paint from suspected areas and carefully inspect exposed surfaces for cracks.
- If visual inspection is difficult, perform dye check or any other suitable examination.
  If a crack is found, repair as follows.

https://truckmanualshub.com/

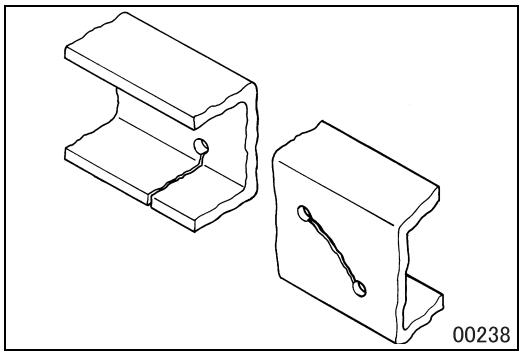

(3) Repair of crack in frame

- With the vehicle unloaded, level the frame.
- Drill a hole, roughly twice the thickness of frame plate in diameter, 10 mm {0.39 in.} from the inside end of crack.

NOTE

- **If crack is within the frame plate, drill holes at both ends of the crack.**

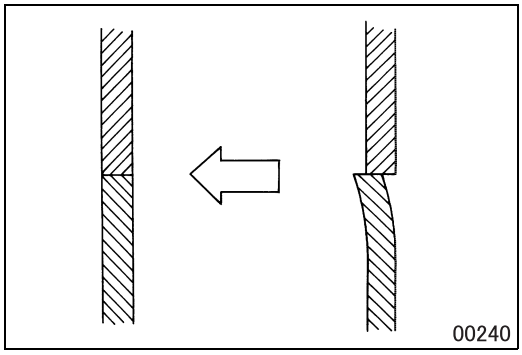

- If the edges of crack are uneven, make them even.

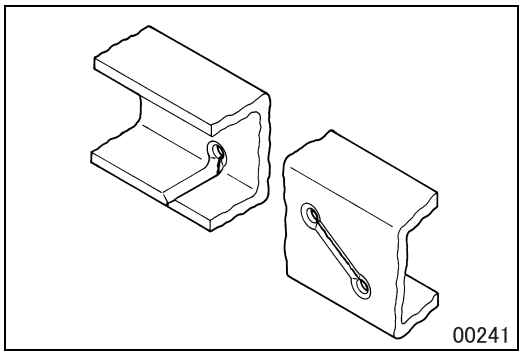

- Using a grinder, cut a 90° V-channel at the crack to a depth of approximately 2/3 of the frame plate thickness, then fill the channel with filler metal by welding.

CAUTION ⚠

- **Avoid gas welding because heat embrittles the material of welded area. Be sure to use electric welding.**
- **Electric welding could allow the welding current to reverse through ground circuit and burn electrical components. To prevent this, be sure to disconnect negative cable from the battery and ground the welding machine at a point near the weld zone before work.**
- **For electric welding, follow other precautions given elsewhere.**
- **If there are any combustibles, such as pipeline, wiring harness, rubber part and fuel tank, near the weld zone, be sure to cover them for protection.**
- **Use low-hydrogen type coated CO_2 and arc welding electrodes for welding and check that there are not harmful defects such as undercut and blow hole after welding.**
- **Preheat the area around weld zone to approximately 50 to 350°C {120 to 660°F} before welding when the workshop temperature is below 0°C {32°F}.**
- **Be sure to protect mountings that may be affected by heat, such as main sills, using heat insulators or equivalent.**

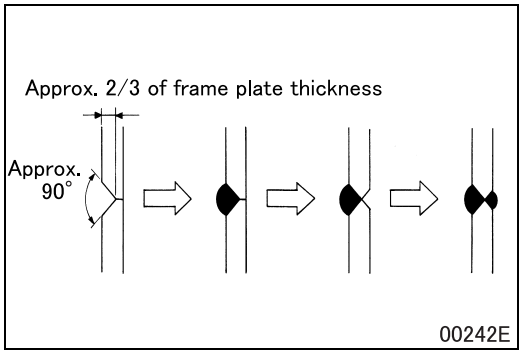

- Then, make a similar V-channel on the opposite side of the weld and fill it with filler metal by electric welding as well. At the same time, deposit metal to cover up the hole or holes at both ends of the crack by welding.

https://truckmanualshub.com/

NOTE

- **In cold districts, heat the weld zone to approximately 200°C {390°F} after welding.**

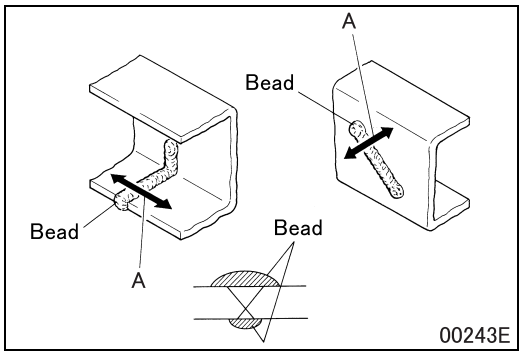

- After welding, run a grinder over the bead at right angles A to remove the hatched portion from the weld on each side of the plate.
- Finish the ground surfaces flat to a thickness equal to the original plate thickness.

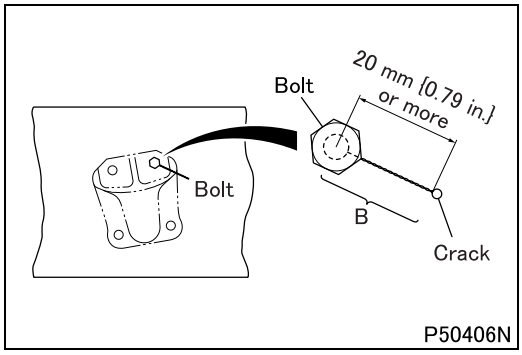

[Repairing crack from rivet or bolt hole]

- To make the edges of cracked hole even, temporarily tighten bolt in the hole.
- First weld to close the crack at a point at least 20 mm {0.79 in.} apart from the center of the bolt.
  For this welding, refer to the aforementioned welding procedures for crack repair.
- Remove the temporary bolt. After making hole edges even, weld to close the rest B of the crack. Fill the hole with weld metal at the same time.
- Drill a hole at the location of original hole, and install a rivet or bolt in it.

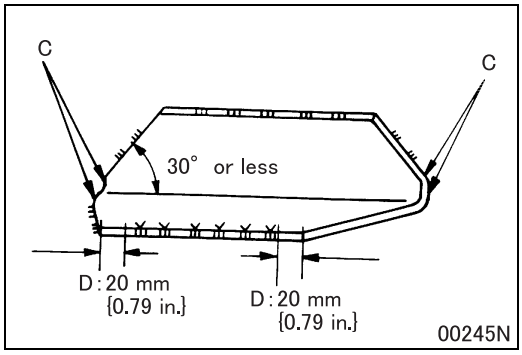

[Repairing using reinforcement plate]

- To prevent the concentration of welding stress at both ends C of the reinforcement plate, cut the ends at a bevel of 30° or less for welding. Do not weld at points D.
- The reinforcement plate must be large enough to cover the cracked area.

NOTE

- **Reinforcement plate thickness: Equal to frame plate thickness**
- **Reinforcement plate material: As specified below or equivalent**

SAPH440 (hot rolled steel for automobiles), or SS400 (rolled steel for general structures)

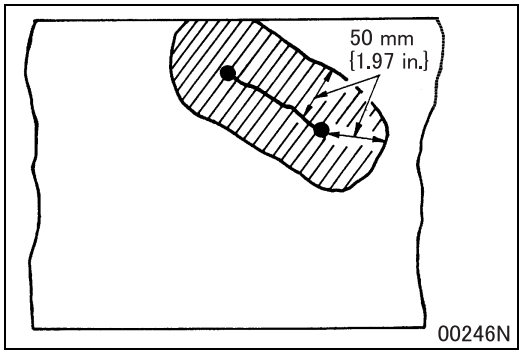

- After welding, heat the hatched area to 600 to 700°C {1110 to 1292°F}.

CAUTION ⚠

- **Be sure to protect mountings that may be affected by heat, such as main sills, using heat insulators or equivalent.**

https://truckmanualshub.com/

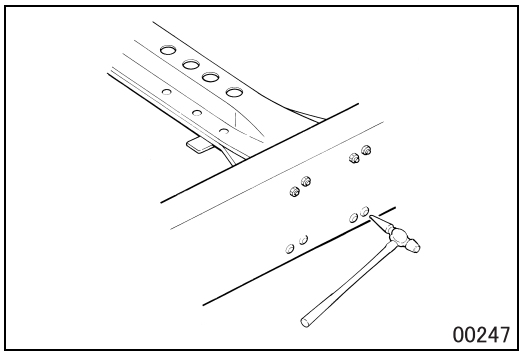

(4) Inspection of rivets for looseness

- Lightly tap the head of each rivet using an inspection hammer and feel or listen for the echo to determine if the rivet is loose.
- Rusting between rivet and frame plate is an indication of a loosened rivet.

CAUTION ⚠

- **Be sure to replace loose rivets. They could break off or allow cracks to develop from the rivet holes, leading to an accident.**

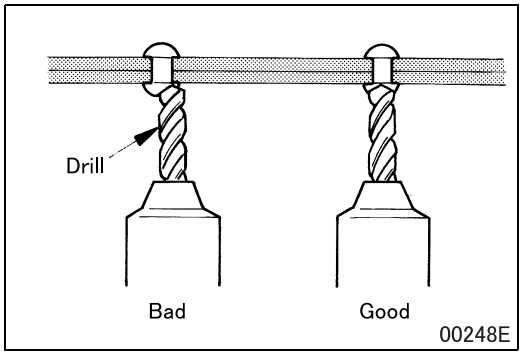

(5) Replacement of rivet

- To remove a loosened rivet, eliminate its head using a drill or grinder. When a drill is used, make a dent in the middle of the rivet's head and align the drill bit to the dent as shown.

NOTE

- **The rivet hole must be intact.**

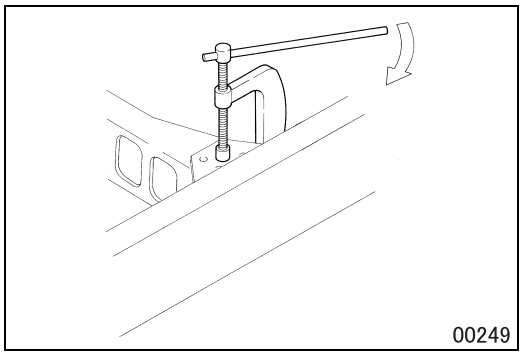

- Before riveting, clamp the two plates closely together near the rivet hole using a C clamp.
- Using a riveting machine, drive the rivet (cold rivet) into the rivet hole.
- If riveting is impracticable, ream the rivet hole, drive a reamer bolt in the hole, fully tighten the nut, then weld it in place.
  As the reamer bolt and nut, use a flange bolt and a flange nut.

(6) Inspection of bolts and nuts for looseness

- Inspect the bolts attaching cross members to the side rails for looseness. If any loose bolt is found, retighten it to specified torque.

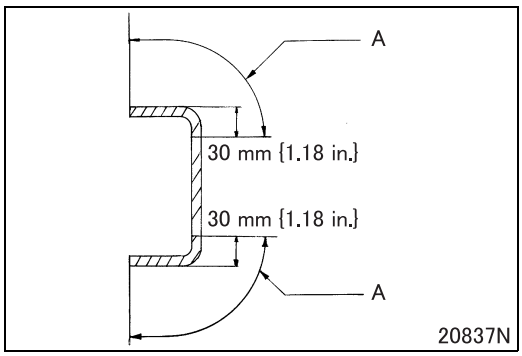

(7) Drilling hole in frame

- When drilling holes in the frame becomes necessary, perform it using care in the following respects.

CAUTION ⚠

- **When drilling holes in the side rail, avoid the illustrated ranges A to prevent cracking.**
- **Grind the edge of drilled hole smooth.**
- **Avoid drilling a hole in the vicinity of a point where the rigidity of the side rail change sharply, such as an area near the joint to the cross member or an end of the stiffener.**
- **The diameter of drilled holes must be 11 mm {0.43 in.} or smaller and the hole-to-hole distance must be 20 mm {0.79 in.} or larger.**

https://truckmanualshub.com/

FUSO

Group 42

Cab

MITSUBISHI FUSO TRUCK OF AMERICA, Inc.

Pub.No.00ELT0001-42

https://truckmanualshub.com/

INDEX

SPECIFICATIONS 42-2

STRUCTURE AND OPERATION
1. Front Cab Mounting 42-3
2. Rear Cab Mounting <Except Crew Cab> 42-4
3. Center and Rear Cab Mountings <Crew Cab> 42-4
4. Cab Tilt Link <Except Crew Cab> 42-5

TROUBLESHOOTING 42-6

ON-VEHICLE INSPECTION AND ADJUSTMENT
1. Adjustment of Cab Tilt System <Except Crew Cab> 42-8

REMOVAL AND INSTALLATION OF CAB
<EXCEPT CREW CAB> 42-10
<CREW CAB> 42-14

FRONT CAB MOUNTING
<EXCEPT CREW CAB> 42-18
<CREW CAB> 42-20

REAR CAB MOUNTING <EXCEPT CREW CAB> 42-22

CENTER AND REAR CAB MOUNTINGS <CREW CAB> 42-24

CAB TILT LINK <EXCEPT CREW CAB> 42-26

CAB STAY <EXCEPT CREW CAB> 42-28

https://truckmanualshub.com/

SPECIFICATIONS

Cab

Item	Specifications	
	Except crew cab	Crew cab
Type	Cab-over type (forward control type)	Cab-over crew cab type (forward control type)
Mass kg {lb}	410 {905}	630 {1390}

Cab Mounting

Item	Specifications		
	Except crew cab	Crew cab	
		Front cab mounting	Center and rear cab mounting
Type	Semi-floating type		Fixed type
Kind	Liquid-filled rubber cushioned mounting		Rubber cushioned mounting

Cab Tilt System <Except Crew Cab>

Item	Specifications
Type	Torsion bar type
Tilt angle	45°
Cab tilt lock	Manually operated hook type

https://truckmanualshub.com/

1. Front Cab Mounting

<Except crew cab>

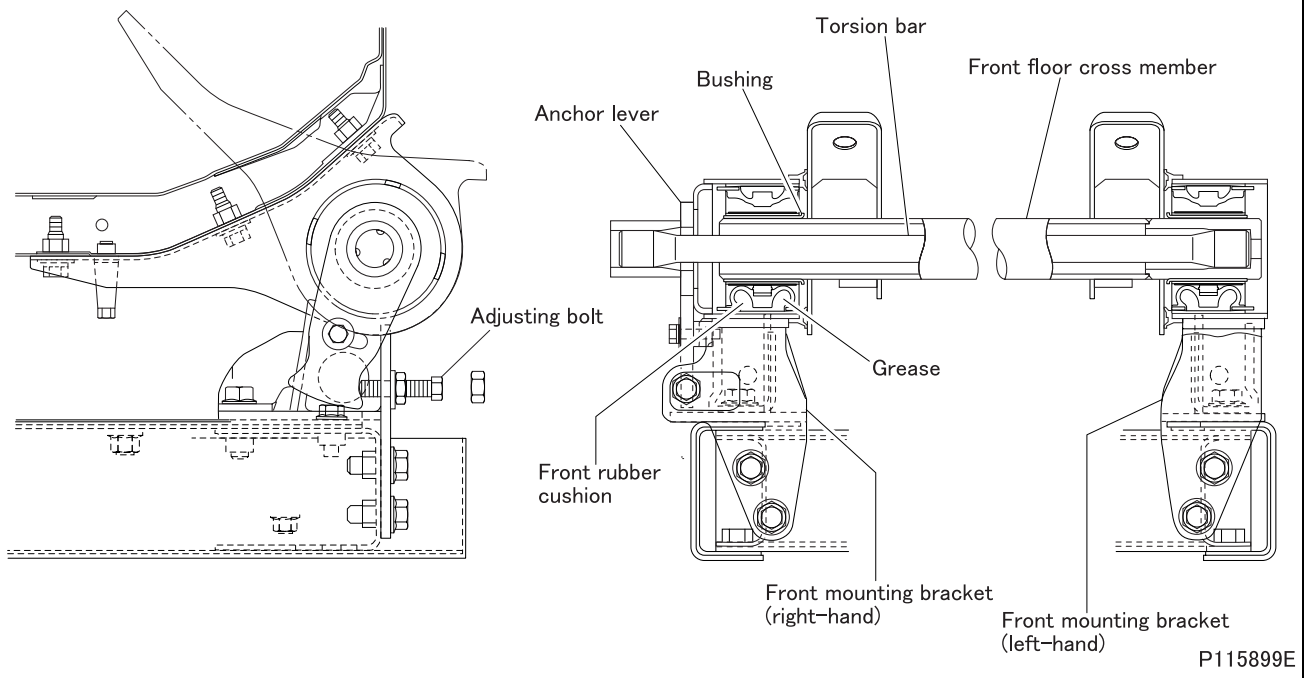

<Crew cab>

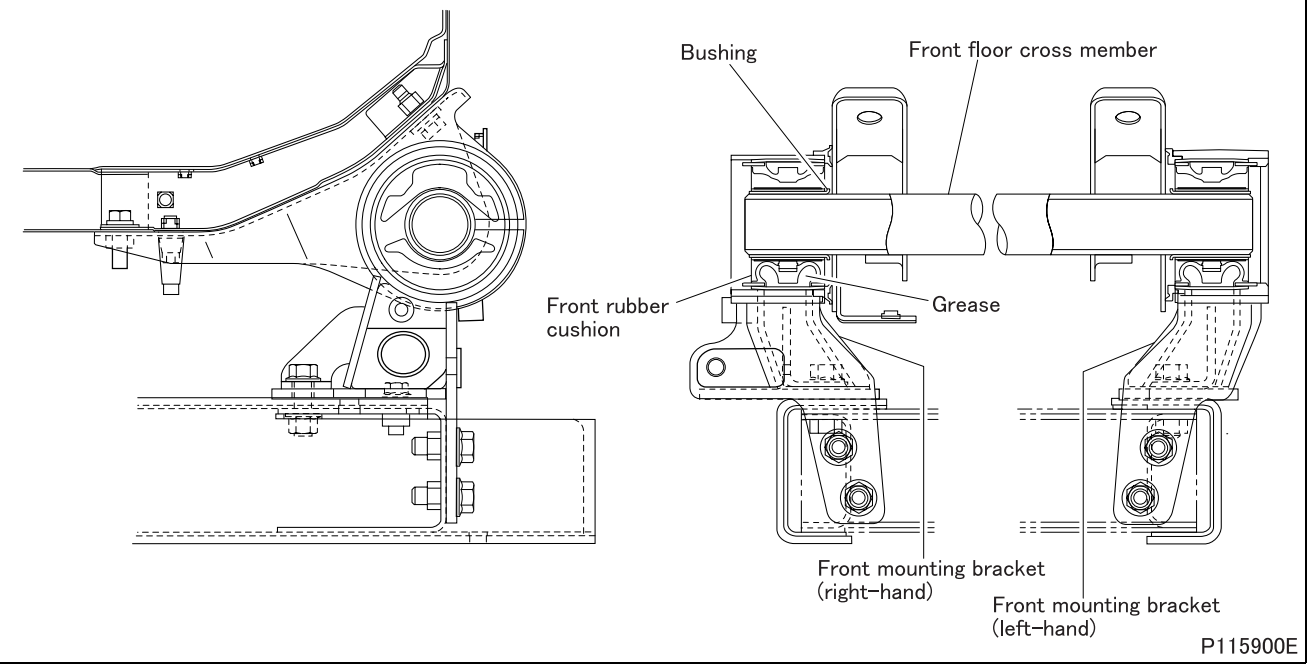

- The operating physical force for the cab tilt system can be adjusted using the adjusting bolt on the front mounting bracket. <Except crew cab>
- The front rubber cushion reduces the vibration and noise of the cab.

https://truckmanualshub.com/

2. Rear Cab Mounting <Except Crew Cab>

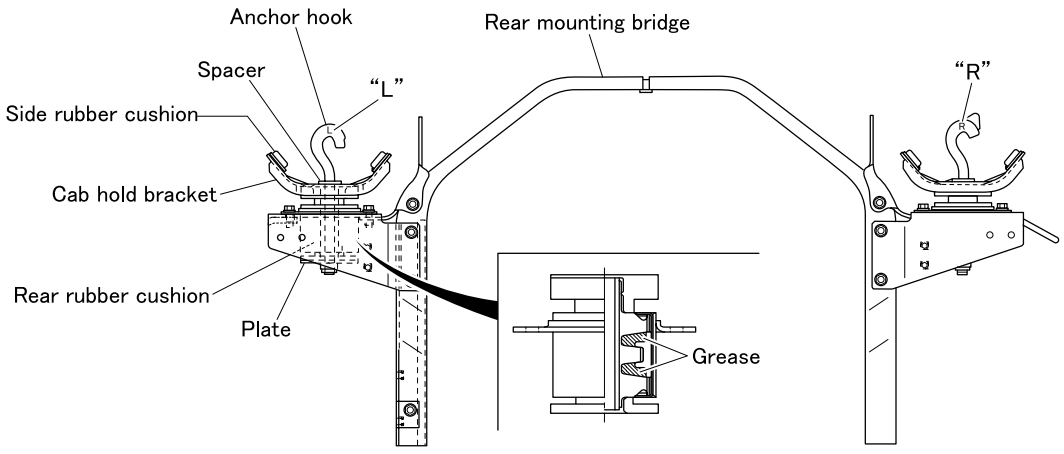

- The left and right anchor hooks are identified with marks "L" and "R", respectively.
- The operating physical force for the lock handle can be adjusted by increasing and decreasing the number of spacers provided between the anchor hook and cab hold bracket.
- Rear mounting upper and lower rubber cushions reduce the vibration and noise of the cab.

3. Center and Rear Cab Mountings <Crew Cab>

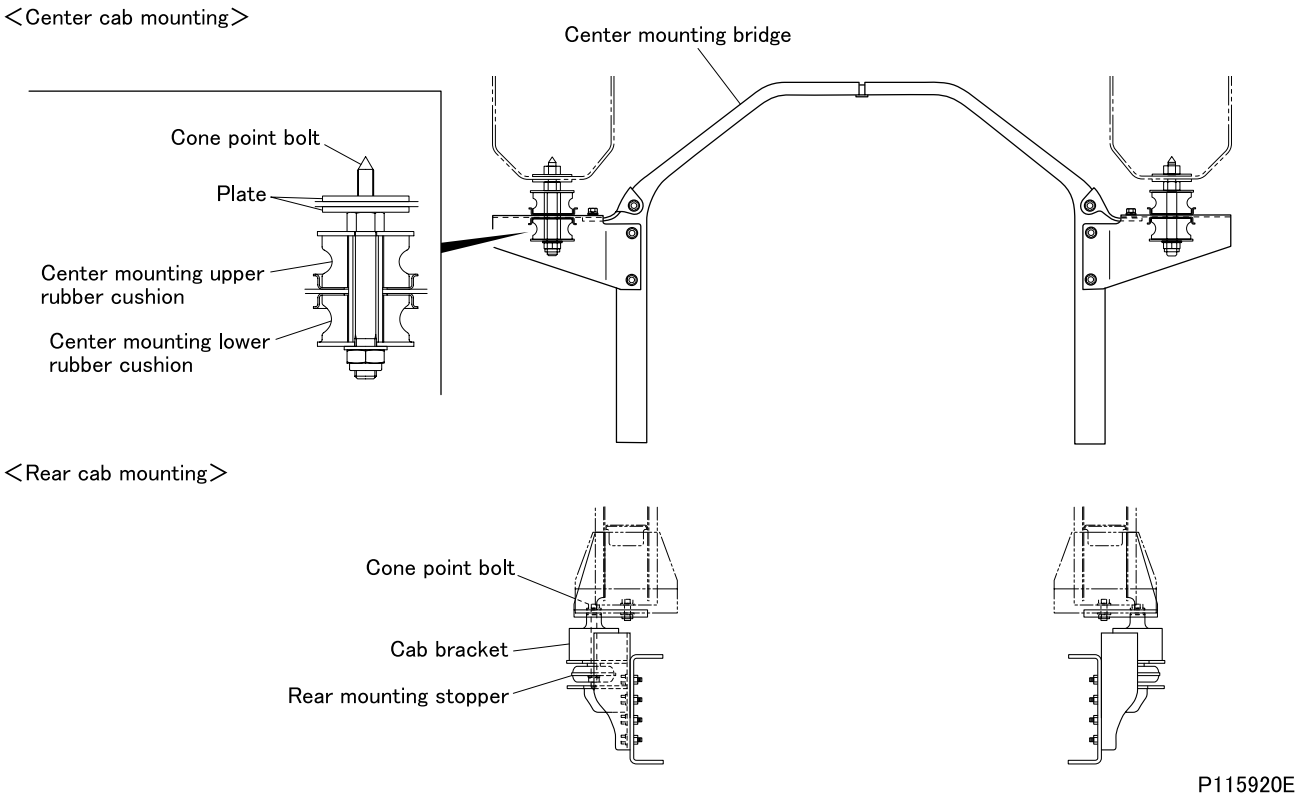

- Center mounting upper and lower rubber cushions reduce the vibration and noise of the cab.

https://truckmanualshub.com/

4. Cab Tilt Link <Except Crew Cab>

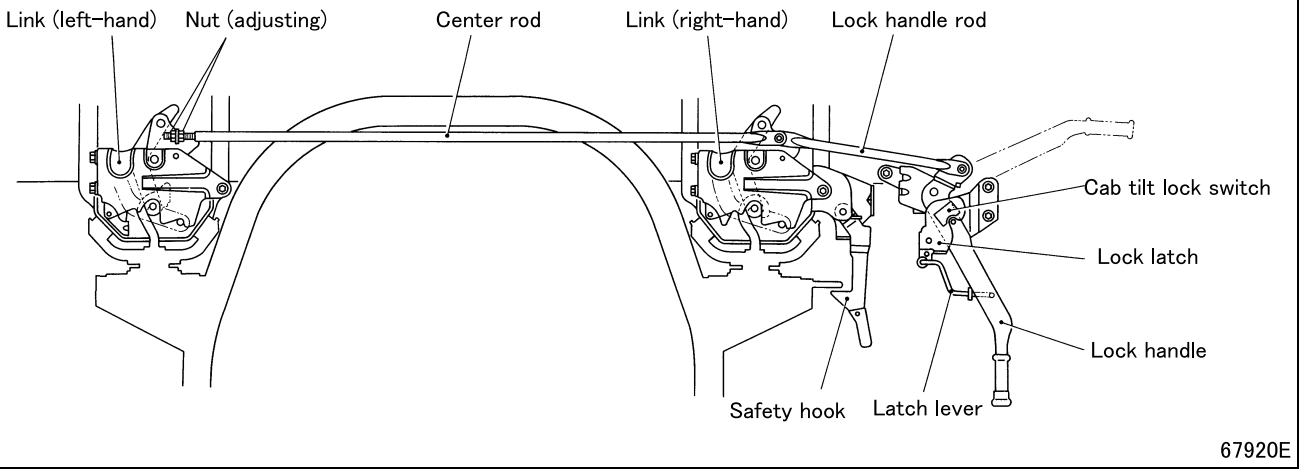

- The length of center rod is adjustable with the adjusting nut.
- The cab tilt lock switch of the manual cab tilt system monitors the locking status of the lock handle.

https://truckmanualshub.com/

Cabs in general

Possible causes \ Symptoms			Cab shimmy (vibration with pitching and rolling)	High-frequency vibration (above 20Hz) and noise in cab and steering wheel	Reference Gr
Cab-related problems	Front cab mounting	Front mounting bracket loose, play	O		
		Sagging of front rubber cushion		O	
	Center or rear cab mounting	Sagging of mounting rubber cushion		O	
	Cab improperly mounted			O	
Engine-related problems		Propeller shaft inclination angle excessive due to increased tilt angle caused by deteriorated engine mounting		O	Gr11
		Engine improperly mounted		O	
		Intake and exhaust system components improperly installed		O	Gr15
Transmission-related problem		Transmission improperly mounted		O	Gr22
Propeller shaft-related problems		Propeller shaft runout excessive		O	Gr25
		Universal joint excessively worn		O	
		Backlash excessive at slip yoke joint		O	
		Center bearing play excessive		O	
		Angle at propeller shaft joint excessive due to deteriorated center bearing rubber cushions or other causes		O	
		Angle at propeller shaft joint excessive due to increased tilt of drive axle caused by overloading		O	
Front axle-related problem		Vibrations from axle seat	O		Gr26
Rear axle-related problems		Reduction gears in poor mesh		O	Gr27
		Differential gears in poor mesh		O	
Wheel and tire-related problems		Wheel and tire runout excessive	O		Gr31
		Wheels and tires out of balance	O		
		Use of tires different in size or type	O		
		Wheel mounting surface deformed	O		
Front suspension-related problem		Friction excessive between spring leaves	O		Gr33
Brake-related problems		Brake drum out of balance <Drum brake>	O		Gr35
		Brake drum out of round <Drum brake>	O		
		Disc brake rotor runout <Disc brake>	O		

https://truckmanualshub.com/

Manual cab tilt system

Symptoms / Possible causes	Cab fails to tilt up.	Cab cannot lock on rear mounting post.	Cab tilt warning lamp fails to illuminate.	Cab tilt warning lamp fails to extinguish.	Reference Gr
Main hook not released	O				
Safety hook not released	O				
Torsion bar damaged or fatigued	O				
Main hook does not engage with hook pin bracket		O			
Cab tilt lock switch poorly adjusted			O	O	
Cab tilt lock switch faulty			O	O	Gr54
Cab tilt warning lamp faulty			O		
Fuse or high current fuse blown			O		
Wiring open-circuited or improperly connected			O		

https://truckmanualshub.com/

ON-VEHICLE INSPECTION AND ADJUSTMENT

1. Adjustment of Cab Tilt System <Except Crew Cab>

Tightening torque (Unit: N·m {ft.lbs, kgf·m})

Mark	Parts to be tightened	Tightening torque	Remarks
–	Lock nut (anchor hook fitting)	83 to 98 {61 to 72, 8.5 to 10}	–

Lubricant and/or sealant

Mark	Points of application	Specified lubricant and/or sealant	Quantity
–	Sliding contact surfaces of lock handle and link	Chassis grease [NLGI No. 1 (Li soap)]	As required

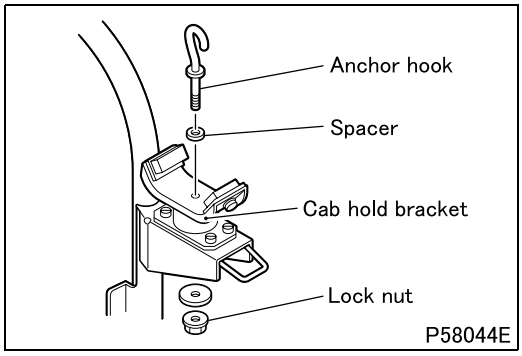

1.1 Inspection of lock handle operating physical force

[Inspection]

- If the lock handle is excessively light to operate, make adjustment as follows.
- If the lock handle is excessively heavy, apply grease to the sliding contact surfaces of handle and link, then operate the handle again for physical operating force. If the lock handle is still heavy, make adjustment as follows.

[Adjustment]

- Remove the lock nut, then remove the anchor hook.
- Adjust the operating physical force by increasing or decreasing the number of spacers between anchor hook and cab hold bracket as follows.

	Number of spacers
If lock handle feels too heavy	Increase
If lock handle feels too light	Decrease

- After adjustment, tighten the lock nut to the specified torque.

CAUTION ⚠

- **If the lock handle feels too light, it is an indication that the handle could be easily unlocked by the vibration of the running vehicle.**

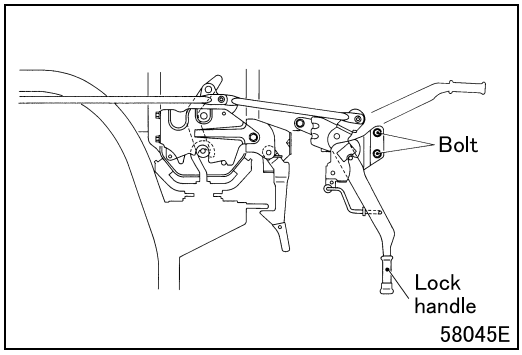

1.2 Adjustment of latch

- If the latch resists, loosen bolts and adjust the installed position of the lock handle using bolt slot.
- After adjustment, retighten the bolts.

https://truckmanualshub.com/

M E M O

https://truckmanualshub.com/

REMOVAL AND INSTALLATION OF CAB <EXCEPT CREW CAB>

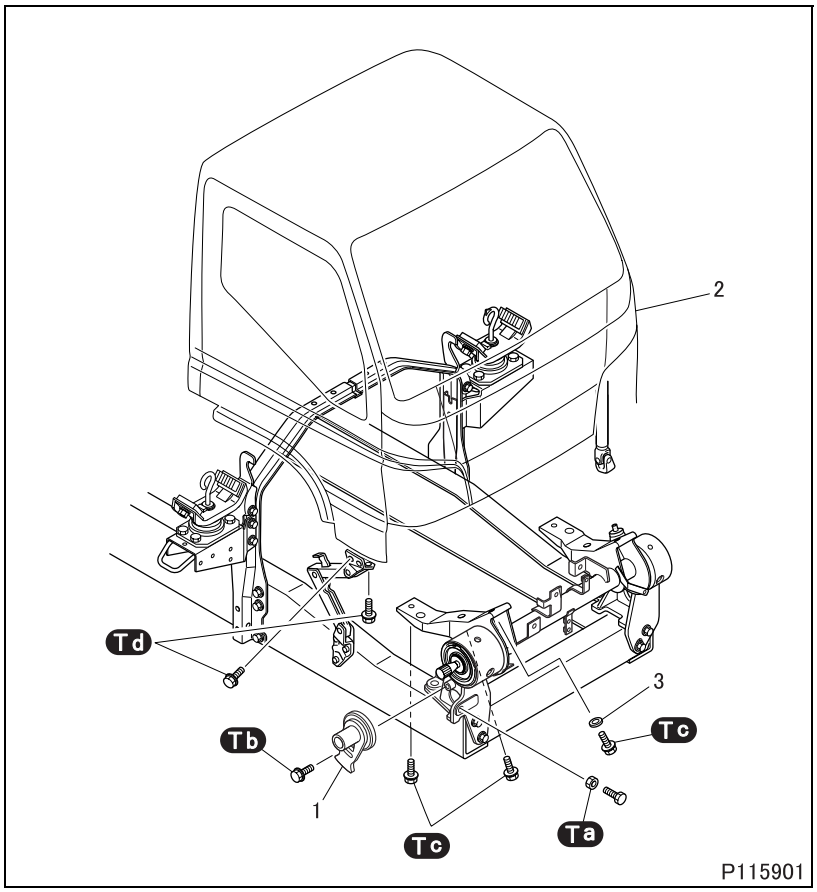

● **Removal sequence**

1 Anchor lever
2 Cab
3 Spacer

WARNING ⚠

- **During removal and installation of the cab, the parking brake is not available for holding the vehicle at a standstill. Therefore, be sure to apply chocks to the tires to ensure that the vehicle does not move.**
- **Never remove the chocks until all the operations are completed.**

- Disconnect all cables, hoses and wires before removal and installation of the cab.

● **Installation sequence**

Follow the removal sequence in reverse.

Tightening torque (Unit: N·m {ft.lbs, kgf·m})

Mark	Parts to be tightened	Tightening torque	Remarks
Ta	Lock nut (anchor lever adjusting bolt locking)	59 to 83 {43 to 61, 6 to 8.5}	–
Tb	Bolt (anchor lever attaching)	34 to 54 {25 to 40, 3.5 to 5.5}	–
Tc	Bolt (cab mounting)	100 to 130 {74 to 96, 10 to 13}	–

◆Removal procedure◆

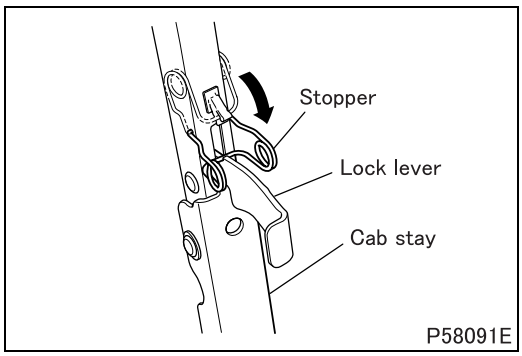

■ **Removal: Cab**

- Tilt the cab to securely lock the cab stay.

WARNING ⚠

- **Be sure to fit the stopper onto the lock lever to lock the cab stay.**

https://truckmanualshub.com/

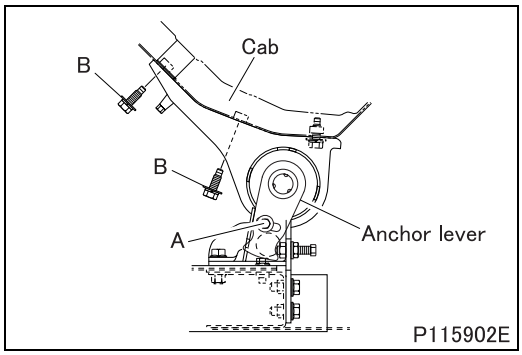

- Remove the bolt A, then detach the anchor lever.
- Remove the bolts B holding the cab in place.

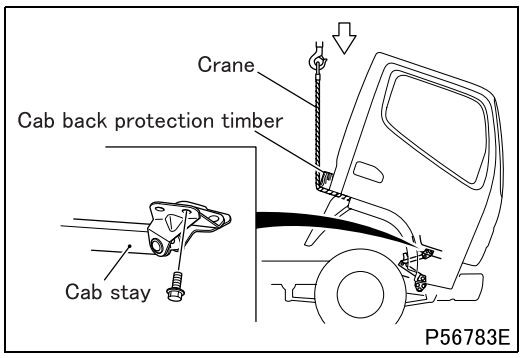

- Support the tilted cab with the crane, then remove the cab stay.

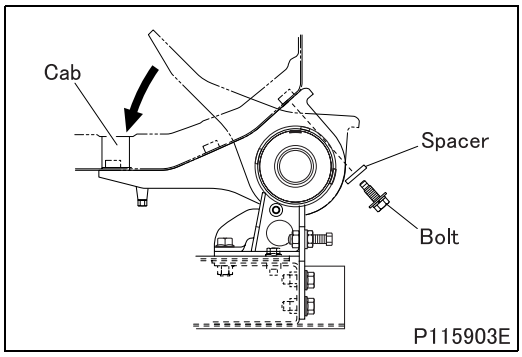

- Lower the cab all the way, then remove bolt.

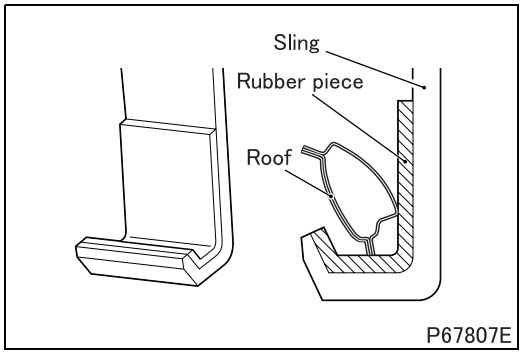

- Make available slings rigid enough to carry the weight of the cab.
- The hook portion of the sling must be lined with a rubber piece as shown to prevent deformation of the roof of the cab.

https://truckmanualshub.com/

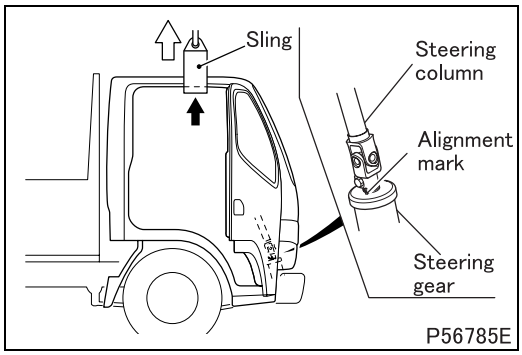

- Hook the slings on the cab roof as shown, then hoist the cab a little to see if it maintains level (balanced at the center of gravity).
- Provide alignment marks on the power steering gear and steering column, then separate the steering column.
- To prevent the steering column from falling off, tie it securely to the cab using a rigid cord.
- Slowly and slightly hoist the cab straight up to confirm that all cables, hoses and electric wiring have been disconnected before removing the cab.
- Lift off the cab straight.

WARNING ⚠

- **While the cab is up in the air, be sure to stay out from under it.**

◆Installation procedure◆

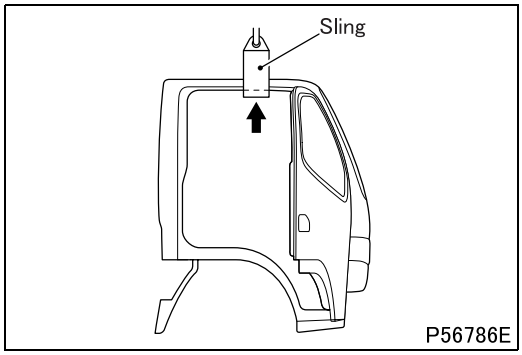

■ Installation: Cab

- Hook the slings at center-of-gravity points on both sides of the cab roof, and lift the cab.

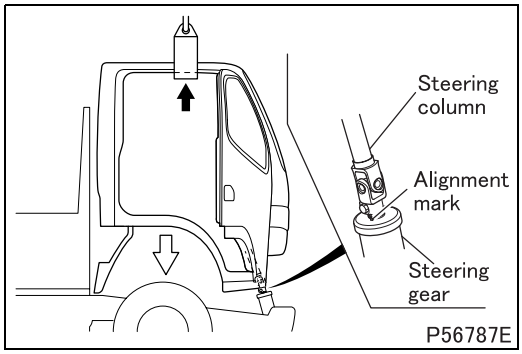

- Slowly lower the cab halfway.
- Join the power steering gear and steering column together in accordance with the alignment marks.

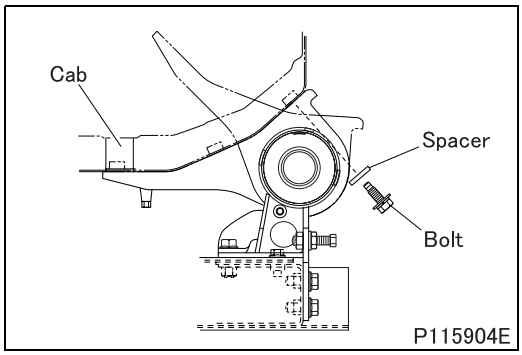

- Further lower the cab slowly to mount in position, then unhook the slings.
- Tighten mounting bolts to specified torque.

https://truckmanualshub.com/

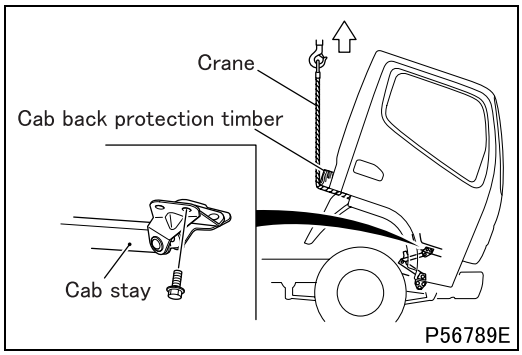

- Before tilting, support the cab using the crane.
- Tilt the cab with the crane, and install the cab stay.

WARNING ⚠

- **Be careful not to tilt the cab more than necessary. Doing so is extremely dangerous because it causes the cab to fall down forward.**

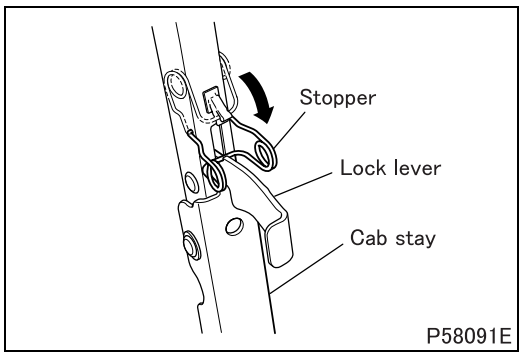

- After the cab stay is installed, tilt the cab to securely lock the cab stay. Then, remove the crane from the cab.

WARNING ⚠

- **Be sure to fit the stopper onto the lock lever to lock the cab stay.**

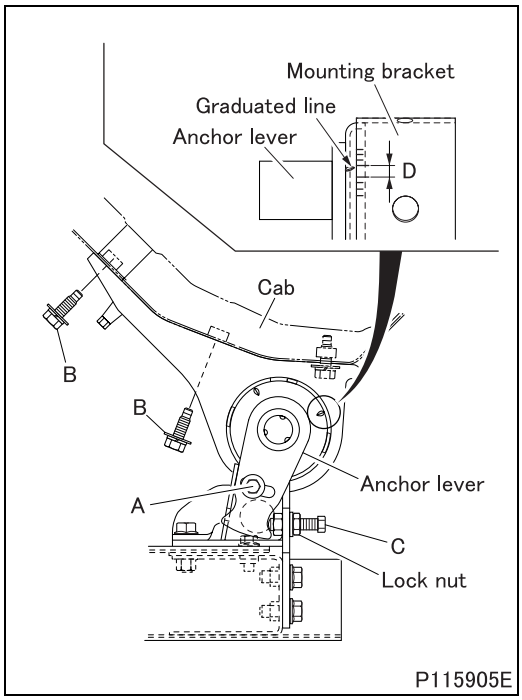

- Tighten the bolt B to specified torque.
- Align the graduated line of the anchor lever to the illustrated range of D (long division) of the scale graduated on the mounting bracket, then install the bolt A handtight.
- After contacting the bolt C with the anchor lever, tighten the bolt C to 10 mm {0.39 in.} (six and two third turns).
- Tighten the lock nut to specified torque.
- Tighten the handtight bolt A to specified torque.

https://truckmanualshub.com/

REMOVAL AND INSTALLATION OF CAB <CREW CAB>

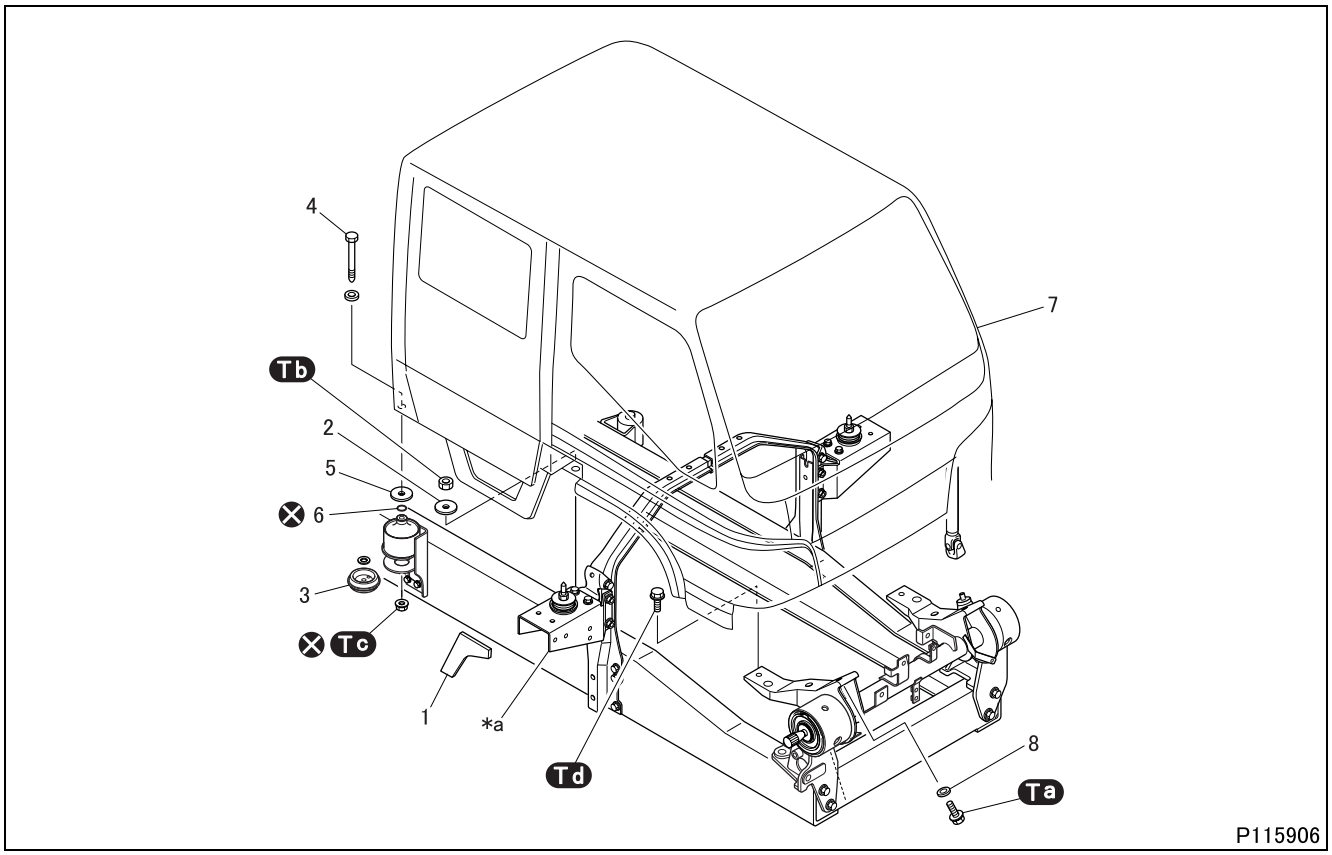

● **Removal sequence**

1 Garnish
2 Plate
3 Rear mounting stopper
4 Cone point bolt
5 Plate
6 O-ring
7 Cab
8 Spacer

⊗: Non-reusable parts

CAUTION ⚠

- **During removal and installation of the cab, the parking brake is not available for holding the vehicle at a standstill. Therefore, be sure to apply chocks to the tires to ensure that the vehicle does not move.**
- **Never remove the chocks until all the operations are completed.**

- Disconnect all cables, hoses and wires before removal and installation of the cab.

● **Installation sequence**

Follow the removal sequence in reverse.

Tightening torque (Unit: N·m {ft.lbs, kgf·m})

Mark	Parts to be tightened	Tightening torque	Remarks
Ta	Bolt (cab mounting)	70 to 95 {51 to 70, 7.1 to 9.7}	–
Tb	Nut (cab mounting)	39 to 59 {30 to 43, 4 to 6}	–
Tc	Lock nut (cab mounting)	59 to 69 {43 to 51, 6 to 7}	–
Td	Bolt (cab mounting)	100 to 130 {74 to 96, 10 to 13}	–

https://truckmanualshub.com/

◆Removal procedure◆

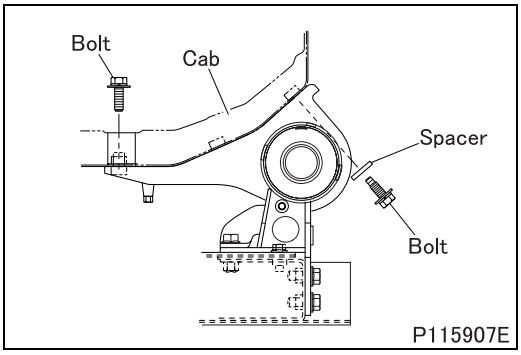

■ **Removal: Cab**

- Remove bolts from inside and outside the cab.

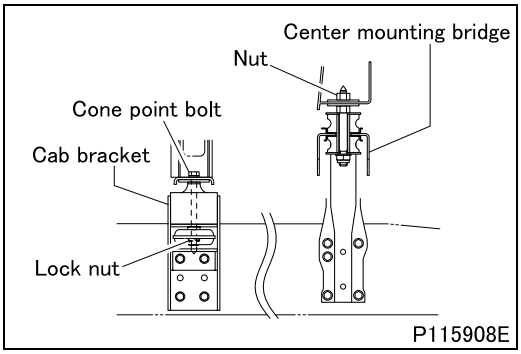

- Remove nuts from the center mounting post, then remove lock nut and cone point bolt from the cab bracket.

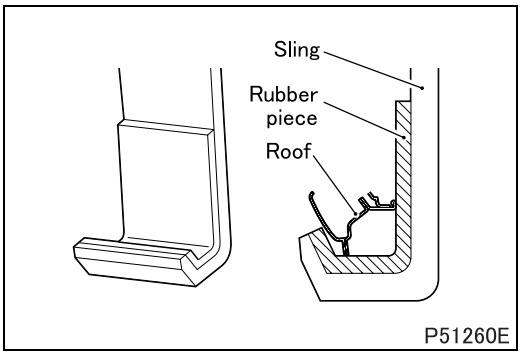

- Make available slings rigid enough to support the weight of the cab.
- Line the hook portion of each sling with a rubber piece to prevent deformation of the roof of the cab.

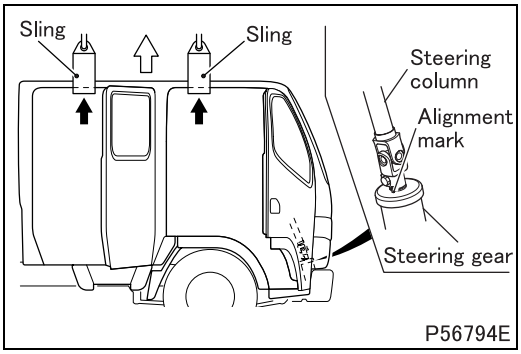

- Hook the slings at appropriate points on the roof of the cab, and lift the cab a little to see if it maintains level (balanced at the center of gravity).
- Provide alignment marks on the power steering gear, then separate the steering column.
- Tie the steering column securely to the cab with a rigid cord not to fall off.
- Slowly and slightly hoist the cab straight up to check that all cables, hoses and electric wiring have been disconnected before removing the cab.
- Slowly lift off the cab.

WARNING ⚠

- **When the cab is up in the air, be sure to stay out from under it.**

https://truckmanualshub.com/

REMOVAL AND INSTALLATION OF CAB <CREW CAB>

◆Installation procedure◆

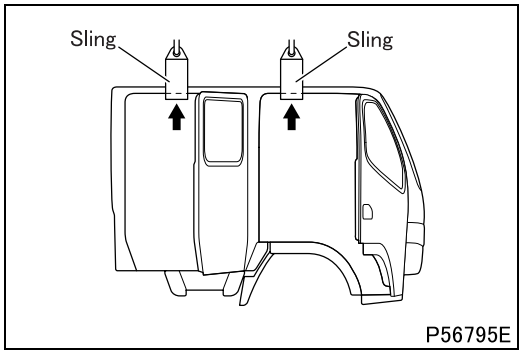

■ **Installation: Cab**

- Hook the slings at equilibrium center-of-gravity points on the roof of the cab.

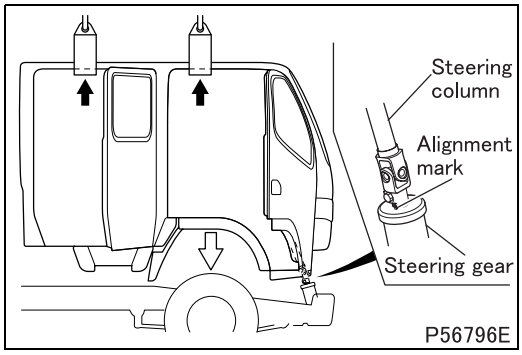

- Slowly lower the cab.
- Join the power steering gear and steering column together in accordance with the alignment marks on them.

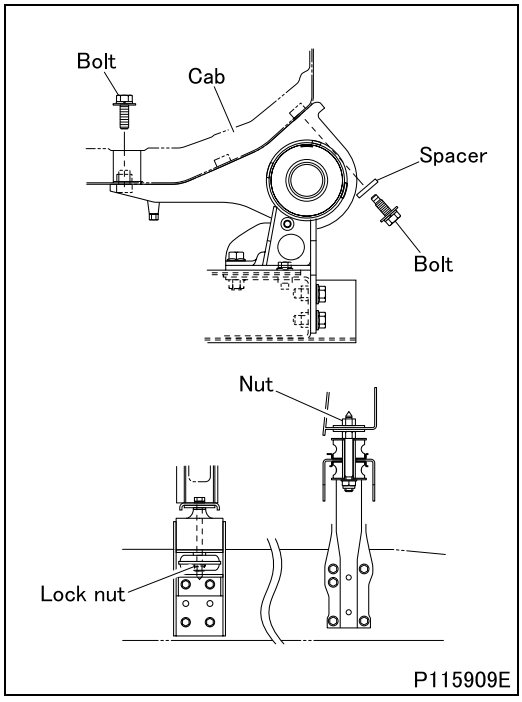

- Further lower the cab slowly into place. Then unhook the slings and tighten bolts, nuts and lock nuts to specified torques.

https://truckmanualshub.com/

M E M O

https://truckmanualshub.com/

FRONT CAB MOUNTING <EXCEPT CREW CAB>

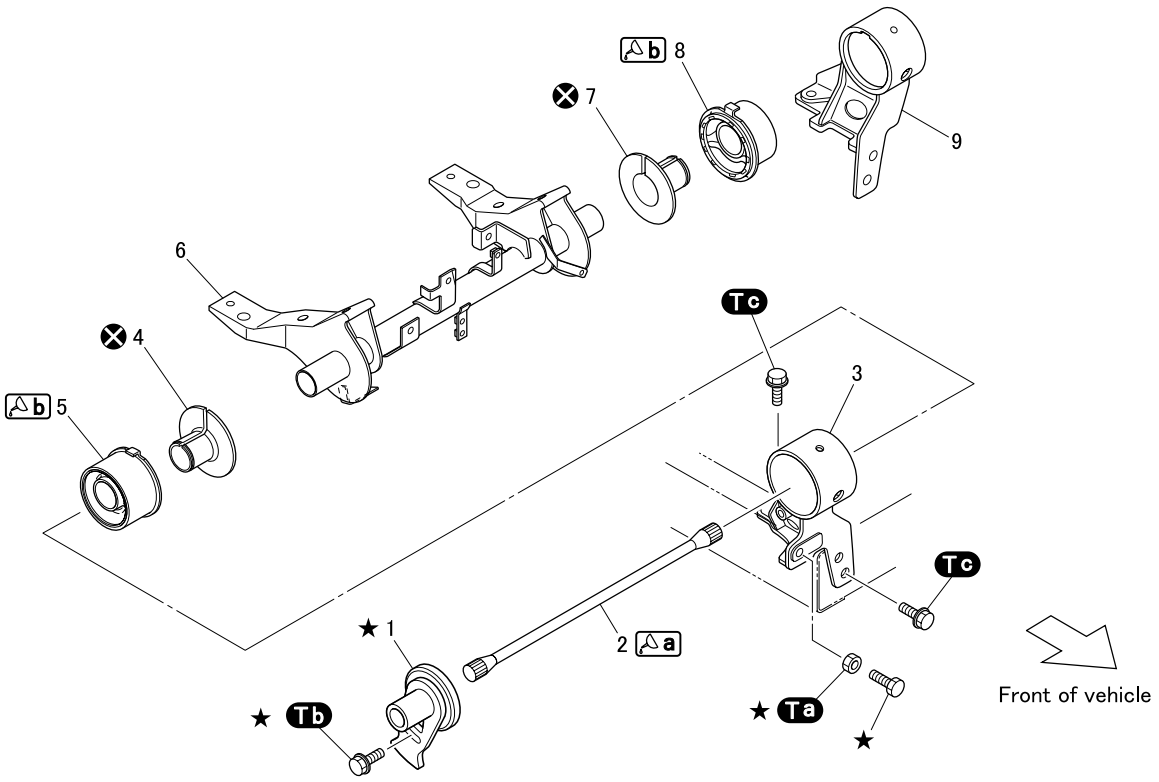

Parts marked with ★ are to be installed while the cab assembly is mounted.
Assemble them by reference to the removal and installation procedures of cab.

P115910N

● **Disassembly sequence**

1 Anchor lever
2 Torsion bar
3 Front mounting bracket, right-hand
4 Bushing
5 Front rubber cushion
6 Front floor cross member
7 Bushing
8 Front rubber cushion
9 Front mounting bracket, left-hand

⊗: Non-reusable parts

● **Assembly sequence**

Follow the disassembly sequence in reverse.

Tightening torque (Unit: N·m {ft.lbs, kgf·m})

Mark	Parts to be tightened	Tightening torque	Remarks
Ta	Nut (anchor lever adjusting bolt locking)	59 to 83 {43 to 61, 6 to 8.5}	–
Tb	Bolt (anchor lever attaching)	34 to 54 {25 to 40, 3.5 to 5.5}	–
Tc	Bolt (front mounting bracket attaching)	200 to 270 {145 to 200, 20 to 28}	–

Lubricant and/or sealant

Mark	Points of application	Specified lubricant and/or sealant	Quantity
a	Both serrated end portions of torsion bar	Wheel bearing grease [NLGI No. 2 (Li soap)]	As required
b	Bushing contact surface of front rubber cushion	Rubber Grease	As required

https://truckmanualshub.com/

◆Installation procedure◆

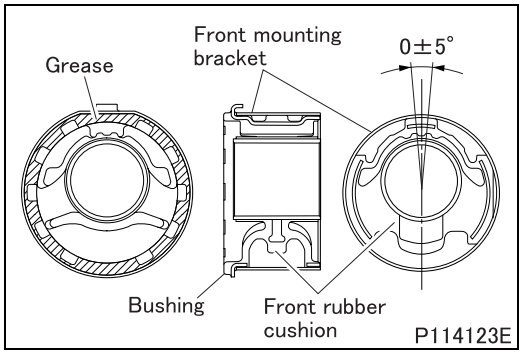

■ **Installation: Bushing and front rubber cushion**

- Fit the front rubber cushion to the front mounting bracket at an angle within the illustrated range.
- After installing the front rubber cushion, fill grease in the bushing as shown and fit it onto the mounting bracket.

https://truckmanualshub.com/

FRONT CAB MOUNTING <CREW CAB>

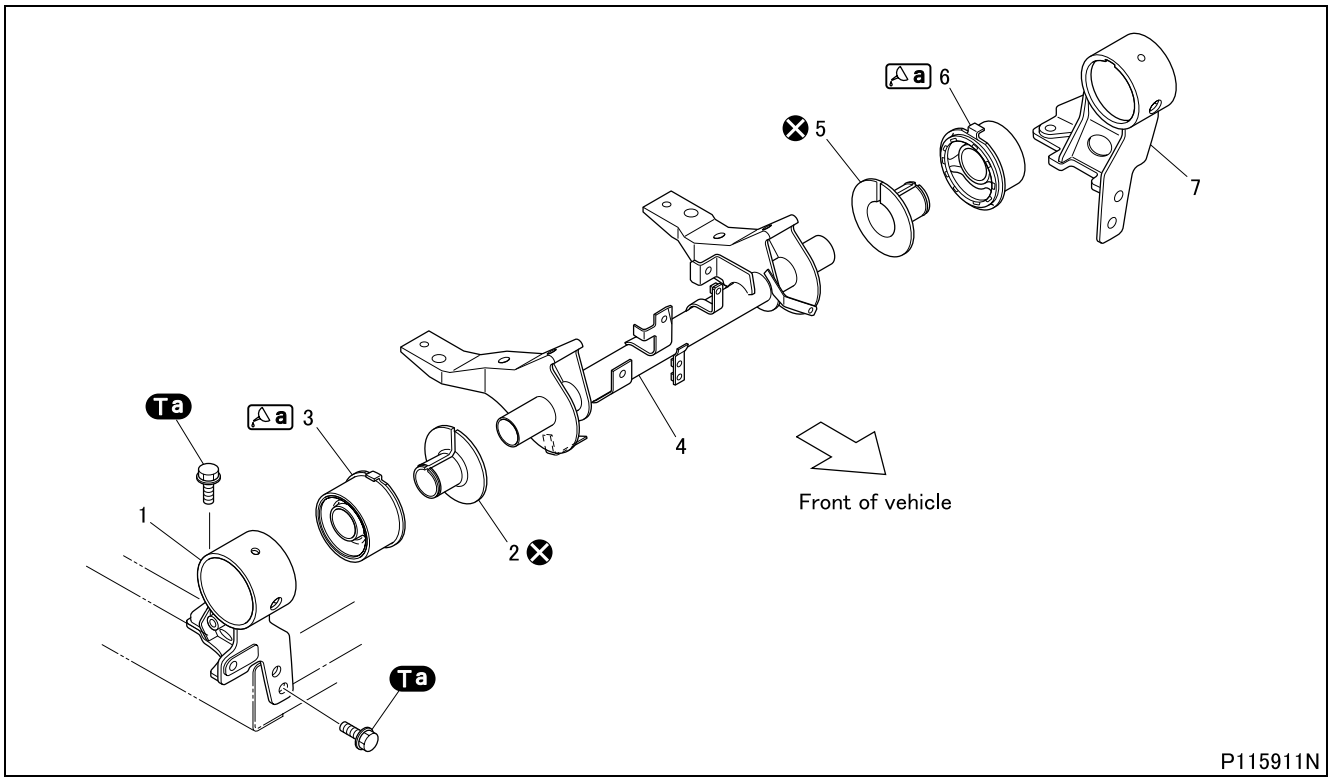

● **Disassembly sequence**

1 Front mounting bracket, right-hand
2 Bushing
3 Front rubber cushion
4 Front floor cross member
5 Bushing
6 Front rubber cushion
7 Front mounting bracket, left-hand

⊗: Non-reusable parts

● **Assembly sequence**

Follow the disassembly sequence in reverse.

Tightening torque (Unit: N·m {ft.lbs, kgf·m})

Mark	Parts to be tightened	Tightening torque	Remarks
Ta	Bolt (front mounting bracket attaching)	200 to 270 {145 to 200, 20 to 28}	–

Lubricant and/or sealant

Mark	Points of application	Specified lubricant and/or sealant	Quantity
a	Bushing contact surface of front rubber cushion	Rubber Grease	As required

https://truckmanualshub.com/

◆Installation procedure◆

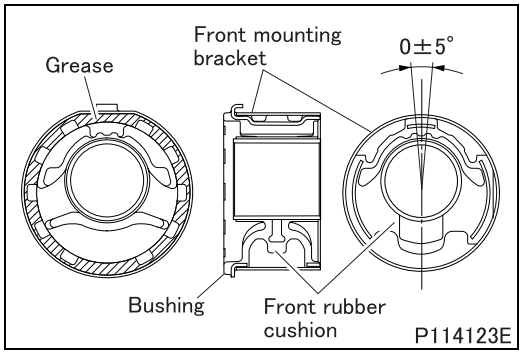

■ Installation: Bushing and front rubber cushion

- Fit the front rubber cushion to the front mounting bracket at an angle within the illustrated range.
- After installing the front rubber cushion, fill grease in the bushing as shown and fit it onto the mounting bracket.

https://truckmanualshub.com/

REAR CAB MOUNTING <EXCEPT CREW CAB>

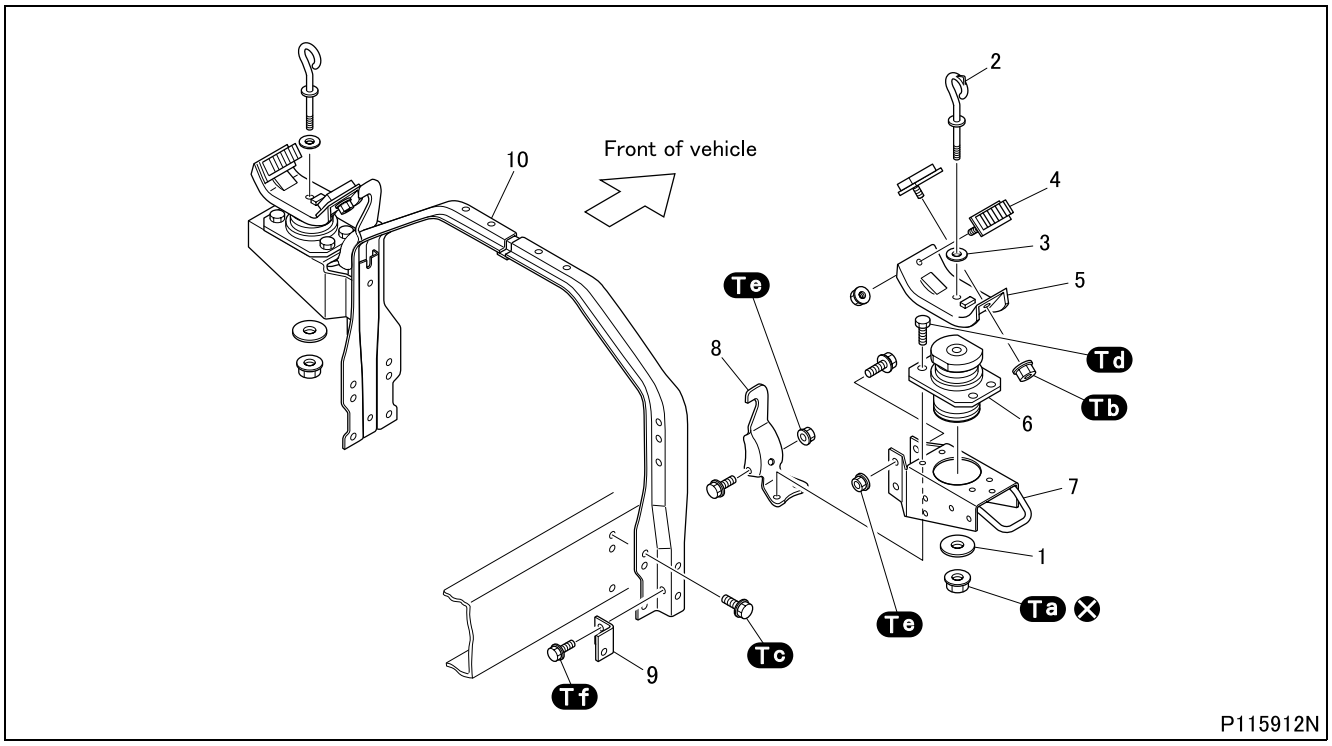

● **Disassembly sequence**

1 Plate
2 Anchor hook
3 Spacer
4 Side rubber cushion
5 Cab hold bracket
6 Rear rubber cushion
7 Rear mounting bracket
8 Cab catch
9 Mounting bracket
10 Rear mounting bridge

⊗: Non-reusable parts

● **Assembly sequence**

Follow the disassembly sequence in reverse.

Tightening torque (Unit: N·m {ft.lbs, kgf·m})

Mark	Parts to be tightened	Tightening torque	Remarks
Ta	Lock nut (anchor hook attaching)	83 to 98 {61 to 72, 8.5 to 10.0}	–
Tb	Nut (side rubber cushion attaching)	10 to 15 {7.4 to 11, 1.0 to 1.5}	–
Tc	Bolt (rear mounting bridge attaching)	75 to 90 {55 to 66, 7.6 to 9.2}	–
Td	Bolt (rear rubber cushion attaching)	20 to 30 {15 to 22, 2.1 to 3.1}	–
Te	Nut (rear mounting bracket attaching)	55 to 65 {41 to 48, 5.6 to 6.6}	–
	Nut (cab catch attaching)		
Tf	Bolt (mounting bracket attaching)	45 to 55 {33 to 41, 4.6 to 5.6}	–

https://truckmanualshub.com/

◆Installation procedure◆

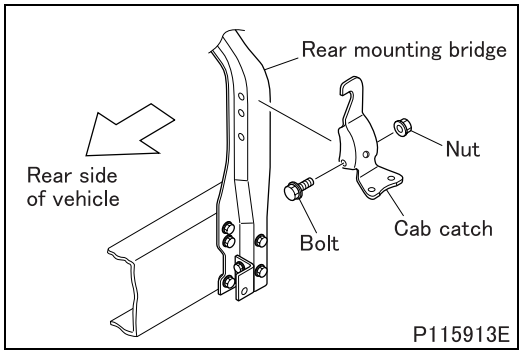

■ **Installation: Cab catch**

- When installing the cab catch, be sure to install the bolt from the rear side of the vehicle.

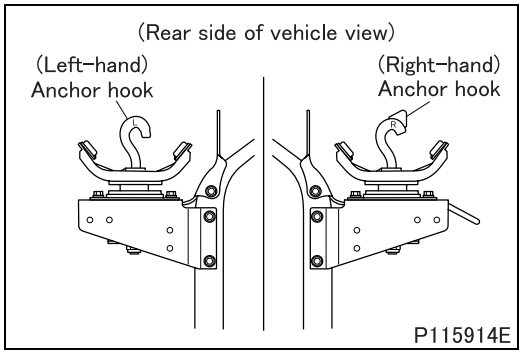

■ **Installation: Anchor hook**

- Fit the anchor hooks to the bracket as shown in the illustration.

CAUTION ⚠

- **When the cab is tilted down with the anchor hooks installed in wrong direction, the links installed in the cab can not hook to the anchor hooks and it may damage both of the anchor hooks and the links.**

https://truckmanualshub.com/

CENTER AND REAR CAB MOUNTINGS <CREW CAB>

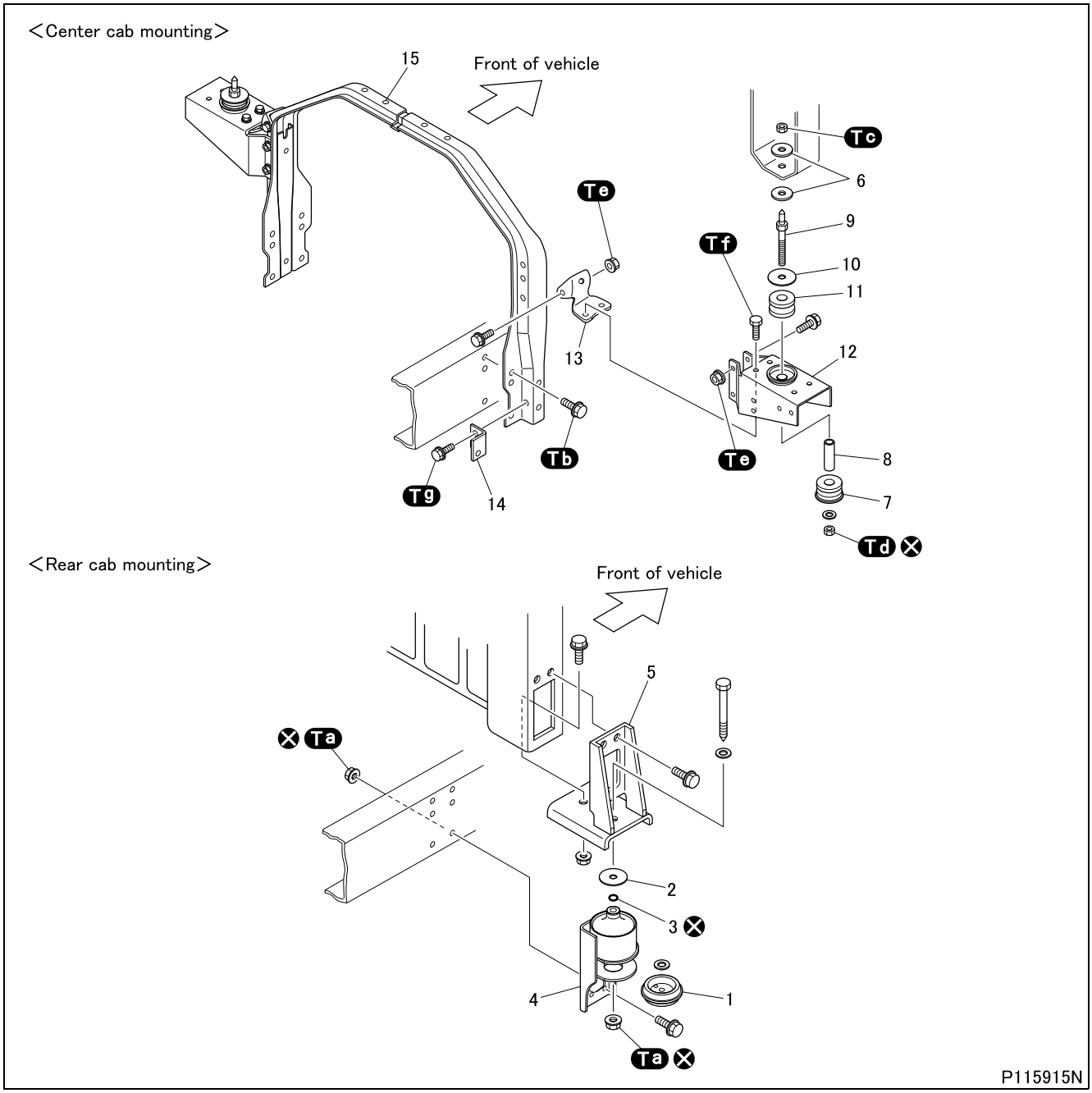

● **Disassembly sequence**

1 Rear mounting stopper
2 Plate
3 O-ring
4 Cab bracket
5 Extension bracket
6 Plate
7 Rear mounting lower rubber
8 Pipe
9 Cone point bolt
10 Plate
11 Rear mounting upper rubber
12 Rear mounting bracket
13 Mounting bracket A
14 Mounting bracket B
15 Rear mounting bridge

⊗: Non-reusable parts

● **Assembly sequence**

Follow the disassembly sequence in reverse.

https://truckmanualshub.com/

Tightening torque (Unit: N·m {ft.lbs, kgf·m})

Mark	Parts to be tightened	Tightening torque	Remarks
Ta	Lock nut (cab mounting)	59 to 69 {43 to 51, 6 to 7}	–
	Nut (cab bracket attaching)		–
Tb	Bolt (rear mounting post attaching)	75 to 90 {55 to 66, 7.6 to 9.2}	–
Tc	Nut (cone point bolt installing)	39 to 59 {29 to 43, 4 to 6}	–
Td	Lock nut (cab mounting)	83 to 98 {61 to 72, 8.5 to 10.0}	–
Te	Nut (rear mounting bracket attaching)	55 to 65 {41 to 48, 5.6 to 6.6}	–
	Nut (mounting bracket A attaching)		
Tf	Bolt (rear mounting bracket attaching)	20 to 30 {15 to 22, 2.1 to 3.1}	–
Tg	Bolt (mounting bracket B attaching)	45 to 55 {33 to 41, 4.6 to 5.6}	–

◆Installation procedure◆

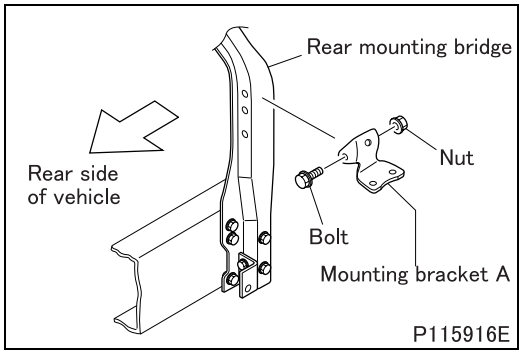

■ Installation: Mounting bracket A

- When installing the mounting bracket A, be sure to install the bolt from the rear side of the vehicle.

https://truckmanualshub.com/

CAB TILT LINK <EXCEPT CREW CAB>

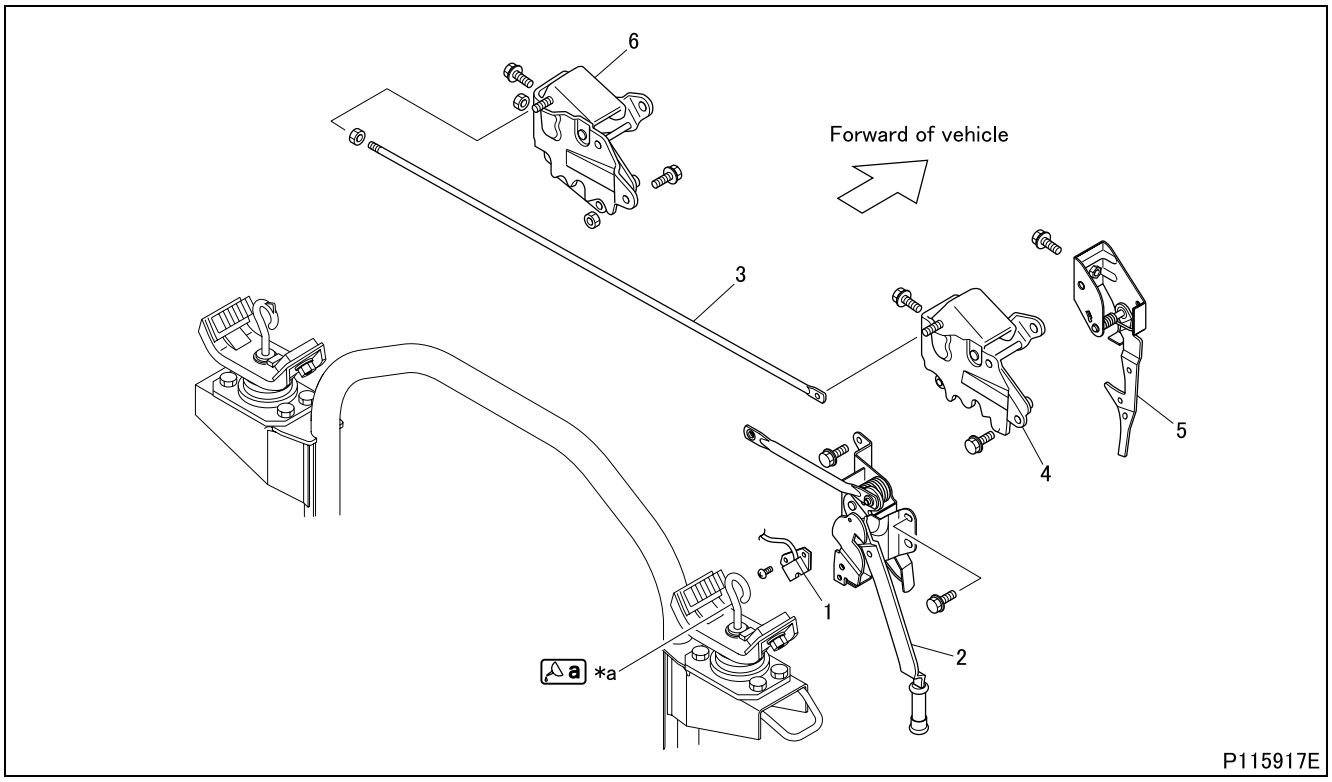

● **Disassembly sequence**

1 Cab tilt lock switch
2 Lock handle
3 Center rod
4 Link (right-hand)
5 Safety hook
6 Link (left-hand)

***a**: Anchor hook

● **Assembly sequence**

Follow the disassembly sequence in reverse.

- After assembly, adjust the lock handle operating physical force. (See ON-VEHICLE INSPECTION AND ADJUSTMENT.)

Lubricant and/or sealant

Mark	Points of application	Specified lubricant and/or sealant	Quantity
a	Contact of link of anchor hook	Chassis grease [NLGI No. 1 (Li soap)]	As required

https://truckmanualshub.com/

◆Installation procedure◆

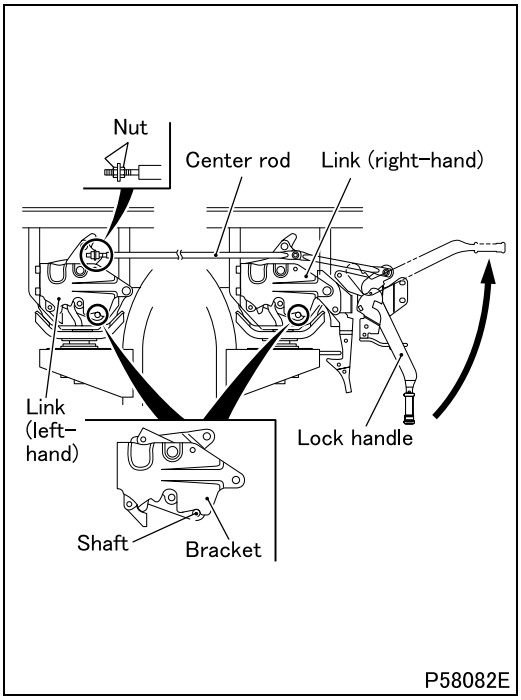

■ Installation: Center rod

- Operate the lock handle in the illustrated direction to unlock the left-hand and right-hand links.
- Adjust the center rod nut to bring the shafts of left-hand and right-hand links into contact with brackets.

https://truckmanualshub.com/

CAB STAY <EXCEPT CREW CAB>

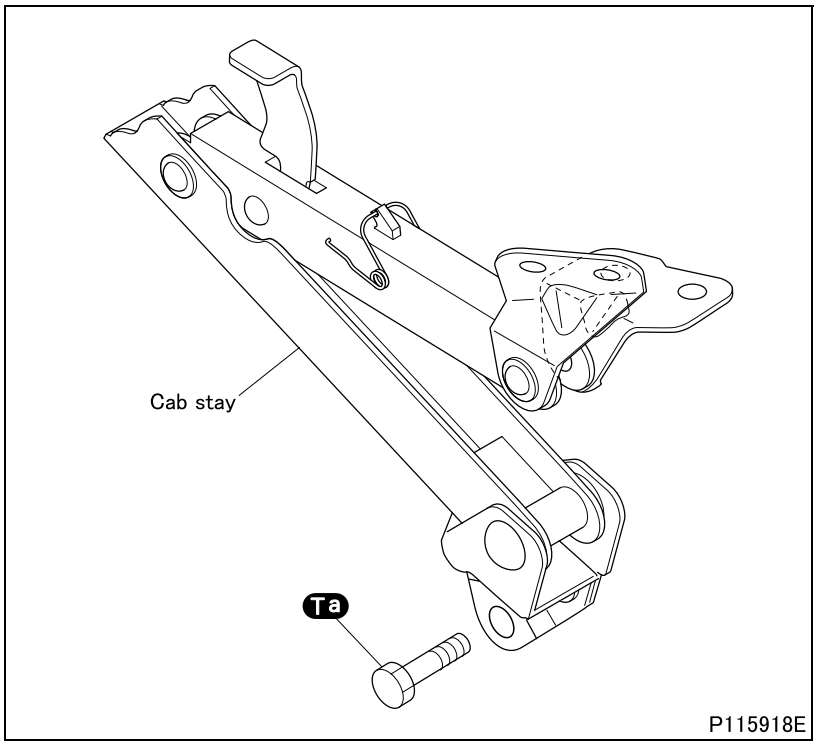

WARNING ⚠

- **Before removing the cab stay, be sure to support the cab with a crane or equivalent so that it does not fall during work.**

Tightening torque (Unit: N·m {ft.lbs, kgf·m})

Mark	Parts to be tightened	Tightening torque	Remarks
Ta	Bolt (cab stay mounting)	59 to 78 {43 to 58, 6 to 8}	–

https://truckmanualshub.com/

FUSO

Group 43

Door

MITSUBISHI FUSO TRUCK OF AMERICA, Inc.

Pub.No.00ELT0001-43

https://truckmanualshub.com/

INDEX

SPECIFICATIONS 43-2

STRUCTURE AND OPERATION
1. **Front Door Lock System 43-3**
2. **Rear Door Lock System <Crew Cab> 43-3**
3. **Front Door Glass Opening and Closing Mechanism 43-4**
4. **Rear Door Glass Opening and Closing Mechanism <Crew Cab> 43-5**
5. **Keyless Entry System 43-6**

TROUBLESHOOTING 43-10

ON-VEHICLE INSPECTION AND ADJUSTMENT
1. **Adjustment of Front Door Alignment 43-14**
2. **Adjustment of Rear Door Alignment <Crew Cab> 43-16**
3. **Inspection of Keyless Entry System 43-18**
4. **Method of Transmitting Code to Keyless Entry Electrical Control Unit 43-19**

FRONT DOOR 43-22

REAR DOOR <CREW CAB> 43-30

https://truckmanualshub.com/

SPECIFICATIONS

Item				Specifications
Front door		Door lock system		Automatic door lock system (central door lock)
		Door glass opening and closing mechanism		Electrical control type
Rear door <crew cab>		Door lock system		Automatic door lock system (central door lock)
		Door glass opening and closing mechanism		Manual control type
Keyless entry system	Transmitter	Type		Holder with separate key type (independent buttons for lock and unlock)
		Rated voltage	V	3
		Consumption current	mA	7.5 (during transmission)
		Transmitting frequency	MHz	315
		Battery		Lithium battery
	Keyless entry electrical control unit	Rated voltage	V	12
		Consumption current	mA	13 or less
		Receiving frequency	MHz	315

https://truckmanualshub.com/

1. Front Door Lock System

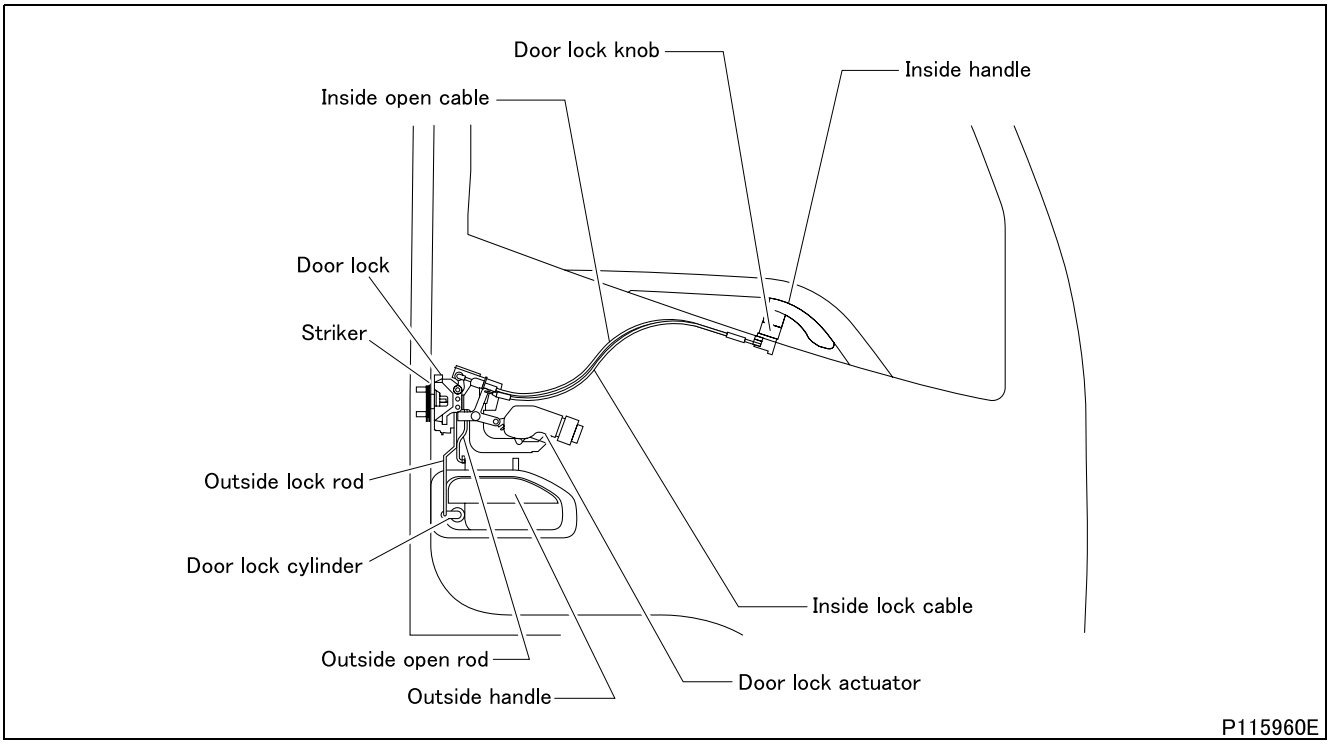

2. Rear Door Lock System <Crew Cab>

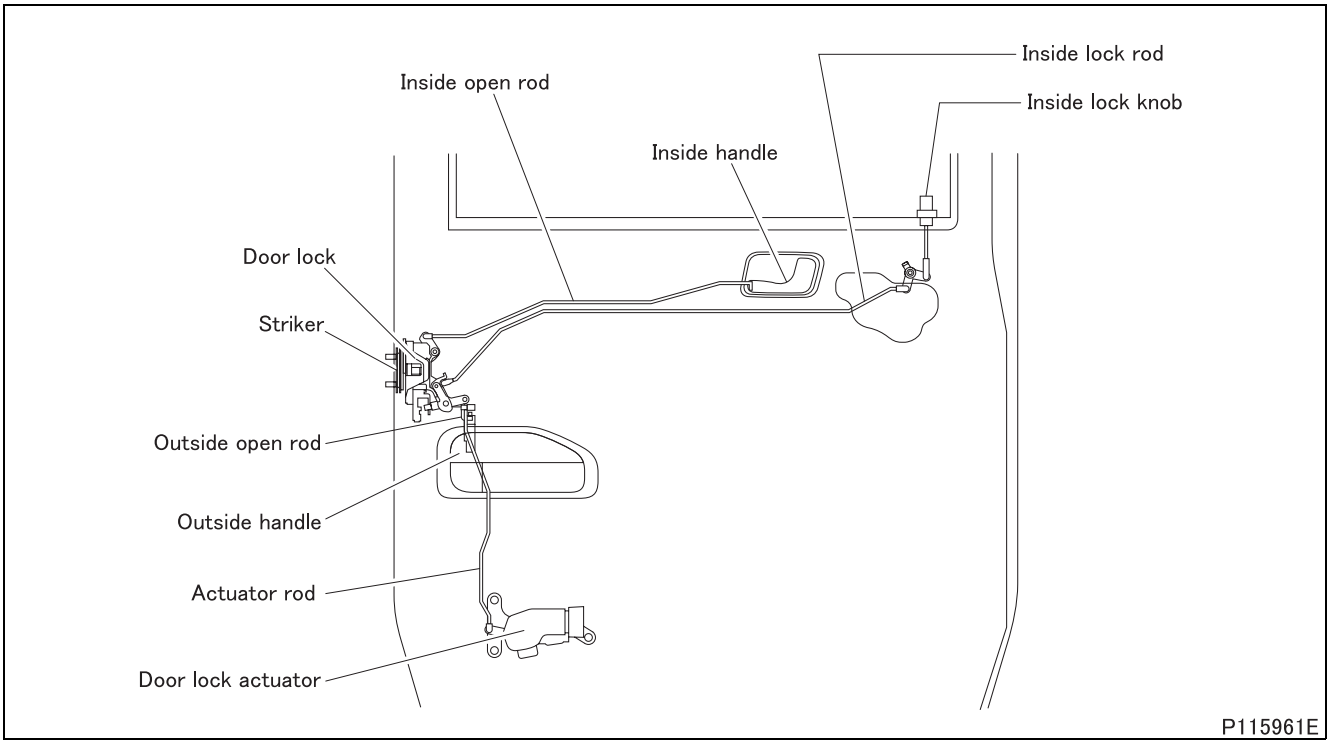

https://truckmanualshub.com/

3. Front Door Glass Opening and Closing Mechanism

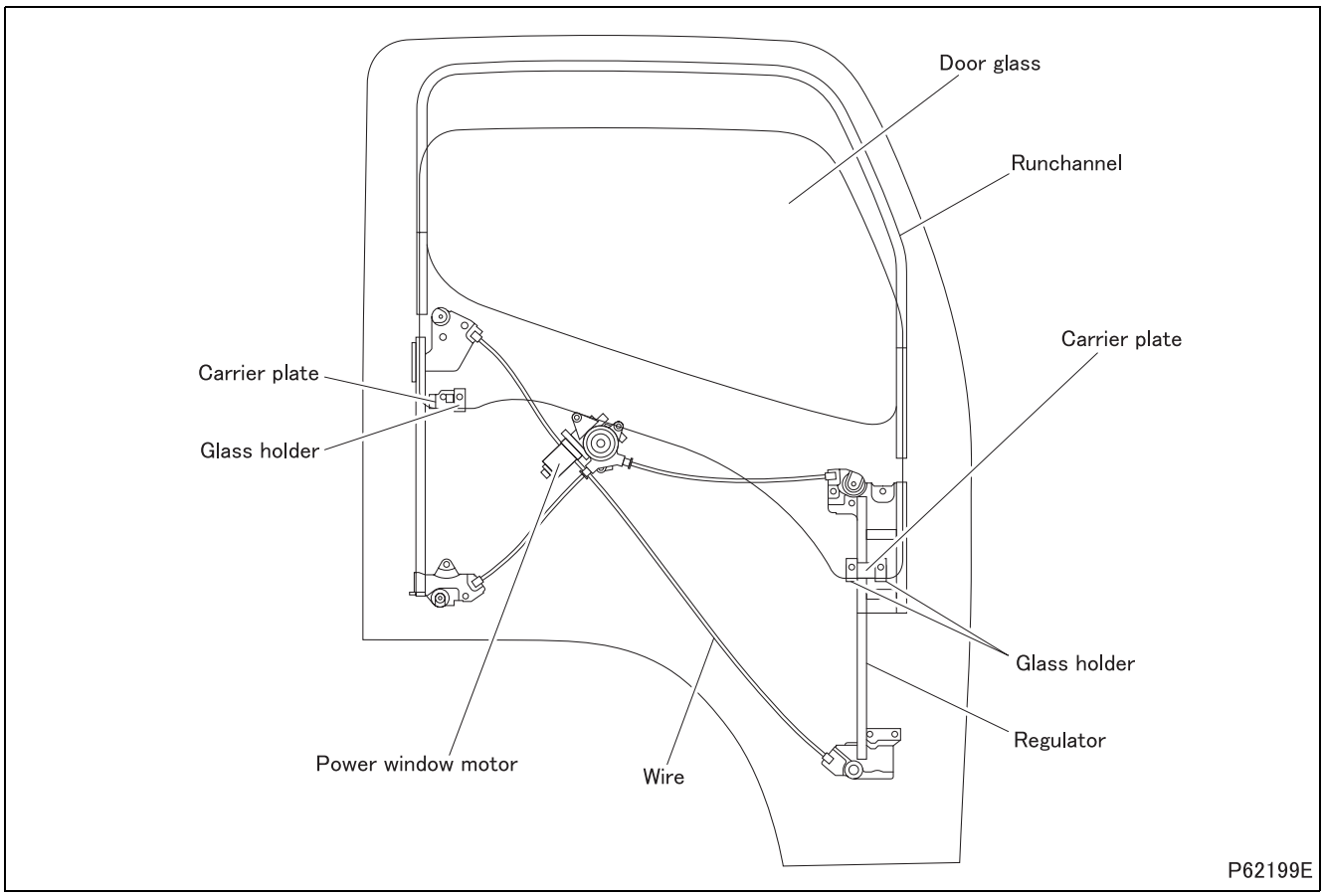

- The door glass is secured to the carrier plate by the glass holder.
- With the rotation of the power window motor the carrier plate is moved up and down by means of the wire to open and close the door glass.

https://truckmanualshub.com/

4. Rear Door Glass Opening and Closing Mechanism <Crew Cab>

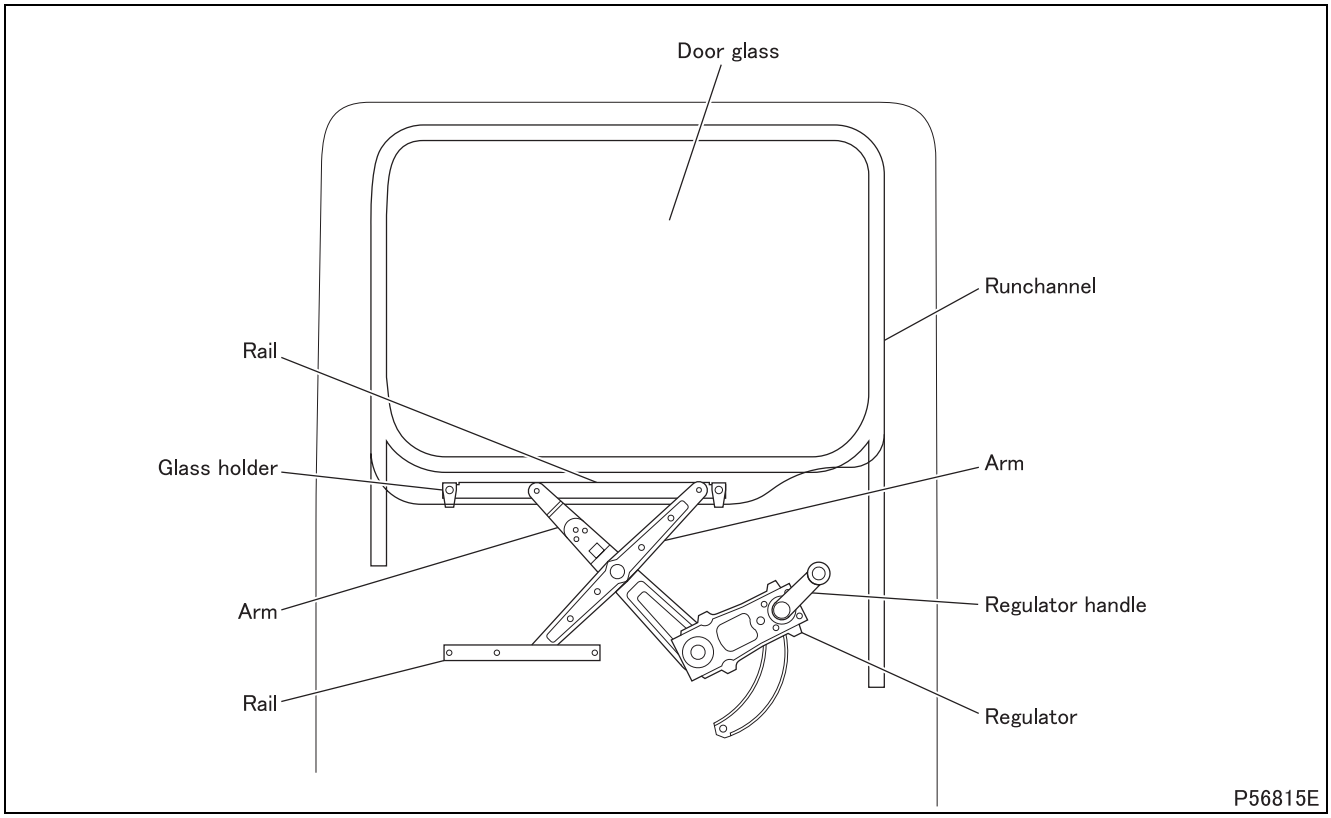

- The door glass is secured to the rail by the glass holder.
- The rail is secured to the door panel, and the arms slide back and forth inside the rail.
- Turning the regulator handle moves the rail up and down by means of the regulator and arm to open and close the door glass.

https://truckmanualshub.com/

5. Keyless Entry System

5.1 System block diagram

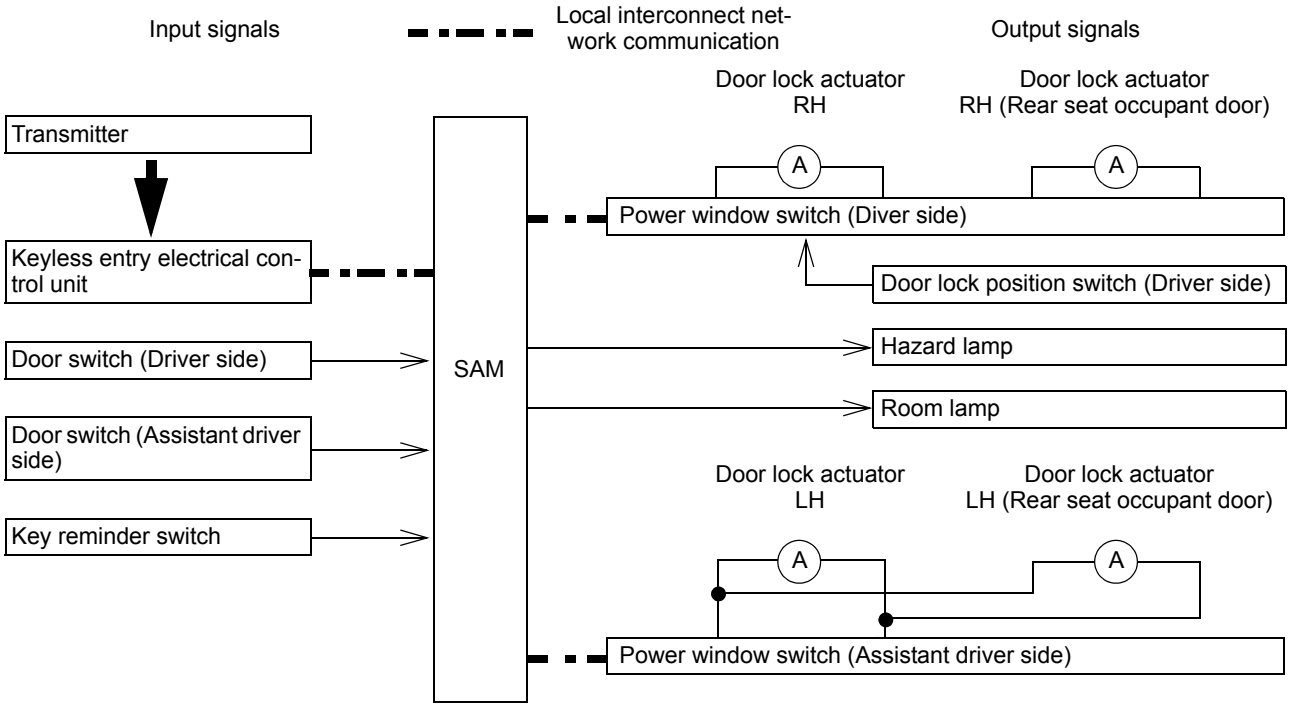

Name of components	Main functions and operations
Transmitter	Transmission of door lock and unlock signals
Keyless entry electrical control unit	Reception of radio signals from transmitter and control of keyless entry system
Door switch	Detection of door state (open/closed)
Door lock position switch	Detection of door lock state
Key reminder switch	Detection of starter key remaining in key cylinder
Central door locking switch	Central operation of door locks
Power window switch	Control of door lock functions
Hazard lamp	Answer-back function
Room lamp	
SAM	Control of local interconnect network communication, control of answer-back functions (hazard and room lamps)
Door lock actuator	Locking/unlocking of doors

- The key entry system operates the lock and unlock system of the right and left doors by remote control using radio signals.
- The system consists of the conventional auto door lock system and additional transmitter and keyless entry electrical control unit.
- Operational conditions of the system: The system operates only when both the right and left doors are completely closed (should not be open even slightly), and the starter key is pulled out from the starter switch.
- Starter switch and door switch are included in the system for detection of the above status.
- The system has an answer back function that turns on the room lamp and the hazard lamp when activated, thus confirming operation of the system when the user is away from the vehicle. The room lamp and the hazard lamp light up when they are functioning, as shown below.
  - The lamps blink twice when the doors are locked.

https://truckmanualshub.com/

- When the door lock is cancelled, the room lamp lights up for a few seconds, gradually fading and eventually going out (fade out function).
- When the door lock is cancelled, the hazard lamp blinks once.

- Features of the system:
  - Failure in the transmitter or keyless entry electrical control unit does not affect the auto door lock system and does not hinder the locking or unlocking of doors.
  - The system operates at 95% within a 3 m diameter and 75% within a 5 m diameter from the center of the cabin.
  - A transmission code rewrite function is incorporated into the keyless entry electrical control unit. If a transmitter is lost or damaged, the function can be recovered by registering a new code, without having to replace the whole system.
  - Because the keyless entry electrical control unit can store three transmission codes, one vehicle can use three transmitters.
  - The system is equipped with an auto lock function. If the unlock button is pressed by mistake while the doors are locked and the operating conditions of the system are met, this will be considered an error, providing a door (right or left) is not opened within 30 seconds after pressing the button, and the doors will automatically lock again.

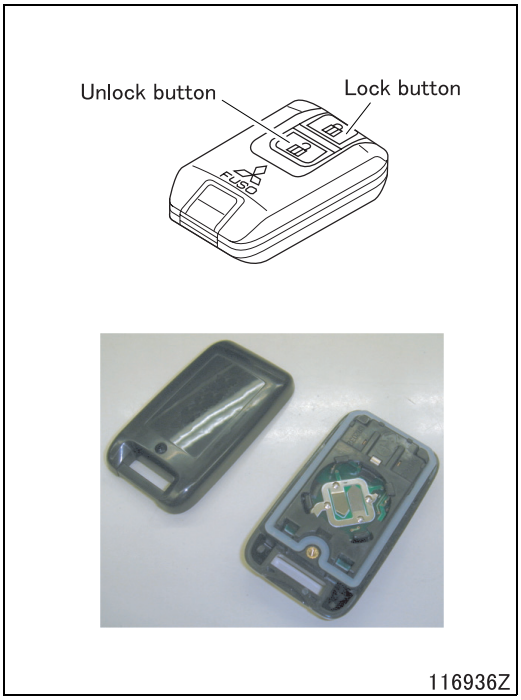

116936Z

(1) Transmitter

- The transmitter has a lock button and an unlock button that operate independently.
- The transmitter has a unique transmitter code assigned to each vehicle, ensuring that each vehicle has an ordinary starter key with a different transmission key. There are more than one million transmission codes and one of them is assigned to each transmitter.
- If the lock button or unlock button is pressed, the transmission code will be transmitted as a radio signal.
- A lithium battery is used as power supply.

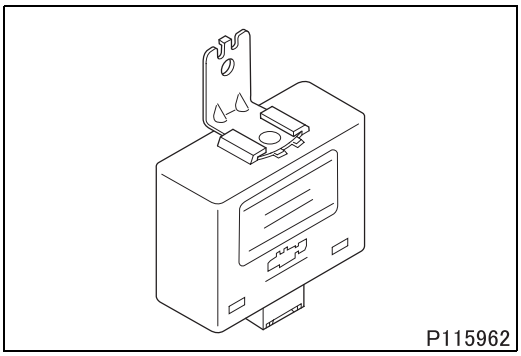
P115962

(2) Keyless entry electrical control unit

- The keyless entry electrical control unit receives radio signals sent from the transmitter and controls the keyless entry system to send locking or unlocking signals to the power window switch.

https://truckmanualshub.com/

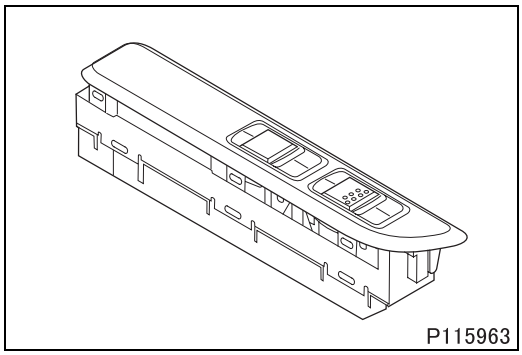
P115963

(3) Power window switch

- This switch outputs electric signals to the door lock actuator according to the commands from the keyless entry electrical control unit.

https://truckmanualshub.com/

M E M O

https://truckmanualshub.com/

Door Glass Opening and Closing Mechanism
<Electrical control type>

Symptoms / Possible causes	Door glass falls by gravity when vehicle is running	Regulator or motor emits noise when vehicle is running	Power window fails to operate	Power window fails to stop	Power window emits noise when in motion	Reference Gr
Power window switch faulty			O	O		Gr54
Regulator and motor assembly faulty	O		O	O	O	
Regulator and motor assembly improperly mounted					O	
Fuse or high current fuse blown			O			
Connector improperly connected, harness open-circuited or improperly grounded			O			
Door glass and door beltline molding unsteady		O				
Air temperature low						

https://truckmanualshub.com/

<Manual control type>

Symptoms / Possible causes		Regulator handle drags	Door glass unsteady when opening and closing	Regulator emits noise when door glass moves up and down	Regulator emits noise when vehicle is running	Door glass falls by gravity when vehicle is running	Reference Gr
Regulator	Regulator faulty	O				O	
	Roller resistive	O		O			
	Improperly mounted		O		O		
Runchannel damaged			O				
Runchannel improperly mounted			O				
Door glass improperly installed		O					
Door glass and door belt line molding unsteady					O		

https://truckmanualshub.com/

Door Lock

Symptoms / Possible causes		Inside handle can not open door	Inside handle heavy to operate	Outer handle can not open door	Outer handle heavy to operate	Door does not open and close smoothly	Central door lock system does not operate		Reference Gr
							Procedure by key	Procedure by door lock knob	
Door setting out of adjustment			O		O	O			
Each door rod	Rod deformed		O		O				
	Rod out of position	O		O			O	O	
	Rod interference		O		O				
Door lock cylinder deformed or damaged							O		
Power window switch faulty							O	O	
Door lock actuator faulty							O	O	
Door latch deformed or damaged			O		O	O			Gr43
Fuse of high current fuse blown							O	O	
Connector improperly connected, harness open-circuited, improperly grounded							O	O	
Battery capacity insufficient							O	O	
Striker deformed		O		O		O			
Outer handle out of adjustment					O				

https://truckmanualshub.com/

Keyless Entry System

Symptoms / Possible causes		Door fails to lock or unlock	Door fails to unlock after being left for a while with door locked	Keyless entry receiver fails to store decryption code	Reference Gr
Fuse or high current fuse blown		O	O	O	Gr54
Connector improperly connected, harness open-circuited or improperly grounded		O	O	O	
Battery capacity insufficient		O	O	O	
Transmitter	Battery run out	O	O	O	
	Transmitter unit faulty	O	O	O	
Starter switch (key reminder switch portion) faulty		O	O		Gr54
Door lock actuator faulty		O	O		
Keyless entry receiver	Memorizing decryption code incorrectly	O			
	Receiver unit faulty	O	O	O	
Door switch faulty		O	O		Gr54
Door half-shut or opened		O			
Starter key putted in starter switch		O			
Power window switch faulty		O	O		Gr54

https://truckmanualshub.com/

ON-VEHICLE INSPECTION AND ADJUSTMENT

1. Adjustment of Front Door Alignment

Tightening torque (Unit: N·m {ft.lbs, kgf·m})

Mark	Parts to be tightened	Tightening torque	Remarks
–	Bolt (door mounting; ★ marked)	17 to 26 {12 to 19, 1.7 to 2.6}	–
	Bolt (upper and lower hinge mounting; ☆ marked)		
–	Screw (striker mounting)	9 to 14 {6.5 to 10, 0.9 to 1.4}	–

- Door alignment is adjusted by changing the positions of the upper and lower hinges and striker.
  Door alignment dimensions: See **1.3**.

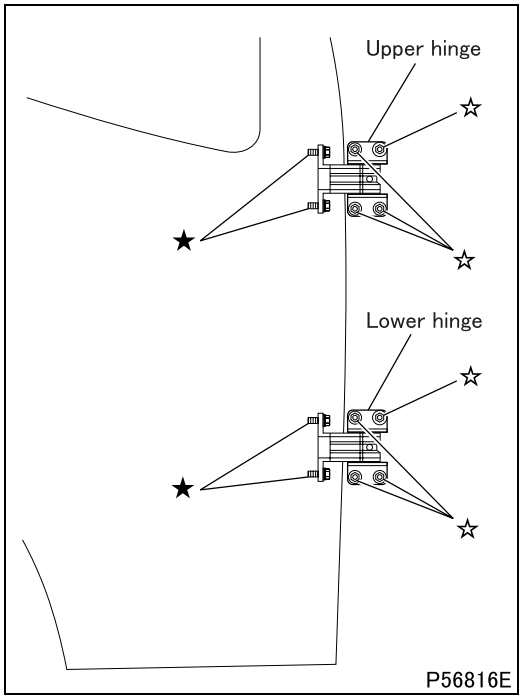

1.1 Adjustment of hinge positions

- Use ★ marked bolts to adjust gap.
- Use ☆ marked bolts to adjust flushness.

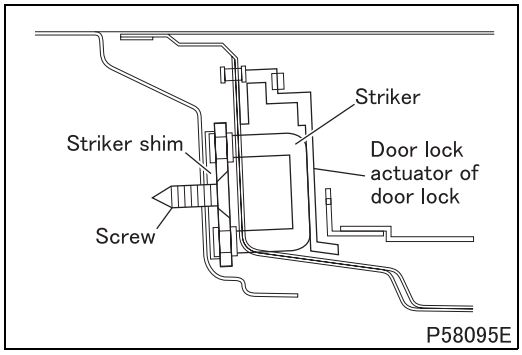

1.2 Adjustment of striker position

- Use mounting screw to make the adjustment.
- To adjust the engagement of the striker with the door lock actuator or door lock, change the number of striker shims as required.

https://truckmanualshub.com/

1.3 Front door alignment dimensions

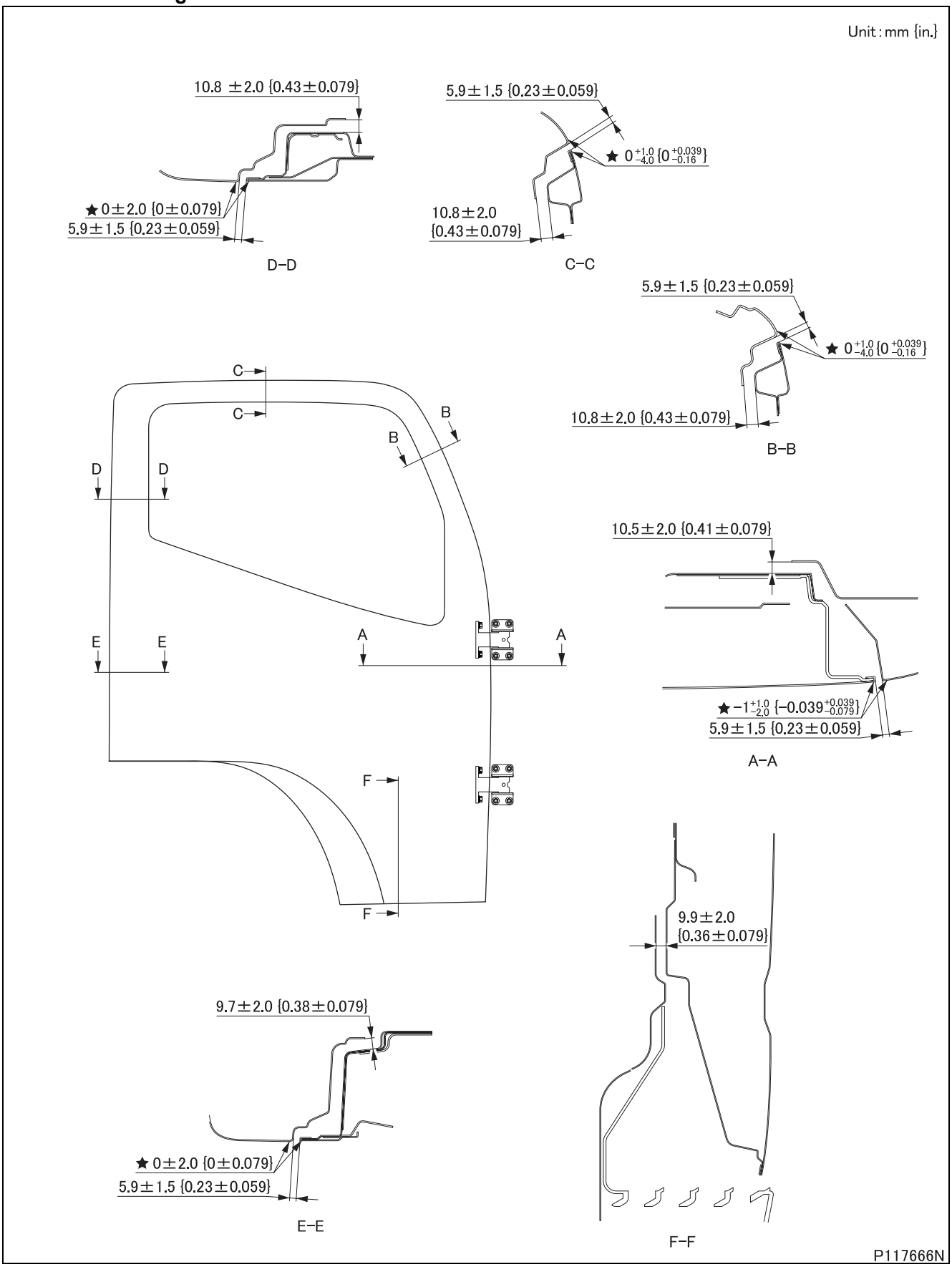

★: Flushness dimension (+ for outside of cab; – for inside of cab)

https://truckmanualshub.com/

2. Adjustment of Rear Door Alignment <Crew Cab>

Tightening torque (Unit: N·m {ft.lbs, kgf·m})

Mark	Parts to be tightened	Tightening torque	Remarks
–	Screw (striker mounting)	9 to 14 {6.5 to 10, 0.9 to 1.4}	–

- Door alignment is adjusted by changing the positions of the upper and lower hinges and striker.
  Rear door alignment dimensions: See **2.3**.

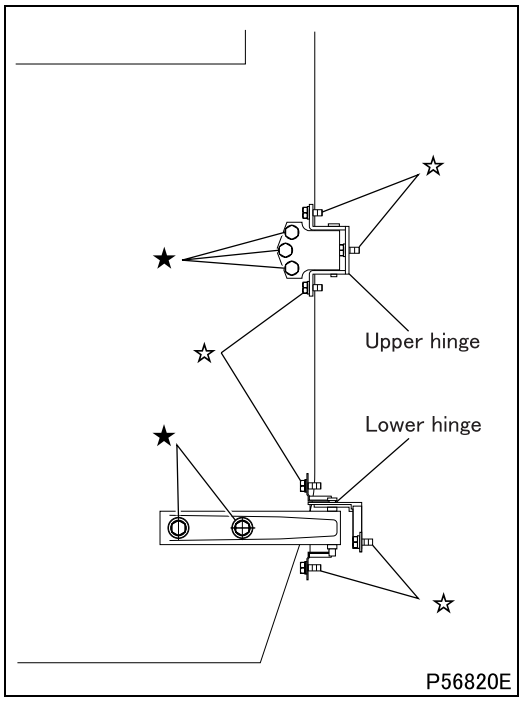

2.1 Adjustment of hinge positions

- Use ★ marked bolts to adjust gap.
- Use ☆ marked bolts to adjust flushness.

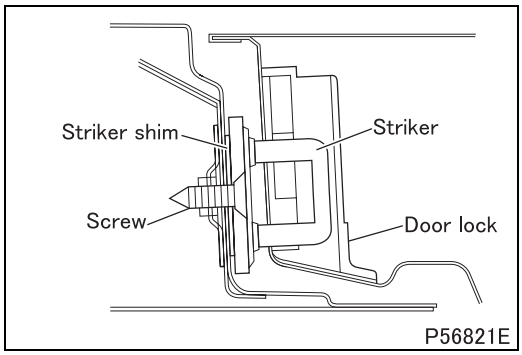

2.2 Adjustment of striker position

- Use mounting screw to make the adjustment.
- To adjust the engagement of the striker with the door lock, change the number of striker shims as required.

https://truckmanualshub.com/

2.3 Rear door alignment dimensions

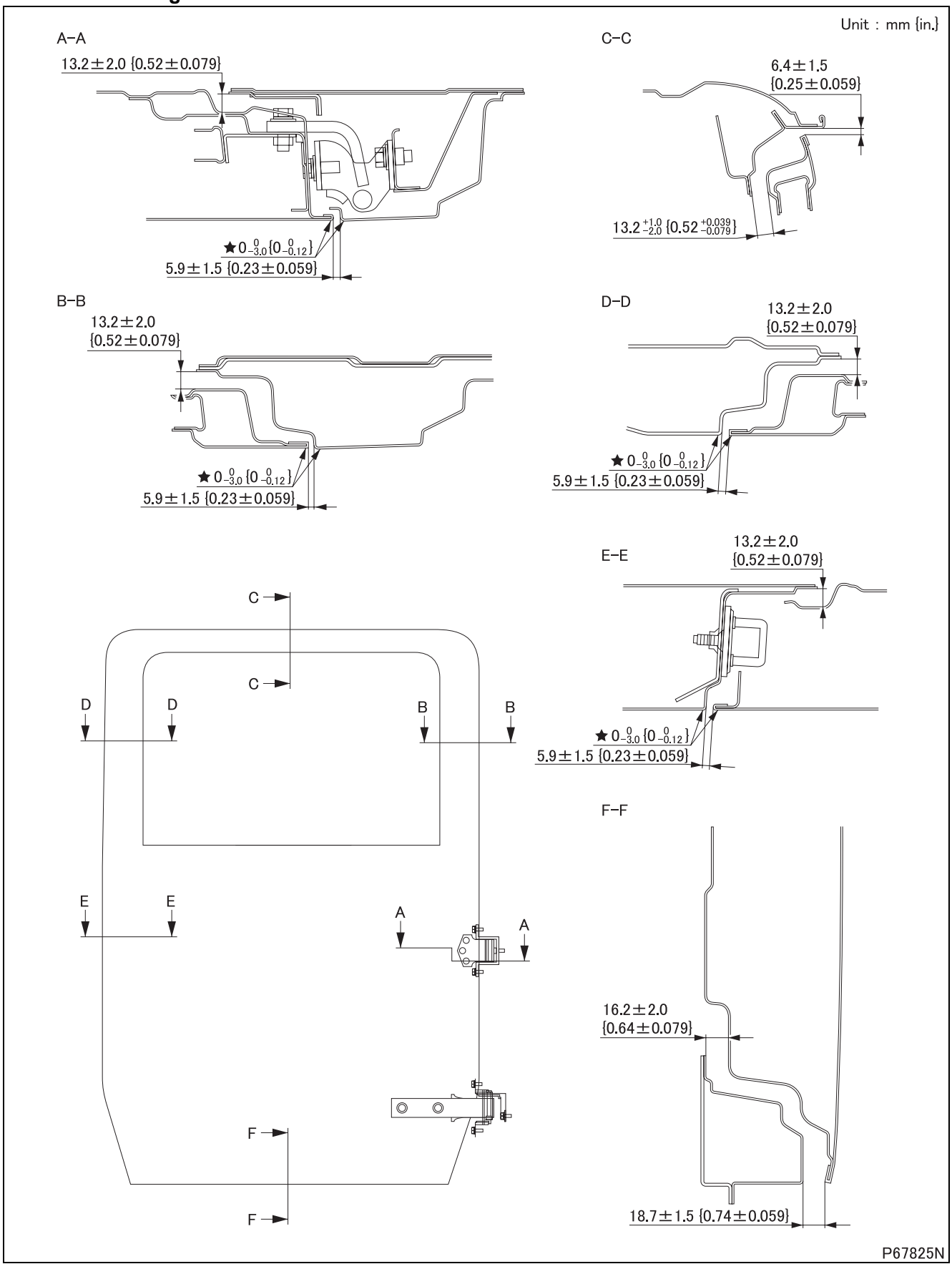

★: Flushness dimension (+ for outside of cab; – for inside of cab)

https://truckmanualshub.com/

3. Inspection of Keyless Entry System

Service standards

Location	Maintenance item	Standard value	Limit	Remedy
–	Range of system operation	3 m {9.8 ft.} or less (operation at approx. 95%)	–	Replace
–	Time of automatic lock function	Approx. 30 sec.	–	Replace

CAUTION ⚠

- **Keep the transmitter dry, and do not disassemble or drop it; otherwise, it may become broken.**
- **Do not leave the transmitter in any place, including the inside of the vehicle, where it would be exposed to direct sunlight or high temperature (above 60°C {140°F}). The battery life will be shortened and the transmitter may become broken.**
- **Do not remove the cover except when changing the battery. It can cause malfunction of the transmitter.**

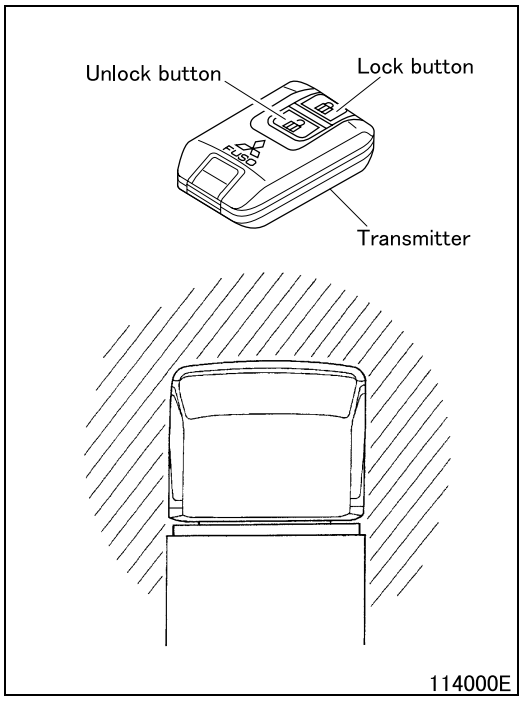

3.1 Inspection of system operation range

- Confirm before inspection that the doors are completely closed and the starter key is pulled out from the starter switch.
- Check if lock and unlock can be made without failure by pressing LOCK and UNLOCK buttons of transmitter from the range of distance (hatched section) from the cabin.

CAUTION ⚠

- **The range of operation may be smaller than the standard value because of electromagnetic hindrance if there is a TV tower, a power plant, a broadcasting tower, etc. in the vicinity.**
- **The standard values are those obtained when the system is operating at approx. 95%. The system operates at approx. 75% when the distance is 5 m {16 ft}.**

- If the system is not operating within the standard values, the following are possible causes:
  - Transmitter battery run out or transmitter unit faulty
  - Starter key switch (part of key reminder switch) faulty
  - Electrical circuit of the system faulty
  - Keyless entry electrical control unit or power window switch faulty
  - Door switch faulty
  - Door lock actuator faulty
  - Door lock position switch faulty

3.2 Inspection of automatic lock function

- Unlock the locked doors by pressing the unlock button of transmitter.
- Keep both right and left doors closed without opening after unlocking, and measure the time until the doors are automatically locked again.
- If the measured time is greatly different from the standard values or if the doors are not locked, replace the keyless entry electrical control unit.

https://truckmanualshub.com/

4. Method of Transmitting Code to Keyless Entry Electrical Control Unit

- When a transmitter is replaced or additionally installed, it is necessary to register the transmission code on the transmitter side in the keyless entry electrical control unit.
- When registering a transmission code in the keyless entry electrical control unit, there is a specified time limit for each process of work and if the work is not completed within these time limits, the transmission code will not be registered.
- Three (3) transmission codes can be registered in each keyless entry electrical control unit. If the fourth or subsequent transmission code is registered, the oldest transmission codes will be erased.
- If a new transmitter is registered to replace a lost transmitter, the registration process must be repeated three times to complete registration.

https://truckmanualshub.com/

ON-VEHICLE INSPECTION AND ADJUSTMENT

Time limit of process

Close the doors on both the driver and passenger sides with the starter key pulled out from the starter switch.

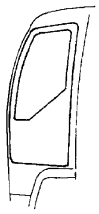

62200

Open the door on the driver's side.

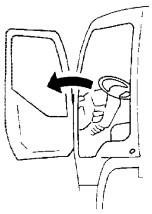

62201

Within 10 sec.

Press the lock or unlock button of transmitter after the door on the driver's side has been opened.

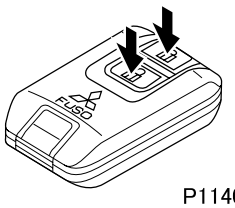

P114007

Within 10 sec.

Turn the starter switch to ON position.

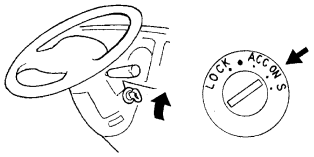

50609

Within 10 sec.

Pull out the starter key from the starter switch.

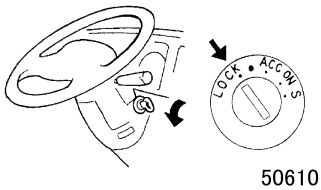

50610

Within 30 sec.

Repeat turning ON and OFF of the door switch on the driver's side (6 times or more) until the door lock actuator operates from LOCK to UNLOCK twice.

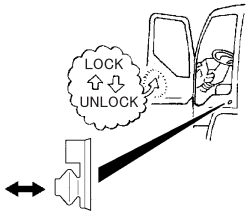

62202

Within 10 sec.

After the door lock actuator is operated, keep the unlock button on the transmitter pressed (for more than 5 seconds) until an operating noise of the door lock actuator is heard.

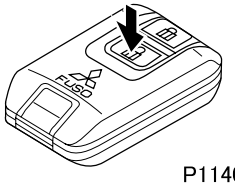

P114008

Completion of registration

https://truckmanualshub.com/

- If the registration of transmission code did not complete normally, restart the procedure of registration from the beginning.
- After normal completion of transmission code registration, confirm that the transmitter operates normally by pressing the buttons of transmitter a few times.

https://truckmanualshub.com/

FRONT DOOR

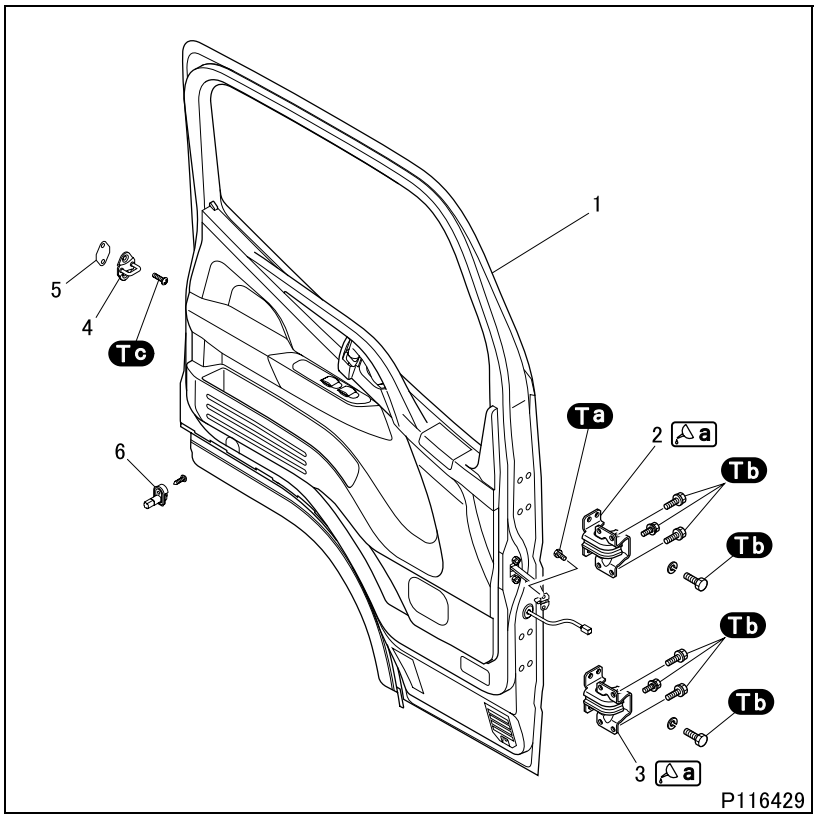

●Removal sequence

1 Door (See later section.)
2 Upper hinge
3 Lower hinge
4 Striker
5 Striker shim
6 Door switch

●Installation sequence

Follow the removal sequence in reverse.

- Adjust front door alignment after installation. (See ON-VEHICLE INSPECTION AND ADJUSTMENT.)

Tightening torque (Unit: N·m {ft.lbs, kgf·m})

Mark	Parts to be tightened	Tightening torque	Remarks
Ta	Bolt (door mounting)	4 to 6 {2.9 to 4.3, 0.4 to 0.6}	–
Tb	Bolt (door mounting)	17 to 26 {12 to 19, 1.7 to 2.6}	–
	Bolt (upper and lower hinge mounting)		
Tc	Screw (striker mounting)	9 to 14 {6.5 to 10, 0.9 to 1.4}	–

Lubricant and/or sealant

Mark	Points of application	Specified lubricant and/or sealant	Quantity
a	Rotating contact parts of upper and lower hinges	Chassis grease [NLGI No. 1 (Li soap)]	As required

https://truckmanualshub.com/

Door

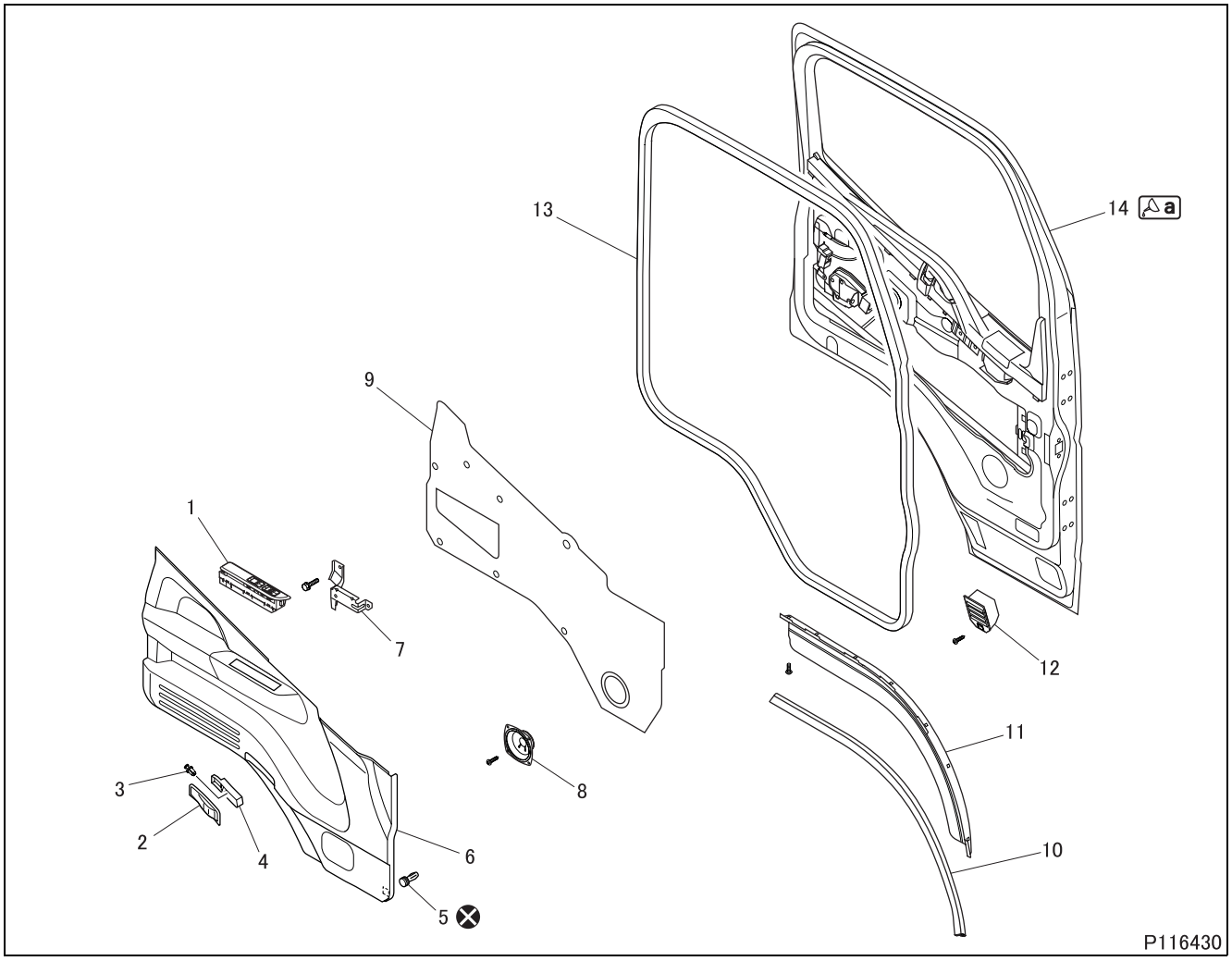

● Disassembly sequence

1 Power window switch
2 Lens
3 Clip
4 Step lamp
5 Clip
6 Lower door trim
7 Trim bracket
8 Speaker
9 Waterproof cover
10 Weatherstrip <FE>
11 Door fender <FE>
12 Air outlet garnish
13 Weatherstrip
14 Door panel (See later section.)

⊗: Non-reusable parts

● Assembly sequence

Follow the disassembly sequence in reverse.

Lubricant and/or sealant

Mark	Points of application	Specified lubricant and/or sealant	Quantity
a	Waterproof cover fitting surface of door Panel	Butyl tape	As required

https://truckmanualshub.com/

◆Removal procedure◆

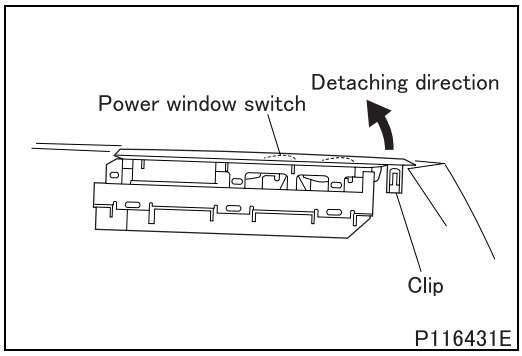

■Removal: Power window switch

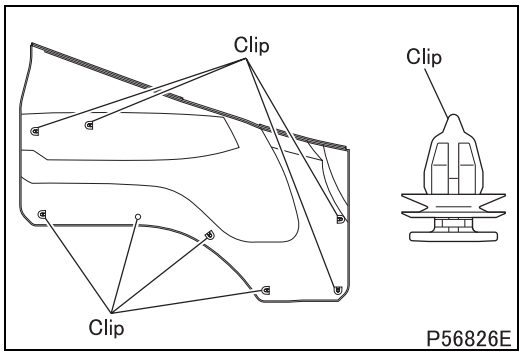

■Removal: Lower door trim

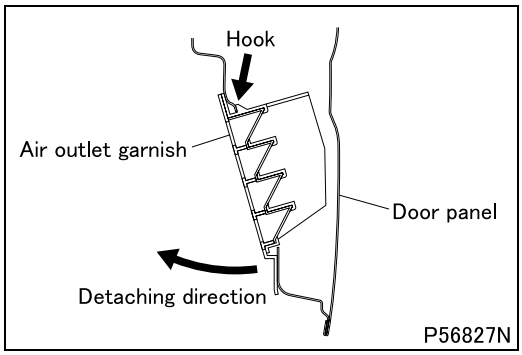

■Removal: Air outlet garnish

◆Installation procedure◆

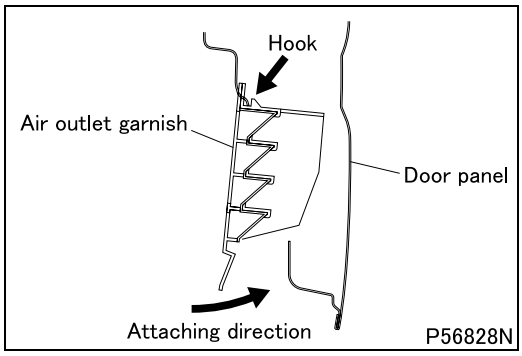

■Installation: Air outlet garnish

- Attach the air outlet garnish to the door panel in the illustrated direction, with its hook fitted in the door panel.

https://truckmanualshub.com/

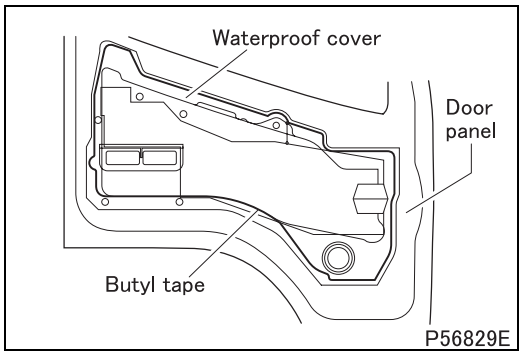

■**Installation: Waterproof cover**

- Apply butyl tape to the door panel as shown, then attach the waterproof cover to the door panel.

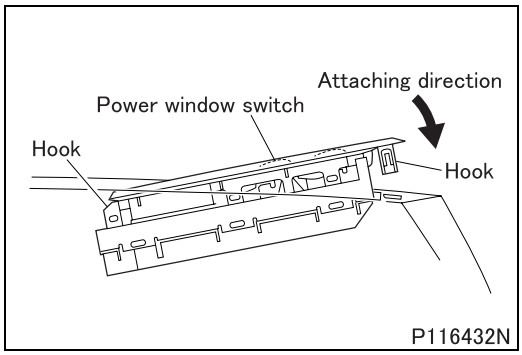

■**Installation: Power window switch**

- To install the power window switch in position, fit hook first, then tab, in the lower door trim.

https://truckmanualshub.com/

FRONT DOOR

Door Panel

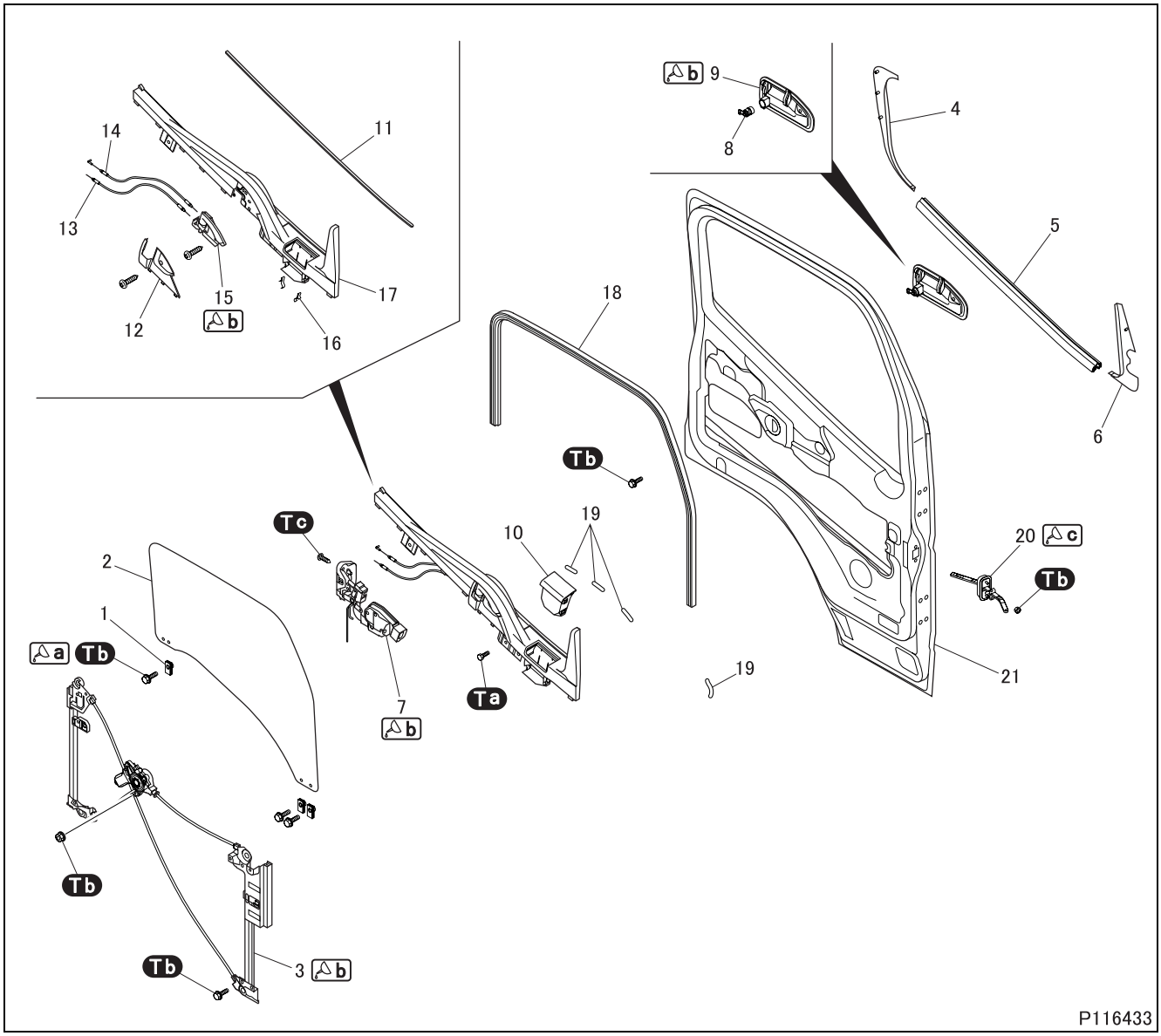

●Disassembly sequence

1 Glass holder
2 Door glass
3 Regulator and motor
4 Sash garnish
5 Beltline molding
6 Delta garnish
7 Door lock actuator
8 Door lock cylinder
9 Outside handle
10 Ashtray
11 Weatherstrip
12 Inside handle inner cover
13 Inside lock cable
14 Inside open cable
15 Inside handle
16 Spring
17 Upper door trim
18 Runchannel
19 Protector
20 Door check
21 Door panel

●Assembly sequence

Follow the disassembly sequence in reverse.

https://truckmanualshub.com/

Tightening torque (Unit: N·m {ft.lbs, kgf·m})

Mark	Parts to be tightened	Tightening torque	Remarks
Ta	Bolt (upper door trim attaching)	10 to 15 {7.2 to 11, 1.0 to 1.5}	–
Tb	Bolt (door glass attaching)	4 to 6 {2.9 to 4.3, 0.4 to 0.6}	Sealant
	Nut (regulator and motor or manual regulator attaching)		–
	Bolt (regulator and motor or manual regulator attaching)		
	Bolt (outside handle attaching)		
	Nut (door check attaching)		
Tc	Screw (door lock attaching)	4.9 to 8.2 {3.7 to 6.1, 0.51 to 0.84}	–

Lubricant and/or sealant

Mark	Points of application	Specified lubricant and/or sealant	Quantity
a	Bolt threads	Loctite Dri-Loc 202	As required
b	Sliding contact surface of regulator and motor	Wheel bearing grease [NLGI No. 2 (Li soap)]	As required
	Sliding contact surface of door lock		As required
	Rotating contact surface of outside handle		As required
	Rotating contact surface of inside handle		
c	Sliding contact surface of door check	Chassis grease [NLGI No. 2 (urea)]	1 g {0.035 oz}

◆ Removal sequence ◆

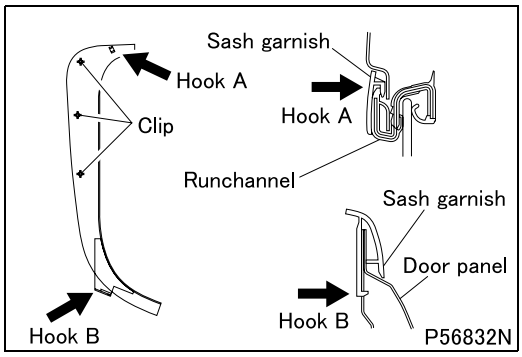

■Removal: Sash garnish

- Disengage hook A on upper part of the sash garnish from the runchannel, then remove clips (3 places).
- Disengage hook B on the lower part of the sash garnish from the door panel.

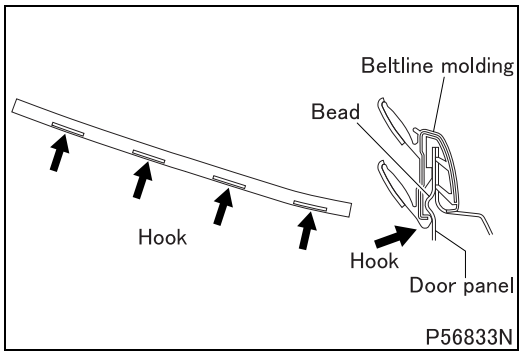

■Removal: Beltline molding

- Disengage hooks (4 places) and remove the beltline molding from the door panel bead.

https://truckmanualshub.com/

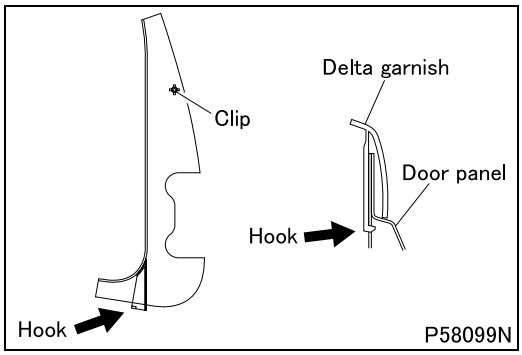

■**Removal: Delta garnish**

- Disengage clip (1 place) first and then hook to remove the delta garnish from the door panel.

◆**Installation procedure**◆

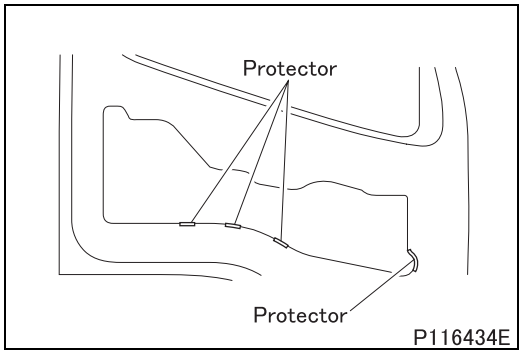

■**Installation: Protector**

- Fit the protectors (4 places) to the door panel in the illustrated positions.

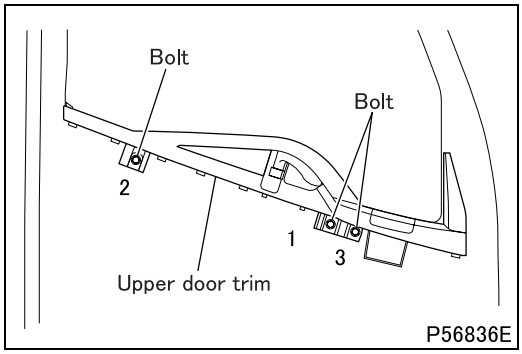

■**Installation: Upper door trim**

- Tighten bolts to specified torque in numerical order (1 to 3) as shown to secure the upper door trim.

■**Installation: Delta garnish**

- To install the delta garnish, follow the removal procedure in reverse.
  (See **"■Removal: Delta garnish"**.)

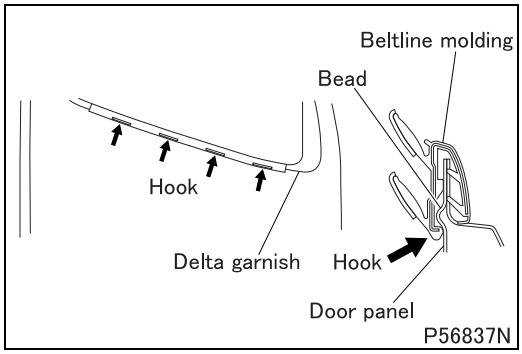

■**Installation: Beltline molding**

- Position the beltline molding with its front side applied to the delta garnish, then engage hooks (4 places) with the door panel bead to secure the beltline molding in place.

■**Installation: Sash garnish**

- To install the sash garnish, follow the removal procedure in reverse.
  (See **"■Removal: Sash garnish"**.)

https://truckmanualshub.com/

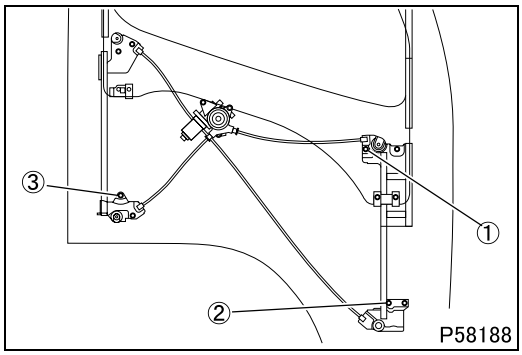

■**Installation: Regulator and motor or manual regulator**

- Tighten bolts (3 places) to specified torque in numerical order (1 to 3) as shown, then tighten the remaining bolts and nuts to specified torque.

https://truckmanualshub.com/

REAR DOOR <CREW CAB>

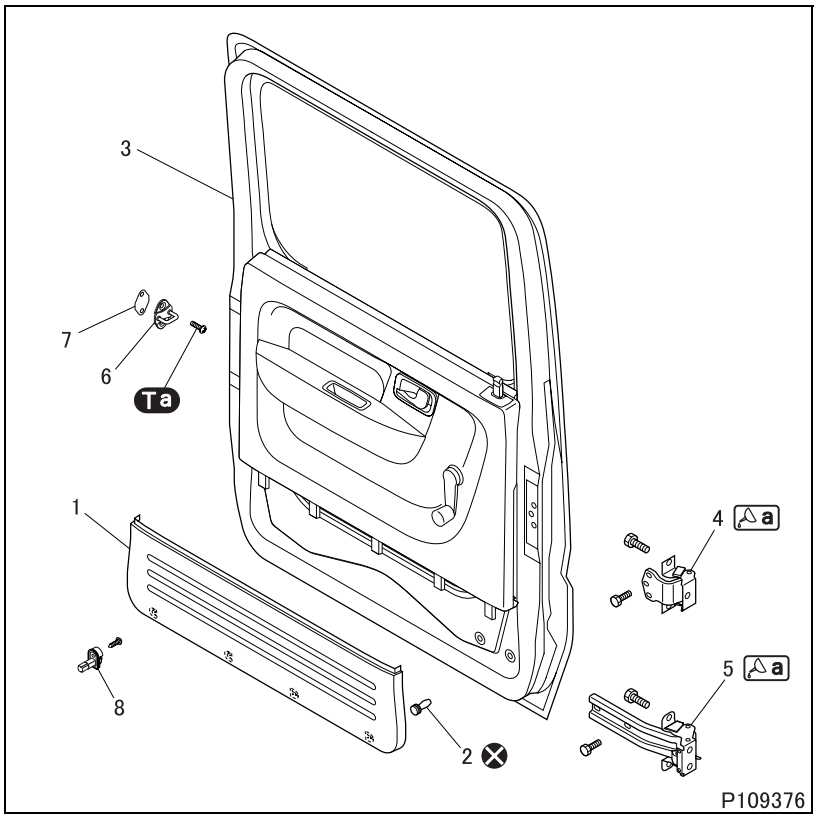

●Removal sequence

1 Lower door trim
2 Clip
3 Door (See later section.)
4 Upper hinge
5 Lower hinge
6 Striker
7 Strike shim
8 Door switch

⊗: Non-reusable parts

●Installation sequence

Follow the removal sequence in reverse.

- Adjust rear door alignment after installation. (See ON-VEHICLE INSPECTION AND ADJUSTMENT.)

Tightening torque (Unit: N·m {ft.lbs, kgf·m})

Mark	Parts to be tightened	Tightening torque	Remarks
Ta	Screw (striker attaching)	9 to 14 {6.5 to 10, 0.9 to 1.4}	–

Lubricant and/or sealant

Mark	Points of application	Specified lubricant and/or sealant	Quantity
a	Rotating contact surfaces of upper and lower hinges	Chassis grease [NLGI No. 1 (Li soap)]	As required

◆Removal procedure◆

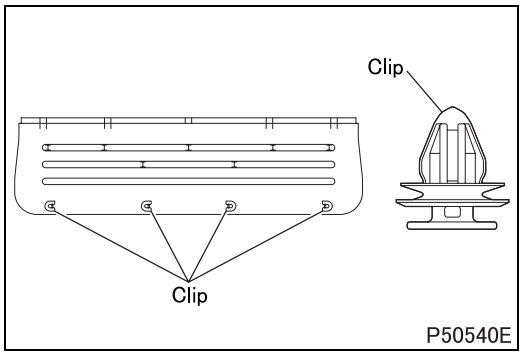

■Removal: Lower door trim

https://truckmanualshub.com/

M E M O

https://truckmanualshub.com/

REAR DOOR <CREW CAB>

Door

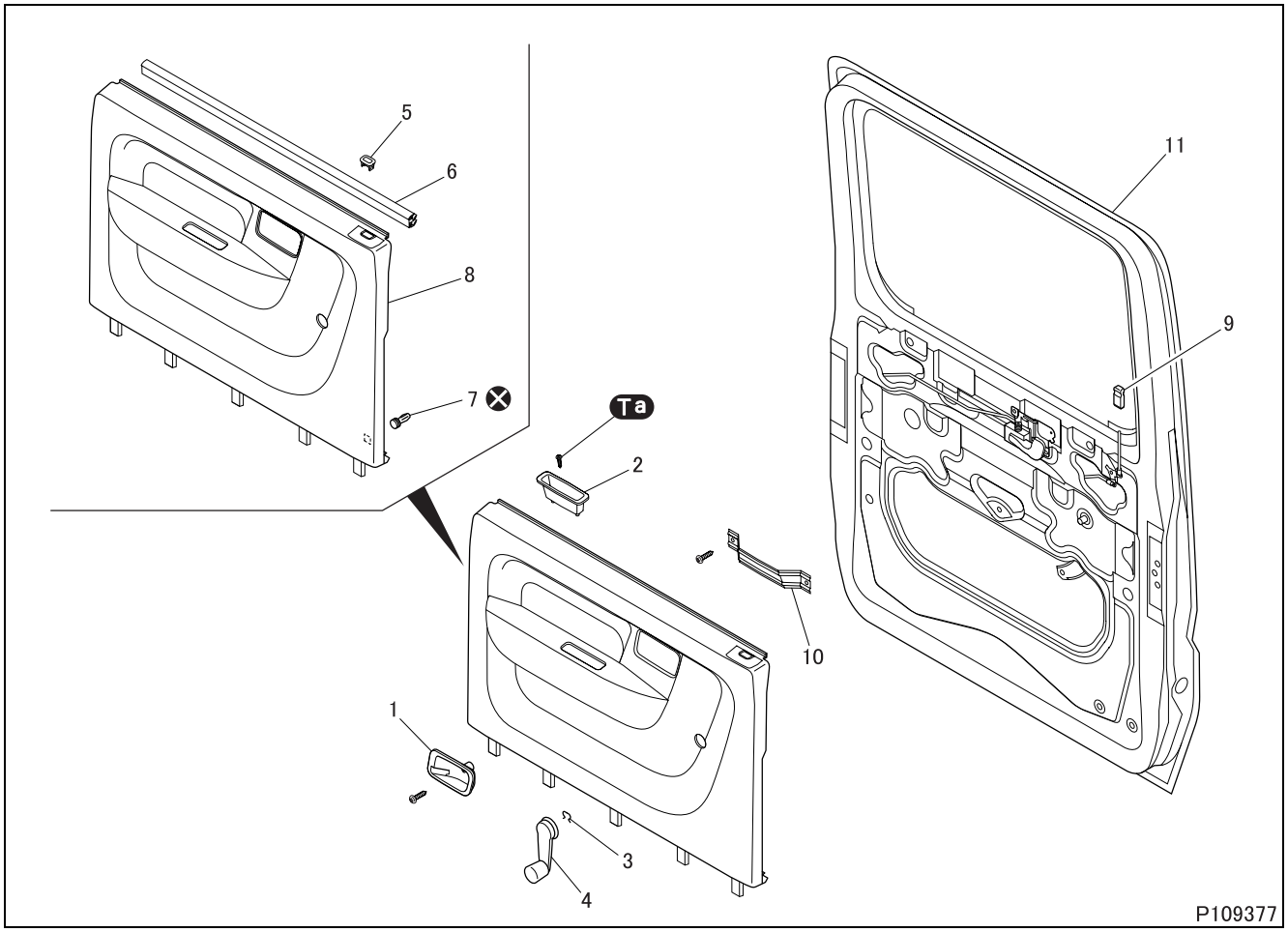

● **Disassembly sequence**

1 Inside handle cover
2 Pull handle cover
3 Clip
4 Regulator handle
5 Bushing
6 Weatherstrip
7 Clip
8 Upper door trim
9 Inside lock knob
10 Pull handle bracket
11 Door panel (See later section.)

⊗: Non-reusable parts

● **Assembly sequence**

Follow the disassembly sequence in reverse.

Tightening torque (Unit: N·m {ft.lbs, kgf·m})

Mark	Parts to be tightened	Tightening torque	Remarks
Ta	Screw (pull handle cover attaching)	2 to 3 {1.4 to 2.1, 0.2 to 0.3}	–

https://truckmanualshub.com/

◆Removal procedure◆

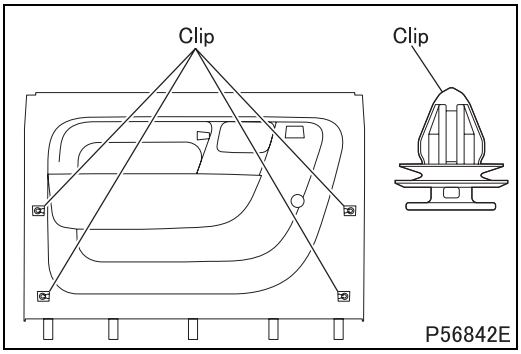

■**Removal: Upper door trim**

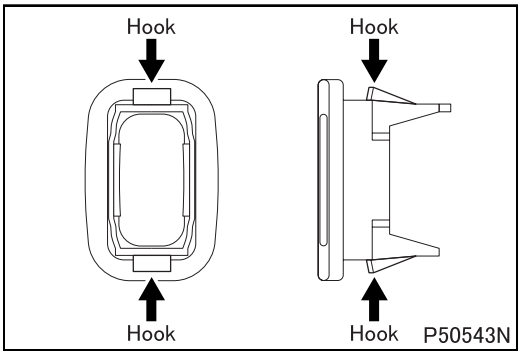

■**Removal: Bushing**

◆Installation procedure◆

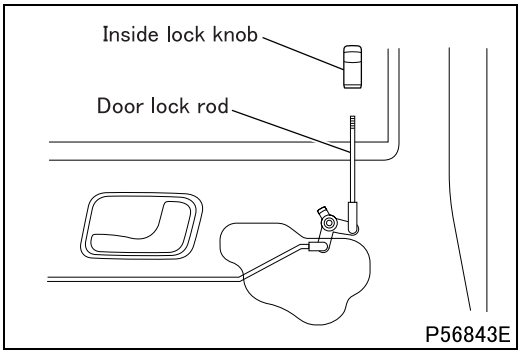

■**Installation: Inside lock knob**

- Screw the inside lock knob all the way onto the door lock rod, then back it up 1 or 2 turns.

https://truckmanualshub.com/

REAR DOOR <CREW CAB>

Door Panel

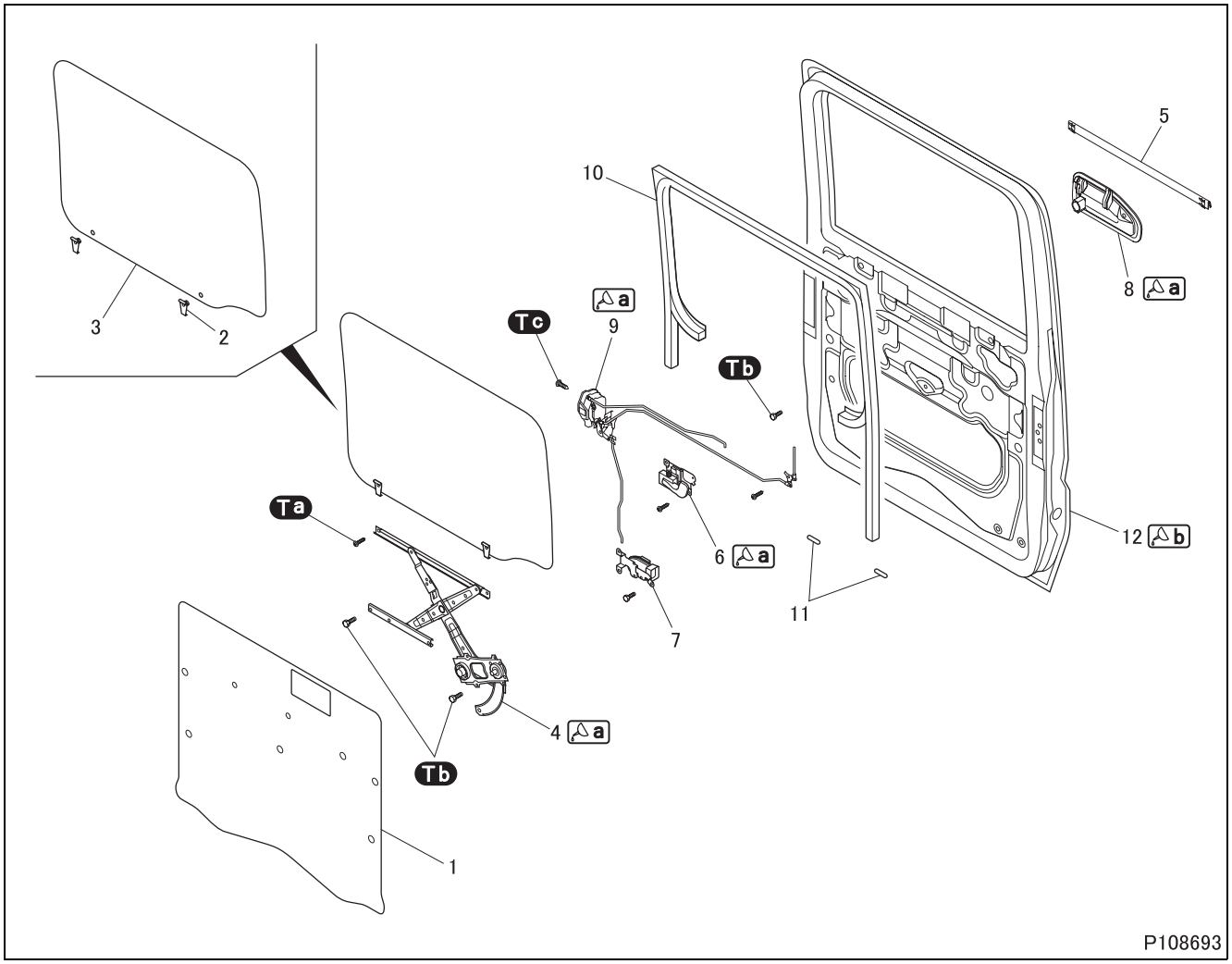

●Disassembly sequence

1. Waterproof cover
2. Glass holder
3. Door glass
4. Regulator
5. Beltline molding
6. Inside handle
7. Door lock actuator
8. Outside handle
9. Door lock
10. Runchannel
11. Protector
12. Door panel

●Assembly sequence

Follow the disassembly sequence in reverse.

Tightening torque (Unit: N·m {ft.lbs, kgf·m})

Mark	Parts to be tightened	Tightening torque	Remarks
Ta	Screw (door glass attaching)	1.8 to 2.5 {1.3 to 1.8, 0.18 to 0.25}	–
Tb	Bolt (regulator attaching)	4 to 6 {2.9 to 4.3, 0.4 to 0.6}	–
	Bolt (outside handle attaching)		
Tc	Screw (door lock attaching)	4.9 to 8.2 {3.6 to 6.1, 0.5 to 0.84}	–

https://truckmanualshub.com/

Lubricant and/or sealant

Mark	Points of application	Specified lubricant and/or sealant	Quantity
a	Sliding contact surface of regulator	Wheel bearing grease [NLGI No. 2 (Li soap)]	As required
a	Rotating contact surface of inside handle		
a	Rotating contact surface of outside handle		
a	Rotating and sliding contact surfaces of door lock		
b	Waterproof cover attaching surface of door panel	Butyl tape	As required

◆Removal procedure◆

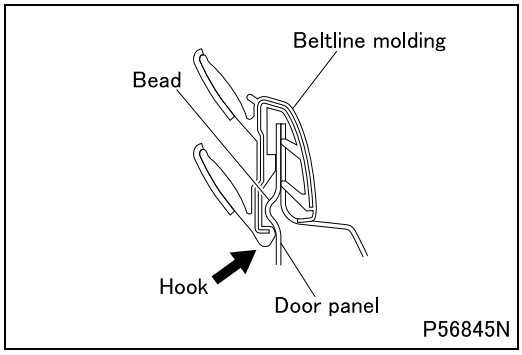

■Removal: Beltline molding

- Disengage hooks (4 places) from the door panel bead to remove the beltline molding from the door panel.

◆Installation procedure◆

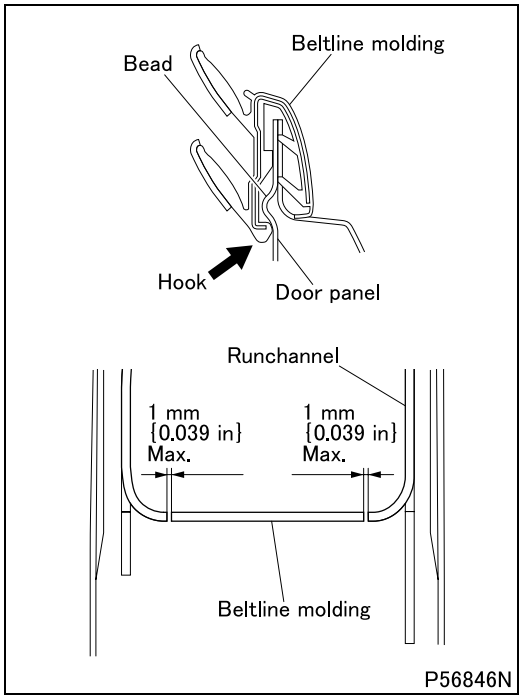

■Installation: Beltline molding

- Engage hooks (4 places) with the door panel bead to install the beltline molding to the door panel. Gaps between beltline molding and runchannel should be as shown.
- Make sure that the cover is tight at both ends of the belt line molding.

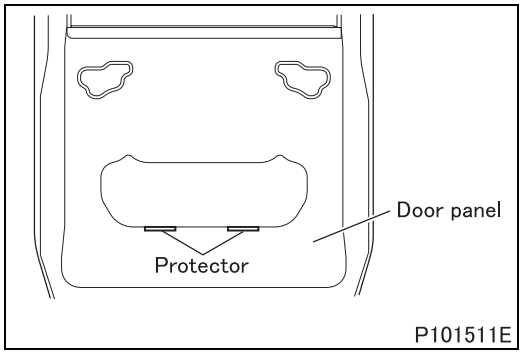

■Installation: Protector

- Fit the protectors to the door panel in the illustrated positions.

https://truckmanualshub.com/

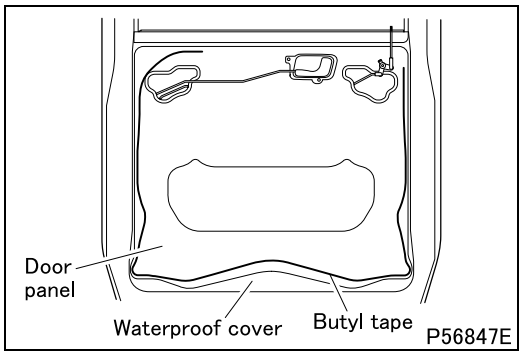

■**Installation: Waterproof cover**

- Apply butyl tape to the door panel as shown, and attach the waterproof cover to the door panel.

https://truckmanualshub.com/

FUSO

Group 51

Exterior

MITSUBISHI FUSO TRUCK OF AMERICA, Inc.

Pub.No.00ELT0001-51

https://truckmanualshub.com/

INDEX

STRUCTURE AND OPERATION
1. Wiper and Washer System 51-2

TROUBLESHOOTING 51-3

MIRROR 51-4

WIPER AND WASHER 51-6

FRONT COVER 51-8

FRONT GRILLE, FRONT CORNER PANEL AND HEADLAMP 51-10

FENDER <FG> 51-15

STEP 51-16

GARNISH <CREW CAB> 51-18

WHEEL HOUSE 51-19

WINDOW GLASS 51-20

https://truckmanualshub.com/

1. Wiper and Washer System

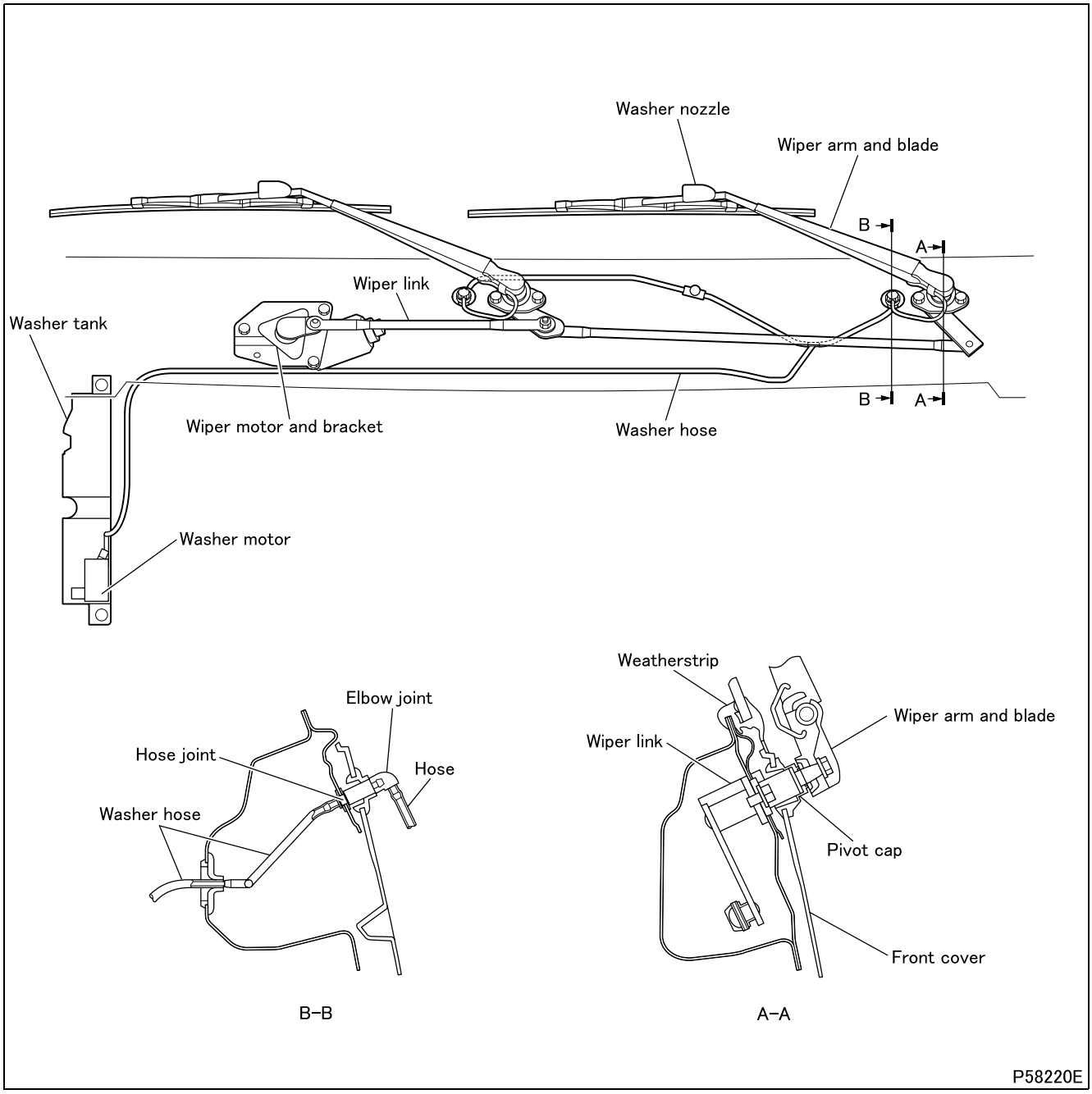

https://truckmanualshub.com/

Wiper and washer

Symptoms / Possible causes	Wiper fails to operate	Wiper fails to stop	Wiper fails to operate intermittently	Wiper blade stops at improper position	Wiper does not wipe well	Wiper emits noise during operation	Washer motor fails to operate	Washer injects insufficient amount of fluid	Washer fails to inject washer fluid	Wiper fails to operate in unison with washer	Reference Gr
Wiper motor faulty	O	O		O		O					Gr54
Washer motor faulty							O	O	O		
Wiper and washer switch faulty	O	O	O				O			O	
MUTIC (control unit) faulty			O							O	
Wiper relay faulty	O						O				
Fuse/high current fuse blown	O						O				
Connector improperly connected, harness open-circuited, grounding improper	O		O				O		O	O	
Wiper motor crank arm out of position				O							
Wiper link and wiper arm improperly connected						O					
Wipe blade defective					O	O					
Wiper arm defective					O						
Washer hose twisted								O	O		
Washer hose improperly connected								O	O		
Washer nozzle clogged								O	O		
Washer fluid insufficient									O		

https://truckmanualshub.com/

MIRROR

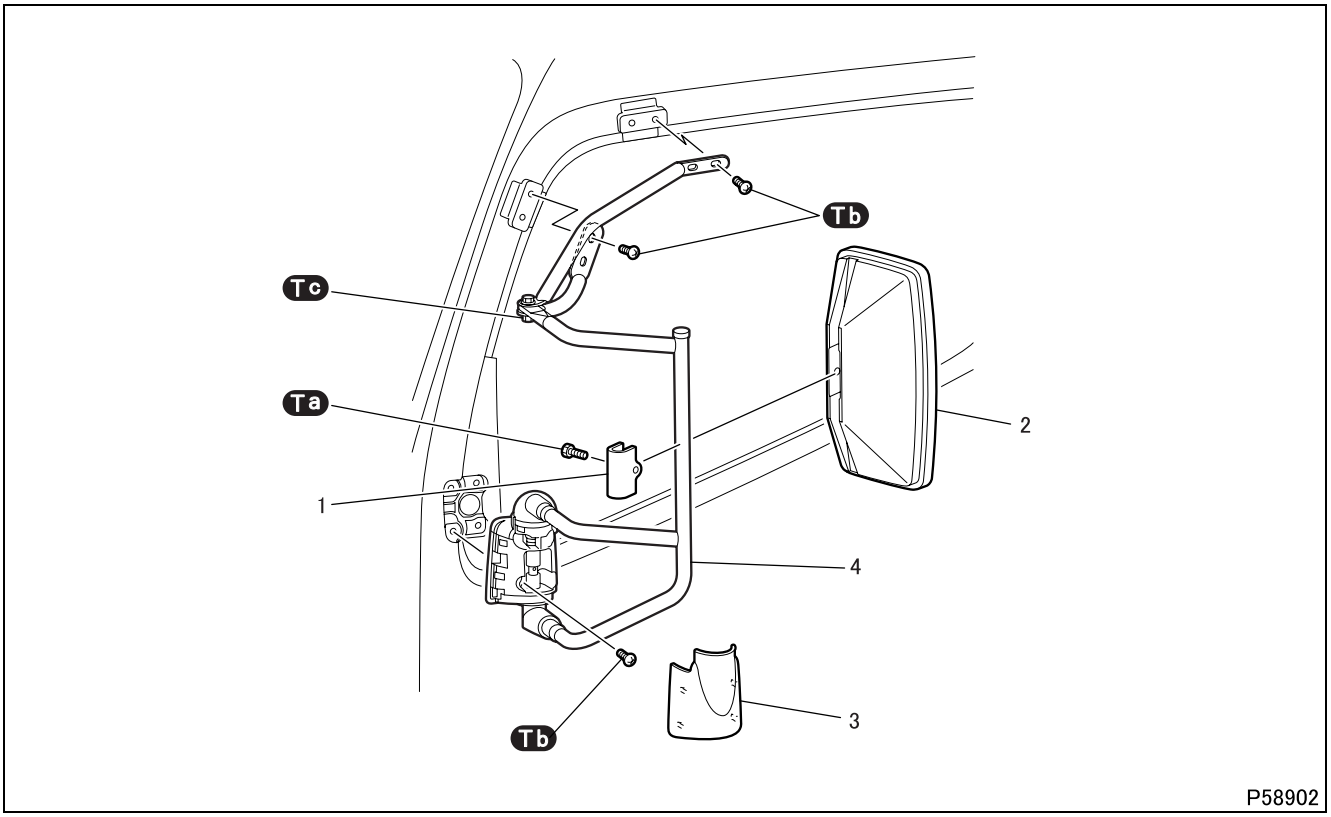

●Disassembly sequence

1 Clamp
2 Mirror
3 Cover
4 Mirror stay

●Assembly sequence

Follow the disassembly sequence in reverse.

Tightening torque (Unit: N·m {ft.lbs, kgf·m})

Mark	Parts to be tightened	Tightening torque	Remarks
Ta	Bolt (mirror mounting)	6.5 to 7.2 {4.8 to 5.3, 0.66 to 0.73}	–
Tb	Screw (mirror stay mounting)	9 to 14 {6.6 to 10, 0.9 to 14}	–
Tc	Nut (mirror stay fastening)	19 to 28 {14 to 21, 1.9 to 2.9}	–

◆Removal procedure◆

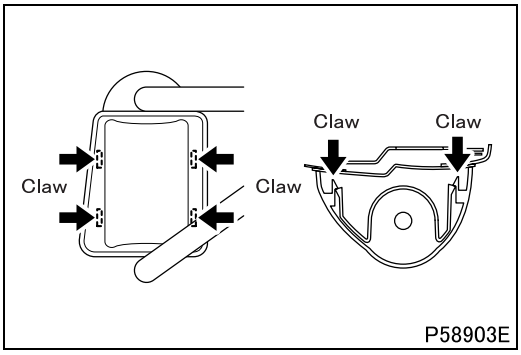

■Removal: Cover

https://truckmanualshub.com/

◆Installation procedure◆

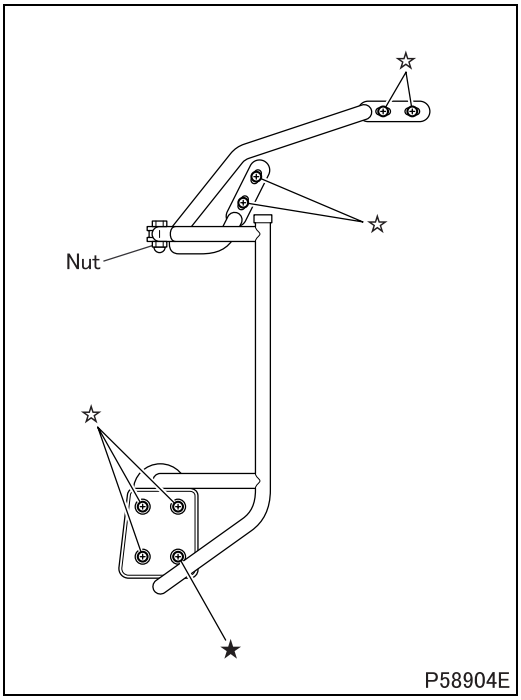

■Installation: Mirror stay

- Install the one screw marked ★ and adjust the position of the mirror stay.
- Install all the remaining seven screws marked ☆ to secure the mirror stay.
- Fasten the mirror stay nut to the specified torque.

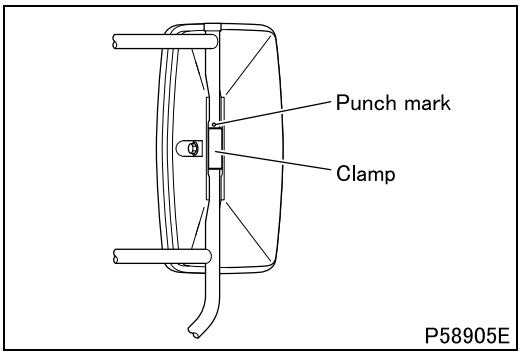

■Installation: Mirror

- Adjust the height of the mirror by aligning the punch mark on the mirror stay with the clamp edge as shown in the illustration.

https://truckmanualshub.com/

WIPER AND WASHER

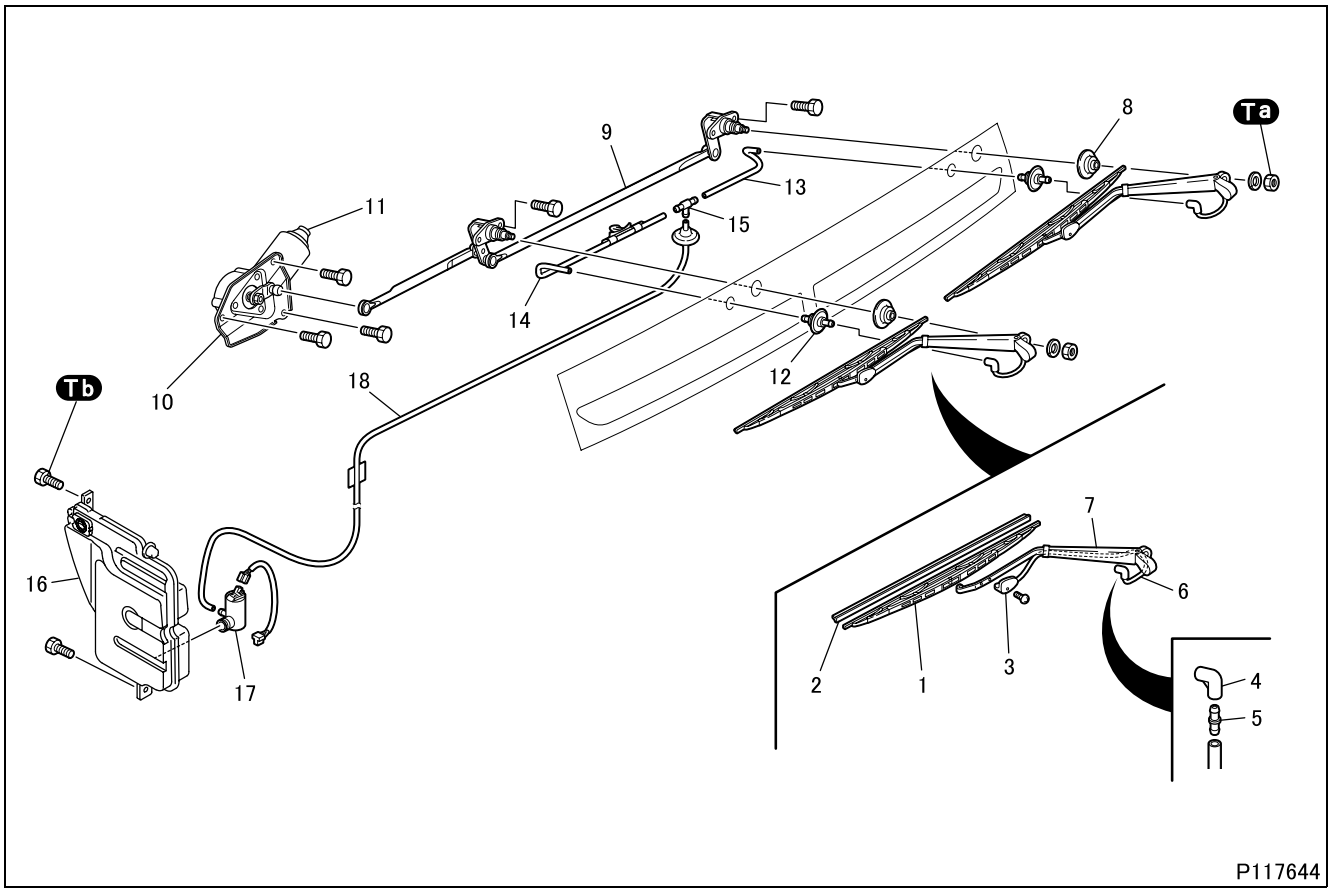

●Disassembly sequence

1 Wiper blade
2 Blade rubber
3 Washer nozzle
4 Elbow joint
5 Joint
6 Hose
7 Wiper arm
8 Pivot cap
9 Wiper link
10 Wiper motor bracket
11 Wiper motor
12 Joint
13 Washer hose
14 Washer hose
15 Joint
16 Washer tank
17 Washer motor
18 Washer hose

NOTE

- **Before disconnecting the connector to remove the wiper motor, pull out cab side harness sufficiently, otherwise it will fall into the cab and cannot be taken out without removing the instrument panel.**

●Assembly sequence

Follow the disassembly sequence in reverse.

Service standards

Location	Maintenance item	Standard value	Limit	Remedy
7	Wiper arm force to press blade against windshield	5.9 ± 0.5 N {1.4 ± 0.11 lbs, 0.60 ± 0.05 kgf}	–	Replace

https://truckmanualshub.com/

Tightening torque (Unit: N·m {ft.lbs, kgf·m})

Mark	Parts to be tightened	Tightening torque	Remarks
Ta	Nut (wiper arm and blade attaching)	10.8 to 15.7 {8.0 to 12, 1.1 to 1.6}	–
Tb	Bolt (washer tank attaching)	7.8 to 11.8 {5.8 to 8.7, 0.8 to 1.2}	–

◆Inspection procedure◆

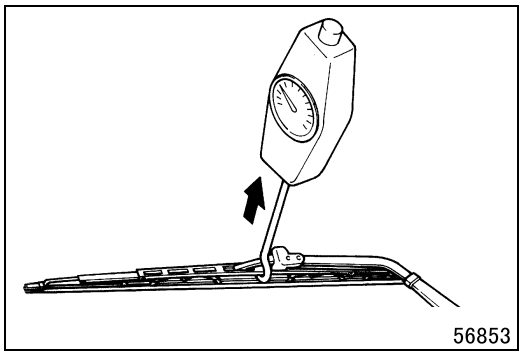

■Inspection: Wiper arm

- Measure the wiper arm force to press the blade against the windshield.
- If the measurement deviates from the standard value, replace the wiper arm.

◆Installation procedure◆

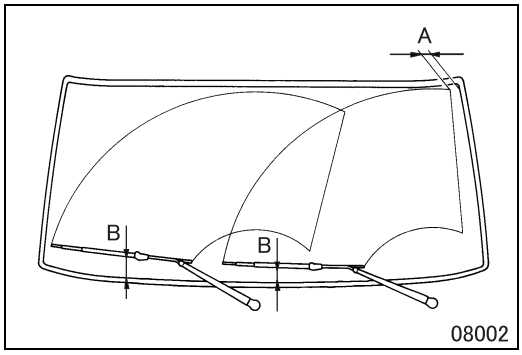

■Installation: Wiper arm and blade

- Install the wiper arm and blade so that the blades travel no closer than points A and B from the edge of the weatherstrip.
  A: 50 mm {1.97 in.}
  B: 59 ± 5 mm {2.3 ± 0.20 in.}

https://truckmanualshub.com/

FRONT COVER

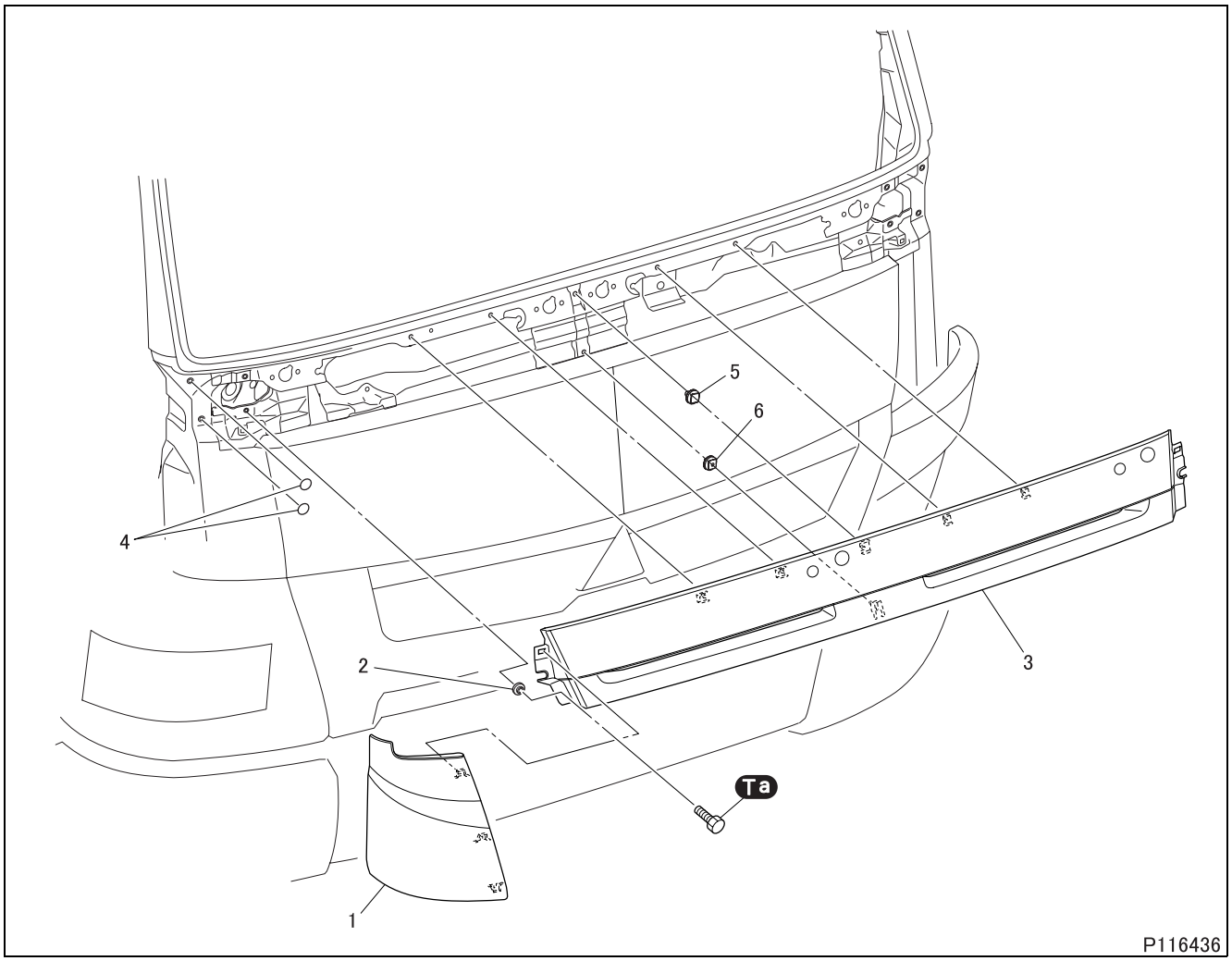

● **Disassembly sequence**

1 Front corner panel (See later section.)
2 Collar
3 Front cover
4 Plug
5 Clip A
6 Clip B

● **Assembly sequence**

Follow the disassembly sequence in reverse.

Tightening torque (Unit: N·m {ft.lbs, kgf·m})

Mark	Parts to be tightened	Tightening torque	Remarks
Ta	Bolt (front cover attaching)	9 to 14 {6.6 to 10, 0.9 to 1.4}	–

https://truckmanualshub.com/

◆Removal procedure◆

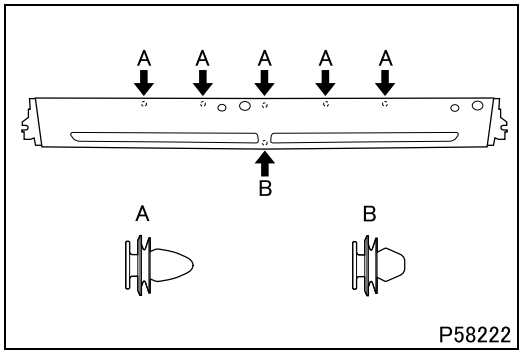

■**Removal: Front cover**

◆Installation procedure◆

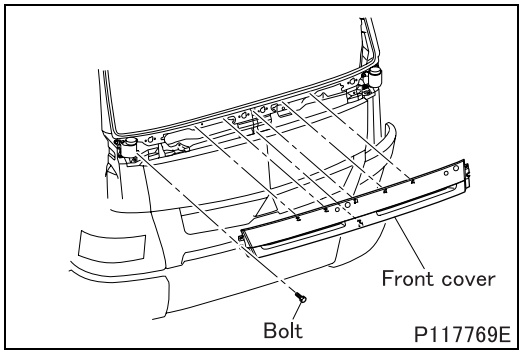

■**Installation: Front cover**

- Push the front cover until a click is heard of the clip and then install the bolt.

https://truckmanualshub.com/

FRONT GRILLE, FRONT CORNER PANEL AND HEADLAMP

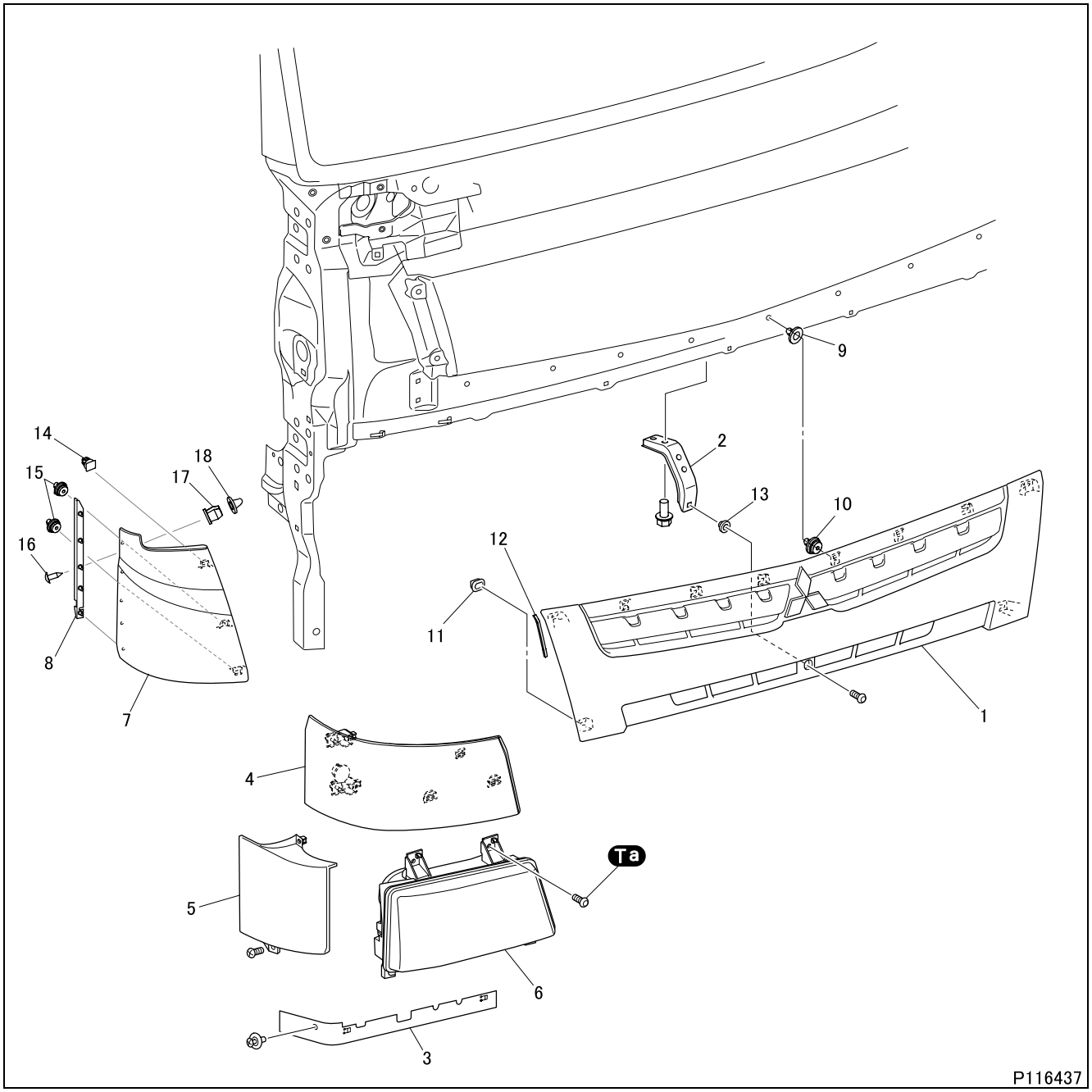

● **Disassembly sequence**

1	Front grille	**7**	Front corner panel	**13**	Grommet
2	Bracket	**8**	Door opening seal	**14**	Clip C
3	Lamp rubber	**9**	Clip A	**15**	Clip D
4	Turn signal lamp	**10**	Front grill clip	**16**	Screw
5	Headlamp garnish	**11**	Clip B	**17**	Grommet
6	Headlamp	**12**	Packing	**18**	Clip E

CAUTION ⚠

- **Do not attempt to forcedly remove lamp rubber, turn signal lamp, headlamp garnish and headlamp. Their mounting claws could be damaged.**
- **Do not remove door opening seal unless absolutely necessary.**

https://truckmanualshub.com/

●Assembly sequence
Follow the disassembly sequence in reverse.

Tightening torque (Unit: N·m {ft.lbs, kgf·m})

Mark	Parts to be tightened	Tightening torque	Remarks
Ta	Bolt (front cover attaching)	4 to 6 {3.0 to 4.4, 0.4 to 0.6}	–

◆Removal procedure◆

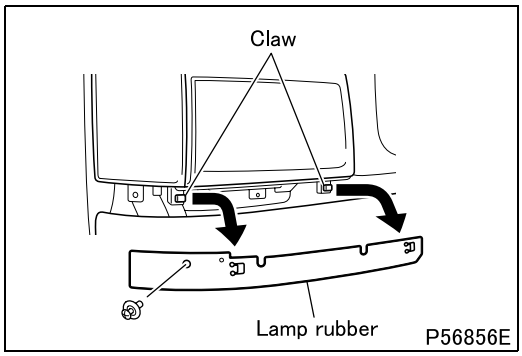

■Removal: Lamp rubber

- Slide the lamp rubber sideways to disengage from the claws of the headlamp.

CAUTION ⚠

- **Do not pull the lamp rubber to forcedly remove. It could be damaged.**

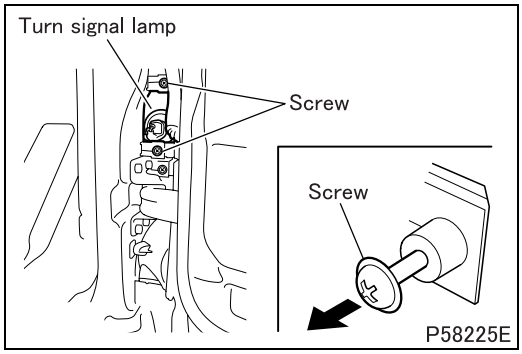

■Removal: Turn signal lamp

- Open the door. Loosen screws securing the turn signal lamp from behind until they turn freely.
- Pull out the loosened screws.

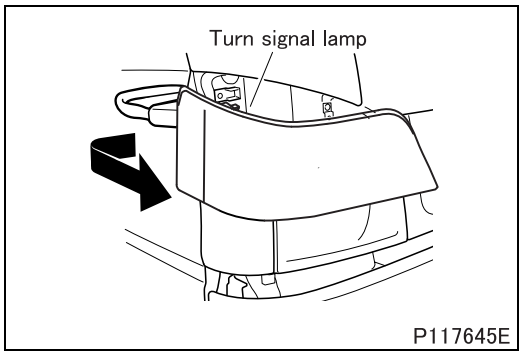

- Close the door. Move the turn signal lamp sideways to disengage its claws.
- Confirm the disengagement of the claws, then pull out the turn signal lamp.

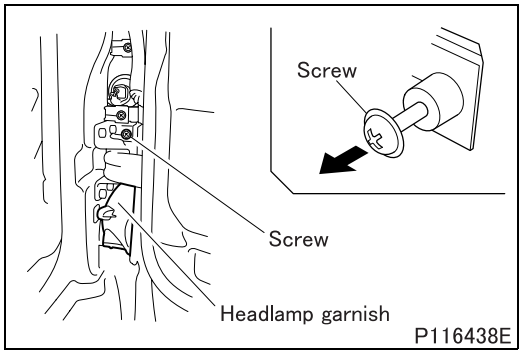

■Removal: Headlamp garnish

- Open the door. Loosen the screw securing the headlamp garnish from behind until it turn freely.
- Pull out the loosened screw.

https://truckmanualshub.com/

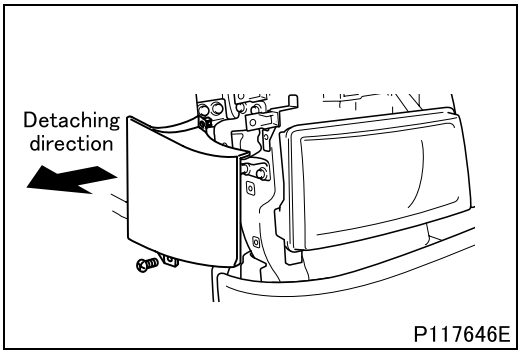

- Close the door, and remove the headlamp garnish.

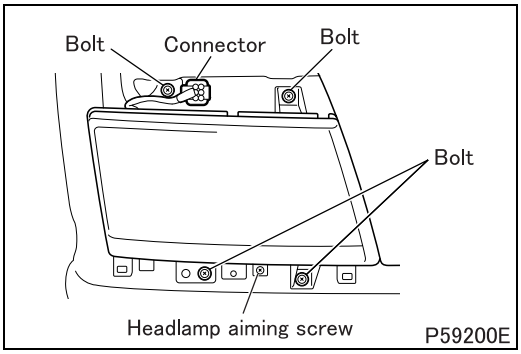

■Removal: Headlamp

CAUTION ⚠

- **The headlamp has aiming screws at the illustrated positions. Do not mistake them for mounting bolts.**

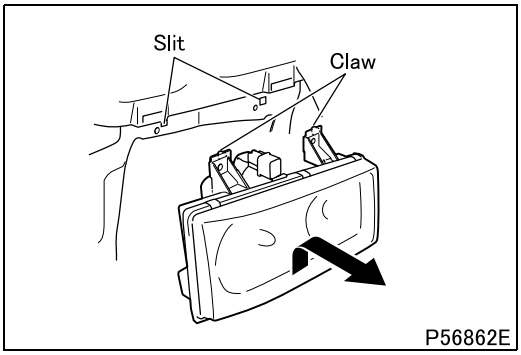

- Lift the headlamp a little to disengage its claws from the slits, then pull it out.

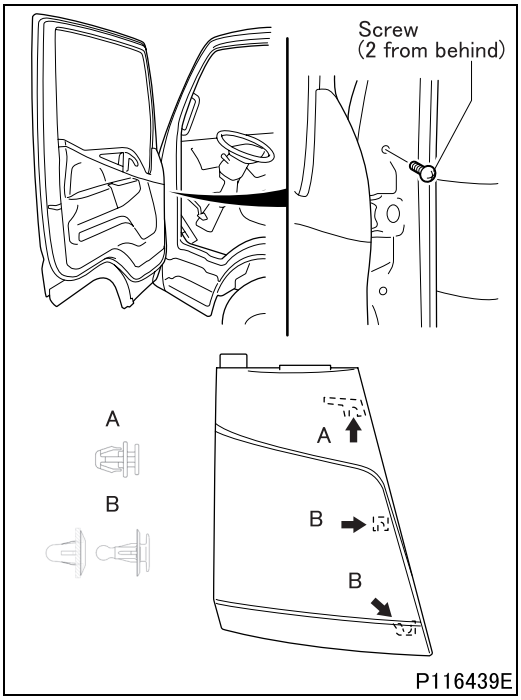

■Removal: Front corner panel

- Open the door. Remove two screws securing the front corner panel from behind.
- Close the door. Remove three clips securing the front corner panel from front.
- Remove the front corner panel.

https://truckmanualshub.com/

◆Installation procedure◆

■Installation: Front corner panel

- To install the front corner panel, follow the removal sequence in reverse.
- To install the front corner panel, push it until a click is heard of the clips (at three places).
  (See **"■Removal: Front corner panel"**.)

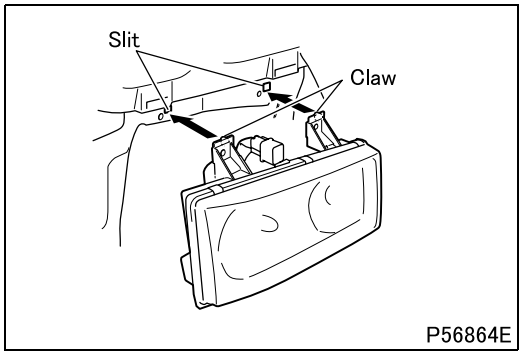

■Installation: Headlamp

- Install the headlamp with its claws inserted in the slits.

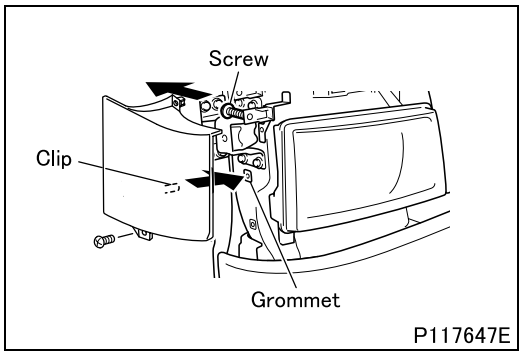

■Installation: Headlamp garnish

- Check to see if the threaded portion of cab-side screw protrudes. If it does, move it out of the way in the illustrated direction.
- Check to see that the end rubber is installed in the headlamp garnish.
- Insert the clip of the headlamp garnish into the grommet.

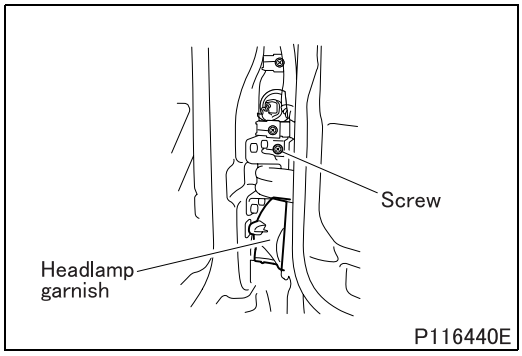

- Open the door. Tighten the screw securing the headlamp garnish from behind.

CAUTION ⚠

- **Do not overtighten the screw. Doing so may damage the headlamp garnish.**

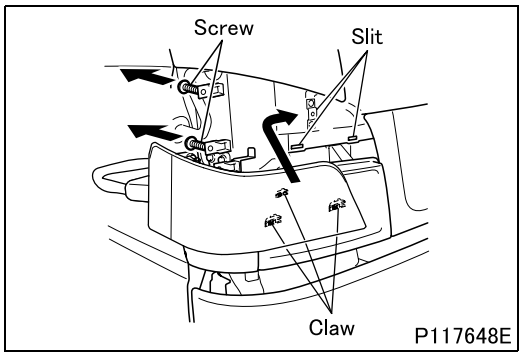

■Installation: Turn signal lamp

- Check to see if the threaded portions of screws protrude. If they protrude, move them out of the way in the illustrated direction.
- Put the claws of the turn signal lamp in the cab-side slits, then press-fit the lamp sideways into place.

https://truckmanualshub.com/

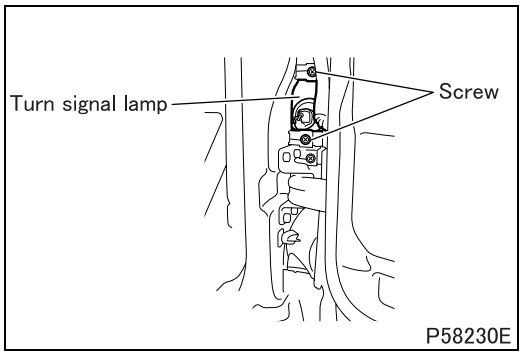

- Open the door, and secure the turn signal lamp by tightening screws from behind.

CAUTION ⚠

- **Do not open the door when the turn signal lamp is not seated completely. Doing so may damage the turn signal lamp.**
- **Do not overtighten the screws. Doing so may damage the turn signal lamp.**

■Installation: Lamp rubber

- Perform the removal procedure in reverse. (See **"■Removal: Lamp rubber"**.)

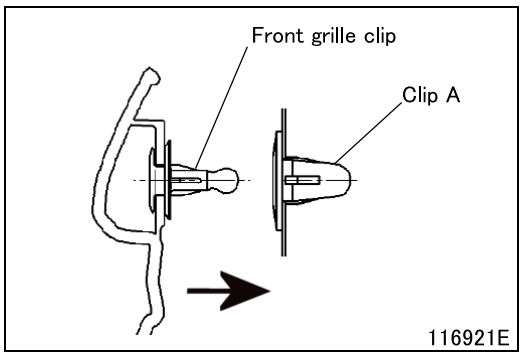

■Installation: Front grille

- Install the front grille by pushing the areas where a clip is fitted. If clip engaging sound is not heard, replace both the front grille clip and clip A.

CAUTION ⚠

- **Do not hit on the areas where a clip is fitted. Doing so could damage the front grille.**

- After installing the front grille, check that the packings at both ends of the front grille are not extruded from the gaps between the front grille and headlamps. If the packings are extruded, fit them into the gaps.

CAUTION ⚠

- **Be careful not to damage the front grille and headlamps.**

https://truckmanualshub.com/

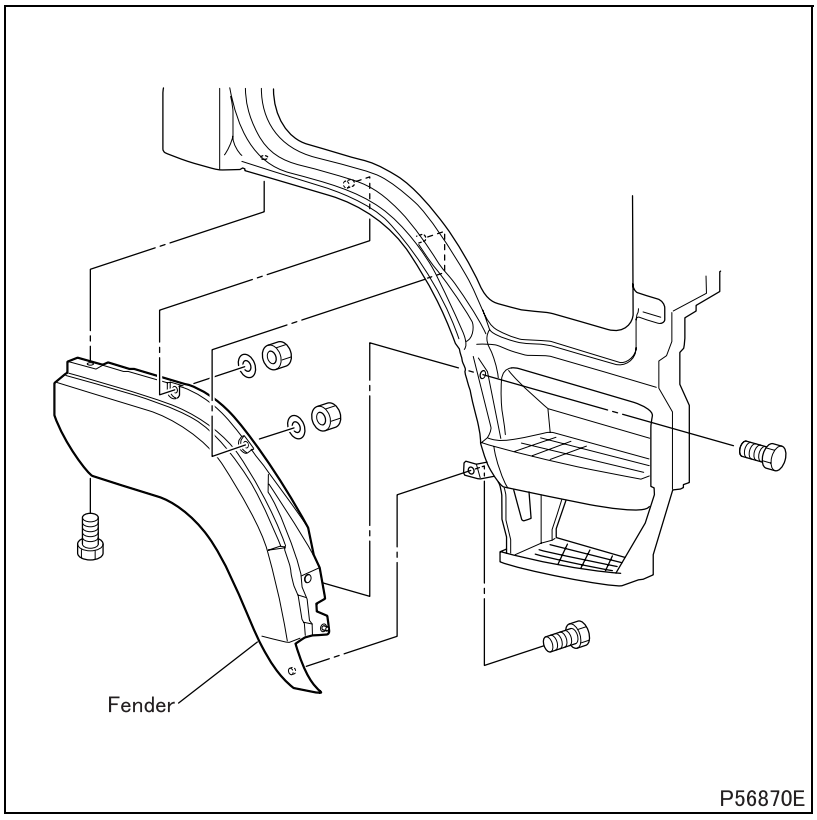

https://truckmanualshub.com/

STEP

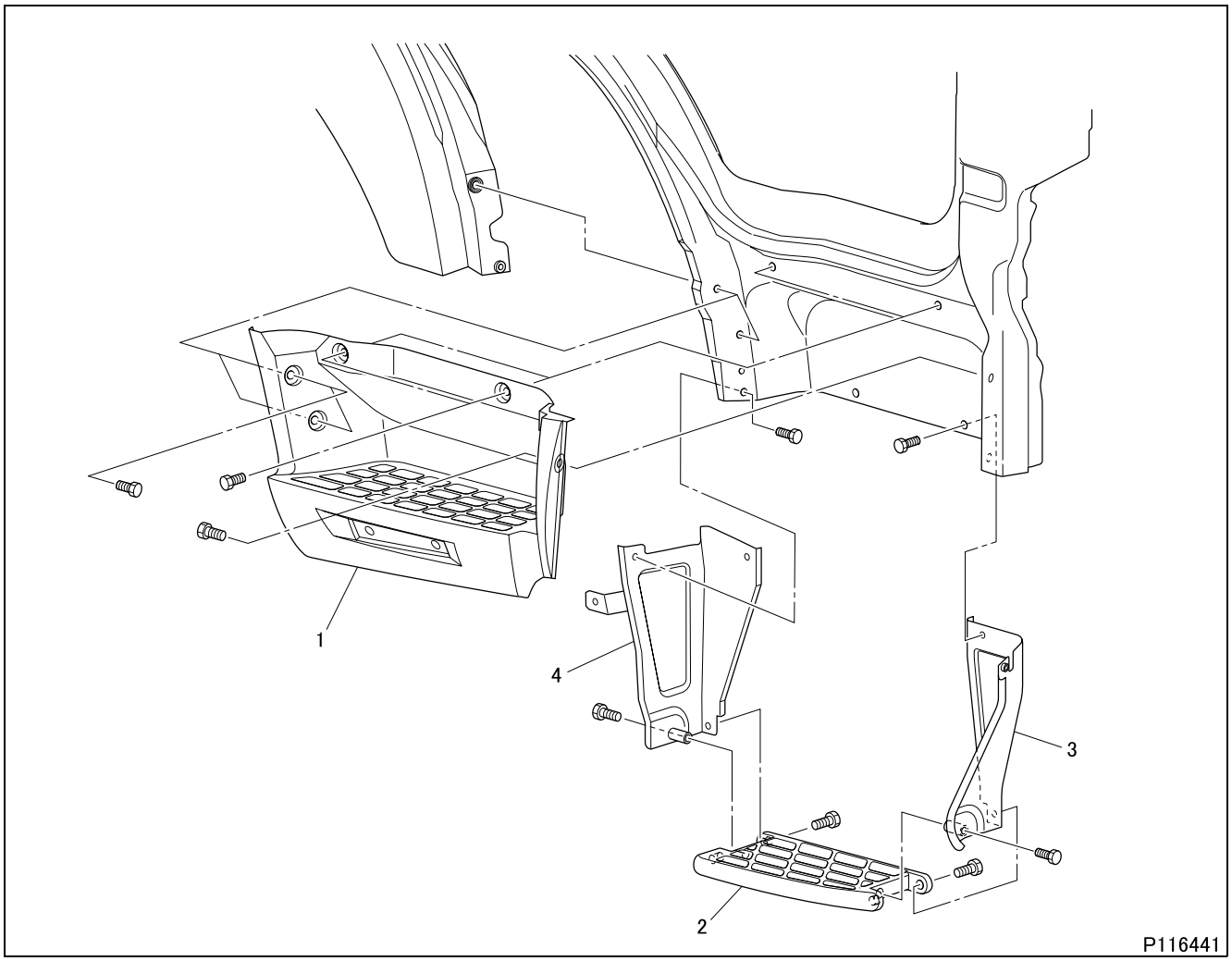

●Removal sequence

1 Step
2 No. 1 step <FG>
3 No. 1 step front bracket <FG>
4 No. 1 step rear bracket <FG>

●Installation sequence

Follow the removal sequence in reverse.

https://truckmanualshub.com/

<Rear Step (Crew Cab)>

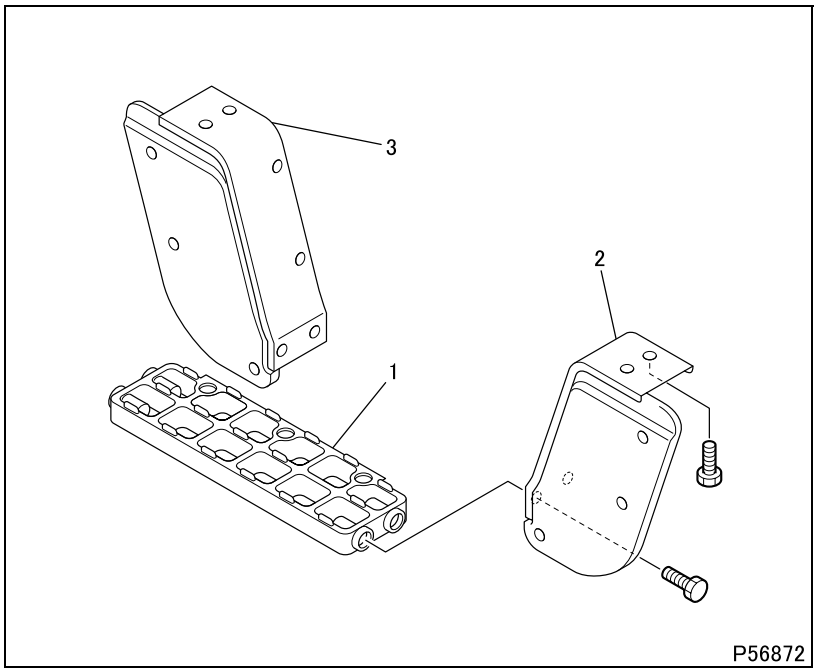

●Removal sequence

1 Step
2 Front bracket
3 Rear bracket

●Installation sequence

Follow the removal sequence in reverse.

https://truckmanualshub.com/

GARNISH <CREW CAB>

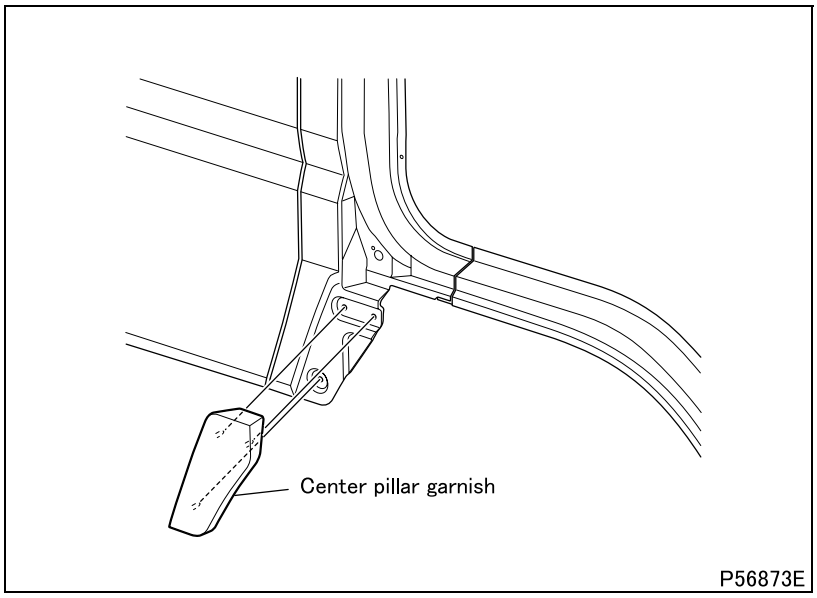

https://truckmanualshub.com/

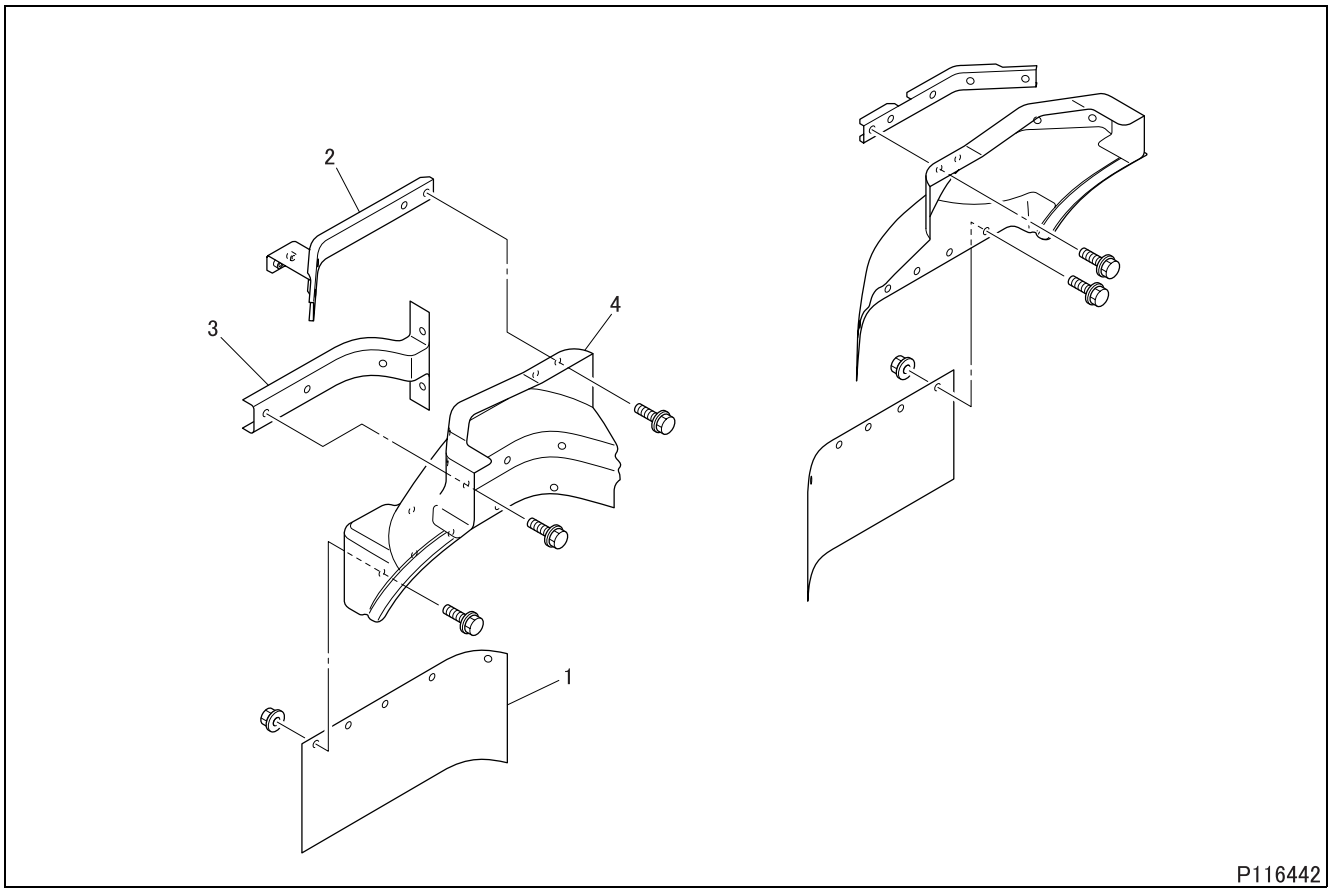

● **Removal sequence**

1 Mud guard apron
2 Mud guard lower stay
3 Mud guard upper stay
4 Mud under guard

● **Installation sequence**

Follow the removal sequence in reverse.

https://truckmanualshub.com/

WINDOW GLASS

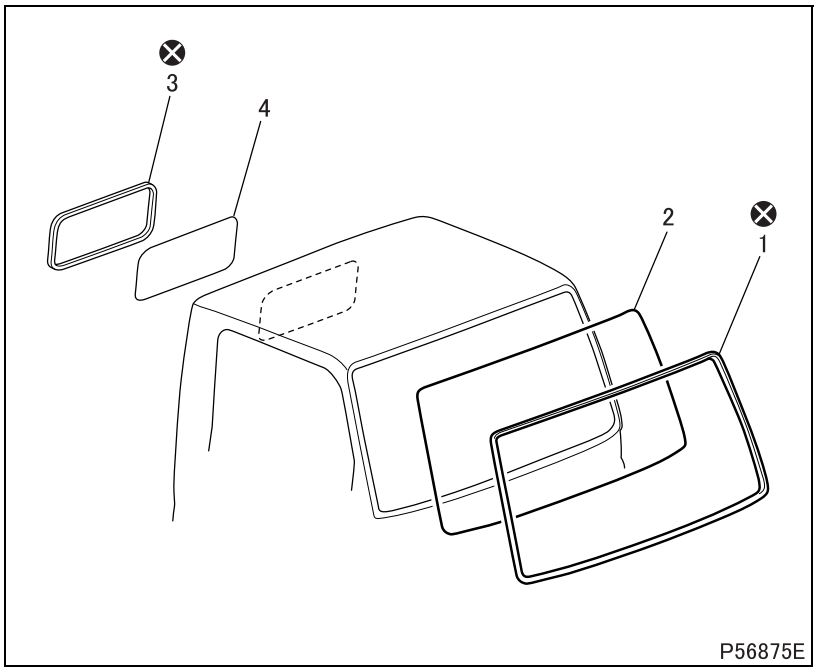

●Removal sequence

1 Windshield weatherstrip
2 Windshield glass
3 Rear window weatherstrip
4 Rear window glass

⊗: Non-reusable parts

●Installation sequence

Follow the removal sequence in reverse.

◆Removal procedure◆

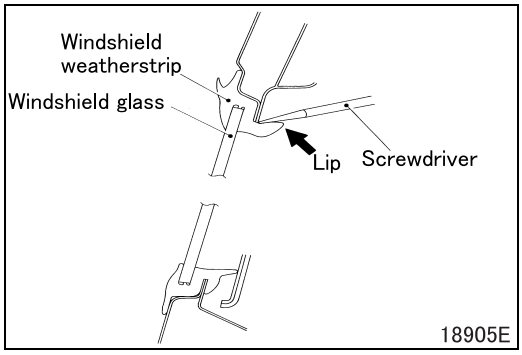

■Removal: Windshield weatherstrip and windshield glass

- While prying up the lip of the weatherstrip with the tip of a screwdriver, push the windshield glass out from inside the cab.

CAUTION ⚠

- **Be careful not to damage the painted surface of the cab. Damaged surface may form rust.**

◆Installation procedure◆

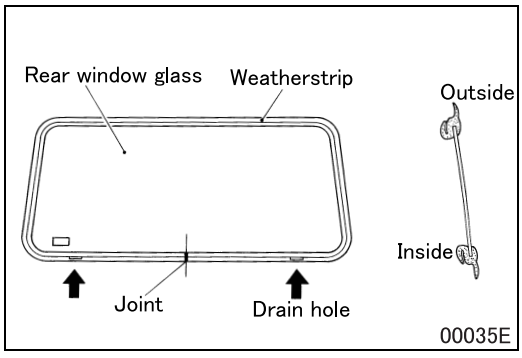

■Installation: Rear window weatherstrip and rear window glass

- Fit the rear window weatherstrip round the rear window glass so that the joint of weatherstrip comes at the bottom center of the glass.
- Except for the point mentioned above, install the rear window glass in the same manner as the windshield glass.

https://truckmanualshub.com/

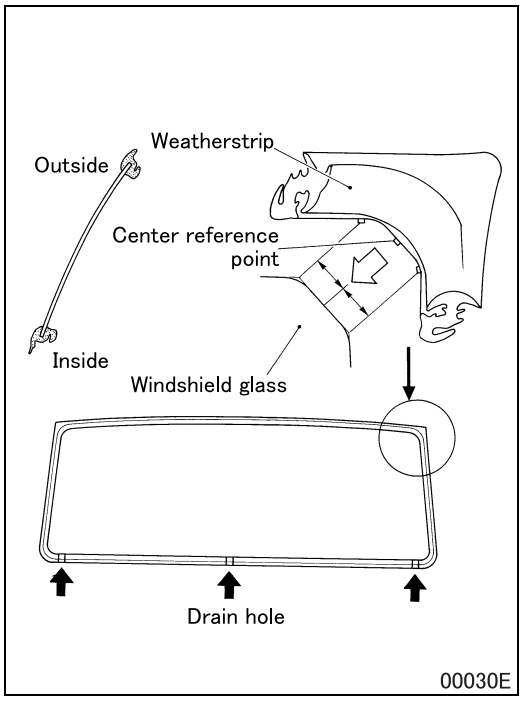

■**Installation: Windshield weatherstrip and windshield glass**

- Install the weatherstrip with its center reference point aligned with the center of the cut at each corner of the glass.

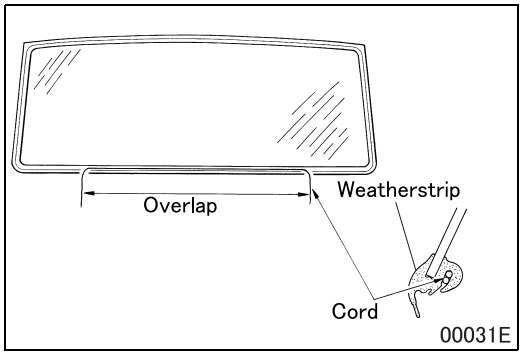

- Put a piece of strong cord in the cab flange fitting groove in the weatherstrip with its end portions overlapped.

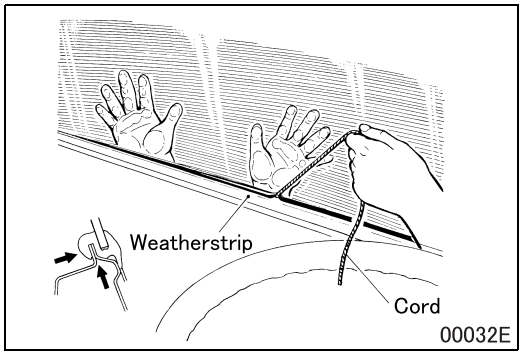

- With the glass strongly pushed from outside, pull out the cord by its ends from inside the cab to gradually fit the flange of the cab in the inner groove of the weatherstrip.

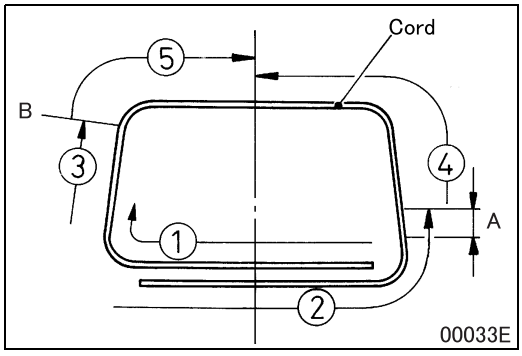

- Pull the cord in the numerical order of steps as shown. At the same time, while tapping with a rubber-headed mallet from outside the cab, settle the windshield glass in place in the weatherstrip.
  - A: Approx. 100 mm {3.9 in.} from the beginning of straight portion
  - B: Up to the end of straight portion

https://truckmanualshub.com/

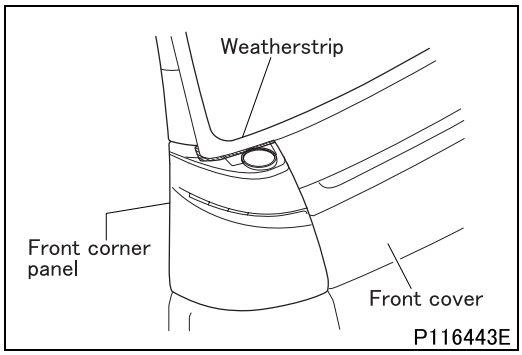

- To ensure watertightness, put the hatched part of the weatherstrip inside between the cab and the front cover and front corner panel.

https://truckmanualshub.com/

FUSO

Group 52

Interior

MITSUBISHI FUSO TRUCK OF AMERICA, Inc.

Pub.No.00ELT0001-52

https://truckmanualshub.com/

INDEX

DRIVER SEAT 52-2

PASSENGER SEAT 52-3

REAR SEAT <CREW CAB> 52-4

SEAT BELT 52-6

INSTRUMENT PANEL 52-12

TRIM AND SCUFF PLATE
- <EXCEPT CREW CAB> 52-28
- <CREW CAB> 52-32

HEAD LINING
- <EXCEPT CREW CAB> 52-36
- <CREW CAB> 52-40

https://truckmanualshub.com/

DRIVER SEAT

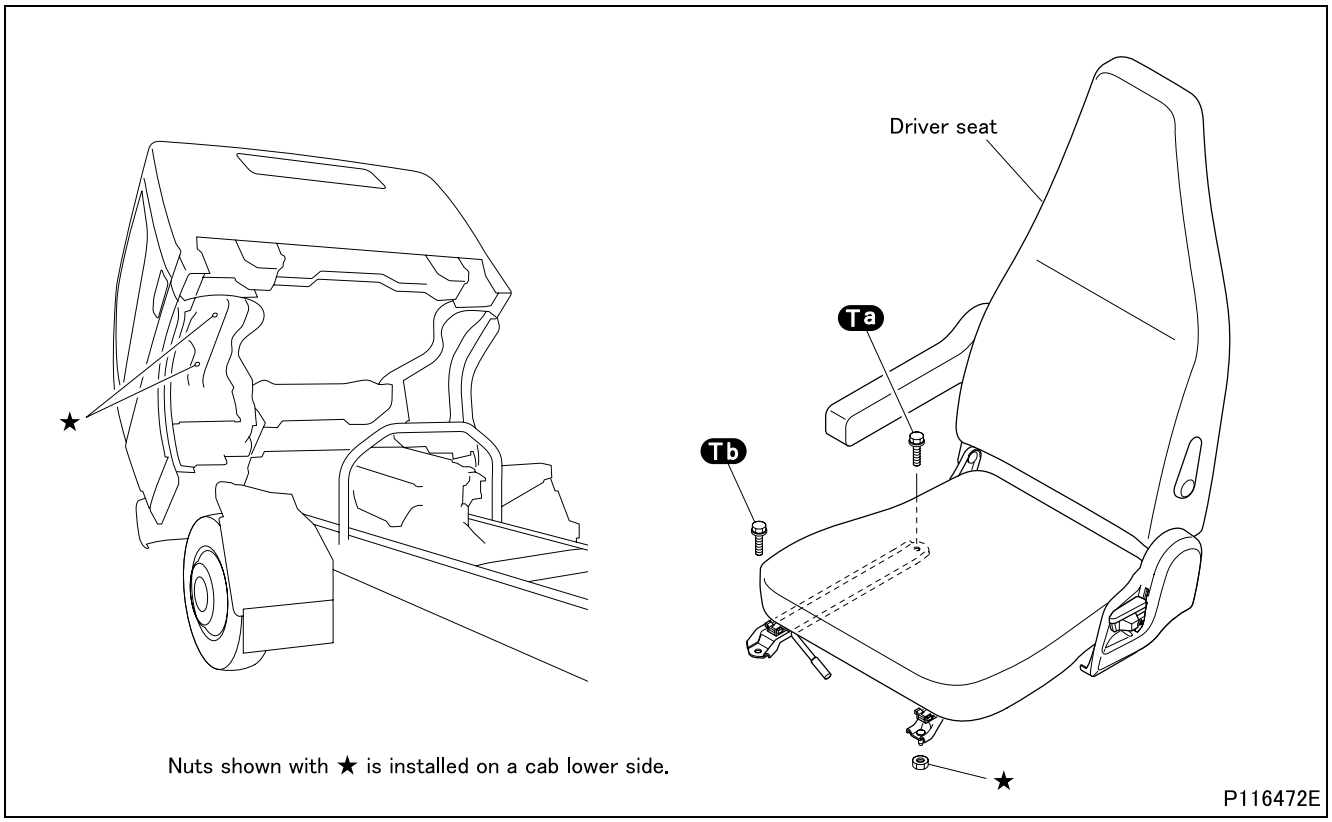

Tightening torque (Unit: N·m {ft.lbs, kgf·m})

Mark	Parts to be tightened	Tightening torque	Remarks
Ta	Bolt (back cushion mounting)	34 to 54 {25 to 40, 3.5 to 5.5}	–
Tb	Bolt (back cushion mounting)	34 to 50 {25 to 37, 3.5 to 5.1}	–

https://truckmanualshub.com/

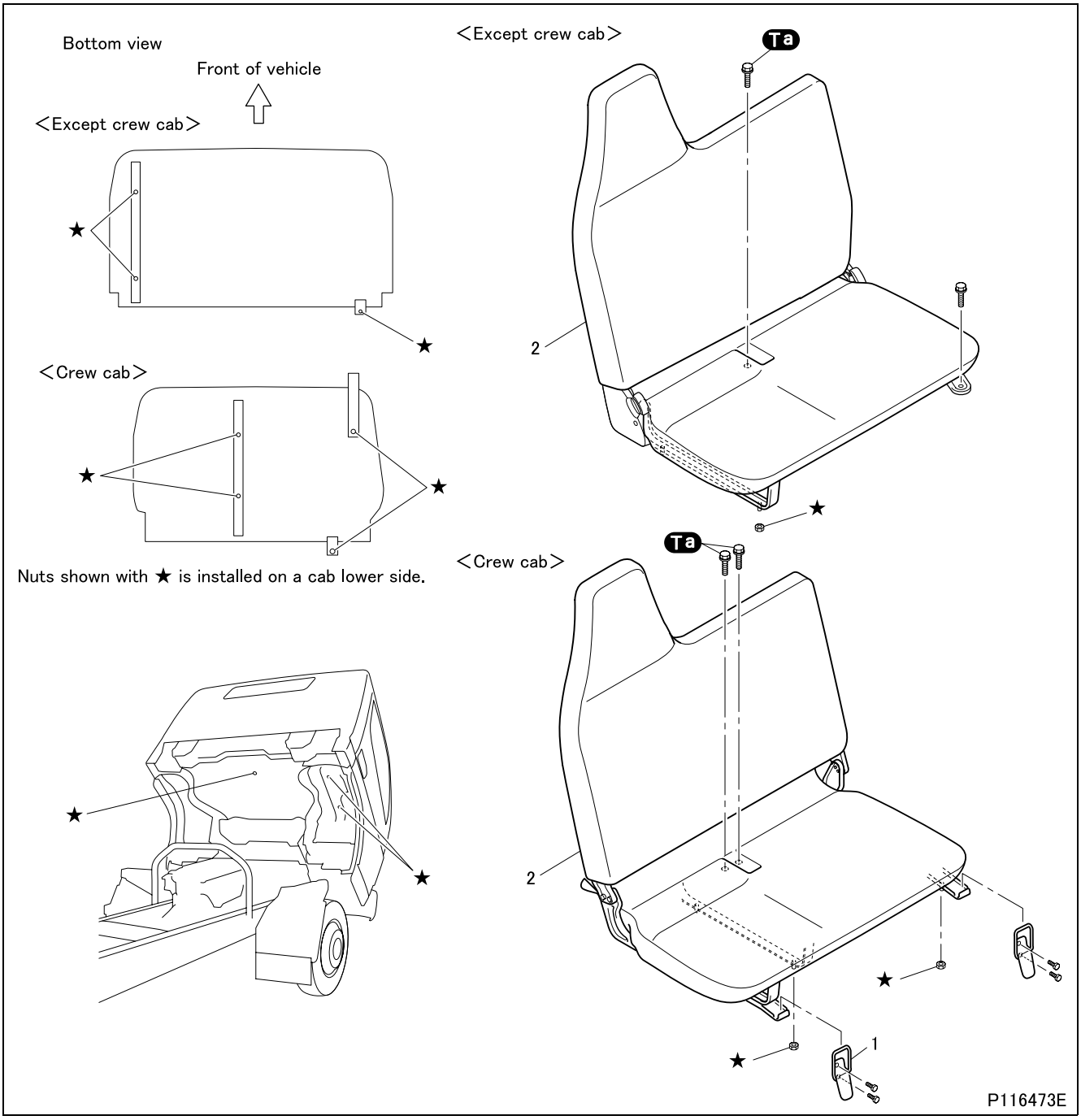

● **Removal sequence**

1 Clamp <crew cab>
2 Side seat

● **Installation sequence**

Follow the removal sequence in reverse.

Tightening torque (Unit: N·m {ft.lbs, kgf·m})

Mark	Parts to be tightened	Tightening torque	Remarks
Ta	Bolt (back cushion mounting)	34 to 54 {25 to 40, 3.5 to 5.5}	–

https://truckmanualshub.com/

REAR SEAT <CREW CAB>

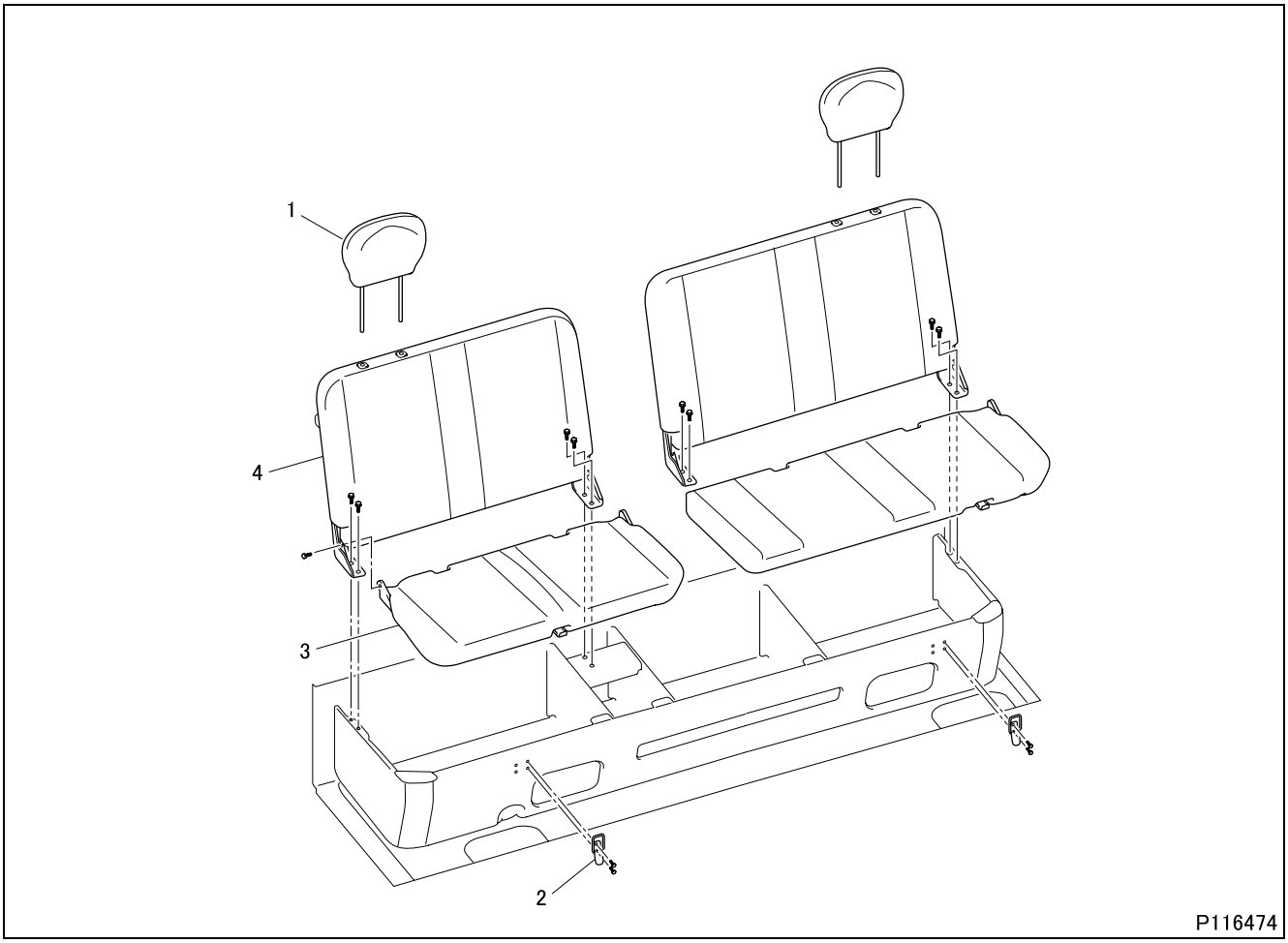

● **Removal sequence**

1 Headrest
2 Clamp
3 Seat cushion
4 Back cushion

● **Installation sequence**

Follow the removal sequence in reverse.

https://truckmanualshub.com/

M E M O

https://truckmanualshub.com/

SEAT BELT

<Driver Side>

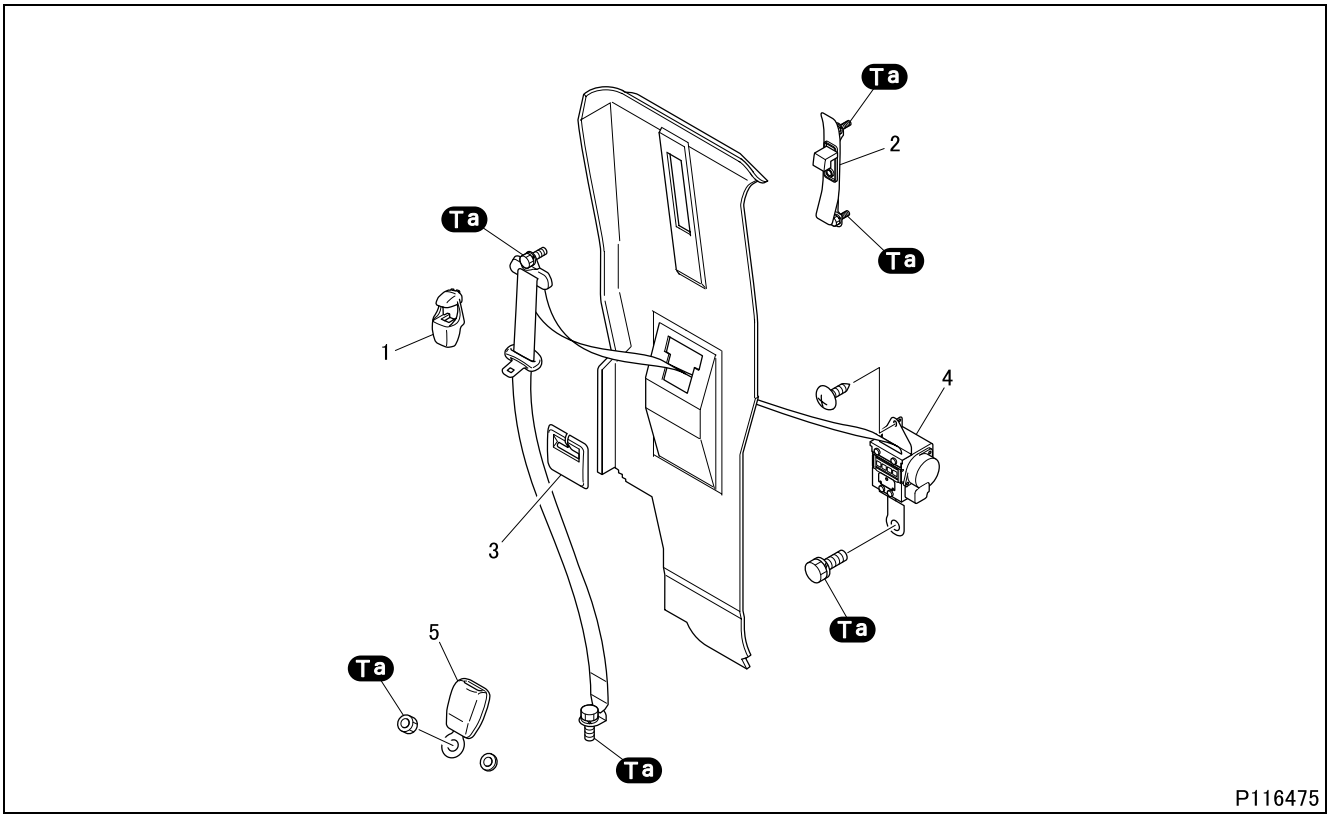

● Removal sequence

1 Shoulder anchor cover
2 Height adjuster
3 Seat belt guide <Except crew cab>
4 Emergency locking retractor
5 Buckle

● Installation sequence

Follow the removal sequence in reverse.

CAUTION ⚠

- **Never disassemble the height adjuster emergency locking retractor and buckle.**

Tightening torque (Unit: N·m {ft.lbs, kgf·m})

Mark	Parts to be tightened	Tightening torque	Remarks
Ta	Bolt (floor anchor mounting)	34 to 54 {25 to 40, 3.5 to 5.5}	–
	Bolt (shoulder anchor mounting)		
	Bolt (height adjuster mounting)		
	Bolt (emergency locking retractor mounting)		
	Nut (buckle mounting)		

https://truckmanualshub.com/

◆Removal procedure◆

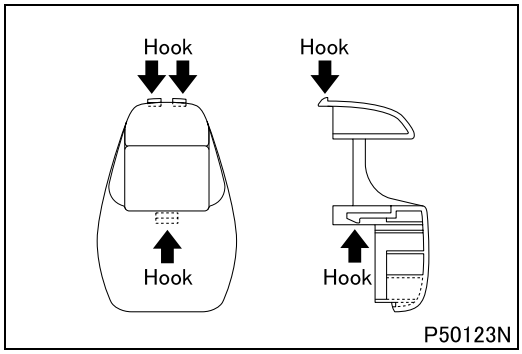

■ **Removal: Shoulder anchor cover**

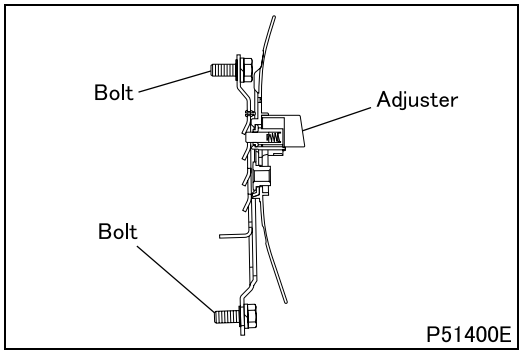

■ **Removal: Height adjuster**

- Set the adjuster fully down when removing the upper bolt.
- Set the adjuster fully up when removing the lower bolt.

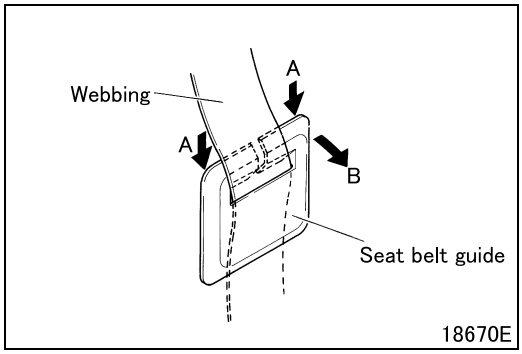

■ **Removal: Seat belt guide**

- To detach the seat belt guide, pull the top of the guide towards you in the direction of B while holding it down in the direction of A.

https://truckmanualshub.com/

SEAT BELT

<Passenger Side>

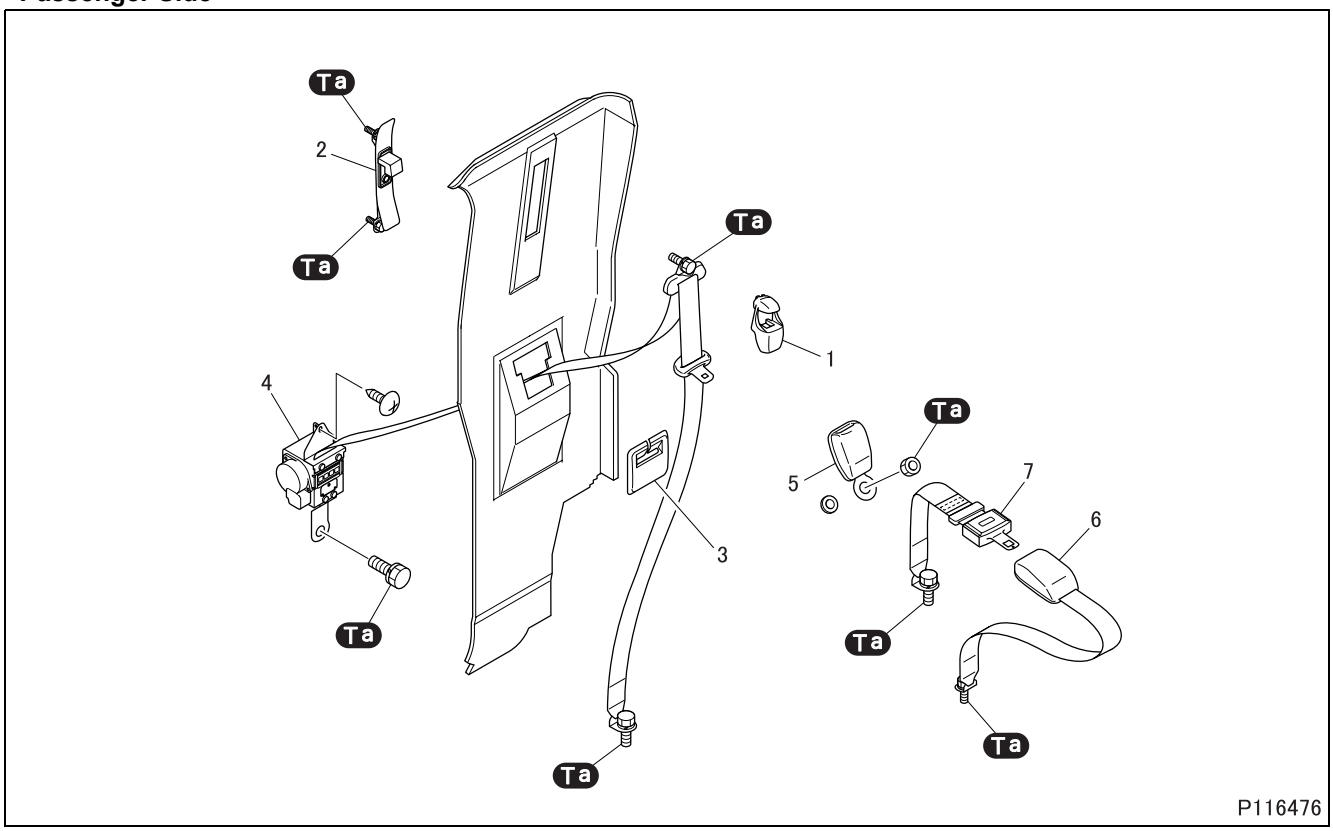

● Removal sequence

1 Shoulder anchor cover
2 Height adjuster
3 Seat belt guide <Except crew cab>
4 Emergency locking retractor
5 Buckle
6 Buckle
7 Tongue

● Installation sequence

Follow the removal sequence in reverse.

CAUTION ⚠

- **Never disassemble the height adjuster emergency locking retractor and buckle.**

https://truckmanualshub.com/

Tightening torque (Unit: N·m {ft.lbs, kgf·m})

Mark	Parts to be tightened	Tightening torque	Remarks
Ta	Bolt (floor anchor mounting)	34 to 54 {25 to 40, 3.5 to 5.5}	–
	Bolt (shoulder anchor mounting)		
	Bolt (height adjuster mounting)		
	Bolt (emergency locking retractor mounting)		
	Bolt (buckle mounting)		
	Bolt (tongue mounting)		

◆Removal procedure◆

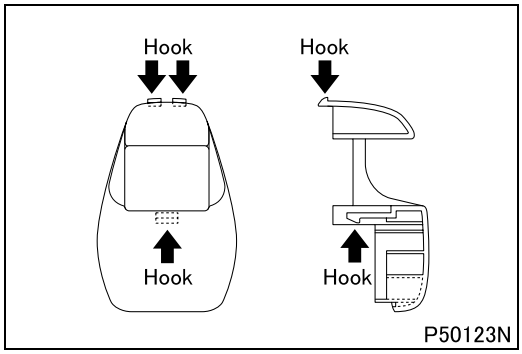

■ Removal: Shoulder anchor cover

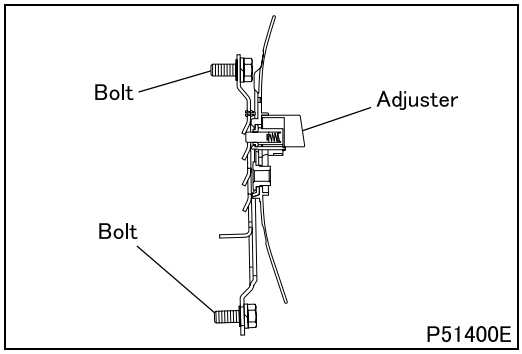

■Removal: Height adjuster

- Set the adjuster fully down when removing the upper bolt.
- Set the adjuster fully up when removing the lower bolt.

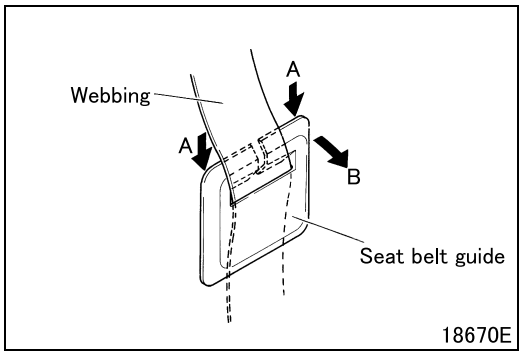

■ Removal: Seat belt guide

- To detach the seat belt guide, pull the top of the guide towards you in the direction of B while holding it down in the direction of A.

https://truckmanualshub.com/

SEAT BELT

<Rear>

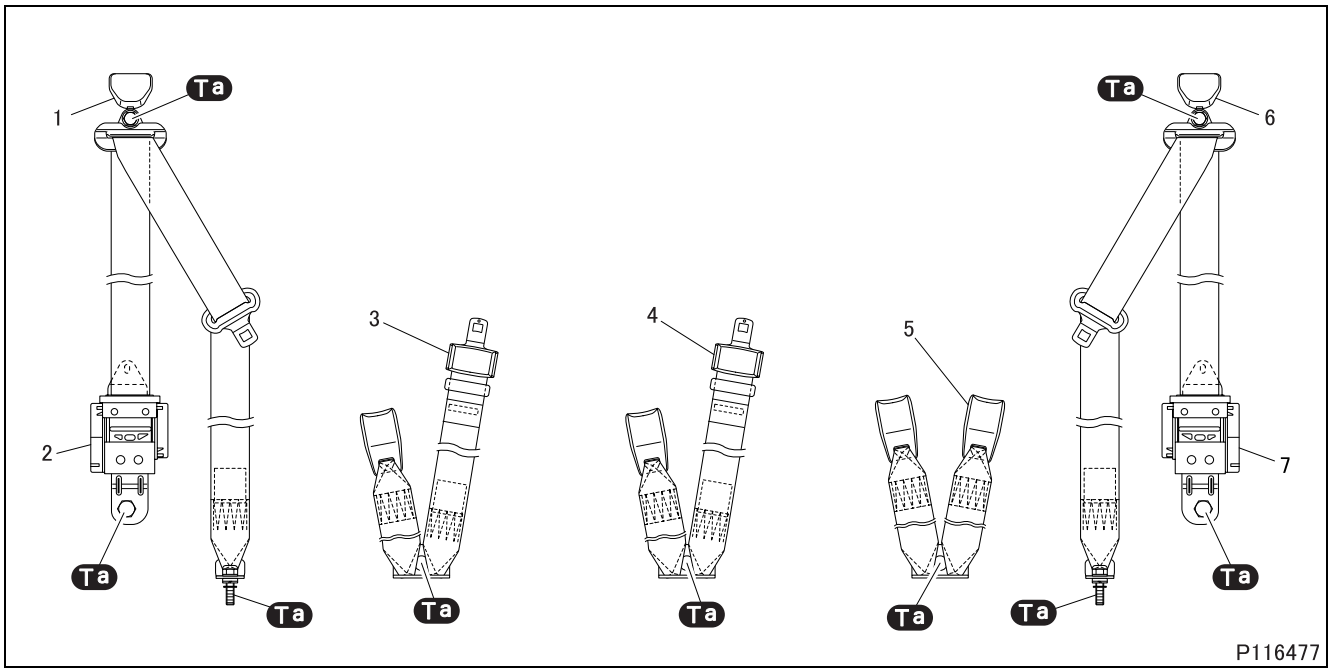

● Removal sequence

1 Shoulder anchor cover
2 Emergency locking retractor (right-hand)
3 Rear seat belt (right-hand)
4 Rear seat belt (center)
5 Rear seat belt (left-hand)
6 Shoulder anchor cover
7 Emergency locking retractor (left-hand)

● Installation sequence

Follow the removal sequence in reverse.

CAUTION ⚠

- **Never disassemble the emergency locking retractor.**

Tightening torque (Unit: N·m {ft.lbs, kgf·m})

Mark	Parts to be tightened	Tightening torque	Remarks
Ta	Bolt (floor anchor mounting)	34 to 54 {25 to 40, 3.5 to 5.5}	–
	Bolt (shoulder anchor mounting)		
	Bolt (emergency locking retractor mounting)		
	Bolt (rear seat belt mounting)		

◆Removal procedure◆

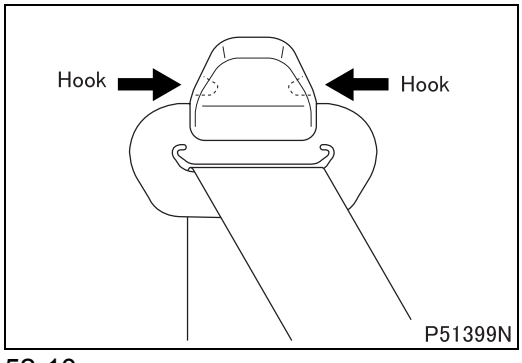

■ Removal: Shoulder anchor cover

https://truckmanualshub.com/

M E M O

https://truckmanualshub.com/

INSTRUMENT PANEL

Lower Panel

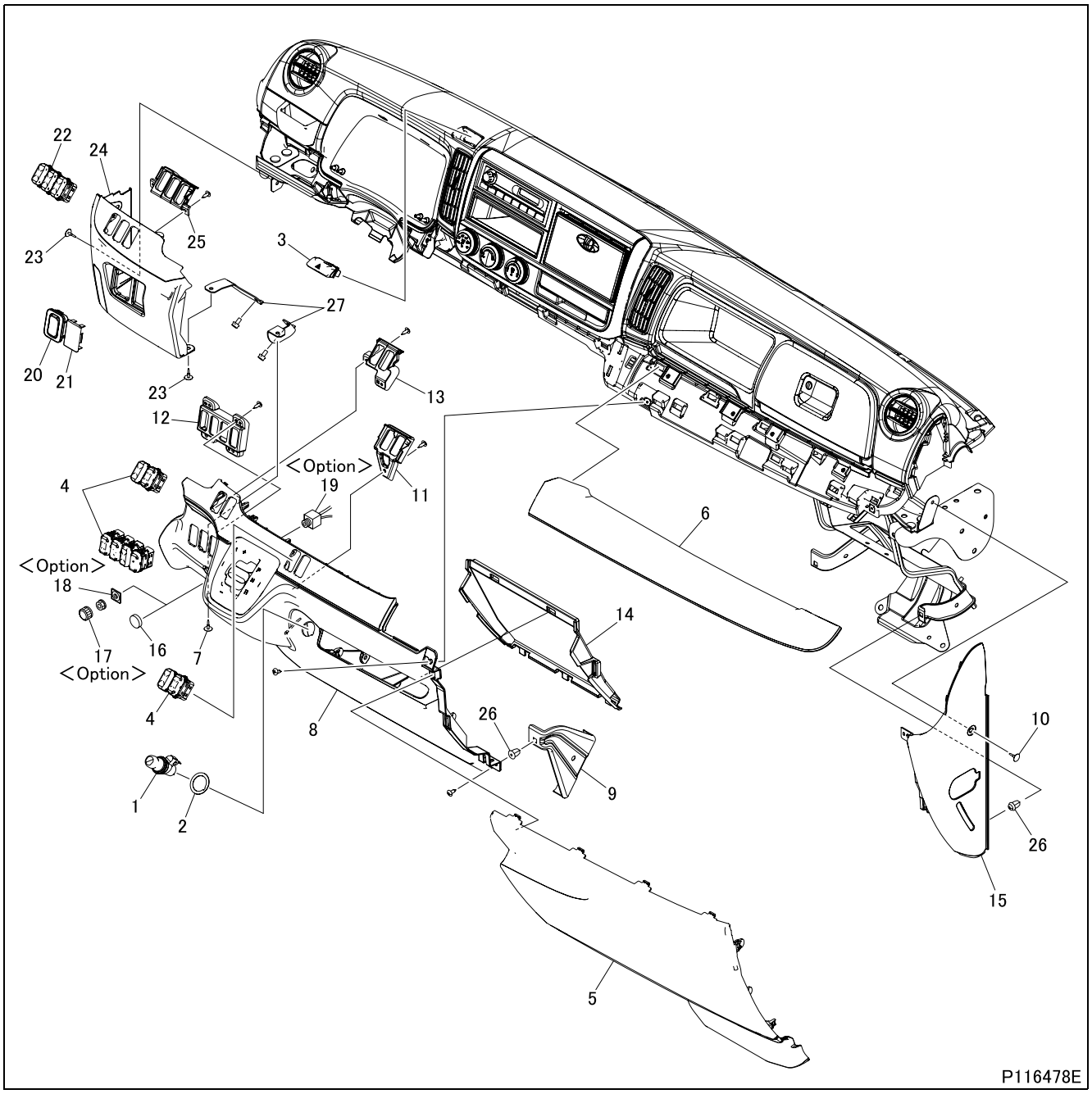

https://truckmanualshub.com/

● Removal sequence

1 Cigarette lighter
2 Cigarette lighter ring
3 Hazard switch
4 Switch or plug
5 Passenger panel
6 Passenger garnish
7 Clip
8 Lower center panel
9 Lower panel support
10 Clip
11 Switch plate A
12 Switch plate C
13 Switch plate D
14 Pocket panel
15 Side panel
16 Plug
17 Knob <Option>
18 Plate <Option>
19 Idle speed adjuster <Option>
20 Plug
21 Plug
22 Switch or plug
23 Clip
24 Driver panel
25 Switch plate B
26 Grommet screw
27 Instrument panel bracket

● Installation sequence

Follow the removal sequence in reverse.

◆Removal procedure◆

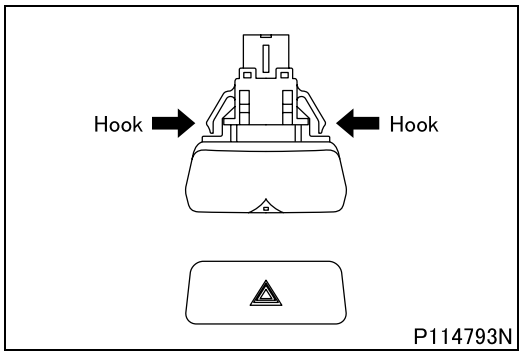

■ **Removal: Hazard switch**

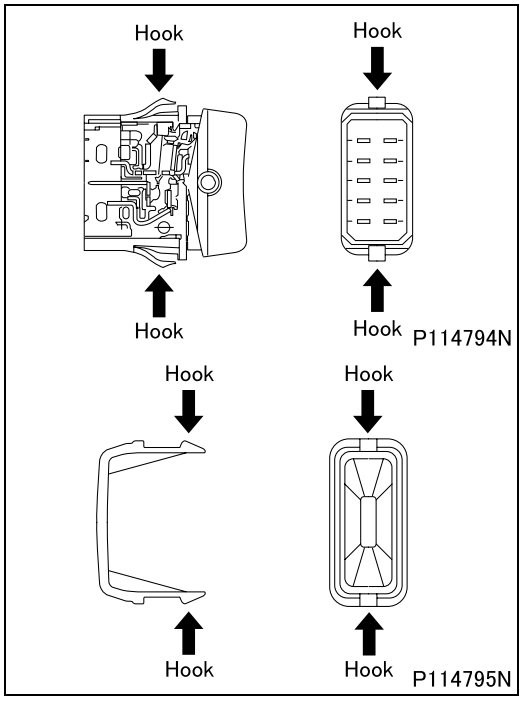

■ **Removal: Switch or plug**

https://truckmanualshub.com/

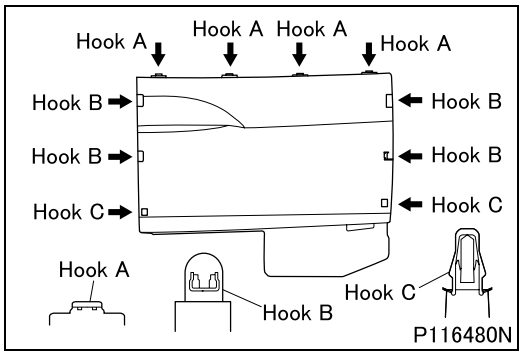

■ **Removal: Passenger panel**

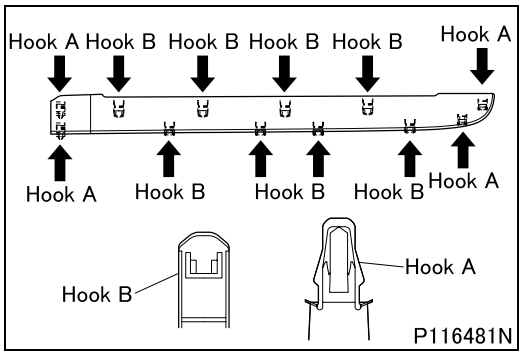

■ **Removal: Passenger garnish**

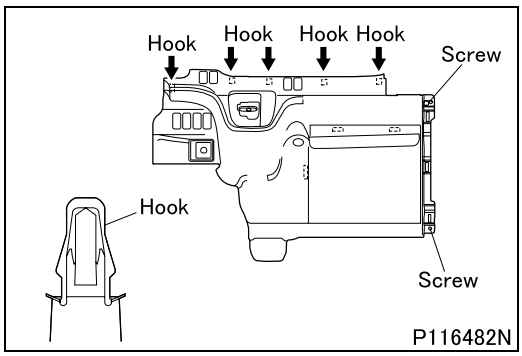

■ **Removal: Lower center panel**

- Remove the screws (× 2) from the lower center panel.

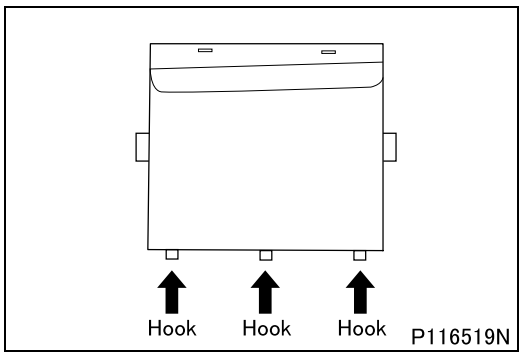

■ **Removal: Pocket panel**

https://truckmanualshub.com/

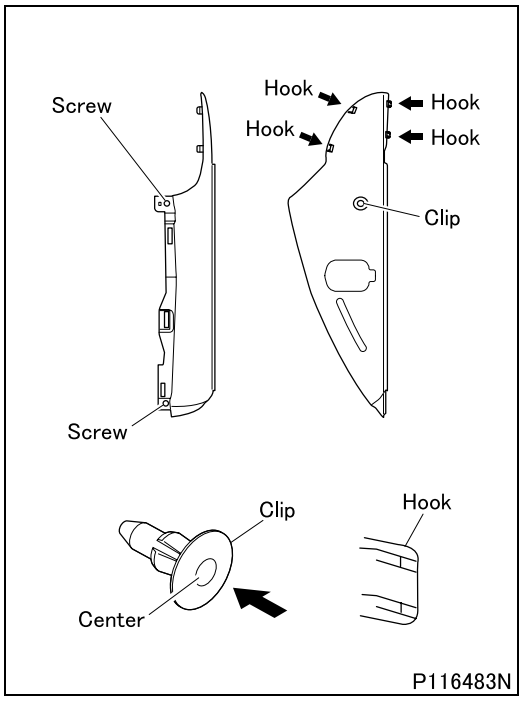

■ **Removal: Side panel**

- Remove the screws (× 2) from the side panel.
- Push the clip (× 1) in the center to disengage them from the side panel.

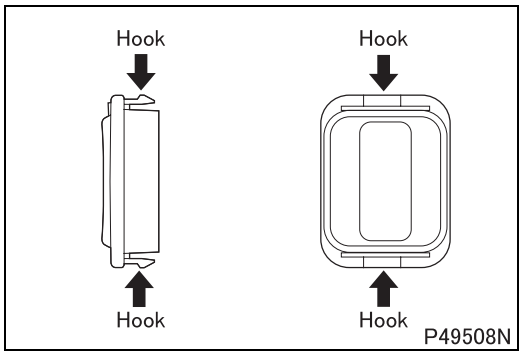

■ **Removal: Plug**

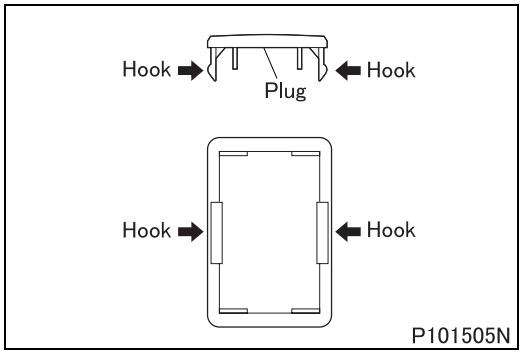

■ **Removal: Plug**

https://truckmanualshub.com/

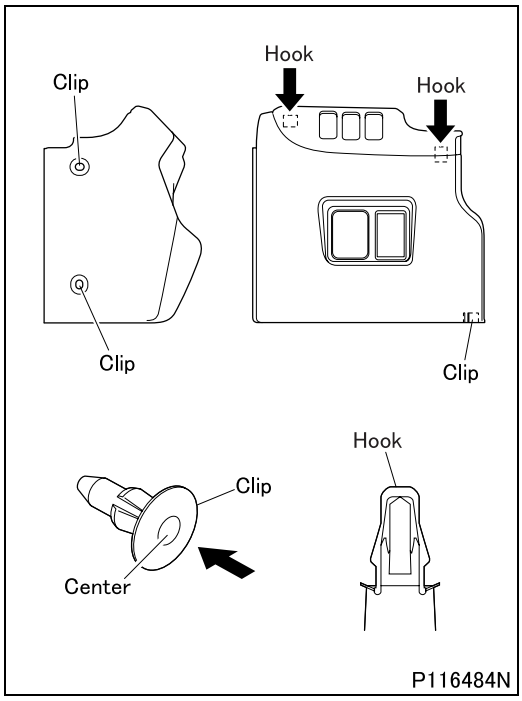

■ **Removal: Driver panel**

- Push the clips in the center to disengage them from the driver panel.

◆**Installation procedure**◆

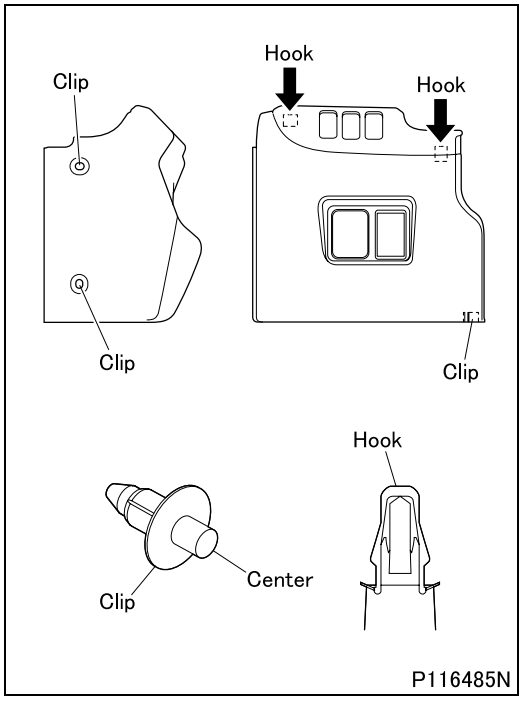

■ **Installation: Driver panel**

- Insert the clips at the illustrated locations and push them in the center to engage into the driver panel.

https://truckmanualshub.com/

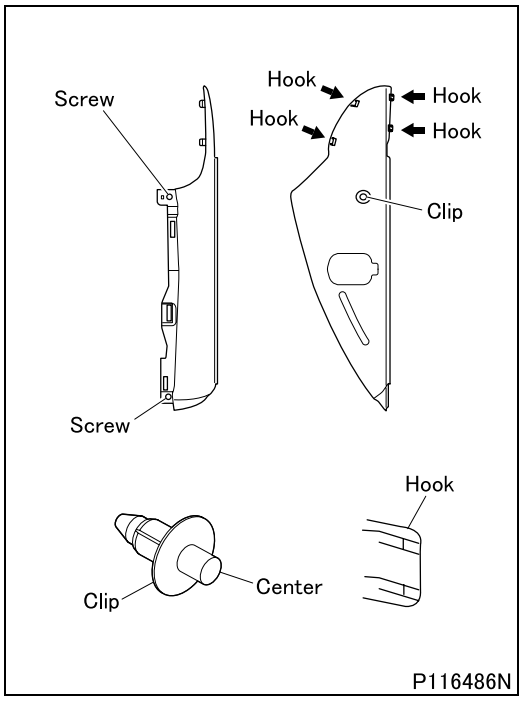

■ **Installation: Side panel**

- Insert the clip (× 1) at the illustrated location and push it in the center to engage into the side panel.
- Install the screws (× 2) to the passenger panel.

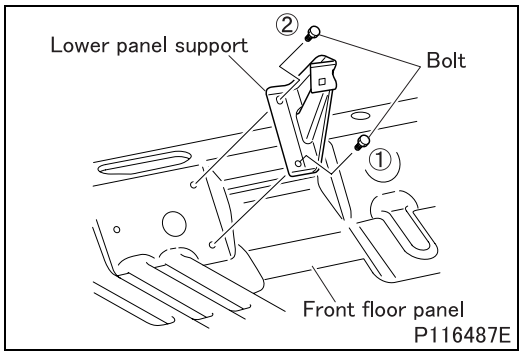

■ **Installation: Lower panel support**

- Insert the clips (× 3) at the illustrated locations and push them in the center to engage into the gear shift lever cover.

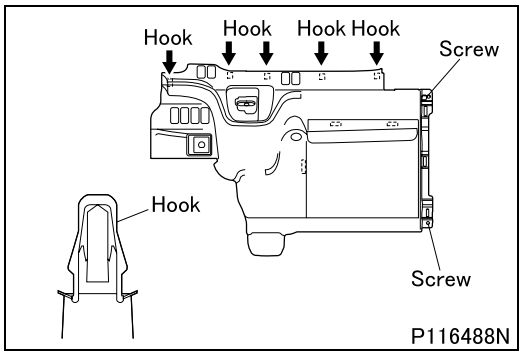

■ **Installation: Lower center panel**

- Install the screws (× 2) to the lower center panel.

https://truckmanualshub.com/

INSTRUMENT PANEL

Driver Upper Panel

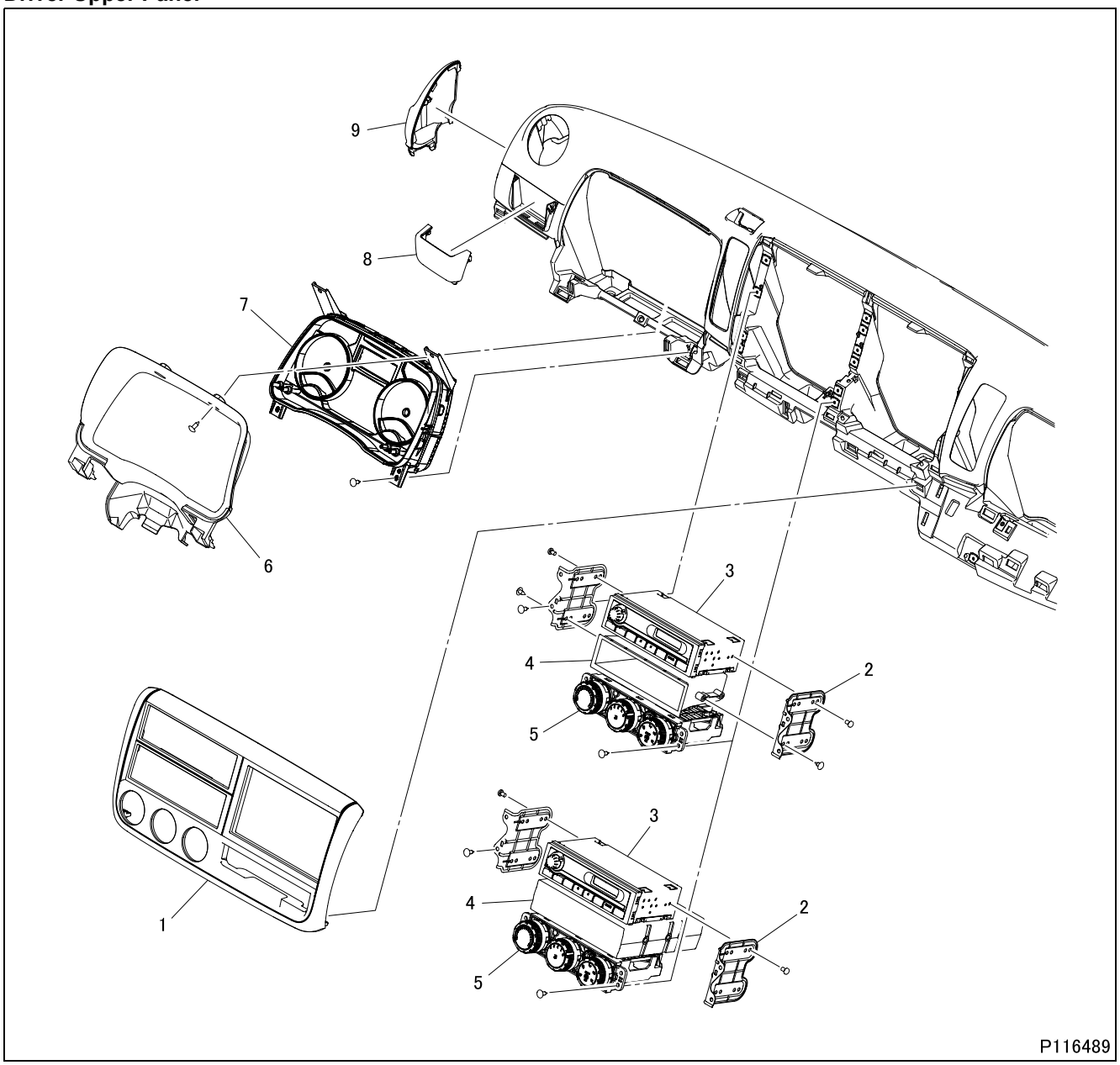

● Removal sequence

1 Upper center panel
2 Radio bracket
3 Box or radio or tachograph
4 Box or tachograph
5 Heater control (See later section.)
6 Meter bezel
7 Meter cluster
8 Pocket panel
9 Lid (brake fluid tank)

● Installation sequence

Follow the removal sequence in reverse.

https://truckmanualshub.com/

◆Work before removal◆

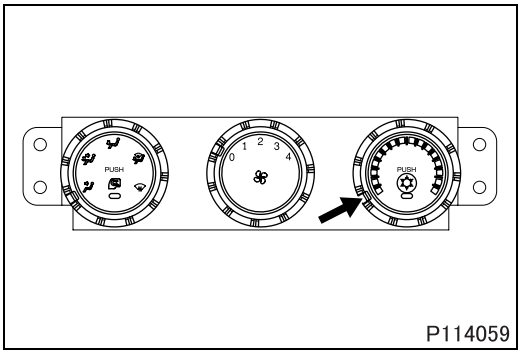

P114059

■ **Removal: Control cables**

- Turn the temperature control knob of the heater controls to the MAX-COOL position.

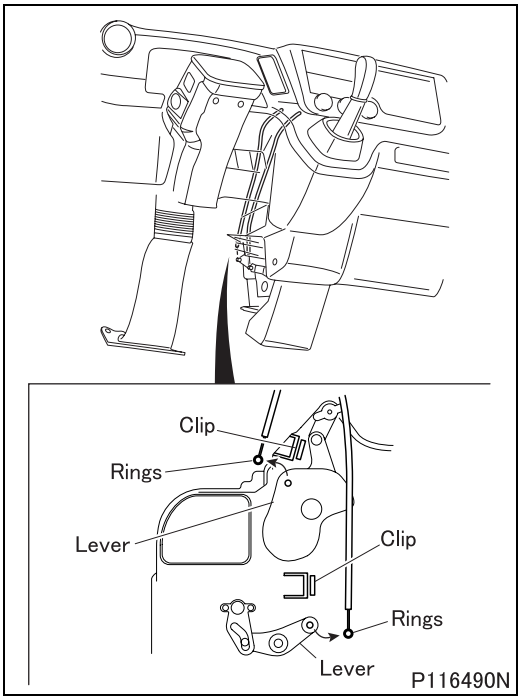

P116490N

- Before disconnecting the cables from the levers, put pairing marks on each cable and its lever.
- Disconnect the control cables from the heater unit.

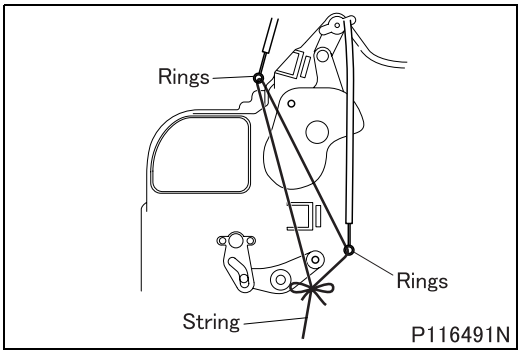

P116491N

- In order that the control cables can be pulled back during installation, attach a string to the rings on the cables as shown in the illustration.

https://truckmanualshub.com/

◆Removal procedure◆

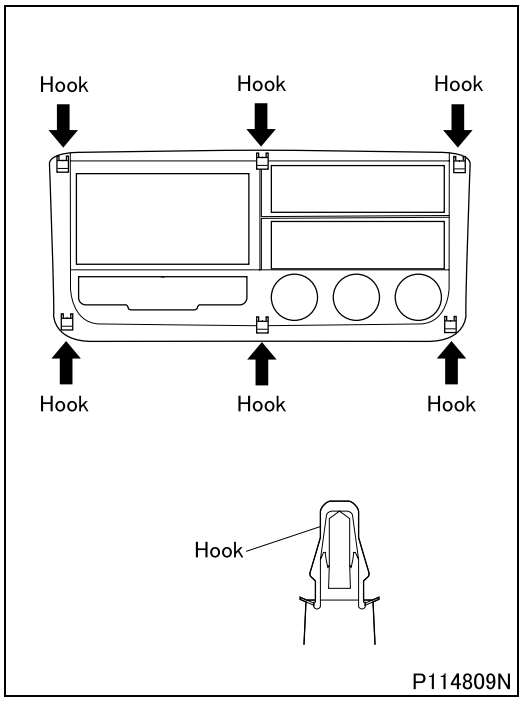

■ Removal: Upper center panel

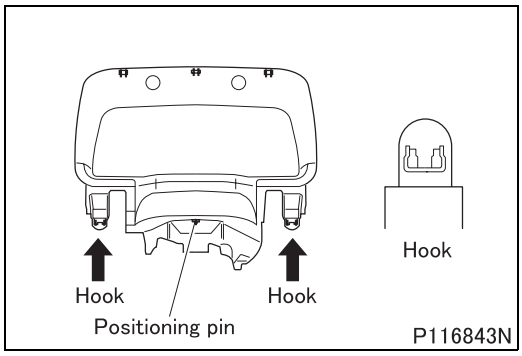

■ Removal: Meter cluster

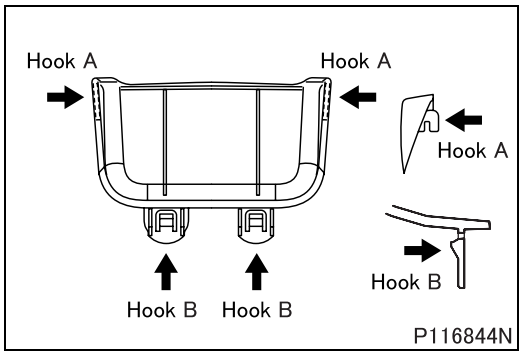

■ Removal: Pocket panel

https://truckmanualshub.com/

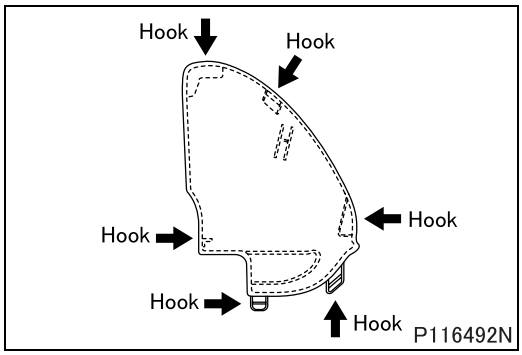

■ **Removal: Lid (brake fluid tank)**

◆**Work after installation**◆

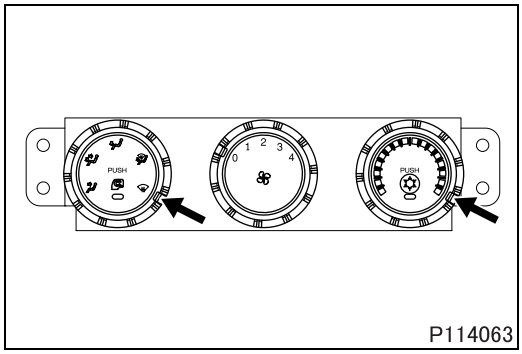

■**Installation: Control cables**

- Of the heater controls, turn the temperature control knob to the MAX-HOT position and also turn the mode selector knob to the DEF position.

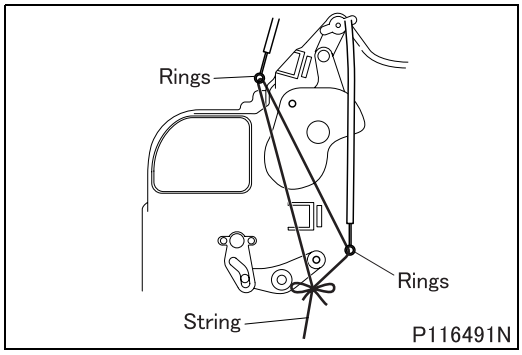

- Pull out the control cables using the string that was attached to them at the time of removal.
- According to the pairing marks, reconnect the cables to the heater unit levers correctly. (See Gr55.)

https://truckmanualshub.com/

INSTRUMENT PANEL

Passenger Upper Panel

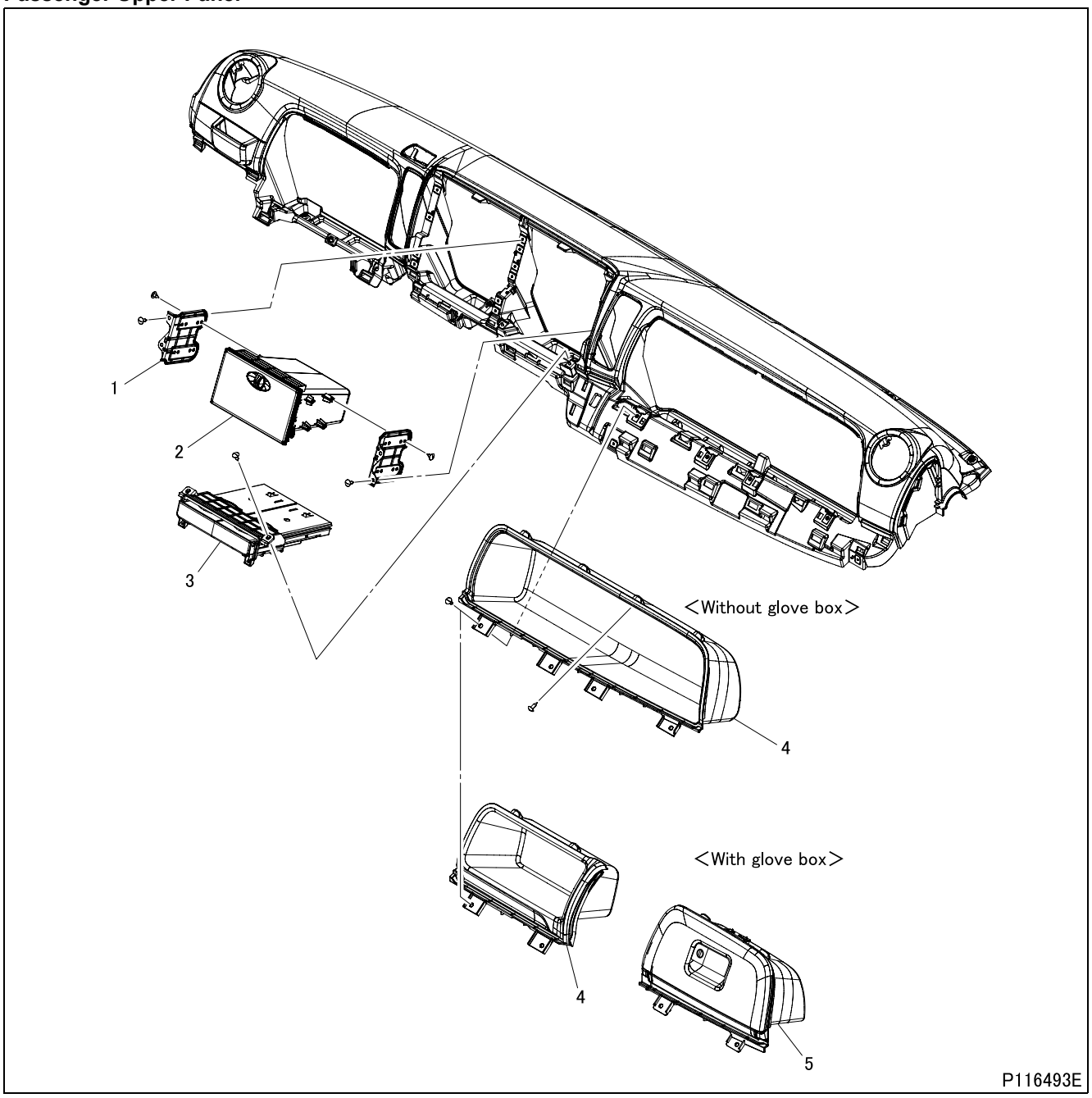

● Removal sequence

1 Radio bracket
2 Box
3 Cap holder
4 Parcel tray
5 Glove box <With glove box>

● Installation sequence

Follow the removal sequence in reverse.

https://truckmanualshub.com/

M E M O

https://truckmanualshub.com/

INSTRUMENT PANEL

Instrument Panel

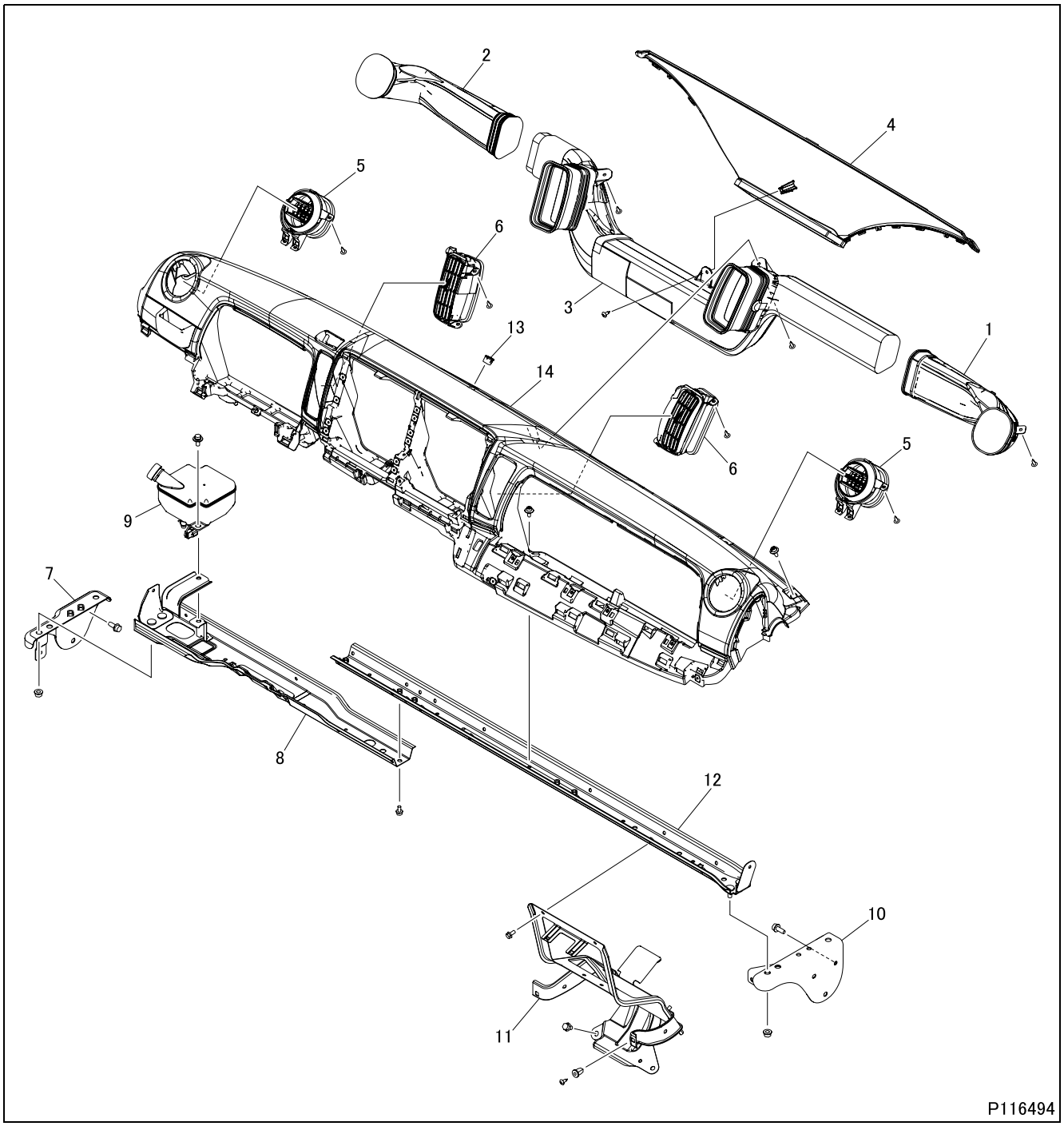

● **Removal sequence**

1 Passenger face duct
2 Driver face duct
3 Center face duct
4 Defroster duct
5 Air outlet side grille
6 Air outlet center grille
7 Instrument panel bracket (left-hand)
8 Driver instrument panel frame
9 Brake fluid tank
10 Instrument panel bracket (right-hand)
11 Sam support
12 Passenger instrument panel frame
13 Plug or photo sensor
14 Instrument panel

https://truckmanualshub.com/

● Installation sequence

Follow the removal sequence in reverse.

◆Removal procedure◆

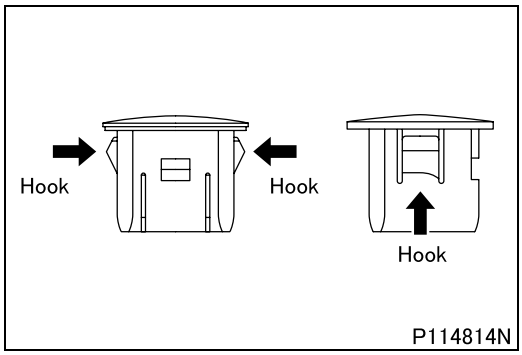

■ **Removal: Plug or photo sensor**

◆Installation procedure◆

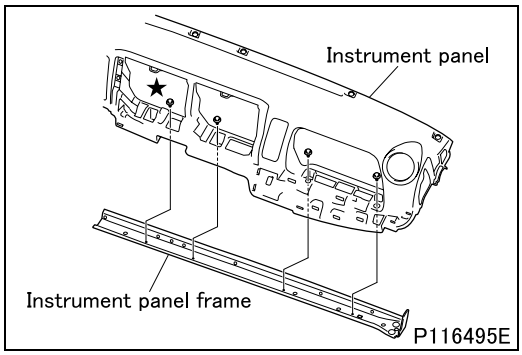

■**Installation: Passenger-side instrument panel frame**

- Install the passenger-side instrument panel frame to the instrument panel by tightening the positioning bolt (marked with ★ in the illustration) first.

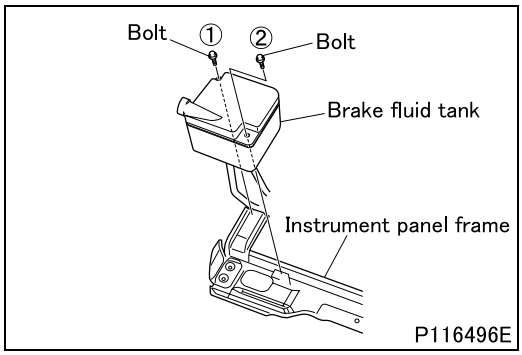

■**Installation: Brake fluid tank**

- Install the brake fluid tank to the driver-side instrument panel frame by tightening the bolts in the order shown in the illustration.

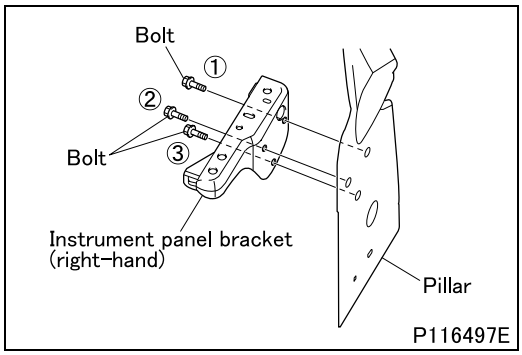

■**Installation: Instrument panel bracket (right-hand)**

- Install the instrument panel bracket (right-hand) to the pillar by tightening the bolts in the order shown in the illustration.

https://truckmanualshub.com/

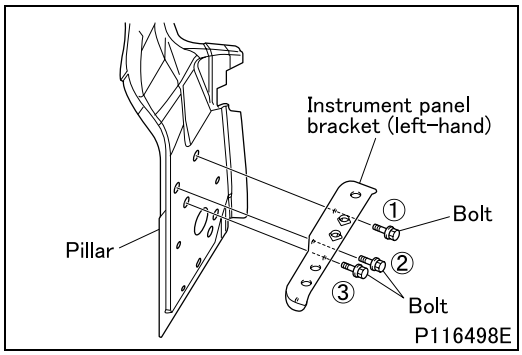

■**Installation: Instrument panel bracket (left-hand)**

- Install the instrument panel bracket (left-hand) to the pillar by tightening the bolts in the order shown in the illustration.

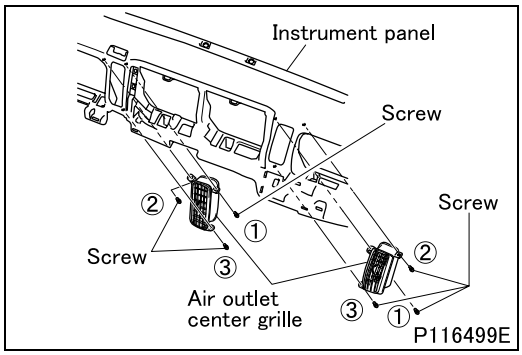

■**Installation: Air outlet center grille**

- Install the air outlet center grille to the instrument panel by tightening the screws in the order shown in the illustration.

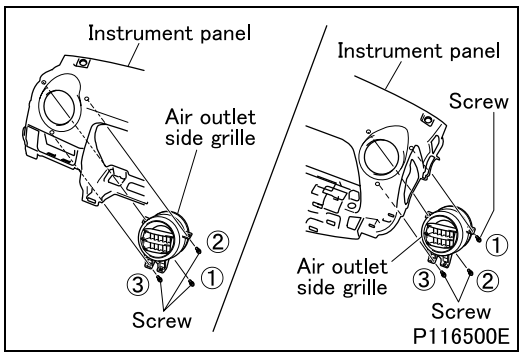

■**Installation: Air outlet side grille**

- Install the air outlet side grille to the instrument panel by tightening the screws in the order shown in the illustration.

https://truckmanualshub.com/

M E M O

https://truckmanualshub.com/

TRIM AND SCUFF PLATE <EXCEPT CREW CAB>

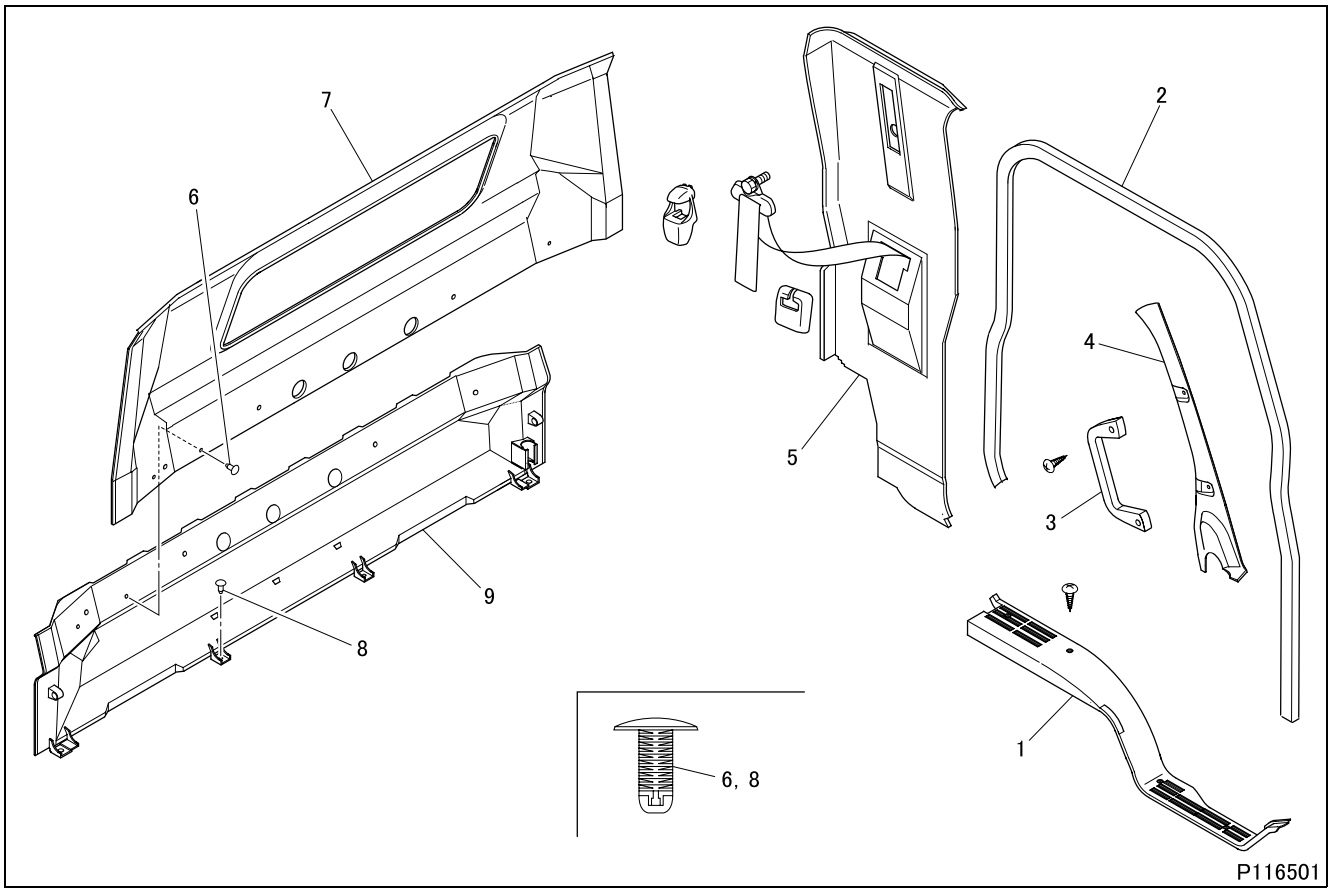

● **Removal sequence**

1 Scuff plate
2 Weatherstrip
3 Grip
4 Front pillar trim
5 Rear pillar trim
6 Clip
7 Upper rear trim
8 Clip
9 Lower rear trim

● **Installation sequence**

Follow the removal sequence in reverse.

◆**Removal procedure**◆

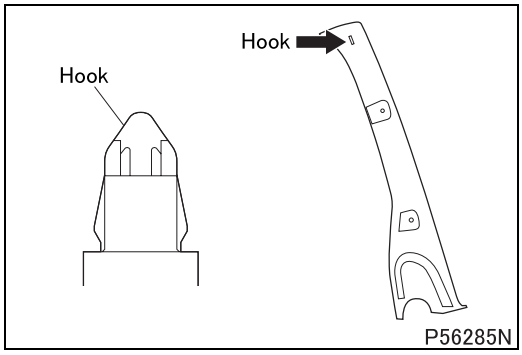

■ **Removal: Front pillar trim**

https://truckmanualshub.com/

◆Installation procedure◆

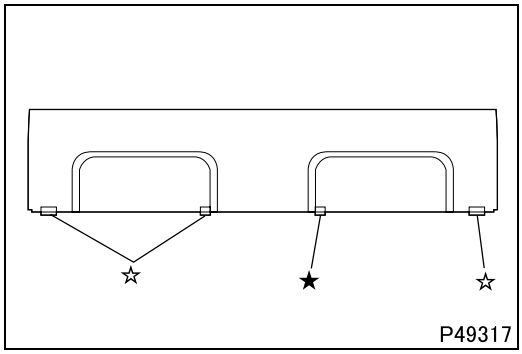

■ Installation: Lower rear trim

- Align the lower rear trim correctly in position by installing a clip into the hole ★.
- Install 3 clips into the holes ☆ to completely fix the lower rear trim in position.

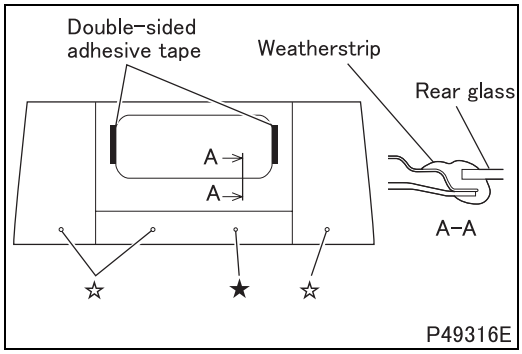

■ Installation: Upper rear trim

- Stick double-sided adhesive tape onto the upper rear trim along the strips referenced in the illustration.
- Align the upper rear trim correctly in position by installing a clip into the hole ★.
- Remove the backing strips from the double-sided adhesive tapes. Press the trim firmly on where the adhesive tape is applied on the back. Then, install 3 clips at the places ☆.
- Install the rear glass by inserting the rear glass weatherstrip over the upper rear trim.

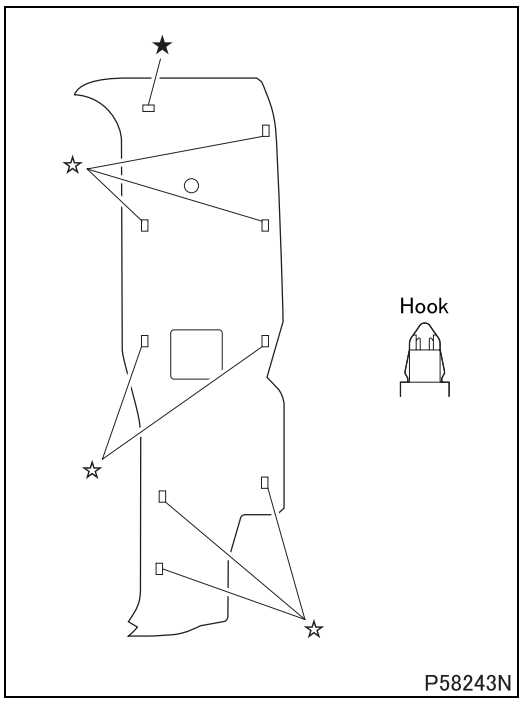

■ Installation: Rear pillar trim

- Align the rear pillar trim correctly onto the cab by engaging the hook ★.
- Engage the hooks ☆ (× 8) onto the cab, from the front to the rear.

https://truckmanualshub.com/

TRIM AND SCUFF PLATE <EXCEPT CREW CAB>

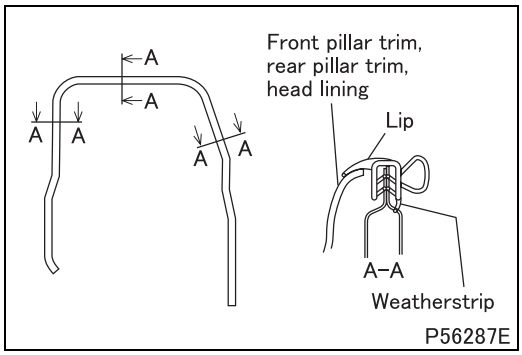

■ **Installation: Weatherstrip**

- Install the weatherstrip so that the lip of the strip holds down the front pillar trim, rear pillar trim, and head lining.

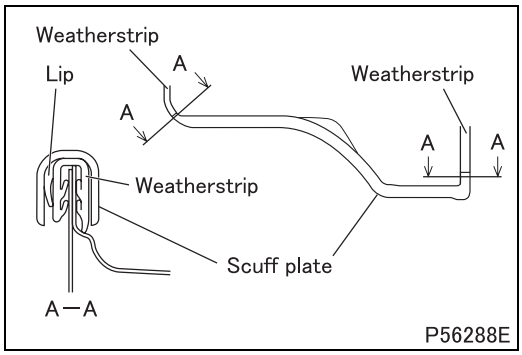

■ **Installation: Scuff plate**

- Install the scuff plate so that it holds down the lip of the weatherstrip.

https://truckmanualshub.com/

M E M O

https://truckmanualshub.com/

TRIM AND SCUFF PLATE <CREW CAB>

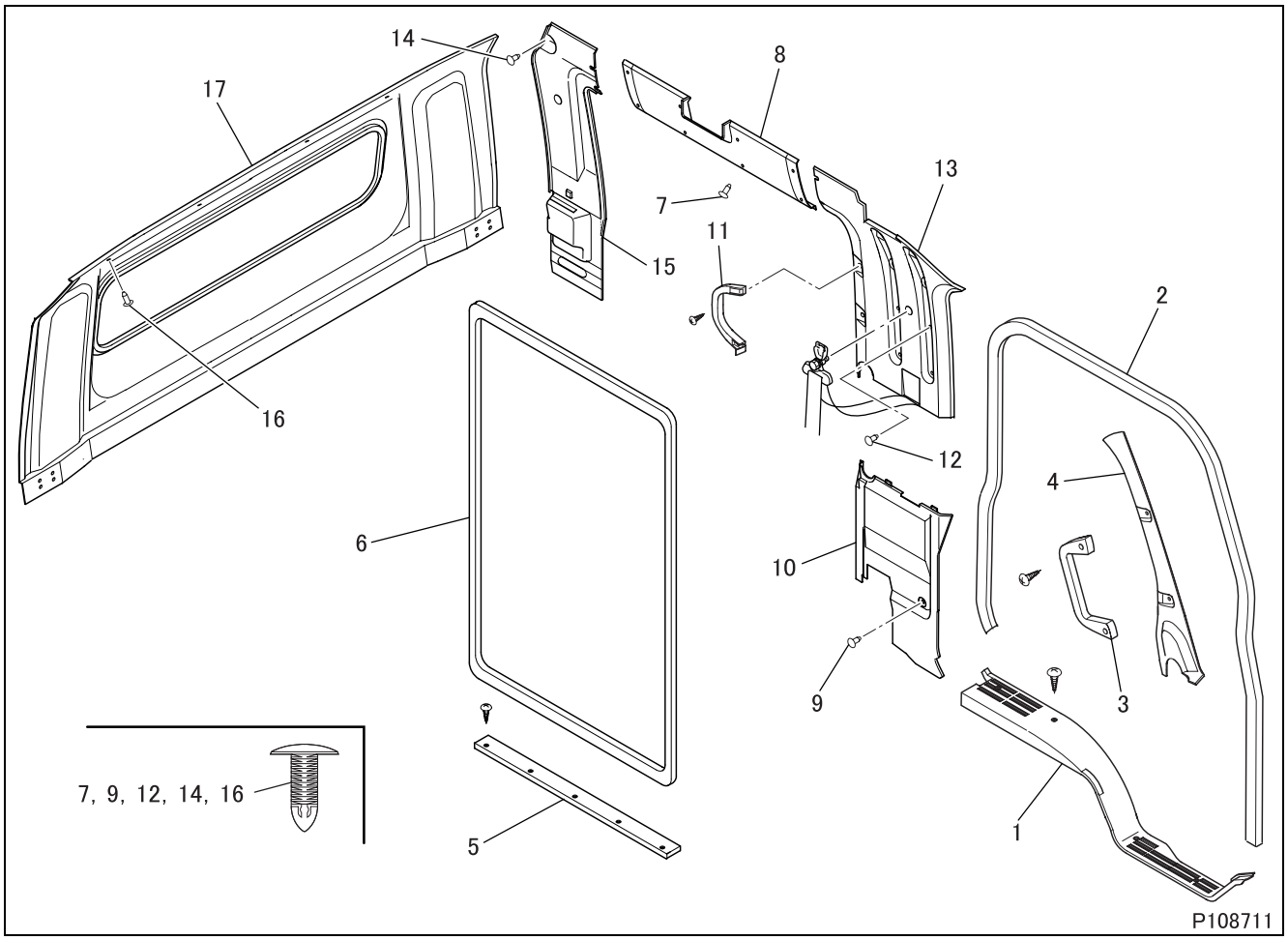

● **Removal sequence**

1 Front scuff plate
2 Weatherstrip
3 Front grip
4 Front pillar trim
5 Rear scuff plate
6 Weatherstrip
7 Clip
8 Roof rail trim
9 Clip
10 Center pillar lower trim
11 Rear grip
12 Clip
13 Center pillar upper trim
14 Clip
15 Rear pillar trim
16 Clip
17 Rear trim

● **Installation sequence**

Follow the removal sequence in reverse.

https://truckmanualshub.com/

◆Removal procedure◆

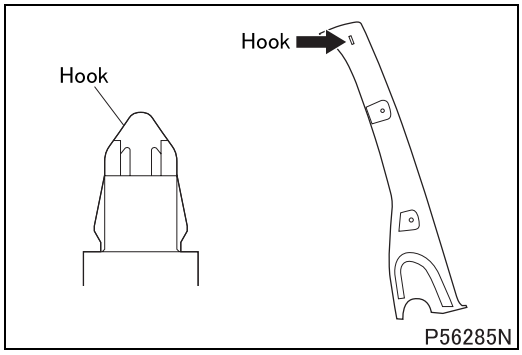

■ **Removal: Front pillar trim**

◆Installation procedure◆

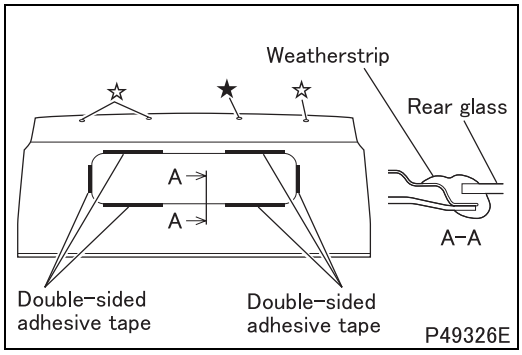

■ **Installation: Rear trim**

- Stick double-sided adhesive tape onto the rear trims as illustrated.
- Align the rear trim on the cab correctly by installing a clip (marked ★).
- Attach the rear trim onto the cab with adhesive tape.
- Install three clips (marked ☆).
- Place the rear window weatherstrip over the rear trim.

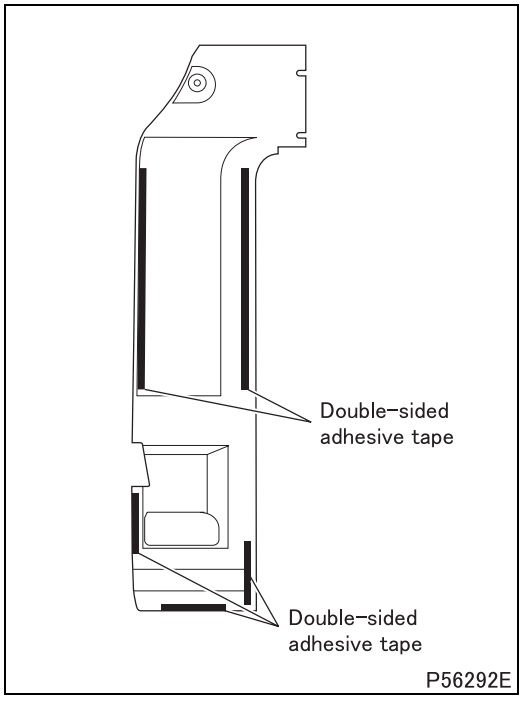

■ **Installation: Rear pillar trim**

- Stick double-sided adhesive tape onto the rear pillar trims as illustrated.
- Locate the rear pillar trim correctly in position by installing a clip.
- Attach the rear pillar trim onto the cab with adhesive tape.

https://truckmanualshub.com/

TRIM AND SCUFF PLATE <CREW CAB>

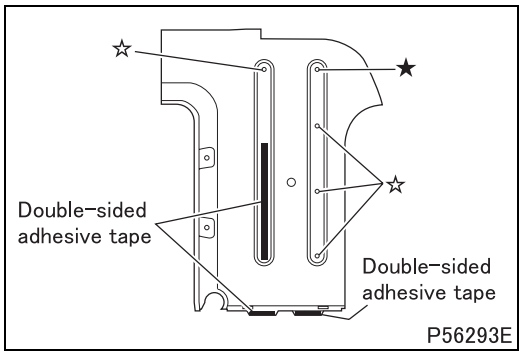

■ **Installation: Center pillar upper trim**

- Stick double-sided adhesive tape onto the center pillar upper trim as illustrated.
- Align the center pillar upper trim on the cab correctly by installing a clip (marked ★).
- Install clips at the locations ☆ (× 4). Remove the backing strip from the double-sided adhesive tape. Press the trim firmly on where the adhesive tape is applied on the back.

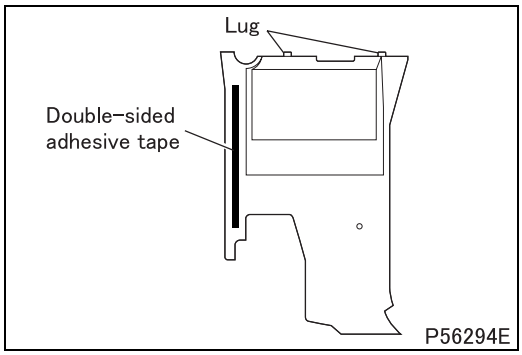

■ **Installation: Center pillar lower trim**

- Stick double-sided adhesive tape onto the center pillar lower trim as illustrated.
- Insert the center pillar lower trim lug(s) (× 2) into the center pillar upper trim hole(s).
- Align the center pillar lower trim correctly in position by installing a clip.
- Attach the center pillar lower trim onto the cab with adhesive tape.

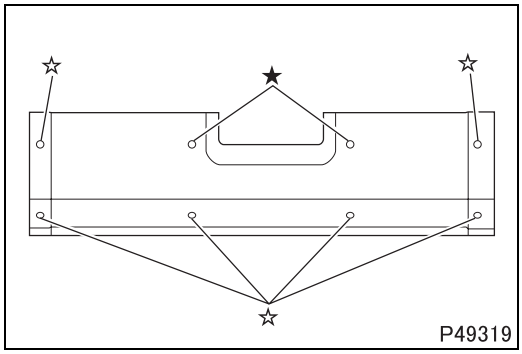

■ **Installation: Roof rail trim**

- Align the center pillar upper trim on the cab correctly by installing two clips (marked ★).
- Install clips at the locations ☆ (× 6).

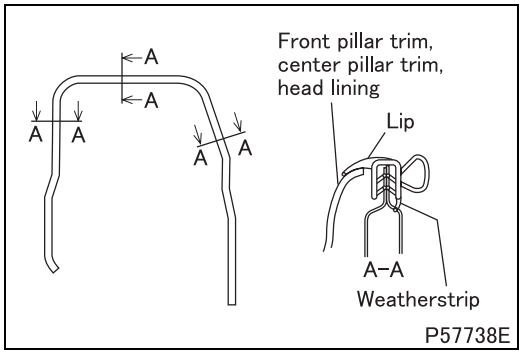

■ **Installation: Weatherstrip**

- Install the weatherstrip in such a manner that the lip of the strip holds down the front pillar trim, center pillar trim, and head lining.

https://truckmanualshub.com/

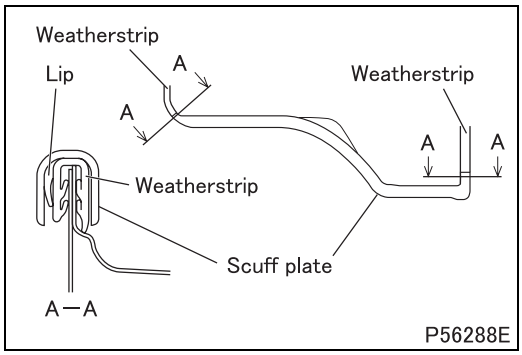

■ **Installation: Scuff plate**

- Install the scuff plate so that it holds down the lip of the weatherstrip.

https://truckmanualshub.com/

HEAD LINING <EXCEPT CREW CAB>

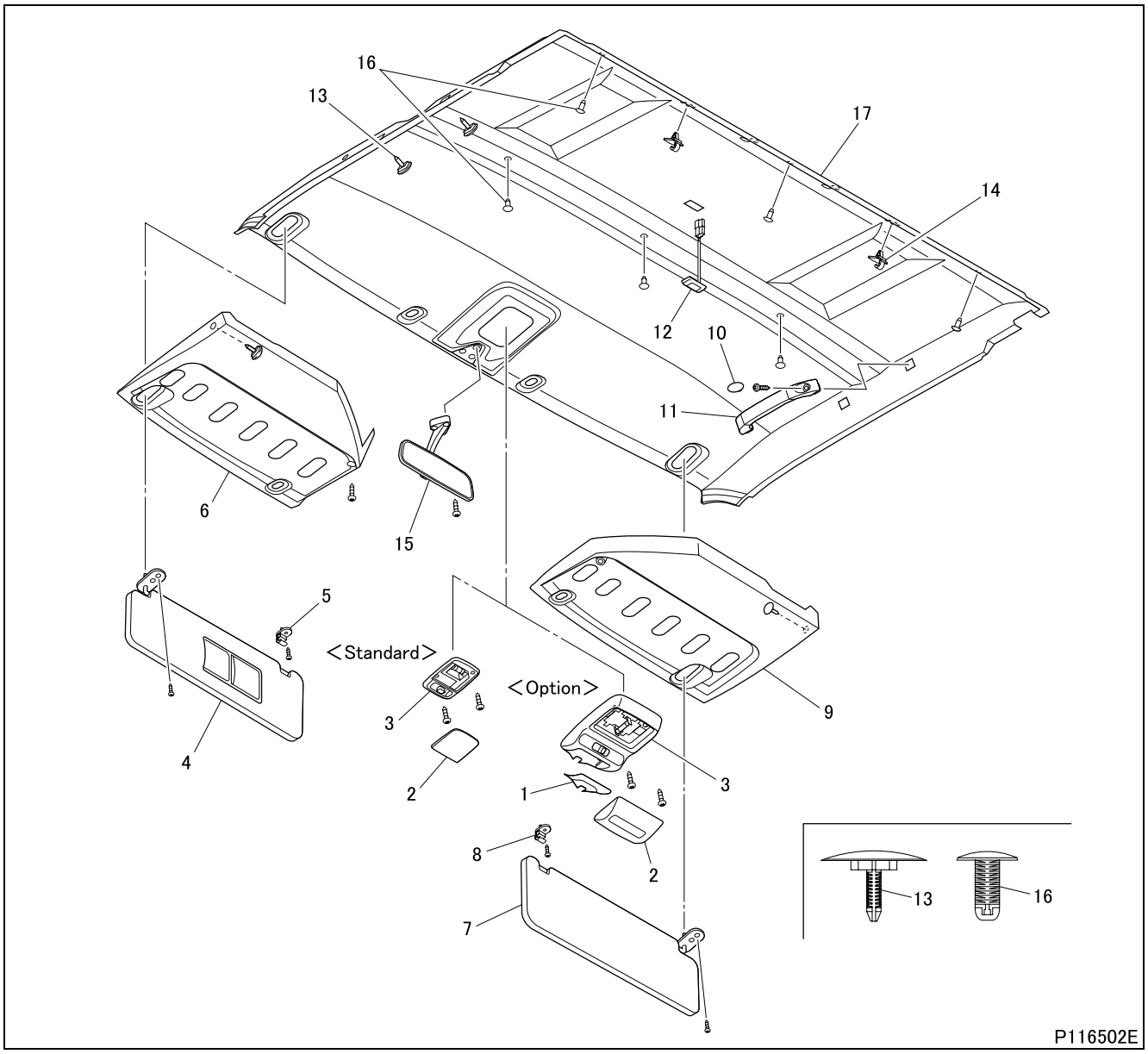

● **Removal sequence**

1 Cover <Option>
2 Lens
3 Room lamp
4 Sun visor (left-hand)
5 Sun visor hook
6 Overhead shelf (left-hand)
7 Sun visor (right-hand)
8 Sun visor hook
9 Overhead shelf (right-hand)
10 Cap
11 Grip
12 In car sensor <F-A/C>
13 Plug
14 Coat hanger
15 Inside mirror
16 Clip (× 8)
17 Head lining

F-A/C: Fully automatic air conditioner

● **Installation sequence**

Follow the removal sequence in reverse.

https://truckmanualshub.com/

◆Removal procedure◆

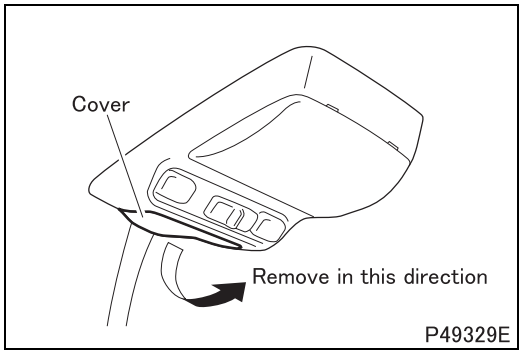

■ **Removal: Cover**

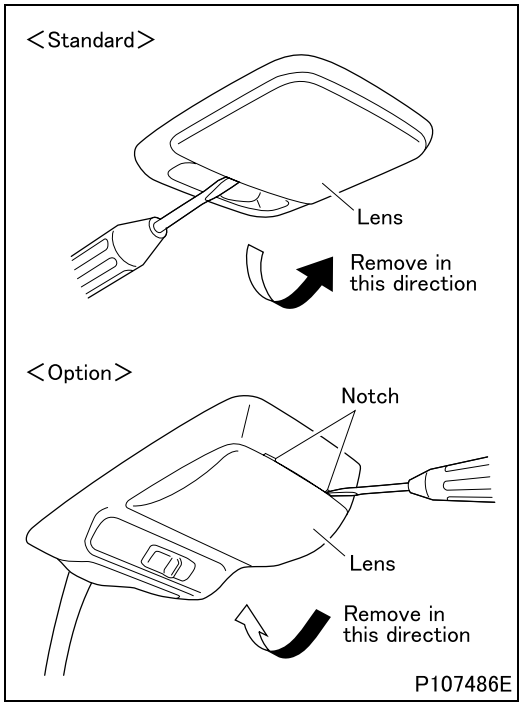

■ **Removal: Lens**

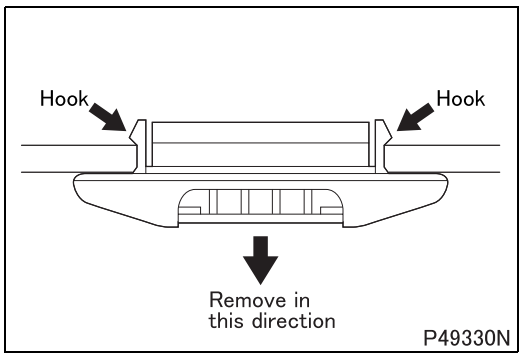

■ **Removal: In car sensor**

https://truckmanualshub.com/

HEAD LINING <EXCEPT CREW CAB>

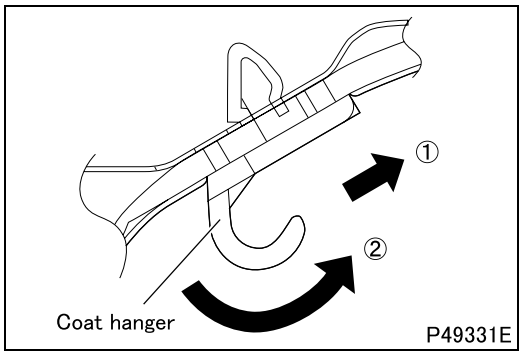

■ **Removal: Coat hanger**

- Remove the coat hanger from the head lining by pulling it in the direction of “2” while pressing it in the direction of “1”.

◆Installation procedure◆

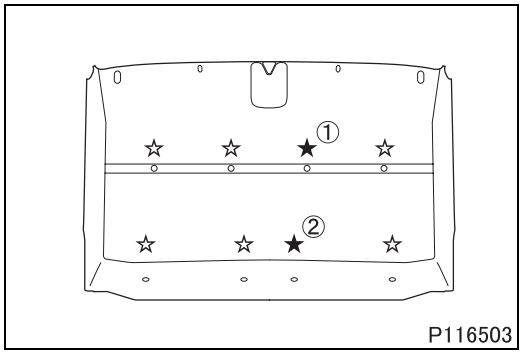

■ **Installation: Head lining**

- Install the head lining to the cab by first fastening the clips marked ★ (2 places) in the order shown in the illustration and then fastening the clips marked ☆ (6 places).

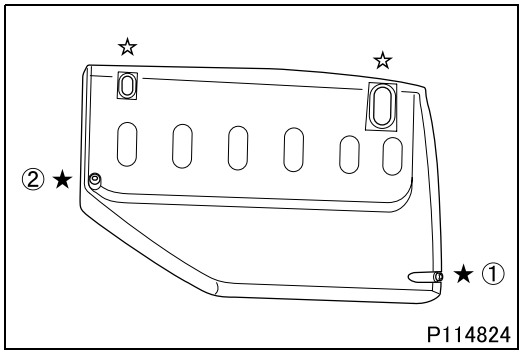

■ **Installation: Overhead shelf**

- Install the overhead shelf with the screws marked ★ (2 places) by tightening them in the order shown in the illustration and then with the screws marked ☆ (2 places) that are also used for fastening the sun visor hook and sun visor.

https://truckmanualshub.com/

M E M O

https://truckmanualshub.com/

HEAD LINING <CREW CAB>

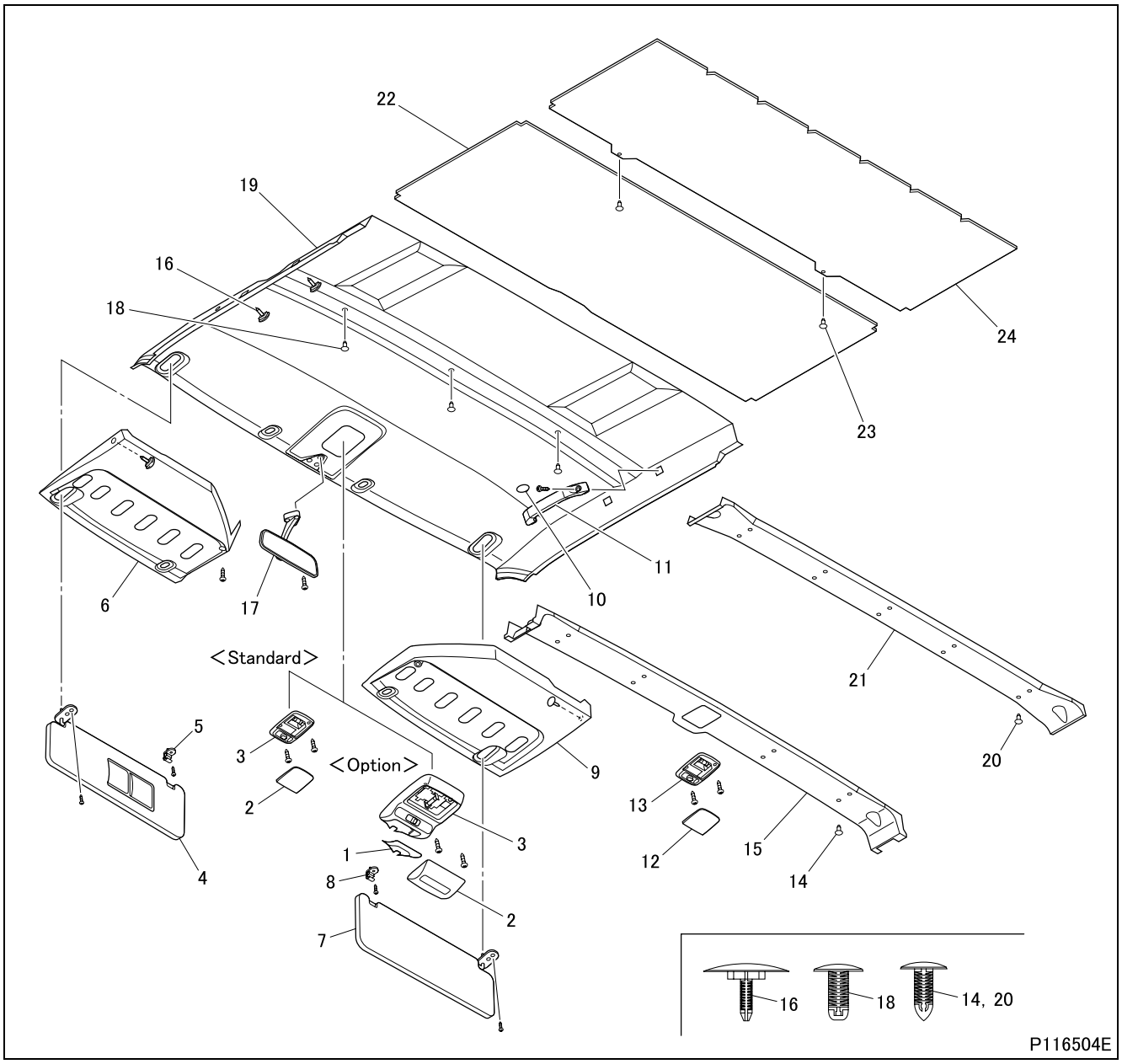

● **Removal sequence**

1 Cover <Option>
2 Lens
3 Room lamp
4 Sun visor (left-hand)
5 Sun visor hook
6 Overhead shelf (left-hand)
7 Sun visor (right-hand)
8 Sun visor hook
9 Overhead shelf (right-hand)
10 Cap
11 Grip
12 Lens
13 Rear room lamp
14 Clip (× 14)
15 Center roof garnish
16 Plug
17 Inside mirror
18 Clip (× 4)
19 Front head lining
20 Clip (× 14)
21 Rear roof garnish
22 Center head lining
23 Clip
24 Rear head lining

https://truckmanualshub.com/

● Installation sequence

Follow the removal sequence in reverse.

◆Removal procedure◆

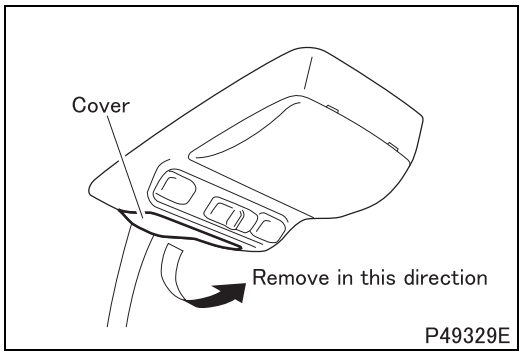

■ **Removal: Cover**

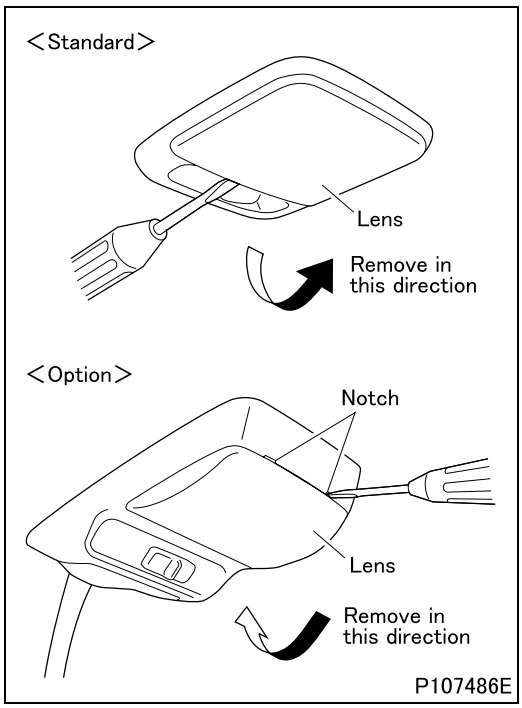

■ **Removal: Lens**

◆Installation procedure◆

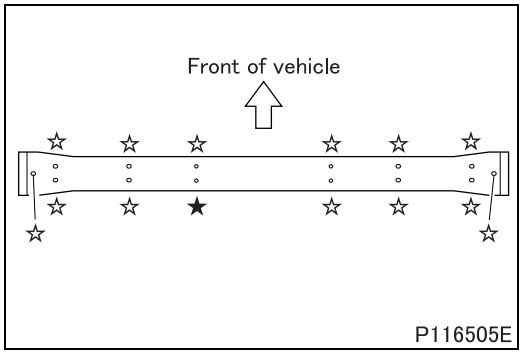

■ **Installation: Rear roof garnish**

- Locate the rear roof garnish correctly onto the cab by installing clips at the locations ★ (× 3). Install clips at the locations ☆ (× 11).

https://truckmanualshub.com/

HEAD LINING <CREW CAB>

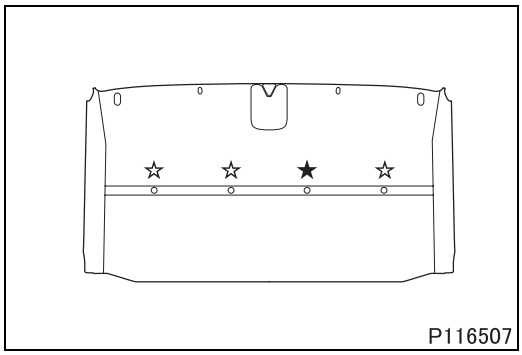

■ **Installation: Front head lining**

- Locate the front head lining correctly onto the cab by installing clips at the locations ★ (× 1). Install clips at the locations ☆ (× 3).

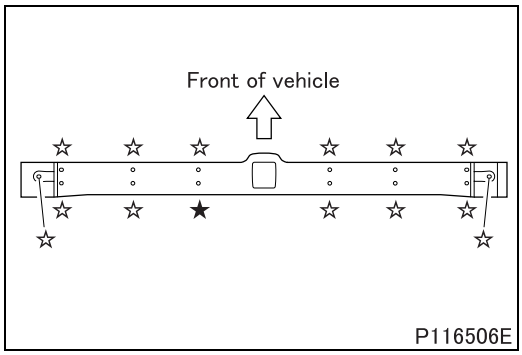

■ **Installation: Center roof garnish**

- Locate the center roof garnish correctly onto the cab by installing clips at the locations ★ (× 3). Install clips at the locations ☆ (× 11).

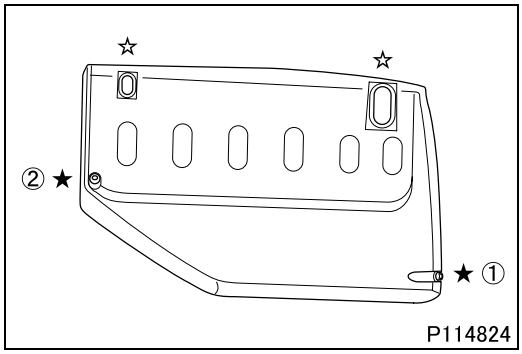

■ **Installation: Overhead shelf**

- Install the overhead shelf with the screws marked ★ (2 places) by tightening them in the order shown in the illustration and then with the screws marked ☆ (2 places) that are also used for fastening the sun visor hook and sun visor.

https://truckmanualshub.com/

FUSO

Group 54

Electrical

MITSUBISHI FUSO TRUCK OF AMERICA, Inc.

Pub.No.00ELT0001-54

https://truckmanualshub.com/

INDEX

54-00A GENERAL

(See Gr00.)

54-00B SPECIFICATIONS

SPECIFICATIONS 54-00B-2

54-00C STRUCTURE AND OPERATION

1. Starter 54-00C-2
2. Alternator 54-00C-3
3. Headlamps 54-00C-5
4. Meter Cluster 54-00C-6
5. Signal Detect and Actuation Modules . 54-00C-18
6. Immobilizer 54-00C-36

54-00D TROUBLESHOOTING

TROUBLESHOOTING 54-00D-2

54-01 POWER, CHARGE AND GROUND CIRCUIT

HIGH-CURRENT FUSE BOX 54-01-2
FUSE BOX 54-01-4
(105) SAM INTERNAL CIRCUIT 54-01-6
(110) POWER CIRCUIT 54-01-8
(115) RESERVE POWER CIRCUIT 54-01-22
(125) BATTERY CHARGING CIRCUIT 54-01-23
(130) GROUND 54-01-24

54-02 ENGINE STARTING, STOPPING AND PRE-HEATING CIRCUIT

(210) ENGINE STARTING CIRCUIT 54-02-2
(220) ENGINE PREHEATING CIRCUIT ..... (See Gr13E.)

54-03 LIGHTING CIRCUIT

(310) HEADLAMP CIRCUIT 54-03-2
(313) DAYTIME RUNNING LIGHT CIRCUIT 54-03-3
(315) FOG LAMP CIRCUIT 54-03-4
(320) TAIL, PARKING AND LICENSE PLATE LAMPS CIRCUIT 54-03-5
(325) STOP LAMP CIRCUIT 54-03-6
(330) TURN SIGNAL AND HAZARD LAMP CIRCUIT 54-03-7
(340) BACKUP LAMP CIRCUIT 54-03-8
(345) CAB LAMP CIRCUIT 54-03-10
(348) ILLUMINATION LAMP CIRCUIT .. 54-03-12
(349) IDENTIFICATION AND SIDE MARKER LAMP CIRCUIT 54-03-13
(352) VAN BODY DOME LIGHT CIRCUIT 54-03-14

54-04 METER CIRCUIT

(401) METER CLUSTER INTERNAL CIRCUIT 54-04-2
(410) TACHOMETER CIRCUIT 54-04-4
(412) SPEEDOMETER CIRCUIT 54-04-5
(415) TACHOGRAPH CIRCUIT 54-04-6
(420) FUEL GAUGE CIRCUIT 54-04-7
(425) WATER TEMPERATURE GAUGE CIRCUIT 54-04-8

https://truckmanualshub.com/

54-05 INDICATOR AND WARNING LAMP CIRCUIT

(510) PARKING BRAKE INDICATOR CIRCUIT 54-05-2
(515) BRAKE WARNING CIRCUIT 54-05-3
(536) ENGINE OIL PRESSURE WARNING CIRCUIT 54-05-4
(537) OVERHEATING WARNING CIRCUIT 54-05-5
(550) CAB TILT WARNING CIRCUIT 54-05-6
(554) STARTER KEY REMOVAL REMINDER ALARM CIRCUIT 54-05-7
(566) FUEL FILTER CIRCUIT 54-05-8

54-06 CAB SIDE ELECTRICAL CIRCUIT

(610) CIGARETTE LIGHTER CIRCUIT ... 54-06-2
(612) AUDIO CIRCUIT 54-06-3
(614) WIPER AND WASHER CIRCUIT ... 54-06-4
(616) HORN CIRCUIT 54-06-5
(620) HEATER AND AIR-CONDITIONER CIRCUIT 54-06-6
(622) POWER WINDOW AND CENTRAL DOOR LOCK CIRCUIT 54-06-8
(629) MIRROR HEATER CIRCUIT 54-06-9
(654) KEYLESS ENTRY CIRCUIT 54-06-10

54-08 ENGINE AND TRANSMISSION SIDE ELECTRICAL CIRCUIT

(810) FOUR-WHEEL DRIVE CIRCUIT 54-08-2
(850) TRANSMISSION POWER TAKE-OFF CIRCUIT 54-08-3

54-09 OTHER CIRCUIT

(905) JOINT CONNECTOR (J/C) 54-09-2
COMMON RAIL SYSTEM ELECTRIC CIRCUIT DIAGRAM ..... (See Gr13E.)
DUONIC™ SYSTEM ELECTRIC CIRCUIT DIAGRAM ..... (See Gr22E.)
ANTI-LOCK BRAKE SYSTEM ELECTRIC CIRCUIT DIAGRAM ..... (See Gr35E.)
FULLY AUTOMATIC AIR-CONDITIONER SYSTEM ELECTRIC CIRCUIT DIAGRAM ..... (See Gr55E.)

54-10 ELECTRICAL EQUIPMENT INSTALLATION POSITIONS

Cab side

[A] SWITCH AND SENSOR 54-10-2
[B] RELAY AND ELECTRONIC CONTROL UNIT 54-10-6
[C] METER AND MOTOR 54-10-10
[D] AIR-CONDITIONER 54-10-12
[E] DOOR 54-10-16
[F] ROOF 54-10-17
[G] CAB 54-10-18
[H] TILT 54-10-19
[J] JOINTS OF MAIN HARNESS CONNECTORS 54-10-20
[P] OTHERS 54-10-24

Engine and transmission

[R] ENGINE 54-10-26
[S] TRANSMISSION 54-10-28

Chassis side

[T] SWITCH AND SENSOR 54-10-30
[U] FUSE, RELAY AND ELECTRONIC CONTROL UNIT 54-10-36
[V] MAGNETIC VALVE, MOTOR AND BUZZER 54-10-38
[W] JOINTS OF MAIN HARNESS CONNECTORS 54-10-40
[X] OTHERS 54-10-44

https://truckmanualshub.com/

54-11 INSPECTION OF ELECTRICAL EQUIPMENT

#001 to #179 SWITCH 54-11-2
#180 to #249 RELAY 54-11-7
#250 to #349 SENSOR 54-11-8
#350 to #409 CONTROL UNIT 54-11-11
#410 to #509 MOTOR 54-11-12
#510 to #539 ACTUATOR 54-11-15
#560 to #609 MAGNETIC VALVE 54-11-16
#610 to #649 BUZZER, HORN 54-11-17
#650 to #699 LAMP 54-11-18
#750 to #859 OTHER 54-11-19
#860 BATTERY 54-11-22
#890 METER 54-11-25

54-12 STARTER AND ALTERNATOR

#930 STARTER 54-12-2
#940 ALTERNATOR 54-12-20

54-13 ON-VEHICLE INSPECTION AND ADJUSTMENT

#950 INSPECTION OF ALTERNATOR ...54-13-2
#951 INSPECTION OF REGULATOR 54-13-3
#960 HEADLAMP AIMING 54-13-4
#961 FOG LAMP AIMING 54-13-6
#984 INSPECTION OF IMMOBILIZER 54-13-8
#985 INSPECTION OF SIGNAL DETECT AND ACTUATION MODULES.....54-13-12
#986 INSPECTION OF METER CLUSTER.....54-13-48

54-14 CONNECTOR CONFIGURATION CHART

CONNECTOR CONFIGURATION CHART 54-14-2

https://truckmanualshub.com/

54-00B SPECIFICATIONS

https://truckmanualshub.com/

SPECIFICATIONS

Battery

Item		Specifications
Model		115D31L
Voltage × Quantity	V	12 × 1
Capacity (5-hour rating)	Ah	70

Alternator

Item		Specifications	
Manufacturer		Bosch	
Type		Alternator with built-in regulator	
Model		F000 BLO 622	0 124 525 216
Output	V-A	12-110	12-140

Starter and Preheat System

Item			Specifications
Starter	Manufacturer		MITSUBISHI ELECTRIC
	Model		M001T31071
	Output	V-kW	12-2.0
	Reduction gear mechanism		Planetary gears
	Magnetic switch operating voltage	V	8 or less
Starter relay	Model		U001T13974
	Excitation current	V-A	12-4
	Closing voltage	V	8 or less
	Opening voltage	V	3.5 or less
	Allowable cutoff current	A	200
Glow electronic control unit	Manufacturer		Bosch
Glow plug	Model		Sheathed type
	Excitation current	V-A	11-18 (reference value)

https://truckmanualshub.com/

Lighting

Item			Specifications
Headlamp	Model		Unconventional, 2-lamp-system
	Type		Reflector type
	Upper beam (HIGH)	W	60/55 (HB2)* (HIGH/LOW)
	Lower beam (LOW)	W	
	Parking lamp	W	5 (W5W)*
Fog lamp		W	55 (H3)*
Front and side turn signal lamp (serving also as hazard warning lamp)		W	21 (W21W)*
Clearance and side marker lamp		W	7.5
Rear combination lamp	Stop and tail lamp (stop/tail)	W	21/5 (P21/5W)*
	Rear turn signal lamp (serving also as hazard warning lamp)	W	21 (P21W)*
	Backup lamp	W	21 (P21W)*
Step lamp		W	5 (W5W)*
License plate lamp		W	10 (R10W)*
Identification lamp		W	7.5
Cab lamp		W	10
Cab and spot lamp		W	8

All bulbs in the lamps shown above have voltage rating of 12 volts.
*: The types of bulbs are shown in parentheses.

Meter

Item			Specifications
Meter cluster	Manufacturer		Continental
	Voltage	V	12
	Speedometer indicating range	km/h {MPH}	0 to 160 ($^{+3}_{0}$ at 60 km/h) {0 to 100 ($^{+2}_{0}$ at 40 MPH)}
	Tachometer indicating range	rpm	0 to 5000 (±50 at 3000 rpm)
	Water temperature gauge indicating range		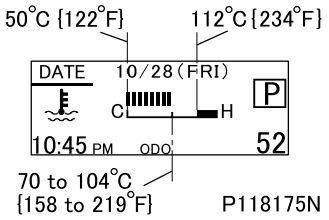
	Meter warning buzzer	Sound pressure dB	55 ± 5 (at 1 m {3.3 ft.})
	Low vacuum pressure buzzer	Sound pressure dB	75 ± 5 (at 1 m {3.3 ft.})

https://truckmanualshub.com/

SPECIFICATIONS

Relay, Radio, Motor, Horn, Buzzer

Item			Specifications
Minimum operating voltage of relay		V	8 or less
Relay in SAM	Minimum operating voltage	V	7.2 or less
	Rated voltage	V	12
AM/FM radio <Option>	Manufacturer		Clarion
	Type		RM9296RA
AM/FM radio (with CD) <Option>	Manufacturer		DAEWOO
	Type		AGC-0010AF
Loudspeaker	Rated input	W	15
	Maximum input	W	25
	Impedance	Ω	4 ± 0.6
Wiper motor	Rated voltage	V	12
	No-load current	A	4 or less
	Bound current	A	30 or less
Washer motor	Rated voltage	V	12
	Rated current	A	3.8 or less
Power window motor	Rated voltage	V	12
	Rated current	A	5 or less
Electric horn	Rated voltage	V	12
	Current consumption	A	3.5
	Sound pressure	dB	110 ± 5 (at 2 m {6.6 ft.})
Back buzzer	Rated voltage	V	12
	Rated current	mA	50 or less
	Sound pressure	dB	85 ± 10 (at 1 m {3.3 ft.})

https://truckmanualshub.com/

54-00C STRUCTURE AND OPERATION

https://truckmanualshub.com/

1. Starter

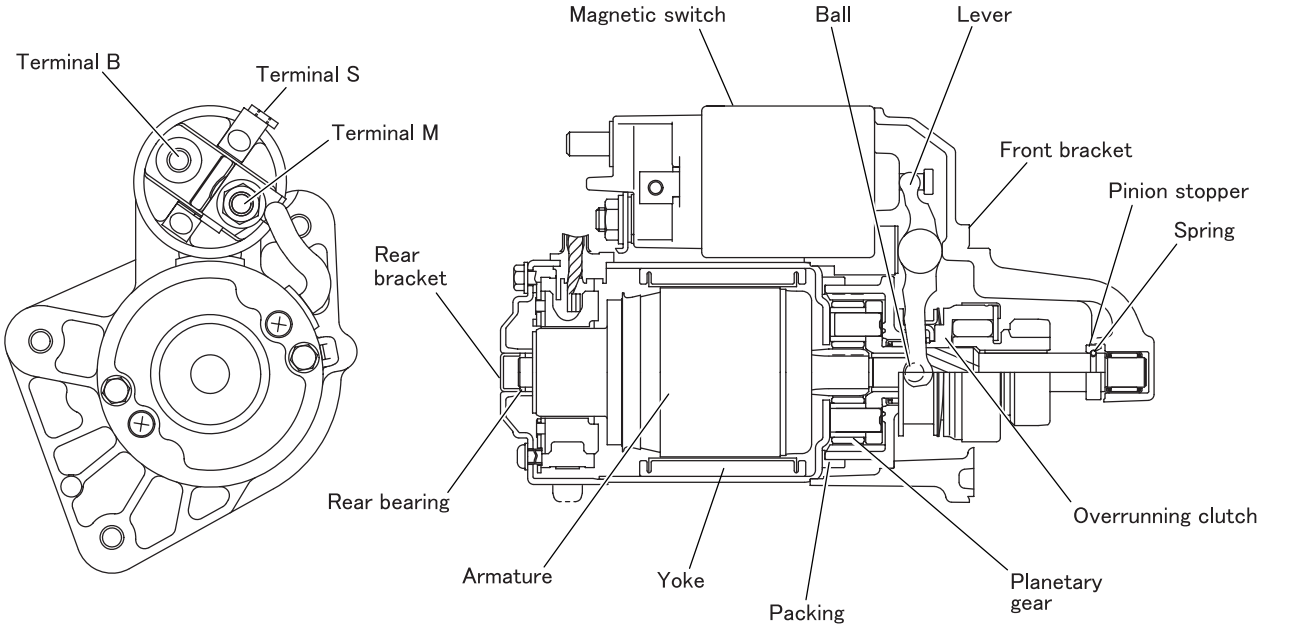

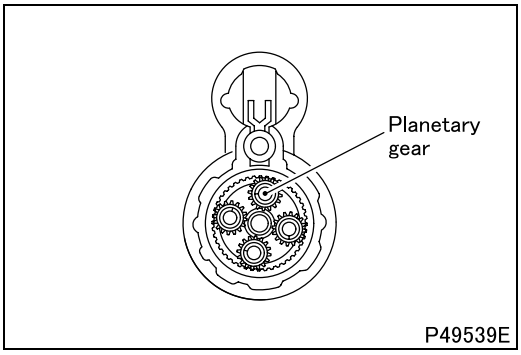

- This starter uses planetary gears as its reduction gearing mechanism.

https://truckmanualshub.com/

2. Alternator

<12V-110A (F 000 BL0 622)>

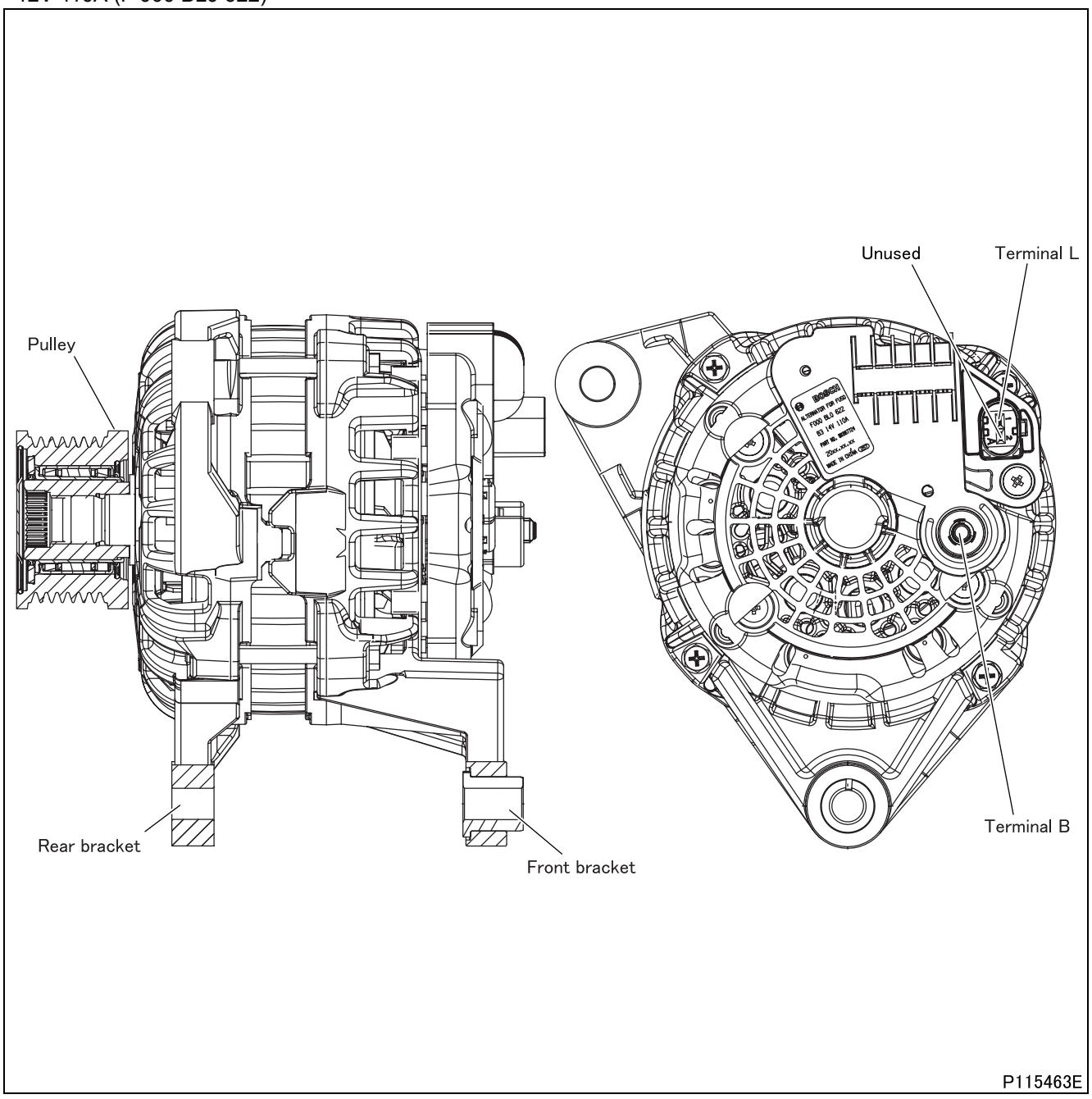

https://truckmanualshub.com/

<12V-140A (0 124 525 216)>

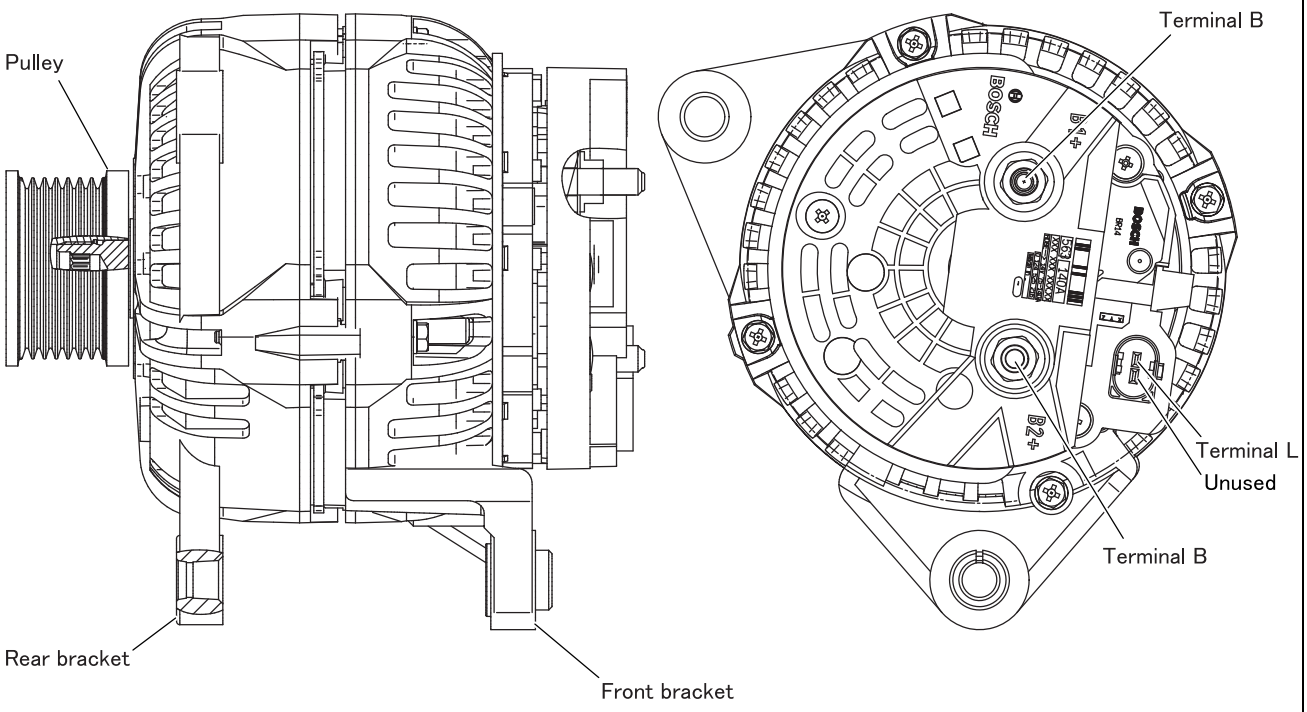

https://truckmanualshub.com/

3. Headlamps

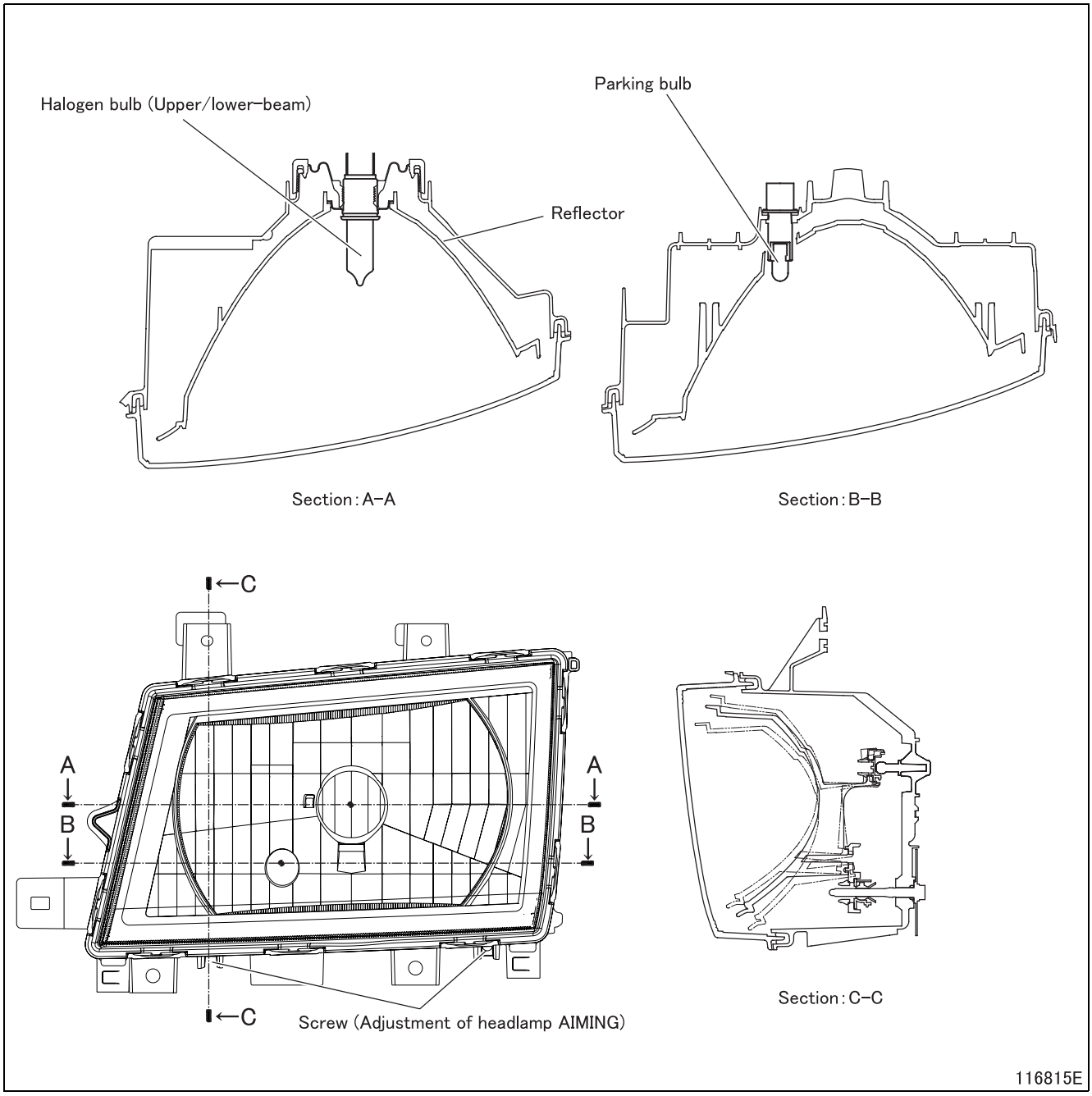

(Left headlamps are shown in this illustration.)

https://truckmanualshub.com/

4. Meter Cluster

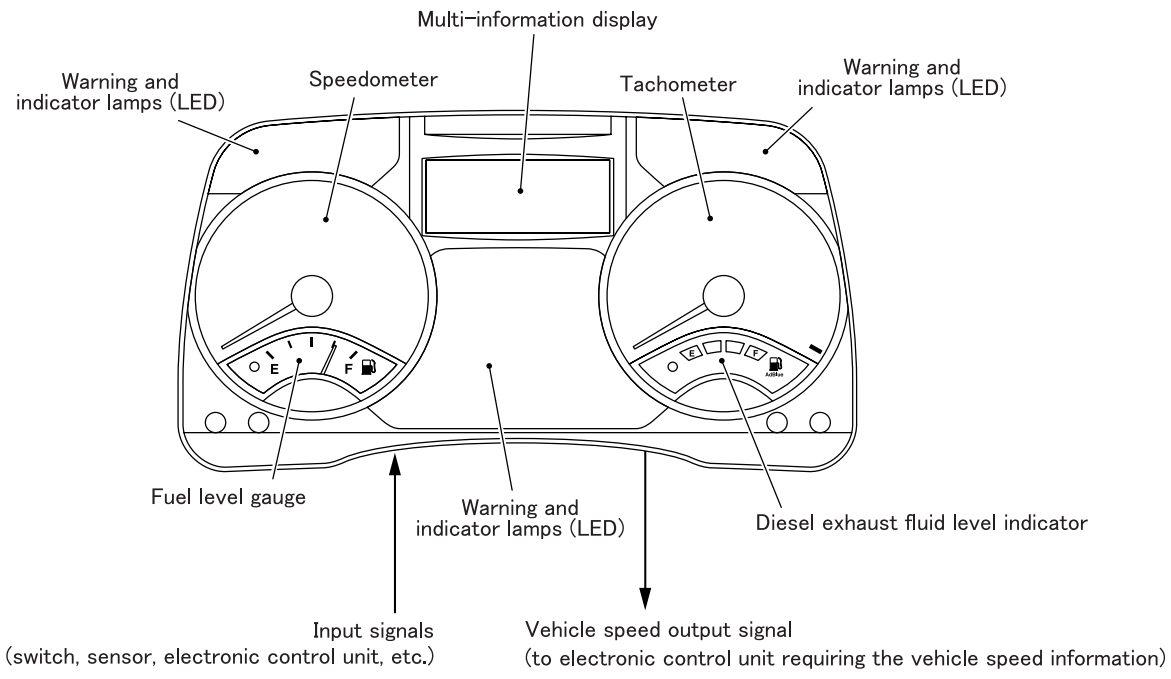

- This meter cluster contains a central processing unit with the following functions.
  - Instrument drive function (speedometer, tachometer, fuel level gauge)
  - Vehicle speed output distribution function
  - Indicator and warning lamps indication function
  - Multi-information display indication function
  - Diesel exhaust fluid level indicator operation function
  - Buzzer sound function
  - Fault diagnosis function

https://truckmanualshub.com/

4.1 Instrument drive function and vehicle speed output distribution function

(1) System block diagram

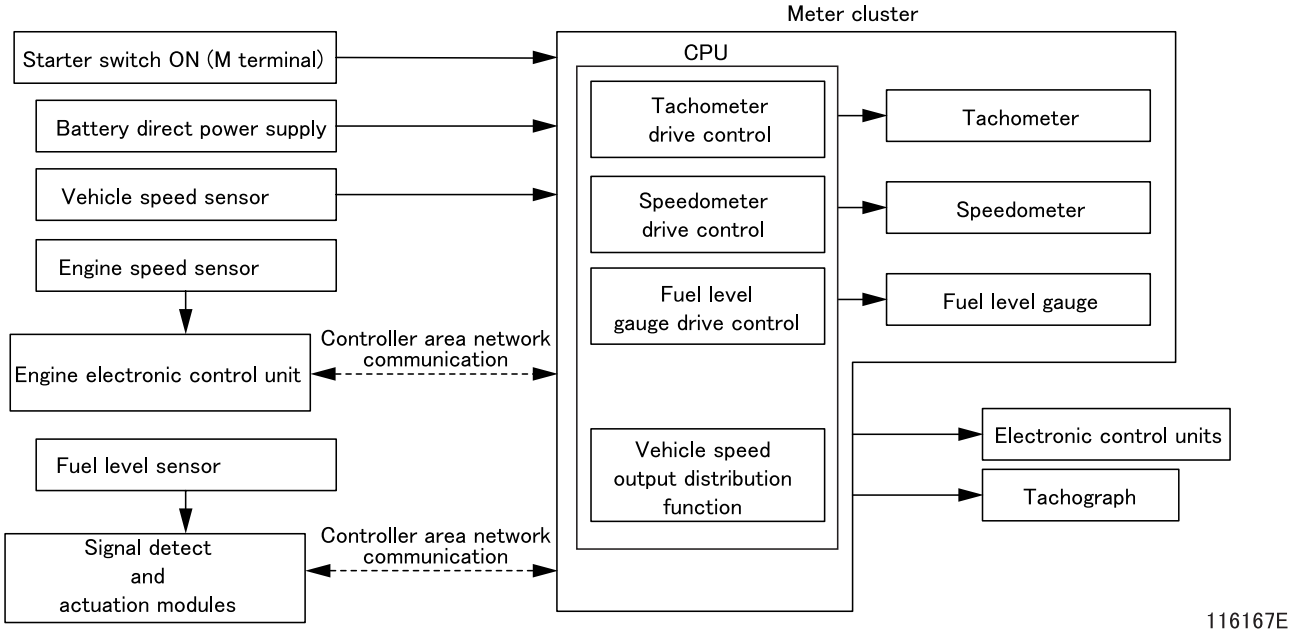

https://truckmanualshub.com/

4.2 Warning and indicator lamps indication function, multi-information display function, urea level indicator operation function and fault diagnosis function

(1) System block diagram

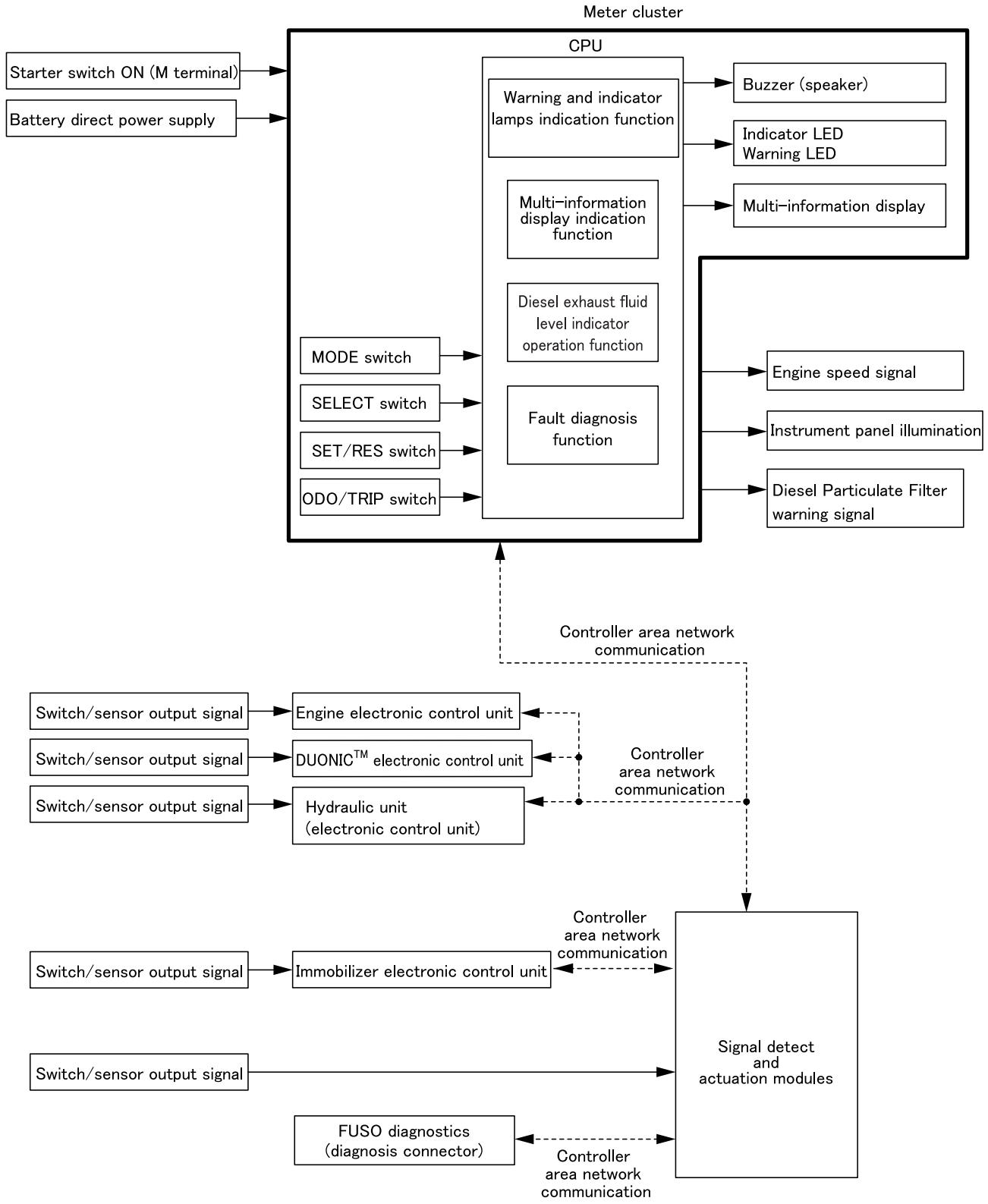

117205E

https://truckmanualshub.com/

4.3 General description

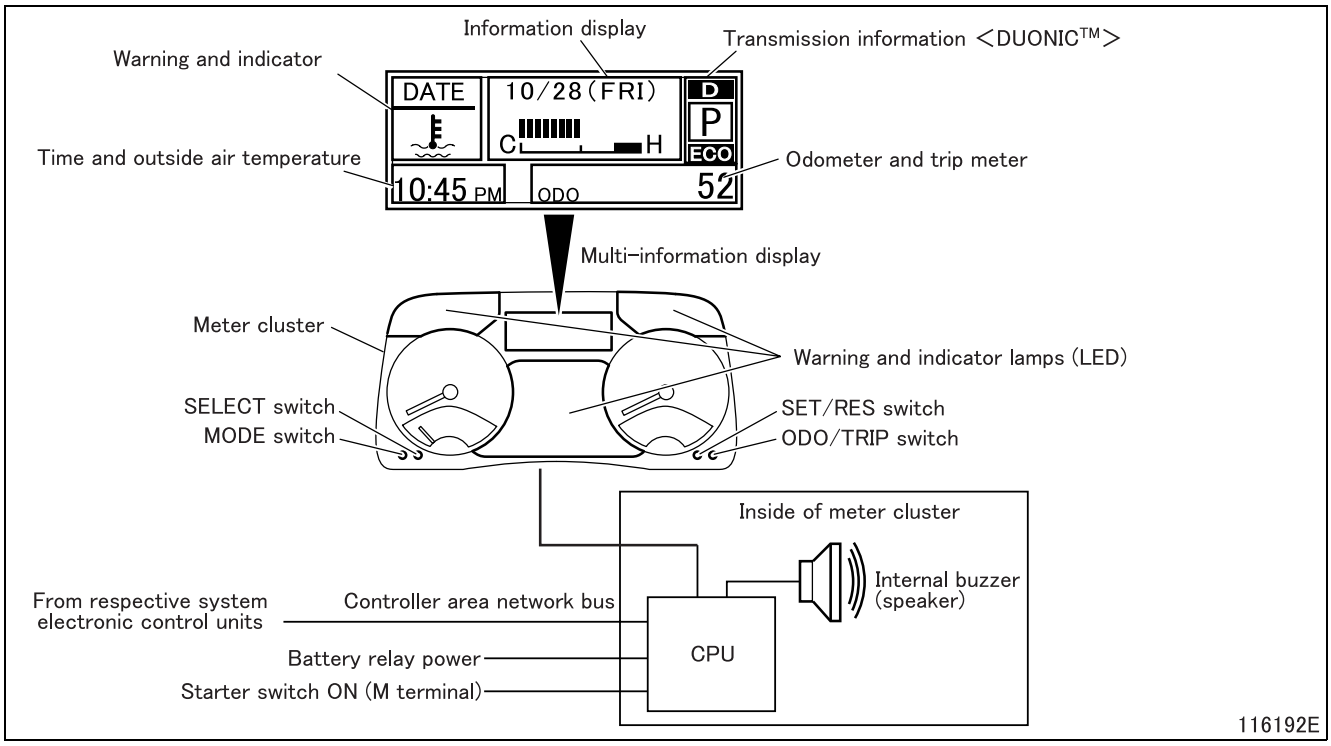

- The warning and indicator lamps indication function indicates warning characters or graphical marks (LED), thereby adequately alerting the driver to abnormalities.
- Output data signals from respective systems are gathered in the central processing unit in the meter cluster and indicated through appropriate LED or the multi-information display. Alarm is sounded by the buzzer (speaker) in the meter cluster.
- The system features are as shown below.
  - The multi-information display distinctly shows necessary information by changing display colors according to the degree of significance of the information.
  - MODE switch, SELECT switch, SET/RES switch and ODO/TRIP switch are used to have option vehicle information (such as trip meter, clock, check and service data) and diagnosis codes for respective electronic control systems indicated by the multi-information display according to information gathered in the meter cluster.
  - When there are two or more warning items, the display is switched to show them in every three seconds.

https://truckmanualshub.com/

(1) Multi-information display indication transition diagram

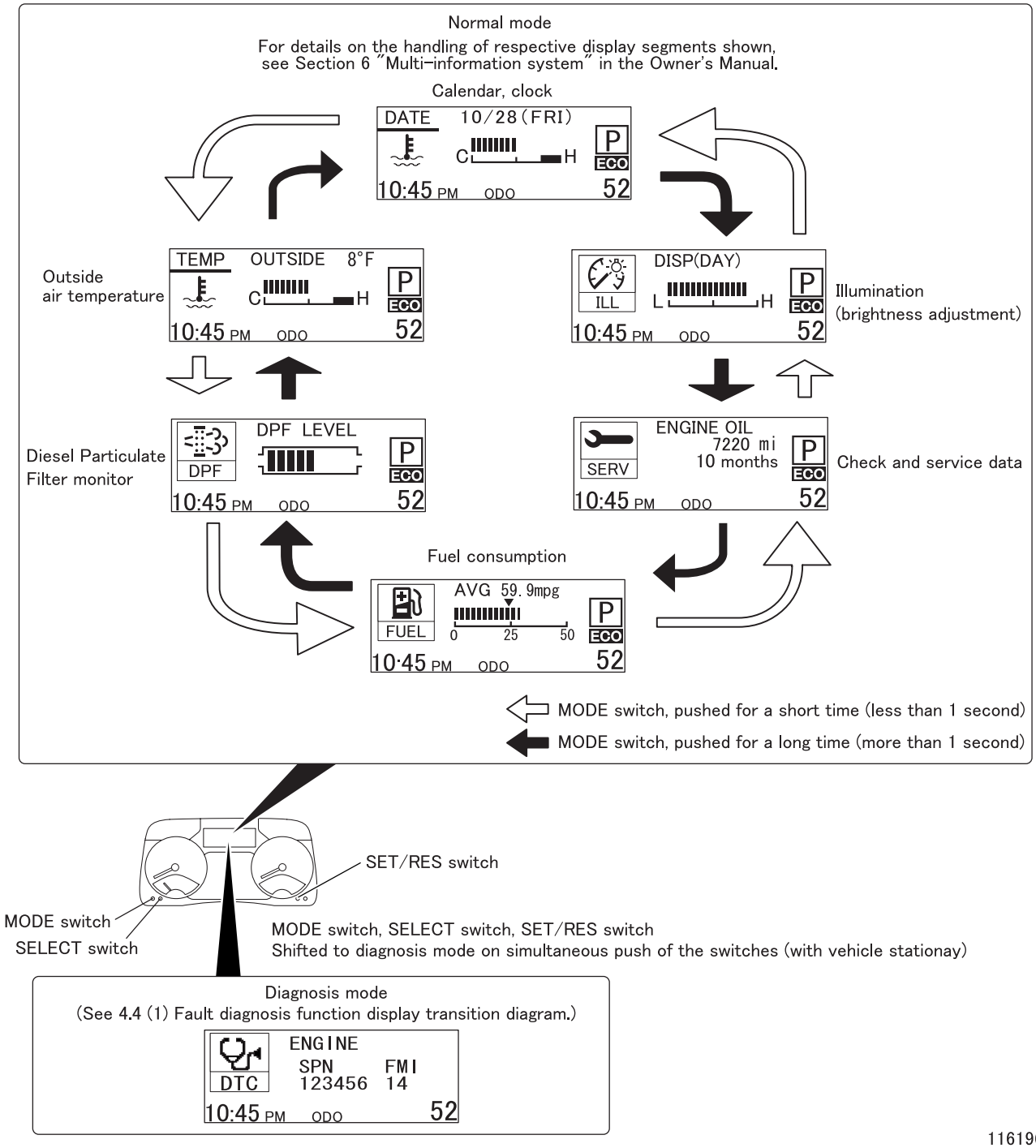

116196N

https://truckmanualshub.com/

(2) Indicator lamps (LED)

Lamp	Illuminating/ flashing	Internal buzzer sounding	Condition for illuminating/flashing	Remarks
•	Illuminates	–	Fuel level is low	See (420).
BRAKE or (!)	Illuminates	O	Parking brake is engaged (Buzzer sounds when vehicle speed exceeds 12 km/h with parking brake engaged.)	See (510).
		–	Brake fluid level is low	See (515).
LOW VACUUM	Illuminates	–	Vacuum in vacuum tank is low <Vacuum booster-equipped vehicle>	See (515).
	Illuminates	O	Engine is overheated	See (537).
	Illuminates	–	Charging system is defective	See (125).
	Illuminates	–	Engine hydraulic pressure is low	See (536).
	Illuminates	–	Engine is being preheated	See Gr13E.
	Illuminates	–	• Engine control system is defective • Exhaust gas aftertreatment is defective	See Gr13E.
(orange)	Flashes	–	• Soot is accumulated in Diesel Particulate Filter (flashes at 0.5 second interval)	See Gr13E.
	Flashes	–	• Diesel Particulate Filter requires cleaning (flashes at 0.25 second interval)	
	Illuminates	–	• Manual regeneration is in progress in the Diesel Particulate Filter	
(green)	Illuminates	–	Automatic regeneration is in progress in the Diesel Particulate Filter	See Gr13E.
	Illuminates	O	• Abnormality is detected by NOx sensor • BlueTec® exhaust gas aftertreatment system is defective • Diesel exhaust fluid level decreases (5% or lower) • Quality of diesel exhaust fluid refilled decreases	See Gr17E.
	Flashes	O	• Abnormality is detected by NOx sensor • Quality of diesel exhaust fluid refilled decreases	
DEF GAUGE •	Illuminates	O	Diesel exhaust fluid level decreases (10% or lower)	See Gr17E.
	Flashes	O	• Diesel exhaust fluid level decreases (5% or lower) • Diesel exhaust fluid tank is empty • Abnormality is detected by NOx sensor • Quality of diesel exhaust fluid refilled decreases	
	Illuminates	–	Headlamp high beam is on	See (310).
	Illuminates	–	Fog lamp is on	See (315).
	Flashes	O (turn signal sound)	• Turn signal lamp is on • Hazard lamp is on	See (330).
	Illuminates	–	• Exhaust brake is on • Warm-up system is on	See Gr13E.

https://truckmanualshub.com/

Mark	Illuminating/ flashing	Internal buzzer sounding	Condition for illuminating/flashing	Remarks
ABS or (ABS)	Illuminates	–	Anti-lock brake system is abnormal	See Gr35E.
	Illuminates	–	• Engine immobilizer starter key communication is defective • Engine immobilizer system is defective	See (210).
	Illuminates	–	Vehicle is running in four-wheel drive mode	See (810).
	Illuminates	–	Headlamp comes on by daytime running light system	See (313).
AUTO	Illuminates	–	Vehicle is running in cruise control mode	See Gr13E.

https://truckmanualshub.com/

(3) Multi-information display indications

Mark	Illuminating/ flashing	Internal buzzer sounding	Condition for illuminating/flashing	Remarks
ENG SYS (red)	Illuminates	–	Engine output is limited	See Gr13E.
ENG SYS (orange)	Illuminates	–	• Engine check is required • Engine oil change is required (when the mark appears alternately with ENG OIL) • System is reset after engine oil change (indicated for 10 seconds)	See Gr13E.
T/M OIL	Illuminates	–	Transmission fluid is too hot	See Gr22E.
T/M SYS (red)	Illuminates	O	DUONIC^{TM} system is faulty or abnormal in electric control system (The system malfunction causes gears to remain in the present shift position; lamp comes on and buzzer sounds.)	See Gr22E.
T/M SYS (orange)	Illuminates	–	DUONIC^{TM} system is faulty or abnormal in electric control system (Automatic or manual gear shifting is enabled.)	See Gr22E.
CAB TILT	Illuminates	O	Cab tilt lock is incomplete (Buzzer sounds at vehicle speed beyond 5 km/h.)	See **550**.
SAM (red)	Illuminates	–	Signal detect and actuation modules are faulty in electric control system	See **105**.
SAM (orange)	Illuminates	–	Signal detect and actuation modules are abnormal in electric control system (when outside light check is needed)	See **105**.
METER	Illuminates	–	Meter cluster electric circuit is defective	See **401**.
ENG OIL	Illuminates	–	• Engine oil change is required (when quantity of fuel mixed in engine oil exceeds upper limit)	See Gr13E.
DPF FULL	Illuminates	–	Soot accumulation in Diesel Particulate Filter is excessive	See Gr13E.
WATER SEPR	Illuminates	–	Moisture in fuel filter becomes excessive	See **566**.

https://truckmanualshub.com/

Mark	Illuminating/ flashing	Internal buzzer sounding	Condition for illuminating/flashing	Remarks
PTO	Illuminates	–	Transmission power take-off is connected <Vehicles with transmission power take-off>	See (850).
PTO READY	Illuminates	–	Transmission power take-off is ready for connection <Vehicles with DUONIC™ transmission power take-off>	See (850).
ENG OIL	Illuminates	–	Less than 1,000 km (600 miles) or one month remains before the next scheduled engine oil change interval	–
OIL FILTER	Illuminates	–	Less than 1,000 km (600 miles) or one month remains before the next scheduled engine oil filter replacement interval	–
FUEL FILTER	Illuminates	–	Less than 1,000 km (600 miles) or one month remains before the next scheduled fuel filter replacement interval	–
BRAKE FLUID	Illuminates	–	Less than 1,000 km (600 miles) or one month remains before the next scheduled brake fluid change interval	–
AIR FILTER	Illuminates	–	Less than 1,000 km (600 miles) or one month remains before the next scheduled air cleaner replacement interval	–
F/M OIL	Illuminates	–	• Less than 1,000 km (600 miles) or one month remains before the next scheduled clutch fluid and transmission fluid change interval • Less than 1,000 km (600 miles) or one month remains before the next scheduled transmission fluid change interval (manual transmission)	–
HUB GREACE	Illuminates	–	Less than 1,000 km (600 miles) or one month remains before the next scheduled wheel hub bearing grease change interval	–
DIFF OIL	Illuminates	–	Less than 1,000 km (600 miles) or one month remains before the next scheduled differential gear oil change interval	–
P/S OIL	Illuminates	–	Less than 1,000 km (600 miles) or one month remains before the next scheduled power steering fluid change interval	–
ENG WATER	Illuminates	–	Less than 1,000 km (600 miles) or one month remains before the next scheduled engine coolant change interval	–

(4) Alarm with buzzer only (without warning lamp on)

Buzzer	Internal buzzer sounding	Condition for buzzing	Remarks
Back buzzer	O	Shifter lever is put in the “R” position	–
Key reminder buzzer	O	When all conditions below are established • Starter key is left inserted • Starter switch in the OFF position • Driver’s side door switch is in “OPEN” position	–

https://truckmanualshub.com/

4.4 Fault diagnosis function

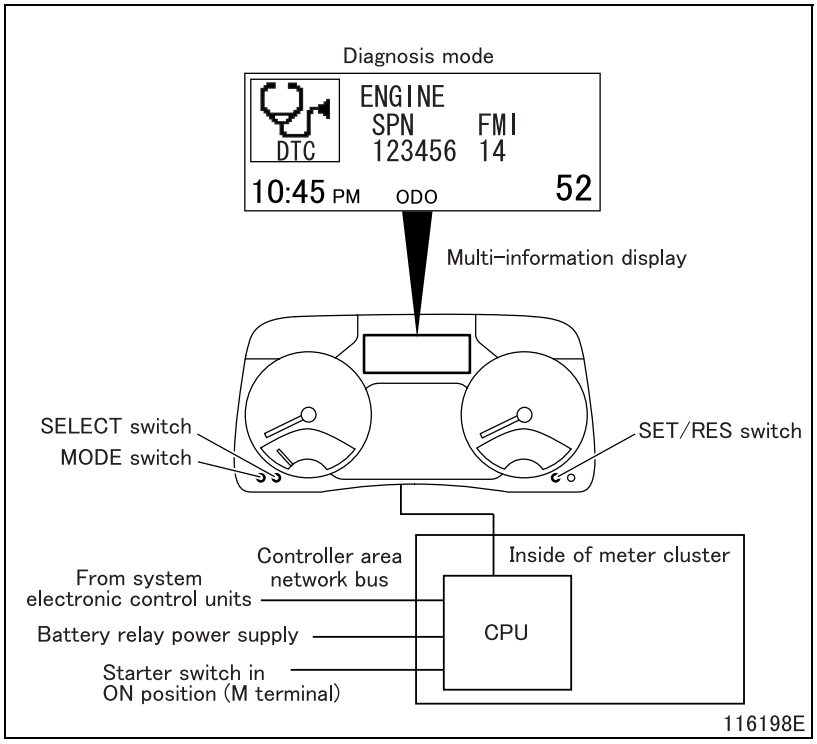

- The fault diagnosis function establishes the diagnosis mode through simultaneous push of the MODE, SELECT and SET/RES switches with the vehicle at a stop to perform the fault diagnosis of respective systems.

https://truckmanualshub.com/

STRUCTURE AND OPERATION

(1) Fault diagnosis function (diagnosis mode) display transition diagram (anti-lock brake system electronic control unit (hydraulic unit))

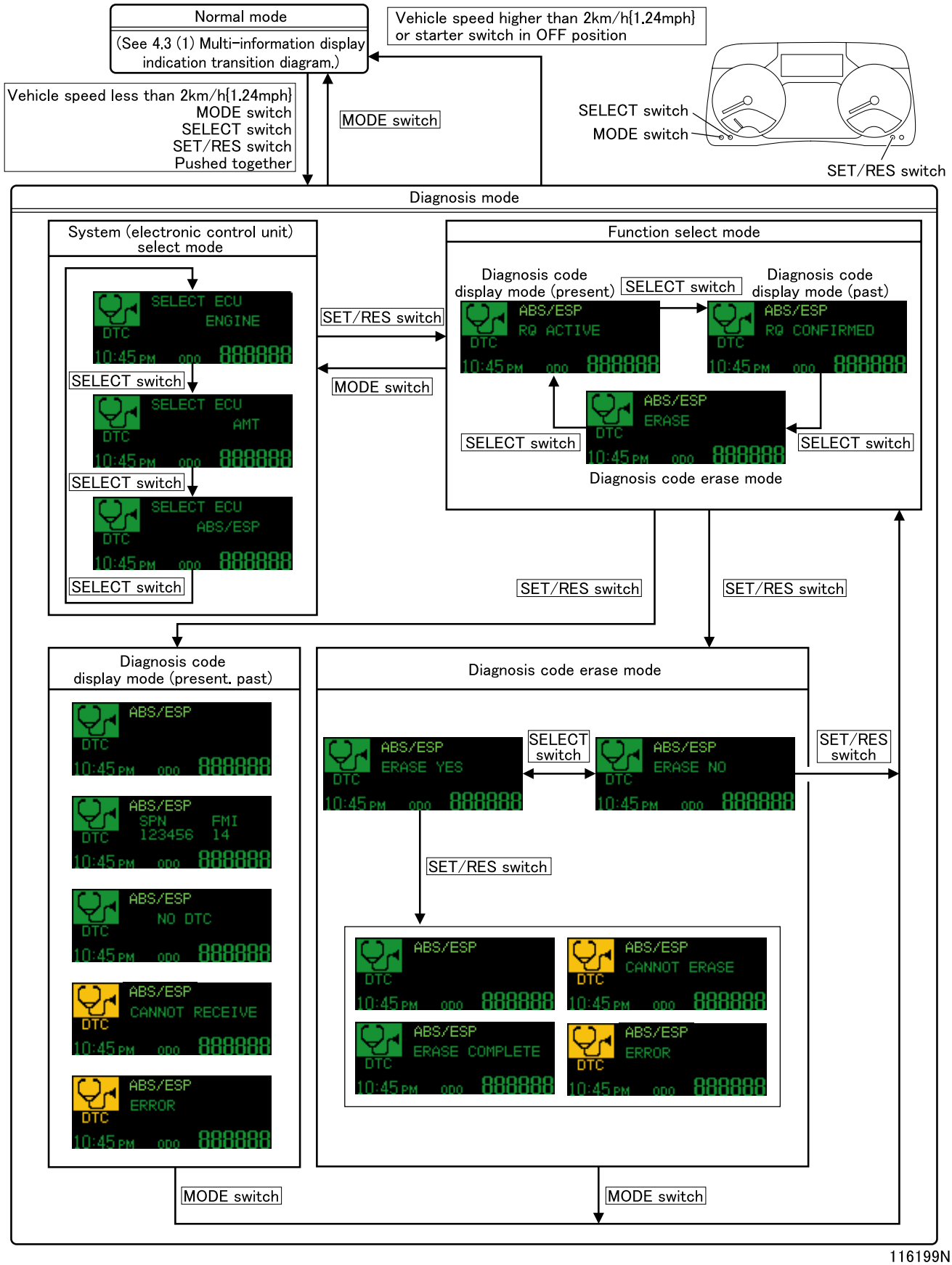

https://truckmanualshub.com/

4.5 Electronic control unit circuit diagram

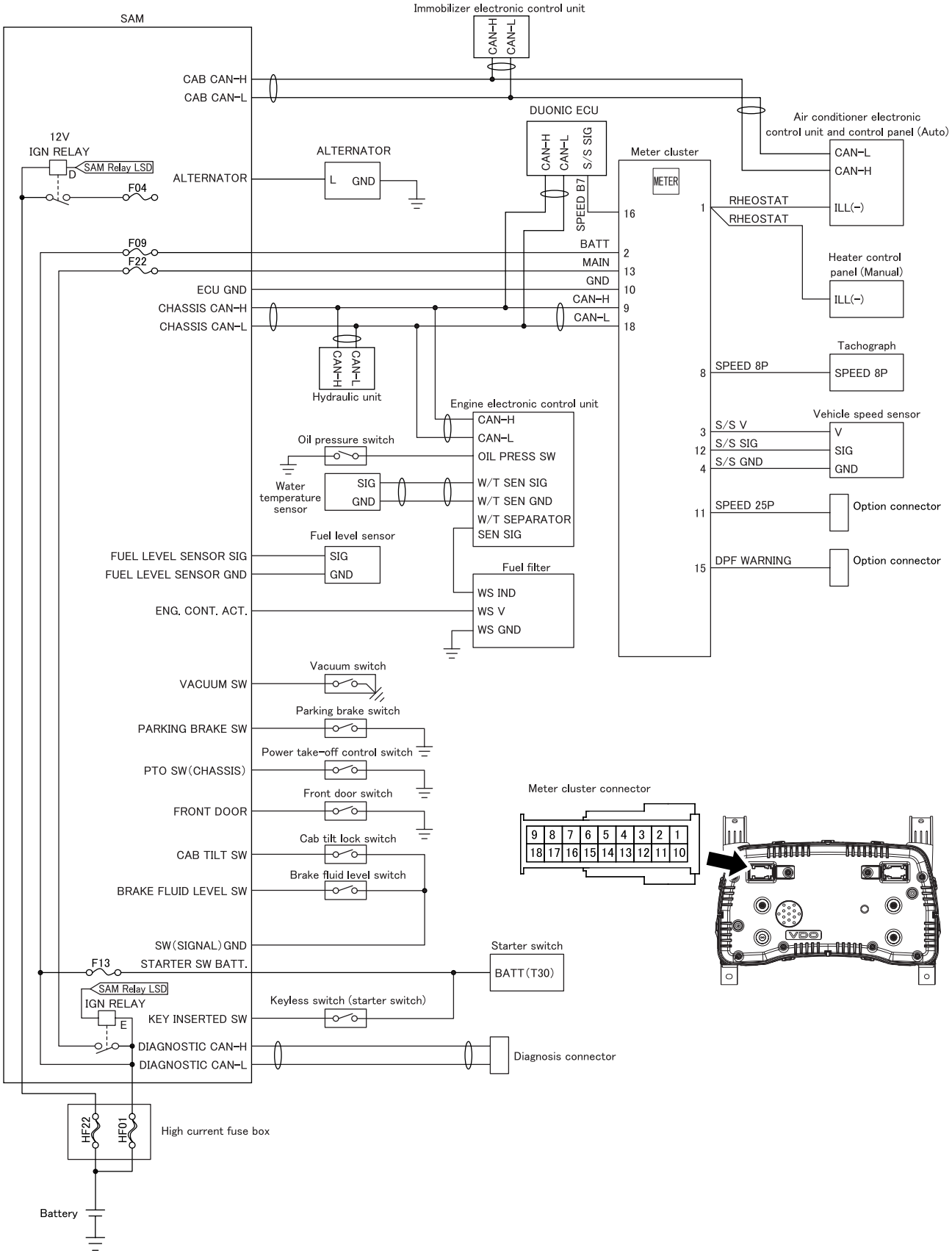

C07345-ECU-MTR E

https://truckmanualshub.com/

5. Signal Detect and Actuation Modules

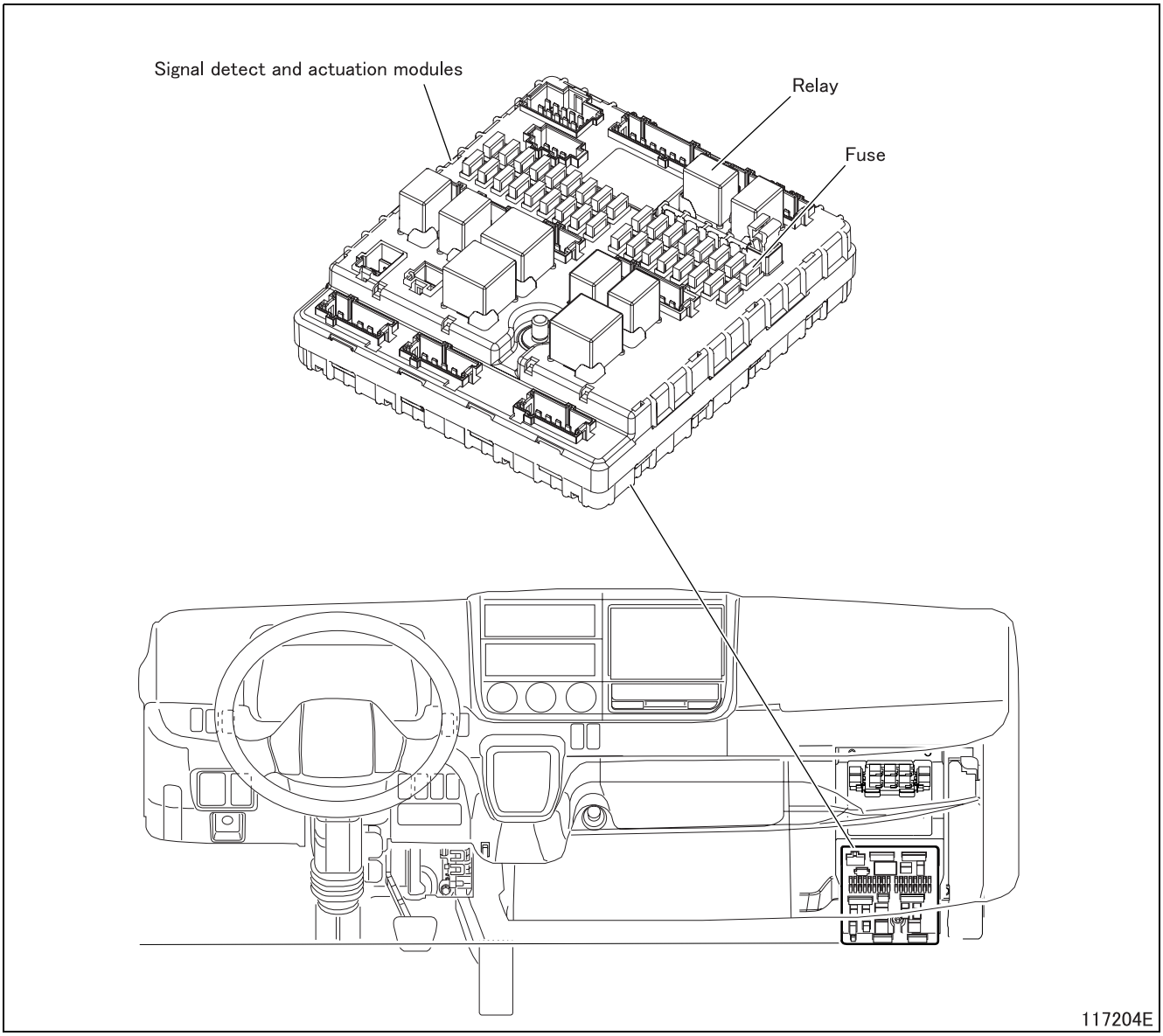

- Signal detect and actuation modules contains conventional relays and fuses in the central processing unit and effects integrated control of electric parts and power distribution. Basically, it has the following functions.
  - Power supply and power distribution functions
  - Detection of various control switch output signals (starter switch, combination switch, etc.)
  - Detection of various detection switch output signals (stop lamp switch, clutch switch, etc.)
  - Detection of various sensor output signals (fuel level sensor, etc.)
  - Junction for controller area network communication between electronic control units
  - Fault diagnosis function
  - Open circuit detection function
  - Various lighting control functions (blown bulb detection)
  - Wiper & washer control
  - Mirror (mirror heater) control

https://truckmanualshub.com/

CAUTION ⚠

- **Before replacing the signal detect and actuation modules, associated fuses and relays, be sure to disconnect (–) battery cable and protect the (–) battery terminal and (–) battery cable with insulating tape or the like.**
- **When a fuse is blown, identify the cause and repair to remove it completely. Then, install a new fuse. Be sure to use the fuse of designated ampere.**
- **To remove a spare fuse, insert a fuse puller from outside the wall holding the spare fuse. Inserting the fuse puller from inside the wall may damage the signal detect and actuation modules, resulting in system malfunction or a fire.**
- **Connect the (+) and (–) cables to the battery at right terminals. Wrong connection causes an excessive current to the signal detect and actuation modules, damaging internal elements and circuits.**

https://truckmanualshub.com/

5.1 System block diagram

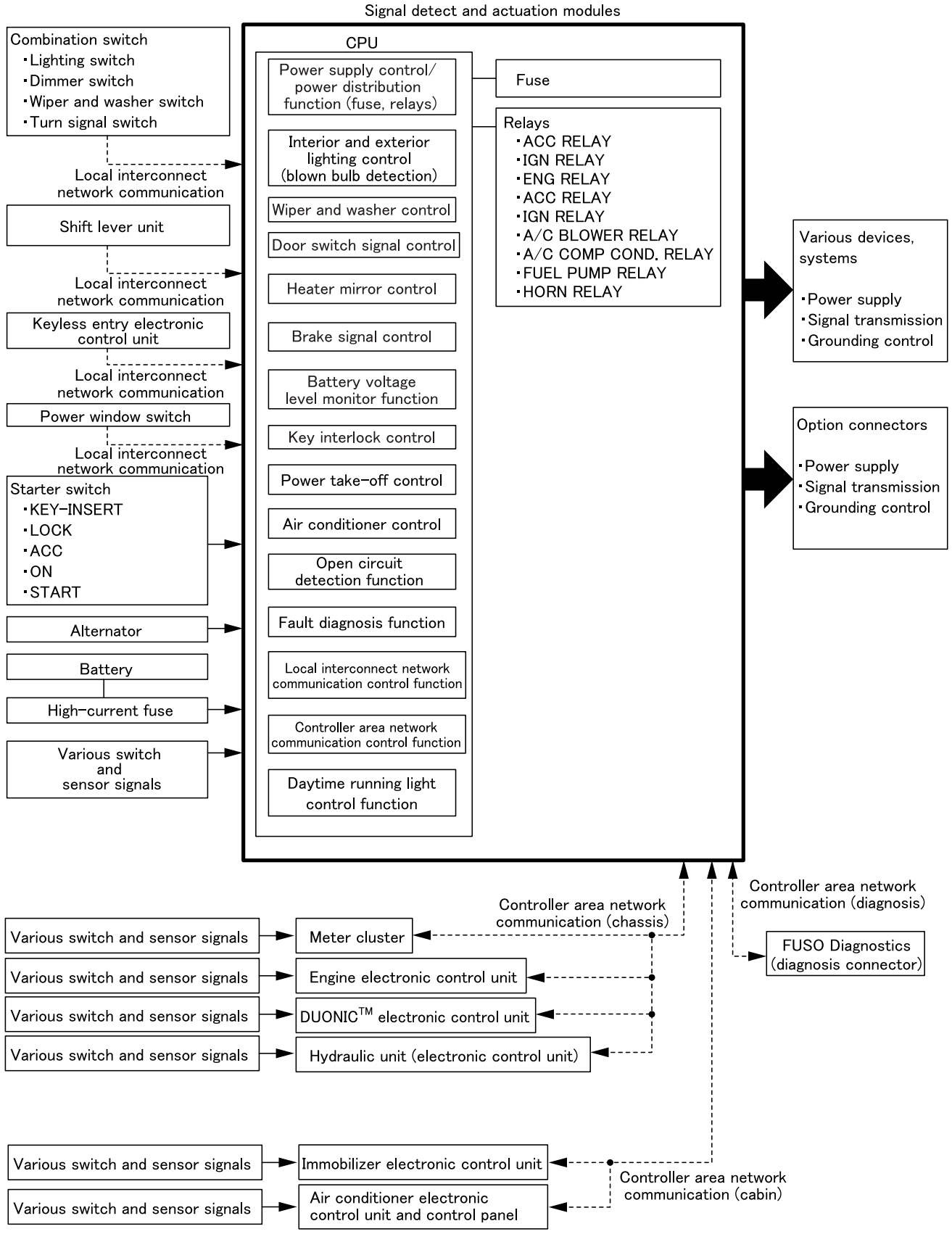

117206E

https://truckmanualshub.com/

5.2 Input and output signals list by signal detect and actuation modules functions

Function	Input	Output	Remarks
Back buzzer	• Starter switch • Back light switch	• Back buzzer • Buzzer in meter cluster • Electronic control units	See (340).
Power take-off subsystem	• Starter switch • Transmission power take-off switch (cab) • Power take-off control switch (chassis)	• Option connector: Power take-off • Electronic control units	See (850).
Backup switch signal output	• Starter switch • Backup lamp switch	Option connector: Backup light switch	See (115).
Parking brake switch output	• Starter switch • Parking brake switch	Option connector: Parking brake switch cut-off	See (115).
Service brake switch	• Stop lamp switch N.O. (service brake switch 1) • Stop lamp switch N.C. (service brake switch 2)	Electronic control units	See (325), Gr13E, Gr22E, Gr35E.
Parking brake switch	Parking brake switch	Electronic control units	See (510).
Brake fluid level switch	Brake fluid level switch	Electronic control units	See (515).
Vacuum flow switch	Vacuum switch	Electronic control units	See (515).
Air conditioner compressor clutch & condenser fan motor	• Starter switch • Air conditioner cut-off signal (controller area network signal) • Air conditioner main switch	• Air conditioner condenser fan motor • Dual pressure switch (air conditioner compressor clutch)	See (620), Gr55E.
Air conditioner blower motor control	• Starter switch • Air conditioner cut-off signal (controller area network signal)	• Air conditioner blower motor • Air conditioner blower motor grounding point	See (620), Gr55E.
Door switch status	• Driver's seat side door switch • Assistant driver's seat side door switch • Rear door switch (left-hand, right-hand) • Starter switch	Electronic control units	See (345).
Keyless entry	• Answer back signal (local interconnect network communication) • Driver's seat side door switch • Assistant driver's seat side door switch • Rear door switch (left-hand, right-hand) • Starter key insert	• Rear turn signal lamp (left-hand) • Rear turn signal lamp (right-hand) • Front turn signal lamp (left-hand) • Front turn signal lamp (right-hand) • Option connector: Side turn signal lamp (left-hand) • Option connector: Side turn signal lamp (right-hand) • Interior lamp	See (115), (654).
Diesel Particulate Filter	Diesel Particulate Filter cleaning switch	Engine electronic control unit	See Gr13E.
Fuel level sensor	Fuel level sensor	Meter cluster	See (420).

https://truckmanualshub.com/

Function	Input	Output	Remarks
Starter switch & relay control	• Starter switch ACC • Starter switch ON • Starter switch CRANK • Starter switch inserted	• Electronic control units [In signal detect and actuation modules] • IGN RELAY • ACC RELAY • IGN RELAY (OPTION) • ACC RELAY (OPTION)	See (105), (110).
Backup lamp	Backup lamp switch	Backup lamp (left-hand, right-hand)	See (340).
Headlamp	• Starter switch • Combination switch	• Low beam (left-hand) • Low beam (right-hand)	See (310).
	• Starter switch • Combination switch	• High beam (left-hand) • High beam (right-hand) • Meter cluster	
Stop lamp	Stop lamp switch N.O. (service brake switch 1)	• Stop lamp (left-hand) • Stop lamp (right-hand)	See (325).
Position lamp, license plate lamp, tail lamp	• Starter switch • Combination switch	• Position lamp (left-hand) • Position lamp (right-hand) • License plate lamp (left-hand) • License plate lamp (right-hand) • Tail lamp (left-hand) • Tail lamp (right-hand)	See (320).
		• Identification lamp relay • Clearance and side marker lamp (right-hand) • Clearance and side marker lamp (left-hand) • Identification lamp (right-hand) • Identification lamp (left-hand) • Identification lamp (center)	See (349).
Turn signal lamp, hazard lamp	• Hazard lamp switch • Combination switch	• Rear turn signal lamp (left-hand) • Rear turn signal lamp (right-hand) • Front turn signal lamp (left-hand) • Front turn signal lamp (right-hand) • Option connector: Side turn signal lamp (left-hand) • Option connector: Side turn signal lamp (right-hand) • Meter cluster	See (115), (330).
Fog lamp	• Combination switch • Fog lamp switch	• Fog lamp (left-hand) • Fog lamp (right-hand) • Meter cluster	See (315).
Cab lamp	• Driver's seat side door switch • Assistant driver's seat side door switch • Rear door switch (left-hand, right-hand) • Starter switch	• Cab lamp (battery) • Cab lamp (control)	See (345).
Step lamp	• Driver's seat side door switch • Assistant driver's seat side door switch	• Step lamp (driver's seat side) • Step lamp (assistant driver's seat side)	See (345).
Illumination lamp	Combination switch	• Air conditioner control panel illumination • Audio illumination • Various control switches illumination • Option connector: Illumination chassis • Option connector: Illumination body	See (115), (348).

https://truckmanualshub.com/

Function	Input	Output	Remarks
Cab tilt signal switch	Cab tilt lock switch	Meter cluster	See (550).
Alternator (L terminal)	Alternator (L terminal)	Meter cluster	See (125).
Clutch switch (upper)	Clutch switch	Electronic control units	See Gr13E.
Key interlock	• Gear shift signal (controller area network line) • Starter switch	Key interlock solenoid: control	See (873).
Wiper & washer	• Starter switch • Combination switch	• Wiper motor (LOW) • Wiper motor (HIGH) • Washer motor (CONTROL)	See (514).
Battery monitor	Battery	Limitation of various functions at low voltage and overvoltage	–
Horn	Horn switch	• Horn battery [In signal detect and actuation modules] • Horn relay	See (616).
Mirror heater	Mirror heater switch	• Mirror heater switch illumination • Mirror heater on driver's seat side • Mirror heater on assistant driver's seat side	See (629).
Central door locking switch control	Door lock switch	• Power window switch (right-hand) • Power window switch (left-hand) • Door lock actuator (right-hand) • Door lock actuator (left-hand) • Rear door lock actuator (right-hand) • Rear door lock actuator (left-hand)	See (622).
Daytime running light	• Combination switch • Parking brake switch • Alternator (terminal L) • Engine electronic control unit	• Headlamp (right-hand) • Headlamp (left-hand) • Meter cluster	See (313).
Transfer four-wheel drive switch status	Transfer four-wheel drive switch	• Meter cluster • Anti-lock brake electronic control unit	See (810).

https://truckmanualshub.com/

Function		Input	Output	Remarks
Power distribution module: J: accessory relay output	Fuse F15	–	• DUONIC™ electronic control unit accessory • Audio accessory • ETC accessory • CLU accessory relay drive	See (105), (115), (110).
	Fuse F16	–	• Cigarette lighter accessory • Motor-driven retractable mirror	
Power distribution module: E: IGN relay output	Fuse F22	–	• Meter cluster IGN • Tachograph IGN • Air conditioner IGN • Rear air conditioner IGN	See (105), (115), (110).
	Fuse F18	–	• Hydraulic unit (electronic control unit) IGN1	
	Fuse F19	–	• Engine electronic control unit IGN	
	Fuse F3	–	–	
	Fuse F24	–	• DUONIC™ electronic control unit IGN1 • DUONIC™ electronic control unit IGN2 • Shift lever 1 IGN1 • Shift lever 2 IGN2	
	Fuse F20	–	• Front drive switch • Van body dome light switch	
	Fuse F1	–	• Starter relay	
Power distribution module: H: Engine relay output	Fuse F31	–	• Engine battery control 1 • Engine battery control 2 • Engine battery control 3	See (105), (110).
	Fuse F28	–	• Engine actuator battery control • Fuel heater relay drive • Fuel pump relay drive	
	Fuse F29/F30	–	• Selective catalytic reduction battery control 1 • Selective catalytic reduction battery control 2	
Power distribution module: C: ACC relay (OPTION) output	Fuse F25	–	• Option connector: ACC chassis • Option connector: ACC body	See (105), (115), (110).
Power distribution module: D: IGN relay (OPTION) output	Fuse F04	–	• Option connector: Main chassis • Option connector: Main body	See (105), (115), (110).
Power distribution module: battery output	Fuse F26	–	• Option connector: Battery body • Option connector: Battery chassis	

https://truckmanualshub.com/

Function		Input	Output	Remarks
Power distribution module: BAT output	Fuse F9	–	• Meter cluster BAT • Diagnosis connector BAT • Combination switch BAT	See (105), (115), (110).
	Fuse F12	–	• Audio BAT • Interior lamp BAT • Tachograph BAT	
	Fuse F13	–	• Immobilizer electronic control unit BAT 2 • Immobilizer electronic control unit BAT 1 • Starter switch BAT	
	Fuse F6	–	–	
	Fuse F17	–	• Fuel heater BAT	
	Fuse F10	–	–	
Power distribution module: A: A/C BLOWER RELAY output	Fuse F11	–	• Air conditioner blower motor	See (105), (110).
Power distribution module: G: A/C COMP COND. RELAY output	Fuse F32	–	• Air conditioner condenser fan motor relay drive • Air conditioner condenser fan clutch	See (105), (110).
Power distribution module: F: FUEL PUMP RELAY output	Fuse F28	–	• Fuel pump control • Fuel pump BAT control	See (105), (110).
	Fuse F34	–	• Fuel heater control	
Power distribution module: Power window supply	Fuse F5	–	• Power window BAT driver's seat side	See (105), (110).
	Fuse F7	–	• Power window BAT assistant driver's seat side	
Communication		• Controller area network - Cabin • Controller area network - Chassis • Controller area network - Diagnosis • Various local interconnect network lines	• Controller area network - Cabin • Controller area network - Chassis • Controller area network - Diagnosis • Various local interconnect network lines	–
Signal detect and actuation modules supply		• Signal detect and actuation modules BAT • Signal detect and actuation modules BAT • Signal detect and actuation modules ENG BAT	–	See (105), (110), (130).
Grounding		• Signal detect and actuation modules ground • Ground, body harness, POWER • Ground, body harness, SIGNAL • Ground, central harness • Ground, various electronic control units		

https://truckmanualshub.com/

5.3 Fault diagnosis function

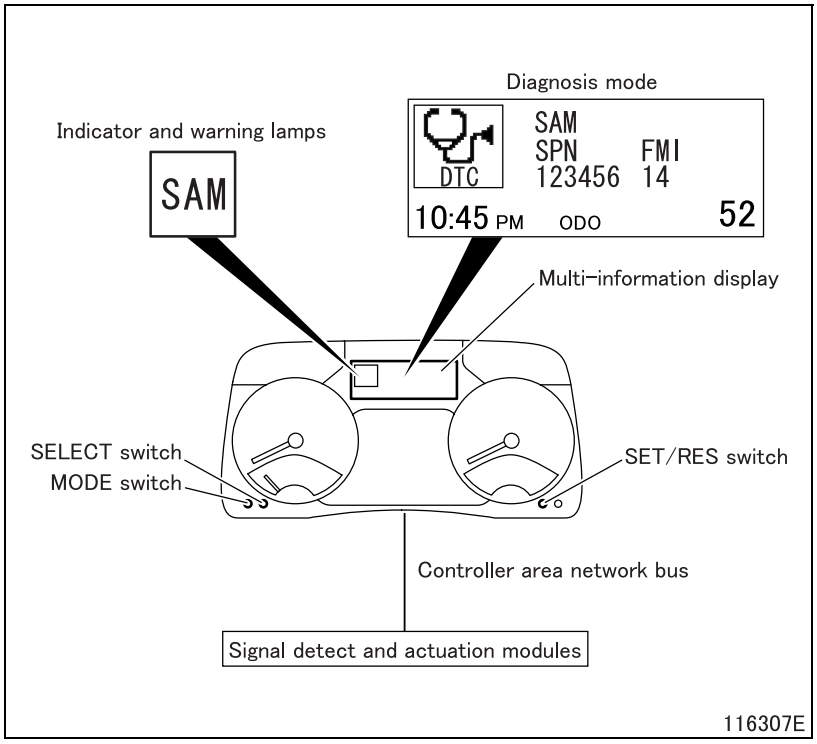

- The driver is informed of faults in the signal detect and actuation modules through the multi-information display in the meter cluster.
- Details of diagnosis codes can be called out through the multi-information display in the meter cluster and the FUSO Diagnostics (diagnosis connector). (See Gr00.)

https://truckmanualshub.com/

5.4 Electronic control unit circuit diagram

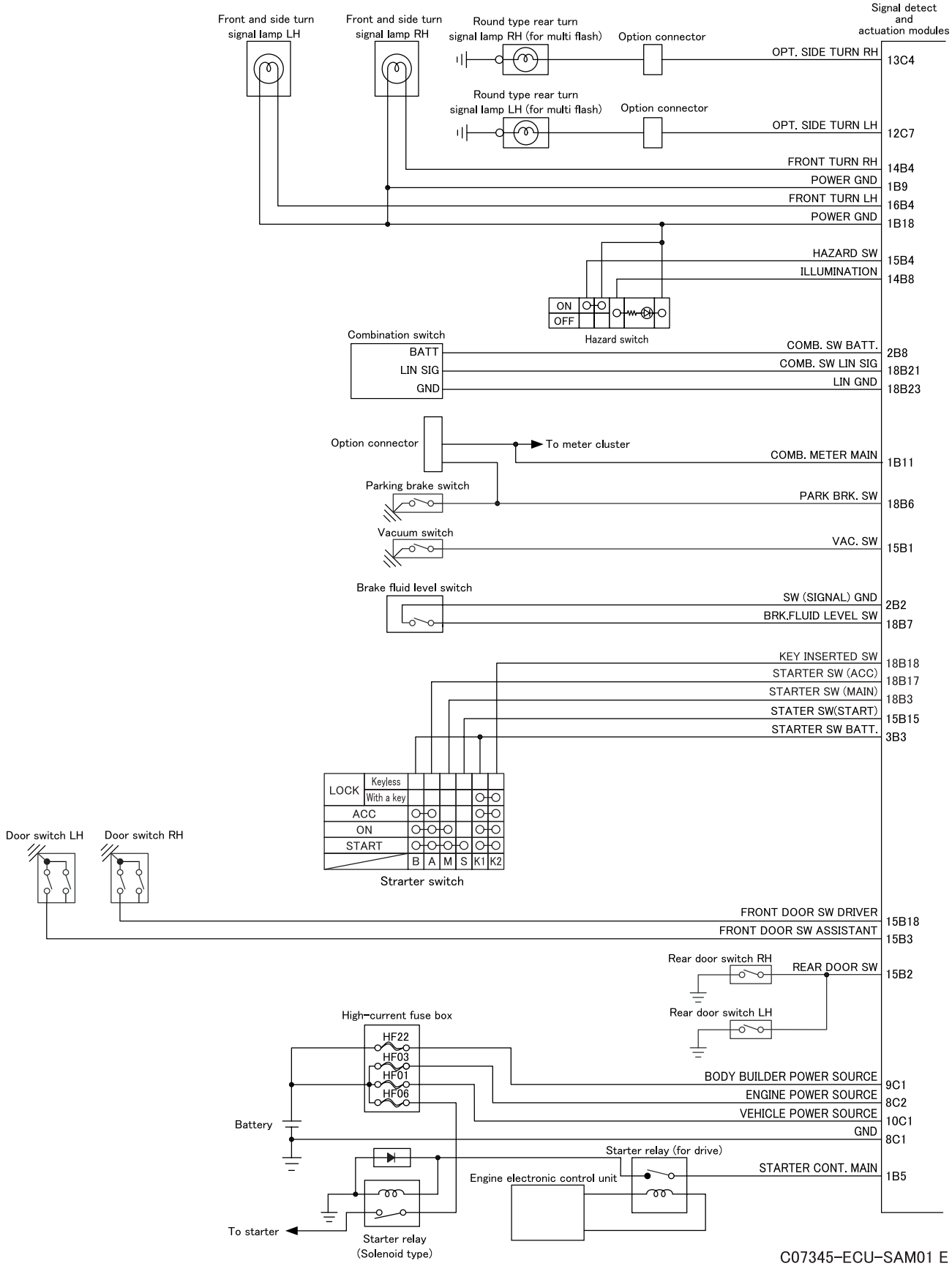

C07345-ECU-SAM01 E

https://truckmanualshub.com/

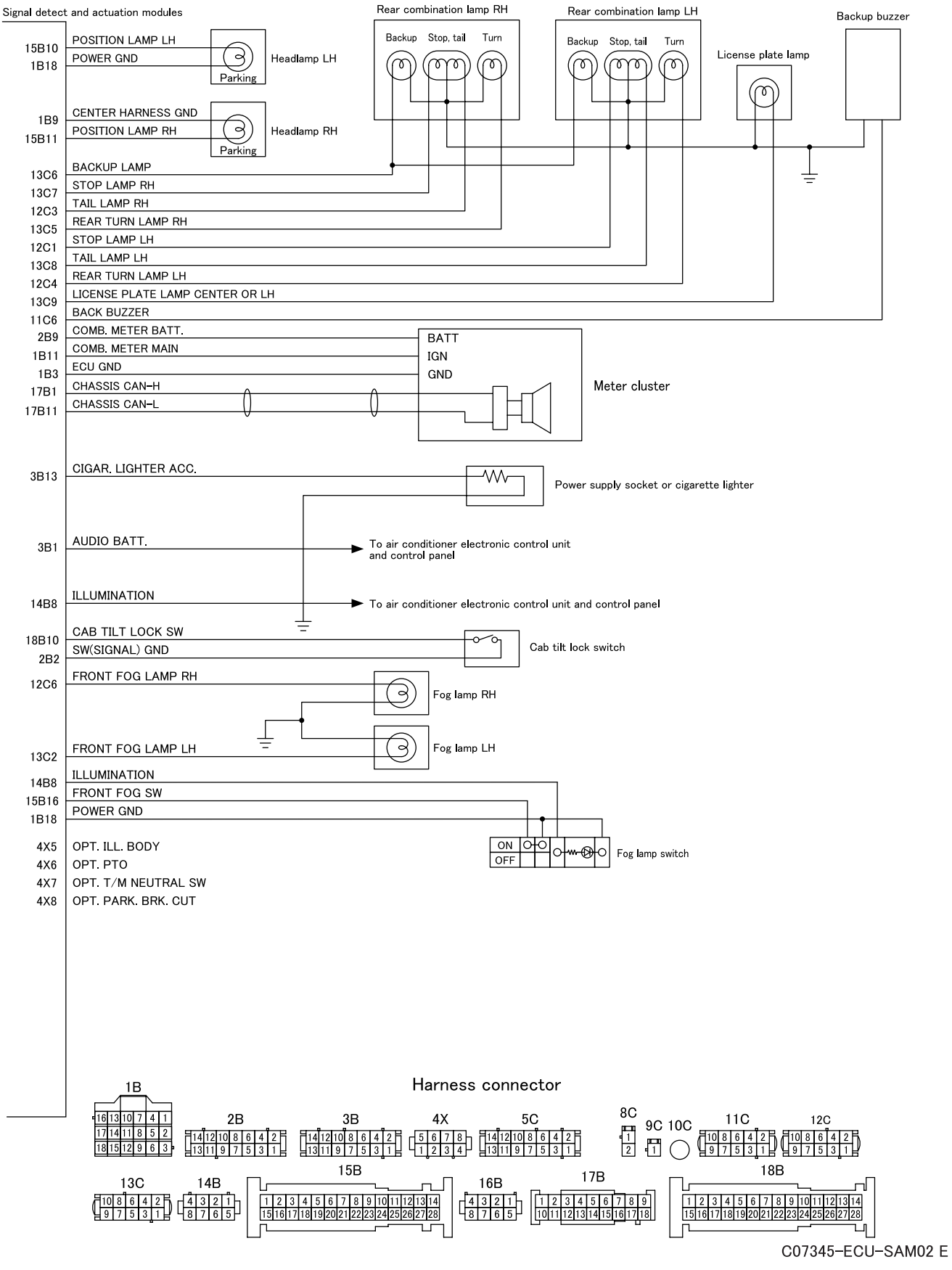

C07345-ECU-SAM02 E

https://truckmanualshub.com/

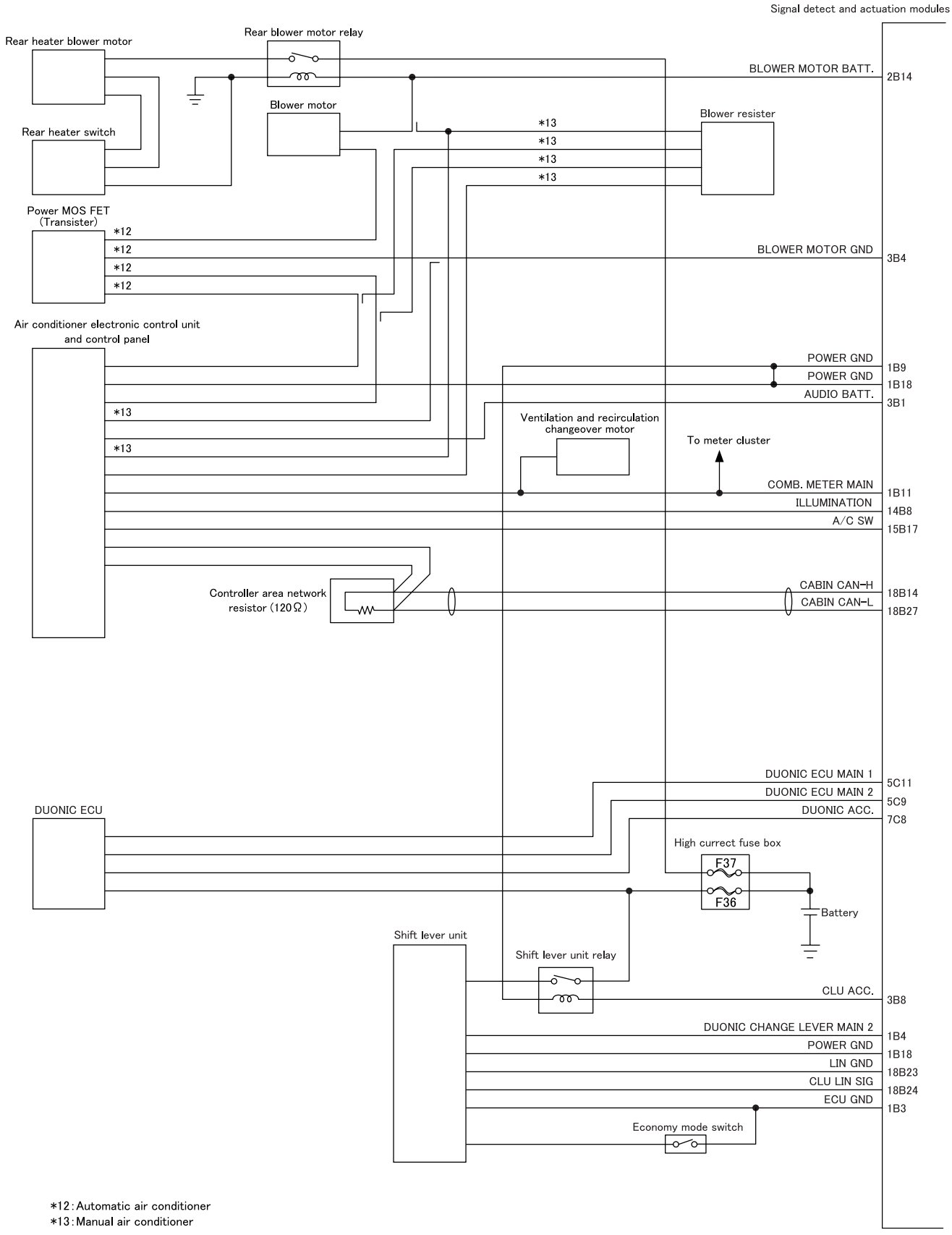

*12: Automatic air conditioner
*13: Manual air conditioner

C07345-ECU-SAM03 E

https://truckmanualshub.com/

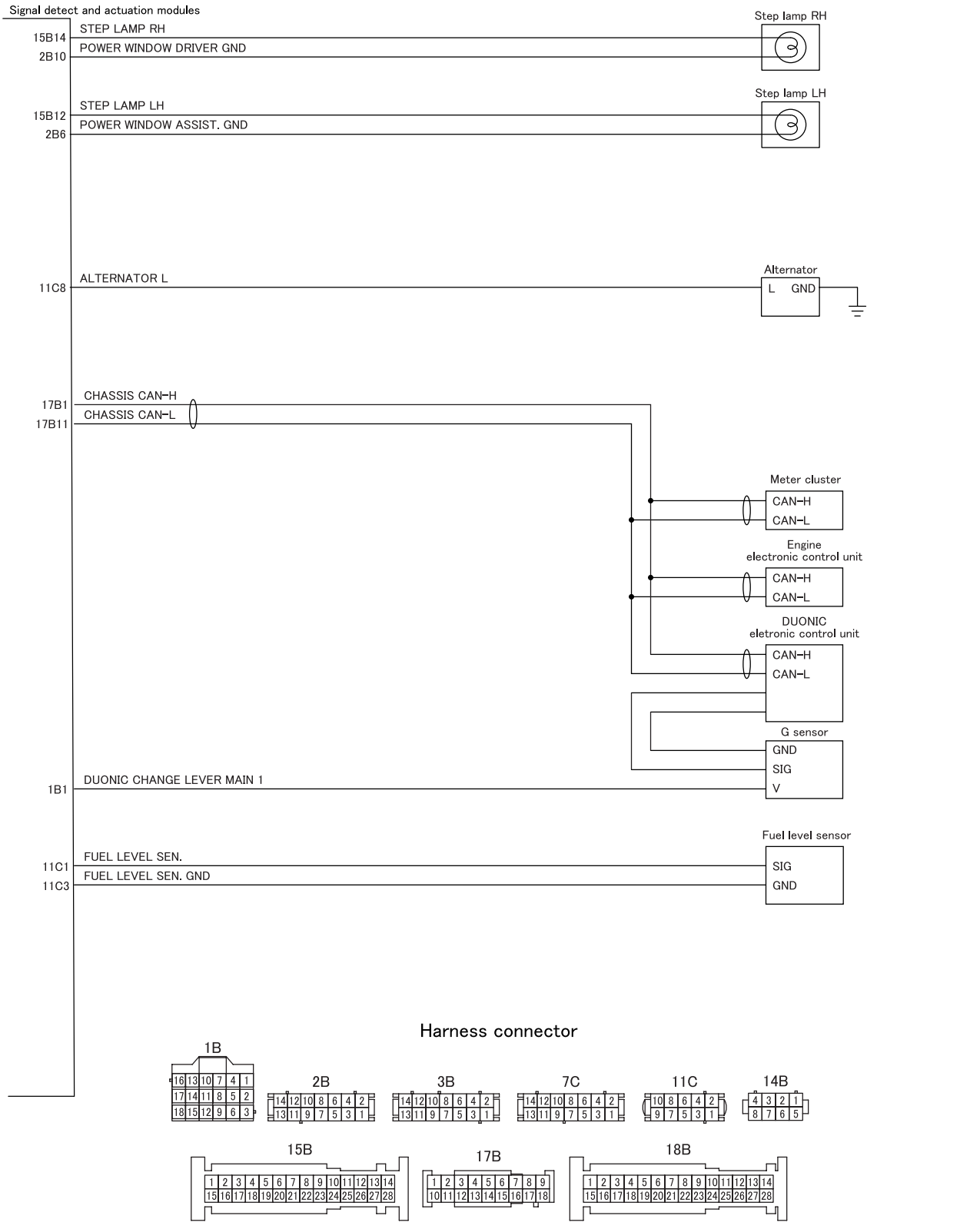

C07345-ECU-SAM04 E

https://truckmanualshub.com/

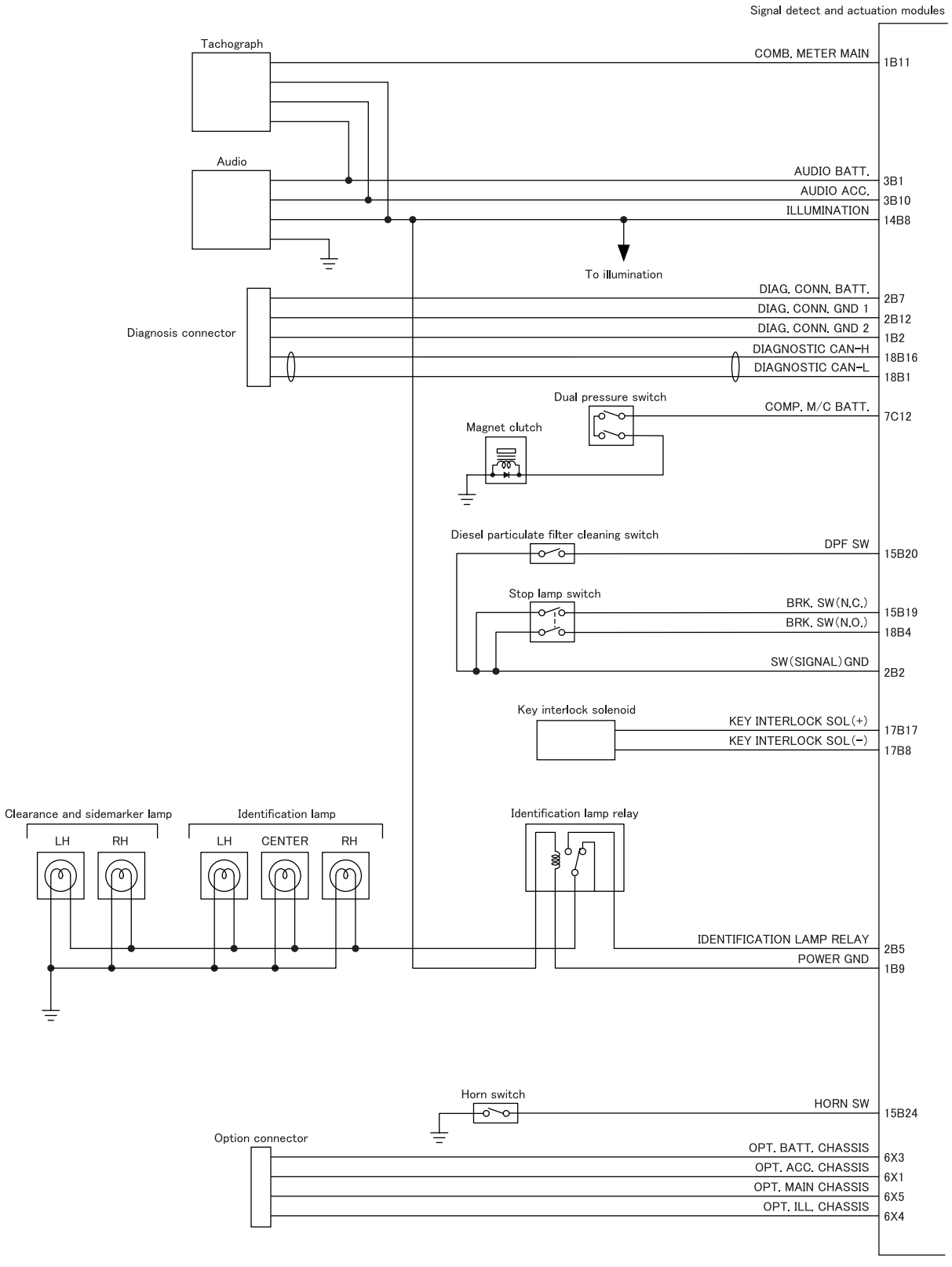

C07345-ECU-SAM05 E

https://truckmanualshub.com/

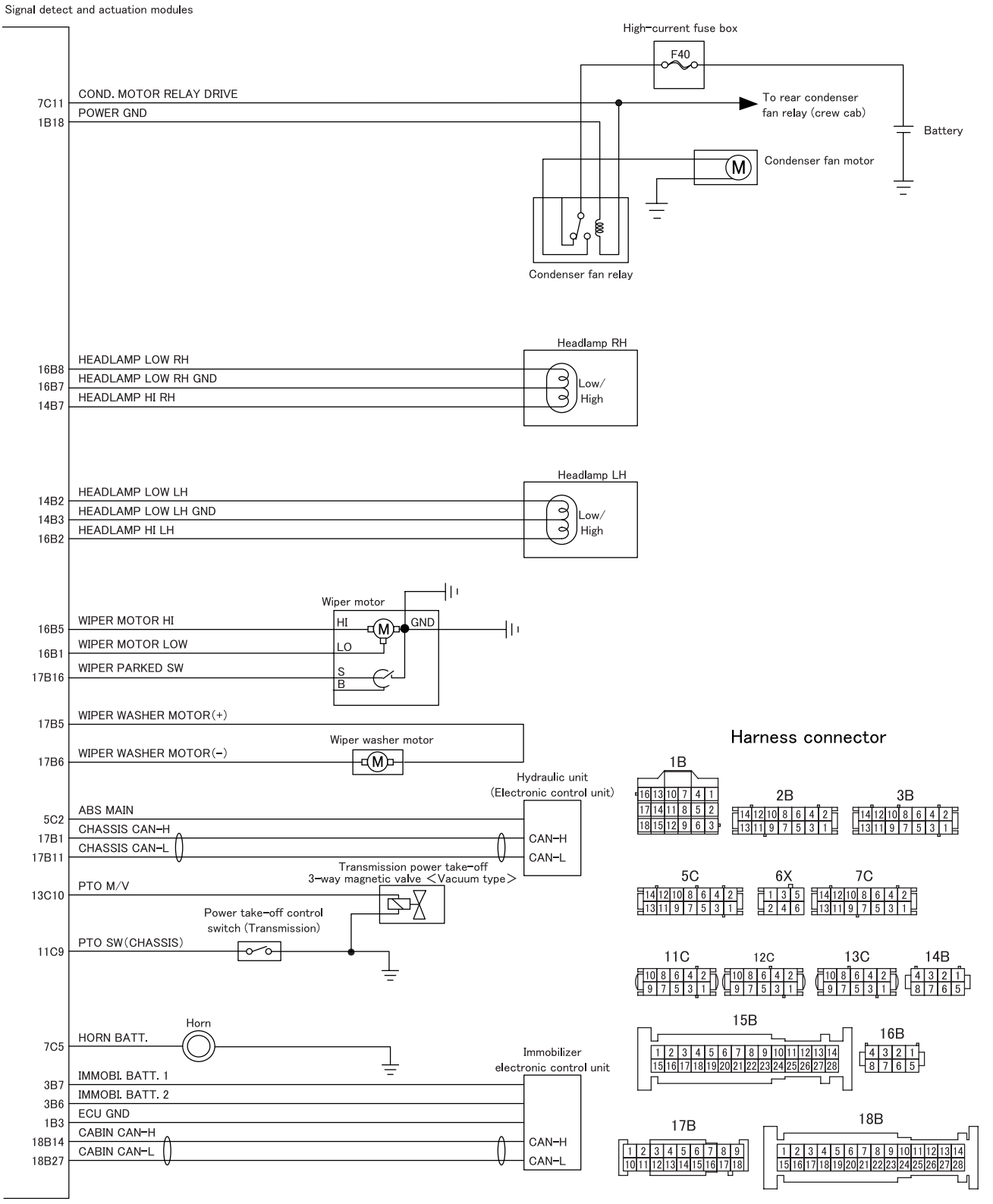

C07345-ECU-SAM06 E

https://truckmanualshub.com/

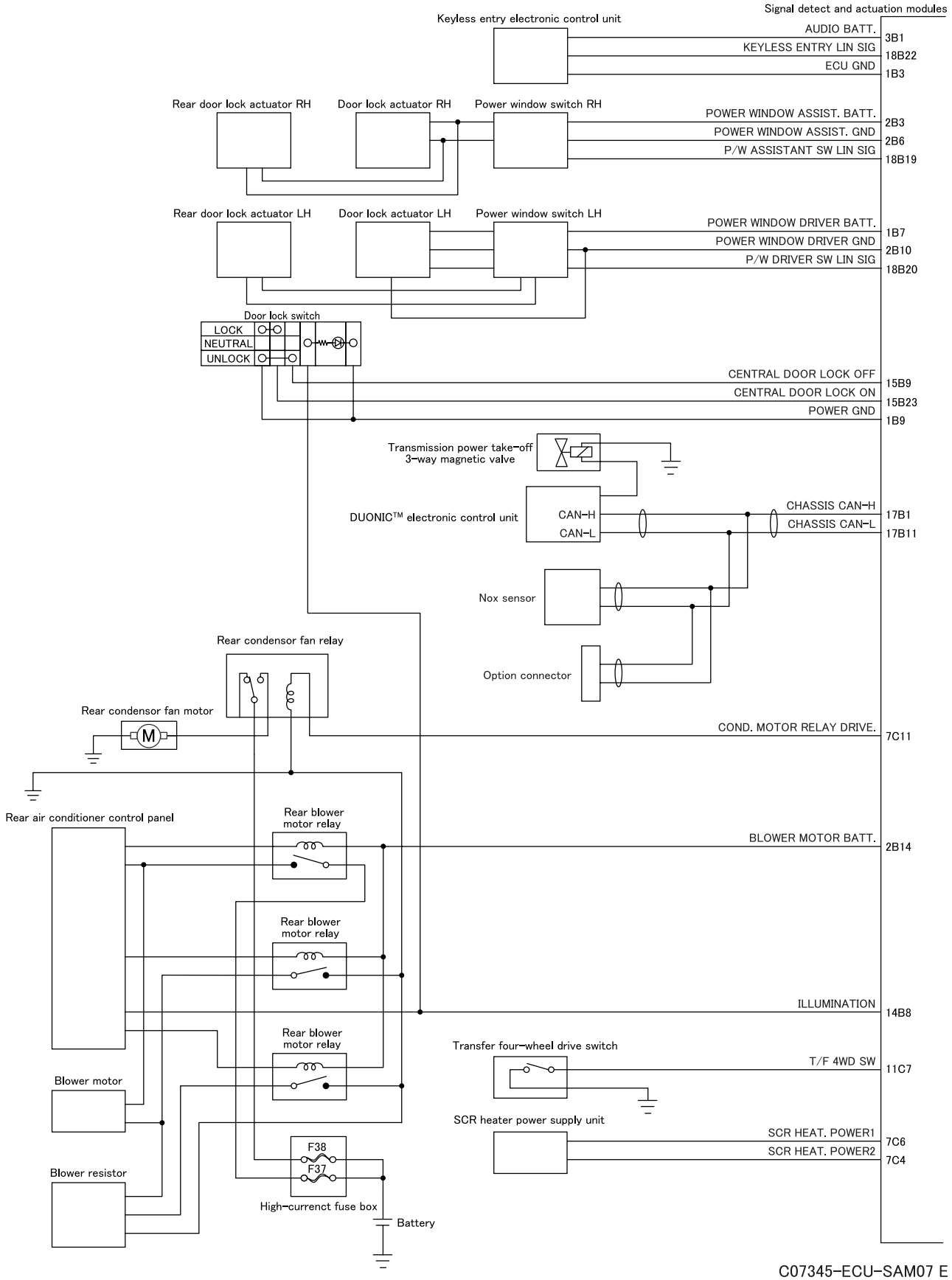

C07345-ECU-SAM07 E

https://truckmanualshub.com/

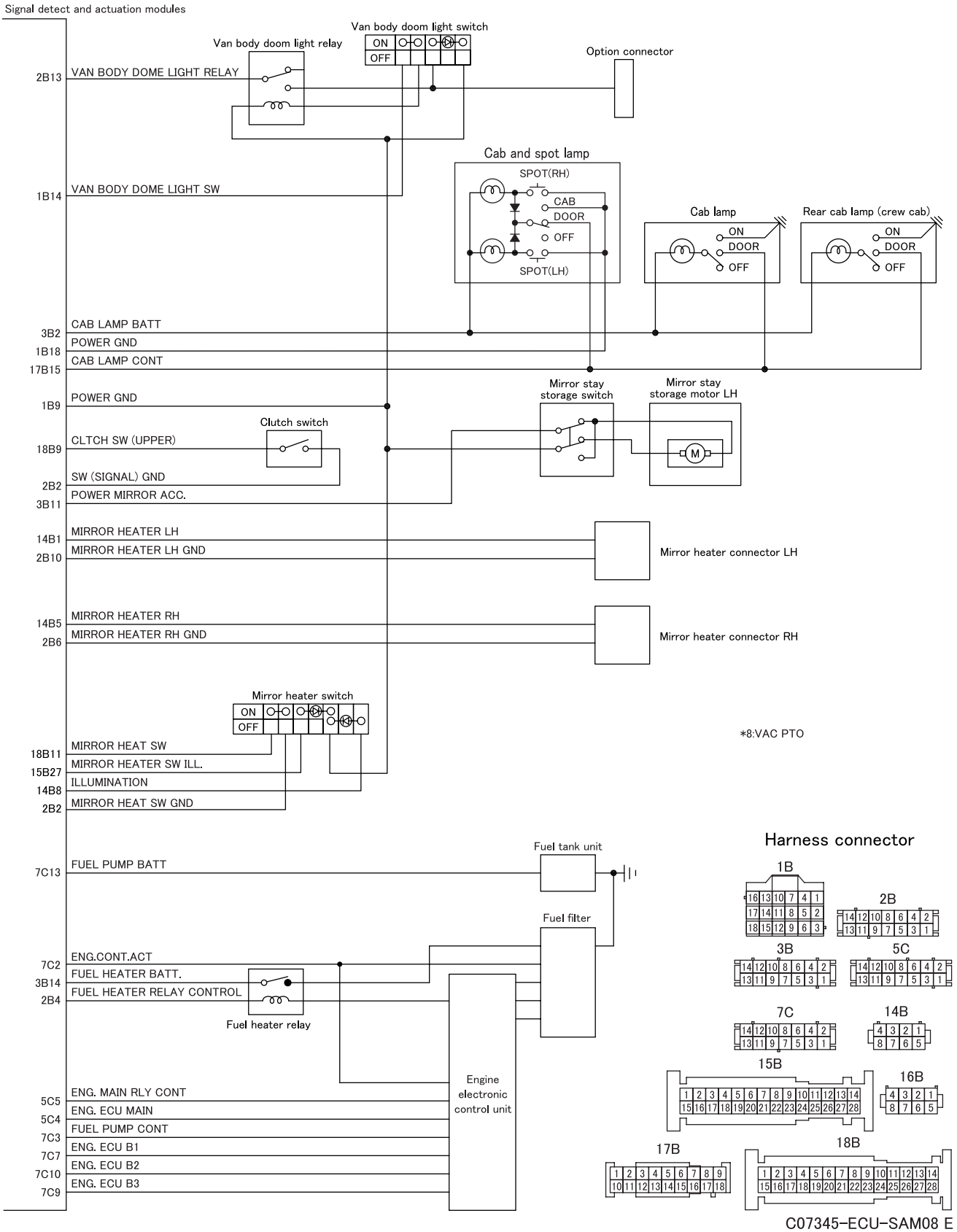

C07345-ECU-SAM08 E

https://truckmanualshub.com/

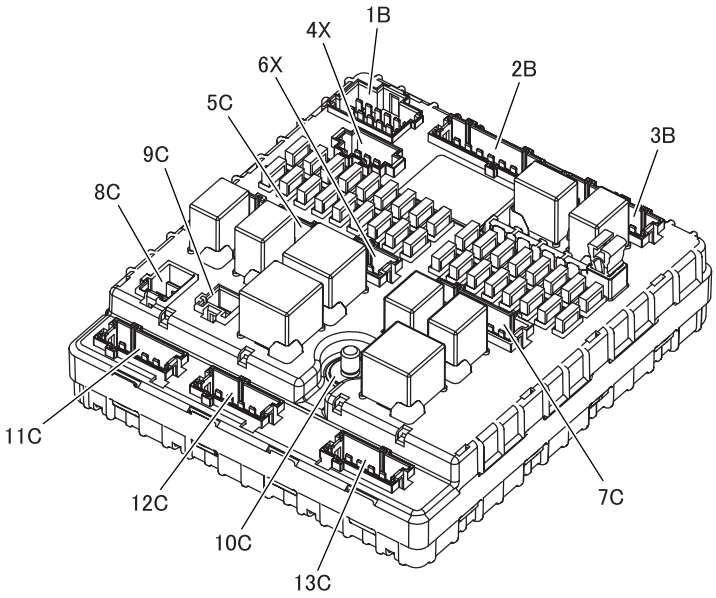

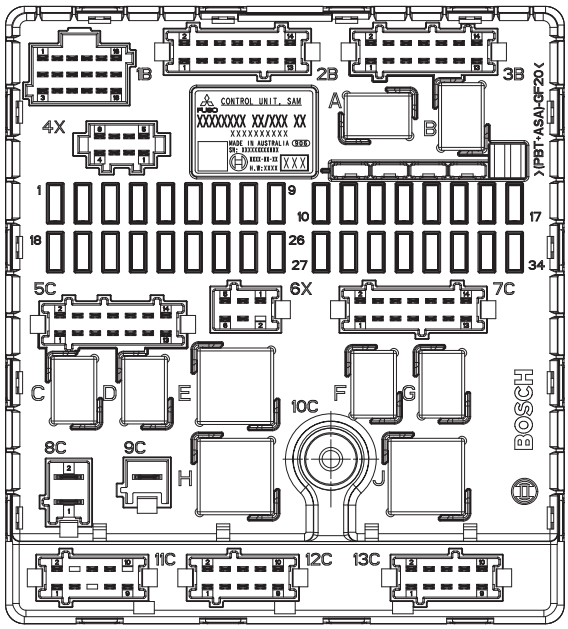

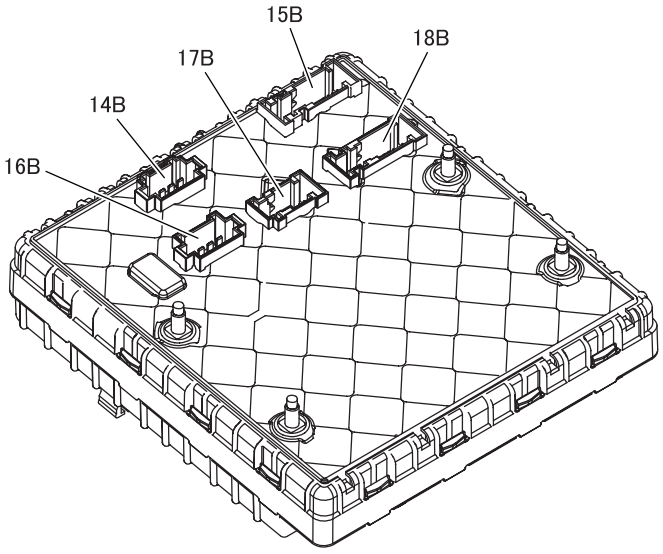

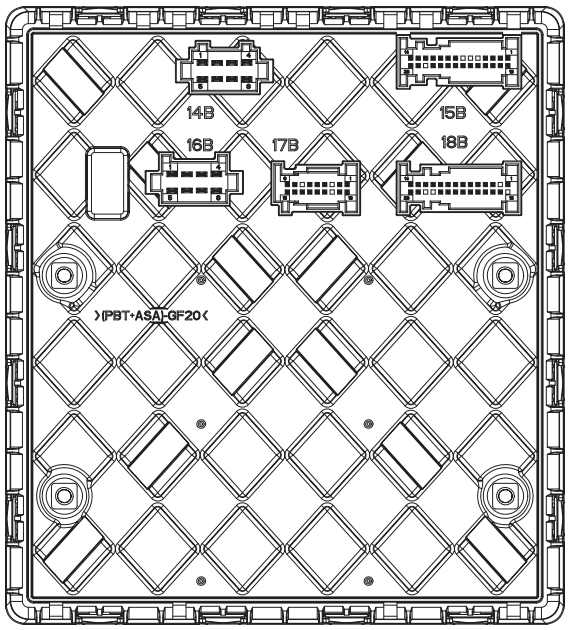

C07345–ECU–SAM09

https://truckmanualshub.com/

6. Immobilizer

- The immobilizer stops the supply of power to the starter and supply of fuel to the engine thereby to prevent improper vehicle control when any other key than the engine immobilizer starter key registered in the immobilizer electronic control unit is used in an attempt to start the engine.

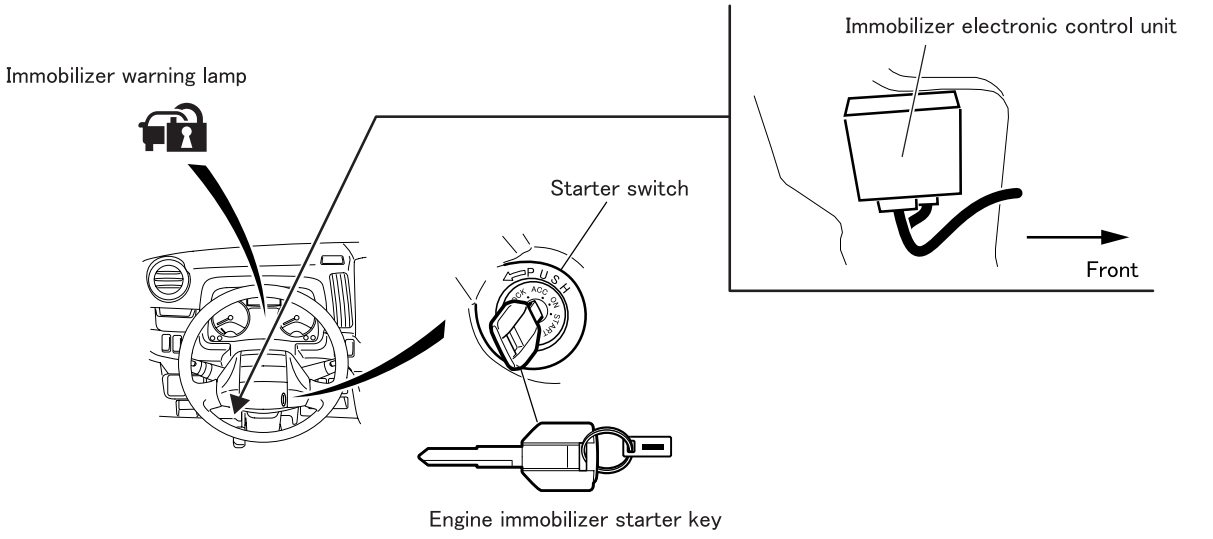

- The immobilizer electronic control unit has the capacity enough to accept the registration of up to six starter keys for engine immobilizer. In case the registered starter key is lost, its registration is erased, then an available starter key is additionally registered.
- If all the registered starter keys are lost or damaged, the erasing of such keys and additional registration of new starter keys are impossible. In such case, the immobilizer electronic control unit is replaced in combination with the new starter keys.
- The immobilizer electronic control unit performs self-diagnosis of the system, and if there is any abnormality in the system, the immobilizer warning lamp is lit to inform the driver of the abnormality.

https://truckmanualshub.com/

6.1 System block diagram

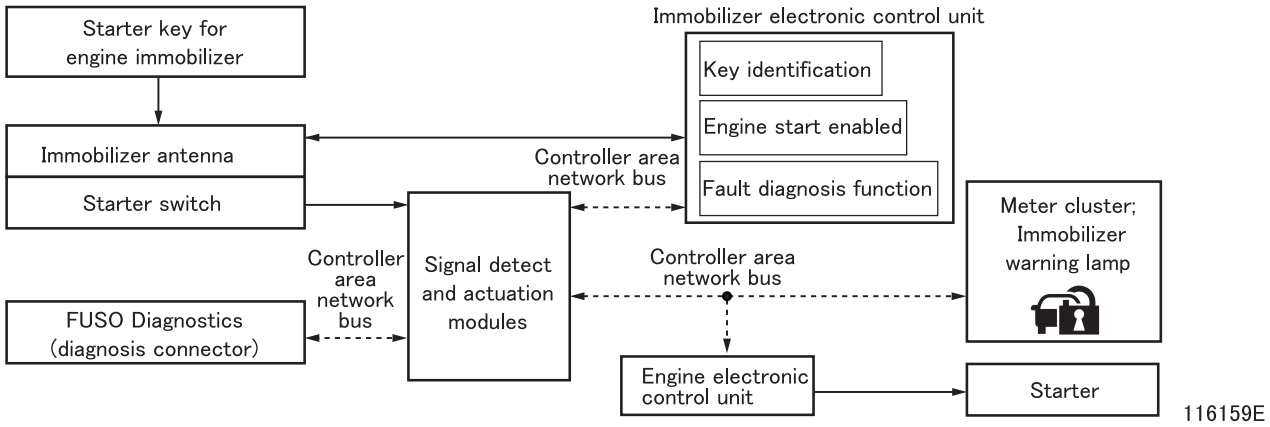

Part name	Function or use
Starter key for immobilizer	Sending and receiving of ID No. signal
Immobilizer antenna	Sending and receiving of ID No. signal
Starter switch	Check of starter switch ON/OFF
Immobilizer electronic control unit	Identification of ID No. and enabling signal for engine start
Starter	Start of engine
Immobilizer warning lamp (meter cluster)	Lit for approx. 3 seconds after starter switch ON (with immobilizer system in “set” status)
	Lit when immobilizer system becomes abnormal.
FUSO Diagnostics (diagnosis connector)	Communication between FUSO Diagnostics and immobilizer electronic control unit (controller area network communication via signal detect and actuation modules)
Signal detect and actuation modules	Junction for sent and received signals between immobilizer electronic control unit, engine electronic control unit, meter cluster and FUSO Diagnostics
	Sending of starter ON/OFF signal

6.2 Fault diagnosis function

- The status of the system is constantly monitored when the starter switch is put in the ON position, and if a fault is detected in the system, the driver is informed of the fault through warning lamp in the meter cluster. At the same time, the location of the fault is stored in the memory in the form of diagnosis code and appropriate fault-response control is effected.
- The diagnosis code stored in the memory can be called out on the multi-information display in the meter cluster and through the FUSO Diagnostics. (See Gr00.)

https://truckmanualshub.com/

6.3 Electronic control circuit diagram

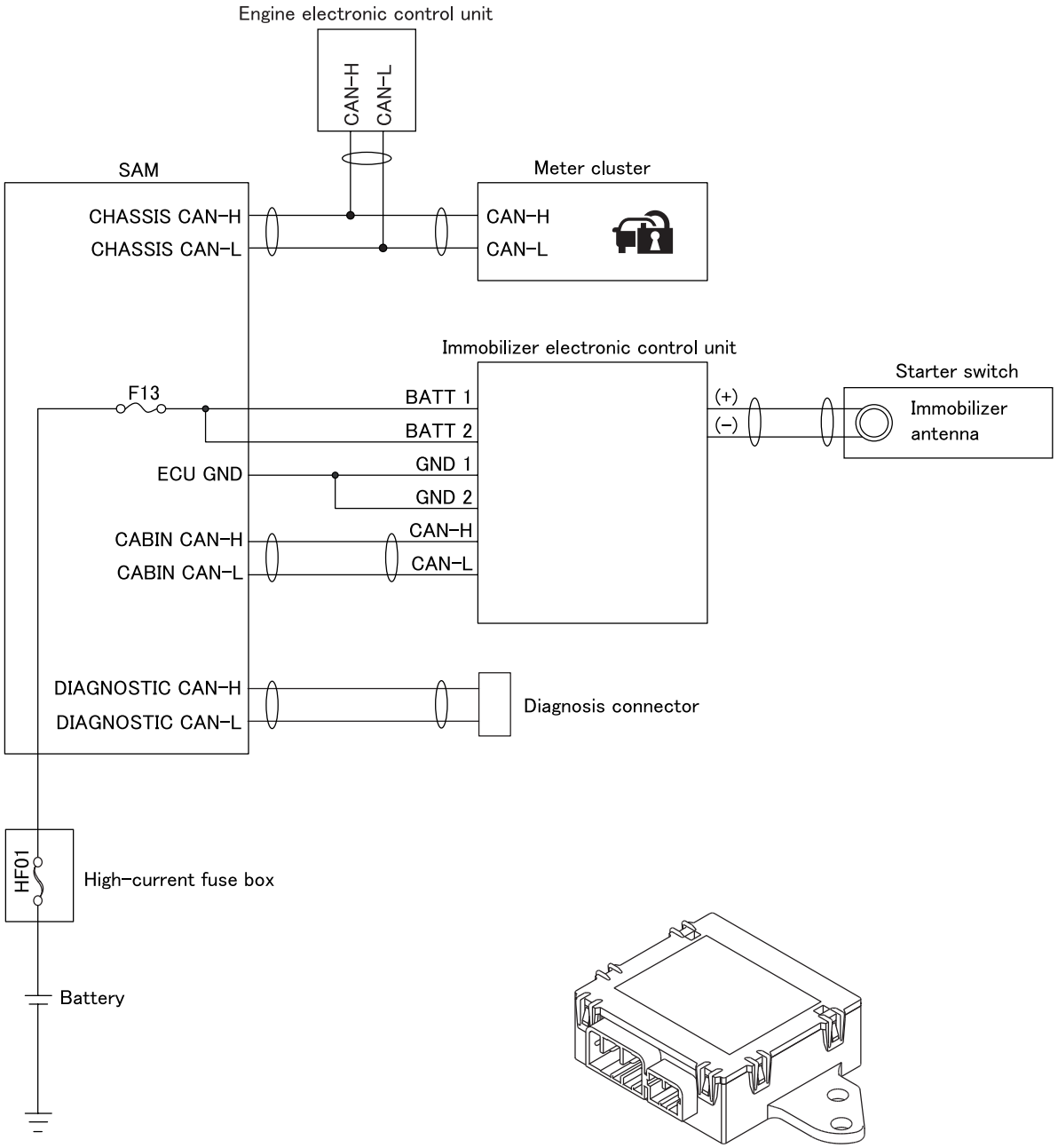

C07345-ECU-IMM E

https://truckmanualshub.com/

54-00D TROUBLESHOOTING

https://truckmanualshub.com/

1. Power and Charging

Possible causes \ Symptoms		Battery fluid (electrolyte) decreases too fast.	Battery temperature is too high.	Battery is normal but excessively discharged.	Charge warning lamp is not illuminated when starter switch is in ON position with engine not running.	Alternator is normal but battery is excessively discharged.	Reference Gr
Connector connection faulty, harness broken, grounding faulty				O		O	
Fuse blown				O	O	O	
High-current fuse blown				O	O	O	
Belt tension insufficient				O		O	Gr14
Belt cut off				O		O	Gr14
Defective battery		O				O	
Signal detect and actuation modules malfunctioning		O	O	O	O	O	
Alternator	Open-circuited stator coil			O			
	Short circuit between stator coil and core			O			
	Open-circuited field coil			O			
	Defective rectifier			O			
	Defective regulator		O	O	O		
	Brush worn			O			
	Permanent set of brush spring in fatigue			O			
	Improper wiring			O			
Defective meter cluster					O		

https://truckmanualshub.com/

2. Engine Starting, Stopping and Preheating

Symptoms / Possible causes		Starter is not activated.	Starter is activated but engine does not start: Pinion does not mesh with ring gear.	Starter is activated but engine does not start: Pinion meshes with ring gear but does not rotate.	Starter is activated but engine does not start: Flywheel rotates but engine does not start.	Engine does not stop.	Engine cannot be warmed up.	Engine is slow to start.	Exhaust brake is nonfunctional.	Reference Gr
Connector connection faulty, harness broken, grounding faulty		O			O	O	O	O	O	
High current fuse blown		O					O		O	
Fuse blown		O					O		O	
Signal detect and actuation modules malfunctioning		O				O	O	O	O	
Battery capacity insufficient		O		O						
Starter	Magnet switch contact stuck, fused	O								
	Magnet switch coil open circuited	O								
	Overrunning clutch malfunctioning		O							
	Pinion worn, damaged		O							
Defective starter relay		O								
Defective starter switch		O				O				
Flywheel ring gear worn, damaged			O							Gr11
Common rail system malfunctioning		O			O	O	O	O	O	Gr13E
DUONIC^{TM} system malfunctioning <DUONIC^{TM}>		O								Gr22E
Gear shift lever in other position than P or N <DUONIC^{TM}>		O								Gr22E
Defective glow plug							O	O	O	Gr11
Glow electronic control unit malfunctioning							O	O	O	Gr13E
Connecting plate poorly fitted							O	O	O	Gr11
Defective water temperature sensor							O	O		
Exhaust brake system malfunctioning									O	Gr35E
Combination switch	Defective exhaust brake switch								O	
	Defective warming-up switch						O			
Immobilizer system malfunctioning		O								
Engine immobilizer starter key not registered in immobilizer electronic control unit is in use		O								

https://truckmanualshub.com/

3. Lighting

Symptoms / Possible causes		Headlamp: Not illuminated.	Headlamp: Dim.	Headlamp: Not switched to upper beam.	Headlamp: Not switched to lower beam.	Fog lamp is not illuminated.	Tail lamp is not illuminated.	Identification lamp, clearance lamp and side marker lamp are not illuminated.	Reference Gr
Connector connection faulty, harness broken, grounding faulty		O				O	O	O	
High current fuse blown		O				O	O	O	
Signal detect and actuation modules malfunctioning		O	O	O	O	O	O	O	
Battery insufficient in capacity			O						
Defective alternator			O						
Bulb blown out		O				O	O	O	
Combination switch	Defective lighting switch	O					O	O	
	Defective dimmer switch			O	O				
Defective fog lamp switch						O			

Symptoms / Possible causes		Parking lamp is not illuminated.	License plate lamp is not illuminated.	Stop lamp is not illuminated.	Turn signal lamp (also used as hazard lamp)					Backup lamp is not illuminated.	Back buzzer does not sound.	Reference Gr
					Will not remain illuminated.	Remains illuminated constantly.	Flashes too slowly.	Flashes too fast.	Flashes at unsteady intervals.			
Connector connection faulty, harness broken, grounding faulty		O	O	O	O					O	O	
High-current fuse blown		O	O	O	O					O	O	
Signal detect and actuation modules malfunctioning		O	O	O	O	O	O	O	O	O	O	
Battery insufficient in capacity					O							
Defective alternator					O							
Bulb blown out		O	O	O	O			O		O	O	
Defective stop lamp switch				O								
Bulb lower than specified in wattage								O				
Bulb higher than specified in wattage							O					
Combination switch	Defective lighting switch	O	O									
	Defective turn signal switch				O							
Defective hazard switch					O							
Defective backup lamp switch										O	O	
Defective back buzzer											O	
DUONIC^{TM} system malfunctioning <DUONIC^{TM}>										O	O	Gr22E

https://truckmanualshub.com/

Symptoms / Possible causes	Cab and spot lamp is not illuminated.	Cab and spot lamp fade-out function does not work. <Models with keyless entry>	Step lamp is not illuminated.	Rear cab lamp is not illuminated. <Crew cab>	Nighttime illumination of meters and switches is faulty.	Reference Gr
Connector connection faulty, harness broken, grounding faulty	O	O	O	O	O	
High-current fuse blown	O	O	O	O	O	
Signal detect and actuation modules malfunctioning	O	O	O	O	O	
Bulb burnt-out	O		O	O	O	
Defective starter switch	O	O				
Defective cab and spot lamp	O	O				
Defective door switch	O	O	O	O		
Defective power window switch (left-hand)		O				
Defective rear cab lamp (crew cab)				O		
Defective meter cluster					O	
Defective lighting switch					O	

https://truckmanualshub.com/

Symptoms / Possible causes		Van body dome light does not illuminate.	Daytime running light system does not operate after engine starts, and headlamps do not illuminate.	Reference Gr
Connector connection faulty, harness broken, grounding faulty		O	O	
Fuse blown		O		
Bulb burnt-out		O		
Signal detect and actuation modules malfunctioning		O	O	
Combination switch	Lighting switch faulty	O		
Van body dome light relay faulty		O		
Van body dome light switch faulty		O		

https://truckmanualshub.com/

4. Meter

Possible causes \ Symptoms		Indicating pointer is stuck.	Indicating pointer is unsteady in movement.	Reading error is excessive in indicating pointer.	Abnormal sound is heard from meter.	Buzzer (built in meter) does not sound.	Reference Gr
Connector connection faulty, harness broken, grounding faulty		O	O	O		O	
Fuse blown		O				O	
Signal detect and actuation modules malfunctioning		O	O	O		O	
Defective meter cluster		O	O	O	O	O	
Tachometer	Defective tachometer	O	O	O	O		
	Engine speed sensor poorly fitted	O	O	O			Gr11
	Defective engine speed sensor	O					
	Defective engine electronic control unit	O	O	O			Gr13E
Speedometer	Defective speedometer	O	O	O	O		
	Defective vehicle speed sensor	O	O	O			
	Vehicle speed sensor poorly fitted	O	O	O			Gr22E
	Tire not as specified			O			Gr31
	Tire worn and tire pressure not as specified			O			Gr31
Water temperature gauge	Defective water temperature sensor	O	O	O			
	Defective engine electronic control unit	O	O	O			Gr13E
Fuel level gauge	Defective fuel level gauge	O	O	O	O		
	Defective fuel level sensor	O	O	O			
Defective buzzer (built in meter)						O	
Controller area network communication faulty		O	O	O		O	

https://truckmanualshub.com/

Symptoms / Possible causes	Indicator and warning display function				Reference Gr
	Warning items are not indicated on LCD in meter cluster.	Buzzer does not sound.	Warning item LED lamp is not illuminated.	Warning item LED lamp will not extinguish.	
Controller area network communication faulty	O	O	O	O	
Initialization of meter cluster is not done yet	O	O	O	O	
Signal detect and actuation modules malfunctioning	O	O	O	O	
Related system electronic control unit malfunctioning	O	O	O	O	

https://truckmanualshub.com/

5. Cigarette Lighter and Audio

Symptoms / Possible causes	Cigarette lighter			Audio										Reference Gr
	Will not turn red-hot.	Will not return.	Night illumination lamp is not illuminated.	Radio will not turned on.	Radio has poor reception.	Radio is not responsive to specific frequency band.	Noise occurs.	Quality of sound is poor.	Sound comes out from one side only.	Sound volume is different between left and right.	Will not accept a CD.	Sound skips at the same place.	CD is accepted but no sound comes out.	
Connector connection faulty, harness broken, grounding faulty	O		O	O			O		O				O	
Fuse blown	O			O									O	
Signal detect and actuation modules malfunctioning	O		O	O									O	
Defective cigarette lighter	O	O												
Antenna and antenna feeder poorly connected				O	O		O							
Defective radio amplifier				O			O	O	O	O				
Defective radio tuner				O	O	O		O						
Defective speaker				O	O	O	O	O	O	O			O	
Left and right speakers are different in impedance										O				
CD is already in											O			
CD scratched or soiled												O		
CD scratched and/or soiled and CD-ROM incapable of reading data is inserted													O	

Source of accessory noise

Accessory	Noise	Status
Alternator	Beep-beep	High-pitched sound that occurs when accelerator pedal is quickly depressed. (Sound stops as soon as engine is stopped.)
Fuel level sensor	Scratchy sound	Heard when engine is suddenly revved up, vehicle is running on rough road or starter switch is turned ON
Horn	Hushing sound	Heard when horn button is pressed or released
Wiper motor	Whizzing sound	Heard depending on windshield wiper speed
Washer motor	Whizzing sound	Heard when washer is operating on front windshield

https://truckmanualshub.com/

6. Horn

Symptoms / Possible causes	Horn				Reference Gr
	Horn does not sound.	Horn does not stop sounding.	Horn sound volume is insufficient.	Horn sound quality is poor.	
Connector connection faulty, harness broken, grounding faulty	O				
Fuse blown	O				
Defective horn switch	O	O			
Defective horn relay	O	O			
Signal detect and actuation modules malfunctioning	O	O			
Defective horn	O		O	O	
Horn stay bent			O	O	
Battery insufficient in capacity	O		O		

https://truckmanualshub.com/

54-01 POWER, CHARGE AND GROUND CIRCUIT

https://truckmanualshub.com/

HIGH-CURRENT FUSE BOX

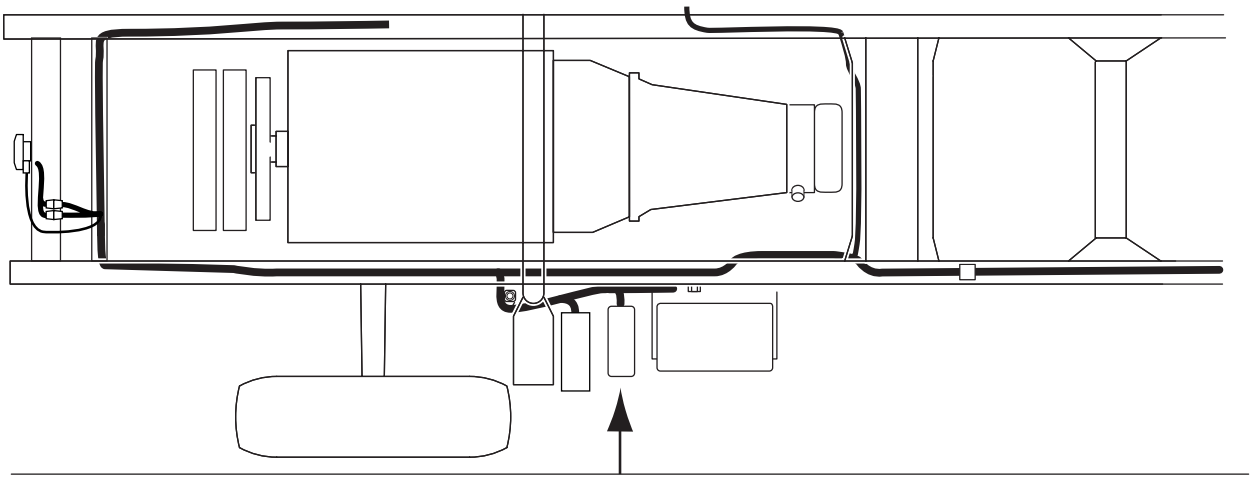

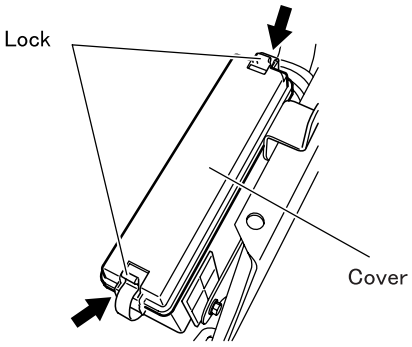

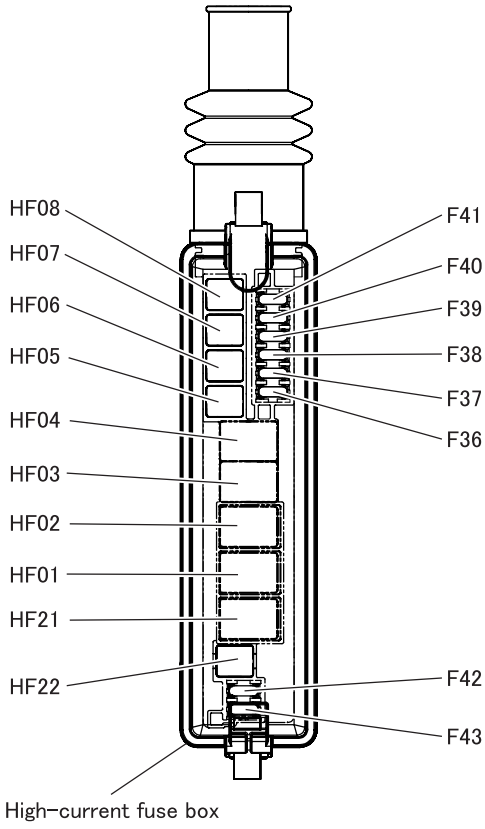

WARNING ⚠

- **To prevent possible injury, be sure to disconnect the negative (-) cable of the battery and insulate it with tape before removing high-current fuses. (See Gr00.)**

CAUTION ⚠

- **With the negative (-) cable of the battery connected, some high-current fuses are always under battery voltage. An arc will be generated when any of these high-current fuses is replaced without disconnecting the battery negative cable, and this could cause the related electric devices to be damaged.**
- **If replace the fuse, remove the high-current fuse box from the vehicle.**
- **If a fuse blows out, identify and remedy the cause, then replace the fuse.**
- **Be sure to use the fuse with the specified ampere.**

54-L05232HF-1

https://truckmanualshub.com/

High-current fuse box

Fuse No.	Main load	Capacity
HF01	SAM	140A
HF02	—	—
HF03	SAM	80A
HF04	—	—
HF05	Glow ECU	60A
HF06	Starter relay	40A
HF07	—	—
HF08	Hydraulic unit	50A
HF21	—	—
HF22	SAM	40A
F36	DUONIC ECU	20A
F37	Rear blower fan <Crew cab>	10A
F38	—	—
F39	—	—
F40	Condenser fan	20A
F41	Hydraulic unit	30A
F42	—	—
F43	—	—

SAM : Signal detect and actuation modules
ECU : Electronic control unit

https://truckmanualshub.com/

FUSE BOX

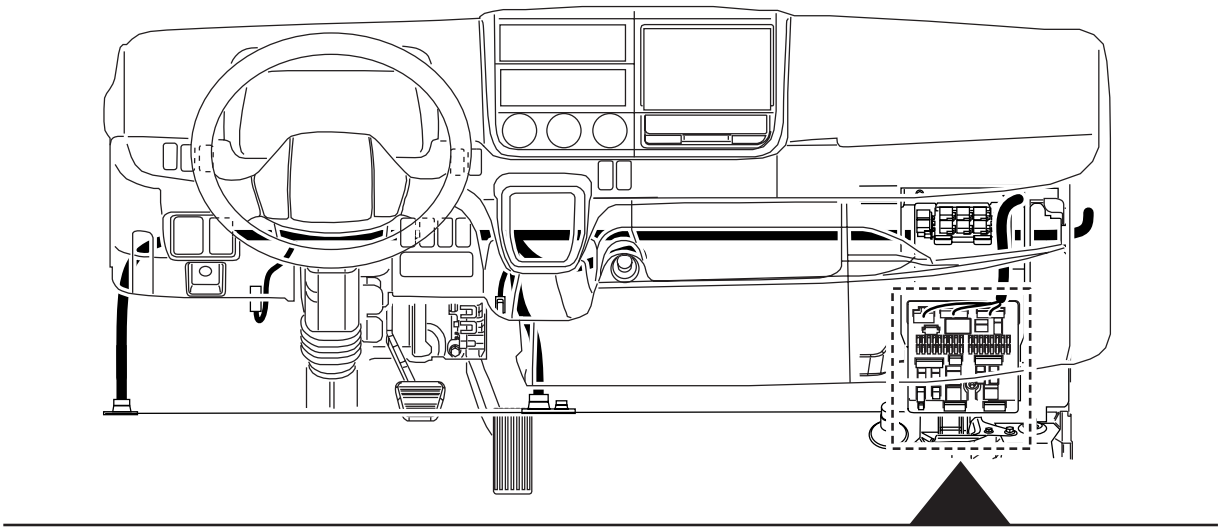

<Inside of SAM>

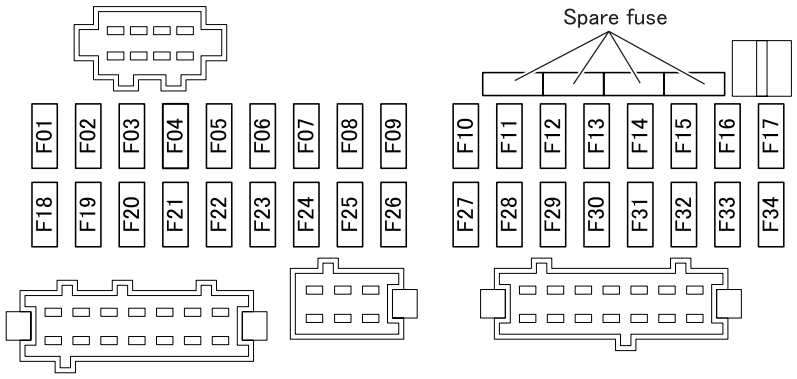

SAM : Signal detect and actuation modules

Removal of spare fuse

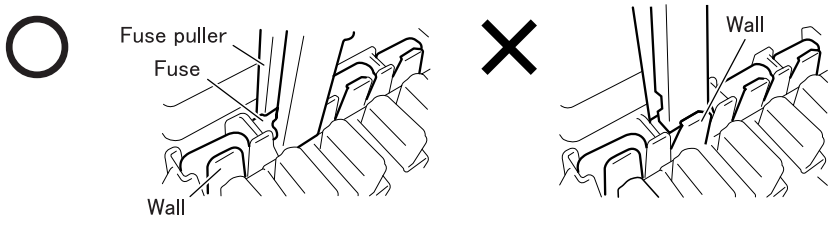

WARNING ⚠

- **To prevent possible injury, be sure to disconnect the negative (-) cable of the battery and insulate it with tape before removing fuses. (See Gr00.)**

CAUTION ⚠

- **If a fuse blows out, identify and remedy the cause, then replace the fuse.**
- **Be sure to use the fuse with the specified ampere.**
- **Insert the fuse puller into the gap on the outer side of the fuse holder wall to remove the spare fuse. Do not force the puller into the gap on the inner side of the fuse holder wall. Doing so will break the SAM and cause malfunctions or a fire.**

54-L05232FUSE-1

https://truckmanualshub.com/

Fuse box

Fuse No.	Main load	Capacity
F01	Starter	10A
F02	—	—
F03	—	—
F04	Opt (IGN)	10A
F05	Power window (driver's seat side)	30A
F06	—	—
F07	Power window (assistant driver's seat side)	30A
F08	Identification lamp	20A
F09	Meter cluster, diagnosis connector, combination switch	10A
F10	—	—
F11	Blower fan	30A
F12	Audio, cab lamp	15A
F13	Starter switch, immobilizer	10A
F14	Horn	10A
F15	Audio, DUONIC ECU	10A
F16	Cigarette lighter	20A
F17	Fuel filter	20A
F18	ABS ECU	10A
F19	Engine ECU	15A
F20	Four-wheel drive	10A
F21	—	—
F22	Meter cluster	15A
F23	—	—
F24	DUONIC ECU	10A
F25	Opt (ACC)	10A
F26	Opt (B)	10A
F27	Van body dome light	20A
F28	Engine ECU	15A
F29	BlueTec® exhaust gas aftertreatment	20A
F30	BlueTec® exhaust gas aftertreatment	20A
F31	Engine ECU	20A
F32	Air-conditioner	10A
F33	—	—
F34	Fuel pump	15A

ABS : Anti-lock brake system
ECU : Electronic control unit

https://truckmanualshub.com/

105 SAM INTERNAL CIRCUIT

(1/2)

A part of this circuit is omitted.

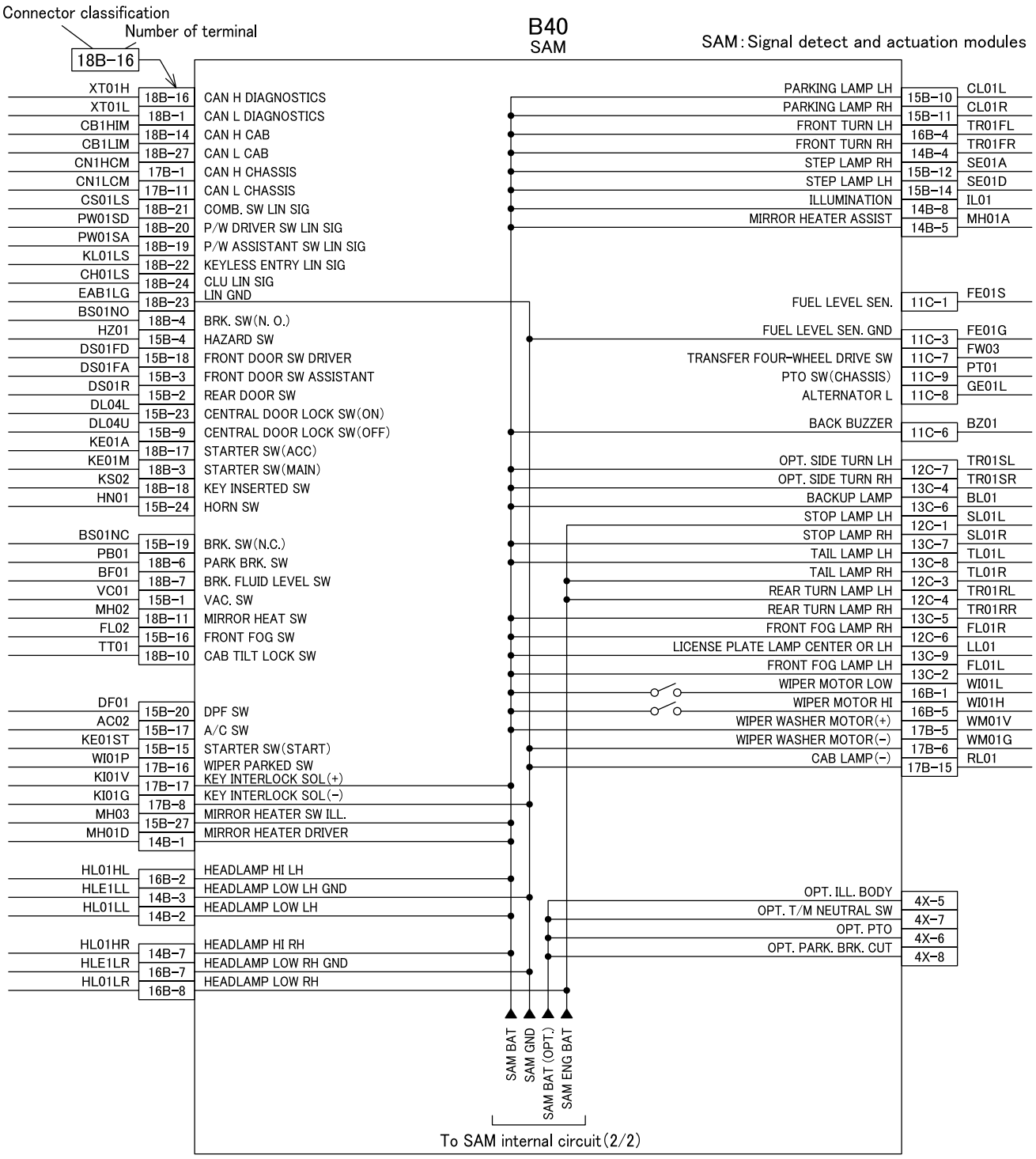

SAM connector (harness side)

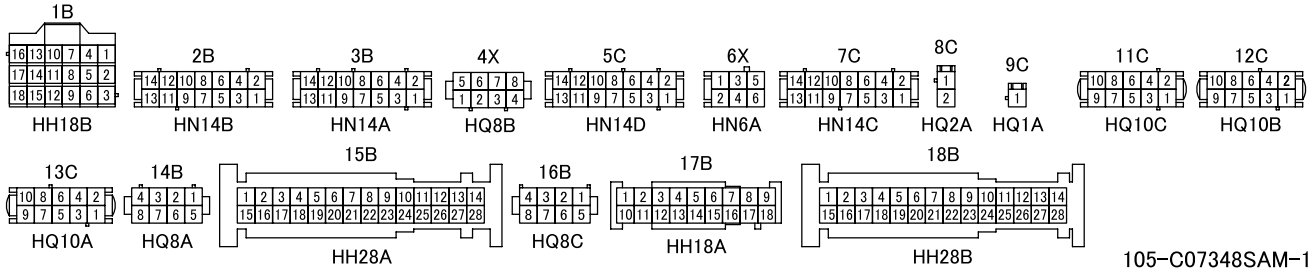

105-C07348SAM-1

https://truckmanualshub.com/

(2/2)

A part of this circuit is omitted.

B40
SAM

SAM : Signal detect and actuation modules

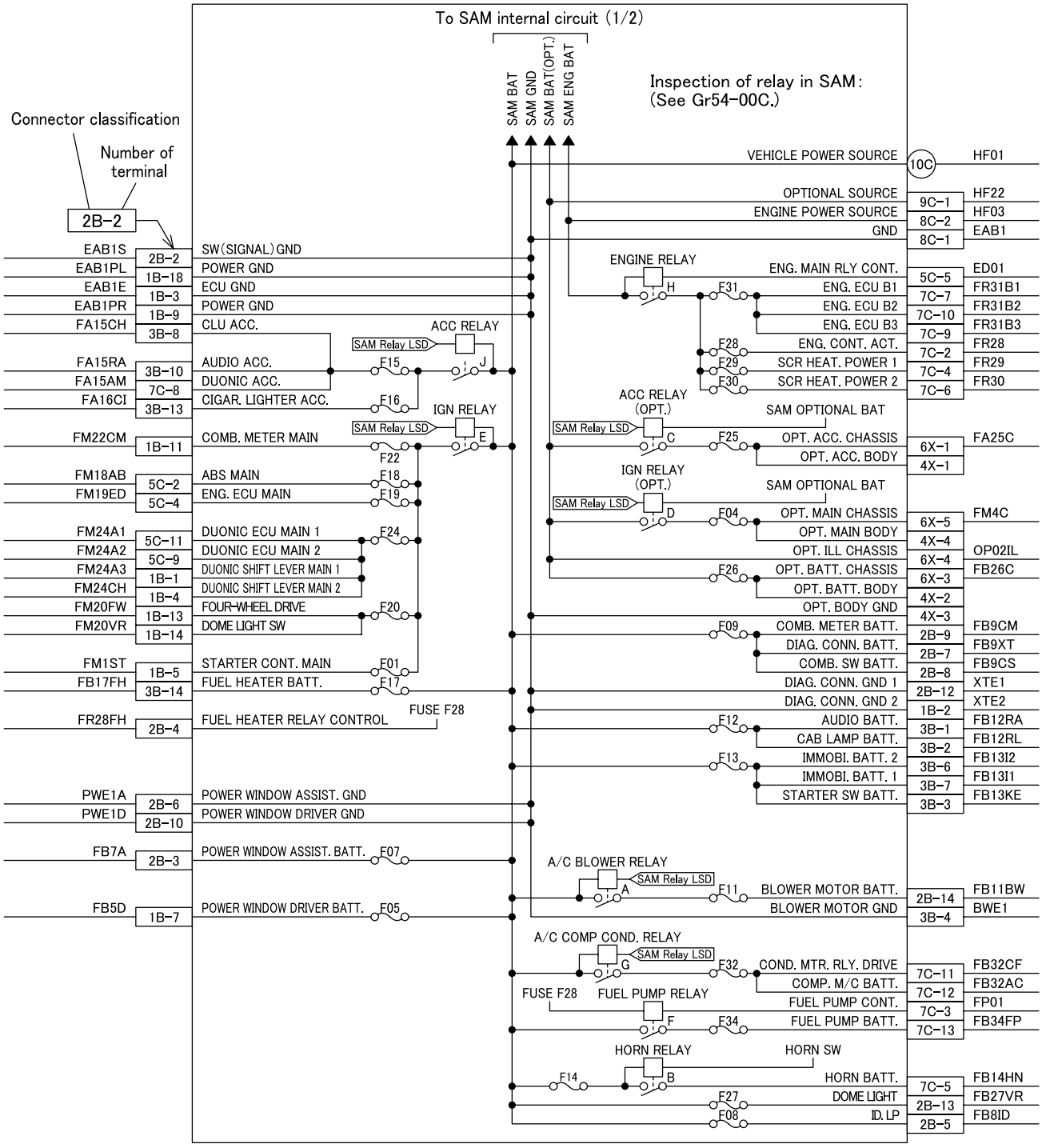

SAM connector (harness side)

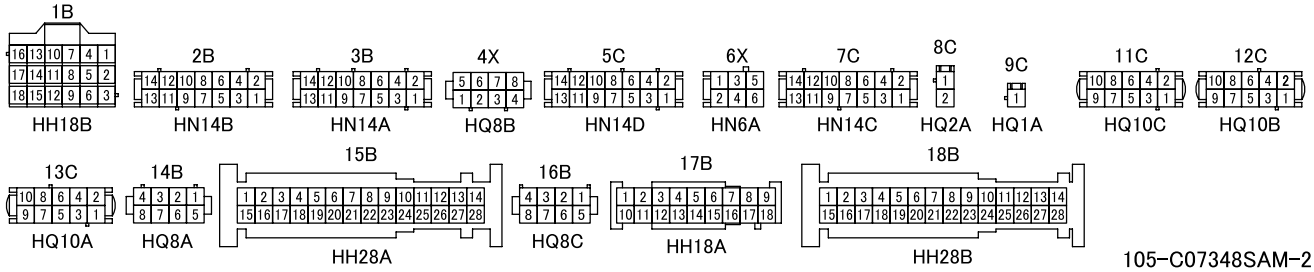

105-C07348SAM-2

https://truckmanualshub.com/

110 POWER CIRCUIT

Battery → high-current fuse → SAM

ECU : Electronic control unit
SAM : Signal detect and modules
ABS : Anti-lock brake system

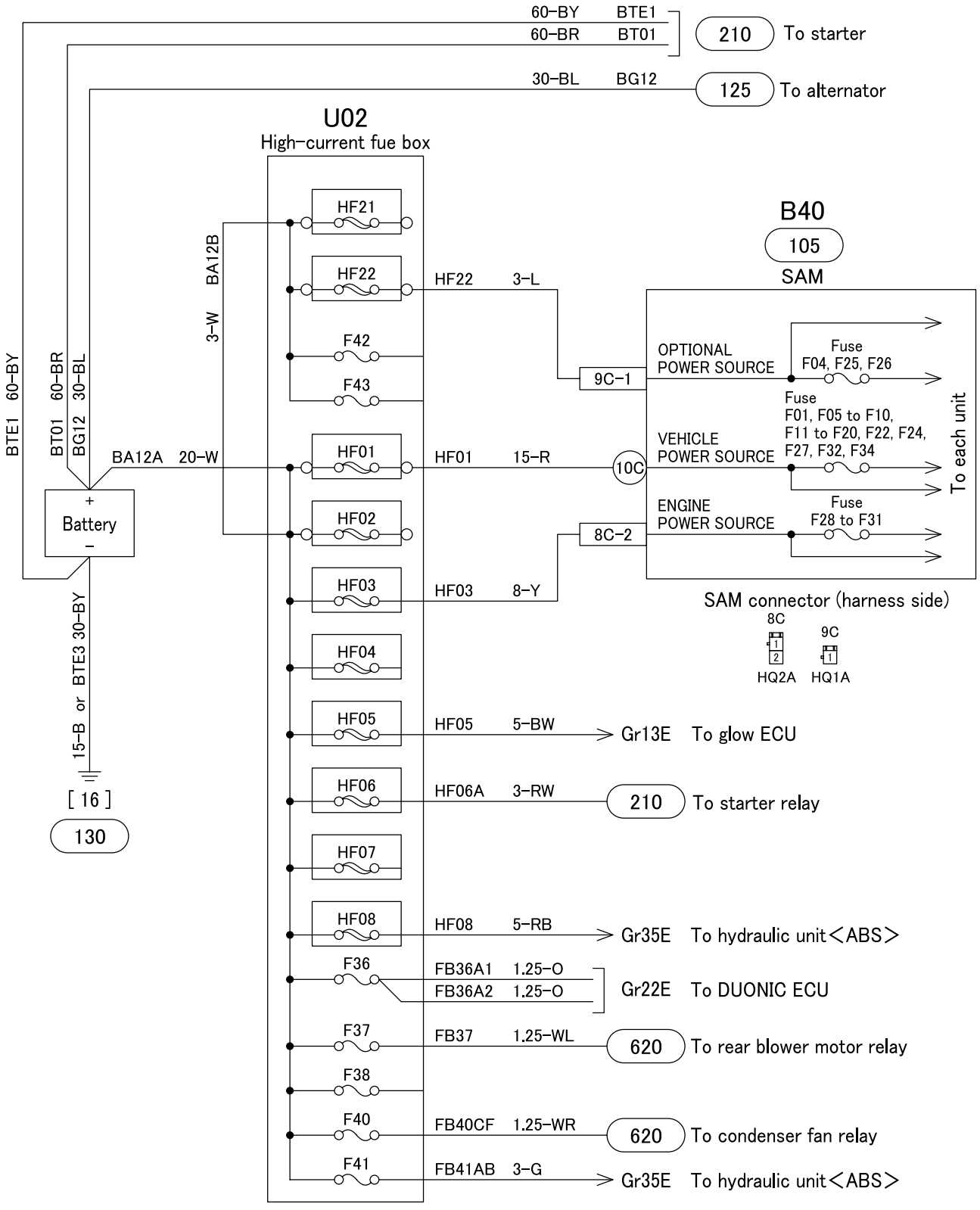

110-C07348ALL

https://truckmanualshub.com/

SAM
(OPTIONAL BAT)

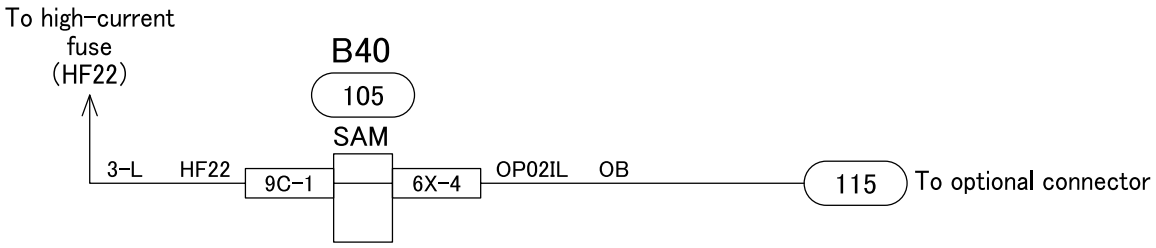

SAM connector (harness side)

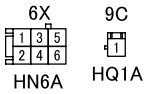

https://truckmanualshub.com/

SAM
(ENG BAT)

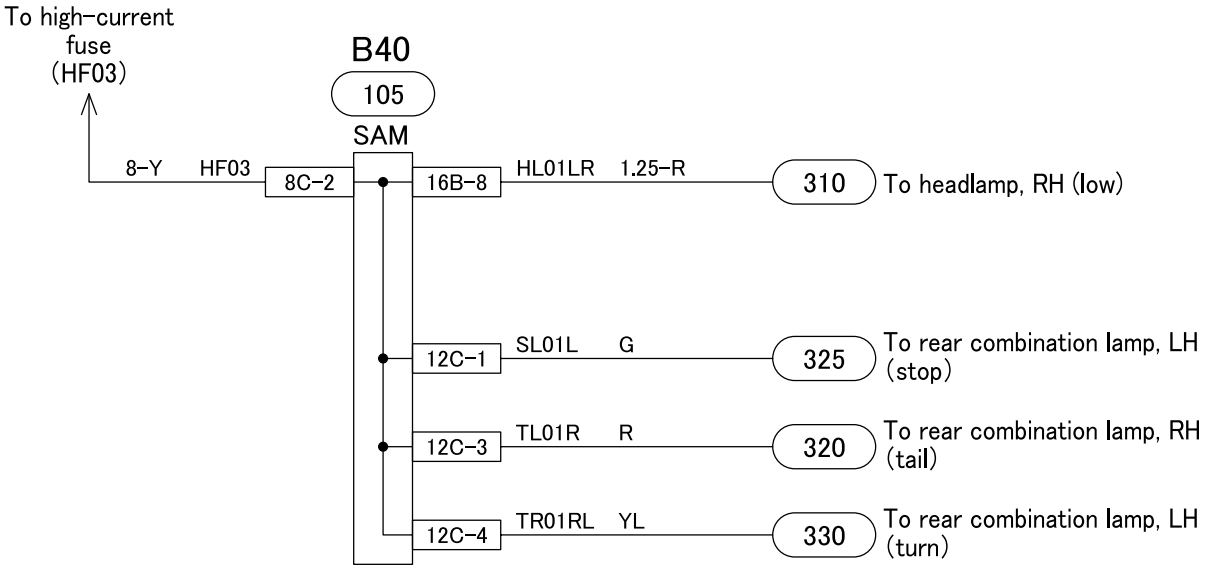

SAM connector (harness side)

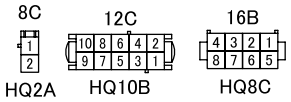

110-C07348EB

https://truckmanualshub.com/

SAM
(VEHICLE BAT) 1/3

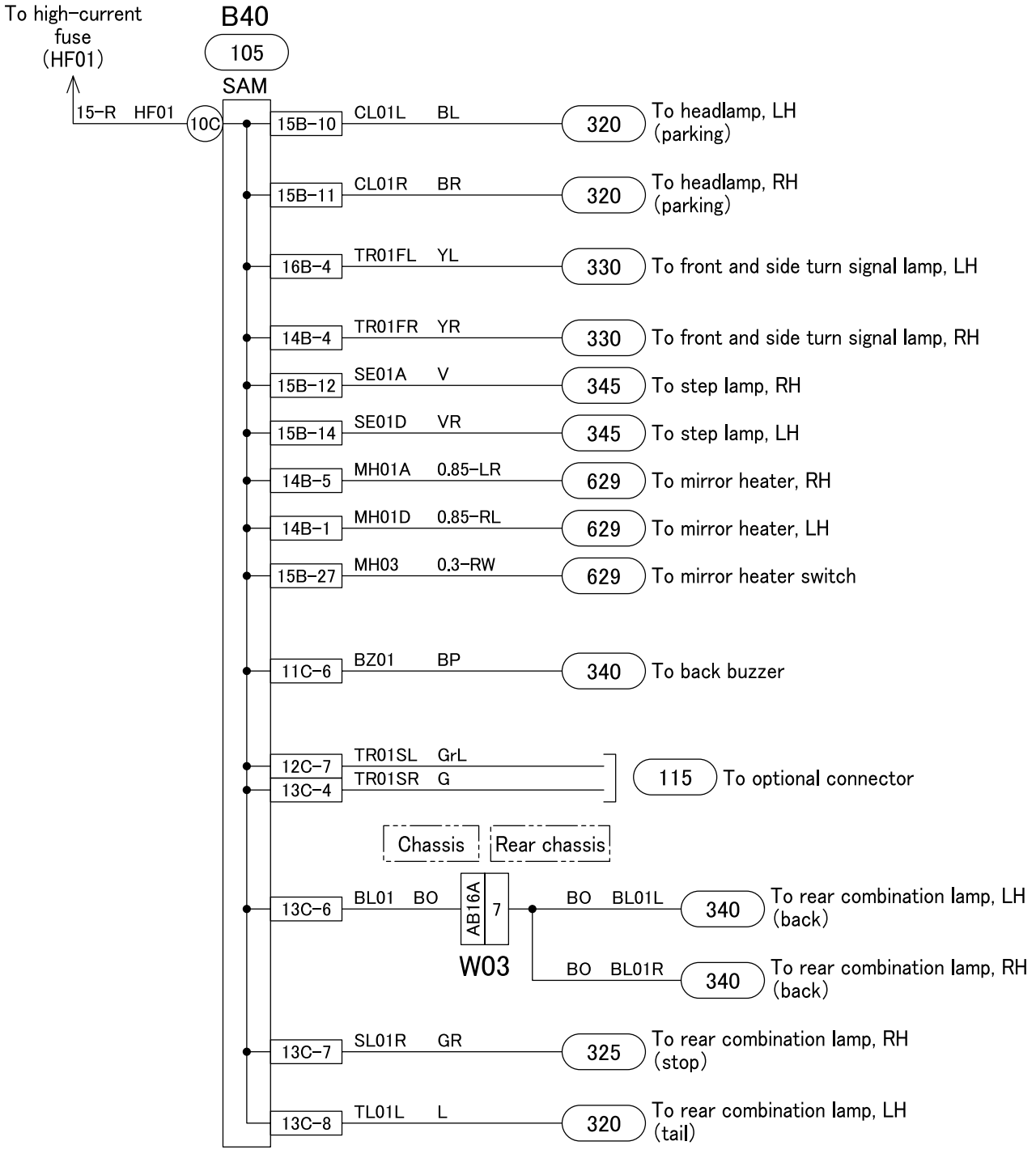

SAM connector (harness side)

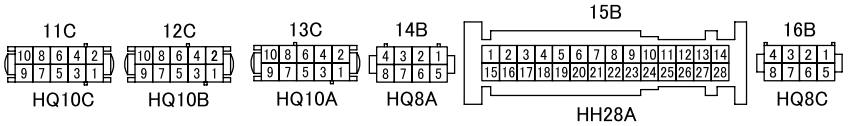

110-C07348VB-1

https://truckmanualshub.com/

SAM
(VEHICLE BAT)2/3

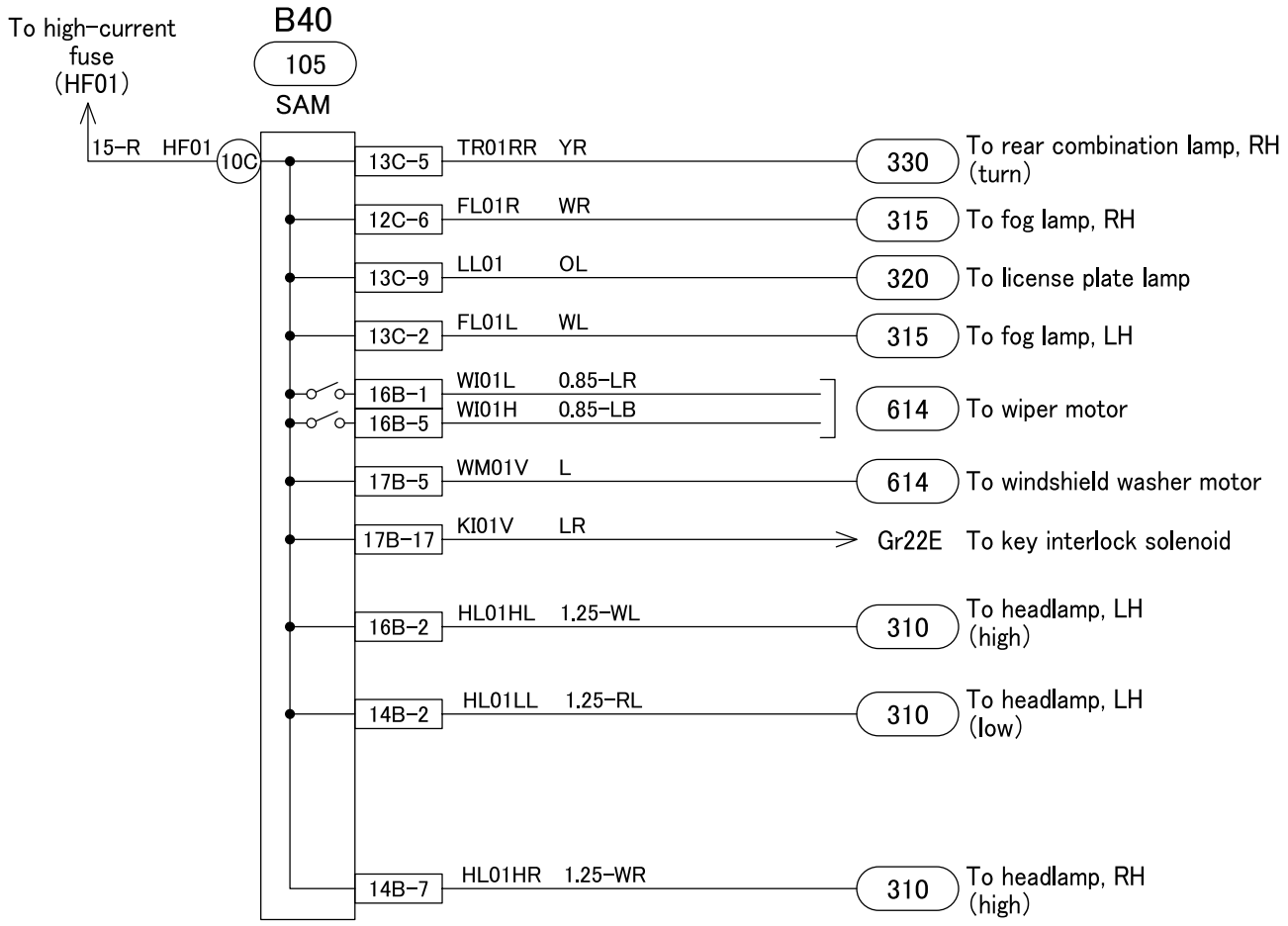

SAM connector (harness side)

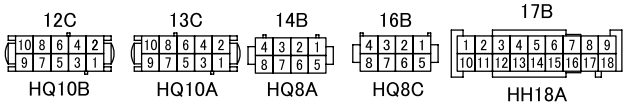

110-C07348VB-2

https://truckmanualshub.com/

SAM
(VEHICLE BAT)3/3

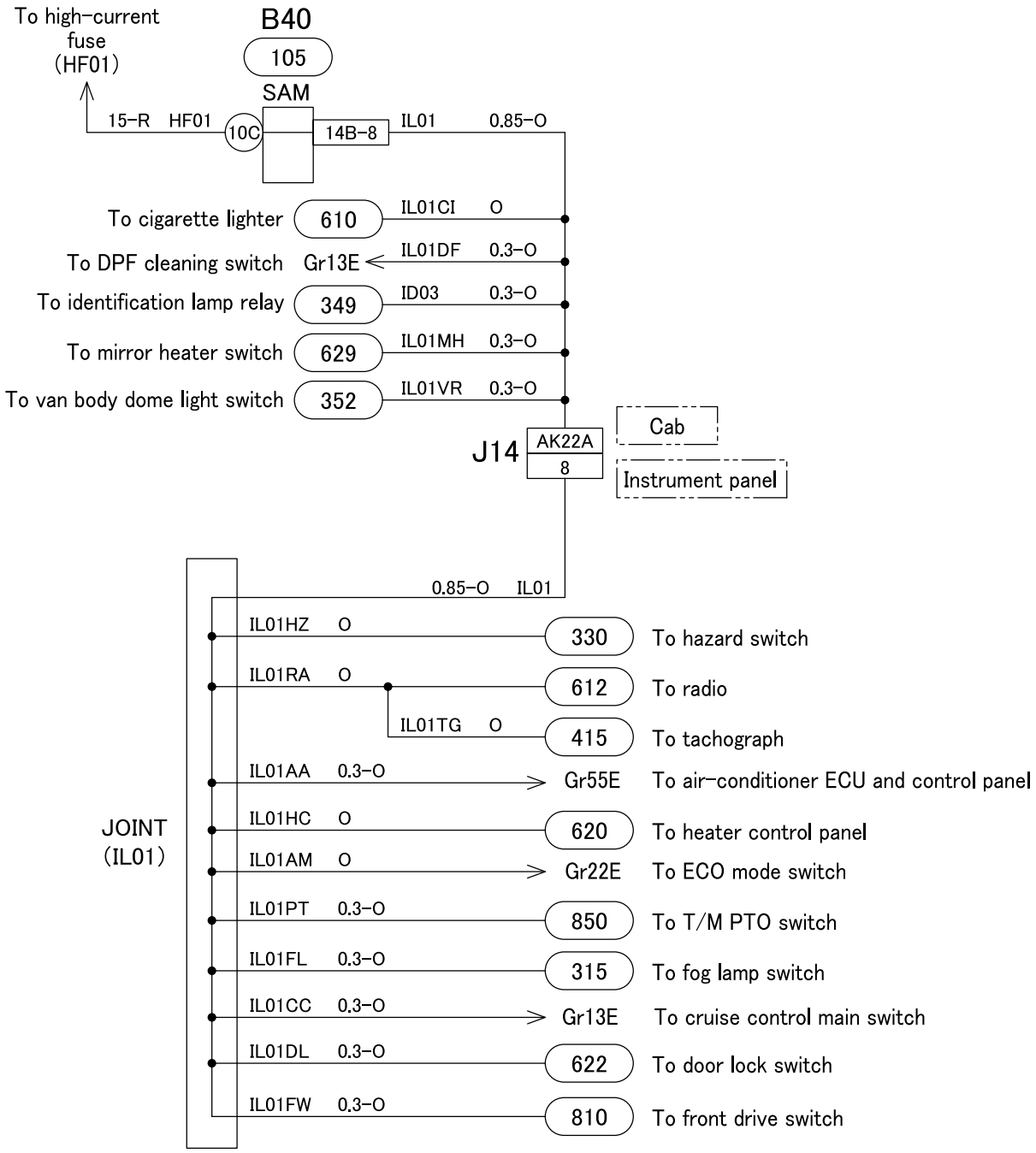

SAM connector (harness side)



ECU : Electronic control unit
T/M : Transmission
PTO : Power take-off
DPF : Diesel particulate filter

110-C07348VB-3

https://truckmanualshub.com/

SAM
(Fuse F01 to F09)

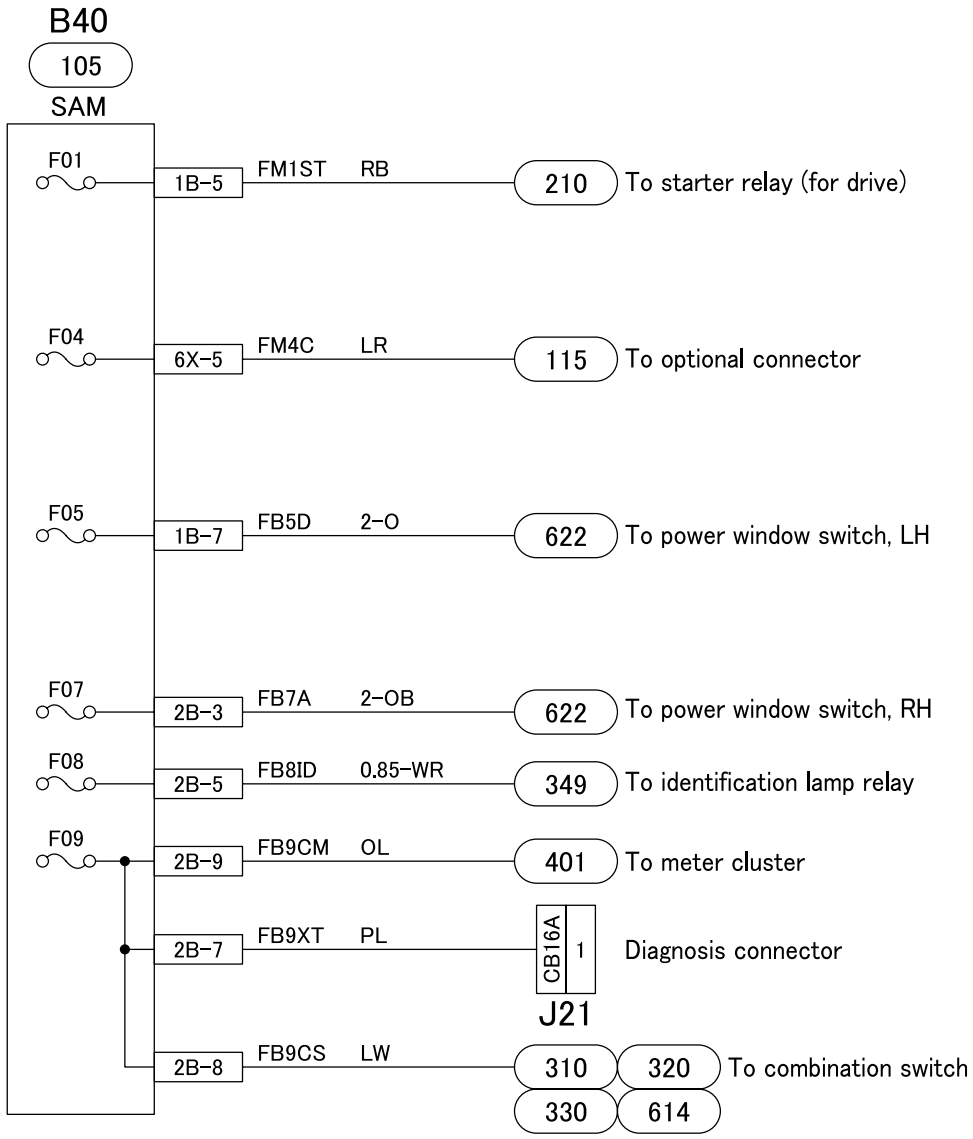

SAM connector (harness side)

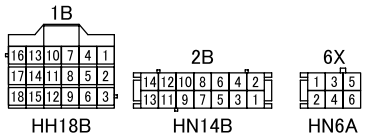

110-C07348F01

https://truckmanualshub.com/

SAM
(Fuse F11 to F14)

A/C : Air-conditioner
ECU : Electronic control unit

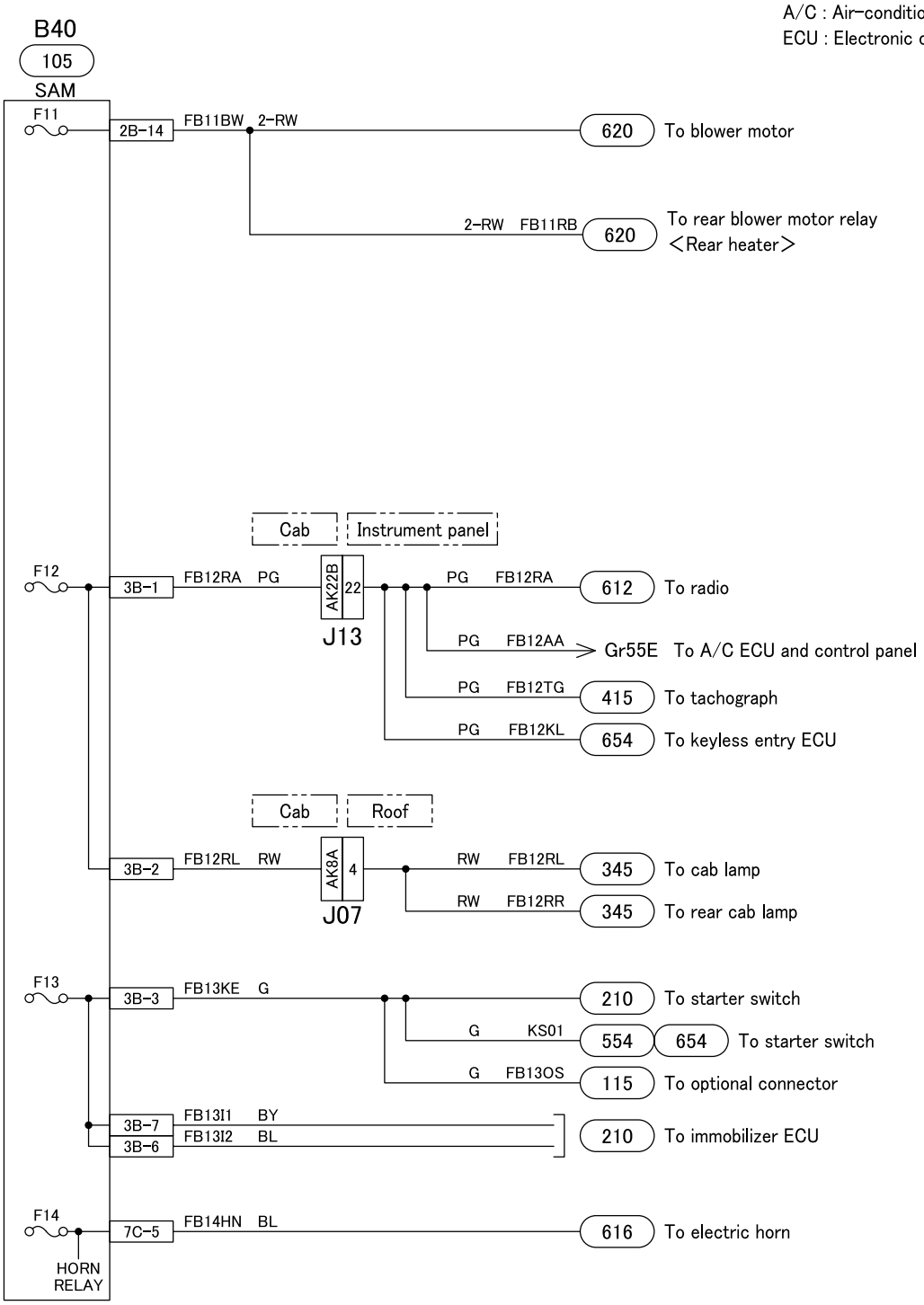

SAM connector (harness side)

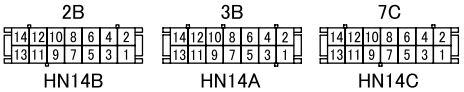

110-C07348F11

https://truckmanualshub.com/

SAM
(Fuse F15 to F17)

ECU : Electronic control unit

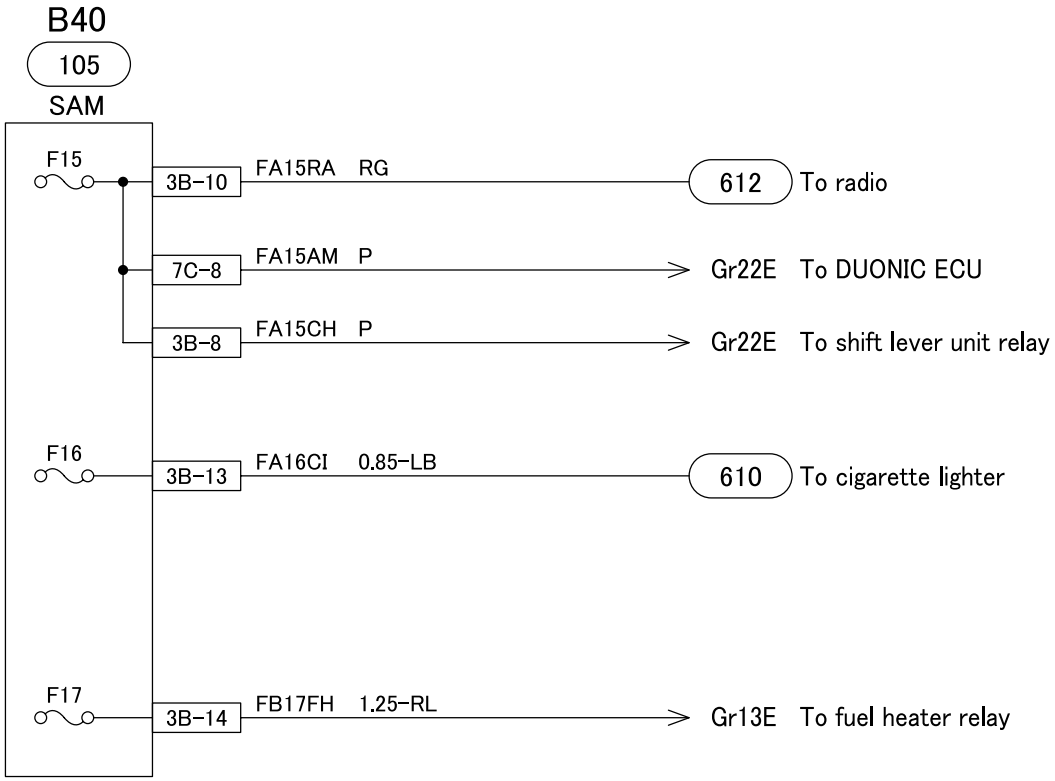

SAM connector (harness side)

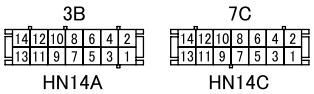

110-C07348F15

https://truckmanualshub.com/

SAM
(Fuse F18 to F20)

ABS : Anti-lock brake system
ECU : Electronic control unit

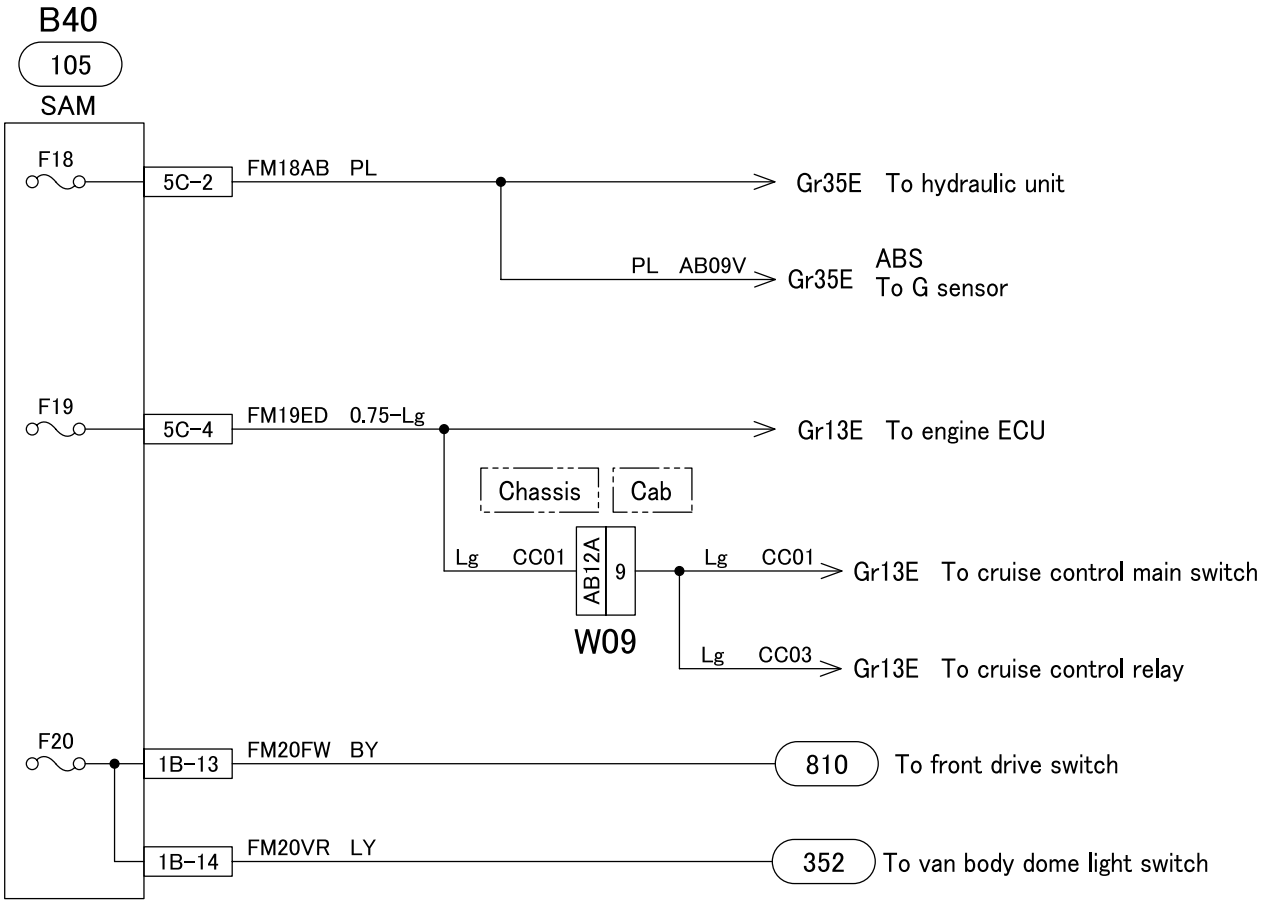

SAM connector (harness side)

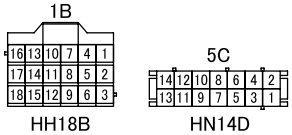

110-C07348F18

https://truckmanualshub.com/

SAM
(Fuse F22 to F24)

A/C : Air-conditioner
ECU : Electronic control unit

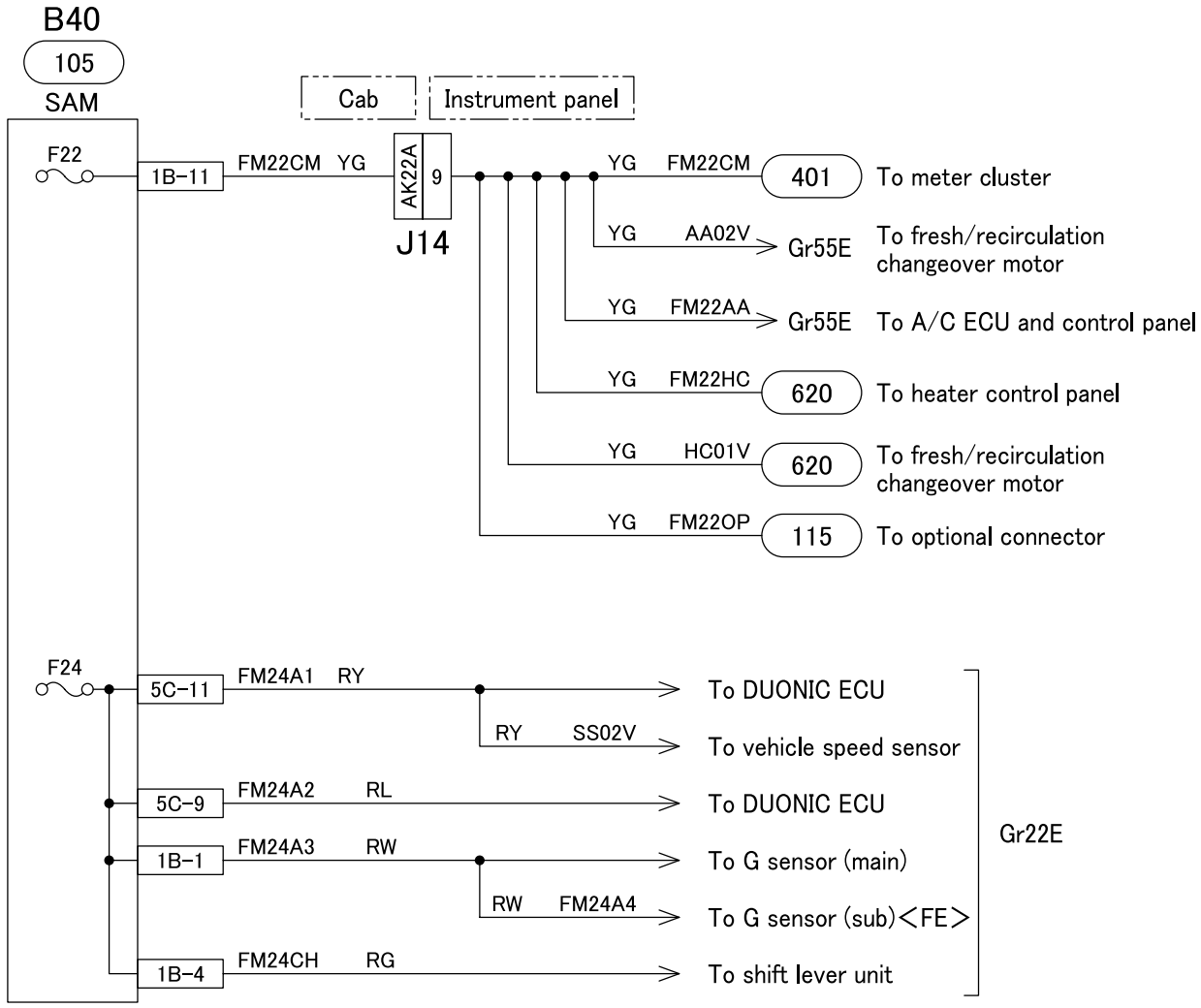

SAM connector (harness side)

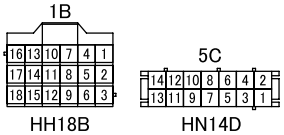

110-C07348F22

https://truckmanualshub.com/

SAM
(Fuse F25 to F27)

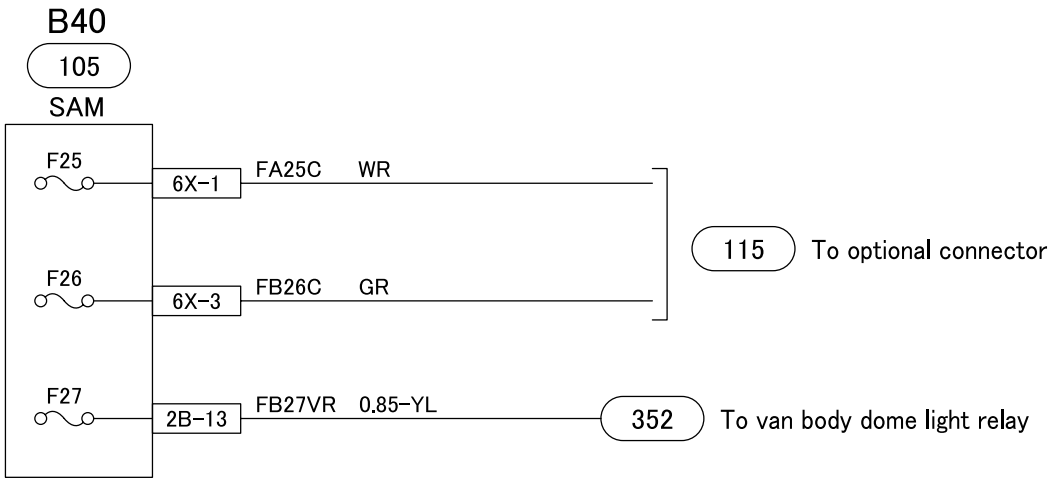

SAM connector (harness side)

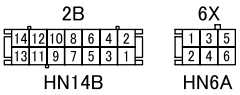

https://truckmanualshub.com/

SAM
(Fuse F28 to F31)

ECU : Electronic control unit
DEF : Diesel exhaust fluid

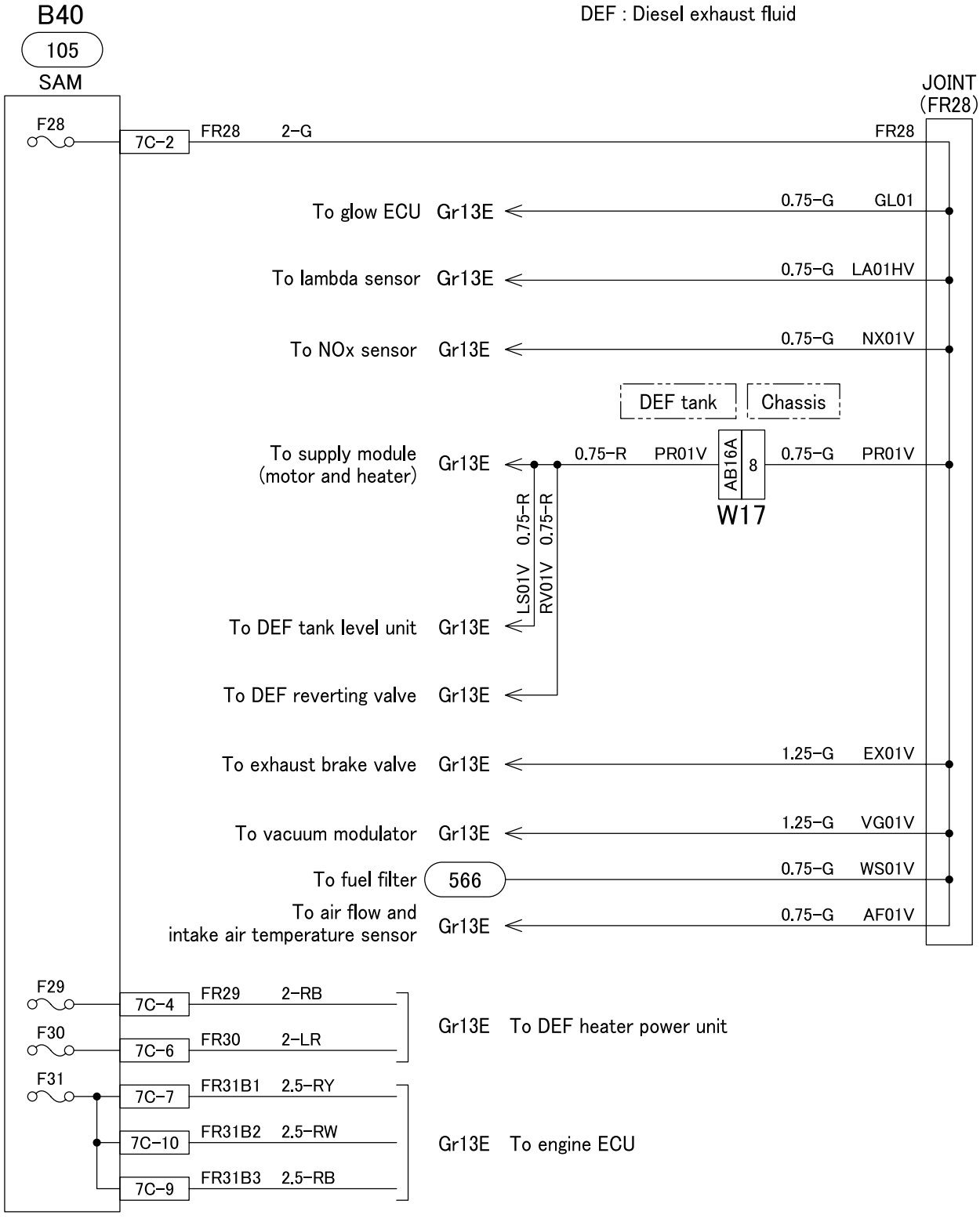

SAM connector (harness side)

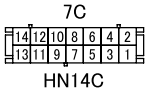

110-C07348F28

https://truckmanualshub.com/

SAM
(Fuse F32 to F34)

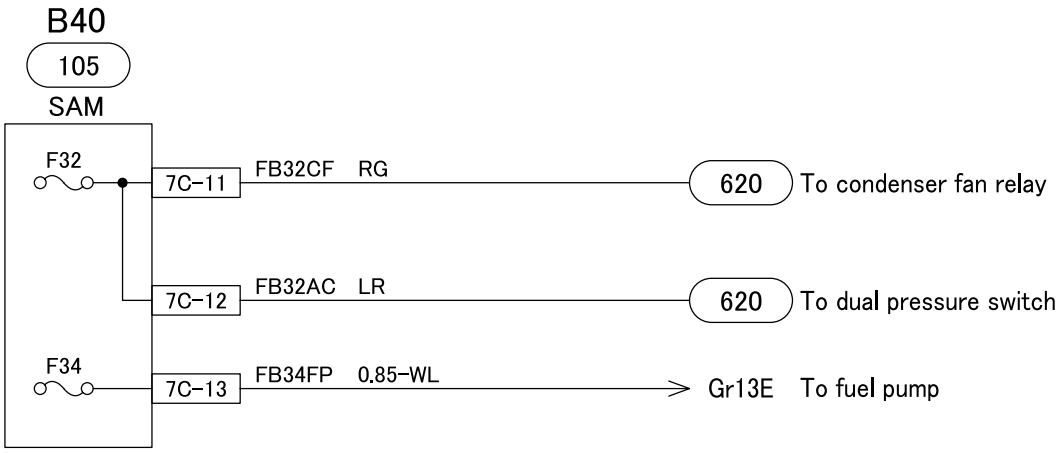

SAM connector (harness side)

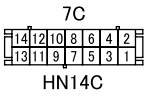

https://truckmanualshub.com/

115 RESERVE POWER CIRCUIT

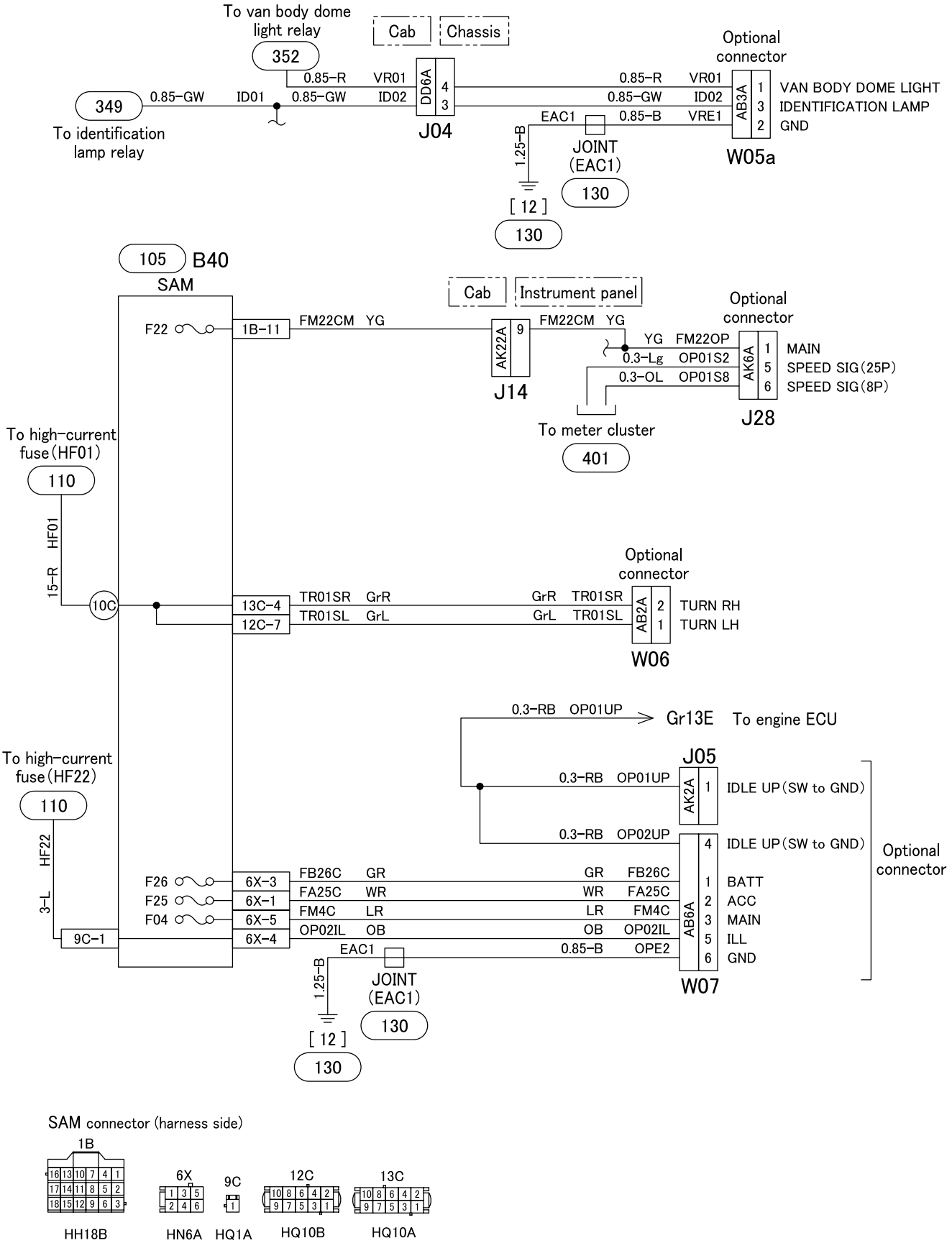

115-C07348

https://truckmanualshub.com/

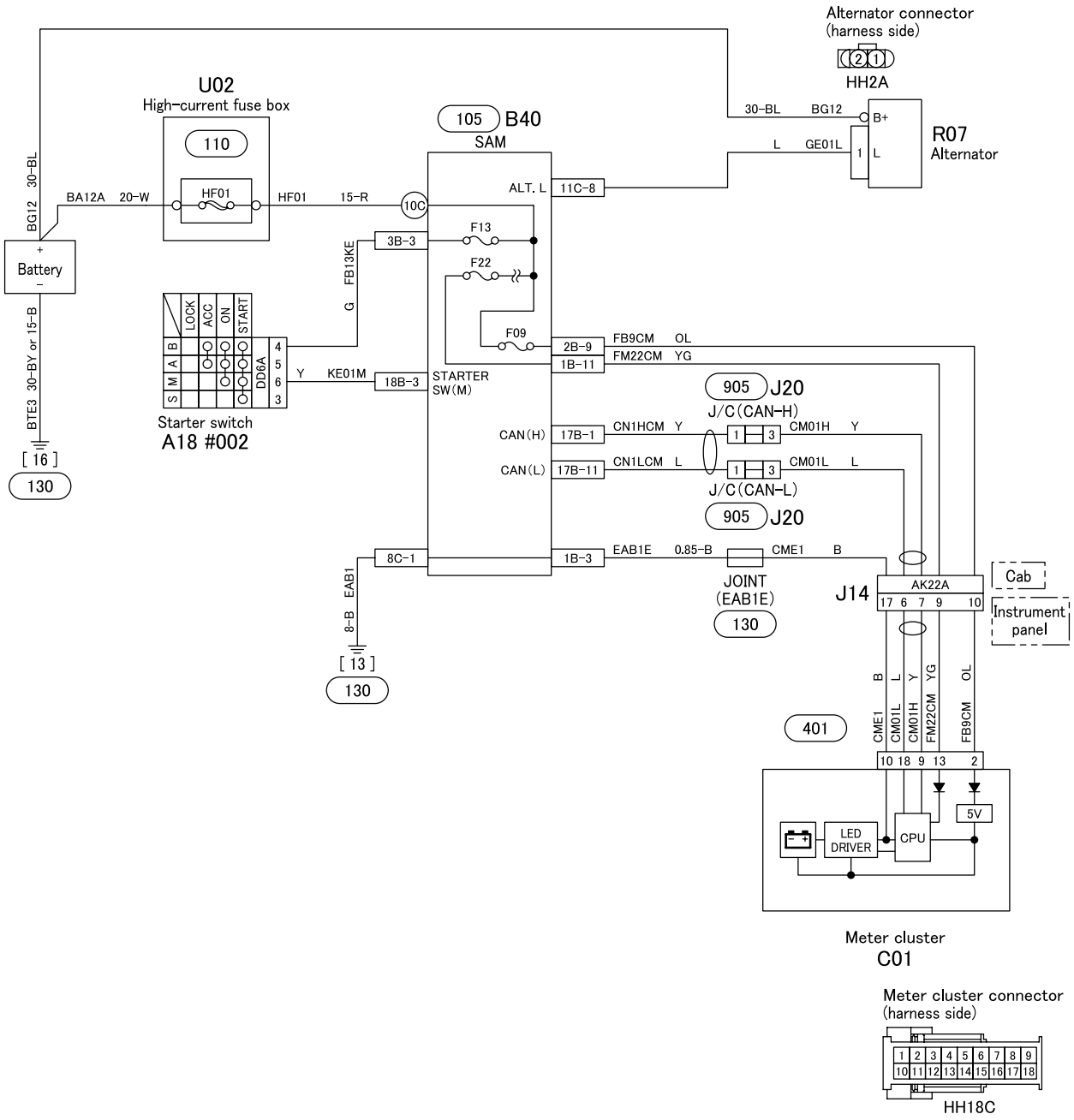

SAM connector (harness side)

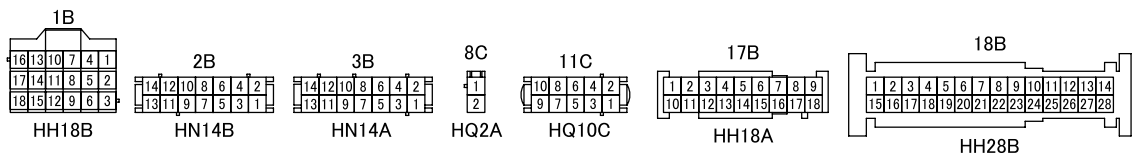

125-C07348

https://truckmanualshub.com/

[1] to [2] Cab ground

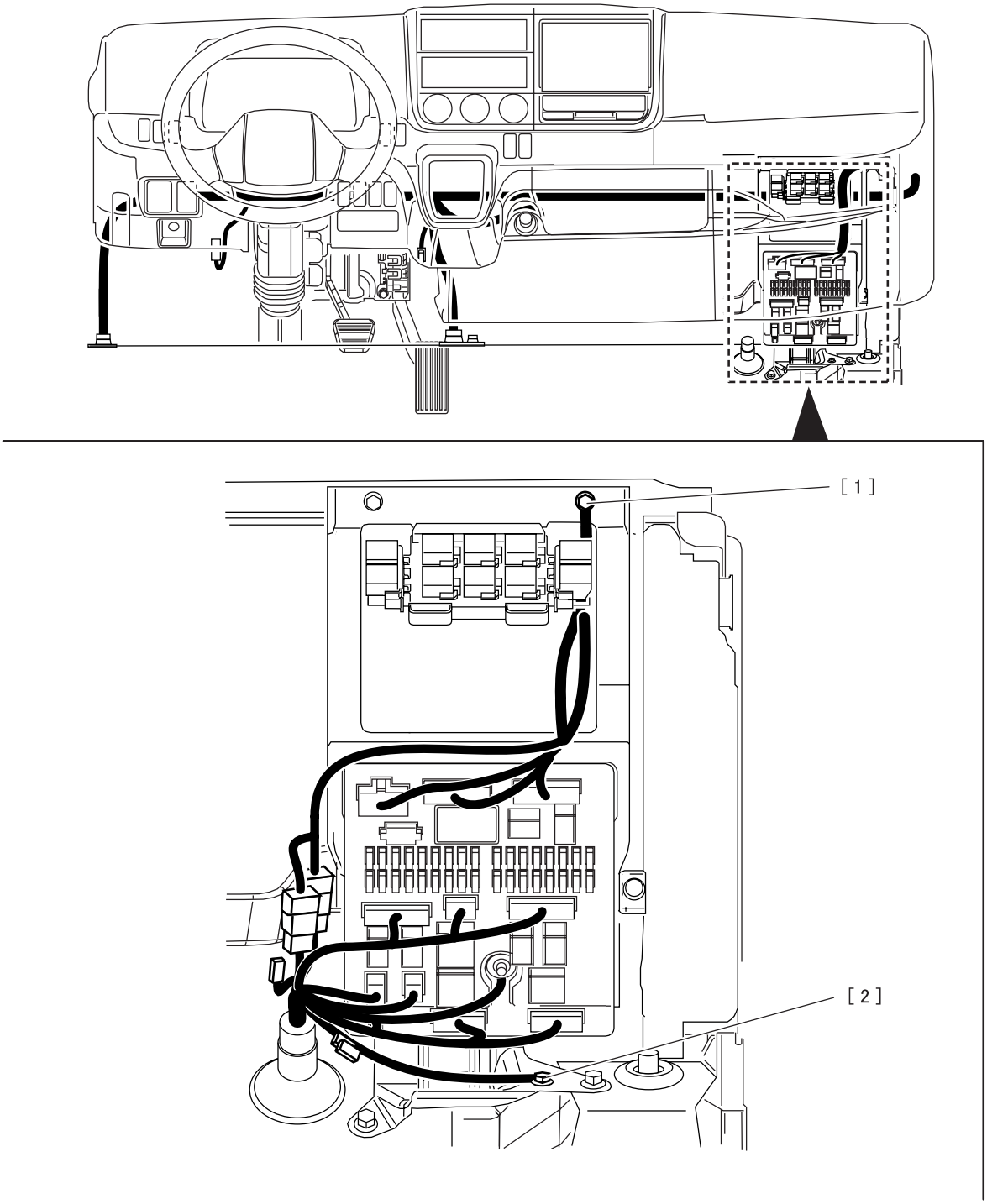

Location	Circuit No.	Wire diameter - wire color	Destination	Remarks
[1]	EAB2	1.25-B	JOINT (EAB2)	
[2]	EAB3	1.25-B	Frame ground ([12])	

54-L05232GND-1

https://truckmanualshub.com/

[11] to [17] Chassis ground

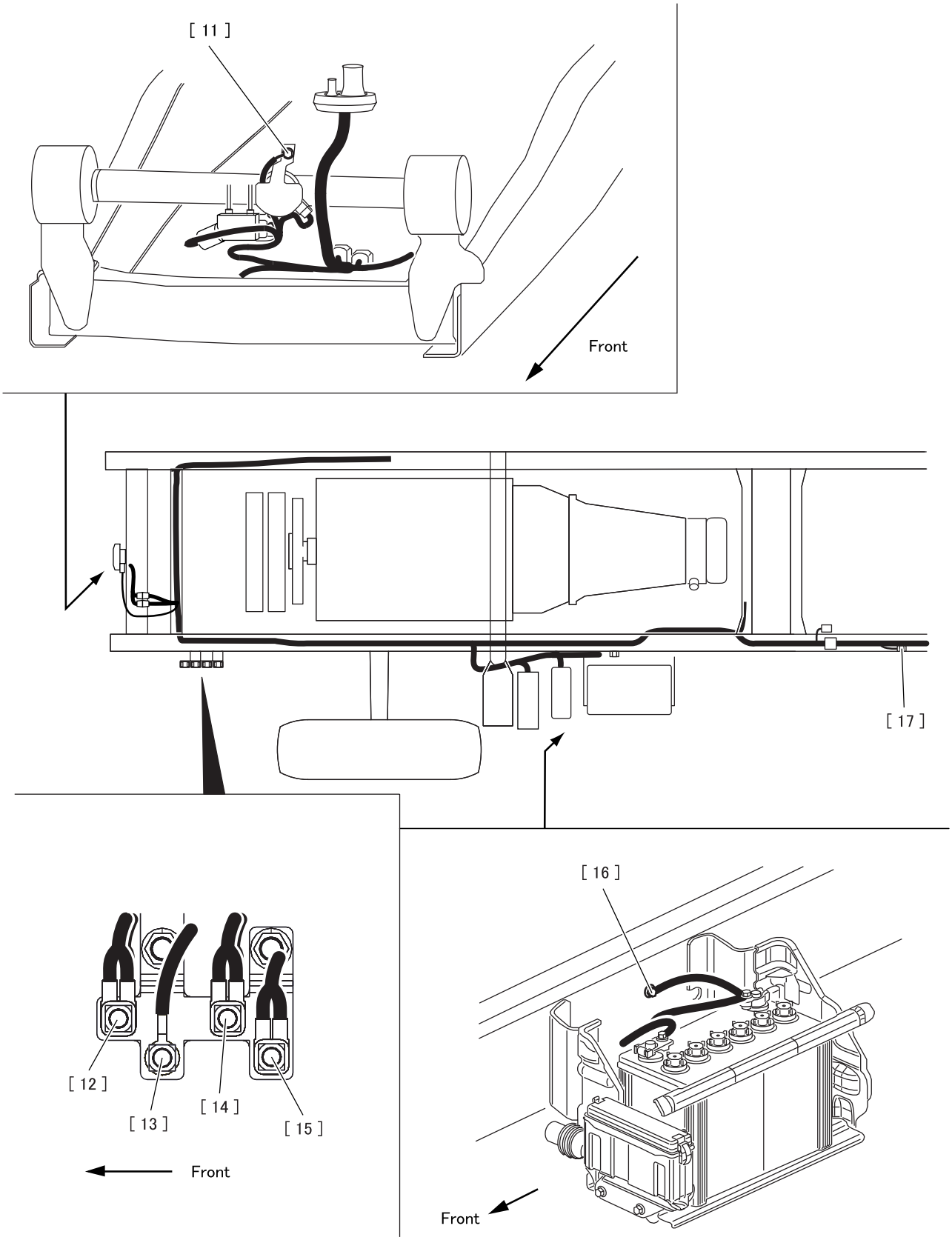

54-L05232GND-2

https://truckmanualshub.com/

Location	Circuit No.	Wire diameter - wire color	Destination	Remarks
[11]	HNE1	1.25-B	Frame ground ([12])	Horn
[12]	CFE1	1.25-B	Condenser fan motor	FE
	EAB3	1.25-B	Cab ground ([2])	
	EAC1	1.25-B	JOINT (EAC1)	
	FHE1	1.25-B	Fuel filter	FG
	FHE1S	1.25-B		FG
	FLE1	B	Fog lamp	
	HNE1	1.25-B	Horn ground	
	HSE1	2-B	DEF tank	BlueTec® exhaust gas aftertreatment
	HSE2	2-B		
[13]	EAB1	8-B	SAM	
[14]	ABE1	3-B	Hydraulic unit	ABS
	ABE2	3-B		
	AME1	1.25-B	DUONIC ECU	
	AME2	1.25-B		
	EDE1	2.5-B	Engine ECU	
	EDE2	2.5-B		
	EDE3	2.5-B		
	EXE1	1.25-B		
[15]	CFE1	1.25-B	Condenser fan motor	FG
	EAR1		JOINT (EAR1)	FG
	FHE1		Fuel filter	FE
[16]	—	15-B	Battery	FG
	BTE3	30-BY	Battery	FE
[17]	EAR1	1.25-B	JOINT (EAR1)	FE
	FPE1X	0.85-B	Fuel pump	FE

SAM : Signal detect and actuation modules
ABS : Anti-lock brake system
ECU : Electronic control unit
DEF : Diesel exhaust fluid

https://truckmanualshub.com/

Entire ground

- This diagram indicates grounding points.
- See the following pages for branching of grounding (wiring for ☆). (in circuit No. order)

ECU : Electronic control unit

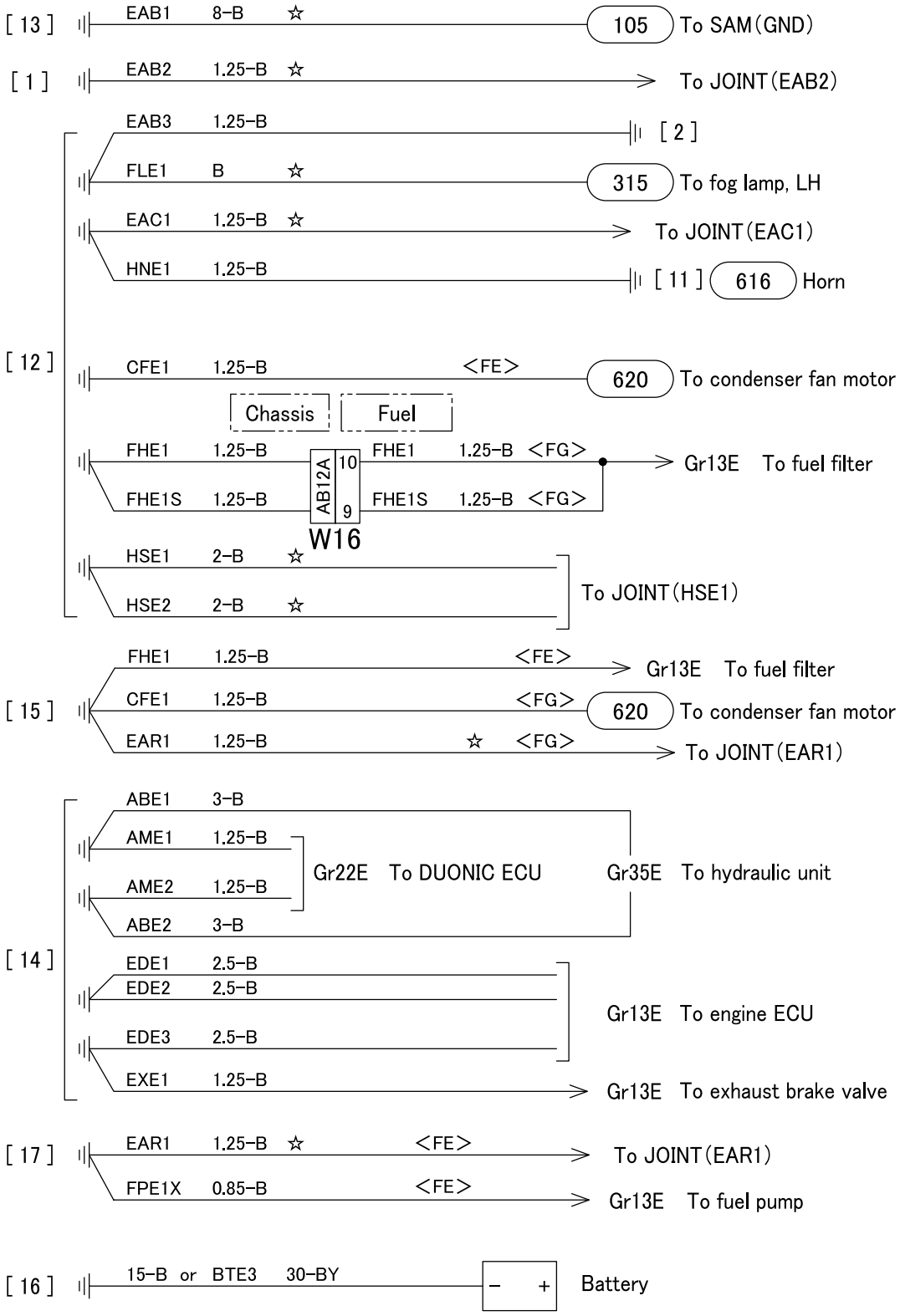

https://truckmanualshub.com/

Circuit No. EAB1 ground (1/6)

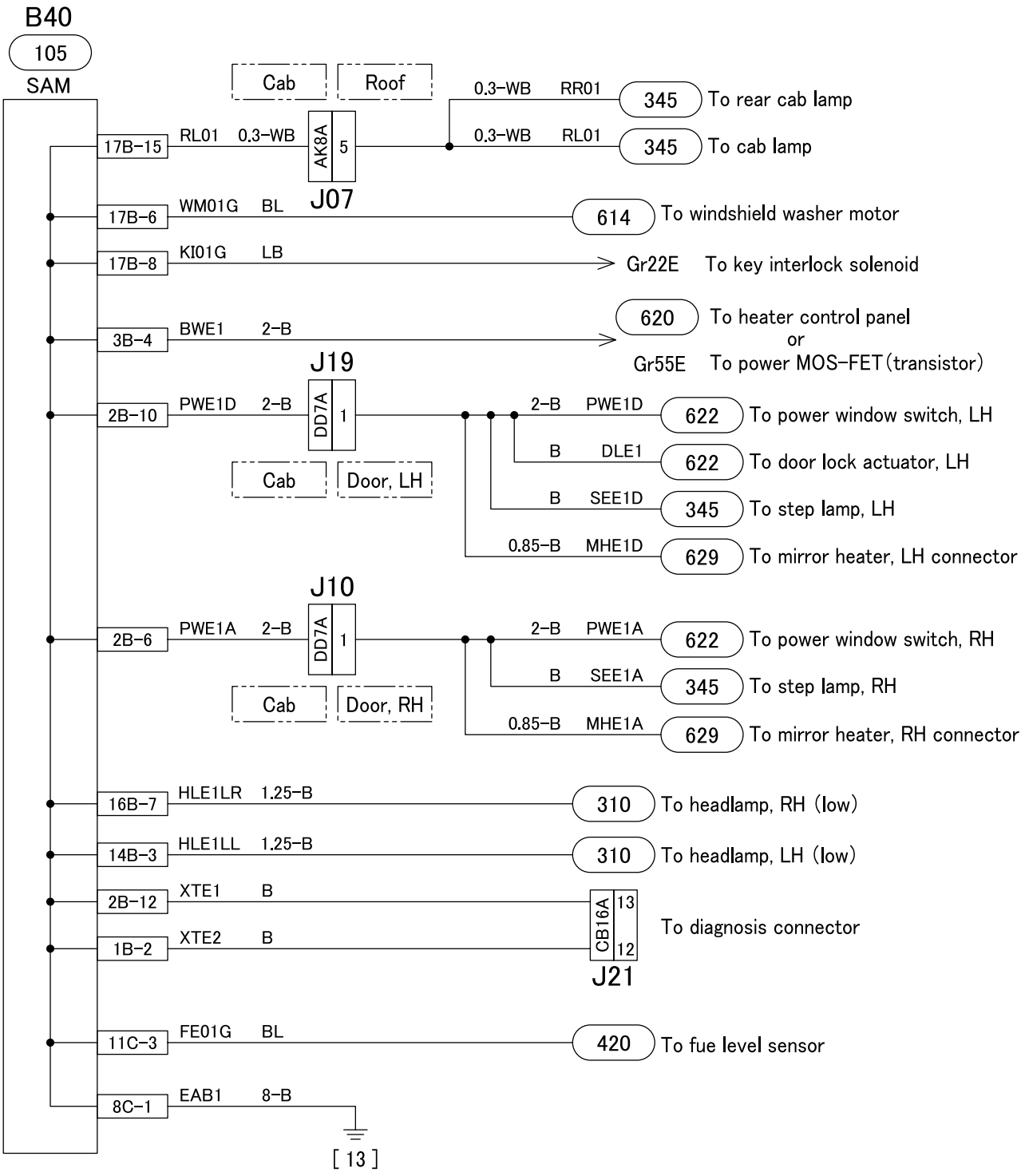

SAM connector (harness side)

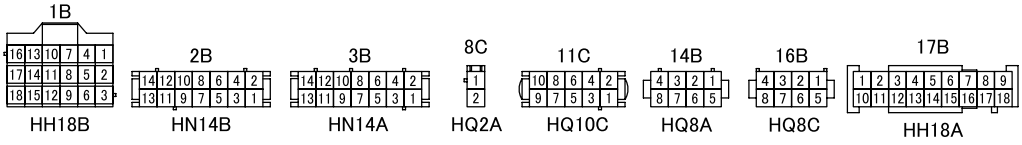

130-C07348EAB1-1

https://truckmanualshub.com/

Circuit No. EAB1 ground (2/6)
＜JOINT(EAB1E)＞

ECU : Electronic control unit

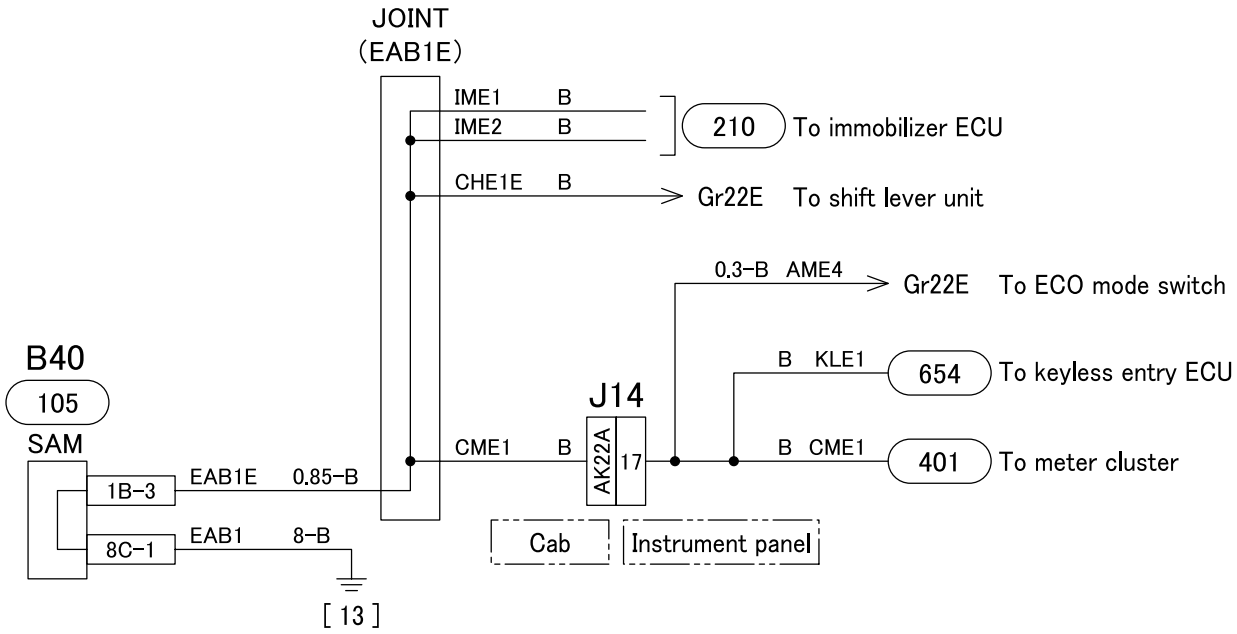

SAM connector (harness side)

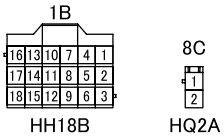

130-C07348EAB1-2

https://truckmanualshub.com/

Circuit No. EAB1 ground (3/6)
＜J/C(EAB1LG)＞

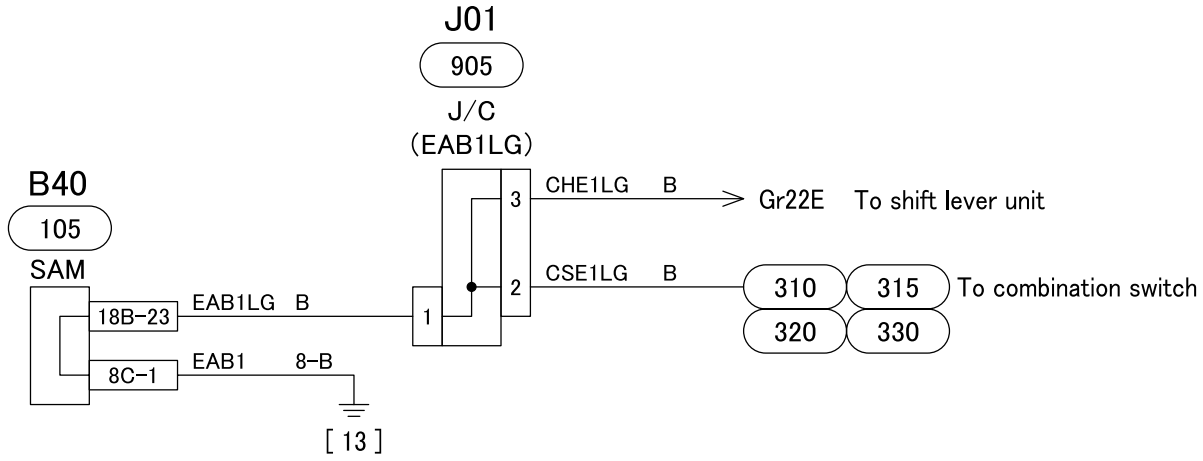

SAM connector (harness side)

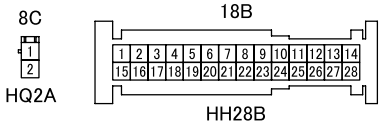

130-C07348EAB1-3

https://truckmanualshub.com/

Circuit No. EAB1 ground (4/6)
＜JOINT(EAB1PL)＞

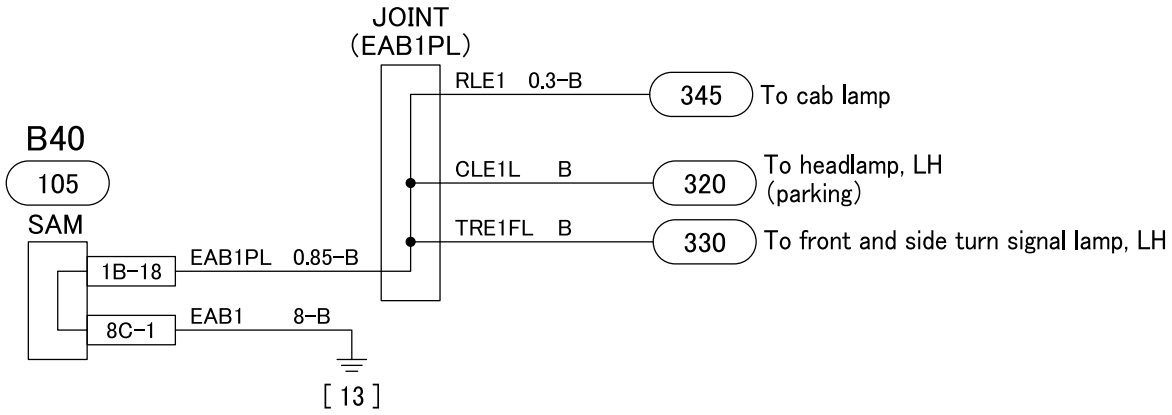

SAM connector (harness side)

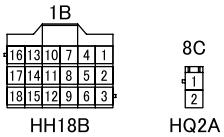

https://truckmanualshub.com/

Circuit No. EAB1 ground (5/6)
＜JOINT(EAB1PR), JOINT(EAI1)＞

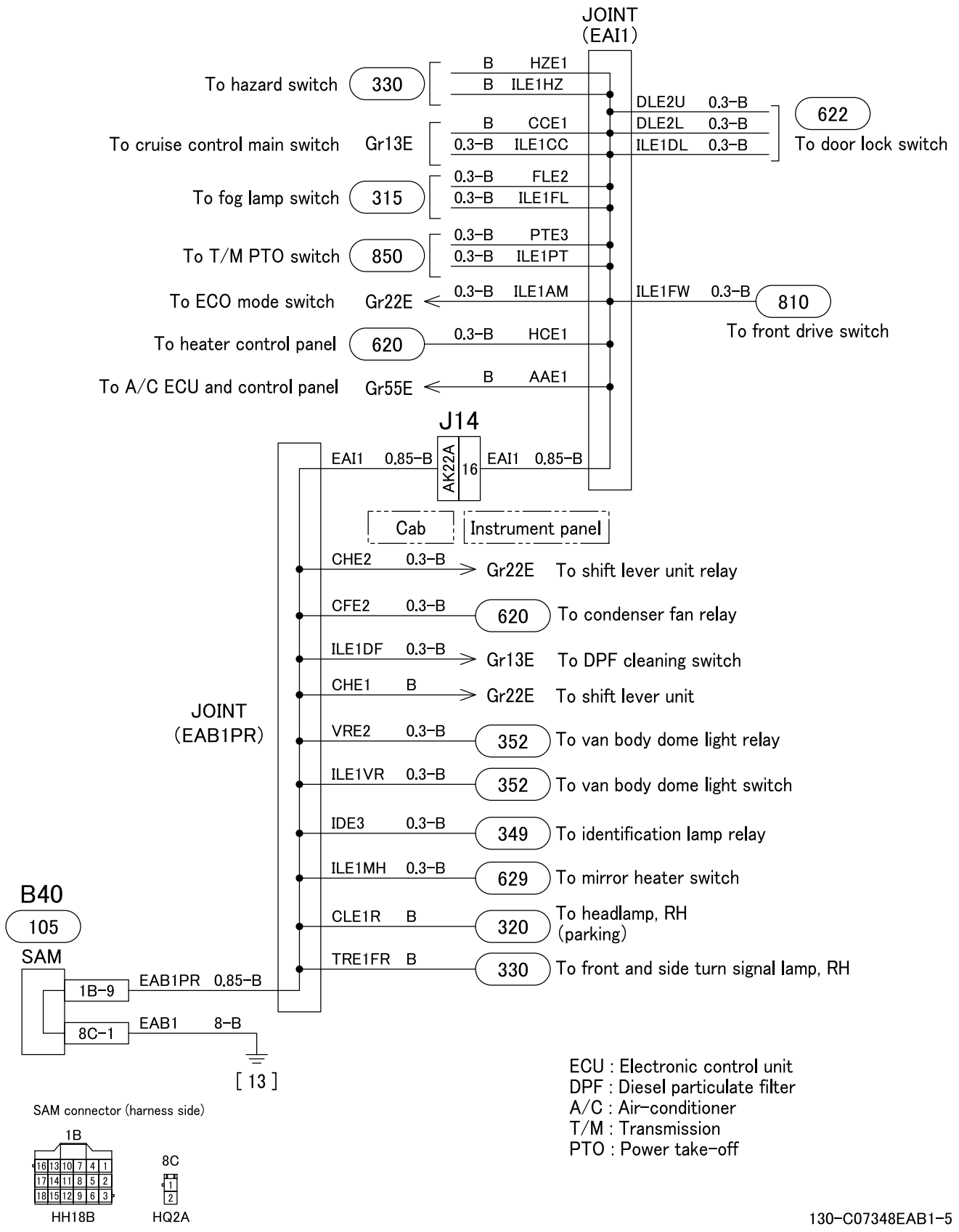

130-C07348EAB1-5

https://truckmanualshub.com/

Circuit No. EAB1 ground (6/6)
＜JOINT(EAB1S)＞

DPF : Diesel particulate filter

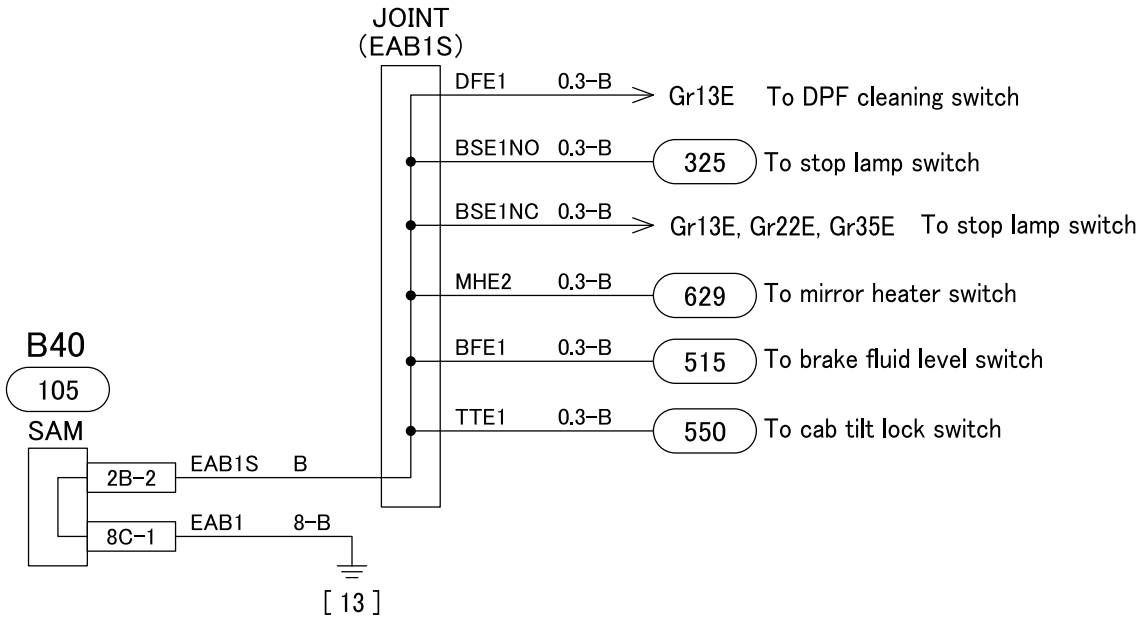

SAM connector (harness side)

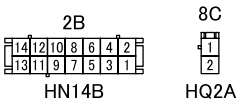

https://truckmanualshub.com/

Circuit No. EAB2 ground

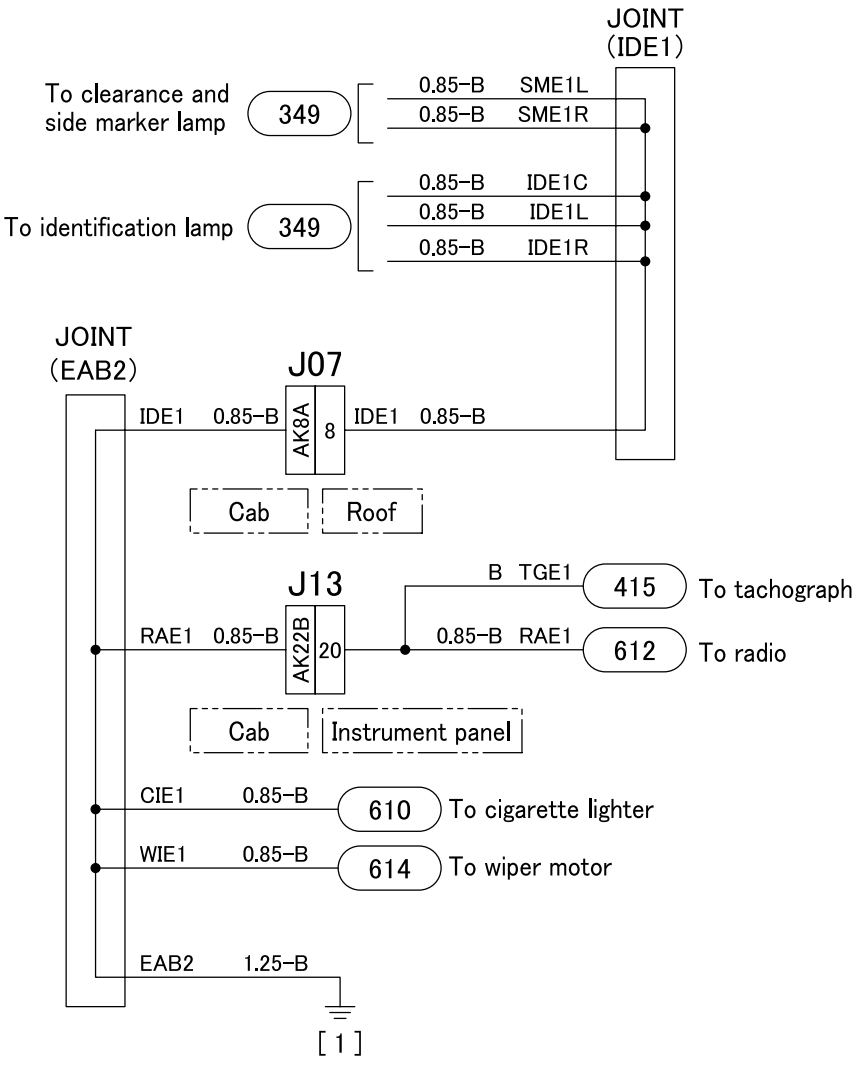

130-C07348EAB2

https://truckmanualshub.com/

Circuit No. EAC1 ground

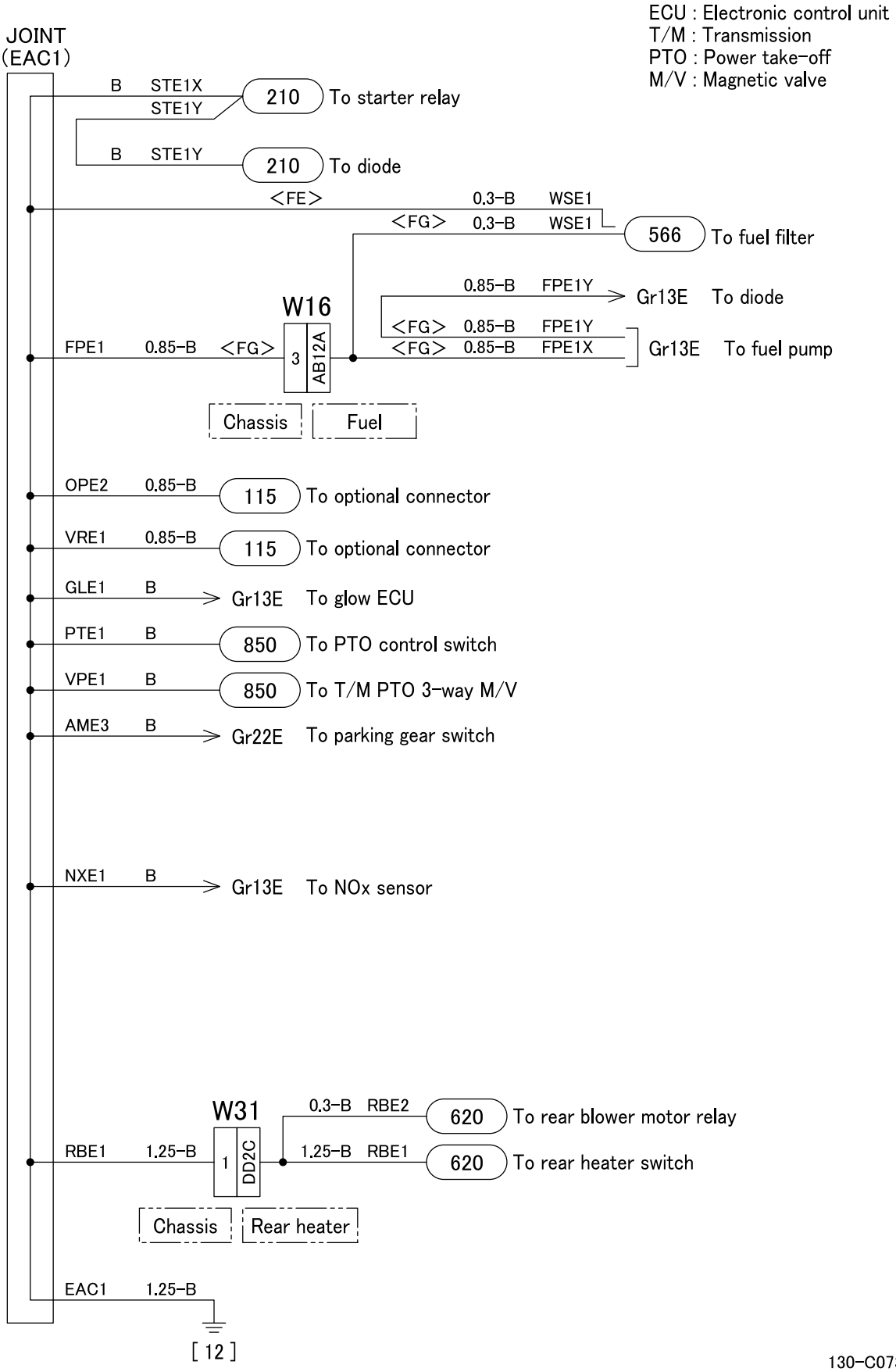

130-C07348EAC1

https://truckmanualshub.com/

Circuit No. EAR1 ground

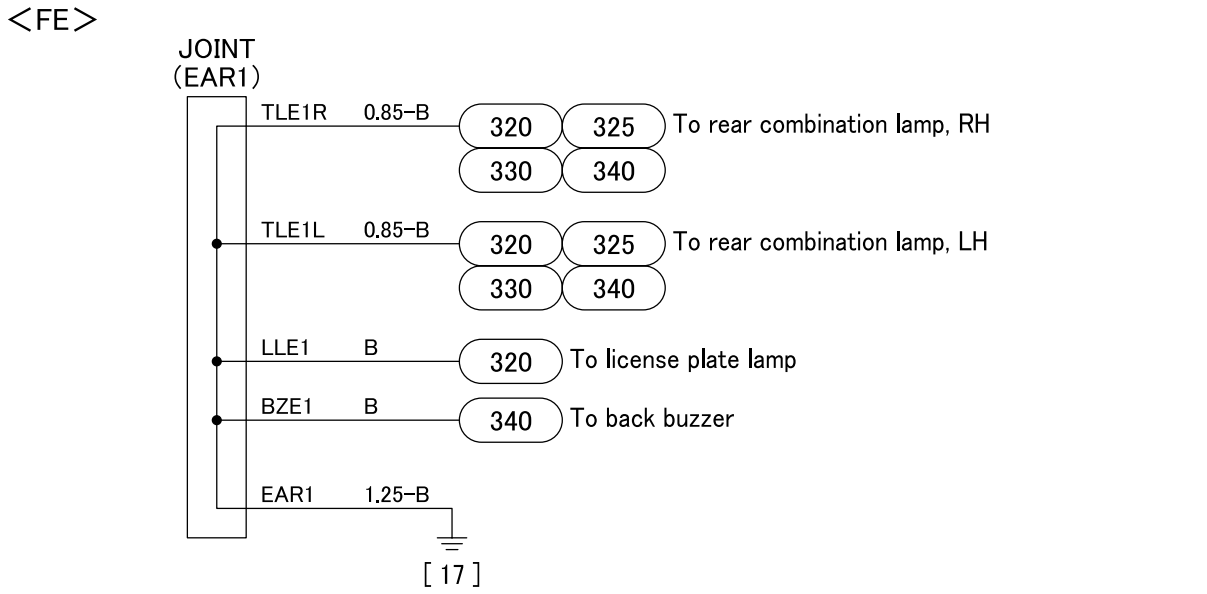

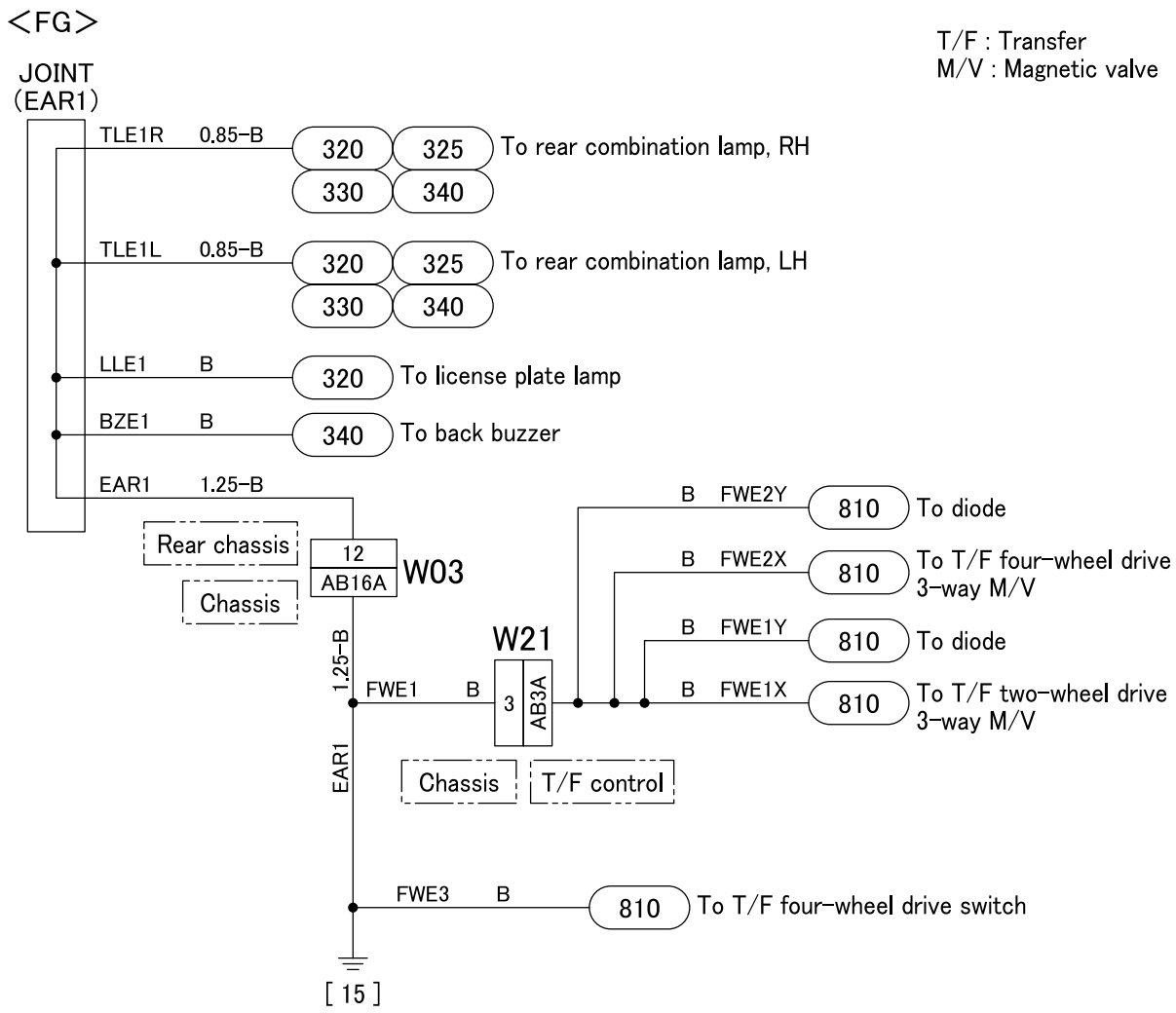

130-C07348EAR1

https://truckmanualshub.com/

Circuit No. FLE1 ground

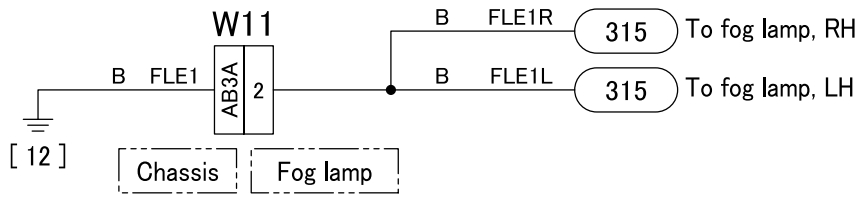

https://truckmanualshub.com/

Circuit No. HSE1, HSE2 ground

DEF : Diesel exhaust fluid

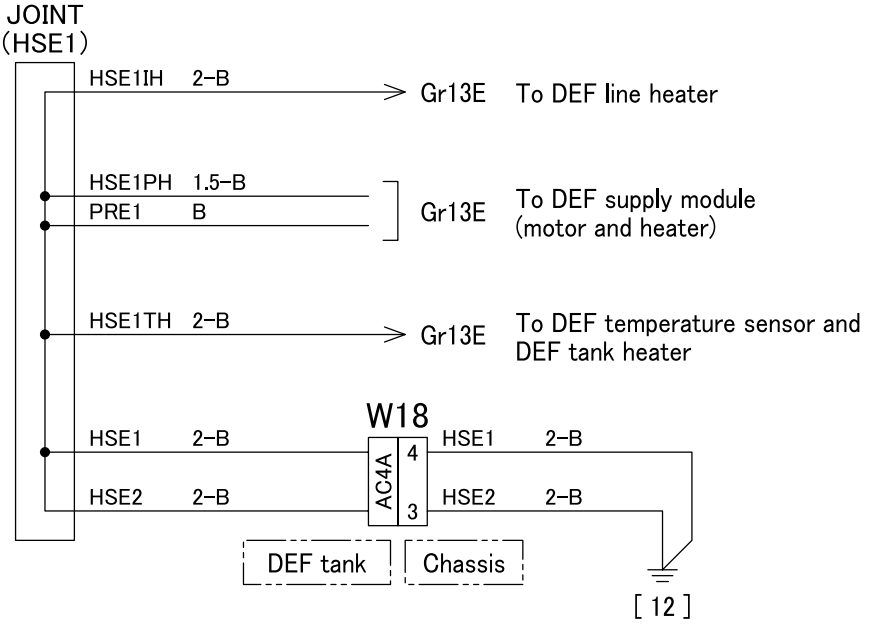

130-C07348HSE1

https://truckmanualshub.com/

54-02 ENGINE STARTING, STOPPING AND PREHEATING CIRCUIT

https://truckmanualshub.com/

210 ENGINE STARTING CIRCUIT

(1/2)

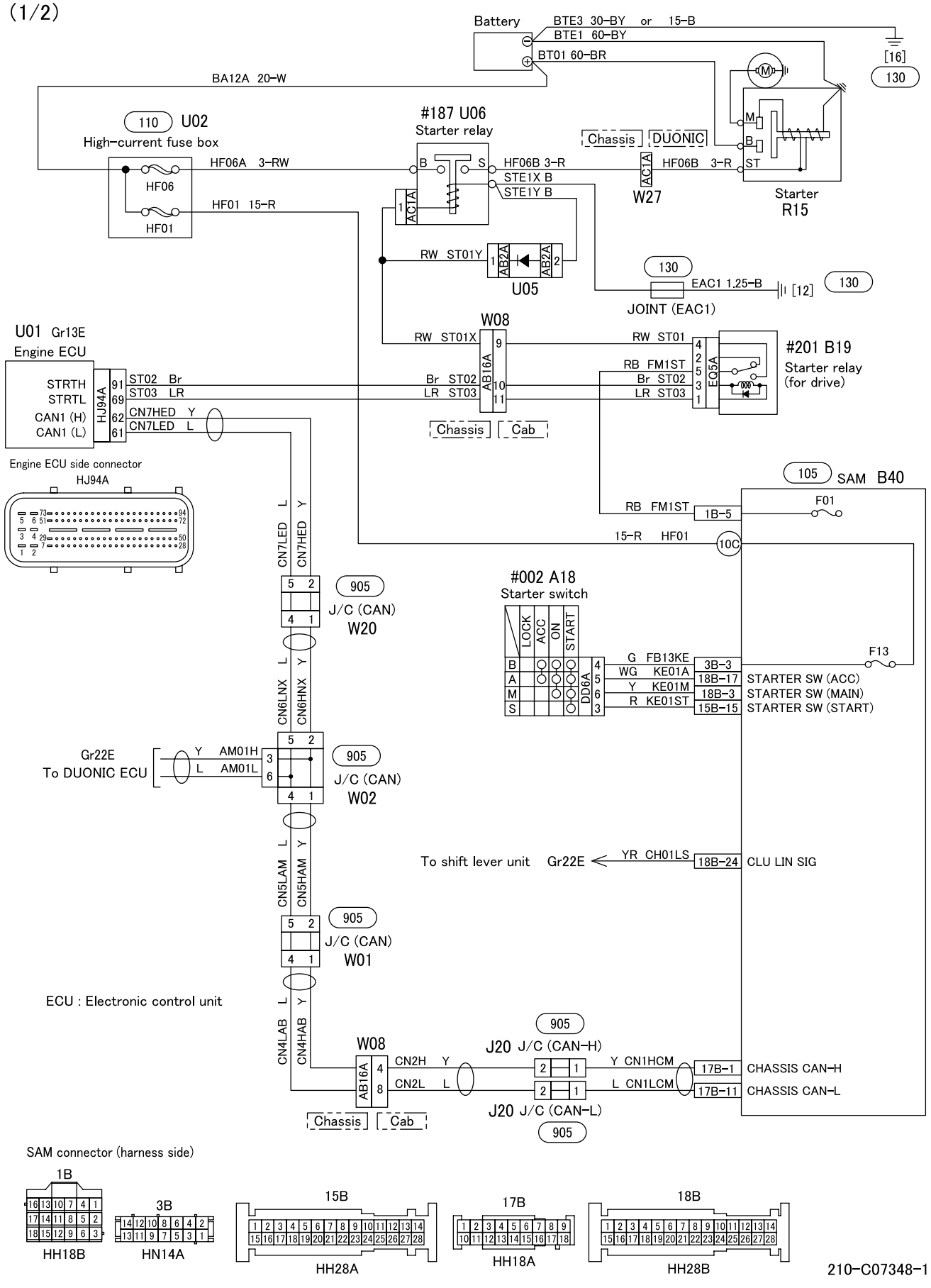

210-C07348-1

https://truckmanualshub.com/

(2/2)

A part of immobilizer circuit is omitted.

ECU : Electronic control unit

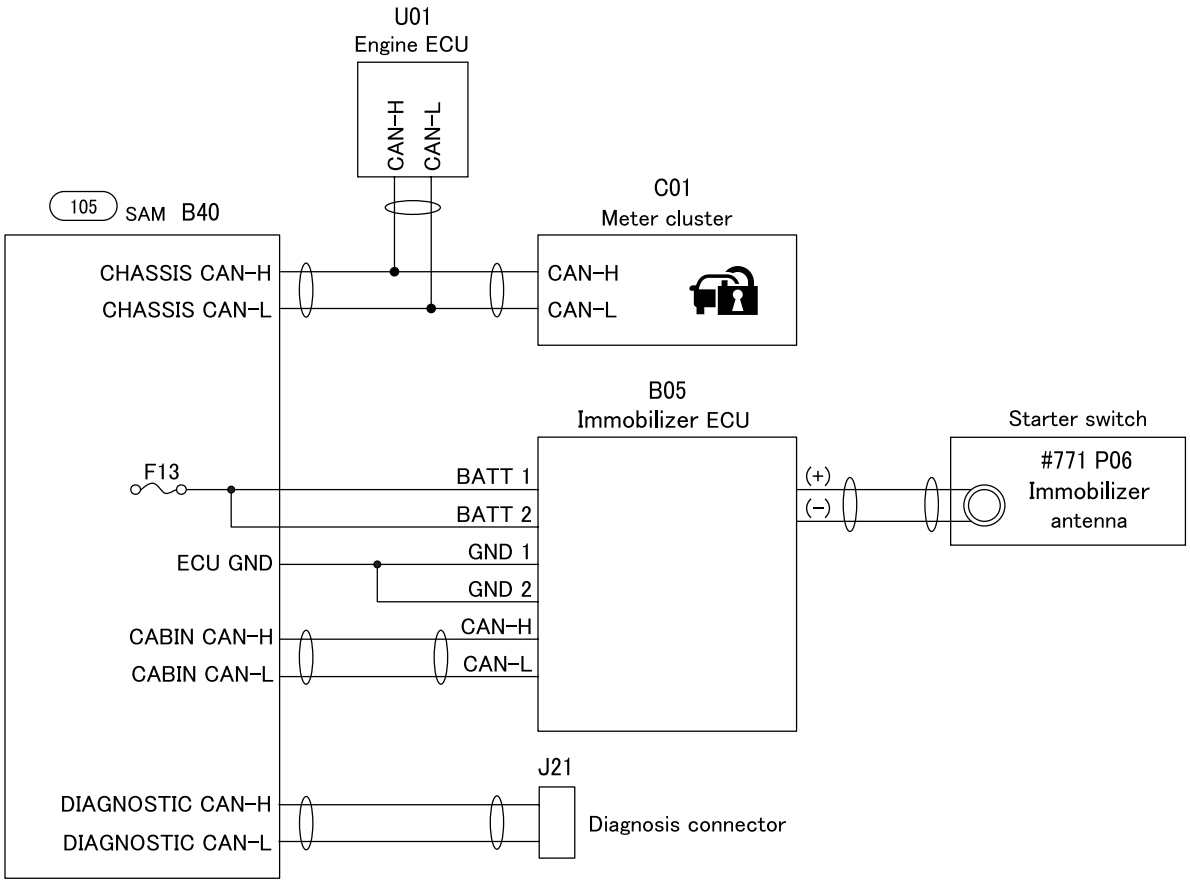

https://truckmanualshub.com/

54-03 LIGHTING CIRCUIT

https://truckmanualshub.com/

310 HEADLAMP CIRCUIT

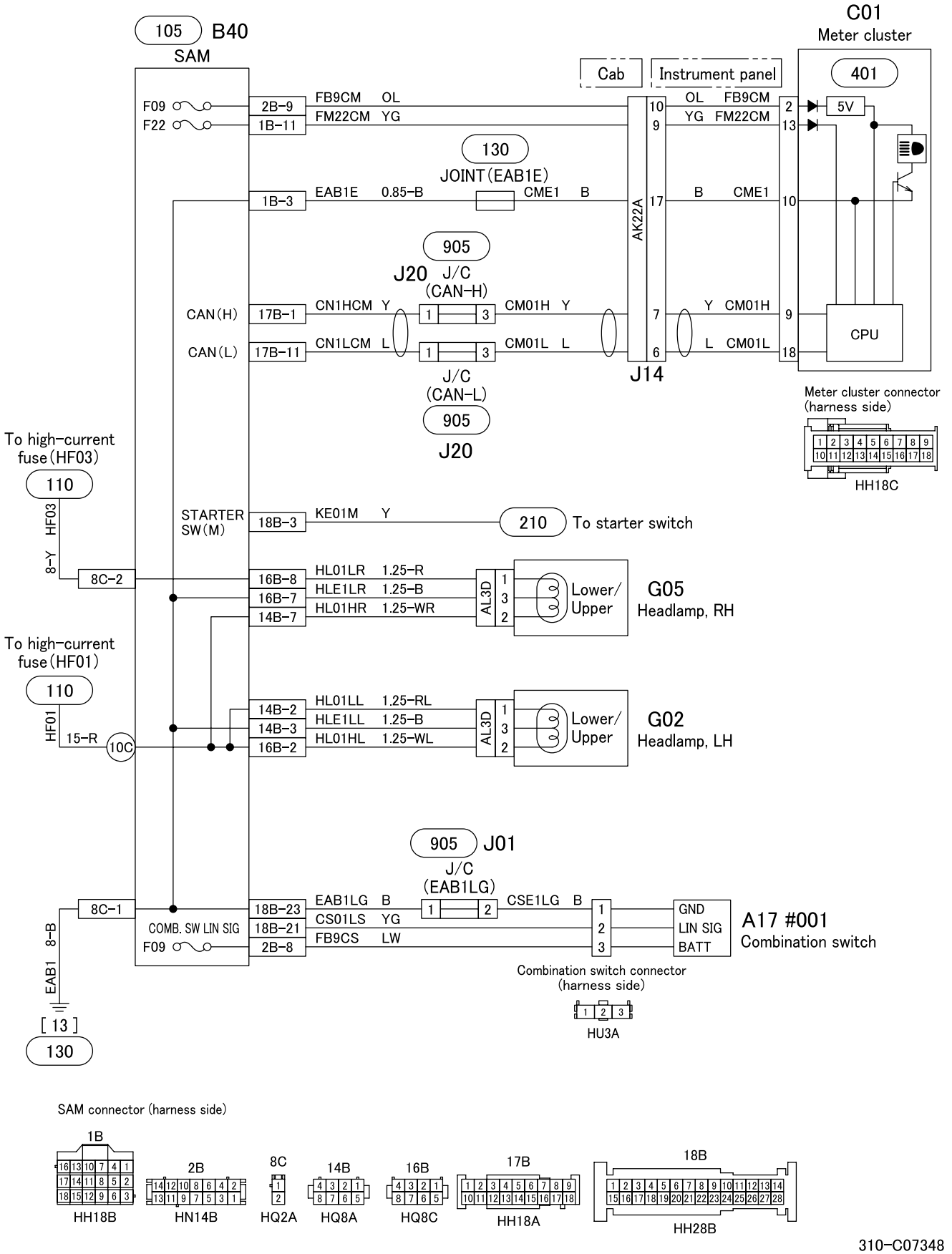

https://truckmanualshub.com/

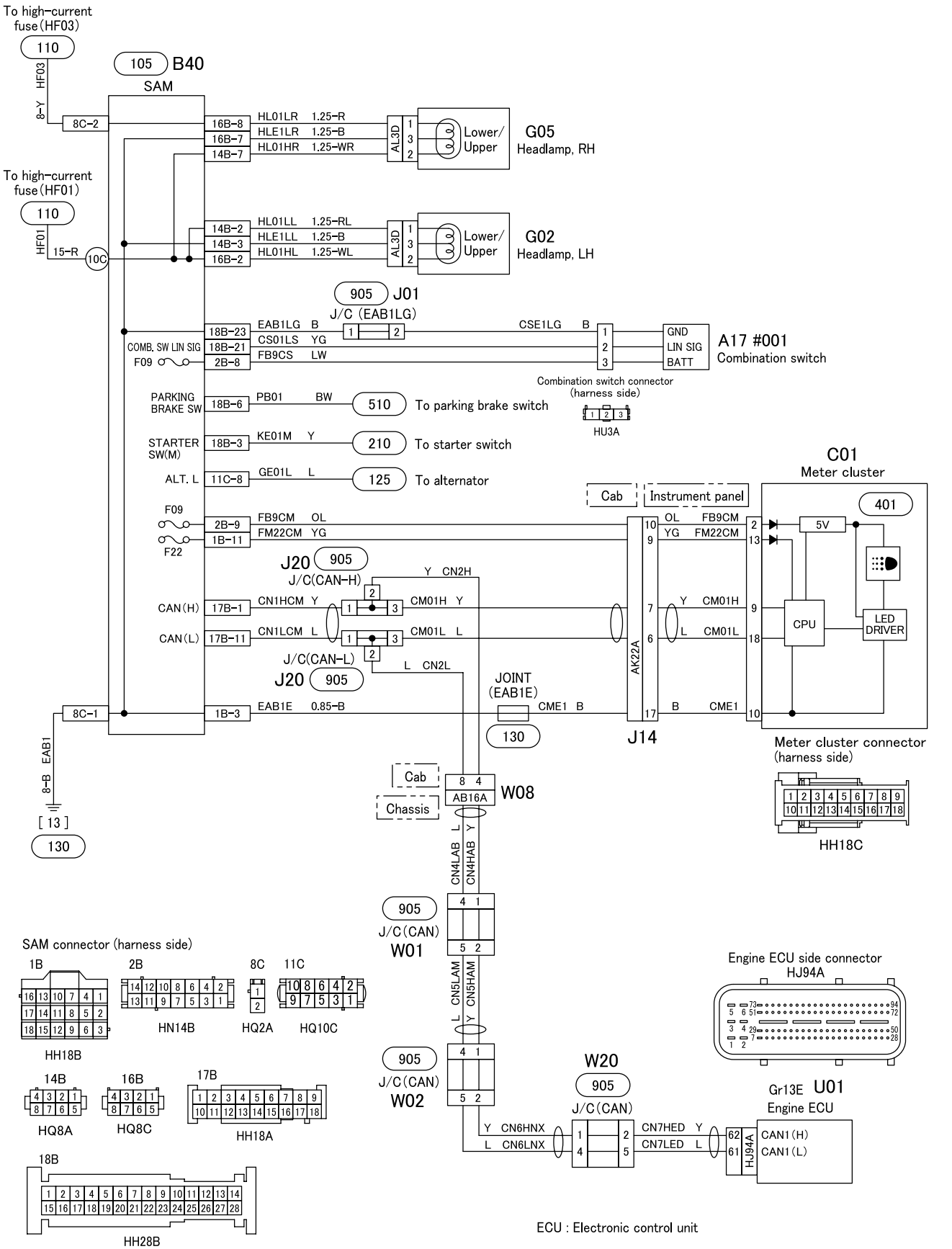

ECU : Electronic control unit

313-C07348

https://truckmanualshub.com/

315 FOG LAMP CIRCUIT

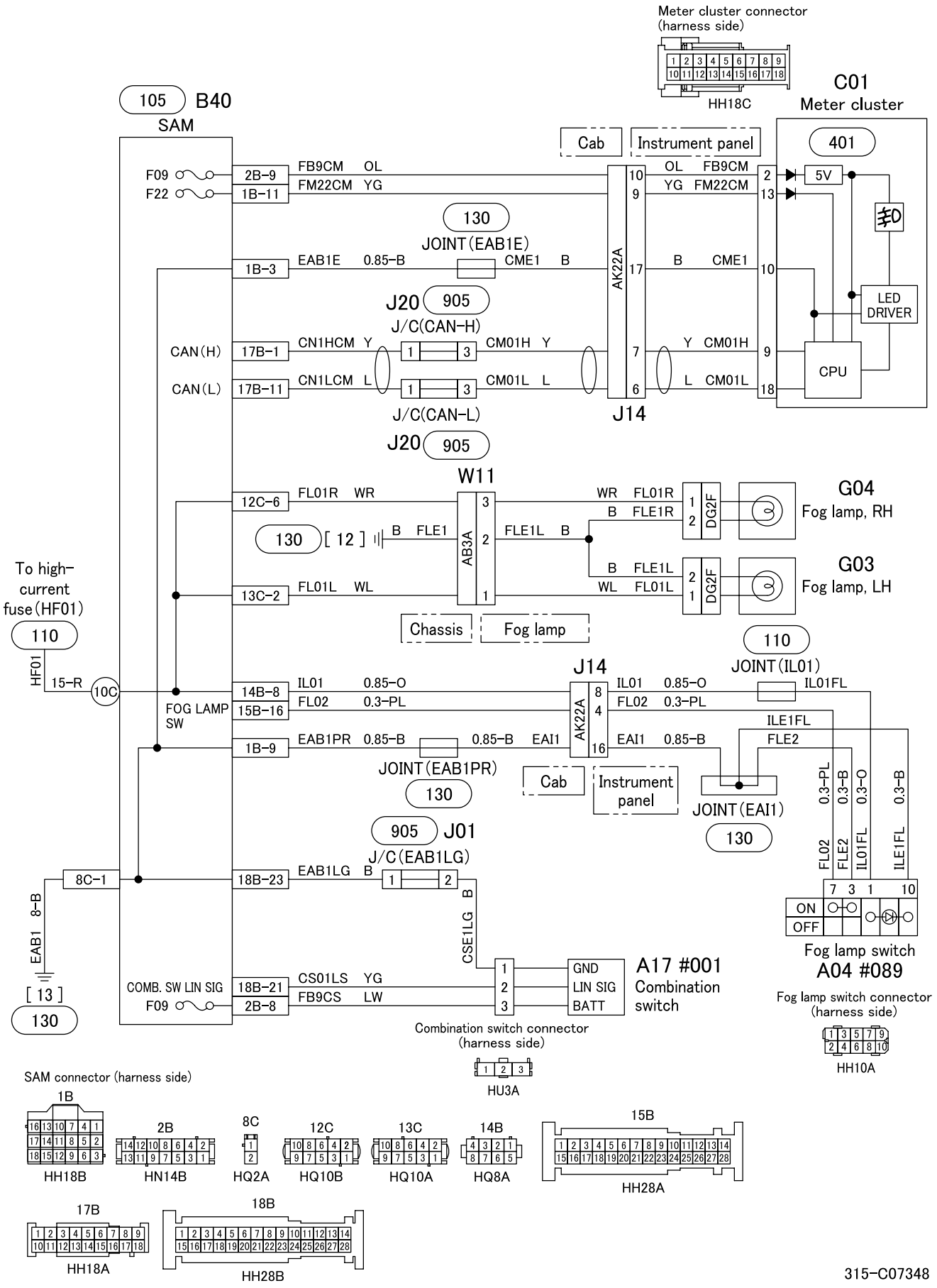

315-C07348

https://truckmanualshub.com/

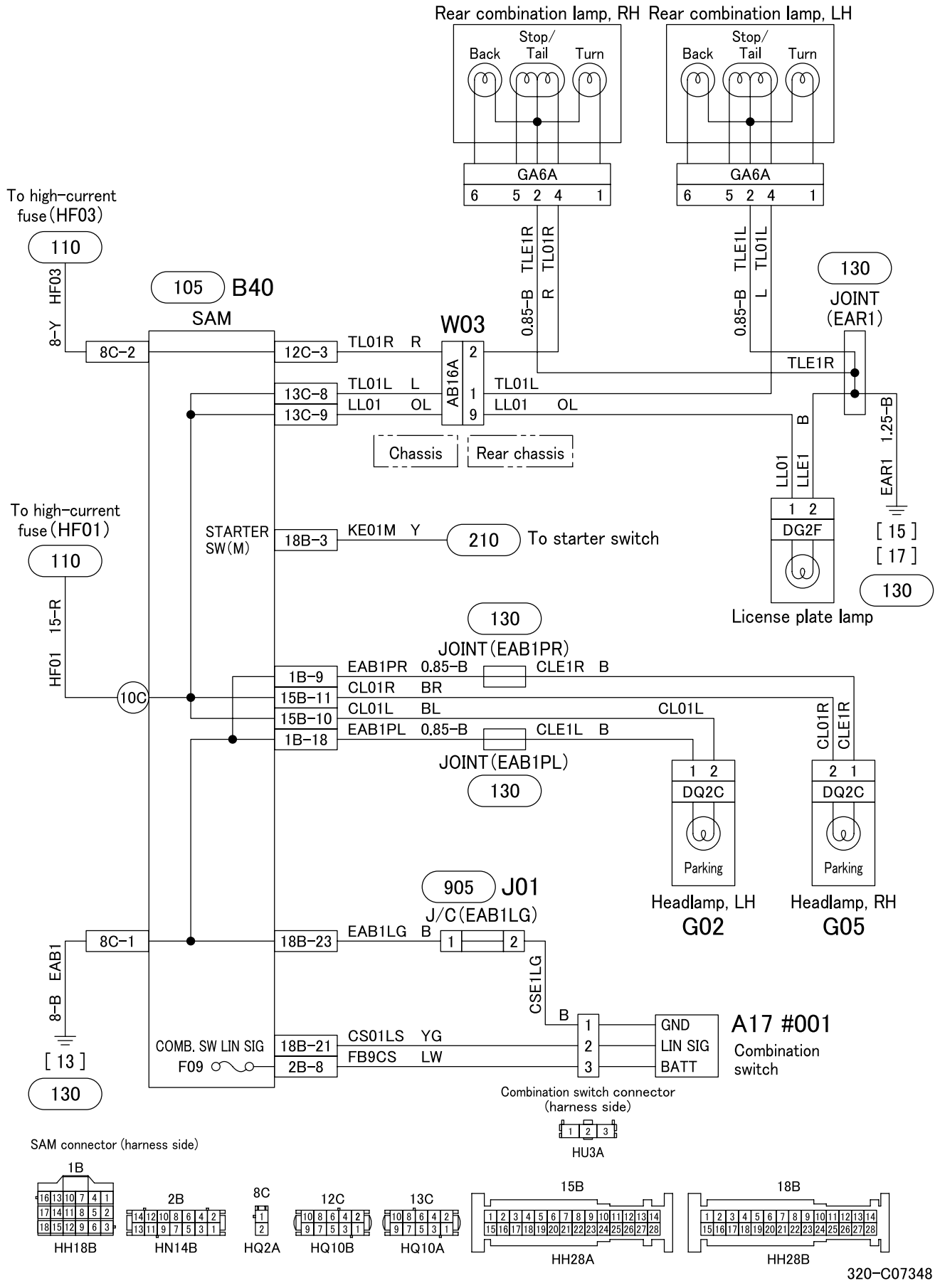

320-C07348

https://truckmanualshub.com/

325 STOP LAMP CIRCUIT

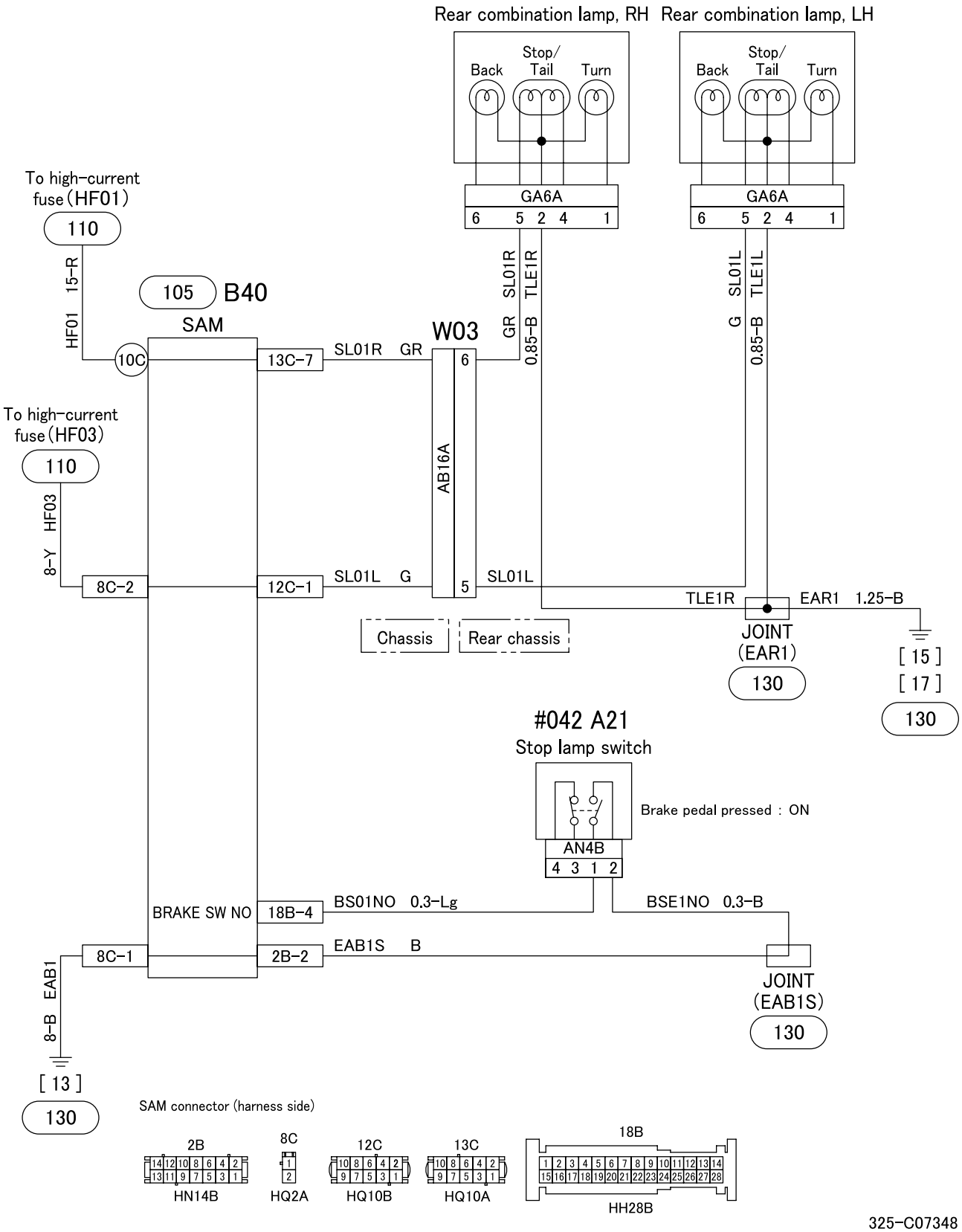

325-C07348

https://truckmanualshub.com/

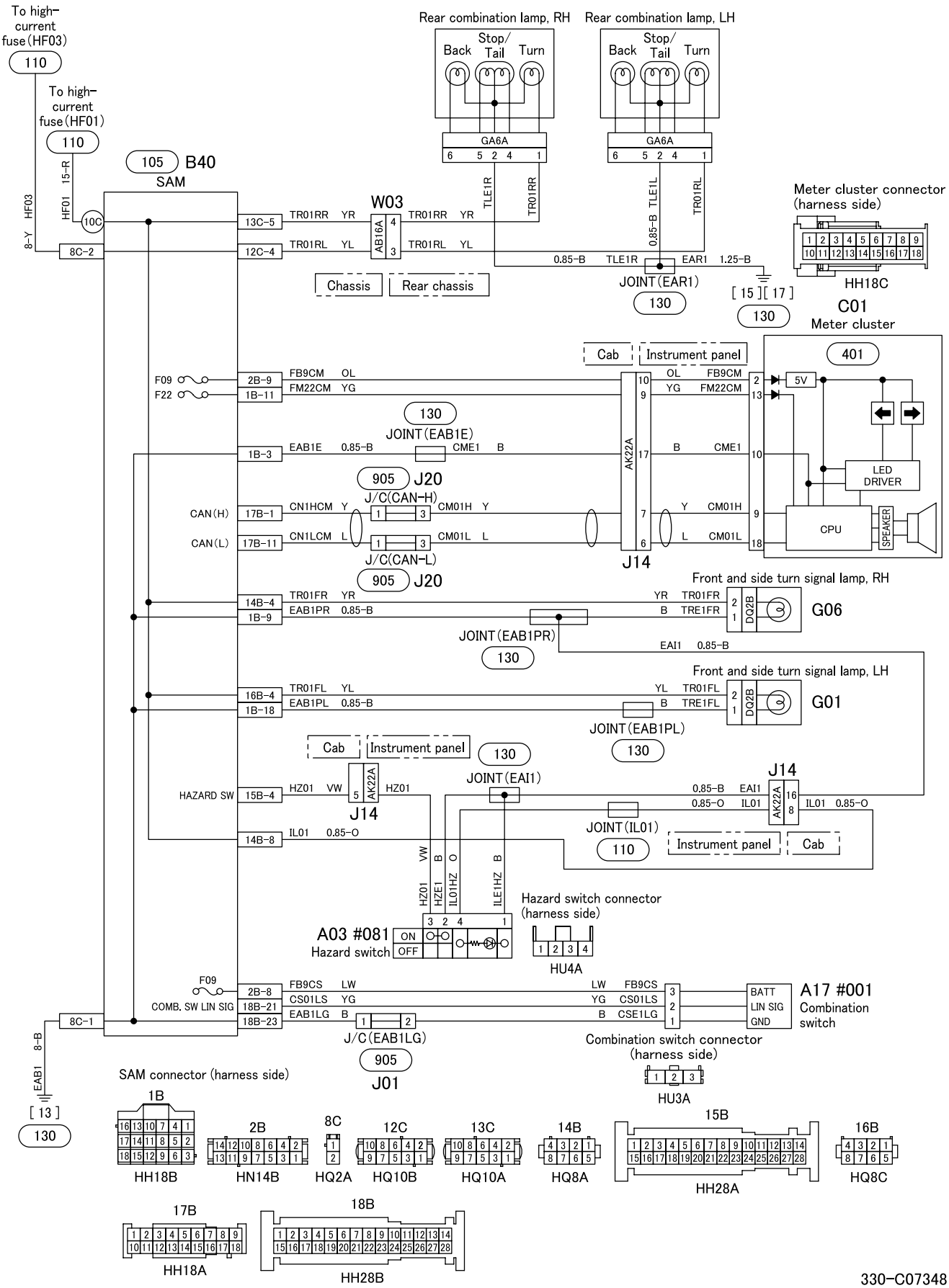

330-C07348

https://truckmanualshub.com/

340 BACKUP LAMP CIRCUIT

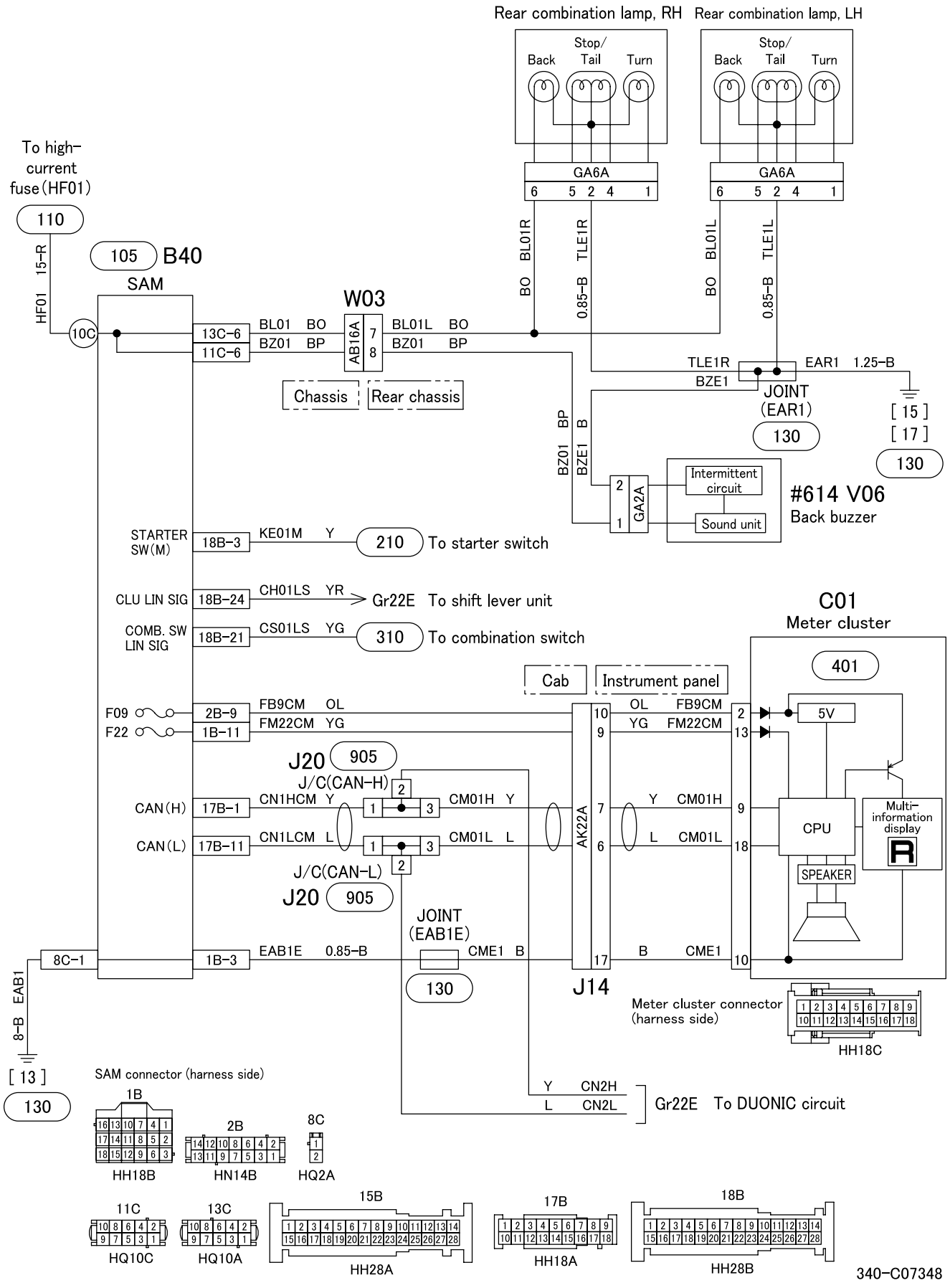

https://truckmanualshub.com/

M E M O

https://truckmanualshub.com/

345 CAB LAMP CIRCUIT

＜Except crew cab＞

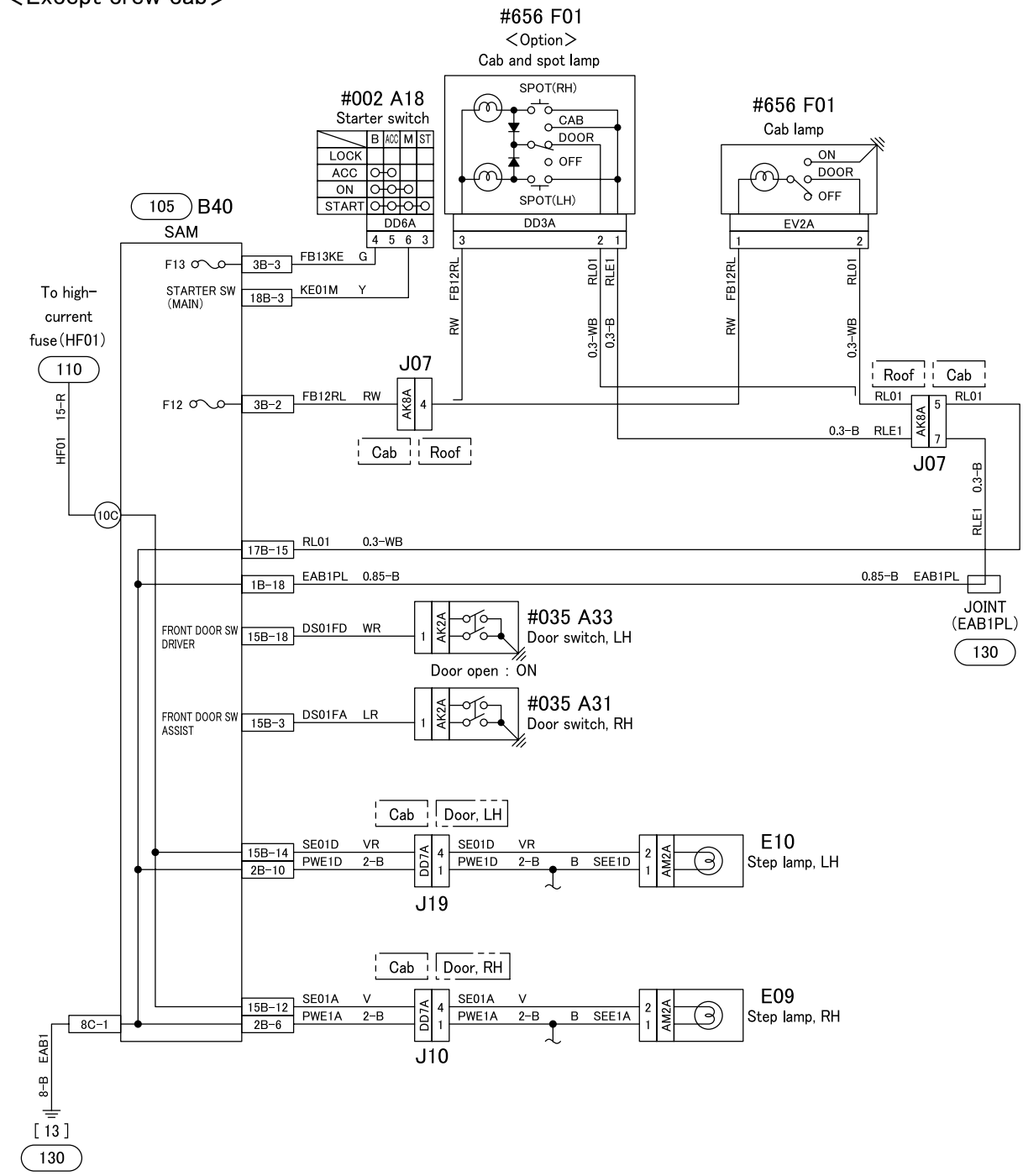

SAM connector (harness side)

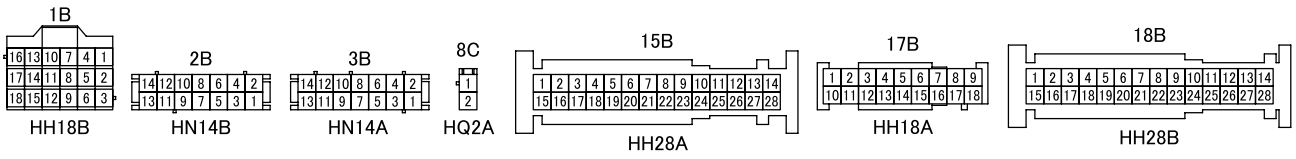

345-C07348-1

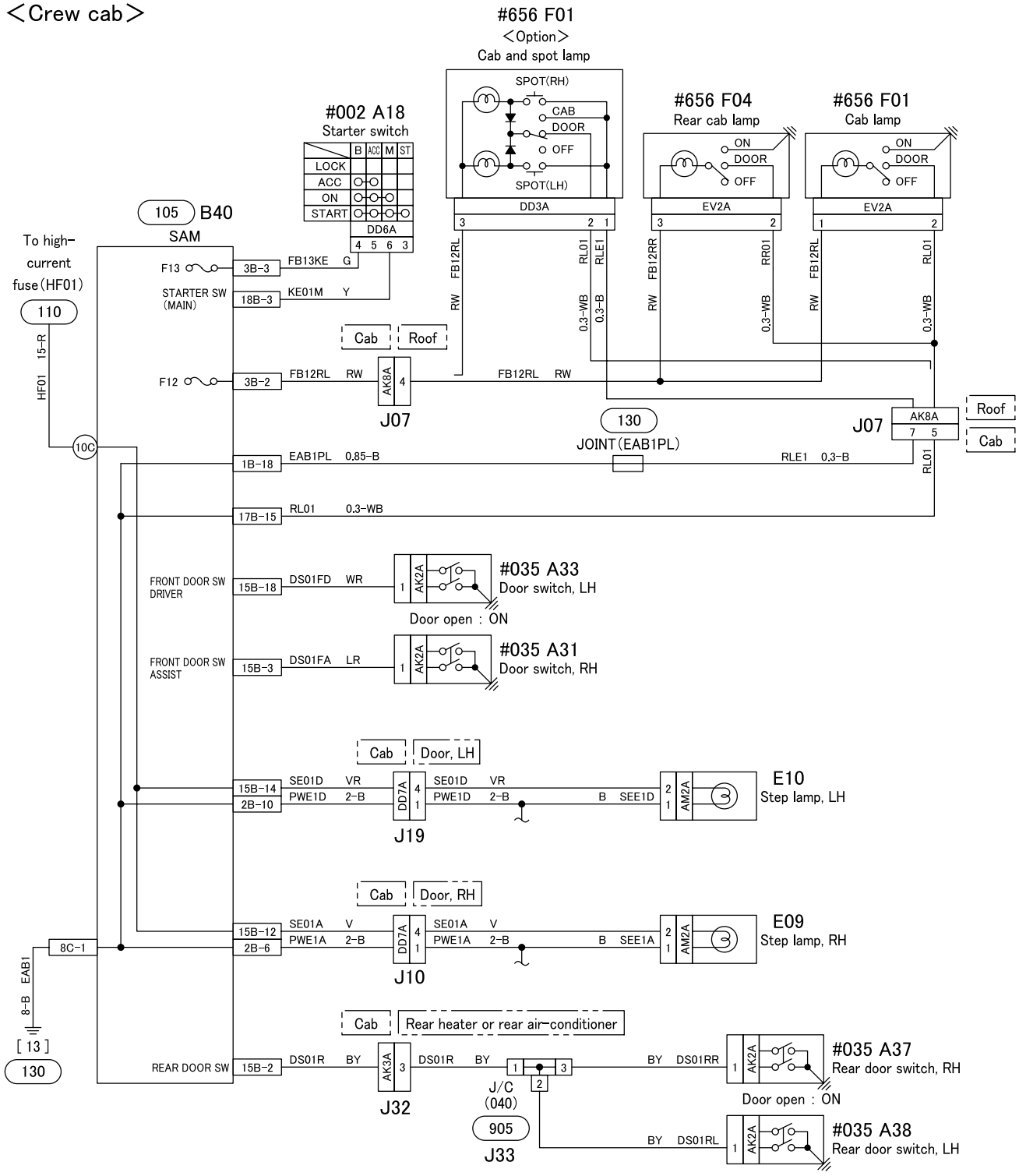

SAM connector (harness side)

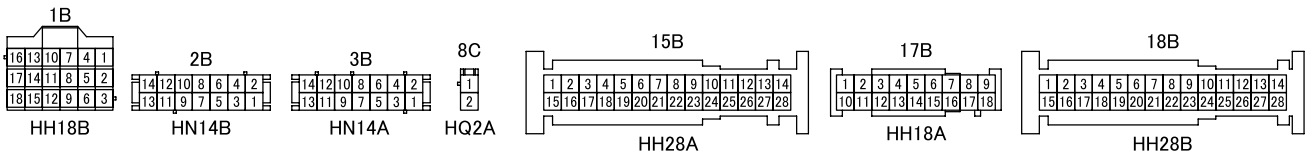

https://truckmanualshub.com/

348 ILLUMINATION LAMP CIRCUIT

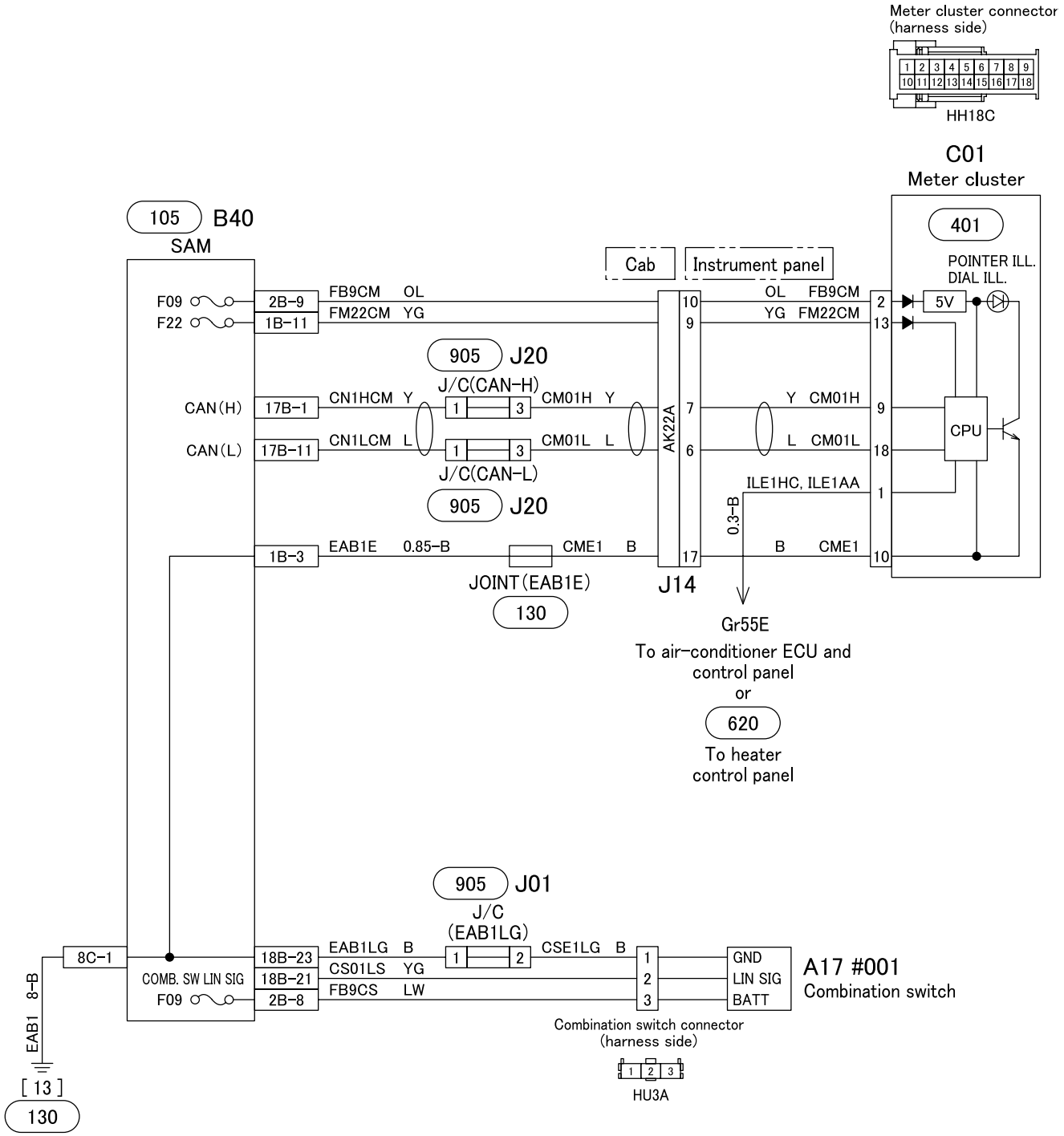

SAM connector (harness side)

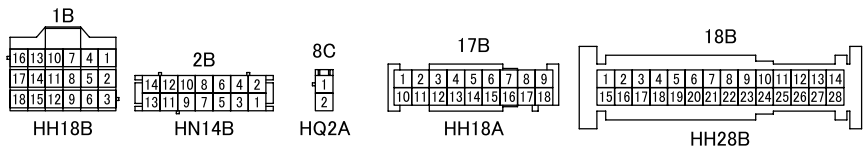

348-C07348

https://truckmanualshub.com/

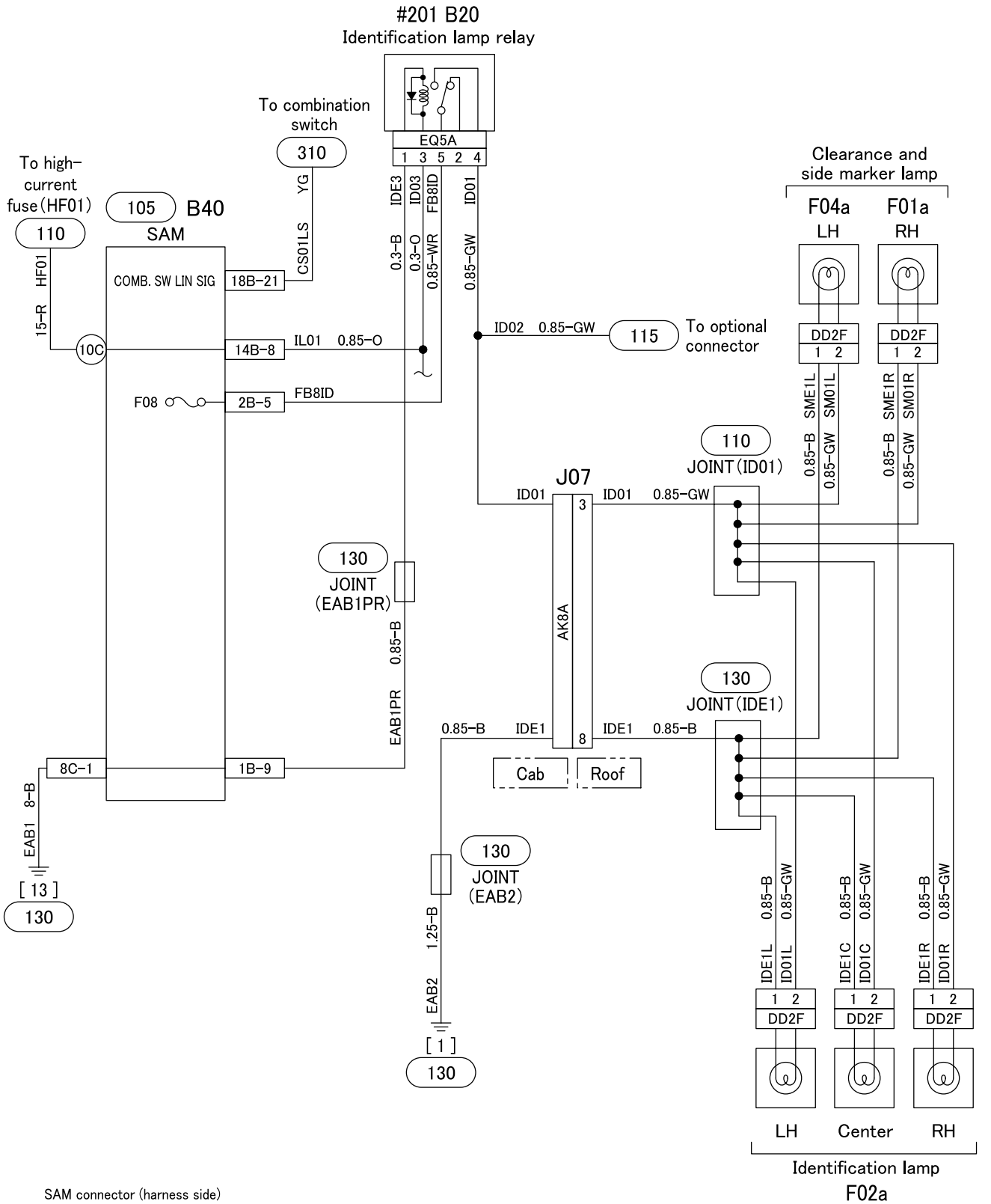

349-C07348

https://truckmanualshub.com/

352 VAN BODY DOME LIGHT CIRCUIT

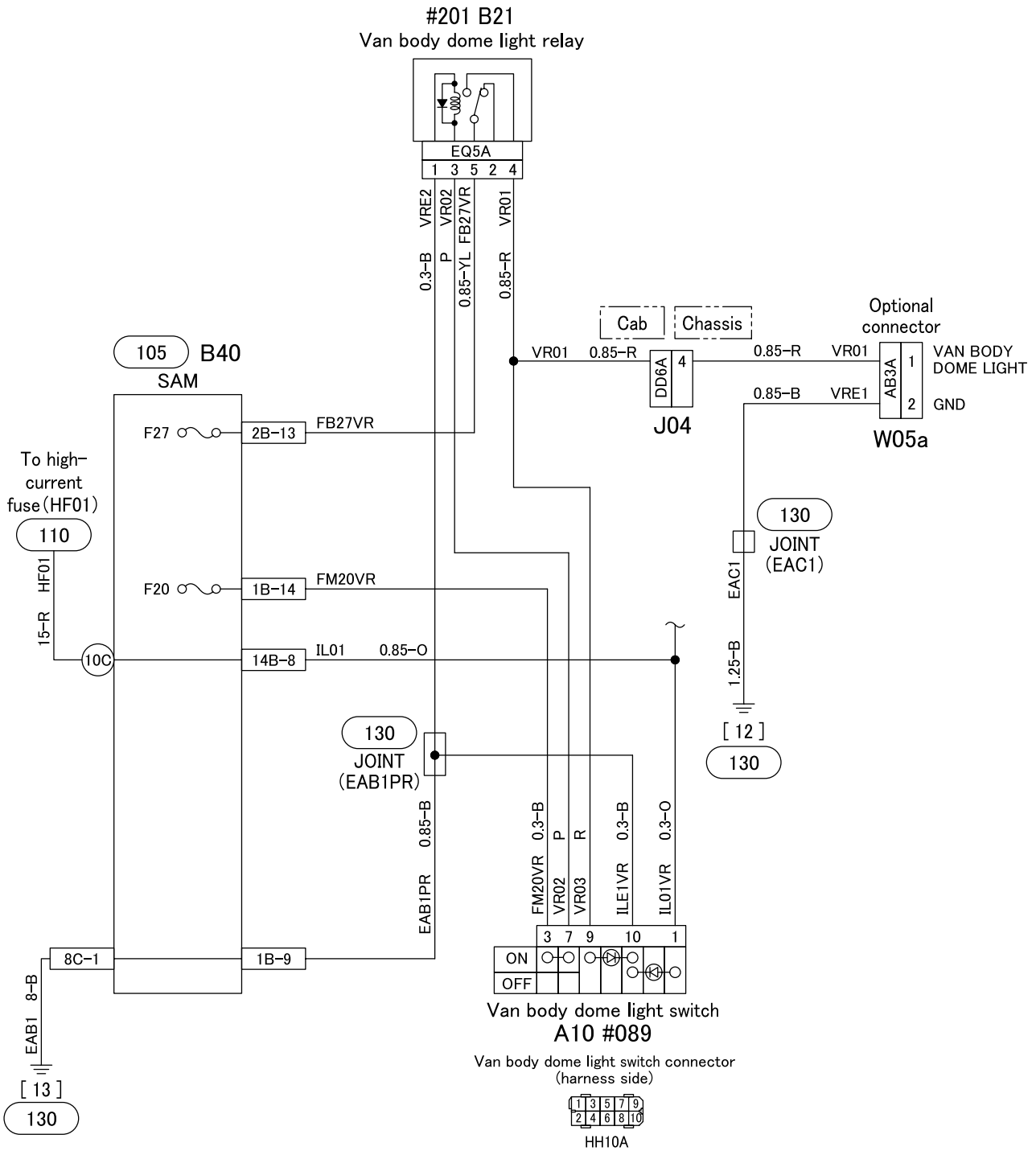

SAM connector (harness side)

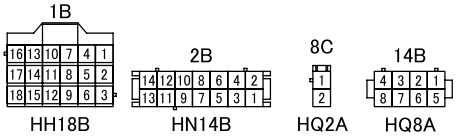

352-C07348

https://truckmanualshub.com/

54-04 METER CIRCUIT

https://truckmanualshub.com/

401 METER CLUSTER INTERNAL CIRCUIT

(1/2)

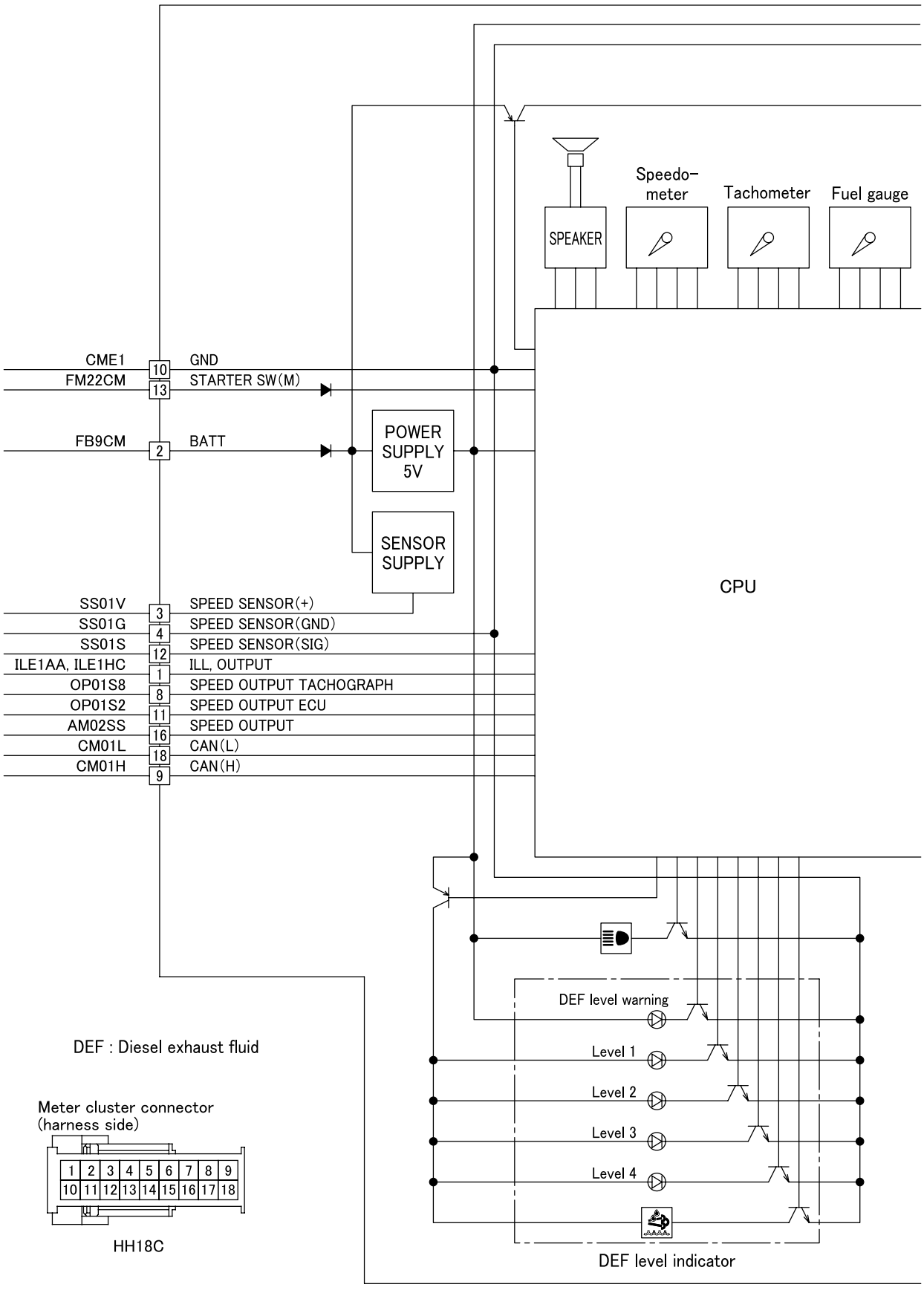

401-C07348-1

https://truckmanualshub.com/

(2/2)

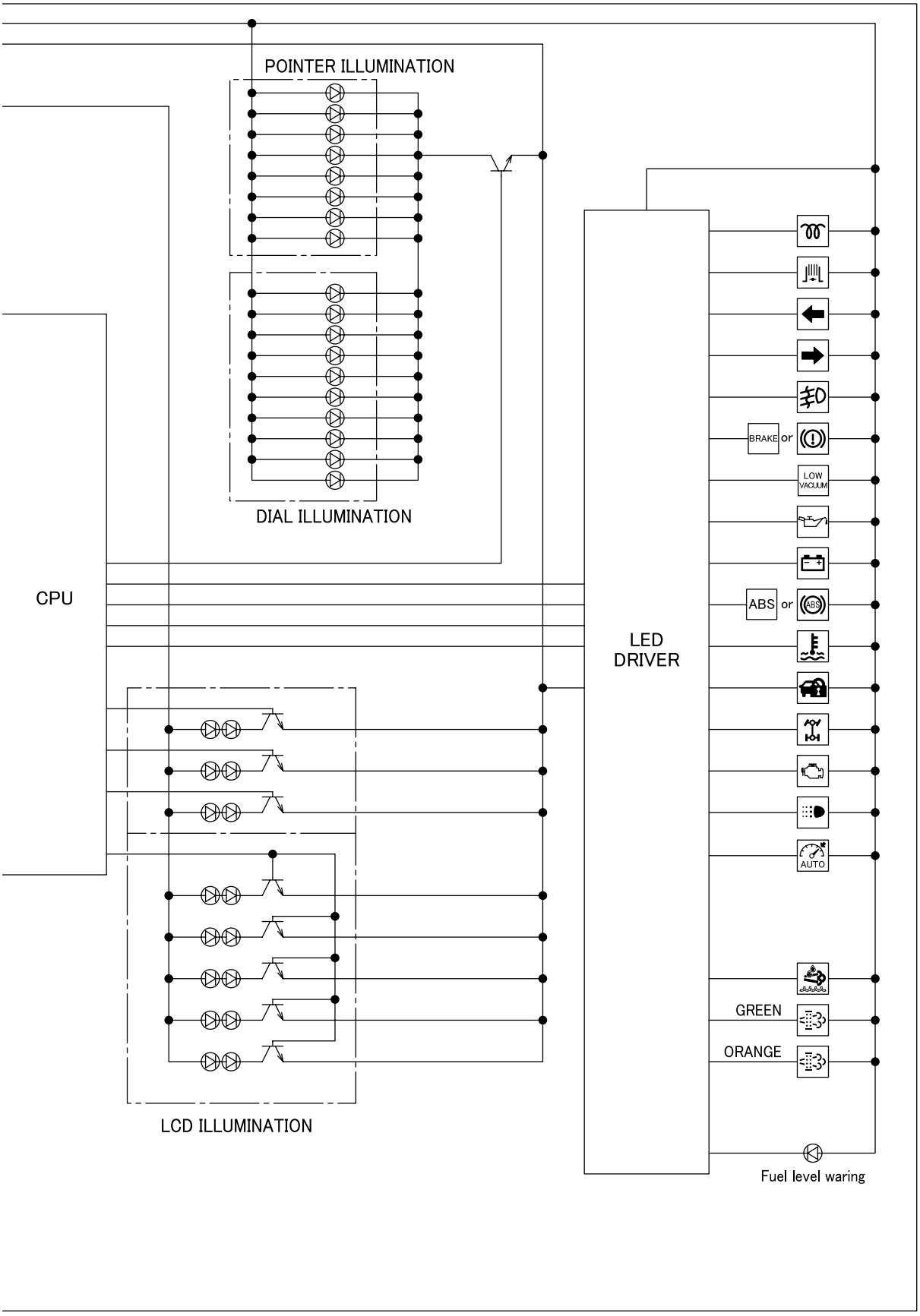

401-C07348-2

https://truckmanualshub.com/

410 TACHOMETER CIRCUIT

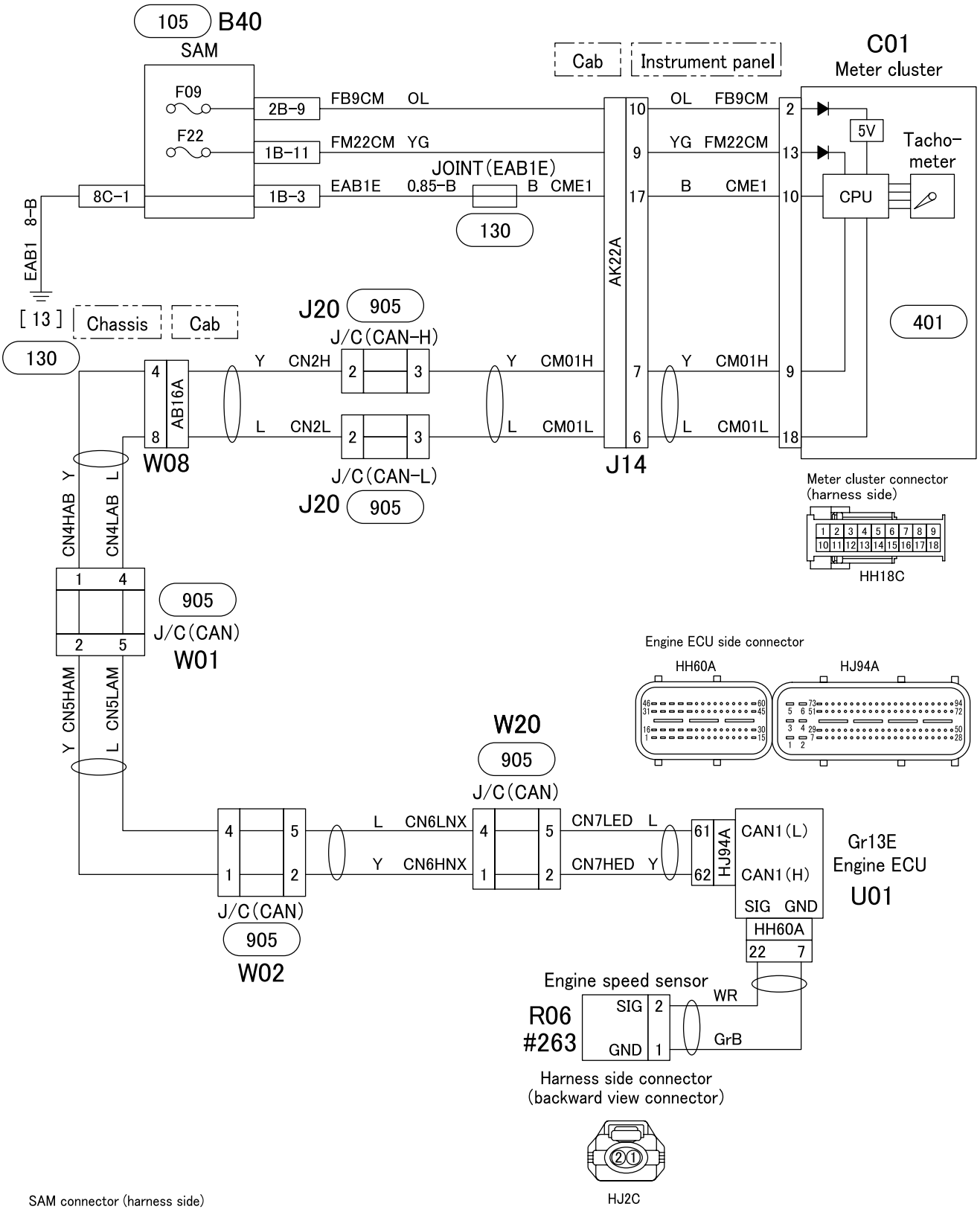

https://truckmanualshub.com/

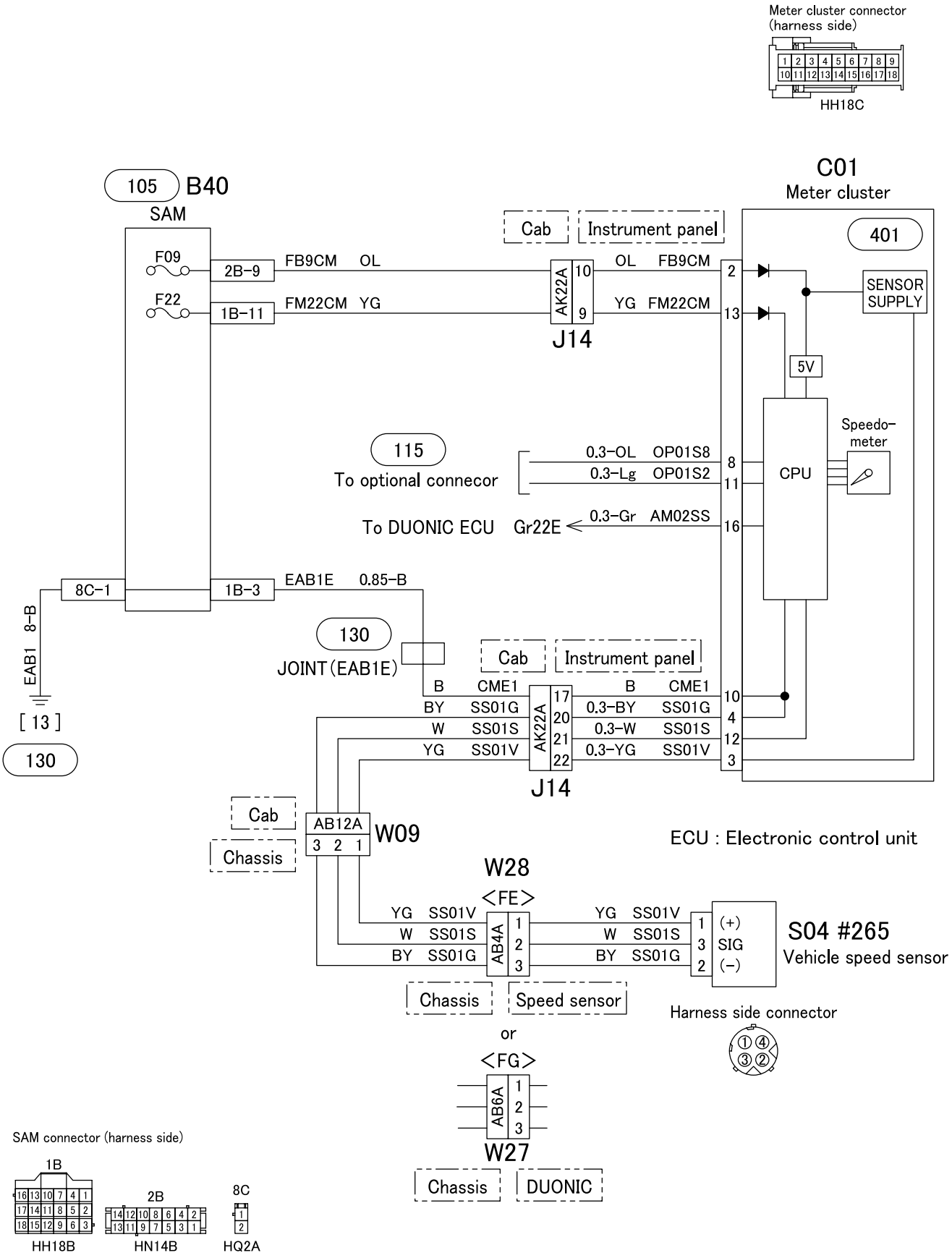

412-C07348

https://truckmanualshub.com/

415 TACHOGRAPH CIRCUIT

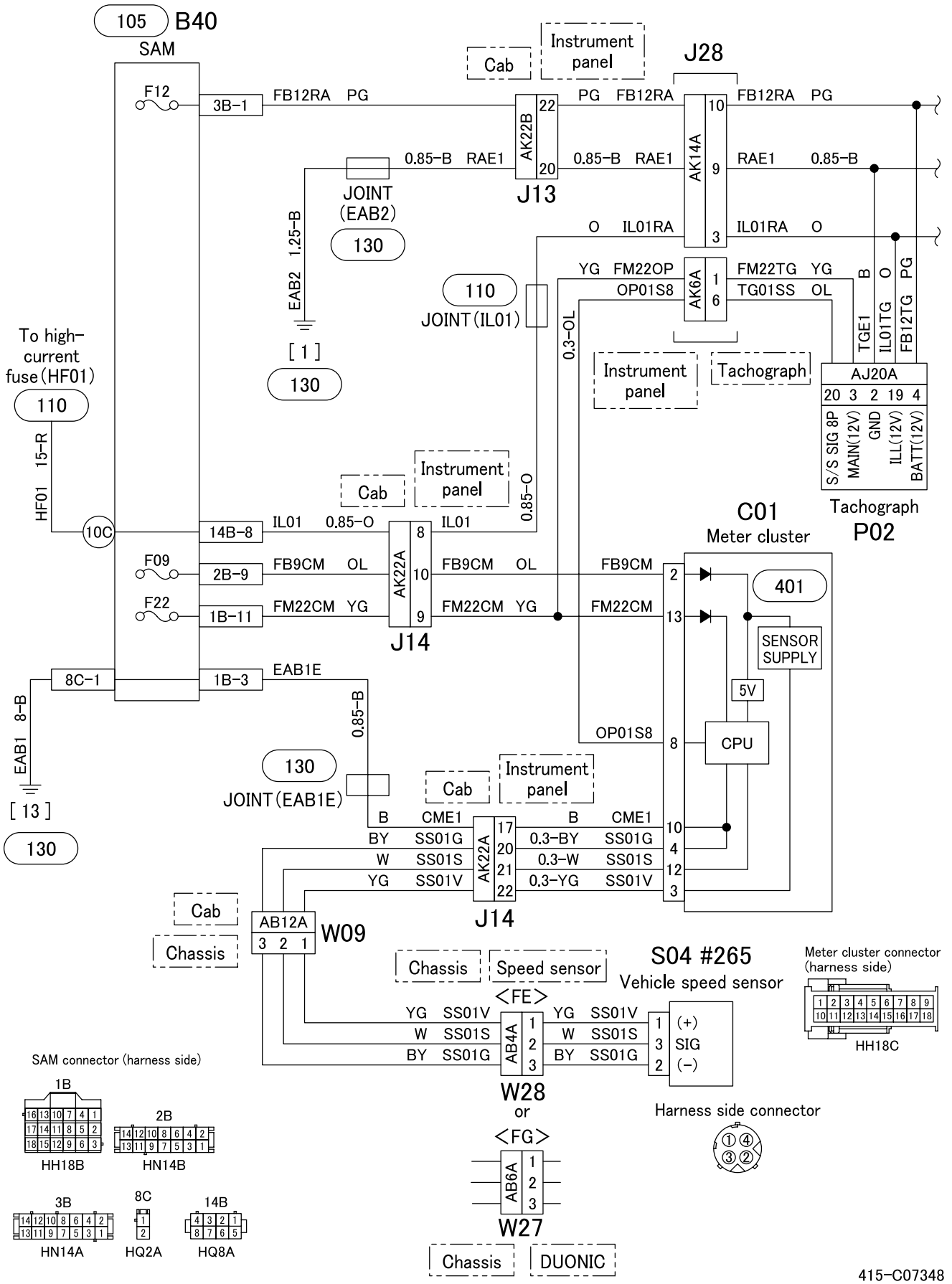

https://truckmanualshub.com/

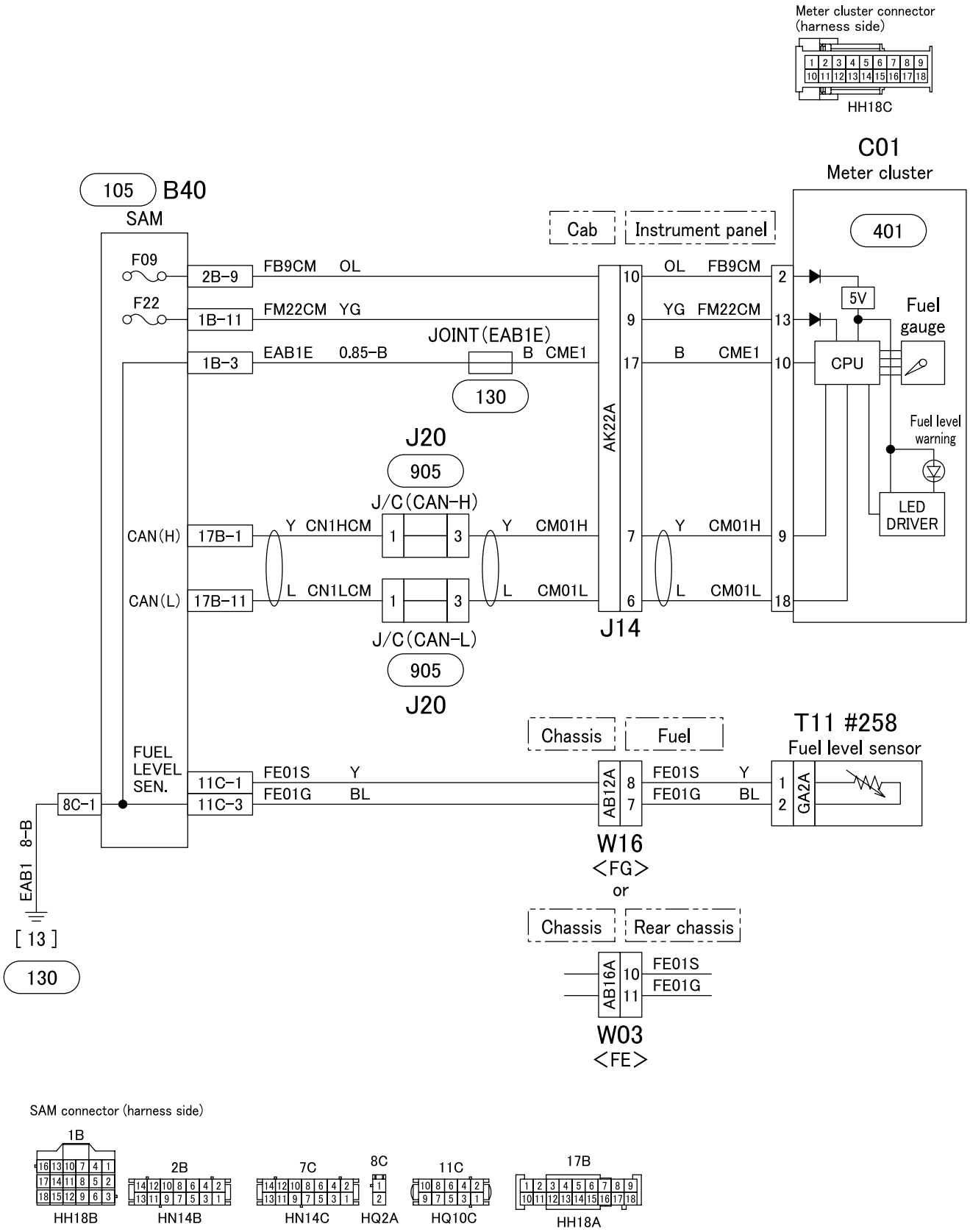

SAM connector (harness side)

420-C07348

https://truckmanualshub.com/

425 WATER TEMPERATURE GAUGE CIRCUIT

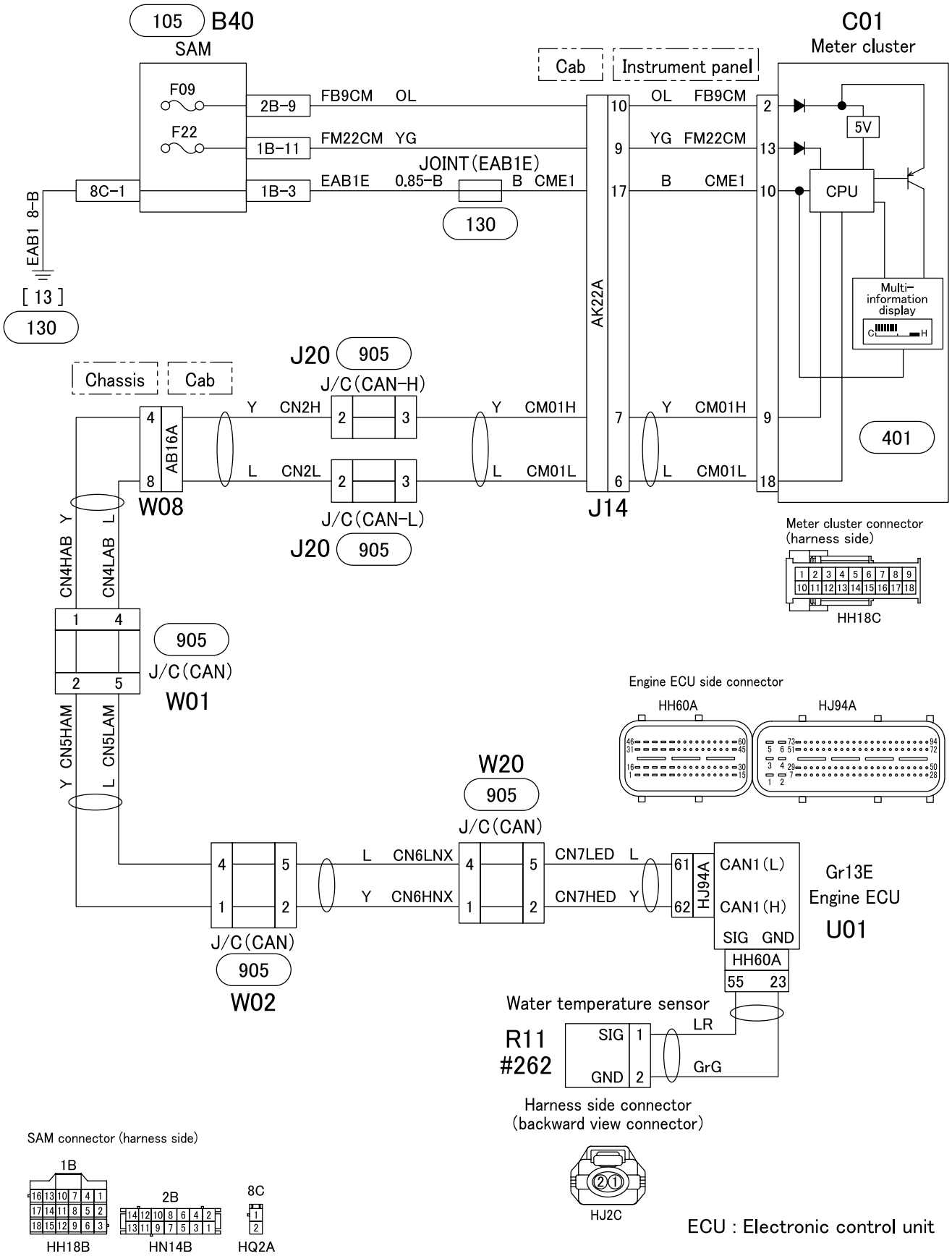

425-C07348

https://truckmanualshub.com/

54-05 INDICATOR AND WARNING LAMP CIRCUIT

https://truckmanualshub.com/

510 PARKING BRAKE INDICATOR CIRCUIT

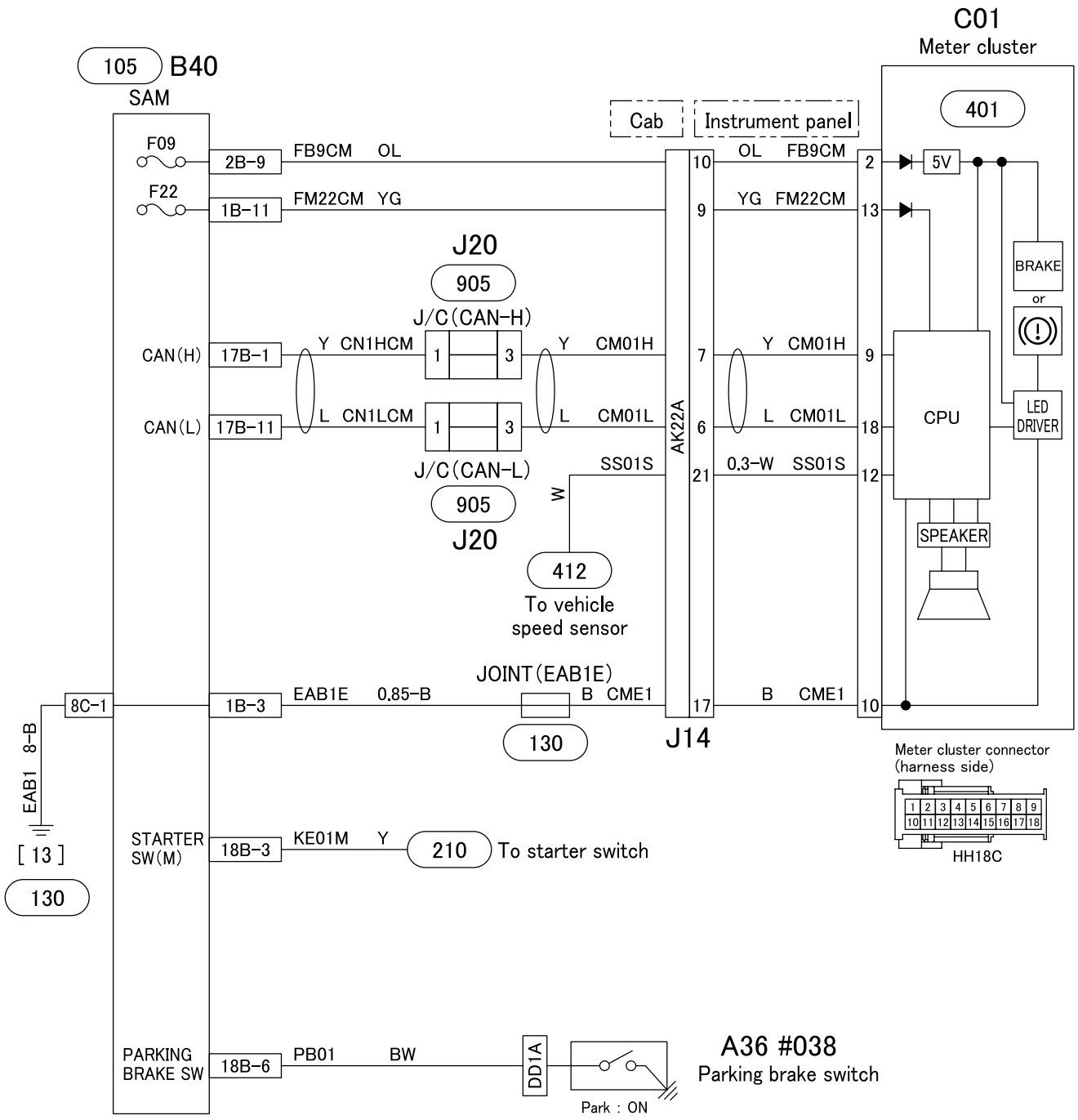

SAM connector (harness side)

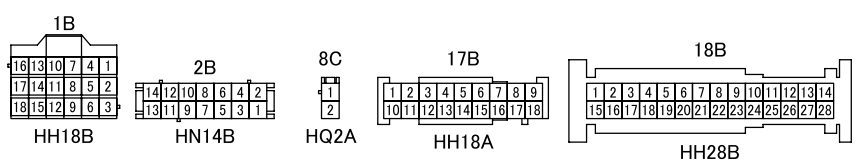

510-C07348

https://truckmanualshub.com/

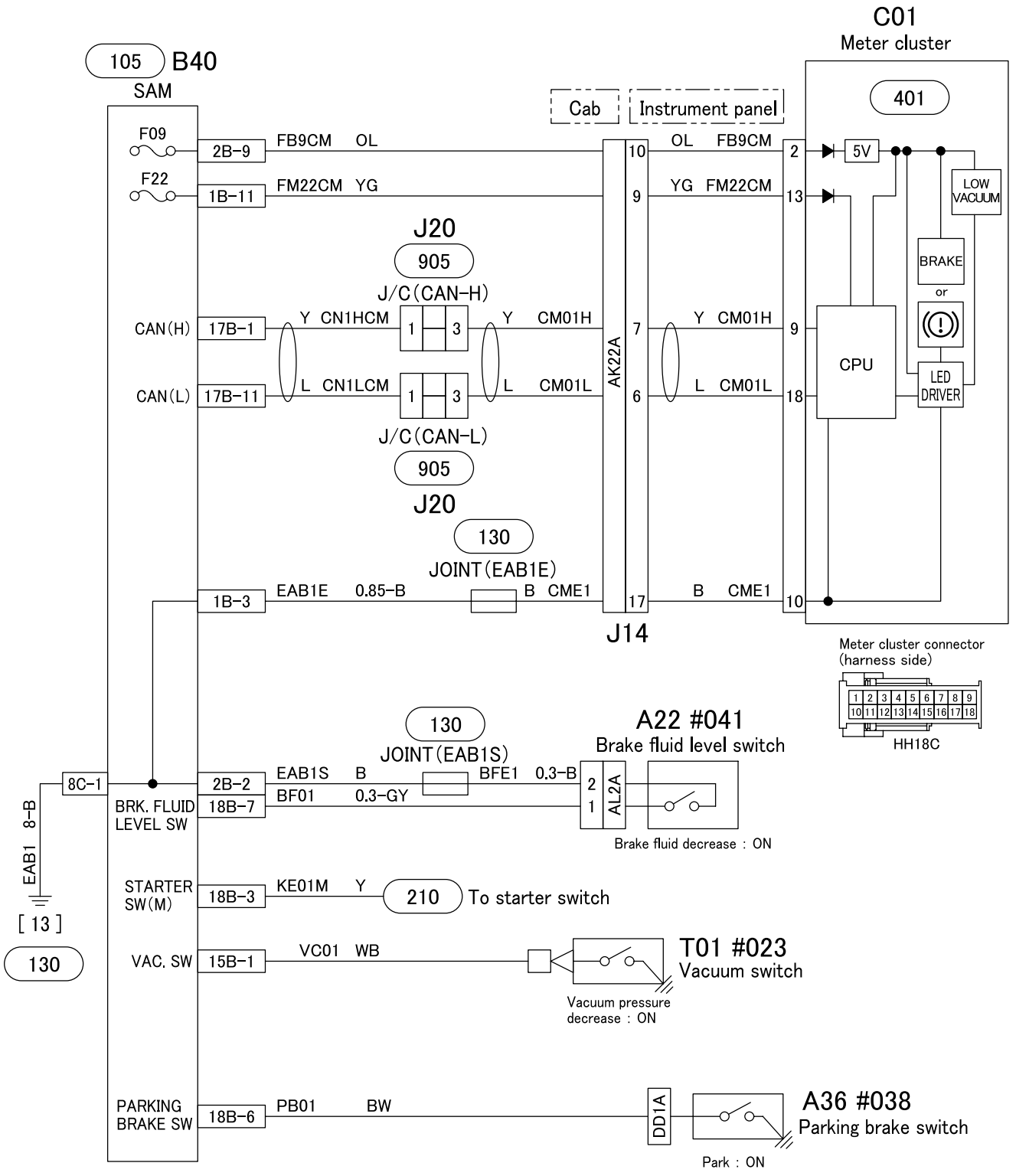

SAM connector (harness side)

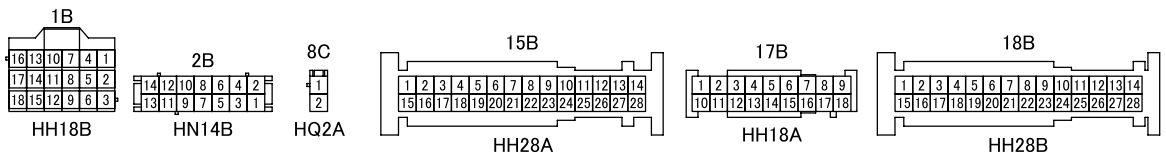

515-C07348

https://truckmanualshub.com/

536 ENGINE OIL PRESSURE WARNING CIRCUIT

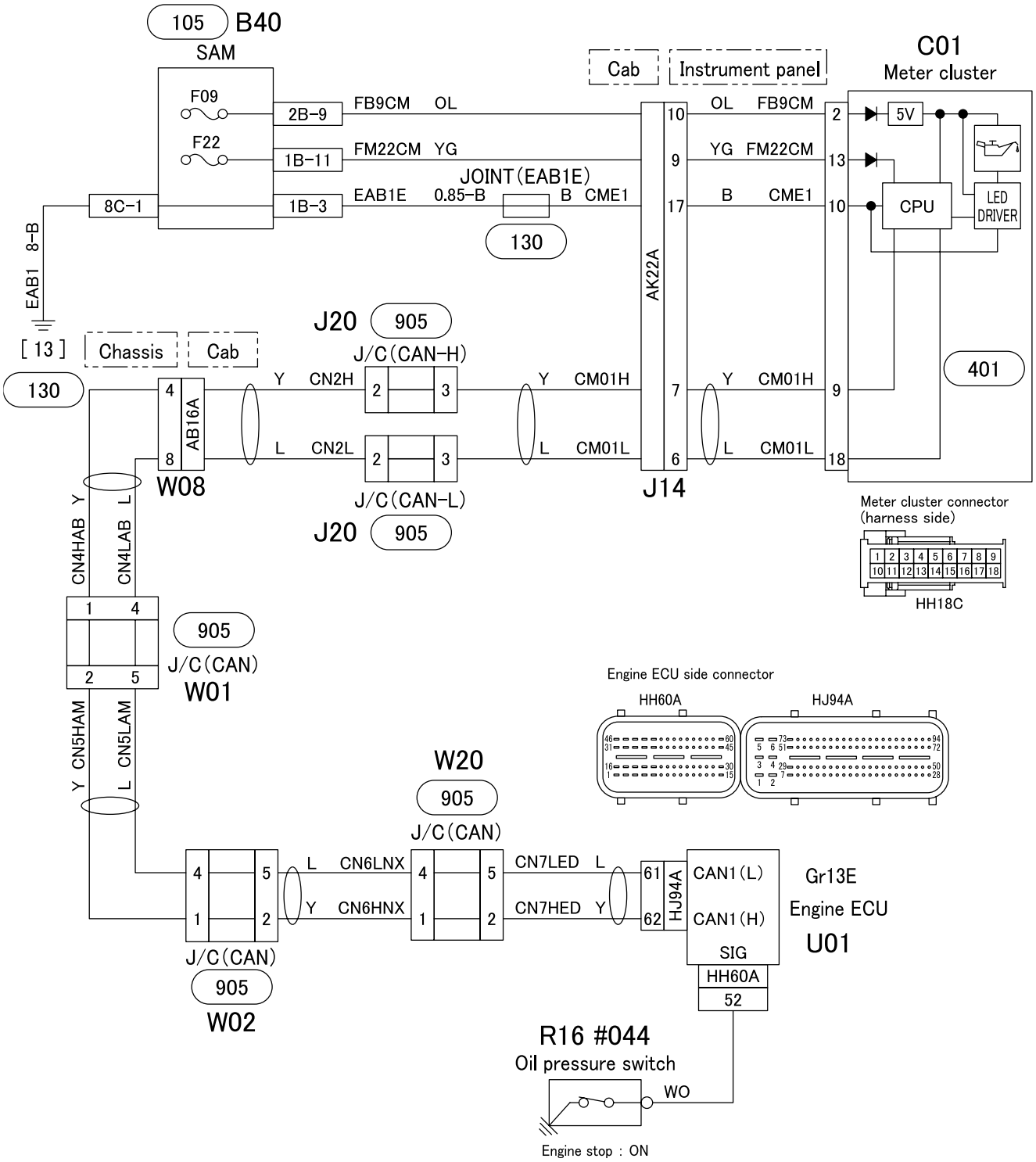

536-C07348

https://truckmanualshub.com/

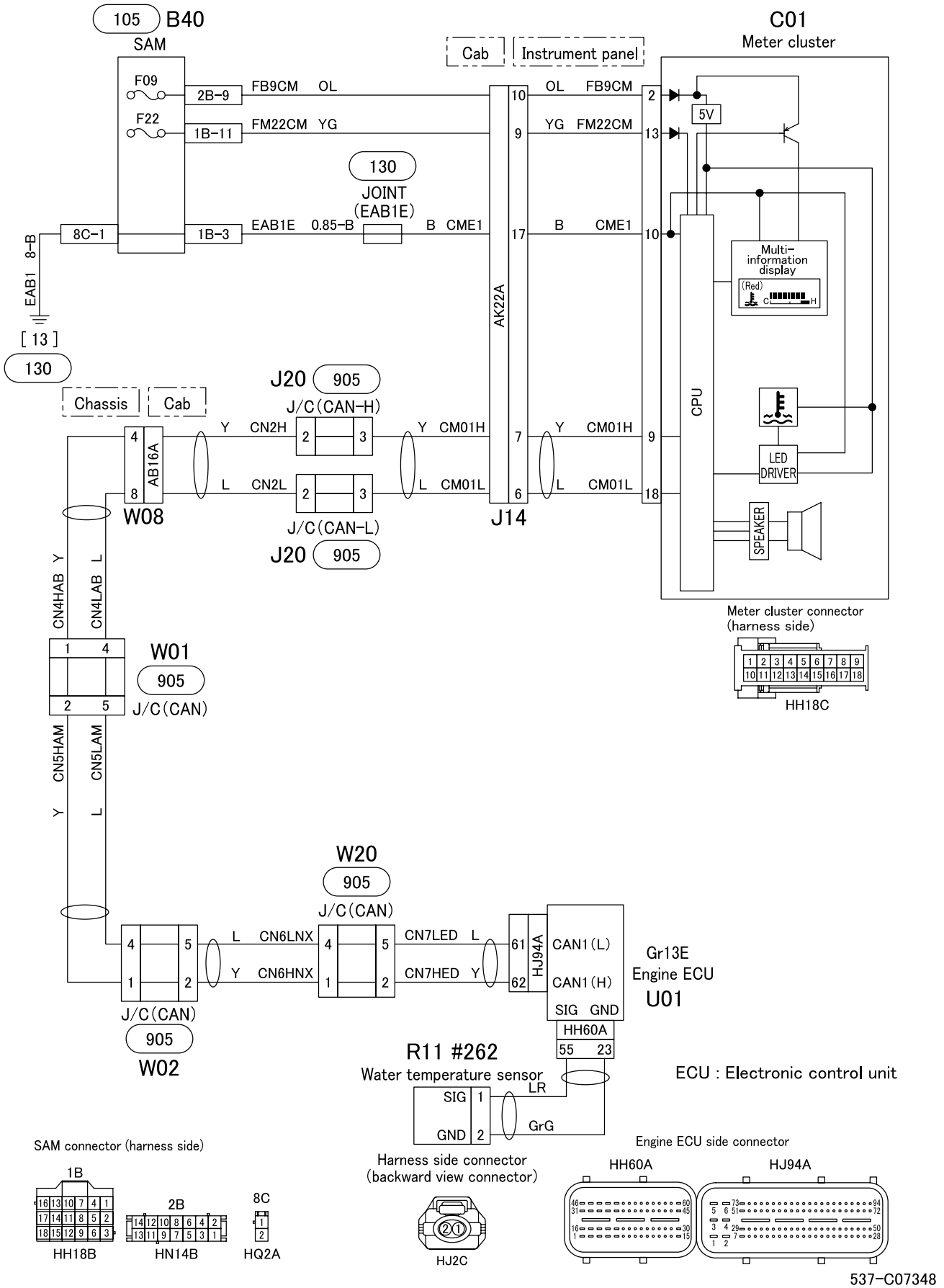

537-C07348

https://truckmanualshub.com/

550 CAB TILT WARNING CIRCUIT

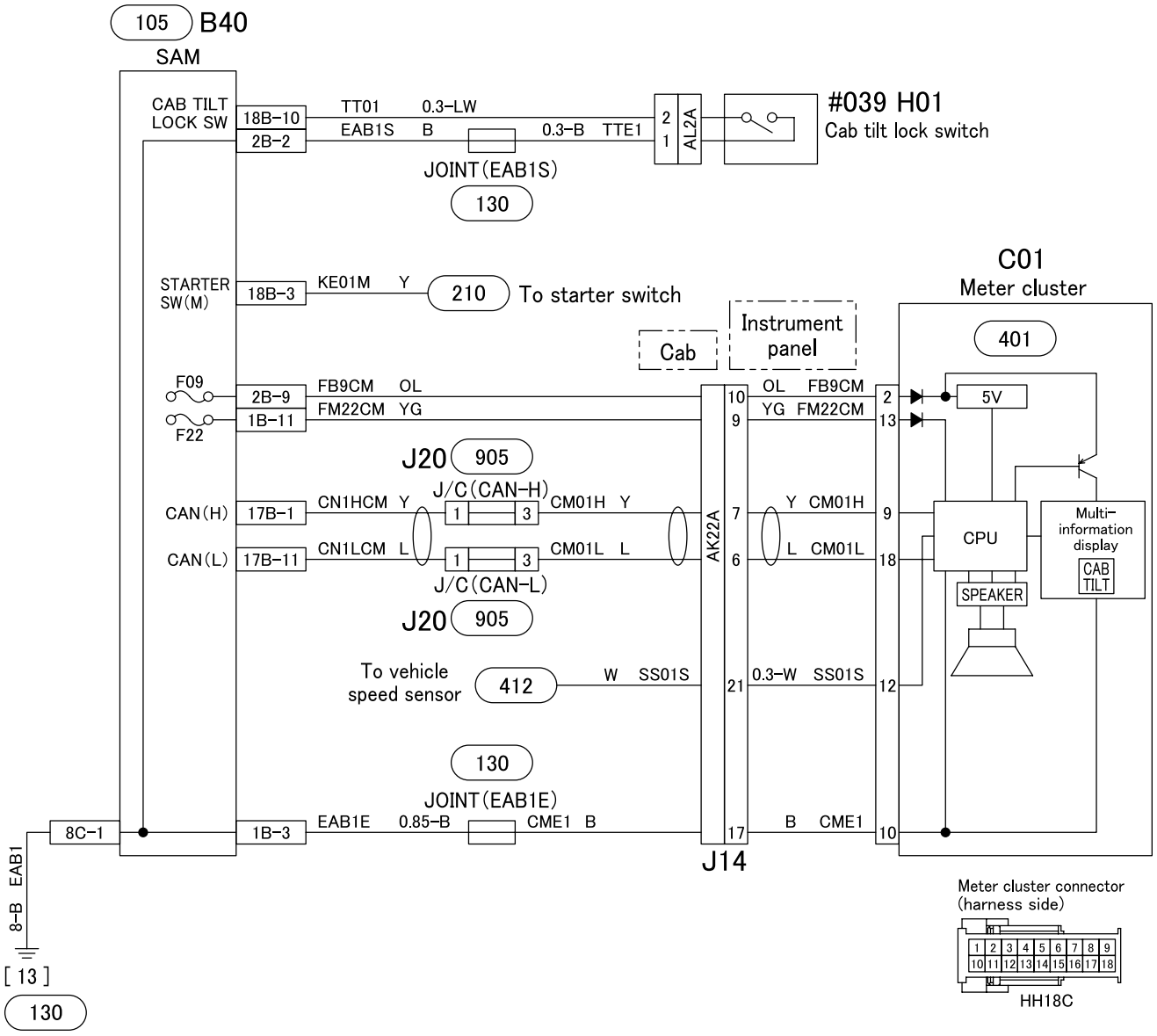

SAM connector (harness side)

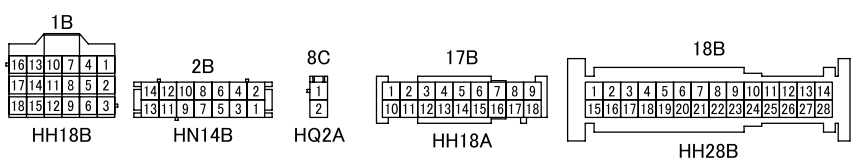

550-C07348

https://truckmanualshub.com/

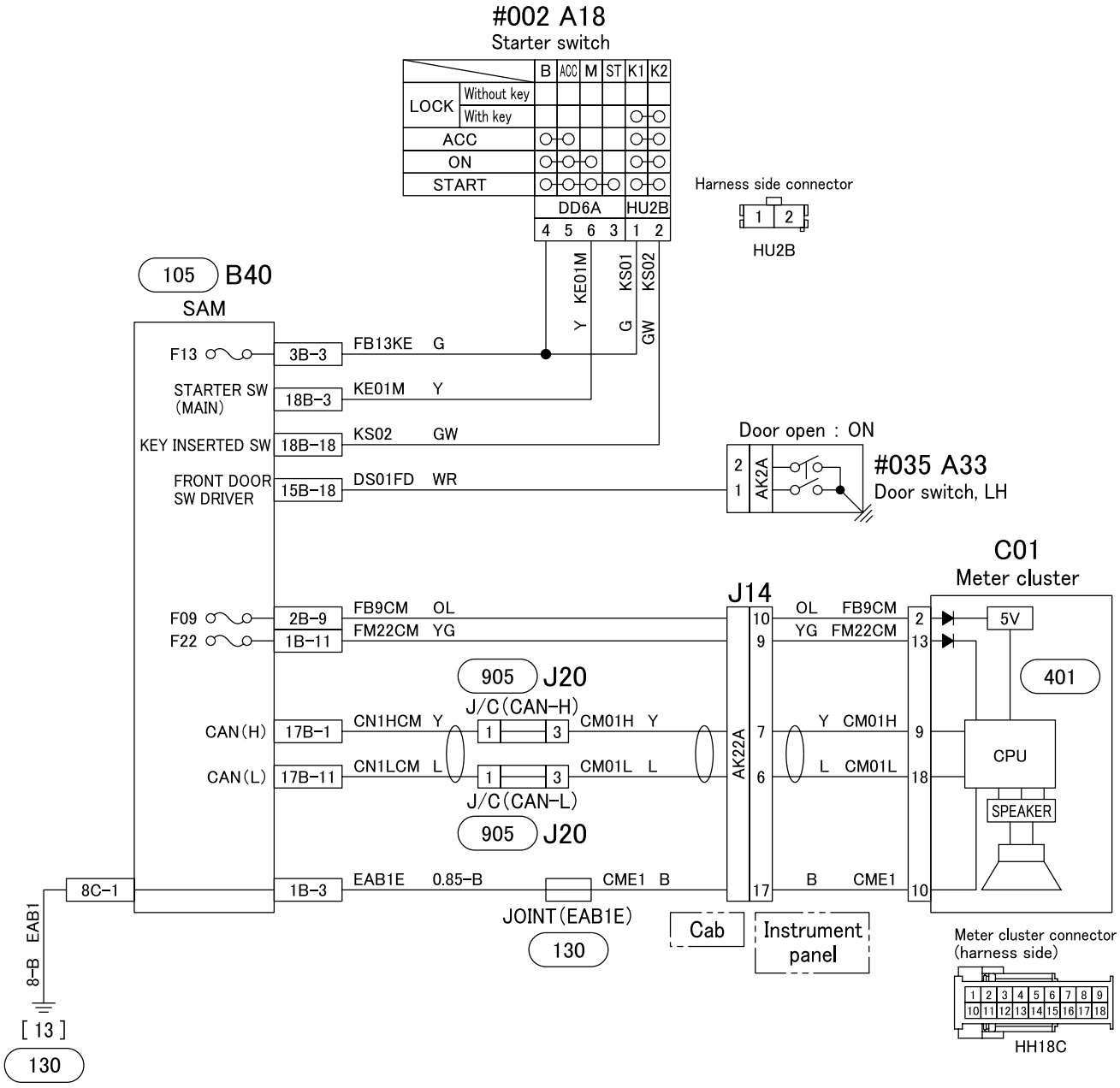

SAM connector (harness side)

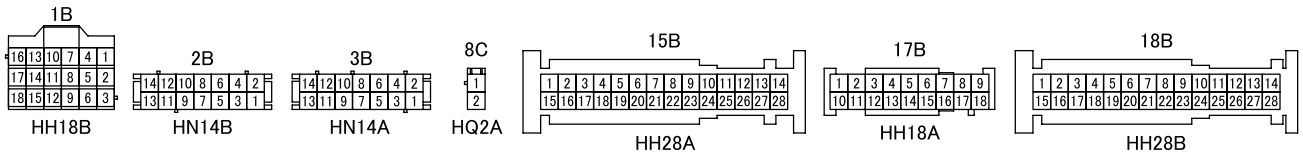

554-C07348

https://truckmanualshub.com/

566 FUEL FILTER CIRCUIT

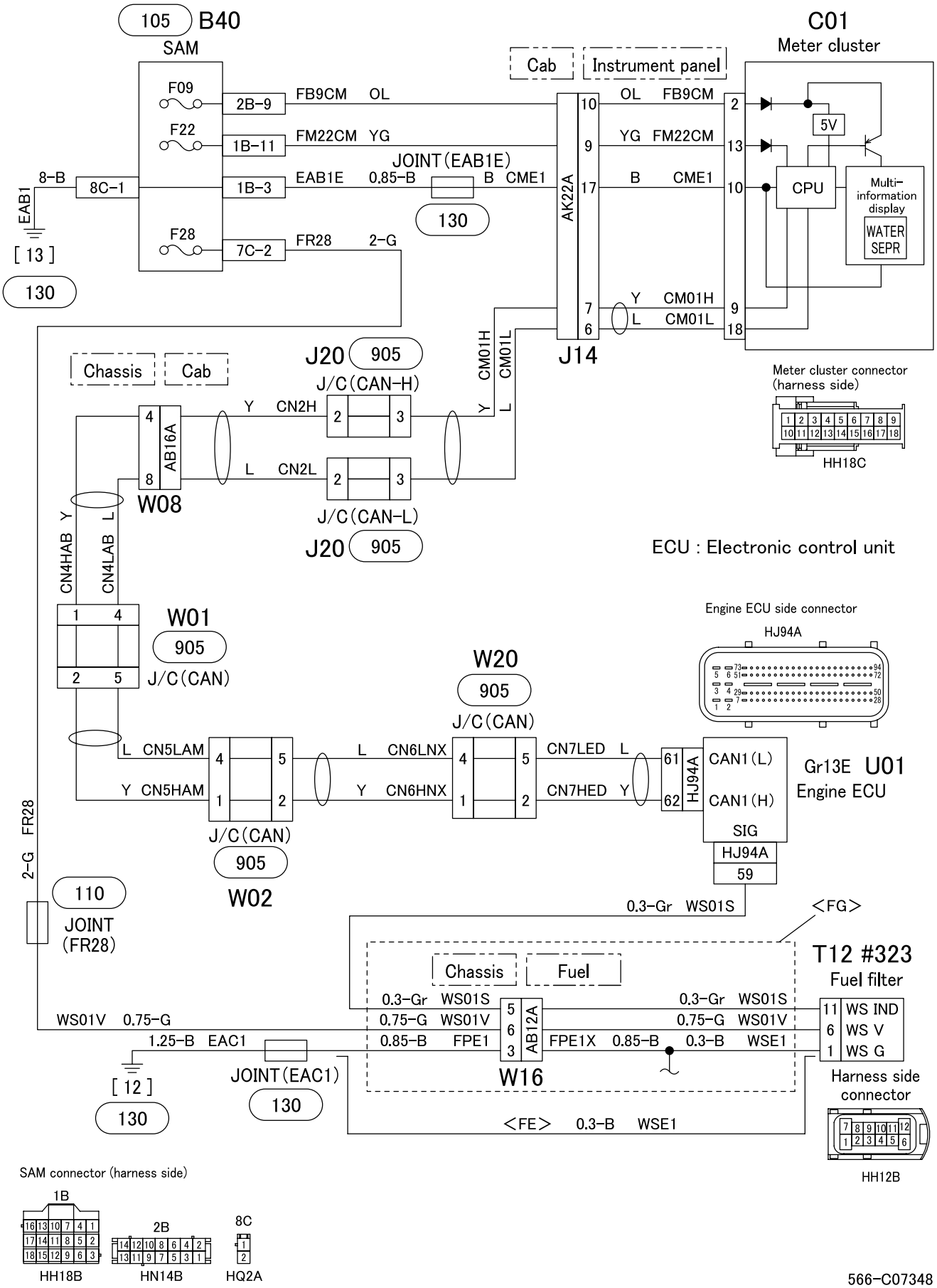

https://truckmanualshub.com/

54-06 CAB SIDE ELECTRICAL CIRCUIT

https://truckmanualshub.com/

610 CIGARETTE LIGHTER CIRCUIT

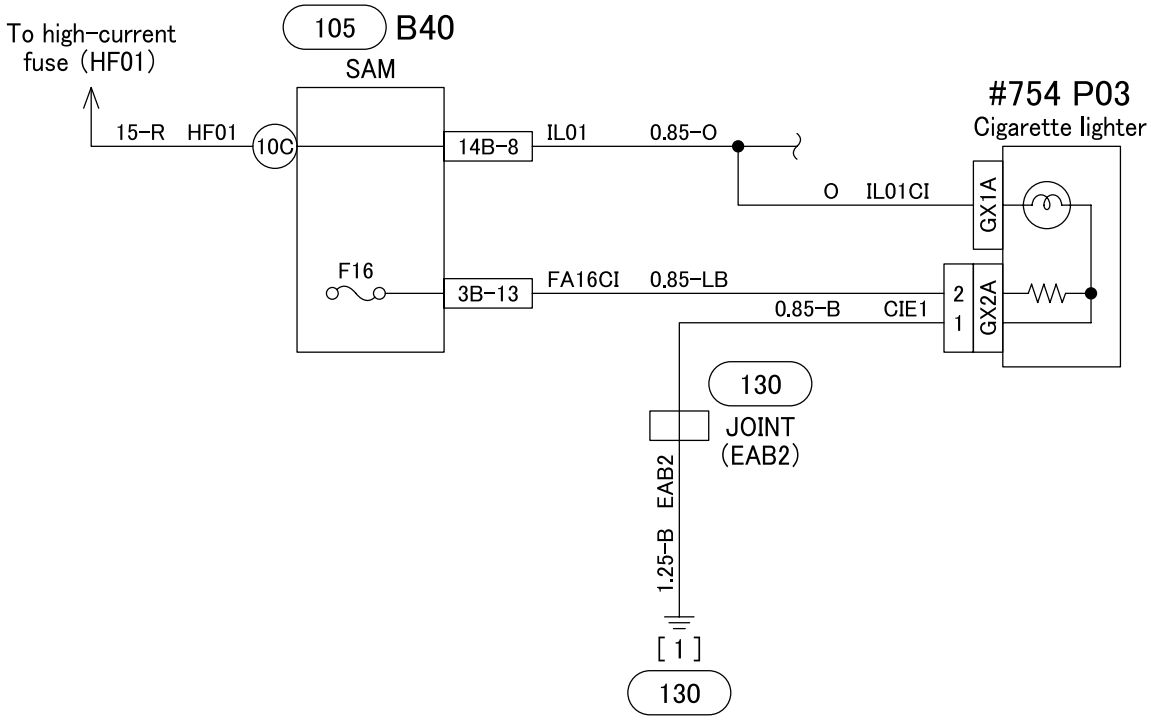

SAM connector (harness side)

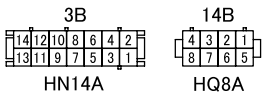

610-C07348

https://truckmanualshub.com/

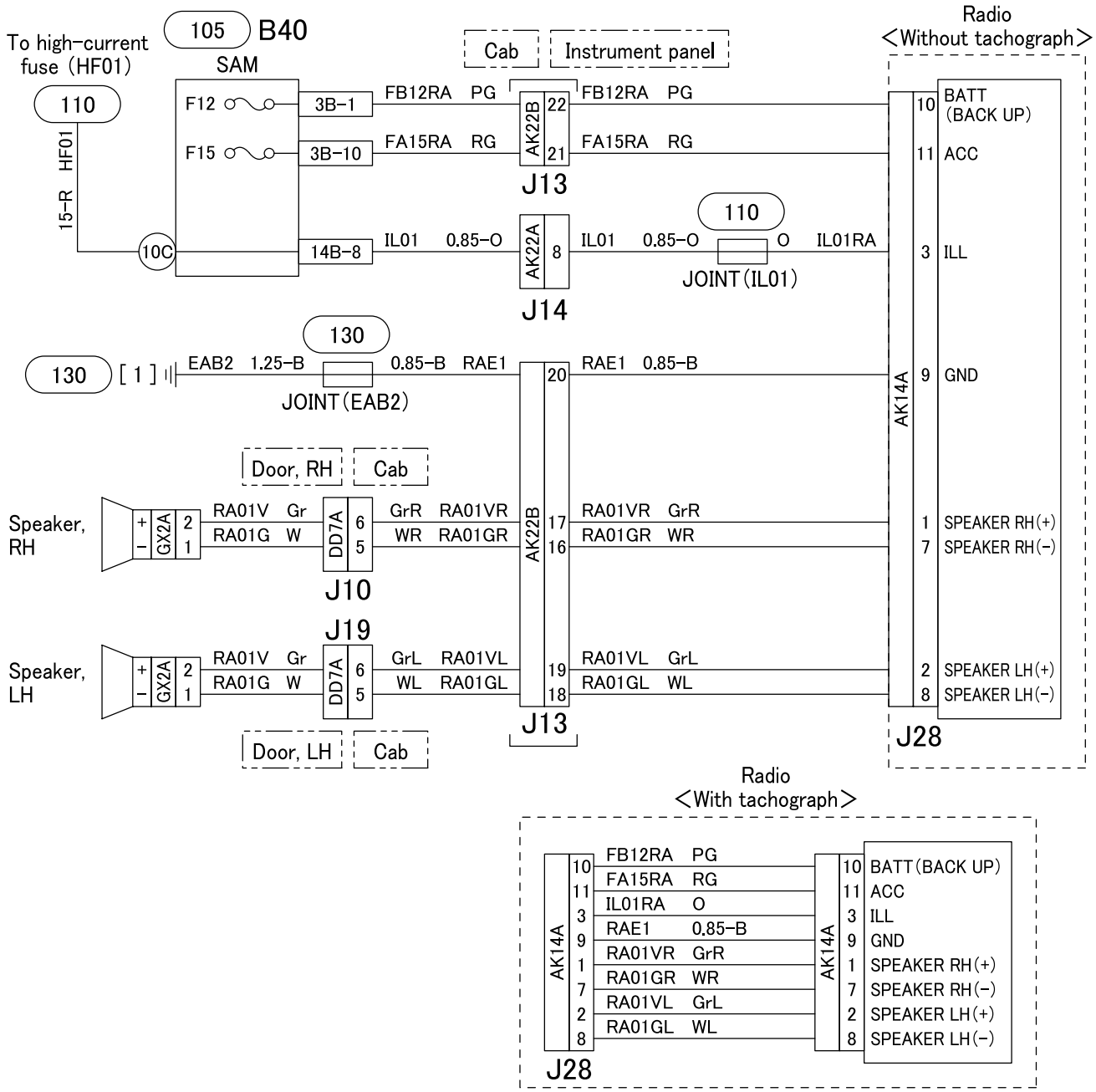

SAM connector (harness side)

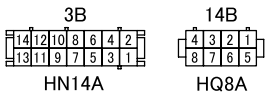

612-C07348

https://truckmanualshub.com/

614 WIPER AND WASHER CIRCUIT

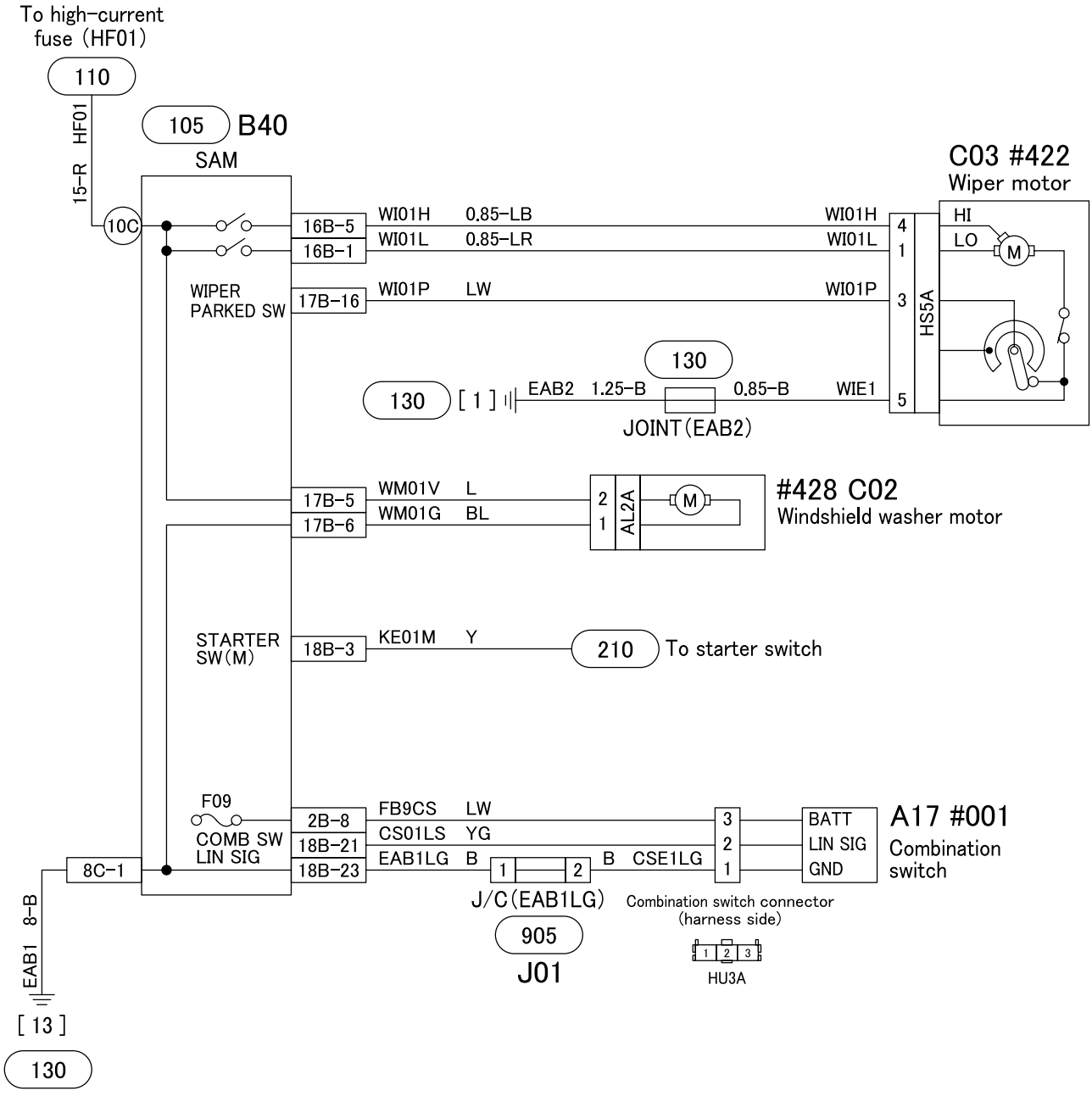

SAM connector (harness side)

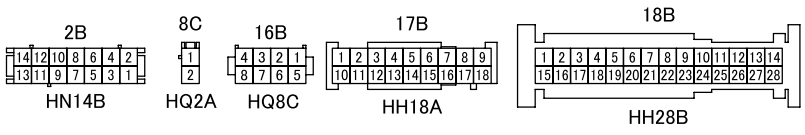

614-C07348

https://truckmanualshub.com/

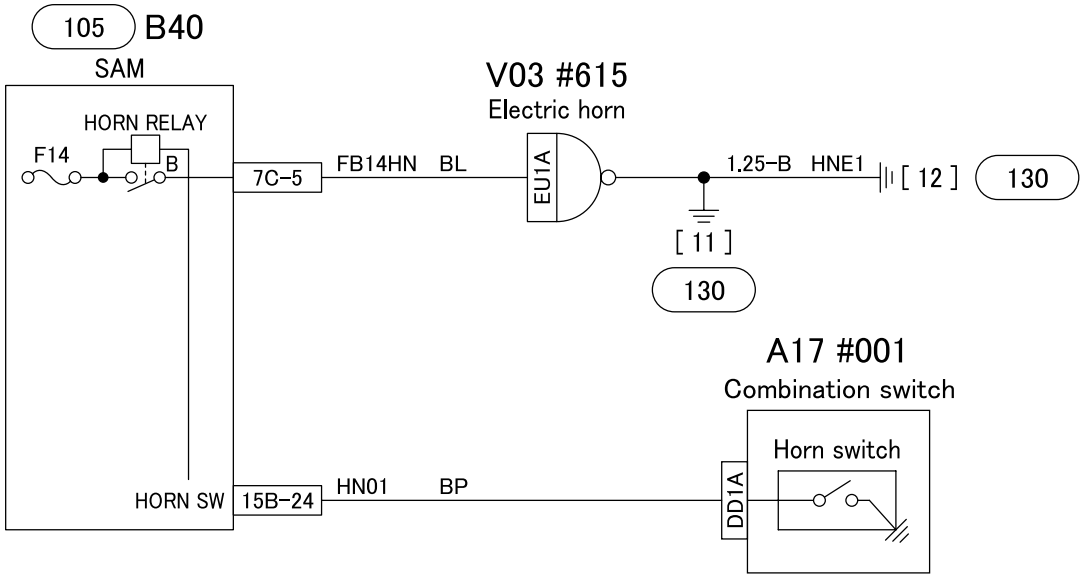

SAM connector (harness side)

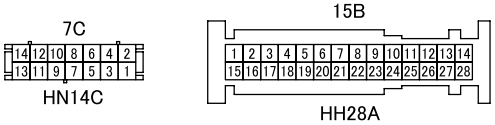

https://truckmanualshub.com/

620 HEATER AND AIR-CONDITIONER CIRCUIT

<Manual air-conditioner>

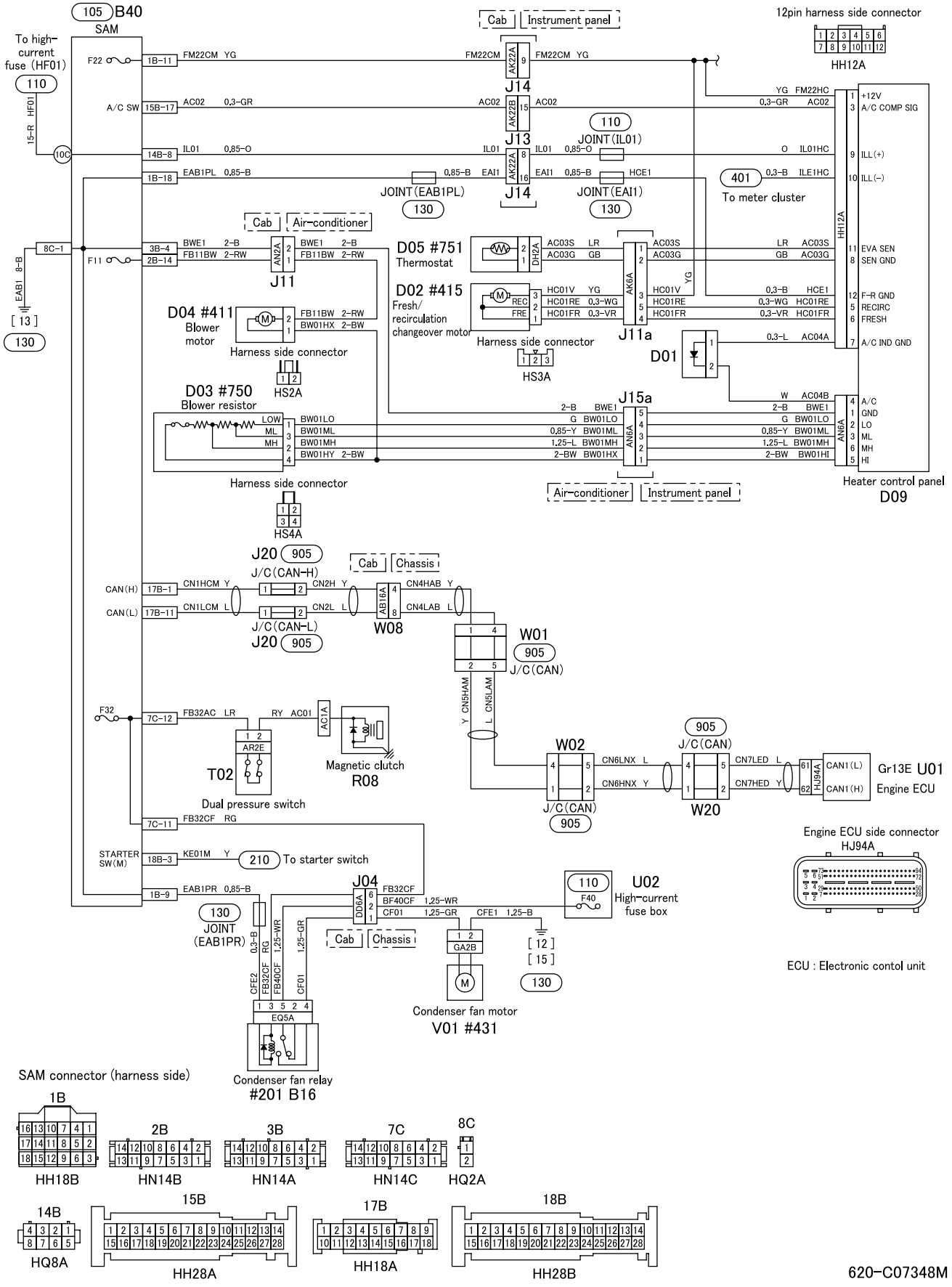

620-C07348M

https://truckmanualshub.com/

＜Rear heater＞

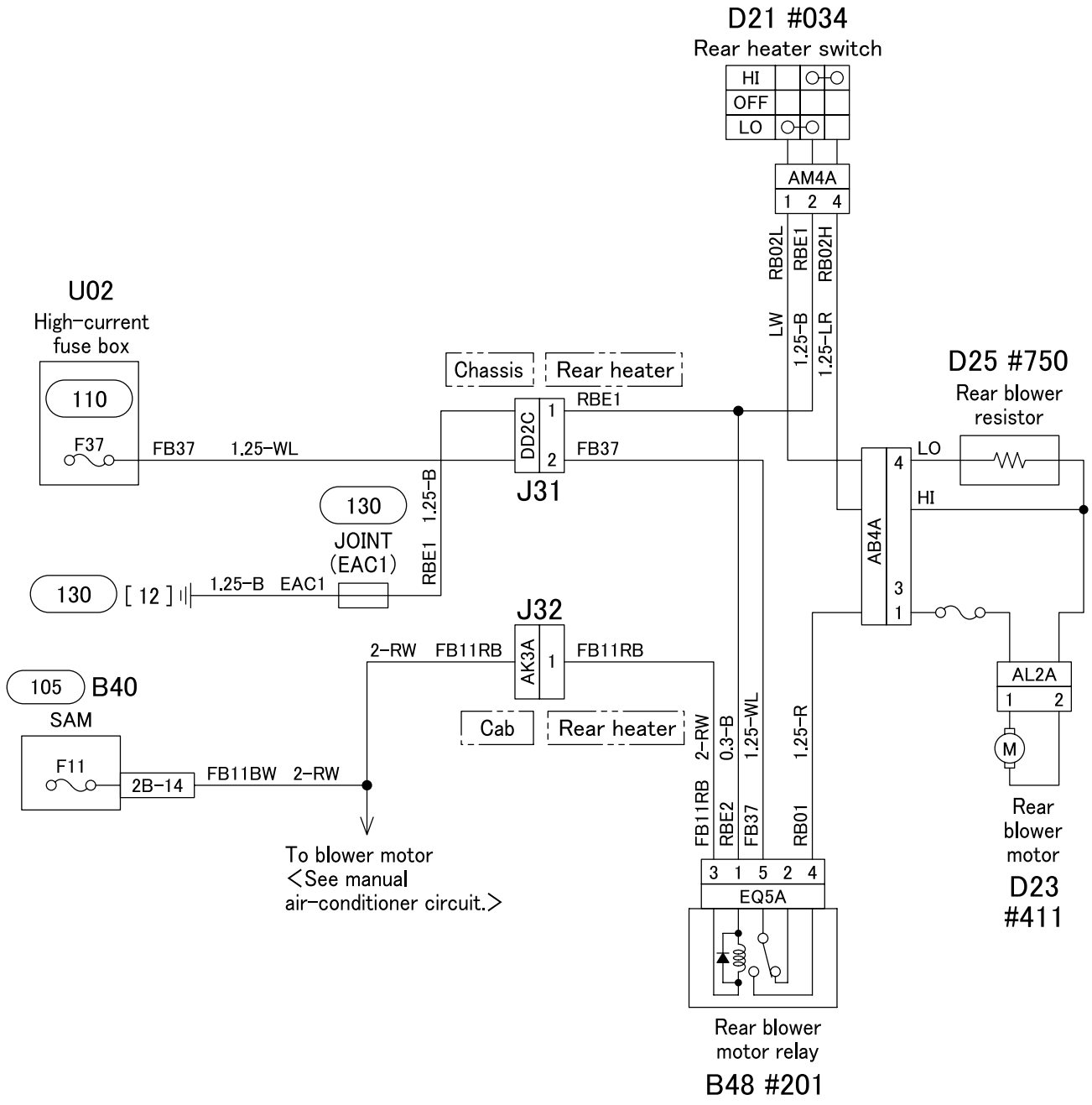

SAM connector (harness side)

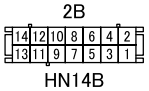

620-C07348H

https://truckmanualshub.com/

622 POWER WINDOW AND CENTRAL DOOR LOCK CIRCUIT

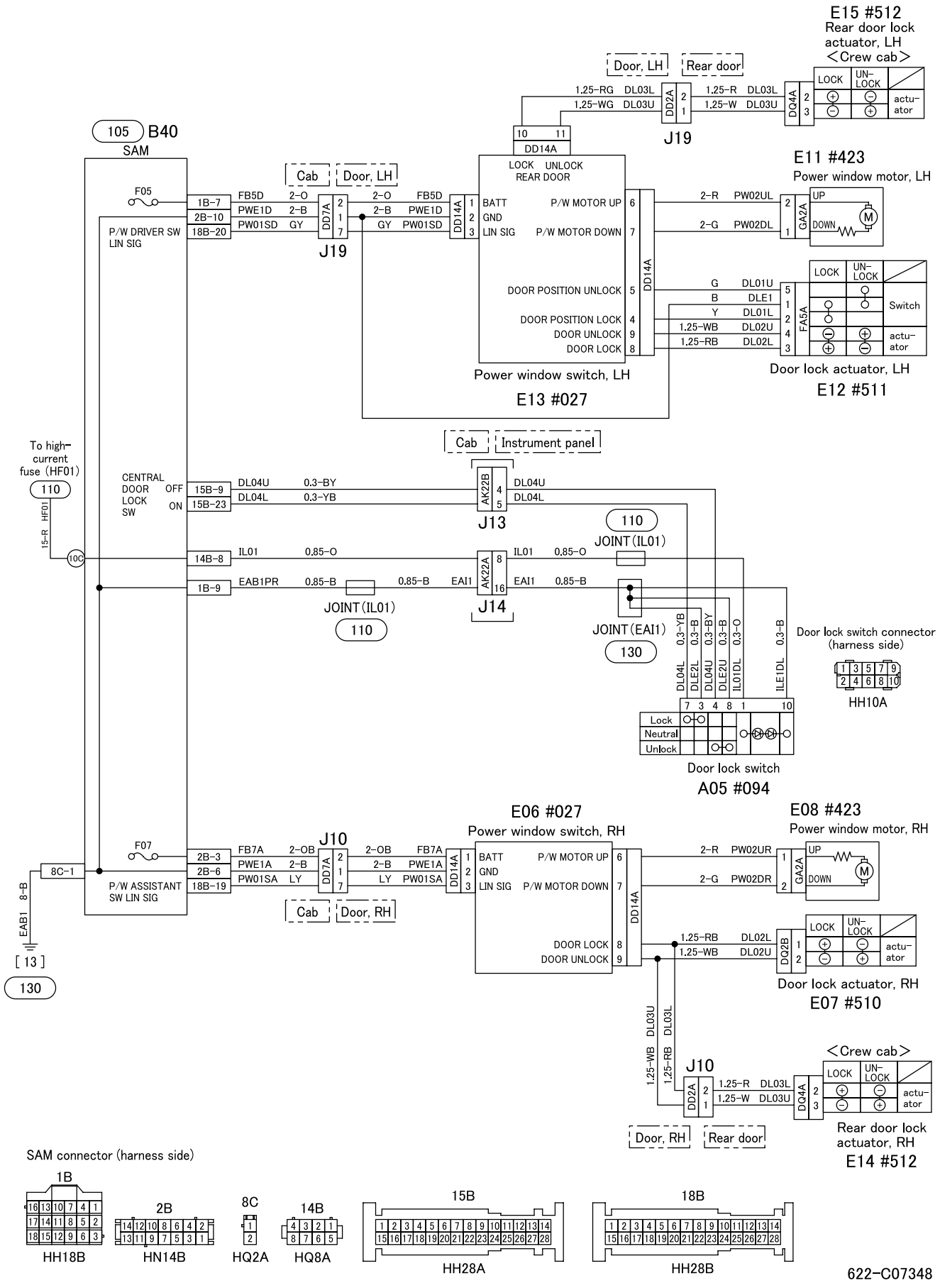

https://truckmanualshub.com/

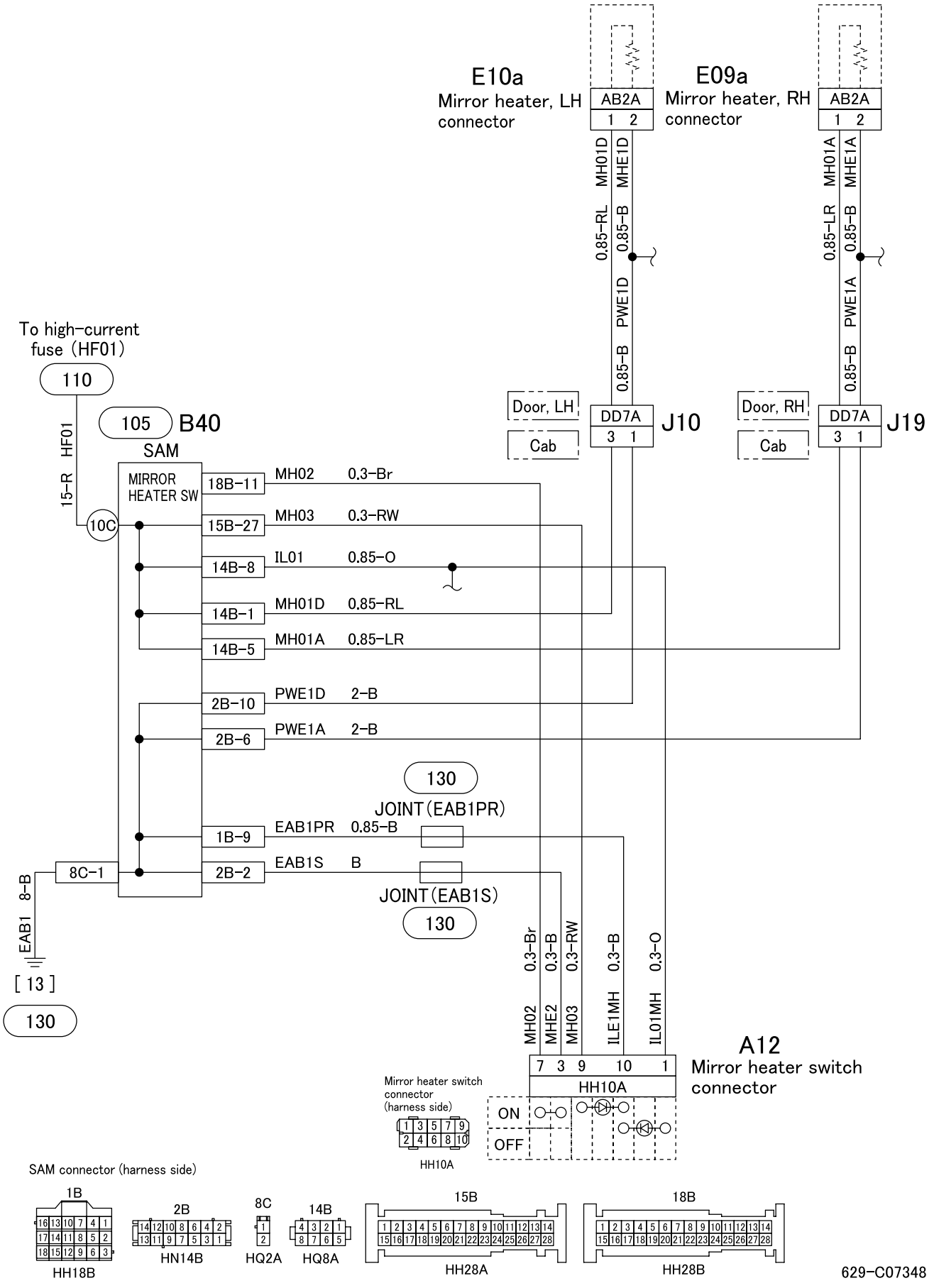

https://truckmanualshub.com/

654 KEYLESS ENTRY CIRCUIT

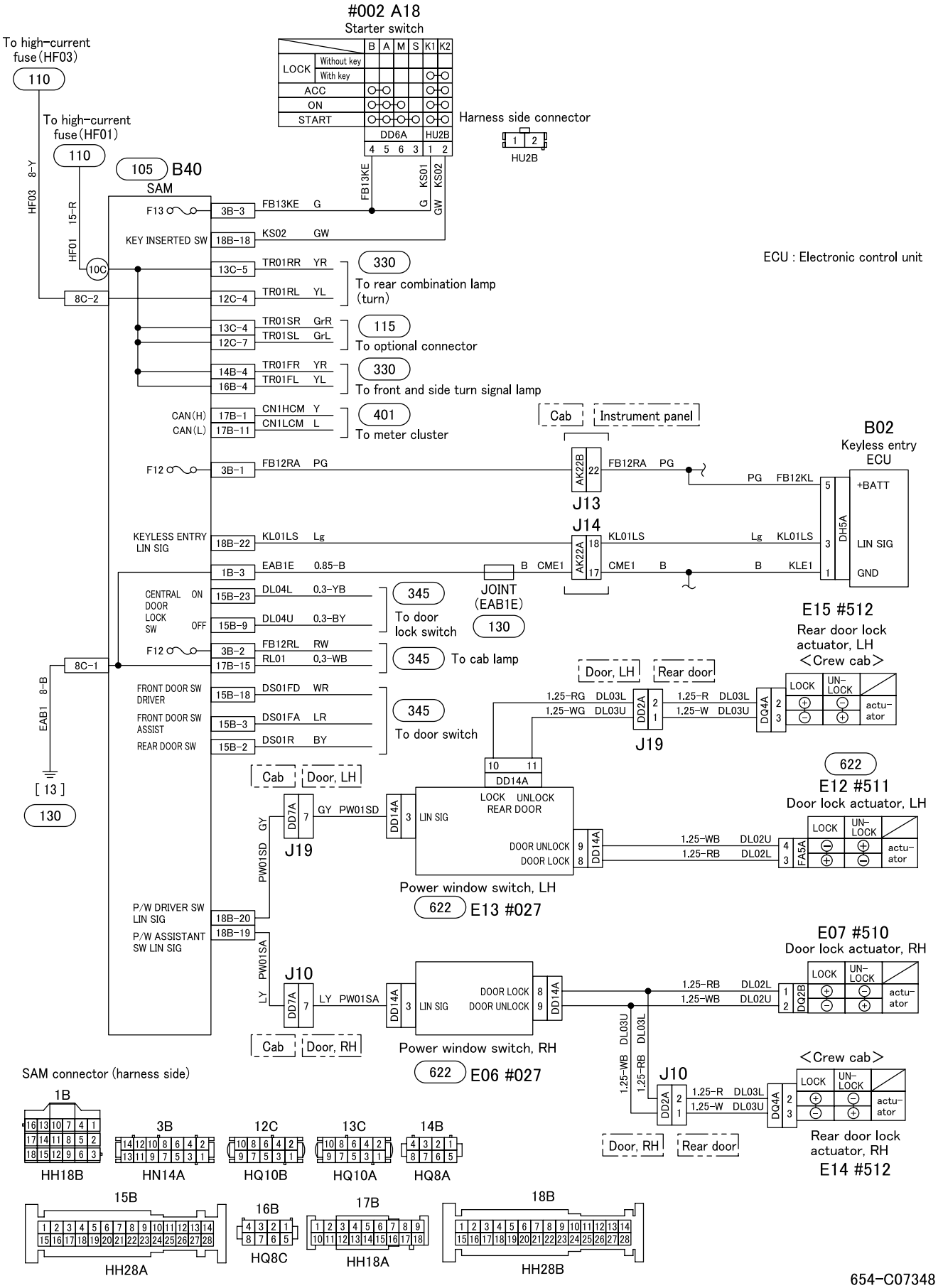

654-C07348

https://truckmanualshub.com/

54-08 ENGINE AND TRANSMISSION SIDE ELECTRICAL CIRCUIT

https://truckmanualshub.com/

810 FOUR-WHEEL DRIVE CIRCUIT

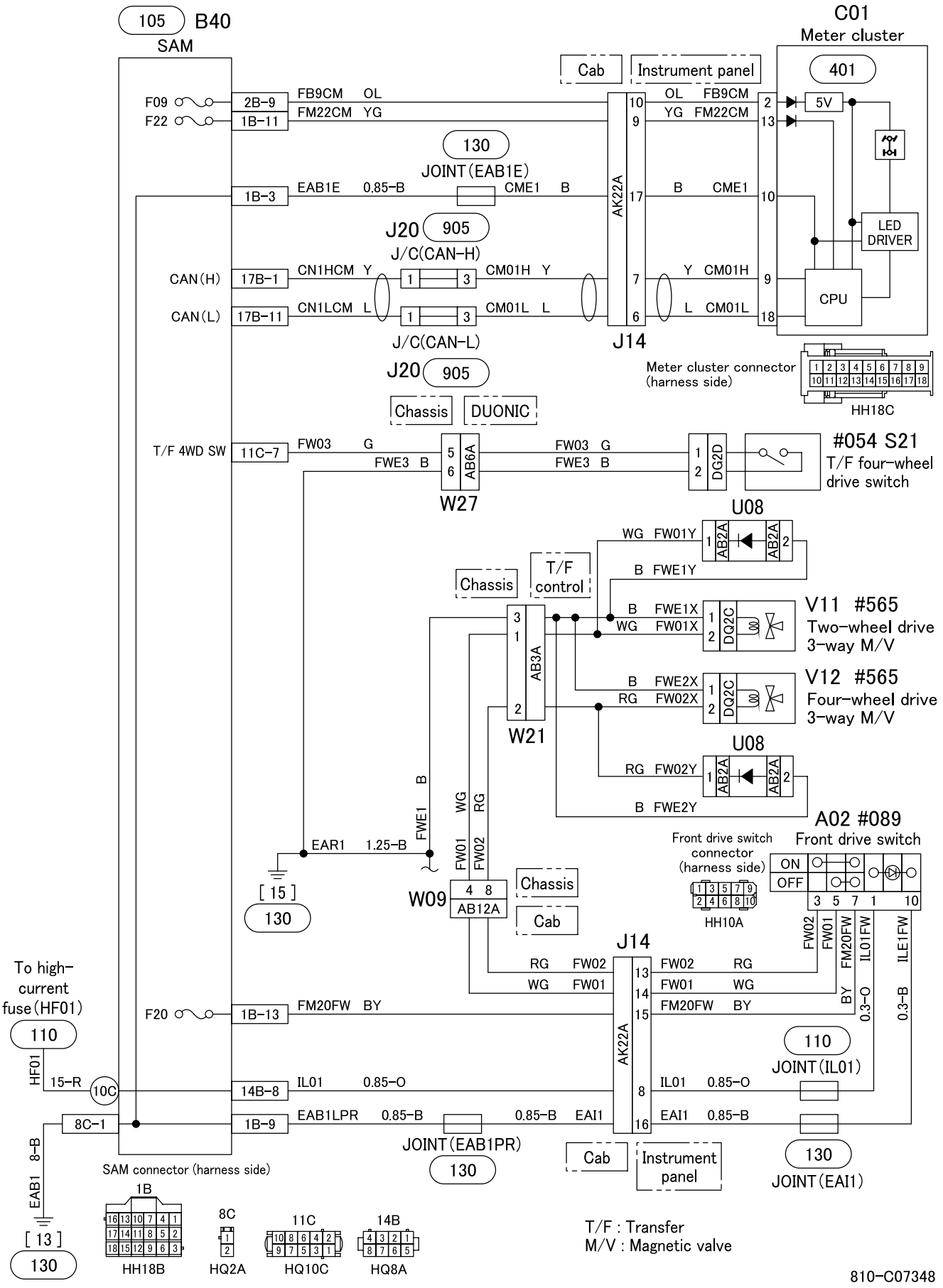

https://truckmanualshub.com/

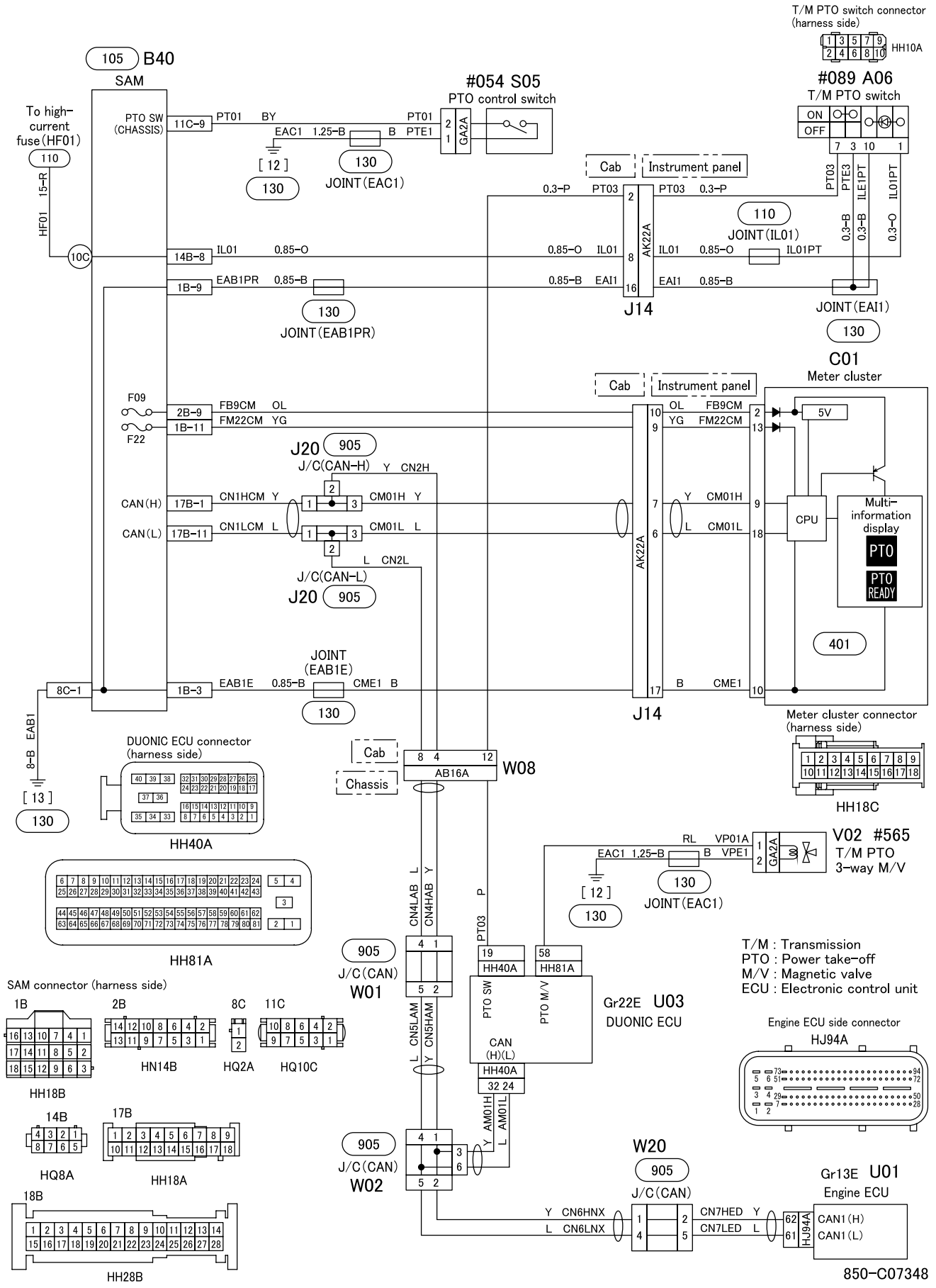

https://truckmanualshub.com/

54-09 OTHER CIRCUIT

https://truckmanualshub.com/

905 JOINT CONNECTOR (J/C)

(1/2)

Ground (EAB1LG)

1	2	3	4
EAB1LG	CSE1LG	CHE1LG	–

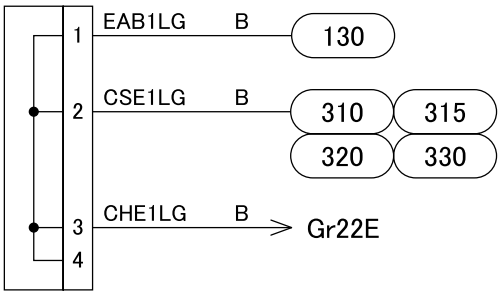

Rear door switch (040)

1	2	3	4
DS01R	DS01RL	DS01RR	–

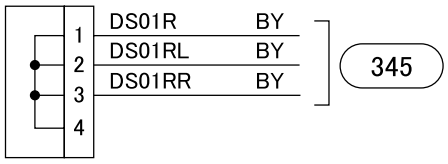

Meter cluster (CAN-H)

1	2	3	4
CN1HCM	CN2H	CM01H	–

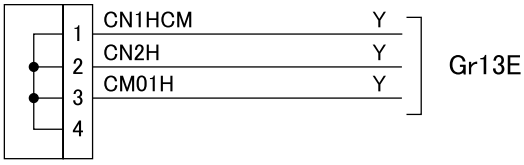

Meter cluster (CAN-L)

1	2	3	4
CN1LCM	CN2L	CM01L	–

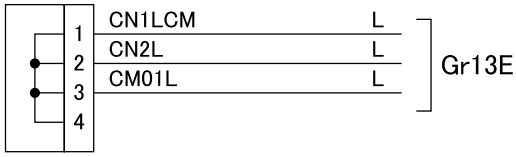

Immobilizer (CAN-H)

1	2	3	4
CB1HIM	CB2H	IM01H	–

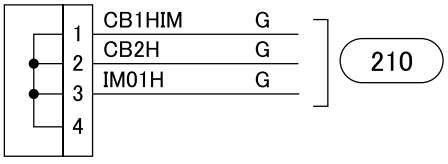

Immobilizer (CAN-L)

1	2	3	4
CB1LIM	CB2L	IM01L	–

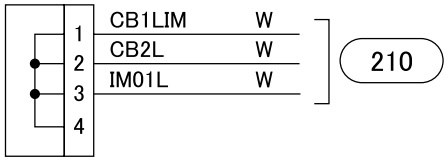

CAN : Controller Area Network

905-C07348-1

https://truckmanualshub.com/

(2/2)

Engine control (CAN)

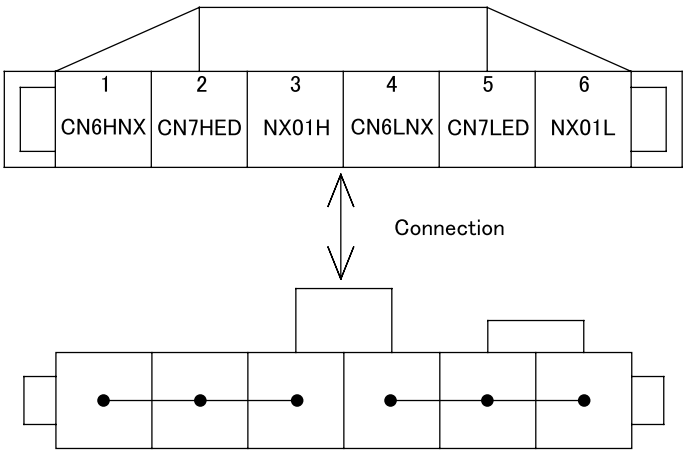

1	CN6HNX	Y	Gr13E
2	CN7HED	Y	
3	NX01H	Y	
4	CN6LNX	L	
5	CN7LED	L	
6	NX01L	L	

DUONIC (CAN)

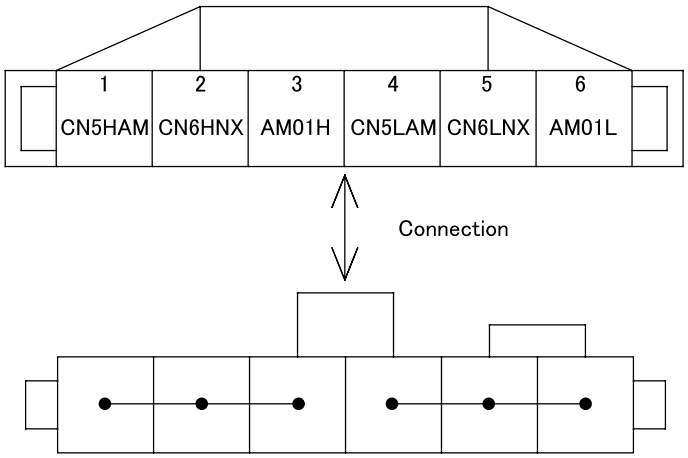

1	CN5HAM	Y	Gr22E
2	CN6HNX	Y	
3	AM01H	Y	
4	CN5LAM	L	
5	CN6LNX	L	
6	AM01L	L	

ABS (CAN)

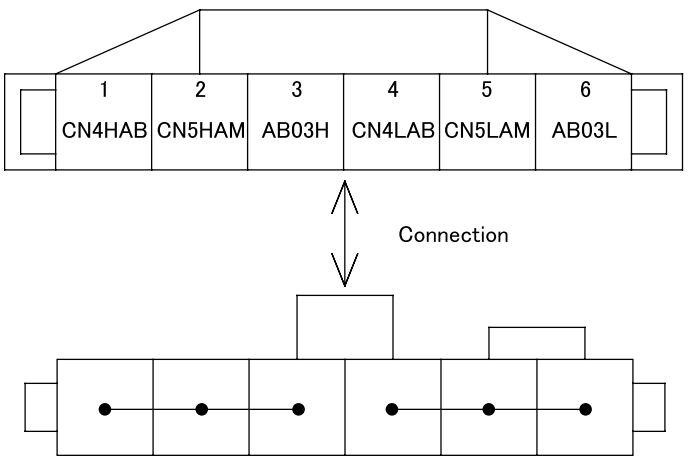

1	CN4HAB	Y	Gr35E
2	CN5HAM	Y	
3	AB03H	Y	
4	CN4LAB	L	
5	CN5LAM	L	
6	AB03L	L	

ABS : Anti-lock brake system
CAN : Controller Area Network

905-C07348-2

https://truckmanualshub.com/

54-10 ELECTRICAL EQUIPMENT INSTALLATION POSITIONS

https://truckmanualshub.com/

A SWITCH AND SENSOR

A01 to 14 (Switch)

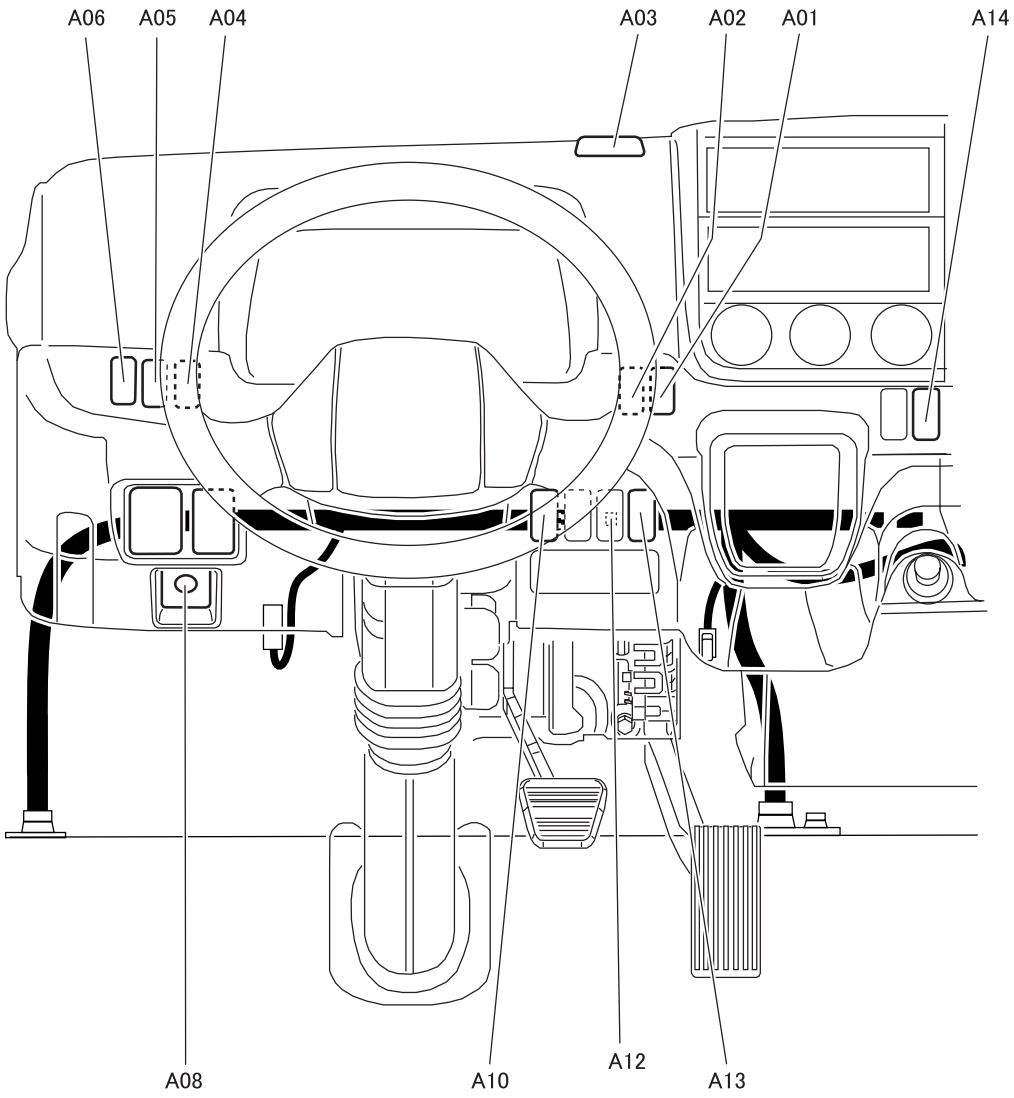

A01 ECO mode switch <DUONIC>
A02 Front drive switch <FG>
A03 Hazard switch
A04 Fog lamp switch
A05 Door lock switch
A06 Transmission power take-off switch
A08 Idling speed adjustment potentiometer
A10 Van body dome light switch
A12 Mirror heater switch connector
A13 DPF cleaning switch
A14 Cruise control main switch

DPF : Diesel particulate filter

54-L05232A-1

https://truckmanualshub.com/

A16 to 22 (Switch)

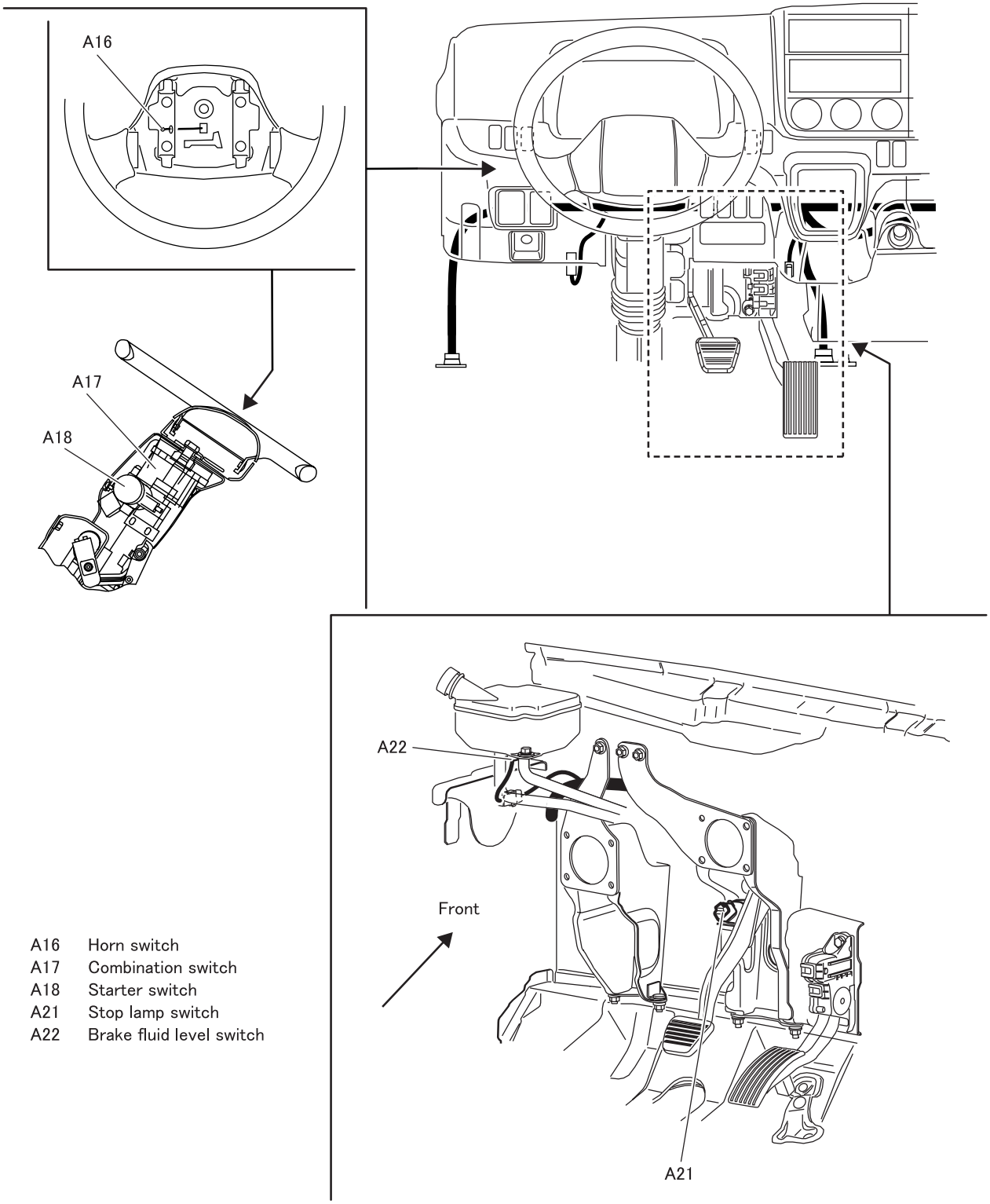

A16 Horn switch
A17 Combination switch
A18 Starter switch
A21 Stop lamp switch
A22 Brake fluid level switch

54-L05232A-2

https://truckmanualshub.com/

A31 to 38 (Switch)

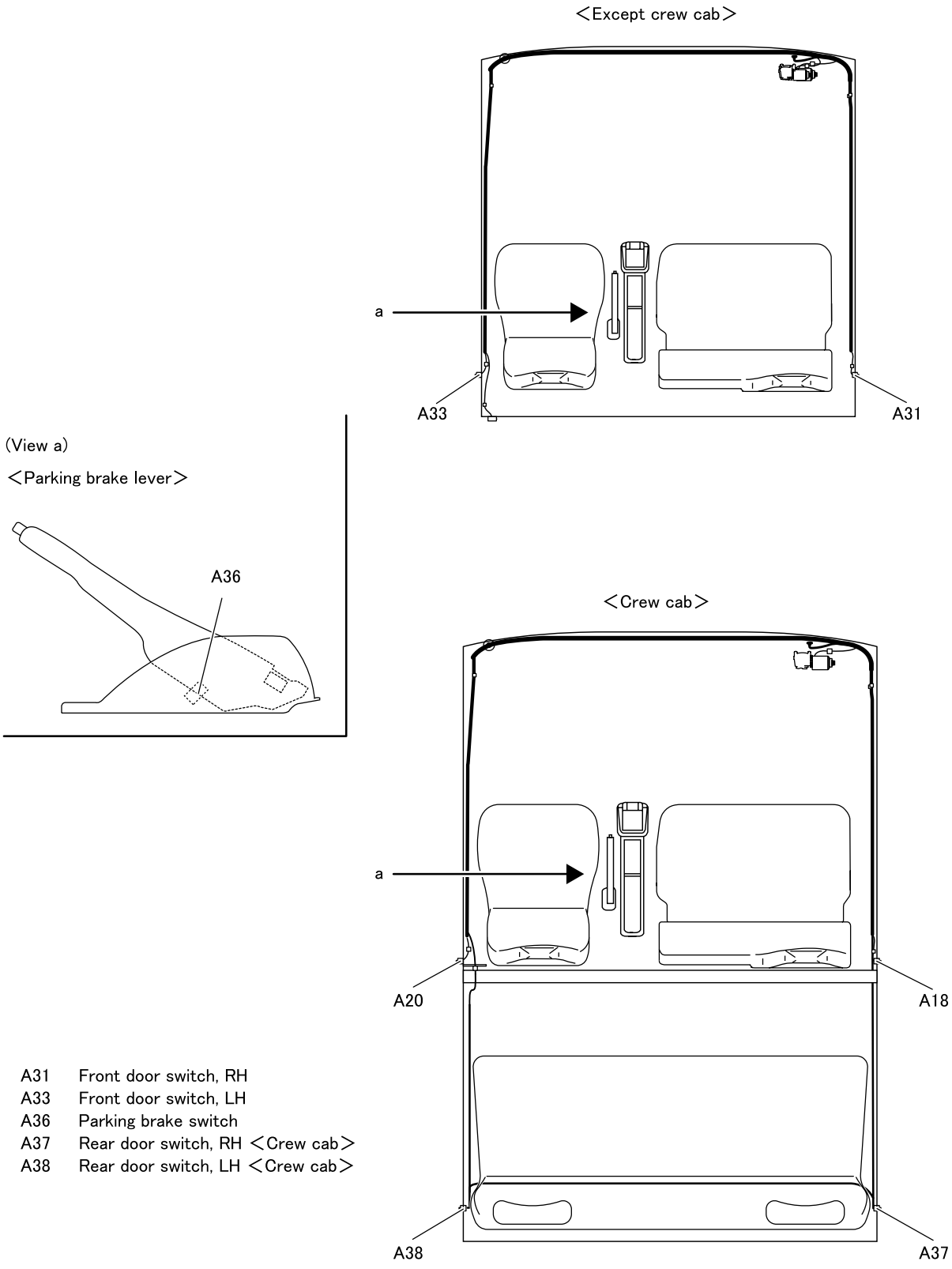

A31 Front door switch, RH
A33 Front door switch, LH
A36 Parking brake switch
A37 Rear door switch, RH ＜Crew cab＞
A38 Rear door switch, LH ＜Crew cab＞

54-L05232A-3

https://truckmanualshub.com/

A41 to 45 (Sensor)

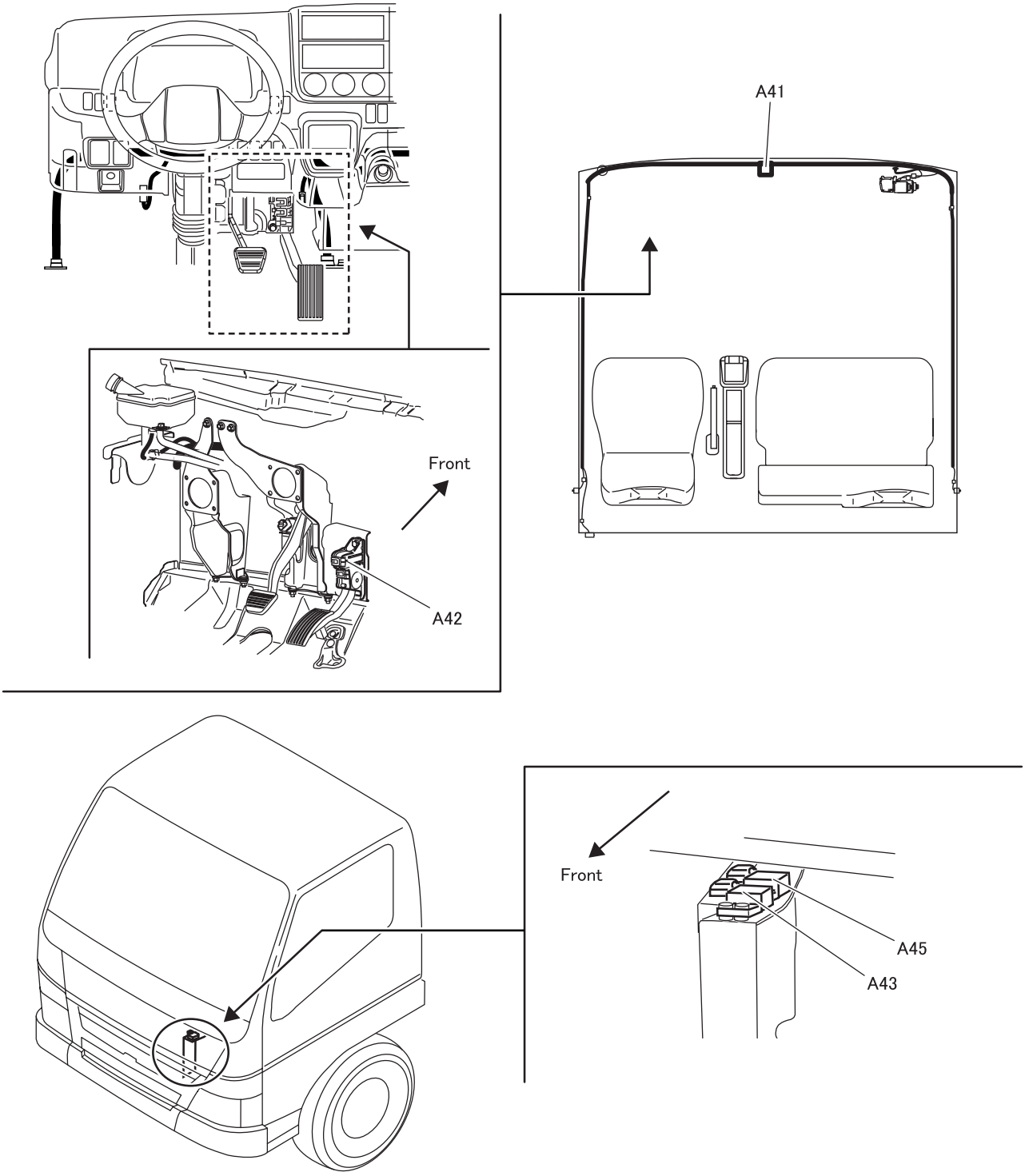

A41 Photo sensor <Fully automatic air-conditioner>
A42 Accelerator pedal position sensor
A43 G sensor (main) <DUONIC>
A45 G sensor (sub) <DUONIC (FEC5)>
G sensor <FG>

54-L05232A-4

https://truckmanualshub.com/

B RELAY AND ELECTRONIC CONTROL UNIT

B02 to 05

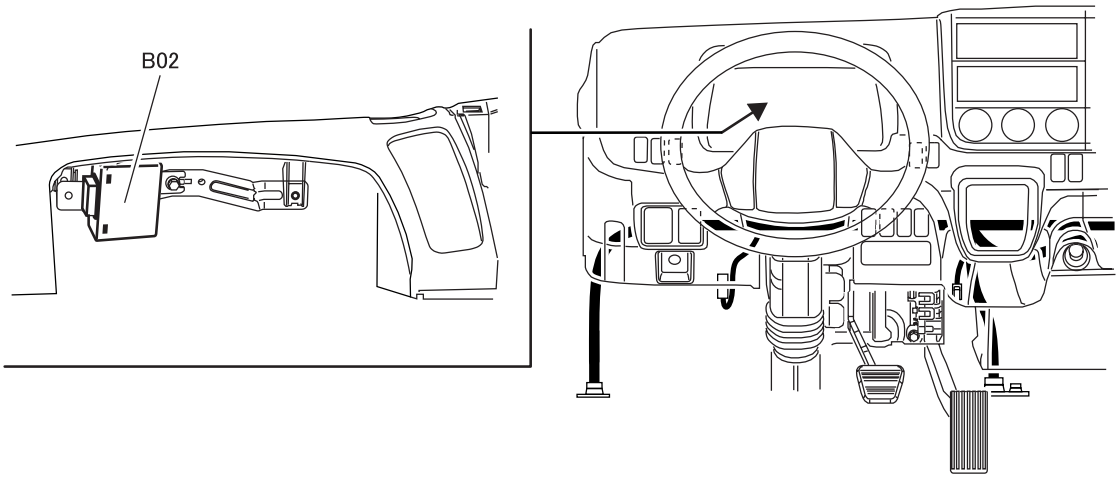

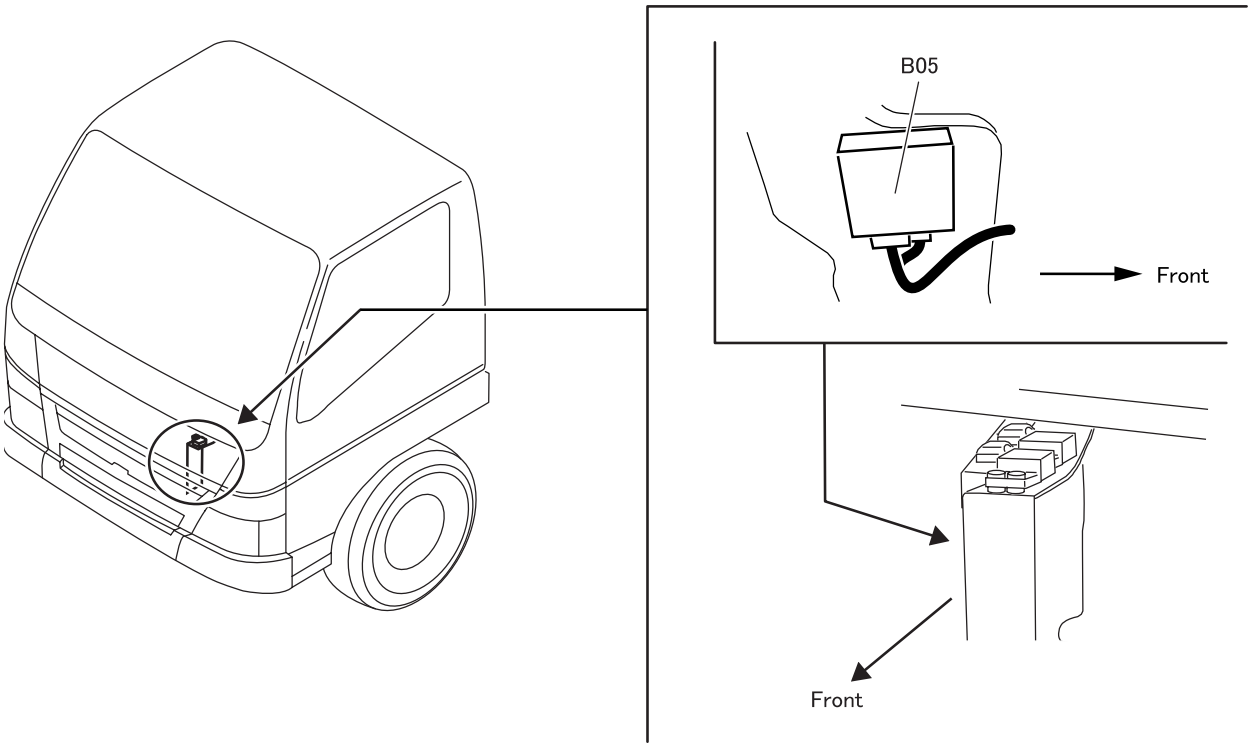

B02 Keyless entry ECU
B05 Immobilizer ECU

ECU : Electronic control unit

54-L05232B-1

https://truckmanualshub.com/

B11 to 21

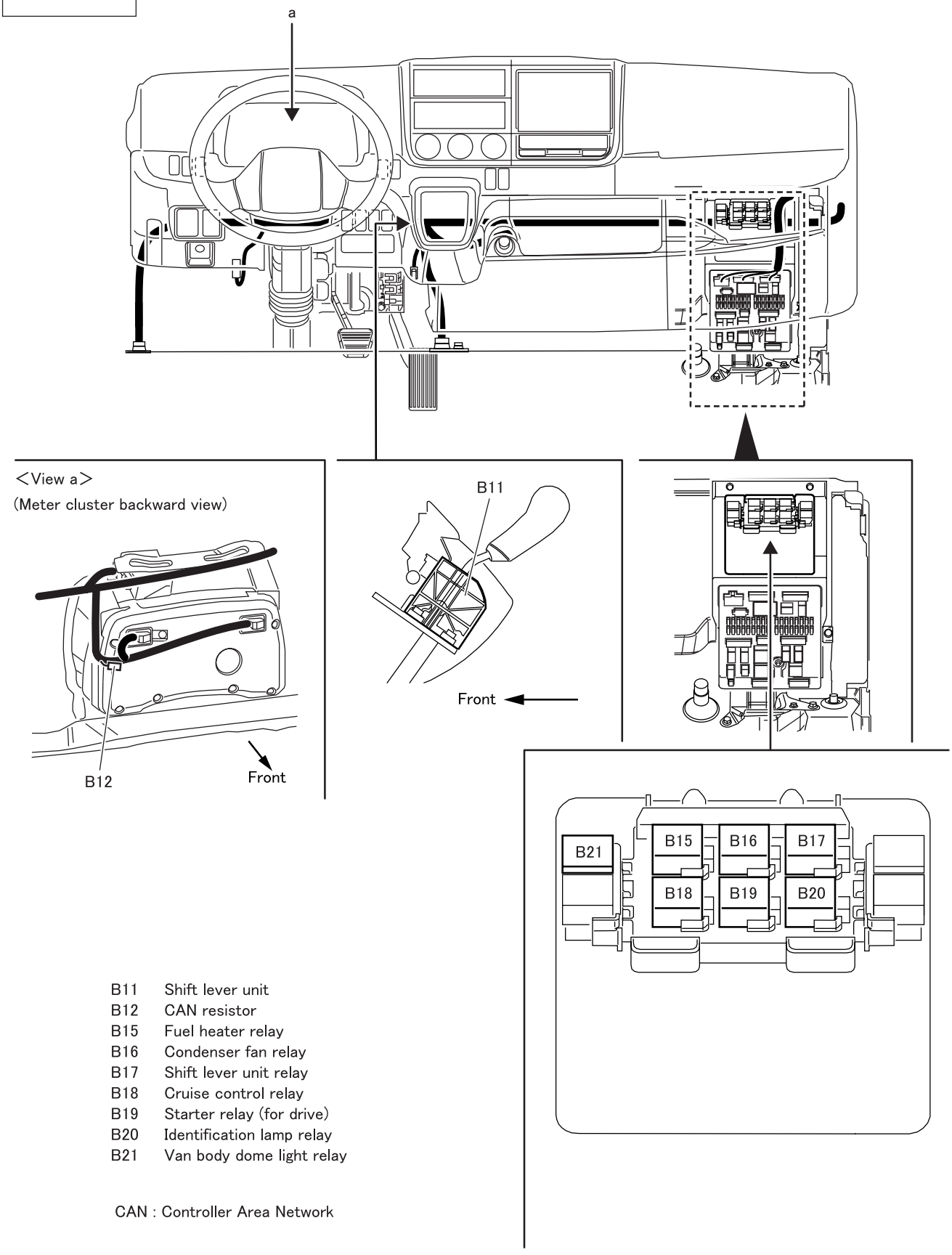

B11 Shift lever unit
B12 CAN resistor
B15 Fuel heater relay
B16 Condenser fan relay
B17 Shift lever unit relay
B18 Cruise control relay
B19 Starter relay (for drive)
B20 Identification lamp relay
B21 Van body dome light relay

CAN : Controller Area Network

https://truckmanualshub.com/

B RELAY AND ELECTRONIC CONTROL UNIT

B40

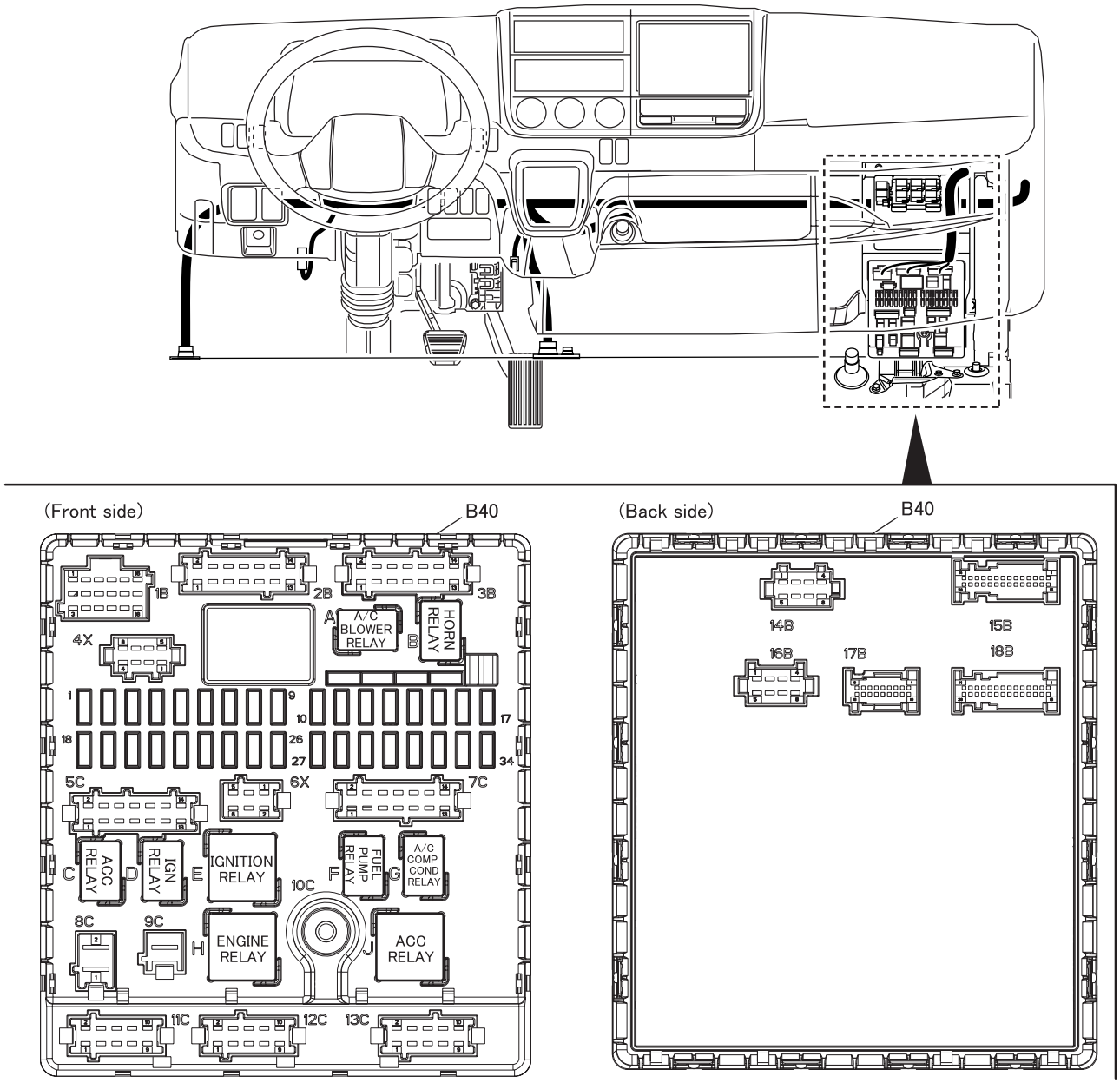

B40 SAM

SAM : Signal detect and actuation modules

54-L05232B-3

https://truckmanualshub.com/

B48 <Crew cab>

(Rear heater)

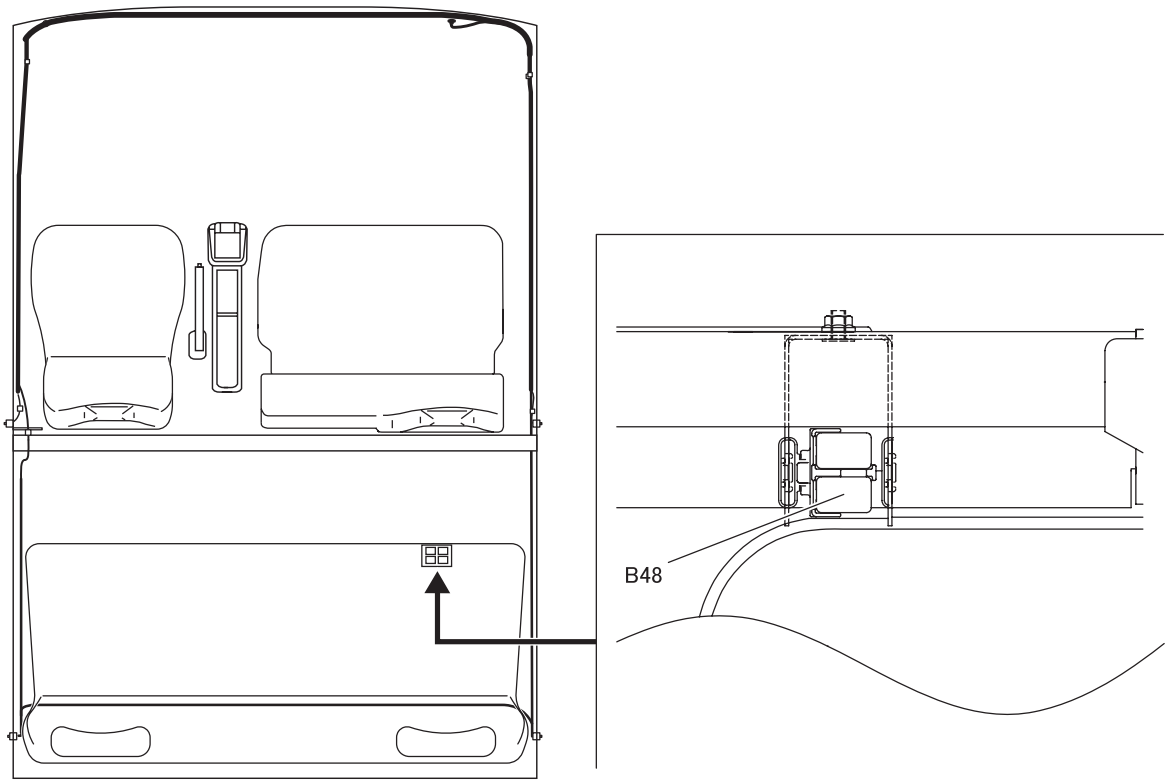

B48 Rear blower motor relay

https://truckmanualshub.com/

C01 to 03

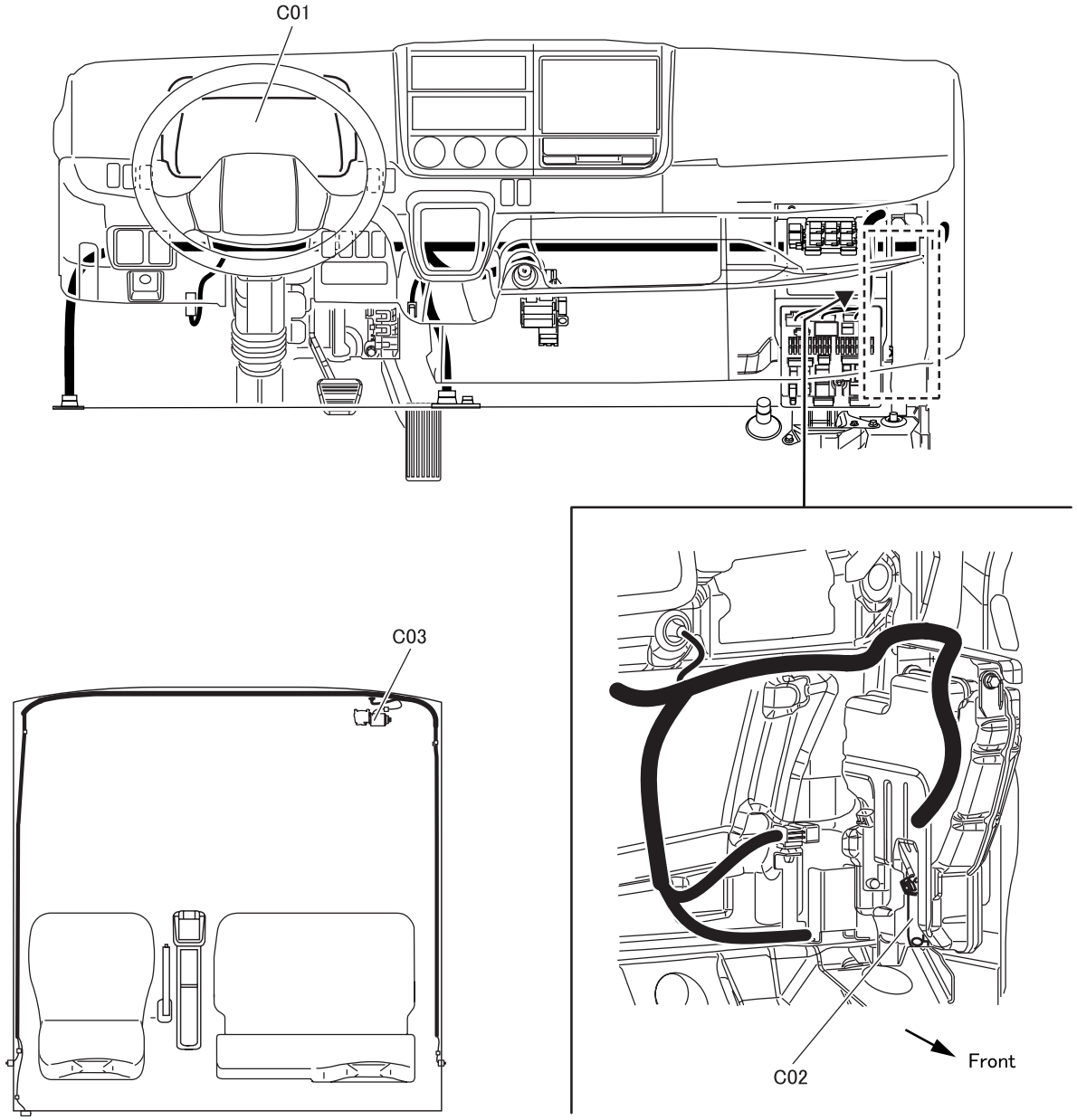

C01 Meter cluster
C02 Windshield washer motor
C03 Wiper motor

54-L05232C

https://truckmanualshub.com/

M E M O

https://truckmanualshub.com/

D01 to 09 ＜Manual air−conditioner＞

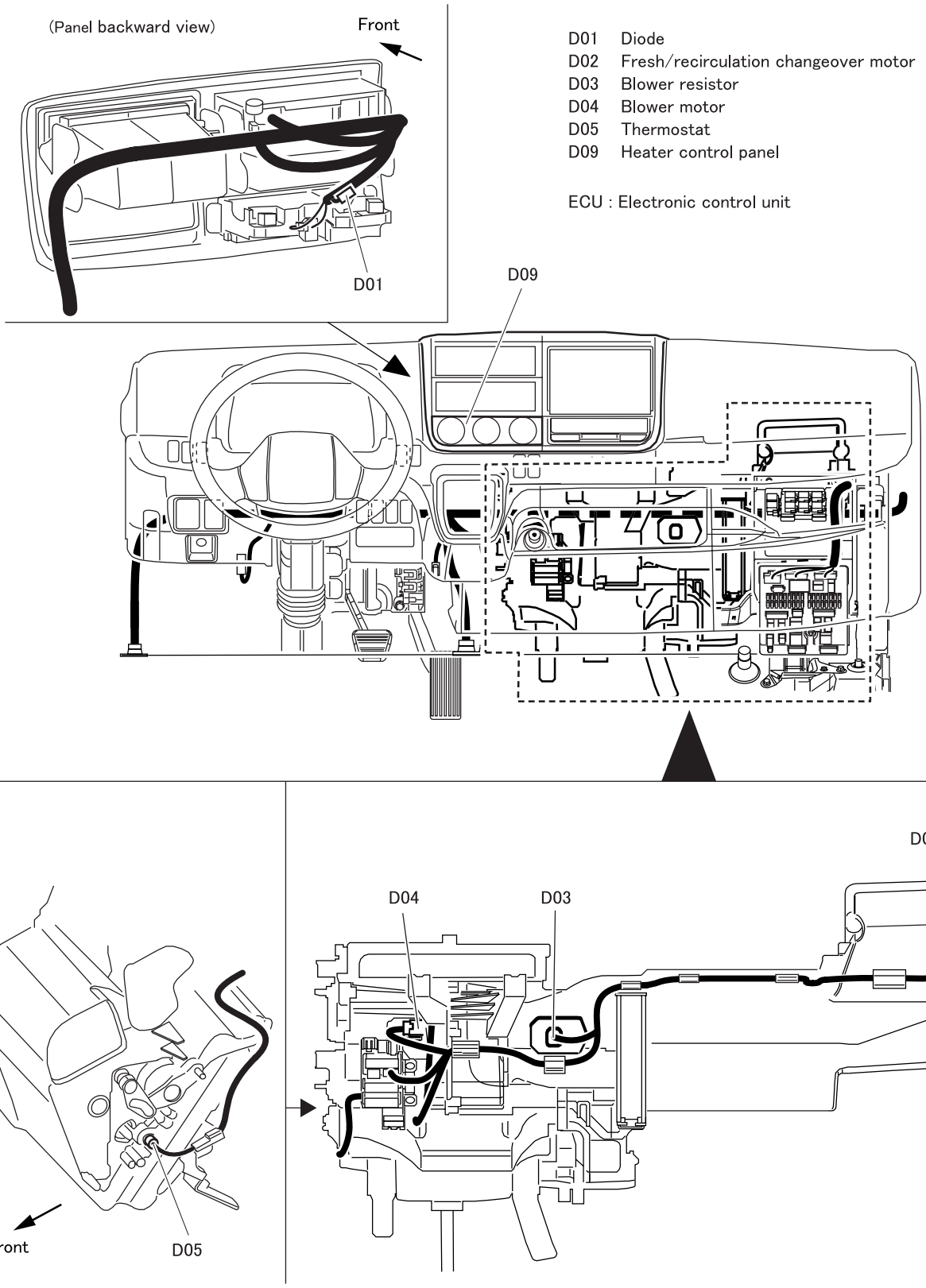

54−L05232D−1

https://truckmanualshub.com/

D02 to 09 <Fully automatic air-conditioner>

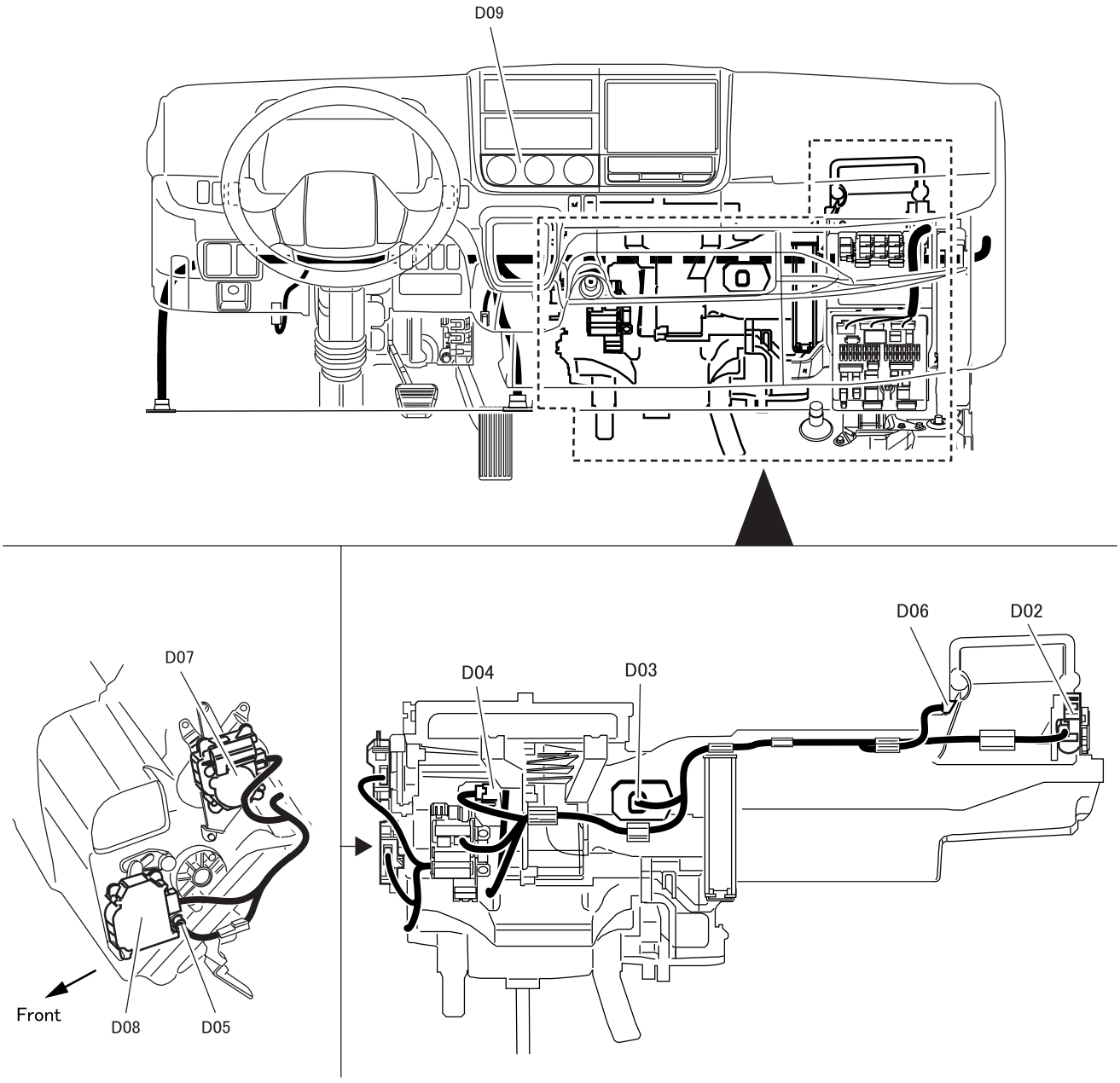

D02 Fresh/recirculation changeover motor
D03 Power MOS-FET (transistor)
D04 Blower motor
D05 Thermostat
D06 Air inlet sensor
D07 Mode motor
D08 Air mixing motor
D09 Air-conditioner ECU and control panel

ECU : Electronic control unit

https://truckmanualshub.com/

D21 to 25

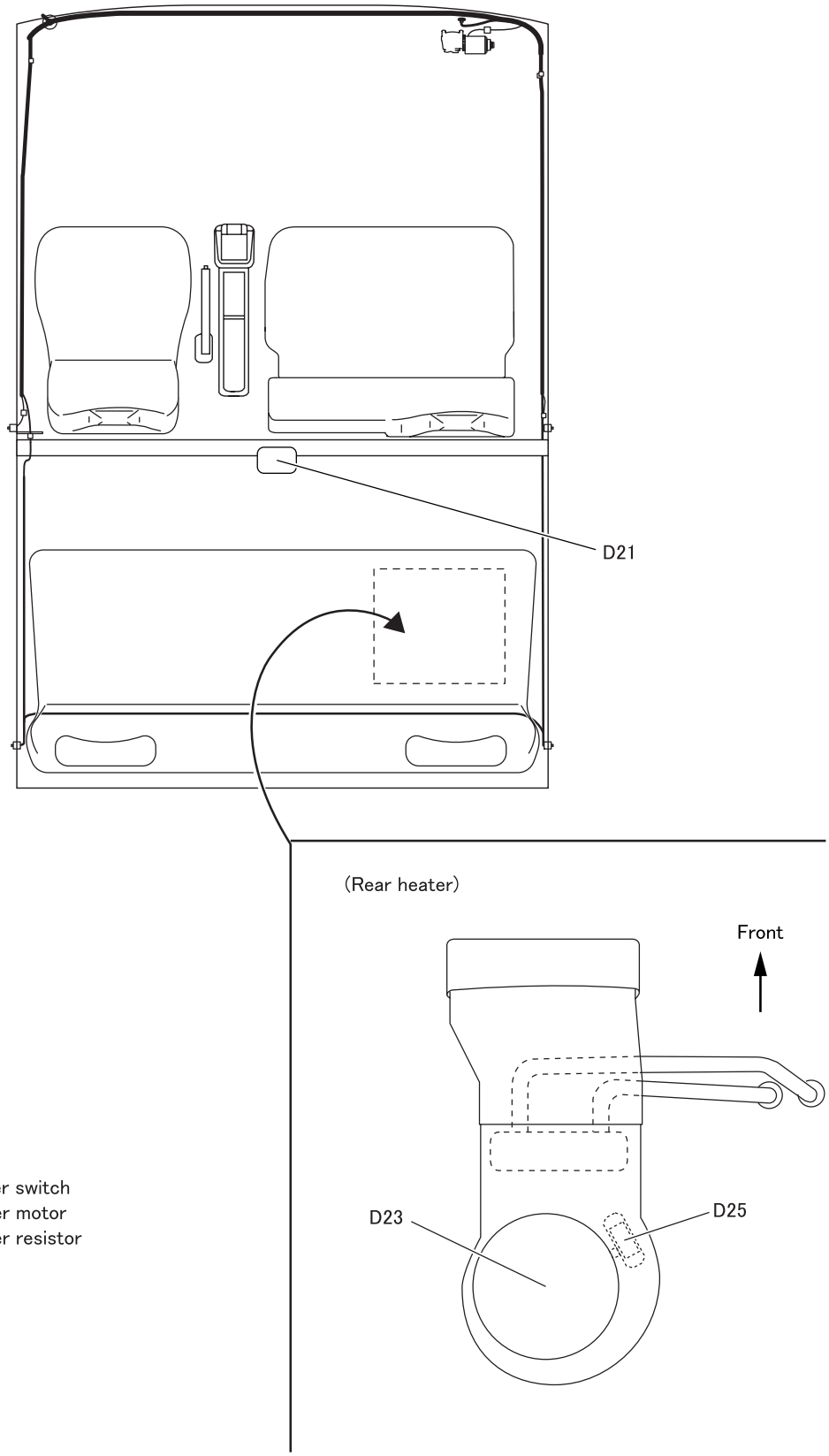

D21 Rear heater switch
D23 Rear blower motor
D25 Rear blower resistor

54-L05232D-3

https://truckmanualshub.com/

M E M O

https://truckmanualshub.com/

E06 to 15

＜Front door, LH＞

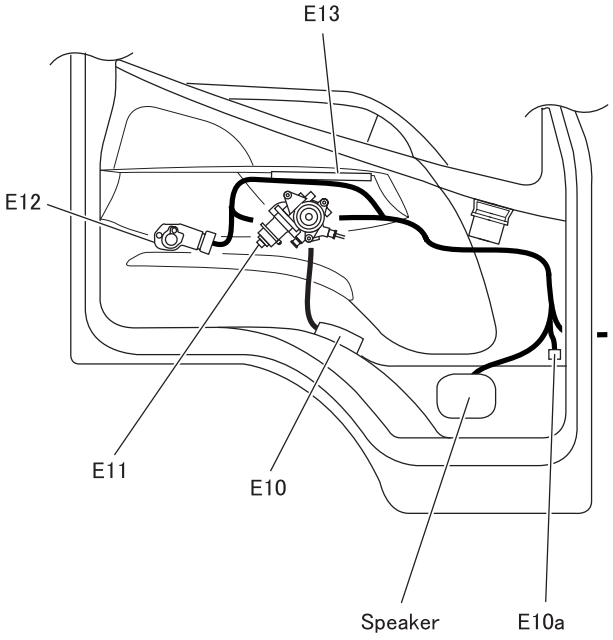

＜Front door, RH＞

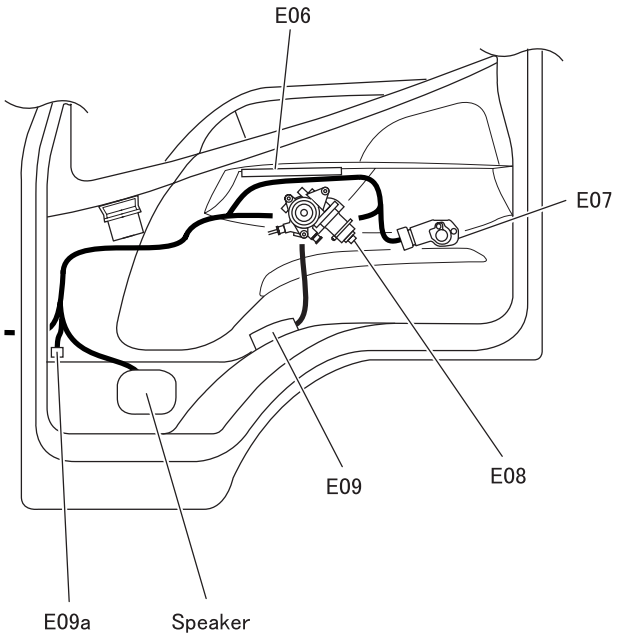

＜Rear door, LH＞

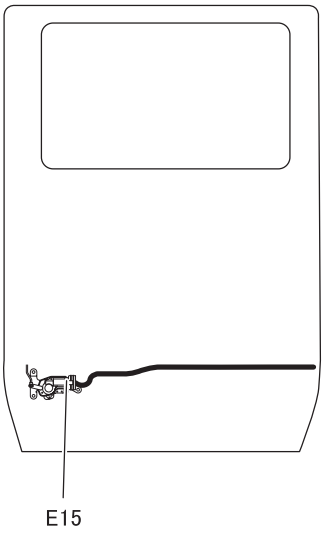

＜Rear door, RH＞

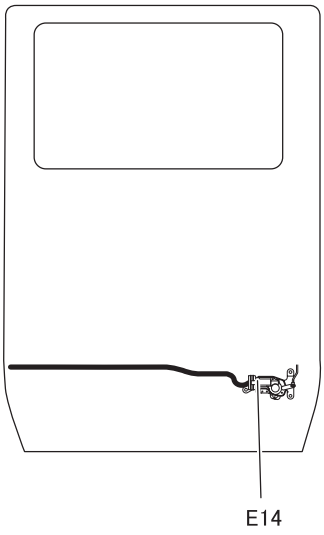

E06	Power window switch, RH
E07	Door lock actuator, RH
E08	Power window motor, RH
E09	Step lamp, RH
E09a	Mirror heater, RH connector
E10	Step lamp, LH
E10a	Mirror heater, LH connector
E11	Power window motor, LH
E12	Door lock actuator, LH
E13	Power window switch, LH
E14	Rear door lock actuator, RH ＜Crew cab＞
E15	Rear door lock actuator, LH ＜Crew cab＞

54-L05232E

https://truckmanualshub.com/

F01 to 04

＜Except crew cab＞

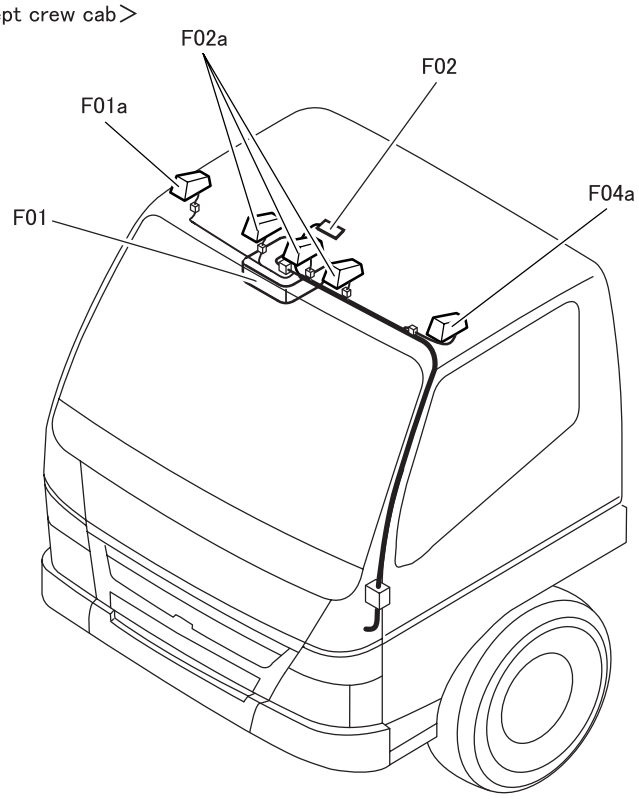

F01	Cab lamp Cab and spot lamp
F01a	Clearance and side marker lamp, RH
F02	In car sensor ＜Fully automatic air−conditioner＞
F02a	Identification lamp
F04	Rear cab lamp ＜Crew cab＞
F04a	Clearance and side marker lamp, LH

＜Crew cab＞

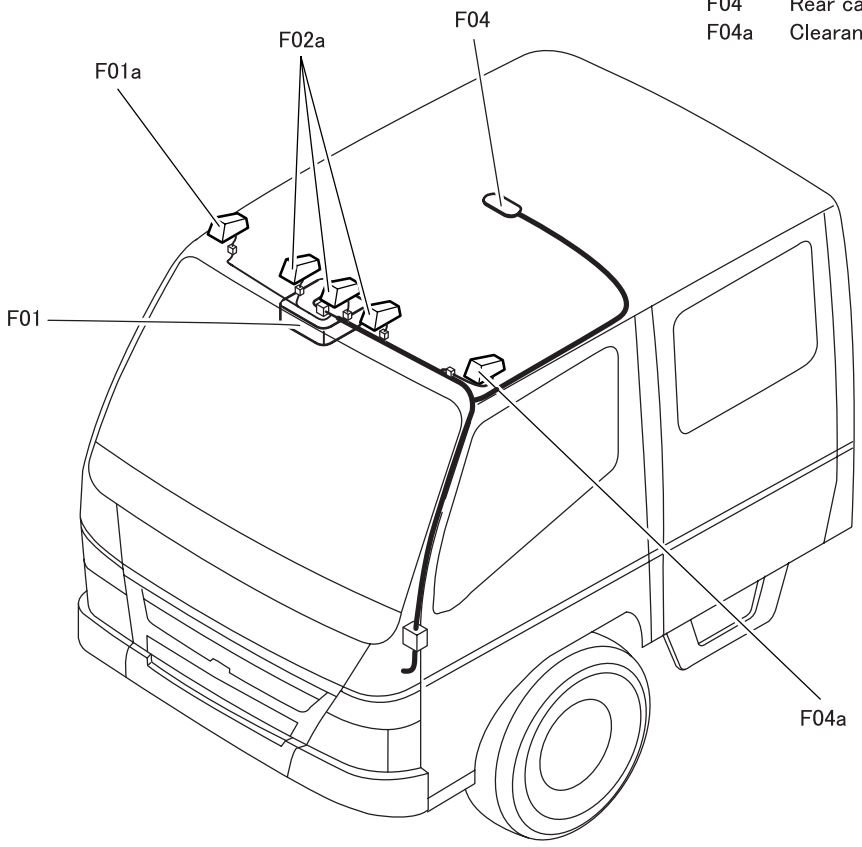

54−L05232F

https://truckmanualshub.com/

G01 to 06

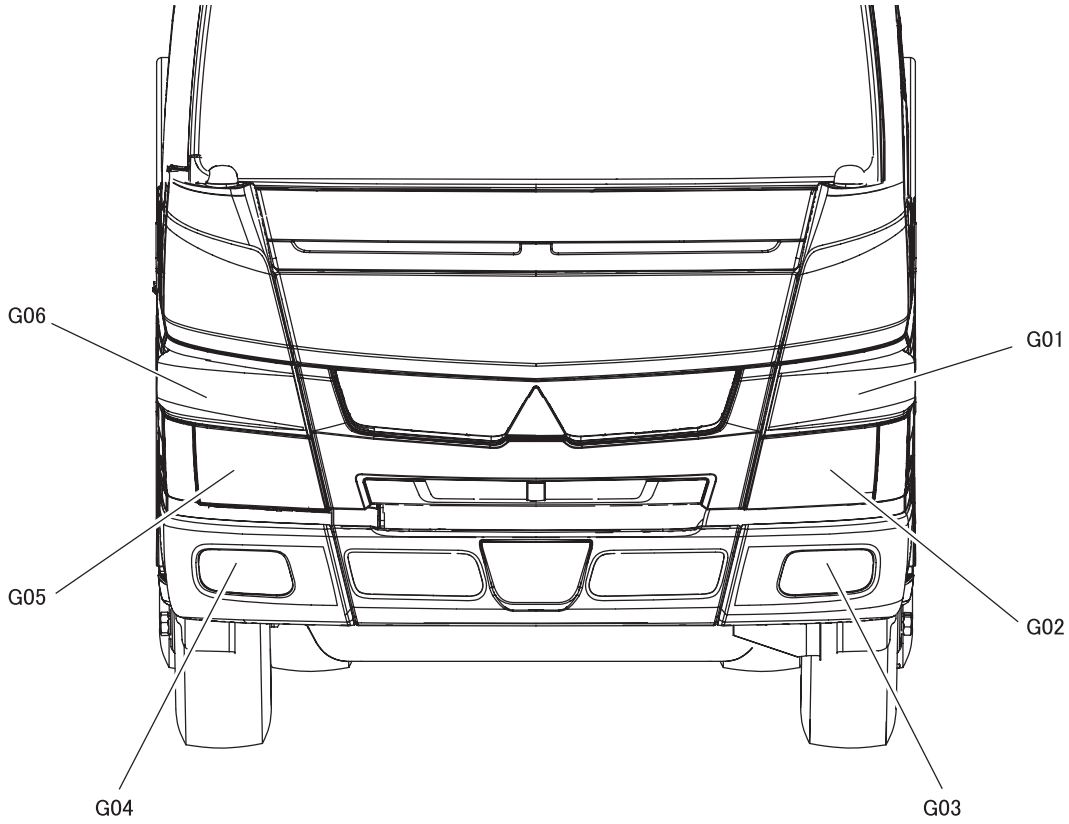

G01 Front and side turn signal lamp, LH
G02 Headlamp, LH
G03 Fog lamp, LH
G04 Fog lamp, RH
G05 Headlamp, RH
G06 Front and side turn signal lamp, RH

54-L05232G

https://truckmanualshub.com/

H01

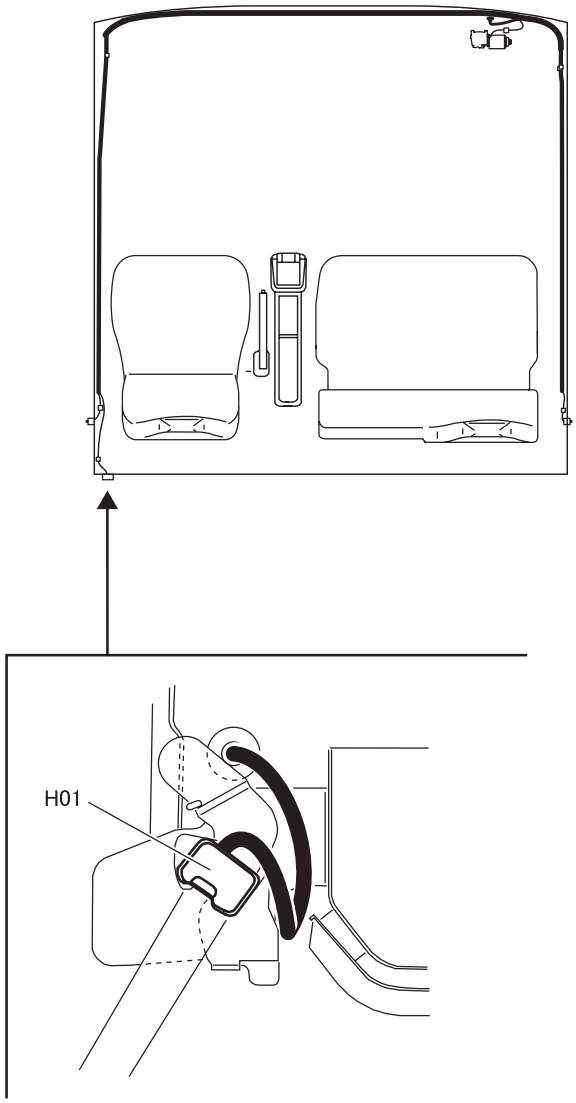

H01 Cab tilt lock switch <Except crew cab>

https://truckmanualshub.com/

J JOINTS OF MAIN HARNESS CONNECTORS

J01 to 15

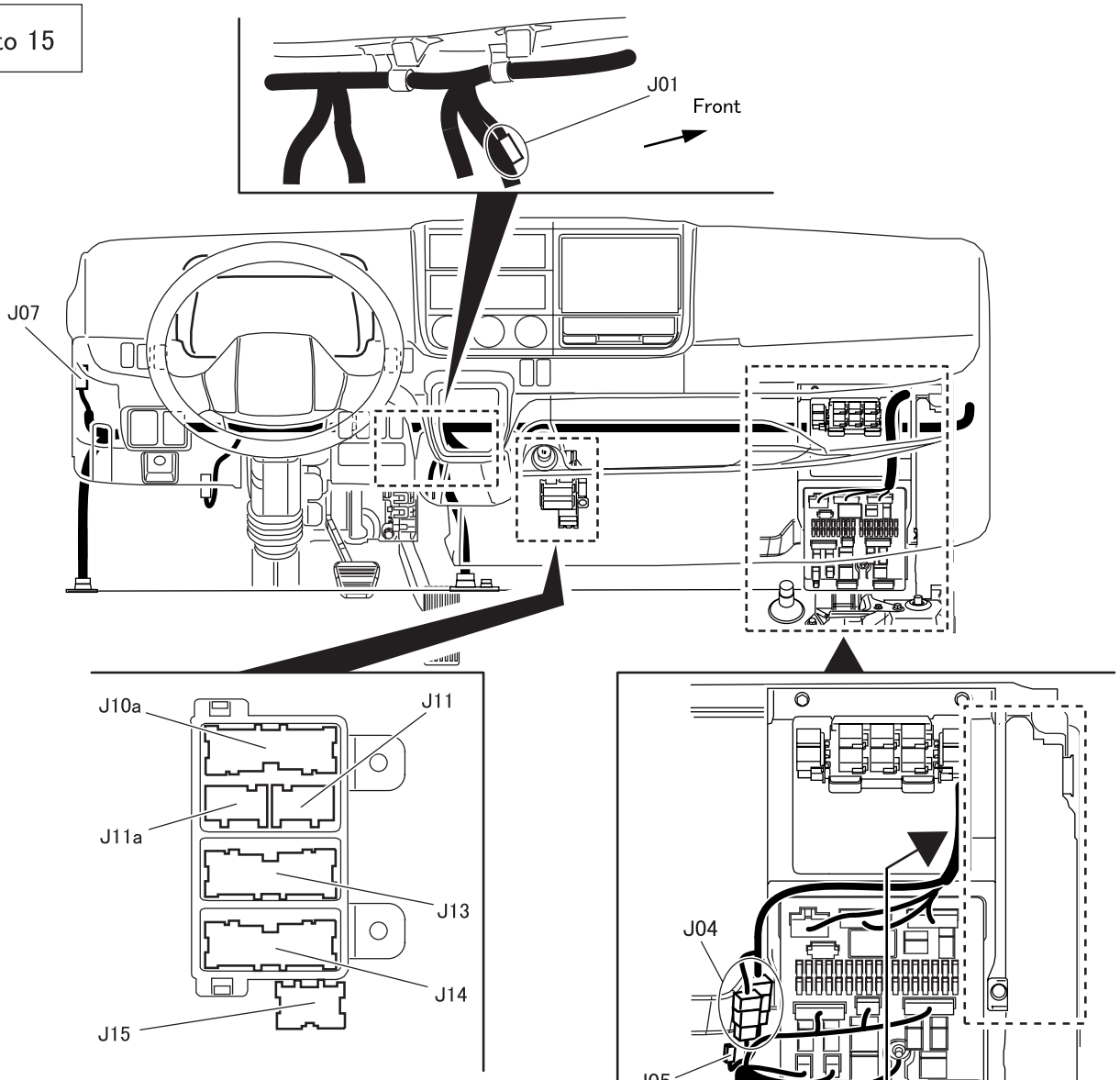

J01 Joint connector (EAB1LG) <Ground>
J04 Connection of cab harness and chassis harness : [AN2A], [DD6A]
J05 Optional connector : [AK2A]
J07 Connection of cab harness and roof harness : [AK8A]
J10 Connection of cab harness and door harness, RH : [DD7A],
Connection of door harness, RH and rear door harness : [DD2A]
<Crew cab>
J10a Connection of instrument panel harness and air-conditioner harness
: [AK18A] <Fully automatic air-conditioner>
J11 Connection of cab harness and air-conditioner harness : [AN2A]
J11a Connection of instrument panel harness and air-conditioner harness
: [AK6A] <Manual air-conditioner>
J13 Connection of cab harness and instrument panel harness : [AK22B]
J14 Connection of cab harness and instrument panel harness : [AK22A]
J15 Connection of instrument panel harness and air-conditioner harness
: [AN6A] <Manual air-conditioner>

ECU : Electronic control unit
Indicate by connector type [ ].

54-L05232J-1

https://truckmanualshub.com/

J17 to 21

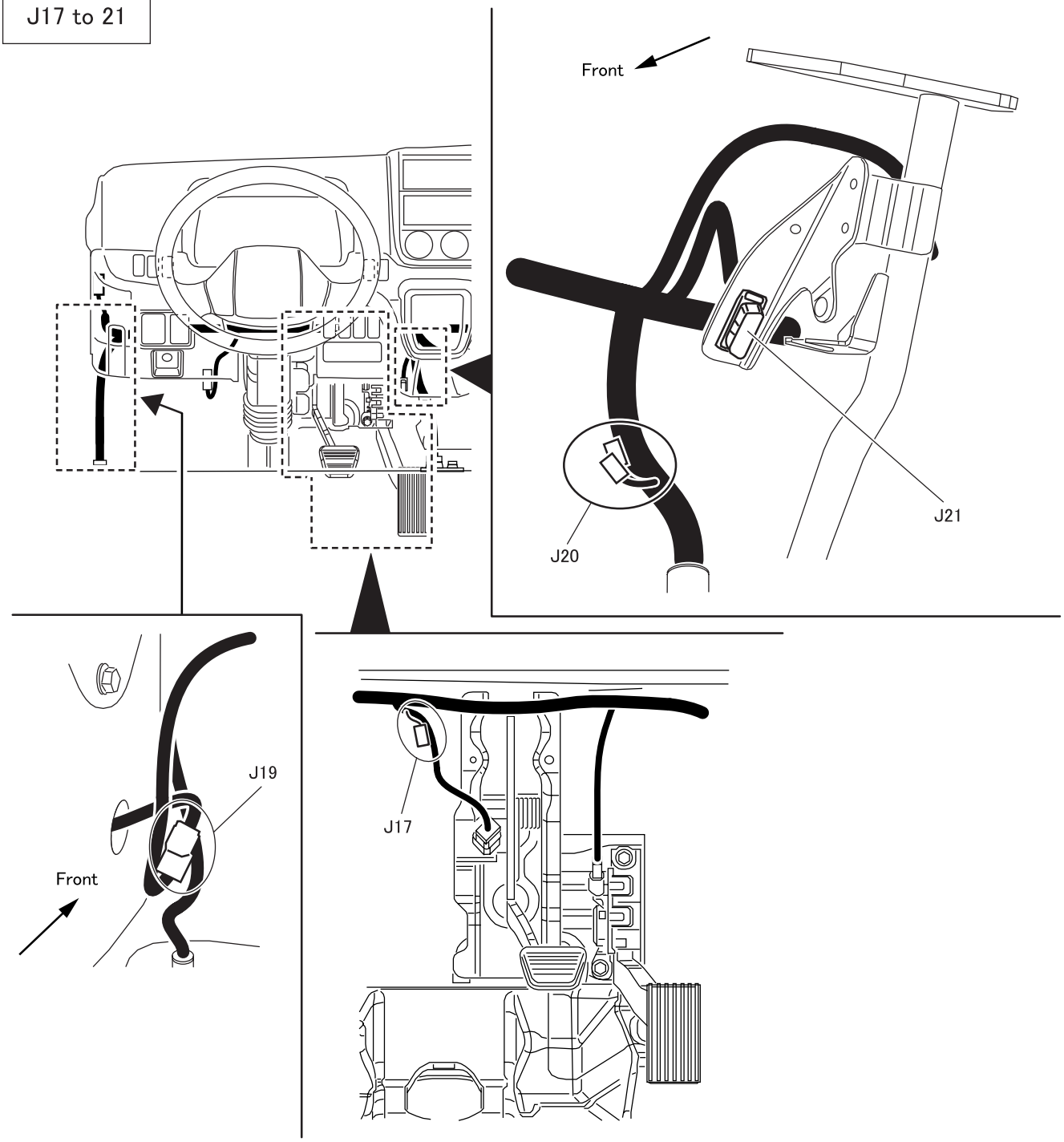

J17 Joint connector (CAN-H) <Immobilizer>
Joint connector (CAN-L) <Immobilizer>
J19 Connection of cab harness and door harness, LH : [DD7A]
Connection of door harness, LH and rear door harness : [DD2A] <Crew cab>
J20 Joint connector (CAN-H) <Meter cluster>
Joint connector (CAN-L) <Meter cluster>
J21 Diagnosis connector

Indicate by connector type [ ].

54-L05232J-2

https://truckmanualshub.com/

J28

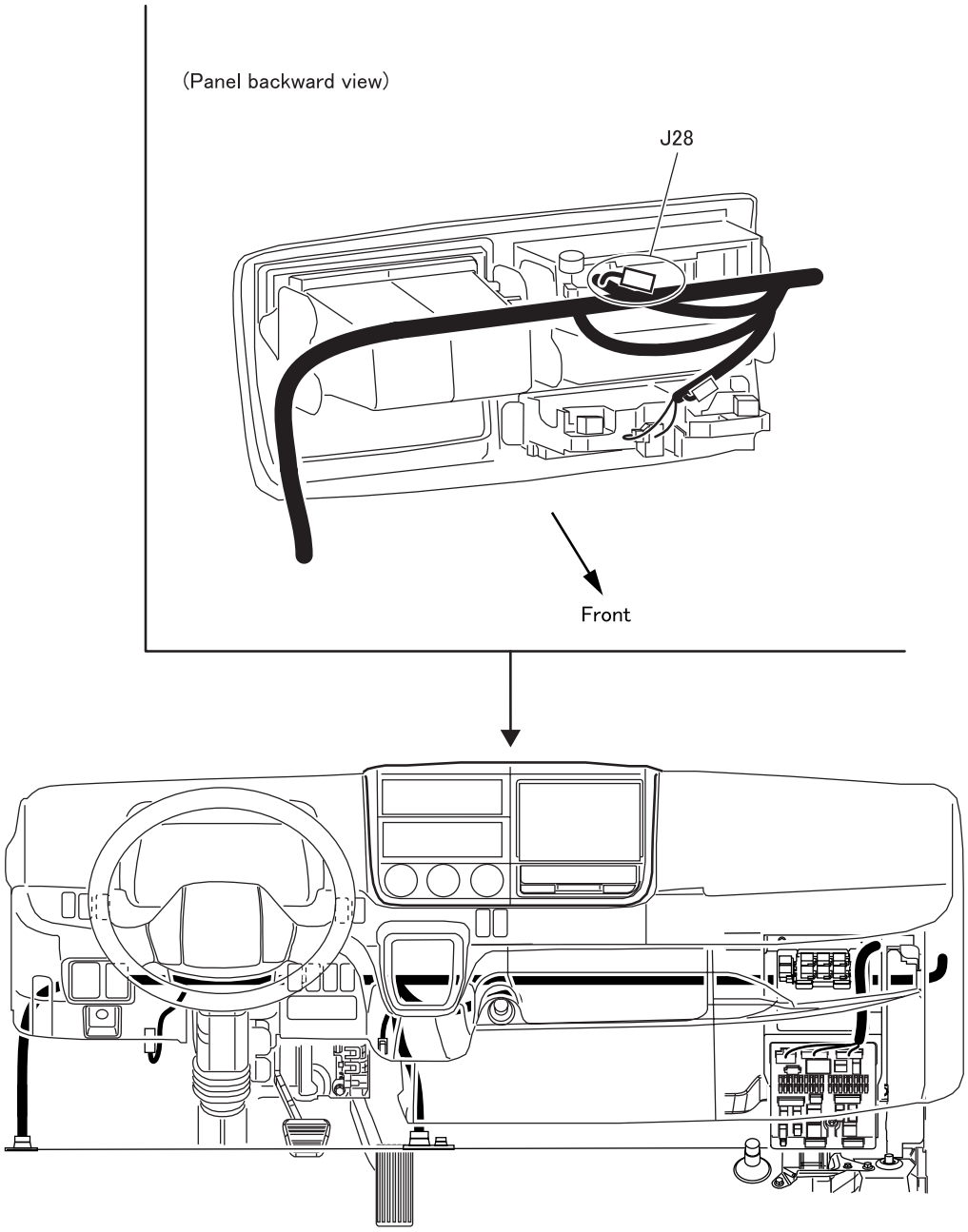

J28 Optional connector [AK6A] <Without tachograph>,
Connector (for radio) [AK14A] <Without tachograph>,
Connection of instrument panel harness and tachograph harness [AK14A], [AK6A] <With tachograph>

https://truckmanualshub.com/

J31 to 33 ＜Crew cab＞

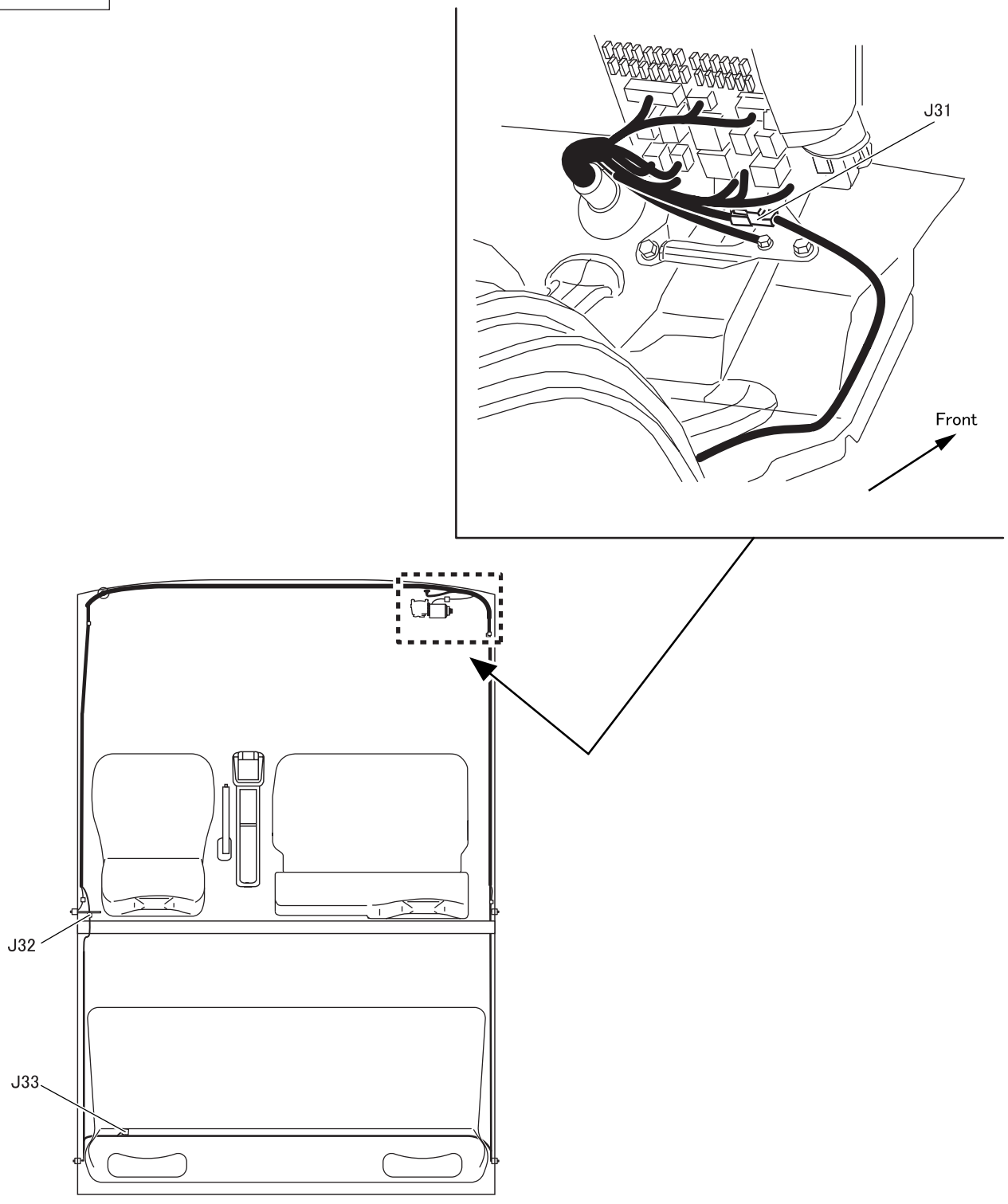

J31 Connection of chassis harness and rear heater harness : [DD2C]
J32 Connection of cab harness and rear heater harness : [AK3A]
J33 Joint connector (040) ＜Rear door switch＞

Indicate by connector type [ ].

https://truckmanualshub.com/

P02 to 06

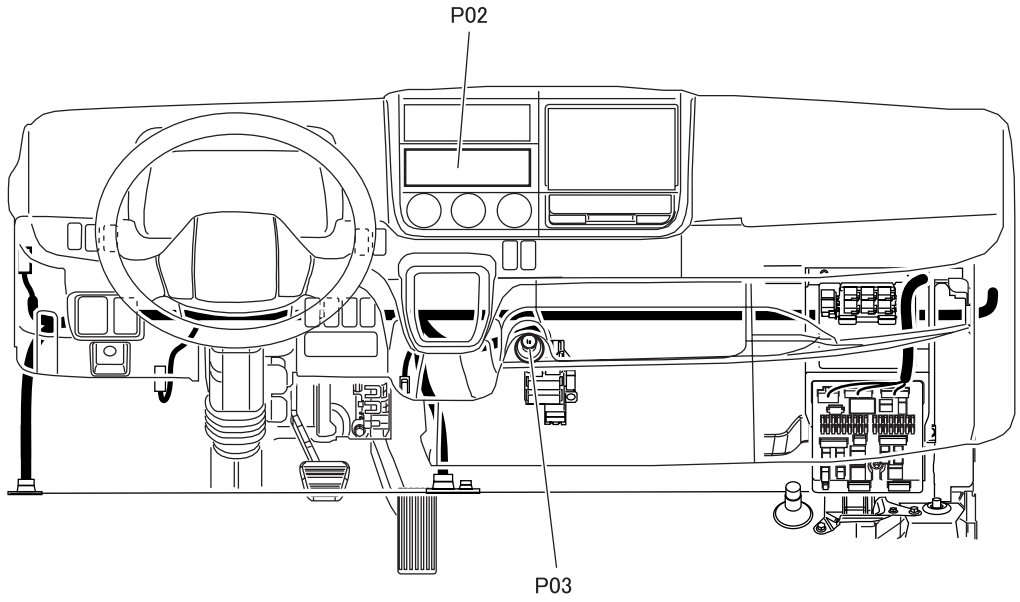

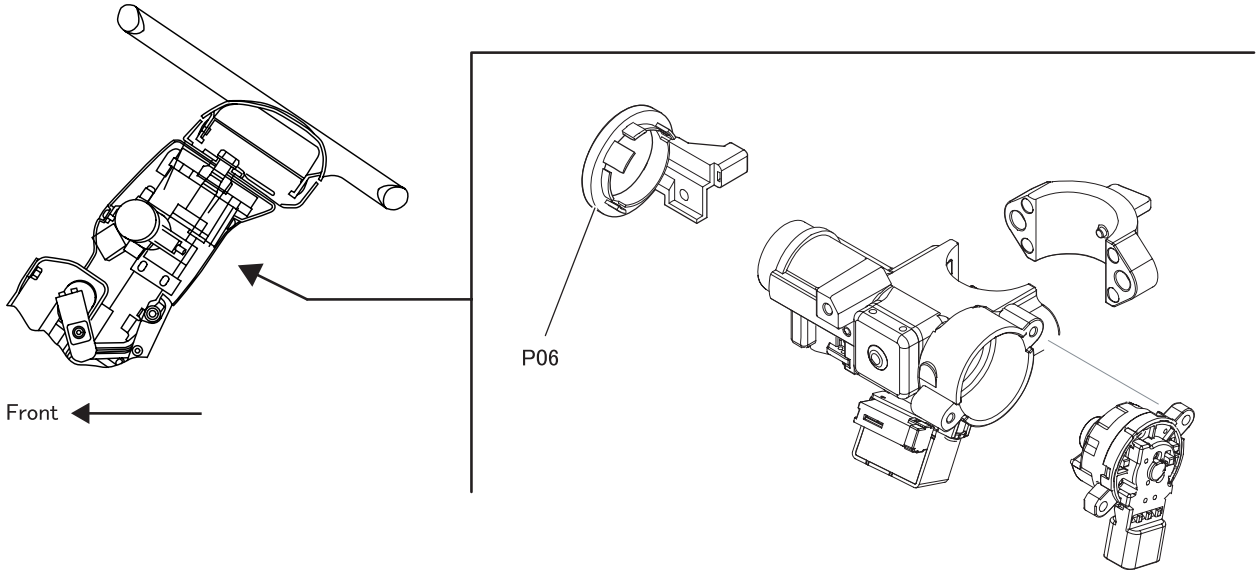

P02 Tachograph
P03 Cigarette lighter
P06 Immobilizer antenna

54-L05232P

https://truckmanualshub.com/

M E M O

https://truckmanualshub.com/

R01 to 09

(Upper view)

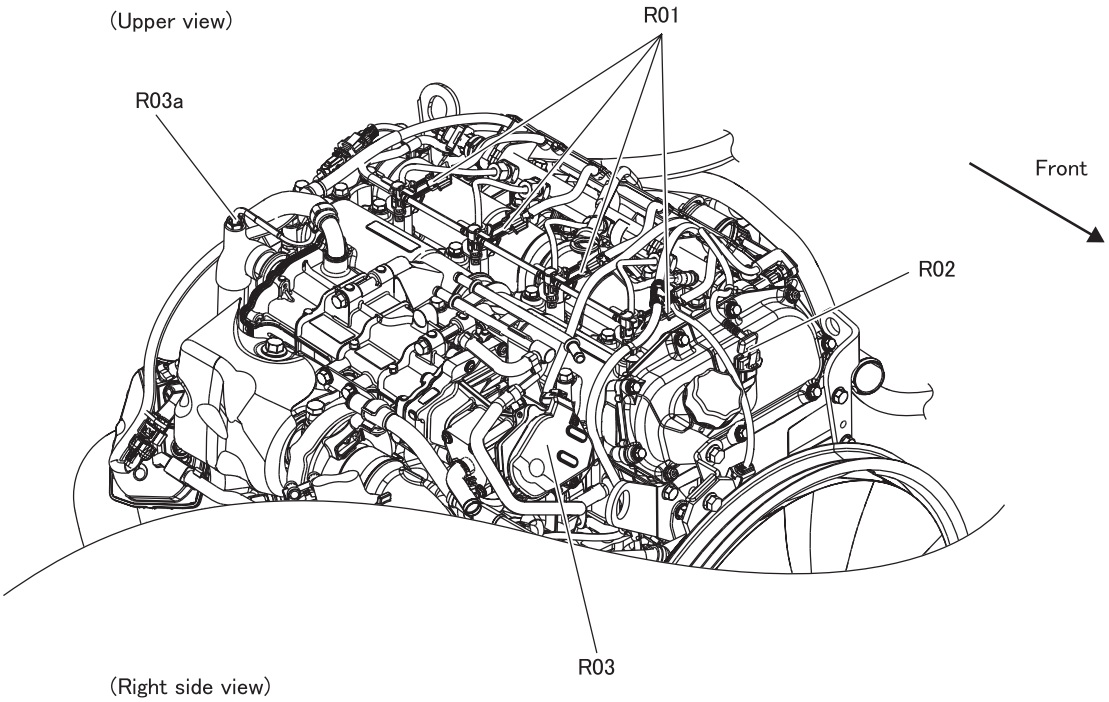

(Right side view)

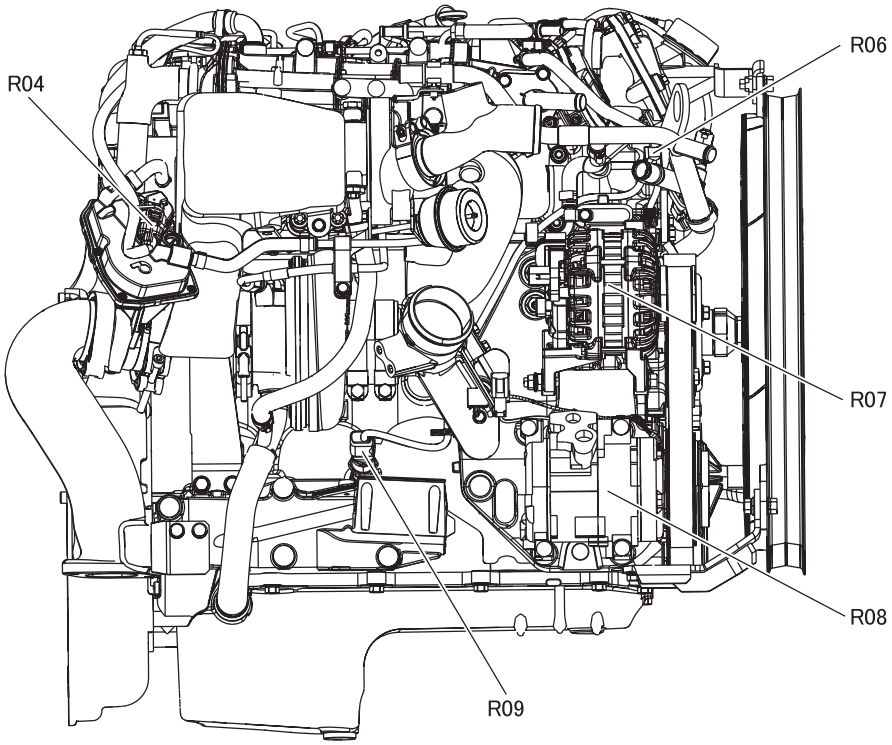

R01	Injector	R06	Engine speed sensor
R02	Camshaft timing sensor	R07	Alternator
R03	EGR actuator	R08	Magnetic clutch
R03a	EGR cooler outlet temperature sensor	R09	Blow-by pressure sensor 2
R04	Exhaust brake valve		

EGR : Exhaust gas recirculation

54-L05232R-1

https://truckmanualshub.com/

R11 to 19

(Left side view)

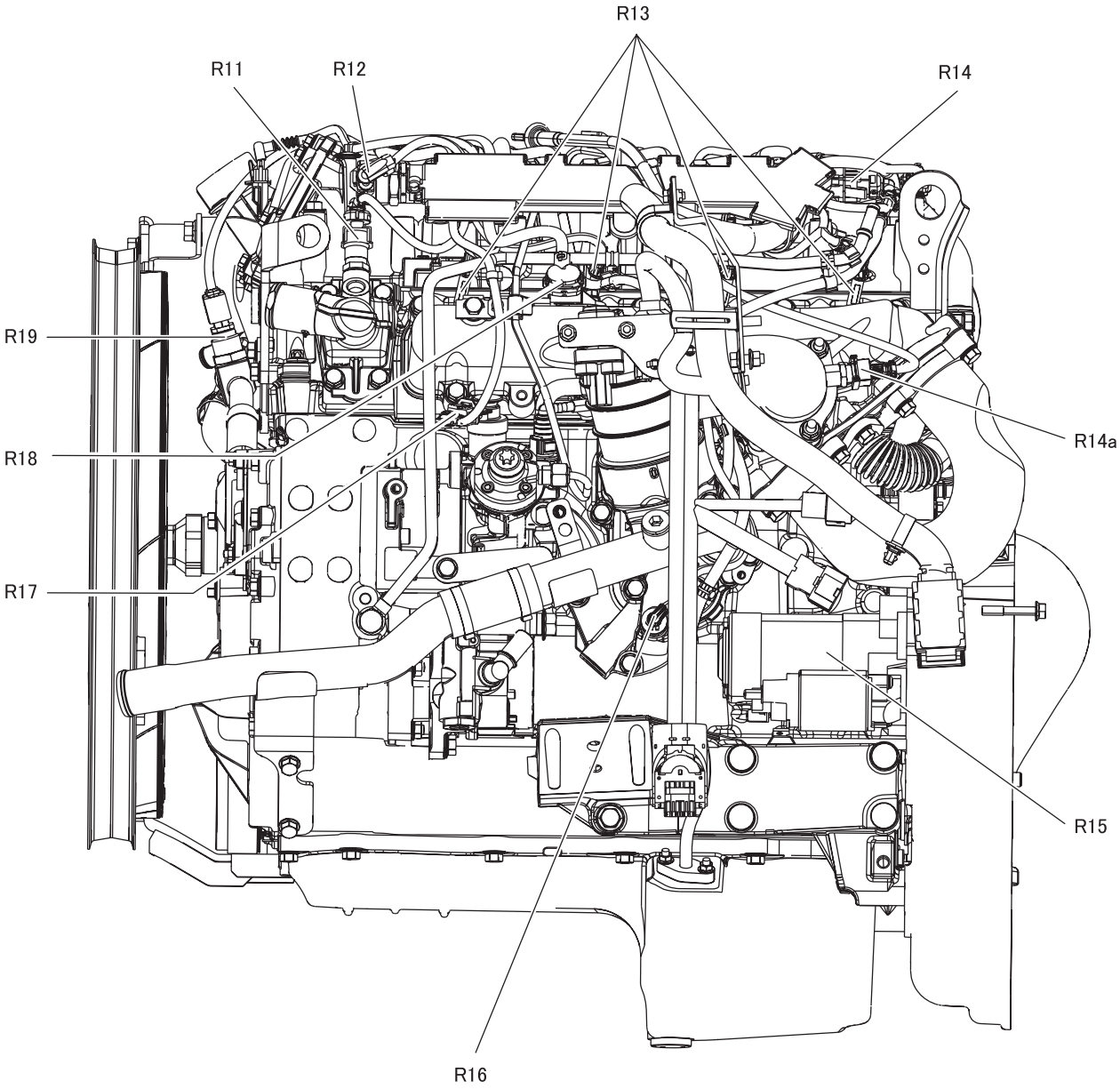

R11 Water temperature sensor
R12 Pressure regulation valve
R13 Glow plug
R14 Pressure sensor
R14a Intercooler outlet temperature sensor
R15 Starter
R16 Oil pressure switch
R17 FMU(fuel metering unit)
R18 Boost pressure and temperature sensor
R19 Blow-by pressure sensor 1

https://truckmanualshub.com/

S04 to 15

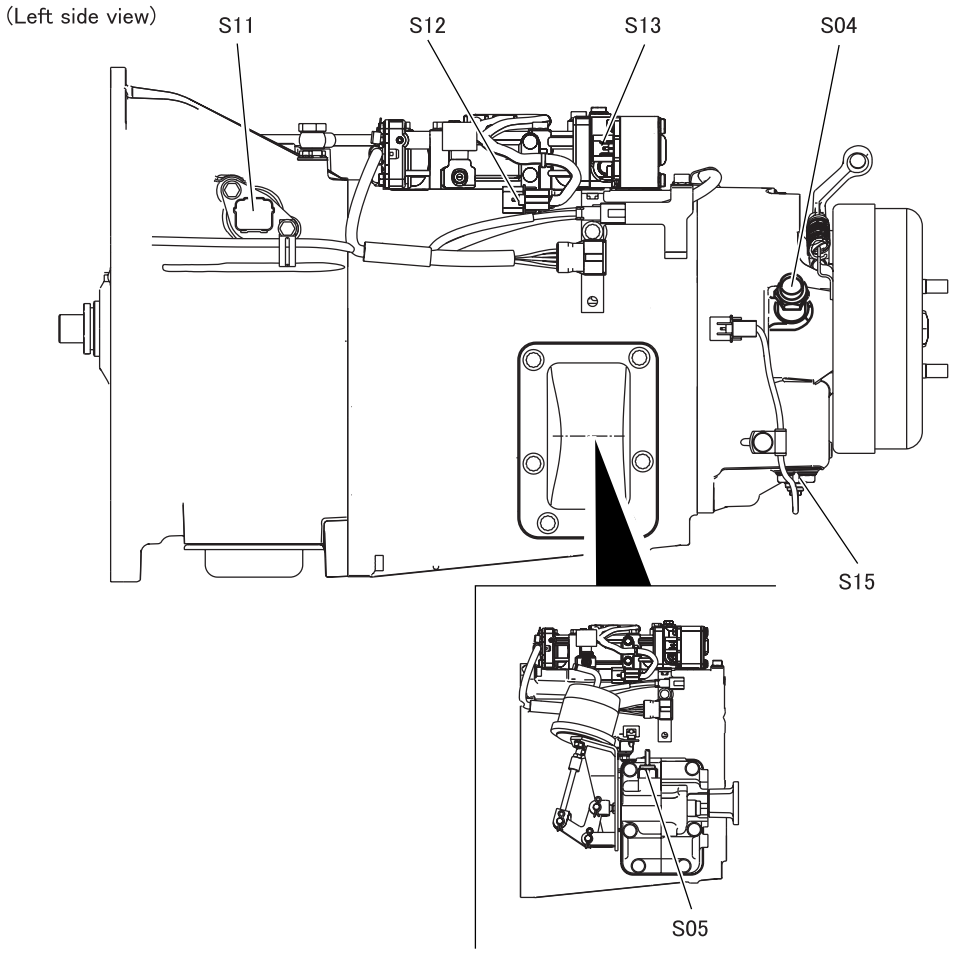

S04 Vehicle speed sensor
S05 Power take-off control switch
S11 Valve body (connector)
S12 Shift stroke sensor (connector)
S13 Gear shift unit
S14 Vehicle speed sensor＜DUONIC＞
S15 Parking gear switch

54-L05232S-1

https://truckmanualshub.com/

S04 to 21 <Transfer (FG)>

(Upper view)

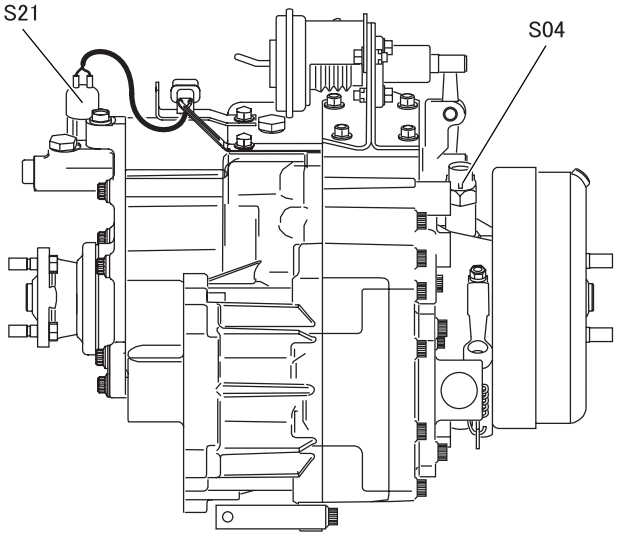

(Left side view)

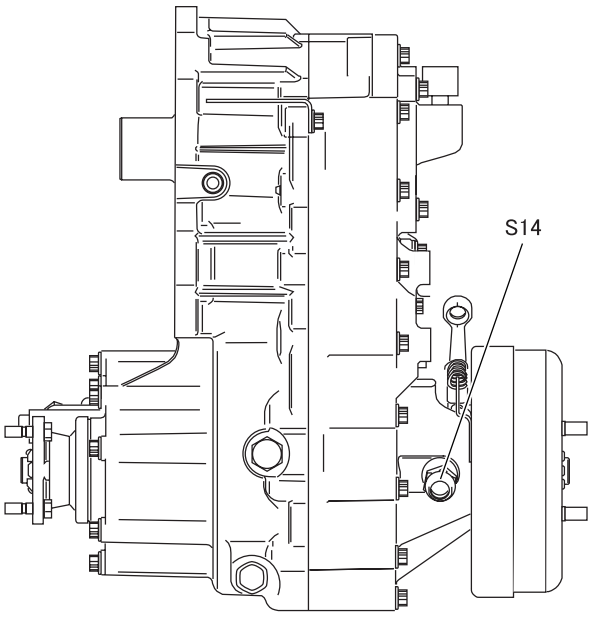

S04 Vehicle speed sensor
S14 Vehicle speed sensor<DUONIC>
S21 Transfer four-wheel drive switch

https://truckmanualshub.com/

T01 to 02 (Switch)

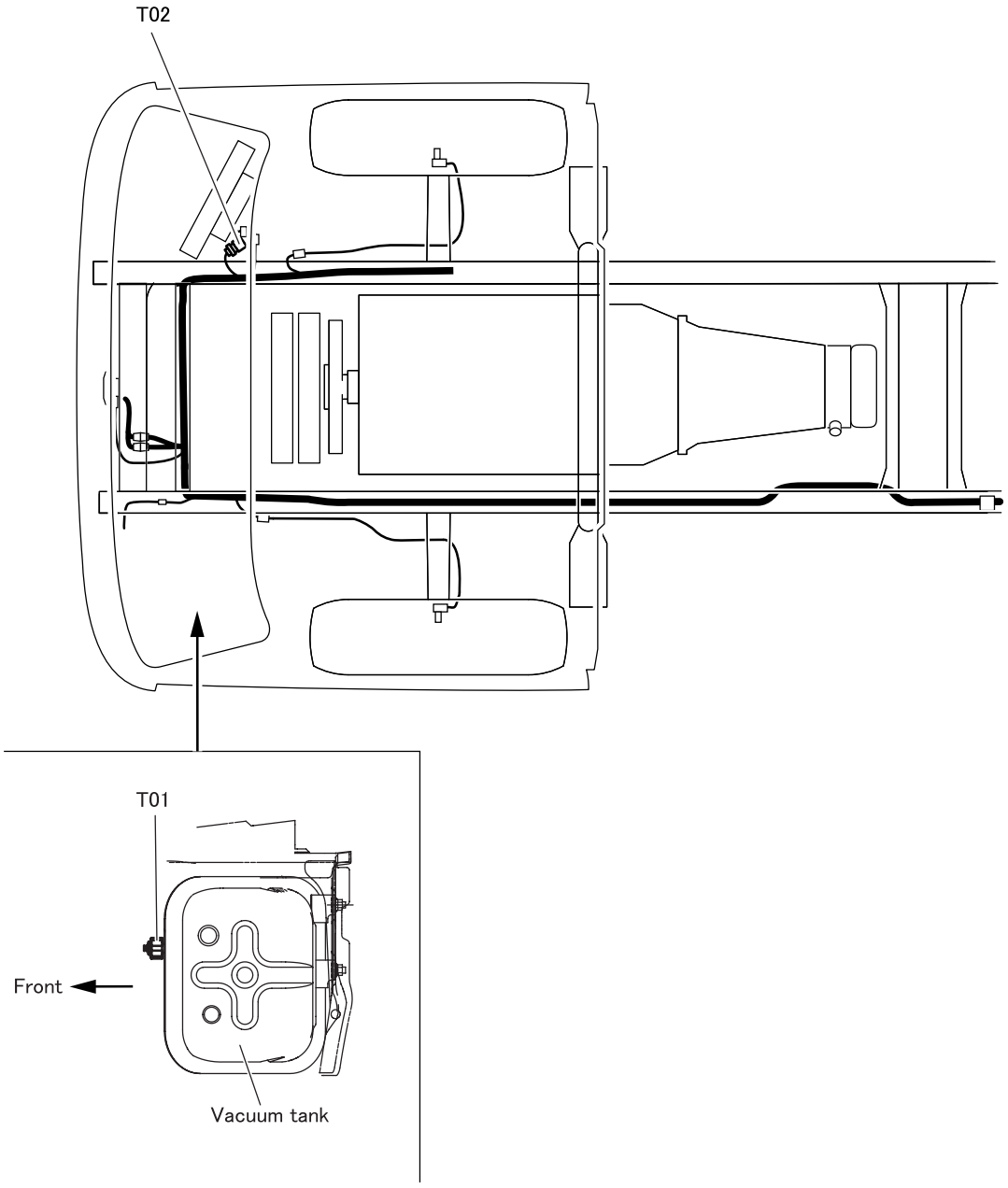

T01 Vacuum switch
T02 Dual pressure switch ＜Air−conditioner＞

54-L05232T-1

https://truckmanualshub.com/

T06 (Sensor)

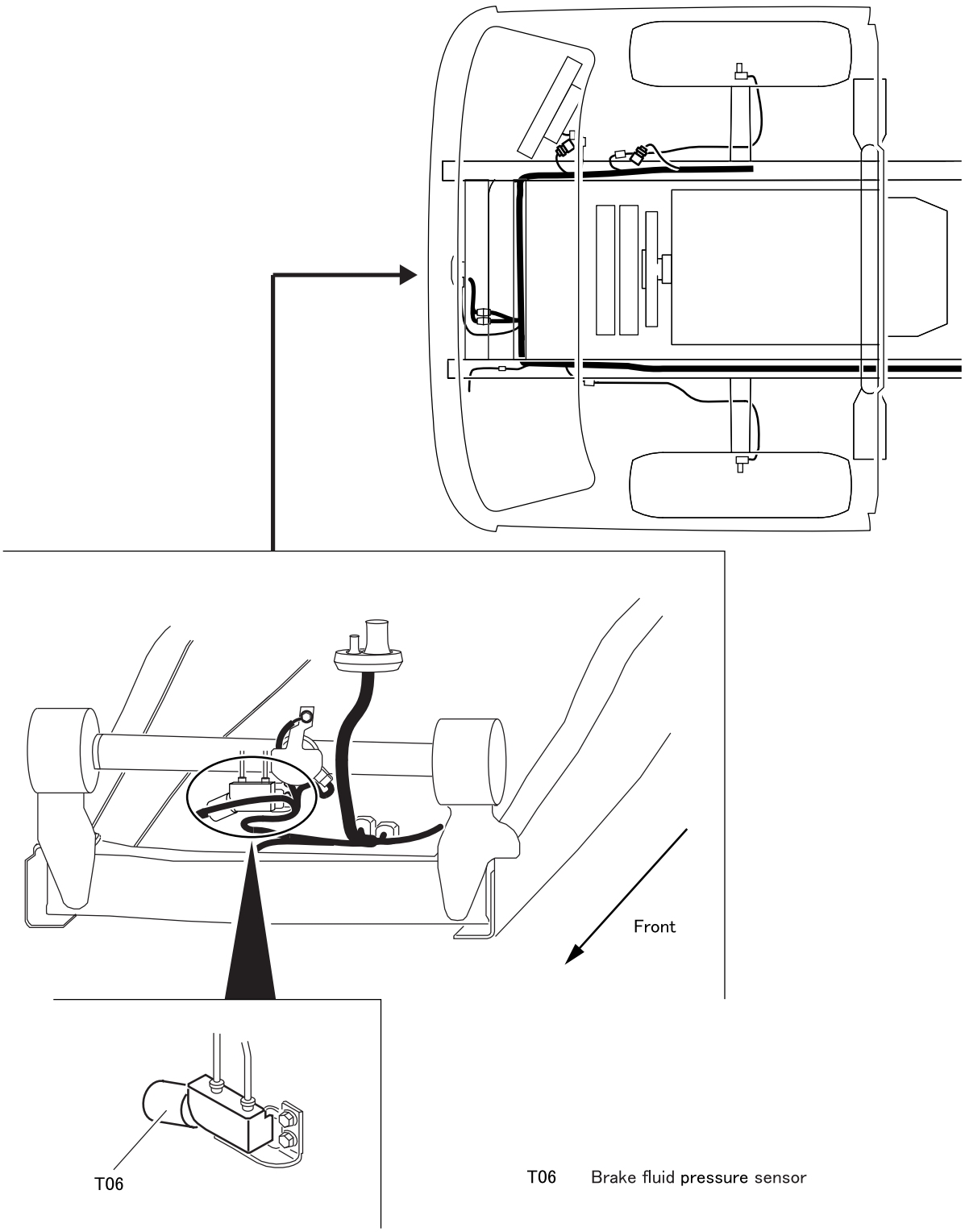

T06 Brake fluid pressure sensor

https://truckmanualshub.com/

T11 to 12 (Sensor)

<FE>

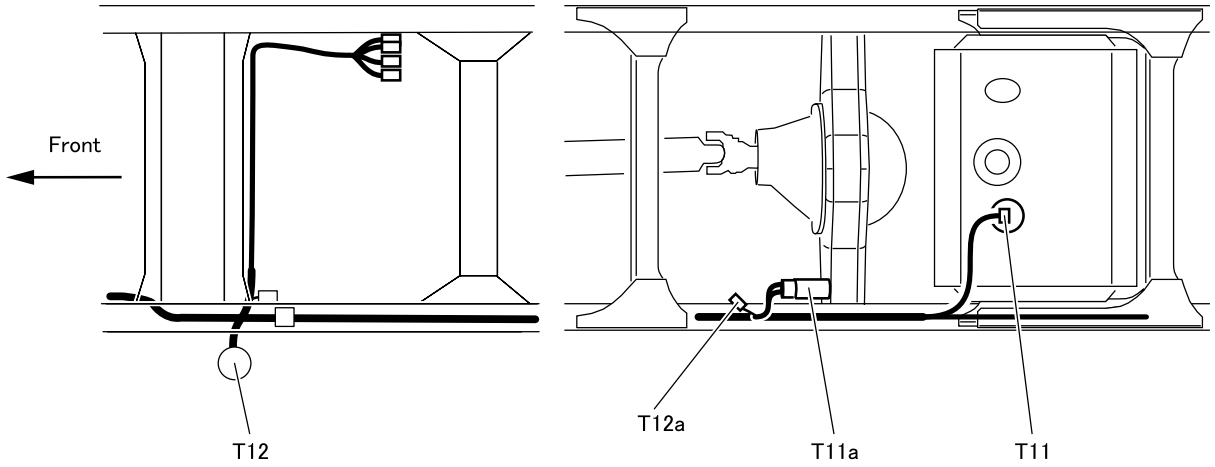

<FG>

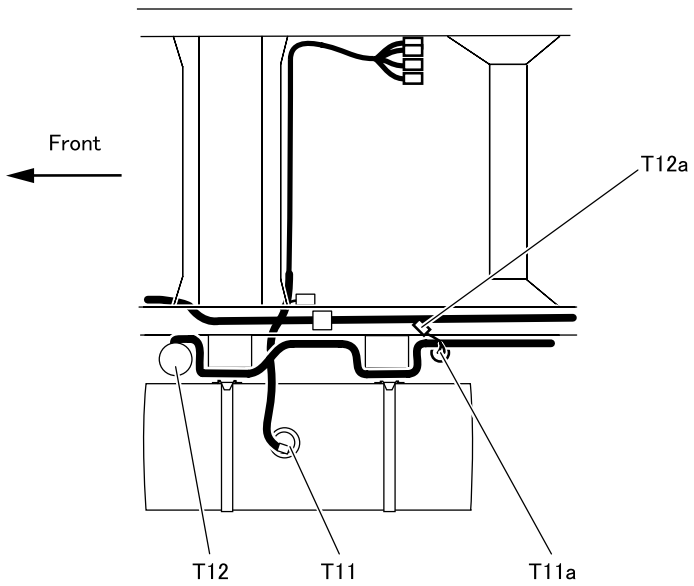

T11	Fuel level sensor
T11a	Fuel pump
T12	Fuel filter
T12a	Diode

https://truckmanualshub.com/

T16 (Sensor)

<Except crew cab>

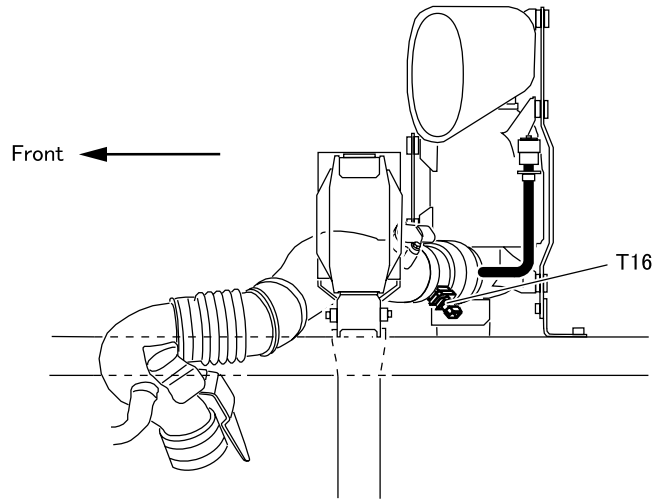

<Crew cab>

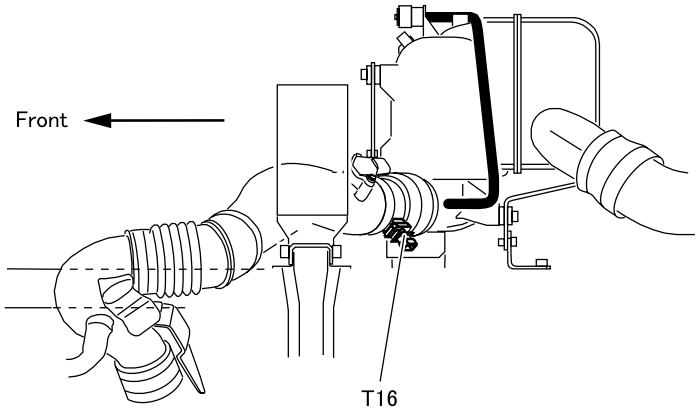

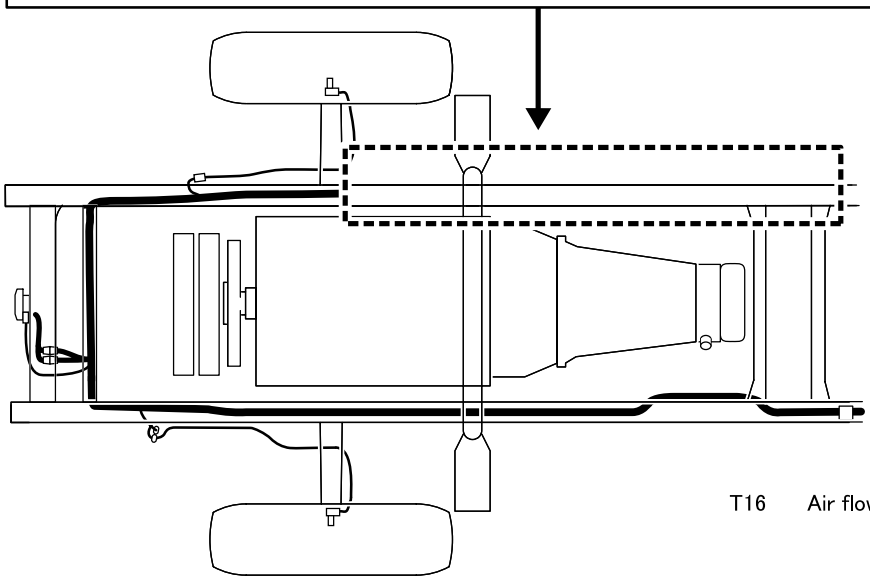

T16 Air flow and intake air temperature sensor

54-L05232T-4

https://truckmanualshub.com/

T21 to 24 (Sensor)

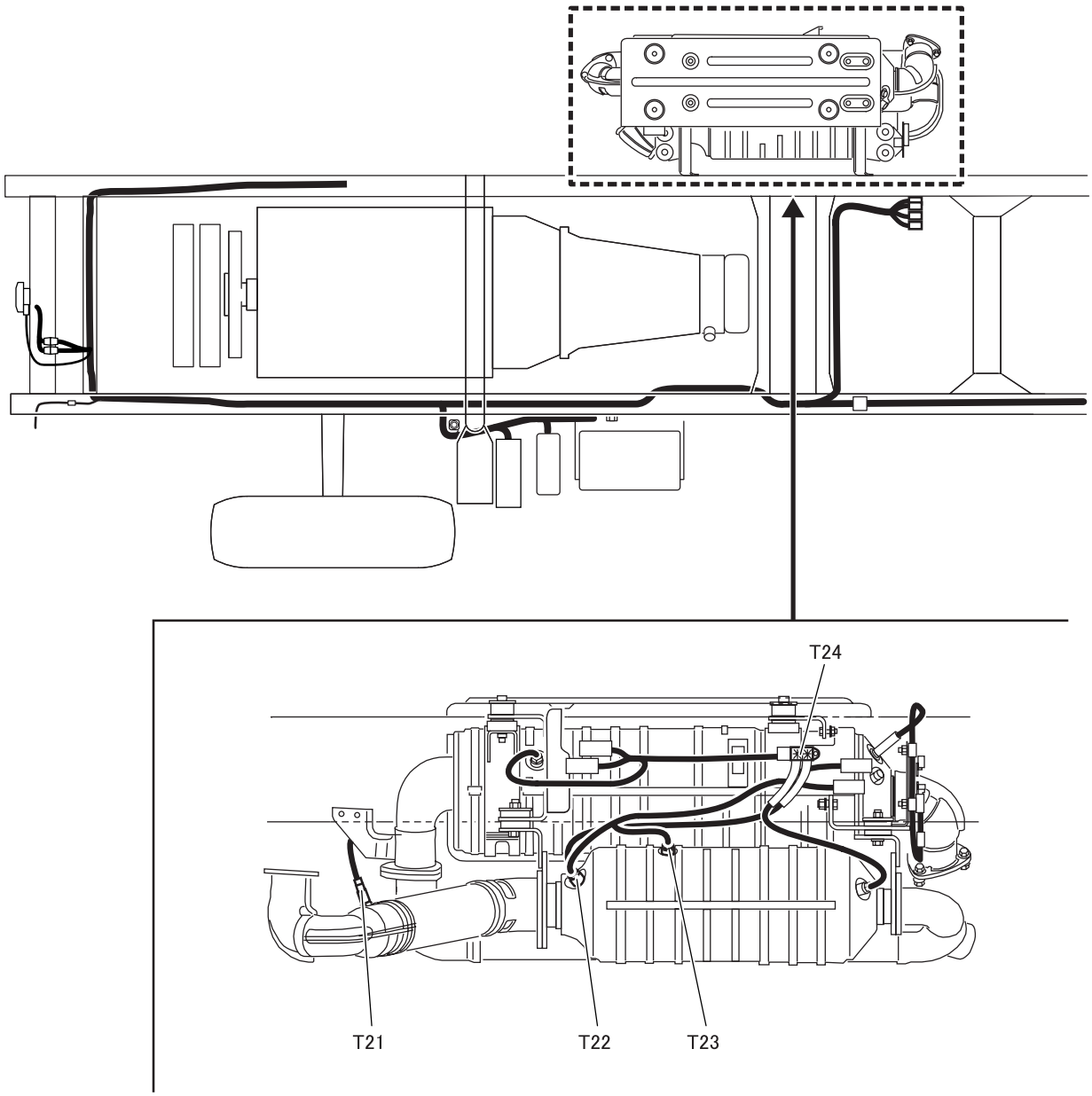

T21 Lambda sensor
T22 Exhaust gas temperature sensor 1
T23 Exhaust gas temperature sensor 2
T24 DPF differential pressure sensor

DPF : Diesel particulate filter

https://truckmanualshub.com/

M E M O

https://truckmanualshub.com/

U FUSE, RELAY AND ELECTRONIC CONTROL UNIT

U01 to 06

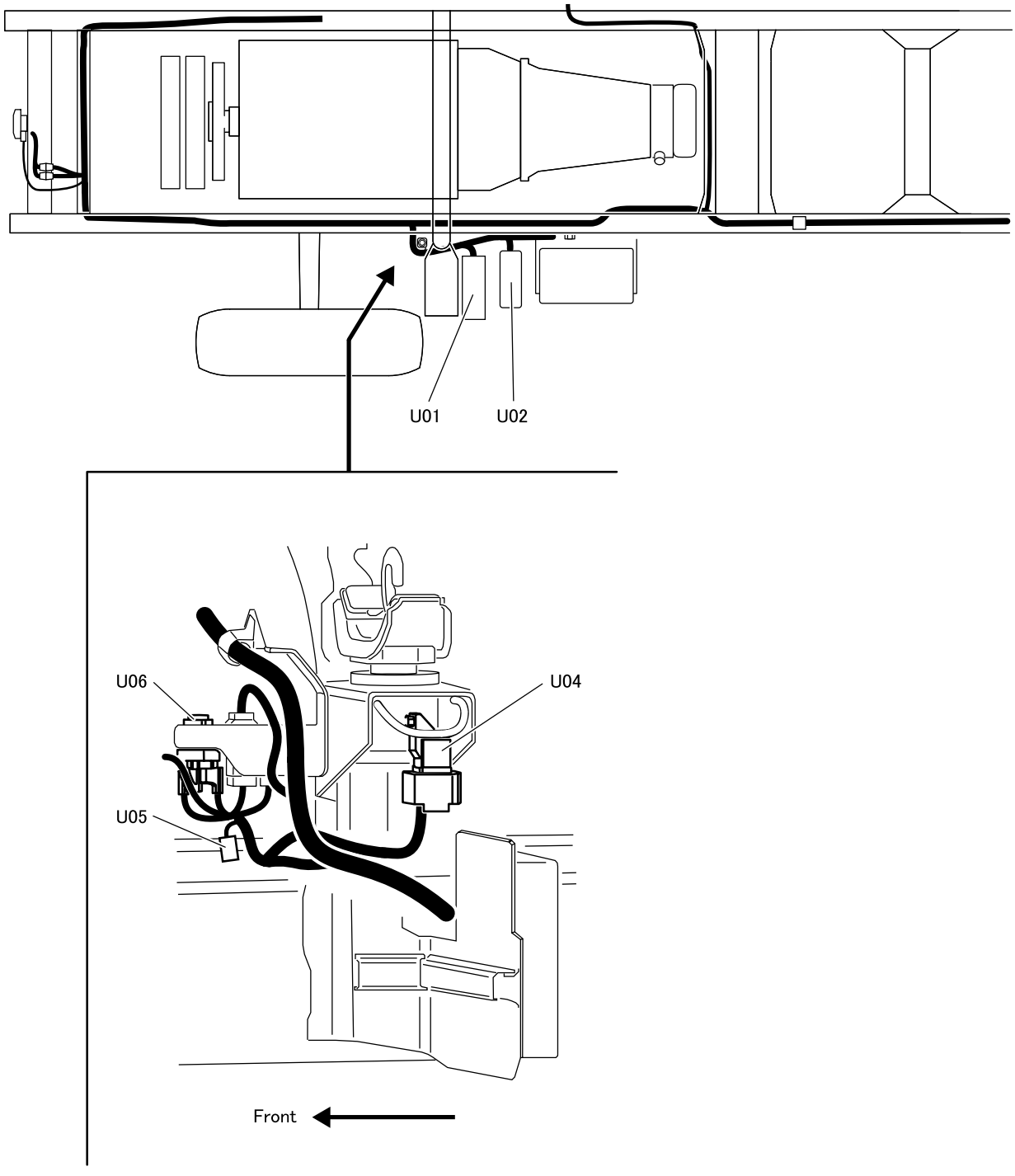

U01 Engine ECU
U02 High-current fuse box
U04 Glow ECU
U05 Diode (for starter relay)
U06 Starter relay

ECU : Electronic control unit

54-L05232U-1

https://truckmanualshub.com/

U07 to 08

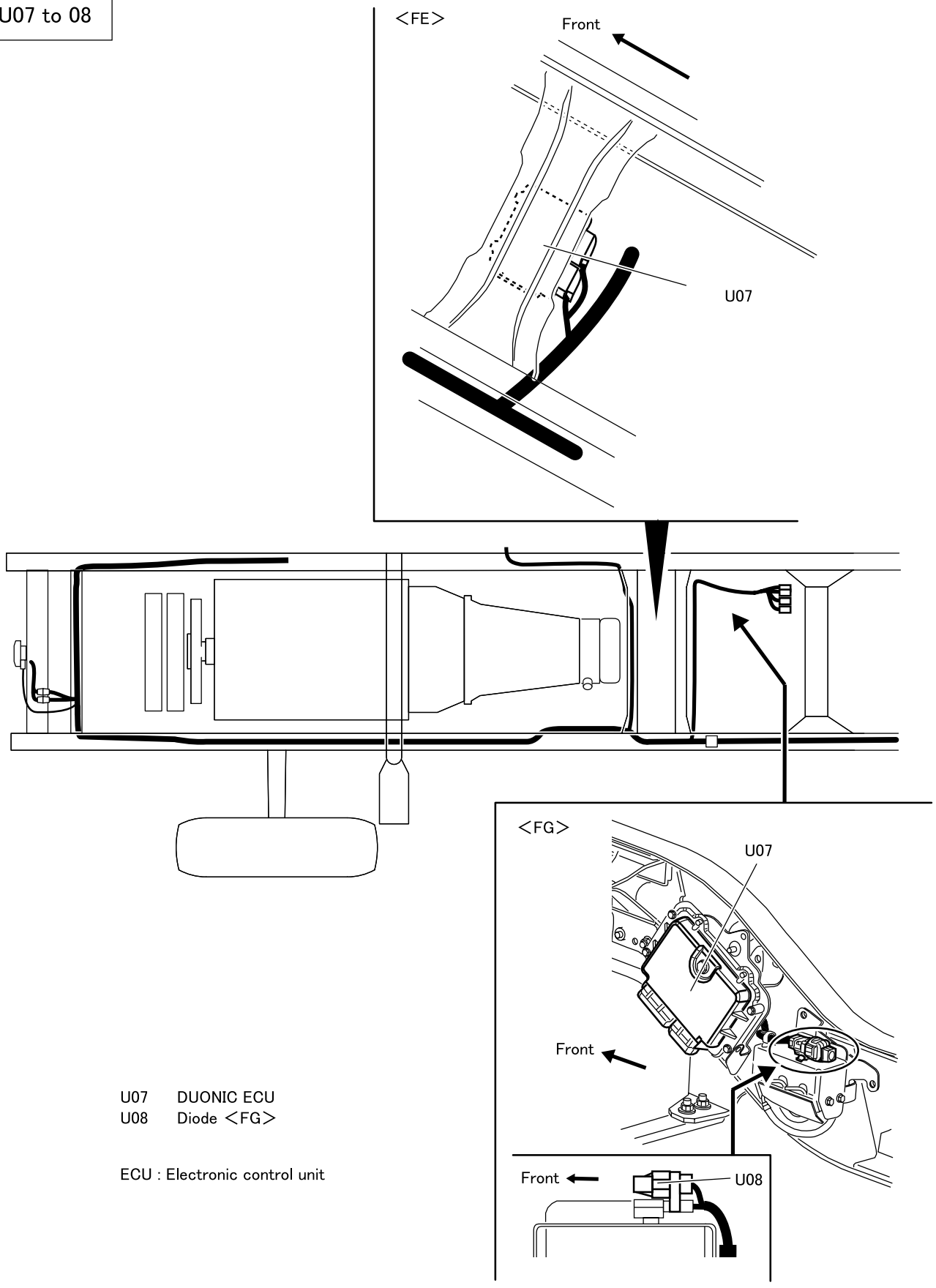

U07 DUONIC ECU
U08 Diode <FG>

ECU : Electronic control unit

54-L05232U-2

https://truckmanualshub.com/

V MAGNETIC VALVE, MOTOR AND BUZZER

V01 to 06

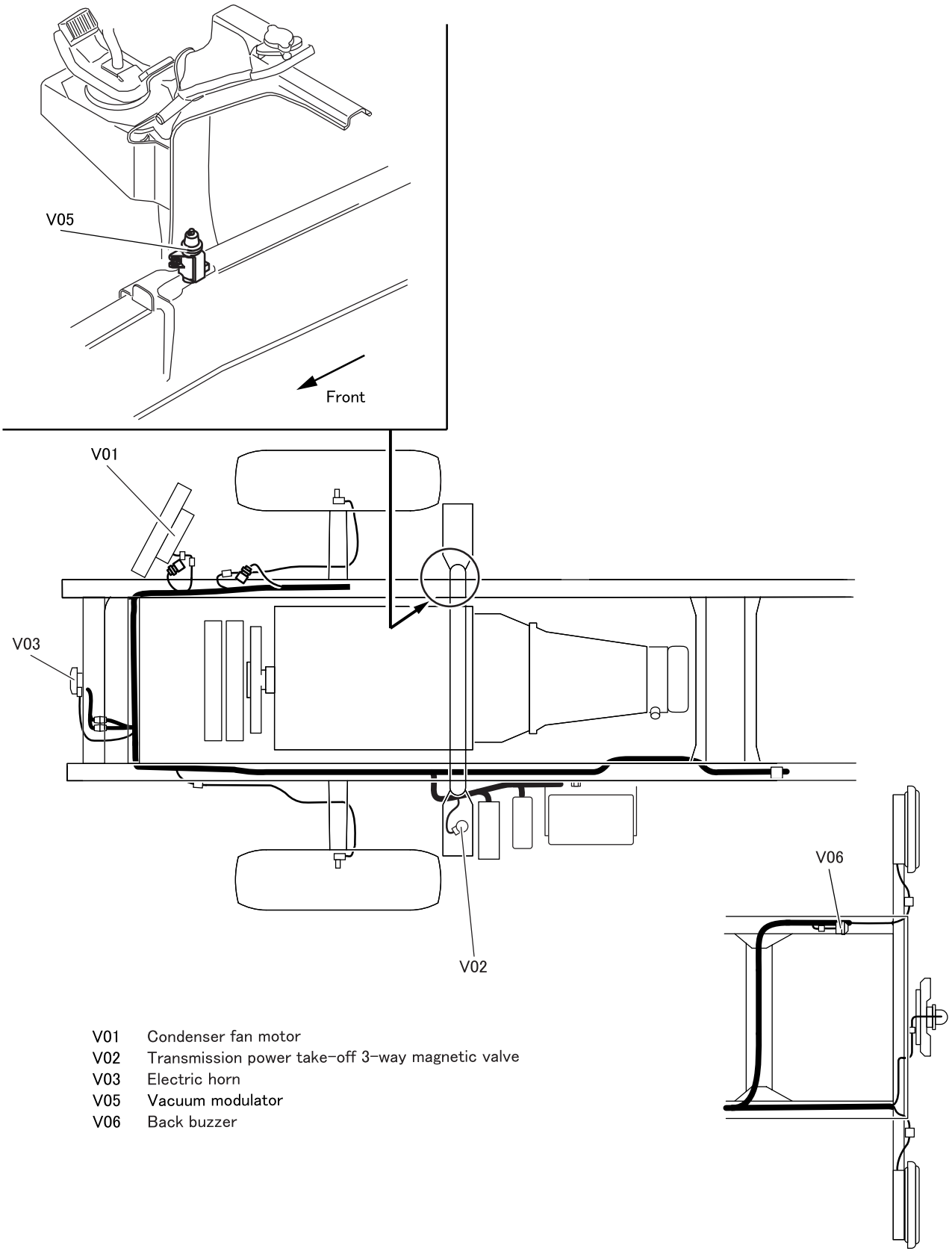

V01 Condenser fan motor
V02 Transmission power take-off 3-way magnetic valve
V03 Electric horn
V05 Vacuum modulator
V06 Back buzzer

54-L05232V-1

https://truckmanualshub.com/

V11 to 12 <FG>

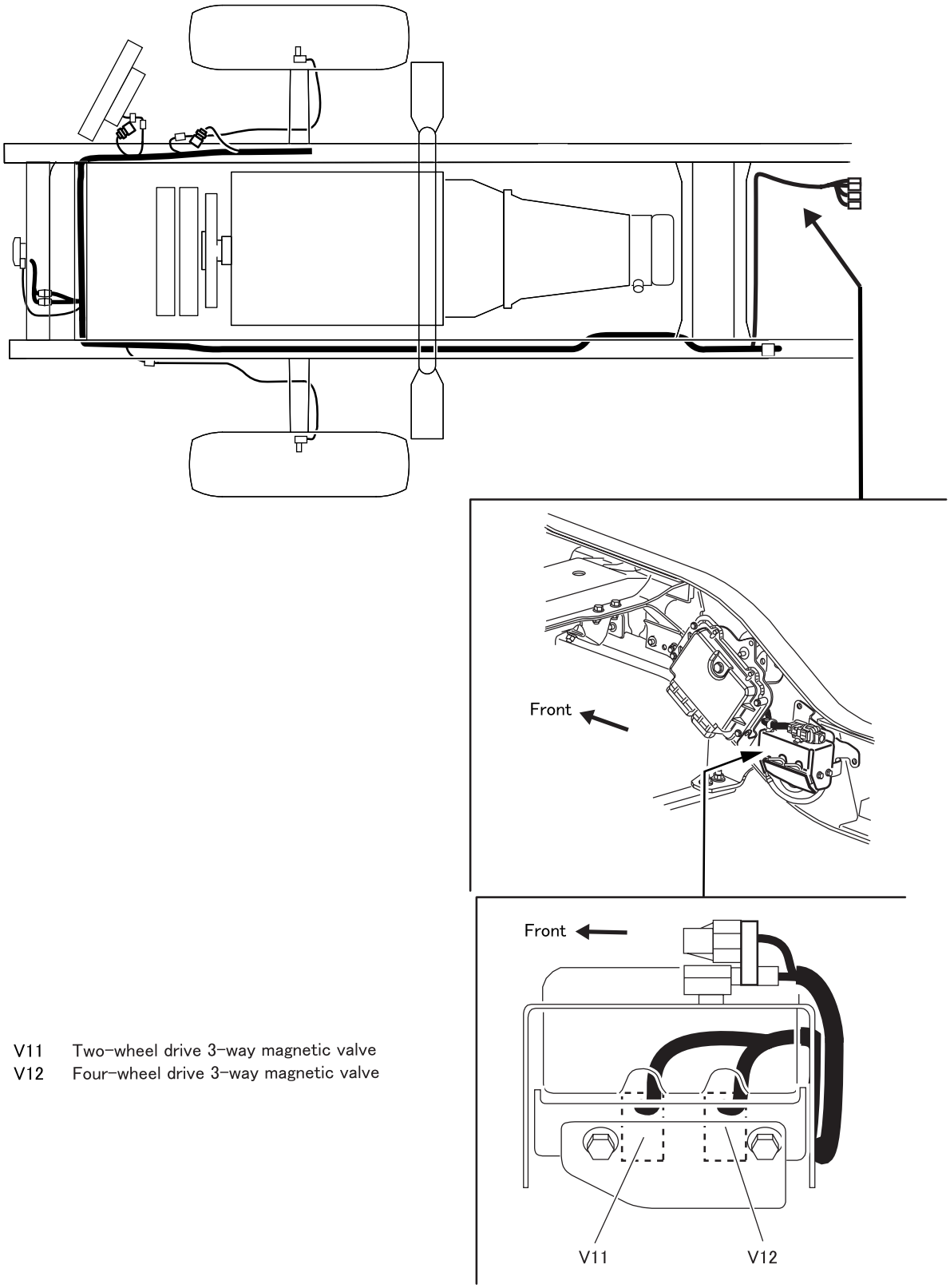

V11 Two-wheel drive 3-way magnetic valve
V12 Four-wheel drive 3-way magnetic valve

https://truckmanualshub.com/

W JOINTS OF MAIN HARNESS CONNECTORS

W01 to 11

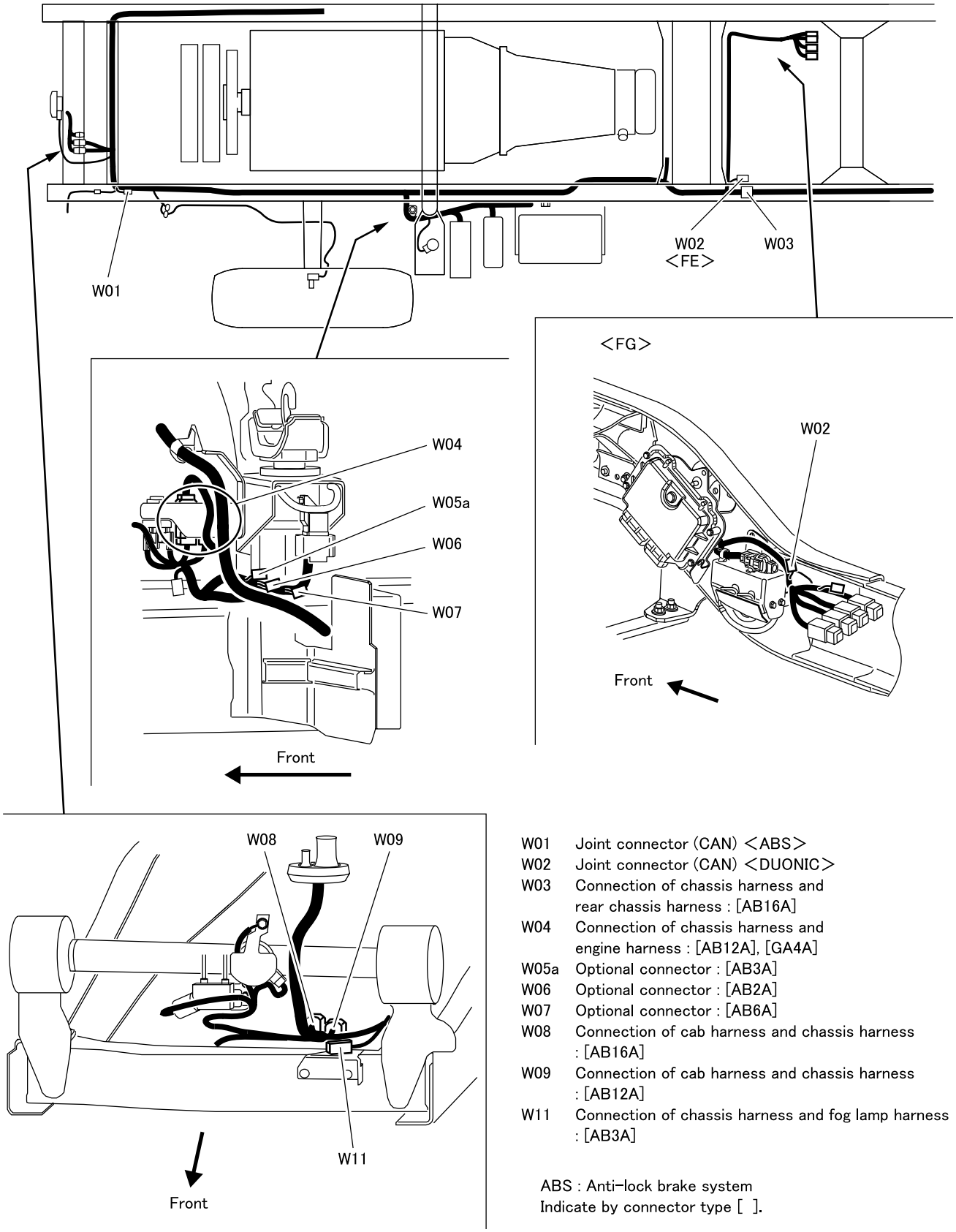

W01 Joint connector (CAN) <ABS>
W02 Joint connector (CAN) <DUONIC>
W03 Connection of chassis harness and rear chassis harness : [AB16A]
W04 Connection of chassis harness and engine harness : [AB12A], [GA4A]
W05a Optional connector : [AB3A]
W06 Optional connector : [AB2A]
W07 Optional connector : [AB6A]
W08 Connection of cab harness and chassis harness : [AB16A]
W09 Connection of cab harness and chassis harness : [AB12A]
W11 Connection of chassis harness and fog lamp harness : [AB3A]

ABS : Anti-lock brake system
Indicate by connector type [ ].

54-L05232W-1

https://truckmanualshub.com/

W16 to 21

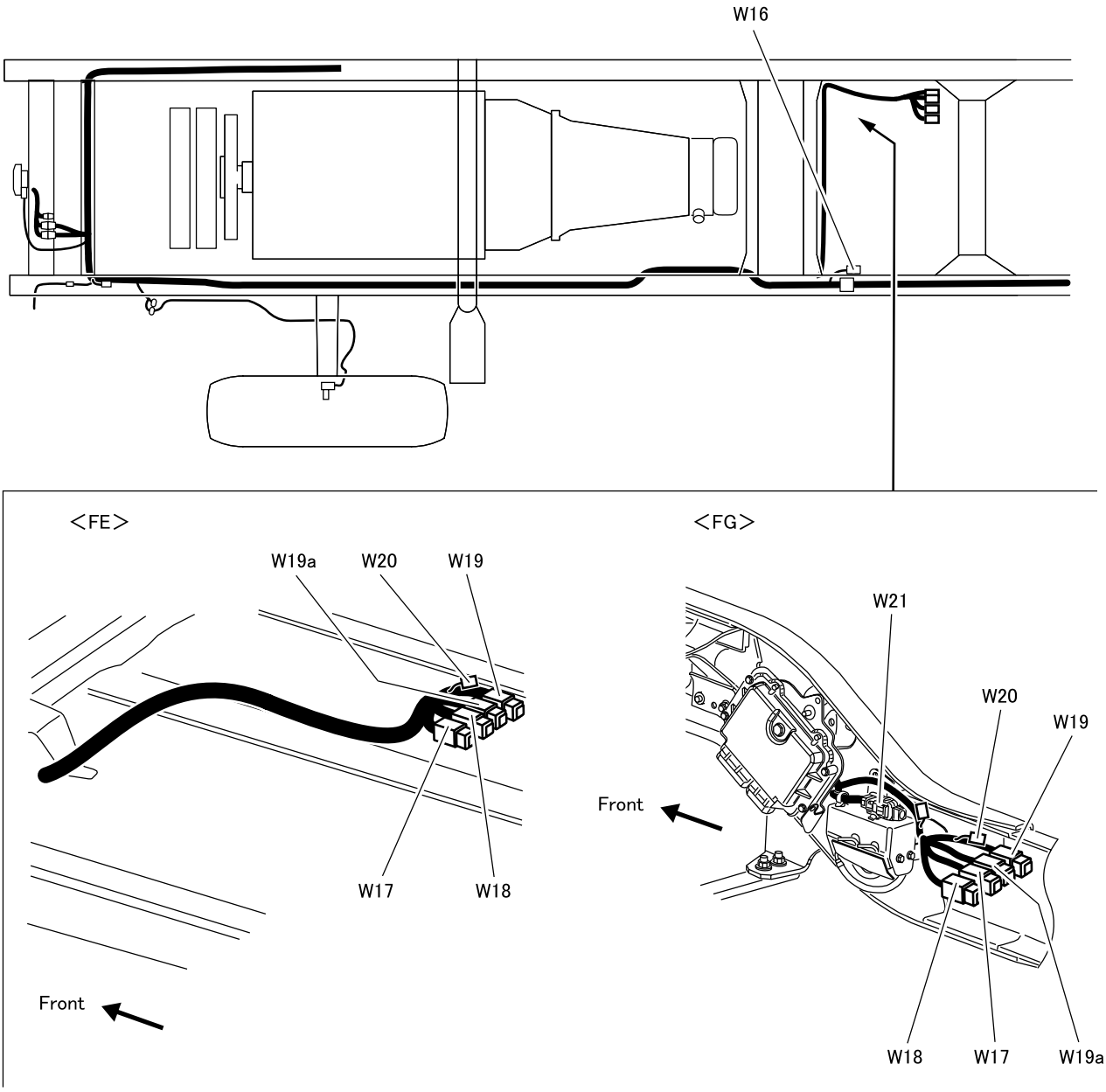

W16 Connection of chassis harness and fuel harness : [AB12A] <FG>
W17 Connection of chassis harness and DEF tank harness : [AB16A]
W18 Connection of chassis harness and DEF tank harness : [AC4A]
W19 Connection of chassis harness and ATS harness : [AB8A]
W19a Connection of chassis harness and ATS harness : [AB12A]
W20 Joint connector (CAN) <Engine control>
W21 Connection of chassis harness and transfer control harness <FG>

DEF : Diesel exhaust fluid
Indicate by connector type [ ].

https://truckmanualshub.com/

W JOINTS OF MAIN HARNESS CONNECTORS

W27 to 28

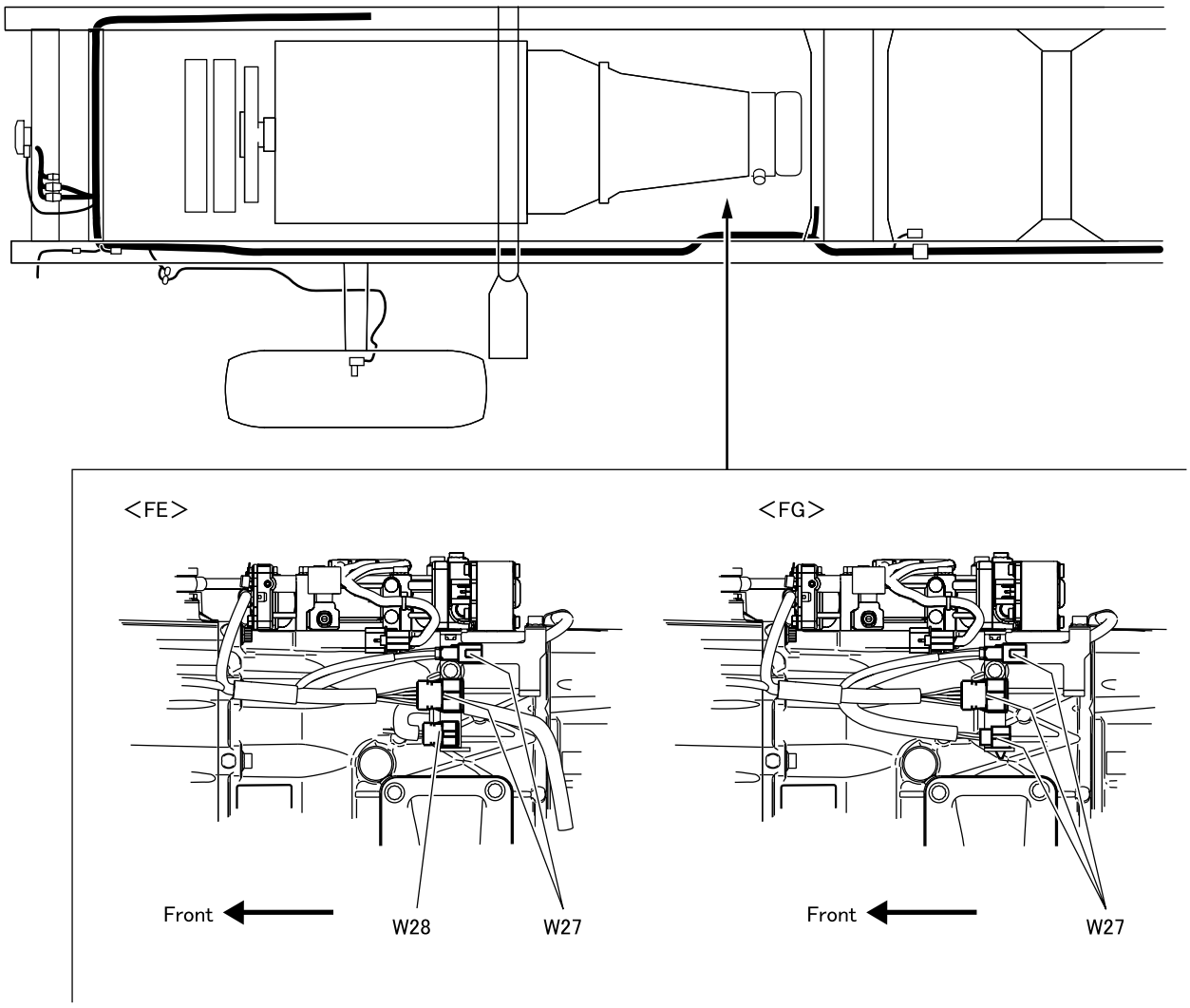

W27 Connection of chassis harness and DUONIC harness
: [AB6A] <FG>, [AB8A], [AC1A]
W28 Connection of chassis harness and speed sensor harness
: [AB4A]

Indicate by connector type [ ].

54-L05232W-3

https://truckmanualshub.com/

M E M O

https://truckmanualshub.com/

X01 to 05 <ABS>

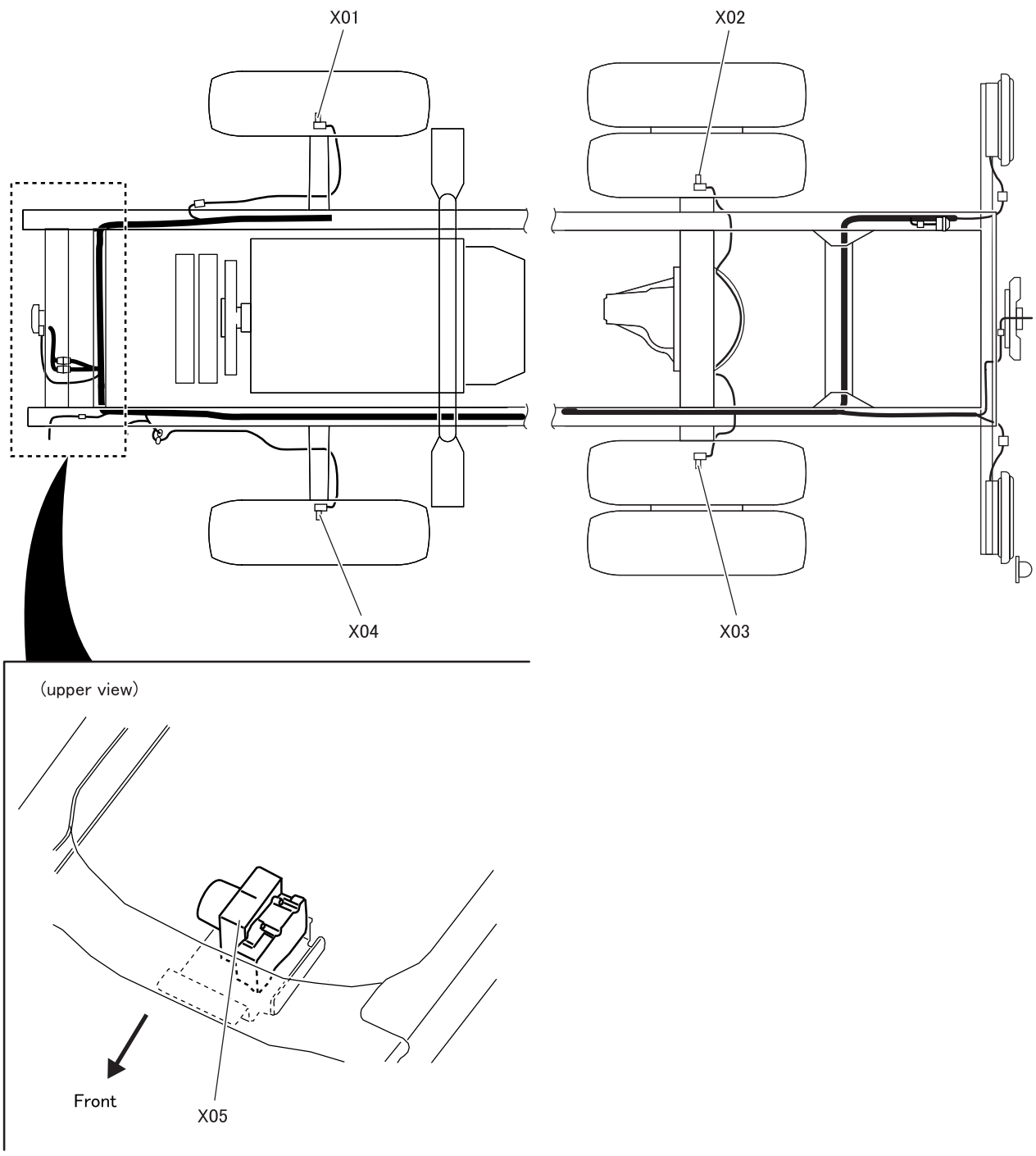

X01	Front wheel speed sensor, RH	
X02	Rear wheel speed sensor, RH	
X03	Rear wheel speed sensor, LH	
X04	Front wheel speed sensor, LH	
X05	Hydraulic unit	ABS : Anti-lock brake system

54-L05232X-1

https://truckmanualshub.com/

X11 <BlueTec® exhaust gas aftertreatment>

<Except crew cab>

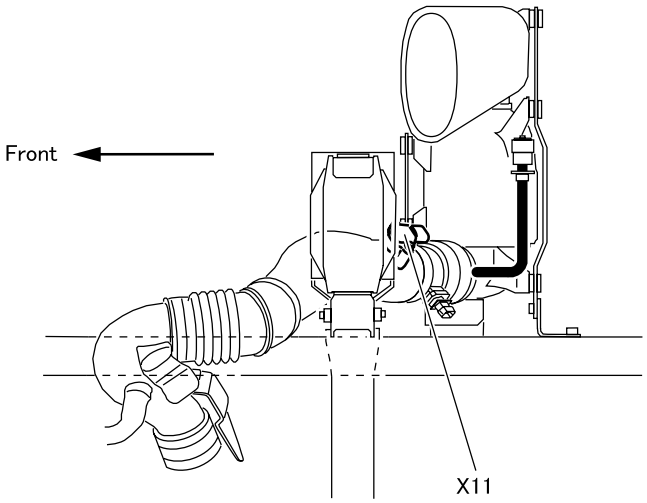

<Crew cab>

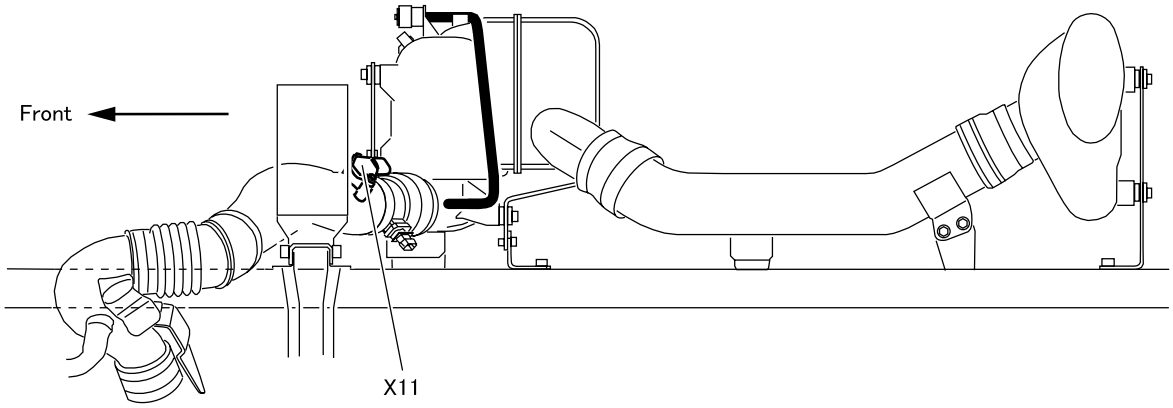

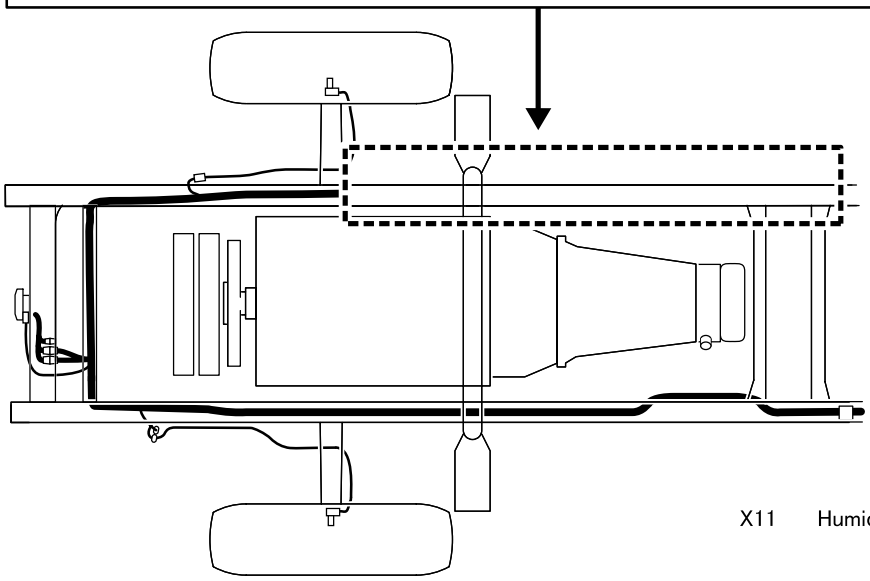

X11 Humidity and intake air temperature sensor

https://truckmanualshub.com/

X16 to 19 <BlueTec® exhaust gas aftertreatment>

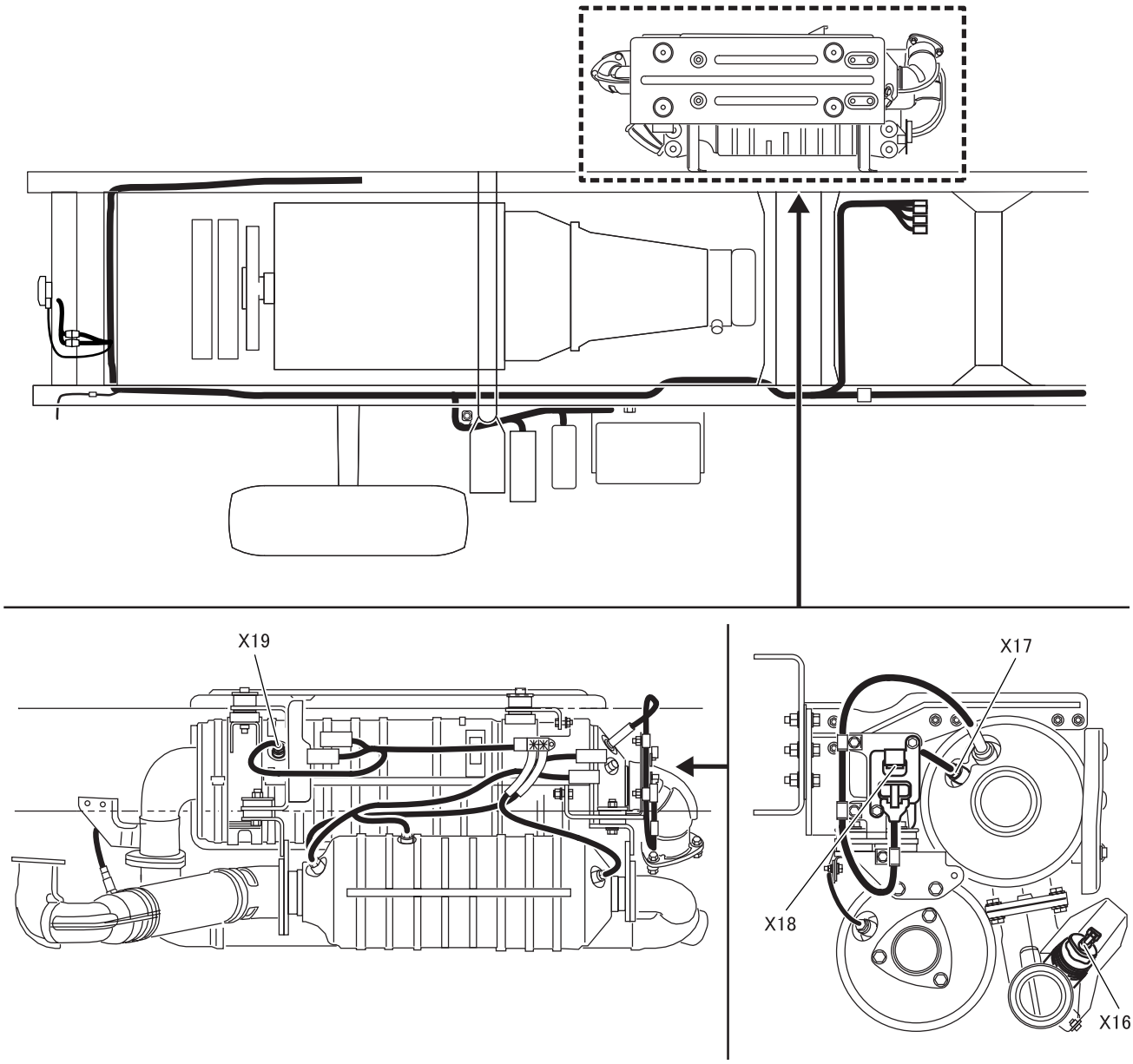

X16 DEF dosing module
X17 SCR temperature sensor 2
X18 NOx sensor
X19 SCR temperature sensor 1

DEF : Diesel exhaust fluid
SCR : Selective catalytic reduction

54-L05232X-3

https://truckmanualshub.com/

X21 to 27 <BlueTec® exhaust gas aftertreatment>

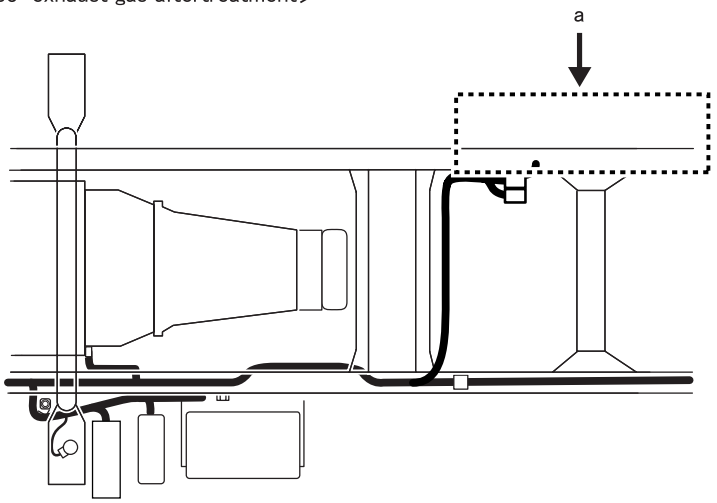

<View a>

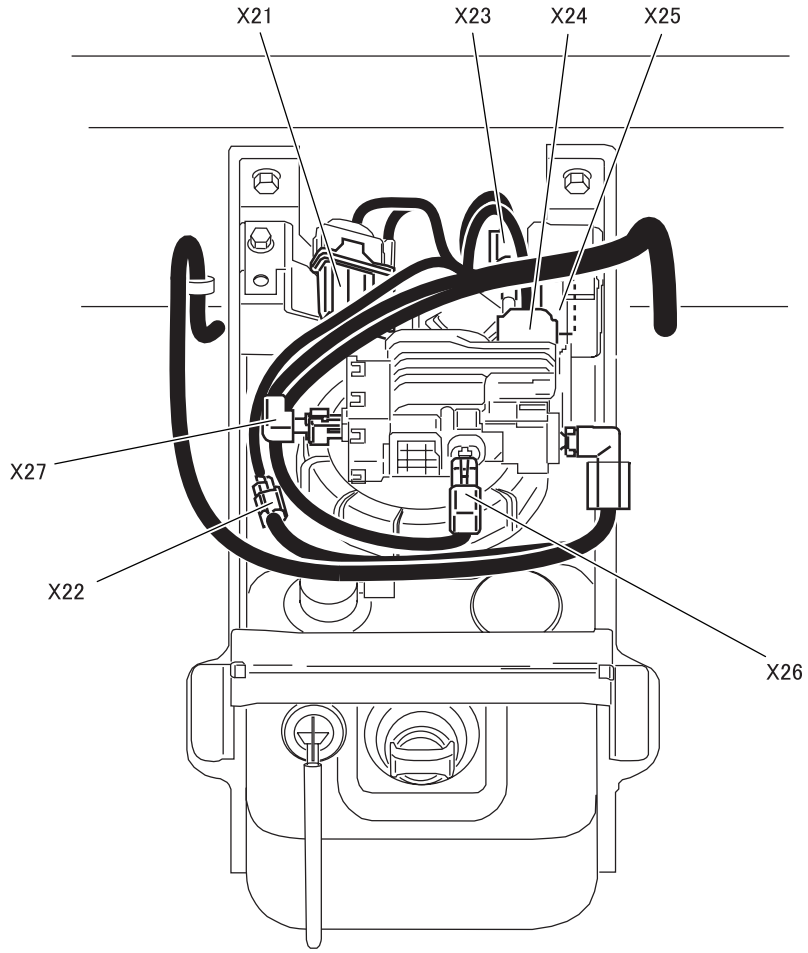

X21 DEF heater power unit
X22 DEF line heater
X23 DEF temperature sensor and DEF tank heater
X24 DEF supply module (motor and heater)
X25 DEF tank level unit
X26 DEF pressure sensor
X27 DEF reverting valve

DEF : Diesel exhaust fluid

https://truckmanualshub.com/

54-11 INSPECTION OF ELECTRICAL EQUIPMENT

https://truckmanualshub.com/

#001 to #179 SWITCH

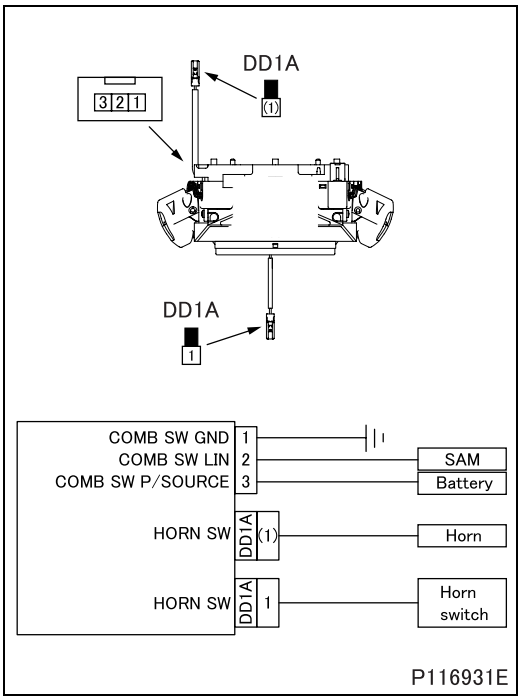

#001 Inspection of combination switch

- Because it is not easy to independently check the switch for the function, determine the quality of the switch indirectly by checking the related parts, such as the harness, horn switch, etc. in the system.
- If there is nothing abnormal in the related parts, but the problem remains in the system, then replace the switch. (See Gr37.)

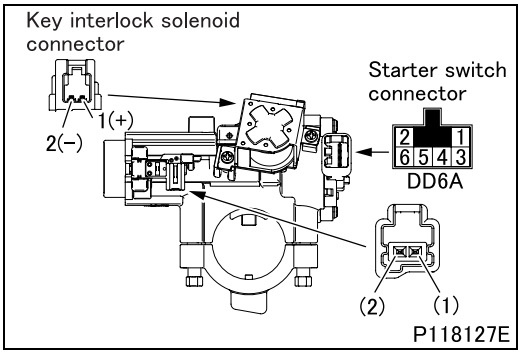

#002 Inspection of starter switch

- Perform the following checks, and if any fault is found, replace the switch. (See Gr37.)

(1) Starter switch

Switch position		Continuity terminal
LOCK	without key	–
	with key	(1)–(2)
ACC		(1)–(2), 4–5
ON		(1)–(2), 4–5–6
START		(1)–(2), 3–4–5–6

(2) Key interlock solenoid

- Confirm that applying battery voltage between the terminals 1 and 2 prevents the key from turning toward the LOCK position.

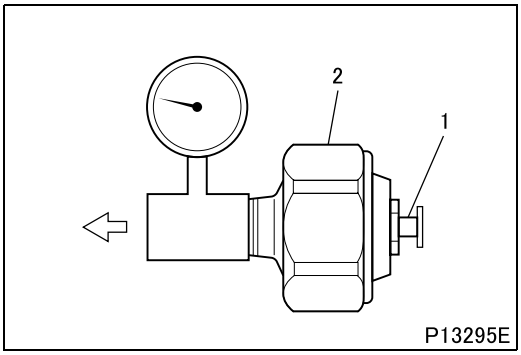

#023 Inspection of vacuum switch

- Perform the following checks, and if any fault is found, replace the switch. (See Gr35.)

(1) Inspection without applying negative pressure

- Make sure that there is no continuity between terminals 1 and 2 (body).

(2) Inspection by applying negative pressure

- Gradually apply negative pressure to the switch starting from 0 kPa {0 psi, 0 kgf/cm^2}.
- Measure the degree of air pressure at the moment when continuity is detected between terminals 1 and 2 (body), and make sure to confirm if the value meets the standard.

Standard value	$-(47\ ^{+3.3}_{-4.0})$ kPa {$-(13.8\ ^{+0.98}_{-1.18})$ in.Hg, $-(350\ ^{+25}_{-30})$ mmHg}

https://truckmanualshub.com/

#027 Inspection of power window switch

- Because it is not easy to check these switches individually, determine the quality of the switches indirectly by checking related parts, such as harnesses, power window motor, etc. in the system.
- If there is nothing abnormal in related parts, but there is still something wrong with the system, then replace the switches. (See Gr43.)

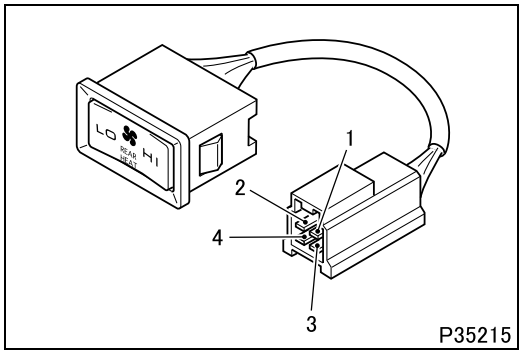

#034 Inspection of rear heater switch

Switch position	Continuity terminal
HI	2–4
OFF	–
LO	1–2

- If any fault is found, replace the switch.

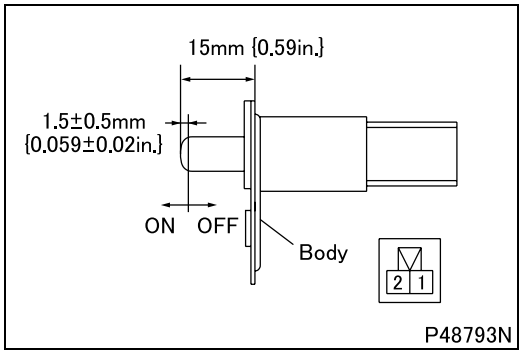

#035 Inspection of door switch

Switch position	Continuity terminal
OFF	–
ON	1-body, 2-body

- If any fault is found, replace the switch. (See Gr43.)

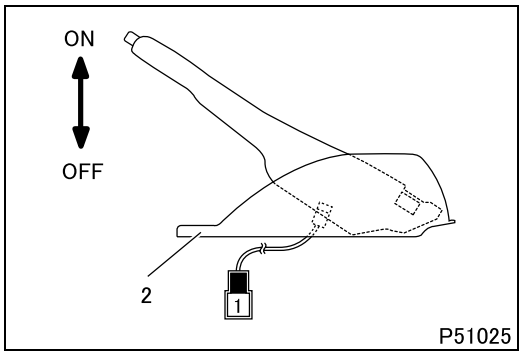

#038 Inspection of parking brake switch

- Measure continuity between terminals 1 and 2 (body) ground.

Pull the parking brake lever	Continuity exists
Release the parking brake lever	Continuity does not exist

- If any fault is found, replace the switch. (See Gr36.)

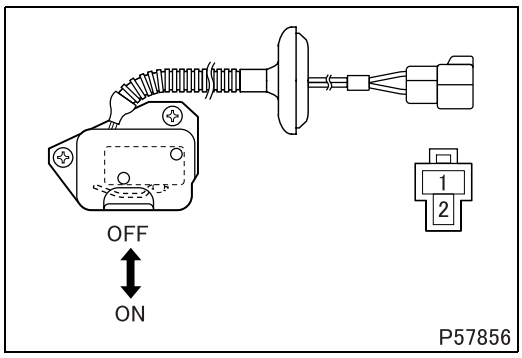

#039 Inspection of cab tilt lock switch

Switch position	Continuity terminal
OFF	–
ON	1–2

- If any fault is found, replace the switch. (See Gr42.)

https://truckmanualshub.com/

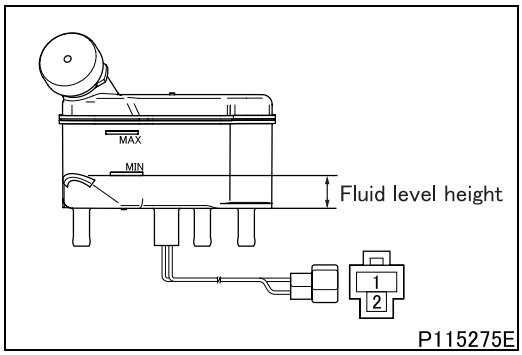

#041 Inspection of brake fluid level switch

- Gradually drain brake fluid from the brake fluid reservoir.

CAUTION ⚠

- **Brake fluid contains ingredients that dissolve the vehicle's paint. Quickly wipe off brake fluid when it is spilled.**

- Measure height of the switch when continuity is detected between terminals 1 and 2.

Standard value	18 to 20 mm {0.71 to 0.79 in.}

- If the measured value deviates from the standard value, replace the brake fluid reservoir. (See Gr52.)

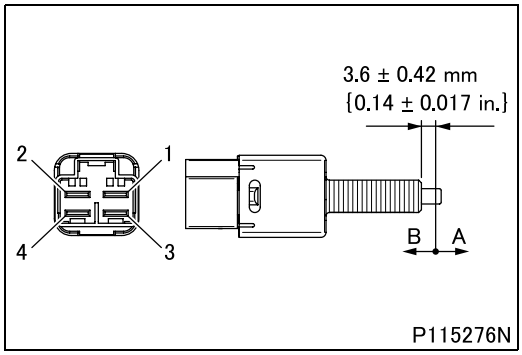

#042 Inspection of stop lamp switch

Switch position	Continuity terminal
A	1–2
B	3–4

- If any fault is found, replace the switch. (See Gr35.)

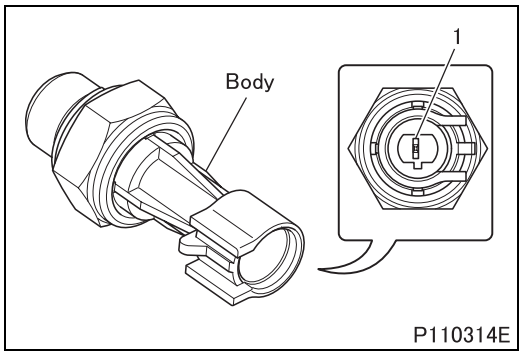

#044 Inspection of oil pressure switch

- Perform the following checks, and if any fault is found, replace the switch. (See Gr12.)

(1) Inspection without applying air pressure

- Make sure that there is continuity between terminals 1 and the body.

(2) Inspection by applying air pressure

- Gradually apply air pressure to the switch starting from 0 kPa {0 psi, 0 kgf/cm^2}.

- Measure the degree of air pressure at the moment when continuity is not detected between terminals 1 and body, and make sure to confirm if the value meets the standard.

Standard value (operating pressure)	50 ± 10 kPa {7.1 ± 1.4 psi, 0.5 ± 0.1 kgf/cm^2}

#054 Inspection of switch

- Perform the following checks, and if any fault is found, replace the switch.

Switch position	Continuity terminal
OFF	–
ON	1–2

https://truckmanualshub.com/

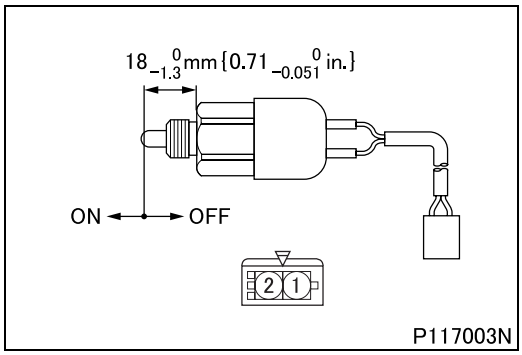

- Transfer four-wheel drive switch. <FG>

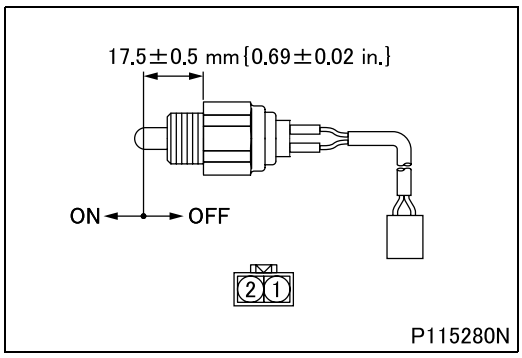

- Parking gear switch. (See Gr22.)

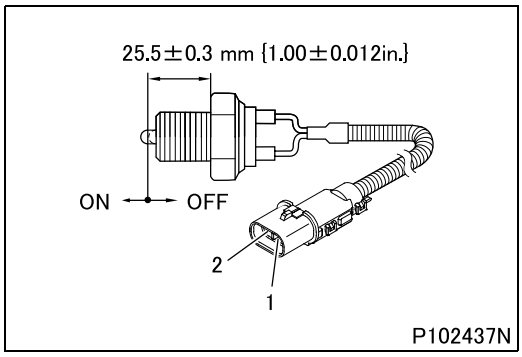

- Power take-off control switch. (See Gr22.)

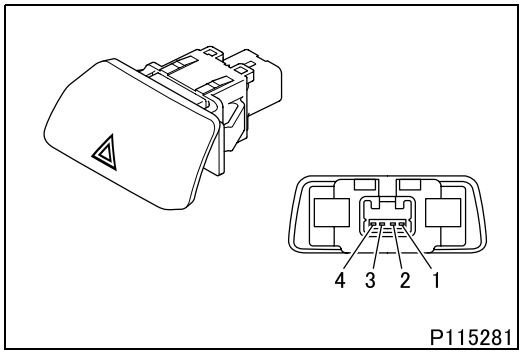

#081 Inspection of hazard switch

Switch position	Continuity terminal	Night illumination
OFF	–	(+) 4-1 (–)
ON	2–3	

- If any fault is found, replace the switch. (See Gr52.)

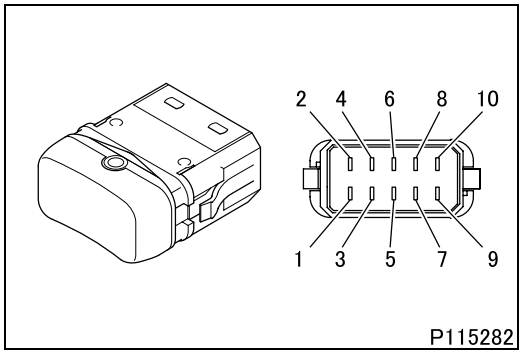

#089 Inspection of switch

- Perform the following checks, and if any fault is found, replace the switch.
  - Fog lamp switch
  - DPF cleaning switch
  - Transmission power take-off switch

Switch position	Continuity terminal	Night illumination
OFF	–	(+) 1–10 (–)
ON	3–7	

- Font drive switch

https://truckmanualshub.com/

- ECO mode switch

Switch position	Continuity terminal	Night illumination
OFF	5–7	(+) 1–10 (–)
ON	3–7	

- Van body dome light switch

Switch position	Continuity terminal	Operation illumination	Night illumination
OFF	–	–	(+) 1–10 (–)
ON	3–7	(+) 9–10 (–)	

- Door lock switch

Switch position	Continuity terminal	Night illumination
LOCK	3–7, 4–6	(+) 1–10 (–)
Neutral	4–6, 5–7	
UNLOCK	4–8, 5–7	

- Cruise control main switch

Switch position	Continuity terminal	Operation illumination	Night illumination
OFF	4–8, 5–7	–	(+) 1–10 (–)
Neutral	4–6, 5–7	–	
ON	3–7, 4–6	(+) 9–10 (–)	

https://truckmanualshub.com/

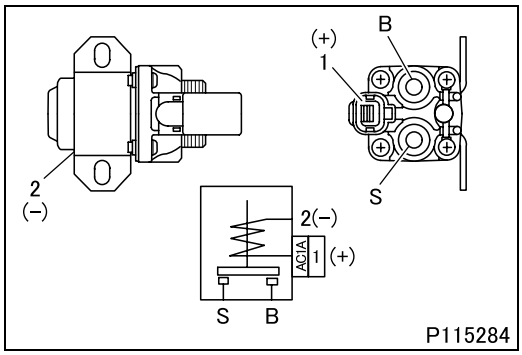

#187 Inspection of starter relay

- Perform continuity and operation checks, and if any fault is found, replace the relay.

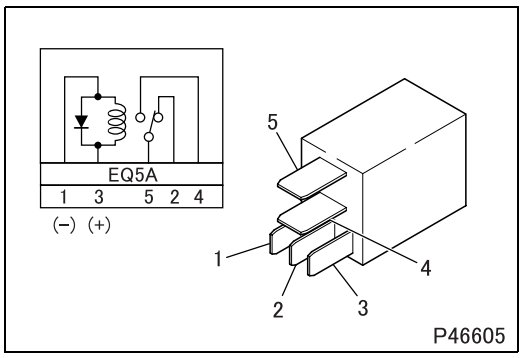

#201 Inspection of relay (normally open type 5 pin)

- Perform continuity and operation checks, and if any fault is found, replace the relay.

https://truckmanualshub.com/

#250 to #349 SENSOR

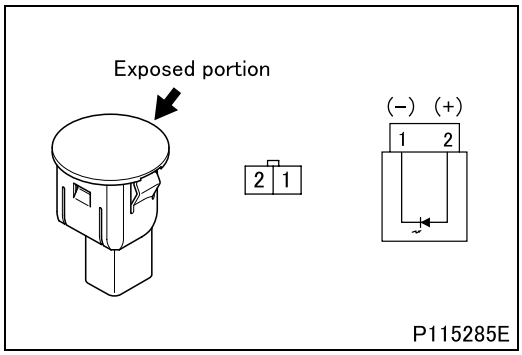

#251 Inspection of photo sensor

- With the photo sensor connected to the control panel at the sensor connector, turn the starter switch ON.
- With the exposed portion of the sensor exposed to light, measure the output voltage between terminal 2 and body ground.

Standard value	Inspection condition: Move a lit bulb of about 60 watts toward and away from right above the photo sensor (approx. 150 mm {5.91 in.} from sensor at closest point).	1 to 5 V (voltage lowers as light nears sensor)

- If the measured value deviates from the standard value, replace the sensor. (See Gr52.)

#252 Inspection of pressure sensor

- Because it is not easy to check these switches individually, determine the quality of the sensors indirectly by checking related parts, such as harnesses, etc. in the system.
- If there is nothing abnormal in the related parts, but there is still something wrong with the system, then replace the sensors.

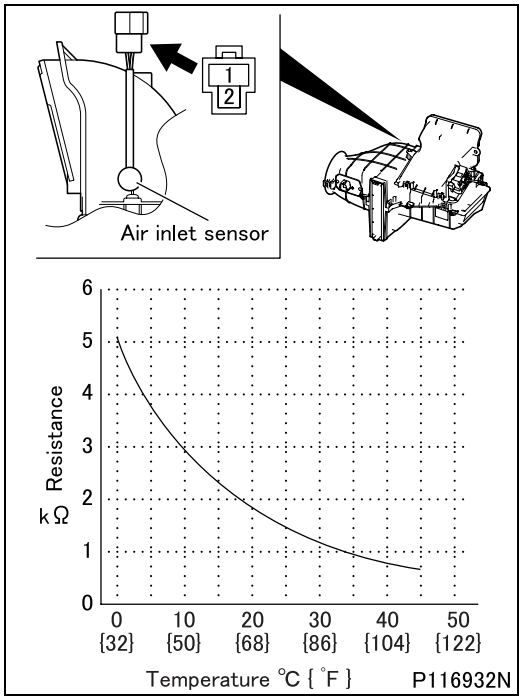

#253 Inspection of air inlet sensor

- Change the ambient temperature of the sensor and measure the resistance between terminals 1 and 2.
- If the measured value deviates from the characteristic shown in the table at left, replace the sensor. (See Gr55.)

https://truckmanualshub.com/

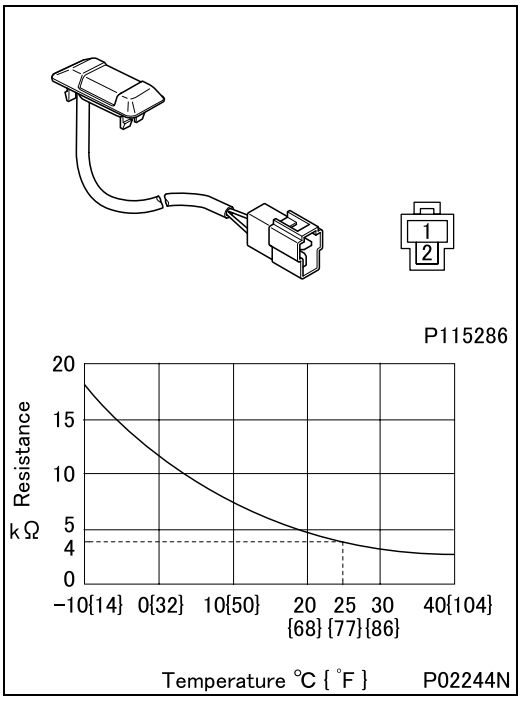

#256 Inspection of in car sensor

- Change the ambient temperature of the sensor and measure the resistance between terminals 1 and 2.
- If the measured value deviates from the characteristics shown in the table at left, replace the sensor. (See Gr52.)

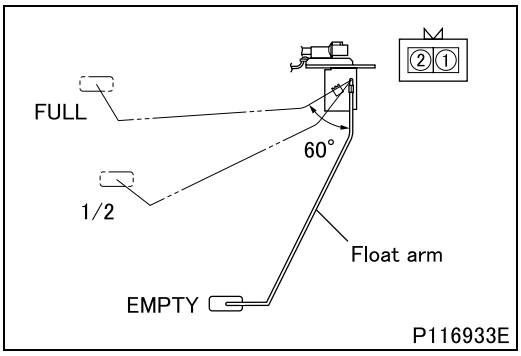

#258 Inspection of fuel level sensor

- Measure resistance values between terminals 1 and 2 when bringing the float arm into contact with stoppers (at EMPTY and FULL positions) and placing it at the midpoint position.

Standard value	at FULL position	0^{+2}_{0} Ω
	at 1/2 position	50 ± 3 Ω
	at EMPTY position	150 ± 10 Ω

- If the measured value deviates from the standard value, replace the sensor. (See Gr13.)

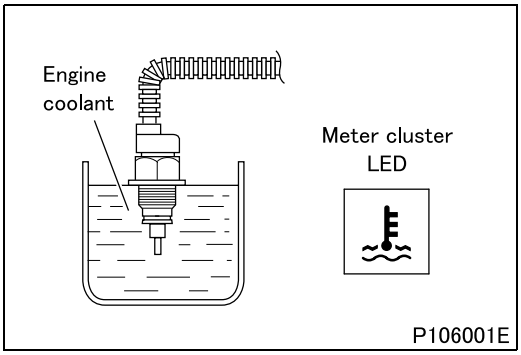

#259 Inspection of water level sensor

- Remove the water level sensor from the radiator.
- Turn the starter switch ON.
- Dip the water level sensor in a container filled with engine coolant, and check that the meter cluster LED illuminates and extinguishes under the following conditions.

Condition	Meter cluster LED
When water level sensor is out of the water	Illuminates
When water level sensor is in the water	Extinguishes

- If any fault is found, replace the sensor. (See Gr14.)

https://truckmanualshub.com/

#250 to #349 SENSOR

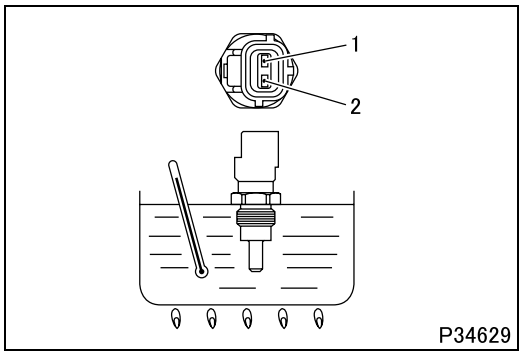

#262 Inspection of water temperature sensor

- Dip the sensor in a container filled with engine oil.
- Raise the oil temperature to each specification below while stirring the oil.
- Measure resistance values between terminals 1 and 2.

Standard value	–30°C {–22°F}	22.307 to 310.194 kΩ
	20°C {68°F}	2.262 to 2.760 kΩ
	80°C {176°F}	0.304 to 0.342 kΩ
	120°C {248°F}	0.106 to 0.119 kΩ

- If the measured value deviates from the standard value, replace the sensor. (See Gr14.)

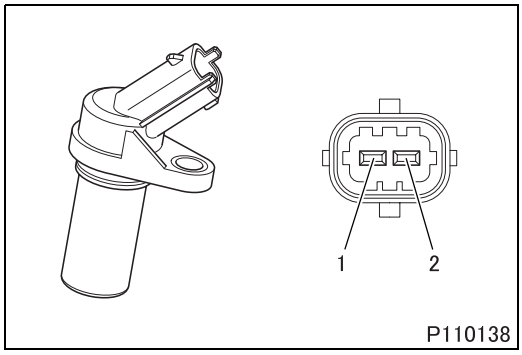

#263 Inspection of engine speed sensor

- Measure the resistance value between terminals 1 and 2.

Standard value (at 20°C {68°F})	860 ± 86 Ω

- If the measured value deviates from the standard value, replace the sensor. (See Gr11.)

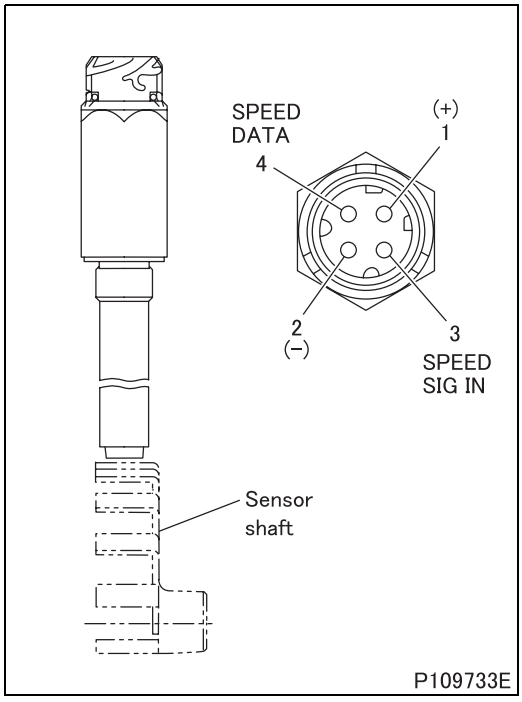

#265 Inspection of vehicle speed sensor

- While applying a voltage of 6.5 to 9 V between terminals 1 and 2, rotate the sensor shaft.
- Check the signals of terminal 3 (SPEED SIG IN) and terminal 4 (SPEED DATA). If no signals are found, replace the sensor. (See Gr22.)

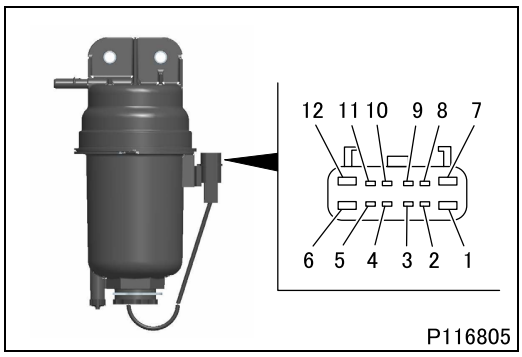

#323 Inspection of fuel filter (fuel temperature sensor)

- Measure the resistance between terminals 8 and 9.

Standard value	–30°C {–22°F}	26.114 ± 2.533 Ω
	0°C {32°F}	5.896 ± 0.430 Ω
	25°C {77°F}	2.057 ± 0.115 Ω
	60°C {140°F}	596 ± 23 Ω
	100°C {212°F}	186 ± 4 Ω
	110°C {230°F}	144 ± 3.456 Ω

- If the measurement is out of specification, replace the fuel filter. (See Gr13.)

https://truckmanualshub.com/

#350 Inspection of control unit and other units

- Since the units alone cannot be readily checked off the vehicle, check the harness, switch and other related parts in each system.
- If faults are not found in the related parts, and the problem still remains in the system, replace the control units or other units.

https://truckmanualshub.com/

#410 to #509 MOTOR

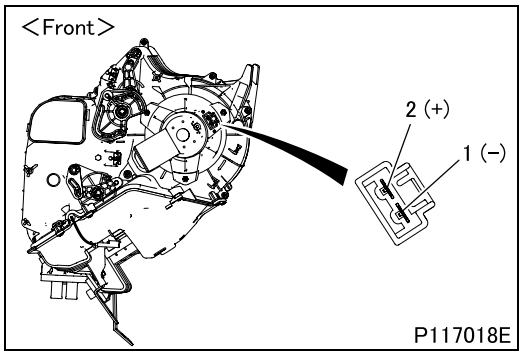

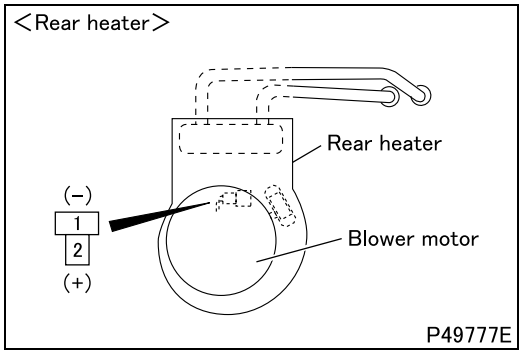

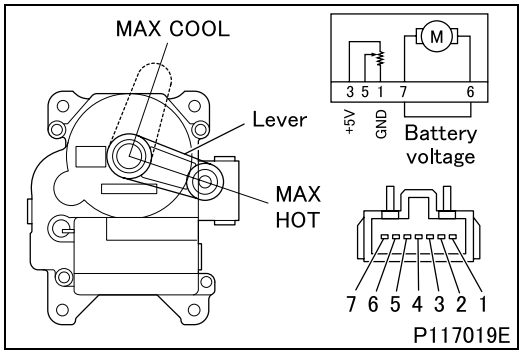

#411 Inspection of blower motor

- Make sure that the motor operates when 12 volts DC is applied between each terminal.
- If any fault is found, replace the motor. (See Gr55.)

#413 Inspection of air mixing motor

- Perform the following checks, and if any fault is found, replace the motor. (See Gr55.)

(1) Inspection of motor

- Make sure that the motor operates when 12 volts DC is applied between each terminal.

Lever position	Continuity terminal
MAX HOT	(+) 6–7 (–)
MAX COOL	(+) 7–6 (–)

CAUTION ⚠

- **Stop voltage application when the lever stops.**
- **After inspection of the motor, return the lever to a position within the range of MAX HOT to MAX COOL.**

(2) Inspection of potentiometer

- Apply 5 volts DC between the terminals 1 and 3 and measure the voltage between the terminals 1 and 5.

Lever position	Standard value
MAX HOT	4 ± 0.03
MAX COOL	1 ± 0.03

https://truckmanualshub.com/

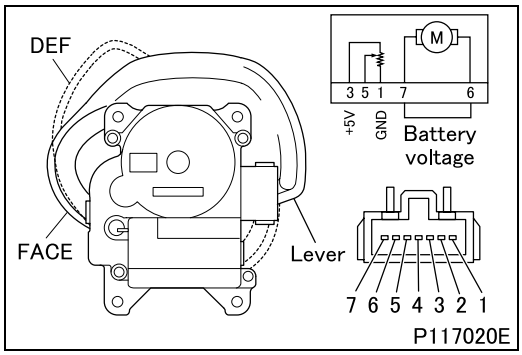

#414 Inspection of mode motor

- Perform the following checks, and if any fault is found, replace the motor. (See Gr55.)

<Fully automatic air-conditioner>

(1) Inspection of motor

- Make sure that the motor operates when 12 volts DC is applied between each terminal.

Lever position	Continuity terminal
FACE	(+) 6–7 (–)
DEF	(+) 7–6 (–)

CAUTION ⚠

- **Stop voltage application when the lever stops.**
- **After inspection of the motor, return the lever to a position within the range of FACE to DEF.**

(2) Inspection of potentiometer

- Apply 5 volts DC between the terminals 1 and 3 and measure the voltage between the terminals 1 and 5.

Lever position	Standard value
FACE	4.5 ± 0.03
DEF	0.5 ± 0.03

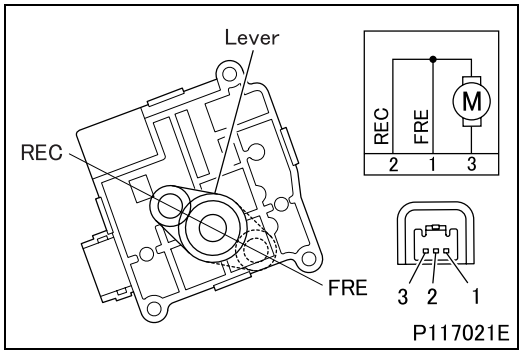

#415 Inspection of fresh/recirculation changeover motor

- Perform the following checks, and if any fault is found, replace the motor. (See Gr55.)
- Make sure that the motor operates when 12 volts DC is applied between each terminal.

Lever position	Continuity terminal
REC (inside air)	(+) 3–2 (–)
FRE (outside air)	(+) 3–1 (–)

CAUTION ⚠

- **Stop applying 12 volts DC if the lever stops spontaneously at the REC or FRE position.**

https://truckmanualshub.com/

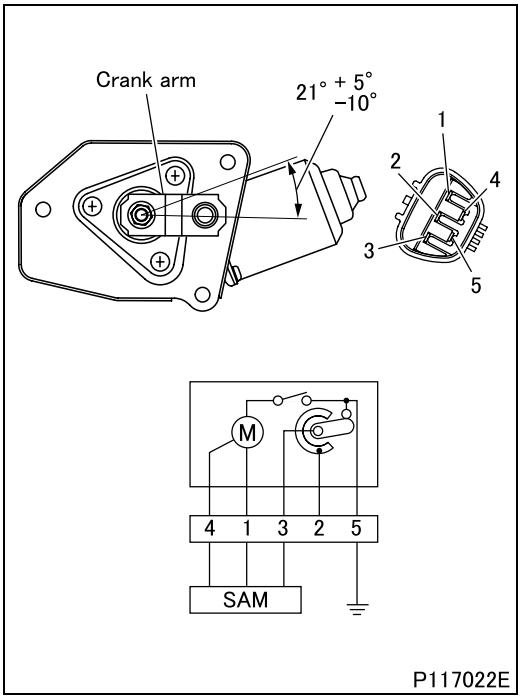

#422 Inspection of wiper motor

- Because it is not easy to check these switches individually, determine the quality of the motor indirectly by checking related parts, such as harnesses, power window motor, etc. in the system.
- If there is nothing abnormal in related parts, but there is still something wrong with the system, then replace the motor. (See Gr51.)

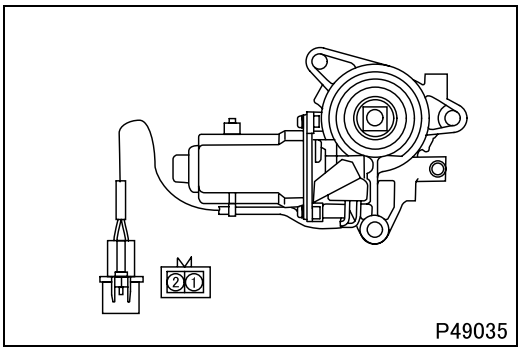

#423 Inspection of power window motor

- Make sure that the motor operates when 12 volts DC is applied between each terminal.

Rotation direction	Continuity terminal
Left	(+) 2–1 (–)
Right	(+) 1–2 (–)

- If any fault is found, replace the motor and the regulator as a set. (See Gr43.)

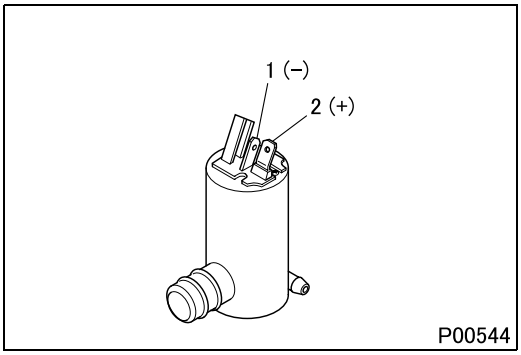

#428 Inspection of windshield washer motor

- Make sure that the motor operates when 12 volts DC is applied between each terminal.
- If any fault is found, replace the motor. (See Gr51.)

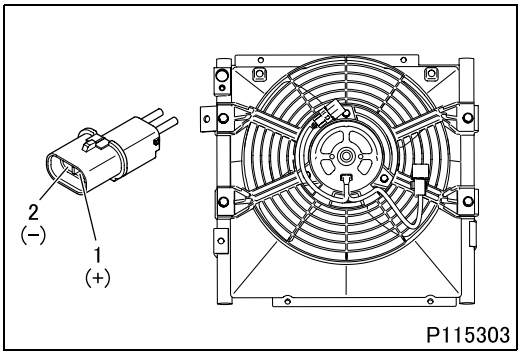

#431 Inspection of condenser fan motor

- Make sure that the motor operates when 12 volts DC is applied between each terminal.
- If any fault is found, replace the condenser. (See Gr55.)

https://truckmanualshub.com/

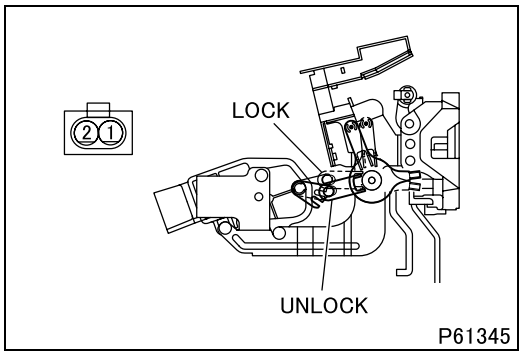

#510 Inspection of door lock actuator (passenger's seat side)

- Make sure that the actuator operates when 12 volts DC is applied between each terminal.

Switch position	Terminal
LOCK	(+) 1–2 (–)
UNLOCK	(+) 2–1 (–)

- If any fault is found, replace the actuator. (See Gr43.)

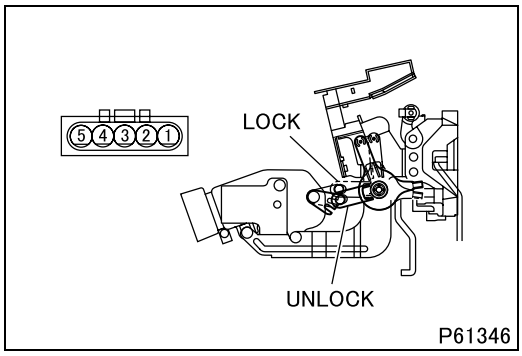

#511 Inspection of door lock actuator (driver's seat side)

- Make sure that the actuator operates when 12 volts DC is applied between each terminal.

Switch position	Continuity terminal	Terminal
LOCK	1–2	(+) 3–4 (–)
UNLOCK	1–5	(+) 4–3 (–)

- If any fault is found, replace the actuator. (See Gr43.)

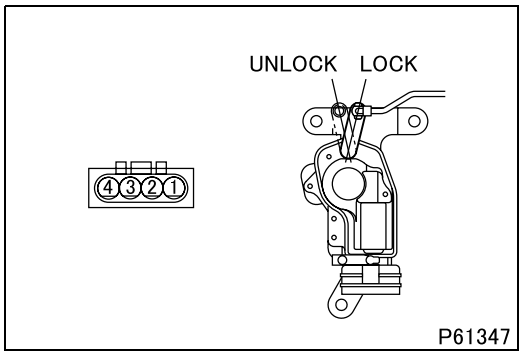

#512 Inspection of rear door lock actuator

- Make sure that the actuator operates when 12 volts DC is applied between each terminal.

Switch position	Terminal
LOCK	(+) 2–3 (–)
UNLOCK	(+) 3–2 (–)

- If any fault is found, replace the actuator. (See Gr43.)

https://truckmanualshub.com/

#560 to #609 MAGNETIC VALVE

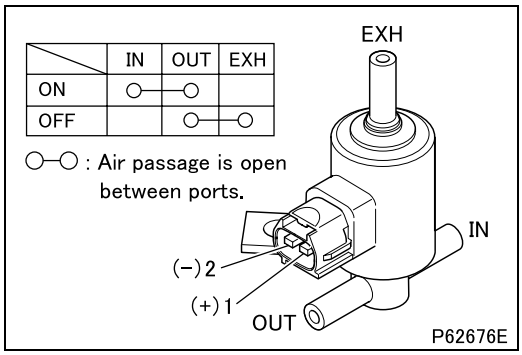

#565 Inspection of 3-way magnetic valve

<Type-1>

- Perform the following checks, and if any fault is found, replace the 3-way magnetic valve.

(1) Operation check

- Gradually apply DC current between each terminal starting from 0 V.
- Measure the voltage when the 3-way magnetic valve operates. (Determine ON/OFF of the magnetic valve by operating noises.)

Standard value (minimum operating voltage)	11 V or less

(2) Inspection of continuity and air tightness

- Negative pressure when inspected: –99.99 kPa {–29.5 in.Hg, –750 mmHg}

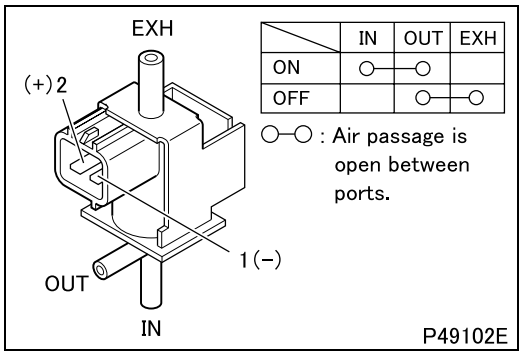

<Type-2>

- Perform the following checks, and if any fault is found, replace the 3-way magnetic valve.

(1) Operation check

- Gradually apply DC current between each terminal starting from 0 V.
- Measure the voltage at which the 3-way magnetic valve operates. (Determine ON/OFF of the magnetic valve by operating noises.)

Standard value (minimum operating voltage)	8 V or less

(2) Inspection of continuity and air tightness

- Negative pressure when inspected: –60 kPa {–17.7 in.Hg, –450 mmHg}

https://truckmanualshub.com/

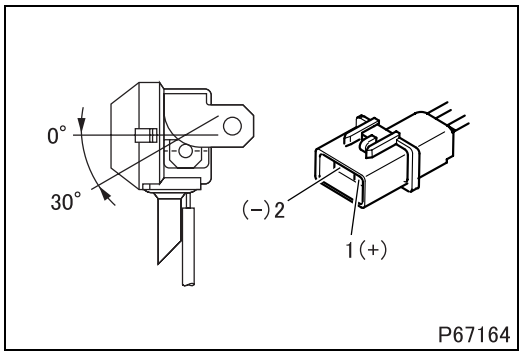

#614 Inspection of backup buzzer

[Inspection]

- Make sure to confirm if the buzzer intermittently sounds by applying the 12 volts DC between each terminal.
- If any fault is found, replace the buzzer.

[Installation]

- Install the backup buzzer to the frame in the range of angles as illustrated.

CAUTION ⚠

- **Be aware that if the installed angle of the buzzer is out of the range as illustrated, water in the buzzer will not drain normally.**

#615 Inspection of electric horn

CAUTION ⚠

- **Bending the stay changes the sound quality of the horn, degrading the horn performance.**
- **Never bend or damage the stay.**

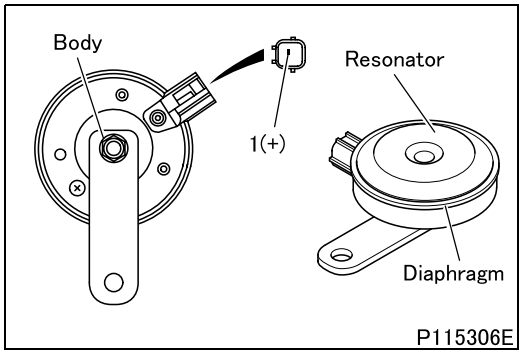

[Inspection]

- Make sure to confirm whether the horn sounds by applying the 12 volts DC between terminals 1 and body.
- Remove foreign substances adhered to the resonator and diaphragm.
- If any fault is found, replace the horn.

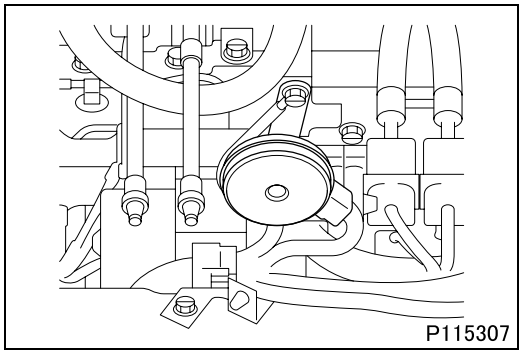

[Installation]

- Install in the direction as illustrated.

https://truckmanualshub.com/

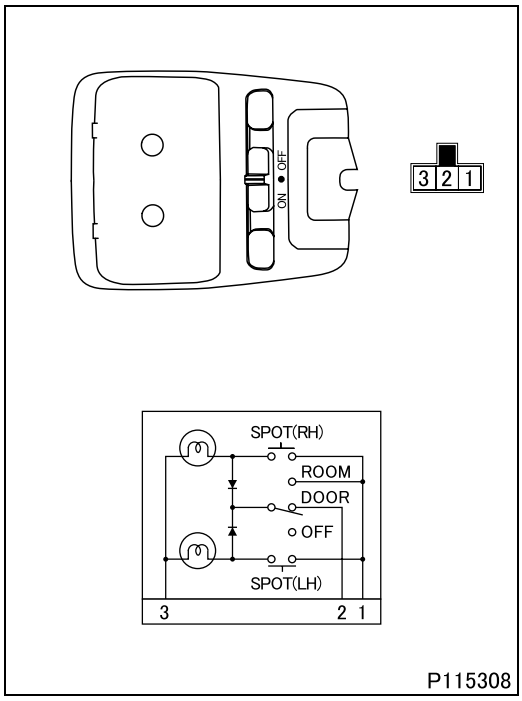

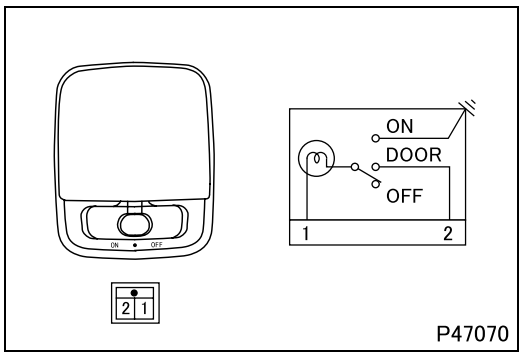

#656 Inspection of cab and spot lamp

- If any fault is found, replace the lamp.

https://truckmanualshub.com/

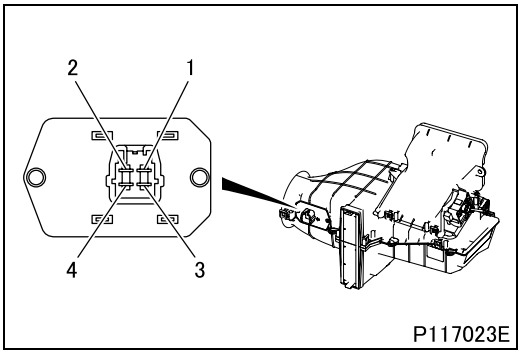

#750 Inspection of blower resistor

<Front air-conditioner (manual)>

- Measure resistance values between each terminals.

Fan speed	Terminal	Standard value
MEDIUM HIGH	2–4	0.56 ± 0.0392 Ω
MEDIUM LOW	3–4	1.56 ± 0.109 Ω
LOW	1–4	3.36 ± 0.235 Ω

- If the measured value deviates from the standard value, replace the blower resistor. (See Gr55.)

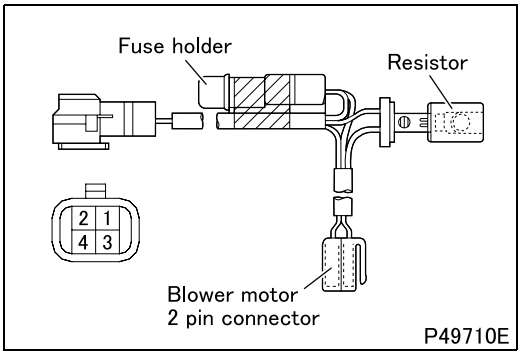

<With rear heater>

- Measure resistance value between terminals 1 and 4.

Fan speed	Terminal	Standard value
LOW	1–4	3 Ω

- If the measured value deviates from the standard value, replace the blower resistor. (See Gr55.)

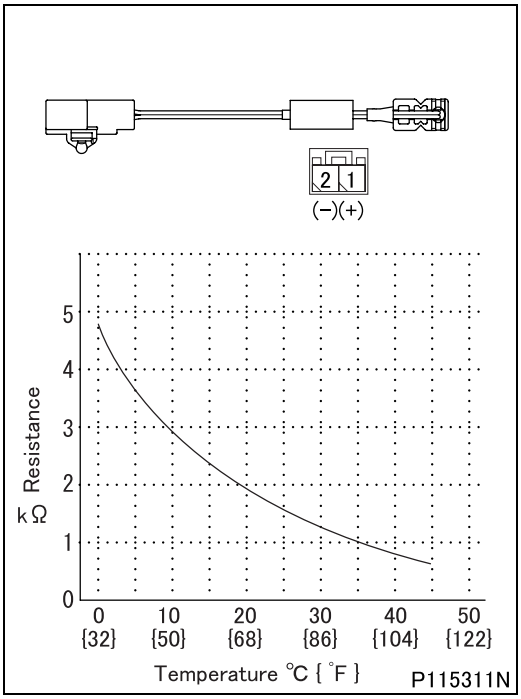

#751 Inspection of thermostat

- Measure the output voltage between terminals 1 and 2 at the specified temperatures.
- If the measured value deviates from the characteristic shown in the table at left, replace the sensor. (See Gr55.)

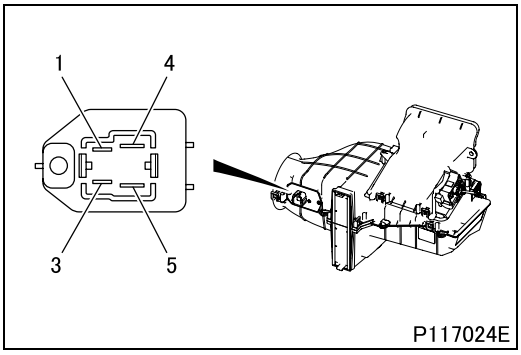

#752 Inspection of power MOS-FET (transistor)

- Perform the following checks, and if any fault is found, replace the power transistor. (See Gr55.)
  - Start the engine and operate the blower in the HI mode. Check that a high blower output equivalent to HI is obtained.
  - Operate the control to step down the flow of air. Check that the blower output equally decreases gradually.
  - Check that nothing is abnormal with the blower motor, wiring, air conditioner electronic control unit, control panel and related parts. If the blower motor is inoperative in that state, the power MOS-FET (transistor) should be faulty.

https://truckmanualshub.com/

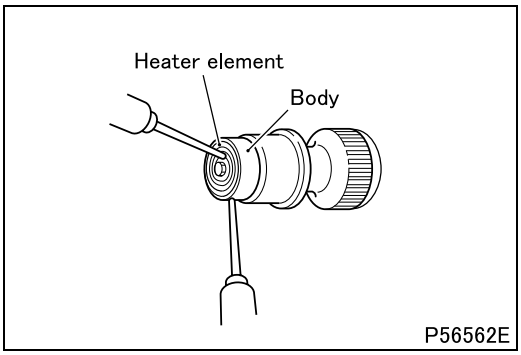

#754 Inspection of cigarette lighter

- Perform the following checks, and if any fault is found, replace the cigarette lighter. (See Gr52.)
- Make sure that there is continuity between heater element and body.

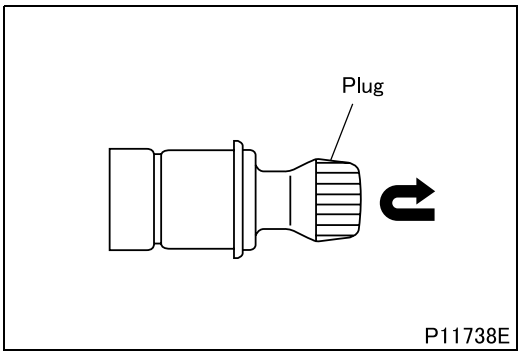

- Make sure that when plug is pushed in by hand, it immediately returns to its original position.
- Place the starter switch at ACC or ON position.
- Push plug into the socket in the cab.
- Measure the time required for plug to automatically return.

Standard value	15 ± 5 seconds

- Check to see that heater element is red-hot.

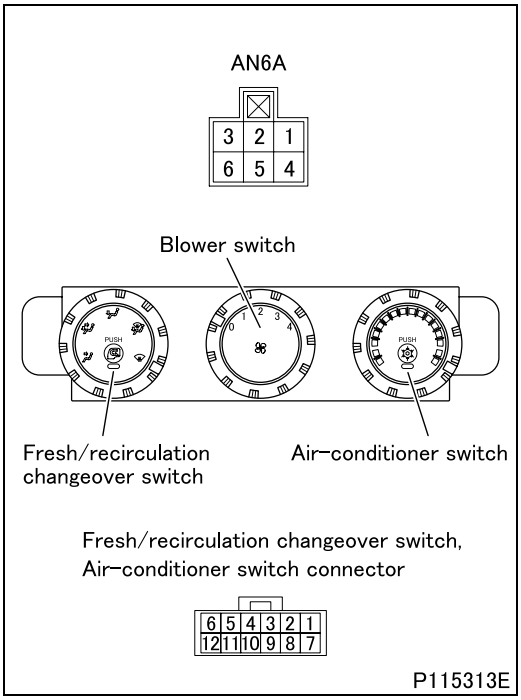

#763 Inspection of heater control panel

- Perform the following checks, and if any fault is found, replace the heater control panel. (See Gr52.)

(1) Blower switch <AN6A connector>

Switch position	Continuity terminal
0: OFF	–
1: LO (LOW)	1–2–4
2: ML (MEDIUM LOW)	1–3–4
3: MH (MEDIUM HIGH)	1–4–6
4: HI (HIGH)	1–4–5

(2) Fresh/recirculation changeover switch

Switch position	Continuity terminal	Operation illumination	Night illumination
OFF: Fresh air	6–12	–	(+) 9–10 (–)
ON: Recirculation air	5–12	(+) 1–12 (–)	

(3) Air-conditioner switch

Switch position	Continuity terminal	Operation illumination	Night illumination
OFF	–	–	(+) 9–10 (–)
ON	3–7	(+) 1–7 (–)	

https://truckmanualshub.com/

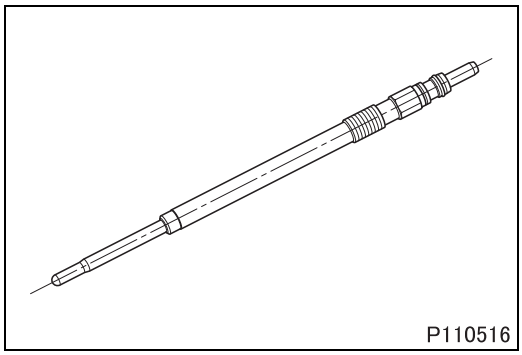
P110516

#764 Inspection of glow plug

- Measure the resistance between the housing and the connection pin using a multimeter.

Standard value (at 20°C {68°F})	0.6 to 1.0 Ω

- If the measured value deviates from the standard value, replace the glow plug. (See Gr11.)

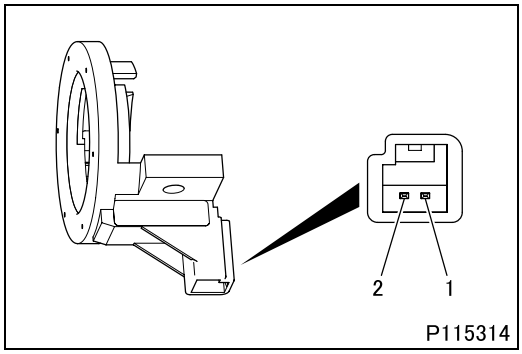

P115314

#771 Inspection of immobilizer antenna

- Measure the resistance between terminals 1 and 2.

Standard value (at 25°C {77°F})	20 ± 2 Ω

- If the measured value deviates from the standard value, replace the immobilizer antenna.

https://truckmanualshub.com/

#860 BATTERY

DANGER ⚠

- **Since flammable hydrogen gas is generated by the battery be sure to obey the following warnings:**
  - **Do not short-circuit the (+) and (–) terminals on the battery.**
  - **Keep sparks and lit cigarettes away from the battery.**
  - **Do not wear metal objects on your arms and lean over battery.**
- **Because the battery electrolyte is made of diluted sulfuric acid and is corrosive, when handling battery wear safety glasses and rubber gloves to protect the eyes and hands.**

WARNING ⚠

- **Make sure that you disconnect battery cable (–) first when you disconnect battery cables.**

CAUTION ⚠

- **Make sure that all electrical switches of the vehicle are OFF before connecting battery cables.**
- **Make sure that you connect battery cable (+) before you connect battery cable (–).**
- **To prevent a short-circuit be sure that disconnected battery cables do not accidentally touch the battery terminals.**

Service standards

Location	Maintenance item	Standard value	Limit	Remedy
–	Specific gravity of battery electrolyte (20°C {68°F})	1.280	1.220	Charge or replace

◆Service procedure◆

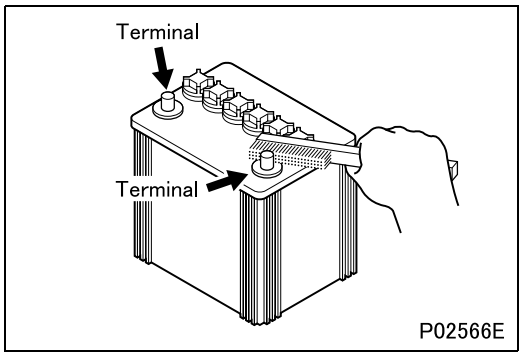

Inspection of battery

(1) Visual inspection

- If a terminal is corroded, remove the corrosion from it using a wire brush.
- If cracks or defects are found on battery, replace it since the cracks or defects can cause liquid spills.

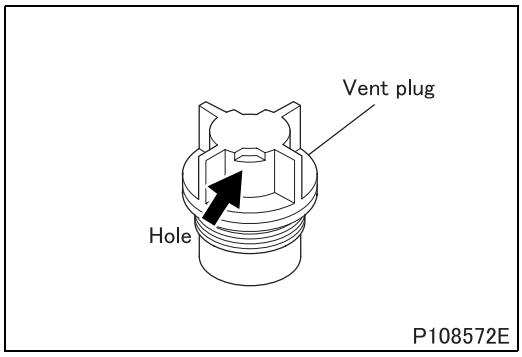

- If vent plug bleed hole is clogged, clean the hole.

https://truckmanualshub.com/

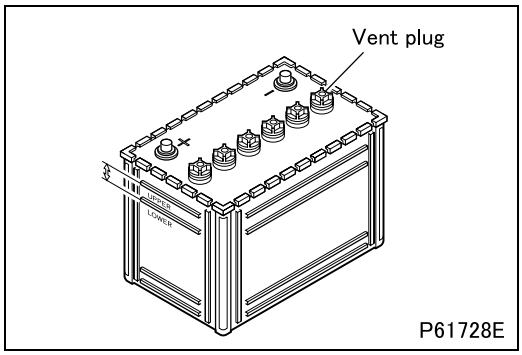

(2) Inspection of fluid level

- Make sure that the battery electrolyte level is between UPPER and LOWER.
- If the level is below LOWER, remove the vent plug and fill the battery with distilled water or battery replenisher to UPPER.

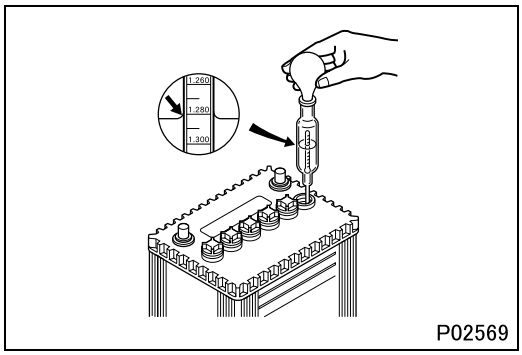

(3) Measurement of specific gravity

Measure the specific gravity of the battery electrolyte. If the measured value is lower than the limit, charge the battery.

NOTE

- **The specific gravity of the battery electrolyte depends on the liquid temperature. Use the following formula to convert the actual value to the value for a temperature of 20°C {68°F}.**

$S^{20} = S^t + 0.0007\ (t–20)$

S^{20} : Specific gravity at a temperature of 20°C {68°F}
S^t : Specific gravity actually measured with the temperature at t°C
t : Temperature of battery electrolyte

https://truckmanualshub.com/

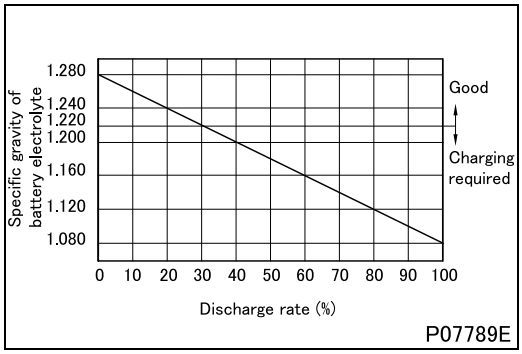

(4) Charging

- Although, as a rule, battery charging should be done with the battery removed from the vehicle, if you have to charge the battery while it is on the vehicle, make sure that you stop the engine and disconnect battery cable (–).
- Remove vent plugs before charging the battery.
- For the recommended charge time and current, see the following table to avoid overcharging.

	Charge current (A)	Charge time (H)	Upper limit of fluid temperature (°C {°F})
Normal charge	Value of 5-hour rating capacity / 10	*Amount of discharge (Ah) / Charge current (A) ×1.2 (to 1.5)	45 {113}
Quick charge	Value of 5-hour rating capacity / 1.5	0.5	55 {131}

* Amount of discharge (Ah) =

$$\text{5-hour rating capacity (Ah)} \times \frac{\text{Amount of discharge (\%)}}{100}$$

- Use the graph shown on the left to calculate the amount of discharge (%).
- Use diluted sulfuric acid, made up of sulfuric acid and refined or distilled water, as the battery electrolyte.

DANGER ⚠

- **Keep naked light away from the battery while charging to prevent explosion.**
- **It is dangerous to generate sparks while charging the battery.**
- **Do not charge battery if the electrolyte level is below LOWER LEVEL, since it can cause early deterioration, heating, or explosion. Make sure to add the fluid to the specified level before charging.**

WARNING ⚠

- **Do not let the battery electrolyte level rise and overflow while charging the battery.**
- **After charging the battery, tighten vent plug, wash away sulfuric acid from the battery using water, and dry the surface.**

https://truckmanualshub.com/

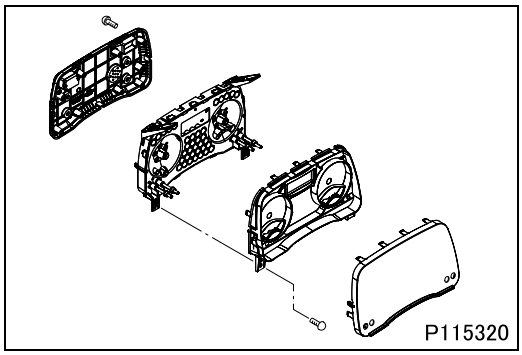

#890 Meter cluster

- Each sensor signal is converted into digital signal in the meter cluster and then the value is indicated by the corresponding meter on the cluster. Therefore, a single meter inspection cannot be performed.
- Check for meter cluster faults with diagnosis codes. (See #986.)

https://truckmanualshub.com/

54-12 STARTER AND ALTERNATOR

https://truckmanualshub.com/

#930 STARTER

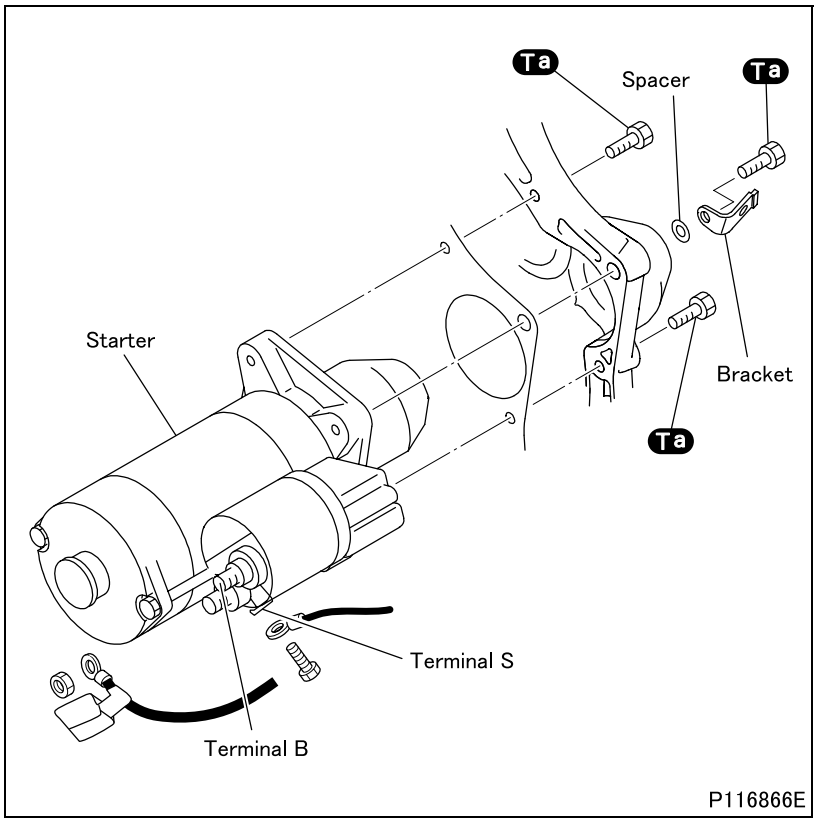

WARNING ⚠

- **Before removing the starter, disconnect the (–) battery cable and insulate the cable and the (–) battery terminal with tape.**
- **It is dangerous to leave the (–) battery cable connected since the battery cable voltage is always present at terminal B.**

Tightening torque (Unit: N·m {ft.lbs, kgf·m})

Mark	Parts to be tightened	Tightening torque	Remarks
Ta	Bolt (starter mounting)	22 to 30 {16 to 22, 2.2 to 3.1}	–

◆Assembly procedure◆

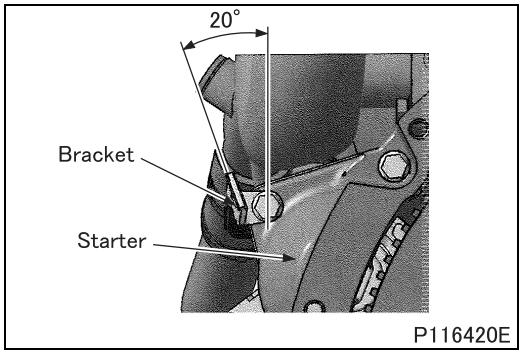

■ Assembly: Bracket

- Install the bracket at the angle shown in the illustration.

https://truckmanualshub.com/

M E M O

https://truckmanualshub.com/

#930 STARTER

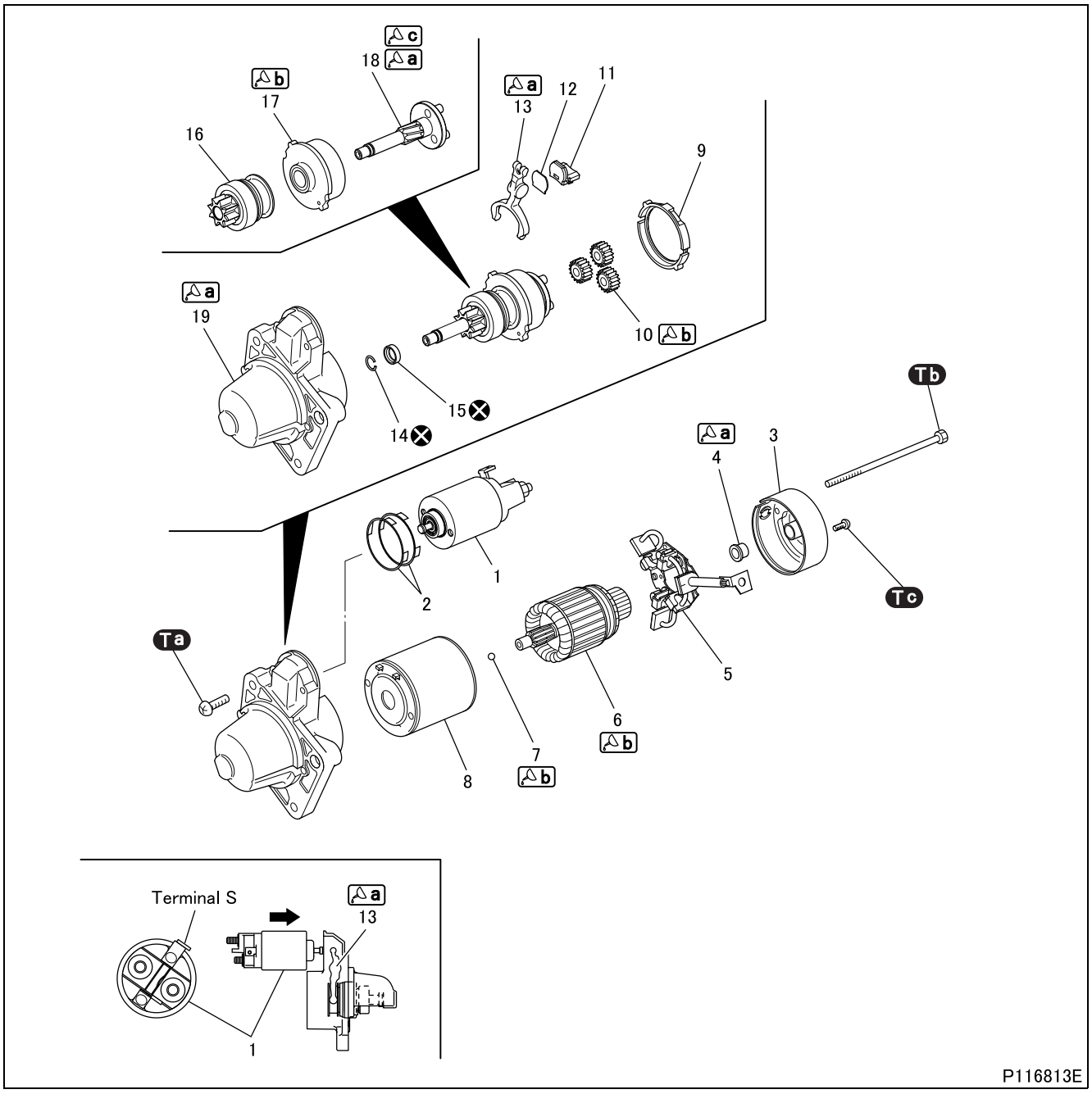

● **Disassembly sequence**

1	Magnetic switch	**8**	Yoke	**15**	Stop ring
2	Shim	**9**	Packing A	**16**	Overrunning clutch
3	Rear bracket	**10**	Planetary gear	**17**	Internal gear
4	Rear bearing	**11**	Packing B	**18**	Planetary gear holder
5	Brush holder	**12**	Plate	**19**	Front bracket
6	Armature	**13**	Lever		
7	Ball	**14**	Snap ring	⊗:	Non-reusable parts

CAUTION ⚠

- **When the armature is removed, the ball may come out with it. Take care not to lose the ball.**

https://truckmanualshub.com/

- Do not remove the rear bearing unless defects are evident.

● Assembly sequence

Follow the disassembly sequence in reverse.

CAUTION ⚠

- **Do not immerse parts in any kind of solvent for cleaning.**
- **Immersing the armature in a solvent will damage the insulation. Wipe parts clean with a cloth.**
- **Immersion cleaning of the drive unit is prohibited.**
- **The overrunning clutch is filled with grease at the factory. Immersion cleaning will wash away the grease from the clutch. To clean the drive unit, use a cleaning solvent-moistened brush and then wipe it dry with a cloth.**

- Whenever the magnetic switch is replaced, the pinion gap must be adjusted.
- The packing A is serviceable if any defect is not found.

Service standards (Unit: mm {in.})

Location	Maintenance item			Standard value	Limit	Remedy
–	Pinion gap			0.5 to 2.0 {0.02 to 0.079}	–	Adjust
–	No-load characteristics	With 11 V applied	Current	120 A or less	–	Correct or replace
			Rotation speed	2870 rpm or higher	–	
4,6	Difference between inside diameter of rear bearing and outside diameter of armature shaft			0.1 {0.0039} or less	–	Replace
5	Brush spring pressure			23.4 to 31.6 N {5.3 to 7.1 lbs, 2.4 to 3.2 kgf}	10 N {2.2 lbs, 1.0 kgf}	Replace
	Brush length			17.6 {0.69}	12.1 {0.48}	Replace
6	Commutator outside diameter			29.4 {1.16}	28.8 {1.13}	Replace
	Runout of commutator periphery			–	0.1 {0.0039} or higher	
	Mold depth between segments			0.5 {0.02}	0.2 {0.0079} or less	Correct or replace
13	Overrunning clutch contact surface of lever			8 {0.31} or higher	–	Replace

Tightening torque (Unit: N·m {ft.lbs, kgf·m})

Mark	Parts to be tightened	Tightening torque	Remarks
Ta	Screw (magnetic switch mounting)	4.1 to 7.6 {3.0 to 5.6, 0.4 to 0.8}	–
Tb	Through bolt (rear bracket mounting)	5.0 to 7.1 {3.7 to 5.2, 0.5 to 0.7}	–
Tc	Screw (rear bracket mounting)	2.4 to 4.4 {1.8 to 3.2, 0.2 to 0.4}	–

https://truckmanualshub.com/

Lubricant and/or sealant

Mark	Points of application	Specified lubricant and/or sealant	Quantity
a	Armature contact surface of rear bearing	Multipurpose grease [NLGI No. 2 (Li soap)]	As required
	Sliding surfaces of lever and overrunning clutch and lever supporting point		
	Internal gear contact surface and spline of planetary gear holder		
	Gear shaft contact surface of front bracket		
b	Sliding surfaces of armature and gear shaft	Molykote AG650	As required
	Ball		
	Teeth of planetary gear		
	Internal gear and gear shaft contact surfaces		
c	Splines of planetary gear holder	Multemp OA-171 (Kyodo Yushi Co., Ltd.)	As required

◆Work before disassembly◆

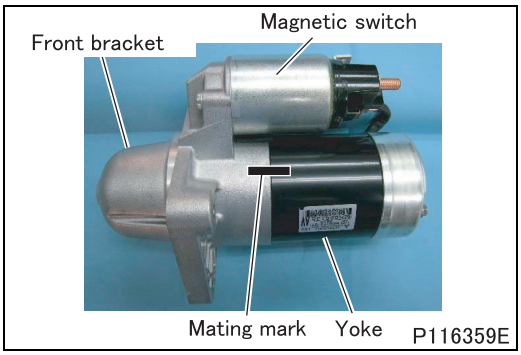

■ **Mating mark: Front bracket and yoke**

CAUTION ⚠

- **Make sure that the motor body is free of damage and that the magnet switch terminals S, B and M are normal.**

CAUTION ⚠

- **A permanent magnet is used in the field section. Do not strike at the yoke hard with a hammer or equivalent, drop it nor squeeze it with a vise.**

◆Disassembly procedure◆

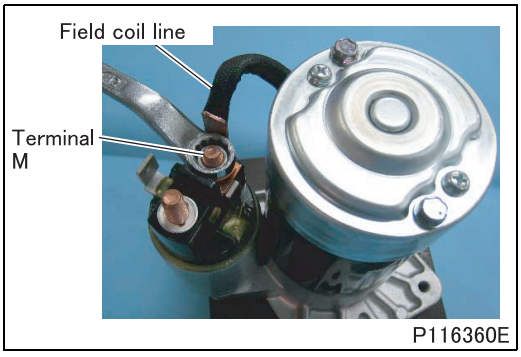

■ **Disassembly: Magnet switch**

- Remove the terminal M nut from the magnet switch and disconnect the field coil line.

https://truckmanualshub.com/

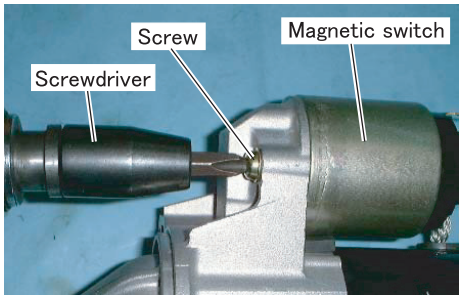

P116361E

- Remove screws and remove the magnet switch.

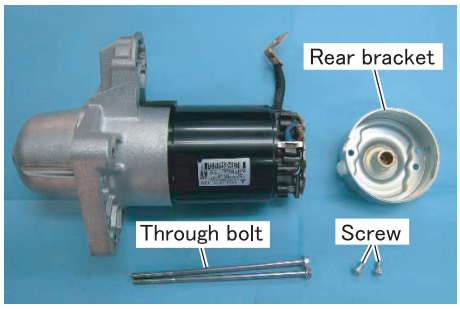

P116362E

■ **Disassembly: Rear bracket**

- Remove through bolts and screws, and then remove the rear bracket.

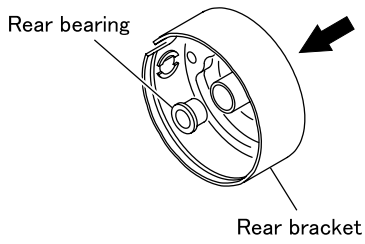

P116428E

■ **Disassembly: Rear bearing**

- To remove the rear bearing, press it out of the rear bracket using a round bar slightly thinner than the bearing and a hand press to apply force from outside of the rear bracket.

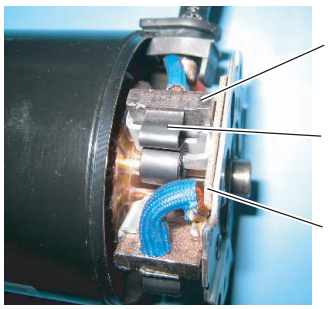

P116363E

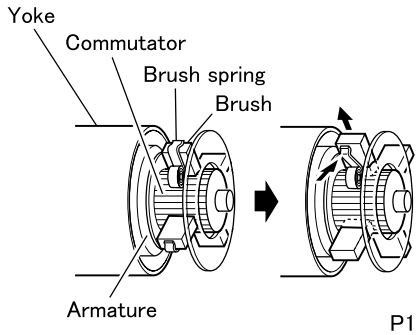

P116417E

■ **Disassembly: Brush holder, armature and yoke**

- Separate the brushes from the commutator. Then, hold each brush with the brush spring applied against the flank of brush.

https://truckmanualshub.com/

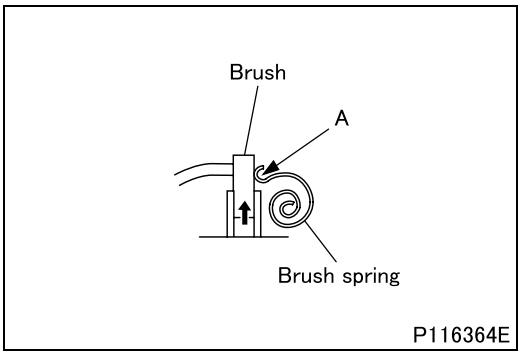

- Pull the brush spring at A to draw up the brush.
- Hold the drawn-up brush with the brush spring as shown.

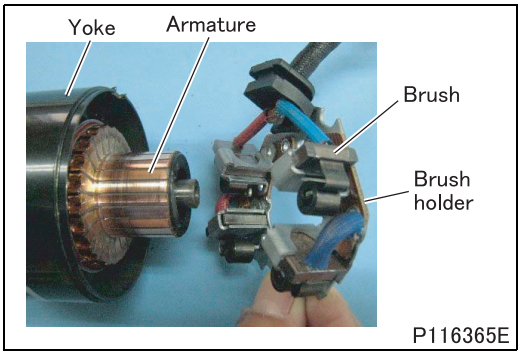

- With the brushes held, remove in this order: the brush holder, armature and yoke.

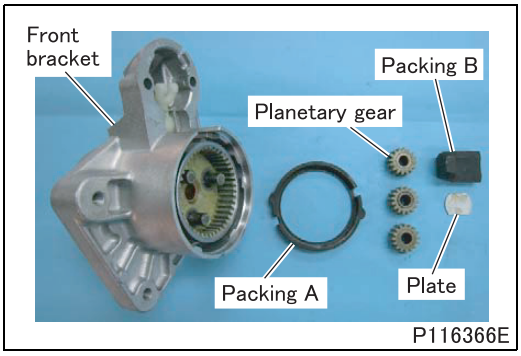

■ **Disassembly: Packing A, B, plate and planetary gear**

- Remove packing A, three planetary gears, packing B and plate from the front bracket.

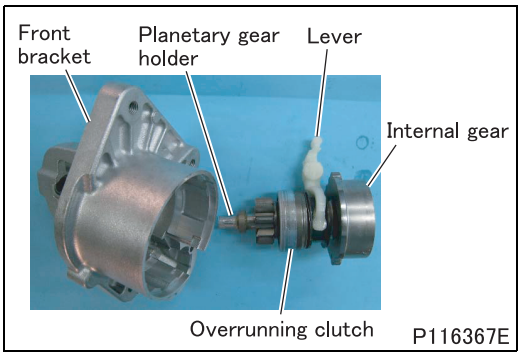

■ **Disassembly: Planetary gear holder, internal gear, overrunning clutch and lever**

- Remove the planetary gear holder, internal gear, overrunning clutch and lever from the front bracket.

CAUTION ⚠

- **Confirm the lever direction before removal.**

https://truckmanualshub.com/

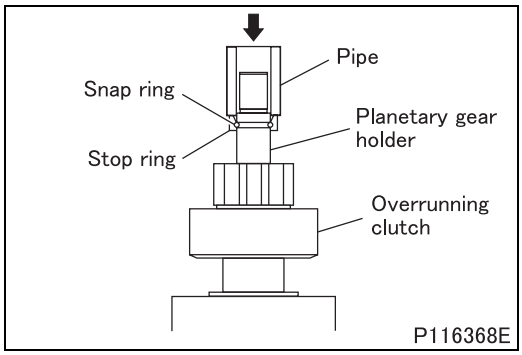

- Apply a pipe of the same size to the stop ring, and then hammer the pipe moderately to release the stop ring from the snap ring.

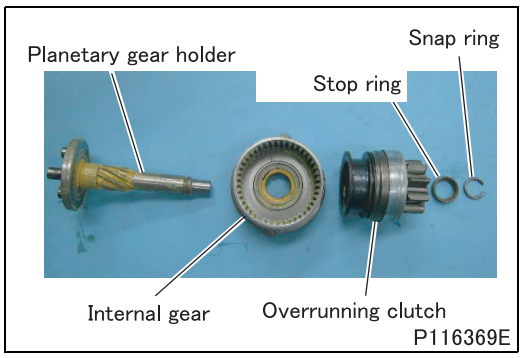

- Remove the snap ring, stop ring, overrunning clutch and internal gear from the planetary gear holder.

◆Inspection procedure◆

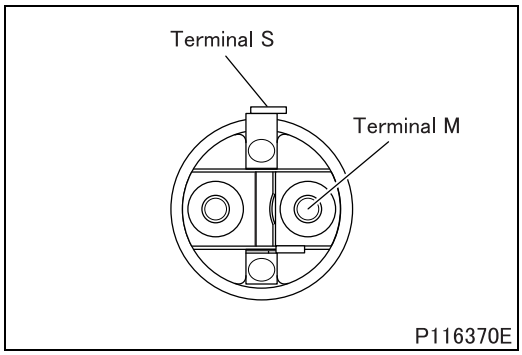

■Inspection: Magnetic switch

- Perform the following checks, and if any fault is found, replace the switch.

(1) Test for coil open circuit

- Confirm that continuity exists between terminals S and M.

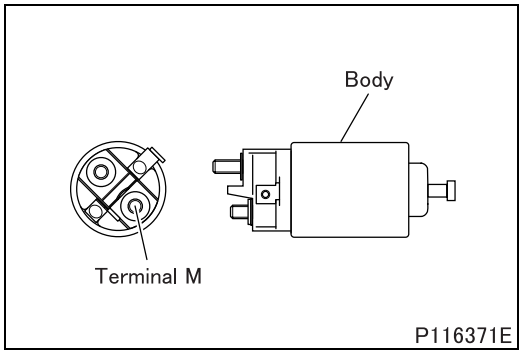

- Confirm that continuity exists between terminal M and the body.

https://truckmanualshub.com/

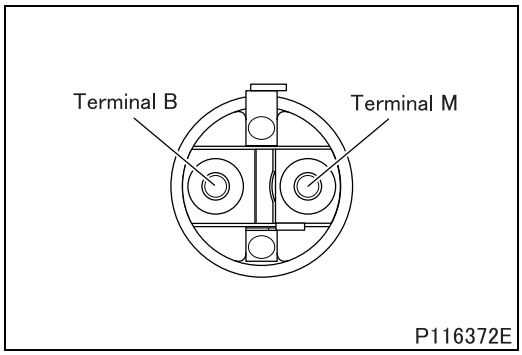

(2) Test for fused-together contacts

- Confirm that continuity does not exist between terminals B and M.

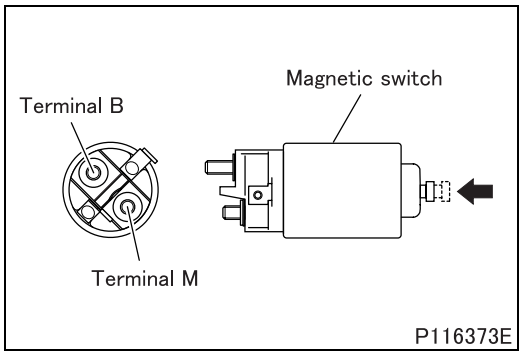

(3) Test for contact-to-contact continuity

- Push in the end of the magnetic switch to close the internal contacts. Then, confirm that continuity exists between terminals B and M.

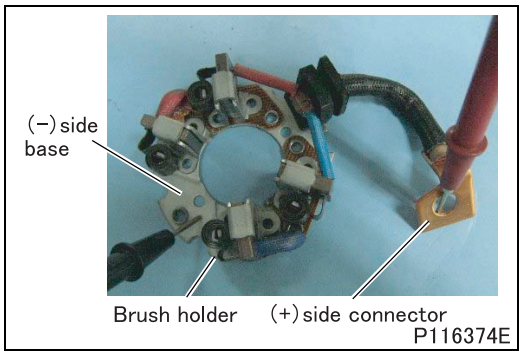

■Inspection: Brush holder

(1) Test for insulation

- Thoroughly clean the (+) side connector and (–) side base and check for continuity between them.
- If continuity exists, there is a short circuit and the brush holder must be replaced.

(2) Manual and visual inspections

- Perform the following inspections. If any fault is found, replace the brush holder.
  - The brush holder should be free of deformation, cracks, loosening of swaged joints and rusted base.
  - The brushes should be able to move smoothly in the brush holder.
  - The brush springs should be free of rust.

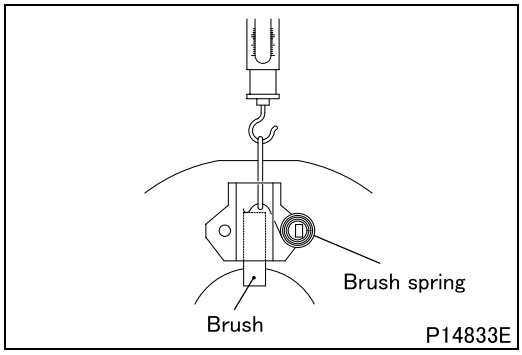

■ Inspection: Brush spring

- Using new brushes, measure the load required to separate each brush spring from its brush.
- If either measurement is lower than the specified limit, replace the brush springs.

https://truckmanualshub.com/

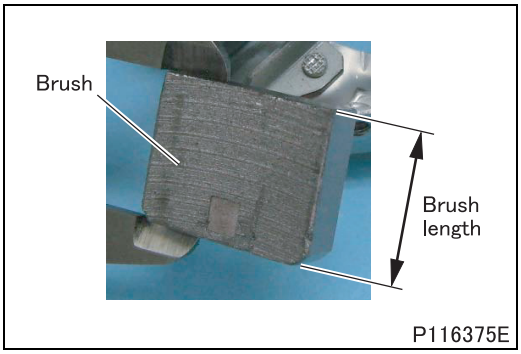

■**Inspection: Brush (+) (–)**

- If either brush is shorter than the limit, it must be replaced.

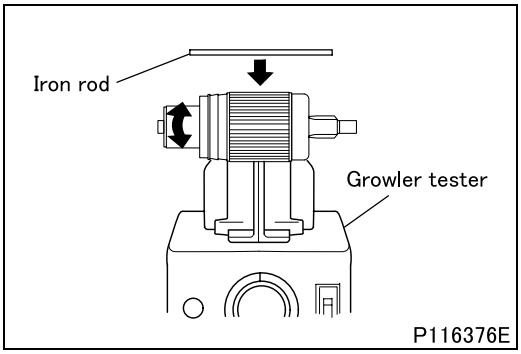

■ **Inspection: Armature**

(1) Test for coil short circuit

- Hold an iron rod parallel with the armature.
- Slowly rotate the armature by hand.
- If the iron rod vibrates or is pulled toward the armature, the coil is short-circuited and the armature must be replaced.

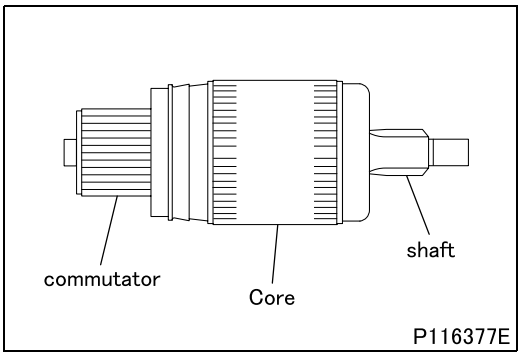

(2) Test for coil grounding

- Confirm that continuity does not exist between the commutator and the core (or shaft).
- If continuity exists, the coil is grounded and the armature must be replaced.

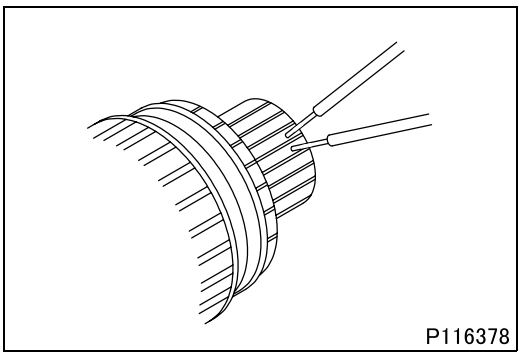

(3) Test for coil open circuit

- Check for continuity between commutator segments.
- If continuity does not exist, replace the armature.

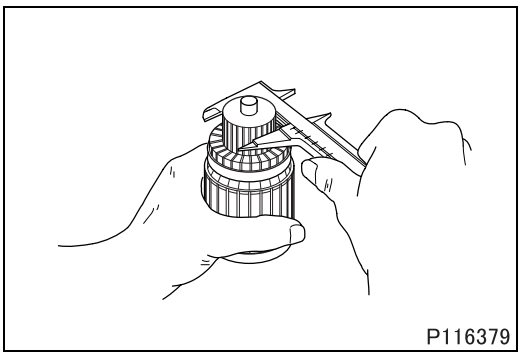

(4) Commutator outside diameter

- If the measurement is out of specification, replace the armature.

https://truckmanualshub.com/

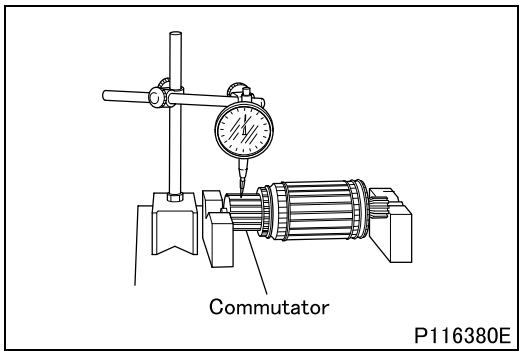

(5) Runout of commutator periphery

- If the reading exceeds the specified limit, rectify the commutator of the armature, making sure the outside diameter stays within specification.

(6) Condition of commutator surface

- If the surface is rough or has stepped wear, rectify it with emery paper (#300 to 500).
- After rectifying the surface, check the extent of commutator runout.

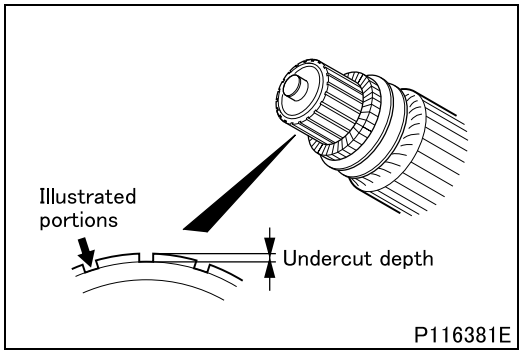

(7) Undercut depth between segments

- If the measurement is lower than the specified limit, rectify or replace the armature.
- To rectify the armature, grind the illustrated portions.

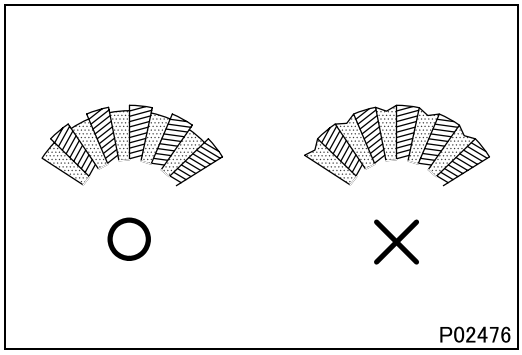

- If the undercut is worn as illustrated, rectify or replace the armature.

○: Acceptable
×: Unacceptable

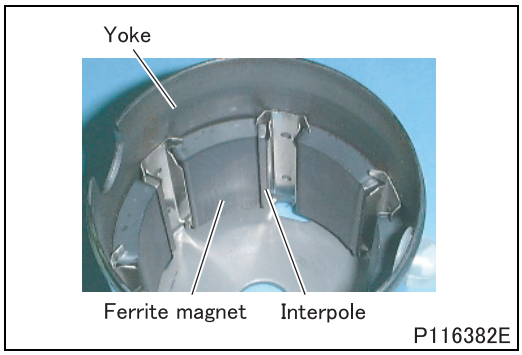

■ Inspection: Yoke

- Inspect the ferrite magnet in the yoke for damages and cracks. If any fault is found, replace the yoke.

https://truckmanualshub.com/

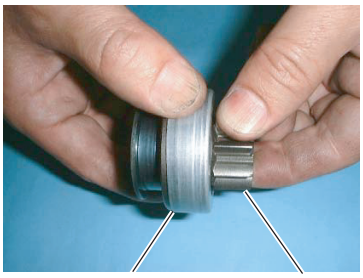

P116383E

■ **Inspection: Overrunning clutch**

If the following inspections reveal any abnormality, replace the overrunning clutch.

- While holding the housing, give a turn to the pinion. The pinion should not turn at all in one direction but should turn smoothly in the other direction with some resistance felt.
- Confirm that the pinion teeth are free of chips and not abnormally worn.
- Confirm that the pinion metal is not abnormally worn.

CAUTION ⚠

- **The overrunning clutch is filled with grease inside. Do not use immersion cleaning.**

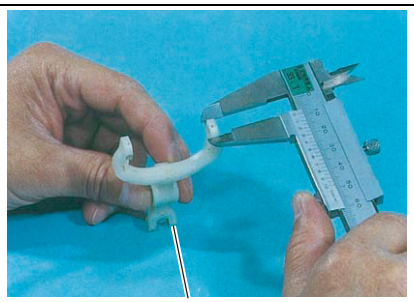

P116384E

■ **Inspection: Lever**

- Measure the overrunning clutch contact surface of the lever to see if it meets the standard value.
- If the measurement is out of the standard value, replace the lever.

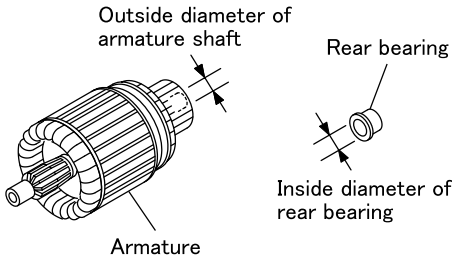

P116385E

■ **Inspection: Rear bearing**

- Confirm that the difference between the inside diameter of the rear bearing and outside diameter of the armature shaft meets the standard value.
- If the measurement is out of the standard value, replace the rear bearing.

◆Assembly procedure◆

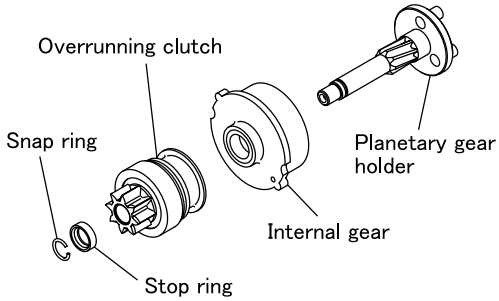

P116860E

■ **Assembly: Planetary gear holder, internal gear and overrunning clutch**

- Install the internal gear, overrunning clutch and stop ring onto the planetary gear holder.

https://truckmanualshub.com/

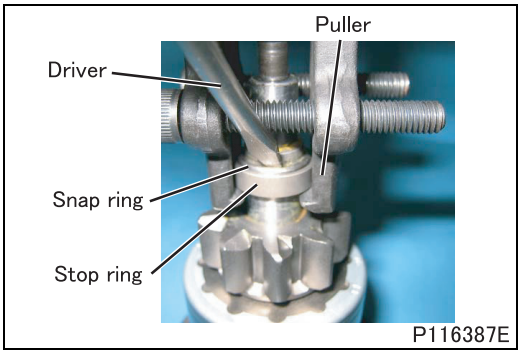

- Set a new snap ring in the groove of the planetary gear holder.
- Using a puller, draw the stop ring toward the snap ring and then fit the snap ring into the stop ring by pressing with a screwdriver.

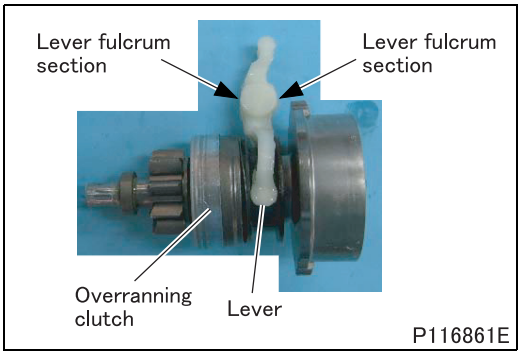

■ Assembly: Lever

- Paying attention to its direction, install the lever onto the over-running clutch.

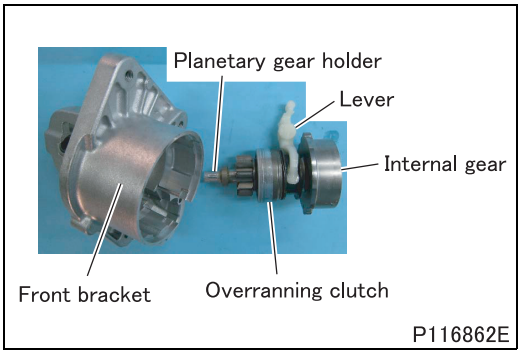

■ Assembly: Front bracket

- Install the planetary gear holder, internal gear, overrunning clutch and lever on the front bracket.

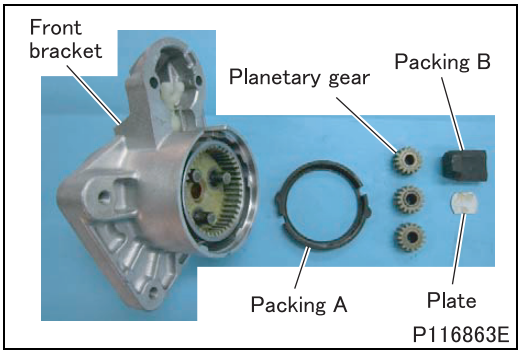

■ Assembly: Packing A, B, plate and planetary gear

- Install in this order: plate, packing B, three planetary gears and packing A.

https://truckmanualshub.com/

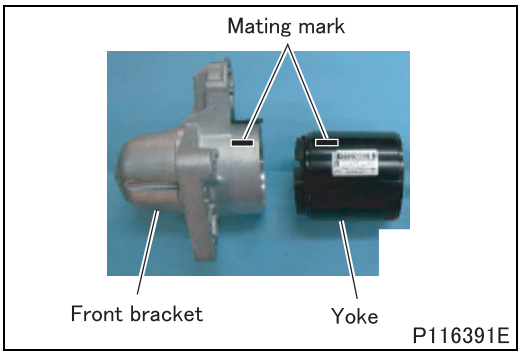

■ **Assembly: Front bracket and yoke**

- Using the mating marks provided before disassembly for alignment, install the yoke to the front bracket.

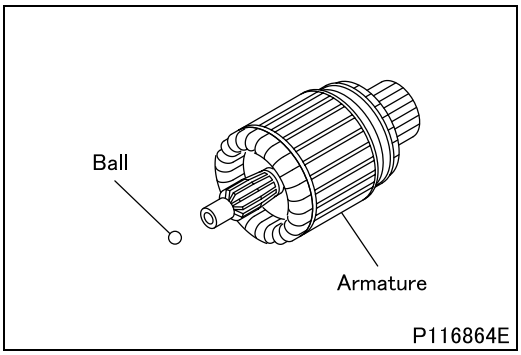

■ **Assembly: Ball and armature**

- Insert the ball, and then install the armature on the planetary gear holder side.

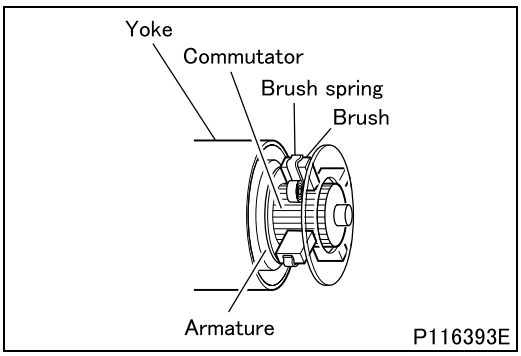

■ **Assembly: Brush holder**

- Install the brush holder on the armature.
- Set the brush springs in the regular state.

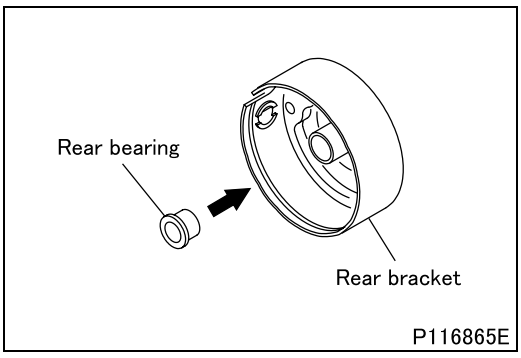

■ **Assembly: Rear bearing and rear bracket**

- Install the rear bearing to the rear bracket.

https://truckmanualshub.com/

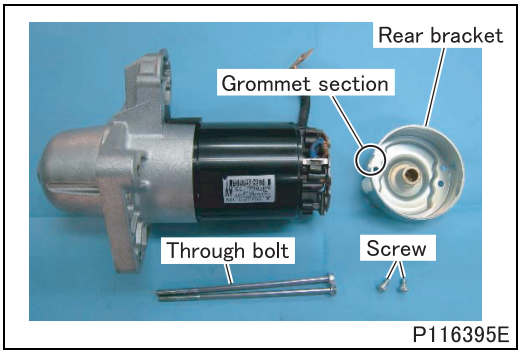

P116395E

- Install the rear bracket on the yoke. Make sure that the parts are fitted at the grommet section of the rear bracket.
- Tighten the through bolts and screws.

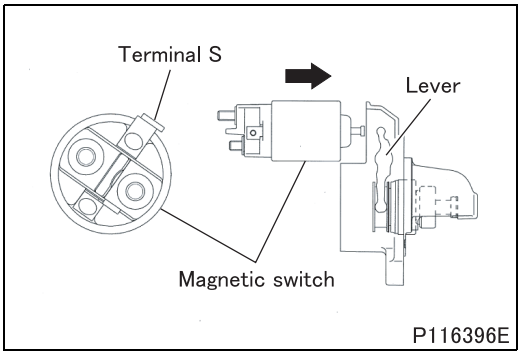

P116396E

■ **Assembly: Magnetic switch**

- Install the magnet switch onto the lever with its terminal S in the illustrated direction.

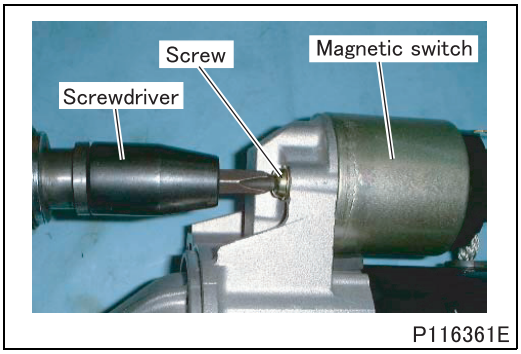

P116361E

- Tighten the screws.

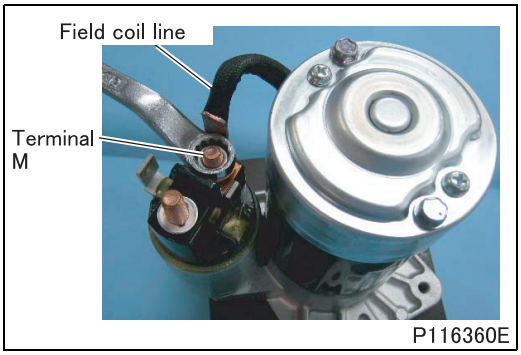

P116360E

- Connect the field coil line to terminal M of the magnet switch, and then tighten the nut.

https://truckmanualshub.com/

◆Inspection after assembly◆

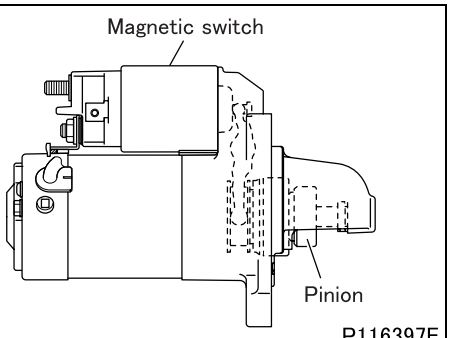

P116397E

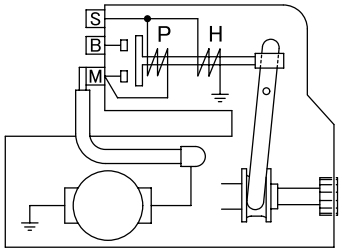

P14257

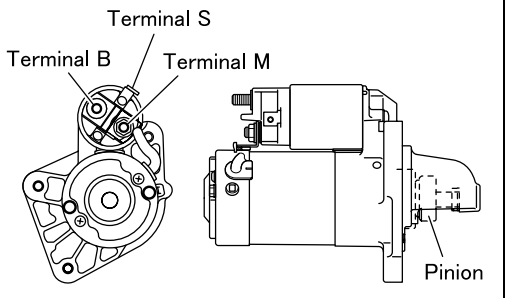

P116398E

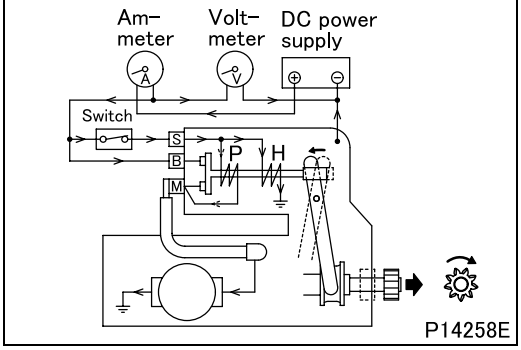

P14258E

■ **Inspection: Performance and pinion gap**

- After assembling the starter, perform inspections with current supplied to it.

WARNING ⚠

- **When the starter is energized, the pinion will spring out and rotate. Be careful not to touch it with your hands.**
- **The magnetic switch may become very hot during inspections. Be careful when touching it.**

CAUTION ⚠

- **Do not energize the pull-in coil P for longer than 10 seconds, and do not energize the holding coil H for longer than 30 seconds. If these periods are exceeded, the coils may overheat and burn out.**
- **When current is supplied to the starter, a large current (100 A or higher) will flow. For inspection purposes, booster cables or similarly thick cables must therefore be used. It is also important to ensure that all connections are secure.**

(1) Performance test

- Connect the starter as illustrated.
- Set the voltage to 11 volts DC.

CAUTION ⚠

- **The voltage applied must not exceed 12 V.**

- The following operations are performed with current supplied to the starter. Thus, the entire test (consisting of measurement of the current flowing through the starter and measurement of the starter's rotational speed) must be completed within 30 seconds.
  - Turn ON the switch to supply current to the starter. The pinion will spring out and rotate.

CAUTION ⚠

- **When the switch is turned ON, the pull-in coil P and holding coil H are both energized. When the large current from the DC power supply flows from terminal B to terminal M, the supply of current to the pull-in coil P is cut; only the holding coil H remains energized. To prevent the holding coil from burning out, it is essential to complete all operations within 30 seconds.**

  - Measure the current, then measure the starter's rotational speed with a digital tachometer.
  - Turn OFF the switch to de-energize the starter.
- If either measurement is out of specification, disassemble and inspect the starter again.

https://truckmanualshub.com/

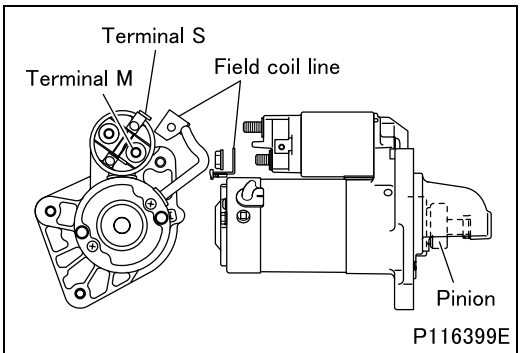

P116399E

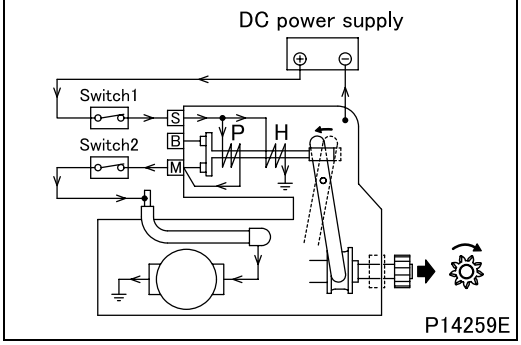

P14259E

(2) Pinion gap

- Connect the starter as illustrated.
- The following operations are performed with current supplied to the starter. Thus, the entire procedure for measurement of the pinion gap must be completed within 30 seconds.
  - Turn ON switches 1 and 2 to supply current to the starter. The pinion will spring out and rotate.

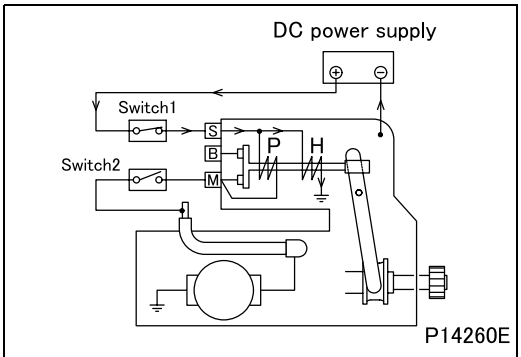

P14260E

  - After the pinion starts to rotate, quickly (within five seconds) turn OFF switch 2 to stop the pinion's rotation.

CAUTION ⚠

- **When switches 1 and 2 are turned ON, the pull-in coil P and holding coil H are both energized. The circuit is connected such that no voltage is applied to starter terminal B, so current flows to the pull-in coil while the pinion rotates. To prevent the pull-in coil from burning out, it is essential to turn OFF switch 2 quickly (within five seconds) after the pinion starts to rotate.**

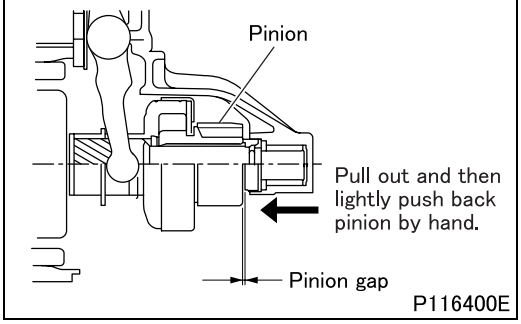

P116400E

  - Pull out the end of the pinion by hand, and then lightly push it back by hand. Measure the amount of axial movement (pinion gap).
  - Turn OFF switch 1 to de-energize the starter.
- If the measurement is out of specification, replace the lever.

https://truckmanualshub.com/

M E M O

https://truckmanualshub.com/

#940 ALTERNATOR

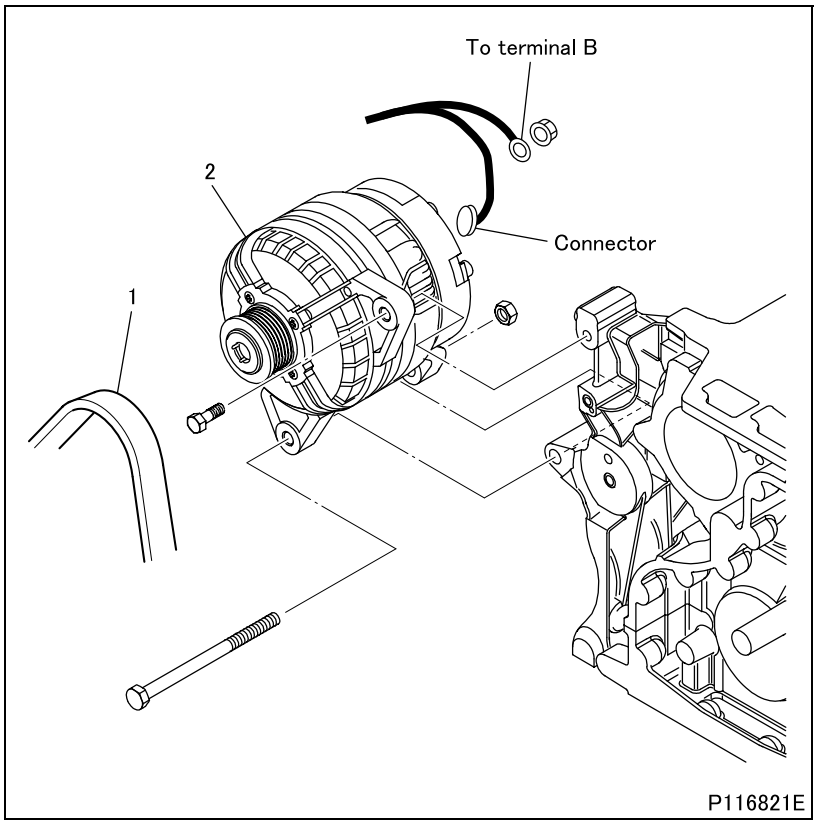

● **Removal sequence**

1 Belt
2 Alternator

WARNING ⚠

- **Before removing the alternator, disconnect the (–) battery cable and insulate the cable and the (–) battery terminal with tape.**
- **It is dangerous to leave the (–) battery cable connected since the battery cable voltage is always present at terminal B.**

● **Installation sequence**

Follow the removal sequence in reverse.

Service standards

Location	Maintenance item			Standard value	Limit	Remedy
2	Alternator output current (*when alternator is hot and producing 13.5 V)	110A	At 1800 rpm	55 A or more	–	Correct or replace
			At 6000 rpm	110 A or more	–	
		140A	At 1800 rpm	75 A or more	–	
			At 6000 rpm	140 A or more	–	
	Adjustment voltage of regulator (at 6000 rpm, 5 A is loaded)			14.5 ± 0.25 V	–	Replace

* The hot condition occurs after the alternator has been running at normal ambient temperature at 6000 rpm and maximum output for 30 minutes.

https://truckmanualshub.com/

◆Inspection procedure◆

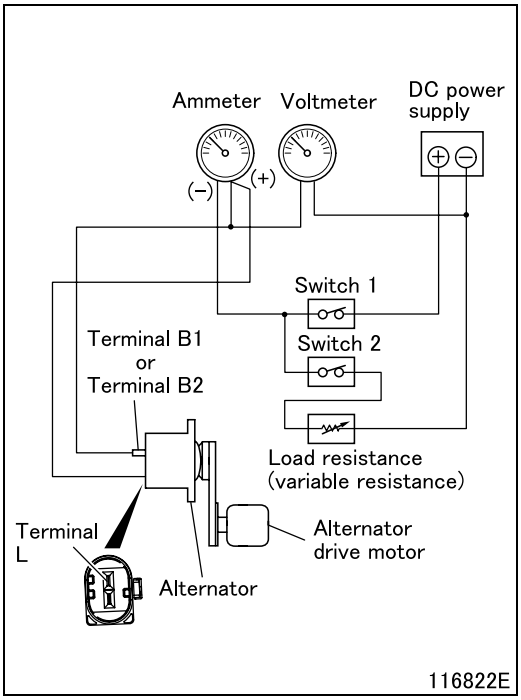

■ **Inspection: Alternator**

(1) Alternator output current (bench test)

- Connect the alternator as illustrated.

CAUTION ⚠

- **Wires with sufficient thickness should be used for wiring and each connection should be securely fastened.**

- Increase load resistance to the maximum (condition under which the load current hardly flows).
- Turn switch 1 and 2 ON.
- Run alternator at 6000 rpm for 30 minutes by adjusting load resistance so that electric current can conform to the following standard.
  Alternator nominal current

Alternator	Current
110A	Approx. 110A
140A	Approx. 140A

- Measure the current at each specified revolution of alternator.
- If the measured value is lower than the standard value, disassemble and check alternator.

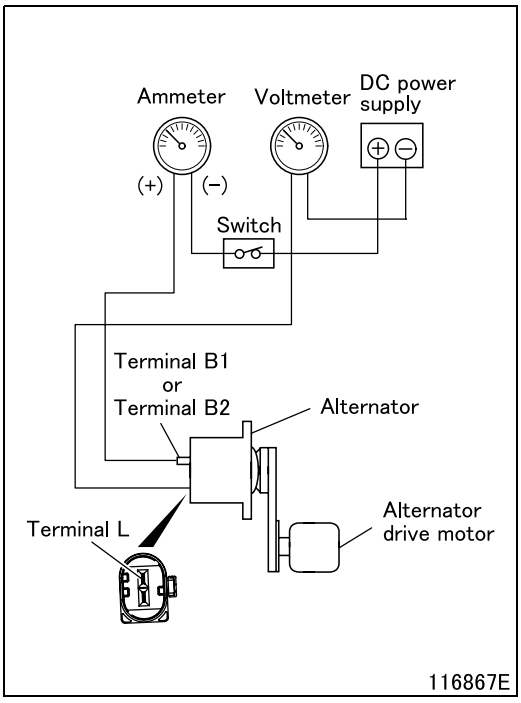

(2) Adjustment voltage of regulator (bench test)

- Connect the alternator as illustrated.
- Turn switch ON.
- Run alternator at low speeds.
- Increase the speed of alternator to 6000 rpm and measure the voltage (adjustment voltage) at this speed. At the same time, make sure that the current is 5 amperes or less at 6000 rpm.
- If the measured value deviates from the standard value, do as follows:
  - If higher than the standard value: Replace the regulator.
  - If lower than the standard value: Inspect the alternator related parts before replacing the regulator.

https://truckmanualshub.com/

54-13 ON-VEHICLE INSPECTION AND ADJUSTMENT

https://truckmanualshub.com/

#950 INSPECTION OF ALTERNATOR

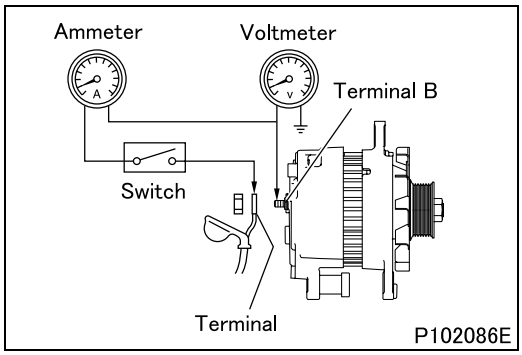

Performance test

- The on-vehicle inspection is only a simplified check. Use a test bench for accurate checking.
- Connect the meters to the alternator as shown.

WARNING ⚠

- **To prevent possible injury, be sure to disconnect the negative battery cable and insulate the cable and the negative battery terminal with tape before working on the wiring. With the negative (–) battery cable connected, battery voltage is always applied to terminal B.**
- **To connect to switch, use a lead wire with the same or larger diameter than that of the chassis harness connected to terminal B.**

- Turn on switch and make sure that voltmeter indicates battery voltage.
- Start the engine.
- Immediately turn on the switches for all lamps on the vehicle.
- Immediately accelerate the engine to the speed indicated below and measure the alternator's output current.
  Approx. 2200 rpm
- The alternator is considered to be good if the measured value is 70% or more of the nominal output current.
  Alternator nominal output

Voltage	Output current
12 V	110 A
12 V	140 A

https://truckmanualshub.com/

Service standards

Location	Maintenance item	Standard value		Limit	Remedy
–	Adjusting voltage	12V-110A	14.5 ± 0.2 V	–	Replace
		12V-140A	14.5 ± 0.25 V		

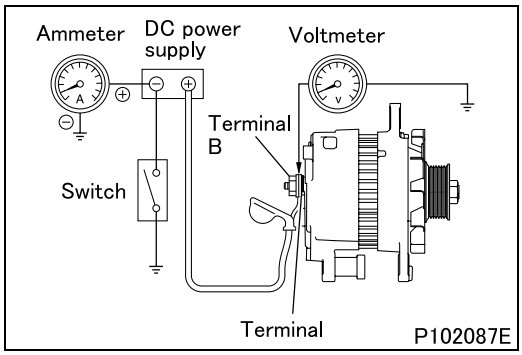

- Connect the meters to the alternator as shown.

WARNING ⚠

- **To prevent possible injury, be sure to disconnect the negative battery cable and insulate the cable and the negative battery terminal with tape before working on the wiring. With the negative (–) battery cable connected, battery voltage is always applied to terminal B.**
- **To connect to switch, use a lead wire with the same or larger diameter than that of the chassis harness connected to terminal B.**

- Turn off the switches for lamps, heater, etc. so that electric loads may not be applied during the inspection.
- Turn on switch and then start the engine.
- If the output current is 5 amperes or less when the engine speed is raised to the appropriate speed indicated below, then measure the voltage at terminal B.
  Approx. 2200 rpm
- If the output current is not less than 5 amperes, the measured value (regulated voltage) will be slightly lower.
- If the output current is 5 amperes or more, do one of the following:
  - Run the engine for a while to charge the battery.
  - Replace the battery with a fully-charged one.
- If the measured value deviates from the standard value, conduct checking again on the test bench.

https://truckmanualshub.com/

#960 HEADLAMP AIMING

1. Preparation for Aiming

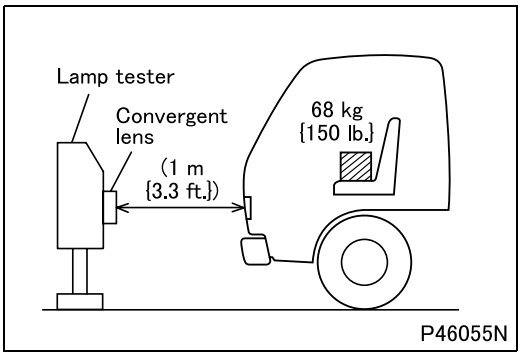

- Park the vehicle on a level flat place and apply chocks to the wheels.
- Empty the vehicle.
- Adjust the tire inflation pressure to the specified value.
- Place a mass of 68 kg {150 lb} (corresponding to a mean weight of one man) on the driver's seat.
- On vehicles with headlamp leveling device, set the headlamp leveling switch to 0.
- Start the engine to charge the battery.
- Locate a lamp tester at a place opposite to the vehicle front end face as illustrated.

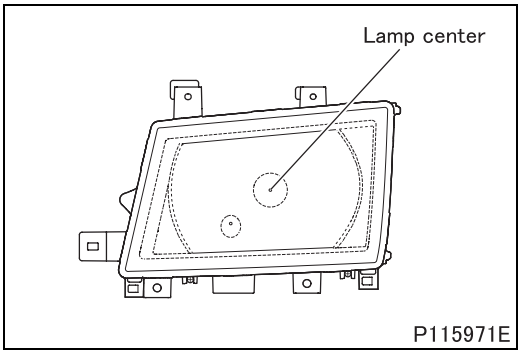

- Turn on the headlamps and aim the headlamps such that the passing beam lamp center is aligned with the beam convergent lens center of the lamp tester. (Shown here is the left-hand headlamp.)
- Mask other lamps than that next subjected to adjustment in such a way that no light may leak.

CAUTION ⚠

- **Headlamp lenses are made of plastic. Do not keep the masked headlamps illuminated for longer than 2 minutes. Sustained illumination of these lamps can cause heat generation, possibly resulting in deformed headlamp lens.**

2. Aiming

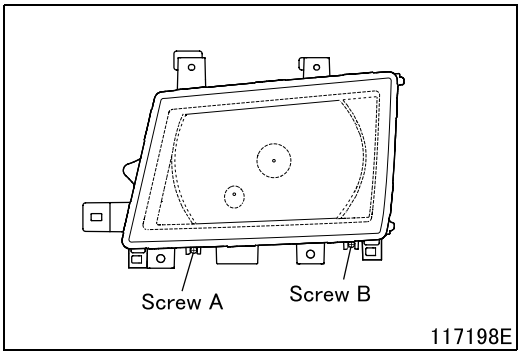

2.1 Adjustment of passing beam

- Turn on the passing beam.
- Perform the following procedure to adjust the passing beam such that the elbow point of the cut-off line between the lighted and shaded areas is positioned as shown in the figure:
- Adjustment in vertical direction: Turn screws A and B the same amount in this order.
- Adjustment in horizontal direction: Turn screw B.

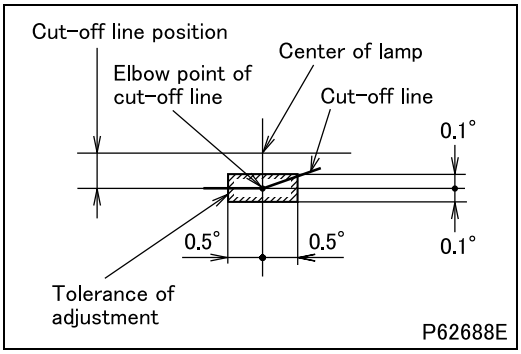

- The position of the cut-off line between the lighted and shaded areas must correspond to the adjustment value.

https://truckmanualshub.com/

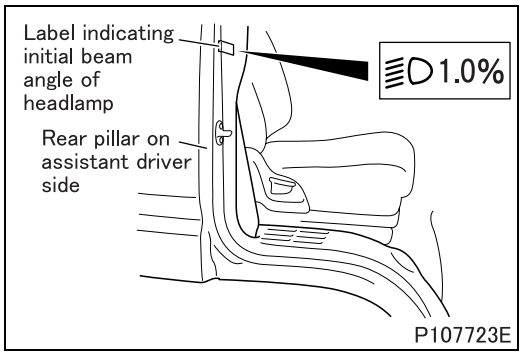

- The adjustment value can be known from the headlamp initial beam angle indication label attached on the rear pillar on assistant driver side.
  The label shows the light beam inclination in percentage (%). The inclination of 1% is equivalent to an ascent (descent) of 1 m {3.3 ft.} per a travel distance of 100 m {330 ft.}.
  To adjust the beam inclination, therefore, the specified value in percentage must be converted into that in angle.

	Adjustment value	
	Value on label indicating initial beam angle of headlamp	Beam inclination adjustment angle
FE	1.0%	0.57°
FG	1.5%	0.86°

	Beam adjustment direction							
	Right-hand headlamp				Left-hand headlamp			
	Up	Down	Left	Right	Up	Down	Left	Right
Screw A	CCW	CW	–	–	CCW	CW	–	–
Screw B	CCW	CW	CCW	CW	CCW	CW	CW	CCW

https://truckmanualshub.com/

#961 FOG LAMP AIMING

1. Preparation for Aiming

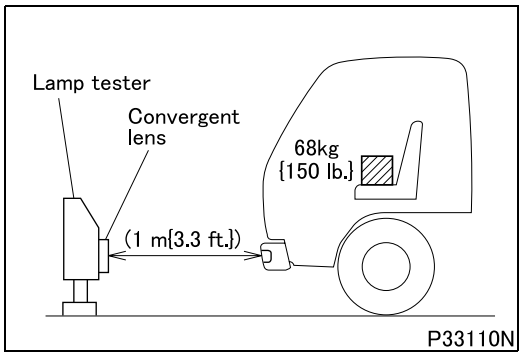

- Park the vehicle on a level flat place and apply chocks to the wheels.
- Empty the vehicle.
- Adjust the tire inflation pressure to the specified value.
- Place a mass of 68 kg {150 lb} (corresponding to a mean weight of one man) on the driver's seat.
- Start the engine to charge the battery.
- Locate a lamp tester at a place opposite to the vehicle front end face as illustrated.
- Mask other lamps than that next subjected to adjustment in such a way that no light may leak.

CAUTION ⚠

- **Fog lamp lenses are made of plastic. Do not keep the masked fog lamp illuminated for longer than 2 minutes. Sustained illumination of these lamps can cause heat generation, possibly resulting in deformed fog lamp lens.**

2. Aiming

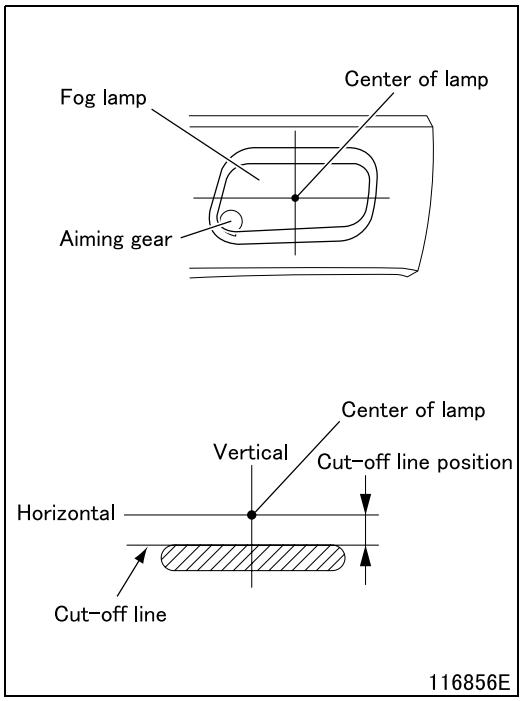

- Turn on fog lamp.
- Make adjustment with the aiming gear to bring for lamp cut-off line into the illustrated position.

Cut-off line position	Standard value
	1.5% or less

	Adjusting direction for optical axis	
	Upward	Downward
Screwdriver rotation direction	Clockwise	Counter-clockwise

https://truckmanualshub.com/

M E M O

https://truckmanualshub.com/

#984 INSPECTION OF IMMOBILIZER

- Since the FUSO diagnostics data are updated from time to time, descriptions or wording may not agree with the workshop manual. The FUSO diagnostics will have the latest data.

1. List of Diagnosis Codes

Code	Message	Warning lamp indication 	Remarks
521742-12	Immobilizer fault	O	
521742-31	Watchdog reset	O	
521743-2	Missing transponder modulation	O	
521744-2	Invalid secret key	O	
521745-2	Bad ECM authentication	O	
521746-2	No ECM challenge/acknowledge	O	
521747-2	Transponder authentication failed	O	
521748-2	Transponder ID table empty	O	
521749-2	Transponder data format error	O	
521750-19	CAN bus performance	O	
521750-31	Lost communication with SAM	O	

2. Details of Diagnosis Codes

521742-12: Immobilizer fault

Generation condition	• Some abnormality has occurred in immobilizer electronic control unit.
Recoverability	• System recovers when relevant diagnosis code is erased.
Control effected by electronic control unit	• Engine is disabled from starting.
Possible causes	• Defective immobilizer electronic control unit

521742-31: Watchdog reset

Generation condition	• CPU has been reset.
Recoverability	• System recovers if no abnormal conditions are present when starter switch is placed in ON again.
Control effected by electronic control unit	• None
Possible causes	• Defective immobilizer electronic control unit

521743-2: Missing transponder modulation

Generation condition	• No communication takes place between transponder key (starter key) and immobilizer electronic control unit.
Recoverability	• System recovers if no abnormal conditions are present when starter switch is placed in ON again.
Control effected by electronic control unit	• Engine is disabled from starting.
Possible causes	• Defective transponder key (starter key) • Defective harness between immobilizer antenna and immobilizer electronic control unit • Defective immobilizer antenna • Defective immobilizer electronic control unit

https://truckmanualshub.com/

521744-2: Invalid secret key

Generation condition	• Secret key is not registered in immobilizer electronic control unit.
Recoverability	• None
Control effected by electronic control unit	• Engine is disabled from starting.
Possible causes	• Defective immobilizer electronic control unit

521745-2: Bad ECM authentication

Generation condition	• Collation between engine electronic control unit and immobilizer electronic control unit is not successfully made.
Recoverability	• System recovers if collation is made successfully when starter switch is placed in ON again.
Control effected by electronic control unit	• Engine is disabled from starting.
Possible causes	• Defective engine electronic control unit • Incorrect engine electronic control unit in use • Engine electronic control unit transferred from another vehicle

521746-2: No ECM challenge/acknowledge

Generation condition	• No communication is possible between engine electronic control unit and immobilizer electronic control unit.
Recoverability	• System recovers if normal communication is established when starter switch is placed in ON again.
Control effected by electronic control unit	• Engine is disabled from starting.
Possible causes	• Defective engine electronic control unit • Controller area network communication line is open or short-circuited to power, ground or another circuit. • Incorrect engine electronic control unit in use

521747-2: Transponder authentication failed

Generation condition	• Collation between transponder key (starter key) and immobilizer electronic control unit is made unsuccessfully.
Recoverability	• System recovers if collation is made successfully when starter switch is placed in ON again.
Control effected by electronic control unit	• Engine is disabled from starting.
Possible causes	• Unauthorized transponder key (starter key) is used. • Transponder key (starter key) not registered yet is used.

521748-2: Transponder ID table empty

Generation condition	• Transponder key (starter key) ID is not stored in immobilizer electronic control unit.
Recoverability	• System recovers when initial key registration is executed.
Control effected by electronic control unit	• Engine is disabled from starting.
Possible causes	• Transponder key (starter key) used is not a one registered in immobilizer electronic control unit.

521749-2: Transponder data format error

Generation condition	• Immobilizer electronic control unit has received an implausible data from transponder key (starter key) through communication line.
Recoverability	• System recovers if a plausible data is obtained when starter switch is placed in ON again.
Control effected by electronic control unit	• Engine is disabled from starting.
Possible causes	• Faulty transponder key (starter key) • Faulty immobilizer antenna • Faulty immobilizer electronic control unit

https://truckmanualshub.com/

521750-19: CAN bus performance

Generation condition	• Controller area network error message is received.
Recoverability	• System recovers if any normal signal is received when starter switch is placed in ON position.
Control effected by electronic control unit	• None
Possible causes	• Controller area network communication line is open or shorted to power, ground or another circuit. • Faulty controller area network resistor • Faulty signal detect and actuation module • Faulty immobilizer electronic control unit

521750-31: Lost communication with SAM

Generation condition	• No controller area network message is receivable.
Recoverability	• System recovers if any normal signal is received when starter switch is placed in ON position.
Control effected by electronic control unit	• None
Possible causes	• Controller area network communication line is open or shorted to power, ground or another circuit. • Faulty controller area network resistor • Faulty signal detect and actuation module • Faulty immobilizer electronic control unit

3. FUSO Diagnostics Service Data (Measured Values)

- Since the contents of the FUSO Diagnostics are regularly updated, the descriptions and expressions may differ from those given in the service manuals. Check the latest information with the FUSO Diagnostics.

Current Value Group	Description	Value	Explanation
Vehicle key	Number of registered key	0 to 6	Shows the number of registered starter keys (transponder keys) for the engine immobilizer.
	Transponder key type	Registered/Unregistered	Shows the type of the starter key (transponder key) for the engine immobilizer that is currently inserted in the starter switch.
	Ignition status	ON/OFF	Shows the ignition status.
Immobilizer status	Immobilizer mode	Normal mode/ Transponder key ID initial registration mode/ Transponder key ID additional registration mode/ Transponder key deletion mode/ Secret key registration mode	Shows the current state of the immobilizer ECU.
	Immobilizer indicator	ON/OFF	Shows the immobilizer indicator lamp state.
	Immobilizer status	ACTIVE/NOT ACTIVE	Shows the immobilizer system state.

4. Initial Settings of Immobilizer

4.1 Connecting the FUSO Diagnostics (See Gr00.)

https://truckmanualshub.com/

4.2 Selection of system

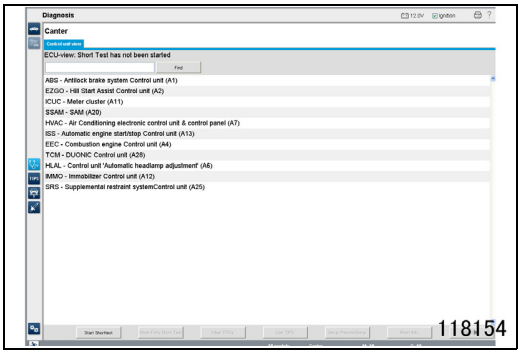

- From the control unit list screen, select [IMMO-Immobilizer Control unit (A12)].

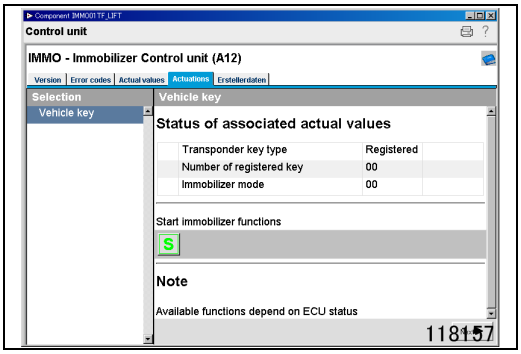

Screen of [IMMO-Immobilizer Control unit (A12)]

- Select the “Actuations” tab and then select [Vehicle key]. Then, the [Vehicle key] screen appears.
- Using the “S” button of “Start immobilizer functions”, display the various registration/deletion screens.

4.3 Initial key registration, Additional key registration, Key deletion, Secret key registration

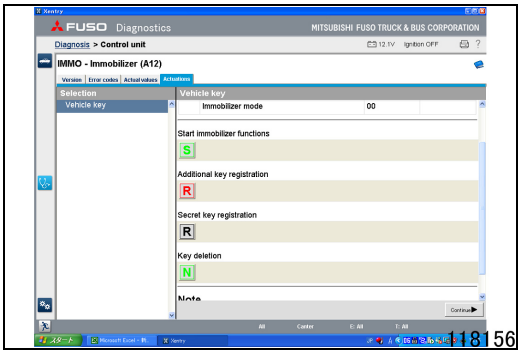

- Following the instructions given on the screen of the FUSO Diagnostics, perform necessary steps to register and delete data.

Function buttons	Functions invoked	Outline
“Initial key registration” button	Initial key registration	Register key information at replacement of the immobilizer electronic control unit.
“Additional key registration” button	Additional key registration	Register additional key information in the immobilizer electronic control unit. (Up to 6 sets of the key information can be registered in the immobilizer electronic control unit.)
“Key deletion” button	Key deletion	Erase key information registered in the immobilizer electronic control unit, excepting the engine immobilizer starter key inserted in the starter switch.
“Secret key registration” button	Select key registration	Register the secret key that has previously been registered in the immobilizer electronic control unit in the engine electronic control unit. A collation check is made by using the secret key registered in both the immobilizer electronic control unit and engine electronic control unit and, if it is checked okay, the engine is started. This function should be performed whenever either one of the electronic control units is replaced with a new one or remounted from other vehicles.

CAUTION ⚠

- **The secret key can be registered only when the initial key has previously been registered.**
- **If registration of the secret key is yet to be completed, the collation check with the engine electronic control unit is NG and the engine cannot be started.**

https://truckmanualshub.com/

- Since the FUSO diagnostics data are updated from time to time, descriptions or wording may not agree with the workshop manual. The FUSO diagnostics will have the latest data.

1. List of Diagnosis Codes

Code	Message	Warning lamp indication		Remarks
		SAM (red)	SAM (orange)	
2372-4	Left rear brake light - Insufficient voltage or short circuit to ground	-	O	
2372-5	Left rear brake light - The current strength is too low or there is an open circuit.	-	O	
2374-4	Right rear brake light - Insufficient voltage or short circuit to ground	-	O	
2374-5	Right rear brake light - The current strength is too low or there is an open circuit.	-	O	
521985-4	BBC Side turn lamp LH - Insufficient voltage or short circuit to ground	-	-	
521985-5	BBC Side turn lamp LH - The current strength is too low or there is an open circuit.	-	-	
521986-4	BBC Side turn lamp RH - Insufficient voltage or short circuit to ground	-	-	
521986-5	BBC Side turn lamp RH - The current strength is too low or there is an open circuit.	-	-	
521987-4	BBC Body illumination - Insufficient voltage or short circuit to ground	-	-	
521988-4	BBC Chassis illumination - Insufficient voltage or short circuit to ground	-	-	
521989-4	BBC Backup Alarm - Insufficient voltage or short circuit to ground	-	-	
521990-4	Transmission power take-off 3-way magnetic valve - Insufficient voltage or short circuit to ground	-	-	
521990-5	Transmission power take-off 3-way magnetic valve - The current strength is too low or there is an open circuit.	-	-	
521992-4	Driver mirror heater - Insufficient voltage or short circuit to ground	-	-	
521994-4	Backup lamp - Insufficient voltage or short circuit to ground	-	-	
521994-5	Backup lamp - The current strength is too low or there is an open circuit.	-	-	
521995-4	Left high beam - Insufficient voltage or short circuit to ground	-	-	
521995-5	Left high beam - The current strength is too low or there is an open circuit.	-	-	
521996-4	Right high beam - Insufficient voltage or short circuit to ground	-	-	
521996-5	Right high beam - The current strength is too low or there is an open circuit.	-	-	
521997-4	Left low beam - Insufficient voltage or short circuit to ground	-	-	
521997-5	Left low beam - The current strength is too low or there is an open circuit.	-	-	
521998-4	Right low beam - Insufficient voltage or short circuit to ground	-	-	
521998-5	Right low beam - The current strength is too low or there is an open circuit.	-	-	
522003-4	Left standing light - Insufficient voltage or short circuit to ground	-	O	
522003-5	Left standing light - The current strength is too low or there is an open circuit.	-	O	

https://truckmanualshub.com/

Code	Message	Warning lamp indication		Remarks
		SAM (red)	SAM (orange)	
522004-4	Right standing light - Insufficient voltage or short circuit to ground	-	O	
522004-5	Right standing light - The current strength is too low or there is an open circuit.	-	O	
522005-4	Left tail lamp - Insufficient voltage or short circuit to ground	-	O	
522005-5	Left tail lamp - The current strength is too low or there is an open circuit.	-	O	
522006-4	Right tail lamp - Insufficient voltage or short circuit to ground	-	O	
522006-5	Right tail lamp - The current strength is too low or there is an open circuit.	-	O	
522007-4	Left rear turn signal lamp - Insufficient voltage or short circuit to ground	-	-	
522007-5	Left rear turn signal lamp - The current strength is too low or there is an open circuit.	-	-	
522008-4	Right rear turn signal lamp - Insufficient voltage or short circuit to ground	-	-	
522008-5	Right rear turn signal lamp - The current strength is too low or there is an open circuit.	-	-	
522009-4	Left turn signal lamp (front) - Insufficient voltage or short circuit to ground	-	-	
522009-5	Left turn signal lamp (front) - The current strength is too low or there is an open circuit.	-	-	
522010-4	Right turn signal lamp (front) - Insufficient voltage or short circuit to ground	-	-	
522010-5	Right turn signal lamp (front) - The current strength is too low or there is an open circuit.	-	-	
522011-4	Right front fog lamp - Insufficient voltage or short circuit to ground	-	-	
522011-5	Right front fog lamp - The current strength is too low or there is an open circuit.	-	-	
522014-4	Passenger exit lamp - Insufficient voltage or short circuit to ground	-	-	
522014-5	Passenger exit lamp - The current strength is too low or there is an open circuit.	-	-	
522015-4	Driver exit lamp - Insufficient voltage or short circuit to ground	-	-	
522015-5	Driver exit lamp - The current strength is too low or there is an open circuit.	-	-	
522016-4	Cabin button illumination - Insufficient voltage or short circuit to ground	-	-	
522017-4	Washer motor - Insufficient voltage or short circuit to ground	-	-	
522017-5	Washer motor - The current strength is too low or there is an open circuit.	-	-	
522020-4	Left license plate lamp - Insufficient voltage or short circuit to ground	-	O	
522020-5	Left license plate lamp - The current strength is too low or there is an open circuit.	-	O	
522022-4	Left front fog lamp - Insufficient voltage or short circuit to ground	-	-	
522022-5	Left front fog lamp - The current strength is too low or there is an open circuit.	-	-	
522026-4	Passenger mirror heater - Insufficient voltage or short circuit to ground	-	-	

https://truckmanualshub.com/

#985 INSPECTION OF SIGNAL DETECT AND ACTUATION MODULES

Code	Message	Warning lamp indication		Remarks
		SAM (red)	SAM (orange)	
522027-3	Interior lamp - Excessive voltage or short circuit to positive	-	-	
522028-4	Mirror heater Switches - Insufficient voltage or short circuit to ground	-	-	
522030-4	Backup buzzer - Insufficient voltage or short circuit to ground	-	-	
522032-4	Connected electrical equipment - Insufficient voltage or short circuit to ground	-	-	
522033-4	Connected electrical equipment - Insufficient voltage or short circuit to ground	-	-	
522034-4	Connected electrical equipment - Insufficient voltage or short circuit to ground	-	-	
522038-5	Air conditioner blower - The current strength is too low or there is an open circuit.	-	O	
522039-5	Accessory 12V/24V relay - The current strength is too low or there is an open circuit.	-	O	
522040-5	Ignition relay - The current strength is too low or there is an open circuit.	O	-	
522041-5	Accessory relay - The current strength is too low or there is an open circuit.	O	-	
522042-5	Ignition 12V/24V relay - The current strength is too low or there is an open circuit.	-	O	
522043-5	Air conditioner compressor relay - The current strength is too low or there is an open circuit.	-	O	
522064-25	Transmission current gear signal - Received network data is in error.	-	-	
522067-25	Main light switch request signal - Received network data is in error.	-	O	
522069-25	High beam switch request signal - Received network data is in error.	-	-	
522070-25	High beam flash switch request signal - Received network data is in error.	-	-	
522071-25	Transmission Control unit - Received network data is in error.	-	-	
522074-25	Combustion engine Control unit - Received network data is in error.	-	-	
522075-25	Combustion engine Control unit - Received network data is in error.	-	-	
522076-25	Combustion engine Control unit - Received network data is in error.	-	-	
522077-25	Combination switch - Received network data is in error.	-	O	
522078-25	Combination switch - Received network data is in error.	-	-	
522079-25	Selector lever - Received network data is in error.	-	-	
522080-25	Keyless entry unit - Received network data is in error.	-	-	
522081-25	Driver power window Switches - Received network data is in error.	-	-	
522082-25	Passenger power window Switches - Received network data is in error.	-	-	
522097-2	Starter Switches - Data erratic, intermittent or incorrect	O	-	
522098-2	Starter Switches - Data erratic, intermittent or incorrect	O	-	
522099-2	Starter Switches - Data erratic, intermittent or incorrect	O	-	

https://truckmanualshub.com/

Code	Message	Warning lamp indication		Remarks
		SAM (red)	SAM (orange)	
522112-3	The battery voltage is too high. - Excessive voltage or short circuit to positive	O	-	
522112-4	The battery voltage is too low. - Insufficient voltage or short circuit to ground	O	-	
522113-25	Combination switch - Received network data is in error.	-	-	
522114-25	Combination switch - Received network data is in error.	-	-	
522115-25	Driver power window Switches - Received network data is in error.	-	-	
522116-25	Passenger power window Switches - Received network data is in error.	-	-	
522117-25	Keyless entry unit - Received network data is in error.	-	-	
522118-25	Selector lever - Received network data is in error.	-	-	
522133-17	Power take-off is not connected when the Power take-off Switches are turned ON. - Occurring	-	-	
522134-17	Power take-off is not disconnected when the Power take-off Switches are turned OFF. - Occurring	-	-	
522135-17	Power take-off was disconnected when the Transmission power take-off 3-way magnetic valve was ON. - Occurring	-	-	
522136-17	Power take-off was connected when Transmission power take-off 3-way magnetic valve was OFF. - Occurring	-	-	
522138-25	Combination switch - Received network data is in error.	-	-	
522139-25	Combination switch - Received network data is in error.	-	-	
522140-25	Combination switch - Received network data is in error.	-	-	
522141-25	Combination switch - Received network data is in error.	-	-	
522142-4	Wiper internal circuit - Insufficient voltage or short circuit to ground	-	-	
522143-5	Wiper internal circuit - The current strength is too low or there is an open circuit.	-	-	
522144-3	Wiper internal circuit - Excessive voltage or short circuit to positive	-	-	
522147-4	Key interlock solenoid - Insufficient voltage or short circuit to ground	-	-	
522148-17	Faulty part CPU inside component “SAM” - Occurring	-	-	
522149-17	Faulty part Memory inside component “SAM” - Occurring	O	-	
522150-17	Faulty component “SAM” - Occurring	O	-	

https://truckmanualshub.com/

2. Details of Diagnosis Codes

2372-4: Left rear brake light - Insufficient voltage or short circuit to ground

Generation condition	• Output current to stop lamp (left-hand) rises to range of 2.3 to 3.7 A or higher.
Recoverability	• System recovers when output current to stop lamp (left-hand) falls within range of 2.3 to 3.7 A or lower.
Control effected by electronic control unit	• Output to stop lamp (left-hand) is stopped.
Possible causes	• Short-circuit to power, ground or another circuit in SIG harness between stop lamp (left-hand) and signal detect and actuation module • Faulty stop lamp (left-hand) • Defective signal detect and actuation module

2372-5: Left rear brake light - The current strength is too low or there is an open circuit.

Generation condition	• Output current to stop lamp (left-hand) falls to range of 0.5 to 1.1 A or lower.
Recoverability	• System recovers when output current to stop lamp (left-hand) rises to range of 0.5 to 1.1 A or higher.
Control effected by electronic control unit	• Normal control is effected.
Possible causes	• Open-circuit or short-circuit to power or ground in SIG harness between stop lamp (left-hand) and signal detect and actuation module • Open-circuit in Plus harness between stop lamp (left-hand) and signal detect and actuation module • Faulty stop lamp (left-hand) • Defective signal detect and actuation module

2374-4: Right rear brake light - Insufficient voltage or short circuit to ground

Generation condition	• Output current to stop lamp (right-hand) rises to range of 2.3 to 3.7 A or higher.
Recoverability	• System recovers when output current to stop lamp (right-hand) falls within range of 2.3 to 3.7 A or lower.
Control effected by electronic control unit	• Output to stop lamp (right-hand) is stopped.
Possible causes	• Short-circuit to power, ground or another circuit in SIG harness between stop lamp (right-hand) and signal detect and actuation module • Faulty stop lamp (right-hand) • Defective signal detect and actuation module

2374-5: Right rear brake light - The current strength is too low or there is an open circuit.

Generation condition	• Output current to stop lamp (right-hand) falls to range of 0.5 to 1.1 A or lower.
Recoverability	• System recovers when output current to stop lamp (right-hand) rises to range of 0.5 to 1.1 A or higher.
Control effected by electronic control unit	• Normal control is effected.
Possible causes	• Open-circuit or short-circuit to power or ground in SIG harness between stop lamp (right-hand) and signal detect and actuation module • Open-circuit in Plus harness between stop lamp (right-hand) and signal detect and actuation module • Faulty stop lamp (right-hand) • Defective signal detect and actuation module

521985-4: BBC Side turn lamp LH - Insufficient voltage or short circuit to ground

Generation condition	• Output current to side turn signal lamp (left-hand) rises to range of 2.3 to 3.7 A or higher.
Recoverability	• System recovers when output current to side turn signal lamp (left-hand) falls within range of 2.3 to 3.7 A or lower.
Control effected by electronic control unit	• Output to side turn signal lamp (left-hand) is stopped.
Possible causes	• Short-circuit to power, ground or another circuit in SIG harness between side turn signal lamp (left-hand) and signal detect and actuation module • Faulty side turn signal lamp (left-hand) • Defective signal detect and actuation module

https://truckmanualshub.com/

521985-5: BBC Side turn lamp LH - The current strength is too low or there is an open circuit.

Generation condition	• Output current to side turn signal lamp (left-hand) falls to range of 0.5 to 1.1 A or lower.
Recoverability	• System recovers when output current to side turn signal lamp (left-hand) rises to range of 0.5 to 1.1 A or higher.
Control effected by electronic control unit	• Normal control is effected.
Possible causes	• Open-circuit or short-circuit to power or ground in SIG harness between side turn signal lamp (left-hand) and signal detect and actuation module • Open-circuit in Plus harness between side turn signal lamp (left-hand) and signal detect and actuation module • Faulty side turn signal lamp (left-hand) • Defective signal detect and actuation module

521986-4: BBC Side turn lamp RH - Insufficient voltage or short circuit to ground

Generation condition	• Output current to side turn signal lamp (right-hand) rises to range of 2.3 to 3.7 A or higher.
Recoverability	• System recovers when output current to side turn signal lamp (right-hand) falls within range of 2.3 to 3.7 A or lower.
Control effected by electronic control unit	• Output to side turn signal lamp (right-hand) is stopped.
Possible causes	• Short-circuit to power, ground or another circuit in SIG harness between side turn signal lamp (right-hand) and signal detect and actuation module • Faulty side turn signal lamp (right-hand) • Defective signal detect and actuation module

521986-5: BBC Side turn lamp RH - The current strength is too low or there is an open circuit.

Generation condition	• Output current to side turn signal lamp (right-hand) falls to range of 0.5 to 1.1 A or lower.
Recoverability	• System recovers when output current to side turn signal lamp (right-hand) rises to range of 0.5 to 1.1 A or higher.
Control effected by electronic control unit	• Normal control is effected.
Possible causes	• Open-circuit or short-circuit to power or ground in SIG harness between side turn signal lamp (right-hand) and signal detect and actuation module • Open-circuit in Plus harness between side turn signal lamp (right-hand) and signal detect and actuation module • Faulty side turn signal lamp (right-hand) • Defective signal detect and actuation module

521987-4: Body illumination - Insufficient voltage or short circuit to ground

Generation condition	• Output current to body illumination lamp rises to range of 3.8 to 7.3 A or higher.
Recoverability	• System recovers when output current to body illumination lamp falls within range of 3.8 to 7.3 A or lower.
Control effected by electronic control unit	• Output to body illumination lamp is stopped.
Possible causes	• Short-circuit to power, ground or another circuit in SIG harness between body illumination lamp (12 V) and signal detect and actuation module • Faulty body illumination lamp (12 V) • Defective signal detect and actuation module

521988-4: Chassis illumination - Insufficient voltage or short circuit to ground

Generation condition	• Output current to chassis illumination lamp rises to range of 3.8 to 7.3 A or higher.
Recoverability	• System recovers when output current to chassis illumination lamp falls within range of 3.8 to 7.3 A or lower.
Control effected by electronic control unit	• Output to chassis illumination lamp is stopped.
Possible causes	• Short-circuit to power, ground or another circuit in SIG harness between chassis illumination lamp (12 V) and signal detect and actuation module • Faulty chassis illumination lamp (12 V) • Defective signal detect and actuation module

https://truckmanualshub.com/

521989-4: BBC Backup Alarm - Insufficient voltage or short circuit to ground

Generation condition	• Output current to backup lamp rises to range of 0.4 to 0.7 A or higher.
Recoverability	• System recovers when output current to backup lamp falls within range of 0.4 to 0.7 A or lower.
Control effected by electronic control unit	• Output to backup lamp is stopped.
Possible causes	• Short-circuit to power, ground or another circuit in SIG harness between backup lamp and signal detect and actuation module • Faulty backup lamp • Defective signal detect and actuation module

521990-4: Transmission power take-off 3-way magnetic valve - Insufficient voltage or short circuit to ground

Generation condition	• Output current to transmission power take-off 3-way magnetic valve rises to range of 1.0 to 1.7 A or higher.
Recoverability	• System recovers when output current to transmission power take-off 3-way magnetic valve falls within range of 1.0 to 1.7 A or lower.
Control effected by electronic control unit	• Output to transmission power take-off 3-way magnetic valve is stopped.
Possible causes	• Short-circuit to power, ground or another circuit in SIG harness between transmission power take-off 3-way magnetic valve and signal detect and actuation module • Faulty transmission power take-off 3-way magnetic valve • Defective signal detect and actuation module

521990-5: Transmission power take-off 3-way magnetic valve - The current strength is too low or there is an open circuit.

Generation condition	• Output current to transmission power take-off 3-way magnetic valve falls to range of 0.2 to 0.4 A or lower.
Recoverability	• System recovers when output current to transmission power take-off 3-way magnetic valve rises to range of 0.2 to 0.4 A or higher.
Control effected by electronic control unit	• Normal control is effected.
Possible causes	• Open-circuit or short-circuit to power or ground in SIG harness between transmission power take-off 3-way magnetic valve and signal detect and actuation module • Open-circuit in Plus harness between transmission power take-off 3-way magnetic valve and signal detect and actuation module • Faulty transmission power take-off 3-way magnetic valve • Defective signal detect and actuation module

521992-4: Right mirror heater - Insufficient voltage or short circuit to ground

Generation condition	• Output current to mirror heater (driver side) rises to range of 7.7 to 13.5 A or higher.
Recoverability	• System recovers when output current to mirror heater (right-hand) falls within range of 7.7 to 13.5 A or lower.
Control effected by electronic control unit	• Output to mirror heater (right-hand) is stopped.
Possible causes	• Short-circuit to power, ground or another circuit in SIG harness between mirror heater (right-hand) and signal detect and actuation module • Faulty mirror heater (right-hand) • Defective signal detect and actuation module

521994-4: Backup lamp - Insufficient voltage or short circuit to ground

Generation condition	• Output current to backup lamp rises to range of 4.7 to 8.2 A or higher.
Recoverability	• System recovers when output current to backup lamp falls within range of 4.7 to 8.2 A or lower.
Control effected by electronic control unit	• Output to backup lamp is stopped.
Possible causes	• Short-circuit to power, ground or another circuit in SIG harness between backup lamp and signal detect and actuation module • Faulty backup lamp • Defective signal detect and actuation module

https://truckmanualshub.com/

521994-5: Backup lamp - The current strength is too low or there is an open circuit.

Generation condition	• Output current to backup lamp falls to range of 1.1 to 2.2 A or lower.
Recoverability	• System recovers when output current to backup lamp rises to range of 1.1 to 2.2 A or higher.
Control effected by electronic control unit	• Normal control is effected.
Possible causes	• Open-circuit or short-circuit to power or ground in SIG harness between backup lamp and signal detect and actuation module • Open-circuit in Plus harness between backup lamp and signal detect and actuation module • Faulty backup lamp • Defective signal detect and actuation module

521995-4: Left high beam - Insufficient voltage or short circuit to ground

Generation condition	• Output current to headlamp Hi (left-hand) rises to range of 6.5 to 11.7 A or higher.
Recoverability	• System recovers when output current to headlamp Hi (left-hand) falls within range of 6.5 to 11.7 A or lower.
Control effected by electronic control unit	• Output to headlamp Hi (left-hand) is stopped.
Possible causes	• Short-circuit to power, ground or another circuit in SIG harness between headlamp Hi (left-hand) and signal detect and actuation module • Faulty headlamp Hi (left-hand) • Defective signal detect and actuation module

521995-5: Left high beam - The current strength is too low or there is an open circuit.

Generation condition	• Output current to headlamp Hi (left-hand) falls to range of 0.8 to 2.9 A or lower.
Recoverability	• System recovers when output current to headlamp Hi (left-hand) rises to range of 0.8 to 2.9 A or higher.
Control effected by electronic control unit	• Normal control is effected.
Possible causes	• Open-circuit or short-circuit to power or ground in SIG harness between headlamp Hi (left-hand) and signal detect and actuation module • Open-circuit in Plus harness between headlamp Hi (left-hand) and signal detect and actuation module • Faulty headlamp Hi (left-hand) • Defective signal detect and actuation module

521996-4: Right high beam - Insufficient voltage or short circuit to ground

Generation condition	• Output current to headlamp Hi (right-hand) rises to range of 6.5 to 11.7 A or higher.
Recoverability	• System recovers when output current to headlamp Hi (right-hand) falls within range of 6.5 to 11.7 A or lower.
Control effected by electronic control unit	• Output to headlamp Hi (right-hand) is stopped.
Possible causes	• Short-circuit to power, ground or another circuit in SIG harness between headlamp Hi (right-hand) and signal detect and actuation module • Faulty headlamp Hi (right-hand) • Defective signal detect and actuation module

https://truckmanualshub.com/

521996-5: Right high beam - The current strength is too low or there is an open circuit.

Generation condition	• Output current to headlamp Hi (right-hand) falls to range of 0.8 to 2.9 A or lower.
Recoverability	• System recovers when output current to headlamp Hi (right-hand) rises to range of 0.8 to 2.9 A or higher.
Control effected by electronic control unit	• Normal control is effected.
Possible causes	• Open-circuit or short-circuit to power or ground in SIG harness between headlamp Hi (right-hand) and signal detect and actuation module • Open-circuit in Plus harness between headlamp Hi (right-hand) and signal detect and actuation module • Faulty headlamp Hi (right-hand) • Defective signal detect and actuation module

521997-4: Left low beam - Insufficient voltage or short circuit to ground

Generation condition	• Output current to headlamp Lo (left-hand) rises to range of 6.0 to 10.9 A or higher.
Recoverability	• System recovers when output current to headlamp Lo (left-hand) falls within range of 6.0 to 10.9 A or lower.
Control effected by electronic control unit	• Output to headlamp Lo (left-hand) is stopped.
Possible causes	• Short-circuit to power, ground or another circuit in SIG harness between headlamp Lo (left-hand) and signal detect and actuation module • Faulty headlamp Lo (left-hand) • Defective signal detect and actuation module

521997-5: Left low beam - The current strength is too low or there is an open circuit.

Generation condition	• Output current to headlamp Lo (left-hand) falls to range of 0.8 to 2.9 A or lower.
Recoverability	• System recovers when output current to headlamp Lo (left-hand) rises to range of 0.8 to 2.9 A or higher.
Control effected by electronic control unit	• Normal control is effected.
Possible causes	• Open-circuit or short-circuit to power or ground in SIG harness between headlamp Lo (left-hand) and signal detect and actuation module • Open-circuit in Plus harness between headlamp Lo (left-hand) and signal detect and actuation module • Faulty headlamp Lo (left-hand) • Defective signal detect and actuation module

521998-4: Right low beam - Insufficient voltage or short circuit to ground

Generation condition	• Output current to headlamp Lo (right-hand) rises to range of 6.0 to 10.9 A or higher.
Recoverability	• System recovers when output current to headlamp Lo (right-hand) falls within range of 6.0 to 10.9 A or lower.
Control effected by electronic control unit	• Output to headlamp Lo (right-hand) is stopped.
Possible causes	• Short-circuit to power, ground or another circuit in SIG harness between headlamp Lo (right-hand) and signal detect and actuation module • Faulty headlamp Lo (right-hand) • Defective signal detect and actuation module

https://truckmanualshub.com/

521998-5: Right low beam - The current strength is too low or there is an open circuit.

Generation condition	• Output current to headlamp Lo (right-hand) falls to range of 0.8 to 2.9 A or lower.
Recoverability	• System recovers when output current to headlamp Lo (right-hand) rises to range of 0.8 to 2.9 A or higher.
Control effected by electronic control unit	• Normal control is effected.
Possible causes	• Open-circuit or short-circuit to power or ground in SIG harness between headlamp Lo (right-hand) and signal detect and actuation module • Open-circuit in Plus harness between headlamp Lo (right-hand) and signal detect and actuation module • Faulty headlamp Lo (right-hand) • Defective signal detect and actuation module

522003-4: Left standing light - Insufficient voltage or short circuit to ground

Generation condition	• Output current to parking lamp (left-hand) rises to range of 0.5 to 1.0 A or higher.
Recoverability	• System recovers when output current to parking lamp (left-hand) falls within range of 0.5 to 1.0 A or lower.
Control effected by electronic control unit	• Output to parking lamp (left-hand) is stopped.
Possible causes	• Short-circuit to power, ground or another circuit in SIG harness between parking lamp (left-hand) and signal detect and actuation module • Faulty parking lamp (left-hand) • Defective signal detect and actuation module

522003-5: Left standing light - The current strength is too low or there is an open circuit.

Generation condition	• Output current to parking lamp (left-hand) falls to range of 0.1 to 0.3 A or lower.
Recoverability	• System recovers when output current to parking lamp (left-hand) rises to range of 0.1 to 0.3 A or higher.
Control effected by electronic control unit	• Normal control is effected.
Possible causes	• Open-circuit or short-circuit to power or ground in SIG harness between parking lamp (left-hand) and signal detect and actuation module • Open-circuit in Plus harness between parking lamp (left-hand) and signal detect and actuation module • Faulty parking lamp (left-hand) • Defective signal detect and actuation module

522004-4: Right standing light - Insufficient voltage or short circuit to ground

Generation condition	• Output current to parking lamp (right-hand) rises to range of 0.5 to 1.0 A or higher.
Recoverability	• System recovers when output current to parking lamp (right-hand) falls within range of 0.5 to 1.0 A or lower.
Control effected by electronic control unit	• Output to parking lamp (right-hand) is stopped.
Possible causes	• Short-circuit to power, ground or another circuit in SIG harness between parking lamp (right-hand) and signal detect and actuation module • Faulty parking lamp (right-hand) • Defective signal detect and actuation module

https://truckmanualshub.com/

522004-5: Right standing light - The current strength is too low or there is an open circuit.

Generation condition	• Output current to parking lamp (right-hand) falls to range of 0.1 to 0.3 A or lower.
Recoverability	• System recovers when output current to parking lamp (right-hand) rises to range of 0.1 to 0.3 A or higher.
Control effected by electronic control unit	• Normal control is effected.
Possible causes	• Open-circuit or short-circuit to power or ground in SIG harness between parking lamp (right-hand) and signal detect and actuation module • Open-circuit in Plus harness between parking lamp (right-hand) and signal detect and actuation module • Faulty parking lamp (right-hand) • Defective signal detect and actuation module

522005-4: Left tail lamp - Insufficient voltage or short circuit to ground

Generation condition	• Output current to tail lamp (left-hand) rises to range of 1.3 to 2.4 A or higher.
Recoverability	• System recovers when output current to tail lamp (left-hand) falls within range of 1.3 to 2.4 A or lower.
Control effected by electronic control unit	• Output to tail lamp (left-hand) is stopped.
Possible causes	• Short-circuit to power, ground or another circuit in SIG harness between tail lamp (left-hand) and signal detect and actuation module • Faulty tail lamp (left-hand) • Defective signal detect and actuation module

522005-5: Left tail lamp - The current strength is too low or there is an open circuit.

Generation condition	• Output current to tail lamp (left-hand) falls to range of 0.1 to 0.3 A or lower.
Recoverability	• System recovers when output current to tail lamp (left-hand) rises to range of 0.1 to 0.3 A or higher.
Control effected by electronic control unit	• Normal control is effected.
Possible causes	• Open-circuit or short-circuit to power or ground in SIG harness between tail lamp (left-hand) and signal detect and actuation module • Open-circuit in Plus harness between tail lamp (left-hand) and signal detect and actuation module • Faulty tail lamp (left-hand) • Defective signal detect and actuation module

522006-4: Right tail lamp - Insufficient voltage or short circuit to ground

Generation condition	• Output current to tail lamp (right-hand) rises to range of 1.3 to 2.2 A or higher.
Recoverability	• System recovers when output current to tail lamp (right-hand) falls within range of 1.3 to 2.4 A or lower.
Control effected by electronic control unit	• Output to tail lamp (right-hand) is stopped.
Possible causes	• Short-circuit to power, ground or another circuit in SIG harness between tail lamp (right-hand) and signal detect and actuation module • Faulty tail lamp (right-hand) • Defective signal detect and actuation module

522006-5: Right tail lamp - The current strength is too low or there is an open circuit.

Generation condition	• Output current to tail lamp (right-hand) falls to range of 0.0 to 0.3 A or lower.
Recoverability	• System recovers when output current to tail lamp (right-hand) rises to range of 0.0 to 0.3 A or higher.
Control effected by electronic control unit	• Normal control is effected.
Possible causes	• Open-circuit or short-circuit to power or ground in SIG harness between tail lamp (right-hand) and signal detect and actuation module • Open-circuit in Plus harness between tail lamp (right-hand) and signal detect and actuation module • Faulty tail lamp (right-hand) • Defective signal detect and actuation module

https://truckmanualshub.com/

522007-4: Left rear turn signal lamp - Insufficient voltage or short circuit to ground

Generation condition	• Output current to rear turn signal lamp (left-hand) rises to range of 2.3 to 3.7 A or higher.
Recoverability	• System recovers when output current to rear turn signal lamp (left-hand) falls within range of 2.3 to 3.7 A or lower.
Control effected by electronic control unit	• Output to rear turn signal lamp (left-hand) is stopped.
Possible causes	• Short-circuit to power, ground or another circuit in SIG harness between rear turn signal lamp (left-hand) and signal detect and actuation module • Faulty rear turn signal lamp (left-hand) • Defective signal detect and actuation module

522007-5: Left rear turn signal lamp - The current strength is too low or there is an open circuit.

Generation condition	• Output current to rear turn signal lamp (left-hand) falls to range of 0.5 to 1.1 A or lower. <In case of LED> • Output current to rear turn signal lamp (left/right-hand) falls to range of 0.007 to 0.03 A or lower.
Recoverability	• System recovers when output current to rear turn signal lamp (left-hand) rises to range of 0.5 to 1.1 A or higher. <In case of LED> • System recovers when output current to rear turn signal lamp (left/right-hand) rises to range of 0.007 to 0.03 A or higher.
Control effected by electronic control unit	• Normal control is effected.
Possible causes	• Open-circuit or short-circuit to power or ground in SIG harness between rear turn signal lamp (left-hand) and signal detect and actuation module • Open-circuit in Plus harness between rear turn signal lamp (left-hand) and signal detect and actuation module • Faulty rear turn signal lamp (left-hand) • Defective signal detect and actuation module

522008-4: Right rear turn signal lamp - Insufficient voltage or short circuit to ground

Generation condition	• Output current to rear turn signal lamp (right-hand) rises to range of 2.3 to 3.7 A or higher.
Recoverability	• System recovers when output current to rear turn signal lamp (right-hand) falls within range of 2.3 to 3.7 A or lower.
Control effected by electronic control unit	• Output to rear turn signal lamp (right-hand) is stopped
Possible causes	• Short-circuit to power, ground or another circuit in SIG harness between rear turn signal lamp (right-hand) and signal detect and actuation module • Faulty rear turn signal lamp (right-hand) • Defective signal detect and actuation module

522008-5: Right rear turn signal lamp - The current strength is too low or there is an open circuit.

Generation condition	• Output current to rear turn signal lamp (right-hand) falls to range of 0.5 to 1.1 A or lower. <In case of LED> • Output current to rear turn signal lamp (left/right-hand) falls to range of 0.007 to 0.03 A or lower.
Recoverability	• System recovers when output current to rear turn signal lamp (right-hand) rises to range of 0.5 to 1.1 A or higher. <In case of LED> • System recovers when output current to rear turn signal lamp (left/right-hand) rises to range of 0.007 to 0.03 A or higher.
Control effected by electronic control unit	• Normal control is effected.
Possible causes	• Open-circuit or short-circuit to power or ground in SIG harness between rear turn signal lamp (right-hand) and signal detect and actuation module • Open-circuit in Plus harness between rear turn signal lamp (right-hand) and signal detect and actuation module • Faulty rear turn signal lamp (right-hand) • Defective signal detect and actuation module

https://truckmanualshub.com/

522009-4: Left turn signal lamp (front and side) - Insufficient voltage or short circuit to ground

Generation condition	• Output current to front side turn signal lamp (left-hand) rises to range of 2.3 to 3.7 A or higher.
Recoverability	• System recovers when output current to front side turn signal lamp (left-hand) falls within range of 2.3 to 3.7 A or lower.
Control effected by electronic control unit	• Output to front side turn signal lamp (left-hand) is stopped.
Possible causes	• Short-circuit to power, ground or another circuit in SIG harness between front side turn signal lamp (left-hand) and signal detect and actuation module • Faulty front side turn signal lamp (left-hand) • Defective signal detect and actuation module

522009-5: Left turn signal lamp (front and side) - The current strength is too low or there is an open circuit.

Generation condition	• Output current to front side turn signal lamp (left-hand) falls to range of 0.5 to 1.1 A or lower.
Recoverability	• System recovers when output current to front side turn signal lamp (left-hand) rises to range of 0.5 to 1.1 A or higher.
Control effected by electronic control unit	• Normal control is effected.
Possible causes	• Open-circuit or short-circuit to power or ground in SIG harness between front side turn signal lamp (left-hand) and signal detect and actuation module • Open-circuit in Plus harness between front side turn signal lamp (left-hand) and signal detect and actuation module • Faulty front side turn signal lamp (left-hand) • Defective signal detect and actuation module

522010-4: Right turn signal lamp (front and side) - Insufficient voltage or short circuit to ground

Generation condition	• Output current to front side turn signal lamp (right-hand) rises to range of 2.3 to 3.9 A or higher.
Recoverability	• System recovers when output current to front side turn signal lamp (right-hand) falls within range of 2.3 to 3.9 A or lower.
Control effected by electronic control unit	• Output to front side turn signal lamp (right-hand) is stopped.
Possible causes	• Short-circuit to power, ground or another circuit in SIG harness between front side turn signal lamp (right-hand) and signal detect and actuation module • Faulty front side turn signal lamp (right-hand) • Defective signal detect and actuation module

522010-5: Right turn signal lamp (front and side) - The current strength is too low or there is an open circuit.

Generation condition	• Output current to front side turn signal lamp (right-hand) falls to range of 0.5 to 1.1 A or lower.
Recoverability	• System recovers when output current to front side turn signal lamp (right-hand) rises to range of 0.5 to 1.1 A or higher.
Control effected by electronic control unit	• Normal control is effected.
Possible causes	• Open-circuit or short-circuit to power or ground in SIG harness between front side turn signal lamp (right-hand) and signal detect and actuation module • Open-circuit in Plus harness between front side turn signal lamp (right-hand) and signal detect and actuation module • Faulty front side turn signal lamp (right-hand) • Defective signal detect and actuation module

522011-4: Right front fog lamp - Insufficient voltage or short circuit to ground

Generation condition	• Output current to fog lamp (right-hand) rises to range of 6.0 to 10.9 A or higher.
Recoverability	• System recovers when output current to fog lamp (right-hand) falls within range of 6.0 to 10.9 A or lower.
Control effected by electronic control unit	• Output to fog lamp (right-hand) is stopped.
Possible causes	• Short-circuit to power, ground or another circuit in SIG harness between fog lamp (right-hand) and signal detect and actuation module • Faulty fog lamp (right-hand) • Defective signal detect and actuation module

https://truckmanualshub.com/

522011-5: Right front fog lamp - The current strength is too low or there is an open circuit.

Generation condition	• Output current to fog lamp (right-hand) falls to range of 0.8 to 2.9 A or lower.
Recoverability	• System recovers when output current to fog lamp (right-hand) rises to range of 0.8 to 2.9 A or higher.
Control effected by electronic control unit	• Normal control is effected.
Possible causes	• Open-circuit or short-circuit to power or ground in SIG harness between fog lamp (right-hand) and signal detect and actuation module • Open-circuit in Plus harness between fog lamp (right-hand) and signal detect and actuation module • Faulty fog lamp (right-hand) • Defective signal detect and actuation module

522014-4: Left exit lamp - Insufficient voltage or short circuit to ground

Generation condition	• Output current to step lamp (left-hand) rises to range of 0.5 to 0.9 A or higher.
Recoverability	• System recovers when output current to step lamp (left-hand) falls within range of 0.5 to 0.9 A or lower.
Control effected by electronic control unit	• Output to step lamp (left-hand) is stopped.
Possible causes	• Short-circuit to power, ground or another circuit in SIG harness between step lamp (left-hand) and signal detect and actuation module • Faulty step lamp (left-hand) • Defective signal detect and actuation module

522014-5: Left exit lamp - The current strength is too low or there is an open circuit.

Generation condition	• Output current to step lamp (left-hand) falls to range of 0.1 to 0.3 A or lower.
Recoverability	• System recovers when output current to step lamp (left-hand) rises to range of 0.1 to 0.3 A or higher.
Control effected by electronic control unit	• Normal control is effected.
Possible causes	• Open-circuit or short-circuit to power or ground in SIG harness between step lamp (left-hand) and signal detect and actuation module • Open-circuit in Plus harness between step lamp (left-hand) and signal detect and actuation module • Faulty step lamp (left-hand) • Defective signal detect and actuation module

522015-4: Right exit lamp - Insufficient voltage or short circuit to ground

Generation condition	• Output current to step lamp (right-hand) rises to range of 0.5 to 0.9 A or higher.
Recoverability	• System recovers when output current to step lamp (right-hand) falls within range of 0.5 to 0.9 A or lower.
Control effected by electronic control unit	• Output to step lamp (right-hand) is stopped.
Possible causes	• Short-circuit to power, ground or another circuit in SIG harness between step lamp (right-hand) and signal detect and actuation module • Faulty step lamp (right-hand) • Defective signal detect and actuation module

522015-5: Right exit lamp - The current strength is too low or there is an open circuit.

Generation condition	• Output current to step lamp (right-hand) falls to range of 0.1 to 0.3 A or lower.
Recoverability	• System recovers when output current to step lamp (right-hand) rises to range of 0.1 to 0.3 A or higher.
Control effected by electronic control unit	• Normal control is effected.
Possible causes	• Open-circuit or short-circuit to power or ground in SIG harness between step lamp (right-hand) and signal detect and actuation module • Open-circuit in Plus harness between step lamp (right-hand) and signal detect and actuation module • Faulty step lamp (right-hand) • Defective signal detect and actuation module

https://truckmanualshub.com/

522016-4: Cabin button illumination - Insufficient voltage or short circuit to ground

Generation condition	• Output current to illumination lamp rises to range of 3.9 to 6.7 A or higher.
Recoverability	• System recovers when output current to illumination lamp falls within range of 3.9 to 6.7 A or lower.
Control effected by electronic control unit	• Output to illumination lamp is stopped.
Possible causes	• Short-circuit to ground in harness between battery and signal detect and actuation module • Malfunction of battery • Faulty alternator • Defective signal detect and actuation module

522017-4: Washer motor - Insufficient voltage or short circuit to ground

Generation condition	• Output current to washer motor rises to range of 4.9 to 8.9 A or higher.
Recoverability	• System recovers when output current to washer motor falls within range of 4.9 to 8.9 A or lower.
Control effected by electronic control unit	• Output to washer motor is stopped.
Possible causes	• Short-circuit to power, ground or another circuit in SIG harness between washer motor and signal detect and actuation module • Faulty washer motor • Defective signal detect and actuation module

522017-5: Washer motor - The current strength is too low or there is an open circuit.

Generation condition	• Output current to washer motor falls to range of 0.4 to 1.7 A or lower.
Recoverability	• System recovers when output current to washer motor rises to range of 0.4 to 1.7 A or higher.
Control effected by electronic control unit	• Normal control is effected.
Possible causes	• Open-circuit or short-circuit to power or ground in SIG harness between washer motor and signal detect and actuation module • Open-circuit in Plus harness between washer motor and signal detect and actuation module • Faulty washer motor • Defective signal detect and actuation module

522020-4: Left license plate lamp - Insufficient voltage or short circuit to ground

Generation condition	• Output current to license plate lamp (left-hand) rises to range of 1.1 to 1.8 A or higher.
Recoverability	• System recovers when output current to license plate lamp (left-hand) falls within range of 1.1 to 1.8 A or lower.
Control effected by electronic control unit	• Output to license plate lamp (left-hand) is stopped.
Possible causes	• Short-circuit to power, ground or another circuit in SIG harness between license plate lamp (left-hand) and signal detect and actuation module • Faulty license plate lamp (left-hand) • Defective signal detect and actuation module

522020-5: Left license plate lamp - The current strength is too low or there is an open circuit.

Generation condition	• Output current to license plate lamp (left-hand) falls to range of 0.1 to 0.3 A or lower.
Recoverability	• System recovers when output current to license plate lamp (left-hand) rises to range of 0.1 to 0.3 A or higher.
Control effected by electronic control unit	• Normal control is effected.
Possible causes	• Open-circuit or short-circuit to power or ground in SIG harness between license plate lamp (left-hand) and signal detect and actuation module • Open-circuit in Plus harness between license plate lamp (left-hand) and signal detect and actuation module • Faulty license plate lamp (left-hand) • Defective signal detect and actuation module

https://truckmanualshub.com/

522022-4: Left front fog lamp - Insufficient voltage or short circuit to ground

Generation condition	• Output current to fog lamp (left-hand) rises to range of 6.0 to 10.9 A or higher.
Recoverability	• System recovers when output current to fog lamp (left-hand) falls within range of 6.0 to 10.9 A or lower.
Control effected by electronic control unit	• Output to fog lamp (left-hand) is stopped.
Possible causes	• Short-circuit to power, ground or another circuit in SIG harness between fog lamp (left-hand) and signal detect and actuation module • Faulty fog lamp (left-hand) • Defective signal detect and actuation module

522022-5: Left front fog lamp - The current strength is too low or there is an open circuit.

Generation condition	• Output current to fog lamp (left-hand) falls to range of 0.8 to 2.9 A or lower.
Recoverability	• System recovers when output current to fog lamp (left-hand) rises to range of 0.8 to 2.9 A or higher.
Control effected by electronic control unit	• Normal control is effected.
Possible causes	• Open-circuit or short-circuit to power or ground in SIG harness between fog lamp (left-hand) and signal detect and actuation module • Open-circuit in Plus harness between fog lamp (left-hand) and signal detect and actuation module • Faulty fog lamp (left-hand) • Defective signal detect and actuation module

522026-4: Left mirror heater - Insufficient voltage or short circuit to ground

Generation condition	• Output current to mirror heater (passenger side) rises to range of 7.7 to 13.5 A or higher.
Recoverability	• System recovers when output current to mirror heater (left-hand) falls within range of 7.7 to 13.5 A or lower.
Control effected by electronic control unit	• Output to mirror heater (left-hand) is stopped.
Possible causes	• Short-circuit to power, ground or another circuit in SIG harness between mirror heater (left-hand) and signal detect and actuation module • Faulty mirror heater (left-hand) • Defective signal detect and actuation module

522027-3: Interior lamp - Excessive voltage or short circuit to positive

Generation condition	• Output current to room lamp rises to range of 6.0 to 12.0 A or higher.
Recoverability	• System recovers when output current to room lamp falls within range of 6.0 to 12.0 A or lower.
Control effected by electronic control unit	• Output to room lamp is stopped.
Possible causes	• Short-circuit to power, ground or another circuit in SIG harness between room lamp and signal detect and actuation module • Faulty room lamp • Defective signal detect and actuation module

522028-4: Mirror heater Switches - Insufficient voltage or short circuit to ground

Generation condition	• Output current to mirror heater switch (illuminated) rises to range of 0.4 to 0.9 A or higher.
Recoverability	• System recovers when output current to mirror heater switch (illuminated) falls within range of 0.4 to 0.9 A or lower.
Control effected by electronic control unit	• Output to mirror heater switch (illuminated) is stopped.
Possible causes	• Short-circuit to power, ground or another circuit in SIG harness between mirror heater switch (illuminated) and signal detect and actuation module • Faulty mirror heater switch (illuminated) • Defective signal detect and actuation module

https://truckmanualshub.com/

522030-4: Backup buzzer - Insufficient voltage or short circuit to ground

Generation condition	• Chip internal temperature rises abnormally high due to overcurrent generated by full or partial short-circuit to ground.
Recoverability	• System recovers when normal current flow is detected.
Control effected by electronic control unit	• Output to back buzzer is stopped.
Possible causes	• Open-circuit or short-circuit to power or ground in SIG harness between back buzzer and signal detect and actuation module • Open-circuit in Plus harness between back buzzer and signal detect and actuation module • Faulty back buzzer • Defective signal detect and actuation module

522032-4: Connected electrical equipment - Insufficient voltage or short circuit to ground

Generation condition	• Output current to option connector (transmission power take-off output) rises to range of 0.4 to 0.9 A or higher.
Recoverability	• System recovers when output current to option connector (transmission power take-off output) falls within range of 0.4 to 0.9 A or lower.
Control effected by electronic control unit	• Output to option connector (transmission power take-off output) is stopped.
Possible causes	• Short-circuit to power, ground or another circuit in SIG harness between option connector (transmission power take-off output) and signal detect and actuation module • Faulty option connector (transmission power take-off output) • Defective signal detect and actuation module

522033-4: Connected electrical equipment - Insufficient voltage or short circuit to ground

Generation condition	• Output current to option connector (transmission neutral switch signal) rises to range of 0.4 to 0.9 A or higher.
Recoverability	• System recovers when output current to option connector (transmission neutral switch signal) falls within range of 0.4 to 0.9 A or lower.
Control effected by electronic control unit	• Output to option connector (transmission neutral switch signal) is stopped.
Possible causes	• Short-circuit to power, ground or another circuit in SIG harness between option connector (transmission neutral switch signal) and signal detect and actuation module • Faulty option connector (transmission neutral switch signal) • Defective signal detect and actuation module

522034-4: Connected electrical equipment - Insufficient voltage or short circuit to ground

Generation condition	• Output current to option connector (parking brake switch signal) rises to range of 0.4 to 0.9 A or higher.
Recoverability	• System recovers when output current to option connector (parking brake switch signal) falls within range of 0.4 to 0.9 A or lower.
Control effected by electronic control unit	• Output to option connector (parking brake switch signal) is stopped.
Possible causes	• Short-circuit to power, ground or another circuit in SIG harness between option connector (parking brake switch signal) and signal detect and actuation module • Faulty option connector (parking brake switch signal) • Defective signal detect and actuation module

522038-5: Air conditioner blower - The current strength is too low or there is an open circuit.

Generation condition	• A/C blower relay in signal detect and actuation module is malfunctioning.
Recoverability	• System recovers when A/C blower relay in signal detect and actuation module resumes normal control.
Control effected by electronic control unit	• Normal control is effected.
Possible causes	• Defective signal detect and actuation module (faulty A/C blower relay)

https://truckmanualshub.com/

522039-5: Accessory 12V/24V relay - The current strength is too low or there is an open circuit.

Generation condition	• A/C relay in signal detect and actuation module is malfunctioning.
Recoverability	• System recovers when A/C relay in signal detect and actuation module resumes normal control.
Control effected by electronic control unit	• Normal control is effected.
Possible causes	• Defective signal detect and actuation module (faulty A/C relay)

522040-5: Ignition relay - The current strength is too low or there is an open circuit.

Generation condition	• IGN relay in signal detect and actuation module is malfunctioning.
Recoverability	• System recovers when IGN relay in signal detect and actuation module resumes normal control.
Control effected by electronic control unit	• Normal control is effected.
Possible causes	• Defective signal detect and actuation module (faulty IGN relay)

522041-5: Accessory relay - The current strength is too low or there is an open circuit.

Generation condition	• ACC relay in signal detect and actuation module is malfunctioning.
Recoverability	• System recovers when ACC relay in signal detect and actuation module resumes normal control.
Control effected by electronic control unit	• Normal control is effected.
Possible causes	• Defective signal detect and actuation module (faulty ACC relay)

522042-5: Ignition 12V/24V relay - The current strength is too low or there is an open circuit.

Generation condition	• IGN relay (option) in signal detect and actuation module is malfunctioning.
Recoverability	• System recovers when IGN relay (option) in signal detect and actuation module resumes normal control.
Control effected by electronic control unit	• Normal control is effected.
Possible causes	• Defective signal detect and actuation module (faulty IGN relay)

522043-5: Air conditioner compressor relay - The current strength is too low or there is an open circuit.

Generation condition	• A/C compressor/condenser relay in signal detect and actuation module is malfunctioning.
Recoverability	• System recovers when A/C compressor/condenser relay in signal detect and actuation module resumes normal control.
Control effected by electronic control unit	• Normal control is effected.
Possible causes	• Defective signal detect and actuation module (faulty A/C compressor/condenser relay)

522064-25: Transmission current gear signal - Received network data is in error.

Generation condition	• Controller area network communication data (gear information) from DUONIC™ electronic control unit are abnormal.
Recoverability	• System recovers when normal controller area network signals are received.
Control effected by electronic control unit	• Normal control is effected.
Possible causes	• Controller area network line is open or shorted to power, ground or another circuit. • Faulty DUONIC™ electronic control unit • Defective signal detect and actuation module

https://truckmanualshub.com/

522067-25: Main light switch request signal - Received network data is in error.

Generation condition	• Local interconnect network communication data (headlight and markers information) from combination switch are abnormal.
Recoverability	• System recovers when normal local interconnect network signals are received.
Control effected by electronic control unit	• Normal control is effected.
Possible causes	• Open-circuit or short-circuit to power, ground or another circuit in local interconnect network line between combination switch and signal detect and actuation module • Faulty combination switch • Defective signal detect and actuation module

522069-25: High beam switch request signal - Received network data is in error.

Generation condition	• Local interconnect network communication data (high beam switch information) from combination switch are abnormal.
Recoverability	• System recovers when normal local interconnect network signals are received.
Control effected by electronic control unit	• Normal control is effected.
Possible causes	• Open-circuit or short-circuit to power, ground or another circuit in local interconnect network line between combination switch and signal detect and actuation module • Faulty combination switch • Defective signal detect and actuation module

522070-25: High beam flash switch request signal - Received network data is in error.

Generation condition	• Local interconnect network communication data (high beam flash switch information) from combination switch are abnormal.
Recoverability	• System recovers when normal local interconnect network signals are received.
Control effected by electronic control unit	• Normal control is effected.
Possible causes	• Open-circuit or short-circuit to power, ground or another circuit in local interconnect network line between combination switch and signal detect and actuation module • Faulty combination switch • Defective signal detect and actuation module

522071-25: Transmission current gear signal - Received network data is in error.

Generation condition	• Controller area network communication data from DUONIC^{TM} electronic control unit are abnormal.
Recoverability	• System recovers when normal controller area network signals are received.
Control effected by electronic control unit	• Normal control is effected.
Possible causes	• Controller area network line is open or shorted to power, ground or another circuit. • Faulty DUONIC^{TM} electronic control unit • Defective signal detect and actuation module

522074-25: Combustion engine Control unit - Received network data is in error.

Generation condition	• Controller area network communication data from engine electronic control unit are abnormal.
Recoverability	• System recovers when normal controller area network signals are received.
Control effected by electronic control unit	• Normal control is effected.
Possible causes	• Controller area network line is open or shorted to power, ground or another circuit. • Defective engine electronic control unit • Defective signal detect and actuation module

https://truckmanualshub.com/

522075-25: Combustion engine Control unit - Received network data is in error.

Generation condition	• Controller area network communication data from engine electronic control unit are abnormal.
Recoverability	• System recovers when normal controller area network signals are received.
Control effected by electronic control unit	• Normal control is effected.
Possible causes	• Controller area network line is open or shorted to power, ground or another circuit. • Defective engine electronic control unit • Defective signal detect and actuation module

522076-25: Combustion engine Control unit - Received network data is in error.

Generation condition	• Controller area network communication data from engine electronic control unit are abnormal.
Recoverability	• System recovers when normal controller area network signals are received.
Control effected by electronic control unit	• Normal control is effected.
Possible causes	• Controller area network line is open or shorted to power, ground or another circuit. • Defective engine electronic control unit • Defective signal detect and actuation module

522077-25: Combination switch - Received network data is in error.

Generation condition	• Local interconnect network communication data (lighting information) from combination switch are abnormal.
Recoverability	• System recovers when normal local interconnect network signals are received.
Control effected by electronic control unit	• Headlamps and Marker Lights automatically turns on when IGN=ON.
Possible causes	• Local interconnect network line is open or shorted to power, ground or another circuit. • Defective combination switch • Defective signal detect and actuation module

522078-25: Combination switch - Received network data is in error.

Generation condition	• Local interconnect network communication data (wiper information) from combination switch are abnormal.
Recoverability	• System recovers when normal local interconnect network signals are received.
Control effected by electronic control unit	• Wiper slow mode automatically turns on when IGN=ON.
Possible causes	• Local interconnect network line is open or shorted to power, ground or another circuit. • Defective combination switch • Defective signal detect and actuation module

522079-25: Selector lever - Received network data is in error.

Generation condition	• Local interconnect network communication data from gear shift lever unit are abnormal.
Recoverability	• System recovers when normal local interconnect network signals are received.
Control effected by electronic control unit	• Normal control is effected.
Possible causes	• Local interconnect network line is open or shorted to power, ground or another circuit. • Faulty gear shift lever unit • Defective signal detect and actuation module

https://truckmanualshub.com/

522080-25: Keyless entry unit - Received network data is in error.

Generation condition	• Local interconnect network communication data from keyless entry electronic control unit are abnormal.
Recoverability	• System recovers when normal local interconnect network signals are received.
Control effected by electronic control unit	• Normal control is effected.
Possible causes	• Local interconnect network line is open or shorted to power, ground or another circuit. • Faulty keyless entry electronic control unit • Defective signal detect and actuation module

522081-25: Right power window Switches - Received network data is in error.

Generation condition	• Local interconnect network communication data from power window switch driver side are abnormal.
Recoverability	• System recovers when normal local interconnect network signals are received.
Control effected by electronic control unit	• Normal control is effected.
Possible causes	• Local interconnect network line is open or shorted to power, ground or another circuit. • Faulty power window switch right-hand • Defective signal detect and actuation module

522082-25: Left power window Switches - Received network data is in error.

Generation condition	• Local interconnect network communication data from power window switch passenger side are abnormal.
Recoverability	• System recovers when normal local interconnect network signals are received.
Control effected by electronic control unit	• Normal control is effected.
Possible causes	• Local interconnect network line is open or shorted to power, ground or another circuit. • Faulty power window switch left-hand • Defective signal detect and actuation module

522097-2: Starter Switches - Data erratic, intermittent or incorrect

Generation condition	• Starter key position disagrees with starter switch signal (the key is OFF but the signal is ACC); there is a trouble in starter switch internal circuit. • Starter key position corresponds with starter switch signal (both are ACC); there is a trouble in key reminder switch (stuck at OFF position).
Recoverability	• System recovers when normal signals are received.
Control effected by electronic control unit	• Normal control is effected.
Possible causes	• Faulty key reminder switch (sticking in OFF position or open-circuit) • Open-circuit in harness between key reminder switch and signal detect and actuation module • Short-circuit in harness between signal detect and actuation module and starter switch • Faulty starter switch • Defective signal detect and actuation module

https://truckmanualshub.com/

522098-2: Starter Switches - Data erratic, intermittent or incorrect

Generation condition	• Starter key position disagrees with starter switch signal (the key is OFF or ACC but the signal is ON); there is a trouble in starter switch internal circuit. • Starter key position corresponds with starter switch signal (both are ON); there is a trouble in key reminder switch (stuck at OFF position).
Recoverability	• System recovers when normal signals are received.
Control effected by electronic control unit	• Normal control is effected.
Possible causes	• Faulty key reminder switch (sticking in OFF position or open-circuit) • Open-circuit in harness between key reminder switch and signal detect and actuation module • Short-circuit in harness between signal detect and actuation module and starter switch • Faulty starter switch • Defective signal detect and actuation module

522099-2: Starter Switches - Data erratic, intermittent or incorrect

Generation condition	• Starter key position disagrees with starter switch signal (the key is OFF, ACC or ON but the signal is ON); there is a trouble in starter switch internal circuit. • Starter key position corresponds with starter switch signal (both are ON); there is a trouble in key reminder switch (stuck at OFF position).
Recoverability	• System recovers when normal signals are received.
Control effected by electronic control unit	• Normal control is effected.
Possible causes	• Faulty key reminder switch (sticking in OFF position or open-circuit) • Open-circuit in harness between key reminder switch and signal detect and actuation module • Short-circuit in harness between signal detect and actuation module and starter switch • Faulty starter switch • Defective signal detect and actuation module

522112-3: The battery voltage is too high. - Excessive voltage or short circuit to positive

Generation condition	• Battery voltage (12 V) is too high.
Recoverability	• System recovers when normal voltage is applied.
Control effected by electronic control unit	• Normal control is effected.
Possible causes	• Faulty alternator • Defective signal detect and actuation module

522112-4: The battery voltage is too low. - Insufficient voltage or short circuit to ground

Generation condition	• Battery voltage (12 V) is too low.
Recoverability	• System recovers when normal voltage is applied.
Control effected by electronic control unit	• Normal control is effected.
Possible causes	• Open-circuit or short-circuit to ground in harness between battery and signal detect and actuation module • Faulty alternator • Defective signal detect and actuation module

522113-25: Combination switch - Received network data is in error.

Generation condition	• Local interconnect network communication data (lighting information) from combination switch are abnormal.
Recoverability	• System recovers when normal local interconnect network signals are received.
Control effected by electronic control unit	• Headlamps and Marker Lights automatically turns on when IGN=ON.
Possible causes	• Open-circuit or short-circuit to power, ground or another circuit in local interconnect network line between combination switch and signal detect and actuation module • Faulty combination switch • Defective signal detect and actuation module

https://truckmanualshub.com/

522114-25: Combination switch - Received network data is in error.

Generation condition	• Local interconnect network communication data from combination switch are abnormal.
Recoverability	• System recovers when normal local interconnect network signals are received.
Control effected by electronic control unit	• Normal control is effected.
Possible causes	• Open-circuit or short-circuit to power, ground or another circuit in local interconnect network line between combination switch and signal detect and actuation module • Faulty combination switch • Defective signal detect and actuation module

522115-25: Right power window Switches - Received network data is in error.

Generation condition	• Local interconnect network communication data from power window switch driver side are abnormal.
Recoverability	• System recovers when normal local interconnect network signals are received.
Control effected by electronic control unit	• Normal control is effected.
Possible causes	• Open-circuit or short-circuit to power, ground or another circuit in local interconnect network line between combination switch and signal detect and actuation module • Faulty power window switch right-hand • Defective signal detect and actuation module

522116-25: Left power window Switches - Received network data is in error.

Generation condition	• Local interconnect network communication data from power window switch passenger side are abnormal.
Recoverability	• System recovers when normal local interconnect network signals are received.
Control effected by electronic control unit	• Normal control is effected.
Possible causes	• Open-circuit or short-circuit to power, ground or another circuit in local interconnect network line between combination switch and signal detect and actuation module • Faulty power window switch left-hand • Defective signal detect and actuation module

522117-25: Keyless entry unit - Received network data is in error.

Generation condition	• Local interconnect network communication data from keyless entry unit are abnormal.
Recoverability	• System recovers when normal local interconnect network signals are received.
Control effected by electronic control unit	• Normal control is effected.
Possible causes	• Open-circuit or short-circuit to power, ground or another circuit in local interconnect network line between combination switch and signal detect and actuation module • Faulty keyless entry unit • Defective signal detect and actuation module

https://truckmanualshub.com/

522118-25: Selector lever - Received network data is in error.

Generation condition	• Local interconnect network communication data from gear shift lever unit are abnormal.
Recoverability	• System recovers when normal local interconnect network signals are received.
Control effected by electronic control unit	• Normal control is effected.
Possible causes	• Open-circuit or short-circuit to power, ground or another circuit in local interconnect network line between combination switch and signal detect and actuation module • Faulty gear shift lever unit • Defective signal detect and actuation module

522133-17: Power take-off is not connected when the Power take-off Switches are turned ON. - Occurring

Generation condition	• Power take-off control switch does not turn ON even in 5 seconds after transmission power take-off switch is turned ON.
Recoverability	• System recovers when normal signals are received.
Control effected by electronic control unit	• Normal control is effected.
Possible causes	• Open-circuit in SIG harness between transmission power take-off 3-way magnetic valve and signal detect and actuation module • Open-circuit in Plus harness between transmission power take-off 3-way magnetic valve and signal detect and actuation module • Faulty transmission power take-off 3-way magnetic valve • Defective signal detect and actuation module

522134-17: Power take-off is not disconnected when the Power take-off Switches are turned OFF. - Occurring

Generation condition	• Transmission power take-off switch (cabin switch) does not turn OFF even in 5 seconds after power take-off control switch (chassis switch) is turned OFF.
Recoverability	• System recovers when normal signals are received.
Control effected by electronic control unit	• Normal control is effected.
Possible causes	• Short-circuit to power or ground in SIG harness between transmission power take-off 3-way magnetic valve and signal detect and actuation module • Faulty transmission power take-off 3-way magnetic valve • Defective signal detect and actuation module

522135-17: Power take-off was disconnected when the Transmission power take-off 3-way magnetic valve was ON. - Occurring

Generation condition	• Power take-off control switch turns OFF before transmission power take-off switch is turned OFF with transmission power take-off 3-way magnetic valve ON.
Recoverability	• System recovers when normal signals are received.
Control effected by electronic control unit	• Normal control is effected.
Possible causes	• Open-circuit in SIG harness between power take-off control switch and signal detect and actuation module • Open-circuit in Plus harness between power take-off control switch and signal detect and actuation module • Faulty power take-off control switch • Defective signal detect and actuation module

https://truckmanualshub.com/

522136-17: Power take-off was connected when Transmission power take-off 3-way magnetic valve was OFF. - Occurring

Generation condition	• Power take-off control switch turns ON before transmission power take-off switch is turned ON with transmission power take-off 3-way magnetic valve OFF.
Recoverability	• System recovers when normal signals are received.
Control effected by electronic control unit	• Normal control is effected.
Possible causes	• Short-circuit to power, ground or another circuit in SIG harness between power take-off control switch and signal detect and actuation module • Faulty power take-off control switch • Defective signal detect and actuation module

522138-25: Combination switch - Received network data is in error.

Generation condition	• Local interconnect network communication data (turn signal left-hand) from combination switch are abnormal.
Recoverability	• System recovers when normal local interconnect network signals are received.
Control effected by electronic control unit	• Normal control is effected.
Possible causes	• Open-circuit or short-circuit to power, ground or another circuit in local interconnect network line between combination switch and signal detect and actuation module • Faulty combination switch • Defective signal detect and actuation module

522139-25: Combination switch - Received network data is in error.

Generation condition	• Local interconnect network communication data (turn signal right-hand) from combination switch are abnormal.
Recoverability	• System recovers when normal local interconnect network signals are received.
Control effected by electronic control unit	• Normal control is effected.
Possible causes	• Open-circuit or short-circuit to power, ground or another circuit in local interconnect network line between combination switch and signal detect and actuation module • Faulty combination switch • Defective signal detect and actuation module

522140-25: Combination switch - Received network data is in error.

Generation condition	• Local interconnect network communication data (wiper signal) from combination switch are abnormal.
Recoverability	• System recovers when normal local interconnect network signals are received.
Control effected by electronic control unit	• Wiper slow mode automatically turns on when IGN=ON.
Possible causes	• Open-circuit or short-circuit to power, ground or another circuit in local interconnect network line between combination switch and signal detect and actuation module • Faulty combination switch • Defective signal detect and actuation module

https://truckmanualshub.com/

522141-25: Combination switch - Received network data is in error.

Generation condition	• Local interconnect network communication data (interval wiper signal) from combination switch are abnormal.
Recoverability	• System recovers when normal local interconnect network signals are received.
Control effected by electronic control unit	• Normal control is effected.
Possible causes	• Open-circuit or short-circuit to power, ground or another circuit in local interconnect network line between combination switch and signal detect and actuation module • Faulty combination switch • Defective signal detect and actuation module

522142-4: Wiper motor - Insufficient voltage or short circuit to ground

Generation condition	• Voltage output to wiper motor is abnormal.
Recoverability	• System recovers when normal voltage is applied.
Control effected by electronic control unit	• Normal control is effected.
Possible causes	• Short-circuit to ground in SIG harness between wiper motor and signal detect and actuation module • Faulty wiper motor • Defective signal detect and actuation module

522143-5: Wiper motor - The current strength is too low or there is an open circuit.

Generation condition	• Current output to wiper motor is abnormal.
Recoverability	• System recovers when normal current is applied.
Control effected by electronic control unit	• Normal control is effected.
Possible causes	• Open-circuit in SIG harness between wiper motor and signal detect and actuation module • Open-circuit in Plus harness between wiper motor and signal detect and actuation module • Faulty wiper motor • Defective signal detect and actuation module

522144-3: Wiper motor - Excessive voltage or short circuit to positive

Generation condition	• Voltage input from wiper motor is abnormal.
Recoverability	• System recovers when normal voltage is applied.
Control effected by electronic control unit	• Normal control is effected.
Possible causes	• Short-circuit to power in SIG harness between wiper motor and signal detect and actuation module • Faulty wiper motor • Defective signal detect and actuation module

522147-4: Key interlock solenoid - Insufficient voltage or short circuit to ground

Generation condition	• Output current to key interlock solenoid rises to range of 4.2 to 7.4 A or higher.
Recoverability	• System recovers when output current to key interlock solenoid falls within range of 4.2 to 7.4 A or lower.
Control effected by electronic control unit	• Output to key interlock solenoid is stopped.
Possible causes	• Short-circuit to power, ground or another circuit in SIG harness between key interlock solenoid and signal detect and actuation module • Faulty key interlock solenoid • Defective signal detect and actuation module

https://truckmanualshub.com/

522148-17: Faulty part CPU inside component “SAM” - Occurring

Generation condition	• Watch dog of signal detect and actuation module generation condition is detected and resetting takes place.
Recoverability	• Watch dog of signal detect and actuation module generation condition is cleared after resetting.
Control effected by electronic control unit	• Normal control is effected.
Possible causes	• Defective CPU of signal detect and actuation module • Defective software of signal detect and actuation module

522149-17: Faulty part Memory inside component “SAM” - Occurring

Generation condition	• Checksum of signal detect and actuation module calculated at data rewriting is not correct.
Recoverability	• Checksum of signal detect and actuation module calculated at data rewriting becomes correct.
Control effected by electronic control unit	• Normal control is effected.
Possible causes	• Abnormality of signal detect and actuation module

522150-17: Faulty component “SAM” - Occurring

Generation condition	• Memory unit is in an abnormal condition.
Recoverability	• Normal operations of memory unit are resumed after restarting.
Control effected by electronic control unit	• Normal control is effected.
Possible causes	• Defective software of signal detect and actuation module

3. FUSO Diagnostics Service Data (Measured Values)

• Since the contents of the FUSO Diagnostics are regularly updated, the descriptions and expressions may differ from those given in the service manuals. Check the latest information with the FUSO Diagnostics.

Current Value Group	Description	Value	Explanation
Lighting: Outputs	Left license plate lamp	ON/OFF	Shows the state of voltage supply to the license plate lamp. ON: 12 V OFF: 0 V
	Right daytime running light	ON/OFF	Shows the state of voltage supply to the daytime running light (RH). ON: 12 V OFF: 0 V
	Left daytime running light	ON/OFF	Shows the state of voltage supply to the daytime running light (LH). ON: 12 V OFF: 0 V
	Clearance lamp RIGHT	ON/OFF	Shows the state of voltage supply to the parking lamp (RH). ON: 12 V OFF: 0 V
	Clearance lamp LEFT	ON/OFF	Shows the state of voltage supply to the parking lamp (LH). ON: 12 V OFF: 0 V
	Right high beam	ON/OFF	Shows the state of voltage supply to the headlamp high beam (RH). ON: 12 V OFF: 0 V

https://truckmanualshub.com/

Current Value Group	Description	Value	Explanation
Lighting: Outputs	Left high beam	ON/OFF	Shows the state of voltage supply to the headlamp high beam (LH). ON: 12 V OFF: 0 V
	Right turn signal on trailer	ON/OFF	Shows the state of voltage supply to the option connector (right turn signal on trailer). ON: 12 V OFF: 0 V
	Left turn signal on trailer	ON/OFF	Shows the state of voltage supply to the option connector (left turn signal on trailer). ON: 12 V OFF: 0 V
	Right turn signal REAR	ON/OFF	Shows the state of voltage supply to the rear turn signal lamp (RH). ON: 12 V OFF: 0 V
	Left turn signal REAR	ON/OFF	Shows the state of voltage supply to the rear turn signal lamp (LH). ON: 12 V OFF: 0 V
	Right turn signal	ON/OFF	Shows the state of voltage supply to the front turn signal lamp (RH). ON: 12 V OFF: 0 V
	Left turn signal	ON/OFF	Shows the state of voltage supply to the front turn signal lamp (LH). ON: 12 V OFF: 0 V
	Right front fog lamp	ON/OFF	Shows the state of voltage supply to front fog lamp (RH). ON: 12 V OFF: 0 V
	Left front fog lamp	ON/OFF	Shows the state of voltage supply to front fog lamp (LH). ON: 12 V OFF: 0 V
	Right rear brake light	ON/OFF	Shows the state of voltage supply to the stop lamp (LH). ON: 12 V OFF: 0 V
	Left rear brake light	ON/OFF	Shows the state of voltage supply to the stop lamp (RH). ON: 12 V OFF: 0 V
	Right tail lamp	ON/OFF	Shows the state of voltage supply to the tail lamp (RH). ON: 12 V OFF: 0 V
	Left tail lamp	ON/OFF	Shows the state of voltage supply to the tail lamp (LH). ON: 12 V OFF: 0 V
	Left exit lamp	ON/OFF	Shows the state of voltage supply to the step lamp (LH). ON: 12 V OFF: 0 V
	Right exit lamp	ON/OFF	Shows the state of voltage supply to the step lamp (RH). ON: 12 V OFF: 0 V
	Switch and controls illumination	ON/OFF	Shows the state of voltage supply to the illumination lamp. ON: 12 V OFF: 0 V

https://truckmanualshub.com/

Current Value Group	Description	Value	Explanation
Lighting: Outputs	Body illumination	ON/OFF	Shows the state of voltage supply to the option connector (body illumination). ON: 12 V OFF: 0 V
	Chassis illumination	ON/OFF	Shows the state of voltage supply to the option connector (chassis illumination). ON: 12 V OFF: 0 V
Wipe and wash: Outputs	Windshield wiper Stage ON	ON/OFF	Shows the state of voltage supply to the wiper motor (Lo). ON: 12 V OFF: 0 V
	Windshield wiper Stage HIGH	ON/OFF	Shows the state of voltage supply to the wiper motor (Hi). ON: 12 V OFF: 0 V
Output 'Pump of windshield washer system'	Windshield washer system	ON/OFF	Shows the state of voltage supply to the wiper washer motor. ON: 12 V OFF: 0 V
Door module: Outputs	Mirror heater Switches	ON/OFF	Shows the state of voltage supply to the mirror heater switch illumination. ON: 12 V OFF: 0 V
	Right mirror heater	ON/OFF	Shows the state of voltage supply to the mirror heater (LH). ON: 12 V OFF: 0 V
	Left mirror heater	ON/OFF	Shows the state of voltage supply to the mirror heater (RH). ON: 12 V OFF: 0 V
Ignition: Outputs	Starter signal Relays (ACC)	ON/OFF	Shows the state of voltage supply to the accessory relay connected equipment. • Gearshift lever unit relay • ETC accessory • Audio accessory • DUONIC™ accessory • Cigarette lighter accessory • Power mirror accessory ON: 12 V OFF: 0 V
	Option relay (ACC)	ON/OFF	Shows the state of voltage supply to the accessory relay (option) connected equipment. • Option connector (accessory body) • Option connector (accessory chassis) ON: 12 V OFF: 0 V
	Starter signal Relays (IGN)	ON/OFF	Shows the state of voltage supply to the ignition relay connected equipment. • Meter cluster (M power supply) • Anti-skid brake system electronic control unit (M power supply) • Engine electronic control unit (M power supply) • DUONIC™ electronic control unit (M power supply 1) • DUONIC™ electronic control unit (M power supply 2) • Gearshift lever unit (M power supply 1) • Gearshift lever unit (M power supply 2) • Starter relay ON: 12 V OFF: 0 V

https://truckmanualshub.com/

Current Value Group	Description	Value	Explanation
Ignition: Outputs	Option relay (IGN)	ON/OFF	Shows the state of voltage supply to the ignition relay (option) connected equipment. • Option connector (M power supply, body) • Option connector (M power supply, chassis) • Alternator (R terminal) ON: 12 V OFF: 0 V
Air conditioning: Outputs	Refrigerant compressor Relays	ON/OFF	Shows the state of voltage supply to the air conditioner compressor condenser relay connected equipment. • Dual pressure switch • Condenser fan relay ON: 12 V OFF: 0 V
	Blower motor Relays	ON/OFF	Shows the state of voltage supply to the air conditioner blower relay connected equipment. • Blower fan relay ON: 12 V OFF: 0 V
Brake system: Outputs	Parking brake Switches Release	ON/OFF	Shows the state of voltage supply to the option connector (parking brake cut). ON: 12 V OFF: 0 V
Transmission: Outputs	Transmission neutral position switch	ON/OFF	Shows the state of voltage supply to the neutral position switch. ON: 12 V OFF: 0 V
	Transmission backup light Switches	ON/OFF	Shows the state of voltage supply to the backup lamp switch. ON: 12 V OFF: 0 V
	Backup buzzer	ON/OFF	Shows the state of voltage supply to the backup buzzer. ON: 12 V OFF: 0 V
Status of power take-off: Outputs	Transmission power take-off 3-way magnetic valve	ON/OFF	Shows the state of voltage supply to the power-take off magnetic valve. ON: 12 V OFF: 0 V
	Power take-off outputs	ON/OFF	Shows the state of voltage supply to the option connector (power-take off magnetic valve). ON: 12 V OFF: 0 V
PWM	Interior lamp Door OPEN	0 to 100%	Shows the state of supply voltage to the cab lamp. Driving duty cycle: 0 to 100%
	Left low beam	0 to 100%	Shows the state of supply voltage to the headlamp low beam (LH). Driving duty cycle: 0 to 100%
	Right low beam	0 to 100%	Shows the state of supply voltage to the headlamp low beam (RH). Driving duty cycle: 0 to 100%
	Key interlock solenoid	0 to 100%	Shows the state of supply voltage to the key interlock solenoid. Driving duty cycle: 0 to 100%
Lighting: Inputs	Front fog lamp Switches	ON/OFF	Shows the ON/OFF state of the front fog lamp switch. OFF: 12 V ON: 0 V (unlatched)
	Hazard warning flasher Switches	ON/OFF	Shows the ON/OFF state of the hazard switch. OFF: 12 V ON: 0 V (unlatched)

https://truckmanualshub.com/

#985 INSPECTION OF SIGNAL DETECT AND ACTUATION MODULES

Current Value Group	Description	Value	Explanation
Wipe and wash: Inputs	Windshield wiper Switch 'Rest position'	ON/OFF	Shows the ON/OFF state of the automatic stop position of the wiper motor. OFF: 12 V ON: 0 V
Door module: Inputs	Mirror heater	ON/OFF	Shows the ON/OFF state of the mirror heater. OFF: 12 V ON: 0 V (unlatched)
	Right rear door / Left rear door	OPEN/ CLOSED	Shows the open/closed state of the rear door.
	Passenger door	OPEN/ CLOSED	Shows the open/closed state of the passenger door.
	Driver door	OPEN/ CLOSED	Shows the open/closed state of the driver door.
	Door Lock Switch OFF	ON/OFF	Shows the ON/OFF state of the door lock switch.
	Door Lock Switch ON	ON/OFF	Shows the ON/OFF state of the door lock switch.
Ignition: Inputs	Starter Switches (START)	ON/OFF	Shows the ON/OFF state of the starter switch (START position). OFF: 0 V ON: 12 V
	Starter Switches (LOCK)	ON/OFF	Shows the ON/OFF state of the starter insert switch. OFF: 0 V ON: 12 V
	Starter Switches (ACC)	ON/OFF	Shows the ON/OFF state of the starter switch (ACC position). OFF: 0 V ON: 12 V
	Starter Switches (ON)	ON/OFF	Shows the ON/OFF state of the starter switch (M position). OFF: 0 V ON: 12 V
	Alternator	ON/OFF	Shows the state of supply voltage from the alternator (L terminal). ON: 12 V OFF: 0 V
	Starter signal Relays (ACC)	ON/OFF	Shows the operating state of the accessory relay output. ON: 12 V OFF: 0 V
	Option relay (ACC)	ON/OFF	Shows the operating state of the accessory relay (option) output. ON: 12 V OFF: 0 V
	Starter signal Relays (IGN)	ON/OFF	Shows the operating state of the ignition relay output. ON: 12 V OFF: 0 V
	Option relay (IGN)	ON/OFF	Shows the operating state of the ignition relay (option) output. ON: 12 V OFF: 0 V
Air conditioning: Inputs	Air conditioning switch	ON/OFF	Shows the ON/OFF state of the air conditioning switch. OFF: 12 V ON: 0 V
	Refrigerant compressor Relays	ON/OFF	Shows the ON/OFF state of the blower fan. OFF: 0 V ON: 12 V

https://truckmanualshub.com/

Current Value Group	Description	Value	Explanation
Air conditioning: Inputs	Blower fan output	ON/OFF	Shows the ON/OFF state of the refrigerant compressor relays. OFF: 0 V ON: 12 V
Brake system: Inputs	Vacuum Switches	ON/OFF	Shows the ON/OFF state of the vacuum switch. OFF: 12 V ON: 0 V
	Brake fluid level Switches	ON/OFF	Shows the ON/OFF state of the brake fluid level switch. OFF: 12 V ON: 0 V
	Parking brake Switches	ON/OFF	Shows the ON/OFF state of the parking brake switch. OFF: 12 V ON: 0 V
	Brake light Switches 2	ON/OFF	Shows the ON/OFF state of the brake switch (normal close). OFF: 12 V ON: 0 V
	Brake light Switches 1	ON/OFF	Shows the ON/OFF state of the brake switch (normal open). OFF: 12 V ON: 0 V
Transmission: Inputs	Backup light Switches	ON/OFF	Shows the ON/OFF state of the backup lamp switch. OFF: 12 V ON: 0 V
	Transmission neutral position switch	ON/OFF	Shows the ON/OFF state of the neutral switch. OFF: 0 V ON: 12 V
	Clutch Switches	ON/OFF	Shows the ON/OFF state of the clutch switch. OFF: 12 V ON: 0 V
Status of power take-off: Inputs	Power take-off Inputs	ON/OFF	Shows the ON/OFF state of the option connector (power take-off control switch). OFF: 0 V ON: 12 V
	Switch for power take-off on body	ON/OFF	Shows the ON/OFF state of the power take-off control switch. OFF: 12 V ON: 0 V
	Switch for power take-off in cab	ON/OFF	Shows the ON/OFF state of the transmission power take-off switch. OFF: 12 V ON: 0 V
Fill level of fuel tank	Fuel level	0	Shows the fuel level in the fuel tank. Fuel tank empty: Approx. 0 Fuel tank full: Approx. 242
Battery voltage	Battery voltage	0	Shows the input voltage from the battery (high-current fuse box) to the SAM (signal detect and actuation modules).

https://truckmanualshub.com/

4. Actuator Test (Control) Using FUSO Diagnostics

- Since the contents of the FUSO Diagnostics are regularly updated, the descriptions and expressions may differ from those given in the service manuals. Check the latest information with the FUSO Diagnostics.
- The basic conditions for performing the actuator test: Vehicle stopped, engine stopped and starter switch ON.

Selection	Explanation
Exterior illumination	Illuminates the stop lamp (LH).
	Illuminates the headlamp high beam (LH).
	Illuminates the parking lamp (LH).
	Illuminates the turn signal lamp (LH).
	Illuminates the stop lamp (RH).
	Illuminates the headlamp high beam (RH).
	Illuminates the parking lamp (RH).
	Illuminates the turn signal lamp (RH).
M7 (Washer motor)	Activates the windshield washer system.
K22 (Starter relay)	Activates the ignition relay. [Additional condition for performing actuator test] Starter switch position: ACC
	Activates the ignition relay (option) [Additional condition for performing actuator test] Starter switch position: ACC
	Activates the accessory relay.
	Activates the accessory relay (option).
Door module	–
Air conditioning	Activates the air conditioner compressor condenser relay.
	Activates the air blower relay.

5. Electronic Control Unit Coding

- The signal detect and actuation module has various kinds of information such as technical data of vehicle and equipment registered as coding data.
- Therefore, each time the signal detect and actuation module is replaced or some setting changes are made, the coding data must surely be rewritten using FUSO Diagnostics. Otherwise, the data stored in the signal detect and actuation module could deviate from the actual conditions of the vehicles, resulting in occurrence of diagnosis codes.

5.1 Rewriting of coding data

- If one of the following changes has been made, be sure to rewrite the relevant coding data. For details of the rewriting procedure, consult an authorized dealer or distributor.
- Depending on the specifications of the rear body to be mounted, coding data other than those listed below may have to be rewritten. For further information, consult an authorized dealer or distributor.

Rewriting coding data required	Standards for rewriting signal detect and actuation module internal data
When signal detect and actuation module is replaced	–
When additional turn signal lamps are installed	–
When rear body is mounted	If an optional connector for rear body mounting is used, the following diagnosis/actuator functions must be set valid: • Illumination • Backup buzzer • Power take-off • Neutral switch • Parking brake switch
When additional LED rear lamps are installed	–
When additional mirror with heater is installed	–

https://truckmanualshub.com/

6. Electronic Control Unit Input/Output Table

- See the Electronic Control Unit Schematic Diagram for the pin locations of each signal and ground. (See Gr54-00C)

Devices to be connected	Terminal	Input/ output	Voltage and wave form
License plate lamp	13C-9-Ground	Output	ON: 12 V/OFF: 0 V
Parking lamp (RH)	15B-11-Ground	Output	ON: 12 V/OFF: 0 V
Parking lamp (LH)	15B-10-Ground	Output	ON: 12 V/OFF: 0 V
Head lamp high beam (RH)	14B-7-Ground	Output	ON: 12 V/OFF: 0 V
Head lamp high beam (LH)	16B-2-Ground	Output	ON: 12 V/OFF: 0 V
Option connector (side turn lamp (RH))	13C-4-Ground	Output	ON: 12 V/OFF: 0 V
Option connector (side turn lamp (LH))	12C-7-Ground	Output	ON: 12 V/OFF: 0 V
Rear turn lamp (RH)	13C-5-Ground	Output	ON: 12 V/OFF: 0 V
Rear turn lamp (LH)	12C-4-Ground	Output	ON: 12 V/OFF: 0 V
Front turn lamp (RH)	14B-4-Ground	Output	ON: 12 V/OFF: 0 V
Front turn lamp (LH)	16B-4-Ground	Output	ON: 12 V/OFF: 0 V
Front fog lamp (RH)	12C-6-Ground	Output	ON: 12 V/OFF: 0 V
Front fog lamp (LH)	13C-2-Ground	Output	ON: 12 V/OFF: 0 V
Stop lamp (RH)	13C-7-Ground	Output	ON: 12 V/OFF: 0 V
Stop lamp (LH)	12C-1-Ground	Output	ON: 12 V/OFF: 0 V
Tail lamp (RH)	12C-3-Ground	Output	ON: 12 V/OFF: 0 V
Tail lamp (LH)	13C-8-Ground	Output	ON: 12 V/OFF: 0 V
Step lamp (RH)	15B-12-Ground	Output	ON: 12 V/OFF: 0 V
Step lamp (LH)	15B-14-Ground	Output	ON: 12 V/OFF: 0 V
Illumination lamp	14B-8-Ground	Output	ON: 12 V/OFF: 0 V
Wiper motor (Hi)	16B-5-Ground	Output	ON: 12 V/OFF: 0 V
Wiper motor (Lo)	16B-1-Ground	Output	ON: 12 V/OFF: 0 V
Wiper washer motor	17B-5-Ground	Output	ON: 12 V/OFF: 0 V
Mirror heater switch illumination	15B-27-Ground	Output	ON: 12 V/OFF: 0 V
Mirror heater (LH)	14B-5-Ground	Output	ON: 12 V/OFF: 0 V
Mirror heater (RH)	14B-1-Ground	Output	ON: 12 V/OFF: 0 V
Backup lamp	13C-6-Ground	Output	ON: 12 V/OFF: 0 V
Backup buzzer	11C-6-Ground	Output	ON: 12 V/OFF: 0 V
Cab lamp	17B-15-Ground	Output	PWM
Key interlock solenoid	17B-17-Ground	Output	PWM
Front fog lamp switch	15B-16-Ground	Input	OFF: 12 V/ON: 0 V (Unlatched type)
Hazard switch	15B-4-Ground	Input	OFF: 12 V/ON: 0 V (Unlatched type)
Wiper motor stop position switch	17B-16-Ground	Input	OFF: 12 V/ON: 0 V
Heater mirror switch	18B-11-Ground	Input	OFF: 12 V/ON: 0 V (Unlatched type)
Rear door switch	15B-2-Ground	Input	OFF: 12 V/ON: 0 V
Front door switch (assistant driver's seat side)	15B-3-Ground	Input	OFF: 12 V/ON: 0 V
Front door switch (driver's seat side)	15B-18-Ground	Input	OFF: 12 V/ON: 0 V
Starter switch (START position)	15B-15-Ground	Input	OFF: 0 V/ON: 12 V
Starter switch (key insert switch)	18B-18-Ground	Input	OFF: 0 V/ON: 12 V
Starter switch (ACC position)	18B-17-Ground	Input	OFF: 0 V/ON: 12 V
Starter switch (M position)	18B-3-Ground	Input	OFF: 0 V/ON: 12 V

https://truckmanualshub.com/

#985 INSPECTION OF SIGNAL DETECT AND ACTUATION MODULES

Devices to be connected	Terminal	Input/ output	Voltage and wave form
Alternator (L terminal)	11C-8-Ground	Input	Engine running: 12 V Engine stopped: 0 V
Accessory relay	3B-8, 7C-8, 3B-10, 3B-13-Ground	Output	Activated: 12 V Not activated: 0 V
Accessory relay (option)	6X-1-Ground	Output	Activated: 12 V Not activated: 0 V
Ignition relay	1B-11, 5C-2, 5C-4, 5C-11, 5C-9, 1B-1, 1B-4, 1B-5, 1B-13, 1B-14-Ground	Output	Activated: 12 V/24 V Not activated: 0 V
Ignition relay (option)	6X-5-Ground	Output	Activated: 12 V Not activated: 0 V
Air conditioner switch	15B-17-Ground	Input	OFF: 12 V/ON: 0 V
Air conditioner compressor condenser relay	7C-11, 7C-12-Ground	Output	Activated: 12 V Not activated: 0 V
Air conditioner blower relay	2B-14-Ground	Output	Active (with air conditioner compressor operating): 12 V Not activated: 0 V
Vacuum switch	15B-1-Ground	Input	OFF: 12 V/ON: 0 V
Brake fluid level switch	18B-7-Ground	Input	OFF: 12 V/ON: 0 V
Parking brake switch	18B-6-Ground	Input	OFF: 12 V/ON: 0 V
Stop lamp switch (normal close)	15B-19-Ground	Input	OFF: 12 V/ON: 0 V
Stop lamp switch (normal open)	18B-4-Ground	Input	OFF: 12 V/ON: 0 V
Power-take off control switch	11C-9-Ground	Input	OFF: 12 V/ON: 0 V
Cab tilt lock switch	18B-10-Ground	Input	OFF: 12 V/ON: 0 V
Diesel particulate filter cleaning switch	15B-20-Ground	Input	OFF: 12 V/ON: 0 V (Unlatched type)
Fuel level sensor	11C-1-Ground	Input	Fuel tank empty: 150 ± 3.5Ω or more Full: 5 ± 2Ω
Battery voltage	10C-1-Ground	Input	Shows the battery voltage (12 V).

https://truckmanualshub.com/

7. Inspection of Relays in Signal Detect and Actuation Module

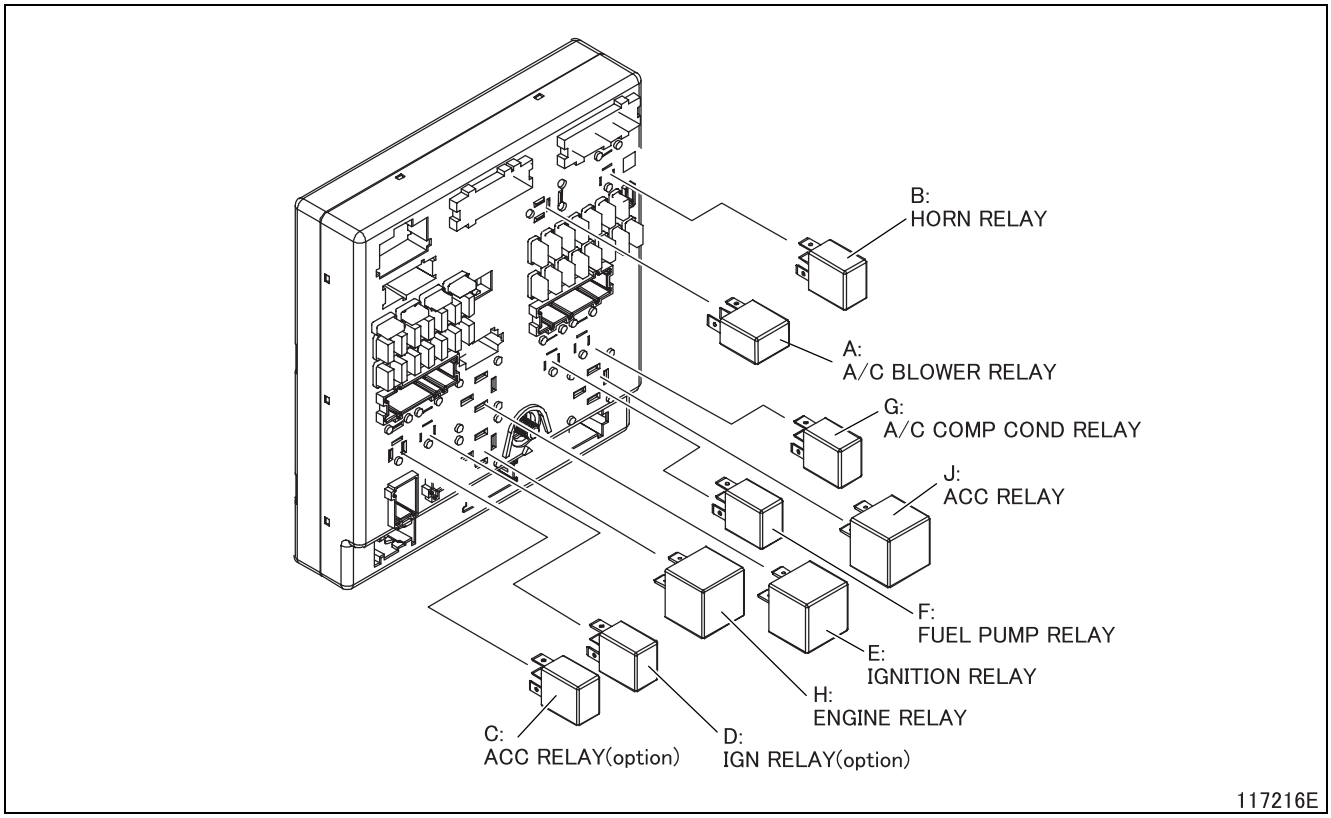

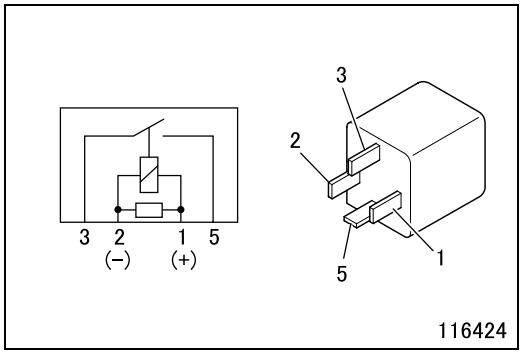

E: Ignition relay
H: Engine relay
J: ACC relay (normally open 4-pin)

- Replace the relay if any abnormal conditions are found during checking for conductivity or operation.

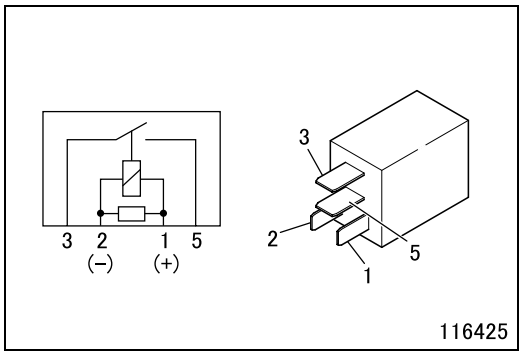

A: A/C blower relay
B: Horn relay
C: ACC relay (option)
D: IGN relay (option)
F: Fuel pump relay
G: A/C compressor (normally open 4-pin)

- Replace the relay if any abnormal conditions are found during checking for conductivity or operation.

https://truckmanualshub.com/

#986 INSPECTION OF METER CLUSTER

- Since the FUSO diagnostics data are updated from time to time, descriptions or wording may not agree with the workshop manual. The FUSO diagnostics will have the latest data.

1. List of Diagnosis Codes

Code	Message	Warning lamp indication METER	Remarks
158-3	The battery voltage is too high. - Voltage above normal or shorted to high source	O	
158-4	The battery voltage is too low. - Voltage below normal or shorted to low source	O	
629-31	Watchdog reset condition exists	O	
639-4	CAN bus OFF fault - Voltage below normal or shorted to low source	O	
1213-14	MIL lamp internal LED circuit failure	O	
521751-7	Stopper motor internal circuit failure	O	
521768-19	EEPROM internal access failure	O	

2. Details of Diagnosis Codes

158-3: The battery voltage is too high. - Voltage above normal or shorted to high source

Generation condition	• In meter cluster is indicated a battery voltage higher than 16 V for 10 seconds.
Recoverability	• System recovers if normal reading is obtained when starter switch is turned to OFF and then to ON.
Control effected by electronic control unit	• None
Possible causes	• Faulty alternator • Faulty signal detect and actuation module • Defective meter cluster

158-4: The battery voltage is too low. - Voltage below normal or shorted to low source

Generation condition	• In meter cluster is indicated a battery voltage lower than 10 V for 10 seconds
Recoverability	• System recovers if normal reading is obtained when starter switch is turned to OFF and then to ON.
Control effected by electronic control unit	• None
Possible causes	• Open-circuit or short-circuit to ground in harness between battery and meter cluster • Malfunction of battery • Faulty alternator • Faulty signal detect and actuation module • Defective meter cluster

629-31: Watchdog reset condition exists

Generation condition	• CPU in meter cluster is reset.
Recoverability	• System recovers if any normal signal is received when starter switch is turned to OFF and then to ON.
Control effected by electronic control unit	• None
Possible causes	• Defective meter cluster • Faulty alternator • Faulty signal detect and actuation module

https://truckmanualshub.com/

639-4: CAN bus OFF fault - Voltage below normal or shorted to low source

Generation condition	• Controller area network communication bus off condition is detected.
Recoverability	• System recovers if any normal signal is received when starter switch is turned to OFF and then to ON.
Control effected by electronic control unit	• None
Possible causes	• Controller area network communication bus is open or shorted to power, ground or another circuit. • Faulty resistor in meter cluster • Defective meter cluster

1213-14: MIL lamp internal LED circuit failure

Generation condition	• Internal circuit is malfunctioning.
Recoverability	• System recovers if any normal signal is received when starter switch is turned to OFF and then to ON.
Control effected by electronic control unit	• Error message is sent through controller area network.
Possible causes	• Defective meter cluster

521751-7: Stopper motor internal circuit failure

Generation condition	• Internal circuit is malfunctioning.
Recoverability	• System recovers if any normal signal is received when starter switch is turned to OFF and then to ON.
Control effected by electronic control unit	• None
Possible causes	• Defective meter cluster

521768-19: EEPROM internal access failure

Generation condition	• Access to EEPROM is impossible.
Recoverability	• System recovers if any normal signal is received when starter switch is turned to OFF and then to ON.
Control effected by electronic control unit	• None
Possible causes	• Defective meter cluster

3. FUSO Diagnostics Service Data (Measured Values)

- Since the contents of the FUSO Diagnostics are regularly updated, the descriptions and expressions may differ from those given in the service manuals. Check the latest information with the FUSO Diagnostics.

Current Value Group	Description	Value	Explanation
–	Vehicle speed Tachograph	0.000 to 255.000 km/h {0.000 to 158.4 mph}	Shows the vehicle speed as determined by the tachograph.
–	Vehicle speed ECU	0.000 to 255.000 km/h {0.000 to 158.4 mph}	Shows the vehicle speed as determined by the ECU.

https://truckmanualshub.com/

4. Actuator Test (Control) Using FUSO Diagnostics

- Since the contents of the FUSO Diagnostics are regularly updated, the descriptions and expressions may differ from those given in the service manuals. Check the latest information with the FUSO Diagnostics.
- The basic conditions for performing the actuator test: Vehicle stopped, engine stopped and starter switch ON.

Selection	Explanation
Instrument cluster	[Test method] Operate each indication in the meter cluster. [Checking method] • The speedometer operates from 0 to maximum. It stops on the way for about 5 seconds at the 40 km/h {40 mph} point. • The tachometer operates from 0 to maximum. It stops on the way for about 5 seconds at the 2000 rpm point. • The fuel level gauge operates from 0 to full. It stops on the way for about 5 seconds at the one half point. • The indicator lamp, illumination, multi-information display and buzzer cycle ON/OFF. [Note] The test stops automatically when three rounds of inspection are completed. (Or, terminated using the stop button.)

5. Electronic Control Unit Coding

- The meter cluster has various kinds of information such as technical data of vehicle and equipment registered as coding data.
- Therefore, each time the meter cluster is replaced or some specification changes are made, the coding data must surely be rewritten using FUSO Diagnostics. Otherwise, the data stored in the meter cluster could deviate from the actual conditions of the vehicles, resulting in incorrect alarms.

6. Rewriting of Coding Data

- If specification changes have been made, be sure to rewrite the relevant coding data. For details of the rewriting procedure, consult an authorized dealer or distributor.

Rewriting coding data required	Standards for rewriting meter cluster internal data
Final gear	When the final gear is changed, the meter cluster internal data must be updated.
Rear tire	When the tire size is changed, the meter cluster internal data must be updated.
Anti-lock brake system	When specifications of this system are changed, the meter cluster internal data must be updated.

https://truckmanualshub.com/

54-14 CONNECTOR CONFIGURATION CHART

https://truckmanualshub.com/

CONNECTOR CONFIGURATION CHART

AA type

Number shows number of pins	Female connector	Male connector
AA1A		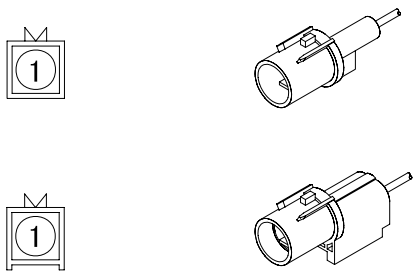
AA2A	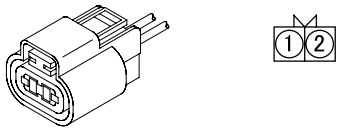	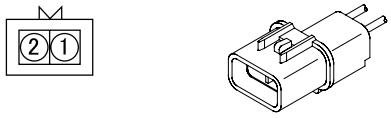
AA2B	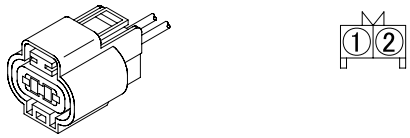	
AA3A		
AA3B	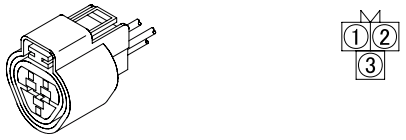	
AA4A	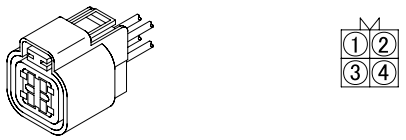	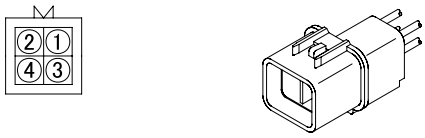
AA4B	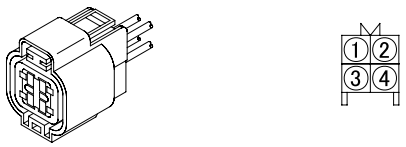	
AA6A	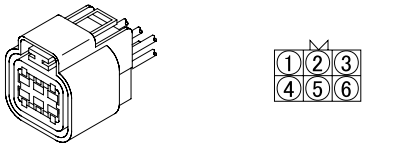	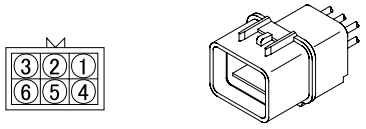

https://truckmanualshub.com/

Number shows number of pins	Female connector	Male connector
AA6B	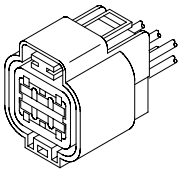 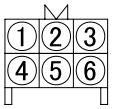	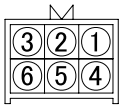 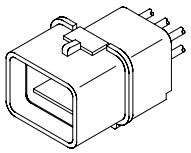
AA8A	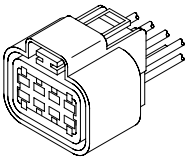 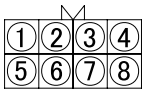	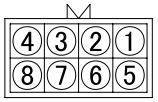 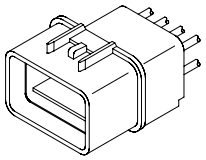
AA10A	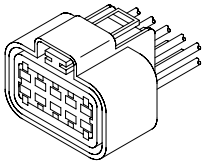 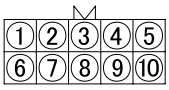	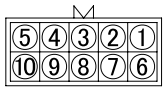 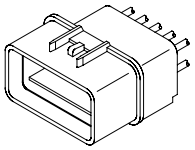
AA12A	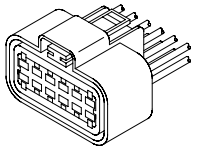 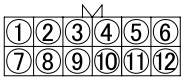	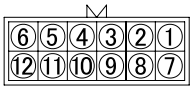 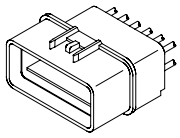

AB type

Number shows number of pins	Female connector	Male connector
AB1A	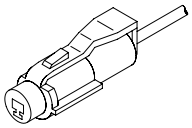 	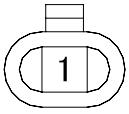 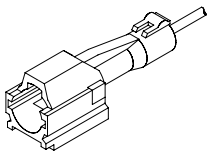
AB2A	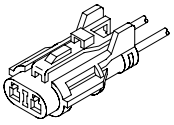 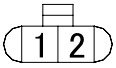	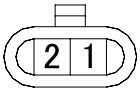 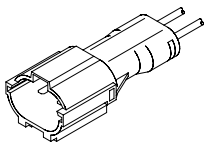
AB2B	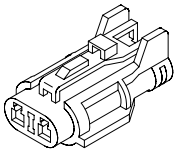 	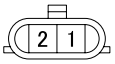 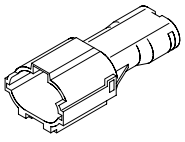
AB2C	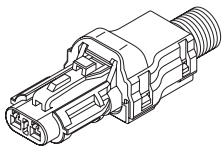 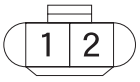	 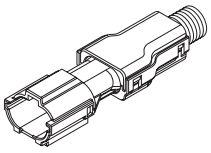

https://truckmanualshub.com/

CONNECTOR CONFIGURATION CHART

Number shows number of pins	Female connector	Male connector
AB3A	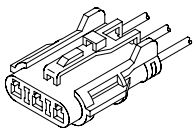 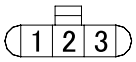	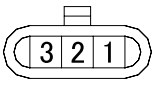 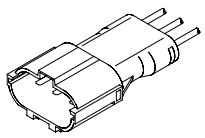
AB3B	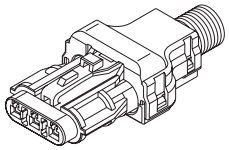 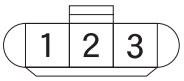	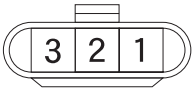 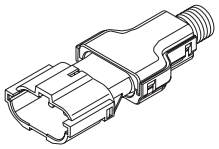
AB4A	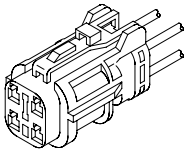 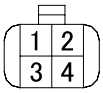	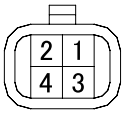 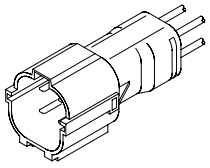
AB6A	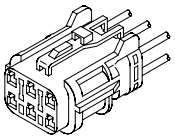 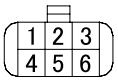	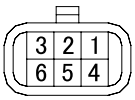 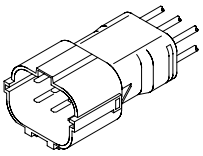
AB6B	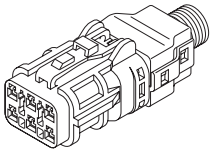 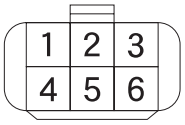	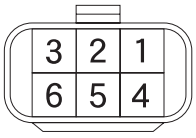 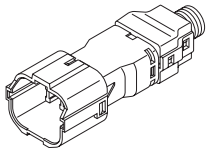
AB8A	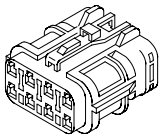 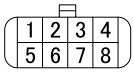	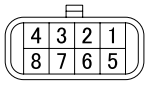 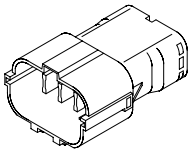
AB8B	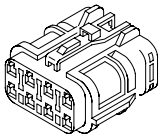 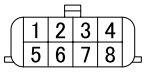	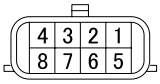 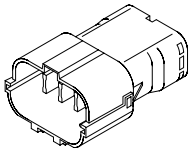
AB12A	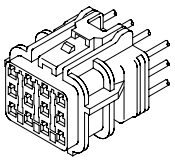 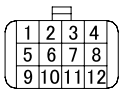	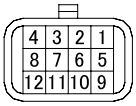 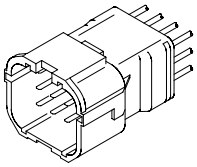 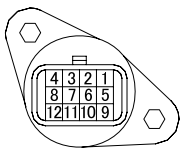 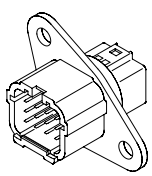

https://truckmanualshub.com/

Number shows number of pins	Female connector	Male connector
AB12B	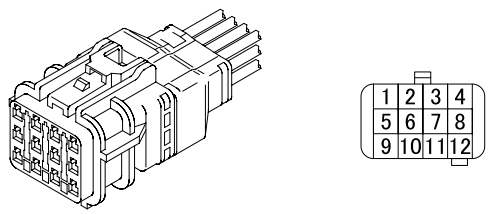	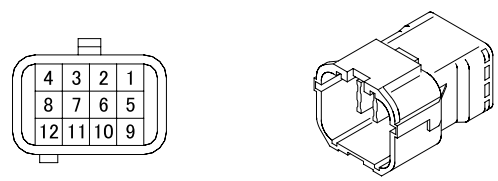
AB14A	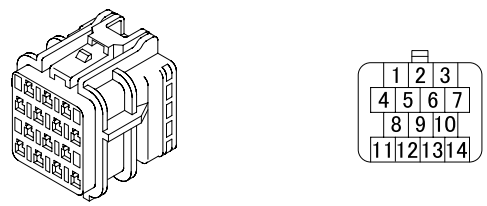	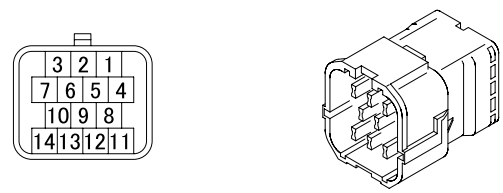
AB14B	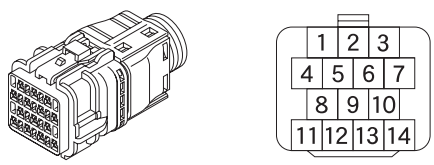	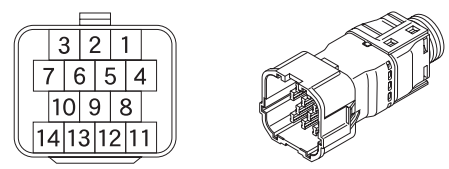
AB16A		
AB16B		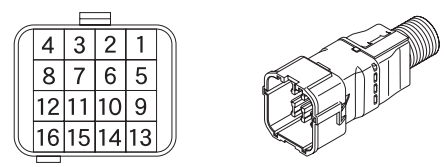
AB52A	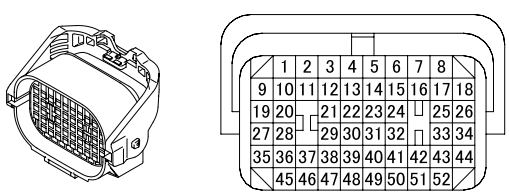	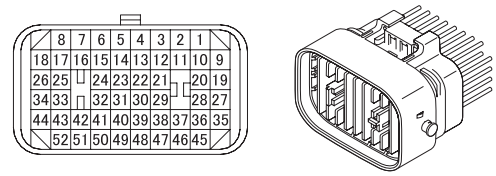
AB52B	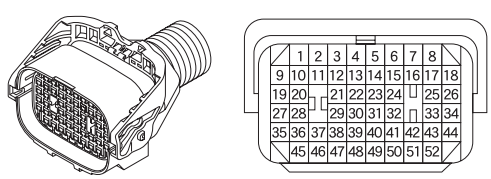	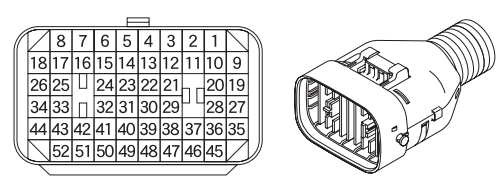

https://truckmanualshub.com/

CONNECTOR CONFIGURATION CHART

AC type

Number shows number of pins	Female connector	Male connector
AC1A	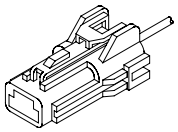 	 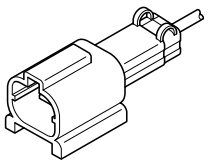
AC1B	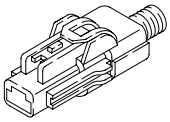 	 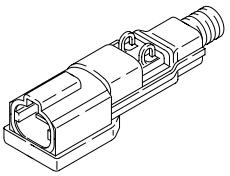
AC2A	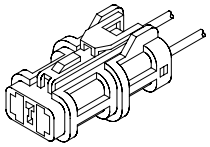 	 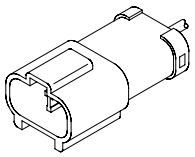
AC2B	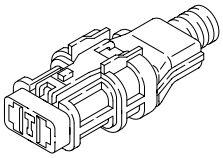 	 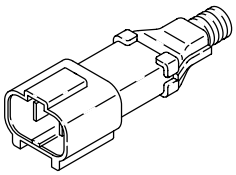
AC2C	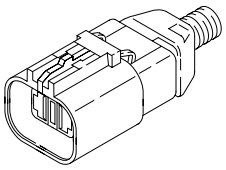 	
AC2D	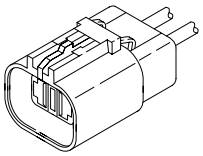 	
AC3A	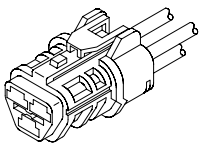 	 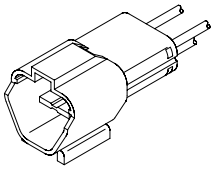
AC4A	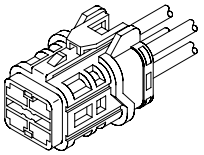 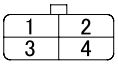	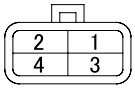 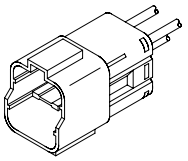
AC4B	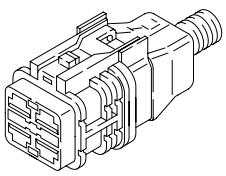 	 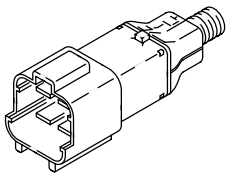

https://truckmanualshub.com/

AD type

Number shows number of pins	Female connector	Male connector
AD1A	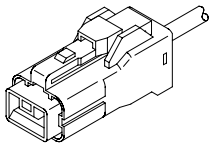 	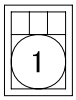 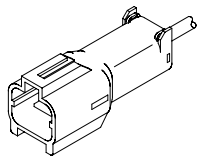
AD2A	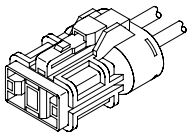 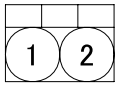	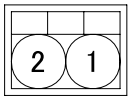 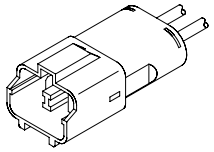
AD2B	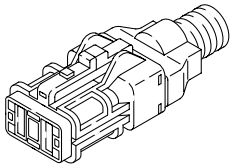 	 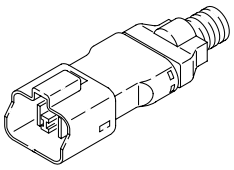

AE type

Number shows number of pins	Female connector	Male connector
AE2A	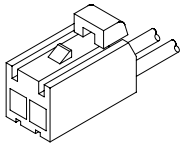 	 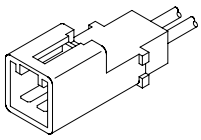
AE3A	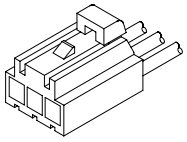 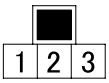	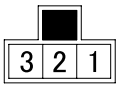 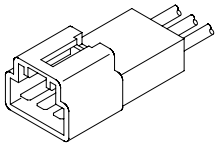
AE5A	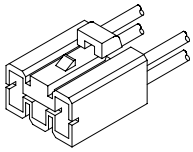 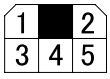	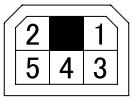 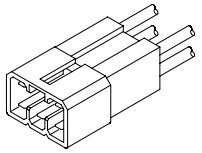
AE7A	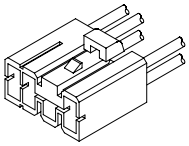 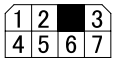	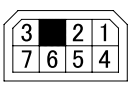 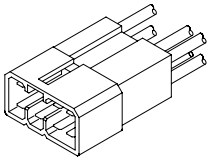
AE9A	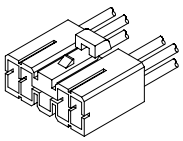 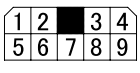	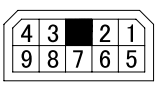 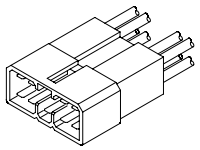

https://truckmanualshub.com/

CONNECTOR CONFIGURATION CHART

Number shows number of pins	Female connector	Male connector
AE11A	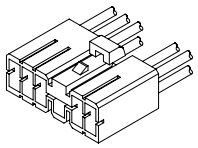 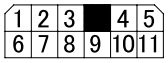	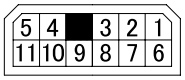 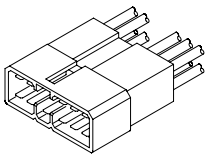
AE13A	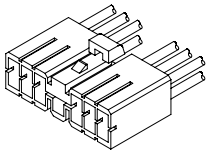 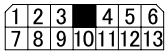	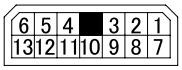 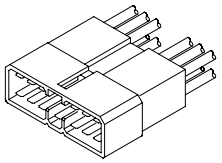
AE15A	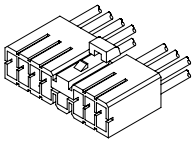 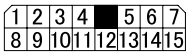	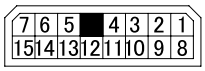 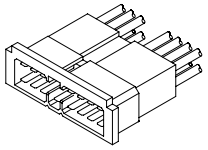
AE16A	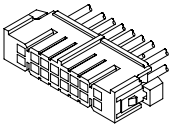 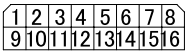	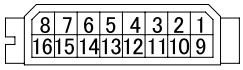 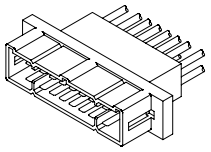
AE16B	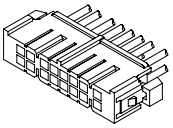 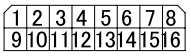	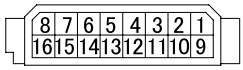 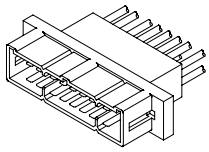
AE16C	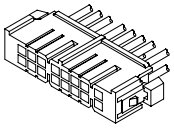 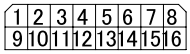	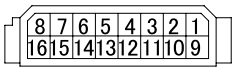 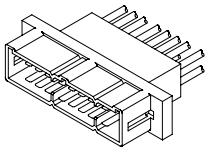
AE17A	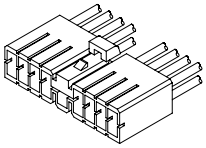 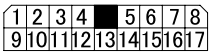	 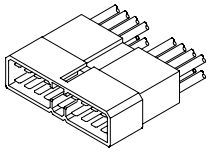

AG type

Number shows number of pins	Female connector	Male connector
AG16A	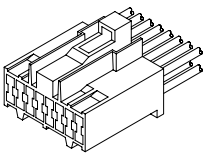 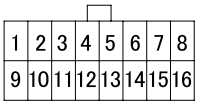	

https://truckmanualshub.com/

Number shows number of pins	Female connector	Male connector
AG20A	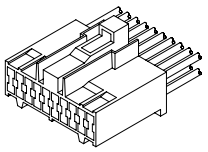 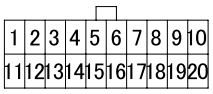	

AH type

Number shows number of pins	Female connector	Male connector
AH10A	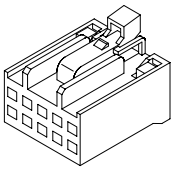 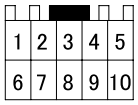	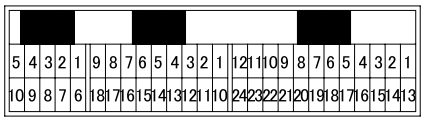 AH10A （AH18A） （AH24A） 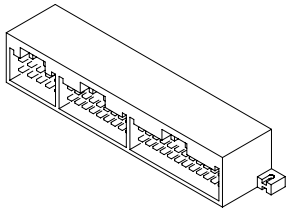
AH12A	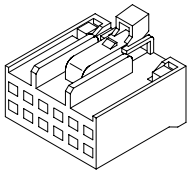 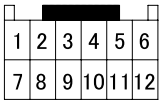	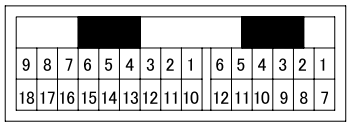 （AH18B） AH12A 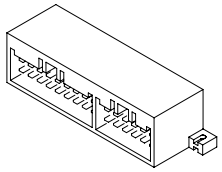
AH12B	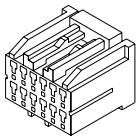 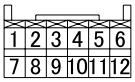	
AH16A	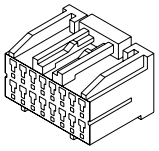 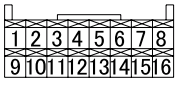	

https://truckmanualshub.com/

CONNECTOR CONFIGURATION CHART

Number shows number of pins	Female connector	Male connector
AH18A	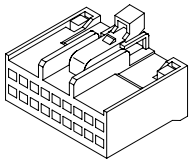 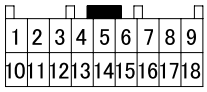 1 2 3 4 5 6 7 8 9 10 11 12 13 14 15 16 17 18	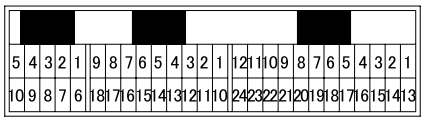 5 4 3 2 1 9 8 7 6 5 4 3 2 1 12 11 10 9 8 7 6 5 4 3 2 1 10 9 8 7 6 18 17 16 15 14 13 12 11 10 24 23 22 21 20 19 18 17 16 15 14 13 (AH10A) AH18A (AH24A) 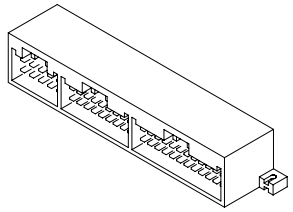
AH18B	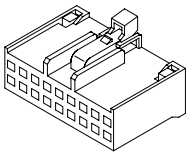 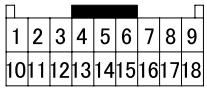 1 2 3 4 5 6 7 8 9 10 11 12 13 14 15 16 17 18	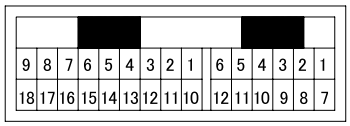 9 8 7 6 5 4 3 2 1 6 5 4 3 2 1 18 17 16 15 14 13 12 11 10 12 11 10 9 8 7 AH18B (AH12A) 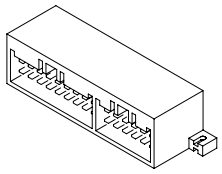
AH22A	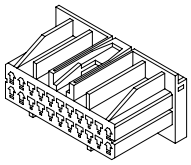 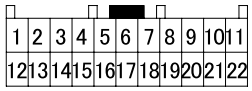 1 2 3 4 5 6 7 8 9 10 11 12 13 14 15 16 17 18 19 20 21 22	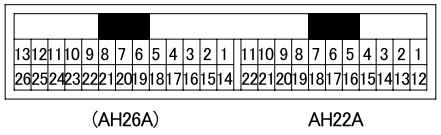 13 12 11 10 9 8 7 6 5 4 3 2 1 11 10 9 8 7 6 5 4 3 2 1 26 25 24 23 22 21 20 19 18 17 16 15 14 22 21 20 19 18 17 16 15 14 13 12 (AH26A) AH22A 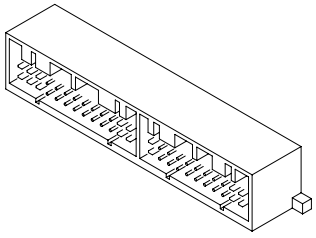
AH24A	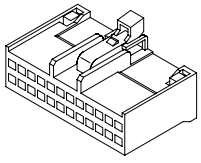 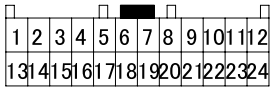 1 2 3 4 5 6 7 8 9 10 11 12 13 14 15 16 17 18 19 20 21 22 23 24	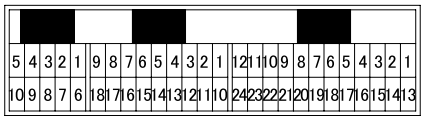 5 4 3 2 1 9 8 7 6 5 4 3 2 1 12 11 10 9 8 7 6 5 4 3 2 1 10 9 8 7 6 18 17 16 15 14 13 12 11 10 24 23 22 21 20 19 18 17 16 15 14 13 (AH10A) (AH18A) AH24A 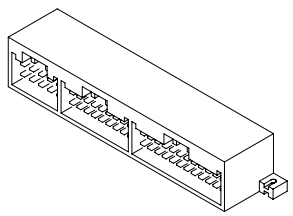

Number shows number of pins	Female connector	Male connector
AH26A	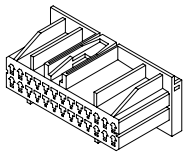 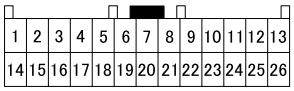	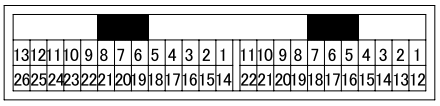 AH26A (AH22A) 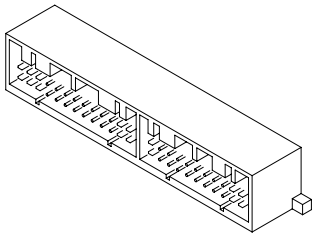

AJ type

Number shows number of pins	Female connector	Male connector
AJ2A	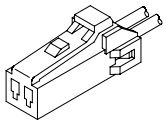 	 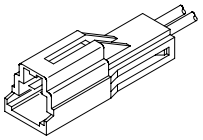
AJ4A	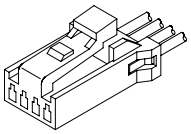 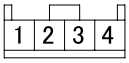	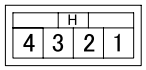 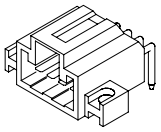
AJ8A	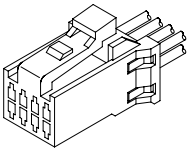 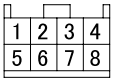	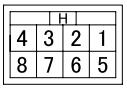 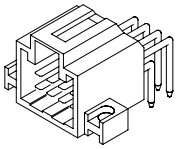
AJ10A	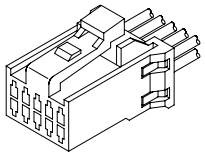 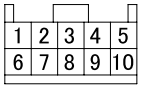	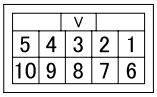 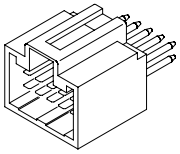 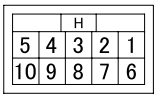 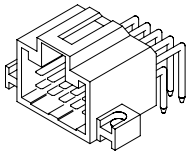

https://truckmanualshub.com/

CONNECTOR CONFIGURATION CHART

Number shows number of pins	Female connector	Male connector
AJ12A	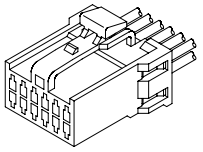 1 2 3 4 5 6 7 8 9 10 11 12	V 6 5 4 3 2 1 12 11 10 9 8 7 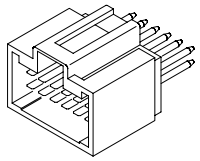 H 6 5 4 3 2 1 12 11 10 9 8 7 AJ12A H 8 7 6 5 4 3 2 1 16 15 14 13 12 11 10 9 (AJ16A) 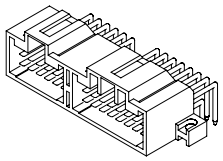
AJ16A	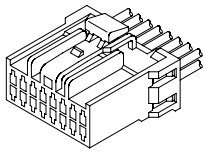 1 2 3 4 5 6 7 8 9 10 11 12 13 14 15 16	H 8 7 6 5 4 3 2 1 16 15 14 13 12 11 10 9 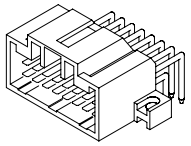 V 8 7 6 5 4 3 2 1 16 15 14 13 12 11 10 9 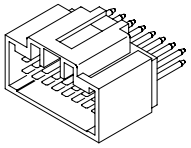 H 6 5 4 3 2 1 12 11 10 9 8 7 (AJ12A) H 8 7 6 5 4 3 2 1 16 15 14 13 12 11 10 9 AJ16A 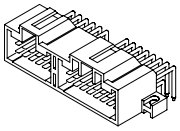 H 8 7 6 5 4 3 2 1 16 15 14 13 12 11 10 9 AJ16A H 10 9 8 7 6 5 4 3 2 1 20 19 18 17 16 15 14 13 12 11 (AJ20A) 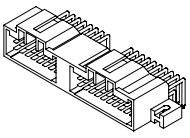
AJ20A	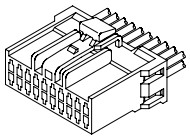 1 2 3 4 5 6 7 8 9 10 11 12 13 14 15 16 17 18 19 20	H 10 9 8 7 6 5 4 3 2 1 20 19 18 17 16 15 14 13 12 11 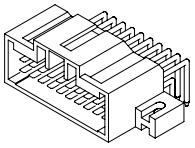 V 10 9 8 7 6 5 4 3 2 1 20 19 18 17 16 15 14 13 12 11 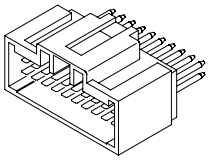 W 10 9 8 7 6 5 4 3 2 1 20 19 18 17 16 15 14 13 12 11 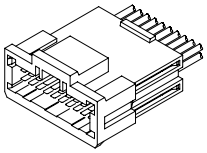 H 8 7 6 5 4 3 2 1 16 15 14 13 12 11 10 9 (AJ16A) H 10 9 8 7 6 5 4 3 2 1 20 19 18 17 16 15 14 13 12 11 AJ20A 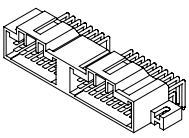

https://truckmanualshub.com/

AK type

Number shows number of pins	Female connector	Male connector
AK2A	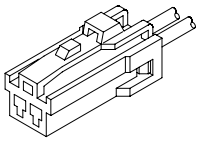 	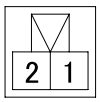 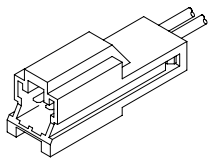
AK3A	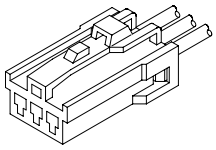 	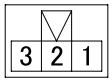 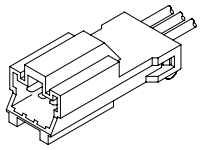
AK4A	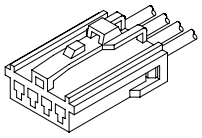 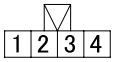	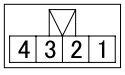 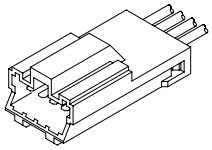
AK6A	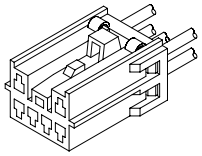 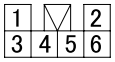	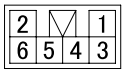 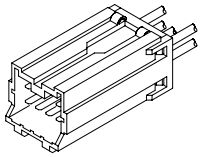
AK8A	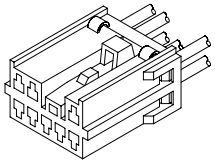 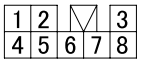	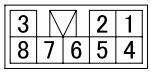 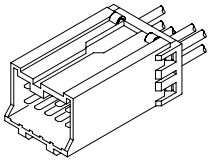
AK10A	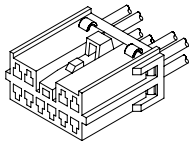 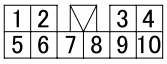	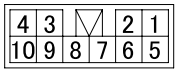 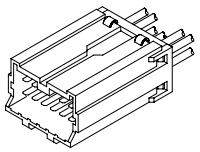 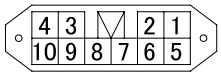 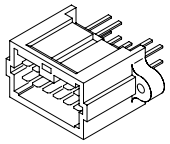
AK12A	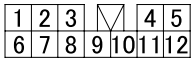	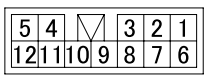

https://truckmanualshub.com/

CONNECTOR CONFIGURATION CHART

Number shows number of pins	Female connector	Male connector
AK14A	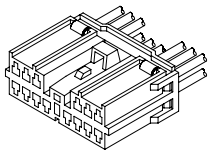 1 2 3 ▽ 4 5 6 7 8 9 10 11 12 13 14	6 5 4 ▽ 3 2 1 14 13 12 11 10 9 8 7 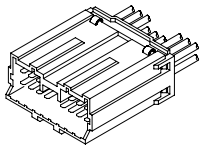 6 5 4 ▽ 3 2 1 14 13 12 11 10 9 8 7 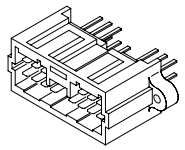
AK18A	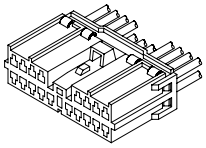 1 2 3 4 ▽ 5 6 7 8 9 10 11 12 13 14 15 16 17 18	8 7 6 5 ▽ 4 3 2 1 18 17 16 15 14 13 12 11 10 9 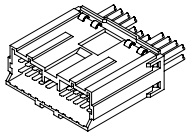 8 7 6 5 ▽ 4 3 2 1 18 17 16 15 14 13 12 11 10 9 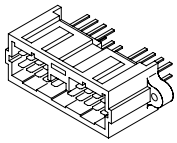
AK20A	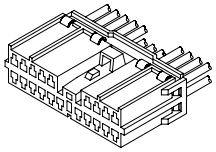 1 2 3 4 5 ▽ 6 7 8 9 10 11 12 13 14 15 16 17 18 19 20	9 8 7 6 ▽ 5 4 3 2 1 20 19 18 17 16 15 14 13 12 11 10 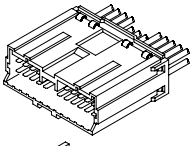 9 8 7 6 ▽ 5 4 3 2 1 20 19 18 17 16 15 14 13 12 11 10 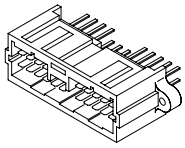
AK20B	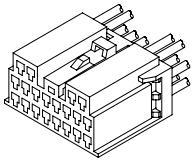 1 2 ▽ 3 4 5 6 7 8 9 10 11 12 13 14 15 16 17 18 19 20	4 3 ▽ 2 1 12 11 10 9 8 7 6 5 20 19 18 17 16 15 14 13 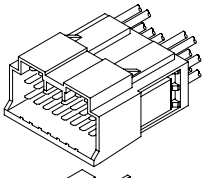 4 3 ▽ 2 1 12 11 10 9 8 7 6 5 20 19 18 17 16 15 14 13 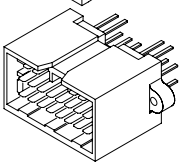
AK22A	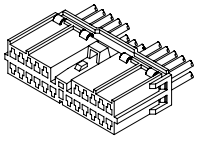 1 2 3 4 5 ▽ 6 7 8 9 10 11 12 13 14 15 16 17 18 19 20 21 22	10 9 8 7 6 ▽ 5 4 3 2 1 22 21 20 19 18 17 16 15 14 13 12 11 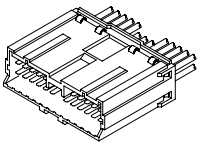 10 9 8 7 6 ▽ 5 4 3 2 1 22 21 20 19 18 17 16 15 14 13 12 11 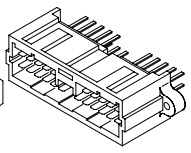

https://truckmanualshub.com/

Number shows number of pins	Female connector	Male connector
AK22B	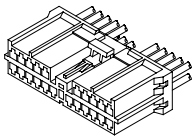 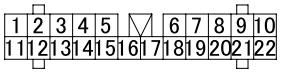	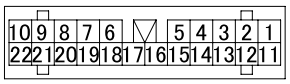 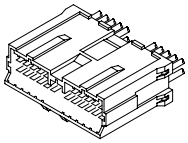

AL type

Number shows number of pins	Female connector	Male connector
AL1A	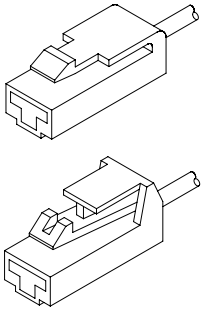 	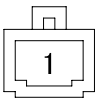 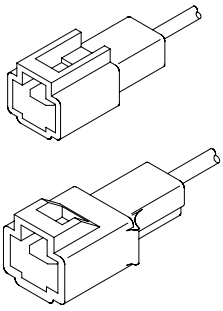
AL2A	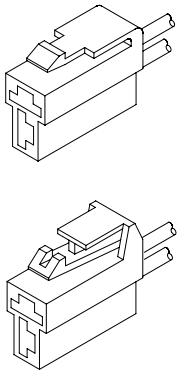 	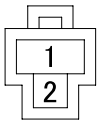 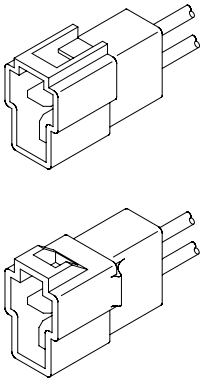
AL2B	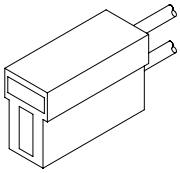 	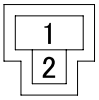 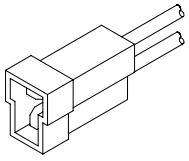
AL3A	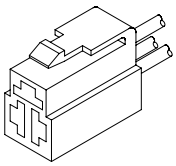 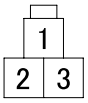	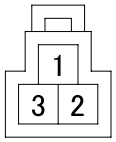 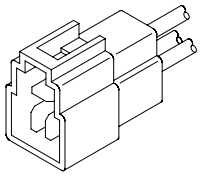

https://truckmanualshub.com/

CONNECTOR CONFIGURATION CHART

Number shows number of pins	Female connector	Male connector
AL3B	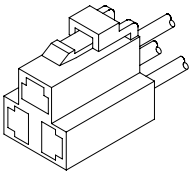 	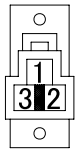 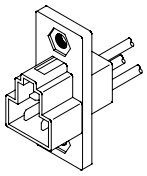
AL3C	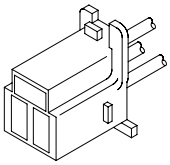 	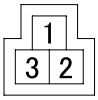 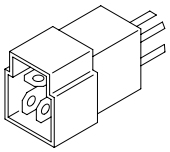
AL3D	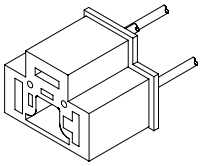 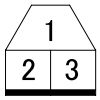 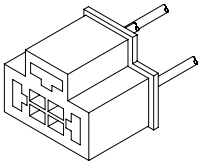	
AL3E	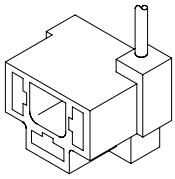 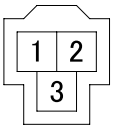 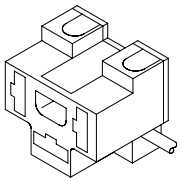	
AL4A	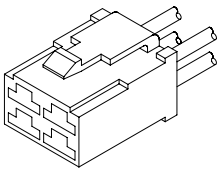 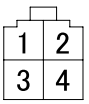 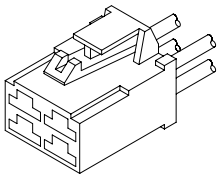	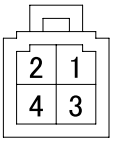 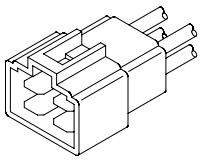 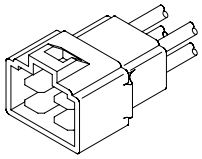

https://truckmanualshub.com/

Number shows number of pins	Female connector	Male connector
AL4B	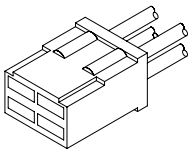 	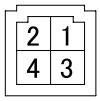 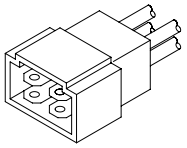
AL6A	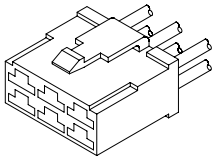 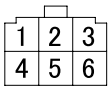 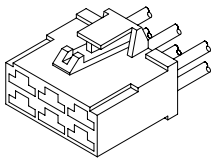	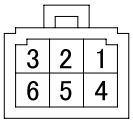 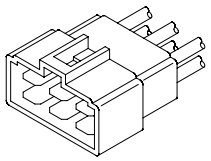 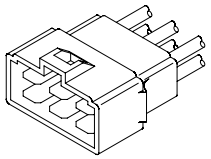
AL6B	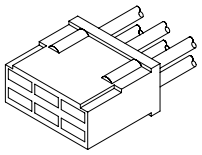 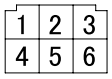	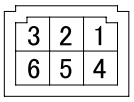 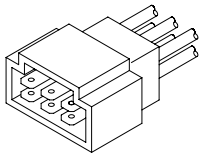
AL8A	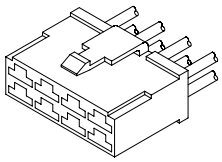 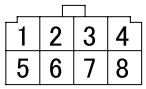 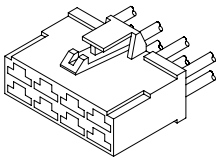	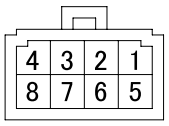 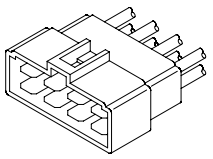 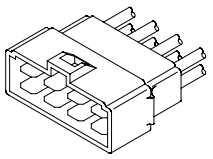
AL8B	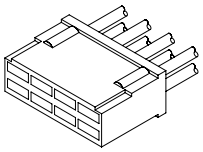 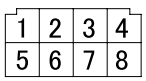	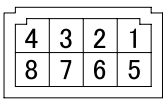 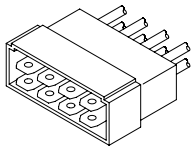

https://truckmanualshub.com/

CONNECTOR CONFIGURATION CHART

AM type

Number shows number of pins	Female connector	Male connector
AM1A	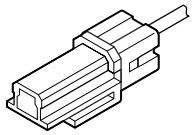 	 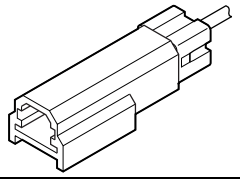
AM1B	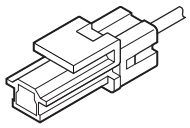 	 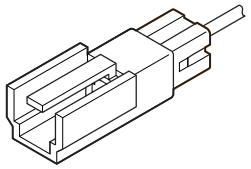
AM2A	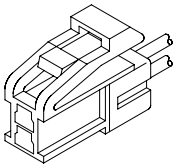 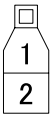	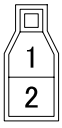 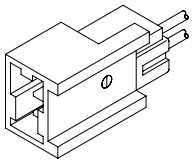
AM2B	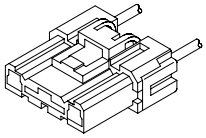 	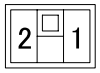 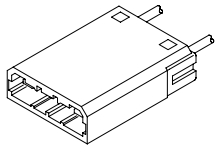
AM2C	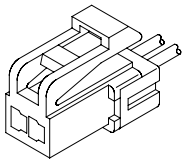 	 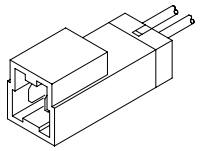
AM4A	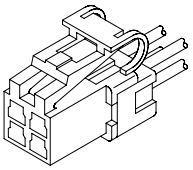 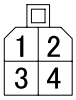	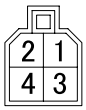 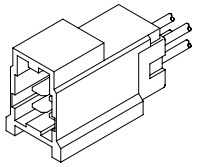
AM4B	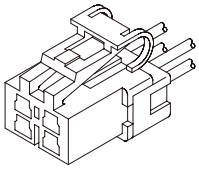 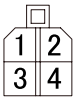	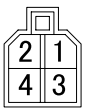 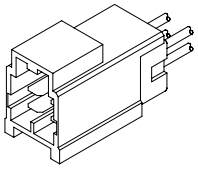
AM6A	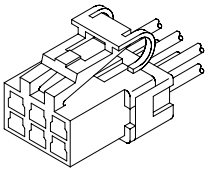 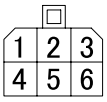	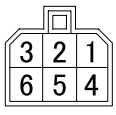 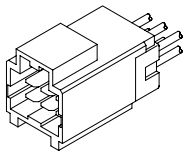
AM6B	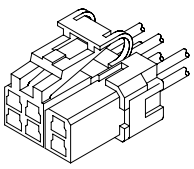 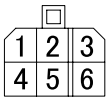	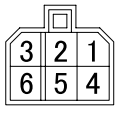 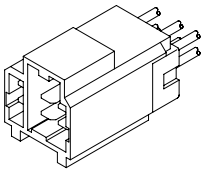

https://truckmanualshub.com/

Number shows number of pins	Female connector	Male connector
AM8A	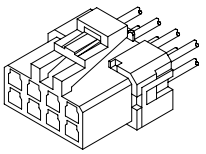 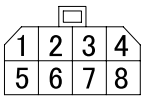	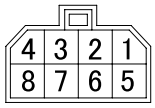 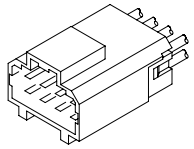
AM8B	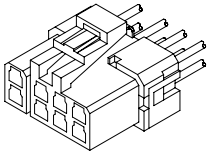 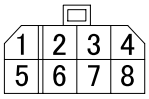	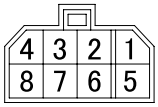 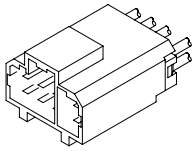
AM10A	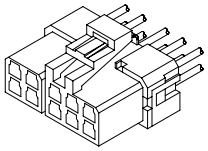 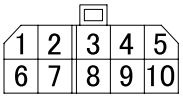	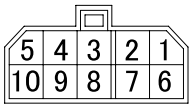 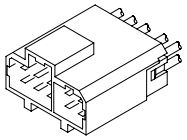
AM10B	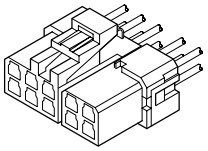 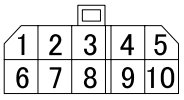	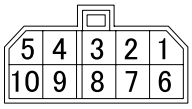 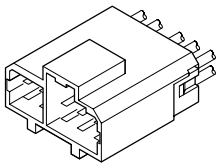

AN type

Number shows number of pins	Female connector	Male connector
AN1A	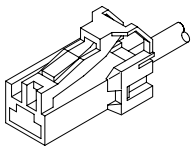 	 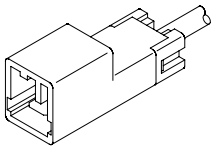
AN2A	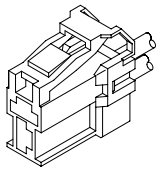 	 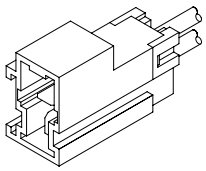
AN2B	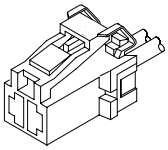 	
AN3A	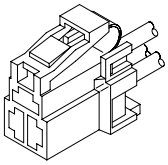 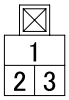	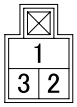 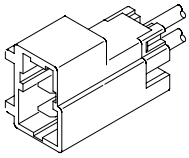

https://truckmanualshub.com/

CONNECTOR CONFIGURATION CHART

Number shows number of pins	Female connector	Male connector
AN4A	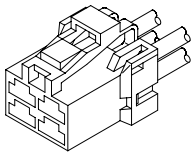 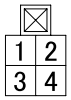	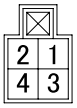 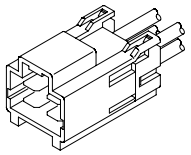
AN4B	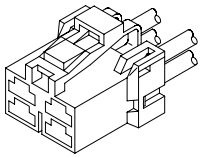 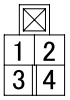	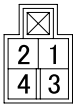 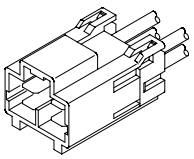
AN6A	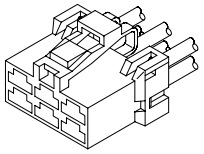 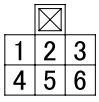	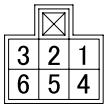 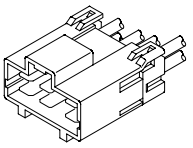
AN6B	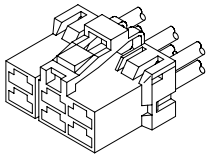 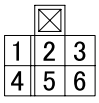	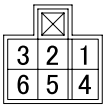 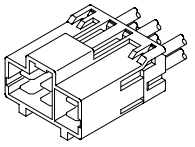
AN8A	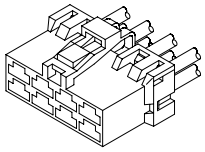 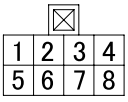	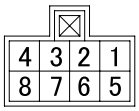 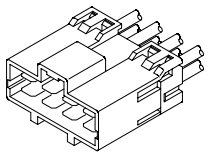
AN8B	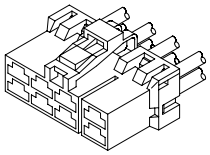 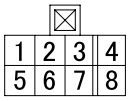	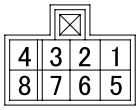 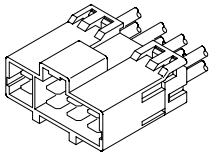

AP type

Number shows number of pins	Female connector	Male connector
AP1A	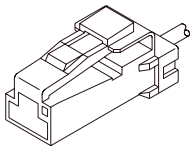 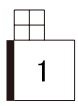	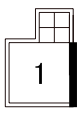 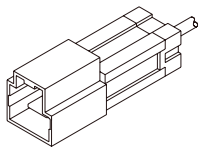
AP1B	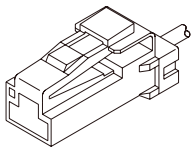 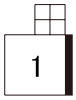	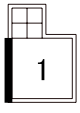 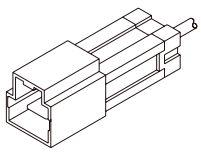

https://truckmanualshub.com/

Number shows number of pins	Female connector	Male connector
AP2A	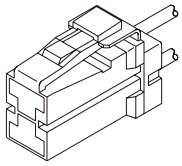 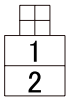	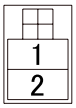 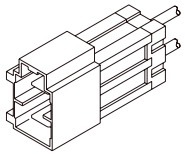
AP2B	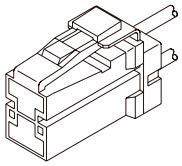 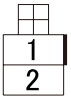	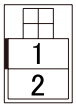 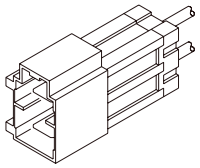
AP2C	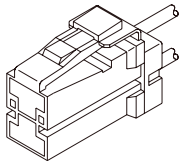 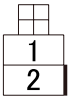	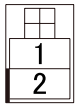 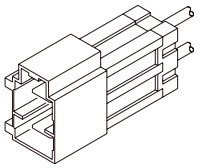

AQ type

Number shows number of pins	Female connector	Male connector
AQ1A		
AQ3A	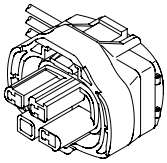 	
AQ3B	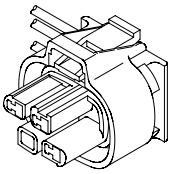 	
AQ5A	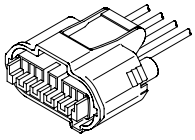 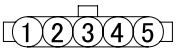	
AQ6A	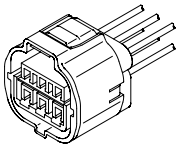 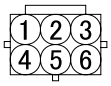	

https://truckmanualshub.com/

CONNECTOR CONFIGURATION CHART

Number shows number of pins	Female connector	Male connector
AQ8A	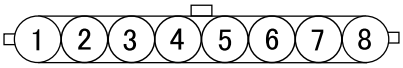	
AQ12A	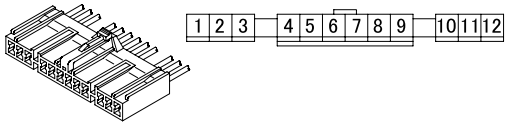	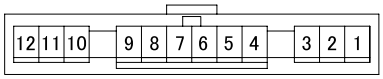

AR type

Number shows number of pins	Female connector	Male connector
AR2A	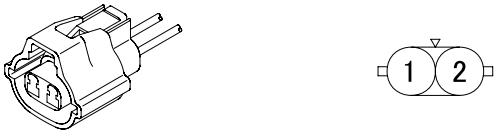	
AR2B	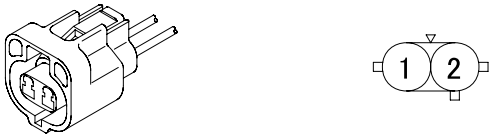	
AR2C	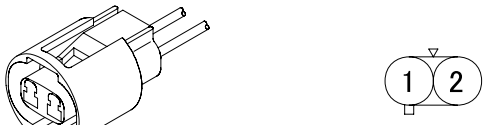	
AR2D	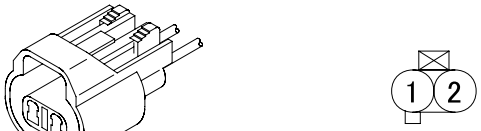	
AR2E	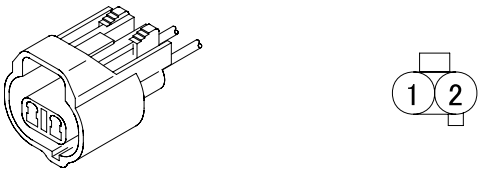	
AR2F	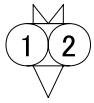	

https://truckmanualshub.com/

Number shows number of pins	Female connector	Male connector
AR2G	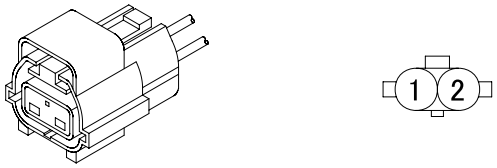	
AR2H	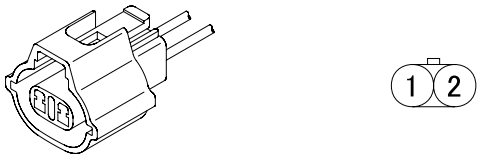	
AR3A	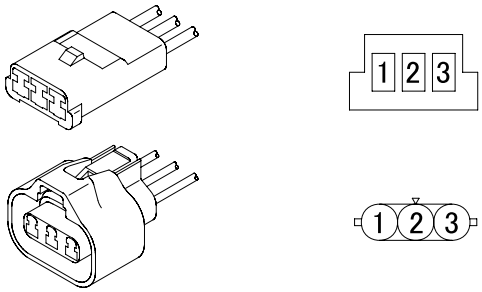	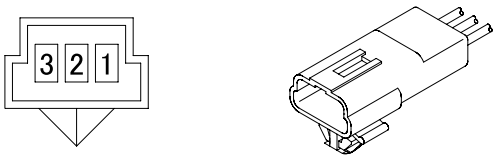

AS type

Number shows number of pins	Female connector	Male connector
AS1A	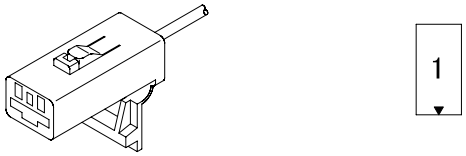	
AS2A	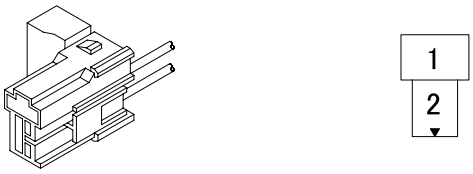	
AS2B	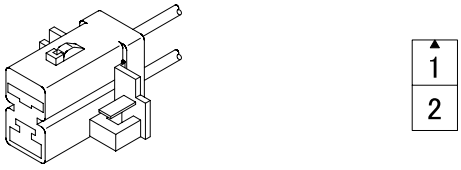	

AT type

Number shows number of pins	Female connector	Male connector
AT4A	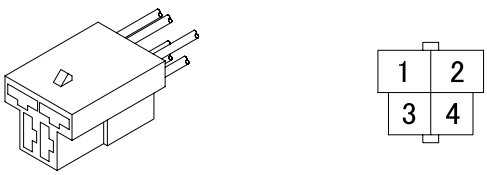	

https://truckmanualshub.com/

CONNECTOR CONFIGURATION CHART

AU type

Number shows number of pins	Female connector	Male connector
AU2A		
AU6A	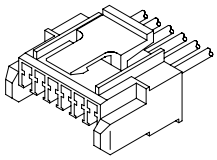 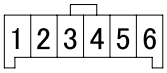	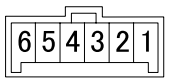
AU8A	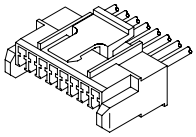 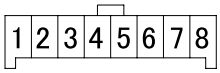	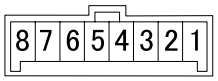
AU10A	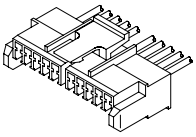 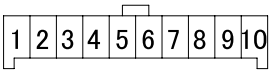	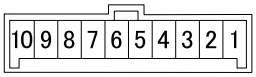
AU12A	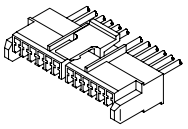 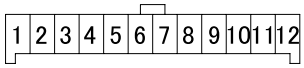	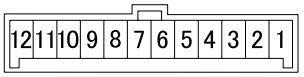
AU13A	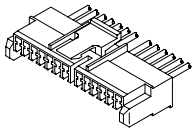 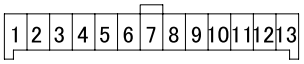	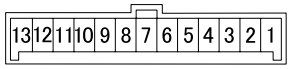
AU16A	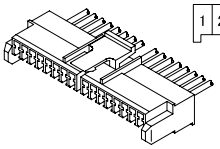 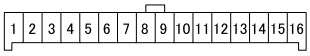	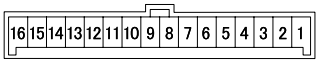
AU16B	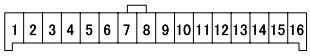	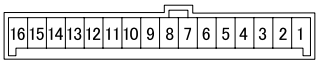
AU16C	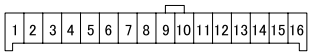	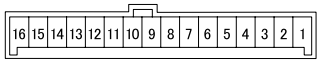

https://truckmanualshub.com/

AV type

Number shows number of pins	Female connector	Male connector
AV1A	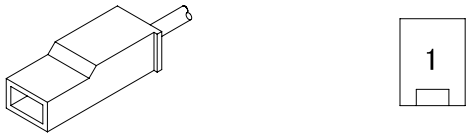	
AV2A		

AW type

Number shows number of pins	Female connector	Male connector
AW1A	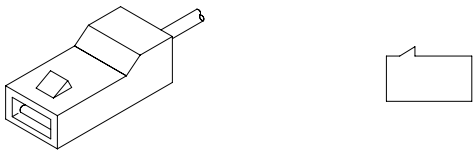	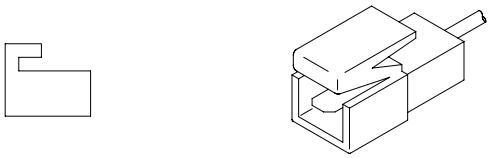
AW1B	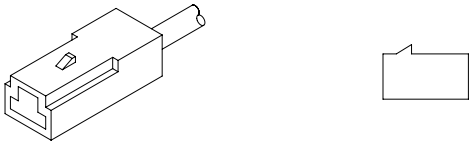	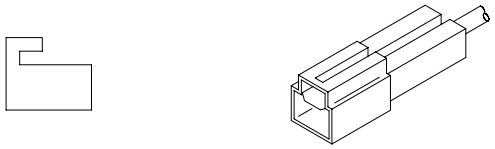
AW1C	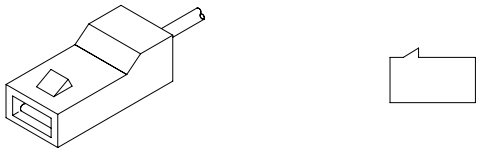	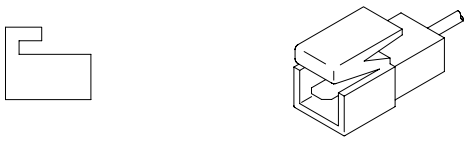
AW2A	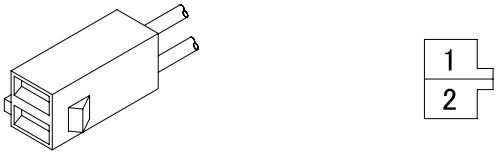	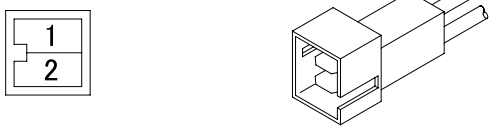

AX type

Number shows number of pins	Female connector	Male connector
AX2A	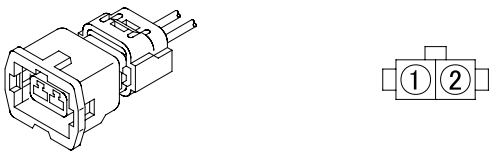	

https://truckmanualshub.com/

CONNECTOR CONFIGURATION CHART

Number shows number of pins	Female connector	Male connector
AX3A	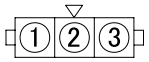	
AX4A	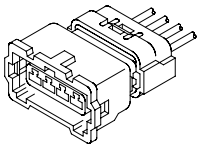 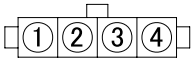	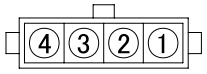 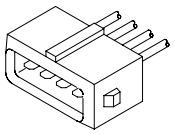

AY type

Number shows number of pins	Female connector	Male connector
AY2A	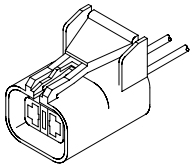 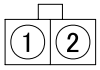	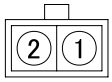 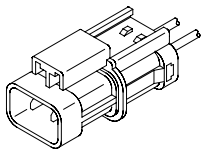

AZ type

Number shows number of pins	Female connector	Male connector
AZ2A	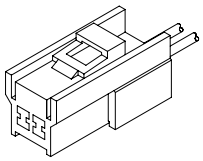 	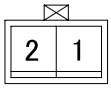 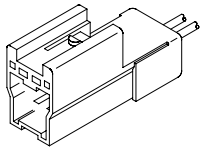

BA type

Number shows number of pins	Female connector	Male connector
BA3A	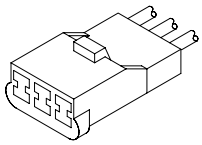 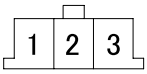	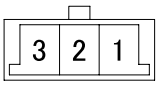 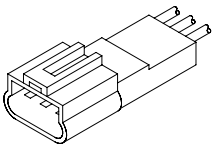

BB type

Number shows number of pins	Female connector	Male connector
BB2A	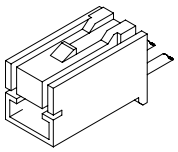 	

Number shows number of pins	Female connector	Male connector
BB3A	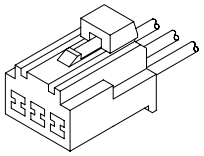 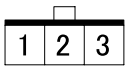	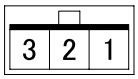 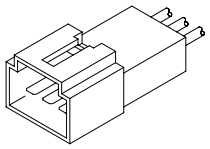

BC type

Number shows number of pins	Female connector	Male connector
BC3A	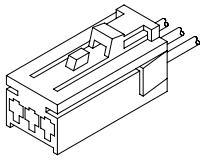 	 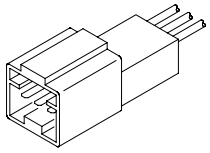

BD type

Number shows number of pins	Female connector	Male connector
BD6A	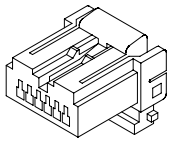 	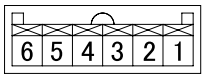 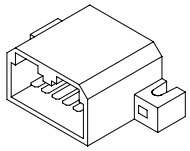
BD8A	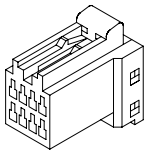 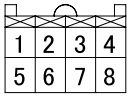	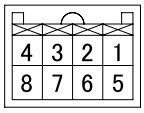 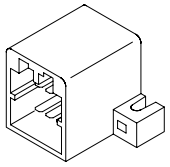
BD12A	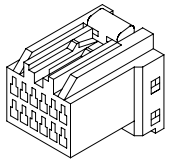 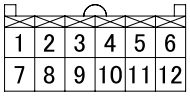	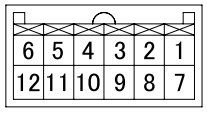 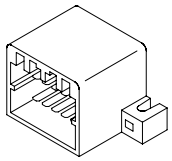
BD16A	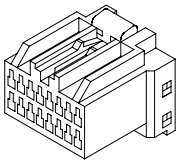 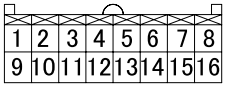	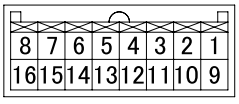 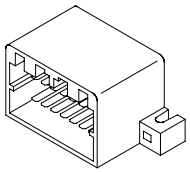
BD20A	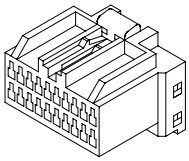 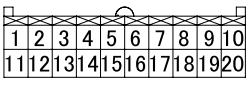	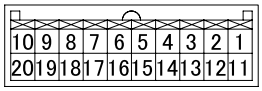 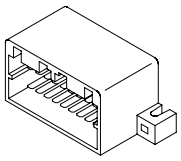

https://truckmanualshub.com/

CONNECTOR CONFIGURATION CHART

BE type

Number shows number of pins	Female connector	Male connector
BE6A	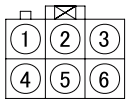	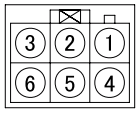

BF type

Number shows number of pins	Female connector	Male connector
BF6A	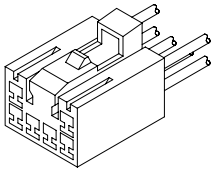 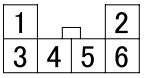	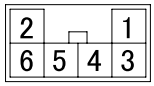 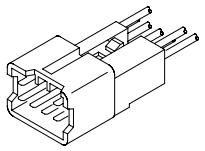
BF8A	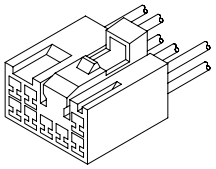 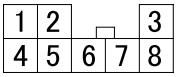	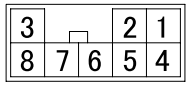 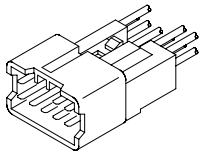
BF10A	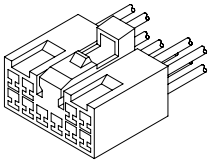 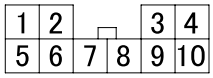	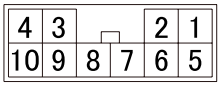 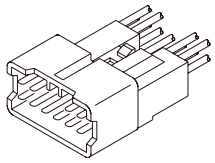
BF12A	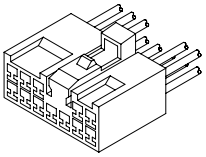 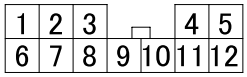	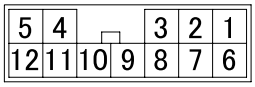 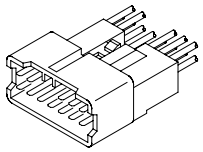

BG type

Number shows number of pins	Female connector	Male connector
BG10A	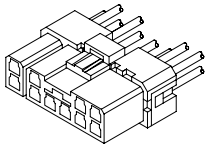 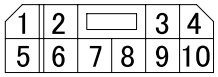	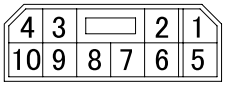 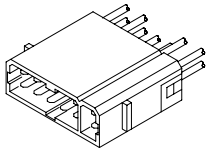
BG12A	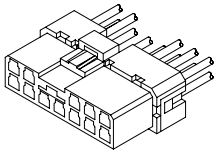 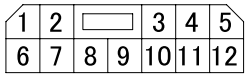	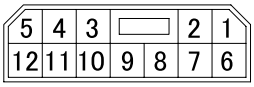 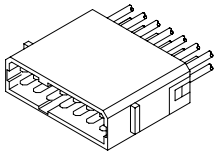

https://truckmanualshub.com/

Number shows number of pins	Female connector	Male connector
BG16A	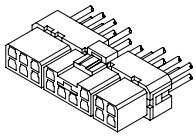 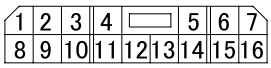	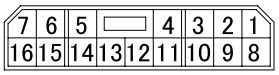 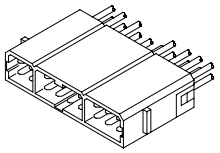

BJ type

Number shows number of pins	Female connector	Male connector
BJ5A	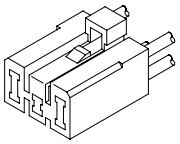 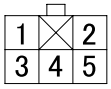	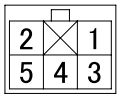 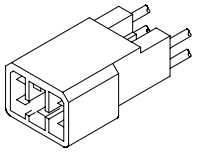
BJ7A	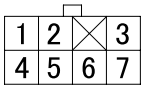	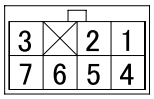
BJ9A	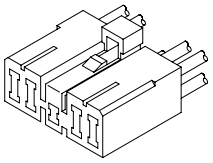 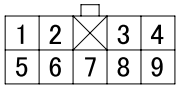	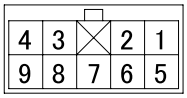 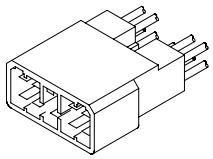

BM type

Number shows number of pins	Female connector	Male connector
BM2A	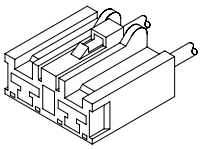 	
BM2B	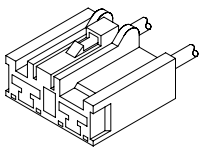 	
BM2C	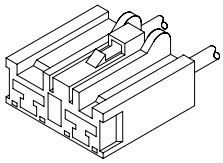 	

https://truckmanualshub.com/

CONNECTOR CONFIGURATION CHART

Number shows number of pins	Female connector	Male connector
BM3A	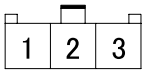	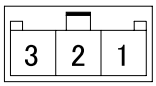
BM4A	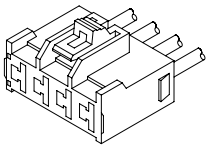 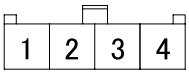	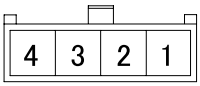 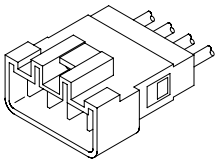

BN type

Number shows number of pins	Female connector	Male connector
BN1A	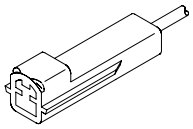 	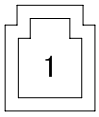 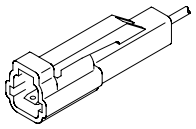

BQ type

Number shows number of pins	Female connector	Male connector
BQ1A	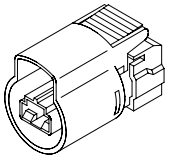 	 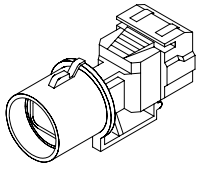
BQ2A	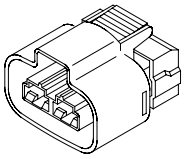 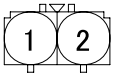	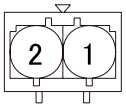 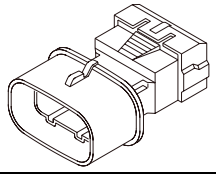
BQ3A	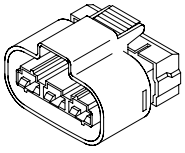 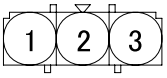	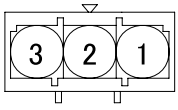 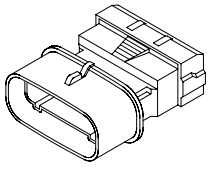
BQ3B	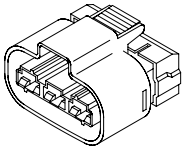 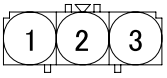	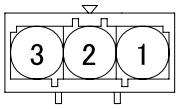 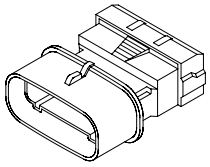

https://truckmanualshub.com/

BR type

Number shows number of pins	Female connector	Male connector
BR1A		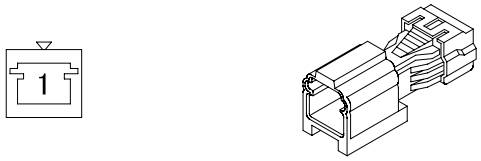
BR2A		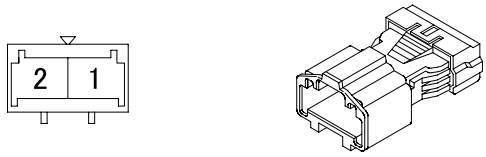
BR4A	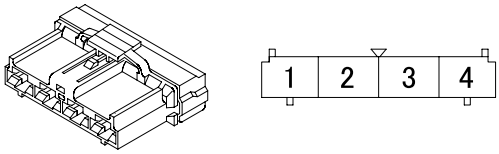	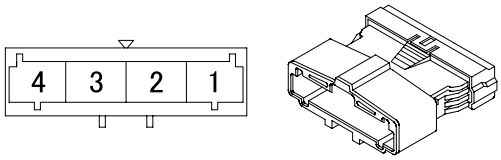
BR4B	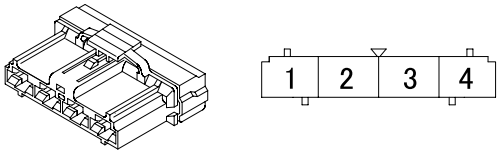	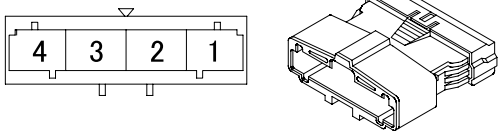

BS type

Number shows number of pins	Female connector	Male connector
BS1A	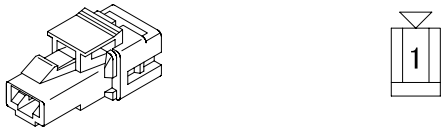	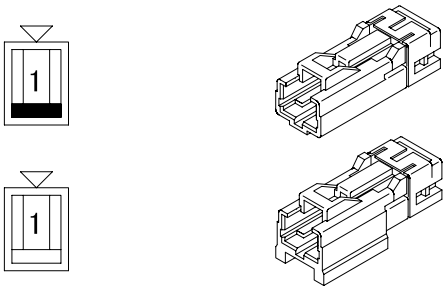
BS2A	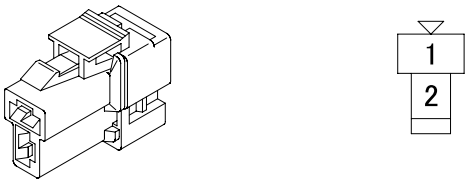	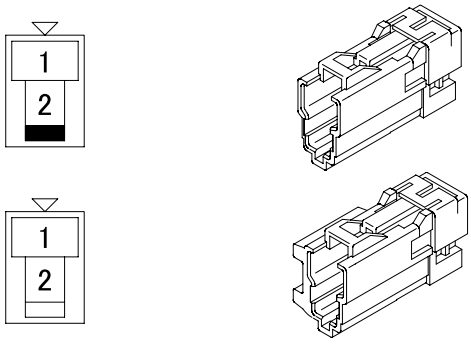

https://truckmanualshub.com/

CONNECTOR CONFIGURATION CHART

Number shows number of pins	Female connector	Male connector
BS3A	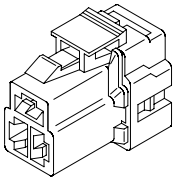 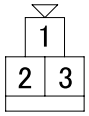	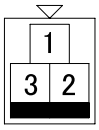 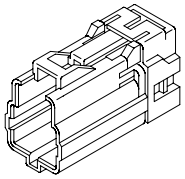 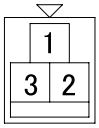 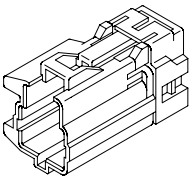
BS4A	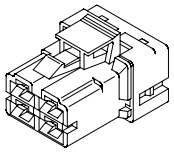 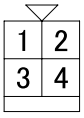	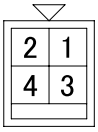 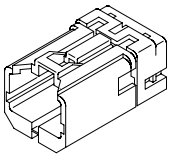
BS6A	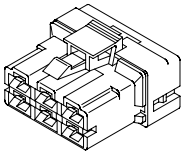 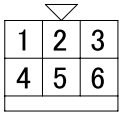	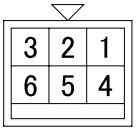 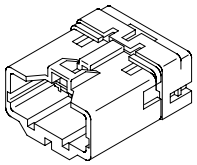
BS8A	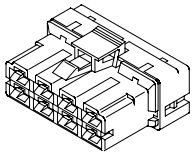 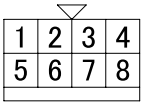	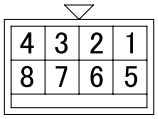 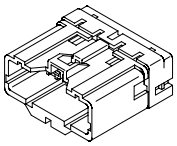

BT type

Number shows number of pins	Female connector	Male connector
BT2A	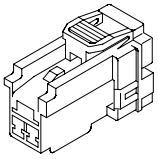 	 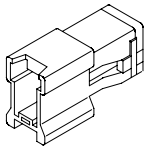
BT3A	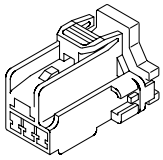 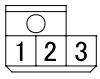	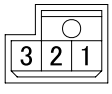 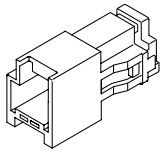
BT4A	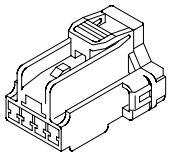 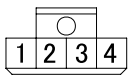	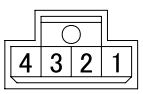 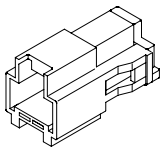

https://truckmanualshub.com/

Number shows number of pins	Female connector	Male connector
BT6A	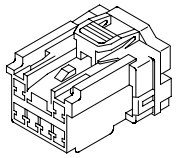 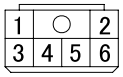	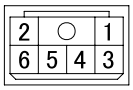 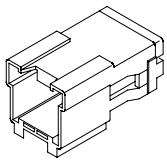
BT8A	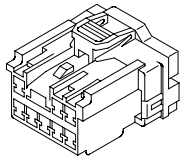 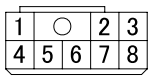	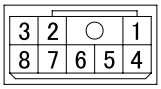 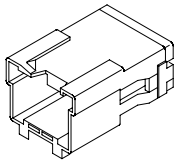
BT10A	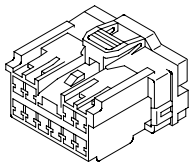 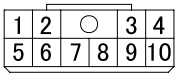	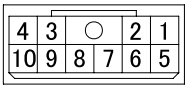 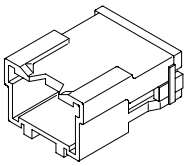
BT12A	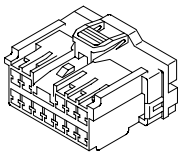 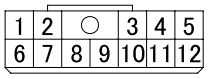	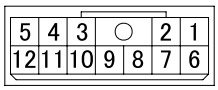 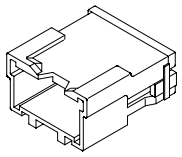
BT16A	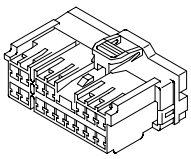 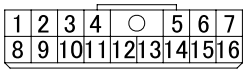	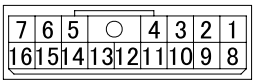 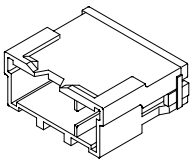
BT16B	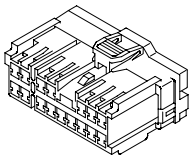 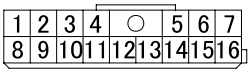	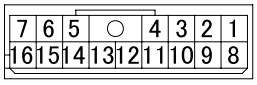 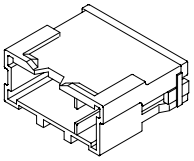
BT16C	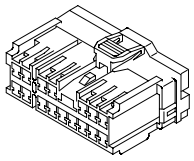 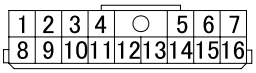	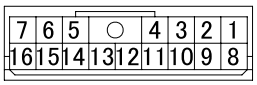 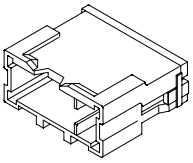
BT20A	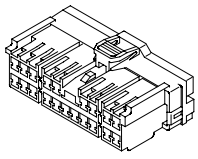 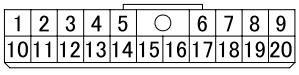	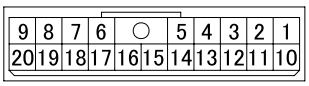 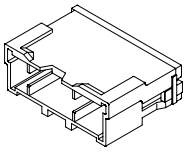
BT20B	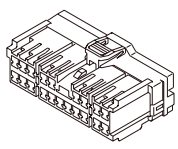 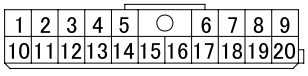	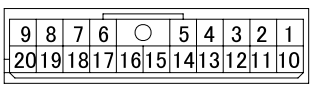 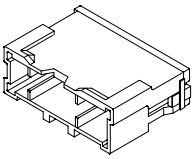

https://truckmanualshub.com/

CONNECTOR CONFIGURATION CHART

Number shows number of pins	Female connector	Male connector
BT20C	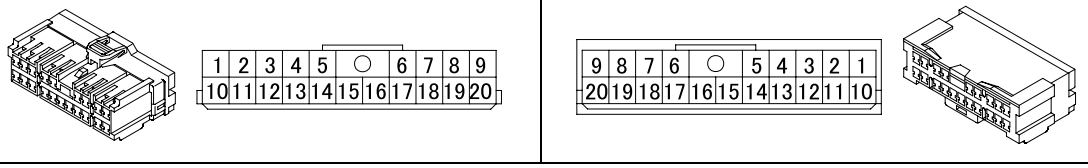	

BU type

Number shows number of pins	Female connector	Male connector
BU4A		
BU6A		

BW type

Number shows number of pins	Female connector	Male connector
BW2A	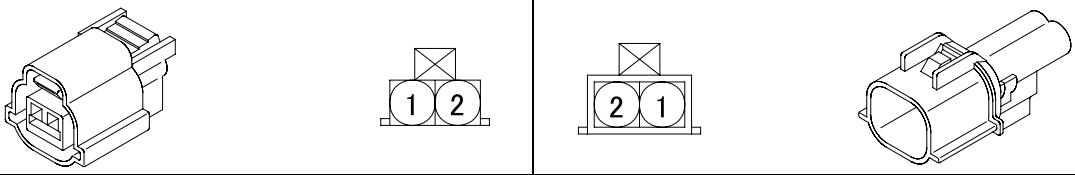	
BW2B	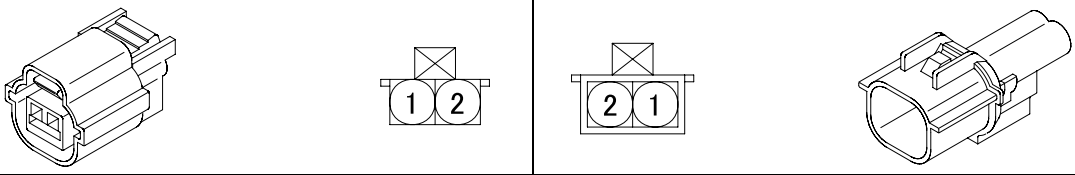	
BW3A	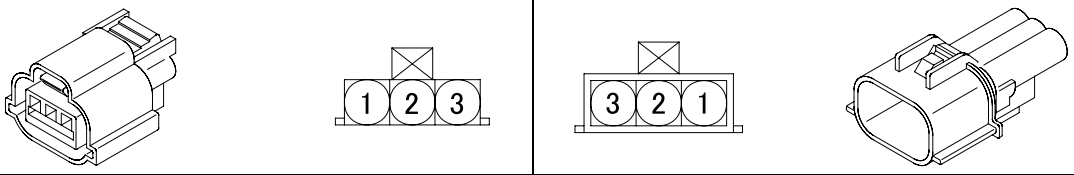	
BW3B	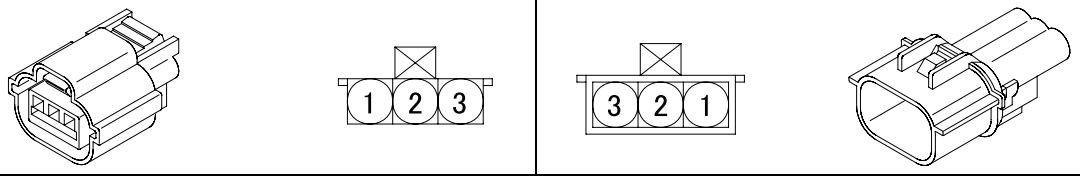	

https://truckmanualshub.com/

Number shows number of pins	Female connector	Male connector
BW4A	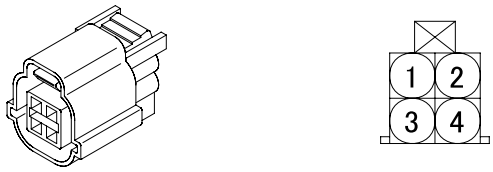	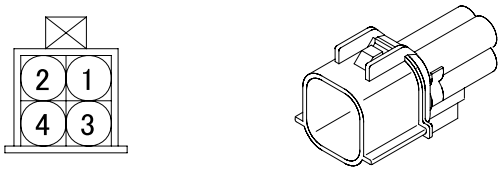
BW4B	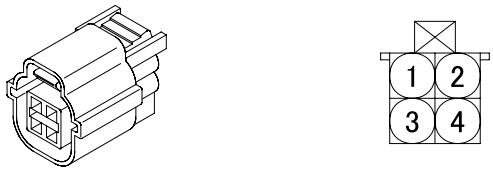	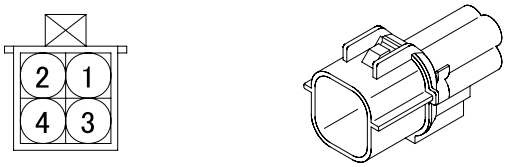
BW6A	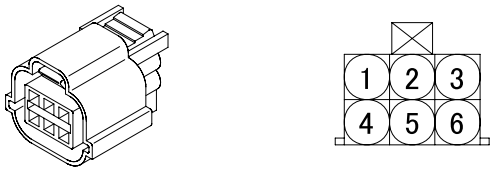	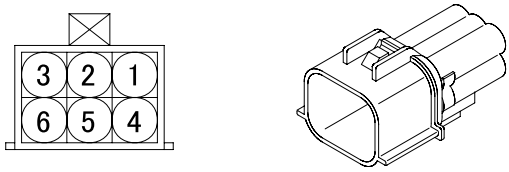
BW6B	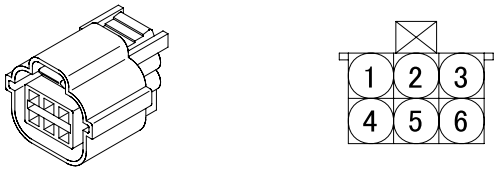	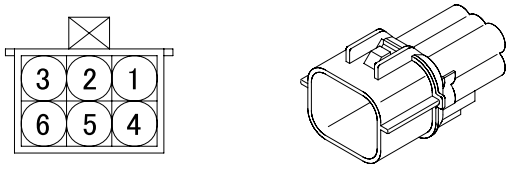
BW8A	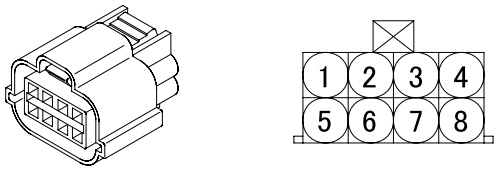	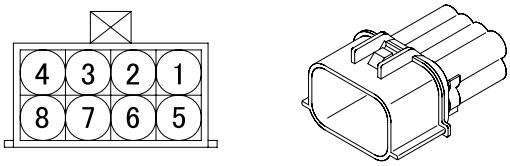
BW10A	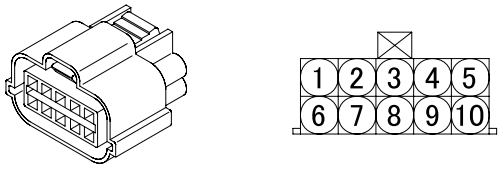	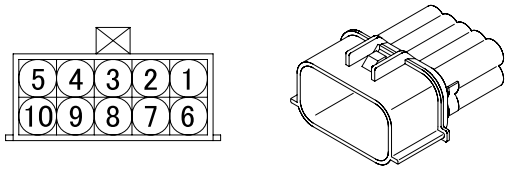

BX type

Number shows number of pins	Female connector	Male connector
BX2A	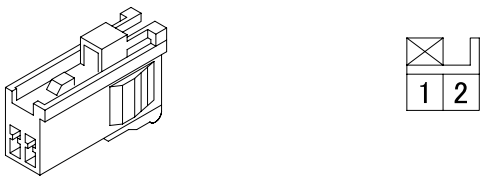	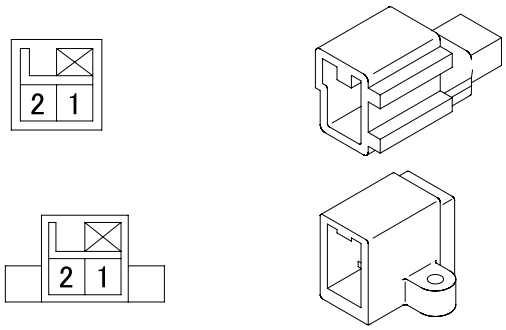

https://truckmanualshub.com/

CONNECTOR CONFIGURATION CHART

Number shows number of pins	Female connector	Male connector
BX3A	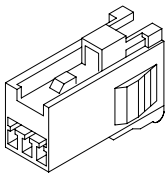 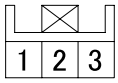	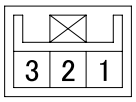 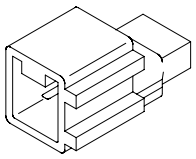 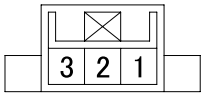 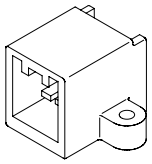
BX5A	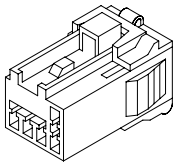 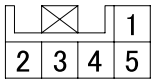	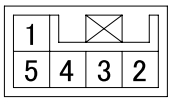 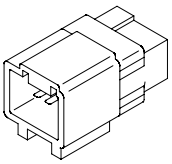 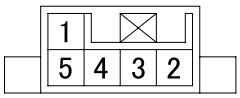 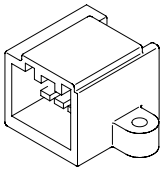
BX7A	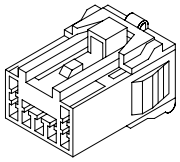 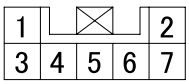	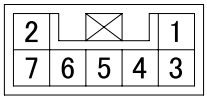 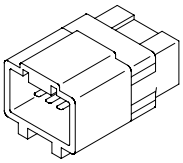 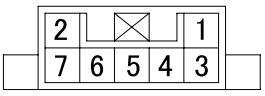 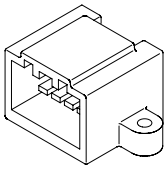
BX9A	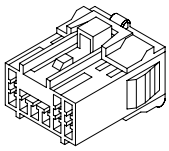 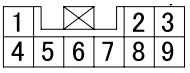	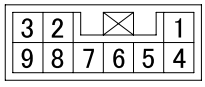 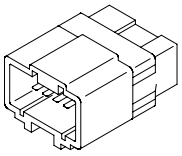 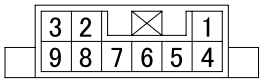 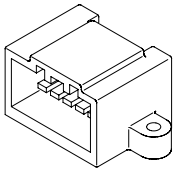

https://truckmanualshub.com/

Number shows number of pins	Female connector	Male connector
BX11A	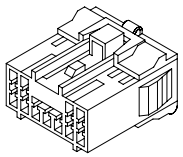 1 2 3 4 5 6 7 8 9 10 11	4 3 2 1 11 10 9 8 7 6 5 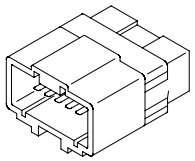 4 3 2 1 11 10 9 8 7 6 5 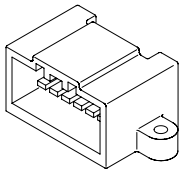
BX13A	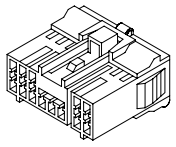 1 2 3 4 5 6 7 8 9 10 11 12 13	5 4 3 2 1 13 12 11 10 9 8 7 6 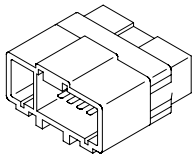 5 4 3 2 1 13 12 11 10 9 8 7 6 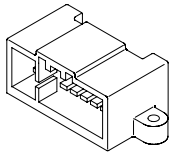
BX15A	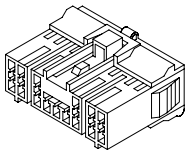 1 2 3 4 5 6 7 8 9 10 11 12 13 14 15	6 5 4 3 2 1 15 14 13 12 11 10 9 8 7 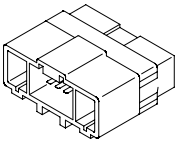 6 5 4 3 2 1 15 14 13 12 11 10 9 8 7 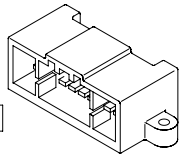
BX17A	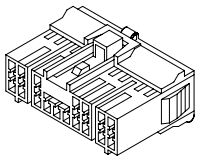 1 2 3 4 5 6 7 8 9 10 11 12 13 14 15 16 17	7 6 5 4 3 2 1 17 16 15 14 13 12 11 10 9 8 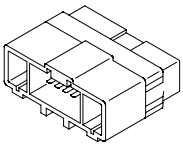 7 6 5 4 3 2 1 17 16 15 14 13 12 11 10 9 8 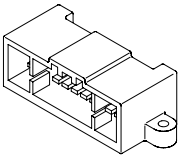

https://truckmanualshub.com/

CONNECTOR CONFIGURATION CHART

Number shows number of pins	Female connector	Male connector
BX19A	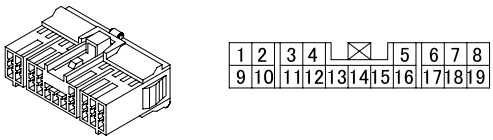	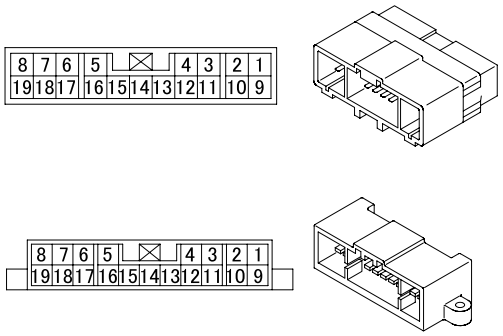

BY type

Number shows number of pins	Female connector	Male connector
BY4A		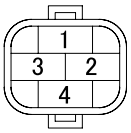

BZ type

Number shows number of pins	Female connector	Male connector
BZ12A		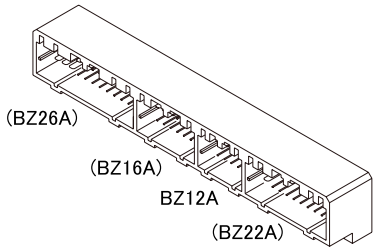
BZ16A	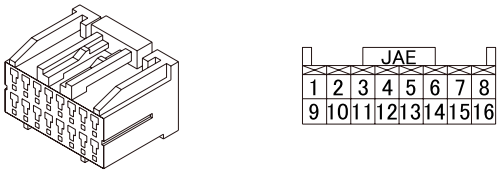	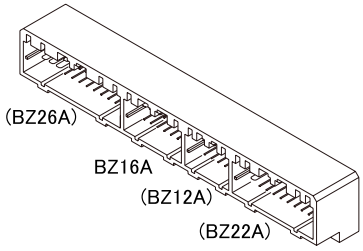
BZ22A	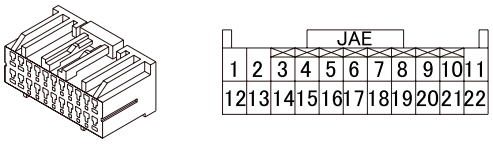	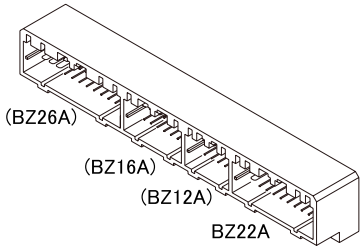

https://truckmanualshub.com/

Number shows number of pins	Female connector	Male connector
BZ26A	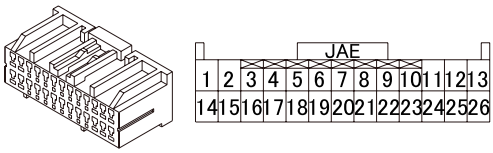	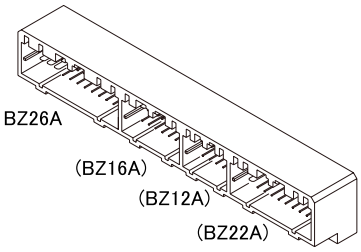

CA type

Number shows number of pins	Female connector	Male connector
CA2A		

CB type

Number shows number of pins	Female connector	Male connector
CB16A	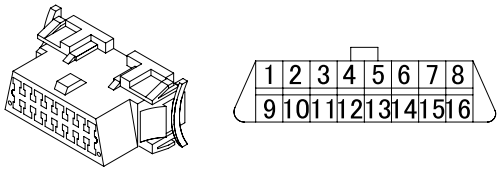	

CD type

Number shows number of pins	Female connector	Male connector
CD35A	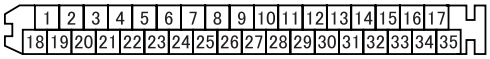	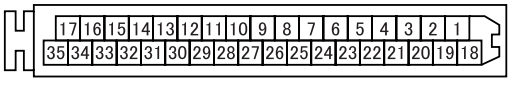
CD55A	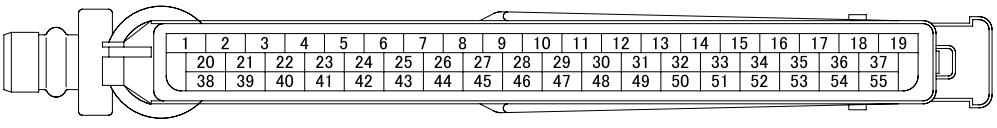	

https://truckmanualshub.com/

CONNECTOR CONFIGURATION CHART

CE type

Number shows number of pins	Female connector	Male connector
CE2A		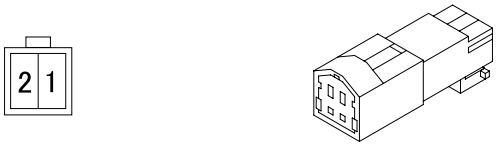
CE4A		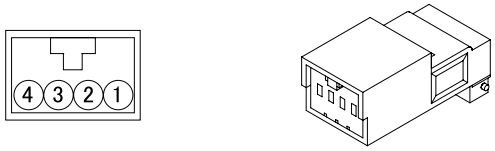
CE12A	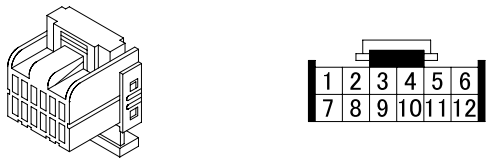	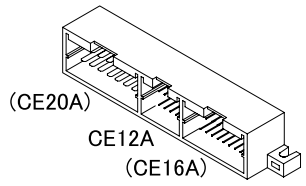
CE16A	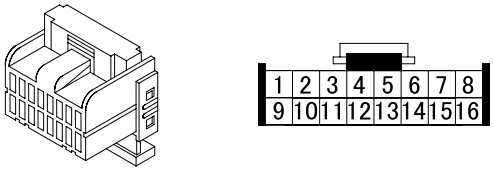	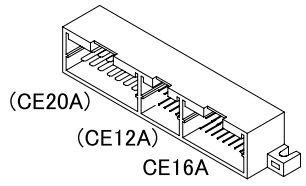
CE20A	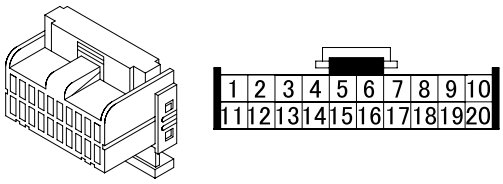	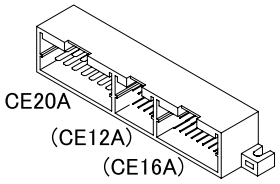

CF type

Number shows number of pins	Female connector	Male connector
CF21A	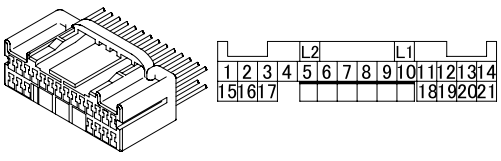	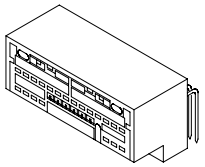

CH type

Number shows number of pins	Female connector	Male connector
CH2A	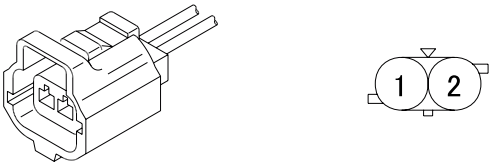	

https://truckmanualshub.com/

Number shows number of pins	Female connector	Male connector
CH2B	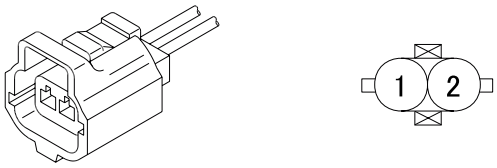	
CH3A	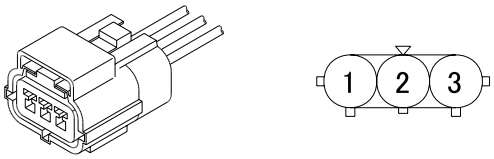	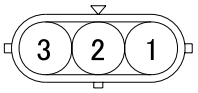

CK type

Number shows number of pins	Female connector	Male connector
CK3A		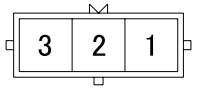

CL type

Number shows number of pins	Female connector	Male connector
CL14A	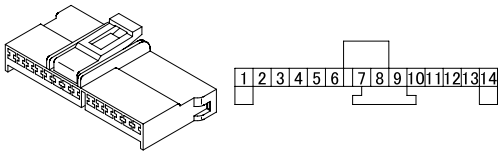	

CM type

Number shows number of pins	Female connector	Male connector
CM28A	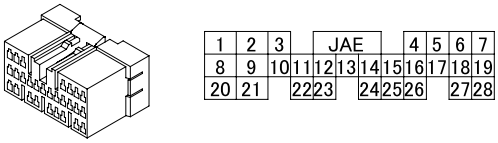	
CM30A	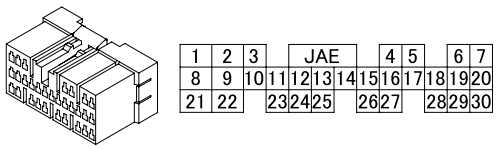	

https://truckmanualshub.com/

CONNECTOR CONFIGURATION CHART

Number shows number of pins	Female connector	Male connector
CM35A	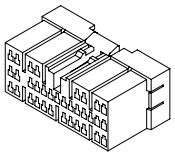 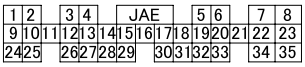	

CN type

Number shows number of pins	Female connector	Male connector
CN2A	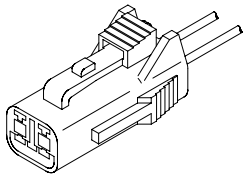 	 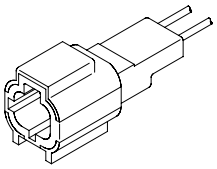
CN12A	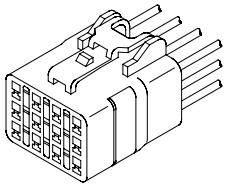 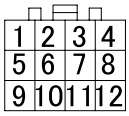	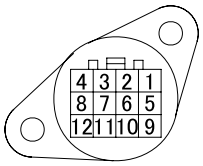 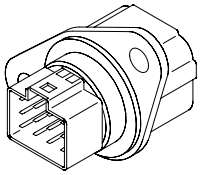
CN16A	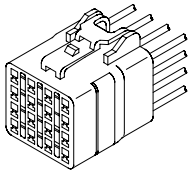 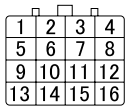	

CP type

Number shows number of pins	Female connector	Male connector
CP40A	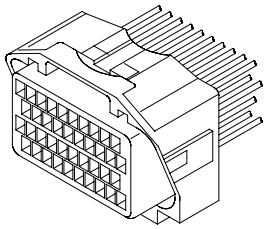 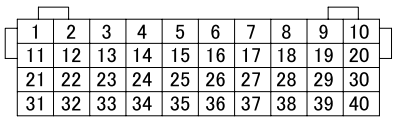	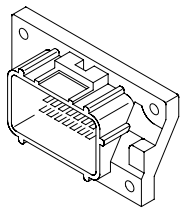 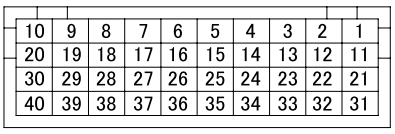

https://truckmanualshub.com/

Number shows number of pins	Female connector	Male connector
CP40B	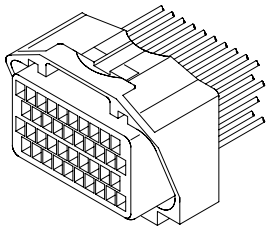 1 2 3 4 5 6 7 8 9 10 11 12 13 14 15 16 17 18 19 20 21 22 23 24 25 26 27 28 29 30 31 32 33 34 35 36 37 38 39 40	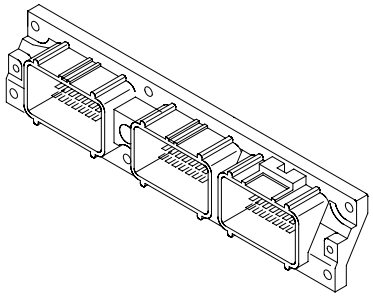 (CP80A) CP40B
CP80A	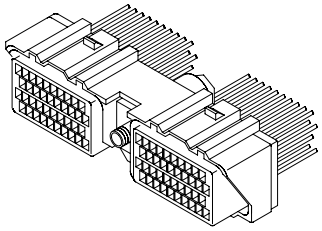 1 2 3 4 5 6 7 8 9 10 41 42 43 44 45 46 47 48 49 50 11 12 13 14 15 16 17 18 19 20 51 52 53 54 55 56 57 58 59 60 21 22 23 24 25 26 27 28 29 30 61 62 63 64 65 66 67 68 69 70 31 32 33 34 35 36 37 38 39 40 71 72 73 74 75 76 77 78 79 80	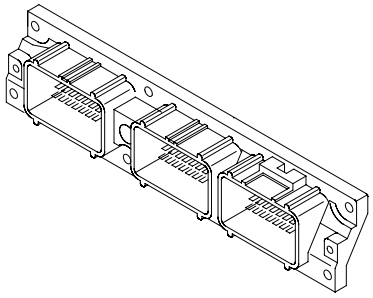 CP80A (CP40B)

CQ type

Number shows number of pins	Female connector	Male connector
CQ2B	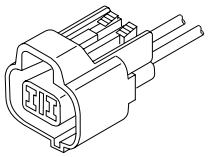 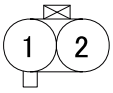	
CQ3A	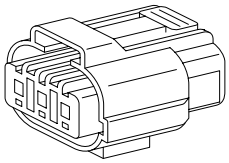	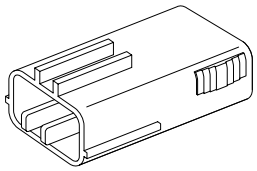
CQ8A	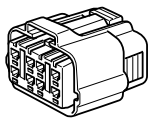 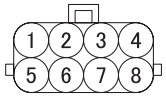	

https://truckmanualshub.com/

CONNECTOR CONFIGURATION CHART

CR type

Number shows number of pins	Female connector	Male connector
CR16A		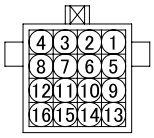

CS type

Number shows number of pins	Female connector	Male connector
CS2A	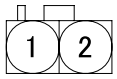	

CT type

Number shows number of pins	Female connector	Male connector
CT3A	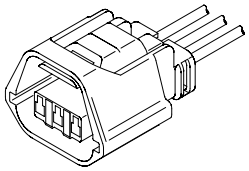	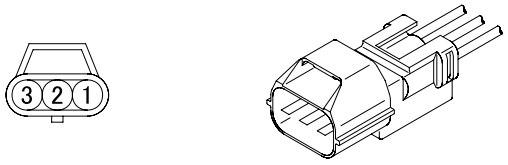
CT3B	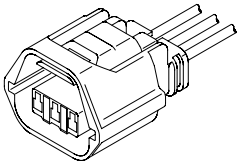	
CT10A	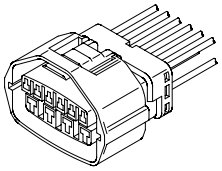	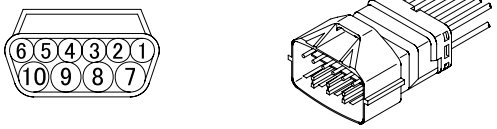

CU type

Number shows number of pins	Female connector	Male connector
CU6A	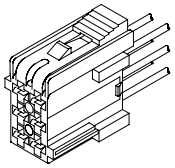	

https://truckmanualshub.com/

Number shows number of pins	Female connector	Male connector
CU9A	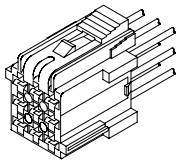 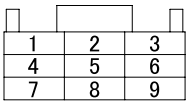	
CU12A	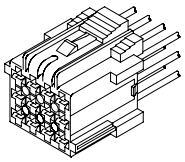 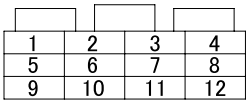	
CU15A	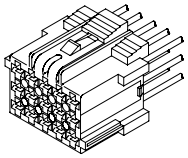 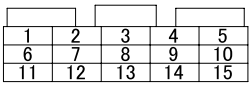	
CU17A	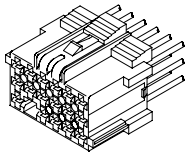 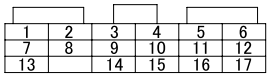	
CU18A	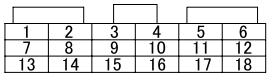	

CV type

Number shows number of pins	Female connector	Male connector
CV8A	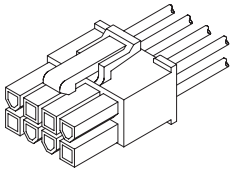 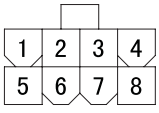	

CW type

Number shows number of pins	Female connector	Male connector
CW16A	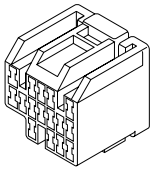 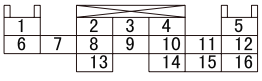	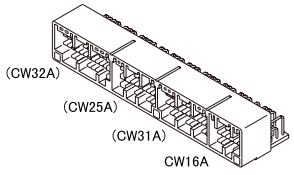

https://truckmanualshub.com/

CONNECTOR CONFIGURATION CHART

Number shows number of pins	Female connector	Male connector
CW25A	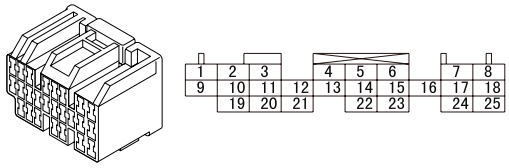	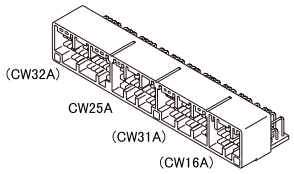
CW31A	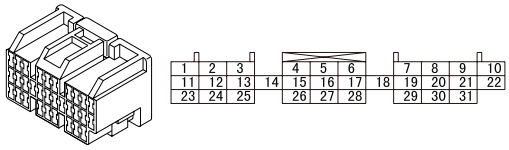	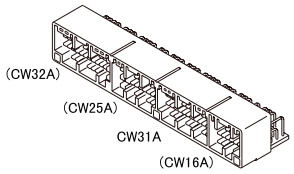
CW32A	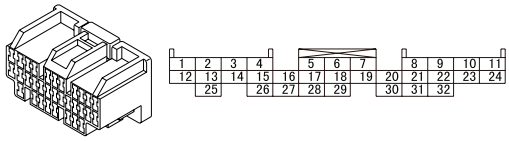	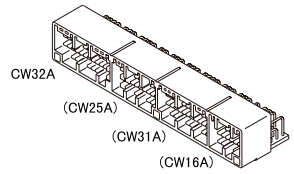

CX type

Number shows number of pins	Female connector	Male connector
CX30A	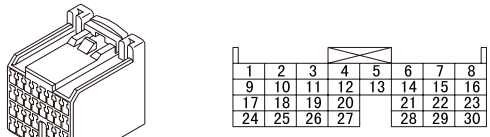	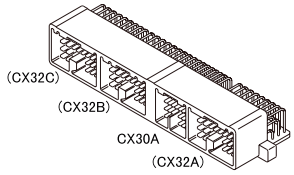
CX32A	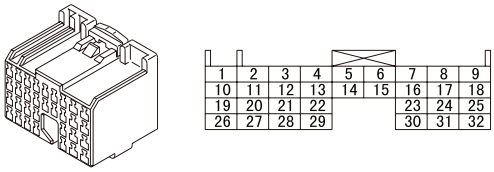	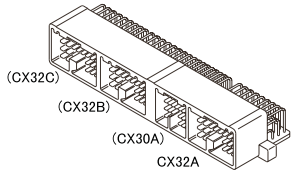
CX32B	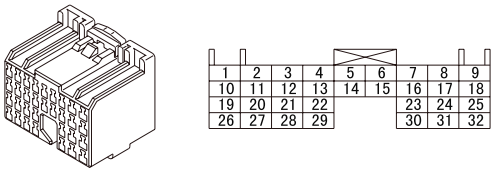	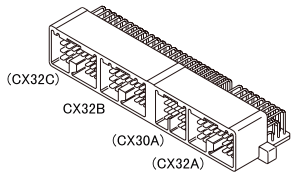
CX32C	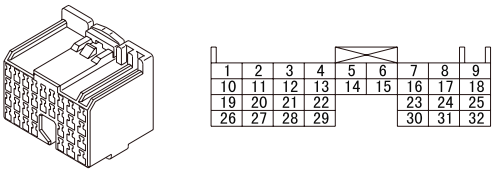	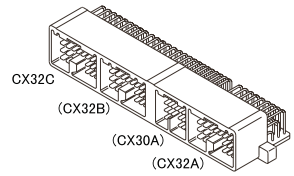

https://truckmanualshub.com/

CY type

Number shows number of pins	Female connector	Male connector
CY17A	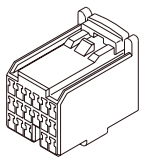 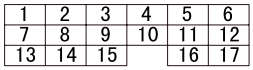	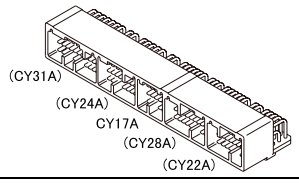
CY22A	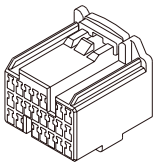 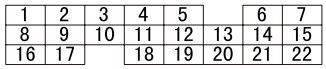	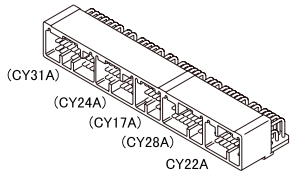
CY24A	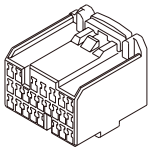 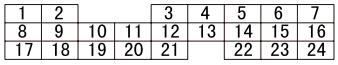	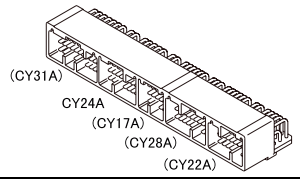
CY28A	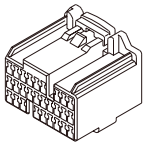 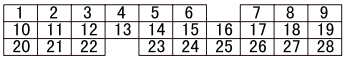	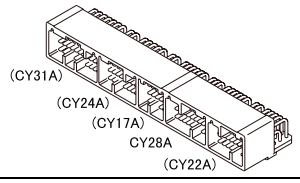
CY31A	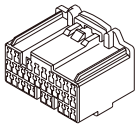 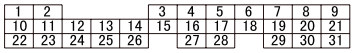	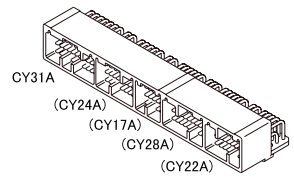

DA type

Number shows number of pins	Female connector	Male connector
DA20A	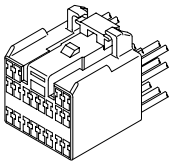 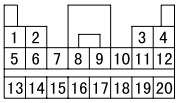	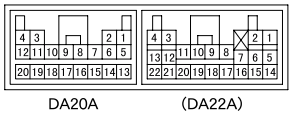 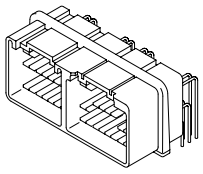
DA22A	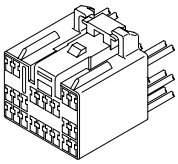 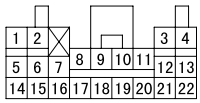	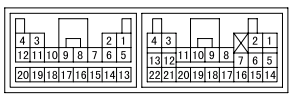 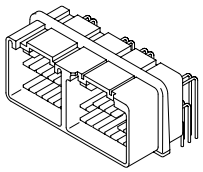
DA25A		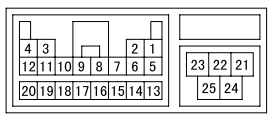 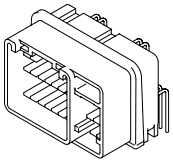

https://truckmanualshub.com/

CONNECTOR CONFIGURATION CHART

DB type

Number shows number of pins	Female connector	Male connector
DB2A	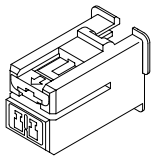 	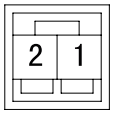 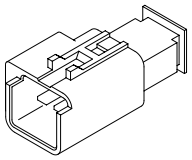

DC type

Number shows number of pins	Female connector	Male connector
DC3A	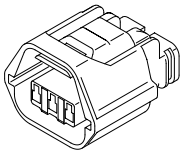 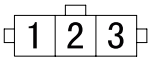	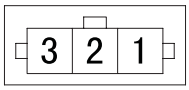 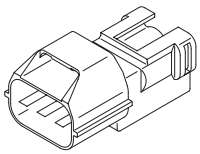

DD type

Number shows number of pins	Female connector	Male connector
DD1A	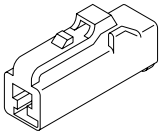 	 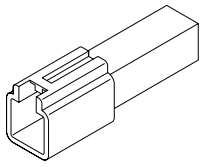
DD2A	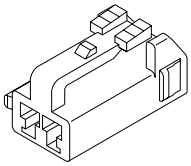 	 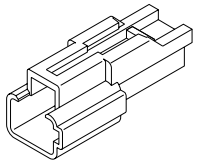
DD2B	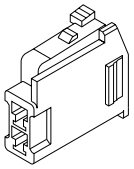 	 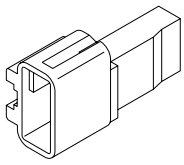
DD2C	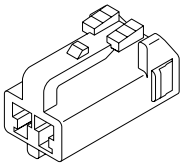 	 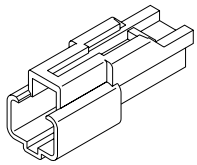
DD2E	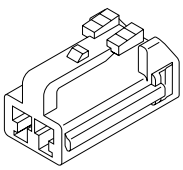 	 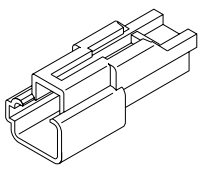

https://truckmanualshub.com/

Number shows number of pins	Female connector	Male connector
DD2F	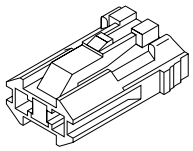 	 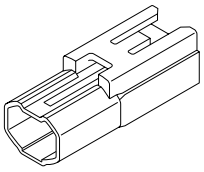
DD3A	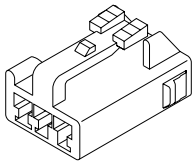 	 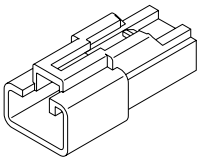
DD4A	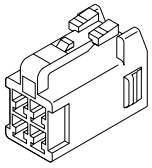 	 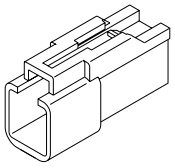
DD4C	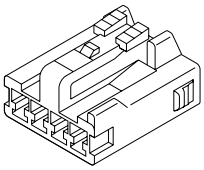 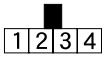	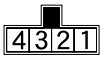 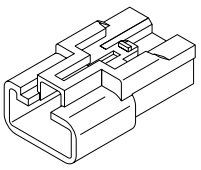
DD5A	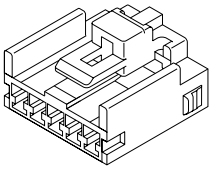 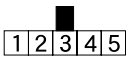	 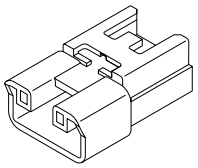
DD6A	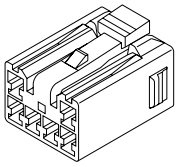 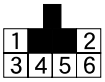	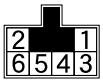 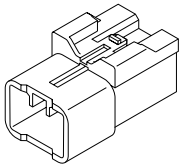
DD6B	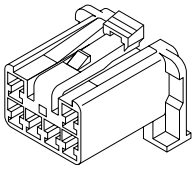 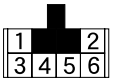	
DD6C	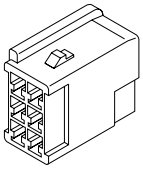 	 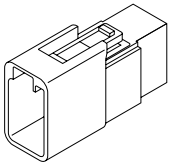
DD6E	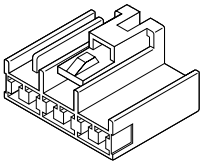 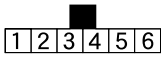	

https://truckmanualshub.com/

CONNECTOR CONFIGURATION CHART

Number shows number of pins	Female connector	Male connector
DD7A	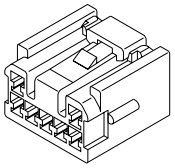 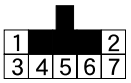	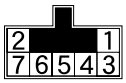 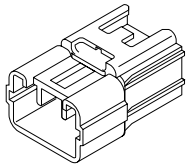
DD8A	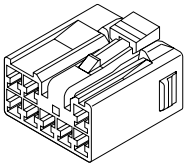 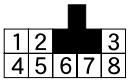	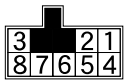 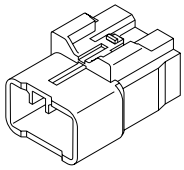
DD9A	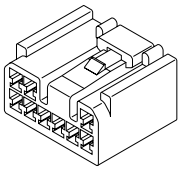 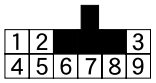	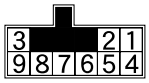 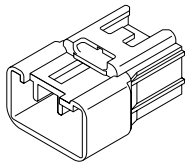
DD10A	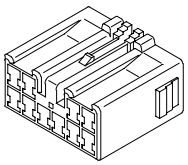 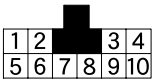	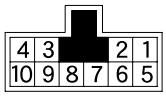 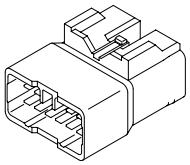
DD10B	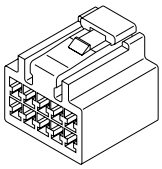 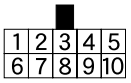	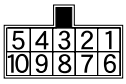 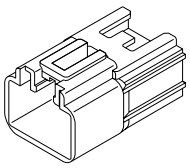
DD11A	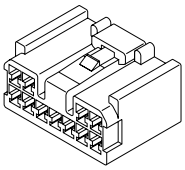 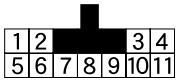	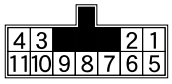 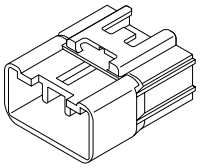
DD12A	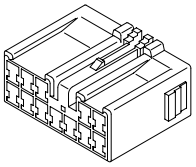 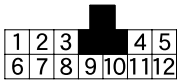	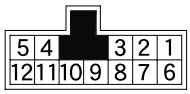 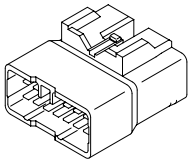
DD12B	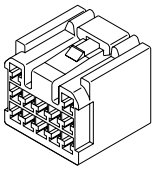 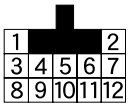	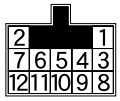 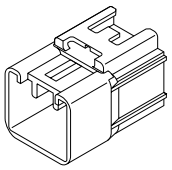
DD12C	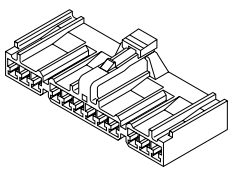 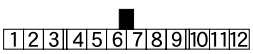	

https://truckmanualshub.com/

Number shows number of pins	Female connector	Male connector
DD13A	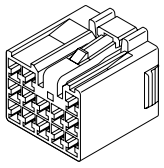 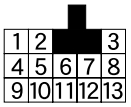	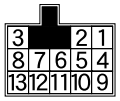 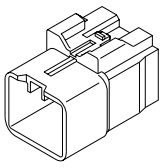
DD13B	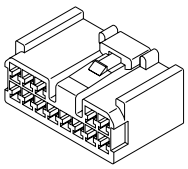 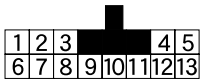	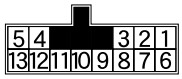 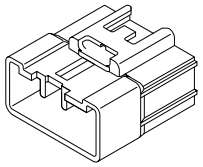
DD14A	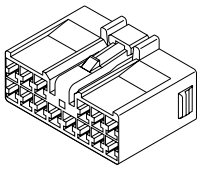 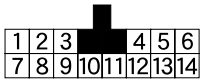	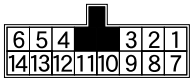 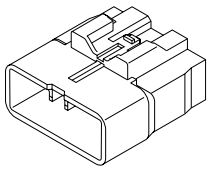
DD14B	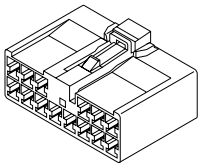 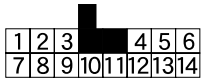	
DD15A	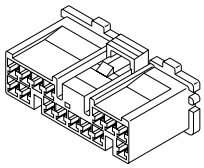 	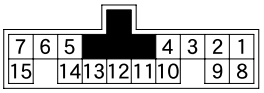 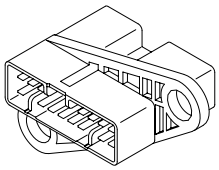
DD15B	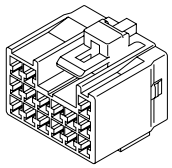 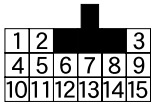	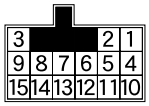 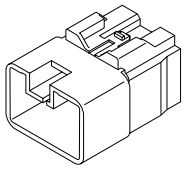
DD16A	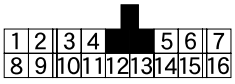	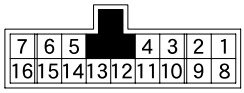
DD16B	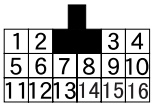	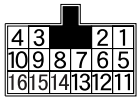
DD18A	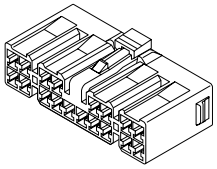 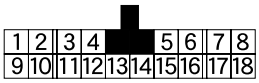	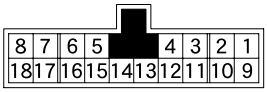 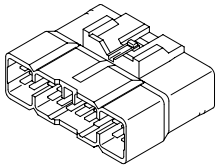

https://truckmanualshub.com/

CONNECTOR CONFIGURATION CHART

Number shows number of pins	Female connector	Male connector
DD20A	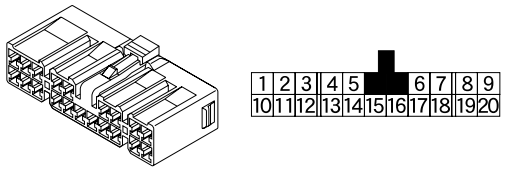	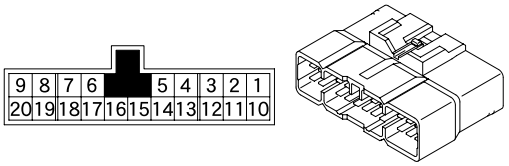
DD22A	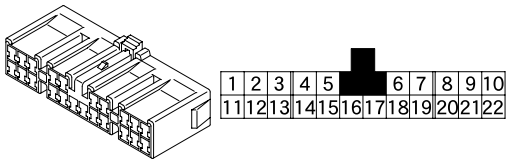	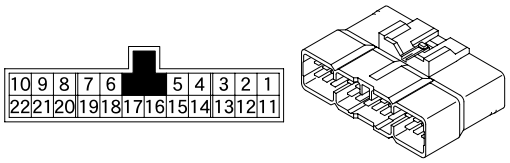

DE type

Number shows number of pins	Female connector	Male connector
DE3A		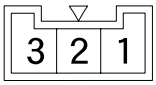
DE7A		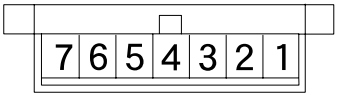

DF type

Number shows number of pins	Female connector	Male connector
DF3A		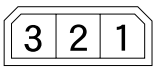

DG type

Number shows number of pins	Female connector	Male connector
DG1A		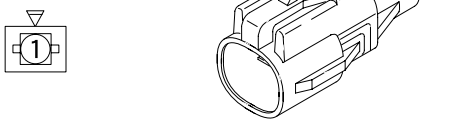

https://truckmanualshub.com/

Number shows number of pins	Female connector	Male connector
DG1B	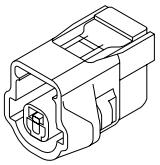 	
DG1C	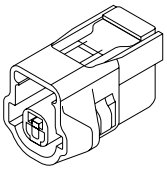 	
DG1D	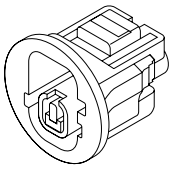 	
DG2A	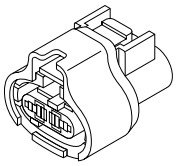 	
DG2B	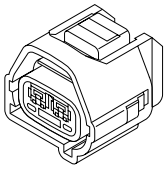 	 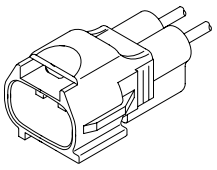
DG2C	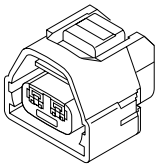 	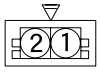 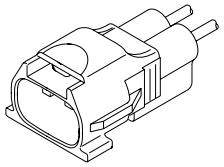
DG2D	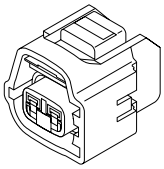 	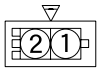 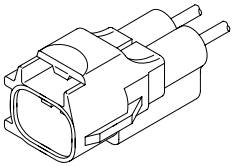
DG2E	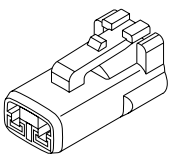 	 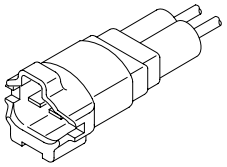
DG2F	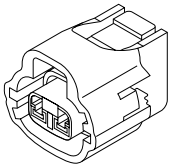 	

https://truckmanualshub.com/

CONNECTOR CONFIGURATION CHART

Number shows number of pins	Female connector	Male connector
DG2G	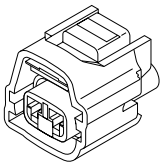 	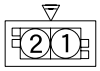 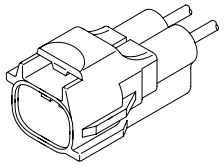
DG2H	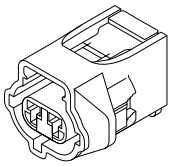 	
DG2J	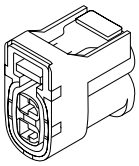 	
DG2K	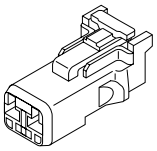 	 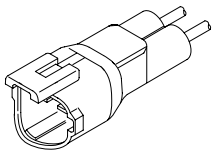
DG2L	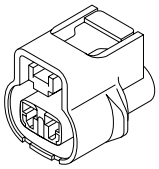 	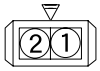 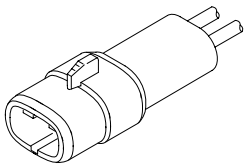
DG2M	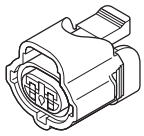 	
DG3A	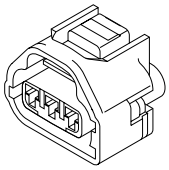 	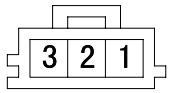
DG3B	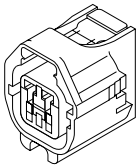 	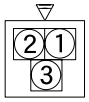 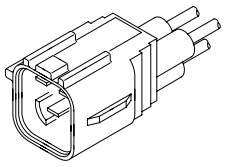
DG4A	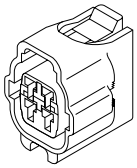 	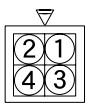 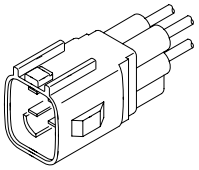

https://truckmanualshub.com/

Number shows number of pins	Female connector	Male connector
DG4B	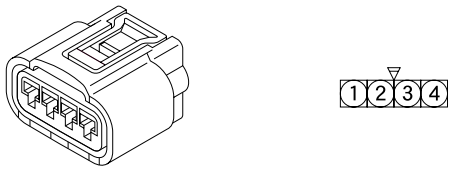	
DG4C		
DG5A	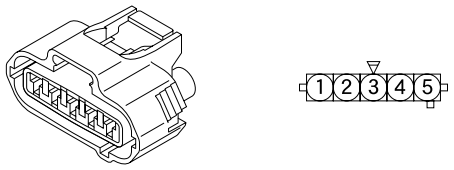	
DG5B	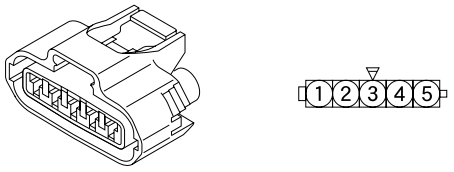	
DG5C	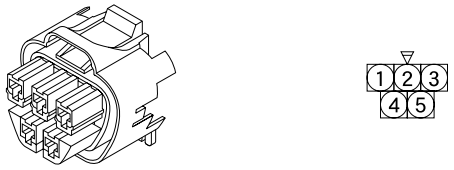	
DG5D	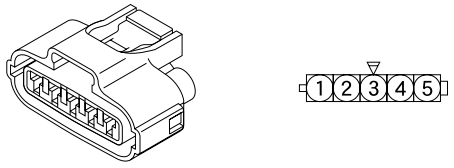	
DG6A	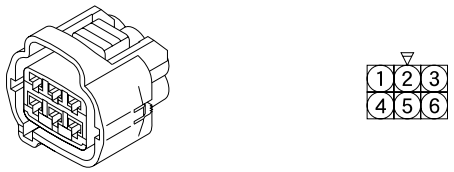	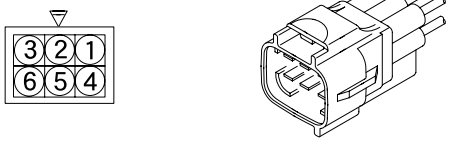
DG6B	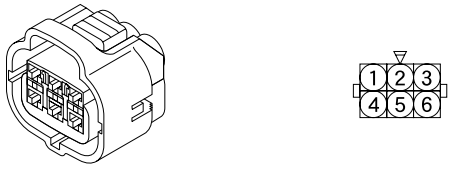	
DG6C	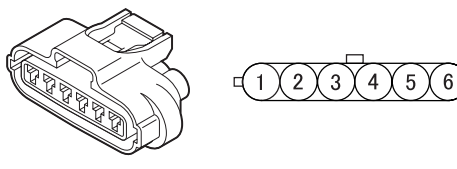	

https://truckmanualshub.com/

CONNECTOR CONFIGURATION CHART

Number shows number of pins	Female connector	Male connector
DG8A	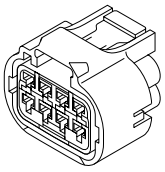 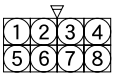	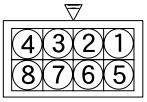 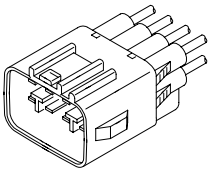
DG8B	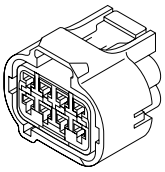 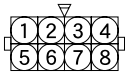	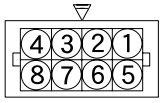 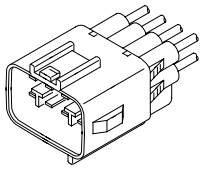
DG10A	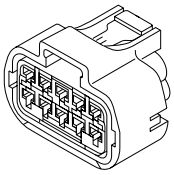 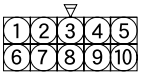	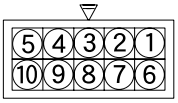 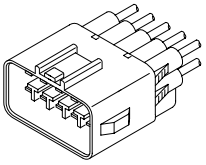
DG12A	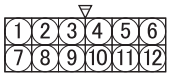	

DH type

Number shows number of pins	Female connector	Male connector
DH2A	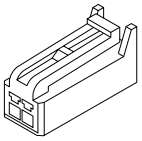 	
DH5A	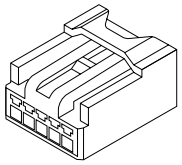 	
DH6A	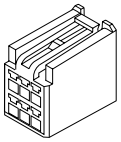 	
DH10A	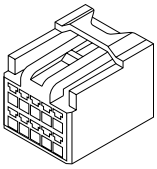 	 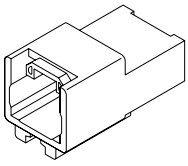

https://truckmanualshub.com/

Number shows number of pins	Female connector	Male connector
DH14A	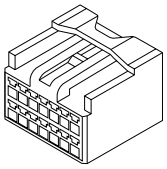 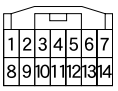	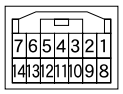 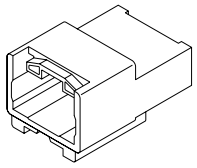
DH18A	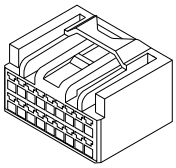 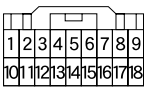	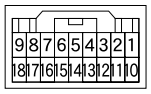 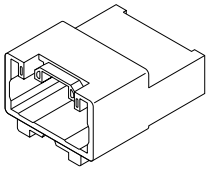
DH20A	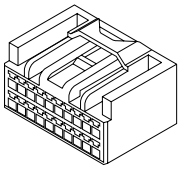 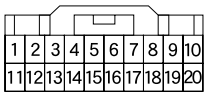	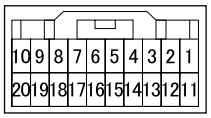 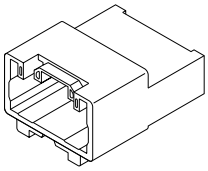
DH22A	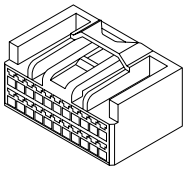 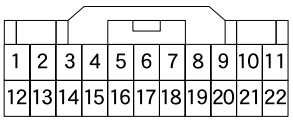	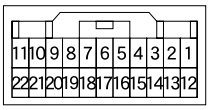 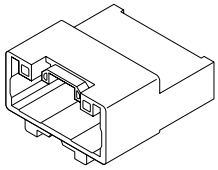

DJ type

Number shows number of pins	Female connector	Male connector
DJ10A	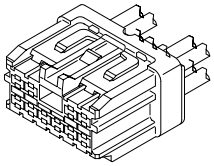 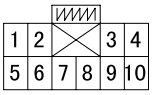	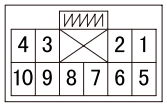 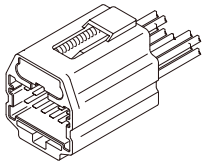
DJ10B	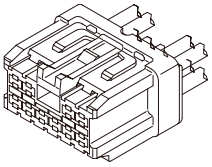 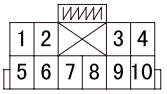	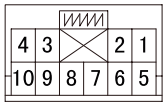 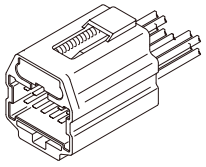

DK type

Number shows number of pins	Female connector	Male connector
DK2A	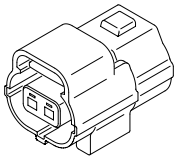 	

https://truckmanualshub.com/

CONNECTOR CONFIGURATION CHART

Number shows number of pins	Female connector	Male connector
DK2B	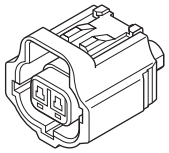 	
DK3A	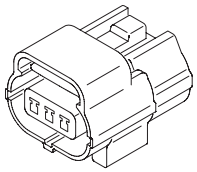 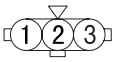	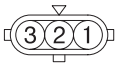 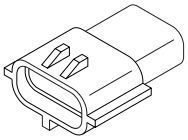
DK4A	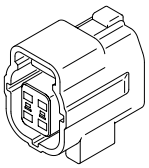 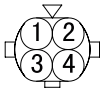	

DL type

Number shows number of pins	Female connector	Male connector
DL4A	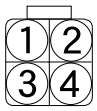	

DM type

Number shows number of pins	Female connector	Male connector
DM3A	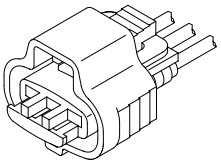 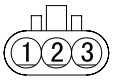	
DM4A	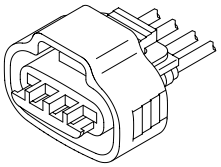 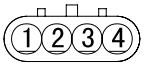	

https://truckmanualshub.com/

DN type

Number shows number of pins	Female connector	Male connector
DN4A	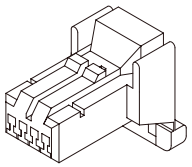 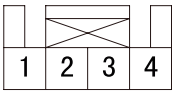	

DP type

Number shows number of pins	Female connector	Male connector
DP5A	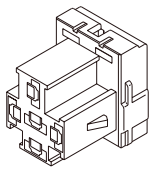 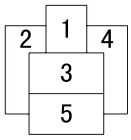	

DQ type

Number shows number of pins	Female connector	Male connector
DQ2A	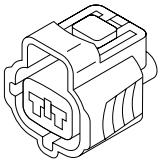 	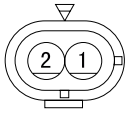 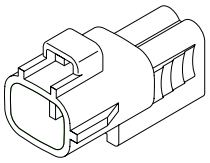
DQ2B	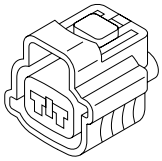 	
DQ2C	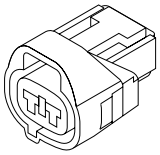 	
DQ2D	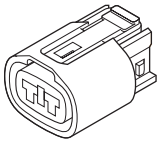 	
DQ2E	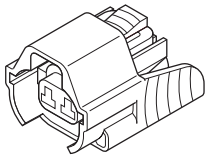 	

https://truckmanualshub.com/

CONNECTOR CONFIGURATION CHART

Number shows number of pins	Female connector	Male connector
DQ2F	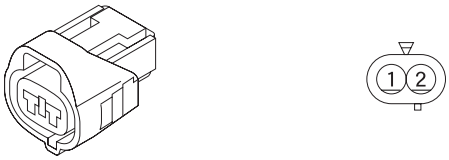	
DQ3A		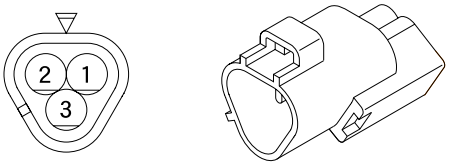
DQ3B	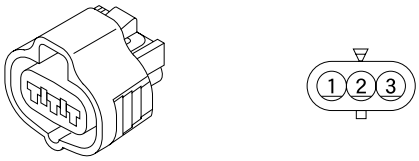	
DQ3D	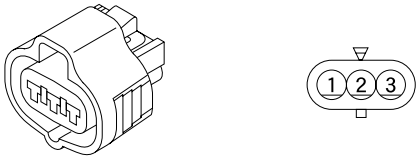	
DQ4A	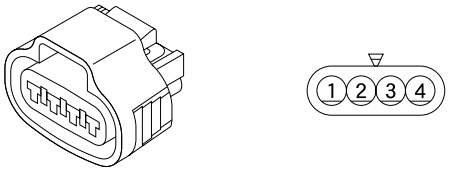	
DQ4B	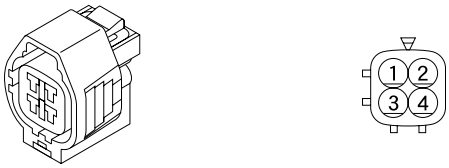	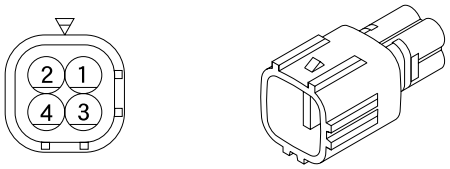
DQ8A	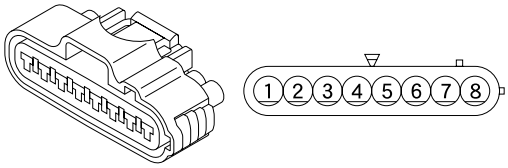	

DR type

Number shows number of pins	Female connector	Male connector
DR2A	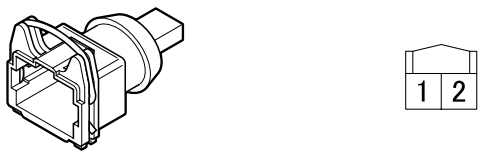	

https://truckmanualshub.com/

DS type

Number shows number of pins	Female connector	Male connector
DS2A	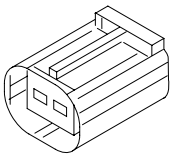 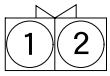	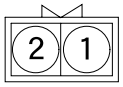 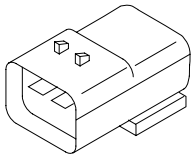
DS6A	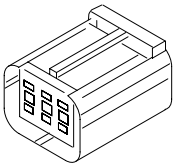 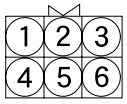	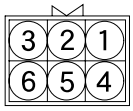 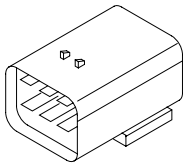

DT type

Number shows number of pins	Female connector	Male connector
DT1A	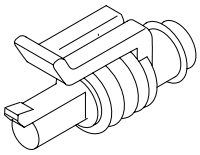 	 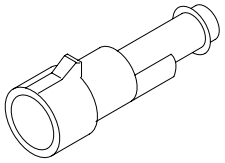
DT2A	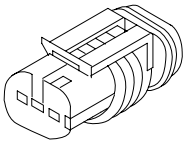 	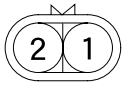 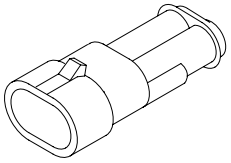
DT3A	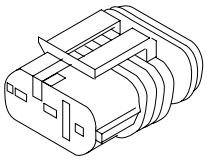 	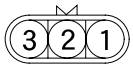 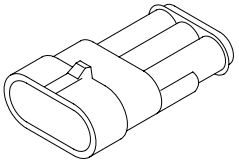
DT4A	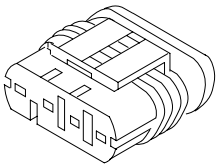 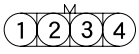	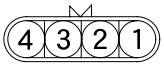 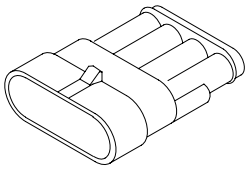

https://truckmanualshub.com/

CONNECTOR CONFIGURATION CHART

DU type

Number shows number of pins	Female connector	Male connector
DU2A		

DV type

Number shows number of pins	Female connector	Male connector
DV4A	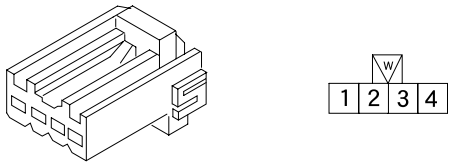	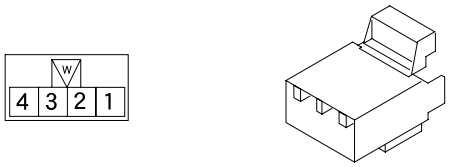

DW type

Number shows number of pins	Female connector	Male connector
DW2A		

DX type

Number shows number of pins	Female connector	Male connector
DX2A		

DY type

Number shows number of pins	Female connector	Male connector
DY1A	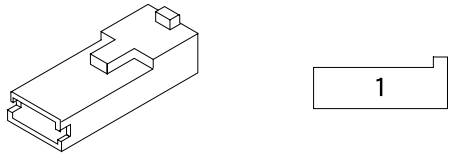	

https://truckmanualshub.com/

DY1B	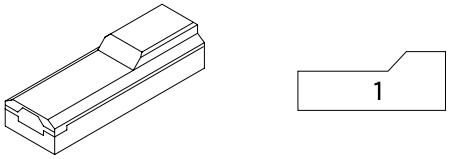	

DZ type

Number shows number of pins	Female connector	Male connector
DZ1A	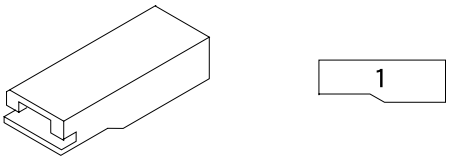	

EA type

Number shows number of pins	Female connector	Male connector
EA8A		
EA8B		

EB type

Number shows number of pins	Female connector	Male connector
EB8A	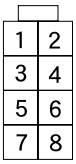	

EC type

Number shows number of pins	Female connector	Male connector
EC2A	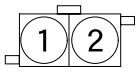	

https://truckmanualshub.com/

CONNECTOR CONFIGURATION CHART

ED type

Number shows number of pins	Female connector	Male connector
ED2A	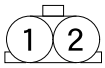	

EE type

Number shows number of pins	Female connector	Male connector
EE2A	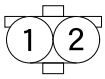	

EF type

Number shows number of pins	Female connector	Male connector
EF2A	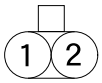	

EG type

Number shows number of pins	Female connector	Male connector
EG4A	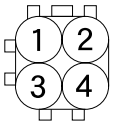	

EH type

Number shows number of pins	Female connector	Male connector
EH2A	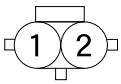	

https://truckmanualshub.com/

EJ type

Number shows number of pins	Female connector	Male connector
EJ9A	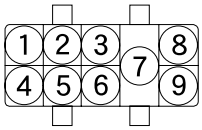	

EK type

Number shows number of pins	Female connector	Male connector
EK2A	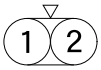	

EL type

Number shows number of pins	Female connector	Male connector
EL2A	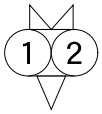	

EM type

Number shows number of pins	Female connector	Male connector
EM40A	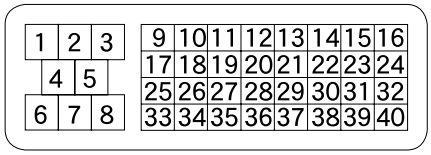	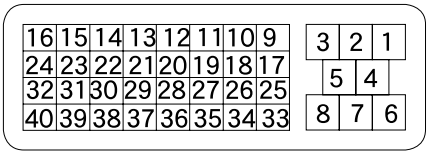
EM81A	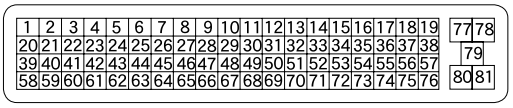	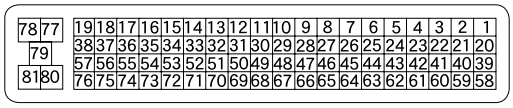

https://truckmanualshub.com/

CONNECTOR CONFIGURATION CHART

EN type

Number shows number of pins	Female connector	Male connector
EN4A	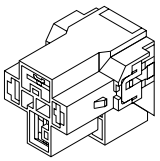 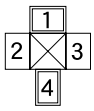	
EN5A	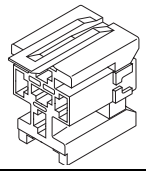 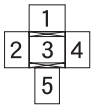	

EP type

Number shows number of pins	Female connector	Male connector
EP34A	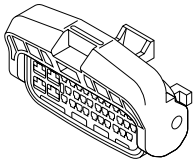 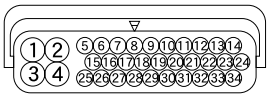	

EQ type

Number shows number of pins	Female connector	Male connector
EQ4A	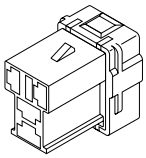 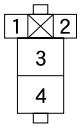	
EQ4B	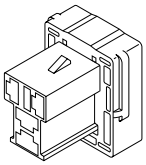 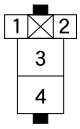	
EQ5A	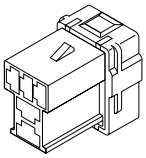 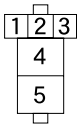 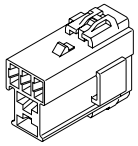 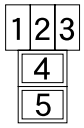	

https://truckmanualshub.com/

Number shows number of pins	Female connector	Male connector
EQ5B		

ER type

Number shows number of pins	Female connector	Male connector
ER2A	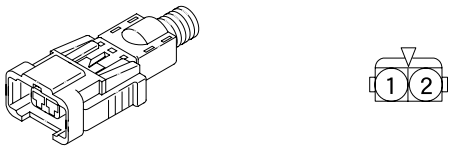	
ER6A	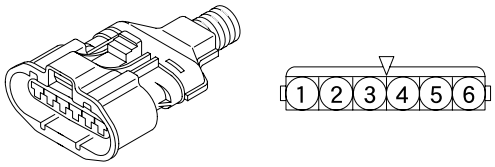	
ER8A	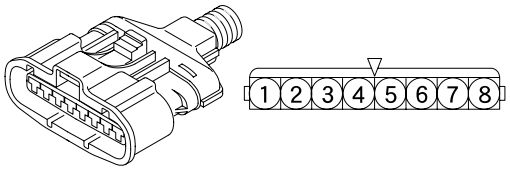	

ES type

Number shows number of pins	Female connector	Male connector
ES2A	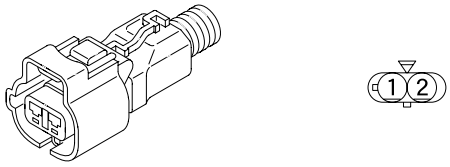	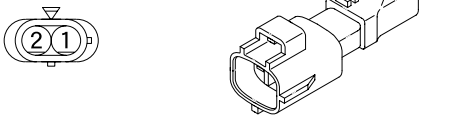
ES2B	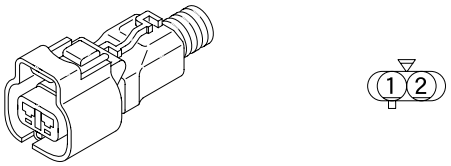	
ES2C	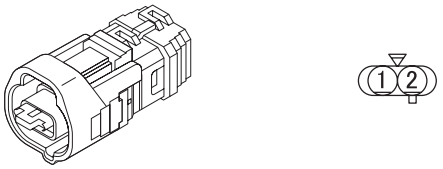	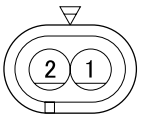

https://truckmanualshub.com/

CONNECTOR CONFIGURATION CHART

Number shows number of pins	Female connector	Male connector
ES3A	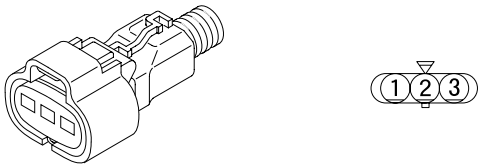	
ES3B	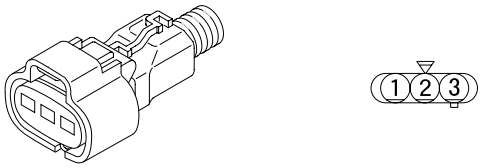	
ES4A	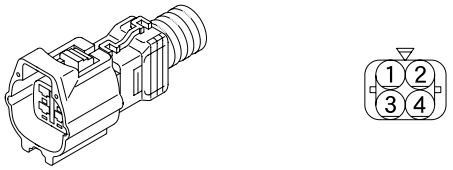	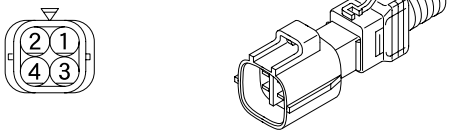

ET type

Number shows number of pins	Female connector	Male connector
ET1A	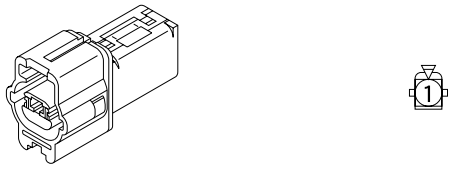	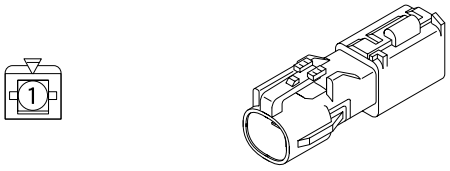
ET1B	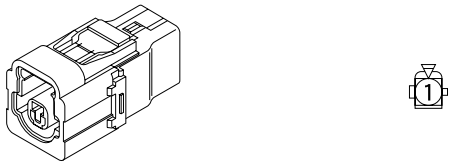	
ET1D	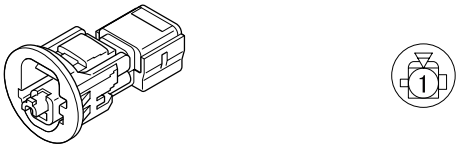	
ET2A	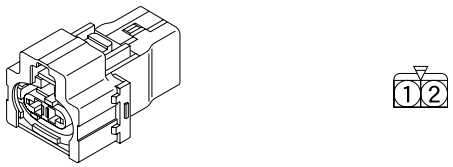	
ET2B	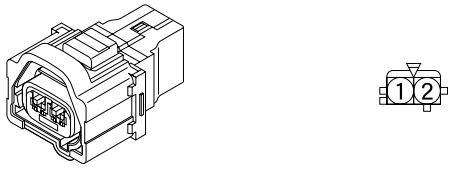	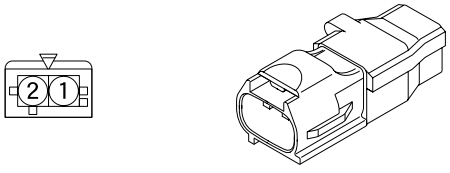

https://truckmanualshub.com/

Number shows number of pins	Female connector	Male connector
ET2C	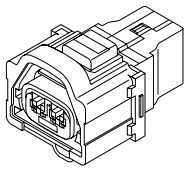 	 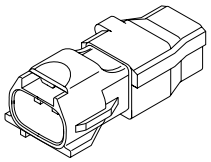
ET2D	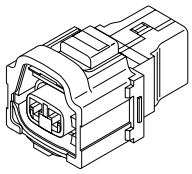 	 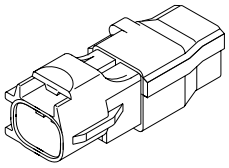
ET2F	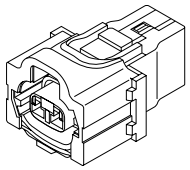 	
ET2G	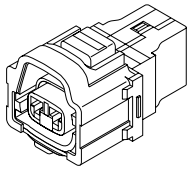 	 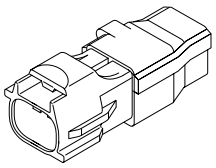
ET2L	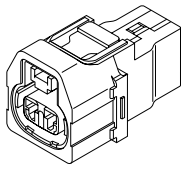 	
ET3A	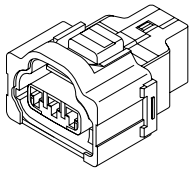 	
ET3B	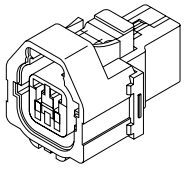 	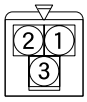 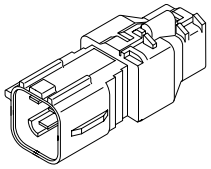
ET3C	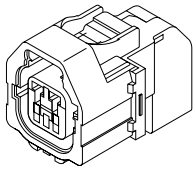 	
ET4A	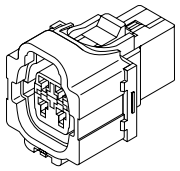 	 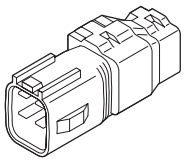

https://truckmanualshub.com/

CONNECTOR CONFIGURATION CHART

Number shows number of pins	Female connector	Male connector
ET4B	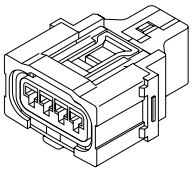 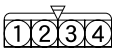	
ET5A	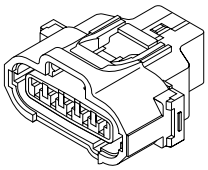 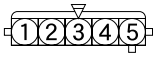	
ET5B	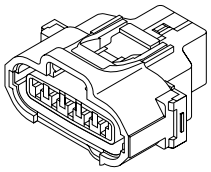 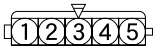	
ET5D	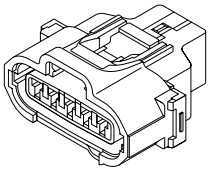 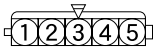	
ET6A	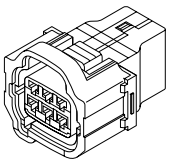 	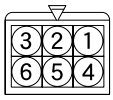 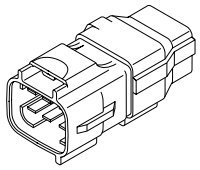
ET6B	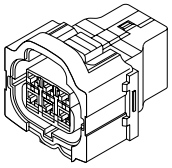 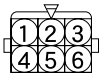	
ET6C	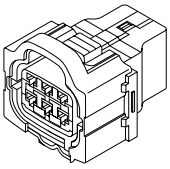 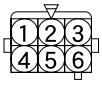	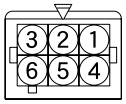 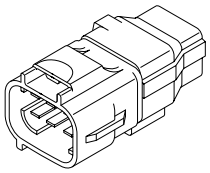
ET8A	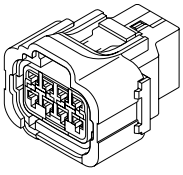 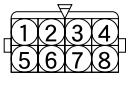	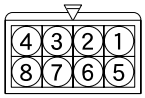 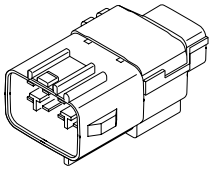
ET8B	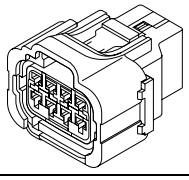 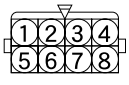	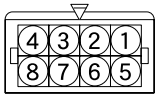 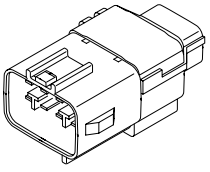

https://truckmanualshub.com/

Number shows number of pins	Female connector	Male connector
ET10A	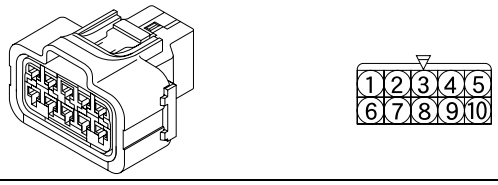	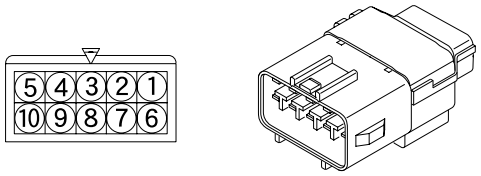
ET32A	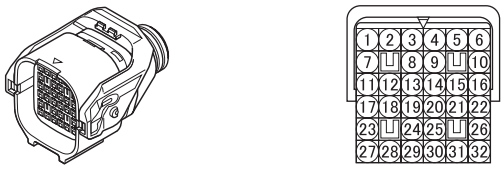	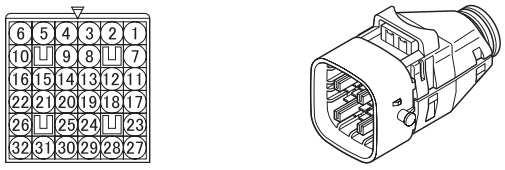

EU type

Number shows number of pins	Female connector	Male connector
EU1A	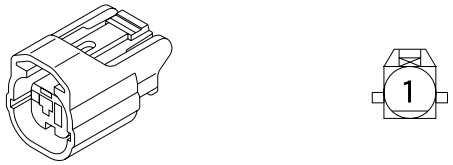	

EV type

Number shows number of pins	Female connector	Male connector
EV2A	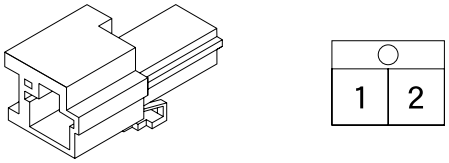	

EW type

Number shows number of pins	Female connector	Male connector
EW12A	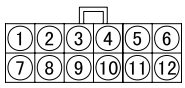	

EX type

Number shows number of pins	Female connector	Male connector
EX5A	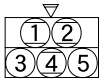	

https://truckmanualshub.com/

CONNECTOR CONFIGURATION CHART

EY type

Number shows number of pins	Female connector	Male connector
EY3A	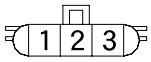	

EZ type

Number shows number of pins	Female connector	Male connector
EZ3A	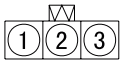	

FA type

Number shows number of pins	Female connector	Male connector
FA2B		
FA3A	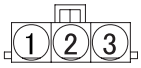	
FA5A	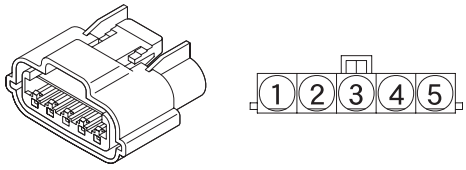	

FB type

Number shows number of pins	Female connector	Male connector
FB55A	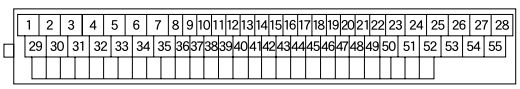	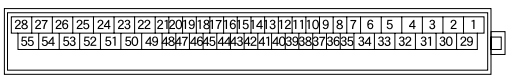

https://truckmanualshub.com/

GA type

Number shows number of pins	Female connector	Male connector
GA1A	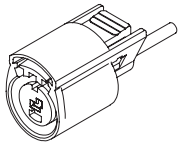 	 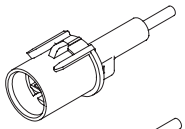  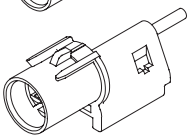
GA2A	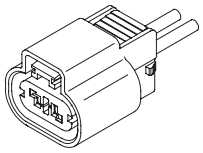 	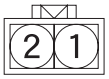 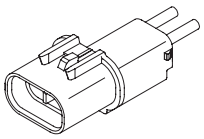
GA2B	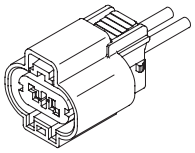 	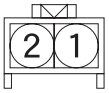 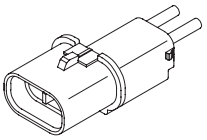
GA3A	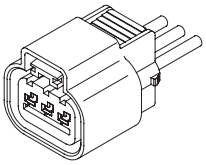 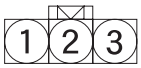	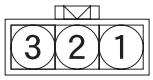 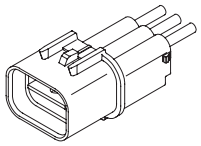
GA3B	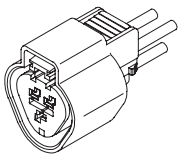 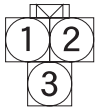	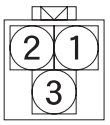 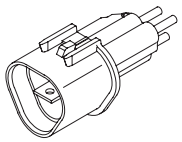
GA4A	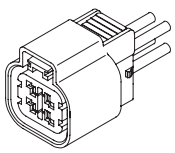 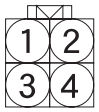	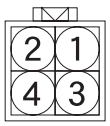 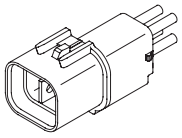
GA4B	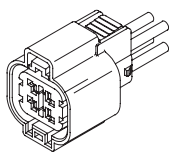 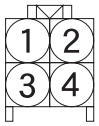	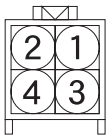 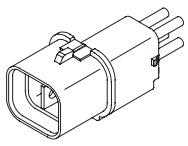
GA6A	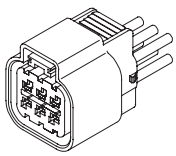 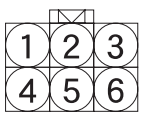	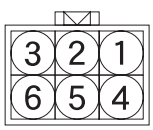 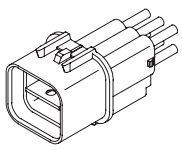

https://truckmanualshub.com/

CONNECTOR CONFIGURATION CHART

Number shows number of pins	Female connector	Male connector
GA6B	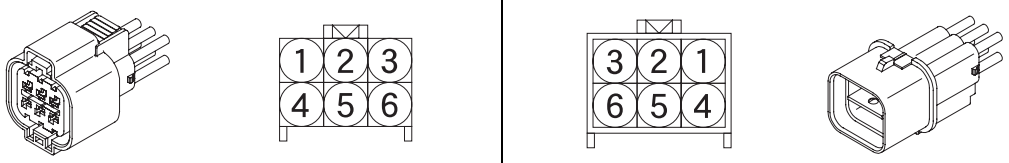	
GA8A	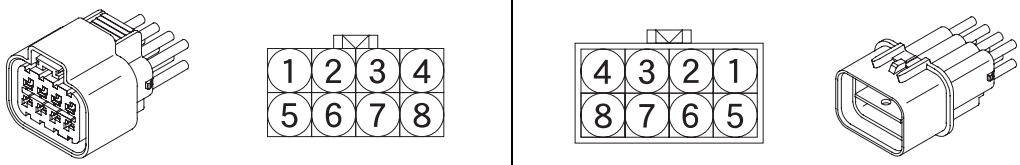	
GA10A	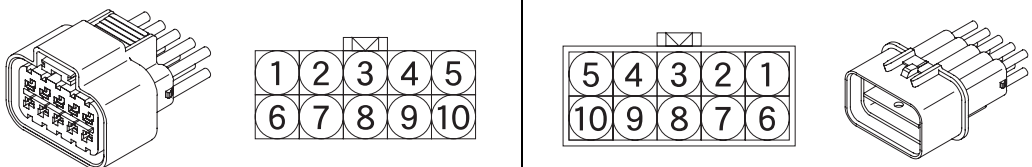	
GA12A	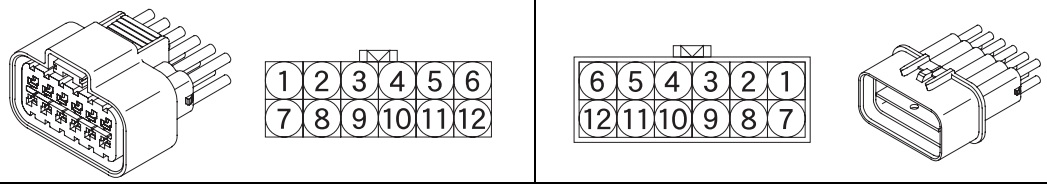	

GB type

Number shows number of pins	Female connector	Male connector
GB1A	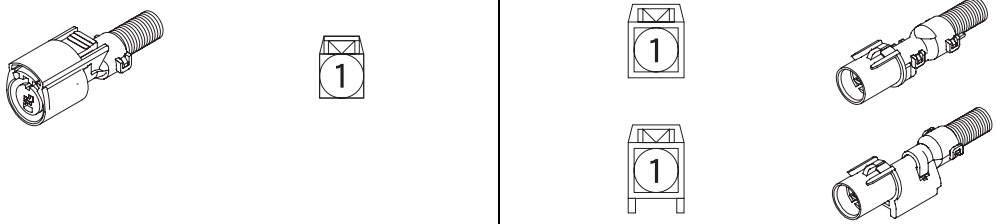	
GB2A	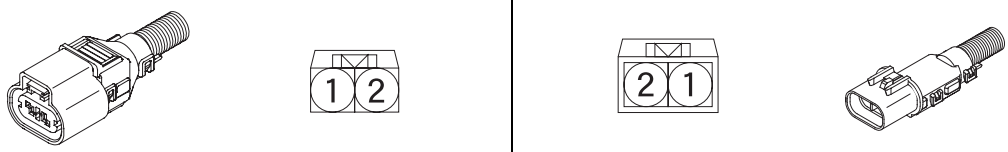	
GB2B	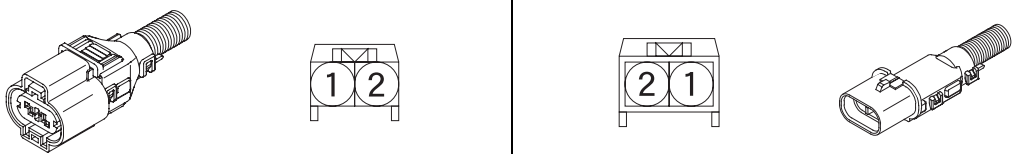	
GB3A	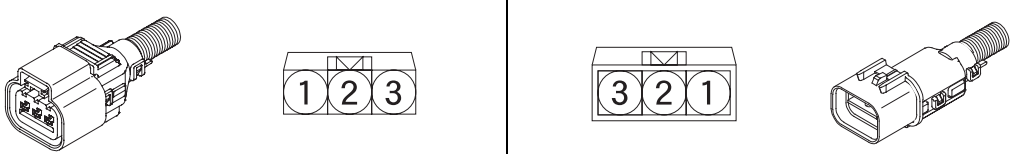	

https://truckmanualshub.com/

Number shows number of pins	Female connector	Male connector
GB3B	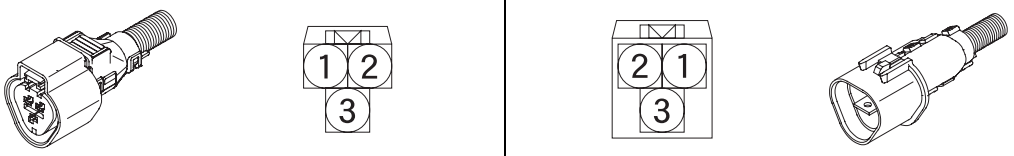	
GB4A	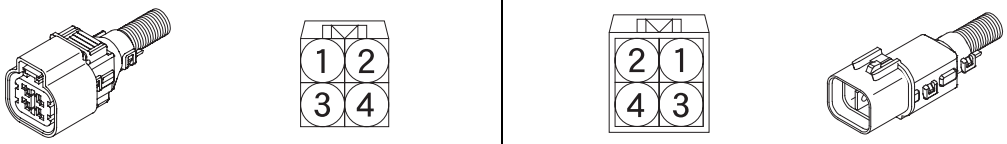	
GB4B	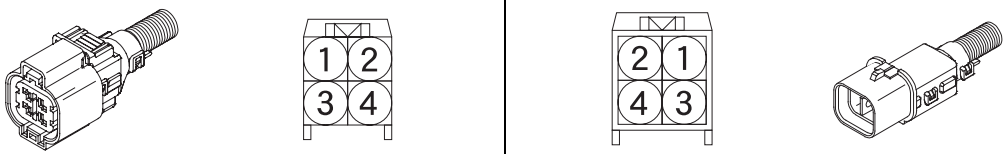	
GB6A	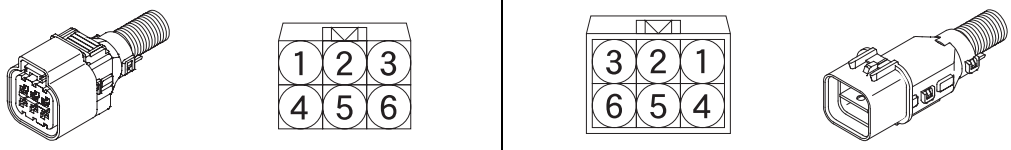	
GB6B	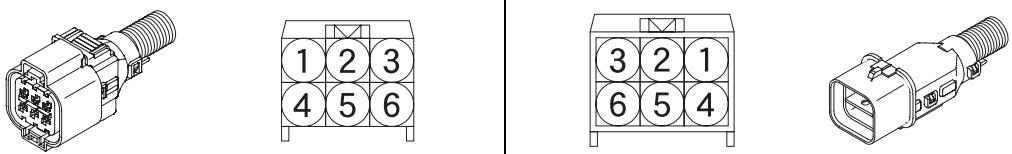	
GB8A	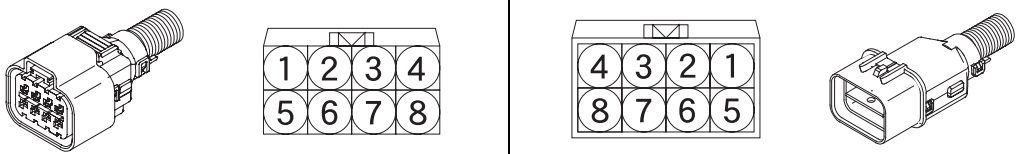	
GB10A	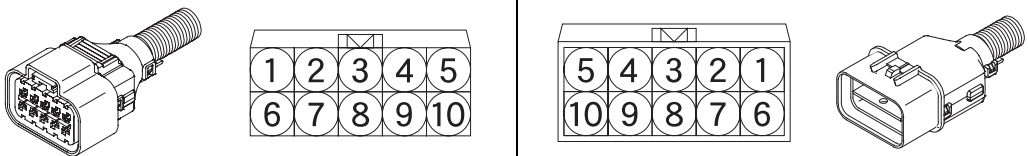	
GB12A	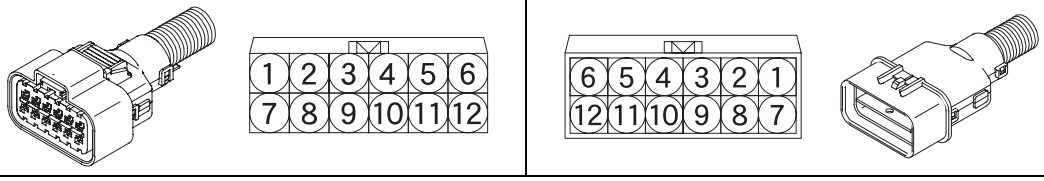	

https://truckmanualshub.com/

CONNECTOR CONFIGURATION CHART

GC type

Number shows number of pins	Female connector	Male connector
GC32A	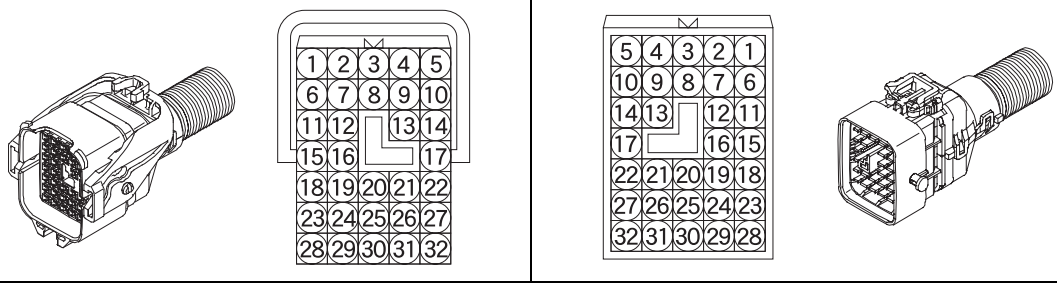	

GD type

Number shows number of pins	Female connector	Male connector
GD1A	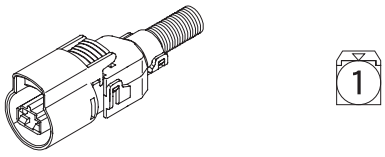	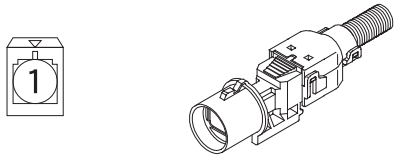
GD2A	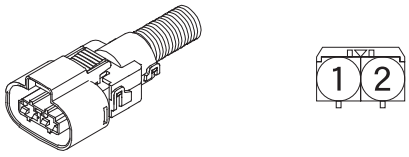	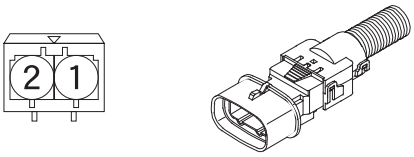
GD3A	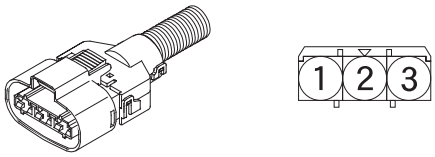	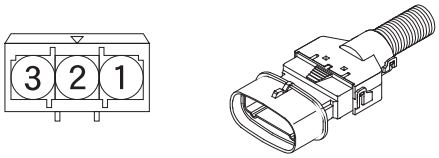
GD3B	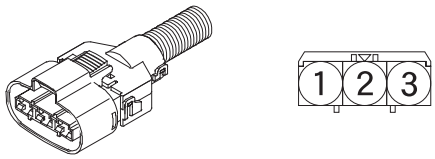	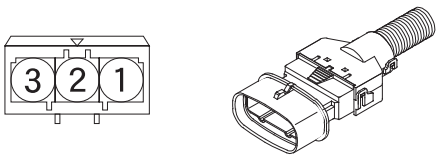

https://truckmanualshub.com/

GE type

Number shows number of pins	Female connector
GE58A	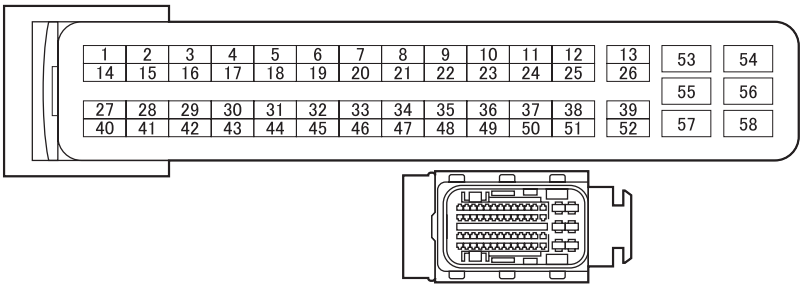
GE96A	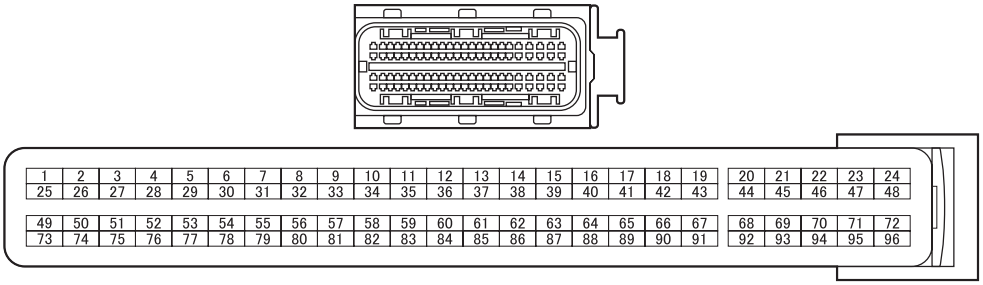

GF type

Number shows number of pins	Female connector	Male connector
GF31A	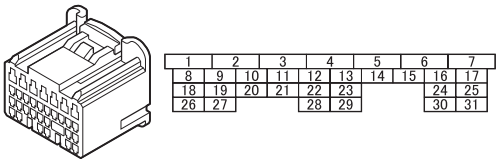	
GF32A	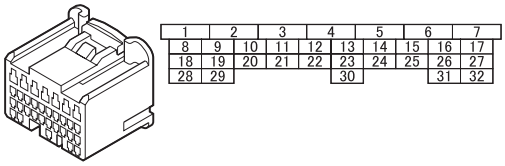	
GF34A	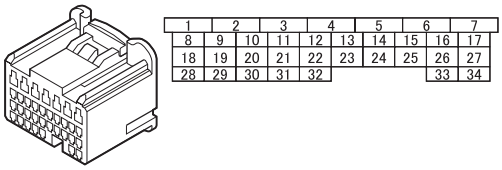	
GF35A	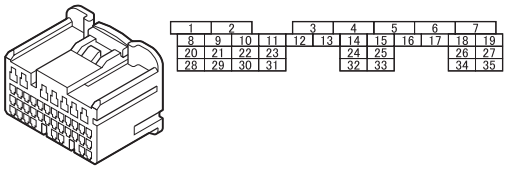	

https://truckmanualshub.com/

CONNECTOR CONFIGURATION CHART

Number shows number of pins	Female connector	Male connector
GF35B	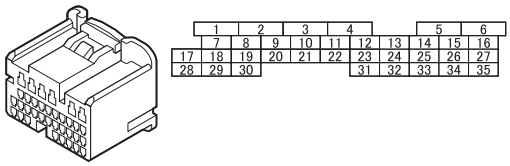	

GG type

Number shows number of pins	Female connector	Male connector
GG12A		
GG16A	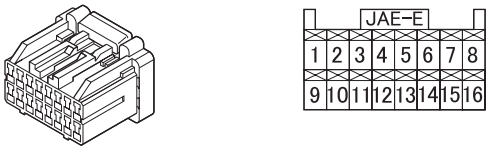	
GG22A	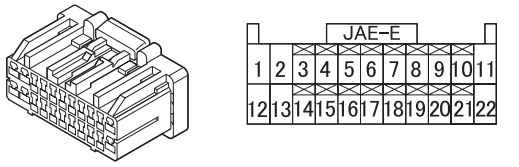	
GG26A	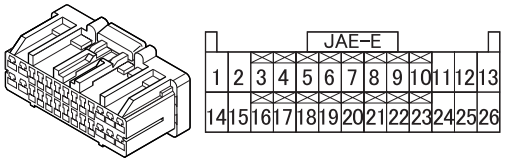	

GH type

Number shows number of pins	Female connector	Male connector
GH3A	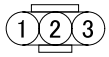	

https://truckmanualshub.com/

GJ type

Number shows number of pins	Female connector	Male connector
GJ2A		
GJ2B	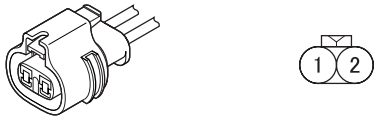	

GK type

Number shows number of pins	Female connector	Male connector
GK7A	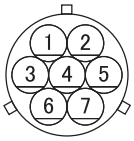	

GL type

Number shows number of pins	Female connector	Male connector
GL2A	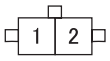	

GM type

Number shows number of pins	Female connector	Male connector
GM2A		

https://truckmanualshub.com/

CONNECTOR CONFIGURATION CHART

GN type

Number shows number of pins	Female connector	Male connector
GN2A		

GP type

Number shows number of pins	Female connector	Male connector
GP8A	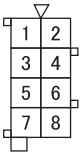	
GP8B	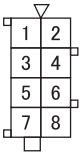	

GQ type

Number shows number of pins	Female connector	Male connector
GQ9A	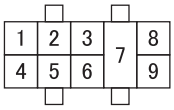	

GR type

Number shows number of pins	Female connector	Male connector
GR13A	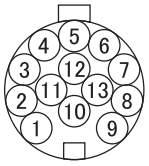	
GR15A	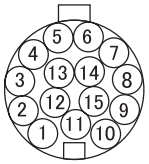	

https://truckmanualshub.com/

GS type

Number shows number of pins	Female connector	Male connector
GS2A	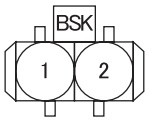	
GS2B	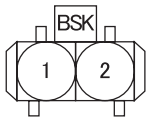	
GS2C	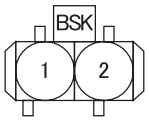	
GS2D	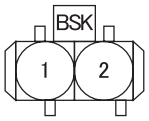	
GS3A	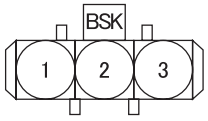	

GT type

Number shows number of pins	Female connector	Male connector
GT24A	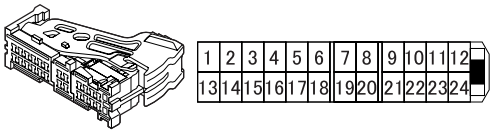	
GT28A	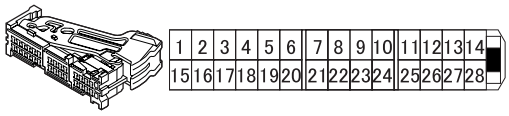	
GT32A	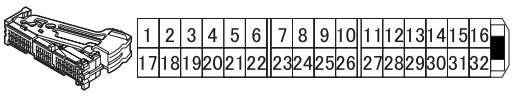	

https://truckmanualshub.com/

CONNECTOR CONFIGURATION CHART

GU type

Number shows number of pins	Female connector	Male connector
GU24A	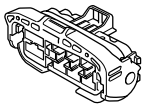 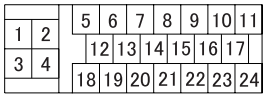	

GV type

Number shows number of pins	Female connector	Male connector
GV12A	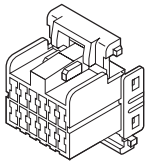 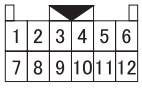	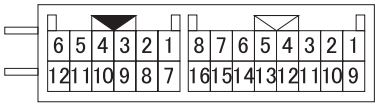 GV12A (GV16A) 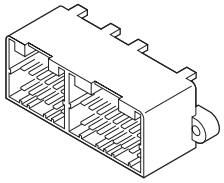
GV16A	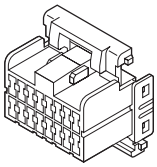 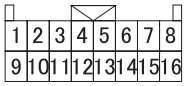	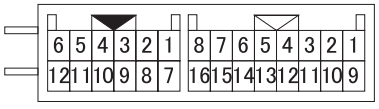 (GV12A) GV16A 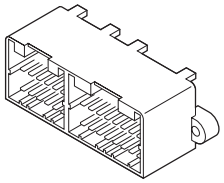
GV20A	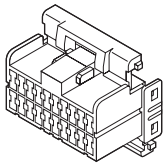 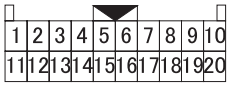	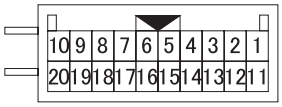 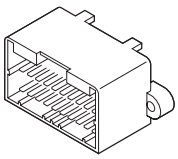

GW type

Number shows number of pins	Female connector	Male connector
GW3A	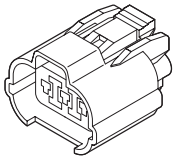 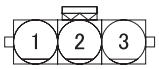	

https://truckmanualshub.com/

Number shows number of pins	Female connector	Male connector
GW3B		
GW4A		

GX type

Number shows number of pins	Female connector	Male connector
GX1A	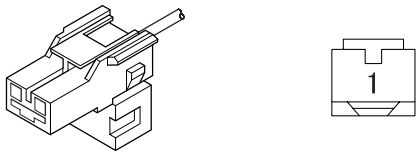	
GX2A	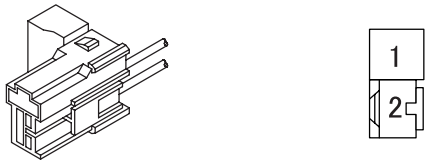	

GY type

Number shows number of pins	Female connector	Male connector
GY4A		

GZ type

Number shows number of pins	Female connector	Male connector
GZ2A	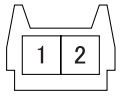	

https://truckmanualshub.com/

CONNECTOR CONFIGURATION CHART

HA type

Number shows number of pins	Female connector	Male connector
HA2A	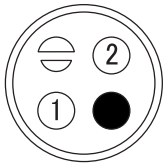	
HA4A	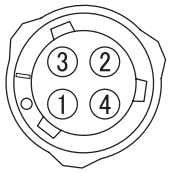	
HA7A		
HA15A	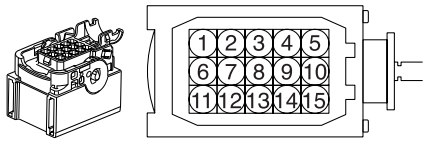	
HA36A	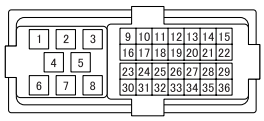	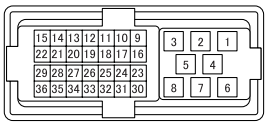
HA46A	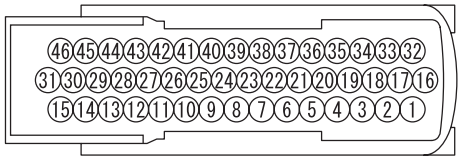	

HB type

Number shows number of pins	Female connector	Male connector
HB4A	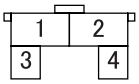	

https://truckmanualshub.com/

HC type

Number shows number of pins	Female connector	Male connector
HC11A	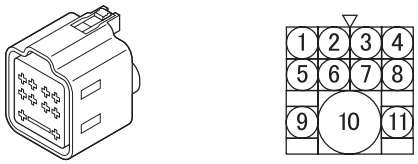	

HD type

Number shows number of pins	Female connector	Male connector
HD2A		
HD2B		
HD3A	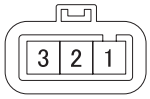	
HD4A	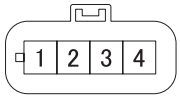	
HD4B	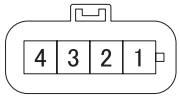	
HD5A	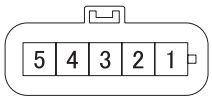	

https://truckmanualshub.com/

CONNECTOR CONFIGURATION CHART

HE type

Number shows number of pins	Female connector	Male connector
HE2A		
HE3A	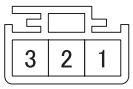	

HF type

Number shows number of pins	Female connector	Male connector
HF3A	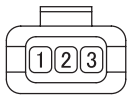	

HG type

Number shows number of pins	Female connector	Male connector
HG2A	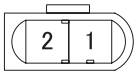	
HG3A	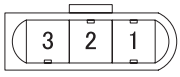	
HG3B	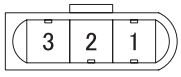	
HG4A	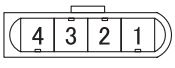	

https://truckmanualshub.com/

HH type

Number shows number of pins	Female connector	Male connector
HH2A	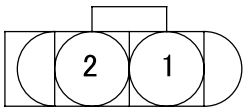	
HH2B	(backward view connector) 	
HH3A	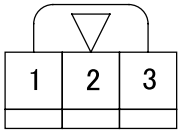	
HH3B	(backward view connector) 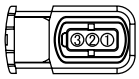	
HH8A	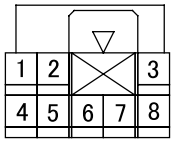	
HH10A	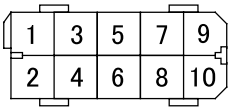	
HH10B	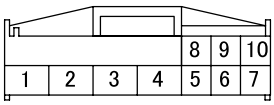	
HH12A	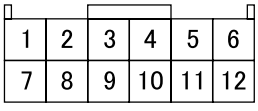	
HH12B	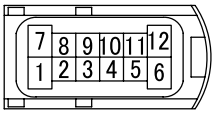	

https://truckmanualshub.com/

CONNECTOR CONFIGURATION CHART

Number shows number of pins	Female connector	Male connector
HH16A	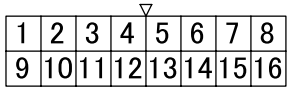	
HH18A	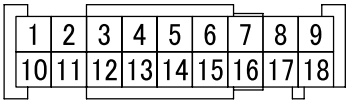	
HH18B	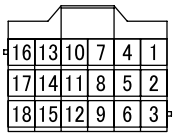	
HH18C	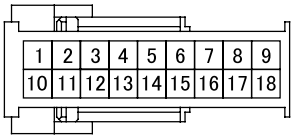	
HH20A	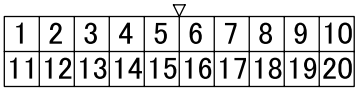	
HH28A	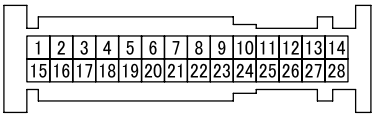	
HH28B	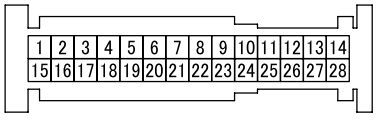	
HH38A	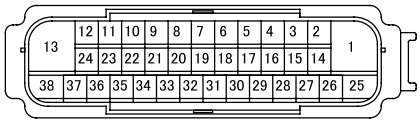	
HH40A	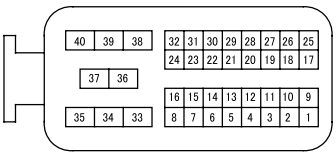	

https://truckmanualshub.com/

Number shows number of pins	Female connector	Male connector
HH40B	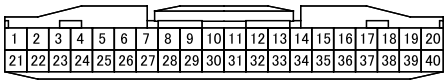	
HH60A		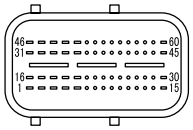
HH81A	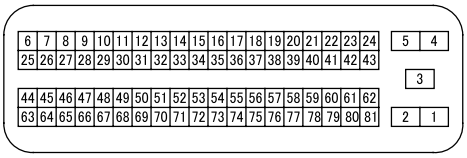	

HJ type

Number shows number of pins	Female connector	Male connector
HJ2A	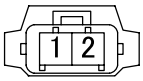	
HJ2B		
HJ2C	(Viewed form back side) 	
HJ3A	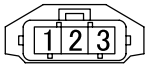	
HJ3B	(Viewed form back side) 	

https://truckmanualshub.com/

CONNECTOR CONFIGURATION CHART

Number shows number of pins	Female connector	Male connector
HJ3C	(Viewed form back side) 	
HJ4A		
HJ4B	 or (Viewed form back side) 	
HJ6A	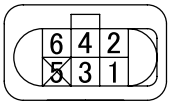	
HJ94A		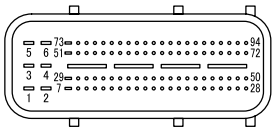

HK type

Number shows number of pins	Female connector	Male connector
HK2A	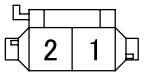	
HK2B	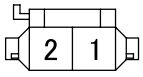	

https://truckmanualshub.com/

Number shows number of pins	Female connector	Male connector
HK6A	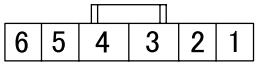	
HK11A	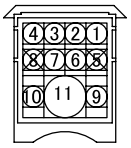	

HL type

Number shows number of pins	Female connector	Male connector
HL3A	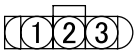	

HM type

Number shows number of pins	Female connector	Male connector
HM5A	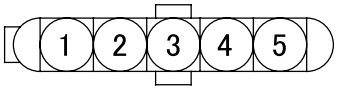	

HN type

Number shows number of pins	Female connector	Male connector
HN3A	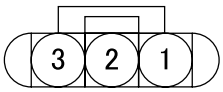	
HN5A	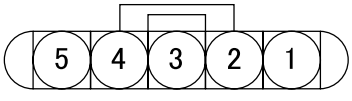	

https://truckmanualshub.com/

CONNECTOR CONFIGURATION CHART

Number shows number of pins	Female connector	Male connector
HN5B	(Viewed form back side) 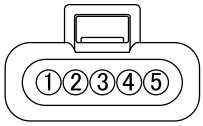	
HN6A	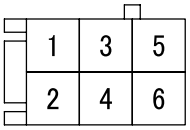	
HN14A	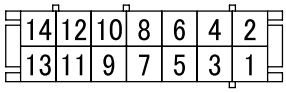	
HN14B	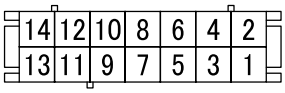	
HN14C	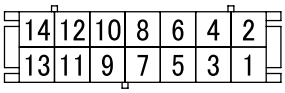	
HN14D	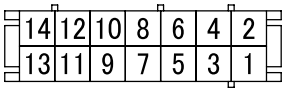	

HP type

Number shows number of pins	Female connector	Male connector
HP23A	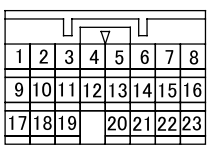	

https://truckmanualshub.com/

HQ type

Number shows number of pins	Female connector	Male connector
HQ1A		
HQ2A		
HQ4A	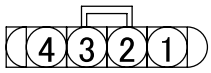	
HQ4B	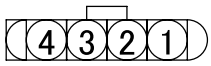	
HQ5A	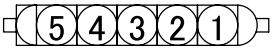	
HQ5B	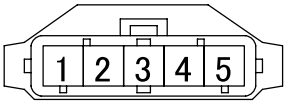	
HQ8A	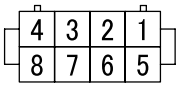	
HQ8B	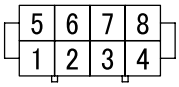	
HQ8C	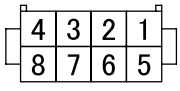	

https://truckmanualshub.com/

CONNECTOR CONFIGURATION CHART

Number shows number of pins	Female connector	Male connector
HQ10A	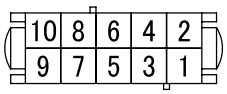	
HQ10B	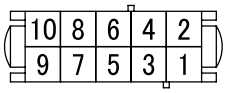	
HQ10C	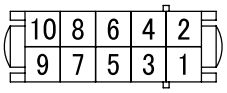	

HR type

Number shows number of pins	Female connector	Male connector
HR3A	(Viewed form back side) 	

HS type

Number shows number of pins	Female connector	Male connector
HS2A	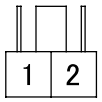	
HS3A	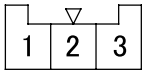	
HS4A	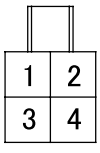	

https://truckmanualshub.com/

Number shows number of pins	Female connector	Male connector
HS5A	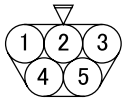	
HS5B	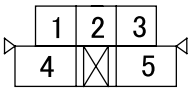	

HT type

Number shows number of pins	Female connector	Male connector
HT7A	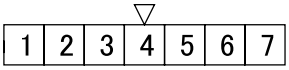	

HU type

Number shows number of pins	Female connector	Male connector
HU2A	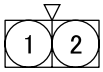	
HU2B	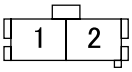	
HU2C	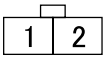	
HU2D		

https://truckmanualshub.com/

CONNECTOR CONFIGURATION CHART

Number shows number of pins	Female connector	Male connector
HU3A	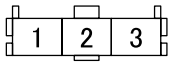	

PC type

Number shows number of pins	Female connector	Male connector
PC4A	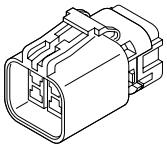 	

PE type

Number shows number of pins	Female connector	Male connector
PE8A	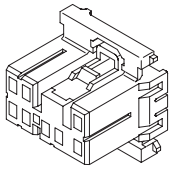 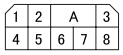	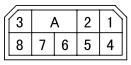 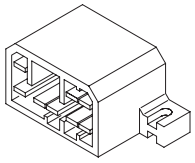
PE10A	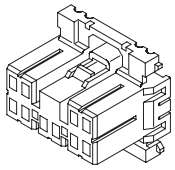 	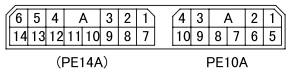 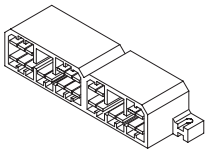
PE10B	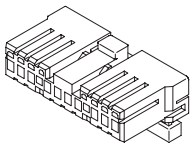 	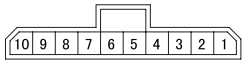 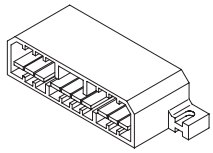

https://truckmanualshub.com/

Number shows number of pins	Female connector	Male connector
PE12A	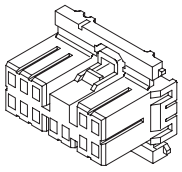 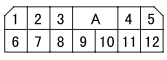	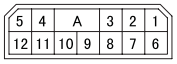 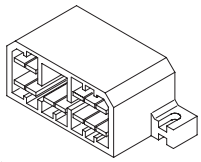 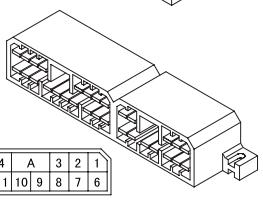 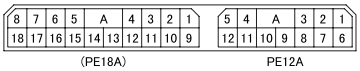 (PE18A) PE12A 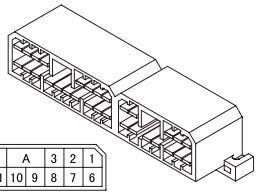 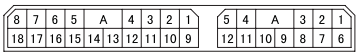 (PE18A) PE12A 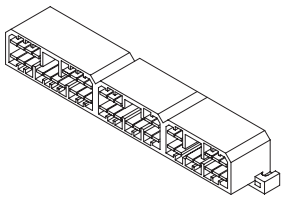 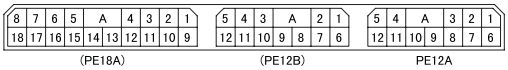 (PE18A) (PE12B) PE12A
PE12B	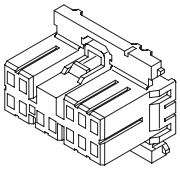 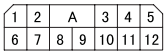	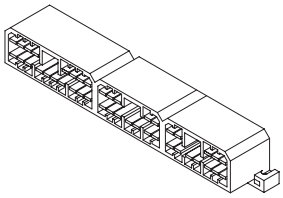 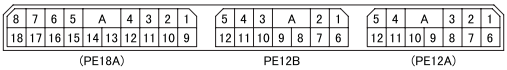 (PE18A) PE12B (PE12A)
PE14A	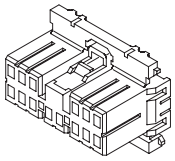 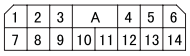	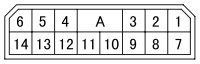 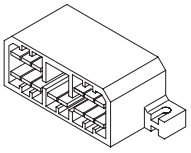 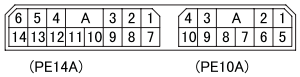 (PE14A) (PE10A) 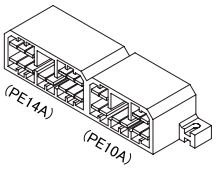 (PE14A) (PE10A)

https://truckmanualshub.com/

CONNECTOR CONFIGURATION CHART

Number shows number of pins	Female connector	Male connector
PE18A	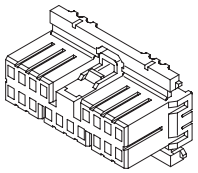 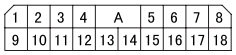 1 2 3 4 A 5 6 7 8 9 10 11 12 13 14 15 16 17 18	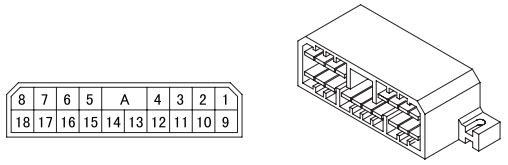 8 7 6 5 A 4 3 2 1 18 17 16 15 14 13 12 11 10 9 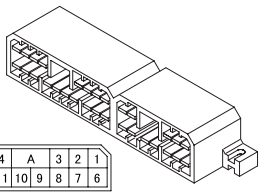 8 7 6 5 A 4 3 2 1 18 17 16 15 14 13 12 11 10 9 PE18A 5 4 A 3 2 1 12 11 10 9 8 7 6 (PE12A) 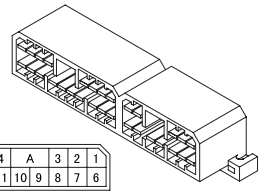 8 7 6 5 A 4 3 2 1 18 17 16 15 14 13 12 11 10 9 PE18A 5 4 A 3 2 1 12 11 10 9 8 7 6 (PE12A) 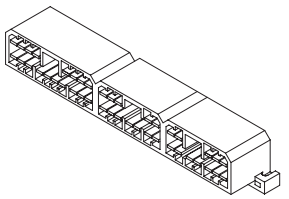 8 7 6 5 A 4 3 2 1 18 17 16 15 14 13 12 11 10 9 PE18A 5 4 3 A 2 1 12 11 10 9 8 7 6 (PE12B) 5 4 A 3 2 1 12 11 10 9 8 7 6 (PE12A)
PE20A	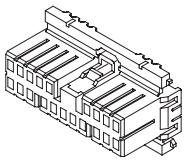 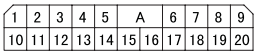 1 2 3 4 5 A 6 7 8 9 10 11 12 13 14 15 16 17 18 19 20	

https://truckmanualshub.com/

FUSO

Group 55

Heater, Air-conditioner And Ventilation

MITSUBISHI FUSO TRUCK OF AMERICA, Inc.

Pub.No.00ELT0001-55

https://truckmanualshub.com/

INDEX

SPECIFICATIONS 55-2

STRUCTURE AND OPERATION
1. Heater 55-3
2. Air Conditioner 55-4
3. Compressor 55-5
4. Air Duct 55-8
5. Heater Control 55-9
6. Rear Heater <Crew Cab> 55-13

TROUBLESHOOTING 55-14

ON-VEHICLE INSPECTION AND ADJUSTMENT
1. Operation Check of Air Conditioner 55-17
2. Recovery of Refrigerant 55-21
3. Recharging the System with Refrigerant 55-22

CONNECTING AIR CONDITIONER PIPING 55-24

COMPRESSOR 55-25

CONDENSER, RECEIVER 55-26

HEATER CONTROL <MANUAL AIR CONDITIONER> 55-28

AIR DUCT 55-32

HEATER AND COOLING UNIT, BLOWER 55-33

REAR HEATER <CREW CAB> 55-34

https://truckmanualshub.com/

SPECIFICATIONS

Item				Specifications	
				Manual air conditioner	Fully automatic air conditioner <option>
Refrigerant	Type			HFC134a	
	Charged quantity g {oz}			Indicated on the label	
Damper change-over system	Mode selection			Manual cable type	Servomotor
	Air mixing				
	Fresh/recirculation changeover			Servomotor	
Servomotor rated voltage V				12	
Blower and Heater and cooling unit	Manufacturer			DENSO	
	Heating capacity W {kcal/h}			4600 ± 460 {3956 ± 396}	
	Cooling capacity W {kcal/h}			3650 ± 365 {3139 ± 314}	
	Temperature control system			Air mixing type	
	Rated voltage V			12	
Compressor	Manufacturer			DENSO	
	Model			10S15C	
	Discharge cm^3 {cu.in.}/1 rotation			167.3 {10.2}	
	Lubricant	Type		ND-OIL8	
		Quantity cm^3 {cu.in.}	without rear air conditioner	120 $^{+15}_{0}$ {7.32 $^{+0.92}_{0}$}	
			with rear air conditioner	200 $^{+15}_{0}$ {12.2 $^{+0.92}_{0}$}	
Condenser	Manufacturer			Valeo Thermal Systems Japan Corporation	
	Rated voltage V			12	
	Rated current A			9.0 ± 0.5	
Receiver	Manufacturer			Valeo Thermal Systems Japan Corporation	
	Capacity cm^3 {cu.in.}			300 {18.3}	
Rear heater unit <crew cab>	Manufacturer			DENSO	
	Heating capacity W {kcal/h}			1760 ± 180 {1514 ± 151}	

https://truckmanualshub.com/

1. Heater

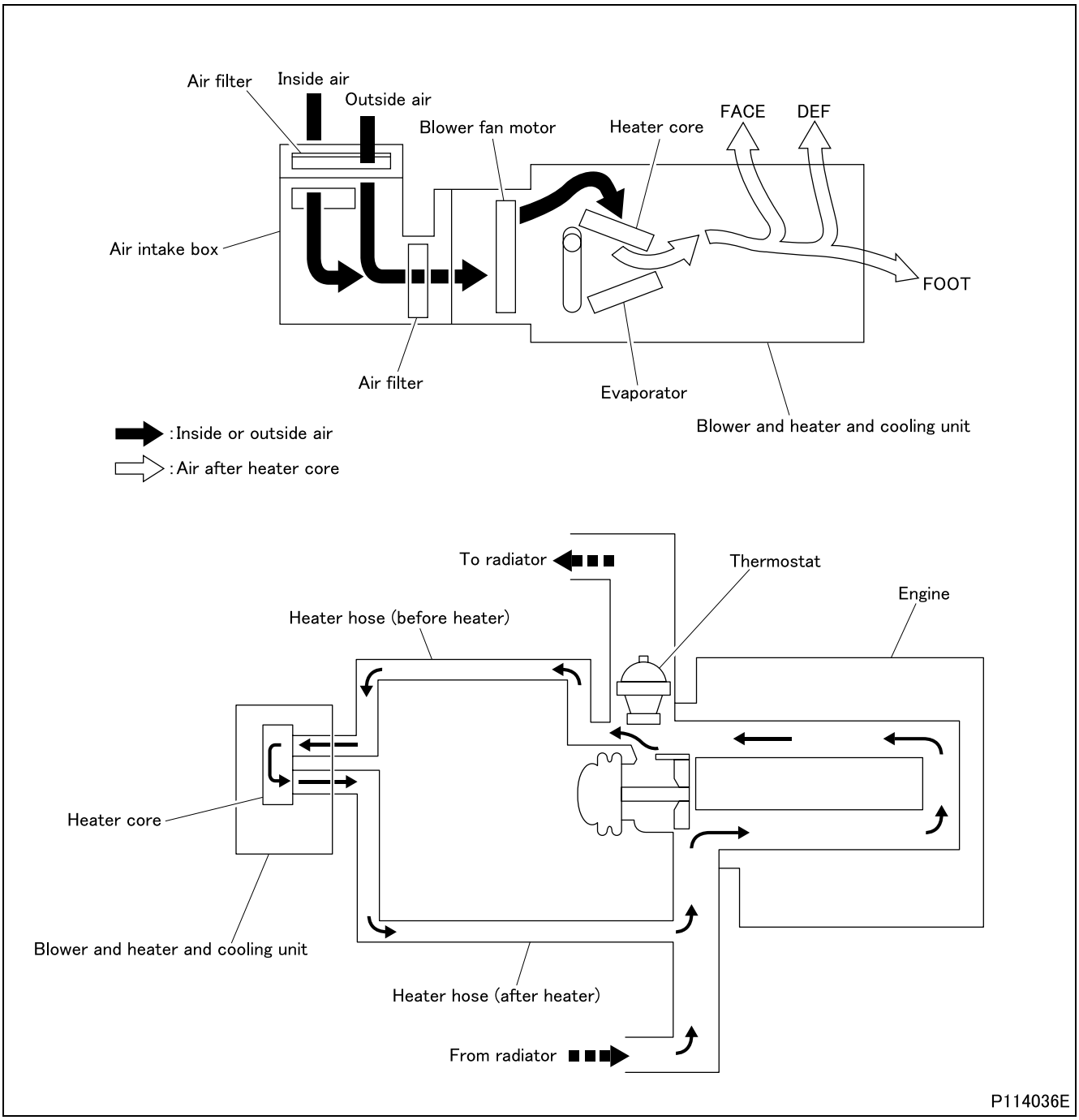

- The air intake box sends air to the blower and heater and cooling unit, where the air is heated by the heater core (heat exchanger). The warmed-up air is then sent through the ducts into the cab.
- Water (engine coolant) warmed up by the heat from the engine circulates permanently through the heater core, irrespective of whether the thermostat is open or closed.

https://truckmanualshub.com/

2. Air Conditioner

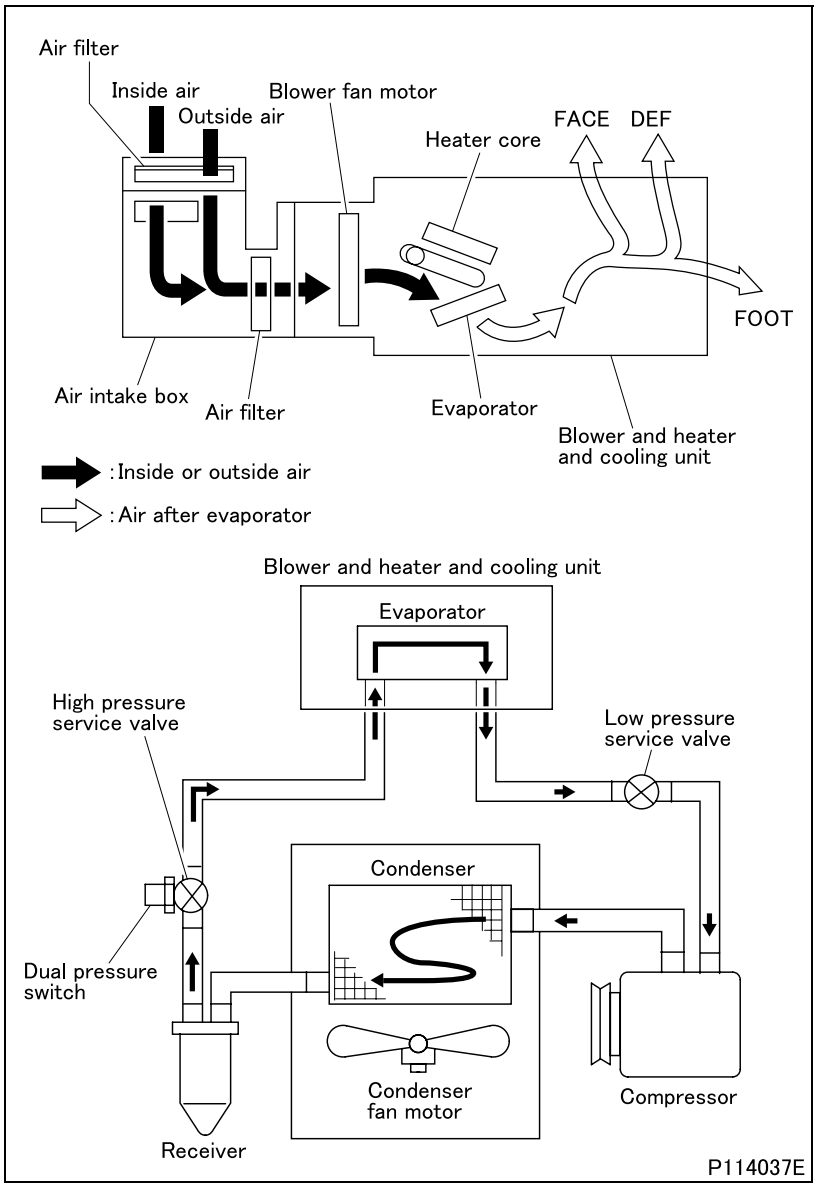

- The air intake box sends air to the blower and heater and cooling unit, where the air is cooled by the evaporator. The cooled air is then sent through the ducts into the cab.
- Refrigerant in gas form is compressed by the compressor. The compressed gas is then sent to the side condenser, where it is cooled by outside air and condenses into liquid form.
- The liquid refrigerant is sprayed into the evaporator, where it quickly evaporates into gas form while at the same time absorbing heat from the surrounding air.
- The refrigerant in gas form is again sent to the compressor and is compressed there.
- When the refrigerant pressure in the high pressure line reaches the specified limit, the dual pressure switch senses this and turns itself OFF. At the same time, the magnet clutch is turned OFF.

https://truckmanualshub.com/

3. Compressor

- The compressor draws low-temperature, low-pressure refrigerant gas from the evaporator, compresses it, and discharges a high-temperature, high-pressure refrigerant gas into the condenser.
- The compressor is driven by the engine via a belt and magnetic clutch.

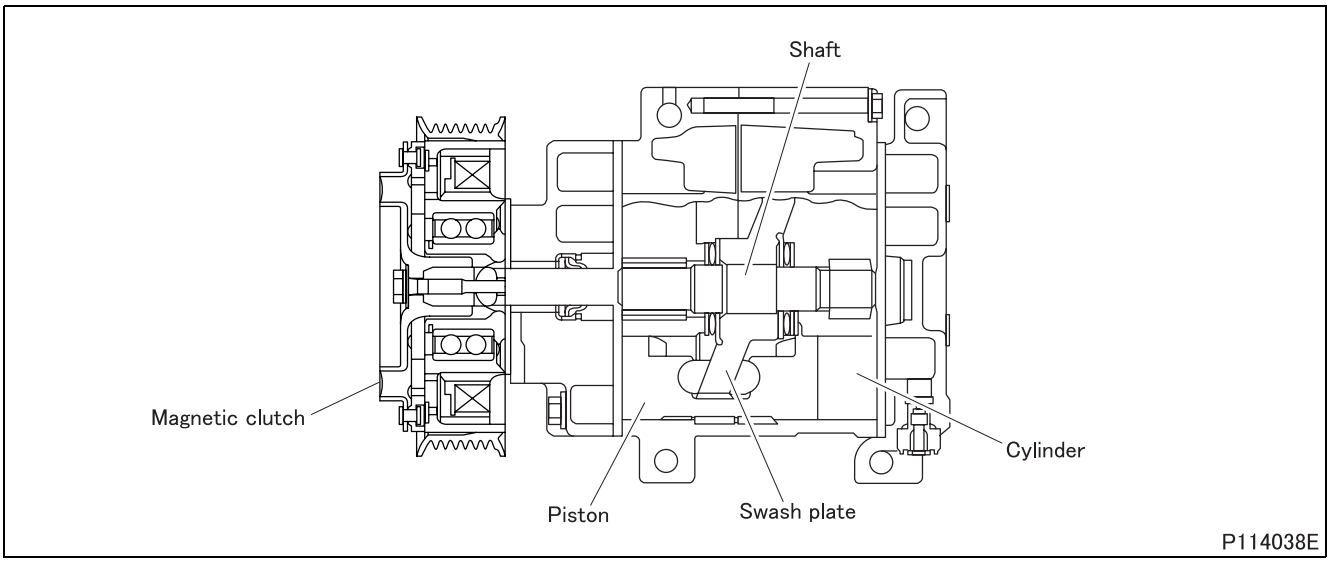

- The swash plate compressor is equipped with a piston and a swash plate that is secured at an angle to the shaft.
- Rotation of the swash plate integrated with the shaft converts the rotary motion of the shaft into the reciprocating motion of the piston, thereby drawing, compressing and discharging the gas refrigerant.

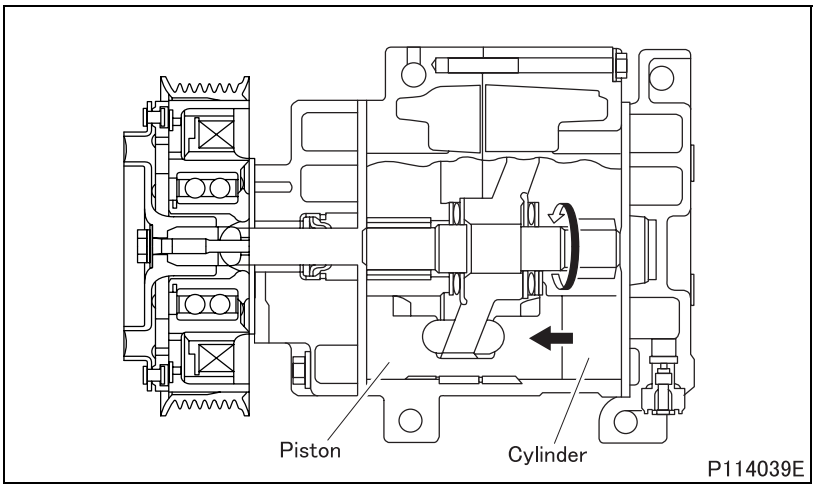

(1) Operation

- When the piston moves to the left, the difference in pressure between the refrigerant that has been sent into the compressor and the space inside the cylinder opens the suction valve in the compressor, feeding the refrigerant into the cylinder.

https://truckmanualshub.com/

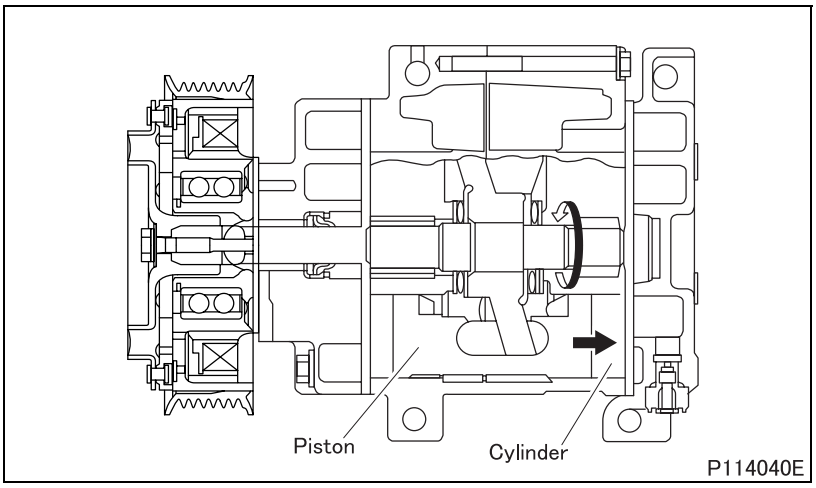

- When the piston moves to the right, the suction valve closes and the refrigerant is compressed.
- When the pressure of the refrigerant reaches a certain level as the compression progresses, the discharge valve in the compressor opens the discharge valve to discharge the compressed refrigerant.
- The suction and discharge valves prevent the refrigerant from flowing backward.

3.1 Magnetic clutch

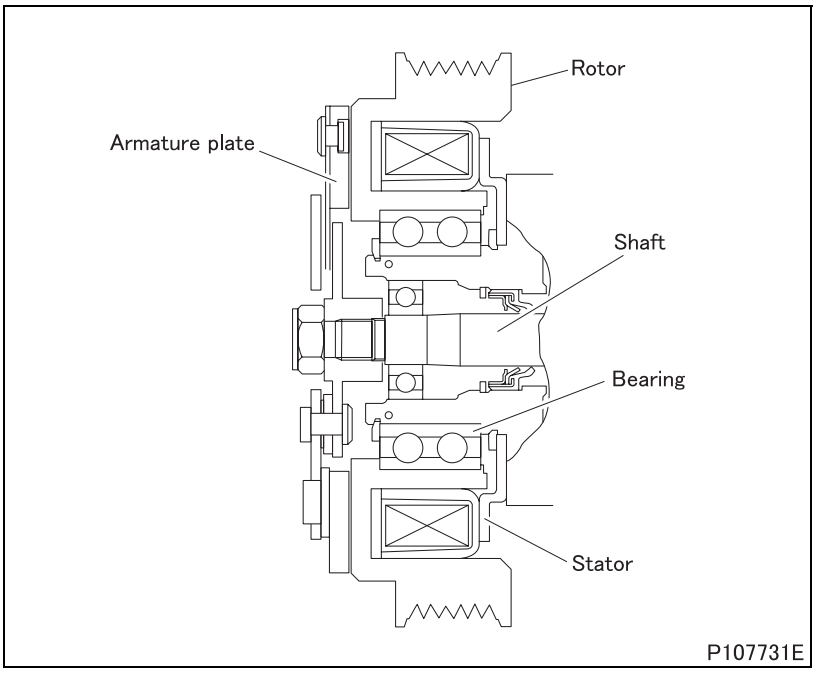

- The magnetic clutch is installed in the shaft of the air compressor to operate and stop the compressor.

https://truckmanualshub.com/

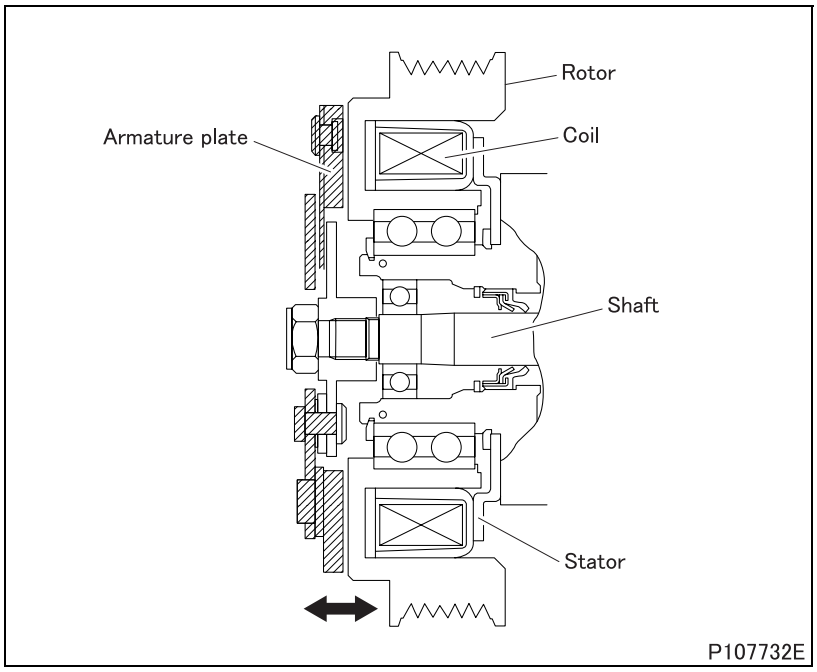

(1) Operation

- When the stator coil in the stator is energized, the generated electromagnetic force strongly attracts the armature plate until it comes in contact with the rotor to rotate the compressor.
- De-energizing the coil releases the armature plate from the rotor to stop the rotation of the compressor.

https://truckmanualshub.com/

4. Air Duct

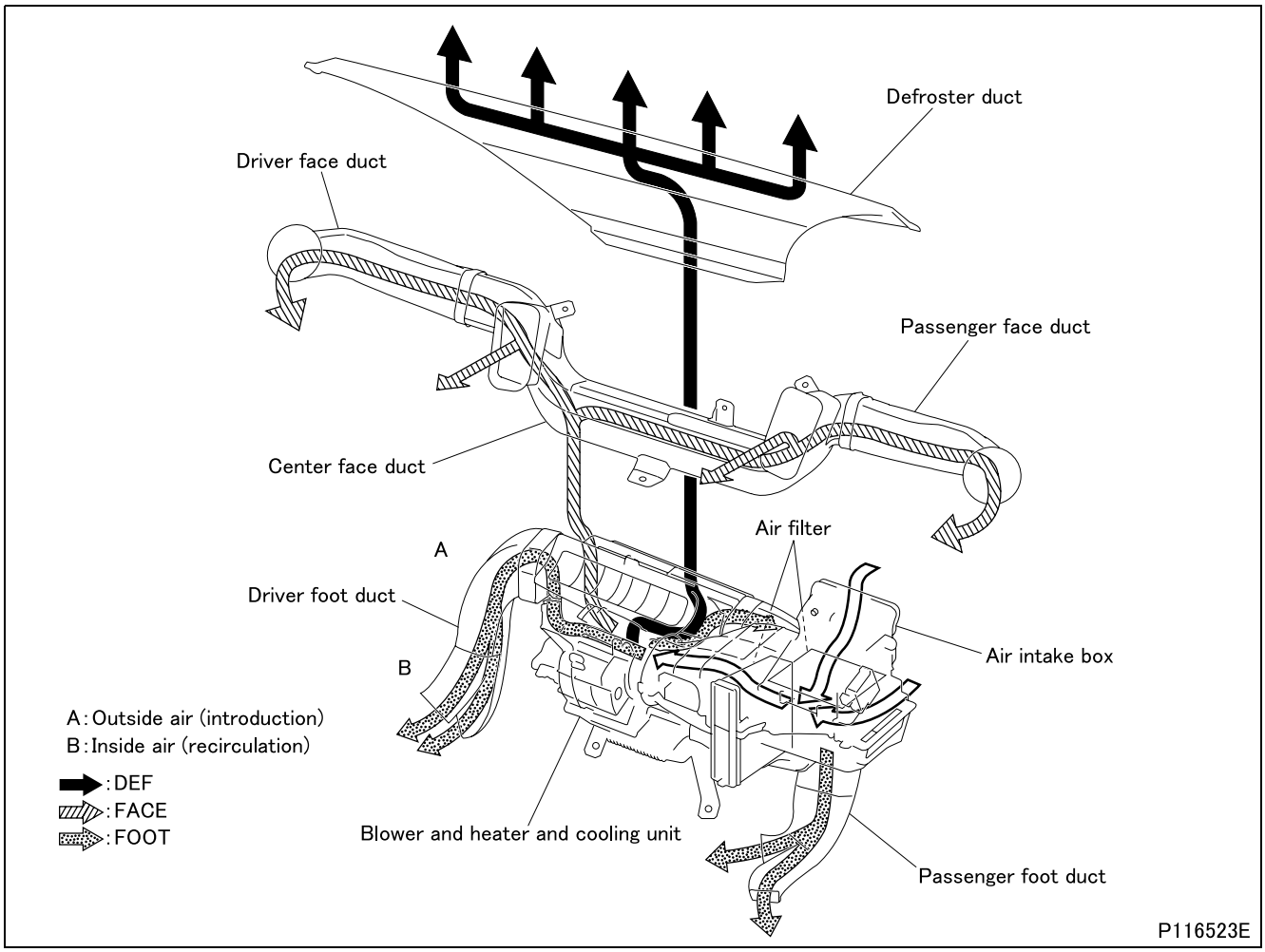

- The air intake box sends outside air A or inside air B through the blower and heater and cooling unit to the ducts. The flow of air is dependent on the open/closed positions of the various dampers.

https://truckmanualshub.com/

5. Heater Control

5.1 Mode selection

<Manual air conditioner>

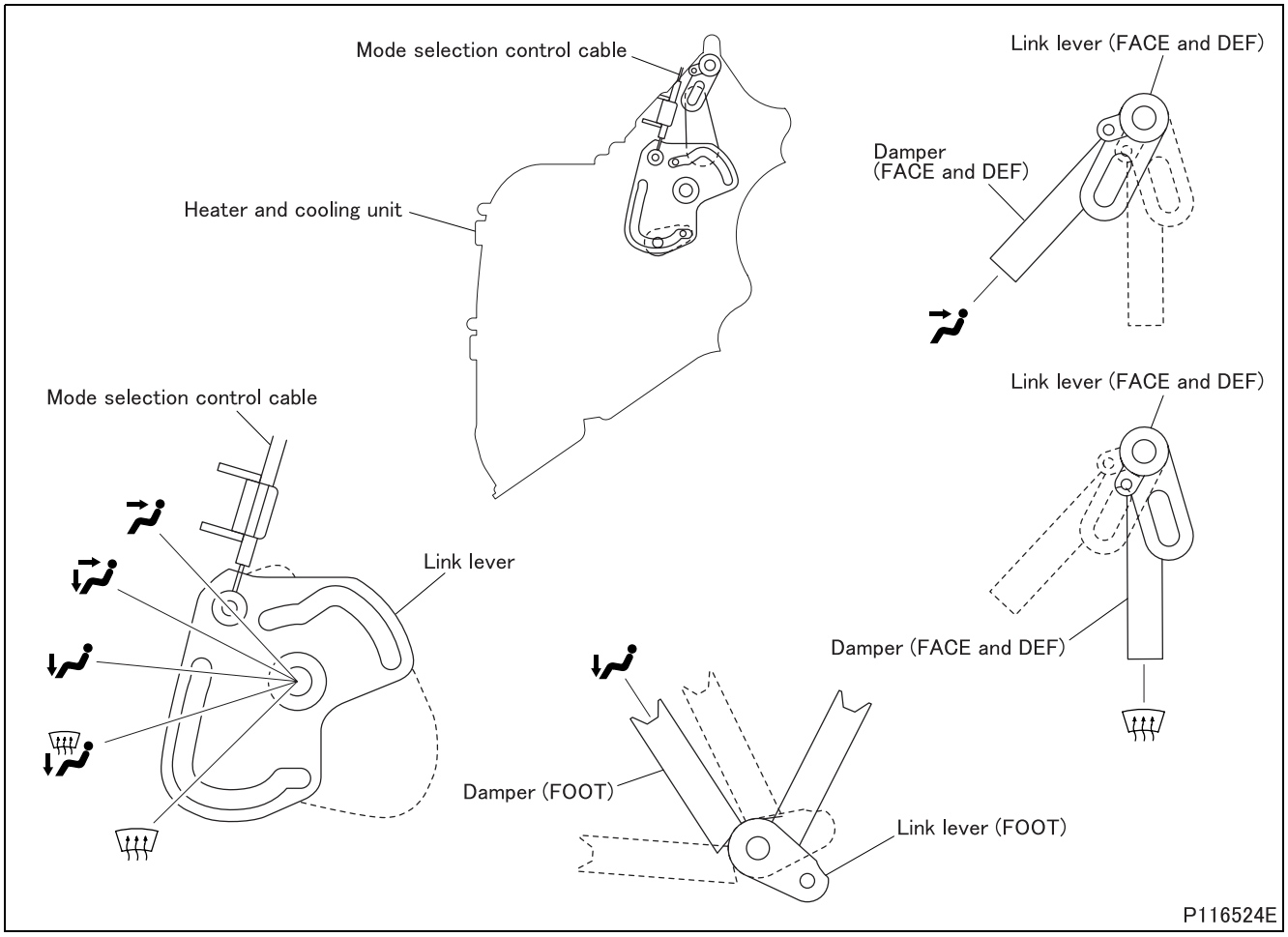

- Mode selection (opening/closing the dampers) is achieved by the operation of the mode selection control cables and the resultant movement of the related parts linked to the cables.

https://truckmanualshub.com/

<Fully automatic air conditioner>

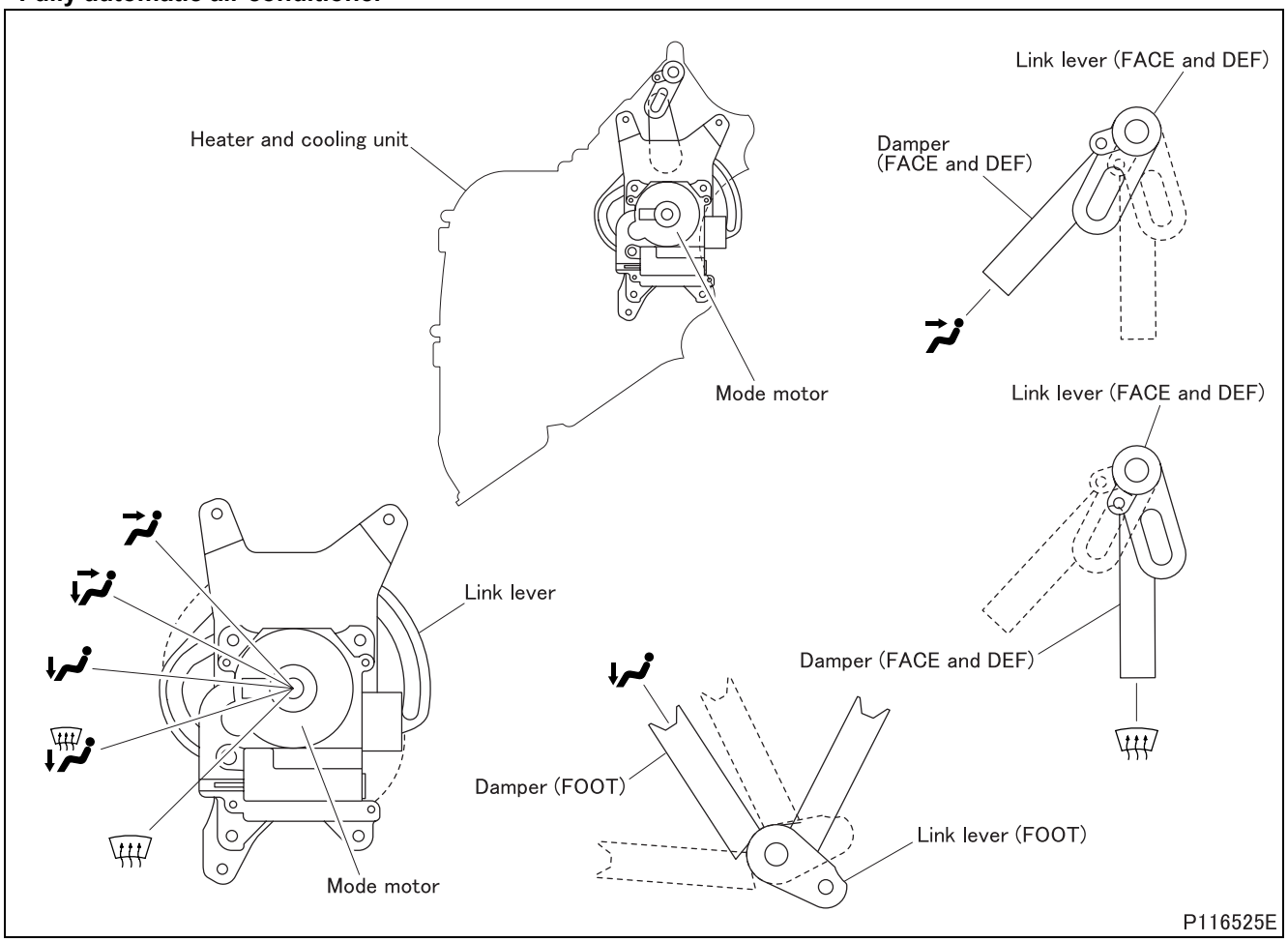

- Mode selection (opening/closing the dampers) is achieved by the operation of the mode motor and the resultant movement of the related parts linked to the motor.

https://truckmanualshub.com/

5.2 Air mix selection

<Manual air conditioner>

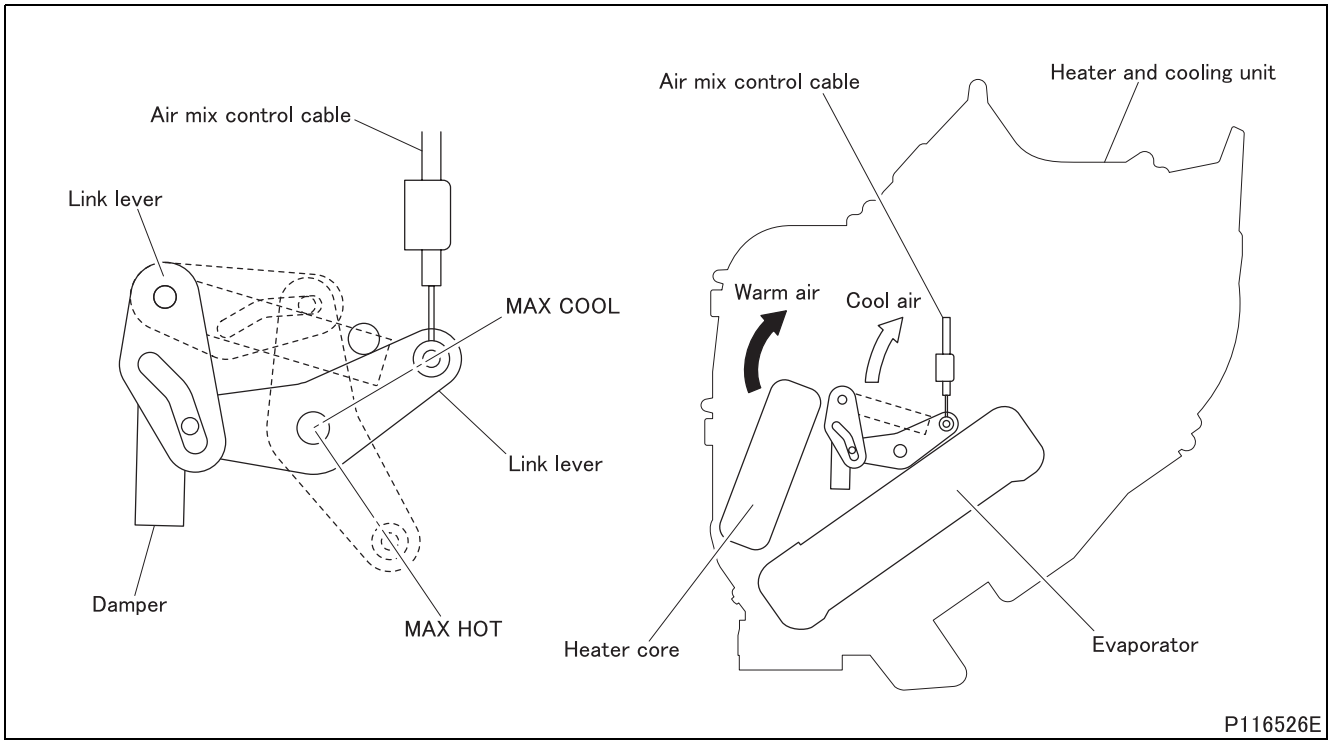

- Air mix selection is achieved by controlling the positions of the dampers, thereby proportioning the volumes of warm and cool air that is and is not sent through the heater core.

<Fully automatic air conditioner>

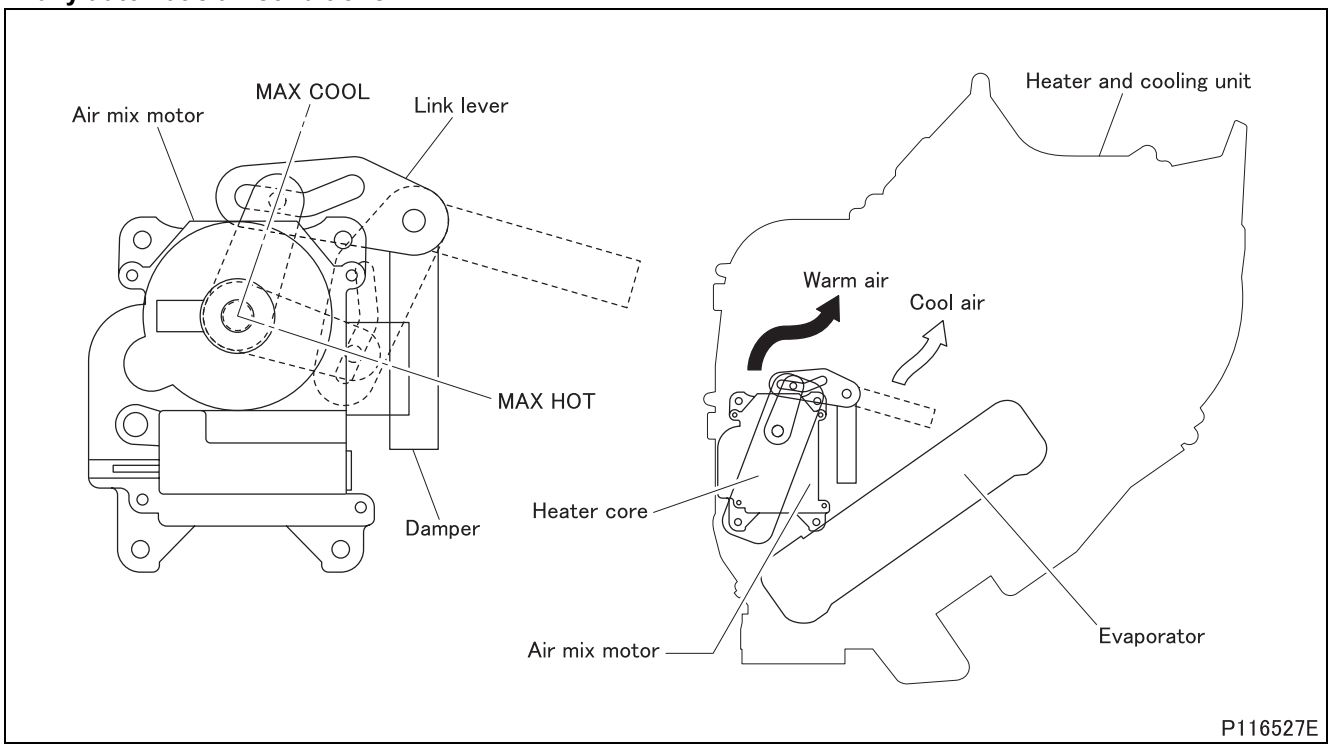

- Air mix selection is achieved by controlling the positions of the dampers, thereby proportioning the volumes of warm and cool air that is and is not sent through the heater core.

https://truckmanualshub.com/

5.3 Fresh/recirculation changeover

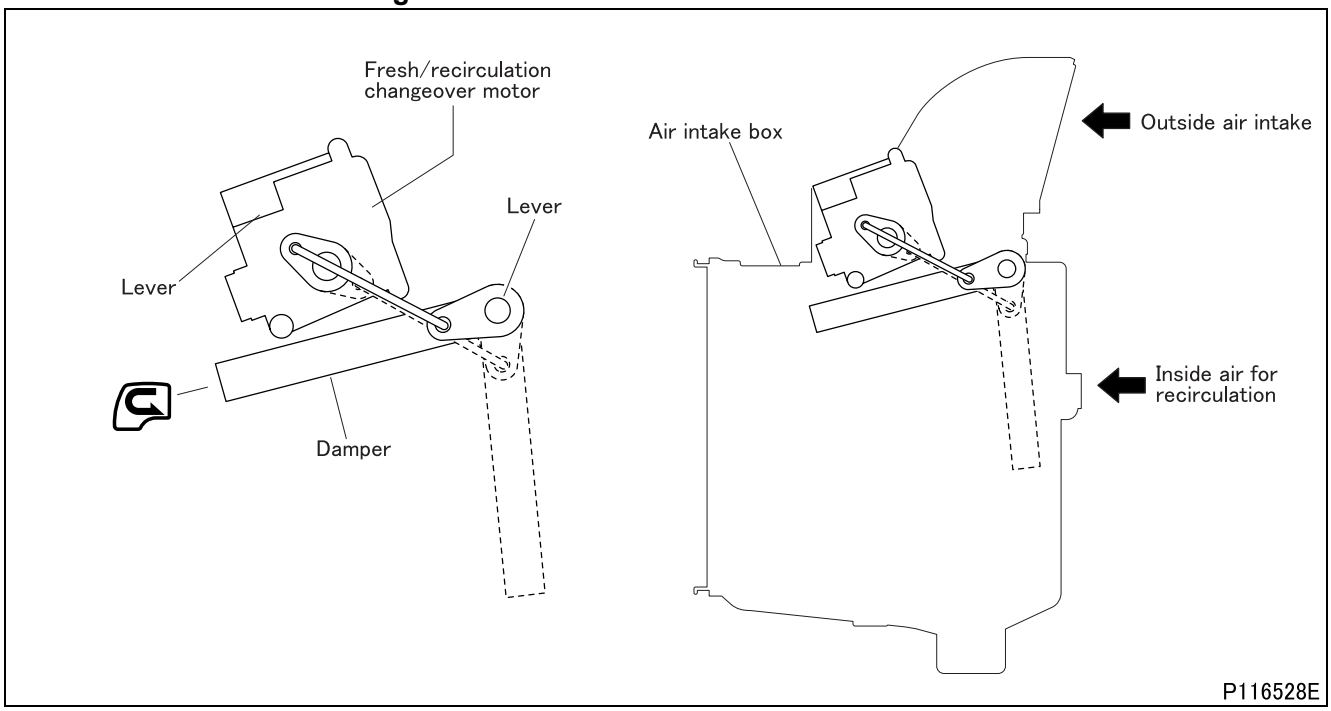

- The fresh/recirculation changeover damper is operated by a motor.

https://truckmanualshub.com/

6. Rear Heater <Crew Cab>

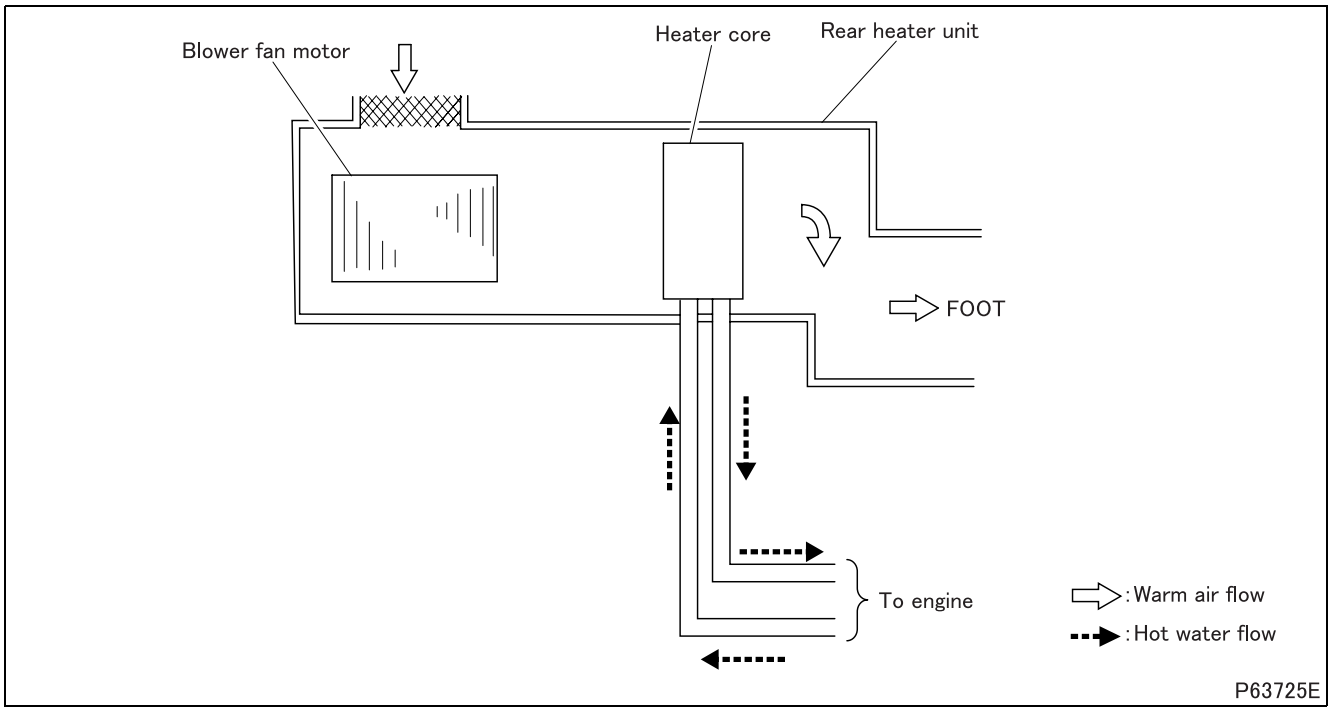

https://truckmanualshub.com/

Front Heater, Front Air Conditioner

Symptoms / Possible causes	No air from vents	Poor cooling	Poor heating	No mode selection	Draft from vents	No temperature setting	No fresh/recirculation selection	Air volume from vents unstable	Controls require too much effort	Reference Gr
Blower motor coil open, shorted	O									Gr54
Blower motor relay contacts stuck closed, coil open, shorted	O									
Power transistor malfunction <F-A/C>								O		
Blower resistor malfunction <M-A/C>								O		
Compressor seized, malfunction		O								
Magnetic clutch of compressor fault		O								
Refrigerant charge low		O					O			
Air conditioner relay contacts stuck closed, coil open, shorted		O								
Mode motor coil open, shorted <F-A/C>				O						Gr54
Mode damper malfunction, not fully closed				O	O				O	
Air mix motor coil open, shorted <F-A/C>						O				Gr54
Air mix damper malfunction, not fully closed					O	O			O	
Fresh/recirculation selection motor coil open, shorted							O			Gr54
Fresh/recirculation selection damper malfunction, not fully closed					O		O		O	
Condenser fan motor coil open, shorted		O								Gr54
Condenser relay contacts stuck closed, coil open, shorted		O								
In car sensor coil open, shorted <F-A/C>		O				O		O		
Air inlet sensor coil open, shorted <F-A/C>		O				O		O		
Thermostat coil open, shorted <F-A/C>		O				O		O		
Dual pressure switch coil open, shorted		O								
Photo sensor coil open, shorted <F-A/C>		O				O		O		
Something placed on sensitive portion of photo sensor <F-A/C>		O				O		O		
Heater control malfunction <M-A/C>	O	O	O	O	O	O	O			
Air conditioner electronic control unit and control panel fault <F-A/C>	O	O	O	O	O	O	O	O		Gr14
Thermostat stays open			O							
Coolant level low			O							
Connector poor contact, harness open, faulty earth	O	O		O	O	O	O			Gr54
Fuse blown	O	O								
Air conditioner piping clogged, loose, incorrectly connected		O								
Heater piping clogged, loose, incorrectly connected			O							
Duct incorrectly connected					O					
Heater and cooling unit clogged			O							

https://truckmanualshub.com/

Symptoms / Possible causes	No air from vents	Poor cooling	Poor heating	No mode selection	Draft from vents	No temperature setting	No fresh/recirculation selection	Air volume from vents unstable	Controls require too much effort	Reference Gr
Condenser clogged		O								
Condenser core restricted, accumulation of foreign matter		O								
Receiver clogged, inefficient desiccant		O								
Evaporator clogged		O								
Control wire jammed, incorrectly installed <M-A/C>				O	O		O		O	
Lever bent				O	O		O		O	
Lever sliding section worn, out of grease				O	O		O		O	

<M-A/C>: Manual air conditioner
<F-A/C>: Fully automatic air conditioner

https://truckmanualshub.com/

Rear Heater, Rear Air Conditioner

Symptoms / Possible causes	No air from vents	Poor cooling	Poor heating	No mode selection	No temperature setting	Air volume from vents unstable	Reference Gr
Rear blower motor coil open, shorted	O						
Rear blower motor relay contacts stuck closed, coil open, shorted	O						
Rear blower resistor malfunction						O	
Rear heater switch malfunction <R-H>	O	O	O				
Connector poor contact, harness open, faulty ground	O	O		O	O	O	
Fuse blown	O	O					

<R-H>: Rear heater

https://truckmanualshub.com/

1. Operation Check of Air Conditioner

- Check the operation using the following flow chart.

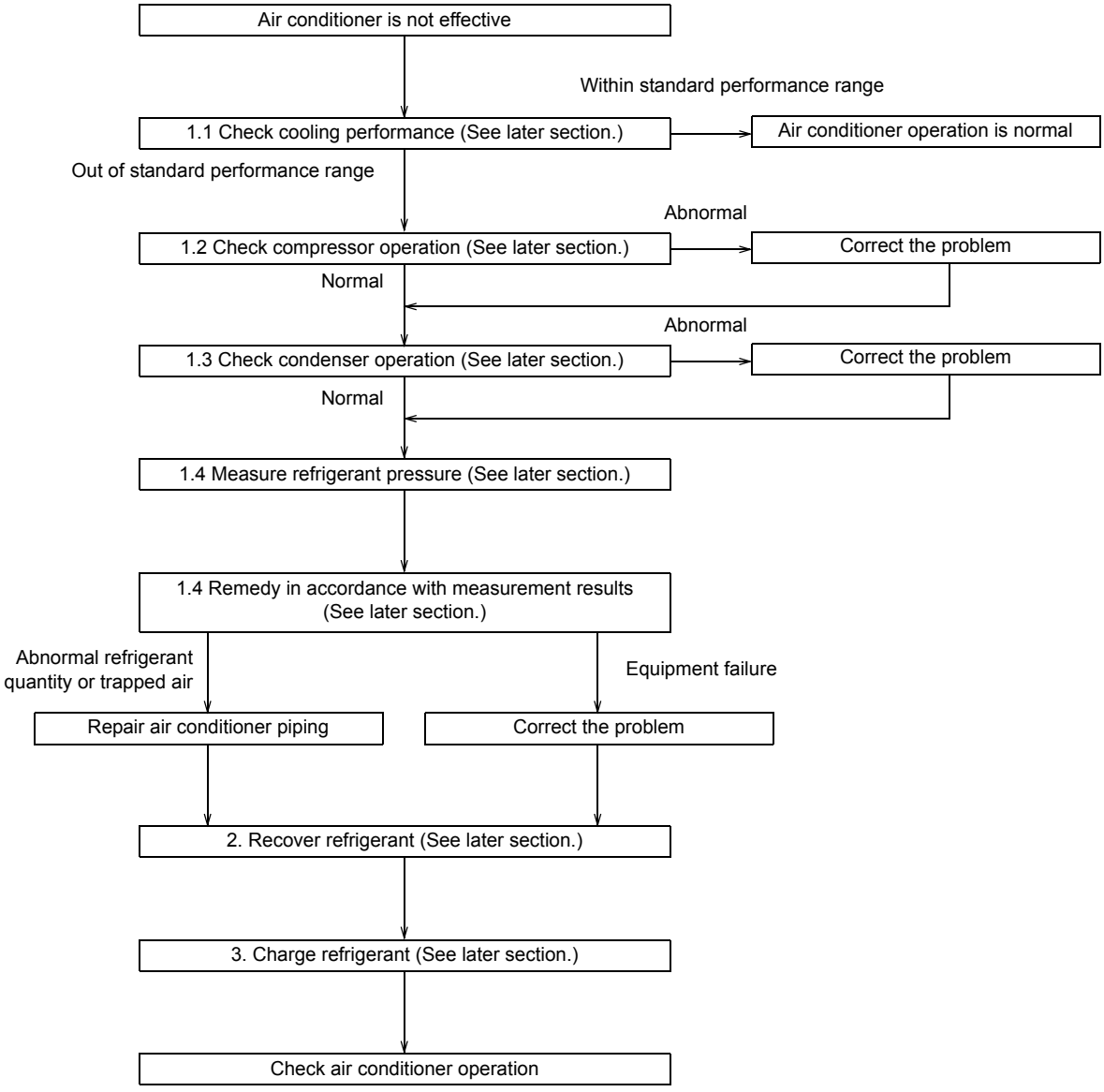

https://truckmanualshub.com/

ON-VEHICLE INSPECTION AND ADJUSTMENT

1.1 Checking the cooling performance

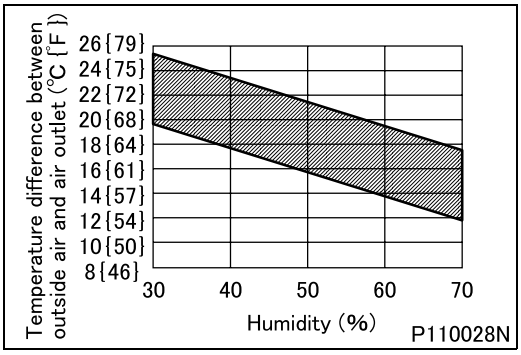

- In the cooling performance check, measure the temperature difference between the outside air and air outlet, and the ambient humidity, and check if the measurement is within the normal range (shaded area in the graph).
- This check should be done under the following conditions:
  - Engine speed: 1400 rpm
  - Air conditioner switch: ON
  - Fan switch: MAX
  - Temperature control: MAX COOL
  - Fresh/recirculation selection: Recirculation
  - Doors: Fully opened
  - Environment: No wind, in the shade

1.2 Checking compressor operation

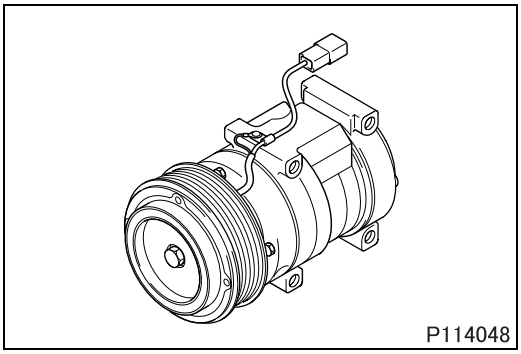

- Check the following:
  - Seizure or failure of compressor (See COMPRESSOR.)
  - Magnet clutch failure (See COMPRESSOR.)
  - Fusing of air conditioner relay contacts, open or short circuit in relay coil (See Gr54.)
  - Open or short circuit in dual pressure switch coil (See Gr54.)
  - Heater control failure (See AIR CONDITIONING CONTROL, FULLY AUTOMATIC AIR CONDITIONER SYSTEM.)

1.3 Checking condenser operation

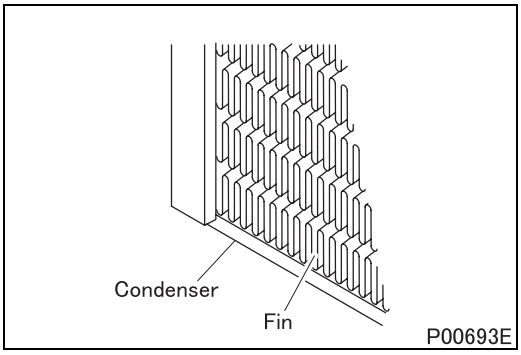

- Check the following:
  - Open or short circuit in condenser fan motor (See Gr54.)
  - Fusing of condenser relay contacts, open or short circuit in relay coil (See Gr54.)
  - Clogging, crushed fins or contamination of condenser (See CONDENSER, RECEIVER.)

https://truckmanualshub.com/

1.4 Measuring refrigerant pressure

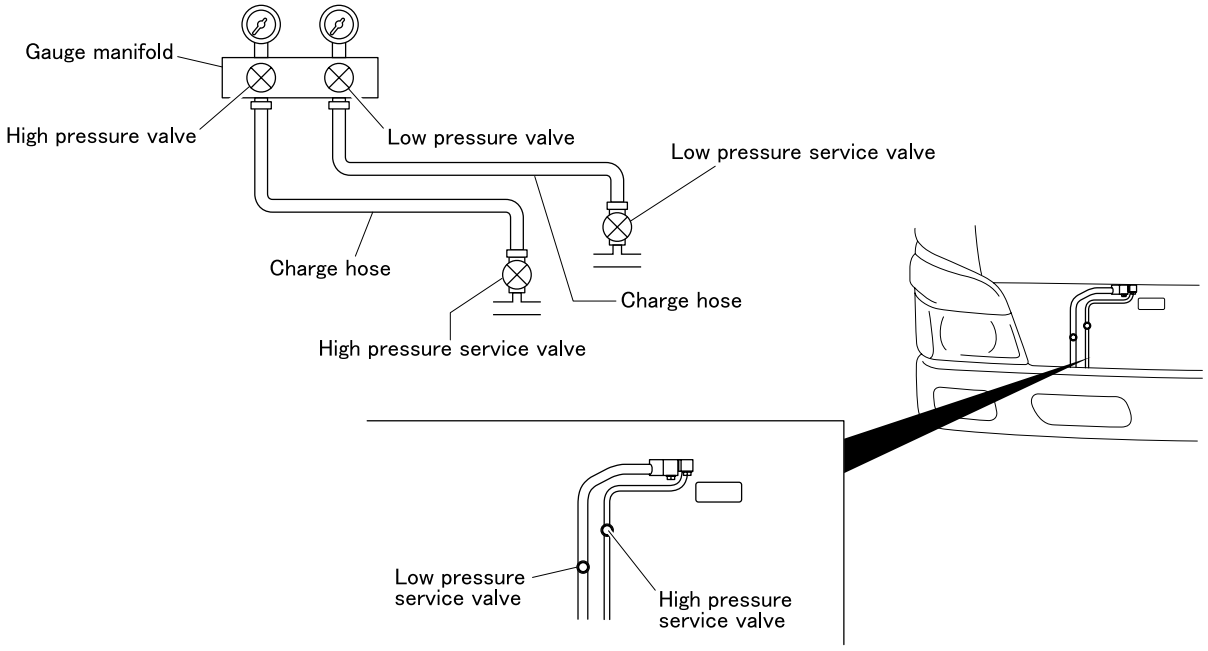

- The measurement should be performed under the following conditions:
  - Engine speed: 825 rpm
  - Air conditioner switch: ON
  - Fan switch: MAX
  - Temperature control: MAX COOL
  - Fresh/recirculation selection: Recirculation
  - Doors: Fully closed
  - Environment: No wind, in the shade, humidity 50%

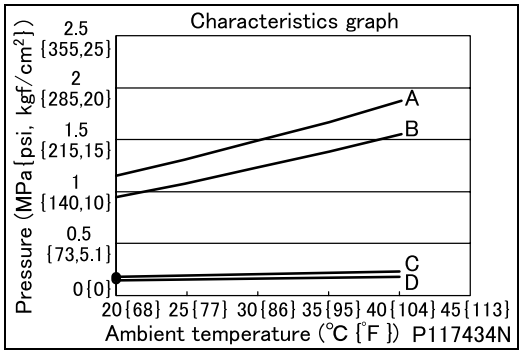

- Check if the measured pressure is within the limit range shown in the characteristics graph. The pressure values in the graph should be regarded as a reference since pressure values vary depending on the measurement environment and vehicle conditions.
  A: Upper limit on the high pressure side
  B: Lower limit on the high pressure side
  C: Upper limit on the low pressure side
  D: Lower limit on the low pressure side
- If the measurement is out of the standard value, take the necessary measures by referring to the following table.

https://truckmanualshub.com/

Measurement results	Possible cause	Remedy
Pressure is too low on both the low and high pressure sides	Refrigerant leakage	Check for refrigerant leaks from piping connections, and repair as required. (See CONNECTING AIR CONDITIONER PIPING.)
Negative pressure on the low pressure side	• Clogged expansion valve • Clogged condenser	• Check the heater and cooling unit, and repair as required. (See HEATER AND COOLING UNIT, BLOWER.) • Check the condenser, and repair or replace as required. (See CONDENSER, RECEIVER.)
Pressure is too high on both the low and high pressure sides	• Too much refrigerant • Poor cooling performance of condenser • Air trapped in refrigerant line • Contamination or abnormal quantity of compressor lubricant	• Check the condenser, and repair or replace as required. (See CONDENSER, RECEIVER.) • Check the compressor, and repair or replace as required. (See COMPRESSOR.)
Almost no difference in pressure between the low and high pressure sides	Compressor failure	Check the compressor, and repair or replace as required. (See COMPRESSOR.)

- After correcting the problem, recover all refrigerant and charge the specified quantity of refrigerant.

https://truckmanualshub.com/

2. Recovery of Refrigerant

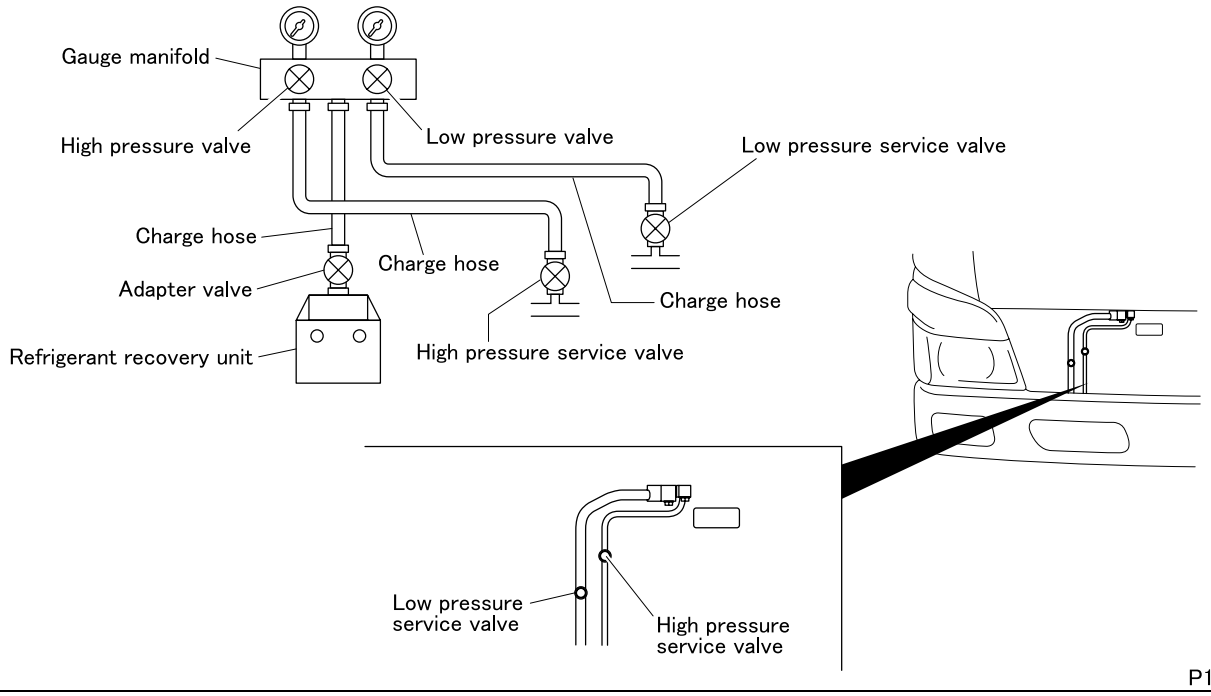

- Recover refrigerant from the air conditioning system in accordance with the following flow chart.
  - Installation of the refrigerant recovery unit

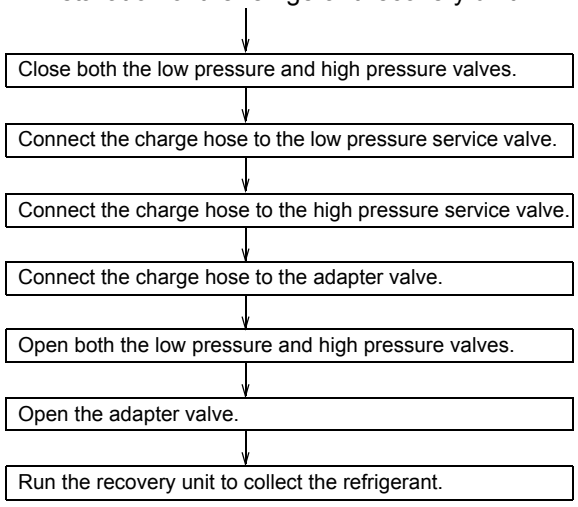

https://truckmanualshub.com/

3. Recharging the System with Refrigerant

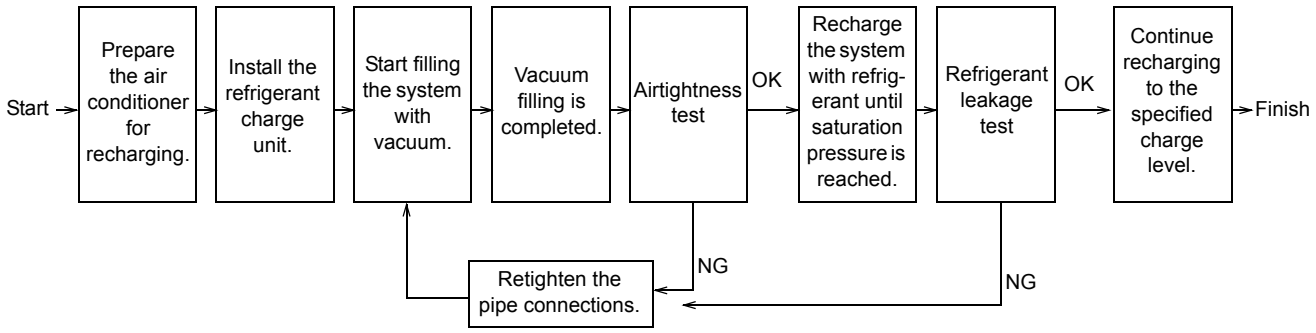

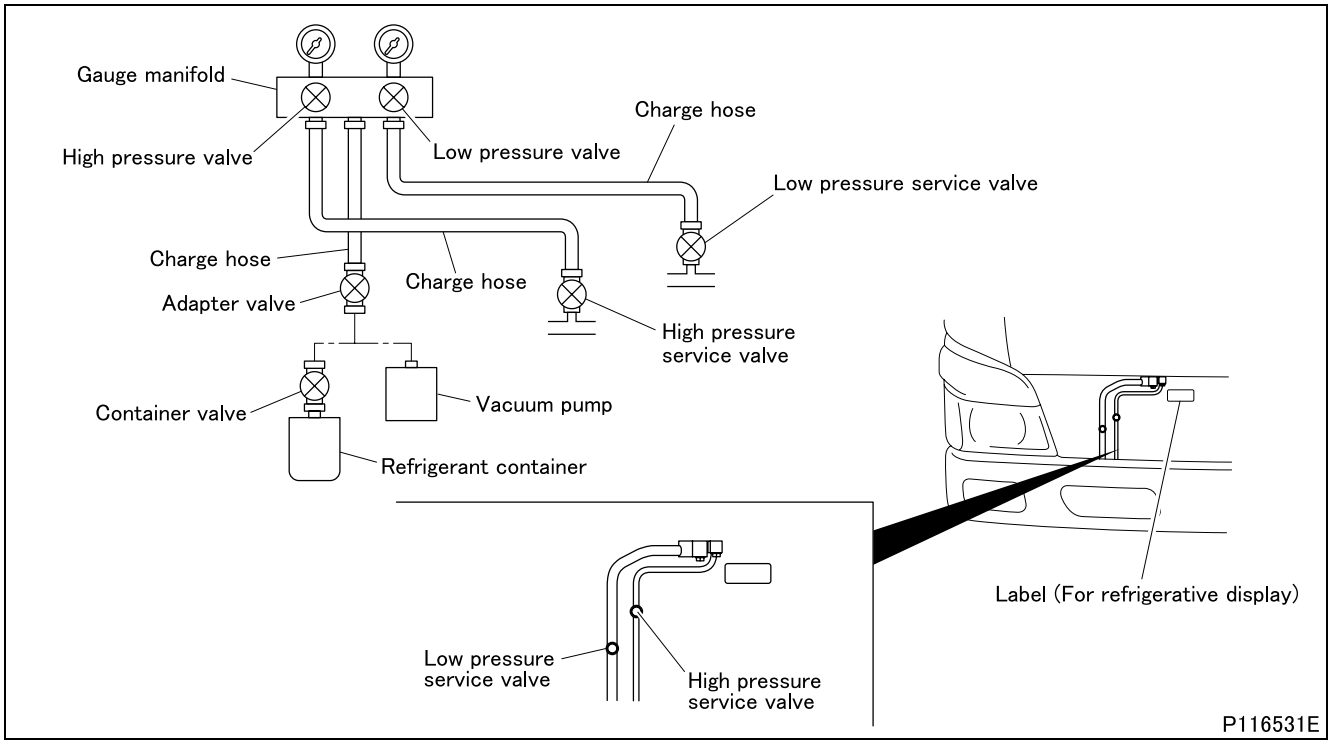

- Recharge the system with refrigerant in accordance with the following flow chart.
  - Installation of the refrigerant charge unit

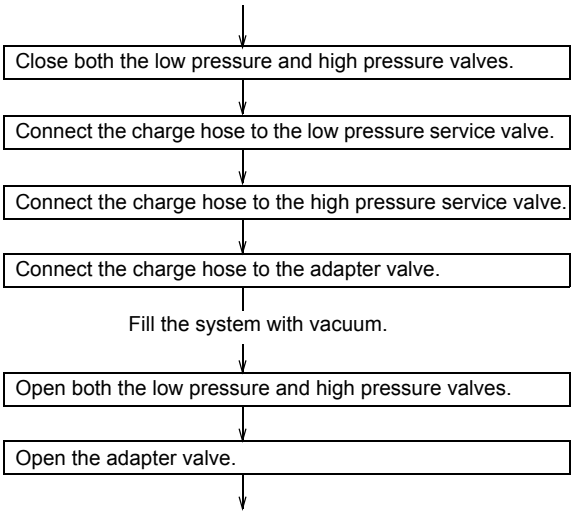

https://truckmanualshub.com/

Run the vacuum pump.

Continue to run the pump for a minimum of 10 to 15 minutes. Close the adapter valve.

Stop the vacuum pump.

CAUTION ⚠

- **Make sure that the adapter valve is closed before stopping the vacuum pump.**

Close both the low pressure and high pressure valves.

Wait for 5 minutes. During this interval, the readings on the gauges installed on the gauge manifold should stay where they are and should not move towards zero.

Vacuum filling is now completed.

Recharging the system with refrigerant

With the adapter valve still closed, remove it from the vacuum pump. Connect the valve to the refrigerant container via the container valve.

Open the container valve and then the adapter valve.

Open the low pressure valve to fill refrigerant in gas form.

CAUTION ⚠

- **Filling refrigerant into the system in liquid form may damage the compressor. To prevent this, keep the refrigerant container in the upright position so that refrigerant is filled in gas form.**

When the refrigerant container is empty, close the adapter valve and install a new container. Continue filling the system.

When the air conditioning system is saturated, start the engine. Turn on the air conditioner to run the compressor, and continue recharging until the specified charge level is reached.

CAUTION ⚠

- **Remove the refrigerant completely and charge the system with refrigerant of the quantity indicated on the label. If the label is damaged or defaced, replace it with a new one.**

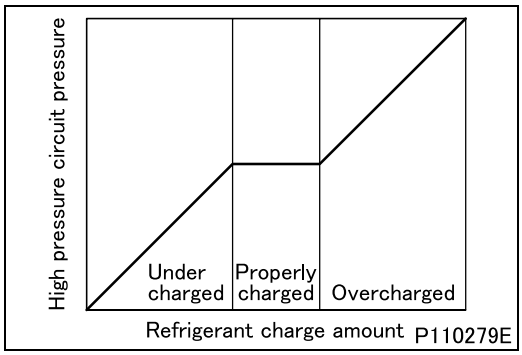

- Charge the system with small amounts of refrigerant (approximately 25g) at a time while checking the air outlet temperature and the change in pressure relative to the amount of charge of refrigerant. Consider the system to be properly charged when the pressure stops changing as shown in the graph.
- After the refrigerant charging has completed, perform cooling performance check and refrigerant pressure measurement. (See “1. Checking Air Conditioner Operation”.)

https://truckmanualshub.com/

CONNECTING AIR CONDITIONER PIPING

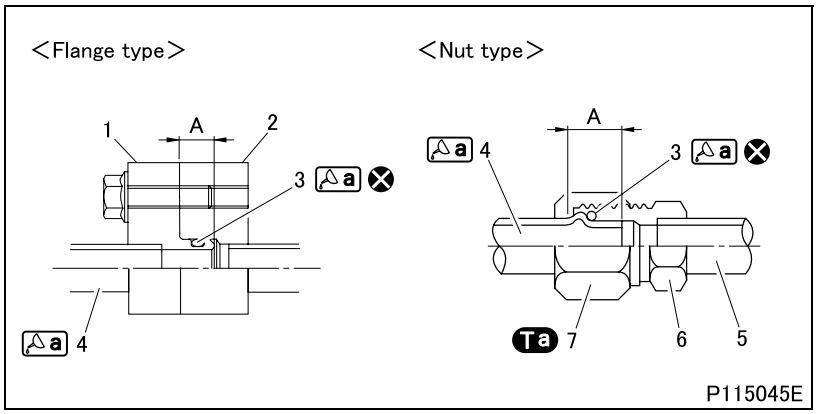

1 Flange (pipe end) <Flange type>
2 Flange (mating end) <Flange type>
3 O-ring
4 Pipe
5 Pipe <Nut type>
6 Union <Nut type>
7 Nut <Nut type>

A: Refrigerant oil application area
⊗: Non-reusable parts

Tightening torque (Unit: N·m {ft.lbs, kgf·m})

Mark	Parts to be tightened		Tightening torque	Remarks
Ta	Nut	Fluid pipes	11.8 to 14.7 {8.7 to 11.0, 1.2 to 1.5}	–
		High-pressure pipes	19.6 to 24.5 {14 to 18, 2.0 to 2.5}	–
		Low-pressure pipes	29.4 to 34.2 {22 to 25, 3.0 to 3.5}	–

Lubricant and/or sealant

Mark	Points of application	Specified lubricant and/or sealant	Quantity
a	O-ring	Refrigerant machine oil ND-OIL8	As required
	Outer periphery of pipe end (area A)		

- There are 2 types of air conditioner pipe/hose connections: flange type and nut type. When connecting/tightening the connections, observe the following precautions.

CAUTION ⚠

- **The connected parts are sealed by the O-ring. Be careful not to damage the O-ring, such as by twisting.**
- **The O-rings are exclusively designed for HFC-134a refrigerant and are not reusable.**
- **Never tighten the nut-type connection by rotating the union. This will deform the piping, allowing refrigerant to leak out. Tighten by rotating the nut while holding the union in position.**

https://truckmanualshub.com/

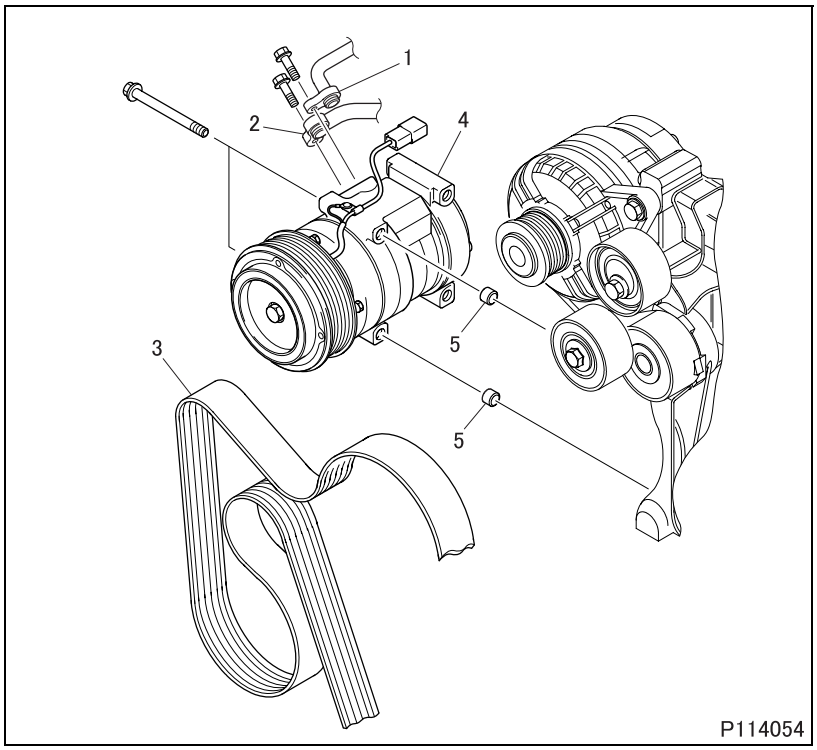

P114054

● **Removal sequence**

1 Discharge hose (high pressure side)
2 Suction hose (low pressure side)
3 Belt (See Gr14.)
4 Compressor
5 Knock bushing

- Recover the refrigerant before disconnecting the hose. (See “On-Vehicle Inspection and Adjustment”.)

● **Installation sequence**

Follow the removal sequence in reverse.

- See the CONNECTING AIR CONDITIONER PIPING section for the installation of hose and pipe.
- After installation, tension the belt to specification. (See Gr14.)

◆Inspection procedure◆

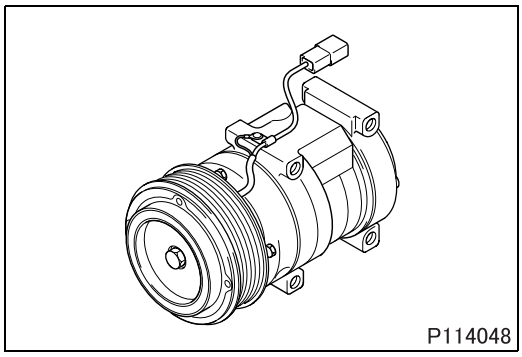
P114048

■ **Inspection: Compressor**

- Perform the following inspections. If any abnormality is found, replace the compressor.

(1) Operation and oil leakage

- Check the compressor proper for malfunction and oil leakage.

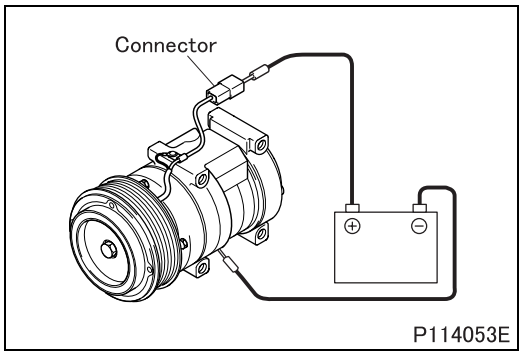

P114053E

(2) Magnetic clutch

- Disconnect the magnetic clutch harness connector and supply power from the positive terminal of the battery to check if the magnetic clutch operates normally.

CAUTION ⚠

- **Do not allow the lead wire connected to the positive terminal of the battery to touch any other component around the connector. Otherwise, a short circuit will occur and the component may fail.**

https://truckmanualshub.com/

CONDENSER, RECEIVER

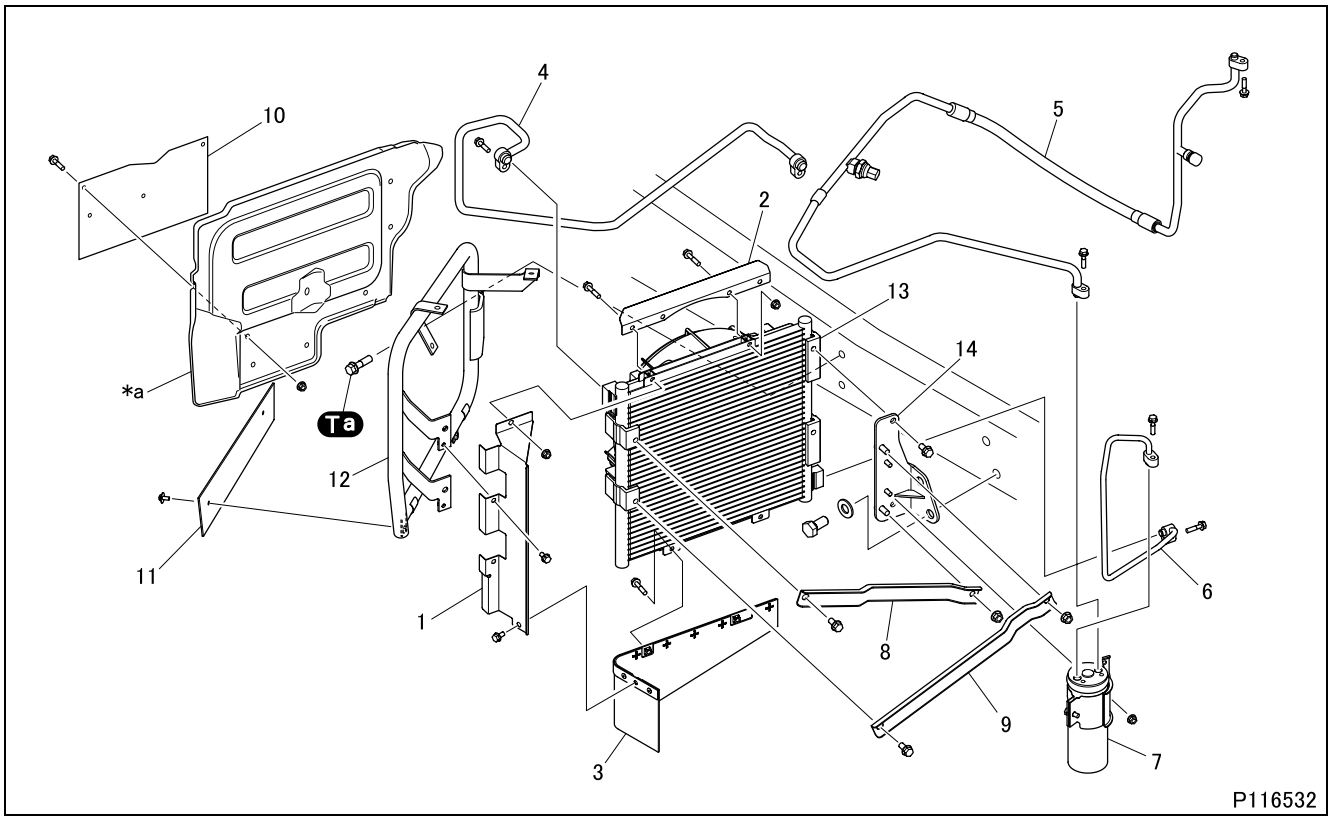

● **Removal sequence**

1 Side baffle plate
2 Upper baffle plate
3 Lower baffle plate
4 Discharge hose (compressor end)
5 Liquid hose (heater and cooling unit end)
6 Liquid pipe (condenser end)
7 Receiver
8 Condenser bracket
9 Condenser bracket
10 Rubber plate
11 Rubber plate
12 Condenser rear bracket
13 Condenser
14 Condenser front bracket

***a**: Front shield panel

- Recover the refrigerant before disconnecting the hose and the pipe. (See “On-Vehicle Inspection and Adjustment”.)

● **Installation sequence**

Follow the removal sequence in reverse.

- See the CONNECTING AIR CONDITIONER PIPING section for the installation of hose and pipe.

Tightening torque (Unit: N·m {ft.lbs, kgf·m})

Mark	Parts to be tightened	Tightening torque	Remarks
Ta	Bolt (condenser rear bracket mounting)	50 to 65 {37 to 48, 5.1 to 6.6}	–

https://truckmanualshub.com/

◆Inspection procedure◆

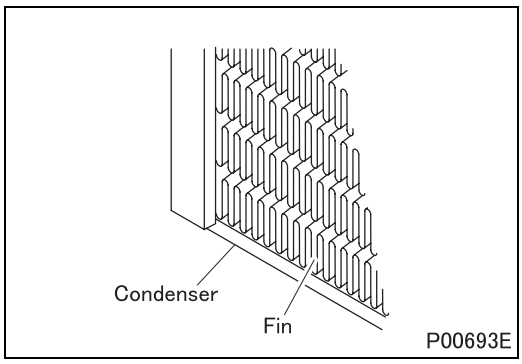

■ Inspection: Condenser

- If the condenser fins are clogged with dirt, dust or other foreign material wash it out. Any deformed fins should be straightened using a spatula or the like.

https://truckmanualshub.com/

HEATER CONTROL <MANUAL AIR CONDITIONER>

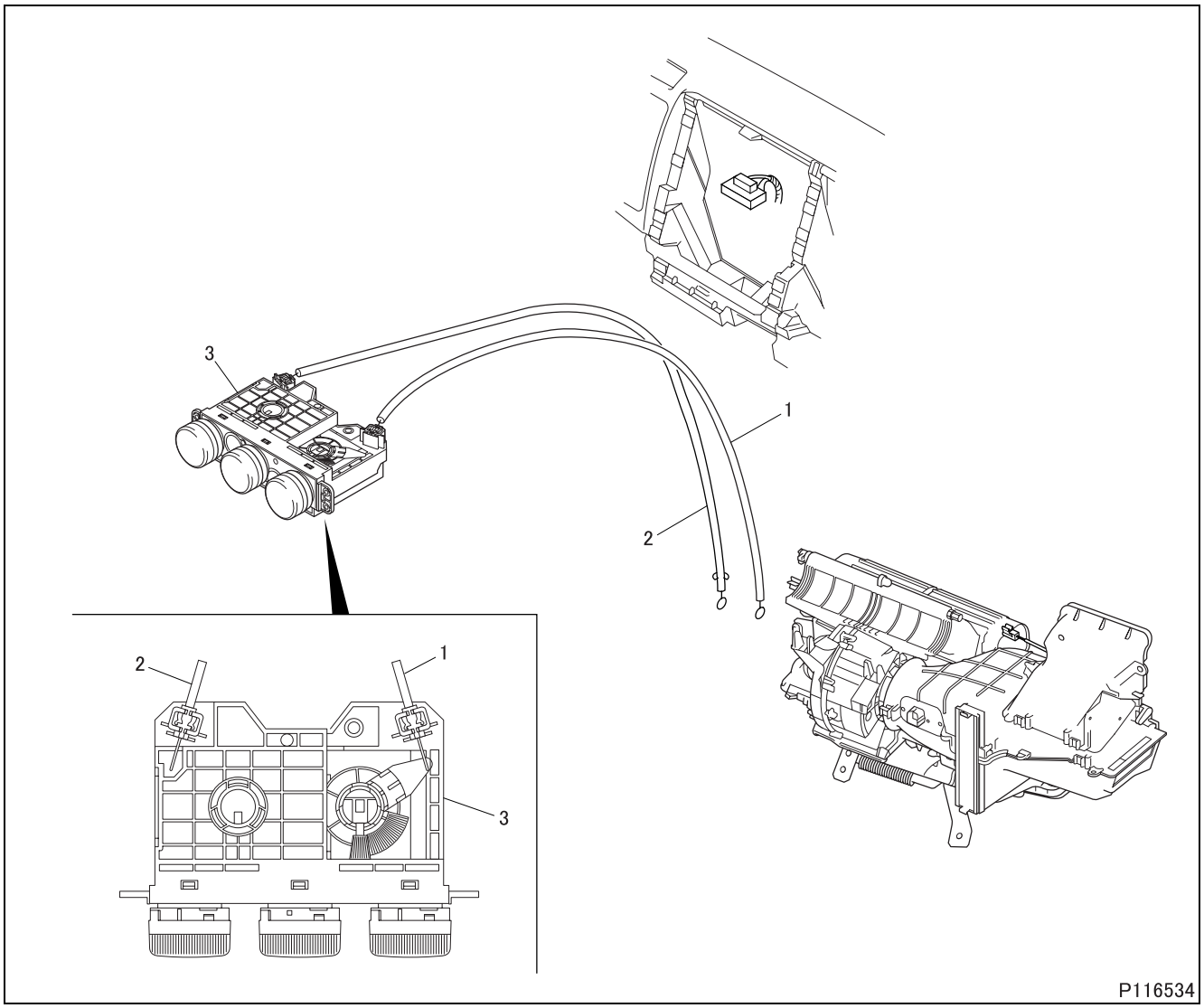

● **Removal sequence**

1 Air mix control cable (NATURAL)
2 Mode selection control cable (LIGHT BLUE)
3 Heater controls

CAUTION ⚠

- **Never remove the cable(s) from the heater controls except when the control cable(s) needs to be replaced. Failure to observe this may damage the hooks on the cable clip.**

● **Installation sequence**

Follow the removal sequence in reverse.

https://truckmanualshub.com/

◆Work before removal◆

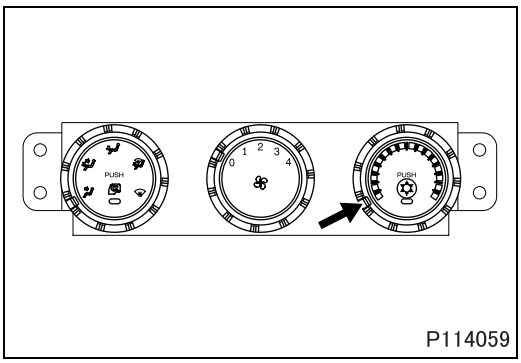

P114059

■ **Adjustment: Temperature control knob**

- Before disconnecting the control cables, turn the temperature control knob of the heater controls to the MAX-COOL position.

◆Removal procedure◆

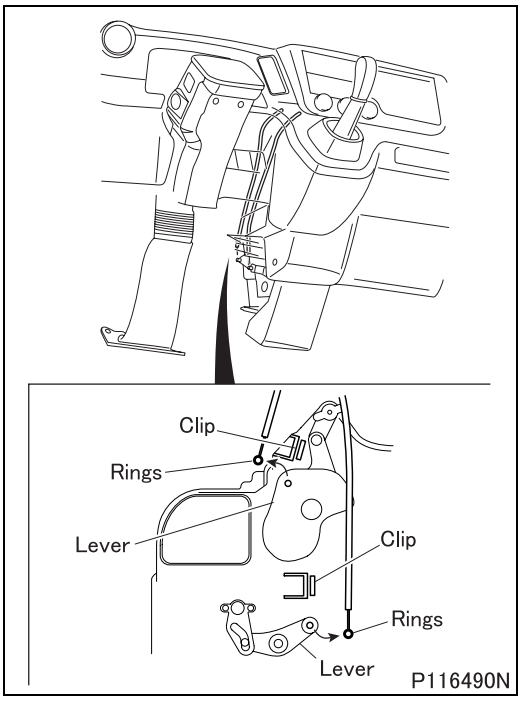

P116490N

■ **Removal: Control cables**

- Before disconnecting the cables from the levers, put pairing marks on each cable and its lever.
- Disconnect the control cables from the heater and cooling unit.

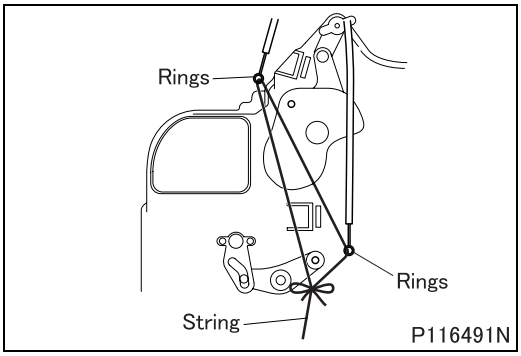

P116491N

- In order that the control cables can be pulled back during installation, attach a string to the rings on the cables as shown in the illustration.

https://truckmanualshub.com/

HEATER CONTROL <MANUAL AIR CONDITIONER>

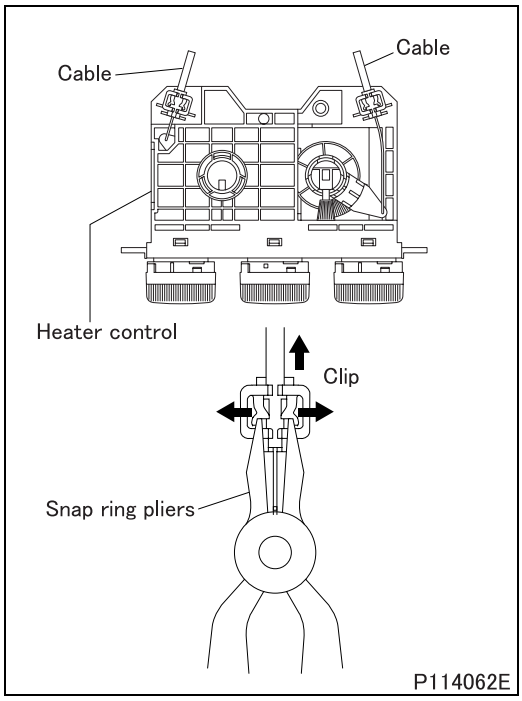

- Remove the heater controls from the instrument panel.
- Use snap ring pliers to disconnect the cable(s) from the heater controls.

◆Work before installation◆

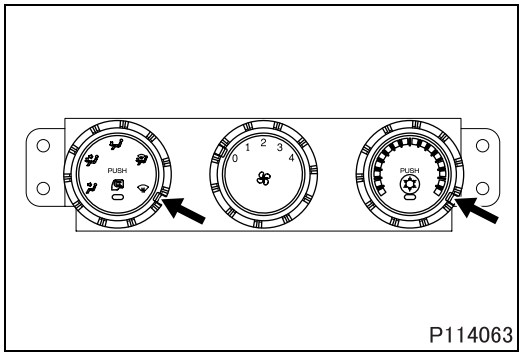

■Adjustment: Heater controls knobs

- At the heater controls, turn the temperature control knob to the MAX-HOT position and turn the mode selector knob to the DEF position before reconnecting the control cables.

https://truckmanualshub.com/

◆Installation procedure◆

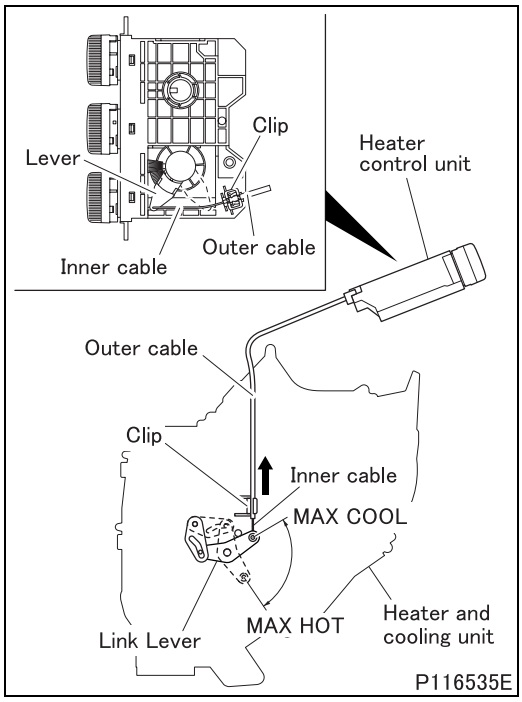

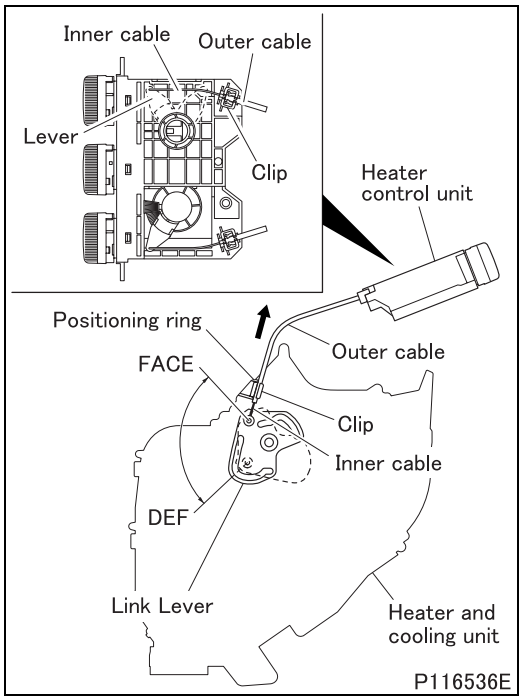

■ Installation: Air mix control cable

- Connect the air mix control inner cable to the lever in the heater control unit.
- Insert the air mix control outer cable into the clip on the heater control while lightly pulling on the cable, and securely fasten the cable with the clip.
- Turn the heater control unit's temperature control knob to the MAX-COOL position. Hold the knob at that position.
- Using the string attached to the control cable during the removal procedure, pull the cable back.
- Connect the air mix control inner cable to the pin on the link lever in the heater and cooling unit.
- Insert the air mix control outer cable into the clip on the heater and cooling unit while lightly pulling on the cable, and securely fasten the cable with the clip.
- Set the heater control unit's temperature control knob to the MAX-COOL and MAX-HOT positions to check that the link lever properly moves to the corresponding positions. If the lever fails to move correctly, repeat the cable installation steps from the beginning.

■ Installation: Mode selection control cable

- Connect the end of the mode selection control inner cable to the lever in the heater control unit.
- Insert the mode selection control outer cable into the clip on the heater control unit while lightly pulling on the cable, and securely fasten the cable with the clip.
- Move the control unit's mode control knob to the DEF position. Hold the knob in that position.
- Pull the control cable back using the string attached to the cable during the removal procedure.
- Connect the other end of the mode selection control inner cable to the pin on the link lever of the heater and cooling unit.
- Put the mode selection control outer cable positioning ring to the side of the clip on the heater and cooling unit, and securely fasten the cable with the clip.
- Set the heater control unit's mode control knob to the FACE and DEF positions to check that the lever properly moves to the corresponding positions. If the lever fails to move correctly, repeat the cable installation steps from the beginning.

https://truckmanualshub.com/

AIR DUCT

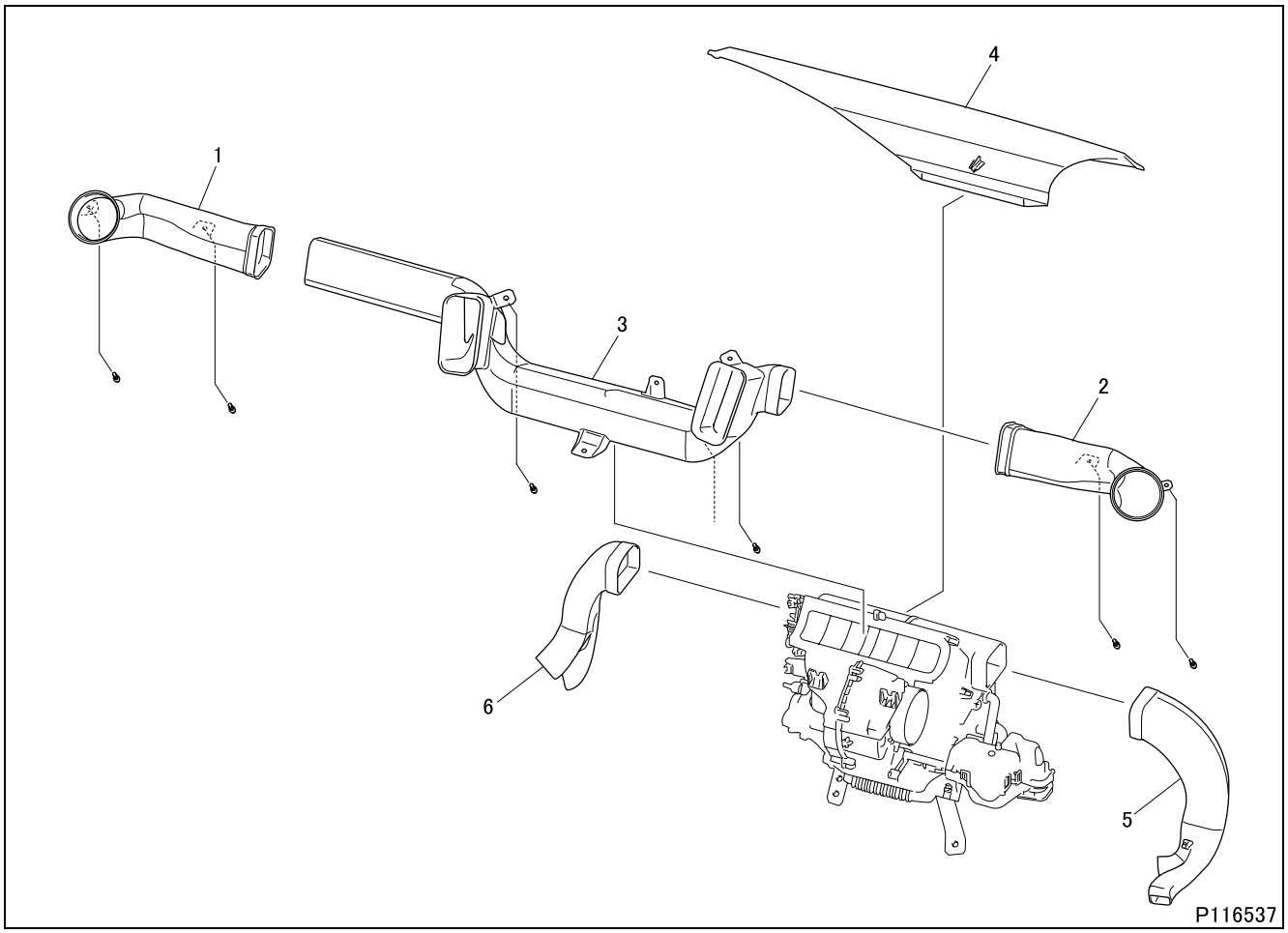

● **Removal sequence**

1 Driver face duct
2 Passenger face duct
3 Center face duct
4 Defroster duct
5 Passenger foot duct
6 Driver foot duct

● **Installation sequence**

Follow the removal sequence in reverse.

https://truckmanualshub.com/

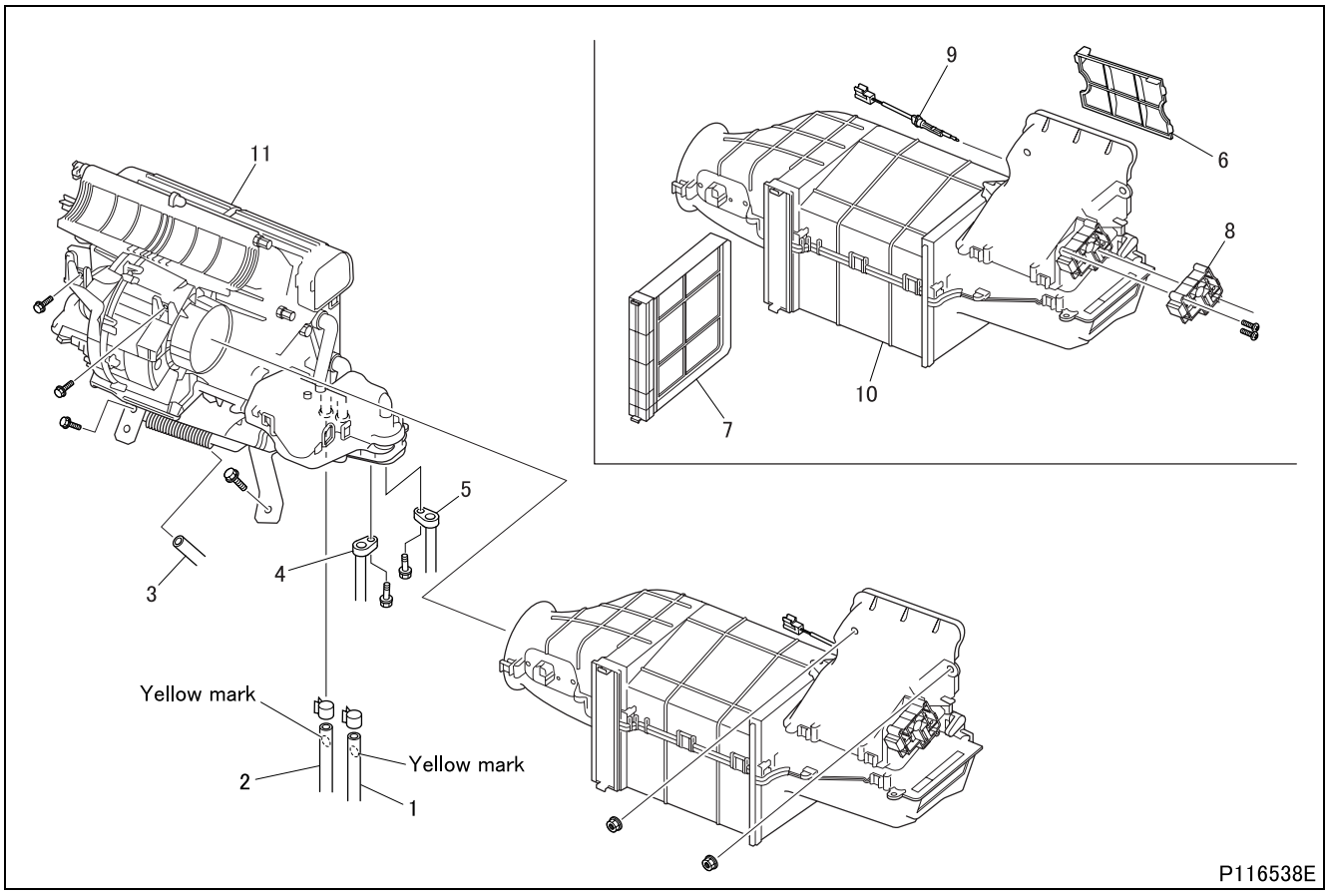

● **Removal sequence**

1 Heater hose (outlet)
2 Heater hose (return)
3 Drain hose
4 Liquid hose (high pressure)
5 Suction hose (low pressure)
6 Air filter
7 Air filter
8 Fresh/recirculation changeover motor
9 Air inlet sensor <F-A/C>
10 Air intake box
11 Blower and heater and cooling unit

F-A/C: Fully automatic air conditioner

- Recover the refrigerant before disconnecting the hose. (See “On-Vehicle Inspection and Adjustment”.)

● **Installation sequence**

Follow the removal sequence in reverse.

- See the CONNECTING AIR CONDITIONER PIPING section for the installation of hose and pipe.

https://truckmanualshub.com/

REAR HEATER <CREW CAB>

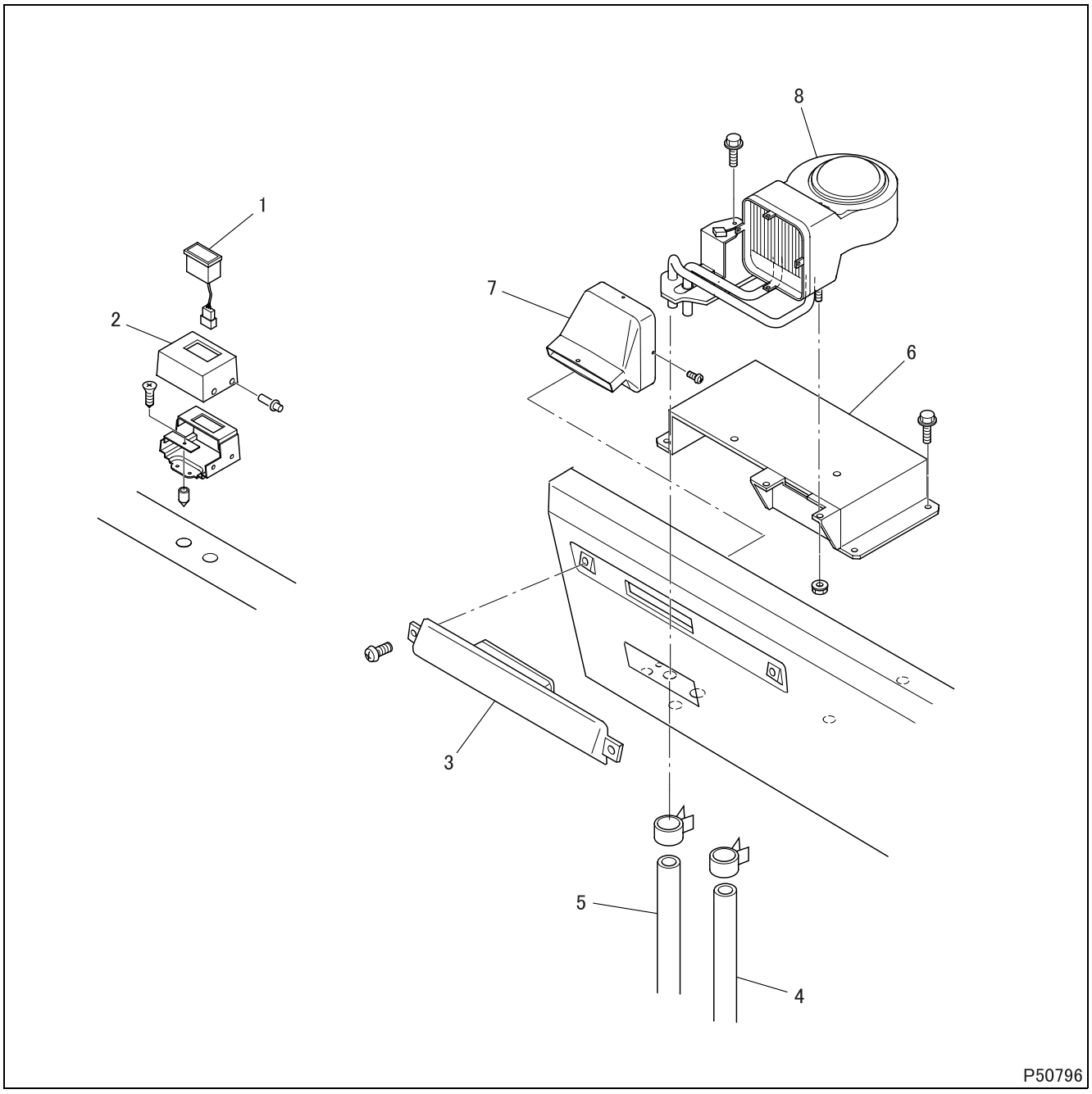

● **Removal sequence**

1 Rear heater switch
2 Switch box
3 Foot duct
4 Heater hose (return)
5 Heater hose (outlet)
6 Plate
7 Joint duct
8 Rear heater unit

● **Installation sequence**

Follow the removal sequence in reverse.

https://truckmanualshub.com/

FUSO

Group 55E

Full Automatic Air-conditioner

MITSUBISHI FUSO TRUCK OF AMERICA, Inc.

Pub.No.00ELT0001-55E

https://truckmanualshub.com/

INDEX

SPECIFICATIONS 55E-2

STRUCTURE AND OPERATION

1. **Overview 55E-4**
2. **Electronic Control System 55E-5**
3. **Electronic Control Unit Schematic Diagram 55E-7**

TROUBLESHOOTING

1. **Inspection According to Diagnosis Code (Trouble Codes) 55E-8**
2. **FUSO Diagnostics Service Data (Measured Values) 55E-14**
3. **Actuator Test (Control) Using FUSO Diagnostics 55E-16**
4. **Electronic Control Unit Input/Output Table 55E-18**

INSPECTION OF ELECTRICAL PARTS 55E-20

INSTALLED LOCATIONS OF PARTS 55E-26

ELECTRICAL CIRCUIT DIAGRAM 55E-44

https://truckmanualshub.com/

SPECIFICATIONS

Item				Specifications
Refrigerant	Type			HFC134a
	Charged quantity g {oz}			Indicated on the label
Damper change-over system	Mode selection			Servomotor
	Air mixing			
	Fresh/recirculation changeover			
Servomotor rated voltage V				12
Heater and cooling unit	Manufacturer			DENSO
	Heating capacity W {kcal/h}			4600 ± 460 {3956 ± 396}
	Cooling capacity W {kcal/h}			3650 ± 365 {3139 ± 314}
	Temperature control system			Air mixing type
Blower	Manufacturer			DENSO
	Rated voltage V			12
Compressor	Manufacturer			DENSO
	Model			10S15C
	Discharge cm^3 {cu.in.}/1 rotation			167.3 {10.2}
	Lubricant	Type		ND-OIL8
		Quantity cm^3 {cu.in.}	without rear air conditioner	120 $^{+15}_{0}$ {7.32 $^{+0.92}_{0}$}
			with rear air conditioner	200 $^{+15}_{0}$ {12.2 $^{+0.92}_{0}$}
Condenser	Manufacturer			Valeo Thermal Systems Japan Corporation
	Rated voltage V			12
	Rated current A			9.0 ± 0.5
Receiver	Manufacturer			Valeo Thermal Systems Japan Corporation
	Capacity cm^3 {cu.in.}			300 {18.3}

https://truckmanualshub.com/

M E M O

https://truckmanualshub.com/

1. Overview

- The fully automatic air conditioner system automatically determines the following parameters to always maintain the optimum condition for a selected temperature.
  - Blow-off air temperature
  - Air outlets
  - Air flow rate
  - Air intake port (inside and outside air changeover)
  - Compressor ON/OFF
- These controls are achieved by the control unit built in air conditioner control unit and control panel; it calculates the temperature control command value using the information from the various sensors provided indoors and outdoors and the temperature control map to determine the operating amount of each actuator.

1.1 System composition

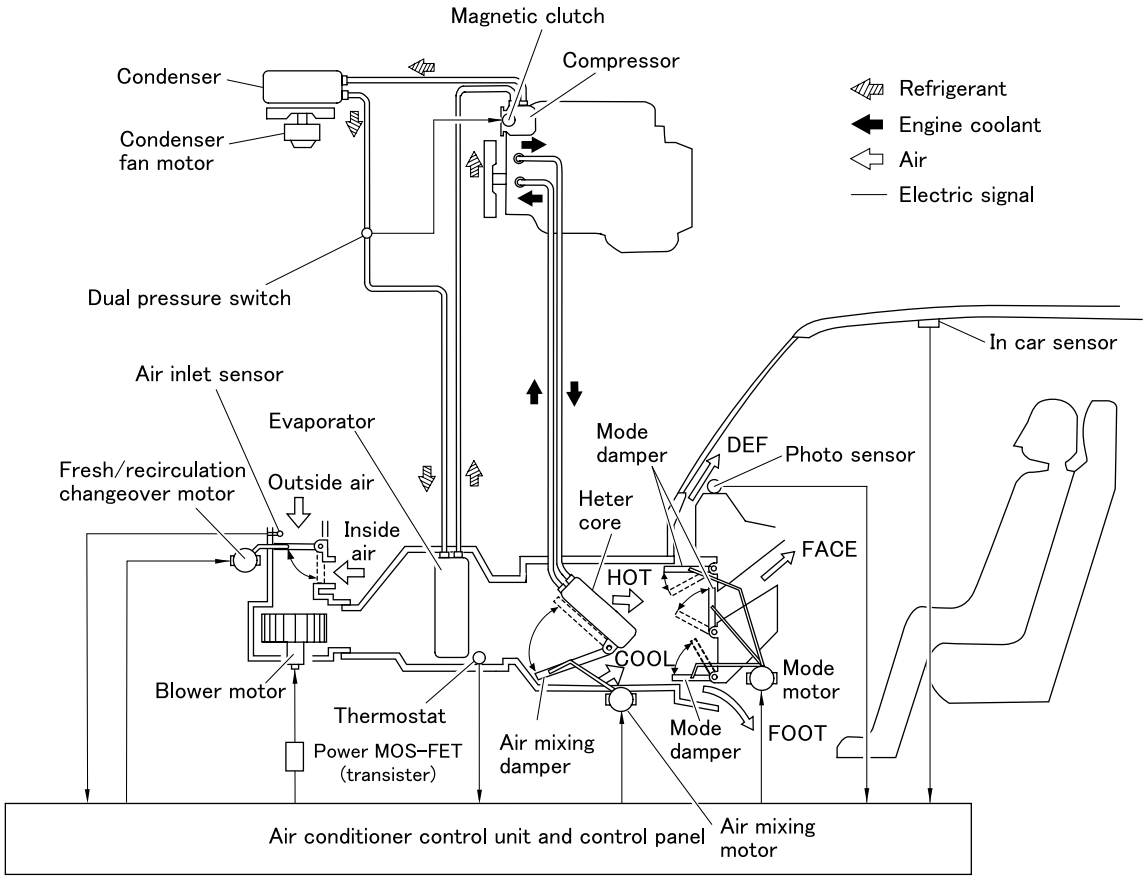

https://truckmanualshub.com/

2. Electronic Control System

2.1 System block diagram

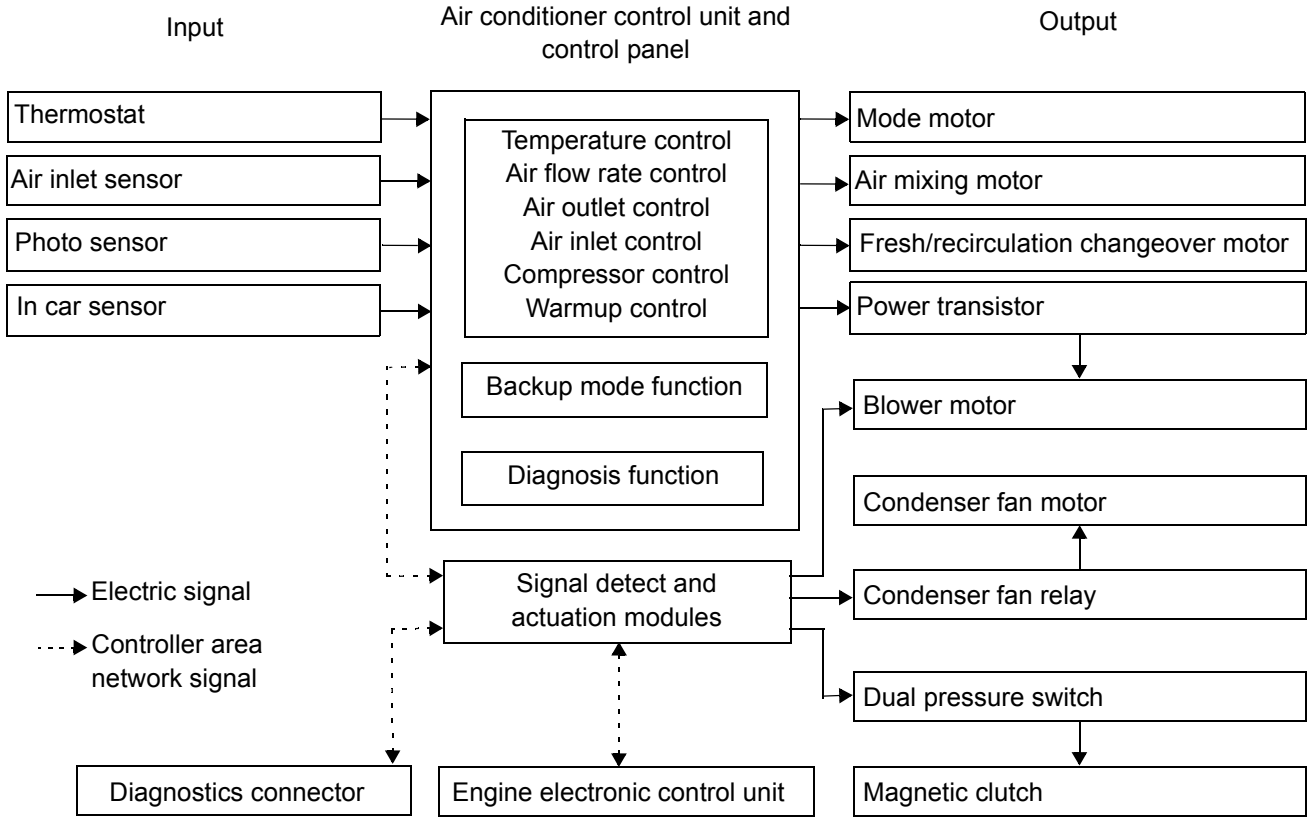

Part name	Major function or operation
Thermostat	Detection of temperature of air passed through evaporator
Air inlet sensor	Detection of outside air temperature
Photo sensor	Detection of sunlight intensity
In car sensor	Detection of inside air temperature
Mode motor	Changeover of mode damper
Air mixing motor	Changeover of air mixing damper
Fresh/recirculation changeover motor	Changeover of inside and outside air damper
Power transistor	Regulator of blower motor operating voltage
Blower motor	Operation of blower fan
Condenser fan motor	Refrigerant cooling
Condenser fan relay	Operation of blower fan motor
Dual pressure switch	Detection of refrigerant pressure
Magnetic clutch	Operation of compressor
Engine electronic control unit	Detection of engine coolant temperature
SAM *	Control of power supply to relevant devices
	Repeating of signals transmitted via controller area network from airbag electronic control unit to send them to relevant devices
FUSO Diagnostics (diagnostics connector)	Communication with air conditioner electronic control unit and control panel

* : SAM (Signal detect and actuation modules)

https://truckmanualshub.com/

2.2 Fully automatic air conditioner control functions

(1) Temperature control

- The air conditioner control unit & control panel operates air mixing motor to adjust the opening of the air mixing damper.

(2) Air flow rate control

- In the auto fan mode, the air conditioner control unit & control panel changes the base voltage of power transistor, thereby changing the drive voltage of blower motor to control the air delivery rate.
- In the warmup control mode, it controls the blower motor depending on the signals from water temperature sensor.

(3) Air outlet control

- In the auto air outlet control mode, the air conditioner control unit & control panel operates mode motor to adjust the openings of the individual dampers (DEF, FACE, FOOT).
- There are 5 selectable positions: FACE, FACE/FOOT, FOOT, FOOT/DEF, and DEF. They are numbered as -1, -2, -3, -4, and -5 in this order.

(4) Air inlet control

- The air selector motor switches the air mode between inside air recirculation and outside air introduction according to the conditions established as a result of manual selections.

	Condition	Damper position
Inside air recirculation	MAX COOL is selected when both the mode and fan speed controls are in AUTO.	Inside air position
Outside air introduction	• MAX HOT is selected when both the mode and fan speed controls are in AUTO. • DEF position is selected.	Outside air position

- If the above conditions are not met when both the mode and fan speed controls are in AUTO, the damper position is automatically adjusted between the inside air and outside air positions according to the temperature.

(5) Compressor control

- In the auto mode, the air conditioner control unit & control panel operates compressor in economy mode (ON/OFF).

(6) Warmup control

- When the following conditions are satisfied, the air conditioner control unit & control panel interrupts air outlet and air flow rate controls, initiating warmup control.
  <Automatic mode control>
  - Mode: AUTO
  - Engine coolant temperature: ≤60°C {140°F}

  <Automatic fan speed control>
  - Fan speed: AUTO
  - Mode: Other position than FACE and DEF
  - Engine coolant temperature: ≥50°C {122°F}

  After warmup control, the air conditioner control unit & control panel enters the auto mode.

(7) Backup function

- The air conditioner control unit & control panel in air conditioner control unit and control panel keeps the set temperature and the setting conditions of all the switches in the memory unless the battery terminals are disconnected.

2.3 Diagnosis function

- Each time the starter switch is set to ON, the air conditioner control unit & control panel performs a self-diagnostic to ensure that all the sensors, etc. are in order. If any of them is found to be defective, the air conditioner control unit & control panel stores the defective element in memory, and enters the backup mode.
- The air conditioner control unit limits the function of the system to keep the vehicle safety when the system is failing. The defective element stored in memory can be called out in terms of a diagnosis code by an Multi-Use Tester or the diagnosis switch. (See Gr00.)

https://truckmanualshub.com/

3. Electronic Control Unit Schematic Diagram

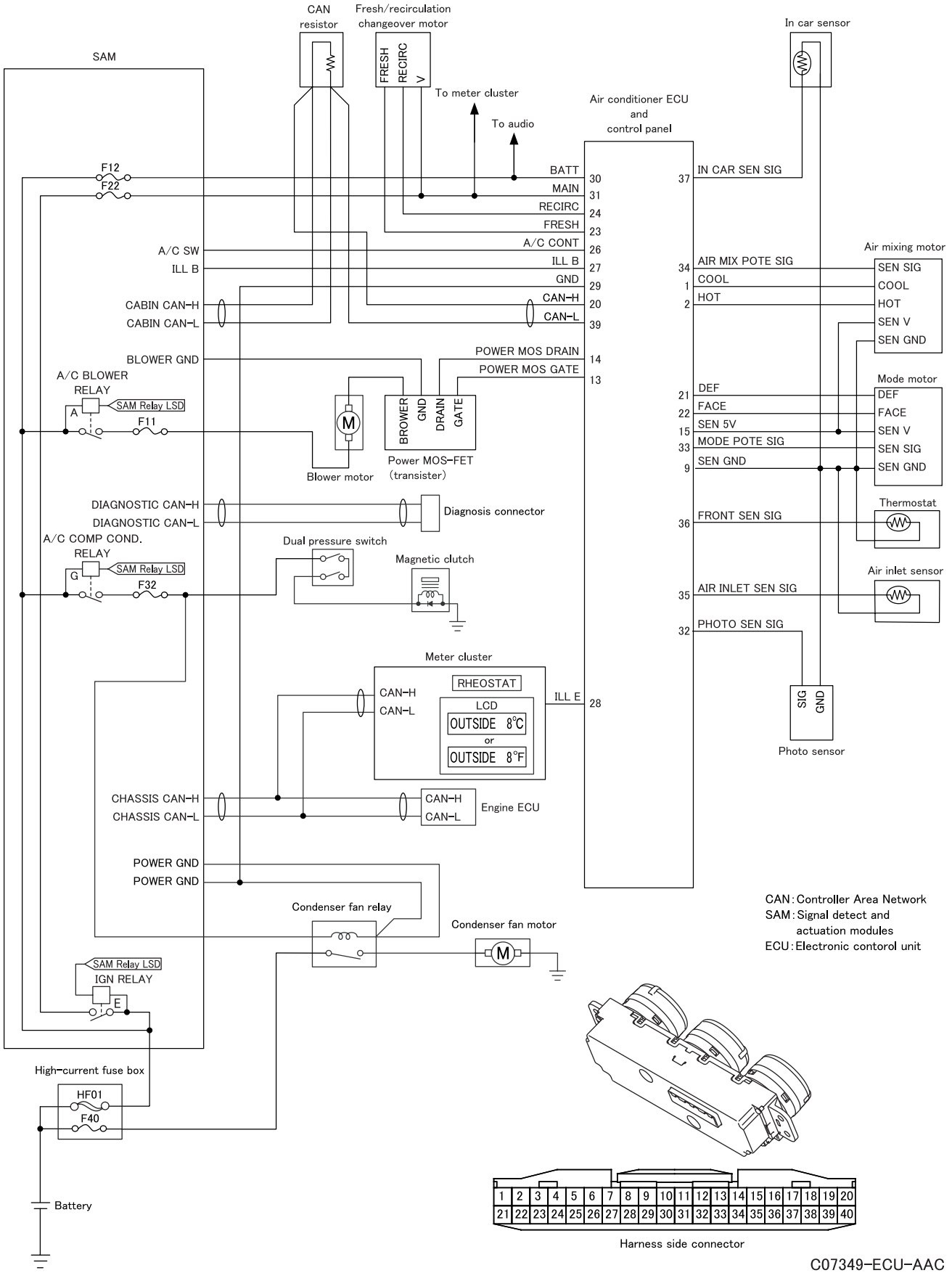

C07349-ECU-AAC

https://truckmanualshub.com/

1. Inspection According to Diagnosis Code (Trouble Codes)

- Since the contents of the FUSO Diagnostics are regularly updated, the descriptions and expressions may differ from those given in the service manuals. Check the latest information with the FUSO Diagnostics.

1.1 List of diagnosis code

Code	Message	warning lamp indication	Remarks
170-3	Interior temperature sensor open circuit - Voltage above normal or shorted to high source	-	
170-4	Interior temperature sensor short circuit - Voltage below normal or shorted to low source	-	
171-3	Ambient temperature sensor open circuit - Voltage above normal or shorted to high source	-	
171-4	Ambient temperature sensor short circuit - Voltage below normal or shorted to low source	-	
639-19	Communication with the CAN-bus has a malfunction. - Received network data is in error	-	
1547-3	Evaporator temperature sensor open circuit - Voltage above normal or shorted to high source	-	
1547-4	Evaporator temperature sensor short circuit - Voltage below normal or shorted to low source	-	
2610-4	Solar radiation sensor short circuit - Voltage below normal or shorted to low source	-	
3981-3	Mode door feedback potentiometer open circuit - Voltage above normal or shorted to high source	-	
3981-4	Mode door feedback potentiometer short circuit - Voltage below normal or shorted to low source	-	
3981-7	Mode door actuator stuck - Mechanical system not responding or out of adjustment	-	
3985-12	The control unit has an internal fault. - Bad intelligent device or component	-	
3986-3	Air mix door feedback potentiometer open circuit - Voltage above normal or shorted to high source	-	
3986-4	Air mix door feedback potentiometer short circuit - Voltage below normal or shorted to low source	-	
3986-7	Air mix door actuator stuck - Mechanical system not responding or out of adjustment	-	

CAN: Controller Area Network communication

https://truckmanualshub.com/

1.2 Code generation criteria and inspection item

170-3: Interior temperature sensor open circuit - Voltage above normal or shorted to high source

Generation condition	• Output voltage of inside air temperature sensor is 4.9 V or higher.
Recoverability	• System recovers normal state when sensor voltage becomes normal.
Control effected by electronic control unit	• If starter switch is turned to ON when faulty condition exists: Default values are invariably assumed. • If faulty condition occurs while starter switch is in ON position: Values just before occurrence of fault are invariably assumed.
Possible causes	• Open signal harness between air conditioner electronic control unit & control panel and inside air temperature sensor • Open ground harness between air conditioner electronic control unit & control panel and inside air temperature sensor • Short circuit to power supply of signal harness between air conditioner electronic control unit & control panel and inside air temperature sensor • Faulty inside air temperature sensor • Faulty air conditioner electronic control unit & control panel

170-4: Interior temperature sensor short circuit - Voltage below normal or shorted to low source

Generation condition	• Output voltage of inside air temperature sensor is 0.1 V or lower.
Recoverability	• System recovers normal state when sensor output voltage becomes normal.
Control effected by electronic control unit	• If starter switch is turned to ON when faulty condition exists: Default values are invariably assumed. • If faulty condition occurs while starter switch is in ON position: Values just before occurrence of fault are invariably assumed.
Possible causes	• Shorted signal harness between air conditioner electronic control unit & control panel and inside air temperature sensor • Faulty inside air temperature sensor • Faulty air conditioner electronic control unit & control panel

171-3: Ambient temperature sensor open circuit - Voltage above normal or shorted to high source

Generation condition	• Output voltage of outside air temperature sensor is 4.9 V or higher.
Recoverability	• System recovers normal state when sensor output voltage becomes normal.
Control effected by electronic control unit	• If starter switch is turned to ON when faulty condition exists: Default values are invariably assumed. • If faulty condition occurs while starter switch is in ON position: Values just before occurrence of fault are invariably assumed.
Possible causes	• Open signal harness between air conditioner electronic control unit & control panel and outside air temperature sensor • Open ground harness between air conditioner electronic control unit & control panel and outside air temperature sensor • Short circuit to power supply of signal harness between air conditioner electronic control unit & control panel and outside air temperature sensor • Faulty outside air temperature sensor • Faulty air conditioner electronic control unit & control panel

171-4: Ambient temperature sensor short circuit - Voltage below normal or shorted to low source

Generation condition	• Output voltage of outside air temperature sensor is 0.1 V or lower.
Recoverability	• System recovers normal state when sensor output voltage becomes normal.
Control effected by electronic control unit	• If starter switch is turned to ON when faulty condition exists: Default values are invariably assumed. • If faulty condition occurs while starter switch is in ON position: Values just before occurrence of fault are invariably assumed.
Possible causes	• Shorted signal harness between air conditioner electronic control unit & control panel and outside air temperature sensor • Faulty outside air temperature sensor • Faulty air conditioner electronic control unit & control panel

https://truckmanualshub.com/

639-19: Communication with the CAN-bus has a malfunction. - Received network data is in error

Generation condition	• There is some controller area network communications problem.
Recoverability	• System recovers normal state when all of the following conditions are met. • Communication bus is not in off state. • Message indicating normal speed range is being received. • Message indicating normal coolant temperature range is being received.
Control effected by electronic control unit	• Default value is invariably assumed for non-received controller area network message.
Possible causes	• Controller area network communications bus is open, shorted to power supply, shorted to ground, or otherwise shorted. • Faulty malfunction signal detect and actuation modules for resistors in air conditioner electronic control unit & control panel. • Faulty air conditioner electronic control unit & control panel.

1547-3: Evaporator temperature sensor open circuit - Voltage above normal or shorted to high source

Generation condition	• Output voltage of thermostat is 4.9 V or higher.
Recoverability	• System recovers normal state when thermostat output voltage becomes normal.
Control effected by electronic control unit	• If starter switch is turned to ON when faulty condition exists: Default values are invariably assumed. • If faulty condition occurs while starter switch is in ON position: Values just before occurrence of fault are invariably assumed.
Possible causes	• Open signal harness between air conditioner electronic control unit & control panel and thermostat • Open ground harness between air conditioner electronic control unit & control panel and thermostat • Short circuit to power supply of signal harness between air conditioner electronic control unit & control panel and thermostat • Faulty thermostat • Faulty air conditioner electronic control unit & control panel

1547-4: Evaporator temperature sensor short circuit - Voltage below normal or shorted to low source

Generation condition	• Output voltage of thermostat is 0.1 V or lower.
Recoverability	• System recovers normal state when thermostat output voltage becomes normal.
Control effected by electronic control unit	• If starter switch is turned to ON when faulty condition exists: Default values are invariably assumed. • If faulty condition occurs while starter switch is in ON position: Values just before occurrence of fault are invariably assumed.
Possible causes	• Shorted signal harness between air conditioner electronic control unit & control panel and thermostat • Faulty thermostat • Faulty air conditioner electronic control unit & control panel

2610-4: Solar radiation sensor short circuit - Voltage below normal or shorted to low source

Generation condition	• Output voltage of photo sensor is 0.1 V or lower.
Recoverability	• System recovers normal state when photo sensor output voltage becomes normal.
Control effected by electronic control unit	• Photo sensor output voltage is invariably assumed to be 0 W.
Possible causes	• Shorted signal harness between air conditioner electronic control unit & control panel and photo sensor • Faulty photo sensor • Faulty air conditioner electronic control unit & control panel

CAN: Controller Area Network communication

https://truckmanualshub.com/

3981-3: Mode door feedback potentiometer open circuit - Voltage above normal or shorted to high source

Generation condition	• Output voltage of potentiometer inside the mode motor is 4.9 V or higher.
Recoverability	• System recovers normal state when potentiometer output voltage becomes normal.
Control effected by electronic control unit	• Air mixing actuator is not driven any further.
Possible causes	• Short circuit to power supply (5 V and/or 24 V) of signal harness between air conditioner electronic control unit & control panel and mode motor • Open ground harness between air conditioner electronic control unit & control panel and mode motor • Faulty potentiometer inside the mode motor • Faulty air conditioner electronic control unit & control panel

3981-4: Mode door feedback potentiometer short circuit - Voltage below normal or shorted to low source

Generation condition	• Output voltage of potentiometer inside the mode motor is 0.1 V or lower.
Recoverability	• System recovers normal state when potentiometer output voltage becomes normal.
Control effected by electronic control unit	• Mode actuator is not driven any further.
Possible causes	• Short circuit to ground of signal harness between air conditioner electronic control unit & control panel and mode motor • Open power harness between air conditioner electronic control unit & control panel and mode motor • Faulty potentiometer inside the mode motor • Faulty air conditioner electronic control unit & control panel

3981-7: Mode door actuator stuck - Mechanical system not responding or out of adjustment

Generation condition	• Mode motor is stopped from being driven if potentiometer output does not vary 12 bits or more. This code is set after consecutive 5 stop-and-restart cycles of mode motor after it is first stopped.
Recoverability	• System recovers normal state when potentiometer varies more than 12 bits when air mixing motor is driven.
Control effected by electronic control unit	• Repeats stop-and-restart cycles as many time as required to reach the target.
Possible causes	• Foreign material caught in mode dampers (DEF, FACE, and FOOT) and links.

3985-12: The control unit has an internal fault. - Bad intelligent device or component

Generation condition	• There is some problem inside electronic control unit.
Recoverability	• System recovers normal state when all of the following conditions are met. • Both writing and reading into EEPROM complete successfully. • Resetting completes successfully.
Control effected by electronic control unit	• When EEPROM is faulty: Battery backup data is used as substitute. • When reset circuit is faulty: Normal resetting is impossible.
Possible causes	• Faulty air conditioner electronic control unit & control panel.

3986-3: Air mix door feedback potentiometer open circuit - Voltage above normal or shorted to high source

Generation condition	• Output voltage of air mixing motor is 4.9 V or higher.
Recoverability	• System recovers normal state when output voltage of air mixing motor becomes normal.
Control effected by electronic control unit	• Electronic control unit causes air mixing motor to stop.
Possible causes	• Short circuit to power supply (5 V and/or 24 V) of signal harness between air conditioner electronic control unit & control panel and air mixing motor • Open ground harness between air conditioner electronic control unit & control panel and air mixing motor • Faulty potentiometer inside the air mixing motor • Faulty air conditioner electronic control unit & control panel

https://truckmanualshub.com/

3986-4: Air mix door feedback potentiometer short circuit - Voltage below normal or shorted to low source

Generation condition	• Output voltage of air mixing motor is 0.1 V or lower.
Recoverability	• System recovers normal state when air mixing motor output voltage becomes normal.
Control effected by electronic control unit	• Air mixing actuator is not driven any further.
Possible causes	• Short circuit to ground of signal harness between air conditioner electronic control unit & control panel and air mixing motor • Open power harness between air conditioner electronic control unit & control panel and air mixing motor • Faulty potentiometer inside the air mixing motor • Faulty air conditioner electronic control unit & control panel

3986-7: Air mix door actuator stuck - Mechanical system not responding or out of adjustment

Generation condition	• Air mixing motor is stopped from being driven if potentiometer output does not vary 12 bits or more. This code is set after consecutive 5 stop-and-restart cycles of mode motor after it is first stopped.
Recoverability	• System recovers normal state when potentiometer output varies more than 12 bits.
Control effected by electronic control unit	• Repeats stop-and-restart cycles of air mixing motor as many time as required to reach the target.
Possible causes	• Foreign material caught in air mixing damper and links.

https://truckmanualshub.com/

M E M O

https://truckmanualshub.com/

2. FUSO Diagnostics Service Data (Measured Values)

- Since the contents of the FUSO Diagnostics are regularly updated, the descriptions and expressions may differ from those given in the service manuals. Check the latest information with the FUSO Diagnostics.

Current value group	Description	Value	Explanation
Temperature values	Ambient temperature	-20.20 to 117.5°F	Detected by the in-car sensor. 0.12 to 4.86 V
	Vehicle interior temperature	-20.20 to 117.5°F	Detected by the air inlet sensor. 0.12 to 4.86 V
	Evaporator temperature	-20.20 to 117.5°F	Detected by the thermostat. 0.12 to 4.86 V
	Solar value	0 to 1559W	Detected by the photo sensor. 0.12 to 5 V Measured values are changed by direct sunlight only.
Status of electric motor	Temperature motor output Feedback	0 to 100%	Shows the value of the photometer in the air mixing motor. 0.12 to 4.86 V
	Mode motor output Feedback	Mode B/L1 Mode B/L2 Mode B/L3 Mode Def/Foot1 Mode Def/Foot2 Mode Def/Foot3 Mode Foot Mode Def Mode Face	Shows the damper value of the photometer in the mode motor. 0.12 to 4.86 V
	Compressor output	ON/OFF	Shows the output value of the air conditioner. ON: Approx. 0 V OFF: Supply voltage from SAM (Signal detect and actuation modules)
	Fresh/Recirculate motor output	Fresh/Recirculate	Shows the output value of the fresh/recirculation changeover motor. Fresh mode Pin 23: Approx. 0 V Recirc. mode Pin 24: Approx. 0 V
	Temperature motor output	0 to 100%	Shows the output value of the air mixing motor. When the air mixing motor is running: Voltage between pins 1 and 2: Approx. -11 to 11 V
	Blower fan output	Fan OFF/ Fan speed 1/ Fan speed 2/ Fan speed 3/ Fan speed 4/ Fan speed 5/ Fan speed 6/ Fan speed 7/ Fan speed 8	Shows the output value of the blower motor. Voltage between pins 14 and 31: Approx. 0 to 12 V
	Mode motor output	Mode B/L1 Mode B/L2 Mode B/L3 Mode Def/Foot1 Mode Def/Foot2 Mode Def/Foot3 Mode Foot Mode Def Mode Face	Shows the output value of the mode motor. When the mode motor is running: Voltage between pins 21 and 22: Approx. -11 to 11 V

https://truckmanualshub.com/

Current value group	Description	Value	Explanation
Switch status	Fresh/Recirculate switch	Auto/ Fresh/ Recirculate	Shows the state of the fresh/recirculate switch.
	Air conditioning switch	Auto/OFF/ON	Shows the state of the air conditioning switch.
	Mode dial position	Mode B/L1 Mode B/L2 Mode B/L3 Mode Def/Foot1 Mode Def/Foot2 Mode Def/Foot3 Mode Auto Mode Foot Mode Def Mode Face	Shows the mode dial position.
	Fan dial position	Fan speed Auto/ Fan OFF/ Fan speed 1 Fan speed 2 Fan speed 3 Fan speed 4 Fan speed 5 Fan speed 6 Fan speed 7 Fan speed 8	Shows the fan dial position.
	Temperature dial position	19 to 31°F	Shows the temperature dial position. 19 (max. cool) to 31 (max. hot)
Other actual values	Coolant temperature	-40.00 to 210.0°F	Shows the coolant temperature data.
	Switch illumination	Reserved/ OFF/ ON	Shows the switch illumination state. Voltage between pins 27 and 28: Approx. 12 V when ON, Approx. 0 V when OFF

https://truckmanualshub.com/

3. Actuator Test (Control) Using FUSO Diagnostics

- Since the contents of the FUSO Diagnostics are regularly updated, the descriptions and expressions may differ from those given in the service manuals. Check the latest information with the FUSO Diagnostics.

Selection	Description
Compressor outlet	Drives the compressor output (pin 26). The actuator test cannot be performed when the blower motor is OFF. [Additional condition for performing actuator test] +12V (M): ON Blower fan: ON [Checking method] Confirm that cold air comes out after the activation sound of the magnetic clutch is heard.
Fresh/recirculation changeover motor output	Drives the fresh/recirculation changeover motor output (pins 23 and 24). Wait for 1.5 seconds before switching the motor. [Additional condition for performing actuator test] +12V (M): ON Turn off the blower fan and drive the vehicle. Switch the motor between the fresh air and recirculation modes. [Checking method] Confirm that air comes out from the outlet in the fresh air mode. Confirm that air does not come out from the outlet in the recirculation mode.
Temperature motor output	Drives the air mixing motor output (pins 1 and 2). [Additional condition for performing actuator test] +12V (M): ON Temperature motor output: Low (2 to 18%) Temperature motor output: Center (42 to 58%) Temperature motor output: High (82 to 98%) [Checking method] Confirm that the motor output feedback follows the motor output.
Blower fan outlet	Drives the condenser fan motor output (pin 13). [Additional condition for performing actuator test] +12V (M): ON Blower motor: OFF Blower motor speed setting: 1 to 8 [Checking method] When the blower motor is OFF, confirm that air does not come out from the outlet. When a blower motor speed is selected, confirm that air comes out from the outlet and that the airflow rate corresponds to the selected speed.
Mode motor outlet	Drives the mode motor output (pins 21 and 22). [Additional condition for performing actuator test] +12V (M): ON 1=Face 2=BL1 3=BL2 4=BL3 5=Foot 6=DF1 7=DF2 8=DF3 9=Front windshield [Checking method] Confirm that air comes out from the same outlet as the selected mode.

https://truckmanualshub.com/

M E M O

https://truckmanualshub.com/

4. Electronic Control Unit Input/Output Table

- See the Electronic Control Unit Schematic Diagram for the pin locations of each signal and ground.

Devices to be connected	Terminal	Input/output	Voltage and wave form
In car sensor	37-9	In	[Measurement condition] Disconnect the electronic control unit and harness, then inspect on the vehicle-side connector. [Judgment criteria] See 54-#256.
Air inlet sensor	35-9	In	[Measurement condition] Disconnect the electronic control unit and harness, then inspect on the vehicle-side connector. [Judgment criteria] See 54-#253.
Thermostat	36-9	In	[Measurement condition] Disconnect the electronic control unit and harness, then inspect on the vehicle-side connector. [Judgment criteria] See 54-#751.
Potentiometer of air mixing motor	34-9	Out	[Judgment criteria] • Lever position Max. hot: 4.0 ± 0.03 V • Lever position Max. cool: 1.0 ± 0.03 V
Potentiometer of mode motor	33-9	Out	[Judgment criteria] • Lever position Face: 4.5 ± 0.03 V • Lever position Def.: 0.5 ± 0.03 V

https://truckmanualshub.com/

M E M O

https://truckmanualshub.com/

INSPECTION OF ELECTRICAL PARTS

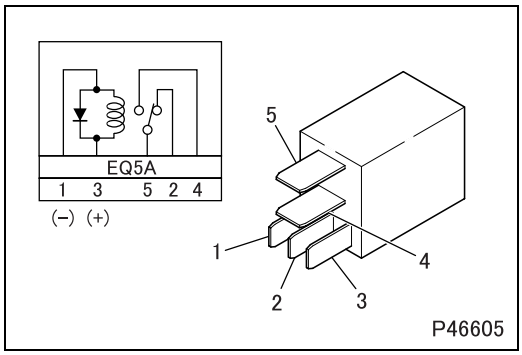

#201 Inspection of relay (normally open type 5 pin)

- Perform continuity check and operation check, and if any fault is found, replace the relay.

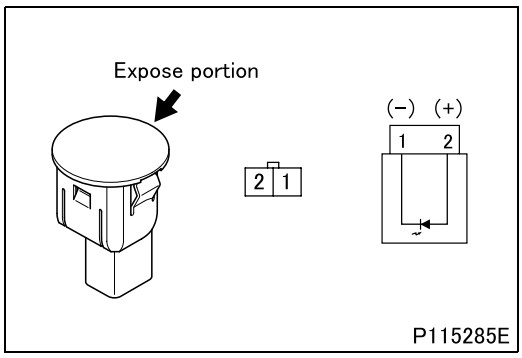

#251 Inspection of photo sensor

- Turn the starter switch to the ON position with the photo sensor connected to the control panel connector.
- Measure the voltage output from between terminal 2 and body ground while shining light on the light receiving part of the sensor.

Standard value	Inspection condition: Move an electric lamp of approx. 60 watts up and down right above the photo sensor (150 mm {5.91 in.} at closest point).	1 to 5V (Voltage decreases when the lamp is closer.)

- If the measured value deviates from the standard value, replace the sensor. (See Gr52.)

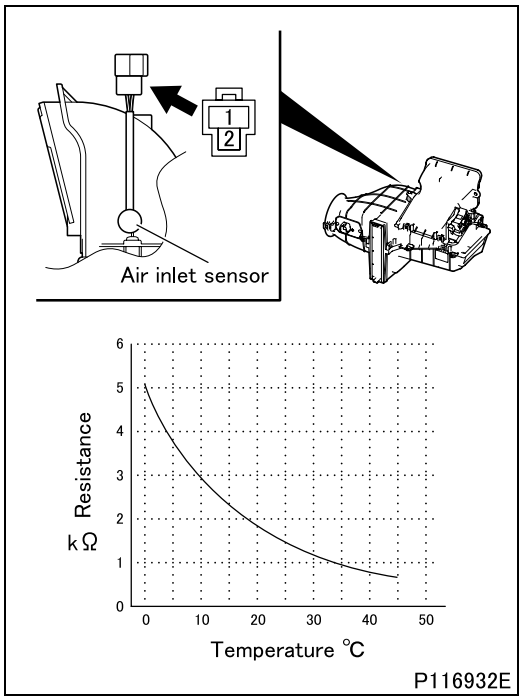

#253 Inspection of air inlet sensor

- Change the ambient temperature of the sensor and measure the resistance between terminals 1 and 2.
- If the measured value deviates from the characteristic shown in the table at left, replace the sensor. (See Gr55.)

https://truckmanualshub.com/

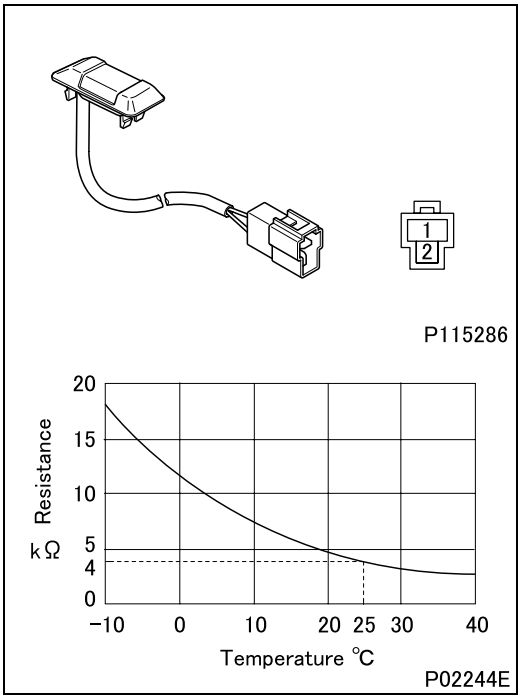

#256 Inspection of in car sensor

- Change the ambient temperature of the sensor and measure the resistance between terminals 1 and 2.
- If the measured value deviates from the characteristic shown in the table at left, replace the sensor. (See Gr52.)

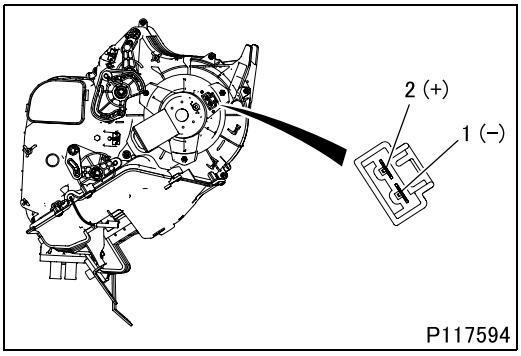

#411 Inspection of blower motor

- Make sure that the motor operates when 12 volts DC is applied between each terminal.
- If any fault is found, replace the motor. (See Gr55.)

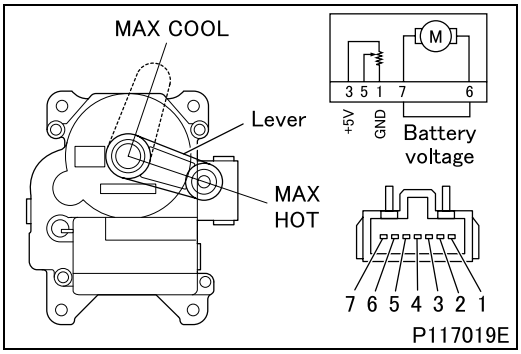

#413 Inspection of air mixing motor

- Perform the following checks, and if any fault is found, replace the motor. (See Gr55.)

(1) Inspection of motor

- Make sure that the motor operates when 12 volts DC is applied between each terminal.

Lever position	Continuity terminal
MAX HOT	(+) 6–7 (–)
MAX COOL	(+) 7–6 (–)

CAUTION ⚠

- **Stop applying voltage when the lever has stopped.**
- **After inspecting the motor, return the lever to a position between MAX HOT and MAX COOL.**

https://truckmanualshub.com/

INSPECTION OF ELECTRICAL PARTS

(2) Inspection of potentiometer

• Apply 5 volts DC between the terminals 1 and 3 and measure the voltage between the terminals 1 and 5.

Lever position	Standard value
MAX HOT	4 ± 0.03
MAX COOL	1 ± 0.03

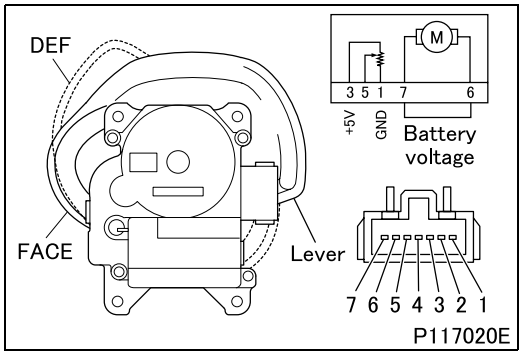

#414 Inspection of mode motor

• Perform the following checks, and if any fault is found, replace the motor. (See Gr55.)

(1) Inspection of motor

• Make sure that the motor operates when 12 volts DC is applied between each terminal.

Lever position	Continuity terminal
FACE	(+) 6–7 (–)
DEF	(+) 7–6 (–)

CAUTION ⚠

- **Stop applying voltage when the lever has stopped.**
- **After inspecting the motor, return the lever to a position between FACE and DEF.**

(2) Inspection of potentiometer

• Apply 5 volts DC between the terminals 1 and 3 and measure the voltage between the terminals 1 and 5.

Lever position	Standard value
FACE	4.5 ± 0.03
DEF	0.5 ± 0.03

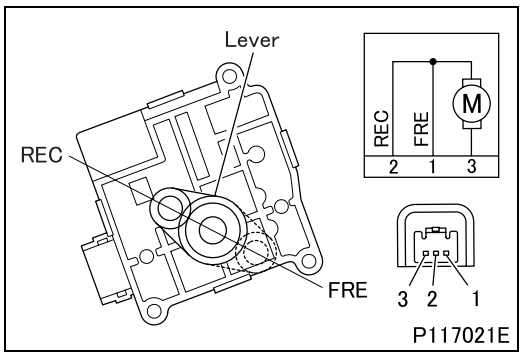

#415 Inspection of fresh/recirculation changeover motor

• Perform the following checks, and if any fault is found, replace the motor. (See Gr55.)

• Make sure that the motor operates when 12 volts DC is applied between each terminal.

Lever position	Continuity terminal
REC (inside air)	(+) 3–2 (–)
FRE (outside air)	(+) 3–1 (–)

CAUTION ⚠

- **Stop applying 12 volts DC if the lever stops spontaneously at the REC or FRE position.**

https://truckmanualshub.com/

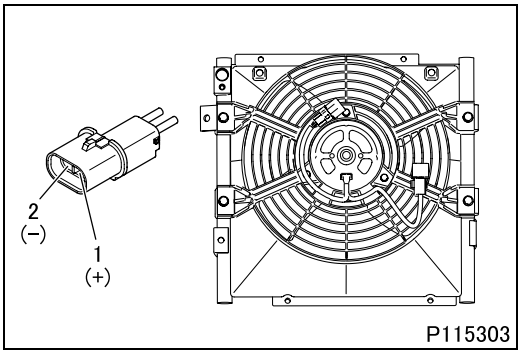

#431 Inspection of condenser fan motor

- Make sure that the motor operates when 12 volts DC is applied between each terminal.
- If any fault is found, replace condenser. (See Gr55.)

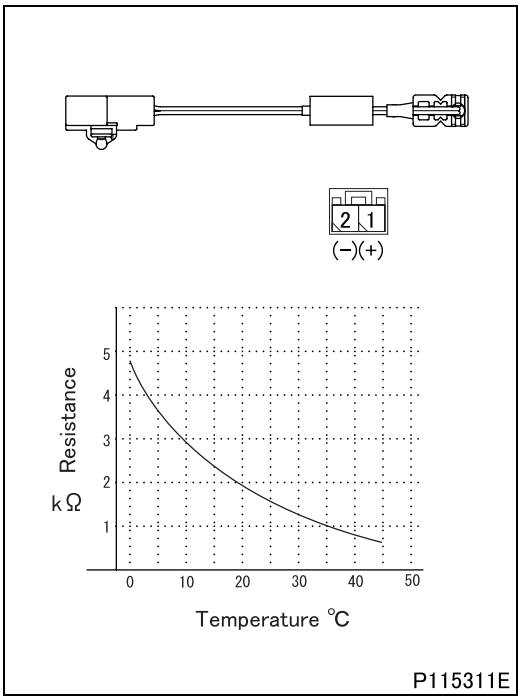

#751 Inspection of thermostat

- Measure the output voltage between terminals 1 and 2 at the specified temperatures.
- If the measured value deviates from the characteristic shown in the table at left, replace the sensor.

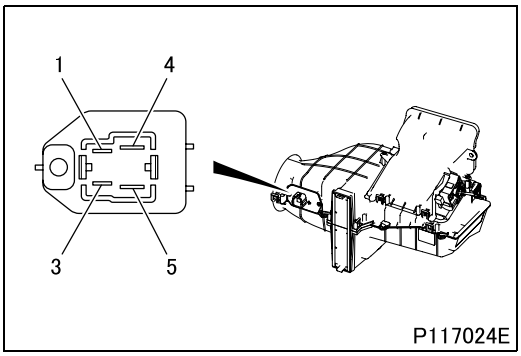

#752 Inspection of power MOS-FET (transistor)

- Perform the following checks, and if any fault is found, replace the power transistor. (See Gr55.)
  - Start the engine and operate the blower with the HI setting. Confirm that the rate of air flow from the blower corresponds to the HI level.
  - Next, gradually decrease the air flow rate by operating the control panel and confirm that the rate of air flow from the blower gradually decreases.
  - Confirm that there is no problem in the blower motor, wiring, air conditioner electronic control unit and control panel. If the blower motor does not rotate in this condition, the power MOS-FET (transistor) is faulty.

https://truckmanualshub.com/

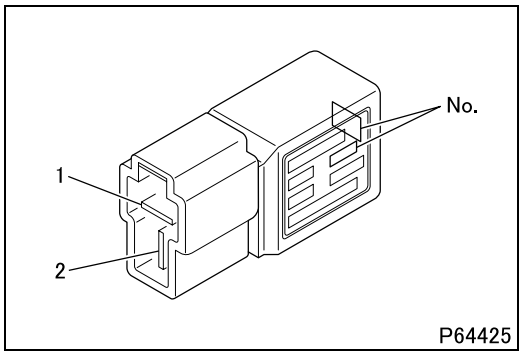

#828 Inspection of controller area network resistor

- Measure the resistance of the resistor number marked on the controller area network resistor.

Standard value (at 20°C {68°F})	Resistor No.	1	270 ± 13.5 Ω
		2	510 ± 25.5 Ω
		3	820 ± 41 Ω
		4	1300 ± 65 Ω
		5	2000 ± 100 Ω
		6	3300 ± 165 Ω
		7	5600 ± 280 Ω
		8	15000 ± 750 Ω
		9	390 ± 19.5 Ω
		10	4300 ± 215 Ω
		11	9100 ± 455 Ω
		12	120 ± 6 Ω (for controller area network resistor)

- If the measurement is out of specification, replace the controller area network resistor with one that has the same resistor number and same specified resistance.

CAUTION ⚠

The controller area network resistor are matched to the engine. If you replace any of them, be sure to replace it with one that has the same resistor number.

https://truckmanualshub.com/

M E M O

https://truckmanualshub.com/

INSTALLED LOCATIONS OF PARTS

A41	(Sensor)

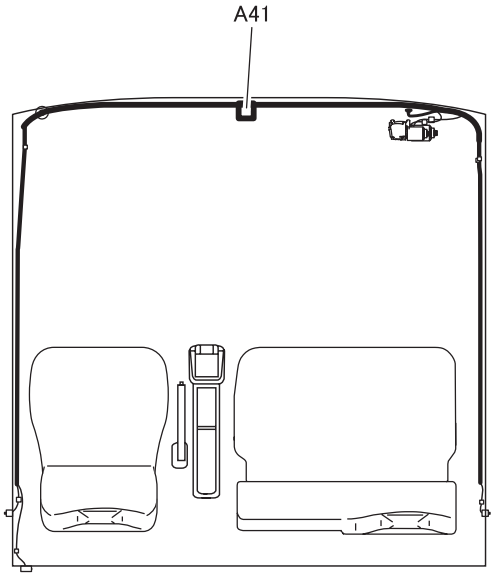

A41 Photo sensor

https://truckmanualshub.com/

M E M O

https://truckmanualshub.com/

INSTALLED LOCATIONS OF PARTS

B12 to16

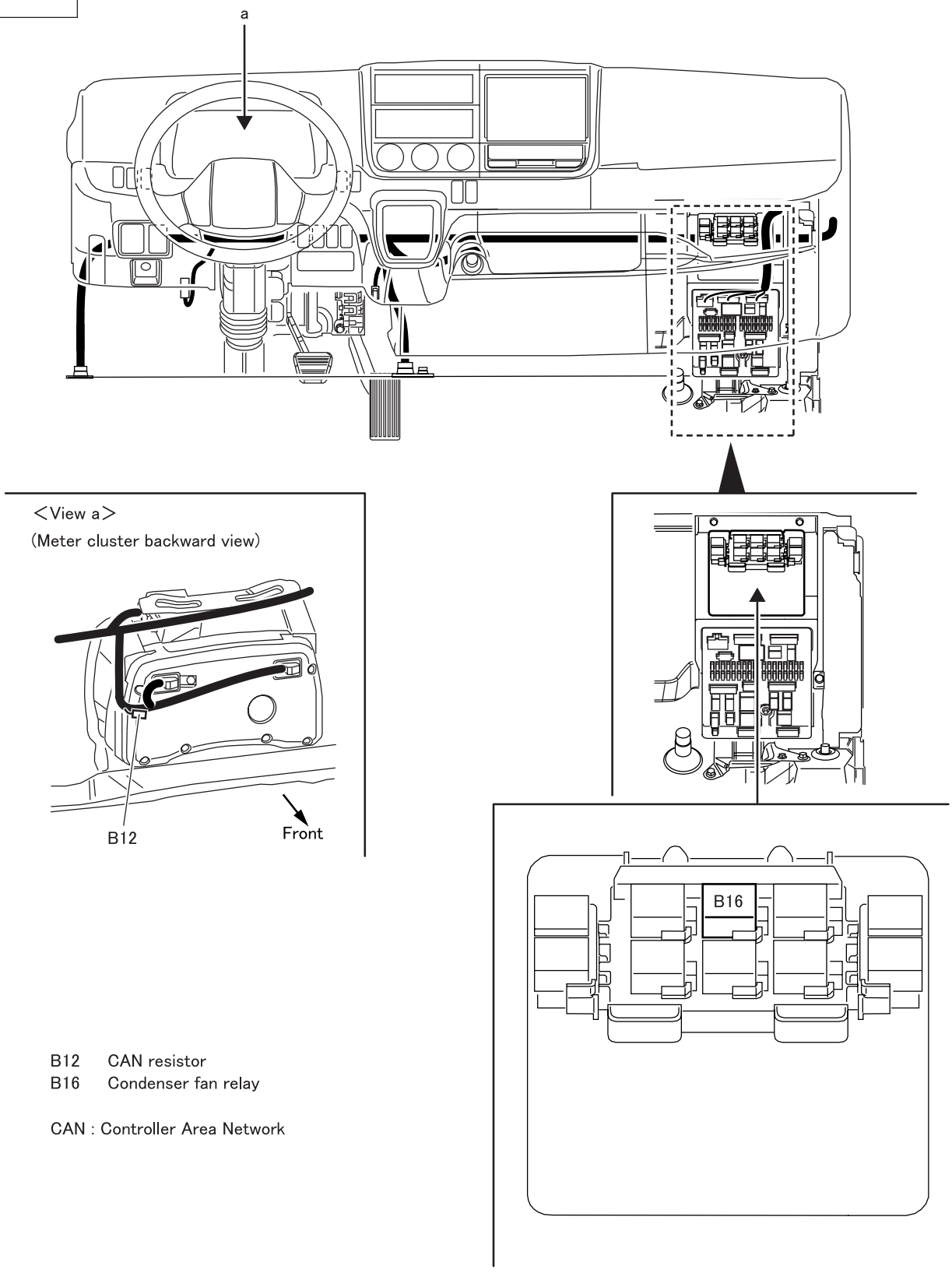

B12 CAN resistor
B16 Condenser fan relay

CAN : Controller Area Network

55E-L05232B-1

https://truckmanualshub.com/

B40

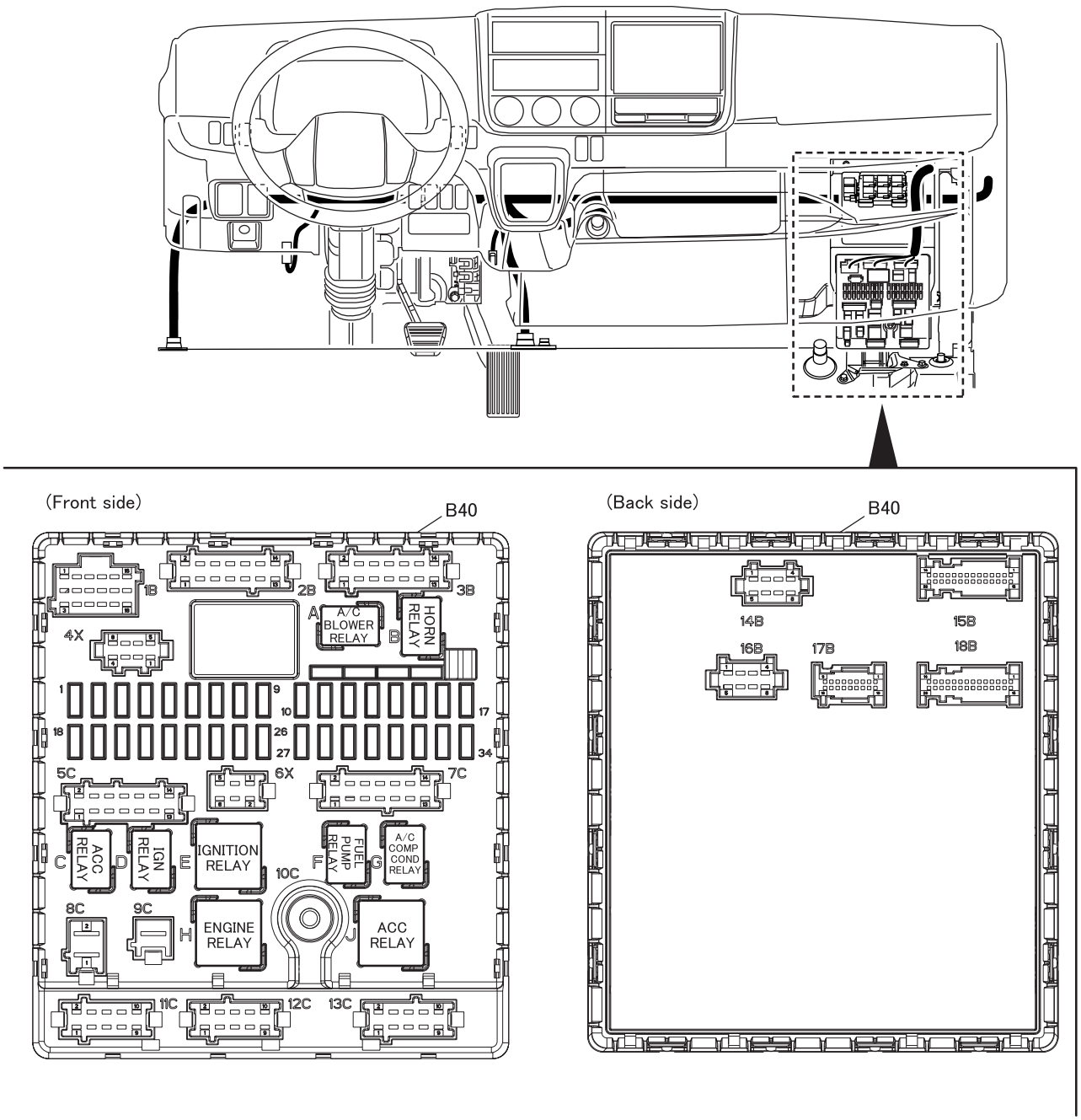

B40 SAM

SAM : Signal detect and actuation modules

https://truckmanualshub.com/

INSTALLED LOCATIONS OF PARTS

C01

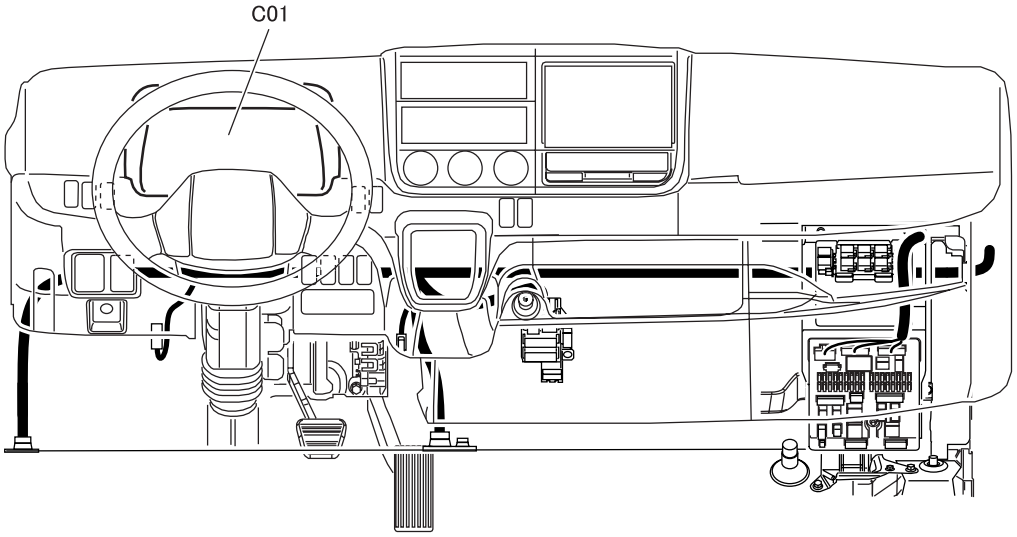

C01 Meter cluster

https://truckmanualshub.com/

D02 to 09 <Full auto air-conditioner>

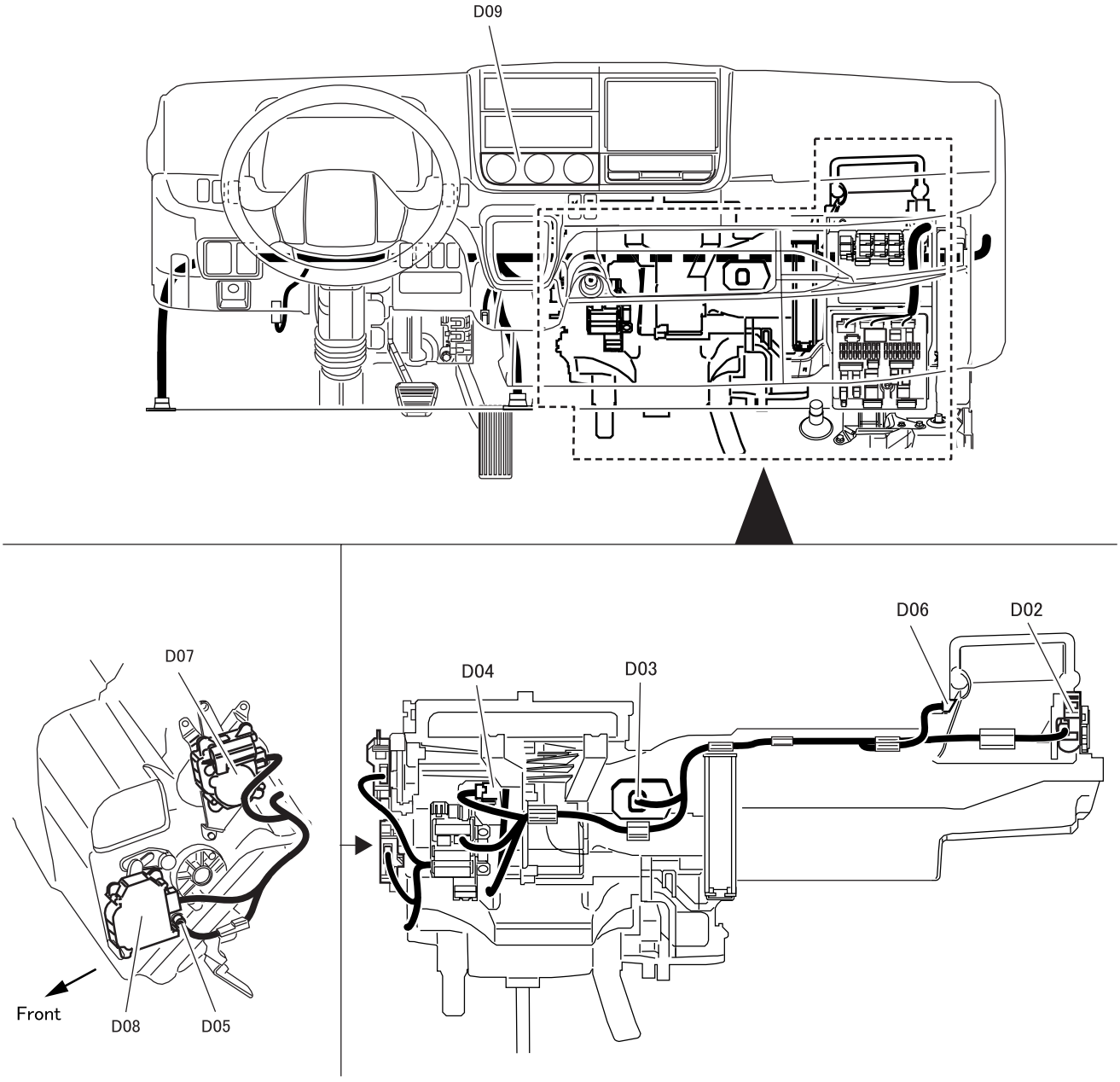

D02 Fresh/recirculation changeover motor
D03 Power MOS-FET (transistor)
D04 Blower motor
D05 Thermostat
D06 Air inlet sensor
D07 Mode motor
D08 Air mixing motor
D09 Air-conditioner ECU and control panel

ECU : Electronic control unit

https://truckmanualshub.com/

INSTALLED LOCATIONS OF PARTS

F02

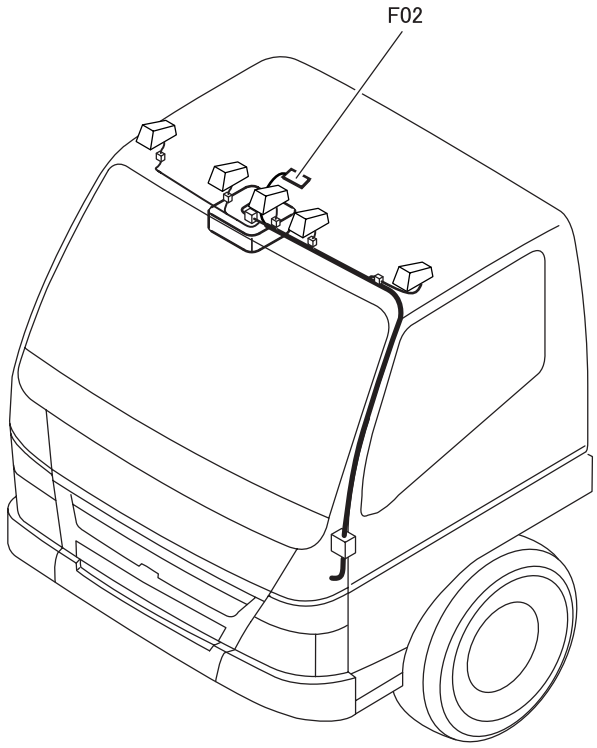

F02 In car sensor

https://truckmanualshub.com/

M E M O

https://truckmanualshub.com/

INSTALLED LOCATIONS OF PARTS

J04 to 14

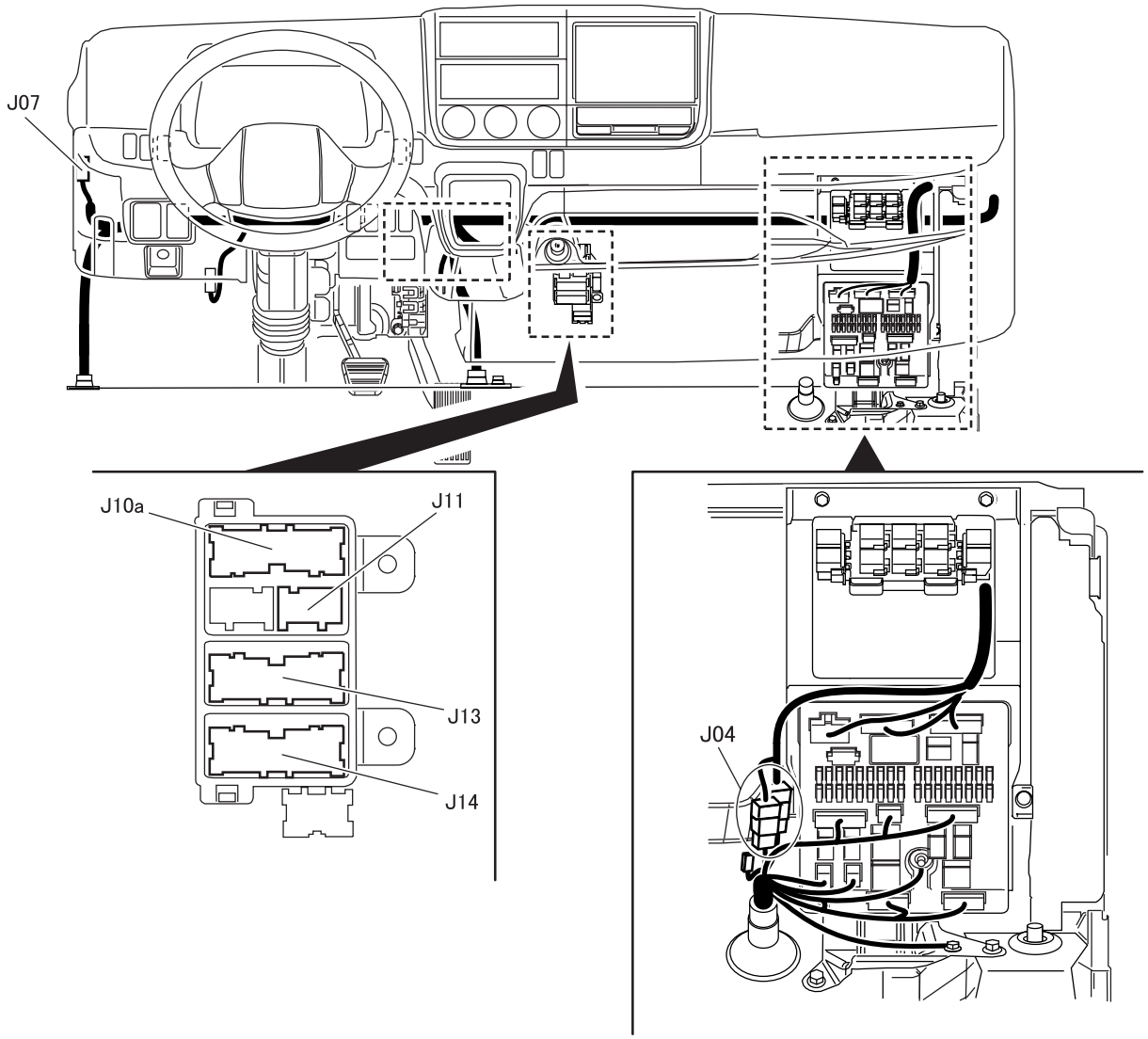

J04 Connection of cab harness and chassis harness : [DD6A]
J07 Connection of cab harness and roof harness : [AK8A]
J10a Connection of instrument panel harness and air−conditioner harness : [AK18A] <Full auto air−conditioner>
J11 Connection of cab harness and air−conditioner harness : [AN2A]
J13 Connection of cab harness and instrument panel harness : [AK22B]
J14 Connection of cab harness and instrument panel harness : [AK22A]

Indicate by connector type [ ].

https://truckmanualshub.com/

J17 to 21

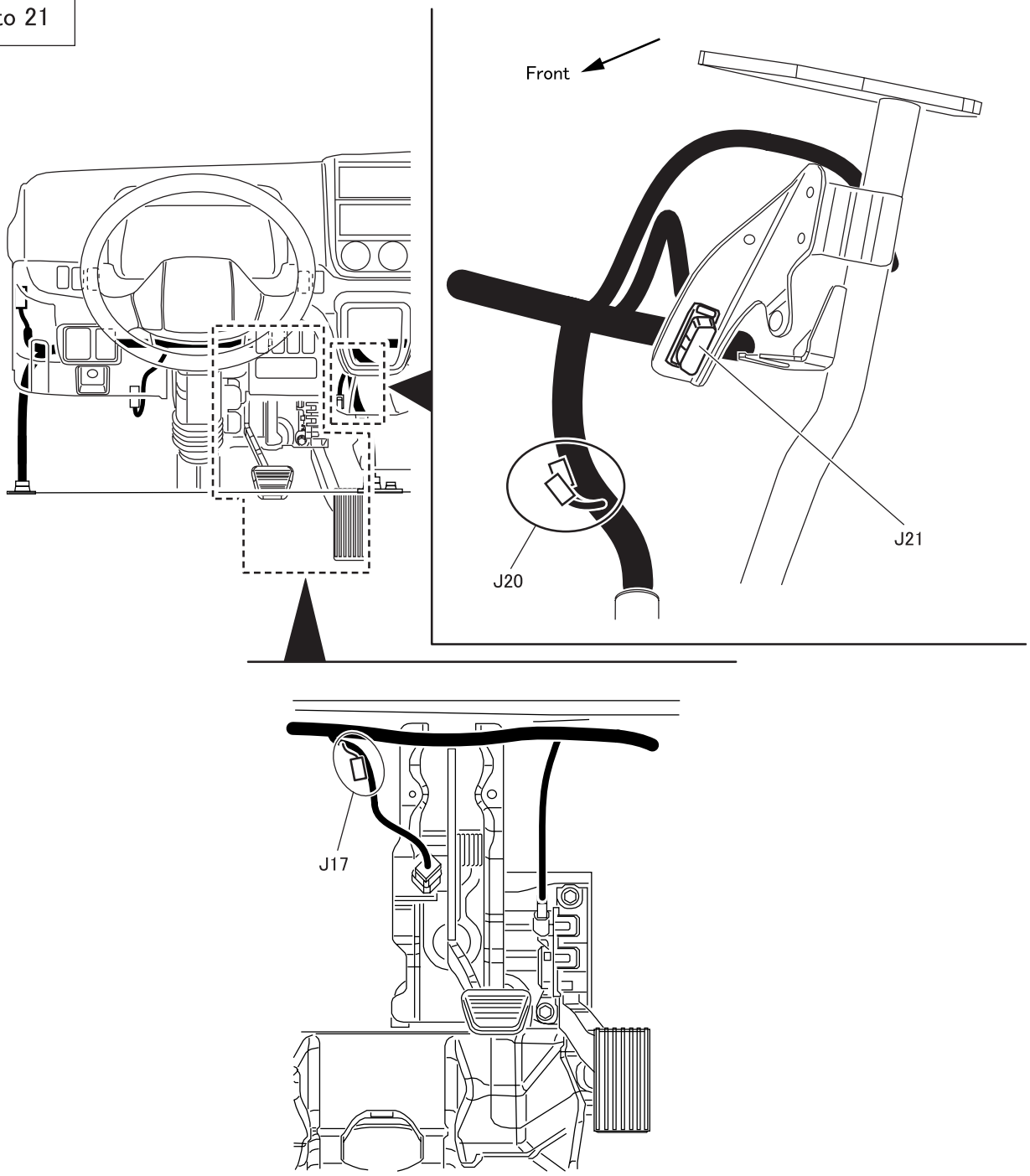

J17 Joint connector (CAN-H) <Immobilizer>
Joint connector (CAN-L) <Immobilizer>
J20 Joint connector (CAN-H) <Meter cluster>
Joint connector (CAN-L) <Meter cluster>
J21 Diagnosis connector

Indicate by connector type [ ].

https://truckmanualshub.com/

INSTALLED LOCATIONS OF PARTS

R08

(Right side view)

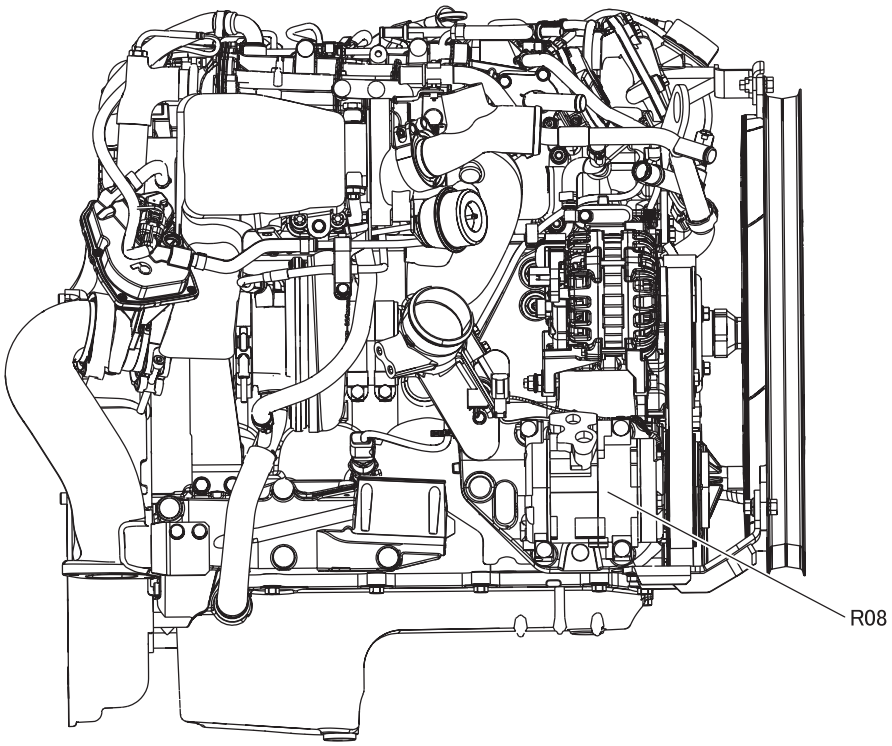

R08 Magnetic clutch

https://truckmanualshub.com/

T02 (Switch)

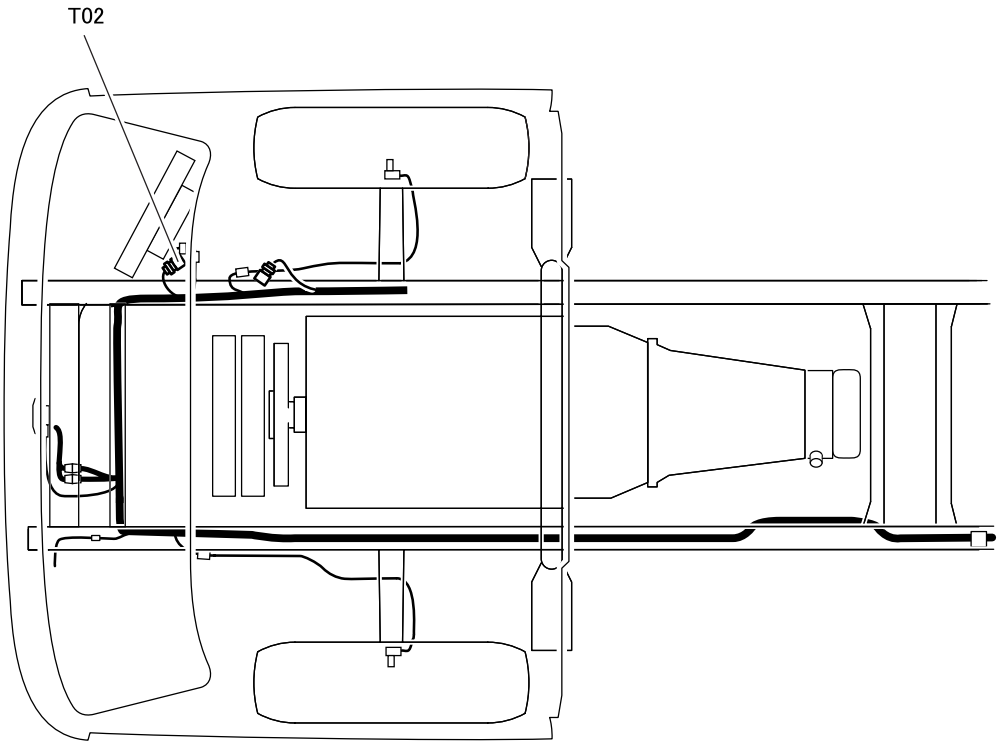

T02 Dual pressure switch

https://truckmanualshub.com/

U02

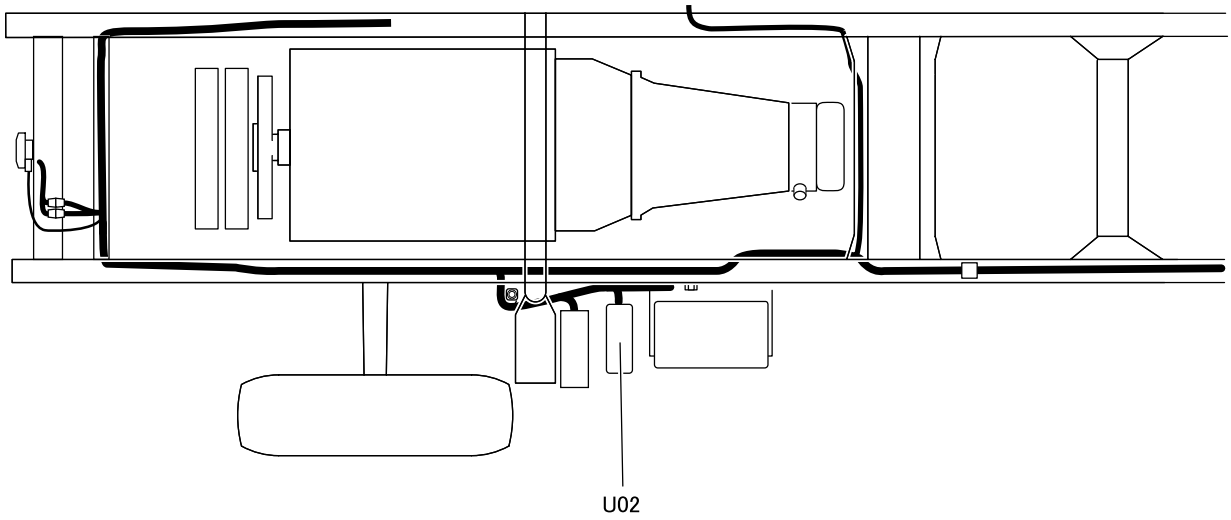

U02 High-current fuse box

https://truckmanualshub.com/

V01

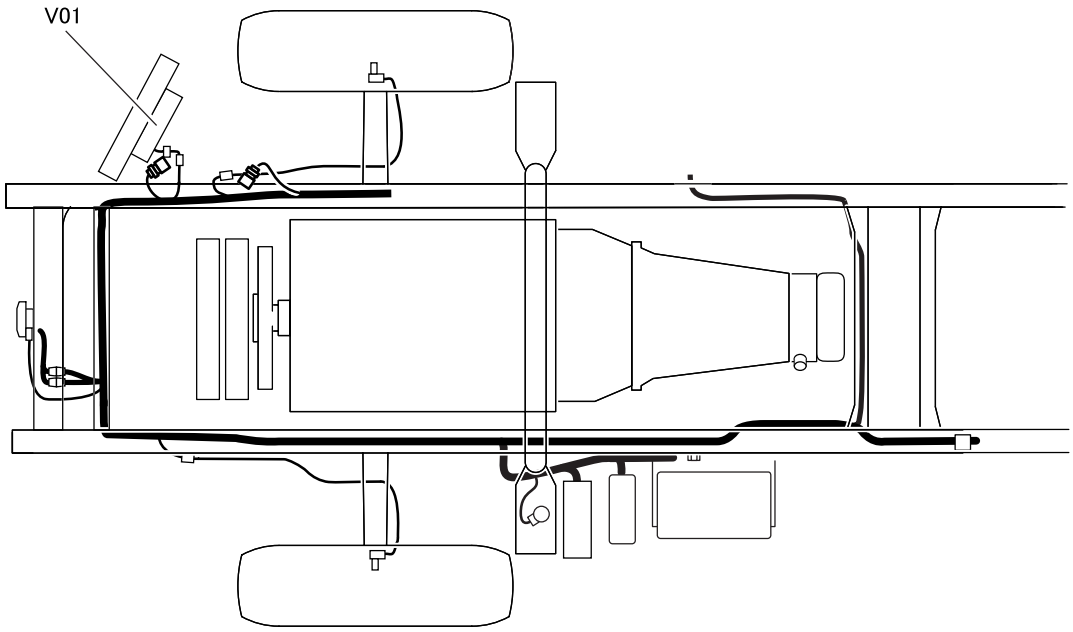

V01 Condenser fan motor

https://truckmanualshub.com/

INSTALLED LOCATIONS OF PARTS

W01 to 08

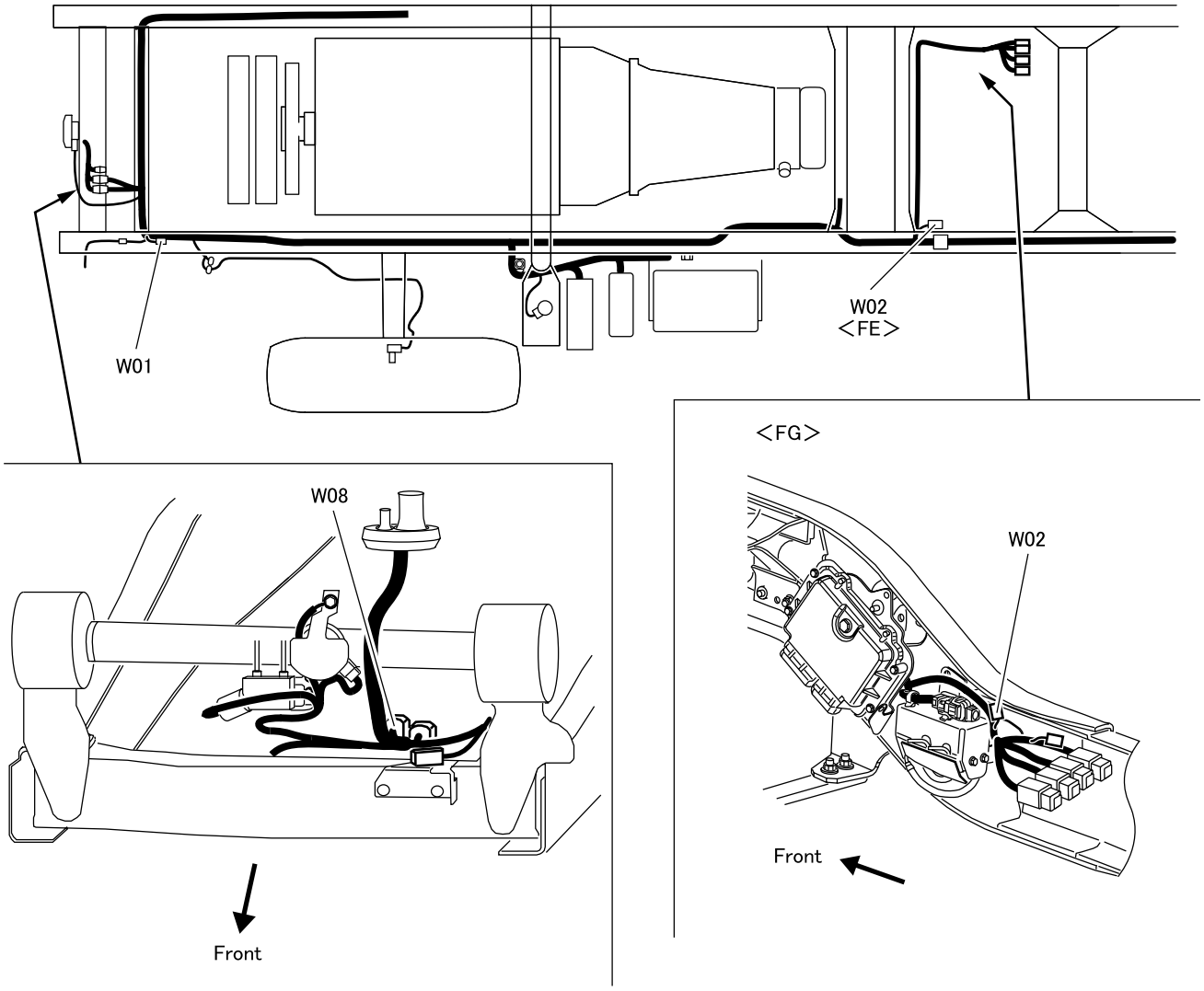

W01 Joint connector (CAN) <ABS>
W02 Joint connector (CAN) <DUONIC>
W08 Connection of cab harness and chassis harness
: [AB16A]

ABS : Anti-lock brake system
Indicate by connector type [ ].

https://truckmanualshub.com/

W20

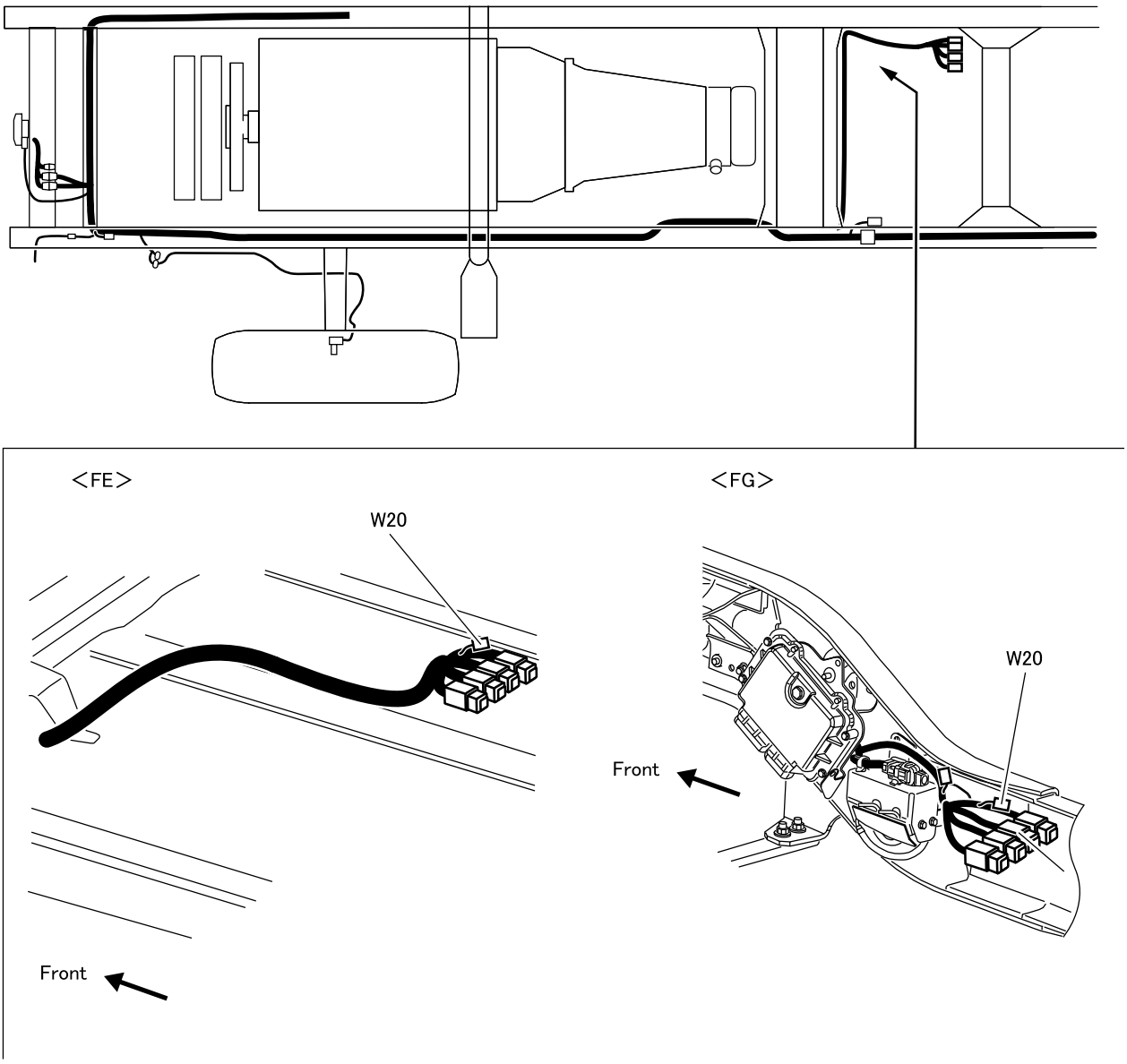

W20 Joint connector (CAN) <Engine control>

https://truckmanualshub.com/

INSTALLED LOCATION OF PARTS

[12] to [13] Chassis ground

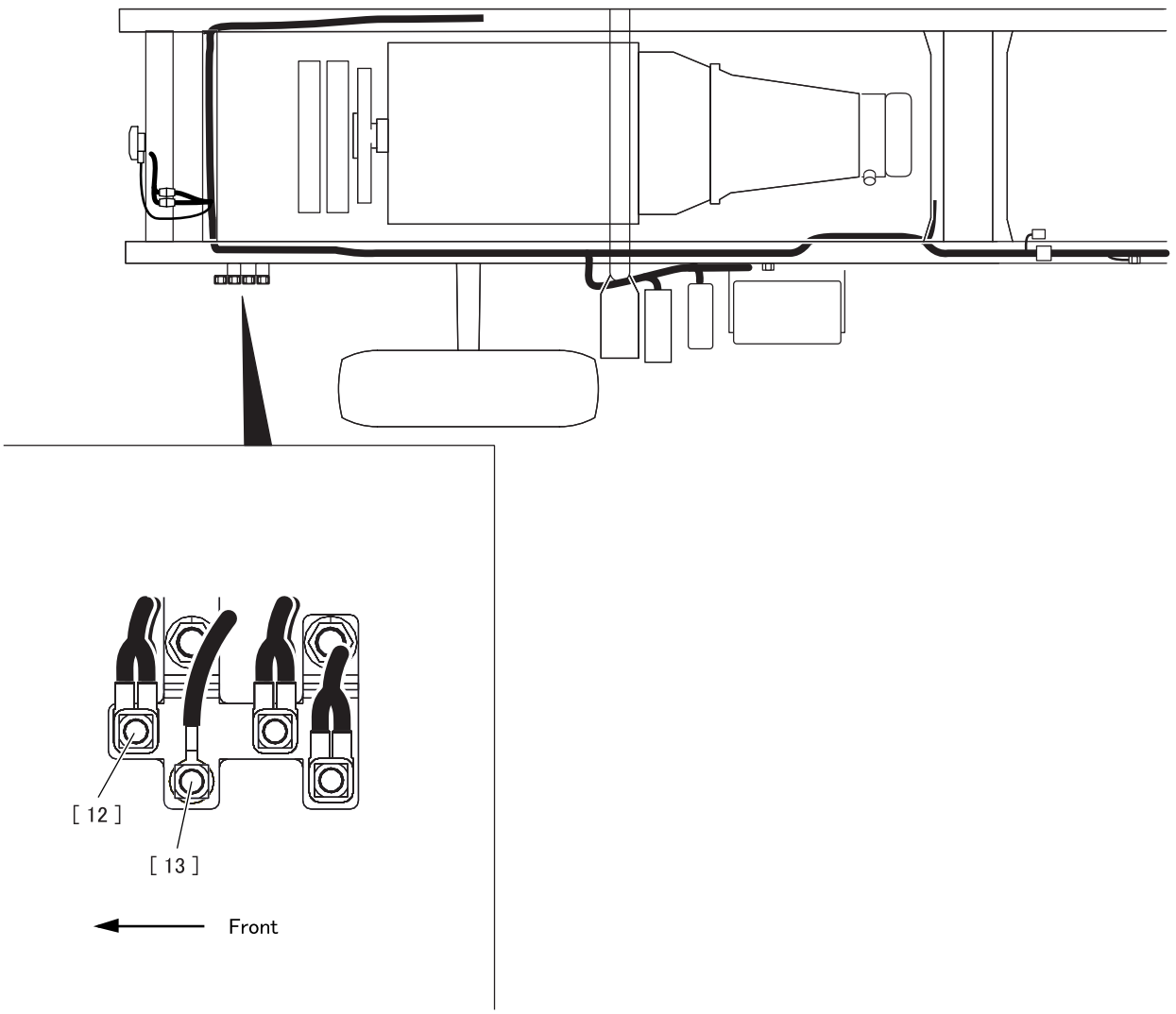

Location	Circuit No.	Wire diameter - wire color	Destination	Remarks
[12]	CFE1	1.25-B	Condenser fan motor	
[13]	EAB1	8-B	SAM	

SAM : Signal detect and actuation modules

https://truckmanualshub.com/

M E M O

https://truckmanualshub.com/

ELECTRICAL CIRCUIT DIAGRAM

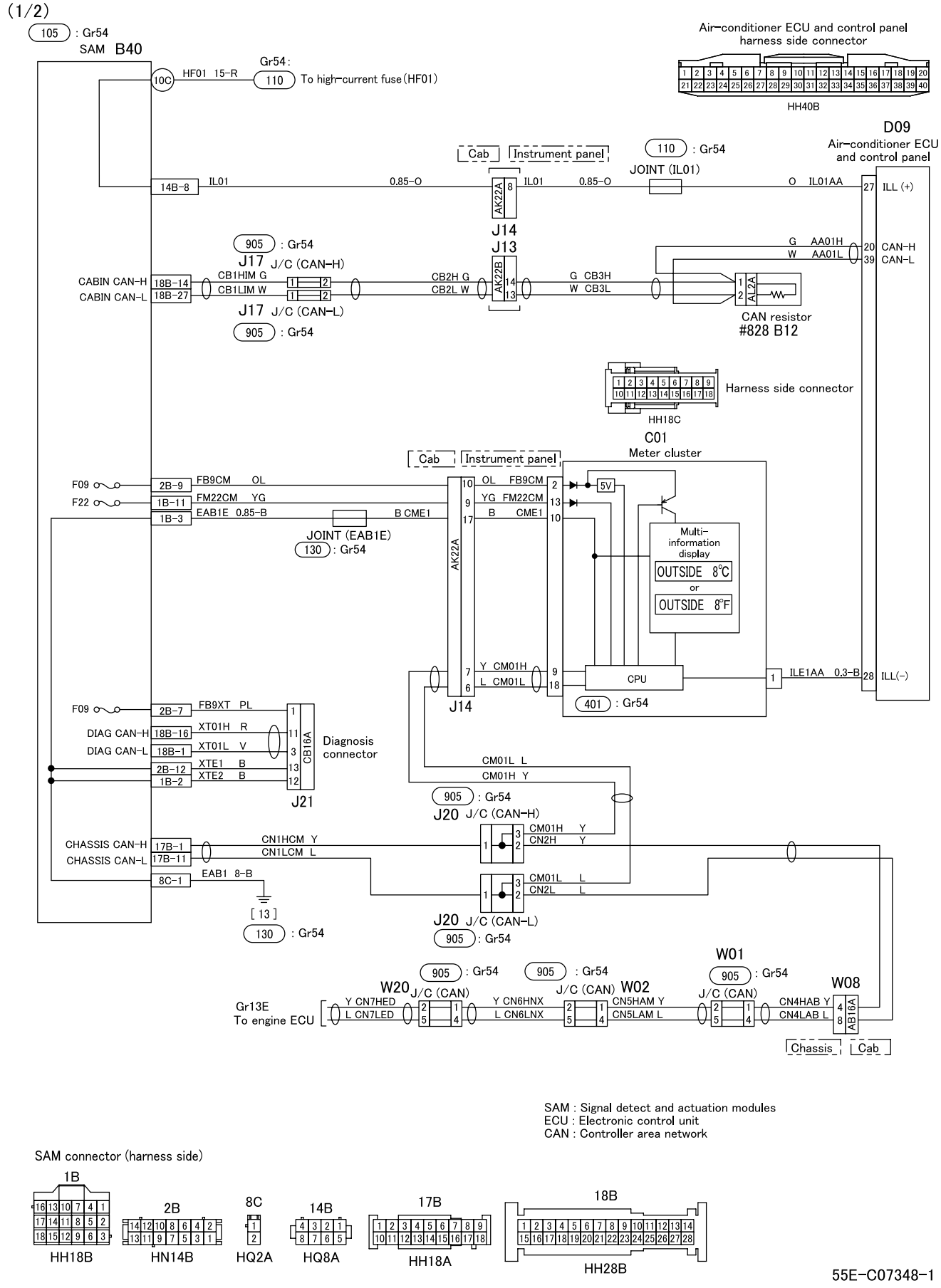

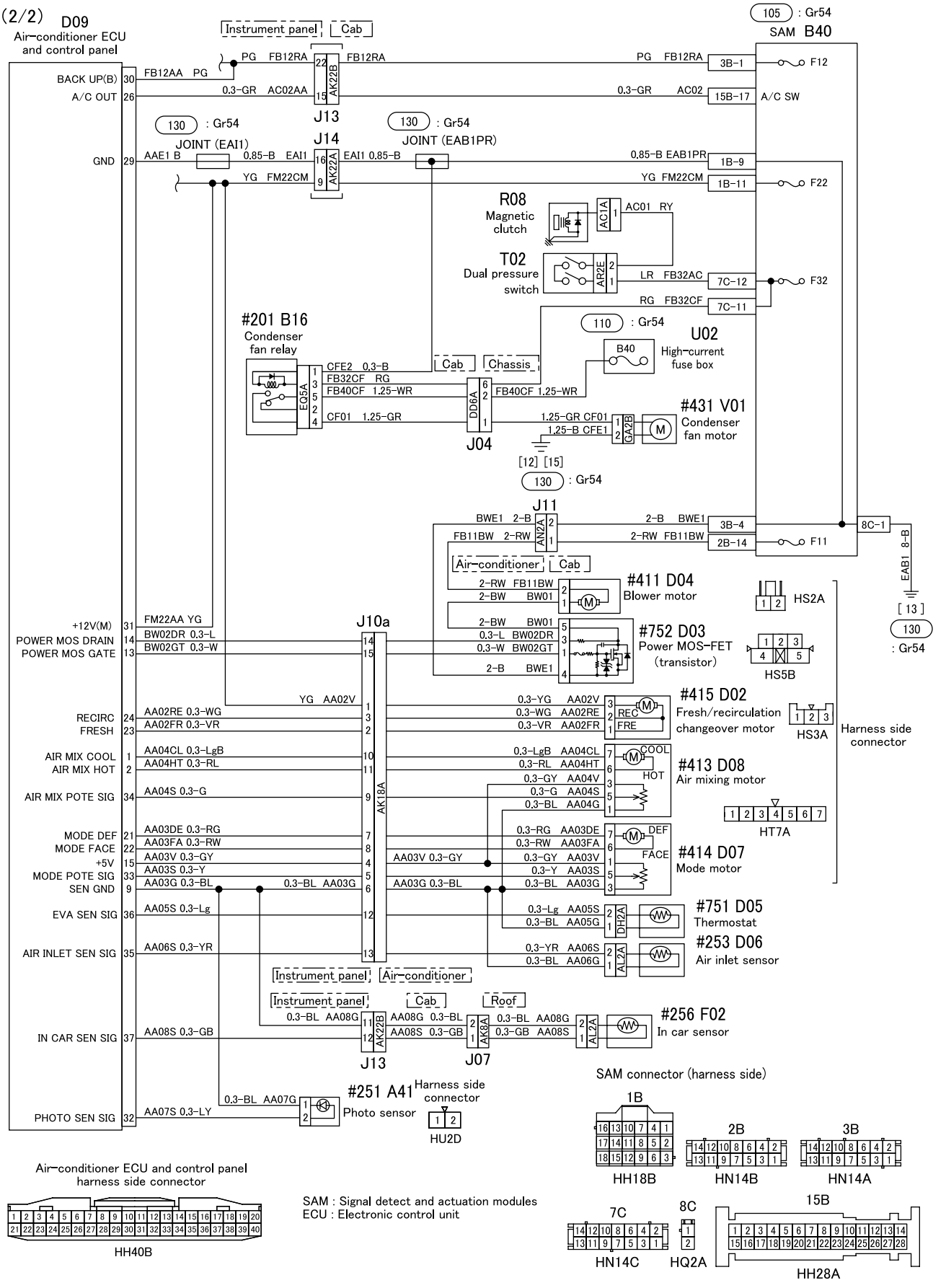
(2/2) D09
Air-conditioner ECU and control panel
Instrument panel
Cab
105 : Gr54
SAM B40
BACK UP(B) 30 FB12AA PG
A/C OUT 26 0.3-GR AC02AA
PG FB12RA
FB12RA
PG FB12RA 3B-1 F12
0.3-GR AC02 15B-17 A/C SW
J13
130 : Gr54
JOINT (EAI1)
130 : Gr54
JOINT (EAB1PR)
J14
GND 29 AAE1 B
0.85-B EAI1
EAI1 0.85-B
0.85-B EAB1PR 1B-9
YG FM22CM
YG FM22CM 1B-11 F22
R08
Magnetic clutch
AC01 RY
T02
Dual pressure switch
LR FB32AC 7C-12 F32
RG FB32CF 7C-11
#201 B16
Condenser fan relay
110 : Gr54
U02
High-current fuse box
B40
CFE2 0.3-B
FB32CF RG
FB40CF 1.25-WR
FB40CF 1.25-WR
CF01 1.25-GR
Cab
Chassis
#431 V01
Condenser fan motor
1.25-GR CF01
1.25-B CFE1
J04
[12] [15]
130 : Gr54
J11
BWE1 2-B
FB11BW 2-RW
2-B BWE1 3B-4
2-RW FB11BW 2B-14 F11
8C-1
EAB1 8-B
[13]
130 : Gr54
Air-conditioner
Cab
#411 D04
Blower motor
HS2A
2-RW FB11BW
2-BW BW01
+12V(M) 31 FM22AA YG
POWER MOS DRAIN 14 BW02DR 0.3-L
POWER MOS GATE 13 BW02GT 0.3-W
J10a
2-BW BW01
0.3-L BW02DR
0.3-W BW02GT
2-B BWE1
#752 D03
Power MOS-FET (transistor)
HS5B
YG AA02V
RECIRC 24 AA02RE 0.3-WG
FRESH 23 AA02FR 0.3-VR
0.3-YG AA02V
0.3-WG AA02RE
0.3-VR AA02FR
#415 D02
Fresh/recirculation changeover motor
HS3A
Harness side connector
AIR MIX COOL 1 AA04CL 0.3-LgB
AIR MIX HOT 2 AA04HT 0.3-RL
0.3-LgB AA04CL
0.3-RL AA04HT
#413 D08
Air mixing motor
AIR MIX POTE SIG 34 AA04S 0.3-G
0.3-GY AA04V
0.3-G AA04S
0.3-BL AA04G
HT7A
MODE DEF 21 AA03DE 0.3-RG
MODE FACE 22 AA03FA 0.3-RW
+5V 15 AA03V 0.3-GY
MODE POTE SIG 33 AA03S 0.3-Y
SEN GND 9 AA03G 0.3-BL
0.3-BL AA03G
AA03G 0.3-BL
0.3-RG AA03DE
0.3-RW AA03FA
AA03V 0.3-GY
0.3-GY AA03V
0.3-Y AA03S
0.3-BL AA03G
#414 D07
Mode motor
EVA SEN SIG 36 AA05S 0.3-Lg
0.3-Lg AA05S
0.3-BL AA05G
#751 D05
Thermostat
AIR INLET SEN SIG 35 AA06S 0.3-YR
0.3-YR AA06S
0.3-BL AA06G
#253 D06
Air inlet sensor
Instrument panel
Air-conditioner
Instrument panel
Cab
Roof
0.3-BL AA08G
AA08G 0.3-BL
0.3-BL AA08G
#256 F02
In car sensor
IN CAR SEN SIG 37 AA08S 0.3-GB
AA08S 0.3-GB
0.3-GB AA08S
J13
J07
SAM connector (harness side)
1B
2B
3B
HH18B
HN14B
HN14A
0.3-BL AA07G
#251 A41
Harness side connector
PHOTO SEN SIG 32 AA07S 0.3-LY
Photo sensor
HU2D
Air-conditioner ECU and control panel harness side connector
HH40B
SAM : Signal detect and actuation modules
ECU : Electronic control unit
7C
8C
15B
HN14C
HQ2A
HH28A

55E-C07348-2