https://truckmanualshub.com/

LG958L VS XCMG 5tons Wheel loader (LW500K&LW500KN&LW500FN&LW500KL&LW500F&LW500D&ZL50GN)

2015.2.12

https://truckmanualshub.com/

LW500KN

LW500D

LW500KL

LW500FN

LG958L

ZL50G

LW500F

LW500K

https://truckmanualshub.com/

Main parameters comparison

https://truckmanualshub.com/

Item	LG958L		LW500KN	LW500FN
Engine	WD10G220E21（T2）	BF6M1013（T2、T3）	WD10G220E23（T2）	SC9D220.2G2B1（T2）
Rated power(Kw)	162	169	162	162
Rated rotary speed（rpm）	2200	2200	2000	2000
Gearbox	ZF	ZF	Planetary gearbox	Planetary gearbox
Rated load（t）	5	5	5	5
Bucket capacity（m^3）	3	3	3	3
Dumping height（mm）	3120	2980	3090	3100
Dumping distance（mm）	1130	1330	1130	1200
Max. breakout force（KN）	180	180	170	162
Max. tractive force（KN）	150	155	165±5	160
Machine weight（t）	16.6	16.9	17.2	16.5
Total time（s）	≤11.3	≤11.3	≤11	≤11
Wheelbase	3200	3200	3300	2960
Turning radius	6039	6039	5925（center of tyre）	6950（outer edge of bucket）
Overall dimension	8079*3024*3382	8079*3024*3382	8225×3016×3515	8000×3016×3515
Steering angle（°）	38	38	38	38

https://truckmanualshub.com/

Item	LW500K	LW500KL	LW500F	LW500D	ZL50GN
Engine	WD615G220	WD10G220E23	WD615G220	WD10G220E23	WD10G220E23（T2）
Rated power(Kw)	162kw	162	162	162	162
Rated rotary speed（rpm）	2200	2000	2200	2000	2000
Gearbox	500K.2.1	Planetary	ZL40/50		Planetary
Rated load（t）	5	5	5	5	5
Bucket capacity（m³）	3	3	3	2.7	3
Dumping height（mm）	3090	3090	3100	3180	3090
Dumping distance（mm）		1130		1160	1130
Max. breakout force（KN）	170	170	158	150	170
Max. tractive force（KN）	165	165	158	150	145
Machine weight（t）	17.2	17.2	16.5	16.2	17.5
Total time（s）	11	11	9.9	≤11	≤11
Wheelbase	3300	3300	2900	2960	3300
Turning radius(center of tyre)	5900	5925	6920（outer edge of bucket）	6940（outer edge of bucket）	6400
Overall dimension	8185*3000*3485	8185*3000*3465	8010*3016*3350	7800*3016*3360	8180*3000*35108
Steering angle（°）	38	38	35		35

RELIABILITY IN ACTION

https://truckmanualshub.com/

Detailed configuration parameters

https://truckmanualshub.com/

LG958L configuration

Power	Weichai WD10G220E21
	DDE BF6M1013(T2)
	DDE BF6M1013(T3)
	Shangchai SC11CB220G2B1
Transmission	ZF gearbox, LG axle
Hydraulic system	pilot control single handle
Boom	Standard boom
Control valve	3-joint valve
Brake system	Dual brake pedal
Cab	Standard
	FOPS&ROPS
Cooling/heating system	A/C(2935000894)
	A/C(2935000985)
	A/C(2935001053)
Quicker coupler	Quicker coupler
Others	Start interlocking
	Engine tachometer
	Fuel tank lock
	Hose for inflating tyre
	Tiltable steering column
	Radio
	Rotating beacon

https://truckmanualshub.com/

LG958L

Item	Parameters	Item	Parameters
Engine brand	Deutz	Reverse gear III	0-23
Engine type	Inline, water cooling, direct injection, turbocharging	Min. turning radius(mm)	6036
Tyre size	23.5-25	Level through radius(mm)	6746
Overall dimension(mm)	8079*3024*3382	Gradeability(°)	30
Operating weight (kg)	16900	Outer width of tyre(mm)	2785
Curb weight(kg)	16835	Dumping angle(°)	-45
Wheelbase (mm)	3200	Max. dumping height(mm)	3120
Rated load(kg)	5000	Corresponding dumping distance(mm)	1130
Rated bucket capacity(m^3)	3.0	Min. ground clearance(mm)	457
Max. tractive force(KN)	155.0	Rated rotary speed(r/min)	2200
Max. breakout force(KN)	180.0	Cylinder number	6
Tipping load(KN)	110.0	Cylinder diameter/stroke(mm)	108/130
Forward gear I	0-6.5	Min. specific fuel consumption	≤210kg/Kw.h
Forward gear II	0-11.5	Max. torque(KN)	925N.m
Forward gear III	0-23	Torque converter type	Single stage, three component, single turbine
Forward gear IV	0-38	Converter ratio	2.55
Reverse gear I	0-6.5	Oil cooling type	Circulating water cooling
Reverse gear II	0-11.5	Gearbox	Fixed shaft power

https://truckmanualshub.com/

LG958L

Item	Parameters	Item	Parameters
Shit pressure(MPa)	1.4-1.6	Fuel oil(L)	300
Main drive	spiral bevel gear, single reduction	Hydraulic oil(L)	210
Front tyre pressure(MPa)	0.39±0.01	Gear oil (main drive and hub reduction)(L)	65
Rear tyre pressure(MPa)	0.33±0.01	Engine oil(L)	19
Travel brake	Air over oil, disc brake	Transmission oil(L)	35
Brake pressure(MPa)	0.784	Braking fluid(L)	4
Park brake	Internal expanding shoe brake		
Steering system	Articulated full hydraulic with load sense		
Steering angle(°)	38		
Working pressure(MPa)	17.5		
Lifting time(s)	≤6.4		
Dumping time(s)	≤1.3		
Fall time(s)	≤3.6		
Total time(s)	≤11.3		

https://truckmanualshub.com/

LW500K

Item	Parameters	Item	Parameters
Engine brand	Weichai	Reverse I (km/h)	16.5
Engine mode	WD615G220	Lifting time(s)	6
Engine type	Inline, water cooling, four stroke, six cylinder, turbocharging	Dumping time(s)	1
Engine power(kw)	162	Fall time(s)	4
Rated rotary speed(r/min)	2200	Total time(s)	11
Operating weight (kg)	17200	Torque converter	500k.2.1
The distance when at Max. dumping height(mm)	1130	Gearbox	500k.2.1
Max. breakout force(KN)	170	Axle	500k.3
Max. tractive force(KN)	165	Hydraulic pump	CBG93100/0010-YF
Steering angle(°)	38	Pump displacement(ml/r)	160
Wheelbase (mm)	3300	Working pressure(MPa)	18
Wheel tread(mm)	2200	Steering gear	BZZ3-125
Tyre size	23.5-25	Steering gear	JHP2080
Inflation pressure(Mpa)	0.34/0.29	Steering gear displacement(ml/r)	80
Min. ground clearance(mm)	440	Steering system pressure(MPa)	16
Min. tuning radius(outer edge of tyre)(mm)	5900mm	Overall dimension(length, width, height)(mm)	8185*3000*3465
Min. tuning radius(outer edge of bucket)(mm)	6910mm		
Forward I (km/h)	11.5		
Forward II (km/h)	38		

RELIABILITY IN ACTION

https://truckmanualshub.com/

LW500KL

Item	Parameters	Item	Parameters
Engine brand	Weichai	Bucket cylinder-diameter*stroke(mm)	Ø180X585
Engine mode	WD615G23	Steering system pressure(MPa)	16
Engine type	Inline, water cooling, four stroke, six cylinder, direct injection	Steering cylinder-diameter*stroke(mm)	Ø90X375
Engine power(kw)/rotary speed(r/min)	162/2000	Travel brake	Air over oil, disc brake
Min. specific fuel consumption(g/kw.h)	198	Park brake/emergency brake	Soft-axle control, internal expanding shoe brake
Max. torque(N.m)	900	Fuel oil tank(L)	295L
Torque converter	Single stage, two phases, four component	Cooling system(L)	45L
Gearbox	Planetary power shift	Crankcase(L)	19L
Torque ratio	4.32	Torque converter-gearbox(L)	45L
I gear(forward/reverse)(km/h)	0-11.5/0-16.5	Axle (L)	27L
II gear(forward/reverse)(km/h)	0-36	Hydraulic system(L)	200L
Axle	Rear axle can swing by 12°	Rated load(t)	5
Tyre size	23.5-25-16PR	Bucket capacity(m^3)	3
Front tyre pressure	0.30—0.32MPa	Dumping height(mm)	3090
Rear tyre pressure	0.27—0.29MPa	Dumping distance(mm)	1130
Working pressure(MPa)	17.5	Lifting height(mm)	5254
Boom cylinder-diameter*stroke(mm)	Ø160X840	Bucket width(mm)	3000

https://truckmanualshub.com/

LW500KL

Item	Parameters
Max. breakout force(N.m)	170
Max. tractive force(KN)	175
Articulated angle(°)	±38
Overall dimension(mm)	8185×3000×3465
Operating weight(t)	17.2
Lifting time(s)	6
Total time(s)	11
Wheelbase(mm)	3300
Wheel tread(mm)	2250
Gradeability(°)	30
Min. tuning radius(center of tyre)(mm)	5925
Min. tuning radius(outer edge of bucket)(mm)	6910

https://truckmanualshub.com/

LW500KN

Item	Parameters
Engine type	WD10G220E23
Rated power(KW)	162
Rated rotary speed(r/min)	2000
Rated load(t)	5
Bucket capacity(m^3)	3
Dumping height(mm)	3090
Dumping distance(mm)	1130
Max. breakout force(N.m)	170
Lifting time(s)	≤6
Total time(s)	≤11
Max. tractive force(KN)	165±5
Min. turning radius(outer edge of bucket)(mm)	6910
Max. running speed(KM/h)	38
Operating weight(t)	17.2
Overall dimension(mm)	8225×3016×3515
Wheel base(mm)	3300

RELIABILITY IN ACTION

https://truckmanualshub.com/

LW500F

Item	Parameters	Item	Parameters
Engine brand	Weichai	Gearbox	ZL40/50
Engine mode	WD615G220	Axle	ZL50L
Engine power(kw)	162	Forward gear I (km/h)	11.5
Rated rotary speed(r/min)	2200	Forward gear II (km/h)	38
Displacement(L)	9.726	Reverse gear I (km/h)	16.5
Operating weight (kg)	16500	Tyre size	23.5-25
Max. breakout force(KN)	158	Min. steering radius(outer edge of bucket)(mm)	6920
Max. tractive force(KN)	156	Lifting time(s)	5.6
Steering angle(°)	35	Dumping time(s)	1
Wheelbase (mm)	2900	Fall time(s)	3.3
The dumping distance when stay at Max. height (mm)	1274	Total time(s)	9.9
Bucket capacity(m^3)	3	Overall dimension(mm)	8010*3016*3350
Rated load(t)	5	Steering pump type	CBGJ2080
Max. dumping height(mm)	3100		
Torque converter	YJSW315		

RELIABILITY IN ACTION

https://truckmanualshub.com/

LW500FN

Item	Parameters
Engine type	WD10G220E23
Rated power(KW)	162
Rated rotary speed(r/min)	2000
Rated load(t)	5
Bucket capacity(m^3)	3
Dumping height(mm)	3090
Dumping distance(mm)	1130
Lifting time(s)	≤6
Total time(s)	≤11
Max. tractive force(KN)	165±5
Min. turning radius(outer edge of bucket)(mm)	6910
Max. running speed(KM/h)	38
Overall dimension(mm)	8225×3016×3515
Wheel base(mm)	3300

https://truckmanualshub.com/

LW500D

Item	Parameters
Engine type	WD10G220E23
Rated power(KW)	162
Rated rotary speed(r/min)	2000
Rated load(t)	5
Bucket capacity(m^3)	2.7
Dumping height(mm)	3180
Dumping distance(mm)	1160
Lifting time(s)	≤6
Total time(s)	≤11
Max. breakout force(N.m)	150
Max. tractive force(KN)	150
Min. turning radius(outer edge of bucket)(mm)	6940
Max. running speed(KM/h)	38
Overall dimension(mm)	7800×3016×3360
Wheel base(mm)	2960
Operating weight(t)	16.2

RELIABILITY IN ACTION

https://truckmanualshub.com/

ZL50GN

Item	Parameters
Engine type	WD10G220E23
Rated power(KW)	162
Rated rotary speed(r/min)	2000
Rated load(t)	5
Bucket capacity(m^3)	3
Dumping height(mm)	3090
Dumping distance(mm)	1130
Lifting time(s)	≤6
Total time(s)	≤11
Max. breakout force(N.m)	170
Max. tractive force(KN)	165±5
Min. turning radius(outer edge of bucket)(mm)	7300
Max. running speed(KM/h)	38
Gradeability (°)	30
Max. steering angle(°)	35
Overall dimension(mm)	8165×3016×3485
Wheel base(mm)	3300
Operating weight(t)	17.5

https://truckmanualshub.com/

Feature Contrast

https://truckmanualshub.com/

LG958L

◆ DDE emissions conform to the stage III , large output torque, excellent fuel economy, remarkable performance.

◆Powerful, reliable and reasonable matching components, long service life.

◆High quality filter ensure the quality of the engine air intake, easy to maintain

◆Optional high temperature cooling module, which can ensure safety in temperatures of up to 50 ℃.

◆ Pilot control, fixed axis type electro-hydraulic control gearbox, convenient to operate.

◆Large diameter bucket cylinders, strong breakout force, superior performance, safe and reliable.

◆Increased bucket angle, high charge ratio.

◆Hydraulic line use the double seal of tape and o-rings, use PVC to protect high-pressure oil pipeline, that solve the problem of the hydraulic line leak.

https://truckmanualshub.com/

Information comes from XCMG advertisement on internet

LW500K

◆A powerful engine with cat 3306B technology powers the LW500K wheel loader, The engine features compact structure, reasonable layout, unparalleled performance , electric startup and electric shutdown.WD615G220 and Cummins QSB6.7 engine are optional.

◆A wind guide cover with wind channel construction is used to have a better airflow for greater heat dissipation efficiency, which reduces heat balance temperature, allowing the machine to meet higher working temperature requirement.

◆Equipped with hang chi 4WG180 transmission or ZF 4WG200 electronic countershaft transmission, featuring electro hydraulic control and auto gear shifting switch(KD function).

◆Arvin Meritor drive axles with disc brakes ,front fixed and rear oscillating around the center pilot, help assure four wheel ground contact for optimum traction and stability.

◆Unique power take-off makes power transmission efficient and reliable.

◆The articulation center is designed on the center of wheelbase to have an overlapping track or front and rear wheels for less tyre wear.

◆Dual row tapered bearing effectively distributes the load in horizontal or vertical direction.

◆The overall structural strengthen is greatly improved via finite element analysis of stress, Stress concentration is avoided and parts to be under heavy load been strengthened, so that the loader frame can adapt to demanding heavy-duty applications. The unique structural form of the rear frame provides perfect accessibility for maintenance.

https://truckmanualshub.com/

Information comes from XCMG advertisement on internet

LW500KL

Strong structure

◆Heavy load for the rocky condition; the working device and front and rear frame feature thick board of high strength, reasonable distribution and strong carrying capacity.

◆The large rock bucket with capacity of 3.0m³ is improved in terms of the work efficiency and adaptation. The bucket teeth adopt the structure of tooth holder and sleeve. The cutting blade and bucket edge are equipped with protection device, featuring excellent abrasion resistance and shock resistance.

◆The thickness of the front frame lug and baseboard is 70mm, and the thickness of the up and down articulated board is 30mm. The machine is superior among the products of same kind in terms of the structural strength and carrying capacity.

◆ Large distance between up and down articulated boards, and large maintenance space. Resolve the load horizontally and vertically efficiently. Easier to access, the machine has more carrying capacity and larger opening space.

◆Each part passes the scientific analysis with professional stress analysis software to ensure that the reliability and carrying capacity of the structural parts could reach the design standard and meet the requirement of the tough condition.

Excellent performance

◆The strong breakout force of 17 ton and strong traction of 17.5 ton ensure that the machine could adapt to various tough condition.

◆Reliable operation: with the long wheelbase of 3300mm and long machine body of 8185mm, the machine is ahead in the industry in terms of the operation reliability.

◆Quick action: the total time of three devices is only 10.3s, and the speed is 11.5 km/hour during the operation.

◆Strong adaptation to the work site: centered design, small turning radius. No speed difference between front and rear wheels. The tyre is not easily worn.

◆**Experienced drive parts**

◆Famous brand engine; The machine adopts the latest planetary transmission with XCMG multiple unique technologies, featuring high reliability and strong adaptation to heavy load; the reinforced drive shaft provides more reliable drive; the powertrain assembly made by XCMG could provide the powerful guarantee for the machine to operate efficiently and reliably.

◆With large power and high torque conservation, the famous brand engine features strong power and adaption.

◆The transmission of 2BS315A (D) is superior in the efficiency delivery and overload adaption.

◆The drive shaft flange adopts DIN and SAE standard to increase the bolt circle diameter, and adopts the self-locking nut for connection and fixing, providing more reliable drive.

◆The reinforced drive axle features large carrying capacity, high reliability and convenient maintenance.

◆With the special tyre face design, glue stock formula and strong body structure, the tyre of domestic famous brand features excellent heat-resisting and abrasion resistance performance, adapting to the mine, construction sites, and hydropower.

https://truckmanualshub.com/

Information comes from XCMG advertisement on internet

LW500KL

Comfortable and safe driving space

◆Provide the best operation environment for the user with the design concept of the people oriented.
◆The luxurious cab features large space and wide visibility.
◆Elegant adjustable instrument panel and comfortable operation.
◆Electronic control planetary box, air conditioner, radio with MP3 function and speaker could be equipped.
◆The operating floor takes the measure of punching antiskid. The all-round handrails ensure the safe operation. With the anti-skidding groove, the ladder step features wide ladder face, guaranteeing the safety operation, and easily getting on and off.

Convenient maintenance

◆Convenient and practical maintenance guarantees the service life of each part to improve the usage economics of the machine.
◆The hood adopts the large side door of sliding upward, featuring large opening angle, and more convenient for access. Optimized brake caliper structure, more convenient for the maintenance.
◆The remote oil and water drainage and centered lubrication provide more convenience.
◆The hydraulic oil tank of XCMG LW500KL loader adopts independent oil return chamber to overcome the issue of hydraulic system cleaning or replacement. The oil enters the oil tank through the filter. It is not necessary to drain the oil when replacing the filter. The service and maintenance is fast and all-round.

Excellent capacity

◆Scientific design: XCMG technical innovation ranks top in China, adopting the computer design of CAD, CAM Pro/E and manufacturing system, and establishes the national R&D Center. The product design level leads in China.
◆Professional production: introduce in the international advanced production technology, own the advanced manufacturing equipments of processing center and robot welding line, and establish the machine assembly flow line of the first level in China to provide the reliable guarantee for the product quality.
◆Round detection: both the part and the whole machine must be detected and tested strictly in the production procedure.

Two breakthroughs in the industry:

◆Inner breakthrough: multiple great improvements in the common weakness of the transmission, revolutionary breakthrough; the service life of key positions is greatly improved, leaking in the products of the same kind.
◆External breakthrough: start the vehicle manufacturing technology first in China, and adopt the all-metal mould pressing covering part, keep the color of the new vehicle through the electrophoretic coating. Luxury decoration in the cab provides comfort for the operation.

https://truckmanualshub.com/

LW500KN

Information comes from XCMG advertisement on internet

Structure, heavy work ability

◆3.3 m long wheelbase, 17.2 t very large machine.

◆ 17 tons of strong digging up force, industry-leading.

◆16.5 tons of strong traction, calmly cope with heavy work.

More Reliable

◆ Bucket using high strength steel plate, wear resistance and impact resistance performance is increased by more than 30%, longer service life ;

◆ Key articulated point lubricating oil way optimization, no drilling hole in pin and the strength and service life of has increased more than one time, industry-leading ;

◆ Hydraulic tubing using high precision steel pipe, argon arc welding, surface coating, making service life long .

◆ Whole vehicle circuit adopts imported water-proof and dust-proof sealing plug.

◆International brand hose, connectors, longer life. the use of special materials, seals, low temperature resistance, resistance to high pressure.

Energy saving more prominent

◆Optimize the structure of hydraulic line, reduce energy loss in the hydraulic oil flow in the tubing and heat, saving energy and reducing consumption ;

◆XCMG proprietary technology of energy-saving transmission system .

◆Double pump confluence of hydraulic system, energy saving, high efficiency.

Cab more comfortable

◆ New luxurious cab, good sealing, space large, and wide field of vision ;

◆A new digital portfolio dashboard, clear and beautiful; Steering machine can be adjusted forward and reverse, comfortable in operation ;

◆The cab and hood using noise reduction processing, reducing 6db.

◆Full cover exquisite interiors, luxury adjustable suspension seat, floor board good sealing performance.

◆Equipped with radio and good speaker.

Convenient to maintain

◆Engine hood opened upward, integrated fuse box, ball valve on air reservoir for inflating tyres;

◆Pressure testing points leading out to one place.

https://truckmanualshub.com/

Information comes from XCMG advertisement on internet

LW500F

Excellent performance

◆Large strength: the strong digging force of 15.8 ton and strong traction of 15.6 ton ensure it

◆LW500F is XCMG popular wheel loader of high efficiency with more than 10 years' experience. The performance, efficiency, structural strength, service life, daily maintenance and operation condition are upgraded all round. With the two breakthroughs of driving medium and covering part, the machine is ahead of other product of the same kind essentially. The machine is especially adapted to the working conditions of aggregate, earthmoving, coal. The shoveling work efficiency ranks top in the dust.

Excellent performance

◆Large strength: the strong digging force of 15.8 ton and strong traction of 15.6 ton ensure that the machine adapts to the various tough condition.

◆Long dumping distance: super long dumping distance of 1274mm guarantees enough operation space.

◆Excellent wheelbase: proper wheelbase of 2900mm, outstanding site adaption and operation reliability.

◆Good ventilation: optimize the ventilation order of hydraulic oil and cooling water. The water cooling of the transmission oil settles issue of the high temperature which is common problem in the industry.

High efficiency

◆Quick action: the total time of three devices is only 9.9s, leading in the industry.

◆Fast speed: the machine speed is 11.5 km/hour during the operation, featuring rapid shoveling.

◆Flexible steering: small turning radius; load sensing steering, flexible and efficient.

◆Sufficient power: dual-pump combination; the machine utilizes the power sufficiently, saves the energy, and features high efficiency.

https://truckmanualshub.com/

Information comes from XCMG advertisement on internet

LW500FN

Higher reliability

◆rear frame adopt high strength steel plate, higher carrying ability.
◆bucket adopt high strength steel plate，service life can be extended to double time.
◆equipped with connector that can prevent water and dust
◆equipped with good material sealing, can work at low tep. and high pressure
◆prevent- respirator is used to improve cleanliness of whole system, extend parts service life by 10%.

More suitable for work

◆larger force：optimized hydraulic system, higher driving force, more suitable for work.
◆short wheelbase, turning radius is small, suitable for site, more stable.
◆optimized transmission system, higher traveling speed，working efficiency are improved by 15%

More energy saving

◆energy-saving low speed engine，XCMG patent torque converter, special gearbox，energy-saving .
◆Optimized cooling system，reduce engine speed, hydraulic and transmission system tem.
◆hydraulic system pipes layout are optimized.
◆Dual-pump flowing together, power is utilized efficiently, energy saving.

More comfortable

◆new cab, large space，wide visual field.
◆new digital instrument panel, can be adjusted front and rear，comfortable.
◆cab and engine hood are design to decrease noise by 6dB.
◆luxury trim，good sealing, multi-function media player.

More convenient to maintain

◆adopt new structure frame engine hood, can be opened from top, large space to repair.
◆rotating fuel tank can be opened to repair torque converter and gearbox.
◆centralized pressure test，easy to test pressure.
◆new fuse box, centralized control, easy to repair.

https://truckmanualshub.com/

Information comes from XCMG advertisement on internet

LW500D

◆Adopts double rock arms、horizontal type boom cylinder，high Spading force，wide visual field；

◆low speed engine 、XCMG patent transmission system、dual pump flow tegother，reasonable match，high efficiency energy saving；

◆structure component is light ensuring energy-saving；short-wheelbase，small steering radius， flexible to operate；

◆ new prevent- respirator is used to improve cleanliness of whole system, extend parts service life ;

◆new dessert filter, better performance, protect engine well, can work in dust conditions

◆working device can fall to level , higher efficiency, low labour intensity

https://truckmanualshub.com/

Information comes from XCMG advertisement on internet

ZL50GN

Strong structure

◆3.3m super length wheelbase,17.5t operating weight, super performance.

◆16.5t driving force, can work in difference working conditions.

Higher reliability

◆ bucket adopt high strength steel plate，service life is longer than before.

◆pins lubrication is optimized, no hole on pin, service life can be extended to double time.

◆new structure steel pipe and new manufacturing method to extend service life.

◆new material prevent- respirator is used to improve cleanliness of whole system, extend parts service life .

◆new dessert filter, better performance, protect engine well, can work in dust conditions.

◆More comfortable

◆adopt single handle pilot control hydraulic system, it is light to operate.

◆new cab, good sealing, large space，wide visual field, cooling system is good.

◆new digital instrument panel, can be adjusted front and rear，comfortable.

◆ working device can be put level automatically, higher efficiency.

◆cab and engine hood are design to decrease noise by 6dB.

◆ new luxury trim, good sealing, also frame to put tools.

More convenient to maintain

◆new structure frame engine hood, can be opened from top, large space to repair.

◆test port of systems are extended by pipes, convenient to test system pressure.

◆ there is ball valve on air storage tank, convenient to inflat tire and clean when work .

◆ new fuse box, centralized control, easy to repair.

https://truckmanualshub.com/

Engine Contrast

https://truckmanualshub.com/

Weichai Deutz-- Features

Low noise ,low fuel consumption , high durability , rare malfunction:

- ◆ Modular design, compact structure, high commonality , easy to maintain
- ◆ Low exhaust emission pollution meeting the stringent emission regulations of Europe/North America
- ◆ Precisely manufacture with reliable material ,main parts perform reliable
- ◆ Performance is stable and reliable, trouble-free intervals is up to 6500 hours
- ◆ Excellent durability, overhaul period is up to 20000 hours
- ◆ Monomer type cylinder head with small size , good caft , strong interchangeability
- ◆ Each system configuration and parts designed with enough security and reliability coefficient
- ◆ Commonality , standardization and serial parts make it easy to batch and the cost is low

https://truckmanualshub.com/

DDE-- Features

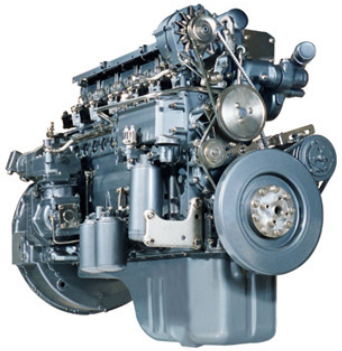

- Meticulous application and most oil-saving place of engine always meets common working condition of complete vehicle
- Strengthen and injecting pressure of unit pump structure is twice as high as mechanical pump; power take-off is efficient and fuel economy is better
- Modular design, less complete vehicle parts, CAN line timely control of engine status and higher reliability
- Apply international advanced 7 –level design and manufacturing precision, inbuilt unit pump structure, single row gear train, crankcase high-mounted forced ring-cooling technique and echelon pre-heating technique; lifespan of engine can achieve 800000 kilometers.
- Unit pump is put inside the crankcase so that crankcase strengthen is high, not easy to break, unit pump is not easy to be damaged and high pressure oil pipe doesn't break
- Many severe environment such as high-temperature, cold, highland, high-humidity and dusty wind are considered at the beginning of design and it can easily work under severe working condition.
- Unique unit pump oil supply system and has few requirements for fuel quality so that it can guarantee reliability while adapting different oil quality in different areas.
- Low noise with 1decibel lower than same product and can achieve standard without any supplementary methods.
- Provide international standard service based on DEUTZ and Volvo global service platform
- Apply one pump per cylinder structure so that unit pump can be changed independently when there is failure. Low maintenance cost and damage of one unit pump will not affect working in short time.
- All maintaining points are on one side leading to short –time maintenance and low maintenance cost

https://truckmanualshub.com/

Information comes from XCMG advertisement on internet

Cummins- serial B Features

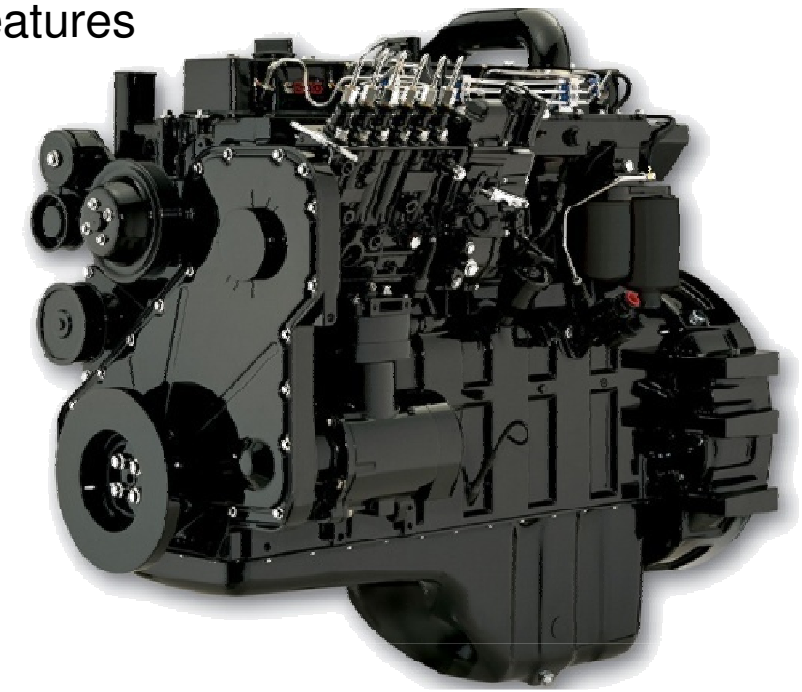

- ◆Originate from the United States excellent advanced design and manufacturing which makes it s fuel consumption have 20% lower than other congeneric Product
- ◆Its low idling makes the engine much perfect with the excellent power due to the special design of the wastegate.
- ◆Excellent reliability the integrated design of the cylinder block and cylinder head make sure that no oil and water leak, the amount o f the parts is 40% less than other congeneric Product
- ◆Platform and the cylinder liner of honing design In perfect geometric structure effectively prevent the oil leakage
- ◆Meet the emission regulations EURO Ⅱ
- ◆Comprehensive maintenance cost is more than other congeneric Product.
- ◆starting motor and accumulator needs to maintain more frequently than another engine

https://truckmanualshub.com/

Details Contrast

https://truckmanualshub.com/

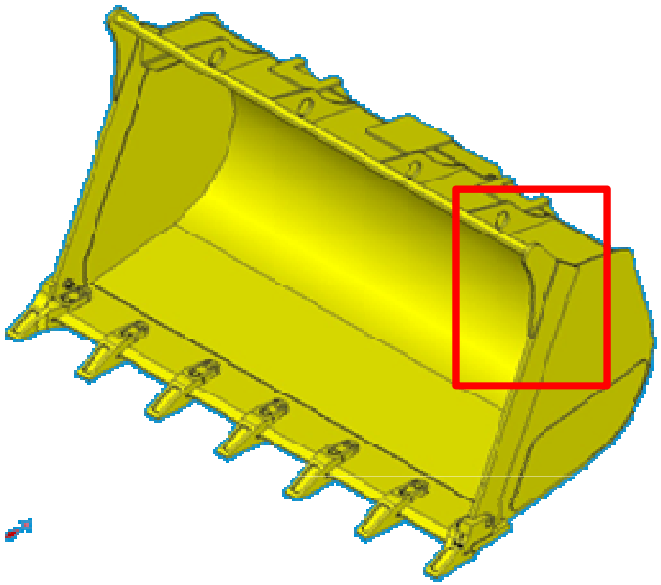

LG958L

LW500K / LW500KL

LG958L add one connecting plate on the edge of bucket, stronger and contributed to loading more materials.

https://truckmanualshub.com/

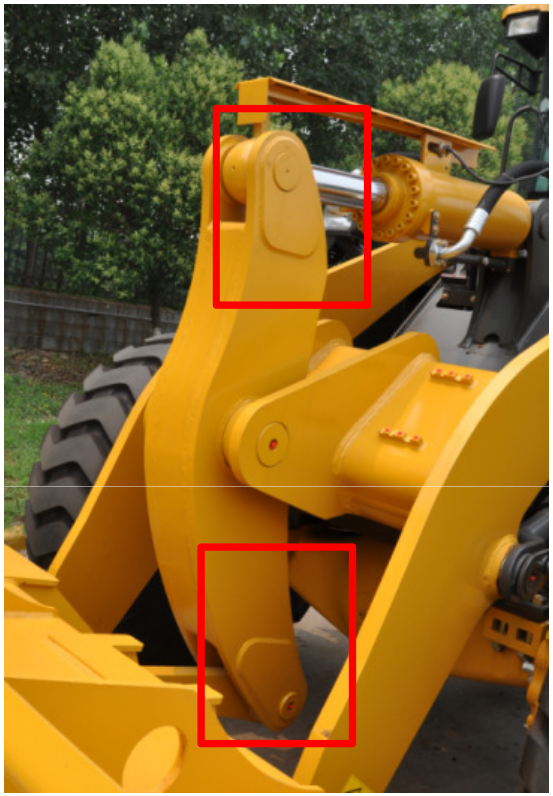

LG958L

LW500K / LW500KL

LG958L Optimize on region of stress concentration to improve bearing capacity of boom.

https://truckmanualshub.com/

LG958L

LW500K / LW500KL

The engine hood of LG958L have a big opening angle, and the back also can be opened, furthermore LG958L have damping material.

https://truckmanualshub.com/

LG958L

LW500K / LW500KL

LG958L apply stepping instrument panel, clear and accurate. The products XCMG apply pointer instrument panel, and rocker switch are arranged under the steering wheel, which is not convenient to operate.

https://truckmanualshub.com/

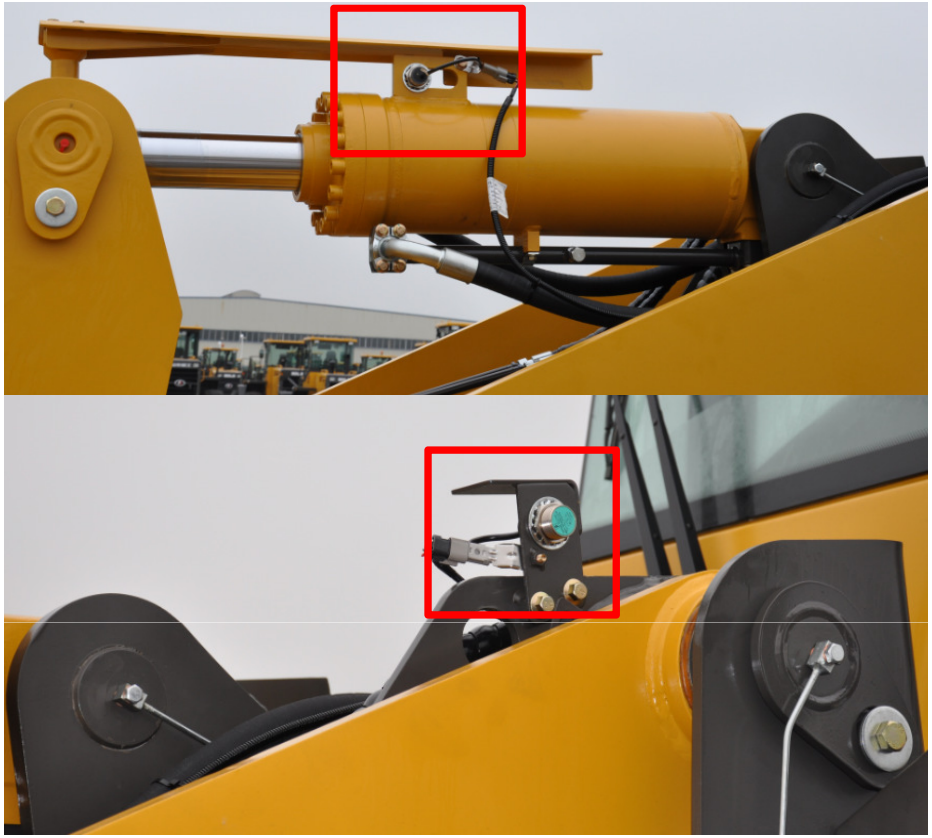

LG958L

LW500K / LW500KL

LG958L have the function of auto lay down and lifting limit, but LW500K and LW500KL don’t have.

https://truckmanualshub.com/

LG958L

LW500K / LW500KL

LG958L not only have headlamp on the back of engine hood but also have rotation caution light on the top of cab, which have good lighting effect and high security.

https://truckmanualshub.com/

LG958L

LW500KL

Air condition compressor of LW500KL is placed on the top of engine, pipelines are messy and it’s not easy to add refrigerating fluid.

https://truckmanualshub.com/

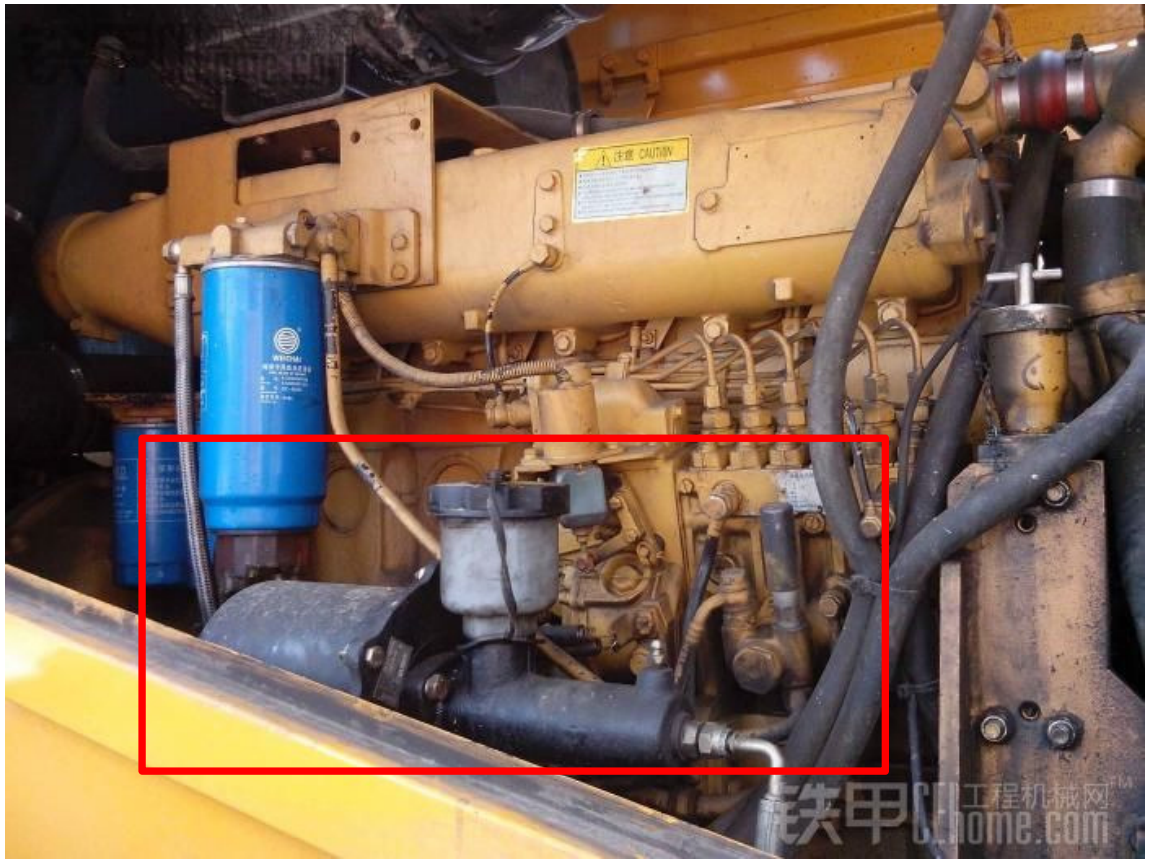

LW500KL

The booster pump is placed on the side of engine, which is not safe. That of LG958L is placed under the ladder, which is more safe and easy to add brake fluid.

https://truckmanualshub.com/

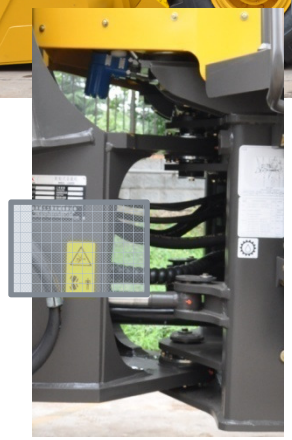

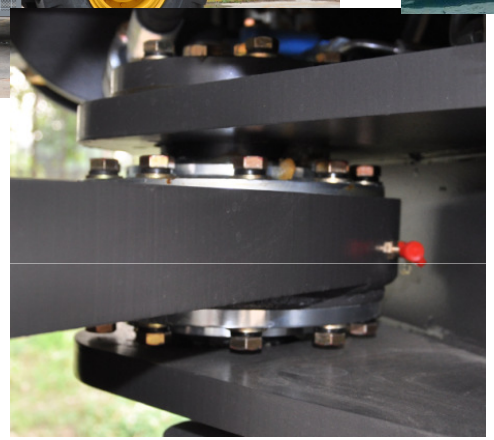

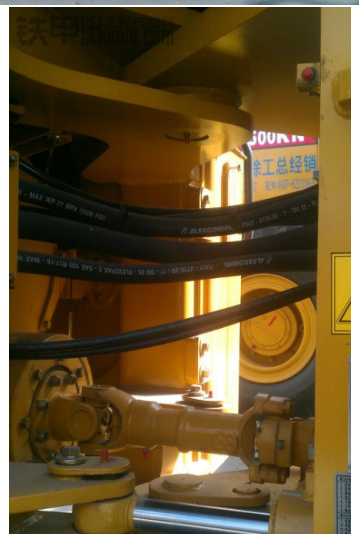

LG958L

◆LG958L adopts load sensing full hydraulic steering system.

◆Hinge point is at center of two wheels，distance between up and low hinge points is increased, adopts tapered roller bearing(TRB),better sealing ，more stable.

LW500KN

LW500KN adopts double pumps flow together steering system, hinge point is at front, and it is not as stable as LG958L.

https://truckmanualshub.com/

LG958L

LG958L adopts pilot control and equipped with 3-joint valve, easy and light to operate.

LW500KN

LW500KN is mechanical operation without the third joint. Easy to fatigue.

https://truckmanualshub.com/

LG958L

LG958L With functions of bucket automatic flat and lifting arm position limit， easy and simple to handle.

LW500KN

LW500KN has no automatic flat and lifting limit function ,it is not convenient to operate, low labor efficiency.

https://truckmanualshub.com/

LG958L

LG958L equipped with GRAMMER seat，can be adjusted at 6 directions with vibration damping，with seat belt，improve comfort and safety greatly.

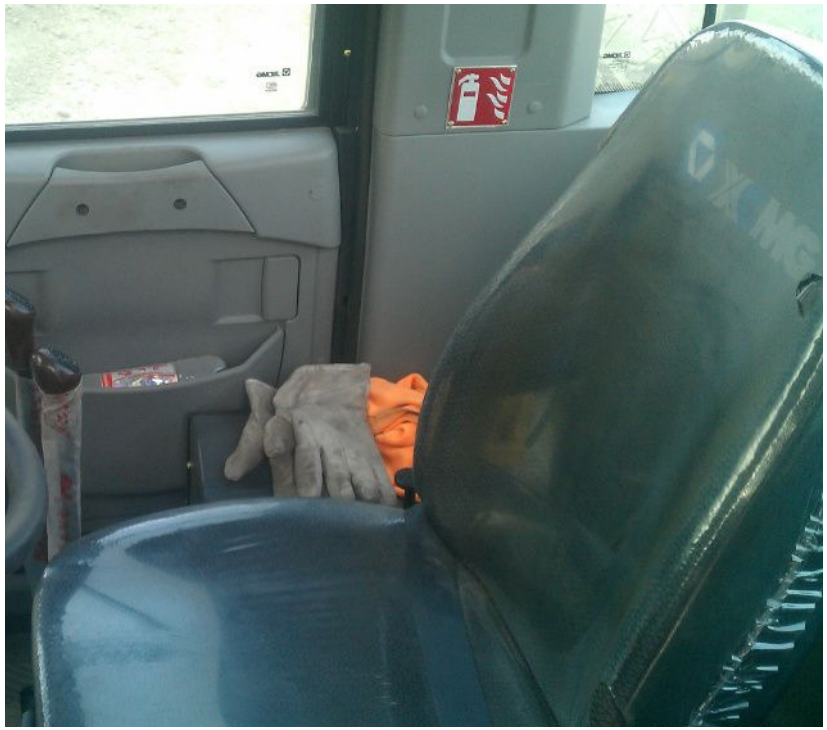

LW500KN

LW500KN seats is not as good as GRAMMER, vibration damping is not good.

https://truckmanualshub.com/

LG958L

LW500KN / FN

LG958L adopting digital stepping instrument panel, HMI is very good, faults rate is low and it is reliable and easy to read.

LW500KN / FN The instrument panel is not as clear as LG958L, and the rocker arm switch is under the steering wheel, not convenient to operate the switch.

https://truckmanualshub.com/

LG958L

LG958L engine hood can be opened very large from side , and there is sponge to damping noise inside the door. It is convenient to repair and maintain with low noise.

LW500KN / LW500FN

LW500KN / FN side door can be opened very small, and there is no sponge to damping noise.

https://truckmanualshub.com/

LG958L

LW500F

LW958L engine hood can be opened larger than LW500F and there is a pair of working lights on engine hood.

https://truckmanualshub.com/

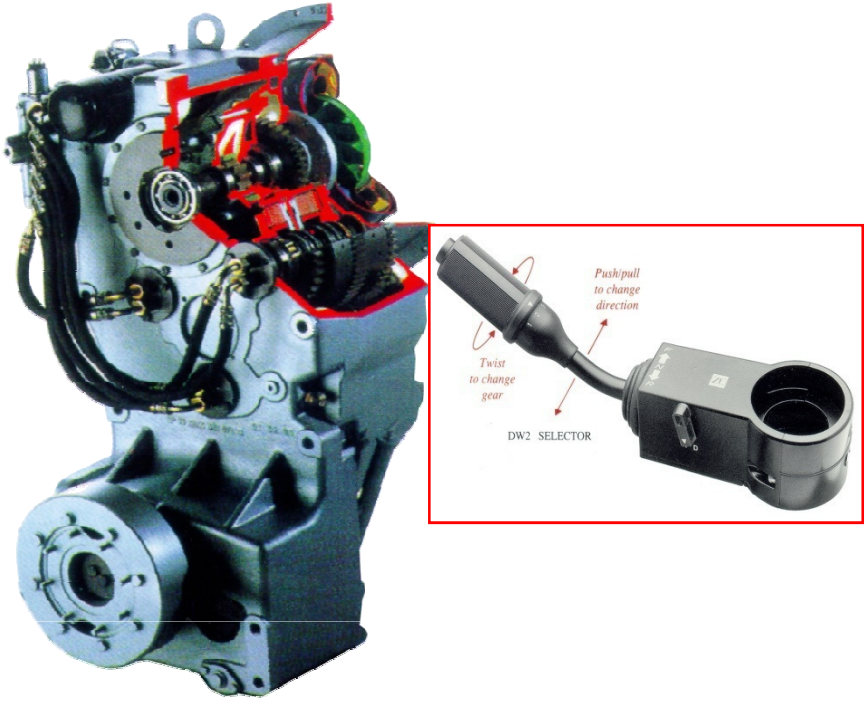

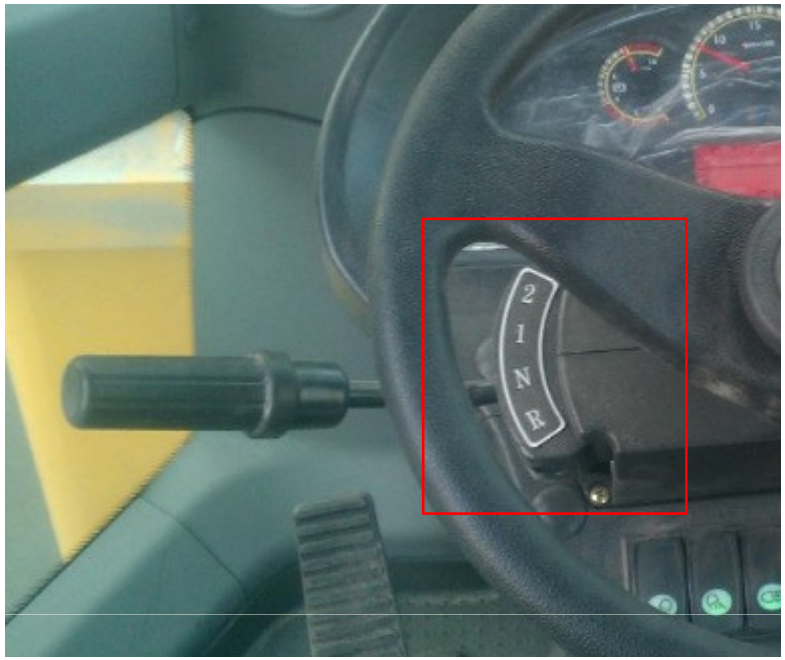

LG958L

LG958L equipped with ZF gearbox with 4 forward gears and 3 reverse gears, and there is KD function ensuring smooth gear shift.

LW500KN / LW500FN

LW500KN and LW500FN are planetary transmission, Two forward gears and one reverse gear.

https://truckmanualshub.com/

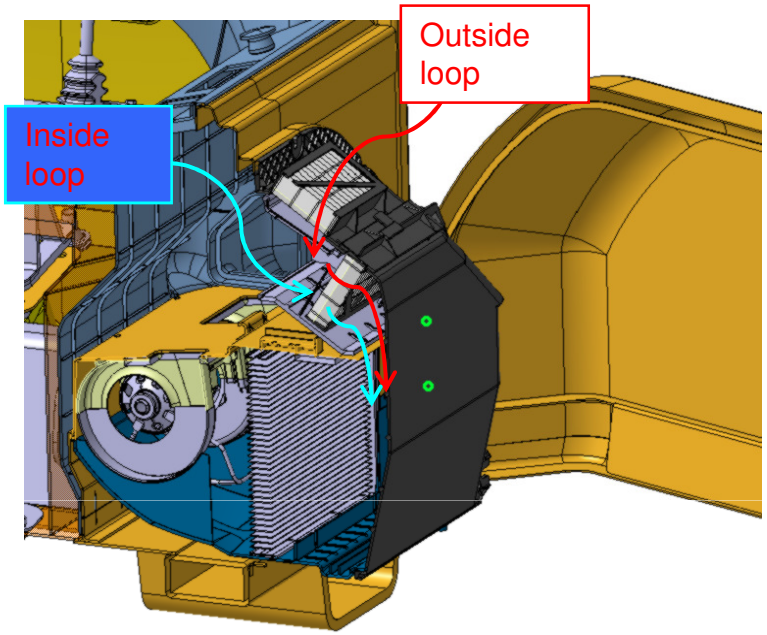

LG958L

Equipped with air conditioning and warming machine, very comfortable while working in the cab, no fear cold and hot.

LW500FN

Simple inside the cab, no air conditioning, not convenient and not comfortable while working in hot environment.

https://truckmanualshub.com/

LG958L

The fuel tank of LG958L is under the rear frame behind, used as one part of the balance weight, which reduced the machine weight.
Fuel scale has been changed to round one ,embedded inside ,prevent from bumping, low failure rate.

LW500 FN

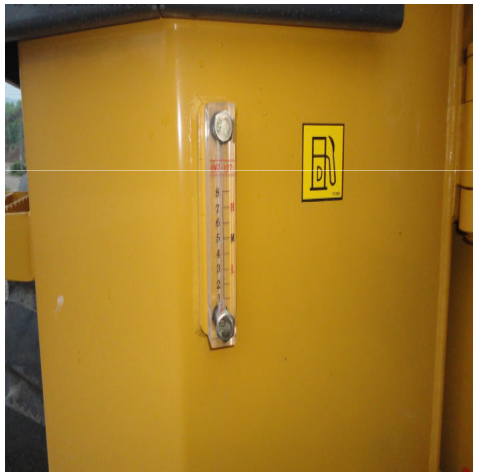

The fuel tank and hydraulic tank of LW500 FN are beside the machine, causing big machine weight ;
Fuel and hydraulic oil is at outside of the tank, which is easily be bumped and easily leak.

https://truckmanualshub.com/

LW500FN extends the pressure test port that convenient to test pressure at one point. But LG958L doesn’t have this.

https://truckmanualshub.com/

LG958L

LW500FN

LG958L has two more work lights than LW500FN at rear of cab, and lights on engine hood is larger than that of LW500FN.

https://truckmanualshub.com/

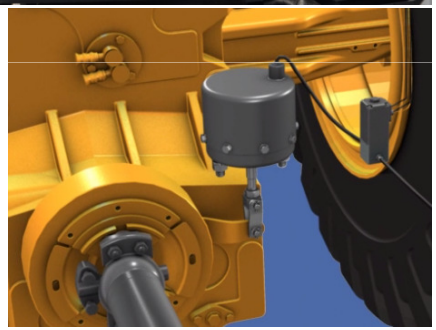

LG958L

LG958L parking brake adopts ele-hydraulic control , reliable and convenient.

LW500FN

LW500 parking brake adopts mechanical operating, it is not convenient.

https://truckmanualshub.com/

LG958L

LW500D

LG958L adopts single rock arm，LW500D adopts double rock arm, horizontal type boom cylinder.

https://truckmanualshub.com/

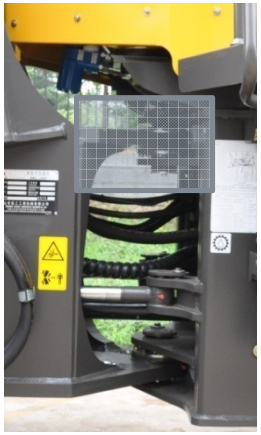

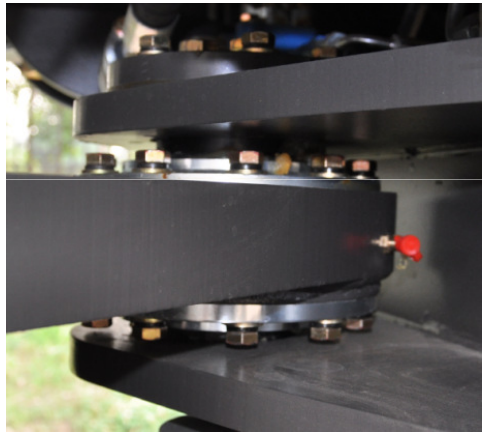

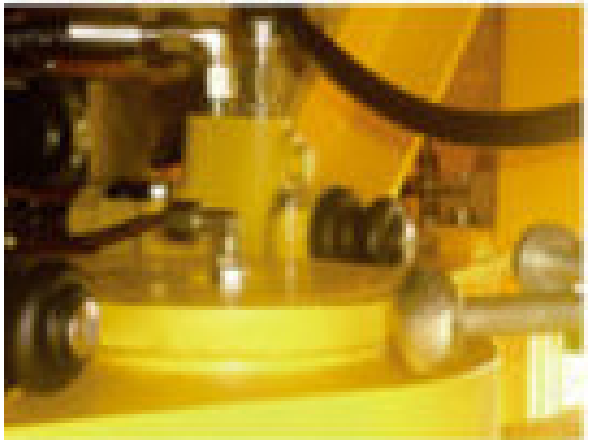

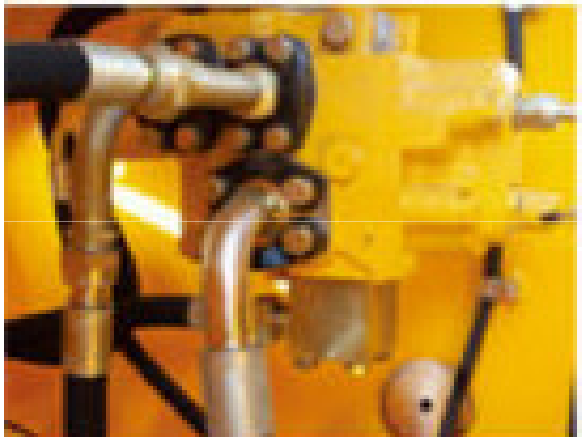

◆**LG958L**adopts load sensing full hydraulic steering system.

◆Hinge point is at center of two wheels，distance between up and low hinge point is increased,
adopts tapered roller bearing(TRB),better sealing ， more stable.

ZL50GN adopts Flow amplification steering system, low resistance, easy to operate.

https://truckmanualshub.com/

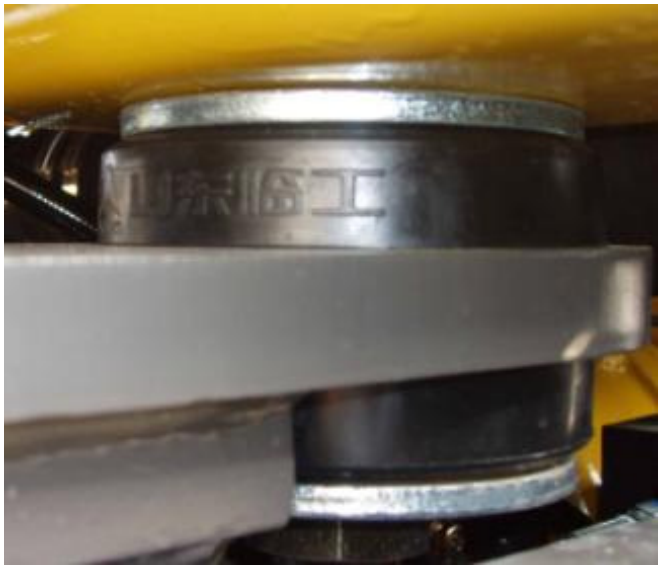

LG958L

Engine and cab are connected to frame by vibration absorber，which reduce vibration and noise.

ZL50GN

Engine are connected to frame by dual-direction vibration absorber rubber，reduce noise and fatigue.

https://truckmanualshub.com/

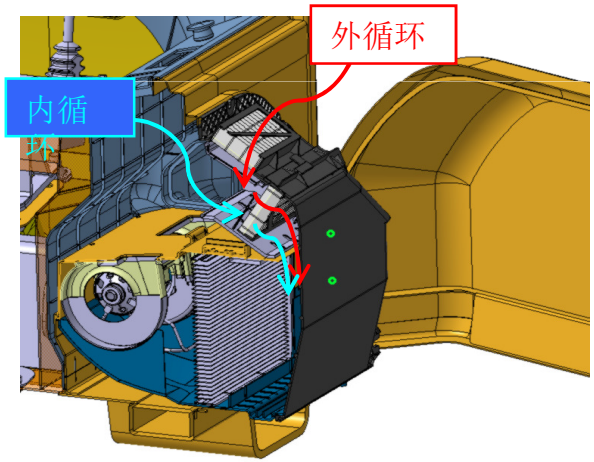

LG958L

ZL50GN

Both of them are pilot control，equipped with cooling and heating A/C，but LG958L A/C has inner and outside air loop, and the filter element can be replaced easily.

https://truckmanualshub.com/

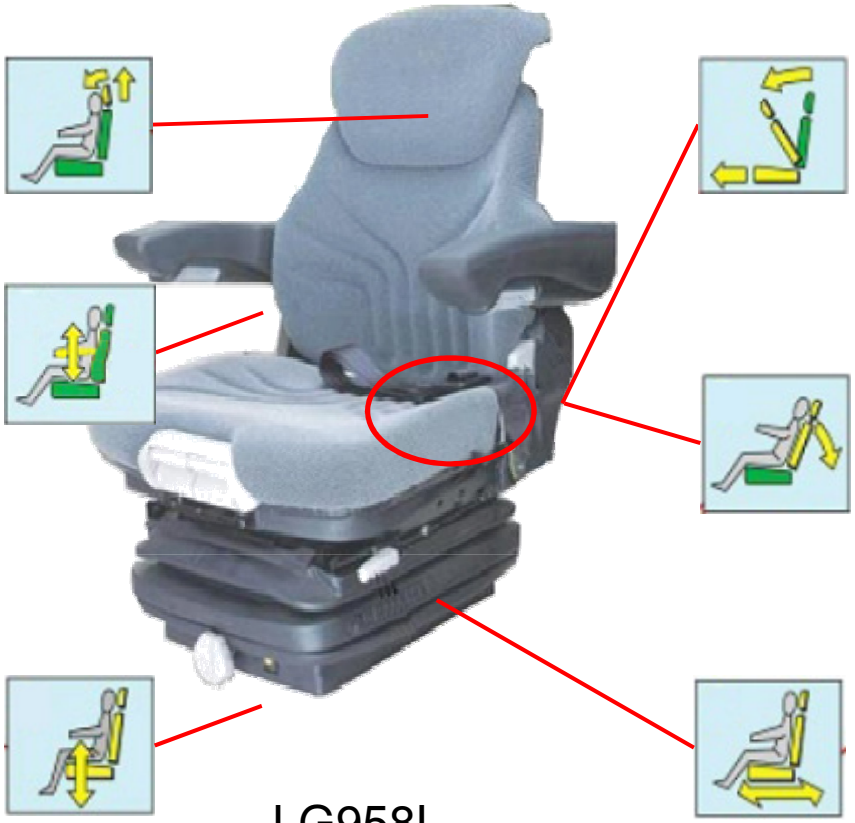

LG958L

LG958L equipped with GRAMMER seat，can be adjusted at 6 directions with vibration damping，seat belt，improve comfort and safety greatly.

ZL50GN

ZL50GN seat without head cushion，it is not as comfort as LG958L.

https://truckmanualshub.com/

LG958L

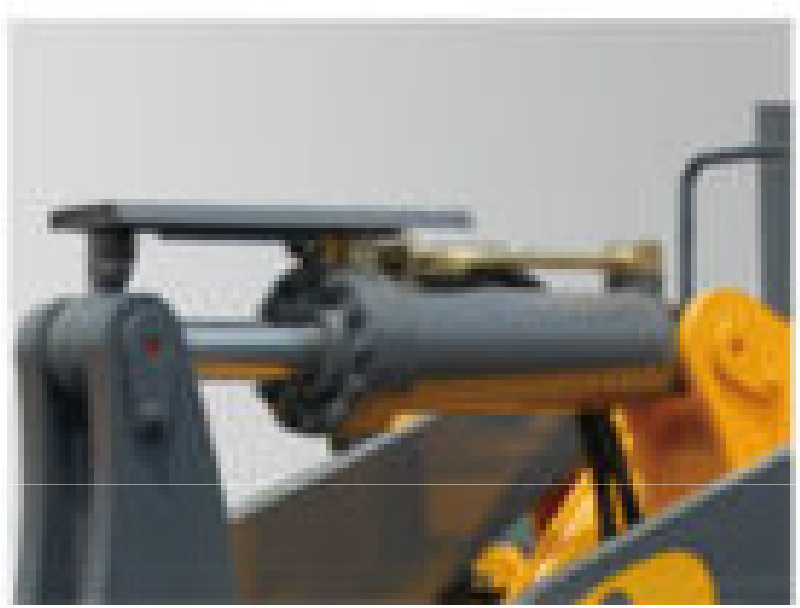

ZL50GN

Both of them has the function that make bucket level automatically, but LG958L also can limit the arm to lift too high.

https://truckmanualshub.com/

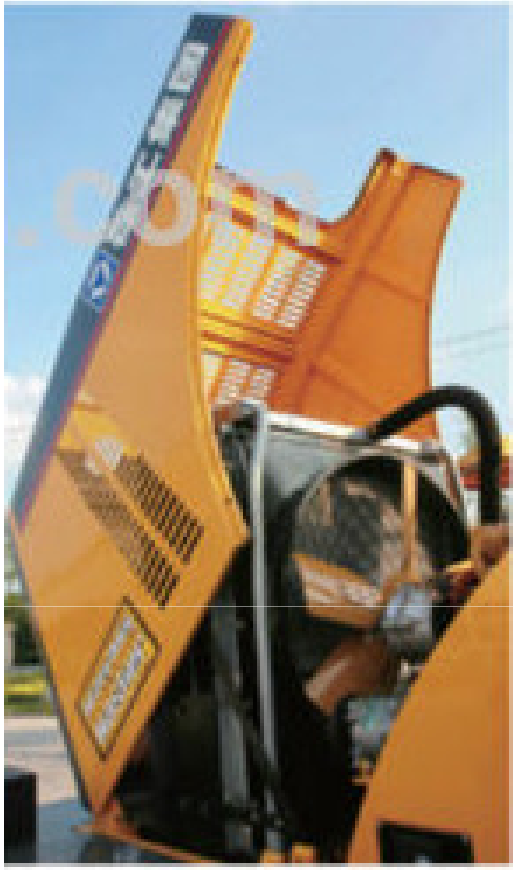

LG958L engine hood can be opened from side， open size is larger than LW500;there are sound-absorbing sponge inside hood, convenient to repair and maintain, low noise.

ZL50GN engine hood can be rotate open as figure show, open size is larger but without sound-absorbing sponge

https://truckmanualshub.com/

LG958L

ZL50GN

LG958L has two more working lights than ZL50GN on rear part of hood, it will be more bright when working at night.

https://truckmanualshub.com/

LG958L fuel tank is at bottom of tail part of vehicle, which work as balance weight, reducing operating weight. Fuel leveler is circle and can avoid be broken, low fault rate.

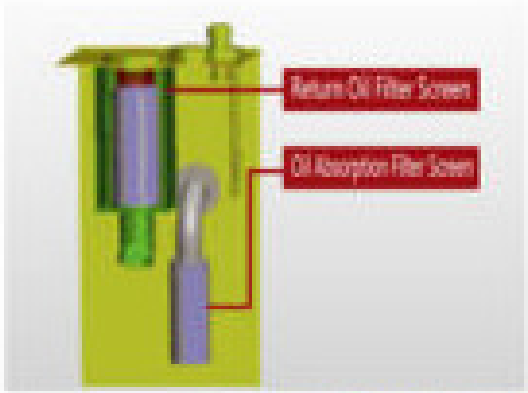

ZL50GN fuel tank and hydraulic oil tank are arranged at two side of vehicle. Fuel leveler and recharge port are also at two side, convenient to recharge fuel and oil, also easy to be broken.

https://truckmanualshub.com/

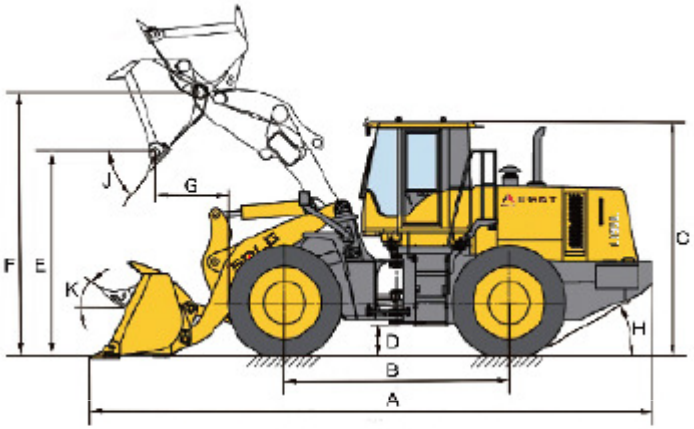

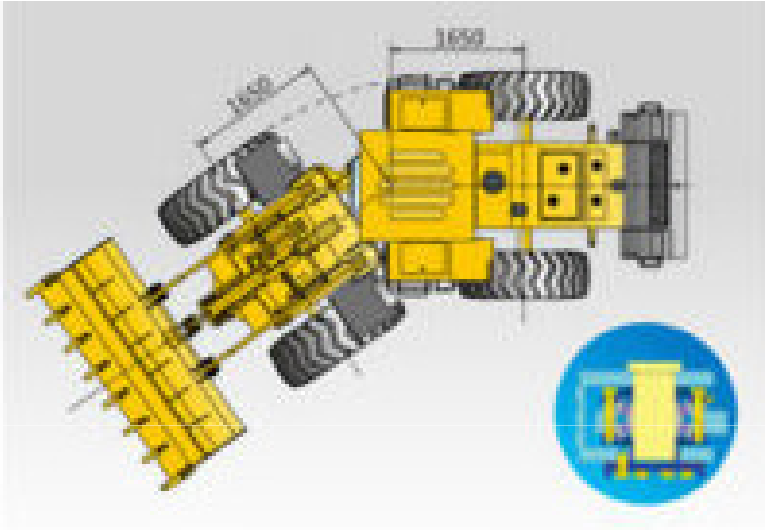

LG958L

ZL50GN

Both of them are centering layout, articulated center is as far as front and rear wheel.
Max. steering angle: LG958L: 38°
ZL50GN: 35°

RELIABILITY IN ACTION

https://truckmanualshub.com/

Vision & Mission

Our Vision

To become the No.1 Chinese construction equipment brand for reliability, customer satisfaction and Brand image in the construction machinery industry.

Our Mission

To provide highly reliable products and services in order to maximize our value in the eyes of the customer.

Brand Promotion Slogan

Reliability in Action

05/06

RELIABILITY IN ACTION