210 LONG FRONT X2

https://truckmanualshub.com/

specifications

Operating Weight: 50,710 lbs. (23 000 kg)
SAE Net Horsepower: 157 HP (117 kW)
Bucket Range: .50 - .95 yd³ (.38 - .73 m³)

Engine

Isuzu AH-4HK1X Tier 3 turbocharged diesel engine with electronic fuel control, 4-cylinder, water-cooled, EGR with cooler, air-to-air intercooler, fuel cooler, auto idle start, neutral safety start, glow plugs, auto warm-up, EPF engine protection, dual stage fuel filtration, remote oil filter, green plug oil drain.

SAE net horsepower ..... 157 HP (117 kW) @ 1,800 rpm
Displacement ..... 5.2 L
Maximum torque..... 463 lbf-ft (628 N-m) @ 1,500 rpm
Starter..... 24V-5.0kW
Alternator..... 50 amp
Battery ..... 92 amp hours

Fuel Usage*

Heavy ..... 4.2 gal / hr (15.90 liter / hr)
Average..... 3.64 gal / hr (13.78 liter / hr)
Light..... 3.08 gal / hr (11.66 liter / hr)

*Fuel econonmy varies widely depending on application. "Heavy" represents nearly continuous operation in tough digging applications in SP Mode. "Light" represents easy digging applications utilizing the machine about 50% of the time in SP Mode.

Cab and Controls

Pressurized cab with climate control a/c and heat with defroster, LCD monitor, illuminated soft-touch switches, low-effort controls pre-wired for auxiliary hydraulics, control pattern changer, sliding LEXAN® MARGARD® windows, safety glass front window with automatic locking system and vandal cover, intermittent windshield wiper with washer, emergency rear window exit, polycarbonate roof hatch with sunshade, shockless cab suspension with four fluid mountings, KAB® reclining suspension seat, sliding 4-position tilting control consoles, AM/FM radio, digital clock, dome light, seat belt, coat hook, cup holder, storage compartments, floor mat, footrests, ashtray, 24-volt cigarette lighter, 12-volt outlet, travel alarm, handrail, mirrors.

Four selectable working modes, anti-theft password protection system, on-board self-diagnostic system with memory, auto-idling system, one-touch decelerator, auto power boost, gate lock safety shutoff.

A/C output .....18,100 BTU/hr
Heater output.....20,150 BTU/hr
Sound level (inside cab) ..... 68.5 dB(A)
Sound level (exterior) ..... 98.1 dB(A)

Hydraulic System

Open-center system, two variable displacement axial piston pumps and one gear pump for pilot controls, main control valve with one 4-spool valve and one 5-spool valve with auxiliary spool - stackable, oil cooler, auto power boost, boom and arm holding valves, o-ring face seals, 6 micron return filter, firewall.

Hydraulic Pumps

Maximum flow ..... 2 x 55.7 gpm (2 x 211 l/min)
Pilot pump maximum flow ..... 4.8 gpm (18 l/min)

Relief Valve Settings

Boom/arm out..... 4,970 psi (343 bar)
in Power-Boost Mode ..... 5,340 psi (368 bar)
Arm in ..... 3,330 psi (230 bar)
Bucket ..... 3,625 psi (250 bar)
Swing circuit ..... 3,480 psi (240 bar)
Travel..... 4,970 psi (343 bar)

Hydraulic Cylinders

number of cylinders – bore x rod x stroke
Boom..... 2 – 4.7″ x 3.3″ x 49.4″ (120 mm x 85 mm x 1 255 mm)
Arm..... 1 – 5.7″ x 4.1″ x 64.1″ (145 mm x 105 mm x 1 627 mm)
Bucket ..... 1 – 3.7″ x 2.6″ x 34.7″ (95 mm x 65 mm x 881 mm)

Hydraulic Oil Filtration

Return filter..... 6 micron
Pilot filter..... 8 micron
Suction screen..... 105 micron

Swing

Planetary reduction powered by axial piston motor. Internal ring gear with grease cavity for swing pinion. Swing bearing is single-row shear type ball bearing. Mechanical disc swing brake. Auto power swing.

Swing speed..... 0 – 11.5 rpm
Swing radius front..... 17´ 0″ (5.19 m)
Swing radius rear..... 9´ 0″ (2.75 m)
Swing torque ..... 38,500 lbf-ft. (52.2 kN•m)

Undercarriage

X Pattern carbody with 15´ 3″ (4.65 m) LC long undercarriage by 8´ 6″ (2.6 m) track gauge, sealed and strutted track chain with track guide, sealed rollers and idlers, two-speed independent hydrostatic travel with compact planetary final drive, disc type brakes, adjustable track tension, swivel guard.

Carrier rollers..... 2 per side
Track rollers..... 8 per side
Track link pitch..... 7.48″ (190 mm)
Shoes ..... 49 per side
Shoe width..... 31.5″ (800 mm)
Ground pressure ..... 5.22 psi (.36 bar)

Lubricant and Coolant Capacity

Fuel tank..... 108.31 gal. (410 liters)
Hydraulic tank..... 38.8 gal. (147 liters)
Hydraulic system..... 63.40 gal. (240 liters)
Final drive (per side)..... 1.32 gal. (5.0 liters)
Swing drive..... 1.32 gal. (5.0 liters)
Engine oil..... 6.1 gal. (23.1 liters)
Cooling system..... 6.76 gal. (25.6 liters)

Travel System

Two-speed independent hydrostatic travel with compact axial piston motors. Hydraulic motor powered output shaft coupled to a planetary reduction unit and track sprocket. All hydraulic components mounted within the width of side frame. Automatic downshift. Spring applied, hydraulically released disc parking brake built into each motor. Each travel motor equipped with counterbalance valve to prevent overspeeding down an incline.

Max. travel speed ..... 2.1 - 3.5 mph (3.4 - 5.6 km/h)
Drawbar pull ..... 42,500 lbf (189.2 kN)
Gradeability ..... 70% (35°)

Attachment

Boom..... 28´ 7″ (8.70 m)

Available Arms	Digging Force*
• 21´ 0″ (6.40 m)	10,341 lbf (46 kN)

Bucket Digging Force ..... 14,610 lbf (65 kN)

*Digging force ratings are based on ISO 6015, "Earthmoving Machinery – Hydraulic Excavators – Tool Forces."

Operating Weight

Working weight with 31.5″ (800 mm) shoes, 28´ 7″ (8.70 m) boom, 21´ 0″ (6.40 m) arm 745 lb. (338 kg) bucket, operator, full fuel tank
..... 50,710 lbs (23,000 kg)

https://truckmanualshub.com/

210 X2 LF Specifications

Working Ranges

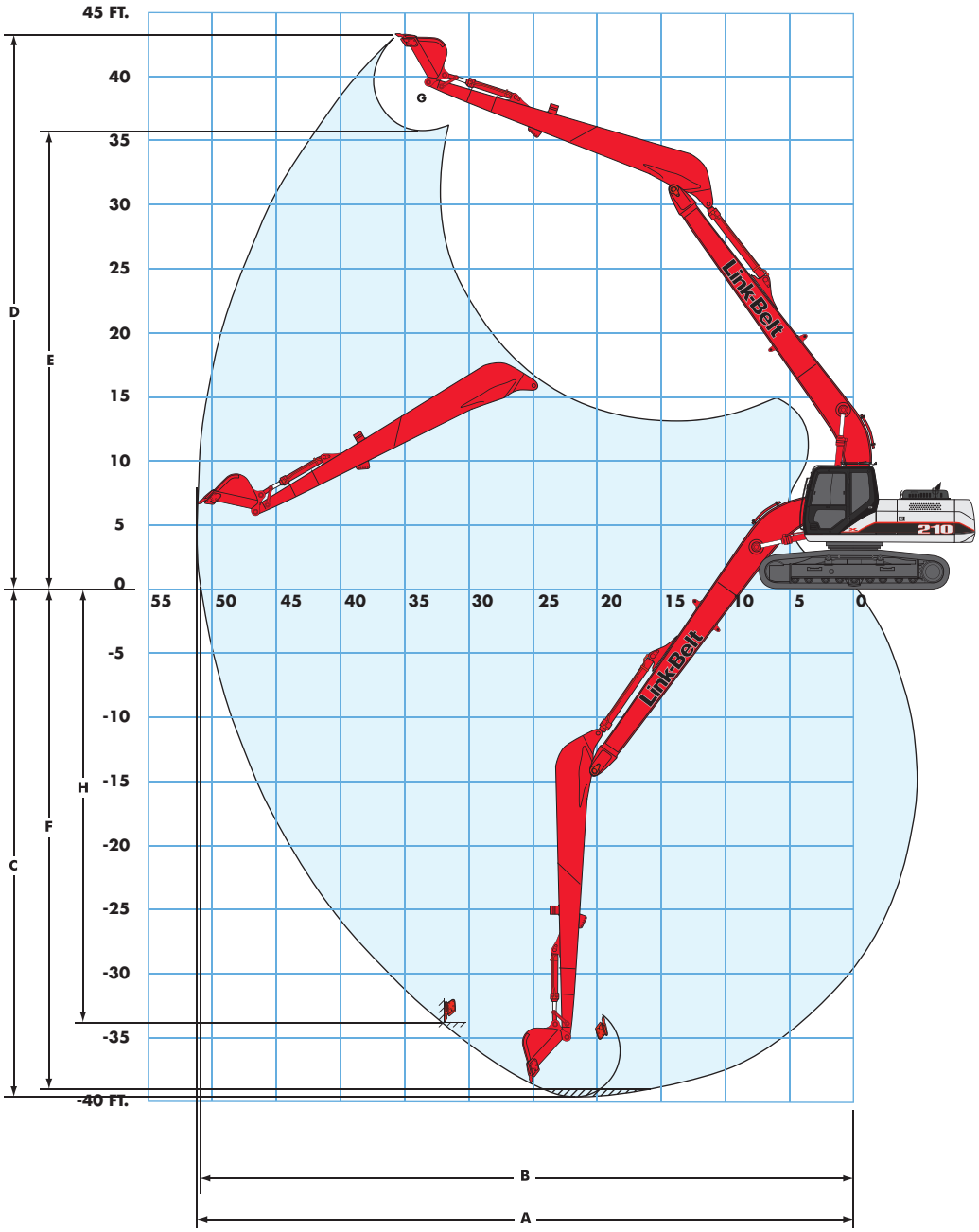

Machine equipped with 28´ 7˝ (8.7 m) boom	21´ 0˝ Arm (6.40 m)
A. Maximum reach	51´ 2˝ (15.60 m)
B. Maximum reach @ ground level	50´ 10˝ (15.49 m)
C. Maximum dig depth	39´ 5˝ (12.01 m)
D. Maximum dig height	42´ 7˝ (12.97 m)
E. Maximum dump height	35´ 2˝ (10.73 m)
F. Digging depth – 8' (2.44 m) level bottom	38´ 9˝ (11.82 m)
G. Bucket rotation	178°
H. Maximum vertical wall depth	33´ 9˝ (10.29 m)

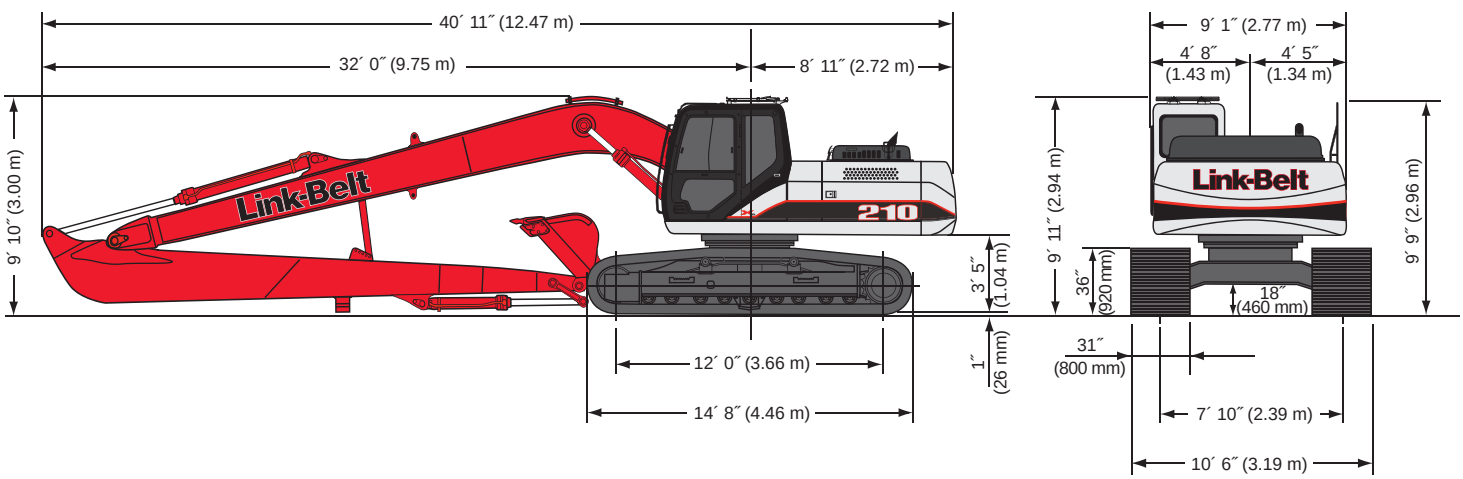

https://truckmanualshub.com/

210 X2 LF Specifications

Lifting Capacities

21´ 0˝ (6.40 m) Arm with 28´ 7˝ (8.7 m) Boom and 745 lb. (338 kg) Bucket with Power-Boost Applied

Radius of Load													
		10' 0" (3.05 m)		15' 0" (4.57 m)		20' 0" (6.10 m)		25' 0" (7.62 m)		30' 0" (9.14 m)		35' 0" (10.7 m)	
		End	Side	End	Side	End	Side	End	Side	End	Side	End	Side
+40´ 0˝	lbs / (kg)												
+35´ 0˝	lbs / (kg)												
+30´ 0˝	lbs / (kg)												
+25´ 0˝	lbs / (kg)												
+20´ 0˝	lbs / (kg)											4,150* / (1 882*)	4,150* / (1 882*)
+15´ 0˝	lbs / (kg)									4,850* / (2 199*)	4,850* / (2 199*)	4,550* / (2 063*)	4,550* / (2 063*)
+10´ 0˝	lbs / (kg)							6,300* / (2 857*)	6,300* / (2 857*)	5,600* / (2 540*)	5,600* / (2 540*)	5,050* / (2 290*)	4,450 / (2 019)
+5´ 0˝	lbs / (kg)	9,050* / (4 105*)	9,050* / (4 105*)	13,750* / (6 237*)	13,750* / (6 237*)	9,700* / (4 399*)	9,700* / (4 399*)	7,750* / (3 515*)	7,300 / (3 311)	6,400* / (2 903*)	5,400 / (2 449)	5,600* / (2 540*)	4,150 / (1 882)
Ground	lbs / (kg)	5,850* / (2 653*)	5,850* / (2 653*)	14,700* / (6 667*)	13,350 / (6 056)	11,550* / (5 239*)	9,000 / (4 082)	8,950* / (4 059*)	6,550 / (2 971)	7,250* / (3 288*)	4,950 / (2 245)	6,150* / (2 789*)	3,800 / (1 724)
-5´ 0˝	lbs / (kg)	6,300* / (2 857*)	6,300* / (2 857)	11,400* / (5 171*)	11,400* / (5 171*)	13,000* / (5 896*)	8,150 / (3 697)	9,900* / (4 490*)	5,950 / (2 699)	7,700 / (3 493)	4,550 / (2 064)	6,100 / (2 767)	3,500 / (1 588)
-10´ 0˝	lbs / (kg)	7,250* / (3 288*)	7,250* / (3 288*)	11,350* / (5 148*)	11,350* / (5 148*)	13,550 / (6 146)	7,700 / (3 493)	9,700 / (4 400)	5,600 / (2 540)	7,400 / (3 357)	4,250 / (1 928)	5,850 / (2 654)	3,300 / (1 497)
-15´ 0˝	lbs / (kg)	8,450* / (3 832*)	8,450* / (3 832*)	12,450* / (5 647*)	11,500* / (5 216*)	13,350 / (6 056)	7,500 / (3 402)	9,500 / (4 309)	5,400 / (2 449)	7,250 / (3 289)	4,100 / (1 860)	5,750 / (2 608)	3,200 / (1 452)
-20´ 0˝	lbs / (kg)	10,200* / (4 626*)	10,200* / (4 626*)	14,300* / (6 486*)	11,850 / (5 375)	13,350 / (6 056)	7,550 / (3 425)	9,450 / (4 287)	5,400 / (2 449)	7,200 / (3 266)	4,050 / (1 837)	5,750 / (2 608)	3,200 / (1 452)
-25´ 0˝	lbs / (kg)	12,550* / (5 692*)	12,550* / (5 692*)	17,150* / (7 779*)	12,100 / (5 489)	13,350 / (6 056)	7,800 / (3 538)	9,600 / (4 355)	5,550 / (2 517)	7,300 / (3 311)	4,150 / (1 882)	5,850 / (2 654)	3,300 / (1 497)
-30´ 0˝	lbs / (kg)	15,450* / (7 008*)	15,450* / (7 008*)	16,150* / (7 325*)	12,700 / (5 761)	12,250* / (5 556*)	8,150 / (3 697)	9,650* / (4 377*)	5,800 / (2 631)	7,500* / (3 402*)	4,400 / (1 996)		
-35´ 0˝	lbs / (kg)	18,250* / (8 278*)	18,250* / (8 278*)	13,300* / (6 032*)	13,100 / (5 942)	10,150* / (4 604*)	8,700 / (3 946)	7,850* / (3 560*)	6,300 / (2 858)				
-40´ 0˝	lbs / (kg)												
-45´ 0˝	lbs / (kg)												

21´ 0˝ (6.40 m) Arm with 28´ 7˝ (8.7 m) Boom and 745 lb. (338 kg) Bucket with Power-Boost Applied

Radius of Load							
		40' 0" (12.2 m)		45' 0" (13.7 m)		Cap. at Max. Reach	
		End	Side	End	Side	End	Side
+40´ 0˝	lbs / (kg)					2,350* / (1 065*)	2,350* / (1 065*)
+35´ 0˝	lbs / (kg)					2,150* / (975*)	2,150* / (975*)
+30´ 0˝	lbs / (kg)	3,700* / (1 678*)	3,700* / (1 678*)			2,100* / (952*)	2,100* / (952*)
+25´ 0˝	lbs / (kg)	3,950* / (1 791*)	3,800 / (1 724)	2,350* / (1 065*)	2,350* / (1 065*)	2,050* / (929*)	2,050* / (929*)
+20´ 0˝	lbs / (kg)	4,100* / (1 859*)	3,800 / (1 724)	3,950* / (1 791*)	2,800 / (1 270)	2,050 / (930)	2,050 / (930)
+15´ 0˝	lbs / (kg)	4,350* / (1 973*)	3,600 / (1 633)	4,150* / (1 882*)	2,700 / (1 225)	2,100* / (952*)	2,000 / (907)
+10´ 0˝	lbs / (kg)	4,700* / (2 131*)	3,400 / (1 542)	4,400* / (1 995*)	2,600 / (1 179)	2,200* / (997*)	1,850 / (839)
+5´ 0˝	lbs / (kg)	5,100* / (2 313*)	3,150 / (1 429)	4,300 / (1 950)	2,450 / (1 111)	2,350* / (1 065*)	1,800 / (816)
Ground	lbs / (kg)	5,100 / (2 313)	2,950 / (1 338)	4,150 / (1 882)	2,300 / (1 043)	2,550* / (1 156*)	1,750 / (794)
-5´ 0˝	lbs / (kg)	4,900 / (2 223)	2,750 / (1 247)	4,000 / (1 814)	2,150 / (975)	2,800* / (1 270*)	1,800 / (816)
-10´ 0˝	lbs / (kg)	4,750 / (2 155)	2,600 / (1 179)	3,950 / (1 792)	2,100 / (953)	3,150* / (1 428*)	1,950 / (885)
-15´ 0˝	lbs / (kg)	4,700 / (2 132)	2,550 / (1 157)	3,900 / (1 769)	2,100 / (953)	3,700* / (1 678*)	2,150 / (975)
-20´ 0˝	lbs / (kg)	4,700 / (2 132)	2,550 / (1 157)			4,500* / (2 041*)	2,500 / (1 134)
-25´ 0˝	lbs / (kg)					4,650* / (2 109*)	3,150 / (1 429)
-30´ 0˝	lbs / (kg)						
-35´ 0˝	lbs / (kg)						
-40´ 0˝	lbs / (kg)						
-45´ 0˝	lbs / (kg)						

Notes: Excavator lifting capacities

1. Lifting capacities shown should not be exceeded. Weight of all lifting accessories must be deducted from the above lifting capacities.
2. Lifting capacities are based on machine standing on firm, uniform supporting surface. User must make allowances for job conditions such as soft or uneven ground.
3. Lifting capacities shown do not exceed 75% of minimum tipping loads or 87% of hydraulic capacities. Capacities marked with an asterisk (*) are limited by hydraulic capacities.
4. Least stable position is over the side.
5. Operator should be fully acquainted with the Operator's Manual & Operating Safety Booklet, furnished by LBX before operating the machine.
6. Capacities apply only to the machine as originally manufactured and normally equipped by LBX Company, LLC.
7. Lift capacity ratings are based on SAE J/ISO 10567, "Earthmoving Machinery – Hydraulic Excavators – Lift Capacity."

https://truckmanualshub.com/

210 X2 LF Specifications

Bucket Sizes

Bucket Type	SAE Heaped Capacity (yd³)	(m³)	Width Outside Lip (in)	(mm)	Bucket Weight (lbs)	(kg)	Number of Teeth	Arm Length 21´-0˝ 6.40 m
STDP	0.50	0.38	24	610	791	359	4	H
	0.66	0.50	30	762	889	403	4	M
	0.82	0.63	36	914	1007	457	5	L
DITCH	0.77	0.59	54	1372	903	410	0	L
	0.86	0.66	60	1524	964	437	0	L
	0.95	0.73	60	1524	994	451	0	L

STDP - Standard duty plate

Approval Code For Arm/Bucket Combinations

H..... Heavy material (up to 3,370 lbs./yd³)

M ..... Medium material (up to 2,700 lbs./yd³)

L ..... Light material (up to 2,020 lbs./yd³)

N/A ..... Not applicable

Standard Equipment

- KAB 515 sliding/reclining suspension seat with adjustable 4-inch armrests, lumbar support and retractable seat belt
- Safety glass front window with auto lock, windshield wiper and washer with intermittent speeds, Lexan® side and rear tinted windows
- 4-position tilting consoles with memory position and hydraulic lock-out
- Auto climate control a/c and heat
- AM/FM stereo with mute button, horn, interior light, digital clock, hour meter, floor mat, cup holder, sun shade, storage, LH and RH rear view mirrors
- Travel alarm with cancel switch
- Vandal guarding with bolt-on FOG capability
- EPA Tier III Isuzu diesel engine
- Common rail fuel injection
- Turbocharger with intercooler
- Neutral safety start
- Idle start
- Glow plug pre-heat
- Auto engine warm-up
- Auto idling system
- One-touch idle
- Dual remote fuel filters with water separation
- Double element air filter with in-cab restriction indicator
- External fuel gauge
- Remote, full-flow engine oil filter
- Green plug engine oil drain
- EPF Engine Protection
- Emergency engine stop
- Open-center hydraulic system
- Four selectable work modes including attachment mode
- Auto power boost
- Auto swing priority
- Pre-set auxiliary pump settings - 10
- Auxiliary valve
- Stackable main control valve
- Control pattern changer
- Long undercarriage
- Sealed and lubricated track chain
- Two-speed with auto shift and straight travel
- Planetary drive
- Spring-applied, hydraulic release brake
- Hydraulic track adjust
- Swivel guard belly pan
- Track guide
- Vandal locks with common key
- 11,285 lb (5,120 kg) counterweight with lifting eyes
- Hand rail
- Tool box
- 28-ft 7-in boom
- EMS (Extended Maintenance System) 1,000 hour service interval throughout entire attachment except bucket
- 21-ft 0-in arm
- Tracks
  31.5-in (800 mm) 3-bar grouser
- Attachment cushion valve
- Arm and boom holding valves
- Cylinder cushion
- Centralized lube bank
- Bucket anti-clatter device
- Illuminated LCD service monitor
- On-board diagnostic system
- Anti-theft device
- 12-volt accessory outlet
- 70-watt work lights on boom and upper

Options

- Arms to convert to standard excavator (requires counterweight conversion)
  9-ft 8-in (2.94 m)
  7-ft 11-in (2.46 m)
- Cab lights - exterior
- Air-suspension seat
- Free Swing
- Single pedal travel
- Cyclone pre-clean air filter
- FOG guard
- Front guard - mesh or bars
- Vandal cover for left window
- HD bucket linkage
- Track guides - triple
- Double-acting auxiliary hydraulics (not for hammer use)

Link-Belt
EXCAVATORS • FORESTRY
DEMOLITION • MATERIAL HANDLING

LBX Company is the proud maker of quality Link-Belt excavators and is located in Lexington, KY.

LBX "Different by Design"
www.lbxco.com

Litho in USA 06/09 #LBX2165 (Supersedes #LBX2123)
® LBX and ® Link-Belt are registered trademarks. Copyright 2009. All rights reserved. We are constantly improving our products and therefore reserve the right to change designs and specifications.