https://truckmanualshub.com/ 1

800-428-5655

www.landoll.com/mhp

STANDARD FEATURES

- Three-Wheel Configuration
- Rear-Wheel Drive and Steering
- High Visibility Mast (3 or 4-Stage)
- 90° Pivoting and Shifting Mast
- 48 Volt Electrical System
- Single Joystick Control Lever
- Adjustable Driver's Seat (15° Swivel Seat)
- Safety Seat Switch – Cuts Power
- Seat Belts
- Parking Brake, Electric, Mechanically Applied, Electrically Released
- Hydraulic Service Front Wheel Brakes
- AC Traction Control with Self-Diagnostics, Hour Meter and Battery Discharge Indicator with Lift Interrupt
- AC Hydraulic Pump Control
- Type "E" Construction
- Electronic Power Steering
- Automatic Return –to– Neutral
- SB 350 Blue Battery Connector
- Key Switch
- Covered Battery Compartment
- Battery Compartment Rollers
- Cushion Rubber Drive Tire (1)
- Polyurethane Load Tires (2)
- Horizontal Fork Indicator
- Overhead Guard
- Load Backrest
- Horn

OPTIONAL FEATURES

- Non-Standard Fork Lengths
- Dual Overhead Guard-Mounted LED Headlights
- Dual Rear Safety LED Light Bars
- Safety Flashing LED Light
- Backup Alarm - Beeping Tone ("Smart" dB Adjusting)
- Fire Extinguisher - OHG Post Mounted
- Cold Storage Conditioning to -22°F (-30°C)
- Lazer Fork Height Indicator
- Fork Positioner
- Keyless Key Pad On-Off
- Type EE Construction
- Single Auxiliary Hydraulics
- Landguide Wire Guidance

SLT-30AC
SLT-35AC

Electric Multi-Purpose
VNA Articulated Forklift Truck

LANDOLL®

Material Handling Products

https://truckmanualshub.com/ 2

DREXEL SLT-30AC & SLT-35AC

Electric Multi-Purpose VNA | Articulated Forklift Truck

TECHNICAL DATA

MODEL				SLT30AC	SLT35AC
Capacity at 24" L/C			lbs/kg	3,000 / 1,361	3,500 / 1,588
Load Center			in/mm	24 / 600	24 / 600
Power Source				Battery, Electric 48V	Battery, Electric 48V
Weight with Battery			lbs/kg	13,225 / 5,999	13,550 / 6,146
Travel Speed		Loaded	mph/kph	6 / 9.7	6 / 9.7
		Unloaded	mph/kph	7 / 11.3	7 / 11.3
Lift Speed		Loaded	fpm/mpm	95 / 29	95 / 29
		Unloaded	fpm/mpm	110 / 33.5	110 / 33.5
Lower Speed		Loaded	fpm/mpm	80 / 24.4	80 / 24.4
		Unloaded	fpm/mpm	75 / 22.8	75 / 22.8
Mast Tilt		Fwd / Back	deg	3 / 4	3 / 4
Lost Load Center	A	with Triple Mast	in/mm	23 / 584	23 / 584
Wheelbase	B		in/mm	56 / 1,422	56 / 1,422
Overall Length to Fork Face	C	with Triple Mast	in/mm	89 / 2,260	89 / 2,260
Underclearance	D		in/mm	4.5 / 114	4.5 / 114
Cab Floor Height	E		in/mm	31 / 787	31 / 787
Seat Height	F		in/mm	50.75 / 1,289	50.75 / 1,289
Overhead Guard Height	G		in/mm	87 / 2,210	87 / 2,210
Chassis Width	H		in/mm	45.5 / 1,156	45.5 / 1,156
Mast Shift	I		in/mm	20 / 508	20 / 508
Side Reach	J		in/mm	3 / 76	3 / 76
Fork Carriage Width	K		in/mm	31 / 787	31 / 787
Turning Radius	L		in/mm	67 / 1,702	67 / 1,702
Standard Forks (ITA Class II)			in/mm	40 x 4 x 1.5 1,016 x 101 x 38	40 x 4 x 1.5 1,016 x 101 x 38
Gradeability		Loaded	%	10	10
Lift Motor Rating			kWh	12	12
Steer Motor Rating			kWh	1.1	1.1
Traction Motor Rating			kWh	12	12
Wheel Sizes		Front (2 Each)	in mm	18 x 9 x 12.1 457 x 229 x 307	18 x 9 x 12.1 457 x 229 x 307
		Rear (1 Each)	in mm	18 x 7 x 12.1 457 x 178 x 307	18 x 7 x 12.1 457 x 178 x 307
Control Type		Traction		AC	AC
		Hydraulic		AC	AC

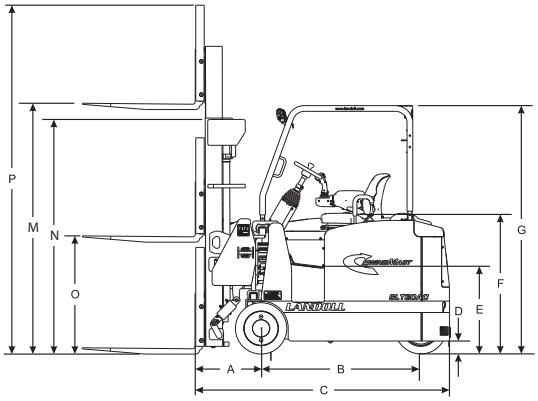

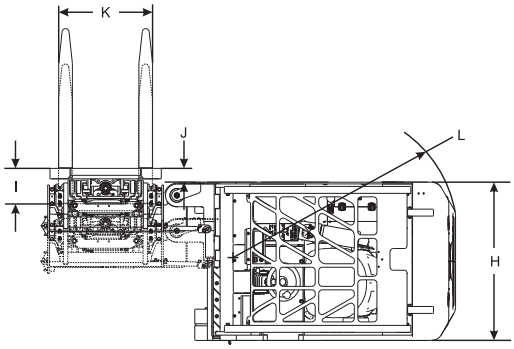

MAST DIMENSIONS

LIFT HEIGHT (M)		LOWERED HEIGHT (N)		**FREE LIFT (O)		OVERALL HEIGHT (P)	
In	M	In	M	In	M	In	M
Mast Dimensions 3 Stage Full Free Lift							
188	4.78	83	2.11	47	1.19	224	5.69
198	5.03	87	2.21	51	1.30	234	5.94
205	5.21	90	2.29	54	1.37	241	6.12
216	5.49	95	2.41	59	1.50	252	6.40
223	5.66	98	2.49	62	1.57	259	6.58
242	6.15	107	2.72	71	1.80	278	7.06
258	6.55	115	2.92	79	2.01	294	7.47
272	6.91	121	3.07	85	2.16	308	7.82
Mast Dimensions 4 Stage Full Free Lift							
250	6.35	87	2.21	51	1.30	286	7.26
258	6.55	89	2.26	53	1.35	294	7.47
276	7.01	95	2.41	59	1.50	312	7.92
294*	7.47	101	2.57	65	1.65	330	8.38
312*	7.92	107	2.72	71	1.80	348	8.84
* Tilt Restricted to 1° Forward and 2° Backward							
** Free Lift Based on 36' (914mm) High Load Backrest							

Landoll continuously improves products. We reserve the right to make any changes in illustrations, specifications, equipment, and prices without prior notice and without changes on previous models.

RECOMMENDED BATTERY

RECOMMENDED BATTERY
Battery Designation: 24-125-13, 48 Volt, 750 AHC (6 Hour Rate)
Battery Weight: Min. 2,750 lbs. (1,247kg) - Max. 3,300 lbs. (1,497kg)
Leads: Position D, 24" (61cm) Long, with SB 350 Amp Blue Connector
Nominal Size: 38.25" x 20.75" x 30.56" (971 x 527 x 776mm)
Battery Compartment Inside Dimensions: 38.5" x 21.5" x 31.5" (978 x 546 x 800mm)

www.landoll.com/mhp | 1900 North Street | Marysville, KS 66508 | (800) 428-5655

ISO 9001 CERTIFICATION Intertek
ANAB ACCREDITED
YOUR INDUSTRY CONNECTION MHEDA
MATERIAL HANDLING INDUSTRY OF AMERICA Member Company
Member IWLA The Resource for Warehouse Logistics
IARW International Association of Refrigerated Warehouses