https://truckmanualshub.com/

SD 310

Shop Manual

950106-01386

Serial Number 010001 and Up (Tier II)

July 2012

DISD reserves the right to improve our products in a continuing process to provide the best possible product to the market place. These improvements can be implemented at any time with no obligation to change materials on previously sold products. It is recommended that consumers periodically contact their distributors for recent documentation on purchased equipment.

This documentation may include attachments and optional equipment that is not available in your machine's package. Please call your distributor for additional items that you may require.

Illustrations used throughout this manual are used only as a representation of the actual piece of equipment, and may vary from the actual item.

https://truckmanualshub.com/

https://truckmanualshub.com/

TABLE OF CONTENTS

Safety

Wheel Loader Safety S0103010K

Specifications

Specifications for SD310 .....SPC000001

General Maintenance

General Maintenance Procedures..... S0302000

Standard Torques..... S0309000

Frame

Counterweight.....SPC000003

Center Joint (Articulation Joint).....SPC000005

Engine and Drive Train

Engine..... SPC000006

Transmission and Torque Converter …….....SPC000007

Front Axle SPC000009

Rear Axle SPC000010

Hydraulics

Cylinders.....SPC000011

Main Pump.....SPC000012

Steer Pump.....SPC000013

Main Control Valve.....SPC000014

Feed Unit SPC000015

Priority Valve SPC000016

Steering Unit.....SPC000017

Motor..... SPC000018

Hydraulic Oil Tank.....SPC000019

Hydraulic Schematic SPC000020

Brake

Brake System SPC000021

Parking System..... SPC000022

https://truckmanualshub.com/

Electrical System

Air Conditioner.....SPC000024
Electrical System SPC000025
Electrical Schematic SPC000027

Attachments

https://truckmanualshub.com/

SAFETY

https://truckmanualshub.com/

https://truckmanualshub.com/

WHEEL LOADER SAFETY

⚠ CAUTION!
Follow all safety recommendations and safe shop practices outlined in the front of this manual or those contained within this section. **Always use tools and equipment that is in good working order.** **Use lifting and hoisting equipment capable of safely handling load.** **Remember, that ultimately safety is your own personal responsibility.**

MODEL	SERIAL NUMBER RANGE
ALL MODELS	ALL MODELS

Copyright 2011 DISD

November 2011

https://truckmanualshub.com/

TABLE OF CONTENTS

To the Operator of a DISD Wheel Loader 3
General Safety Essentials 6
Location of Safety Labels 6
Unauthorized Modifications..... 6
General Hazard Information 7
Before Starting Engine 15
Machine Operation 18
Maintenance..... 25
Battery..... 33
Towing 35
Shipping and Transportation 36

https://truckmanualshub.com/

TO THE OPERATOR OF A DISD WHEEL LOADER

⚠ DANGER!

Unsafe use of the wheel loader could lead to serious injury or death. Operating procedures, maintenance and equipment practices or traveling or shipping methods that do not follow the safety guidelines on the following pages could cause serious, potentially fatal injuries or extensive damage to the machine or nearby property.

Please respect the importance of taking responsibility for your own safety, and that other people who may be affected by your actions.

Safety information on the following pages is organized into the following topics.

1. “General Safety Essentials” on page 6.
2. “Location of Safety Labels” on page 6.
3. “Unauthorized Modifications” on page 6.
4. “General Hazard Information” on page 7.
5. “Before Starting Engine” on page 15.
6. “Machine Operation” on page 18.
7. “Maintenance” on page 25.
8. “Battery” on page 33.
9. “Towing” on page 35.
10. “Shipping and Transportation” on page 36.

https://truckmanualshub.com/

⚠ WARNING!

Improper operation and maintenance of this machine can be hazardous and could result in serious injury or death.

Operator and maintenance personnel should read this manual thoroughly before beginning operation or maintenance.

Keep this manual in the storage compartment to the rear of the operator's seat, and have all personnel involved in working on the machine periodically read the manual.

Some actions involved in operation and maintenance of the machine can cause a serious accident, if they are not done in a manner described in this manual.

The procedures and precautions given in this manual apply only to intended uses of the machine.

If you use your machine for any unintended uses that are not specifically prohibited, you must be sure that it is safe for any others. In no event should you or others engage in prohibited uses or actions as described in this manual.

DISD delivers machines that comply with all applicable regulations and standards of the country to which it has been shipped. If this machine has been purchased in another country or purchased from someone in another country, it may lack certain safety devices and specifications that are necessary for use in your country. If there is any question about whether your product complies with the applicable standards and regulations of your country, consult DISD or your DISD distributor before operating the machine.

https://truckmanualshub.com/

⚠ SAFETY ALERT SYMBOL ⚠

Be Prepared - Get to Know All Operating and Safety Instructions

This is the Safety Alert Symbol. Wherever it appears - in this manual or on safety signs on the machine - you should be alert to potential for personal injury or accidents. Always observe safety precautions and follow recommended procedures.

LEARN SIGNAL WORDS USED WITH SAFETY ALERT SYMBOL

Words "**CAUTION**," "**WARNING**," and "**DANGER**" used throughout this manual and on labels on machine indicate hazards or unsafe practices. All three statements indicate that safety is involved. Observe precautions indicated whenever you see the Safety Alert "Triangle," no matter which signal word appears next to the "Exclamation Point" symbol.

⚠ CAUTION!

This word is used on safety messages and safety labels and indicates potential of a hazardous situation that, if not avoided, could result in minor or moderate injury. It may also be used to alert against a generally unsafe practice.

⚠ WARNING!

This word is used on safety messages and safety labels and indicates potential of a hazardous situation that, if not avoided, could result in serious injury or death. It may also be used to alert against a highly unsafe practice.

⚠ DANGER!

This word is used on safety messages and safety labels and indicates imminent hazard of a situation that, if not avoided, is very likely to cause death or extremely serious injury. It may also be used to alert against equipment that may explode or detonate if handled or treated carelessly.

Safety precautions are described in SAFETY from page 6 on.

DISD cannot predict every circumstance that might involve a potential hazard in operation and maintenance. Therefore the safety messages in this manual and on the machine may not include all possible safety precautions. If any procedures or actions not specifically recommended or allowed in this manual are used, you must be sure that you and others can do such procedures and actions safely and without damaging the machine. If your unsure about the safety of some procedures, contact a DISD distributor.

https://truckmanualshub.com/

GENERAL SAFETY ESSENTIALS

ACCESSORY APPLICATIONS

This wheel loader has been designed primarily for moving earth with a bucket. For use as a grapple or for other object handling, contact Daewoo. Lifting-work applications are permitted in approved lift configuration, to rated capacity only, with no side-loading (unless prohibited by local regulation). Do not use machine for activities for which it was not intended. Do not use bucket for lifting work, unless lift slings are used in approved configuration.

LOCATION OF SAFETY LABELS

Location of safety labels (decals) can vary from unit to unit. Refer to appropriate Operation and Maintenance Manual, and Parts Manual for your unit.

There are several specific warning signs on this machine. The exact location of hazards and the description of the hazards are reviewed in the appropriate Operation and Maintenance Manual.

Please become familiarized with all warning signs.

Make sure that all of the warning signs are legible. Clean the warning signs or replace the warning signs if you cannot read the words. Replace the illustrations if the illustrations are not visible. When you clean the warning signs, use a cloth, water and soap. Do not use solvent, gasoline, or other harsh chemicals to clean the safety signs. Solvents, gasoline, or other harsh chemicals could loosen the adhesive that secures the warning sign. Loose adhesive will allow the warning sign to fall off.

Replace any safety sign that is damaged, or missing. If a safety sign is attached to a part that is replaced, install a safety sign on the replacement part.

UNAUTHORIZED MODIFICATIONS

Any modification made without authorization or written approval from Daewoo can create a safety hazard, for which the machine owner must be held responsible.

For safety’s sake, replace all OEM parts with the correct authorized or genuine Daewoo part. For example, not taking the time to replace fasteners, bolts or nuts with the correct replacement parts could lead to a condition in which the safety of critical assemblies is dangerously compromised.

https://truckmanualshub.com/

GENERAL HAZARD INFORMATION

SAFETY RULES

Only trained and authorized personnel can operate and maintain the machine.

Follow all safety rules, precautions and instructions when operating or performing maintenance on the machine.

Do not operate the machine if you are not feeling well, if you are taking medication that makes you feel sleepy, if you have been drinking, or if you are suffering from emotional problems. These problems will interfere with your sense of judgement in emergencies and may cause accidents.

When working with another operator or with a person on work site traffic duty, be sure that all personnel know the nature of the work and understand all hand signals that are to be used.

Always observe strictly any other rules related to safety.

SAFETY FEATURES

Be sure that all guards and covers are installed in their proper position. Have guards and covers repaired immediately if damaged.

Be sure that you understand the method of use of safety features such as transmission lever neutral lock and the seat belt, and use them properly.

Never remove any safety features. Always keep them in good operating condition.

Failure to use safety features according to the instructions in the Operation and Maintenance Manual could result in serious bodily injury.

INSIDE OPERATOR'S COMPARTMENT

When entering the operator's compartment, always remove all mud and oil from the soles of your shoes. If you operate the accelerator and brake pedals with mud or oil stuck to your shoes, your foot may slip and this may cause a serious accident.

Clean grease and dirt from pedals and controls. This contributes to safe operation. Cleaning also provides an opportunity to inspect equipment. Minor damage can be repaired or corrected before major problems result.

Keep cab floor and consoles free of tools and personal items.

After using the ashtray, make sure that any matches or cigarettes are properly extinguished, and be sure to close the ashtray. If the ashtray is left open, there is danger of fire.

Do not stick suction pads to the window glass. Suction pads act as a lens and may cause fire.

Do not leave lighters laying around the operator's compartment. If the temperature inside the operator's compartment becomes high, there is danger that the lighter may explode.

Do not use cellular telephones inside the operator's compartment when driving or operating the machine. There is danger that this may lead to an unexpected accident.

Never bring any dangerous objects such as flammable or explosive items into the operator's cab. To ensure safety, do not use the radio or music headphones when operating the machine. There is danger that this may lead to a serious accident.

When operating the machine, do not put your hands or head out of the window.

When standing up from the operator's seat, always place transmission neutral lock lever in the "LOCK" position and set pilot cutoff switch to "O" (OFF) position. If you accidentally touch the work equipment levers when they are not locked, the machine may suddenly move and cause serous injury or damage.

When leaving the machine, lower the work equipment completely to the ground, set transmission neutral lock lever in the "LOCK" position, set pilot cutoff switch to "O" (OFF) position, "APPLY" parking brake, and shut down engine. Use the key to lock all the equipment. Always remove the key and take it with you.

CLOTHING AND PERSONAL PROTECTIVE ITEMS

Contain long hair, and avoid loose clothing and jewelry. They can catch on controls or in protruding parts and cause serious injury or death.

Do not wear oily clothes. They are highly flammable.

Figure 1

Full eye protection, a hard hat, safety shoes and gloves may be required at the work site. While working on the machine, never use inadequate tools. They could break or slip, causing injury, or they may not adequately perform intended functions.

BREATHING MASKS, EAR PROTECTION MAY BE REQUIRED

Do not forget that some risks to your health may not be immediately apparent. Exhaust gases and noise pollution may not be visible, but these hazards can cause disabling or permanent injuries.

ASBESTOS DUST HAZARD PREVENTION

Asbestos dust can be HAZARDOUS to your health if it is inhaled. Materials containing asbestos fiber can be present on work site. Breathing air that contains asbestos fiber can ultimately cause serious or fatal lung damage. To prevent lung damage from asbestos fiber, observe following precautions;

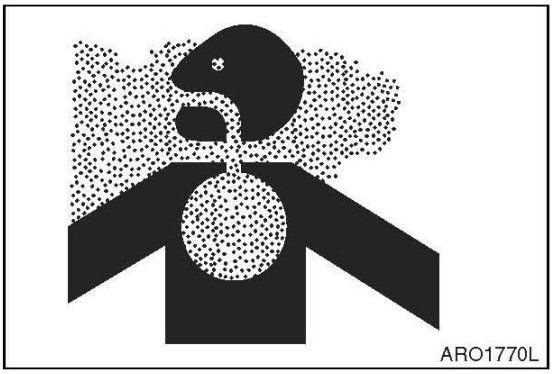

Figure 2

- Use a respirator that is approved for use in an asbestos-laden atmosphere.
- Never use compressed air for cleaning.
- Use water for cleaning to keep down the dust.
- Work on the machine or component with the wind at your back whenever possible.
- Always observe any rules and regulations related to the work site and working environment

MOUNTING AND DISMOUNTING

Before getting on or off the machine, if there is any oil, grease, or mud on the handrails, steps, or track shoes, wipe it off immediately. Always keep these parts clean. Repair any damage and tighten any loose bolts.

Never get on or off a moving machine. In particular, never get on or off a moving machine. These actions may lead to serious injury.

When getting on or off the machine, always face the machine, and maintain a three-point contact (both feet and one hand or one foot and both hands) with the handholds and steps to ensure that you support yourself securely.

Never hold any control levers when getting on or off the machine.

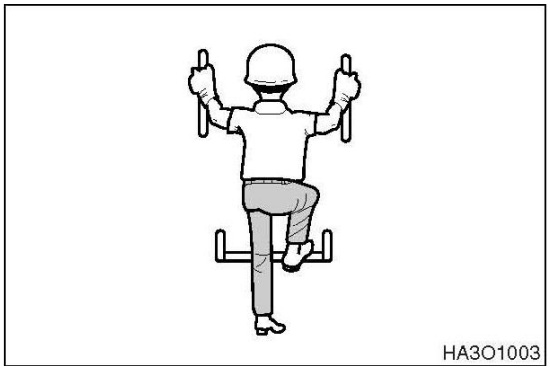

Figure 3

Never get up from operator’s seat or leave operator’s station and dismount machine if engine is running.

FUEL, OIL AND HYDRAULIC FLUID FIRE HAZARDS

Fuel, oil and antifreeze will catch fire if it is brought close to a flame. Fuel is particularly flammable and can be hazardous.

Always strictly observe the following.

Add fuel, oil, antifreeze and hydraulic fluid to the machine only in a well-ventilated area. The machine must be parked with controls, lights and switches turned "OFF." The engine must be "OFF" and any flames, glowing embers, auxiliary heating units or spark-causing equipment must be doused, turned off and/or kept well clear of the machine.

Figure 4

Static electricity can produce dangerous sparks at the fuel filling nozzle. In very cold, dry weather or other conditions that could produce a static discharge, keep the tip of the fuel nozzle in constant contact with the neck of the fuel filling nozzle, to provide a ground.

Keep fuel and other fluid reservoir caps tight and do not start the engine until caps have been secured.

PRECAUTIONS WHEN HANDLING FLUIDS AT HIGH TEMPERATURE

Immediately after operations are stopped, the coolant, engine oil, and hydraulic oil are at high temperature and the radiator and hydraulic tank are still under pressure. Attempting to remove the cap, drain the oil or coolant, or replace the filters may lead to serious burns. Always wait for the temperature to go down, and follow the specified procedures when carrying out these operations.

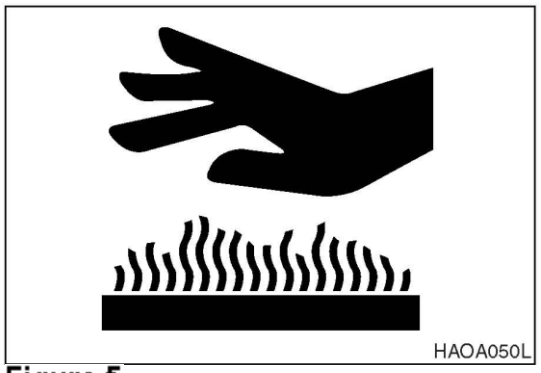

Figure 5

To prevent hot coolant from spurting out, shut down engine, wait for the coolant to cool, then loosen the cap slowly to relieve the pressure. To prevent hot oil from spurting out, shut down engine, wait for the oil to cool, then loosen the cap slowly to relieve the pressure

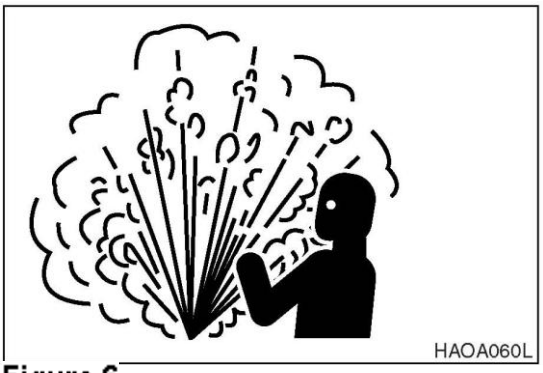

Figure 6

https://truckmanualshub.com/

INJURY FROM WORK EQUIPMENT

Do not enter or put your hand, arm or any other part of your body between movable parts, such as between the work equipment and cylinders, or between the machine and work equipment.

If the control levers are operated, the clearance between the machine and the work equipment will change and this may lead to serious damage or personal injury.

If going between movable parts is necessary, always position and secure the work equipment so that it cannot move.

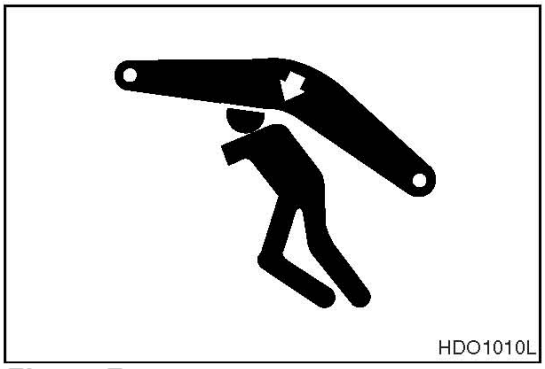

Figure 7

FIRE EXTINGUISHER AND FIRST AID KIT

As a precaution if any injury or fire should occur, always do the following.

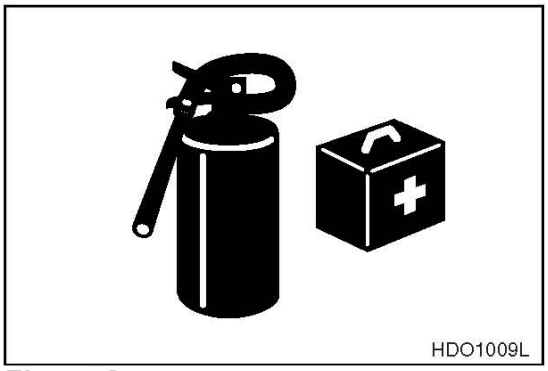

Figure 8

- Be sure that fire extinguishers have been provided and read the labels to ensure that you know now to use them. It is recommended that an appropriately sized (2.27 kg [5 lb] or larger) multipurpose "A/B/C" fire extinguisher be mounted in the cab. Check and service the fire extinguisher at regular intervals and make sure that all work site crew members are adequately trained in its use.
- Provide a first aid kit in the storage compartment and keep another at the work site. Check the kit periodically and make any additions if necessary.
- Know what to do in case of injury from fire.
- Keep emergency numbers for doctor, ambulance service, hospital and fire department you're your telephone.

If the machine catches fire, it may lead to serious personal injury or death. If a fire occurs during operation, escape from the machine as follows;

- Turn the starter switch "OFF" and shut down engine.
- If there is time, use the fire extinguisher to extinguish as much of the fire as possible.
- Use the handrails and steps to escape from the machine.

The above is the basic method for escaping from the machine, but changing the method may be necessary according to the conditions, so carry out practice drills at the work site.

PROTECTION FROM FALLING OR FLYING OBJECTS

On work sites where there is danger that falling objects or flying objects may hit the operator's cab select a guard to match the operating conditions to protect the operator.

Work in mines, tunnels, deep pits or on loose or wet surfaces could produce danger of falling rock, roll over or hazardous flying objects. Additional protection for operator’s cab could be required in form of a FOPS/Falling Object Protective Structure and/or ROPS/Roll Over Protective Structure reinforcement system (Option).

Any reinforcement system that is installed on machine must pass safety and certification standards and carry appropriate labeling and rating information. For example, most often added type of reinforcement system, FOPS, must meet or exceed Society of Automotive Engineers standard SAE J1356, "Performance Criteria for Falling Object Guards for Wheel loaders. (Option)"

Figure 9

Figure 10

Never attempt to alter or modify any type of protective structure reinforcement system, by drilling holes, welding or remounting or relocating fasteners. Any serious impact or damage to system requires a complete integrity reevaluation. Reinstallation, recertification and/ or replacement of system may be necessary.

INSTALL ADDITIONAL SAFETY EQUIPMENT IF CONDITIONS REQUIRE

Laminate glass protection for the front, side or rear windows may also be recommended depending upon particular site conditions.

Contact your DISD distributor for available safety guards and/or recommendations if there is any danger of getting hit by objects that could strike the operator’s cab. Make sure that all other work site crew members are kept well away from wheel loader and safe from potential hazards.

MAINTAIN STANDARD SAFETY EQUIPMENT IN GOOD CONDITION

Machinery guards and body panel covers must be in place at all times. Keep well clear of rotating parts. Pinch point hazards such as cooling fan and alternator drive belts could catch hair, jewelry or oversize or very loose clothing.

Safety labels must be replaced if they are damaged or become unreadable. Information on labels gives work crew members an important safety reminder. Part numbers for each decal and required mounting locations are shown on pages 1-2 through 1-4 of this section.

https://truckmanualshub.com/

ATTACHMENT PRECAUTIONS

Options kits are available through your dealer. Contact DISD for information on available one-way (single-acting) and two-way (double-acting) piping / valving / auxiliary control kits. Because DISD cannot anticipate, identify or test all attachments that owners may wish to install on their machines, please contact DISD for authorization and approval of attachments and their compatibility with options kits.

ACCUMULATOR

The pilot control system is equipped with an accumulator. For a brief period of time after the engine has been shut down, the accumulator will store a pressure charge that may enable hydraulic controls to be activated. Activation of any controls may enable the selected function to operate under force of gravity.

When performing maintenance on the pilot control system, the hydraulic pressure in the system must be released as describe in Operation and Maintenance Manual.

The accumulator is charged with high-pressure nitrogen gas, so it is extremely dangerous if it is handled in the wrong way. Always observe the following precautions;

- Do not drill or make any holes in the accumulator or expose it any flame, fire or heat source.
- Do not weld on the accumulator, or try attaching anything to it.
- When carrying out disassembly or maintenance of the accumulator, or when disposing of the accumulator, the charged gas must be properly released. Contact your DISD distributor.
- Wear safety goggles and protective gloves when working on an accumulator. Hydraulic oil under pressure can penetrate the skin and cause serious injuries.

ENGINE VENTILATION

Engine exhaust gases can cause loss of judgment, loss of alertness, and loss of motor control. These gases can also cause unconsciousness, serious injury and fatal accidents.

Make sure of adequate ventilation before starting engine in any enclosed area.

You should also be aware of open windows, doors or ductwork into which exhaust may be carried, or blown

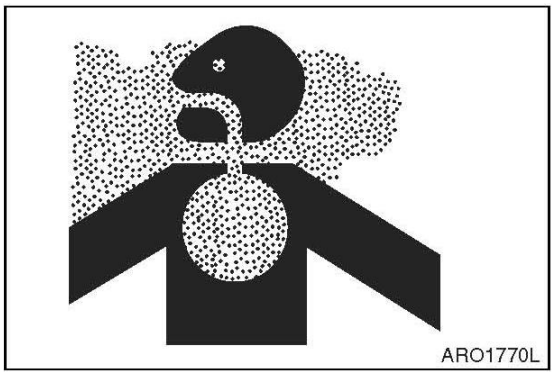

Figure 11

https://truckmanualshub.com/

BEFORE STARTING ENGINE

WORK SITE PRECAUTIONS

Before starting operations, thoroughly check the area for any unusual conditions that could be dangerous.

Check the terrain and condition of the ground at the work site, and determine the best and safest method of operation.

Make the ground surface as hard and horizontal as possible before carrying out operations. If there is a lot of dust and sand on the work site, spray water before starting operations.

If you need to operate on a street, protect pedestrians and cars by designating a person for work site traffic duty or by erecting fences and posting "No Entry" signs around the work site.

Erect fences, post "No Entry" signs, and take other steps to prevent people from coming close to or entering the work site. If people come close to a moving machine, they may be hit or caught by the machine, and this may lead to serious personal injury or death.

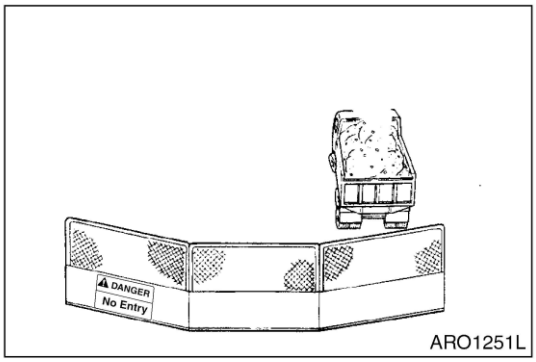

Figure 12

Water lines, gas lines, phone lines and high-voltage electrical lines may be buried under the work site. Contact each utility and identify their locations. Be careful not to damage or cut any of these lines.

NEVER be in water that is in excess of the permissible water depth. Refer to "Operation Manual."

Any type of object in the vicinity of the boom could represent a potential hazard, or cause the operator to react suddenly and cause an accident. Use a spotter or signal person working near bridges, phone lines, work site scaffolds, or other obstructions.

Minimum levels of insurance coverage, work permits or certification, physical barriers around the work site or restricted hours of operation may be mandated by governing authorities. There may also be regulations, guidelines, standards or restrictions on equipment that may have to be followed for local requirements.

There may also be regulations related to performing certain kinds of work. If there is any question about whether your machine and work site complies with the applicable standards and regulations contact your local authorities and agencies.

Avoid entering soft ground. It will be difficult for the machine to escape.

Avoid operating your machine to close to the edge of cliffs, overhangs, and deep ditches. The ground may be weak in such areas. If the ground should collapse, the machine could fall or tip over and this could result in serious injury or death.

Remember that the soil after heavy rain, blasting or after earthquakes, is weakened in these areas.

Earth laid on the ground and the soil near ditches is loose. It can collapse under the weight of vibration of your machine and cause your machine to tip over Install the head guard (FOPS) if working in areas where there is danger of falling rocks.

CHECKS BEFORE STARTING ENGINE

Every day before starting the engine for the first time, carry out the following checks. If these checks are not carried out properly, there is danger of serious injury.

- Completely remove all wood chips, leaves, grass, paper and other flammable materials accumulated in the engine compartment and around the battery. They could cause a fire.
  Remove any dirt from the window glass, mirrors, handrails, and steps.
- Do not leave tools or spare parts laying around in the operator's compartment. The vibration of the machine when traveling or during operations may cause them to fall and damage or break the control levers or switches. They may also get caught in the gap of the control levers and cause the work equipment to malfunction or move dangerously. This may lead to unexpected accidents.
- Check the coolant level, fuel level, and hydraulic tank oil level, and check for clogged air cleaner and damage to the electrical wiring.
- Adjust the operator's seat to a position where it is easy to operate the machine, and check the seat belt and mounts for damage and wear.
- Check the operation of the gauges and the angle of the mirrors, and check that the safety lever is in "LOCKED" position.
- If any abnormalities are found in the above checks, carry out repairs immediately.

ENGINE STARTING

- Walk around your machine before getting in operator’s cab. Look for evidence of leaking fluid, loose fasteners, misaligned assemblies or any other indications of possible equipment hazard.
- All equipment covers and machinery safety guards must be in place, to protect against injury while machine is being operated.
- Look around work site area for potential hazards, or people or property that could be at risk while operation is in progress.
- NEVER start engine if there is any indication that maintenance or service work is in progress, or if a warning tag is attached to controls in cab.
- A machine that has not been used recently, or is being operated in extremely cold temperatures, could require a warm-up or maintenance service before start up.
- Check gauges and monitor displays for normal operation before starting engine. Listen for unusual noises and remain alert for other potentially hazardous conditions at start of work cycle.
- Check tire inflation and check tires for damage or uneven wear. Perform maintenance before operation.
- Do not short circuit the starting motor to start the engine. This is not only dangerous, but may also damage the machine.
- When starting the engine, sound the horn as an alert.
- Start and operate the machine only while seated.

https://truckmanualshub.com/

BEFORE OPERATING MACHINE

If checks are not carried out properly after starting the engine, it may result in a delay in discovering abnormalities in the machine, and this may lead to personal injury or damage to the machine.

Carry out the checks in an open area where there are no obstructions. Do not let anyone near the machine when carrying out the checks.

- Check the operating condition of the equipment, and the actuation of the bucket, boom, and travel systems.
- Check the machine for any abnormal noise, vibration, heat, smell, or abnormality with the gauges. Check also for leakage of air, oil, and fuel.
- If any abnormality is found, repair the problem immediately. If the machine is used without repairing the problems, it may lead to unexpected injury or failure.
- Clear all personnel from directly around machine and from the area.
- Clear all obstacles from the machine's path. Beware of hazards.
- Be sure that all windows are clean. Secure the doors and the windows in the open position or in the shut position.
- Adjust the rear view mirrors for best visibility close to the machine. Make sure that the horn, the travel alarm (if equipped), and all other warning devices are working properly.
- Fasten the seat belt securely.
- Warm up the engine and hydraulic oil before operating machine.
- Before moving the machine, check the position of undercarriage. The normal travel position is with idler wheels to the front under the cab and the drive sprockets to the rear. When the undercarriage is in the reversed position, the travel controls must be operated in opposite directions

https://truckmanualshub.com/

MACHINE OPERATION

IMPORTANT

If you need more information or have any questions or concerns about safe operating procedures or working the wheel loader correctly in a particular application or in the specific conditions of your individual operating environment, please consult your local DISD representative.

OPERATE WHILE SEATED AT OPERATOR'S STATION ONLY

Never reach in through a window to work a control. Do not try to operate wheel loader unless you're in command position - seated at controls. You should stay alert and focused on your work at all times. Do not twist out of seat if job activity behind you (or to the side) requires your attention.

Use a spotter or signal person if you cannot see clearly and something is happening behind you.

Replace damaged safety labels and lost or damaged operator's manuals.

Do not let anyone operate machine unless they've been fully and completely trained, in safety and in operation of the machine.

Figure 13

SEAT BELTS SHOULD BE USED AT ALL TIMES

Whenever engine is running, operator should be seated at the control station with seat belt properly engaged.

Figure 14

MOVEMENT ALARMS

If wheel loader is equipped with an audible travel movement alarm, test alarm on a daily basis. Audible alarm should sound as soon as travel system is engaged.

https://truckmanualshub.com/

TRAVEL PRECAUTIONS

When traveling, wheel loader always keeps lights on; make sure that you are in compliance with all state and local regulations concerning warning flags and signs.

Never turn the starter switch to the "O" (OFF) position when traveling. It is dangerous if the engine stops when the machine is traveling. It will be impossible to operate the steering unless the unit is equipped with an emergency steering system.

Pilot control valve lever (joystick) should not be operated while traveling.

Lower work equipment so that it is 400 mm (16 in) above ground.

Never travel over obstacles or slopes that will cause machine to tilt severely. Travel around any slope or obstacle that causes 10° tilt, or more.

Do not operate the steering suddenly. The work equipment may hit the ground and cause the machine to lose its balance, and this may damage the machine or structures in the area.

When traveling on rough ground, travel at low speed, and avoid sudden changes in direction.

Always keep to the permissible water depth.

When traveling over bridges or structures on private land, check first that the bridge or structure can withstand the weight of the machine. When traveling on public roads, check with the local authorities and follow their instructions.

SLOPING TERRAIN REQUIRES CAUTION

Dig evenly around work site whenever possible, trying to gradually level any existing slope. If it’s not possible to level area or avoid working on a slope, reducing size and cycling rate workload is recommended.

On sloping surfaces, use caution when positioning wheel loader before starting a work cycle. Stay alert for unstable situations to avoid getting into them. For example, you should always avoid working bucket over downhill side of machine when parked perpendicular to slope. Avoid full extensions of bucket in a downhill direction. Lifting bucket too high, too close to machine, while wheel loader is turned uphill can also be hazardous.

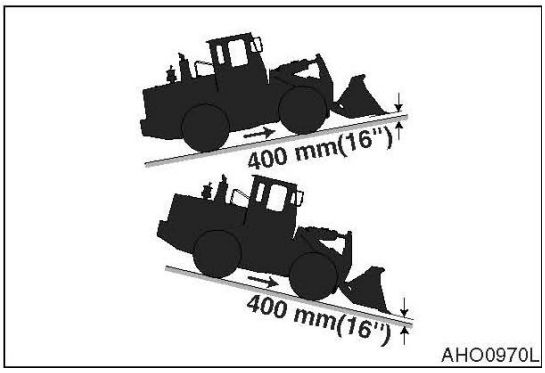

Figure 15

AVOID HIGH-VOLTAGE CABLES

Serious injury or death can result from contact or proximity to high-voltage electric lines. The bucket does not have to make physical contact with power lines for current to be transmitted.

Use a spotter and hand signals to stay away from power lines not clearly visible to operator.

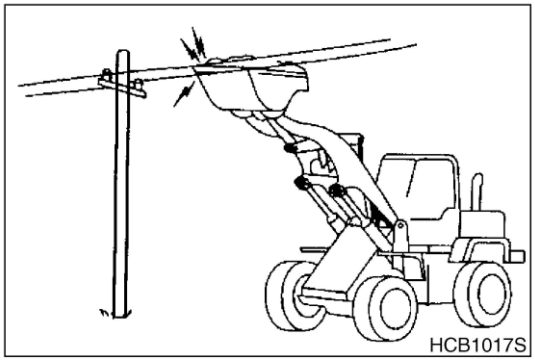

Figure 16

VOLTAGE	MINIMUM SAFE DISTANCE
6.6 kV	3 m (9’ 10")
33.0 kV	4 m (13’ 1")
66.0 kV	5 m (16’ 5")
154.0 kV	8 m (26’ 3")
275.0 kV	10 m (32’ 10")

Use these minimum distances as a guideline only. Depending upon voltage in line and atmospheric conditions, strong current shocks can occur with boom or bucket as far away as 4 - 6 m (13 - 20 ft) from power line. Very high voltage and rainy weather could further decrease that safety margin.

NOTE: *Before starting any type of operation near power lines (either above ground or buried cable-type) you should always contact power utility directly and work out a safety plan with them.*

BEFORE STARTING TO DIG, CONTACT AUTHORITIES

Below ground hazards also include natural gas lines, water mains, tunnels and buried foundations. Know what’s underneath work site before starting to dig.

BE AWARE OF HEIGHT OBSTACLES

Any type of object in vicinity of boom could represent a potential hazard, or cause operator to react suddenly and cause an accident. Use a spotter or signal person working near bridges, phone lines, work site scaffolds, or other obstructions.

USE CARE ON LOOSE SUPPORT

Working heavy loads over loose, soft ground or uneven, broken terrain can cause dangerous side load conditions and possible tip over and injury. Travel without a load or balanced load may also be hazardous.

If temperatures are changing, be cautious of dark and wet patches when working or traveling over frozen ground. Stay away from ditches, overhangs and all other weak support surfaces. Halt work and install support mats or blocking if work is required in an area of poor support.

USE SOLID SUPPORT BLOCKING

Never rely on lift jacks or other inadequate supports when work is being done. Block wheels fore and aft to prevent any movement.

Figure 17

DIGGING BENEATH OVERHANGS

Digging beneath an overhang is dangerous. Overhand could collapse on top of operator and cause serious injury or death. Go on to another digging area before steep overhangs are formed. Know height and reach limits of wheel loader and plan ahead while working. Park wheel loader away from overhangs before work shut down.

DIGGING BENEATH WHEEL LOADER

Digging beneath wheel loader is dangerous. Earth beneath could collapse. This could cause wheel loader to tip, which could cause serious injury or death to operator. Working around deep pits, trenching or along high walls may require support blocks, especially after heavy rainfalls or during spring thaws.

STAY ALERT FOR PEOPLE MOVING THROUGH WORK AREA

When loading a truck you should always know where the driver is.

Avoid loading over the cab of a truck even if the driver is in a safe spot. Someone else could have gone inside, for any number of reasons. Avoid working where unseen passersby might be.

Slow down work cycle and use slower travel speeds in congested or populated areas. Use a commonly understood signal so that other members of work crew can warn operator to slow or halt work in an impending hazardous situation.

Figure 18

BE AWARE OF AND CONFORM TO LOCAL REGULATIONS

Minimum levels of insurance coverage, work permits or certification, physical barriers around work-site or restricted hours of operation may be mandated by governing authorities. There may also be guidelines, standards or restrictions on equipment that may be used to perform certain kinds of work. Check and follow all local requirements, which may also be related to below ground hazards and power lines.

https://truckmanualshub.com/

NEVER USE ETHER STARTING AIDS

An electric-grid type manifold heater is used for cold starting. Glowing heater element can cause ether or other starting fluid to detonate, causing injury.

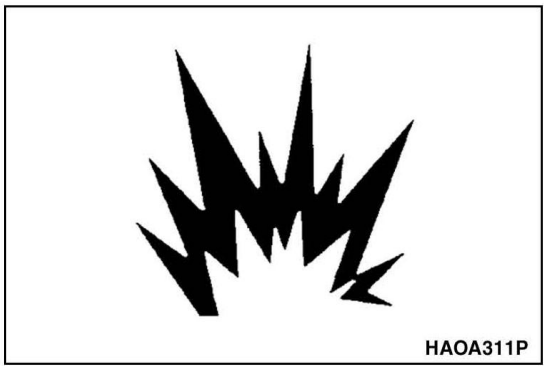

Figure 19

OBSERVE GENERAL SAFETY RULES

Only trained and authorized personnel, with a good knowledge and awareness of safe procedures, may be allowed to operate or perform maintenance or service on wheel loader.

All personnel at work site should be aware of assigned individual responsibilities and tasks.

Communication and hand signals used should be understood by everyone.

Terrain and soil conditions at work site, approaching traffic, weather-related hazards and any above or below ground obstacles or hazards should be observed and monitored by all work crew members.

TAKE TIME TO PROVIDE GOOD VISIBILITY

Be careful not to go close to the edge of a cliff by mistake.

Use the machine only for its main purpose. Using it for other purposes will cause failures.

To ensure an ample view, do as follows:

- When working in dark areas, attach working lights and front lights to the machine. If necessary, set up lighting at the work site.
- Stop operations when the visibility is poor, such as in fog, mist, snow, and rain. Wait for the visibility to improve to a level which causes no problems for the operation.
- Keep dirt and dust off of windows and off lens surfaces of work lights. Stop working if lights, windows or mirrors need cleaning or adjustment.

To avoid hitting the work equipment, always do the following;

- When working in tunnels, on bridges, under electric wires, or when parking the machine or carrying out other operations in places with limited height, be extremely careful not to hit the bucket or other parts.
- To prevent collisions, operate the machine at a safe speed when working in confined spaces, indoors, or in crowded areas.
- Do not pass the bucket over the heads of workers or over the operator's compartment of dump truck.

KEEP "PINCH POINT" AREAS CLEAR – USE CAUTION IN REVERSE

Use a signal person in high traffic areas and whenever operator's view is not clear, such as when traveling in reverse.

Anyone standing near wheels, or working assemblies of the attachment, is at risk of being caught between moving parts of machine.

Never allow anyone to ride on any part of machine or attachment, including any part of operator's cab.

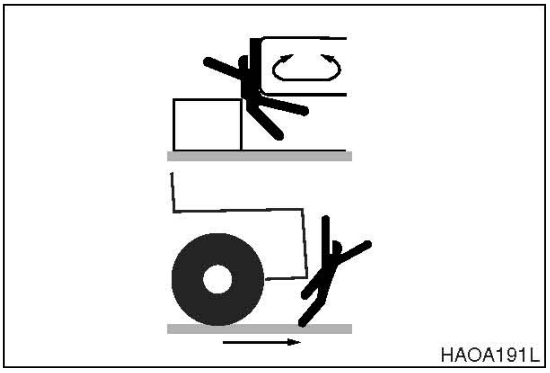

Figure 20

OPERATE CAREFULLY ON SNOW AND ICE AND IN VERY COLD TEMPERATURES

In icy cold weather avoid sudden travel movements and stay away from even very slight slopes. Machine could skid off to one side very easily.

Snow accumulation could hide or obscure potential hazards. Use care while operating or while using machine to clear snow.

Warming up engine for a short period may be necessary, to avoid operating with sluggish or reduced working capacity. Jolting shocks and impact loads caused by bumping or bottoming boom or attachment are more likely to cause severe stress in very cold temperatures. Reducing work cycle rate and work load may be necessary.

When the temperature rises, frozen road surfaces become soft, so the machine travel becomes unstable.

In cold weather, do not touch metal surfaces with your bare hands. If you touch a metal surface in extremely cold weather, your skin may freeze to the metal surface.

PARKING MACHINE

Avoid making sudden stops, or parking machine wherever it happens to be at the end of the work day. Plan ahead so that the wheel loader will be on firm, level ground away from traffic and away from high walls, cliff edges and any area of potential water accumulation or runoff. If parking on inclines is unavoidable, block wheels to prevent movement. Lower bucket or other working attachment completely to ground, or to an overnight support saddle. There should be no possibility of unintended or accidental movement.

When parking on public roads, provide fences, signs, flags, or lights, and put up any other necessary signs to ensure that passing traffic can see the machine clearly, and park the machine so that the machine, flags, and fences do not obstruct traffic.

https://truckmanualshub.com/

SHUTDOWN CONTROL FUNCTIONS

After bucket has been lowered to overnight storage position, move all switches and controls to "OFF" position. Pull parking brake knob to "APPLIED" position. This will apply parking brake. Move pilot cutoff switch to "LOCK" position. This will disable pilot control valve lever (joystick). Move key in starter switch to "OFF" position, and remove key from switch.

Engage all lock-down security equipment that may have been installed on machine.

IMPORTANT
When hydraulic system maintenance or service work must be performed, be aware that accumulators in system store fluid under pressure after system has been shut down. To release hydraulic pressure in accumulators, operate control with engine "OFF" until accumulator pressure is completely dissipated.

NEVER LET ANYONE RIDE ON ATTACHMENT

Never let anyone ride on any work attachment, such as the bucket, crusher, grapple, or clamshell (grab bucket). There is a danger of the person falling and suffering serious injury.

Figure 21

MAINTENANCE

USE WARNING TAG DURING SERVICE

Alert others that service or maintenance is being performed and tag operator's cab controls - and other machine areas if required - with a warning notice.

Warning tags for controls are available from DISD distributors; see Figure 22.

Figure 22

CLEAN BEFORE INSPECTION ORMAINTENANCE

Clean the machine before carrying out inspection and maintenance. This prevents dirt from getting into the machine and also ensures safety during maintenance.

If inspection and maintenance are carried out when the machine is dirty, it will become more difficult to locate the problems, and also there is danger that you may get dirt or mud in your eyes or that you may slip and injure yourself.

When washing the machine, do the following;

- Wear shoes with nonslip soles to prevent yourself from slipping and falling on wet places.
- Wear safety glasses and protective clothing when washing the machine with high-pressure steam.
- Take action to prevent touching high-pressure water and cutting your skin or having mud fly into your eyes.
- Do not spray water directly on electrical components (sensors, connector) (1, Figure 23). If water gets into the electrical system, there is danger that it will cause defective operation and malfunction.

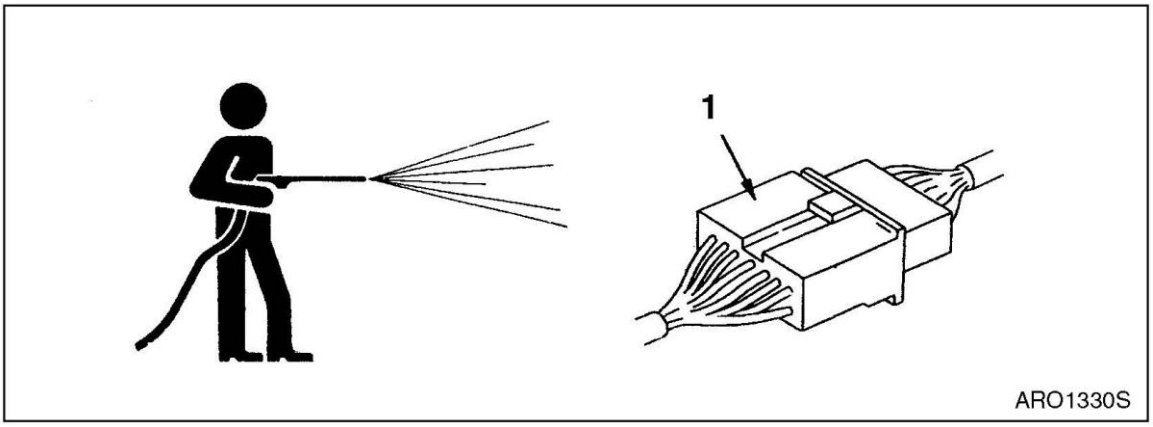

Figure 23

Pick up any tools or hammers that are laying in the work place, wipe up any grease or oil or any other slippery substances, and clean the area to make it possible to carry out the operation in safety. If the work place is left untidy, you may trip or slip and suffer injury.

https://truckmanualshub.com/

PROPER TOOLS

Use only tools suited to the task. Using damaged, low qualify, faulty, or makeshift tools could cause personal injury. There is danger that pieces from, chisels with crushed heads, or hammers, may get into your eyes and cause blindness.

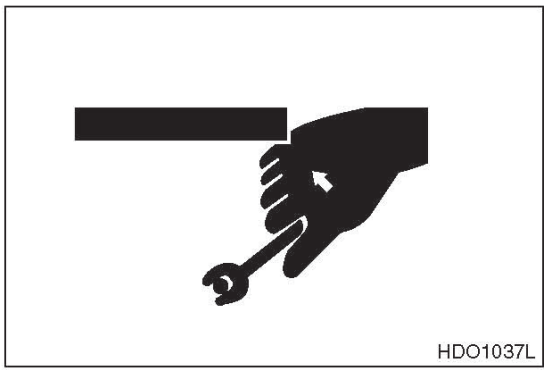

Figure 24

USE OF LIGHTING

When checking fuel, oil, battery electrolyte, or window washing fluid, always use lighting with anti-explosion specifications. If such lighting equipment is not used, there is danger of explosion.

If work is carried out in dark places without using lighting, it may lead to injury, so always use proper lighting.

Even if the place is dark, never use a lighter or flame instead of lighting. There is danger of fire.

There is also danger that the battery gas may catch fire and cause and explosion.

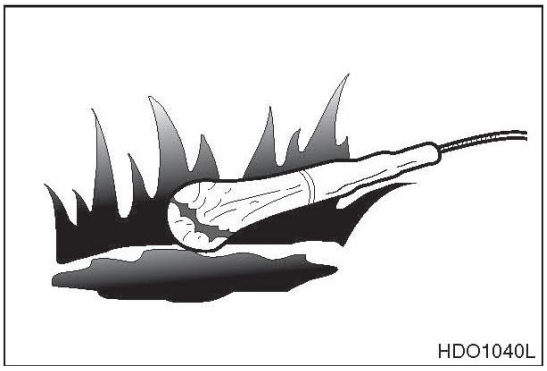

Figure 25

FIRE PREVENTION AND EXPLOSION PREVENTION

All fuels, most lubricants and some coolant mixtures are flammable. Leaking fuel or fuel that is spilled onto hot surfaces or onto electrical components can cause a fire.

Store all fuels and all lubricants in properly marked containers and away from all unauthorized persons.

Store oily rags and other flammable material in a protective container.

Do not smoke while you refuel the machine or while you are in a refueling area.

Do not smoke in battery charging areas or in areas the contain flammable material.

Clean all electrical connections and tighten all electrical connections. Check the electrical wires daily for wires that are loose of frayed. Tighten all lose electrical wires before you operate the machine. Repair all frayed electrical wires before you operate the machine.

Remove all flammable materials before they accumulate on the machine.

Do not weld on pipes or on tubes that contain flammable fluids. Do not flame cut on pipes or on tubes that contain flammable fluids. Before you weld on pipes or on tubes or before you flame cut on pipes or on tubes, clean the pipes or tubes thoroughly with a nonflammable solvent.

BURN PREVENTION

When checking the radiator coolant level, shut down engine, let the engine and radiator cool down, then check the coolant recovery tank. If the coolant level in the coolant recovery tank is near the upper limit, there is enough coolant in the radiator.

Loosen the radiator cap gradually to release the internal pressure before removing the radiator cap.

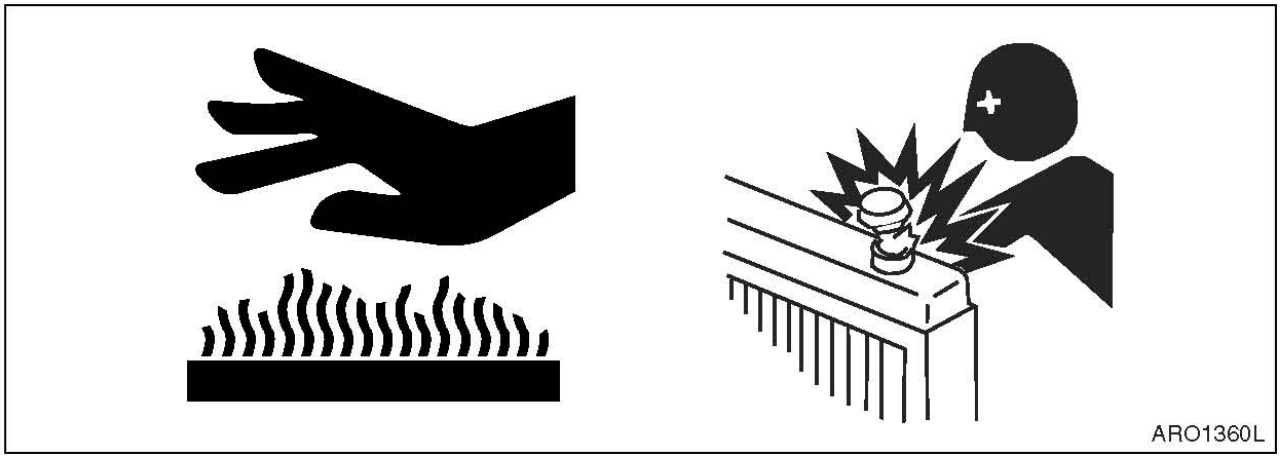

Figure 26

If the coolant level in the coolant recovery tank is below the lower limit, add coolant.

Cooling system conditioner contains alkali. Alkali can cause personal injury. Do not allow alkali to contact the skin, the eyes, or the mouth.

Allow cooling system components to cool before you drain the cooling system.

Hot oil and hot components can cause personal injury. Do not allow hot oil or hot components to contact the skin.

Remove the hydraulic tank filter plug only after the engine has been stopped. Make sure that the hydraulic tank filter plug is cool before you remove it with your bare hand. Remove the hydraulic tank filter plug slowly to relieve pressure.

Relieve all pressure in the hydraulic oil system, in the fuel system, or in the cooling system before you disconnect any lines, fittings, or related items.

Batteries give off flammable fumes that can explode.

Do not smoke while you are checking the battery electrolyte levels.

Electrolyte is an acid. Electrolyte can cause personal injury. Do not allow electrolyte to contact the skin or the eyes.

Always wear protective glasses when you work on batteries.

https://truckmanualshub.com/

WELDING REPAIRS

When carrying out welding repairs, carry out the welding in a properly equipped place. The welding should be performed by a qualified worker. During welding operations, there is the danger of, generation of gas, fire, or electric shock, so never let an unqualified worker do welding.

The qualified welder must do the following;

- To prevent explosion of the battery, disconnect the battery terminals and remove batteries.
- To prevent generation of gas, remove the paint from the location of the weld.
- If hydraulic equipment, piping or places close to them are heated, a flammable gas or mist will be generated and there is danger of it catching fire. To avoid this, never subject these places to heat.
- Do not weld on pipes or on tubes that contain flammable fluids. Do not flame cut on pipes or on tubes that contain flammable fluids. Before you weld on pipes or on tubes or before you flame cut on pipes or on tubes, clean the pipes or tubes thoroughly with a nonflammable solvent.
- If heat is applied directly to rubber hoses or piping under pressure, they may suddenly break so cover them with a fireproof covering.
- Wear protective clothing.
- Make sure there is good ventilation.
- Remove all flammable objects and provide a fire extinguisher.

PRECAUTIONS FOR REMOVAL, INSTALLATION, AND STORAGE OFATTACHMENTS

Before starting removal and installation of attachments, decide the team leader.

Do not allow anyone except the authorized workers close to the machine or attachment.

Place attachments that have been removed from the machine in a safe place so that they do not fall. Put up a fence around the attachments and take other measures to prevent unauthorized persons from entering.

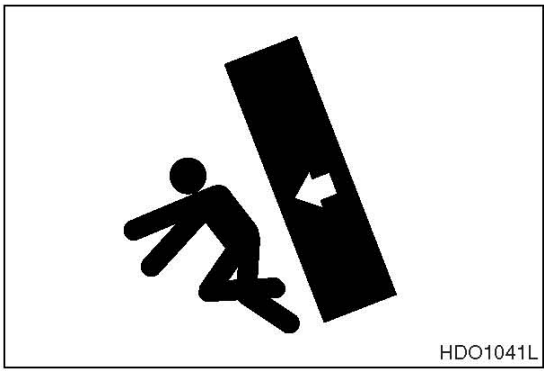

Figure 27

https://truckmanualshub.com/

PRECAUTIONS WHEN WORKING ON MACHINE

When carrying out maintenance operations on the machine, keep the area around your feet clean and tidy to prevent you from falling.

Always do the following;

- Do not spill oil or grease.
- Do not leave tools laying about.
- Watch your step when walking.

Figure 28

Never jump down from the machine. When getting on or off the machine, use the steps and handrails, and maintain a three-point contact (both feet and one hand or both hands and one foot) to support yourself securely.

If the job requires it, wear protective clothing.

To prevent injury from slipping or falling, when working on the hood or covers, never use any part except the inspection passage fitted with nonslip pads.

LOCK INSPECTION COVERS

When carrying out maintenance with the inspection cover open, lock the cover securely in position with the lock bar.

If maintenance work is carried out with the inspection cover open but not locked, there is danger that it may suddenly close and cause injury if there is a gust of wind.

CRUSHING PREVENTION AND CUTTING PREVENTION

You should always have at least two people working together if the engine must be run during service. One person needs to remain in the operator’s seat, ready to work the controls or stop the machine and shut off the engine.

Unless you are instructed otherwise, never attempt adjustments while the machine is moving or while the engine is running.

Stay clear of all rotating parts and moving parts.

Keep objects away from moving fan blades. The fan blades will throw objects and the fan blades can cut objects.

Do not use a wire rope cable that is kinked or flayed. Wear gloves when you handle a wire rope cable.

When you strike a retainer pin, the retainer pin might fly out. The loose retainer pin can injure personnel.

Make sure that the area is clear of people when you strike a retainer pin. To avoid injury to your eyes, wear protective glasses when you strike a retainer pin.

https://truckmanualshub.com/

DO NOT RUN ENGINE IF REPAIRS OR WORK ARE BEING PERFORMED ALONE

You should always have at least two people working together if engine must be run during service. One person needs to remain in operator's seat, ready to work controls or stop machine and shut "OFF" engine.

ALWAYS USE ADEQUATE EQUIPMENT SUPPORTS AND BLOCKING

Do not allow weight or equipment loads to remain suspended. Lower everything to ground before leaving operator's seat. Do not use hollow, cracked or unsteady, wobbling weight supports. Do not work under any equipment supported solely by a lift jack.

DO NOT WORK ON HOT ENGINES OR HOT COOLING OR HYDRAULIC SYSTEMS

Wait for engine to cool off after normal operation. Park wheel loader on firm, level ground and lower all equipment before shutting down and switching "OFF" controls. When engine lube oil, gearbox lubricant or other fluids require change, wait for fluid temperatures to decrease to a moderate level before removing drain plugs.

NOTE: *Oil will drain more quickly and completely if it is warm. Do not drain fluids at temperatures exceeding 95°C (203°F), however do not allow full cool down.*

HYDRAULIC CYLINDER SEALS REQUIRE PERIODIC REPLACEMENT

Check cylinder drift rate at regular intervals. Overhaul seal kits are available through DISD.

HIGH PRESSURE HYDRAULIC LINES CAN STORE A GREAT DEAL OF ENERGY

Exposed hydraulic hoses on arm or boom could react with explosive force if struck by a falling rock, overhead obstacle or other work site hazard. Extra safety guards may be required. NEVER allow hoses to be hit, bent or interfered with during operation.

https://truckmanualshub.com/

PRECAUTIONS WITH HIGH PRESSURE LINE, TUBES AND HOSES

When inspecting or replacing high-pressure piping or hoses, check that the pressure has been released from the circuit. Failure to release the pressure may lead to serious injury. Always do the following;

- Wear protective glasses and leather gloves.
- Fluid leaks from hydraulic hoses or pressurized components can be difficult to see but pressurized oil has enough force to pierce the skin and cause serious injury. Always use a piece of wood or cardboard to check for suspected hydraulic leaks. Never use your hands or expose your fingers.
- Do not bend high pressure lines. Do not strike high pressure lines. Do not install lines, tubes or hoses that are bent or damaged.
- Make sure that all clamps, guards and heat shields are installed correctly to prevent vibration, rubbing against other parts, and excessive heat during operation.
  - If any of the following conditions are found, replace the part.
  - Damage or leakage from hose end.
  - Wear, damage, cutting of covering, or exposure of strengthening wire layer.
  - Cover portion is swollen in places.
  - There is twisting or crushing at movable parts of hose.
  - Foreign material is embedded in the covering.
  - Hose end is deformed.

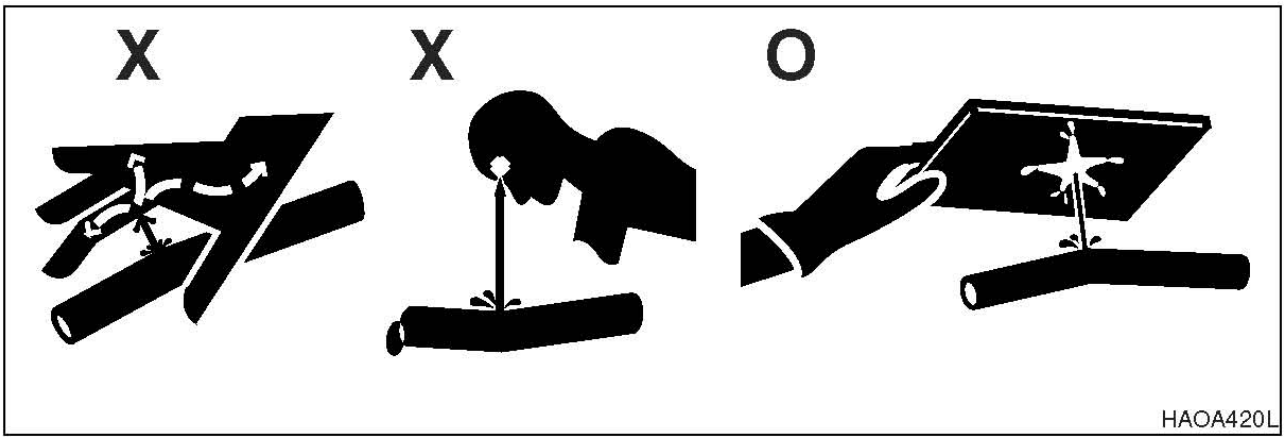

Figure 29

OBTAIN IMMEDIATE MEDICAL ATTENTION IF PRESSURIZED OIL PIERCES SKIN.

⚠ **WARNING!**
Failure to obtain prompt medical assistance could result in gangrene or other serious damage to tissue.

https://truckmanualshub.com/

USE CORRECT REPLACEMENT FASTENERS TIGHTENED TO PROPER TORQUE

Refer to "General Maintenance" section of Shop Manual for information on tightening torques and recommended assembly compounds and always use correct part.

Poor or incorrect fastener connections can dangerously weaken assemblies.

SAFETY-CRITICAL PARTS MUST BE REPLACED PERIODICALLY

Replace following fire-related components as soon as they begin to show any sign of wear, or at regular periodic intervals, whether or not deterioration is visible:

- Fuel system flexible hoses, the tank overflow drain hose and the fuel filler cap.
- Hydraulic system hoses, especially the pump outlet lines and front and rear pump branch hoses.
- Keep mounting brackets and hose and cable routing straps tight. Hose routing should have gradual bends.

DISPOSE OF ALL PETROLEUM-BASED OILS AND FLUIDS PROPERLY

Physical contact with used motor oil may pose a health risk. Wipe oil from your hands promptly and wash off any remaining residue.

Used motor oil is an environmental contaminant and may only be disposed of at approved collection facilities. To prevent pollution of the environment, always do the following;

- Never dump waste oil in a sewer system, rivers, etc.
- Always put oil drained from your machine in containers. Never drain oil directly onto the ground.
- Obey appropriate laws and regulations when disposing of harmful materials such as oil, fuel, solvent, filters, and batteries.

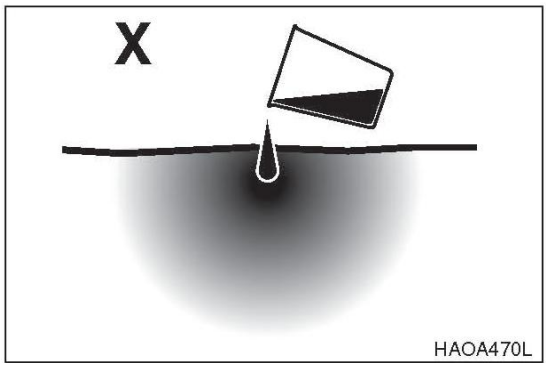

Figure 30

CHECK TIRE PRESSURE AND CONDITION

Maintain tire pressure but do not over inflate. Inspect tires and wheels daily. When inflating tires, follow procedures in Maintenance Section, which include using an extension to allow you to avoid standing in front of or over a tire. Do not change a tire unless you have both experience and proper equipment.

BATTERY HAZARD PREVENTION

Battery electrolyte contains diluted sulfuric acid and batteries generate hydrogen gas. Hydrogen gas is highly explosive, and mistakes in handling them can cause serious injury or fire. To prevent problems, always do the following;

- Do not smoke or bring any flame near the battery.
- When working with batteries, ALWAYS wear safety glasses and rubber gloves.
- If you spill battery electrolyte on yourself or your clothes, immediately flush the area with water.
- If battery electrolyte gets into your eyes, flush them immediately with large quantities of water and see a doctor at once.
- If you accidentally drink battery electrolyte, drink a large quantity of water or milk, raw egg or vegetable oil. Call a doctor or poison prevention center immediately.
- When cleaning the top surface of the battery, wipe it with a clean, damp cloth. Never use gasoline, thinner, or any other organic solvent or detergent.
- Tighten the battery caps securely.
- Explosive battery gas can be set off by sparks from incidental contact or static discharge. Turn "OFF" all switches and engine when working on batteries. Keep battery terminals tight. Contact between a loose terminal and post can create an explosive spark.
- If the battery electrolyte is frozen, do not charge the battery or start the engine with power from another source. There is danger that the battery may catch fire.
- When charging the battery or starting with power from another source, let the battery electrolyte melt and check that there is no leakage of battery electrolyte before starting the operation.
- Always remove the battery from the machine before charging.

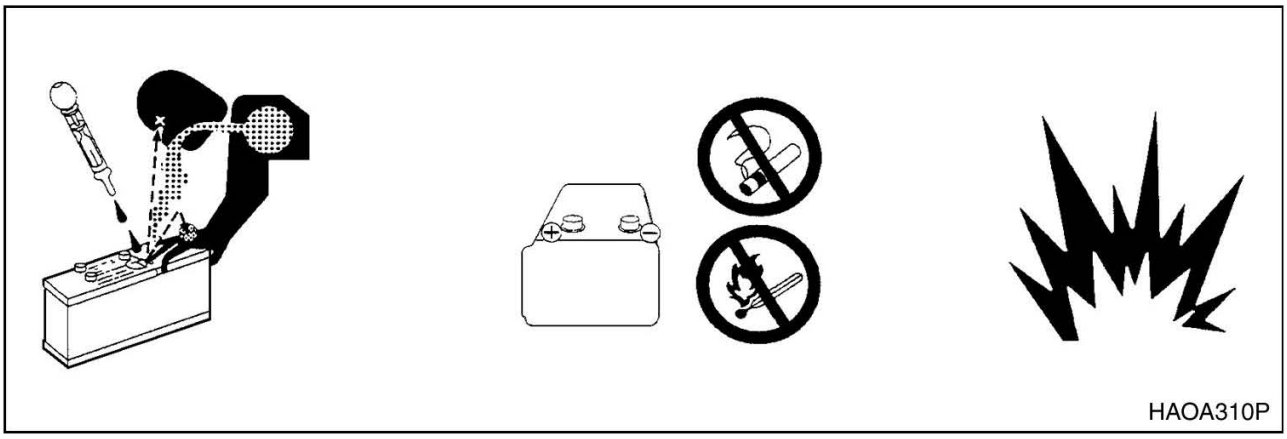

Figure 31

DISCONNECT BATTERIES BEFORE ELECTRICAL SERVICE OR ELECTRICAL WELDING

Remove cable to negative terminal first when disconnecting cable. Connect positive terminal cables first when installing a battery.

https://truckmanualshub.com/

USE LOW HEAT PORTABLE LIGHTING

Hot surfaces on trouble lights or portable work lights can set off fuel or battery explosive gases.

BOOST STARTING OR CHARGING ENGINE BATTERIES

If any mistake is made in the method of connecting the booster cables, it may cause an explosion or fire. Always do the following;

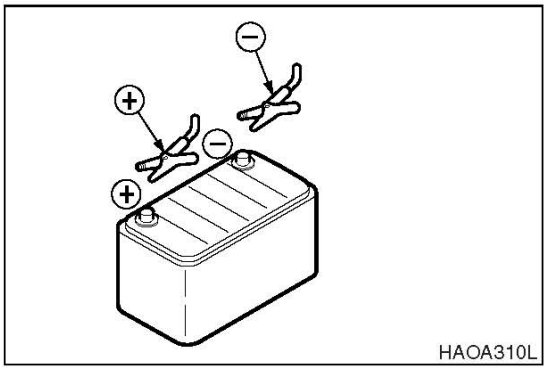

Figure 32

- Turn off all electrical equipment before connecting leads to the battery. This includes electrical switches on the battery charger or boost starting equipment.
- When boost-starting from another machine or vehicle do not allow the two machines to touch. Wear safety glasses or goggles while required battery connections are made.
- 24 volt battery units consisting of two series-connected twelve volt batteries have a cable connecting one positive terminal on one of the 12 volt batteries to a negative terminal on the other battery. Booster or charger cable connections must be made between the nonseries-connected positive terminals and between the negative terminal of the booster battery and the metal frame of the machine being boosted or charged. Refer to the procedure and illustration in Operation and Maintenance Manual.
- Connect positive cable first when installing cables and disconnect the negative cable first when removing them. The final cable connection, at the metal frame of the machine being charged or boost-started, should be as far away from the batteries as possible.

https://truckmanualshub.com/

TOWING

PRECAUTIONS WHEN TOWING

If any mistake is made in the method of selecting or inspecting the towing wire or in the method of towing, it may lead to serious personal injury. Always do the following;

- Always use the method of towing given in this Operation and Maintenance Manual. Do not use any other method.
- Use leather gloves when handling the wire rope.
- When carrying out the preparation work for towing with two or more workers, determine the signals to use and follow these signals correctly.
- If the engine on the problem machine will not start or there is a failure in the brake system, always contact your DISD distributor.
- Never go between the towing machine and the towed machine during the towing operation.
- It is dangerous to carry out towing on slopes, so select a place where the slope is gradual. If there is no place where the slope is gradual, carry out operations to reduce the angle of the slope before starting the towing operation.
- When towing a problem machine, always use a wire rope with a sufficient towing capacity.
- Do not use a frayed, kinked rope or a rope with any loss of diameter.

https://truckmanualshub.com/

SHIPPING AND TRANSPORTATION

OBEY STATE AND LOCAL OVER-THE-ROAD REGULATIONS

Check state and local restrictions regarding weight, width and length of a load before making any other preparation for transport.

Hauling vehicle, trailer and load must all be in compliance with local regulations governing intended shipping route.

Partial disassembly or tear-down of wheel loader may be necessary to meet travel restrictions or particular conditions at work site.

Refer to the section "Transportation" section of operation manual.

SUMMARY OF SAFETY PRECAUTIONS FOR LIFTING

⚠WARNING!

Improper lifting can allow load to shift and cause personal injury or damage to the machine

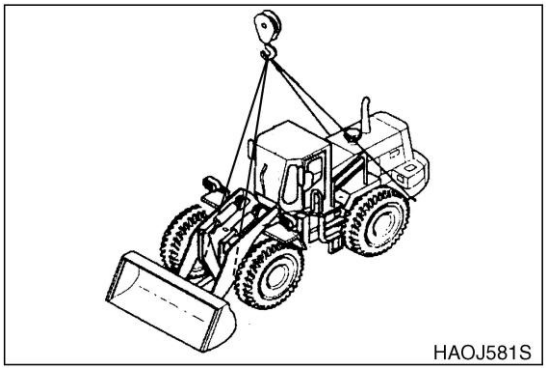

Figure 33

To make safe lifts, the following items must be evaluated by operator and work site crew.

- Condition of ground support.
- Wheel loader configuration and attachments.
- Weight, lifting height and lifting radius.
- Safe rigging of load.
- Proper handling of suspended load.

Taglines on opposite sides of load can be very helpful in keeping a suspended load secure, if they are anchored safely to control points on ground.

https://truckmanualshub.com/

https://truckmanualshub.com/

SPECIFICATIONS

https://truckmanualshub.com/

https://truckmanualshub.com/

SPECIFICATIONS FOR SD310

⚠ CAUTION!
Follow all safety recommendations and safe shop practices outlined in the front of this manual or those contained within this section. **Always use tools and equipment that is in good working order.** **Use lifting and hoisting equipment capable of safely handling load.** **Remember, that ultimately safety is your own personal responsibility.**

MODEL	SERIAL NUMBER RANGE
SD310	010001 and Up

Copyright 2012 DISD

July 2012

https://truckmanualshub.com/

TABLE OF CONTENTS

Component Locations 4
General Specifications 6
Engine Performance Curves 8
Working Range and Dimensions.....10
Working Capacities 11
Bucket Capacity 11
Tipping Load 11
Material Weight 11
Approximate Weight of Workload Materials 11

https://truckmanualshub.com/

COMPONENT LOCATIONS

Figure 1 identifies the location of major machine components.

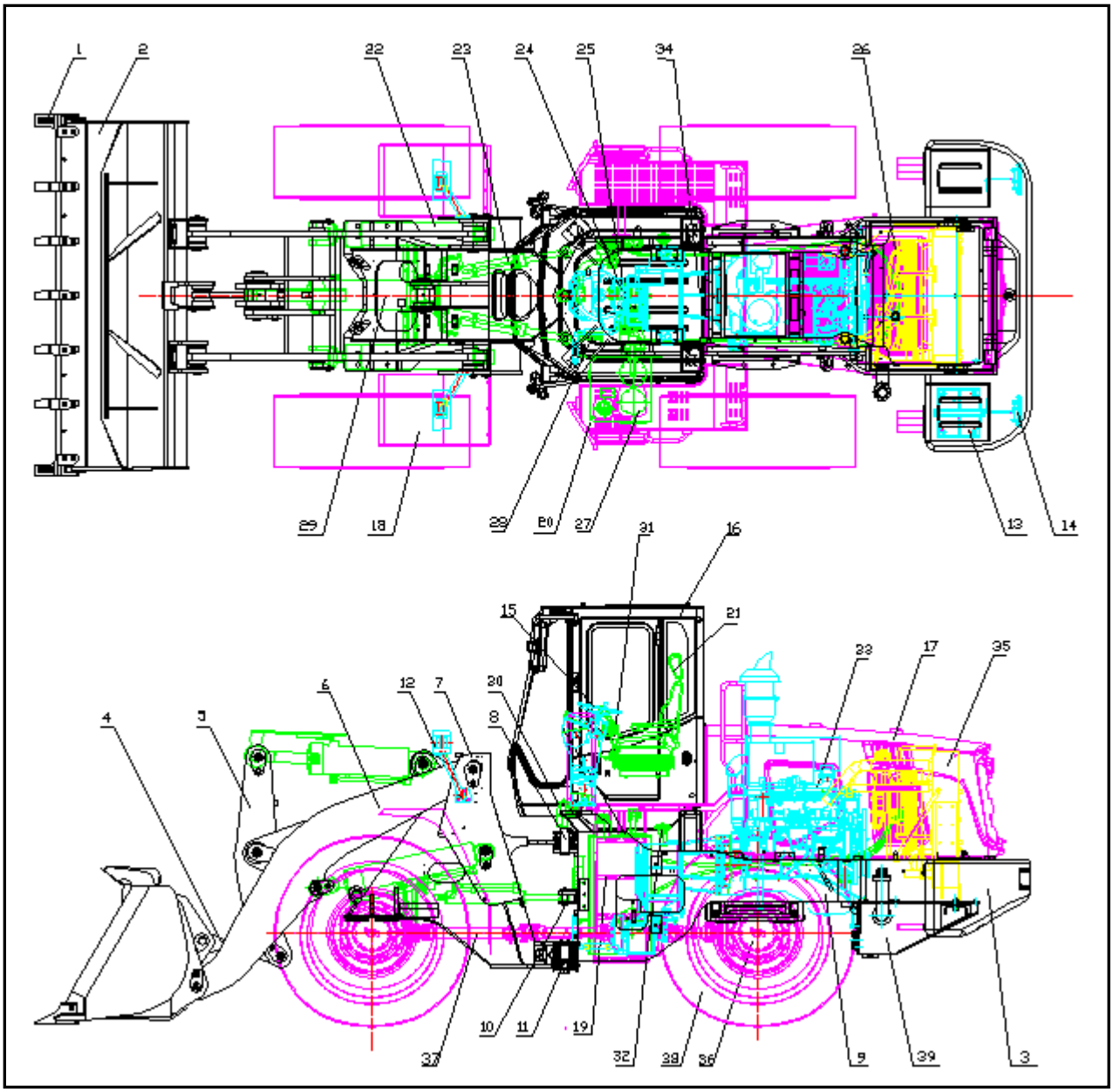

Figure 1

Reference Number	Description	Reference Number	Description
1	Frame	21	Seat
2	E/G and T/M Ass`y	22	Boom Cylinder
3	Fuel Tank	23	Steer Cylinder
4	Oil Tank	24	Steer Pump
5	Axle and Driving shaft	25	Main Pump
6	Axle and Driving shaft	26	Fan Motor
7	Tire	27	Oil Tank
8	Axle Hub	28	Priority Valve
9	Cooling Pipe line	29	Bucket Cylinder
10	Main Pipe line	30	Steering Unit
11	Steering Pipe line	31	Joystick
12	Front Combined Lamps	32	Pilot Filter
13	Battery	33	Engine
14	Rear Combined Lamps	34	Transmission
15	Console	35	Radiator
16	Cabin	36	Axle
17	Engine Cover	37	Shaft
18	Front Fender	38	Tire
19	Ladder	39	Fuel Tank
20	Platform		

GENERAL SPECIFICATIONS

Item		SD310
Serial Number		010001 thru UP
Standard Bucket Capacity		3.00 m^3 (3.92yd^3)
Vehicle Weight		17,350 kg (38,250 lb)
Engine		
	Type	Doosan DE08TIS
	Rated power (SAE J 1995 gross)	218 ps @ 2,000 rpm (215 hp @ 2,000 rpm)
	Max. Torque (SAE J 1995 gross)	92 kg•m / 1,300 rpm (666 ft lb @ 1,300 rpm)
Transmission		
	Full Automatic Power shift	Full Automatic Power shift
	Speeds	4 Forward, 3Reverse
Brake Systems		
	Service Brakes	4 Wheel, Dry Disks, Single Pedal
	Parking Brake	Dry Disk on Transmission
Performance		
	Travel Speed (1/2/3/4) km/h(mph)	Forward:6.4(4.0)/11.8(7.3)/23.8（14.8）/39.0(24.2) Reverse:6.5(4.0)/11.9(7.4)/24.1(14.9)
	Steering Angle	+ 40°
	Min. Tire Turning Radius (Tire Center)	5,500 mm
	Max.Tractive Effort	17.260 kg (38.051lb)
	Max. Breakout Force	16,100kg (35.494 lb)
	Bucket Rise Time	5.8 Seconds
	Bucket Dump Time	1.4 Seconds
	Bucket Descent Time	3.5 Seconds
Working Range		
	Dump Height at 45° (w/ cutting edge)	3,230 mm (10’ - 7")
	Dump Reach at 45° (w/ cutting edge)	1,158 mm (3’ - 9")
	Max Dump Angle at Fully Raised	48°
	Max Tilt Angle at Carry	49°
Travel Dimension		
	Overall Length	8,220 mm (26’ - 11")
	Overall Width	3.004 mm (9’ - 10")
	Overall Height	3,468 mm (11’ - 4")
	Wheel Base	3,190 mm (10’ - 5")
	Tread	2,152mm (7’ - 1")
	Ground Clearance	424 mm (1’ - 5")

https://truckmanualshub.com/

ENGINE PERFORMANCE CURVES

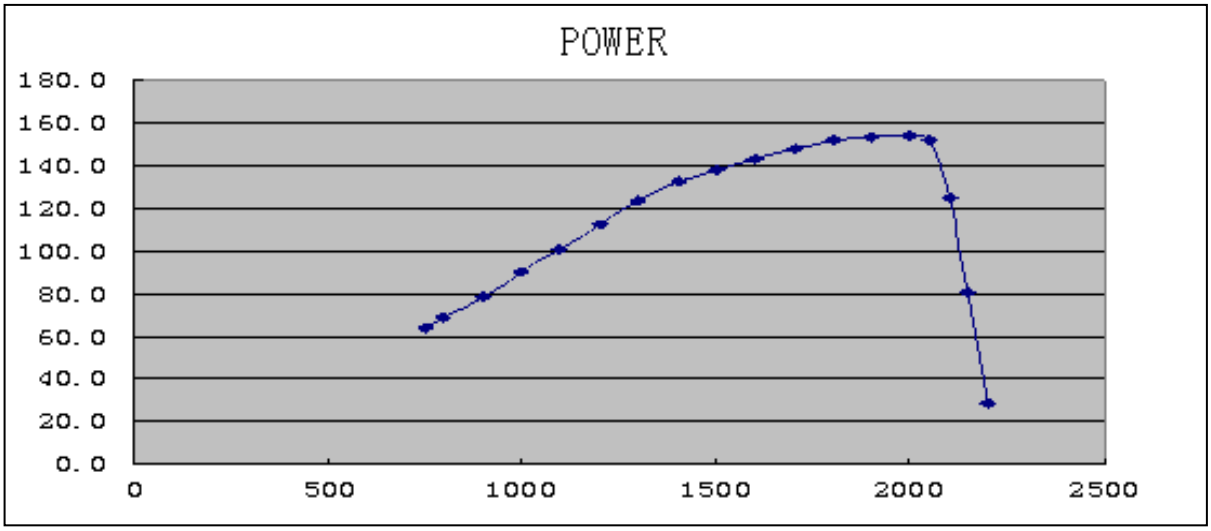

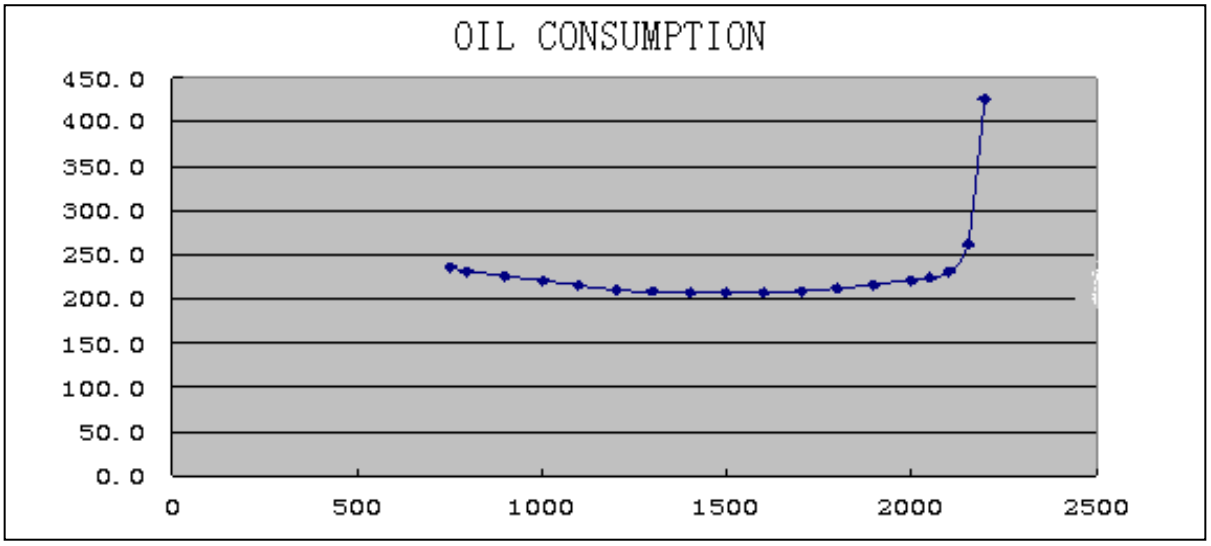

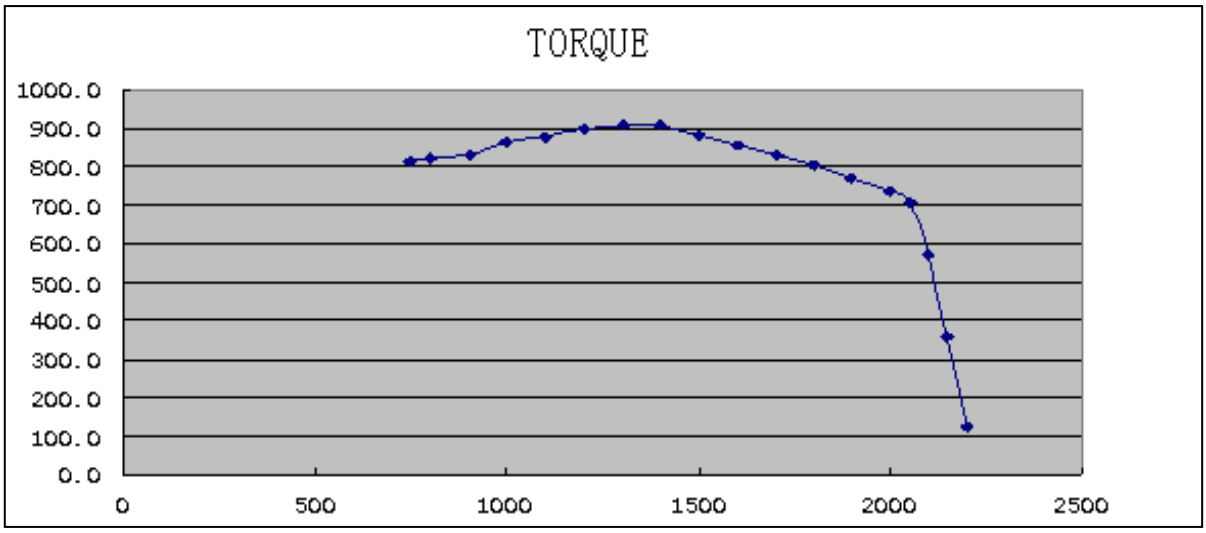

Serial Number	010001 and Up
Engine Type	DE08TIS
Rated Power (217 hp @ 2,000 rpm)	218ps @ 2,000 rpm (214 hp @ 2,200 rpm)
Maximum Torque (666 ft lb @ 1,300 rpm)	92 kg•m @ 1,300 rpm (666 ft lb @ 1,300 rpm)
Fuel Consumption	156 g / ps.h
Performance Standard	SAE J1349 gross

NOTE: *Barometric Pressure: 760 mm (30") Mercury*

Temperature: 20°C (68°F)

W/O Cooling Fan: Driven by hydraulic fan motor

Alternator: 24 V, 6kw

Exhaust System: Complete, attached

Air Cleaner; Installed

WORKING RANGE AND DIMENSIONS

Figure 3, illustrates exterior machine dimensions and working range of machine when it is equipped with a standard bucket.

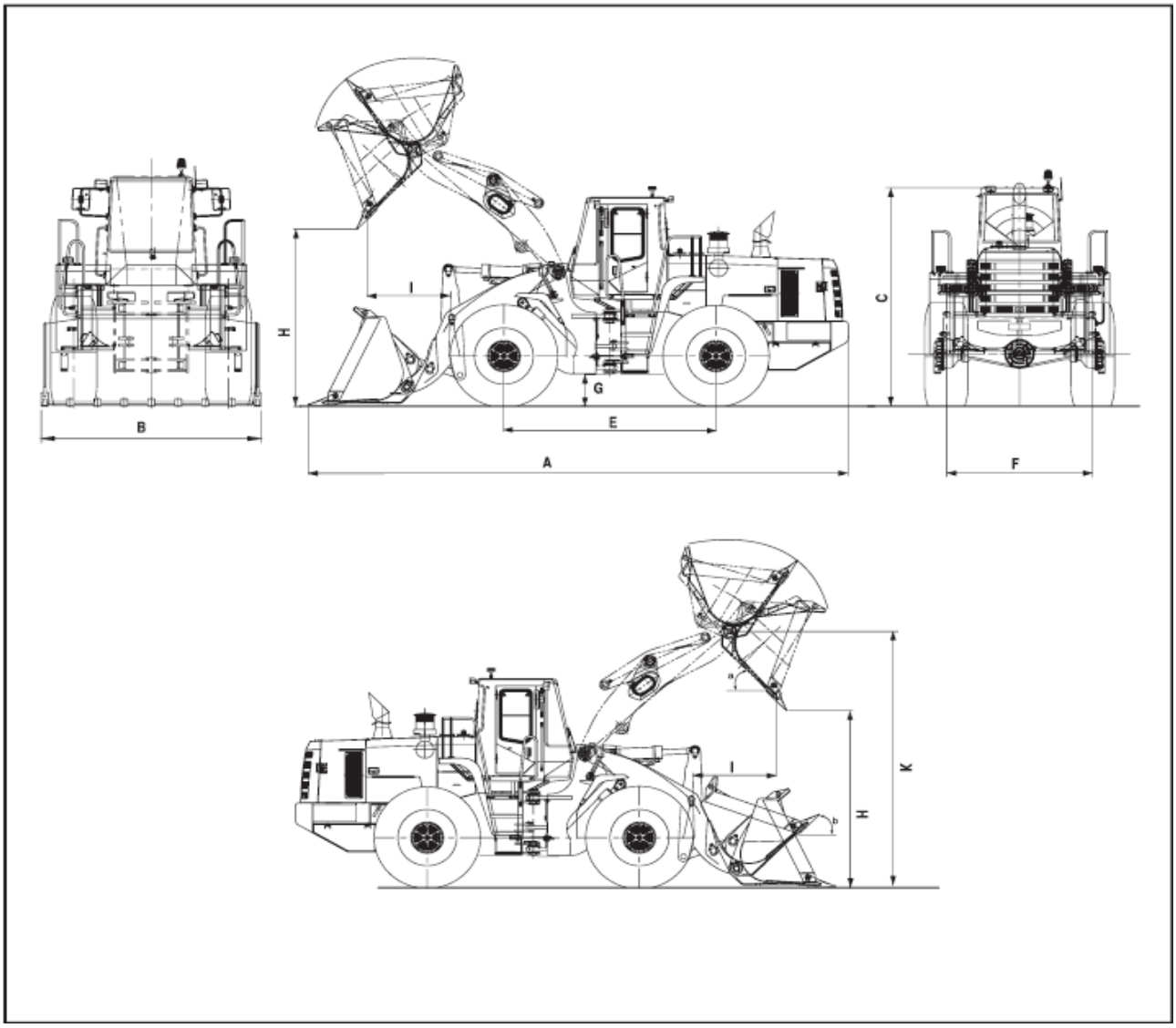

Figure 3

Category	Dimension	Category	Dimension
Overall Length (A)	8,220 mm (26’ 11")	Dump Height, to tooth (H)	3,110 mm (10’ - 2")
Overall Width (B)	3.004 mm (9’ 10")	Dump Distance, to Bucket Edge (I)	1,158 mm (3’ 9")
Overall Height (C)	3,468mm (11’ 4")	Dump Height, to Bucket Pivot (K)	4,160 mm (13’8")
Wheel Base (E)	3,190 mm (10’ 5")	Max. Dump Angle at Fully Raised (a)	48°
Tread (F)	2,152 mm (7’ 1")	Max. Tilt Angle at Carry (b)	49°
Ground Clearance (G)	424 mm (1’ 5")	Tire Size	23.5-25-16 PR(L3)

WORKING CAPACITIES

BUCKET CAPACITY

Standard toothed bucket has a capacity of 3.0 m3 (3.9 yd3). An optional bucket equipped with a cutting edge and no teeth has a capacity of 3.2 m3 (4.2 yd3), and 2.9 m3(3.8 yd3),V-Type of 2.7 m3(3.5 yd3) rock bucket and 4.0 m3(5.2 yd3) big bucket.

TIPPING LOAD

Static Tipping Load with bucket at max reach position is 12,603 kg (27,784 lb). With bucket in Fully Turned position, Static Tipping Load is 10,964 kg (24,171 lb).

MATERIAL WEIGHT

The data below describes weight of a cubic meter (cubic yard) of many types of workload materials.

APPROXIMATE WEIGHT OF WORKLOAD MATERIALS

MATERIAL	LOW WEIGHT OR DENSITY 1,100 KG/M^3 (1,850 LB/YD^3), OR LESS	MEDIUM WEIGHT OR DENSITY 1,600 KG/M^3 (2,700 LB/YD^3), OR LESS	HIGH WEIGHT OR DENSITY 2,000 KG/M^3 (3,370 LB/YD^3), OR LESS
Charcoal	401 kg/m^3 (695 lb/yd^3)	----------	----------
Coke, blast furnace size	433 kg/m^3 (729 lb/yd^3)	----------	----------
Coke, foundry size	449 kg/m^3 (756 lb/yd^3)	----------	----------
Coal, bituminous slack, piled	801 kg/m^3 (1,350 lb/yd^3)	----------	----------
Coal, bituminous r. of m., piled	881 kg/m^3 (1,485 lb/yd^3)	----------	----------
Coal, anthracite	897 kg/m^3 (1,512 lb/yd3)	----------	----------
Clay, DRY, in broken lumps	1,009 kg/m^3 (1,701 lb/yd^3)	----------	----------
Clay, DAMP, natural bed	----------	1,746 kg/m^3 (2,943 lb/yd^3)	----------

MATERIAL	LOW WEIGHT OR DENSITY 1,100 KG/M^3 (1,850 LB/YD^3), OR LESS	MEDIUM WEIGHT OR DENSITY 1,600 KG/M^3 (2,700 LB/YD^3), OR LESS	HIGH WEIGHT OR DENSITY 2,000 KG/M^3 (3,370 LB/YD^3), OR LESS
Cement, Portland, DRY granular	----------	1,506 kg/m^3 (2,583 lb/yd^3)	----------
Cement, Portland, DRY clinkers	----------	1,362 kg/m^3 (2,295 lb/yd^3)	----------
Dolomite, crushed	----------	1,522 kg/m^3 (2,565 lb/yd^3)	----------
Earth, loamy, DRY, loose	----------	1,202 kg/m^3 (2,025 lb/yd^3)	----------
Earth, DRY, packed	----------	1,522 kg/m^3 (2,565 lb/y d^3)	----------
Earth, WET, muddy	----------	----------	1,762 kg/m^3 (2,970lb/yd3)
Gypsum, calcined, (heated, powder)	961kg/m^3 (1,620 lb/yd^3)	----------	----------
Gypsum, crushed to 3 inch size	----------	1,522 kg/m^3 (2,565 lb/y d^3)	----------
Gravel, DRY, packed fragments	----------	----------	1,810 kg/m^3 (3,051 lb/y d^3)
Gravel, WET, packed fragments	----------	----------	1,522 kg/m^3 (3,240 lb/y d^3)
Limestone, graded above 2	----------	1,282 kg/m^3 (2,160 lb/y d^3)	----------
Limestone, graded 1-1/2 or 2	----------	1,362 kg/m^3 (2,295 lb/y d^3)	----------
Limestone, crushed	----------	1,522 kg/m^3 (2,565 lb/y d^3)	
Limestone, fine	----------	----------	1,602 kg/m^3 (2,705 lb/y d^3)
Phosphate, rock	----------	1,282 kg/m^3 (2,160 lb/y d^3)	----------

MATERIAL	LOW WEIGHT OR DENSITY 1,100 KG/M^3 (1,850 LB/YD^3), OR LESS	MEDIUM WEIGHT OR DENSITY 1,600 KG/M^3 (2,700 LB/YD^3), OR LESS	HIGH WEIGHT OR DENSITY 2,000 KG/M^3 (3,370 LB/YD^3), OR LESS
Salt	929 kg/m^3 (1,566 lb/yd^3)	----------	----------
Snow, light density	529 kg/m^3 (891 lb/yd^3)	----------	----------
Sand, DRY, loose	----------	1,522 kg/m^3 (2,565 lb/yd^3)	----------
Sand, WET, packed	----------	----------	1,922 kg/m^3 (3,240 lb/yd^3)
Shale, broken	----------	1,362 kg/m^3 (2,295 lb/y d^3)	----------
Sulphur, broken	529 kg/m^3 (891 lb/yd^3)	----------	----------

IMPORTANT
Weights are approximations of estimated average volume and mass. Exposure to rain, snow or ground water; settling or compaction due to overhead weight and chemical or industrial processing or changes due to thermal or chemical transformations could all increase value of weights listed in table..

https://truckmanualshub.com/

https://truckmanualshub.com/

GENERAL MAINTENANCE

https://truckmanualshub.com/

https://truckmanualshub.com/

GENERAL MAINTENANCE PROCEDURES

⚠ CAUTION!
Follow all safety recommendations and safe shop practices outlined in the front of this manual or those contained within this section. **Always use tools and equipment that is in good working order.** **Use lifting and hoisting equipment capable of safely handling load.** **Remember, that ultimately safety is your own personal responsibility.**

MODEL	SERIAL NUMBER RANGE
ALL MODELS	ALL RANGES

Copyright 2011 DISD

July 2011

https://truckmanualshub.com/

TABLE OF CONTENTS

Welding Precautions and Guidelines 3
Hydraulic System - General Precautions 4
Maintenance Service and Repair Procedure 5
General Precautions 5
Hydraulic System Cleanliness and Oil Leaks..... 6
Maintenance Precautions for Hydraulic System Service 6
Oil Leakage Precautions..... 6
Cleaning and Inspection..... 7
General Guidelines 7
Bearing inspection 8

https://truckmanualshub.com/

WELDING PRECAUTIONS AND GUIDELINES

IMPORTANT

To avoid accidents, personal injury and the possibility of causing damage to the machine or to components, welding must only be performed by properly trained and qualified personnel, who possess the correct certification (when required) for the specific welding fabrication or specialized repair being performed.

⚠ WARNING!

Structural elements of the machine may be built from a variety of steels. These could contain unique alloys or may have been heat treated to obtain particular strength characteristics. It is extremely important that welding repairs on these types of steel are performed with the proper procedures and equipment. If repairs are performed incorrectly, structural weakening or other damage to the machine (that is not always readily visible) could be caused. Always consult DISD After Sales Service before welding on integral components (loader arm, frames, car body, track frames, turntable, attachment, etc.) of the machine. It is possible that some types of structurally critical repairs may require Magnetic Particle or Liquid Penetrant testing, to make sure there are no hidden cracks or damage, before the machine can be returned to service.

⚠ CAUTION!

Always perform welding procedures with the proper safety equipment on hand. Adequate ventilation and a dry work area are absolutely essential. Keep a fire extinguisher nearby and always wear protective clothing and the recommended type of eye protection.

https://truckmanualshub.com/

⚠ CAUTION!

Observe the following safety precautions:

1. **Use extra caution and adequate safety shielding when welding near fuel and oil tanks, batteries, hydraulic piping lines or other fire hazards.**
2. **Never weld when the engine is running. Battery cables must be disconnected before the welding procedure is started.**
3. **Never weld on a wet or damp surface. The presence of moisture causes hydrogen embrittlement and structural weakening of the weld.**
4. **If welding procedures are being performed near cylinder rods, operator's cab window areas or any other assemblies that could be damaged by weld spatters, use adequate shielding protection in front of the assembly.**
5. **During equipment setup, always attach ground cables directly to the area or component being welded to prevent arcing through bearings, bushings, or spacers.**
6. **Always use correct welding rods for the type of weld being performed and observe recommended precautions and time constraints. AWS Class E7018 welding rods for low alloy to medium carbon steel must be used within two hours after removal from a freshly opened container. Class E11018G welding rods for T-1 and other higher strength steel must be used within 1/2 hour.**

HYDRAULIC SYSTEM - GENERAL PRECAUTIONS

Always maintain oil level in the system at recommended levels. Assemblies that operate under heavy loads, at high speed, with extremely precise dimensional tolerances between moving parts - pistons and cylinders, or shoes and swash plates, for example - can be severely damaged if oil supply runs dry.

Assemblies can be run dry and damaged severely in a very short time when piping or hoses are disconnected to repair leaks and/or replace damaged components. Hoses that are inadvertently switched during disassembly (inlet for outlet and vice versa), air introduced into the system or assemblies that are low on oil due to neglect or careless maintenance, could all produce sufficient fluid loss to cause damage.

When starting the engine (particularly after long layoff or storage intervals), make sure that all hydraulic controls and operating circuits are in neutral, or "OFF." That will prevent pumps or other components that may be temporarily oil-starved from being run under a load.

Replacement of any hydraulic system component could require thorough cleaning, flushing, and some amount of pre-filling with fresh, clean oil if the protective seal on replacement parts has obviously been broken or if seal integrity may have been compromised. When protective seals are removed before installation and reassembly, inspect all replacement parts carefully, before they are installed. If the replacement part is bone dry (with no trace of factory pre-lube) or has been contaminated by dirt or by questionable oils, flushing and pre-filling with clean hydraulic fluid is recommended.

Vibration, irregular or difficult movement or unusual noise from any part of the hydraulic system could be an indication of air in the system (and many other types of problems). As a general precaution (and to help minimize the risk of potential long-term damage), allow the engine to run at no-load idle speed immediately after initial start-up. Hydraulic fluid will circulate, releasing any air that may have been trapped in the system before load demands are imposed.

A daily walk-around pre-start equipment safety inspection, including a quick visual scan for any exterior evidence of leaking hydraulic fluid, can help extend the service life of system components.

IMPORTANT
Hydraulic system operating conditions (repetitive cycling, heavy work loads, fluid circulating under high pressure) make it extremely critical that dust, grit or any other type of contamination be kept out of the system. Observe fluid and filter change maintenance interval recommendations and always pre-clean any exterior surface of the system before it is exposed to air. For example, the reservoir filler cap and neck area, hoses that have to be disassembled, and the covers and external surfaces of filter canisters should all be cleaned before disassembly.

MAINTENANCE SERVICE AND REPAIR PROCEDURE

GENERAL PRECAUTIONS

Fluid level and condition should always be checked whenever any other type of maintenance service or repair is being performed.

NOTE: *If the unit is being used in an extreme temperature environment (in sub-freezing climates or in high temperature, high humidity tropical conditions), frequent purging of moisture condensation from the hydraulic reservoir drain tap should be a regular and frequent part of the operating routine. In more moderate, temperate climates, draining reservoir sediment and moisture may not be required more than once or twice every few months.*

Inspect drained oil and used filters for signs of abnormal coloring or visible fluid contamination at every oil change. Abrasive grit or dust particles will cause discoloration and darkening of the fluid. Visible accumulations of dirt or grit could be an indication that filter elements are overloaded (and will require more frequent replacement) or that disintegrating bearings or other component failures in the hydraulic circuit may be imminent or have already occurred. Open the drain plugs on the main pump casings and check and compare drain oil in the pumps. Look for evidence of grit or metallic particles.

Vibration or unusual noise during operation could be an indication of air leaking into the circuit (Refer to the appropriate Troubleshooting section for component or unit for procedures.), or it may be evidence of a defective pump. The gear-type pilot pump could be defective, causing low pilot pressure, or a main pump broken shoe or piston could be responsible.

NOTE*: If equipped, indicated operating pressure, as shown on the multidisplay digital gauge on the Instrument Panel ("F-Pump" and "R-Pump") will be reduced as a result of a mechanical problem inside the pump. However, pressure loss could also be due to cavitation or air leakage, or other faults in the hydraulic system.*

Check the exterior case drain oil in the main pumps. If no metallic particles are found, make sure there is no air in the system. Unbolt and remove the tank return drain line from the top part of the swing motor, both travel motors and each main pump. If there is air in any one of the drain lines, carefully pre-fill the assembly before bolting together the drain line piping connections. Run the system at low rpm.

HYDRAULIC SYSTEM CLEANLINESS AND OIL LEAKS

MAINTENANCE PRECAUTIONS FOR HYDRAULIC SYSTEM SERVICE

Whenever maintenance, repairs or any other type of troubleshooting or service is being performed, it's important to remember that the hydraulic system - including both the interior and exterior surfaces of assemblies, and every drop of operating fluid - must be protected from contamination.

Dust and other foreign contaminants are major contributors to premature wear in hydraulic circuits. The narrow tolerances, rapidly moving parts and high operating pressures of the system require that fluid be kept as clean as possible. The performance and dependability of the machine (and the service lift of individual components) can be noticeably reduced if proper precautions are not observed:

- Use a safe, noncombustible, evaporative-type, low-residue solvent and thoroughly clean exterior surfaces of assemblies before any part of the circuit is opened up or disassembled.

  NOTE: *It's just as important to clean the cap and reservoir top before routine fluid changes or quick checks as it is before major repairs. (Accumulated dirt attracts moisture, oil and other fluids - and more dirt.)*
- Keep dismantled parts covered during disassembly. Use clean caps, plugs or tape to protect the disconnected openings of flanges, manifolds and piping.
- Do not allow cleaning solvents or other fluids to mix with the oil in the system. Use clean oil to flush any traces of solvent or other residue before reassembly.
- If metal or rubber fragments are found in the system, flush and replace all fluid in the system and troubleshoot the circuit to identify the source of contamination.

IMPORTANT
Make sure that cleaning solvents will be compatible with rubber materials used in the hydraulic system. Many petroleum based compounds can cause swelling, softening, or other deterioration of system sealing elements, such as O-rings, caps and other seals.

OIL LEAKAGE PRECAUTIONS

Oil that is visibly seeping from joints or seals should always serve as a "red flag" alarm.

Leaks must alert the machine operator and maintenance crew that air, water and dirt have an open, free passageway through which to enter the circuit. Harsh, corrosive salt air, freezing and thawing condensation cycles and working environments that are full of fine dust are especially hazardous. Clogging of valve spools or external piping (especially pilot circuit piping) can gradually diminish or very suddenly put a complete stop to normal hydraulic function. You can prevent having to make these types of repairs by following recommended assembly procedures:

1. Use new O-rings and oil seals whenever hydraulic assemblies are rebuilt.
2. Prepare joint surfaces before assembly by checking alignment and flatness. Clean and repair corrosion or any other damage.
3. Follow bolt torque recommendations and all other assembly requirements

https://truckmanualshub.com/

NOTE: *Grease lip seals before assembly.*

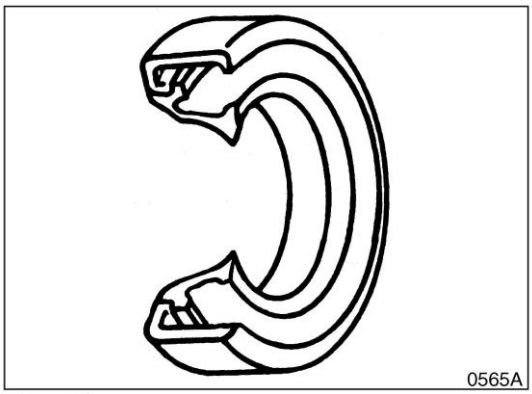

Figure 1

CLEANING AND INSPECTION

GENERAL GUIDELINES

All parts must be clean to permit an effective inspection. During assembly, it is very important that no dirt or foreign material enters unit being assembled. Even minute particles can cause malfunction of close fitting parts such as thrust bearing, matched parts, etc.

⚠ WARNING!
Care should be exercised to avoid inhalation of vapors, exposure to skin and creating fire hazards when using solvent type cleaners.

1. Clean all metal parts thoroughly using a suitable cleaning fluid. It is recommended that parts be immersed in cleaning fluid and moved up and down slowly until all oils, lubricants, and/or foreign materials are dissolved and parts are thoroughly clean.
2. For bearings that can be removed, soak them in a suitable cleaning fluid for a minute or two, then remove bearings from cleaning fluid and strike flat against a block of wood to dislodge solidified particles of lubricant. Immerse again in cleaning fluid to flush out particles. Repeat above operation until bearings are thoroughly clean. To dry bearings, use moisture-free compressed air. Be careful to direct air stream across bearing to avoid spinning bearings that are not lubricated. DO NOT SPIN BEARINGS WHEN DRYING; bearings may be rotated slowly by hand to facilitate drying process.
3. Carefully inspect all bearing rollers, cages and cups for wear, chipping or nicks to determine condition. Do not replace a bearing cone or cup individually without replacing mating cup or cone at the same time. After inspection, dip bearings in light weight oil and wrap in clean lintless cloth or paper to protect them until installation.

   For those bearings that are to be inspected in place; inspect bearings for roughness of rotation, scoring, pitting, cracked or chipped races. If any of these defects are found, replace bearings. Also inspect defective bearing housing and/or shaft for grooved, galled or burred conditions that indicate bearing has been turning in its housing or on its shaft.
4. It is more economical to replace oil seals, O-rings, sealing rings, gaskets and snap rings when unit is disassembled than waiting for premature failures; refer to latest Micro Fiche and/or Parts Book for replacement items. Be extremely careful when installing sealing members, to avoid cutting or

scratching. Curling under of any seal lip will seriously impair its efficiency. Apply a thin coat of Loctite #120 to outer diameter, of metal casing, on oil seals to assure an oil tight fit into retainer. Use extreme care not to get Loctite on lips of oil seals. If this happens, that portion of the seal will become brittle and allow leakage.

When replacing lip type seals, make sure spring loaded side is towards oil to be sealed.

5. If available, use magna-flux or similar process for checking for cracks that are not visible to the eye. Examine teeth on all gears carefully for wear, pitting, chipping, nicks, cracks or scores. Replace all gears showing cracks or spots where case hardening has worn through. Small nicks may be removed with suitable hone. Inspect shafts and quills to make certain they have not been sprung, bent, or splines twisted and that shafts are true.

   NOTE: Spline *wear is not considered detrimental except where it affects tightness of splined parts.*

   Inspect thrust washers for distortion, scores, burs, and wear. Replace thrust washer if defective or worn.

6. Inspect bores and bearing surfaces of cast parts and machined surfaces for scratches, wear, grooves and dirt. Remove any scratches and burrs with crocus cloth. Remove foreign material. Replace any parts that are deeply grooved or scratched which would affect their operation.

BEARING INSPECTION

The conditions of the bearing are vital to the smooth and efficient operation of the machinery. When any component containing bearings is disassembled, always carefully examine the condition of the bearings and all of its components for wear and damage.

Once the bearing is removed, clean all parts thoroughly using a suitable cleaning solution. If the bearing is excessively dirty soak the bearing assembly in a light solution and move the bearing around until all lubricants and or foreign materials are dissolved and the parts are thoroughly clean.

When drying bearings, moisture free compressed air can be used. Be careful not to direct the air in a direction which will force the bearing to dry spin while not being properly lubricated.

After the bearings have been cleaned and dried, carefully inspect all bearing rollers, cages and cups for wear, chipping or nicks. If the bearing cannot be removed and is to be inspected in place, check foe roughness of rotation, scoring, pitting, cracked or chipped races. If any of these defects are found replace the whole bearing assembly. NEVER replace the bearing alone without replacing the mating cup or the cone at the same time.

After inspection lightly coat the bearing and related parts with oil and wrap in a clean lintless cloth or paper and protect them from moisture and other foreign materials until installation.

It is also important to inspect the bearing housing and/or shaft for grooved, galled or burred conditions that indicate that the bearing has been turning in its housing or on its shaft.

If available, use magna-flux or similar process for checking for cracks that are not visible to the naked eye.

The following illustrations will aid in identifying and diagnosing some of the bearing related problems.

NOTE: *The illustrations will only show tapered roller bearings, but the principles of identifying, diagnosing and remedying the defects are common to all styles and types of bearings.*

Normal Bearing

Smooth even surfaces with no discoloration or marks.

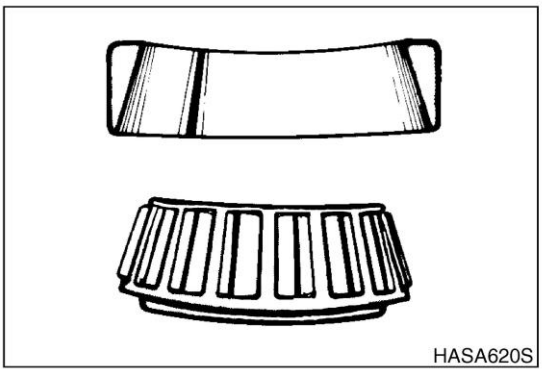

Figure 2

Bent Cage

Cage damage due to improper handling or tool usage.

Replace bearing.

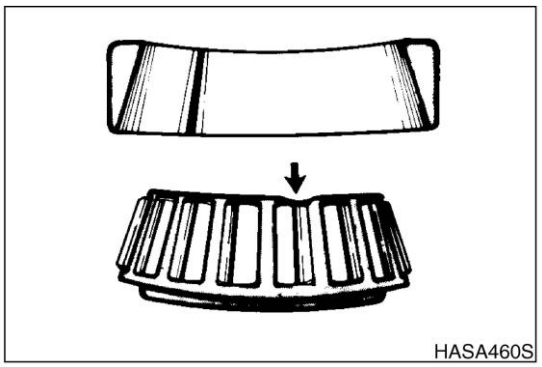

Figure 3

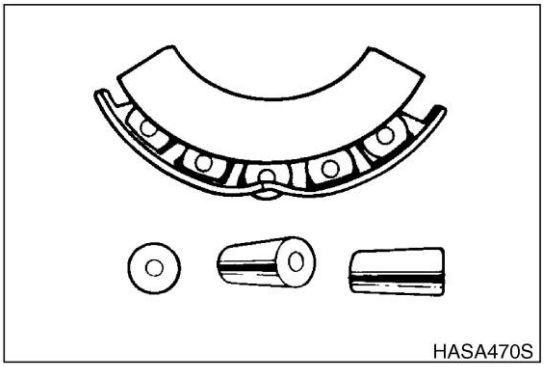

Figure 4

Galling

Metal smears on roller ends due to over heat, lubricant failure or overload.

Replace bearing - check seals and check for proper lubrication.

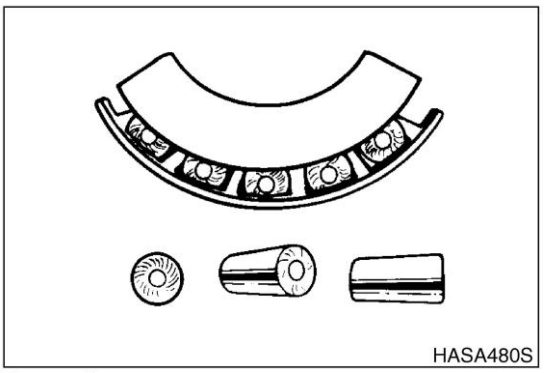

Figure 5

https://truckmanualshub.com/

Abrasive Step Wear

Pattern on roller ends caused by fine abrasives.

Clean all parts and housings, check all parts and housings, check seals and bearings and replace if leaking, rough or noisy.

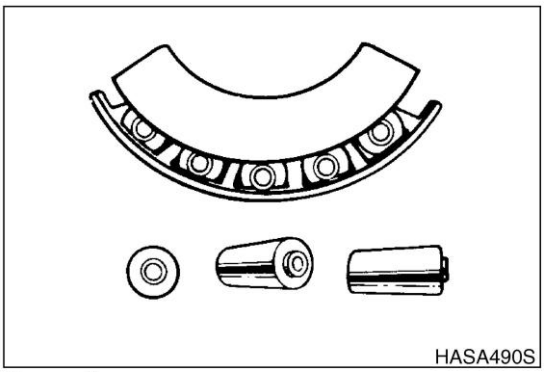

Figure 6

Etching

Bearing surfaces appear gray or grayish black in color with related etching away of material usually at roller spacing.

Replace bearings - check seals and check for proper lubrication.

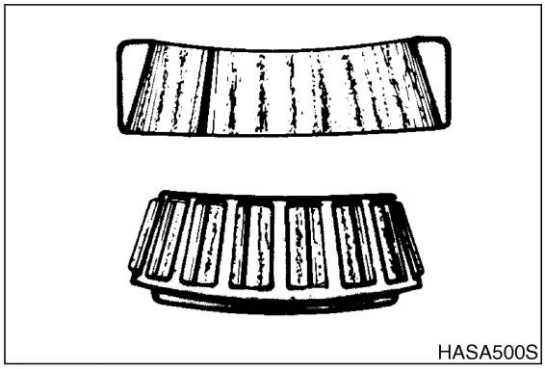

Figure 7

Misalignment

Outer race misalignment due to foreign object.

Clean related parts and replace bearing. Make sure races are properly seated.

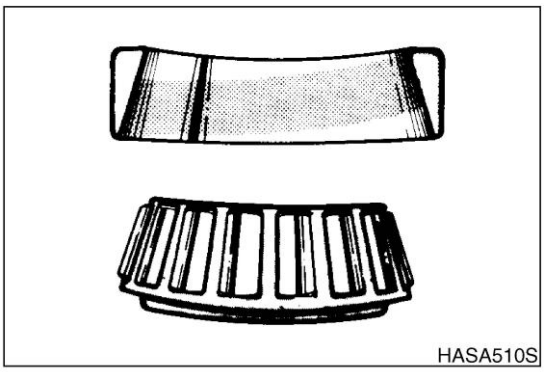

Figure 8

Indentations

Surface depressions on race and rollers caused by hard particles of foreign materials.

Clean all parts and housings, check seals and replace bearings if rough or noisy.

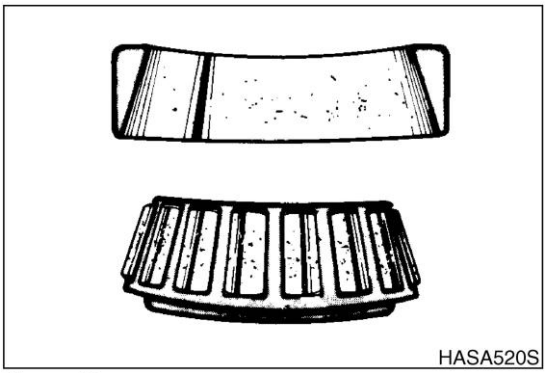

Figure 9

https://truckmanualshub.com/

Fatigue Spalling

Flaking of surface metal resulting from fatigue.

Replace bearing - clean all related parts.

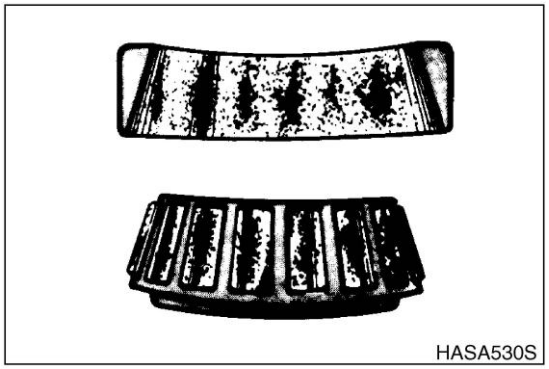

Figure 10

Brinelling

Surface indentations in raceway caused by rollers either under impact loading or vibration while the bearing is not rotating.

Replace bearing if rough or noisy.

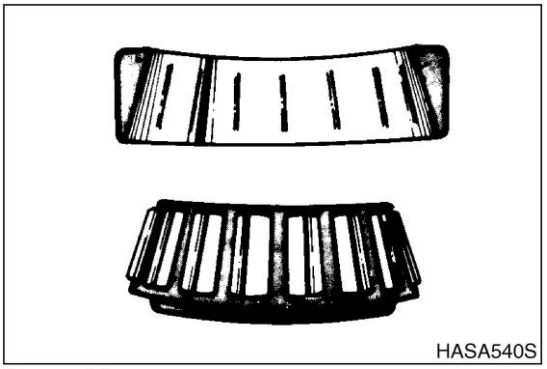

Figure 11

Cage Wear

Wear around outside diameter of cage and roller pockets caused by abrasive material and inefficient lubrication.

Replace bearings - check seals.

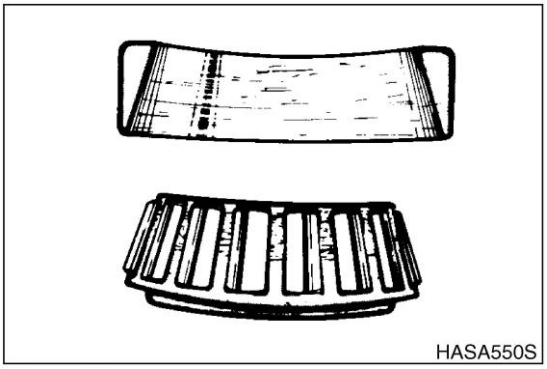

Figure 12

Abrasive Roller Wear

Pattern on races and rollers caused by fine abrasives.

Clean all parts and housings, check seals and bearings and replace if leaking, rough or noisy.

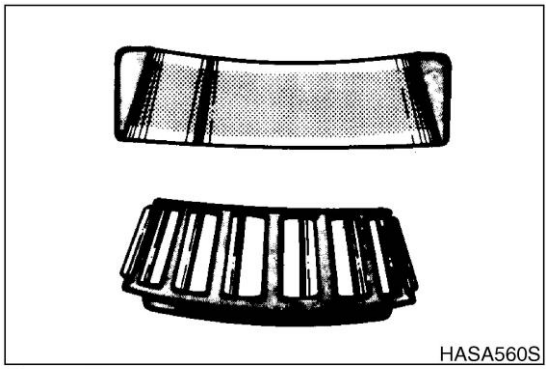

Figure 13

https://truckmanualshub.com/

Cracked Inner Race

Race cracked due to improper fit, cocking or poor bearing seat.

Replace all parts and housings, check seals and bearings and replace if leaking.

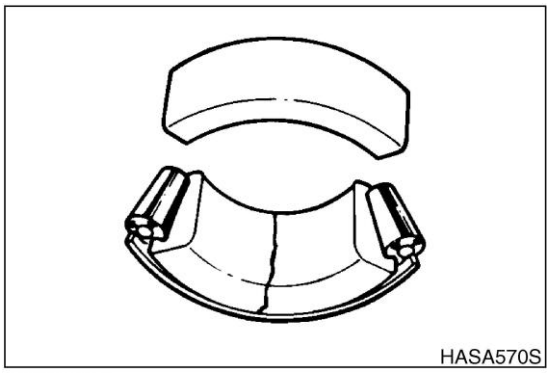

Figure 14

Smears

Smearing of metal due to slippage caused by poor fitting, lubrication, overheating, overloads or handling damage.

Replace bearings, clean related parts and check for proper fit and lubrication.

Replace shaft if damaged.

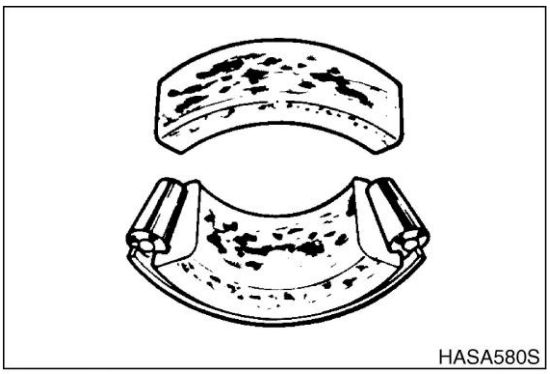

Figure 15

Frottage

Corrosion set up by small relative movement of parts with no lubrication.

Replace bearing. Clean all related parts. Check seals and check for proper lubrication.

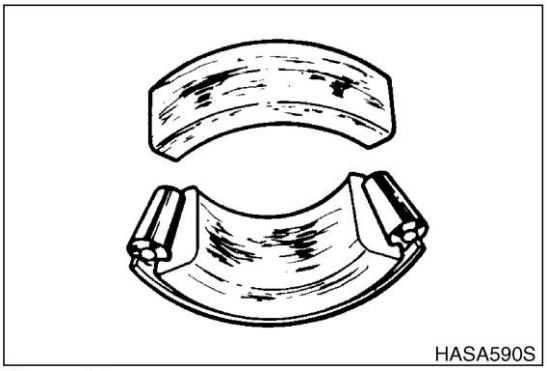

Figure 16

https://truckmanualshub.com/

Heat Discoloration

Heat discoloration can range from faint yellow to dark blue resulting from overload or incorrect lubrication.

Excessive heat can cause softening of races or rollers.

To check for loss of temper on races or rollers, a simple file test may be made. A file drawn over a tempered part will grab and cut metal, whereas a file drawn over a hard part will glide readily with no metal cutting.

Replace bearing if over heating damage is indicated.

Check seals and other related parts for damage.

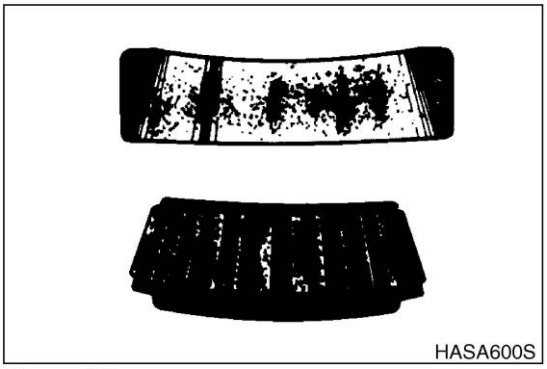

Figure 17

Stain Discoloration

Discoloration can range from light brown to black caused by incorrect lubrication or moisture.

if the stain can be removed by light polishing or if no evidence of overheating is visible, the bearing can be reused.

Check seals and other related parts for damage.

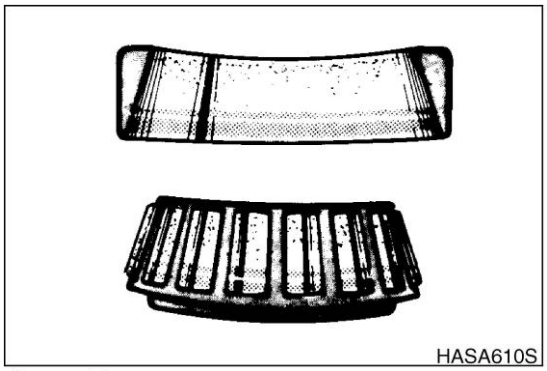

Figure 18

https://truckmanualshub.com/

https://truckmanualshub.com/

STANDARD TORQUES

⚠ CAUTION!
Follow all safety recommendations and safe shop practices outlined in the front of this manual or those contained within this section. **Always use tools and equipment that is in good working order.** **Use lifting and hoisting equipment capable of safely handling load.** **Remember, that ultimately safety is your own personal responsibility.**

MODEL	SERIAL NUMBER RANGE
ALL MODELS	ALL RANGES

Copyright 2011 DISD

July 2011

https://truckmanualshub.com/

TABLE OF CONTENTS

Torque Values for Standard Metric Fasteners 3
Torque Values for Standard U.S. Fasteners 4
Type 8 Phosphate Coated Hardware 6
Torque Values for Hose Clamps..... 7
Torque Values for Split Flanges..... 8
Torque Wrench Extension Tools..... 9
Torque Multiplication 9
Other Uses for Torque Wrench Extension Tools 10
Tightening Torque Specifications (Metric) 10

TORQUE VALUES FOR STANDARD METRIC FASTENERS

NOTE: *The units for the torque values are kg•m (ft lb).*

Dia. x Pitch (mm)	Grade										
	3.6 (4A)	**4.6 (4D)**	**4.8 (4S)**	**5.6 (5D)**	**5.8 (5S)**	**6.6 (6D)**	**6.8 (6S)**	**6.9 (6G)**	**8.8 (8G)**	**10.9 (10K)**	**12.9 (12K)**
M5 x Std.	0.15 (1.08)	0.16 (1.15)	0.25 (1.80)	0.22 (1.59)	0.31 (2.24)	0.28 (2.02)	0.43 (3.11)	0.48 (3.47)	0.50 (3.61)	0.75 (5.42)	0.90 (6.50)
M6 x Std.	0.28 (2.02)	0.30 (2.16)	0.55 (3.25)	0.40 (2.89)	0.55 (3.97)	0.47 (3.39)	0.77 (5.56)	0.85 (6.14)	0.90 (6.50)	1.25 (9.04)	1.50 (10.84)
M7 x Std.	0.43 (3.11)	0.46 (3.32)	0.70 (5.06)	0.63 (4.55)	0.83 (6.00)	0.78 (5.64)	1.20 (8.67)	1.30 (9.40)	1.40 (10.12)	1.95 (14.10)	2.35 (1.99)
M8 x Std.	0.70 (5.06)	0.75 (5.42)	1.10 (7.95)	1.00 (7.23)	1.40 (10.12)	1.25 (9.04)	1.90 (13.74)	2.10 (15.18)	2.20 (15.91)	3.10 (22.42)	3.80 (27.48)
M8 x 1	0.73 (5.28)	0.80 (5.78)	1.20 (8.67)	1.00 (7.23)	1.50 (10.84)	1.35 (9.76)	2.10 (15.18)	2.30 (16.63)	2.40 (17.35)	3.35 (24.23)	4.10 (29.65)
M10 x Std.	1.35 (9.76)	1.40 (10.12)	2.20 (15.91)	1.90 (13.74)	2.70 (19.52)	2.35 (19.99)	3.70 (26.76)	4.20 (30.37)	4.40 (31.18)	6.20 (44.84)	7.20 (52.07)
M10 x 1	1.50 (10.84)	1.60 (11.57)	2.50 (18.08)	2.10 (15.18)	3.10 (22.42)	2.80 (20.25)	4.30 (31.10)	4.90 (35.44)	5.00 (36.16)	7.00 (50.63)	8.40 (60.75)
M12 x Std.	2.40 (17.35)	2.50 (18.08)	3.70 (26.76)	3.30 (23.86)	4.70 (33.99)	4.20 (30.37)	6.30 (45.56)	7.20 (52.07)	7.50 (54.24)	10.50 (75.94)	12.50 (90.41)
M12 x 1.5	2.55 (18.44)	2.70 (19.52)	4.00 (28.93)	3.50 (25.31)	5.00 (36.16)	4.50 (32.54)	6.80 (49.18)	7.70 (55.69)	8.00 (57.86)	11.20 (81.00)	13.40 (96.92)
M14 x Std.	3.70 (26.76)	3.90 (28.20)	6.00 (13.23)	5.20 (37.61)	7.50 (54.24)	7.00 (50.63)	10.00 (72.33)	11.50 (83.17)	12.00 (86.79)	17.00 (122.96)	20.00 (144.66)
M14 x 1.5	4.10 (29.65)	4.30 (31.10)	6.60 (47.73)	5.70 (41.22)	8.30 (60.03)	7.50 (54.24)	11.10 (80.28)	12.50 (90.41)	13.00 (94.02)	18.50 (11.26)	22.00 (158.12)
M16 x Std.	5.60 (40.50)	6.00 (43.39)	9.00 (65.09)	8.00 (57.86)	11.50 (83.17)	10.50 (75.94)	15.50 (112.11)	17.90 (129.47)	18.50 (133.81)	26.00 (188.05)	31.00 (224.22)
M16 x 1.5	6.20 (44.84)	6.50 (47.01)	9.70 (70.16)	8.60 (62.20)	12.50 (90.41)	11.30 (81.73)	17.00 (122.96)	19.50 (141.04)	20.00 (144.66)	28.00 (202.52)	35.50 (256.77)
M18 x Std.	7.80 (56.41)	8.30 (60.03)	12.50 (90.41)	11.00 (79.56)	16.00 (115.72)	14.50 (104.87)	21.00 (151.89)	27.50 (198.90)	28.50 (206.14)	41.00 (296.55)	43.00 (311.01)
M18 x 1.5	9.10 (65.82)	9.50 (68.71)	14.40 (104.15)	12.50 (90.41)	18.50 (133.81)	16.70 (120.79)	24.50 (177.20)	27.50 (198.90)	28.50 (206.14)	41.00 (296.55)	49.00 (354.41)
M20 x Std.	11.50 (83.17)	12.00 (86.79)	20.50 (148.27)	18.00 (130.19)	25.00 (180.82)	22.50 (162.74)	35.00 (253.15)	39.50 (285.70)	41.00 (296.55)	58.00 (419.51)	68.00 (491.84)
M20 x 1.5	12.80 (92.58)	13.50 (97.64)	20.50 (148.27)	18.00 (130.19)	25.00 (180.82)	22.50 (162.74)	35.00 (253.15)	39.50 (285.70)	41.00 (296.55)	58.00 (419.51)	68.00 (491.84)
M22 x Std.	15.50 (112.11)	16.00 (115.72)	24.50 (177.20)	21.00 (151.89)	30.00 (216.99)	26.00 (188.05)	42.00 (303.78)	46.00 (332.71)	49.00 (354.41)	67.00 (484.61)	75.00 (542.47)
M22 x 1.5	17.00 (122.96)	18.50 (133.81)	28.00 (202.52)	24.00 (173.59)	34.00 (245.92)	29.00 (209.75)	47.00 (339.95)	52.00 (44.76)	56.00 (405.04)	75.00 (542.47)	85.00 (614.80)
M24 x Std.	20.50 (148.27)	21.50 (155.50)	33.00 (238.68)	27.00 (195.29)	40.00 (289.32)	34.00 (245.92)	55.00 (397.81)	58.00 (419.51)	63.00 (455.67)	82.00 (593.10)	92.00 (655.43)
M24 x 1.5	23.00 (166.35)	35.00 (253.15)	37.00 (267.62)	31.00 (224.22)	45.00 (325.48)	38.00 (202.52)	61.00 (441.21)	67.00 (484.61)	74.00 (535.24)	93.00 (672.66)	103.00 (744.99)

TORQUE VALUES FOR STANDARD U.S. FASTENERS

TYPE	S.A.E. GRADE	DESCRIPTION	BOLT HEAD MARKING
1	1 OR 2	WILL HAVE NO MARKINGS IN THE CENTER OF THE HEAD. Low or Medium Carbon Steel Not Heat Treated.	
5	5	WILL HAVE THREE RADIAL LINES. Quenched and Tempered Medium Carbon Steel.	
8	8	WILL HAVE 6 RADIAL LINES. Quenched and Tempered Special Carbon or Alloy Steel.	

Recommended torque, in foot pounds, for all Standard Application Nuts and Bolts, provided:

1. All thread surfaces are clean and lubricated with SAE-30 engine oil. (See Note.)
2. Joints are rigid, that is, no gaskets or compressible materials are used.
3. When reusing nuts or bolts, use minimum torque values.

NOTE: *Multiply the standard torque by:*

0.65 when finished jam nuts are used.

0.70 when Molykote, white lead or similar mixtures are used as lubricants.

0.75 when parkerized bolts or nuts are used.

0.85 when cadmium plated bolts or nuts and zinc bolts w/waxed zinc nuts are used.

0.90 when hardened surfaces are used under the nut or bolt head.

NOTE: *When reusing bolts and nuts in service, use minimum torque values.*

The following General Torque Values must be used in all cases where **SPECIAL TORQUE VALUES** are not given

NOTE: *TORQUE VALUES LISTED THROUGHOUT THIS MANUAL ARE LUBRICATED (WET) THREADS; VALUES SHOULD BE INCREASED 1/3 FOR NONLUBRICATED (DRY) THREADS.*

THREAD SIZE	HEAT TREATED MATERIAL GRADE 5 AND GRADE 8			
	GRADE 5 (3 RADIAL DASHES ON HEAD)		GRADE 8 (6 RADIAL DASHES ON HEAD)	
	FOOT POUNDS (ft lb)	NEWTON METER (N•m)	FOOT POUNDS (ft lb)	NEWTON METER (N•m)
1/4" - 20	6	8	9	12
1/4" - 28	7	9	11	15
5/16" - 18	13	18	18	24
5/16" - 24	15	20	21	28
3/8" - 16	24	33	34	46
3/8" - 24	27	37	38	52
7/16" - 14	38	52	54	73
7/16" - 20	42	57	60	81
1/2" - 13	58	79	82	111
1/2" - 20	65	88	90	122
9/16" - 12	84	114	120	163
9/16" - 18	93	126	132	179
5/8" - 11	115	156	165	224
5/8" - 18	130	176	185	251
3/4" - 10	205	278	290	393
3/4" - 16	240	312	320	434
7/8" - 9	305	414	455	617
7/8" - 14	334	454	515	698
1" - 8	455	617	695	942
1" - 14	510	691	785	1064
1 1/8" - 7	610	827	990	1342
1 1/8" - 12	685	929	1110	1505
1 1/4" - 7	860	1166	1400	1898
1 1/4" - 12	955	1295	1550	2102
1 3/8" - 6	1130	1532	1830	2481
1 3/8" - 12	1290	1749	2085	2827
1 1/2" - 6	1400	2034	2430	3295
1 1/2" - 12	1690	2291	2730	3701
1 3/4" - 5	2370	3213	3810	5166
2" - 4 1/2	3550	4813	5760	7810

NOTE: If any bolts and nuts are found loose or at values less than what the chart states, it is recommended that the loose bolt and/or nut be replaced with a new one.

TYPE 8 PHOSPHATE COATED HARDWARE

This chart provides tightening torque for general purpose applications using original equipment standard hardware as listed in the Parts Manual for the machine involved. **DO NOT SUBSTITUTE**. In most cases, original equipment standard hardware is defined as Type 8, coarse thread bolts and nuts and thru hardened flat washers (Rockwell "C" 38 - 45), all phosphate coated and assembled without supplemental lubrication (as received) condition.

The torques shown below also apply to the following:

1. Phosphate coated bolts used in tapped holes in steel or gray iron.
2. Phosphate coated bolts used with phosphate coated prevailing torque nuts (nuts with distorted threads or plastic inserts).
3. Phosphate coated bolts used with copper plated weld nuts.

Markings on bolt heads or nuts indicate material grade ONLY and are NOT to be used to determine required torque.

NOMINAL THREAD DIAMETER	STANDARD TORQUE ±10%	
	KILOGRAM METER (kg•m)	FOOT POUNDS (ft lb)
1/4"	1.1	8
5/16"	2.2	16
3/8"	3.9	28
7/16"	6.2	45
1/2"	9.7	70
9/16"	13.8	100
5/8"	19.4	140
3/4"	33.2	240
7/8"	53.9	390
1"	80.2	580
1 - 1/8"	113.4	820
1 - 1/4"	160.4	1160
1 - 3/8"	210.2	1520
1 - 1/2"	279.4	2020
1 - 3/4"	347.1	2510
2	522.8	3780

TORQUE VALUES FOR HOSE CLAMPS

The following chart provides the tightening torques for hose clamps used in all rubber applications (radiator, air cleaner, operating lever boots, hydraulic system, etc.).

CLAMP TYPE AND SIZE	TORQUE			
	RADIATOR, AIR CLEANER, BOOTS, ETC.		HYDRAULIC SYSTEM	
	KILOGRAM METER (kg•m)	INCH POUNDS (in lb)	KILOGRAM METER (kg•m)	INCH POUNDS (in lb)
"T" Bolt (Any Diameter)	0.68 - 0.72	59 - 63	-------	------
Worm Drive - Under 44 mm (1-3/4 in) Open Diameter	0.2 - 0.3	20 - 30	0.5 - 0.6	40 - 50
Worm Drive - Over 44 mm (1-3/4 in) Open Diameter	0.5 - 0.6	40 - 50	-------	------
Worm Drive - All "Ultra-Tite"	0.6 - 0.7	50 - 60	0.5 - 0.6	40 - 50

TORQUE VALUES FOR SPLIT FLANGES

The following chart provides the tightening torques for split flange connections used in hydraulic systems. Split flanges and fitting shoulders should fit squarely. Install all bolts, finger tight and then torque evenly.

NOTE: *Over torquing bolts will damage the flanges and/or bolts, which may cause leakage.*

FLANGE SIZE (*)	BOLT SIZE	BOLT TORQUE	
		KILOGRAM METER (kg•m)	INCH POUNDS (in lb)
1/2"	5/16"	2.1 - 2.5	15 - 18
3/4"	3/8"	3.0 - 3.7	22 - 27
1"	3/8"	3.7 - 4.8	27 - 35
1 - 1/4"	7/16"	4.8 - 6.2	35 - 45
1 - 1/2"	1/2"	6.4 - 8.0	46 - 58
2"	1/2"	7.6 - 9.0	55 - 65
2 - 1/2"	1/2"	10.9 - 12.6	79 - 91
3"	5/8"	19.1 - 20.7	138 - 150
3 - 1/2"	5/8"	16.2 - 18.4	117 - 133

(*) - Inside diameter of flange on end of hydraulic tube or hose fitting.

NOTE: *Values stated in chart are for Standard Pressure Series (Code 61) Split Flanges.*

TORQUE WRENCH EXTENSION TOOLS

Very large diameter, high grade fasteners (nuts, bolts, cap screws, etc.) require a great deal of turning force to achieve recommended tightening torque values.

Common problems that could occur as a result are:

- Recommended torque exceeds the measuring capacity of the torque wrench.
- Specialized sockets do not fit the adapter on the front end (nose) of the torque wrench.
- Generating adequate force on the back end (handle) of the wrench is difficult or impossible.
- Restricted access or an obstruction may make use of the torque wrench impossible.
- A unique application requires fabrication of an adapter or other special extension.

Most standard torque wrenches can be adapted to suit any one of the proceeding needs or situations, if the right extension tool is used or fabricated.

TORQUE MULTIPLICATION

A wrench extension tool can be used to increase the tightening force on a high capacity nut or bolt.

For example, doubling the distance between the bolt and the back (handle) end of the torque wrench doubles the tightening force on the bolt.

It also halves the indicated reading on the scale or dial of the torque wrench. To accurately adjust or convert indicated scale or dial readings, use the following formula:

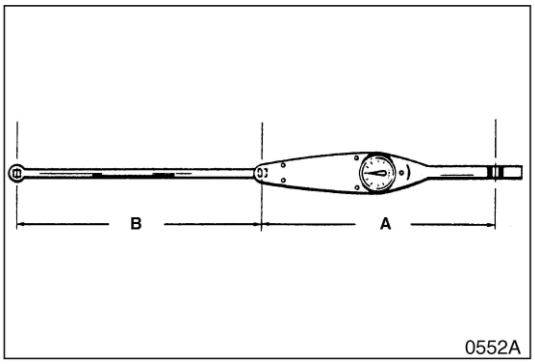

Figure 1

I = A x T / A + B where:

I = Indicated force shown on the torque wrench scale or dial.

T = Tightening force applied to the nut or bolt (actual Torque).

A = Length of the torque wrench (between the center of the nut or bolt and the center of the handle).

B = Length of the extension.

As an example, if a 12" extension is added to a 12" torque wrench, and the indicated torque on the dial reads "150 ft lb," the real force applied to the bolt is 300 ft lb:

$$I = \frac{A \times T}{A + B} = \frac{12 \times 300}{12 + 12} = \frac{3600}{24} = 150$$

NOTE: *The formula assumes that there is no added deflection or "give" in the joint between the extension and torque wrench. Readings may also be inaccurate:*

- If the extension itself absorbs some of the tightening force and starts to bend or bow out.
- If an extension has to be fabricated that is not perfectly straight (for example, an extension made to go around an obstruction, to allow access to a difficult to tighten fastener), the materials and methods used must be solid enough to transmit full tightening torque.

https://truckmanualshub.com/

OTHER USES FOR TORQUE WRENCH EXTENSION TOOLS

Torque wrench extensions are sometimes made up for reasons other than increasing leverage on a fastener. For example, a torque wrench and extension can be used to measure adjustment "tightness" of a linkage or assembly. Specially fabricated extensions can be used to make very precise checks of the force required to engage or disengage a clutch mechanism, release a spring-applied brake assembly, or "take up" free play in most any movable linkage.

Once the value of the adjustment force is established, repeated checks at regular intervals can help to monitor and maintain peak operating efficiency. These types of adjustment checks are especially useful if physical measurements of linkage travel are difficult to make or will not provide the needed degree of precision and accuracy.

To allow the assembly or mechanism to accept a torque wrench, welding a nut or other adapter on the end of a linkage shaft or other leverage point will allow turning the shaft or assembly manually.

TIGHTENING TORQUE SPECIFICATIONS (METRIC)

(For coated threads, prelubricated assemblies.)

⚠ CAUTION!

Disassembly, overhaul and replacement of components on the machine, installation of new or replacement parts and/or other service-related maintenance may require the use of thread or flange sealing assembly compound.

Use the information on this page as a general guide in selecting specific formulas that will meet the particular requirements of individual assembly installations. DISD does not specifically endorse a specific manufacturer or brand name but the following table of "Loctite" applications is included for which cross-references to other makers' products should also be widely available.

IMPORTANT

Use primer "T" or "N" for all cold weather assembly of fastener adhesives, with Thread locker sealers 222, 242/243, 262, 271, 272, or 277.

I. "Loctite" Fastener Adhesives

Product	Application	Color	Removal	Break-away Cure Strength (in lb) of Sealer Alone
222	Low strength for 6 mm (1/4") or smaller fasteners.	Purple	Hand tools	45
242 or 243	Medium strength for 6 mm (1/4") and larger fasteners.	Blue	Hand tools	80
262	High strength for high grade fasteners subject to shock, stress and vibration.	Red	Heat/260°C (500°F) Remove HOT (NO solvent)	160
271	Extra high strength for fine thread fasteners up to 25 mm (1") diameter.	Red	Heat/260°C (500°F) Remove HOT	160
272	High temperature/high strength for hostile environments to 232°C (450°F).	Red	Heat/316°C (600°F) Remove HOT	180
277	Extra high strength for coarse thread fasteners 25 mm (1") diameter and larger.	Red	Heat/260°C (500°F) Remove HOT	210

II. "Loctite" Pipe Thread Sealant

Product	Application	Color	Removal	Required Setup
545	"No-filler/non-clog" formula for high-pressure hydraulic systems. Over-application will not restrict or foul system components.	Purple	Hand tools	4 Hours (or 1/2 hour with Locquic "T" Primer)
656	Solvent-resistant, higher viscosity tapered thread sealer.	White	Hand tools	4 Hours (or 1/2 hour with Locquic "T" Primer)

III. "Loctite" gasket/flange sealer

Product	Application	Color	Notes
518	Gasket eliminator specifically made for aluminum flanges/surfaces. For hydraulic systems to 34,475 kPa (5,000 psi).	Red	Use Locquic "N" primer for fast (1/2 - 4 hours) setup. Unprimed setup 4 - 24 hours.
504	Low pressure/wide-gap gasket eliminator compound. Fills gaps to 0.0012 mm (0.030"), cures to rigid seal.	Orange	Use Locquic "N" primer for faster (1/2 - 4 hours) setup. Unprimed setup 4 - 24 hours.
515	General purpose, fast setup, flexible-cure gasket eliminator. For nonrigid assemblies subject to shock, vibration or deflection.	Purple	Use Locquic "N" primer for faster (1/4 - 2 hours) setup. Unprimed setup 1 - 12 hours.

IV. "Loctite" retaining compounds

Product	Application	Color	Notes
609	For bushings, sleeves, press-fit bearings, splines and collars. For gaps to 0.0002 mm (0.005"), temperatures to 121°C (250°F).	Green	Use Locquic "N" primer for increased bond strength and all cold temperature applications.
620	For high temperatures to 232°C (450°F).	Green	Same as 609, above.
680	For high strength bonds and tight clearance gaps, to 0.00008 mm (0.002").	Green	Same as 609, above.

V. "Loctite" Adhesives

Product	Application	Color	Notes
380	Black Max instant adhesive for shock and vibration-resistant bonds.	Black	May take 120 hours to reach full cure strength.
454	Adhesive for porous surfaces.	Clear	Full strength in 24 hours.
480	Increased strength (+50%), shock and vibration-resistant.	Black	Full strength in 24 hours.

https://truckmanualshub.com/

FRAME

https://truckmanualshub.com/

https://truckmanualshub.com/

COUNTERWEIGHT

⚠ CAUTION!
Follow all safety recommendations and safe shop practices outlined in the front of this manual or those contained within this section. **Always use tools and equipment that is in good working order.** **Use lifting and hoisting equipment capable of safely handling load.** **Remember, that ultimately safety is your own personal responsibility.**

MODEL	SERIAL NUMBER RANGE
SD310	**010001 and Up**

Copyright 2012 DISD

July 2012

https://truckmanualshub.com/

TABLE OF CONTENTS

Specifications 3
Counterweight 3

Specifications

NOTE: ***Weight***

Model	Weight	Serial Number Range
SD310（ZF T/M）	1650 kg (3,638 lb)	010001 and Up

Counterweight

1. Parts list

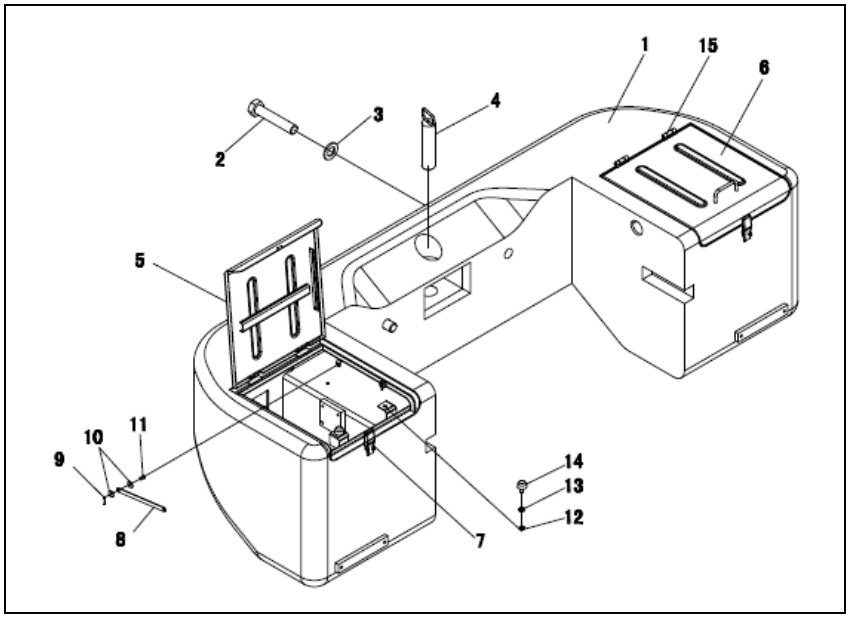

Fig. 1

Reference Number	Description	Reference Number	Description
1	COUNTERWEIGHT	9	PIN;SPLIT
2	BOLT	10	WASHER;PLAIN
3	WASHER;HARDEN	11	PIN
4	PIN	12	NUT
5	COVER(R,H)	13	WASHER;PLAIN
6	COVER(L,H)	14	RUBBER;STOPPER
7	LOCK	15	HINGE
8	PLATE		

https://truckmanualshub.com/

2. TORQUE

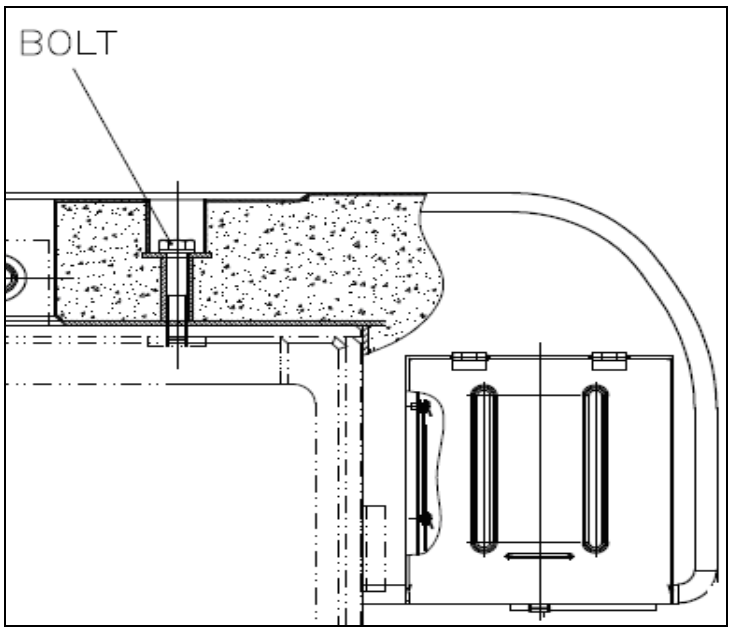

Fig. 2

NOTE: *1) Tighten bolt to torque value list in the following table.*

SD310	100 kg • m (726 ft lb)

https://truckmanualshub.com/

CENTER JOINT (ARTICULATION JOINT)

⚠ CAUTION!
Follow all safety recommendations and safe shop practices outlined in the front of this manual or those contained within this section. **Always use tools and equipment that is in good working order.** **Use lifting and hoisting equipment capable of safely handling load.** **Remember, that ultimately safety is your own personal responsibility.**

MODEL	SERIAL NUMBER RANGE
SD310	010001 and Up

Copyright 2012 DISD

July 2012

https://truckmanualshub.com/

TABLE OF CONTENTS

General Description 3
Maintenance Standard 4

https://truckmanualshub.com/

General Description

The loader frame is an articulated type: the front frame is joined to the rear frame with two hinge pins around which the loader pivots for steering.

⚠ CAUTION!

When the loader is steered, the area near center hinge pins becomes so narrow that you may get caught between front and rear frames. Before trying to service the loader, make sure to set frame lock plate.

Prior to moving (traveling) the loader, make sure the frame lock plate is set to original position.

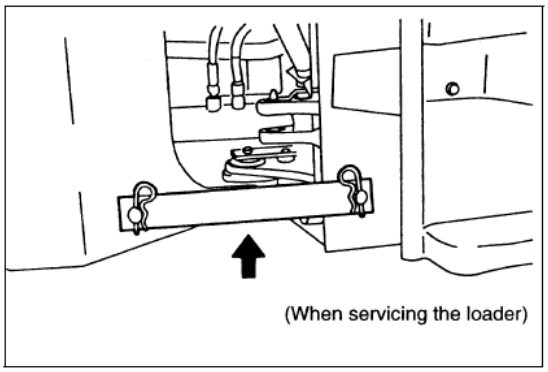

Figure 1

Maintenance Standard

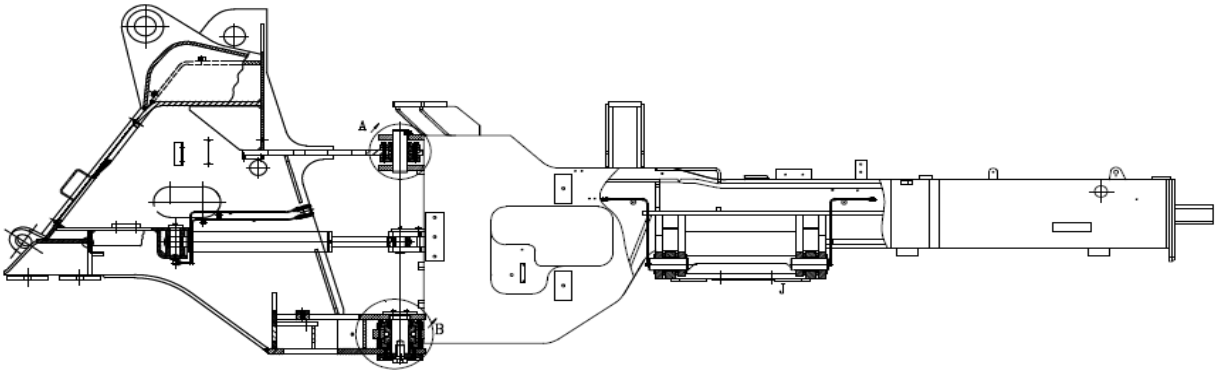

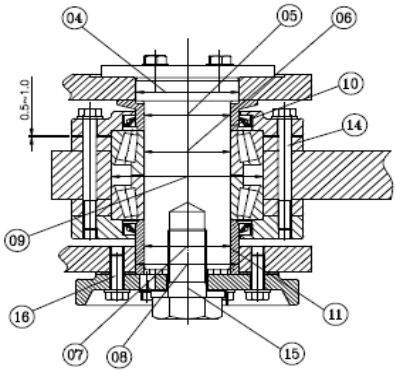

(LOWER HINGE BEARING)

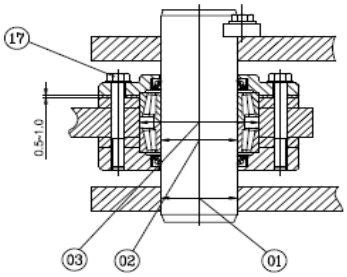

(UPPER HINGE BEARING)

Figure 2

UNIT : *mm*

No.	Check item	Criteria					Remedy
		Standard size	Tolerance		Standard Clearance	Clearance limit	
1	Clearance between upper hinge pin and rear frame	70	0	+0.174	0.1-0.193	-	Replace
			-0.019	+0.1			
2	Clearance between upper hinge pin and bearing	70	0	0	-0.015-0.019	-	
			-0.019	-0.015			
3	Clearance between bearing and front frame	110	0	0	-0.035-0.018	-	
			-0.018	-0.035			
4	Clearance between lower hinge pin and front frame	95	0	+0.307	0.22-0.394	-	
			-0.087	+0.22			
5	Clearance between lower hinge pin and spacer(small)	80	0	+0.434	0.36-0.453	-	
			-0.019	+0.36			
6	Clearance between lower hinge pin and bearing	80	0	0	-0.015-0.019	-	
			-0.019	-0.015			
7	Clearance between lower hinge pin and spacer(large)	80	0	+0.434	0.36-0.453	-	
			-0.019	+0.36			
8	Clearance between front frame and spacer(large)	95	0	+0.307	0.22-0.394	-	
			-0.087	+0.22			
9	Clearance between lower hinge bearing and rear frame	140	0	0	-0.04-0.02	-	
			-0.02	-0.04			
10	Height of lower hinge spacer(small)	$31.5^{0}_{-0.1}$	-	-	-	0	
11	Height of lower hinge spacer(large)	$56^{0}_{-0.1}$	-	-	-	0	
12	Shim thickness for lower hinge and cap(rear frame)	0.5~1.0	-	-	-	-	
13	Shim thickness for upper hinge and cap(front frame)	0.5~1.0					
14	Tightening torque of lower hinge cap mounting bolt(M12)	When adjusting with shim: 4kg·m					Retighten
		Final value: 13±1.0 kg·m					
15	Tightening torque of lower hinge cap mounting bolt(M16)	When adjusting with shim: 30 kg·m					
		Final value: 110±1.0 kg·m					
16	Tightening torque of lower hinge pin mounting bolt	13±1.0 kg·m					
17	Tightening torque of upper hinge cap mounting bolt	13±1.0 kg·m					

https://truckmanualshub.com/

https://truckmanualshub.com/

ENGINE AND DRIVE TRAIN

https://truckmanualshub.com/

SPC000006

https://truckmanualshub.com/

5ton Diesel Engine

⚠ CAUTION!
Follow all safety recommendations and safe shop practices outlined in the front of this manual or those contained within this section. **Always use tools and equipment that is in good working order.** **Use lifting and hoisting equipment capable of safely handling load.** **Remember, that ultimately safety is your own personal responsibility.**

MODEL	SERIAL NUMBER RANGE
SD310	010001 and Up

Copyright 2012 DISD

July 2012

https://truckmanualshub.com/

TABLE OF CONTENTS

1. GENERAL INFORMATION.....1
1.1 General Repair Instructions.....1
1.2 Engine Specific Character.....2
1.3 Engine Specifications.....4
1.4 Engine Assembly.....8
2. MAJOR MAINTENANCE.....13
2.1 Preventive Maintenance.....13
2.2 Diagnosis and Remedy.....20
2.3 Engine Inspection.....29
3. MAINTENANCE.....30
3.1 Engine Disassembly.....30
3.2 Inspection and Measurement.....45
3.3 Engine Reassembly.....63
3.4 Breaking In on Major Parts.....88
4. MAINTENANCE OF MAJOR COMPONENTS.....90
4.1 Cooling System.....90
4.2 Lubrication System.....94
4.3 Fuel Injection Pump.....97
4.4 Turbocharger.....110
5. SPECIAL TOOL LIST.....119

• APPENDIX

https://truckmanualshub.com/

DESCRIPTION OF THE ILLUSTRATION MARKS

	Removal		Adjustment
	Installation		Cleaning
	Disassembly		Pay close attention-Important
	Reassembly		Tighten to specified torque
	Align the marks		Use special tools of manufatur's
	Directional Indication		Lubricate with oil
	Inspection		Lubricate with grease
	Measurement		

1 GENERAL INFORMATION

1.1 General Repair Instructions

1. Before performing service operation, disconnect the grounding cable from the battery for reducing the chance of cable damage and burning due to short-circuiting.
2. Use covers for preventing the components from damage or pollution.
3. Engine oil and anti-freeze solution must be handled with reasonable care as they cause paint damage.
4. The use of proper tools and special tools where specified is important to efficient and reliable service operation.
5. Use genuine DOOSAN parts necessarily.
6. Used cotter pins, gaskets, O-rings, oil seals, lock washer and self-lock nuts should be discarded and new ones should be prepared for installation as normal function of the parts can not be maintained if these parts are reused.
7. To facilitate proper and smooth reassemble operation, keep disassembled parts neatly in groups. Keeping fixing bolts and nut separate is very important as they vary in hardness and design depending on position of installation.
8. Clean the parts before inspection or reassembly. Also clean oil ports, etc. using compressed air to make certain they are free from restrictions.
9. Lubricate rotating and sliding faces of parts with oil or grease before installation.
10. When necessary, use a sealer on gaskets to prevent leakage.
11. Carefully observe all specifications for bolts and nuts torques.
12. When service operation is completed, make a final check to be sure service has been done property.

1.2 Engine Specific Character

1.2.1 Toroidal combustion mode

The basic structure of toroidal combustion chamber tha combustion chamber on the center of piston head, and the cylinder head has a swirl path. During intake stroke, a large amount of intake air generates strong swirl in the combustion chamber; and during compression stroke, it provides a strong air flow through piston configuration, facilitating the mixture of air and fuel. The engine of toroidal combustion type is silent, ensuring safe operation, multi-purpose applications, reduced consumption of fuel and oil.

1.2.2 OMEGA combustion bowl

The OMEGA combustion bowl is a unit designed to perform high efficiency, low emission combustion. As the rim around the combustion bowl port of the upper of the piston has been machined in a smaller size than the interior of the combustion bowl, strong swirl is produced in the combustion bowl and strong squish flow makes the fuel be mixed more sufficiently with air.

Due to the application of OMEGA combustion system and optimal utilization of intake and exhaust port configuration within the cylinder head, the DE08TIS diesel engines discharge very low level of hazardous exhaust gases such as smoke, nitrogen oxide, hydrocarbon, or carbon monoxide and thus ensure high performance and low fuel consumption.

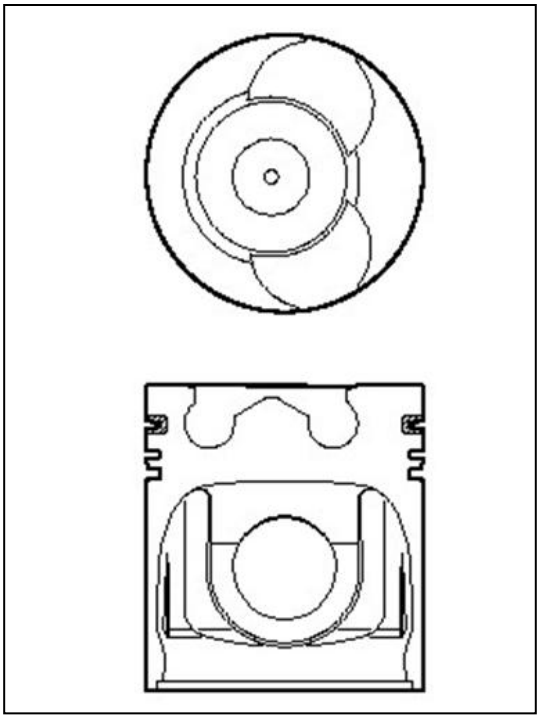

1.2.3. Oil gallery cooling type piston (DE08TIS)

Oil gallery cooling is used for the piston of DE08TIS diesel engine.

When thermal loading is high, piston cooling by means of an oil gallery in the crown is normally necessary to prevent crown cracking and ring sticking. The design of the gallery, the design and location of the oil spray nozzle and the quantity of oil flowing in the gallery are critical in order to achieve the desired temperature reduction.

The cross section shape of the gallery should be designed to achieve sufficient oil movement to maximize cooling efficiency.

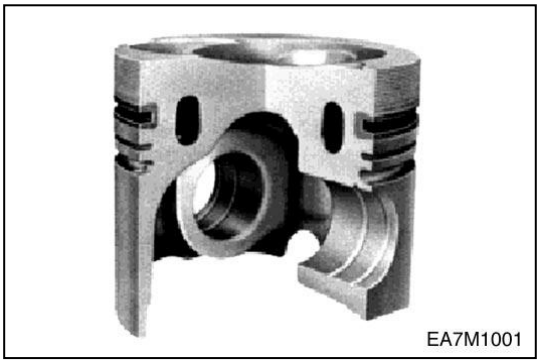

1.3 Engine Specifications

1.3.1 Specification

			DE08TIS
Engine type			4 cycle in-line, water cooled type, Turbocharged & intercooled
Combustion chamber type			Direct injection type
Cylinder liner type			Replaceable dry liner
Timing gear system			Gear driven type
Number of piston rings			Comprssion ring 2, oil ring 1
Number of cylinders - bore x stroke		(mm)	6 - 111 x 139
Total displacement		(cc)	8,071
Compression ratio			18.5:1
Engine dimension (L x W x H)		(mm)	1,270 x 848 x 1,149
Engine weight		(kg)	780
Direction of rotation (viewed from)			Counter clockwise
Firing order			1-5-3-6-2-4
Fuel injection timing (BTDC)		(°)	9° ± 1°
Fuel injection pump type			"S3S" type
Governor type			RSV
Fuel injection nozzle type			Multi hole type
Fuel injection pressure		(kg/㎠)	1st: 180, 2nd: 280
Compression pressure		(kg/㎠)	28 (at 200rpm)
Valve clearance (at cold)	Intake	(mm)	0.3
	Exhaust	(mm)	0.3
Intake valve	Open	(°)	16 (BTDC)
	Close	(°)	36 (ABDC)
Exhaust valve	Open	(°)	46 (BBDC)
	Close	(°)	14 (ATDC)
Lubricating type			Forced lubrication system
Oil pump type			Gear driven by crankshaft
Oil filter type			Cartridge type
Lubricant used	SAE classification		SAE 15W40
	Oil grade		ACEA-E2 / AECA-E3 or above (API CH-4 grade)
Lubricant capacity	Total	(L)	26
	Max.	(L)	24
	Min.	(L)	18
Oil cooler type			Water cooled
Coolant pump			Belt driven centrifugal type
Cooling Type			Forced circulation
Coolant capacity (Inside engine)		(L)	11
Thermostat	Type		Wax pellet type
	Opening Temp.	(℃)	71
	Full open Temp.	(℃)	85
Alternator capacity (Voltage - Capacity)		(V-A)	24 -60
Starter (Voltage - Power)		(V-kW)	24 - 6.0
Pre heat system			AIR HEATER

https://truckmanualshub.com/

1.3.2 Engine power

Production tolerance : ±5%

Engine Model		Performance				Remark
Model	Product Code	Power (PS/RPM)	Torque (kgf•m/RPM)	Low Idle (RPM)	High Idle (RPM)	
DE08TIS	DE08-PBL00	217.6/2,000	92/1,300	850	2,200	

1.3.3 Performance curve (DE08TIS - 225PS)

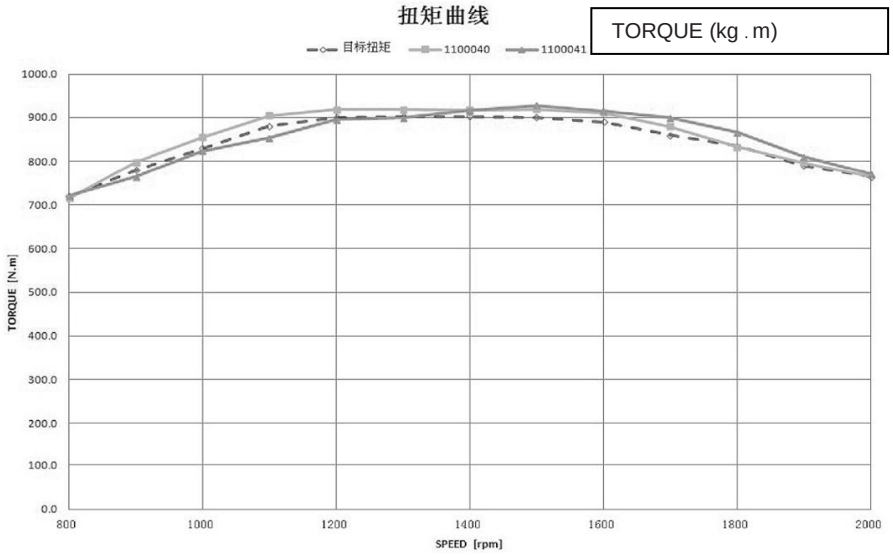

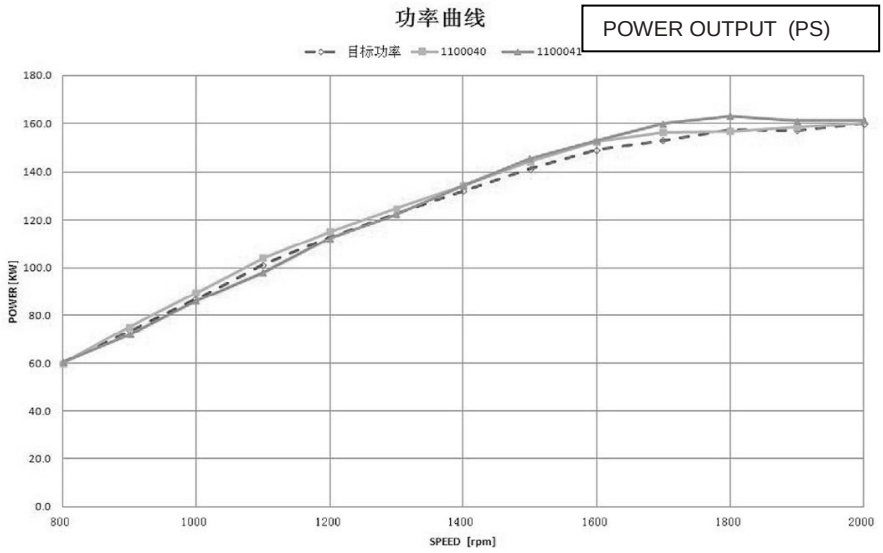

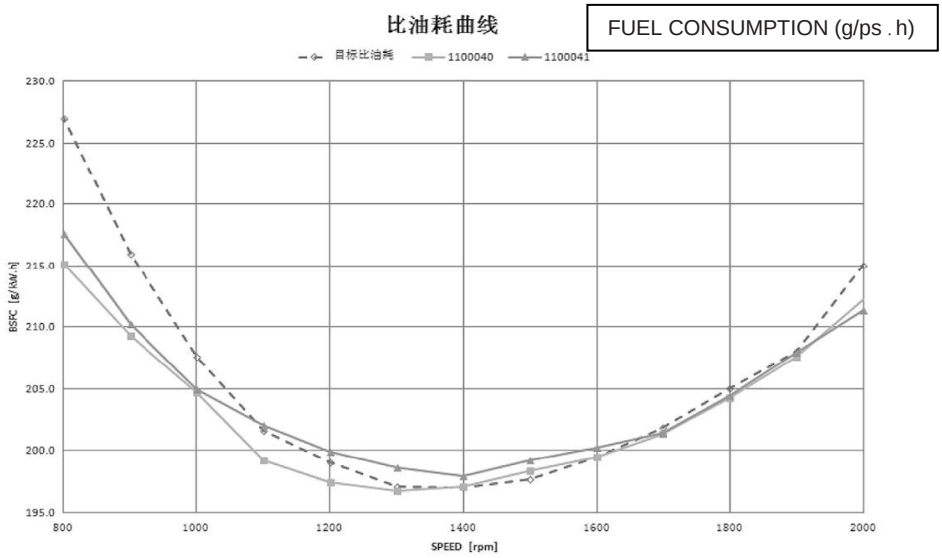

https://truckmanualshub.com/

PERFORMANCE		ISO 1585 (SAE J1349)
Output	(max.)	160 kW (217.6PS) / 2,000 rpm
Torque	(max.)	902 N.m (92 kg.m) / 1,300 rpm
Fuel consumption	(min.)	213 g/kW.h (156 g / PS.h)

1.4 Engine Assembly

1.4.1 Engine sectional view (longitudinal)

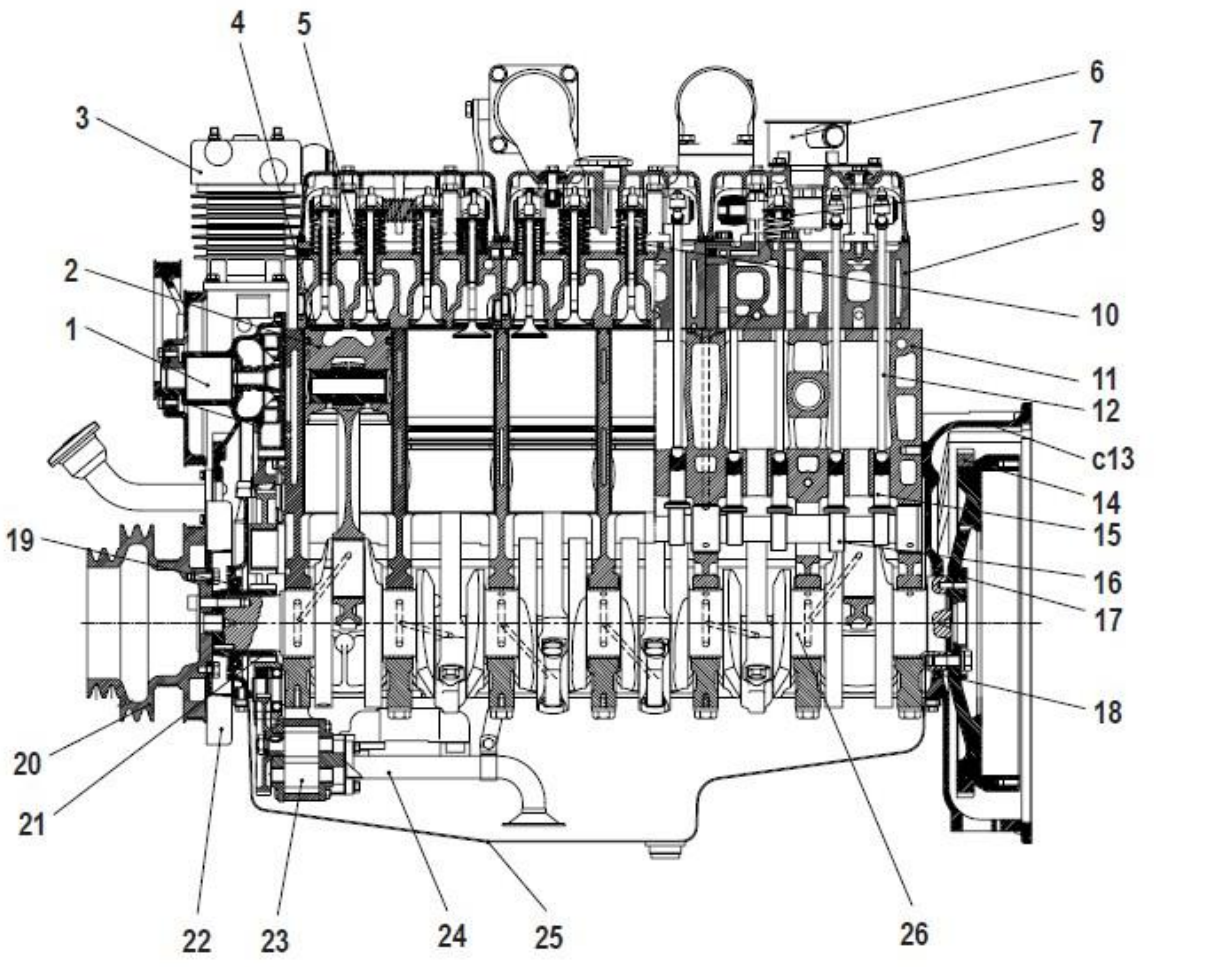

1. Water pump
2. Piston
3. Air compressor
4. Intake valve
5. Exhaust valve
6. Breather
7. Cylinder head cover
8. Exhaust valve spring
9. Cylinder head
10. Intake valve spring
11. Cylinder block
12. Push rod
13. Flywheel housing
14. Ring gear
15. Tappet
16. Cam shaft
17. Fly wheel
18. Oil seal (Rear)
19. Oil seal (Front)
20. Crank shaft pulley
21. Crank shaft gear
22. Vibration damper
23. Oil pump
24. Oil suction pipe
25. Oil pan
26. Crank shaft

1.4.2 Engine sectional view (cross)

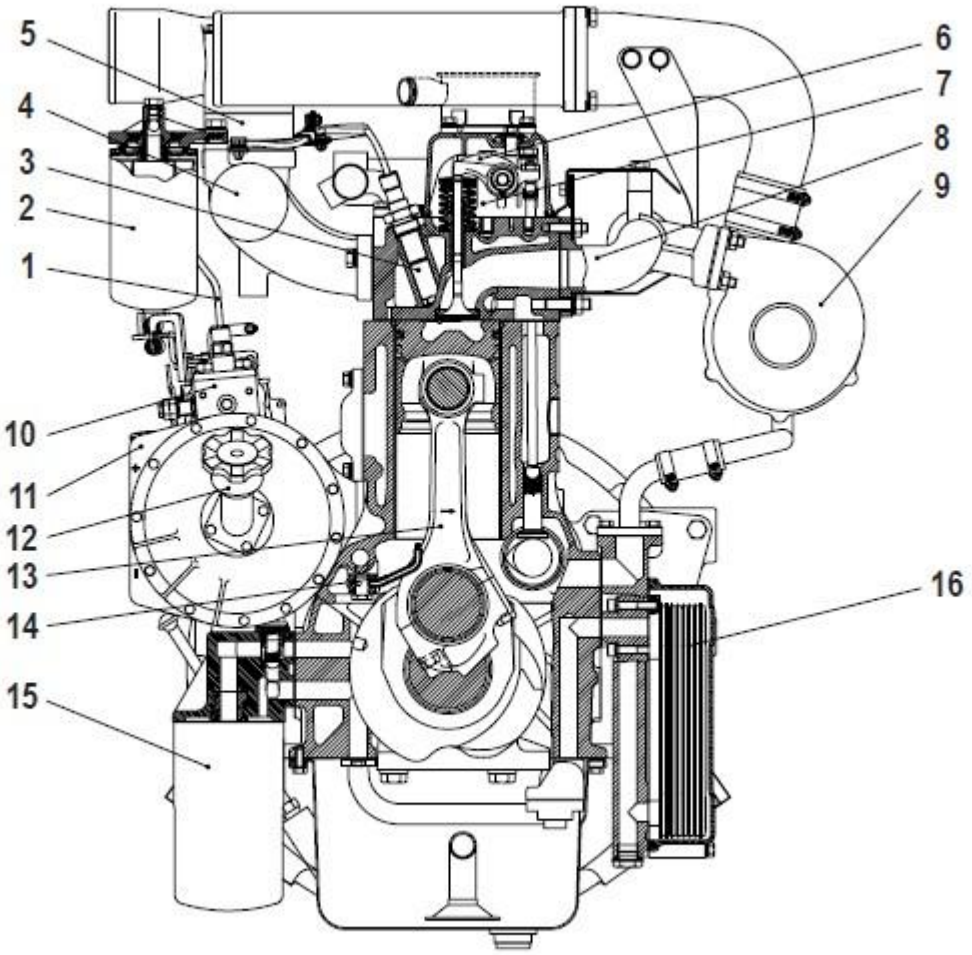

1. Fuel injection pipe
2. Fuel filter
3. Fuel injection nozzle
4. Intake manifold
5. Air heater
6. Rocker arm
7. Rocker arm bracket
8. Exhaust manifold
9. Turbo charger
10. Fuel injection pump
11. Timing gear case
12. Oil filler cap
13. Connecting rod
14. Oil spray nozzle
15. Oil filter
16. Oil cooler

1.4.3 Engine assembly views

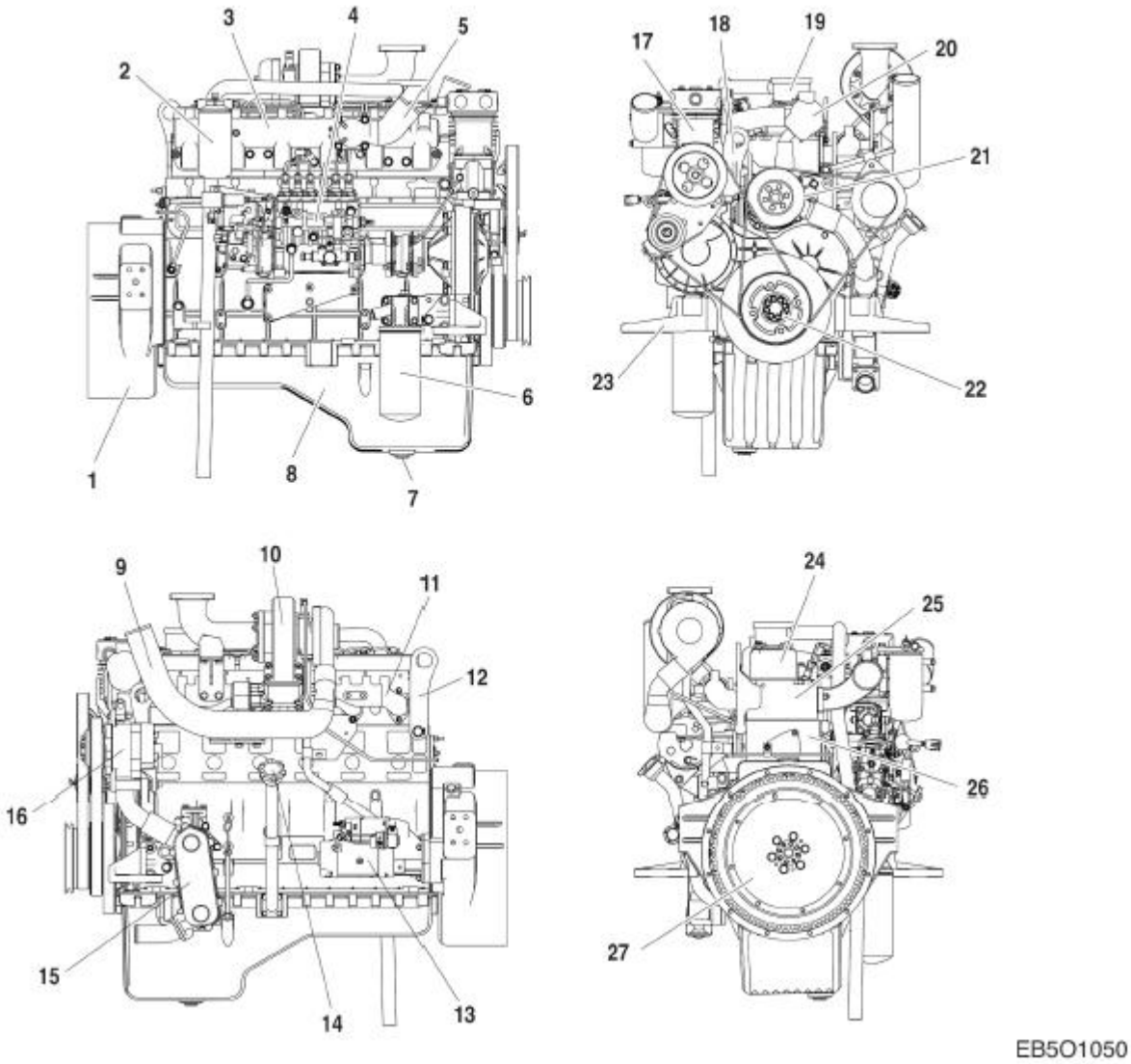

1. Flywheel housing
2. Fuel filter
3. Intake pipe
4. Fuel injection pump
5. Air pipe (From air cooler to intake manifold)
6. Oil filter
7. Drain plug
8. Oil pan
9. Air pipe (From turbocharger to air cooler)
10. Turbocharger
11. Exhaust pipe
12. Lifting hook (Rear)
13. Starter
14. Oil filler cap
15. Oil cooler
16. Alternator
17. Air compressor
18. Lifting hook (Front)
19. Breather
20. Thermostat
21. Water pump
22. Crankshaft pulley
23. Mounting bracket
24. Cylinder head cover
25. Cylinder head
26. Cylinder block
27. Flywheel

2 MAJOR MAINTENANCE

2.1 Preventive Maintenance

The preventive maintenance means that the operator performs the servicing of engine to obtain long life and best performance from DOOSAN diesel engine.

2.1.1 Cooling Water

- Regarding the cooling water that is to be used for engine, the soft water not the hard water must be used.
- The engine cooling water can be used diluting it with antifreezing solution 40% and the additive for rust prevention (DCA4) 3 ~ 5 %.
- The density of above solution and additive must be inspected every 500 hours to maintain it properly.

Note:

The proper density control of antifreezing solution and rust preventing additive will be able to prevent the rusting effectively and maintain the stable quality of engine.

For the improper control might give the fatal damage to the cooling water pump and cylinder liners, detail care is needed.

- Since DE08TIS diesel engine cylinder liner is dry type, particularly the cooling water control should be applied thoroughly by the cooling water test kit. (DOOSAN 60.99901-0038)
- The density of antifreezing solution and additive for rust prevention is able to be confirmed by the cooling water test kit. (DOOSAN 60.99901-0038)
- How to use the cooling water test kit

(1) When the cooling water temp. of engine is in the range of 10 ~ 55 °C, loosen the plug for cooling water discharge and fill the plastic cup about a half.

Note:

In taking the cooling water sample, if the water in auxiliary tank were taken, it is hard to measure the accurate density. Take the cooling water sample necessarily loosening the cooling water discharge plug.

(2) A t the state of a test paper soaked in the sampled water, after taking the paper out through water agitation, shake off the water.

(3) Wait for about 45 sec. till the color change of test paper.

Note:

However, it should not elapse longer than 75 sec, and if it did, the hue would change.

(4) Make the numerical value by comparing the test paper which hue has changed with the color list of label on storage bottle.

(5) By comparing the hue changed into yellowish green or so with the green color indication of test paper storage bottle, confirm the density. (Then, the density indication must be in the hue range of 33% to 50%).

(6) The brown at the middle of test paper and the lower pink color indication represent the additive state for rust prevention, and the proper range is that the meeting numerical value of brown (vertical) and pink color (horizontal) locates in the range of 0.3 to 0.8 at the color list of label on the test paper storage bottle.

(7) In case of less than 0.3, replenish the additive for rust prevention (DCA4), and in case of more than 0.8, pour out the cooling water about 50% and then readjust the density after refilling with clean fresh water.

Amount of Anti-freeze in winter

Ambient Temperature (˚C)	Cooling water (%)	Anti-freeze (%)
Over -10	85	15
-10	80	20
-15	73	27
-20	67	33
-25	60	40
-30	56	44
-40	50	50

2.1.2 Fan belt

- Use a fan belt of specified dimensions, and replace if damaged, frayed, or deteriorated.
- Check the fan belt for belt tension.

  If belt tension is lower than the specified limit, adjust the tension by relocating the alternator. (specified deflection: 10 ~ 15 mm when pressed down with thumb)

2.1.3 Engine oil

- Check oil level with the oil level gauge and replenish if necessary.
- Check the oil level with the engine cooled. If the engine is warm, allow time for 5 ~ 10 minutes for oil drain into the crankcase before checking oil level. The oil level must be between Max and Min. lines on the gauge.
- Engine oil should be changed at the specified intervals.

  Oil filter cartridge should be changed simultaneously.

First oil change: 50hr operating After 50hr operation: every 200hr

• The following oils are also recommended.

Engine model	Recommend oil	
	SAE No.	API No.
DE08TIS	SAE15W40	ACEA-E2 or ACEA-E3 (API CH-4)

* If long oil change intervals are to be used, ACEA-E3 oil must be used.

2.1.4 Oil filter

• Check for oil pressure and oil leaks, and repair or replace the oil filter if necessary.
• Change the oil filter cartridge simultaneously at every replacement of engine oil.

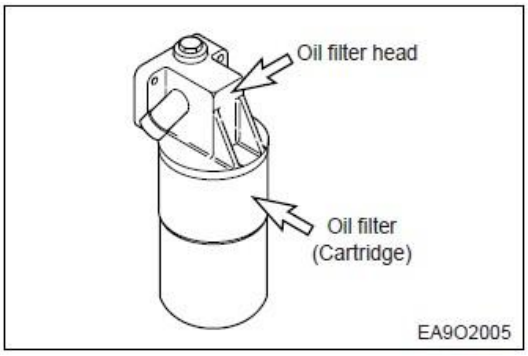

2.1.5 Fuel filter

• Drain water in cartridge with loosening the cock under filter manually (6) from time to time.

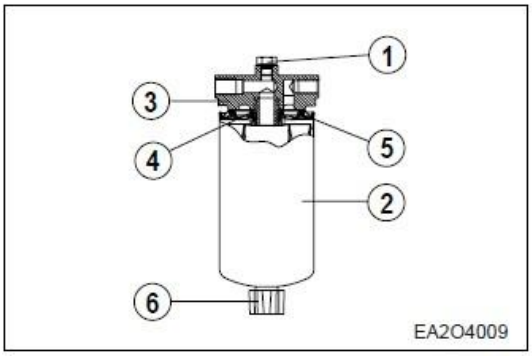

2.1.6 Air cleaner

• In case that elements are deformed, damaged or if the air cleaner has a crack, replace it.
• By the definite interval, the elements must be cleaned and replaced.

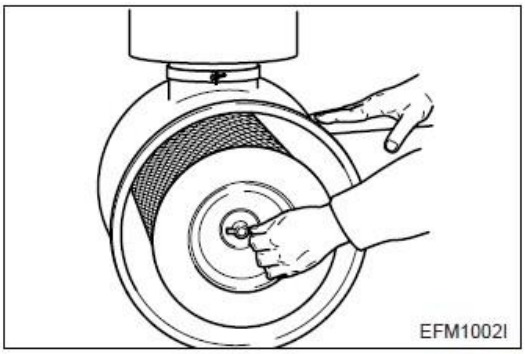

2.1.7 Intercooler

The intercooler is air to air type and has a large cooling fan capacity. The intercooler life and performance depends on the intake air condition greatly. Fouled air pollutes and clogs the air fins of intercooler. As a result of this, the engine output is decreased and engine malfunction is occurred. So you always check whether the intake air systems like air filter element are worn or polluted.

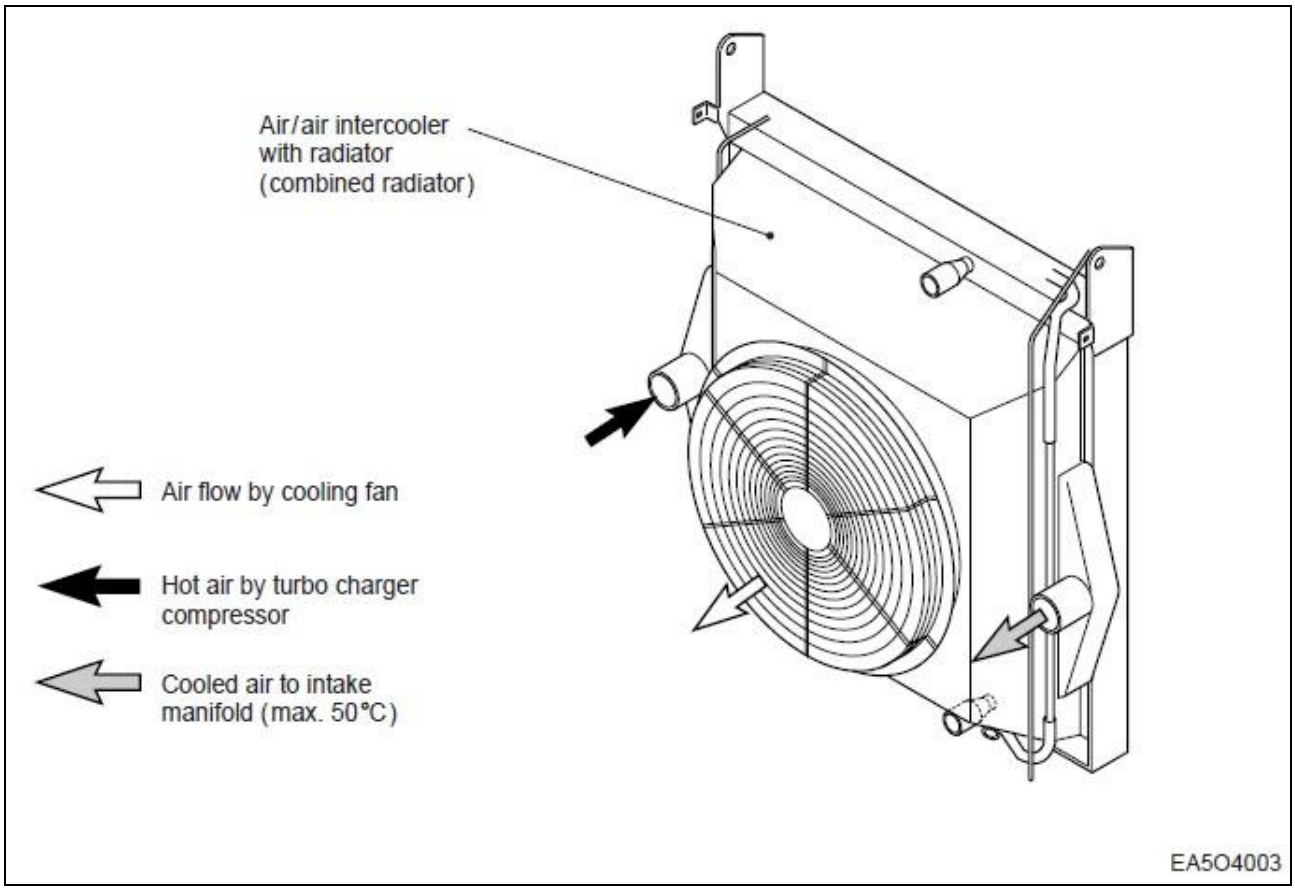

2.1.8 Valve clearance adjust procedure

- After letting the #1 cylinder's piston come at the compression top dead center by turning the crankshaft, adjust the valve clearances.
- Loosen the lock nuts of rocker arm adjusting screws and push the feeler gauge of specified value between a rocker arm and a valve stem and adjust the clearance with adjusting screw respectively and then tighten with the lock nut.
- As for the valve clearance, adjust it when in cold, as follows.

Model	Intake Valve	Exhaust Valve
DE08TIS	0.3 mm	0.3 mm

(1) Rotate the crankshaft to overlap the intake and the exhaust valves of #6, then #1 cylinder become the compression state of top dead center.

(2) Therefore adjust the valve clearance corresponding to “ ⇨ “of lower figure.
At this time there are no force on the push rods of #1 cylinder.

(3) Rotating the crankshaft by one revolution, #6 cylinder become the compression state of top dead center.

(4) Thereafter adjust the valve clearances corresponding to “ ➡ “of lower figure.

(5) After reinsuring the valve clearances, retighten if necessary.

• No. 1 cylinder is located at the side where flywheel was installed.

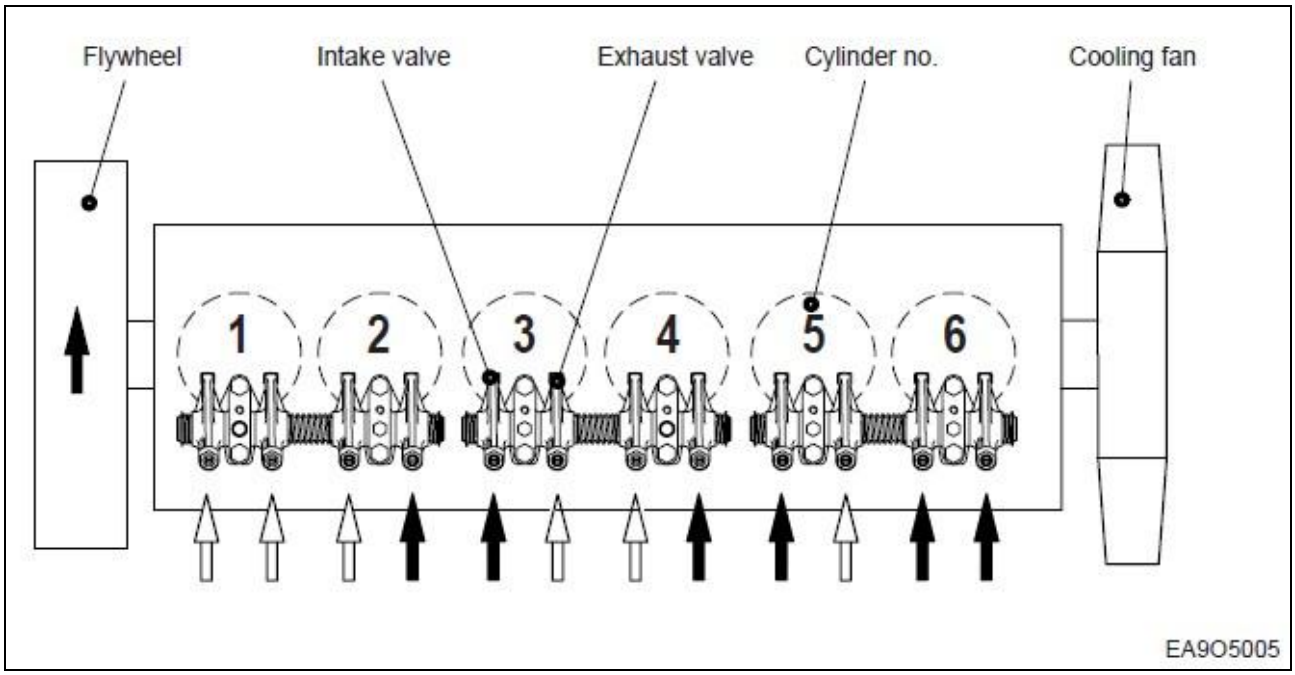

2.1.9 Cylinder compression pressure

• Stop the engine after warming up, and take out nozzle holder assembly.

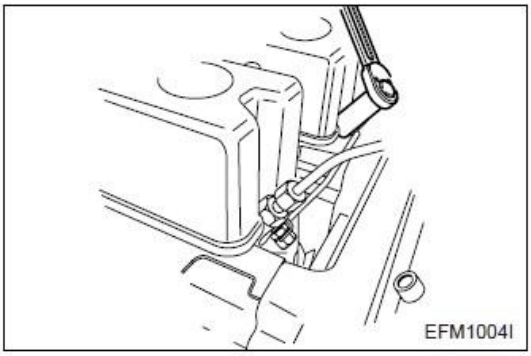

- Install the special tool (compression gauge adapter) at the nozzle holder hole, and connect the compression pressure gauge there.

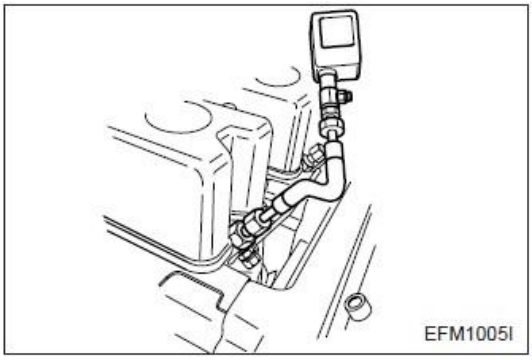

Standard value	28kg/cm² over
Limit value	24kg/cm²
Difference between each cylinder	Within ± 10 %

* Condition: Water temperature 20°C, Engine rotation 200rpm (10 rotations)

2.1.10 Injection nozzle

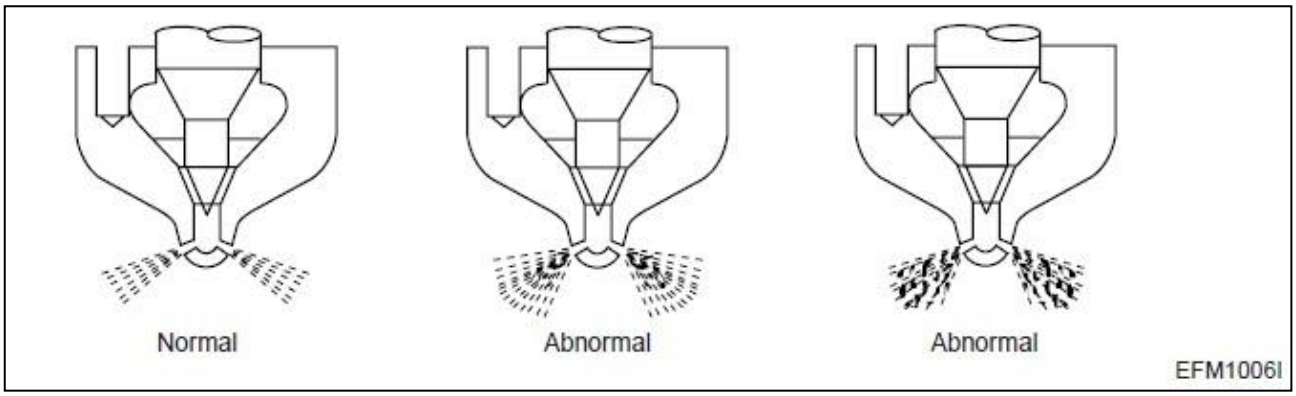

- Install a nozzle on the nozzle tester.
- If the inspected injection pressure is less than the specified value, adjust using the adjusting shims.

Engine Model	DE08TIS
Opening pressure	1st : 180 kg/cm² 2nd : 280 kg/cm²

- Check the atomizing state and replace it if abnormal.

2.1.11 Fuel injection pump

- Check the housing crack, damage etc. and replace it if abnormal.
- Check if the idle operation and speed regulating lever's sealing is removed.
- The adjustment and testing of fuel injection pump should necessarily be done at the test bench.

2.1.12 Battery

- Inspect for any leakage of electrolytic solution owing to battery crack, and replace the battery in case of poor condition.
- Inspect for amount of electrolytic solution, and replenish if insufficient.
- Measure the gravity of electrolytic solution, if less than specified value (1.12 ~ 1.28), replenish.

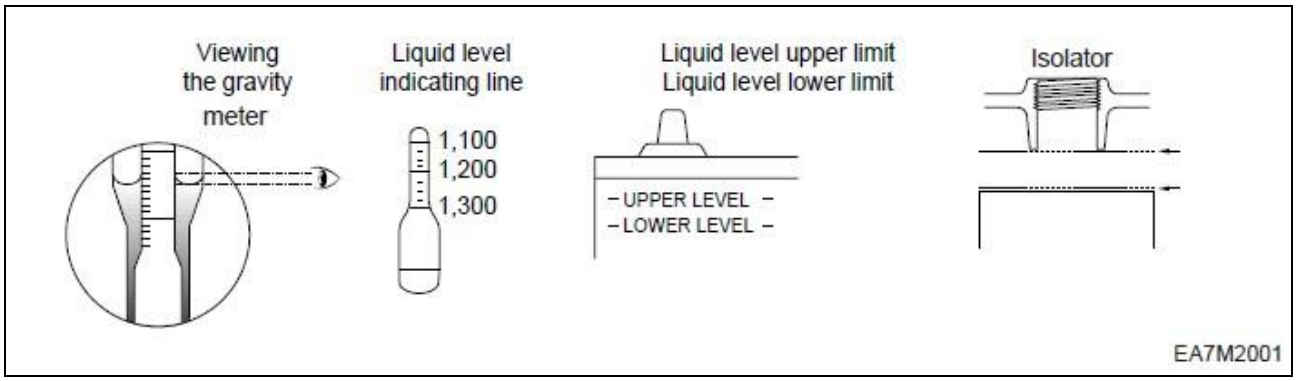

2.1.13 Air removal of fuel system

The suction room of fuel injection pump has the function of air removal continuously during the operation through a relief valve.

In case that the suction room lacks fuel at all, for instance, in case of new installation of injection pump, after loosening the air removing screws of cartridge filter respectively, remove the air by operating the manual pump of fuel supply pump until bubble will disappear.

2.1.14 Fuel supply pump

Every time of engine oil replacement, the fuel strainer installed at the fuel supply pump should be removed and cleaned.

2.1.15 Turbocharger

The turbocharger needs not arty special equipment.

Every time of engine replacement, a leakage or clogging of oil pipes should be inspected. Air cleaner should be maintained carefully for nut or foreign material not to get in. Periodic inspection should be applied on the compressed air and exhaust gas pipes, For leaking air will bring the overheat engine, an immediate repair must be done.

During the operation that is surrounded by the dust and oil mixed air, frequent cleaning must be done on the impellers. Tear down the impeller casing (attention: be careful not to bend) and must clean with non-acid solvent solution. If necessary, use plastic scraper If impeller is severely polluted, dip the impeller into solution and may be better to clean it with stiff brush. Then one thing to beware is to dip only impeller part and so do not support by impeller but bearing housing.

2.1.16 Starting motor

In case of engine maintenance, clean pinion and ring gear thoroughly putting in the fuel, and coat them with grease.

Also, In case of washing engine (room) and so forth, inspect the wiring state being careful for water not to get in.

2.2 Diagnosis and Remedy

- The following description summarizes the probable cause of and remedy for generall failure by item.
- Immediate countermeasures should be taken before a failure is inflamed if any symptom is detected.

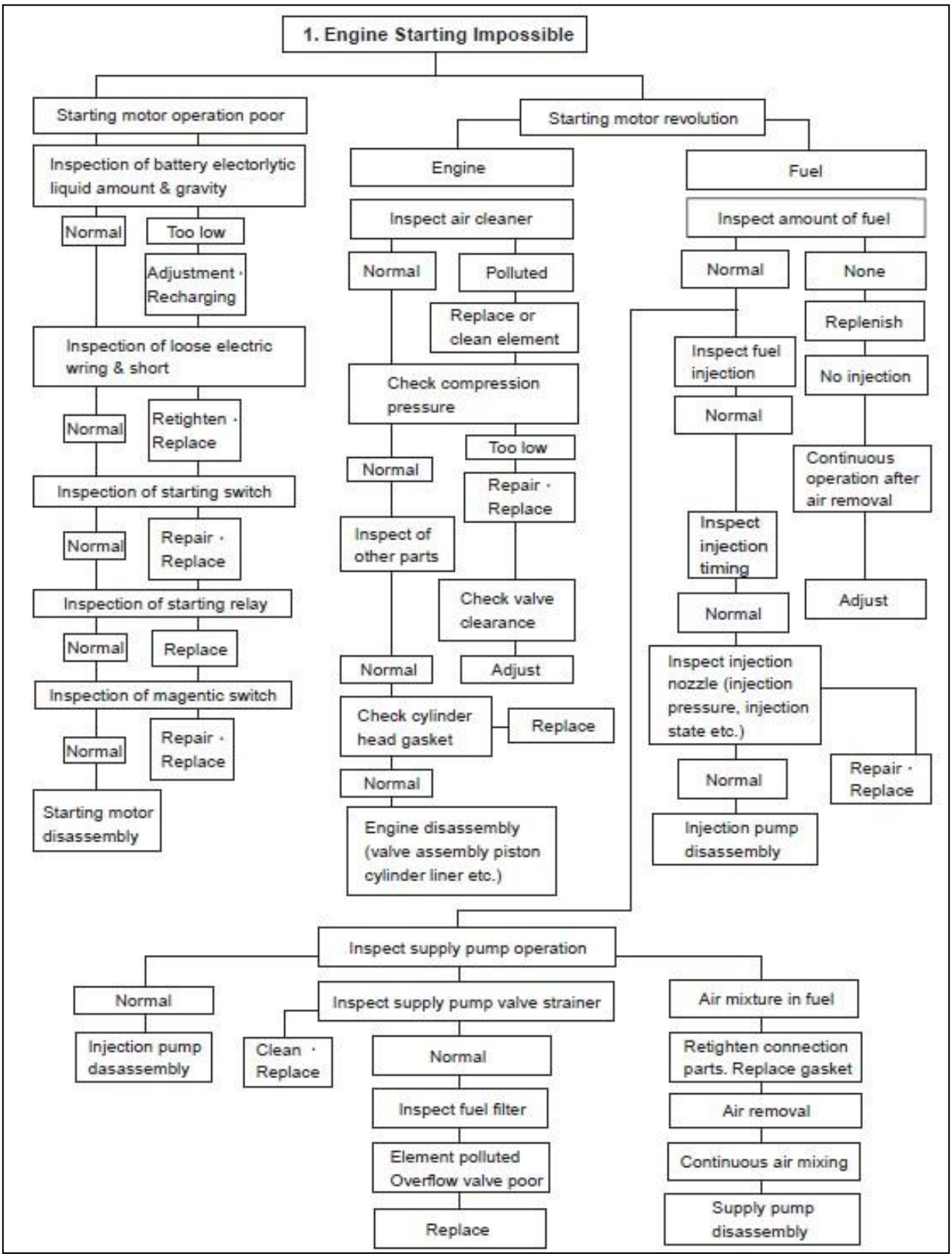

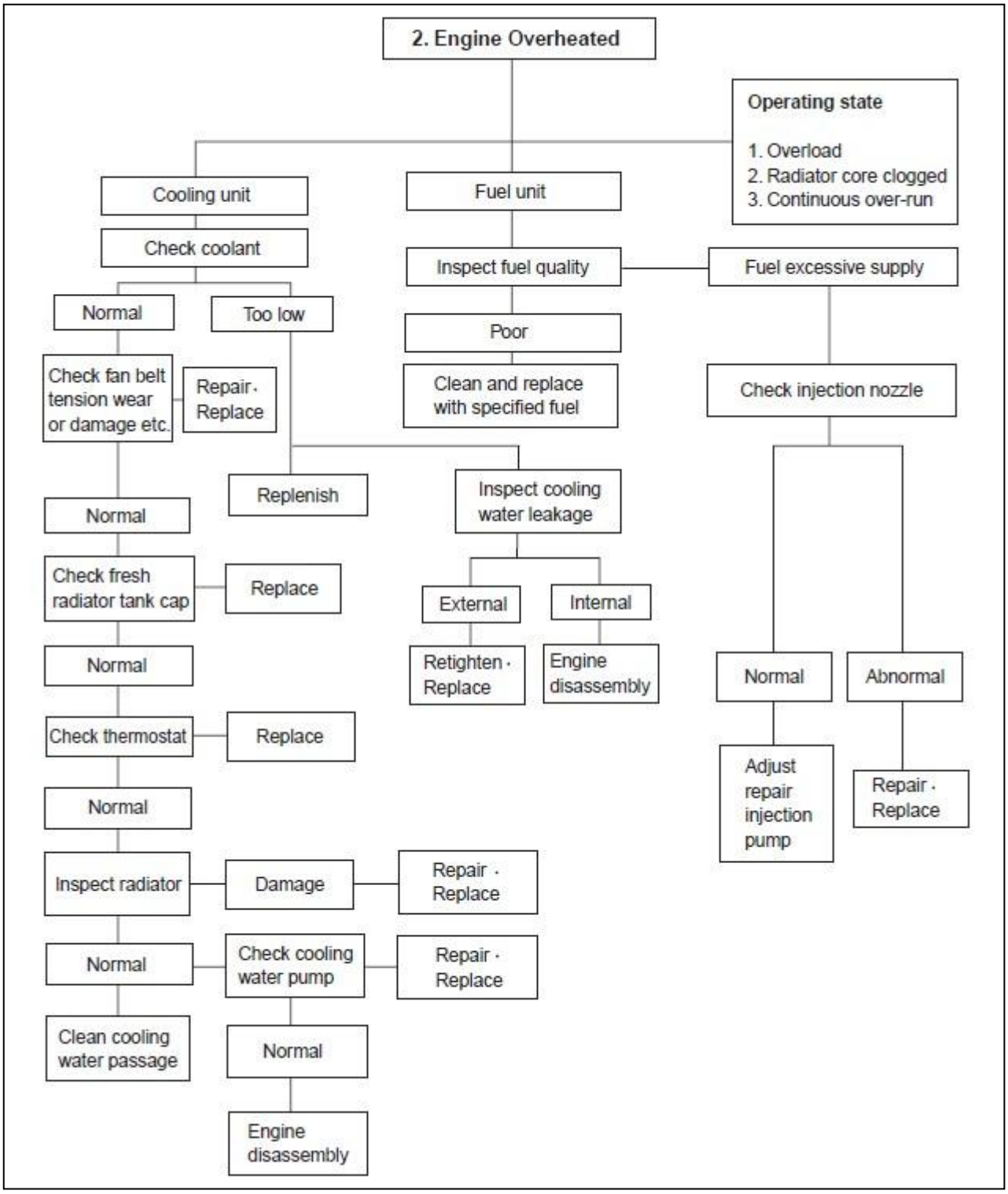
2. Engine Overheated
Operating state
1. Overload
2. Radiator core clogged
3. Continuous over-run
Cooling unit
Fuel unit
Check coolant
Inspect fuel quality
Fuel excessive supply
Normal
Too low
Poor
Check fan belt tension wear or damage etc.
Repair · Replace
Clean and replace with specified fuel
Check injection nozzle
Replenish
Inspect cooling water leakage
Normal
Check fresh radiator tank cap
Replace
External
Internal
Normal
Retighten · Replace
Engine disassembly
Normal
Abnormal
Check thermostat
Replace
Adjust repair injection pump
Repair · Replace
Normal
Inspect radiator
Damage
Repair · Replace
Normal
Check cooling water pump
Repair · Replace
Clean cooling water passage
Normal
Engine disassembly

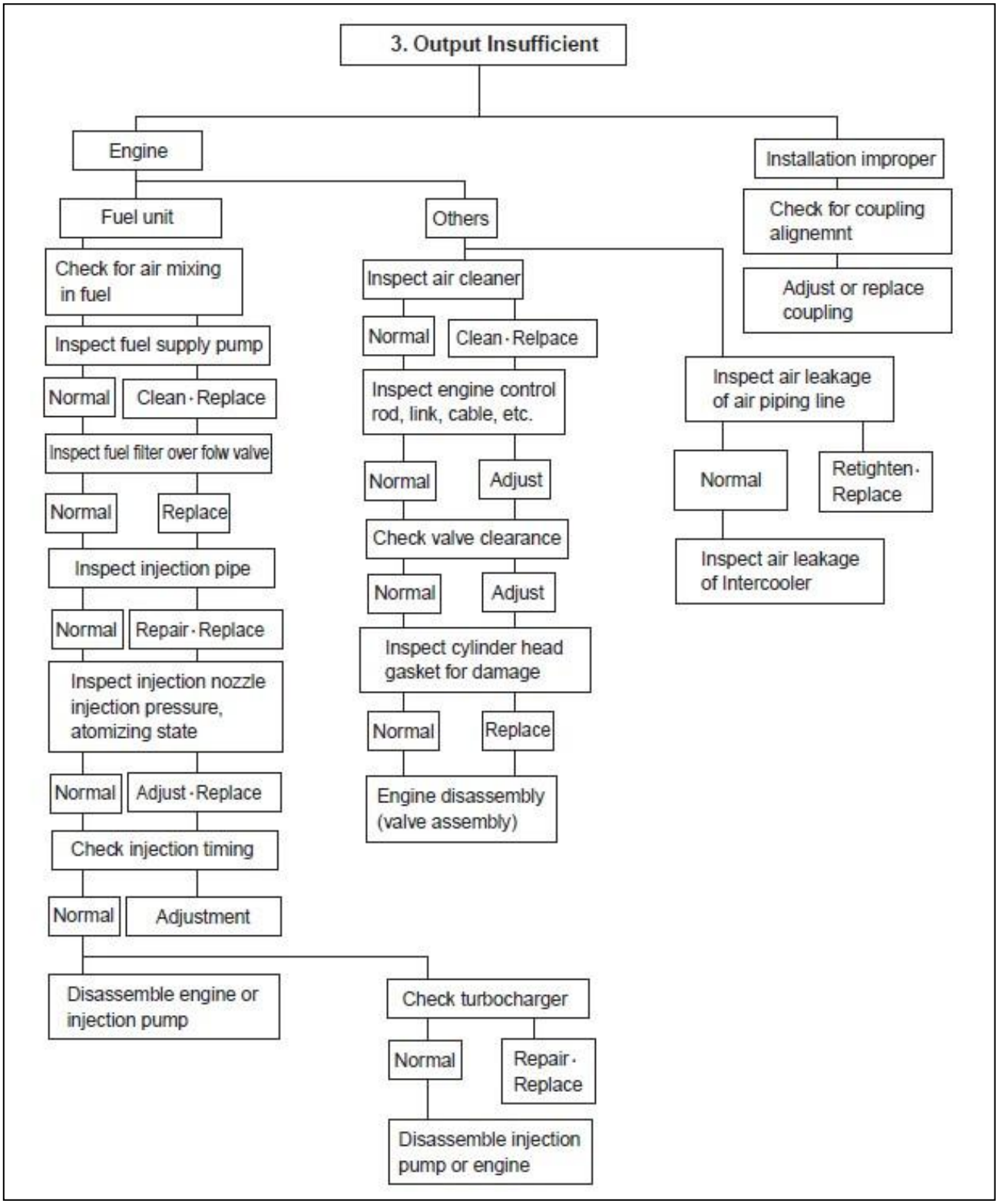
3. Output Insufficient
Engine
Installation improper
Fuel unit
Others
Check for coupling alignemnt
Adjust or replace coupling
Check for air mixing in fuel
Inspect fuel supply pump
Normal
Clean · Replace
Inspect fuel filter over folw valve
Normal
Replace
Inspect injection pipe
Normal
Repair · Replace
Inspect injection nozzle injection pressure, atomizing state
Normal
Adjust · Replace
Check injection timing
Normal
Adjustment
Disassemble engine or injection pump
Inspect air cleaner
Normal
Clean · Relpace
Inspect engine control rod, link, cable, etc.
Normal
Adjust
Check valve clearance
Normal
Adjust
Inspect cylinder head gasket for damage
Normal
Replace
Engine disassembly (valve assembly)
Check turbocharger
Normal
Repair · Replace
Disassemble injection pump or engine
Inspect air leakage of air piping line
Normal
Retighten · Replace
Inspect air leakage of Intercooler

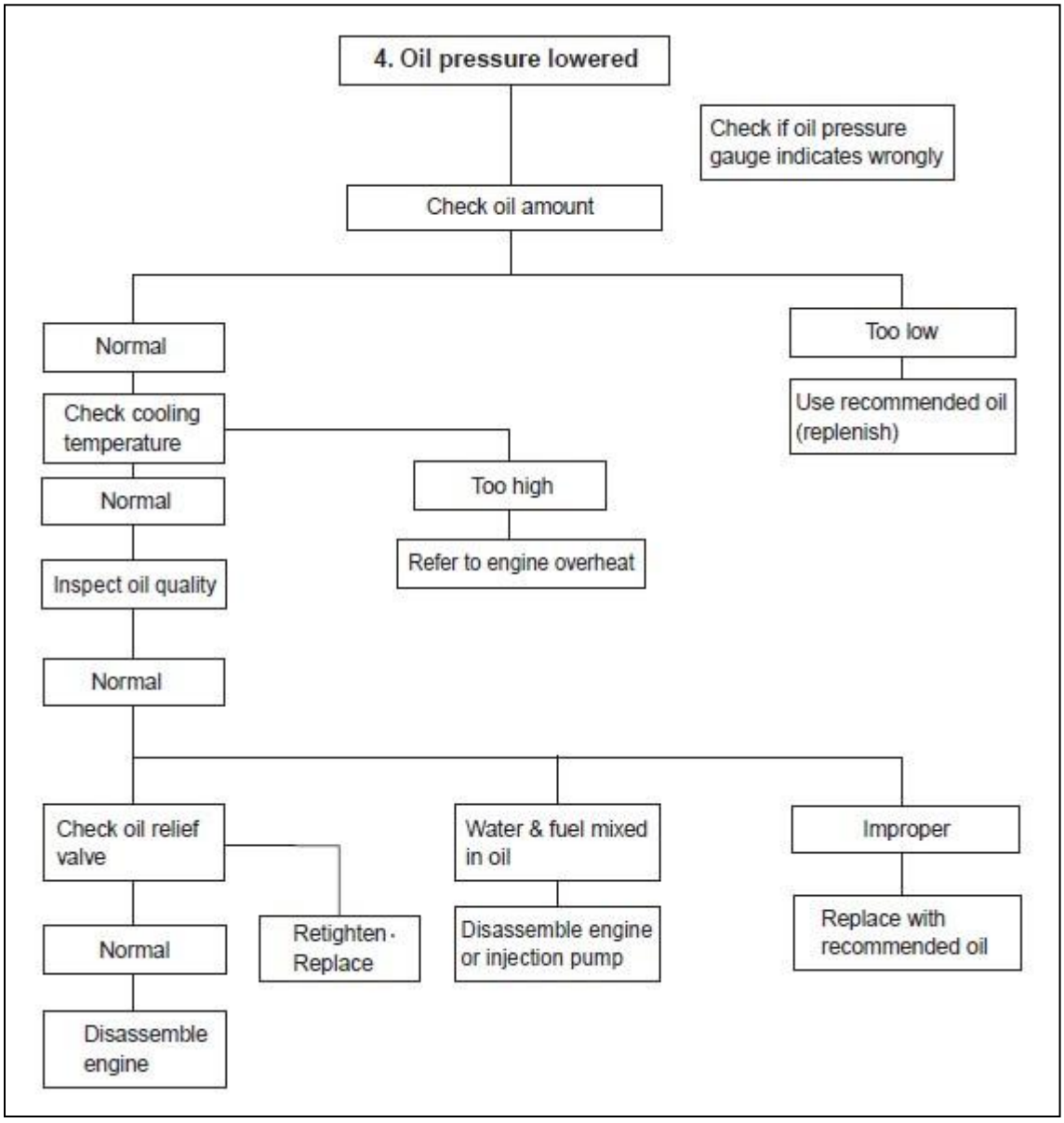
4. Oil pressure lowered
Check if oil pressure gauge indicates wrongly
Check oil amount
Normal
Too low
Use recommended oil (replenish)
Check cooling temperature
Too high
Refer to engine overheat
Normal
Inspect oil quality
Normal
Check oil relief valve
Water & fuel mixed in oil
Improper
Normal
Retighten · Replace
Disassemble engine or injection pump
Replace with recommended oil
Disassemble engine

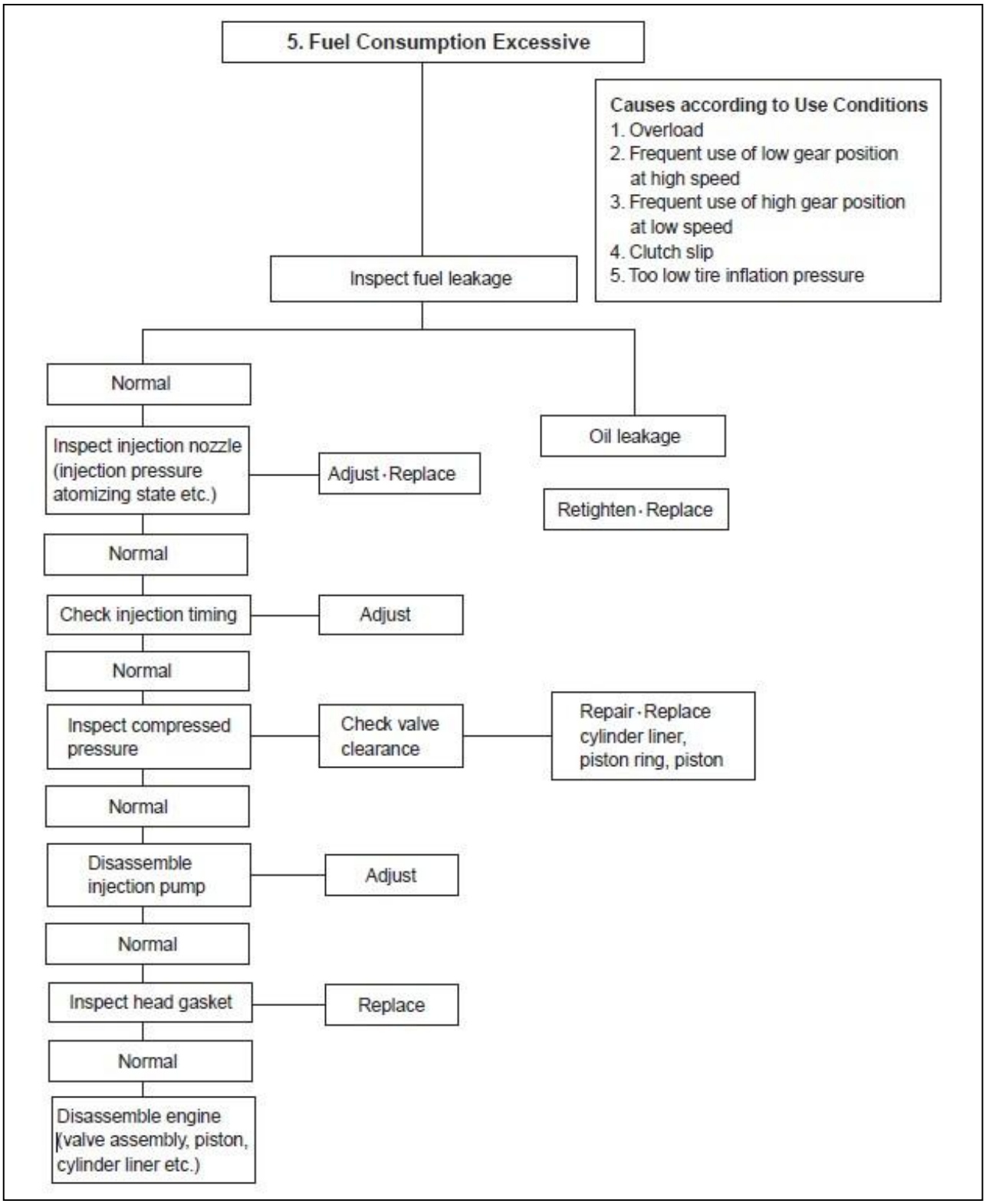
5. Fuel Consumption Excessive
Causes according to Use Conditions
1. Overload
2. Frequent use of low gear position at high speed
3. Frequent use of high gear position at low speed
4. Clutch slip
5. Too low tire inflation pressure
Inspect fuel leakage
Normal
Oil leakage
Retighten · Replace
Inspect injection nozzle (injection pressure atomizing state etc.)
Adjust · Replace
Normal
Check injection timing
Adjust
Normal
Inspect compressed pressure
Check valve clearance
Repair · Replace cylinder liner, piston ring, piston
Normal
Disassemble injection pump
Adjust
Normal
Inspect head gasket
Replace
Normal
Disassemble engine (valve assembly, piston, cylinder liner etc.)

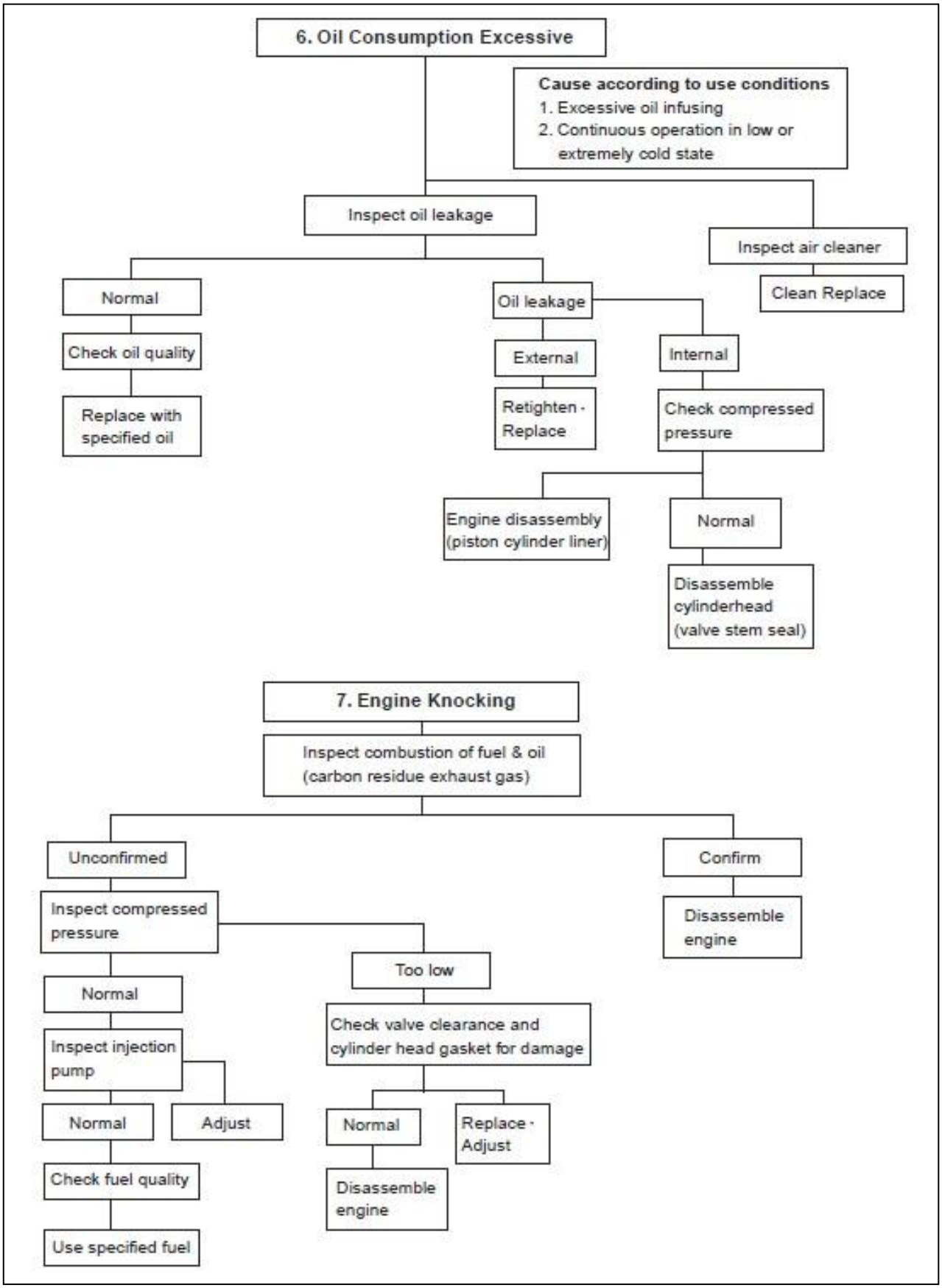
6. Oil Consumption Excessive
Cause according to use conditions
1. Excessive oil infusing
2. Continuous operation in low or extremely cold state
Inspect oil leakage
Inspect air cleaner
Clean Replace
Normal
Check oil quality
Replace with specified oil
Oil leakage
External
Retighten · Replace
Internal
Check compressed pressure
Engine disassembly (piston cylinder liner)
Normal
Disassemble cylinderhead (valve stem seal)
7. Engine Knocking
Inspect combustion of fuel & oil (carbon residue exhaust gas)
Unconfirmed
Confirm
Disassemble engine
Inspect compressed pressure
Normal
Inspect injection pump
Normal
Adjust
Check fuel quality
Use specified fuel
Too low
Check valve clearance and cylinder head gasket for damage
Normal
Replace · Adjust
Disassemble engine

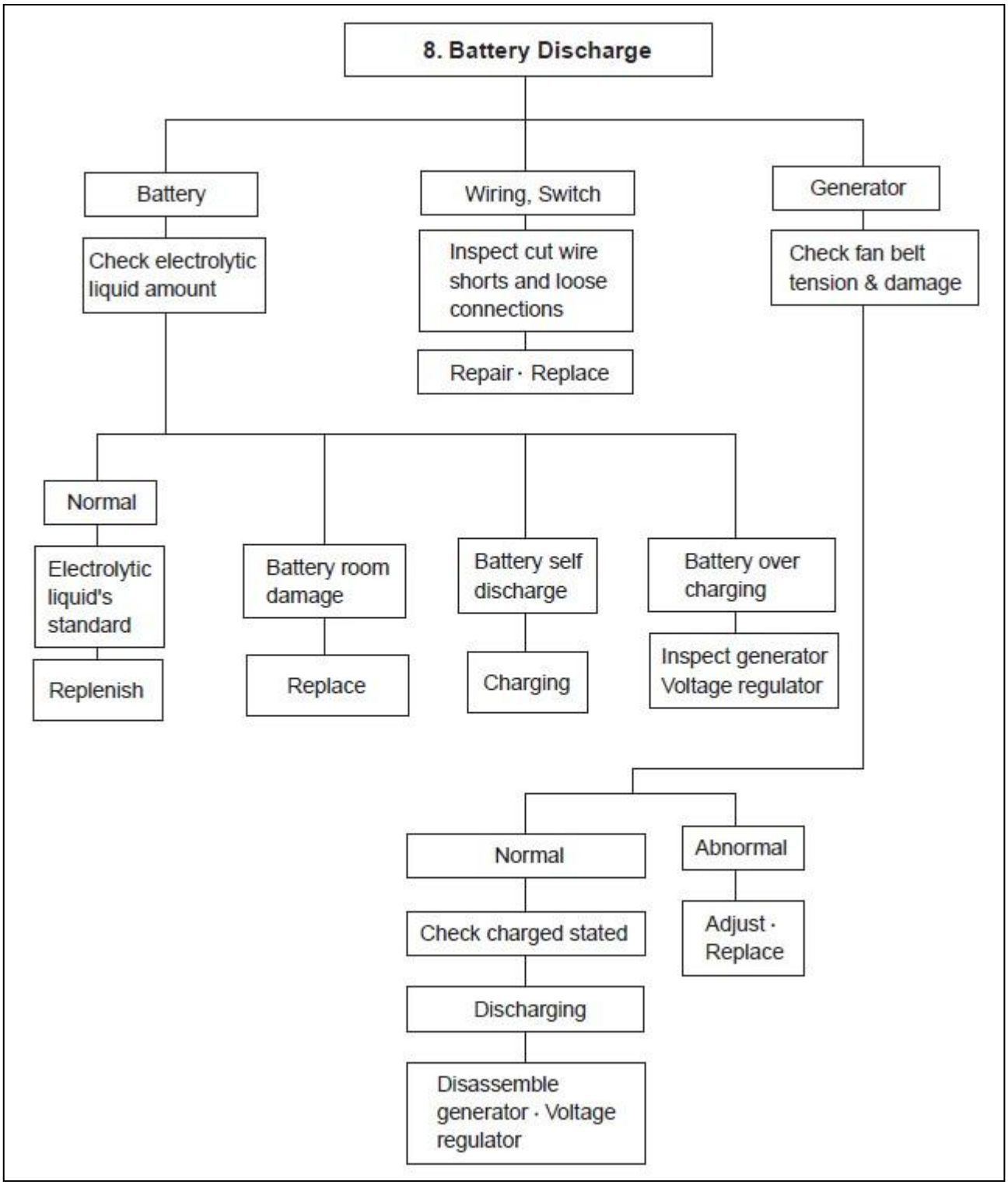
8. Battery Discharge
Battery
Wiring, Switch
Generator
Check electrolytic liquid amount
Inspect cut wire shorts and loose connections
Check fan belt tension & damage
Repair · Replace
Normal
Electrolytic liquid's standard
Replenish
Battery room damage
Replace
Battery self discharge
Charging
Battery over charging
Inspect generator Voltage regulator
Normal
Check charged stated
Discharging
Disassemble generator · Voltage regulator
Abnormal
Adjust · Replace

Condition	Causes	Remedies
1) Starting difficult	• Valve's poor shut, stem distortion	Repair or replace
(1) Compression pressure lack	• Valve spring damage	Replace valve spring
	• Cylinder head gasket's leak	Replace gasket
	• Wear of piston, piston ring or liner	Adjust
2) Idle operation abnormal	• Injection timing incorrect	Adjust
	• Air mixing at injection pump	Remove air
3) Engine output insufficient	• Valve clearance incorrect	Adjust
(1) Continuous output insufficient	• Valve tightness poor	Repair
	• Cylinder head gasket's leak	Replace gasket
	• Wear, stick, damage of piston ring	Replace piston ring
	• Injection timing incorrect	Adjust
	• Fuel injection amount insufficient	Adjust injection pump
	• Nozzle injection pressure improper or stuck	Adjust or replace
	• Supply pump's function lowered	Repair or replace
	• Fuel pipe system clogged	Repair
	• Air suction amount insufficient	Clean or replace air cleaner
	• Turbocharger poor	Repair or replace
(2) Output insufficient when in acceleration	• Compression pressure insufficient	Disassemble engine
	• Injection timing incorrect	Adjust
	• Fuel injection amount insufficient	Adjust injection pump
	• Injection pump timer's function insufficient	Repair or replace
	• Nozzle injection pressure, injection angle improper	Repair, replace
	• Supply pump's function lowered	Repair or replace
	• Air intake amount insufficient	Clean or replace air cleaner
4) Overheating	• Engine oil insufficient or poor	Replenish or replace
	• Cooling water insufficient	Replenish or replace
	• Fan belt loosened, worn, damaged	Adjust or replace
	• Cooling water pump's function lowered	Repair or replace
	• Water temp. regulator's operation poor	Replace
	• Valve clearance incorrect	Adjust
	• Exhaust system's resistance increased	Clean or replace

Condition	Causes	Remedies
5) Engine noisy	For noises arise compositely such as rotating parts, lapping parts etc., there is necessity to search the cause of noises accurately.	
(1) Crankshaft	• As the wear of bearing or crankshaft progress, the oil clearances increase. • Lopsided wear of crankshaft • Oil supply insufficient due to oil passage clogging • Stuck bearing	Replace bearing & grind crankshaft Grind or replace Clean oil passage Replace bearing & Grind
(2) Con rod and Con rod bearing	• Lopsided wear of con rod bearing • Lopsided wear of crank pin • Connecting rod distortion • Stuck bearing • Oil supply insufficiency as clogging at oil passage progresses	Replace bearing Grind crankshaft Repair or replace Replace & grind crankshaft Clean oil passage
(3) Piston, piston pin & piston ring	• Piston clearance increase as the wear of piston and piston ring progresses • Wear of piston or piston pin • Piston stuck • Piston insertion poor • Piston ring damaged	Replace piston & piston ring Replace Replace piston Replace piston Replace piston
(4) Others	• Wear of crankshaft, thrust bearing • Camshaft end play increased • Idle gear end play increased • Timing gear backlash excessive • Valve clearance excessive • Abnormal wear of tappet, cam • Turbocharger inner part damaged	Replace thrust bearing Replace thrust plate Replace thrust washer Repair or replace Adjust valve clearance Replace tappet, cam Repair or replace
6) Fuel Consumption Excessive	• Injection timing incorrect • Fuel injection amount excessive	Adjust Adjust injection pump
7) Oil Consumption Excessive (1) Oil level elevated	• Clearance between cylinder liner & piston	Replace
	• Wear of piston ring, ring groove • Piston ring's damage, stick, wear • Piston ring opening's disposition improper • Piston skirt part damaged or abnormal wear • Oil ring's oil return hole clogged • Oil ring's contact poor	Replace piston, piston ring Replace piston ring Correct position Replace piston Replace piston ring Replace piston ring
(2) Oil level lowered	• Looseness of valve stem & guide • Wear of valve stem seal • Cylinder head gasket's leak	Replace in set Replace seal Replace gasket
(3) Oil leak	• Looseness of connection parts • Various parts' packing poor • Oil seal poor	Replace gasket, repair Replace packing Replace oil seal

2.3 Engine Inspection

2.3.1 Stopping engine

After checking the engine for any unusual condition at the idling speed, then turn the key switch to stop the engine.

2.3.2 General engine inspection cycle

○ : Inspection and adjustment ● : Replacement

Check Points		Daily	Inspection Interval (hours)					Remarks
			50	200	500	600	1,200	
Cooling system	Check leakage (hose, clamp)	○						
	Check coolant level	○						
	Replacement of Coolant						●	
	Poly-belt	○						Every 2,000 hours
	Radiator cleaning						○	
Lubrication system	Leakage check	○						
	Oil level gauge check	○						
	Lubricant replacement		● (initial)	● [Note]				
	Oil filter cartridge replacement		● (initial)	● [Note]				
Intake system	Cooler connection check (hose, clamp)	○						
	Cleaning & replacement of air filter element			○ Cleaning		●		
Fuel system	Fuel line leakage check	○						
	Clean the fuel supply pump strainer			○				
	Remove the fuel tank precipitate						○	
	Discharge water from water separator			○				
	Replace fuel filter element				●			
	Check the fuel injection timing			○				when required
	Fuel injection nozzle check			○				when required
Electric system	Exhaust gas status check	○						
	Battery charging status check	○						
	Compression pressure check						○	when required
	Intake/exhaust valve clearance adjustment		○ Initial					when required

Note Replacement cycle may vary depending on use conditions.

2.3.3 Use of original parts for repair and replacement

For engine is being mechanically harmonized with many parts, only when the original parts that the manufacture recommends to use is used, the engine trouble would be preventively maintained and capable to keep up the maximum performances.
For the analogous parts not the original parts are poor in qualities and gives illl performances, it may rather bring early engine failure.

https://truckmanualshub.com/

3 MAINTENANCE

3.1 Engine Disassembly

3.1.1 Heed at disassembly

- Before disassembly, the part shelf should be prepared for various tools and repair parts.
- When assembling, clean empty hand should be used and clean environment maintained.
- In case of storing the disassembled parts, each part should not touch each other.
- In case of disassembly, the parts should be laid in order.

3.1.2 Oil level gauge

- Pull out the oil level gauge.

3.1.3 Cooling water

- Remove the radiator cap. Open the drain plug at the radiator lower part to drain the coolant as the right figure.

  Caution:

  When removing radiator filler cap while the engine is still hot, cover the cap with a rag, then turn it slowly to release the internal steam pressure. This will prevent a person from scalding with hot steam spouted out from the filler port.

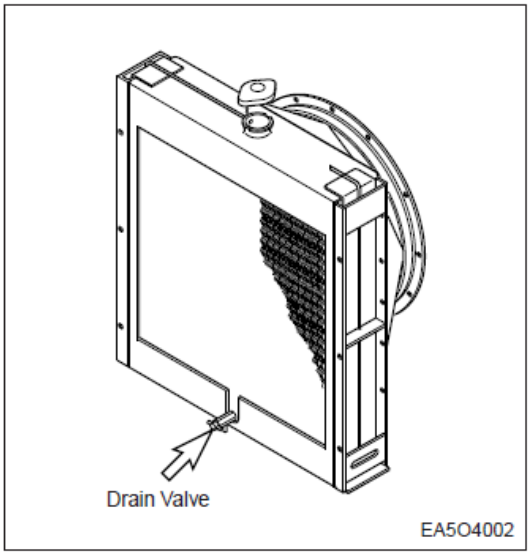

- Remove the drain plug from the cylinder block and drain out the cooling water into a container.

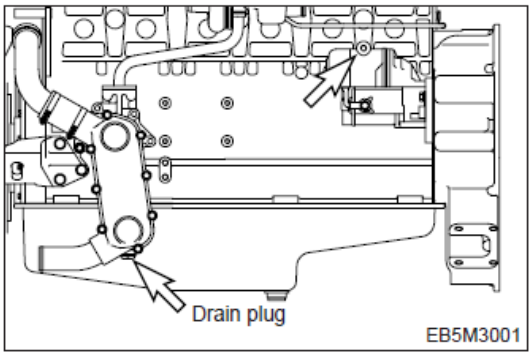

3.1.4 Engine oil

- Remove the oil drain plug of oil pan and pour the engine oil into the prepared vessel.

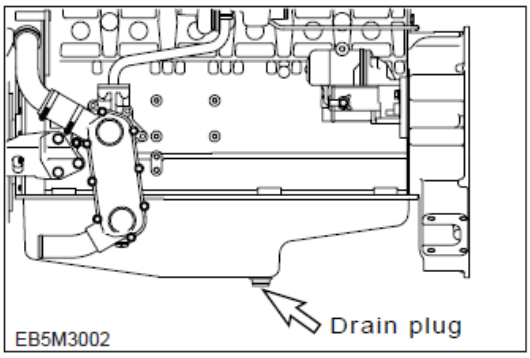

3.1.5 Cooling fan

- Remove the flange fixing bolts, then take off the flange and cooling fan.

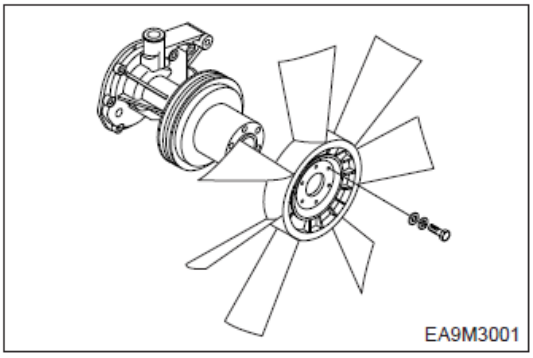

3.1.6 Belt

- Loosen the tension adjusting bolts of the alternator and the idle pulley, and take off the belts.

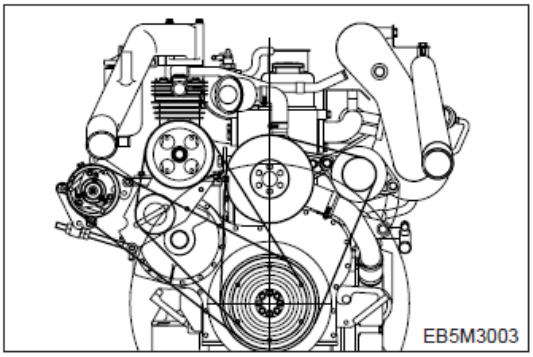

3.1.7 Thermostat

- Loosen the rubber hose connected to the cooling water pipe and remove the thermostat.
- Remove the rubber hose of the bypass line.

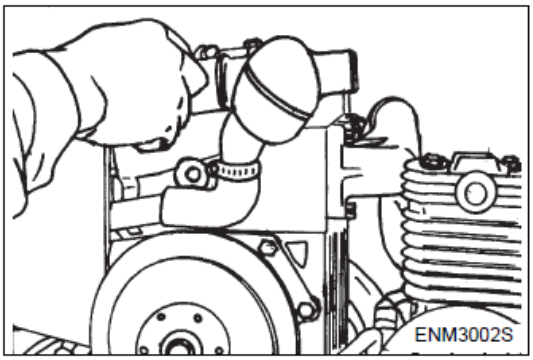

3.1.8 Starter

- Unscrew the starter fixing nuts and remove the starter being careful not to damage its gears.

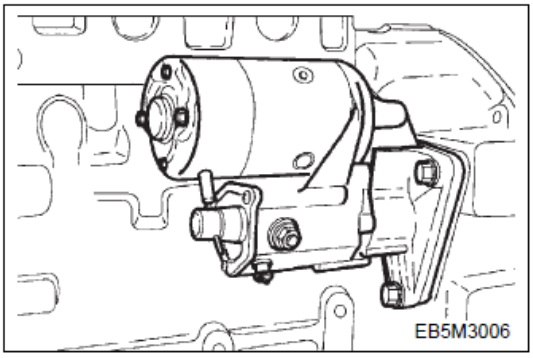

3.1.9 Fuel filter

- Remove the hollow screws of filter and tear down fuel supply and discharge rubber hose.
- Remove fuel filter fixing bolts and disassemble the fuel filter. (If the fuel filter is of cartridge type, disassemble the cartridge element only.)

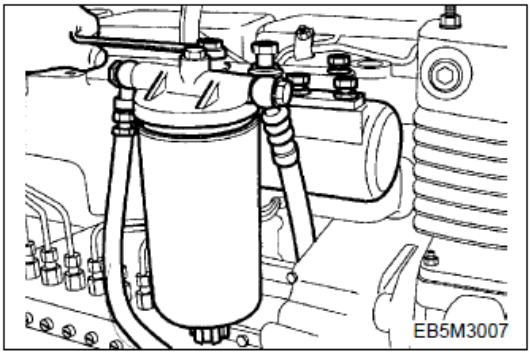

3.1.10 Breather

- Loosen the clamp screw to remove the rubber hose.

3.1.11 Intercooler (D1146TI, DE08TIS)

- Tear down the various hoses and air pipes from the inter cooler.
- Remove the intercooler fixing bolts and tear it down.

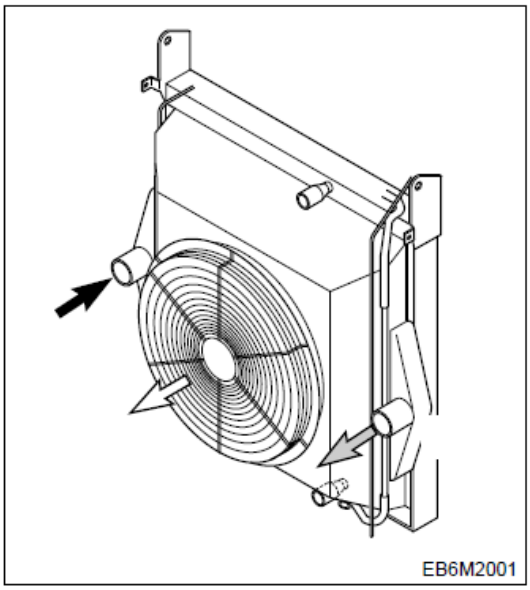

3.1.12 Alternator

- Remove the alternator assembling bolt and disassemble the alternator.

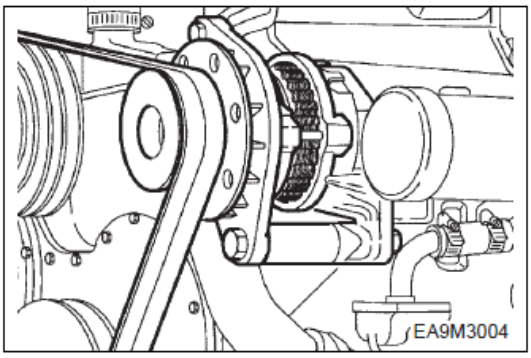

3.1.13 Oil cooler

- Loosen the cooling water pump and the rubber hose clamps of connected pipes, and disassemble it.
- Remove the oil cooler fixing bolts and take off the oil cooler.

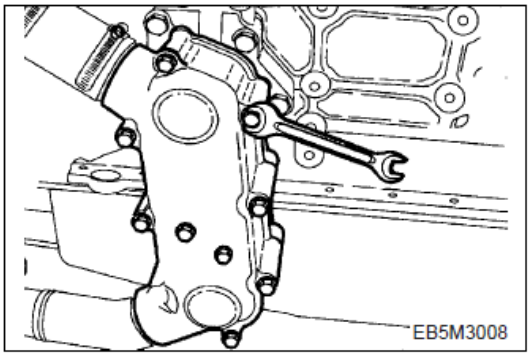

3.1.14 Oil filter

- Remove the oil filter assembling bolts and disassemble the oil filter assembly.

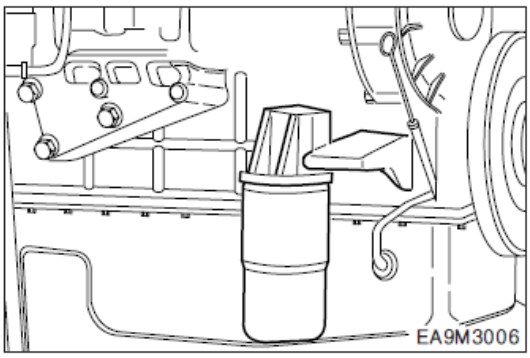

3.1.15 Power steering pump

- Remove the oil hose between power steering oil pump and control unit of the vehicle.
- Unscrew the power steering oil pump fixing bolts and remove the power steering pump.

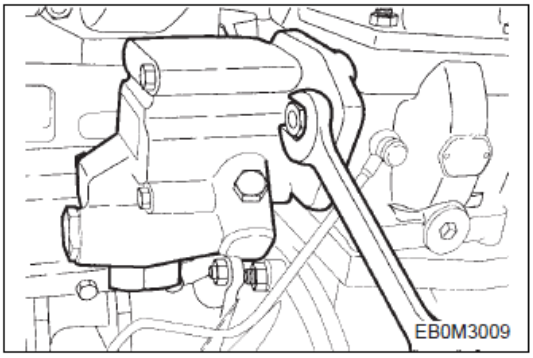

https://truckmanualshub.com/

3.1.16 Air compressor

- Remove the oil pipe between cylinder block and air compressor.
- Unscrew the air compressor fixing bolts and take off the air compressor.

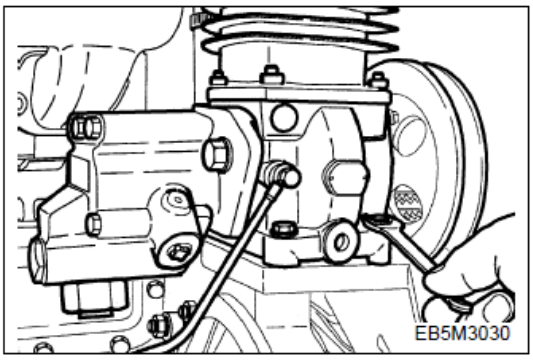

3.1.17 Idle pulley

- Unscrew the idle pulley fixing bolts and take off the idle pulley.

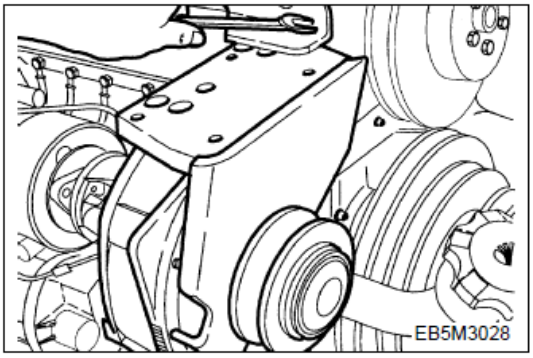

3.1.18 Water pump

- Unclamp the rubber hose connected to the oil cooler.
- Unscrew the water pump fixing bolts from the cylinder block and take off the water pump.

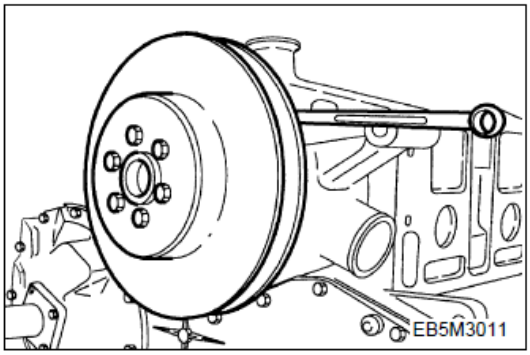

3.1.19 Cylinder head cover

- Remove the head cover fixing bolts and lift the cylinder head cover.

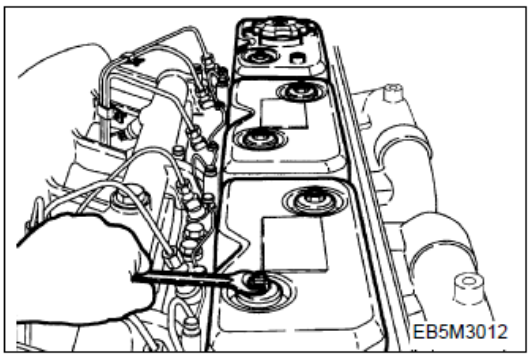

3.1.20 Fuel injection nozzle

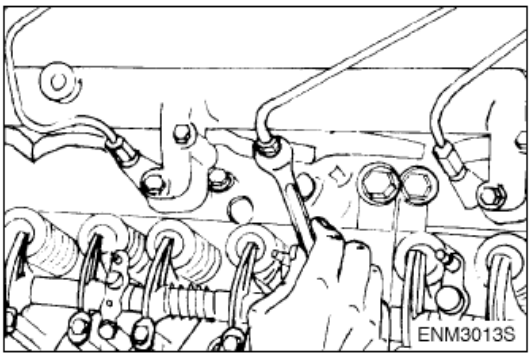

- Unscrew the fuel injection pipe between the injection pump and nozzle and take off the pipe.
- Install a special jig on the nozzle holder, and then pull out the nozzle as striking the hammer of the jig backwardly.

  Caution :

  Take care not to damage the nozzle at disassembly.
- Take out the seal ring from the nozzle hole of the cylinder head and discard it.

3.1.21 Turbo charger (D1146TI, DE08TIS)

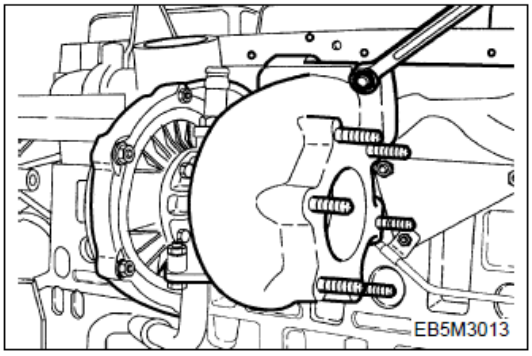

- Remove the oil supply pipe and oil return pipe between the turbo charger and the cylinder block.
- Unclamp the rubber hose connected the intercooler and air cleaner.
- Unscrew the turbo charger fixing nuts and take off the turbo charger from the exhaust manifold.

3.1.22 Exhaust manifold

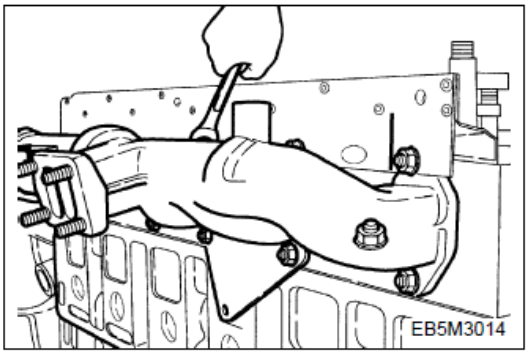

- Unscrew the exhaust manifold fixing nuts and remove the heat shield from the exhaust manifold.
- Then disassemble the exhaust manifold and gasket.
- Scrap the used gasket.

3.1.23 Intake manifold

- Unscrew the intake manifold fixing bolts and remove the intake manfold from the cylinder head.
- Disassemble the intake manifold gasket and discard it.

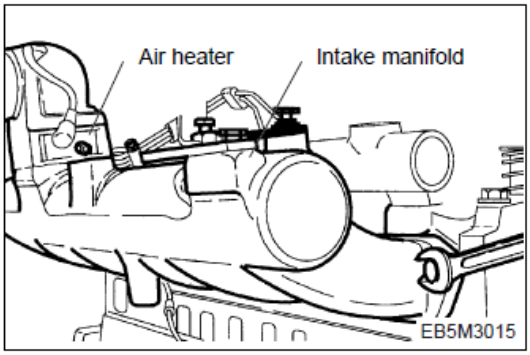

3.1.24 Cooling water pipe

- Unscrew the cooling water pipe fixing bolts and remove the cooling water pipe from the cylinder head.
- Remove the cooling water pipe gasket and finish the surface with a scraper.

  Caution:

  Be sure that piece of the gasket do not come into the cooling water passage.

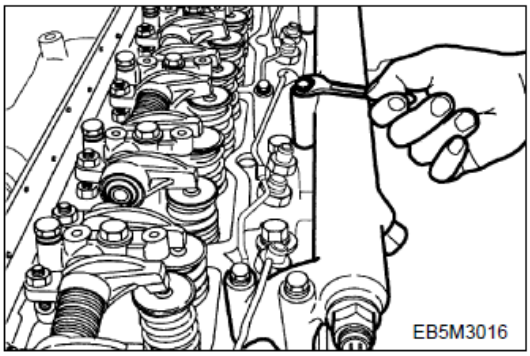

3.1.25 Rocker arm

- Remove the rocker arm bracket fixing bolts in reverse order (zigzag method) of assembling and disassemble the rocker arm.
- Take out the push rod upwards.
- Disassembly of rocker arm assembly

  Remove the snap ring from the both ends of rocker arm shaft by means of a plier.

  Remove the washer, rocker arm, bracket and spring from the rocker arm shaft in sequence.

  Press out the rocker arm bush.

  Caution:

  When reassembling the bush, cool the bush in dry ice and press the bush while aligning the bush with the oil hole of the rocker arm.

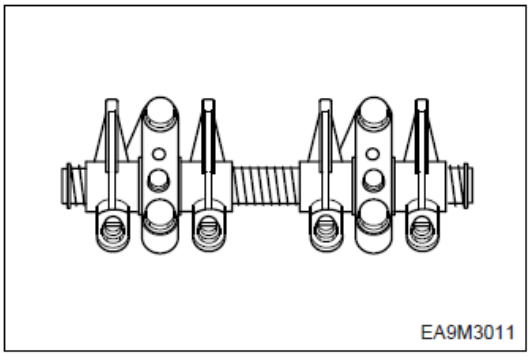

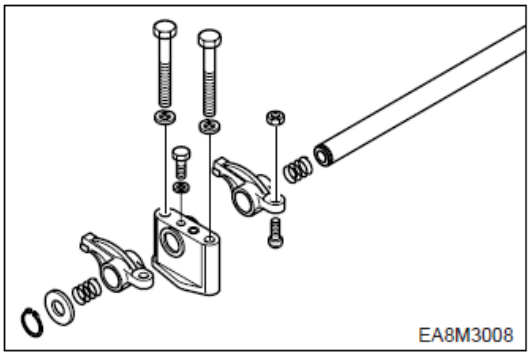

3.1.26 Cylinder head

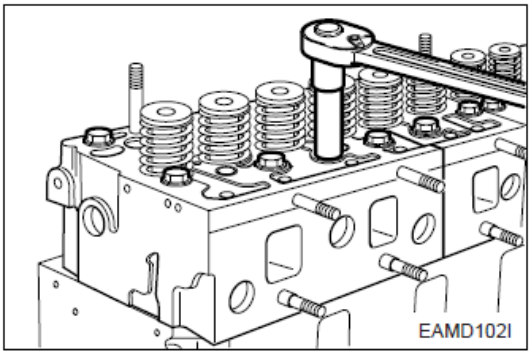

- Remove the cylinder head bolts in the reverse order of tightening but remove it step by step.

  First step : Loosen 1 ~ 2 threads

  Second step : Remove by loosening fully.
- However, remove the total bolts simultaneously by the step of 1 and 2.
- Lay the removed bolts orderly not to damage the threads at all and store.

  Caution:

  Prevent a collision between the bolt thread each other.

- Take out the cylinder head gasket and scrap it.
- Remove the foreign residues from the cylinder head surface and block surface.

  Caution:

  Try not to make any damage on the contact surfaces.

- Disassembly of cylinder head

  Place the cylinder head on a individual shelf.

  As pressing the valve spring with a special tool, remove the cotter pin, valve spring.

  Take out the intake and exhaust valves.

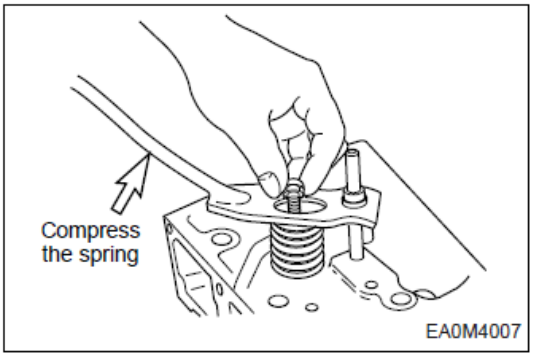

For removal of the valve seat, apply arc welding work to two points of valve seat insert, and pull out the valve seat insert with inner extractor.

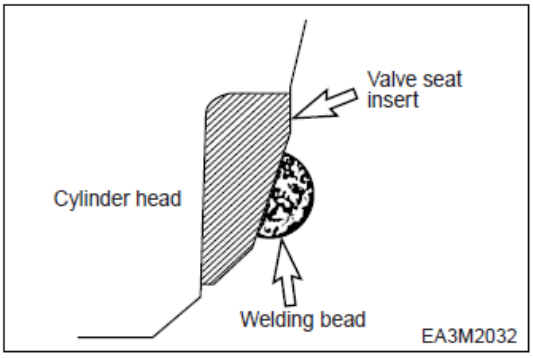

3.1.27 Oil pan

- Unscrew the oil pan fixing bolts and remove the oil pan.
- Remove the oil pan gasket and discard it.

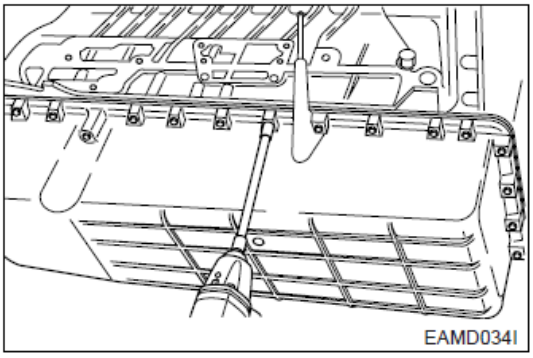

3.1.28 Vibration damper

- Unscrew the vibration damper fixing bolts in reverse sequence of installing sequence and remove the vibration damper assembly.

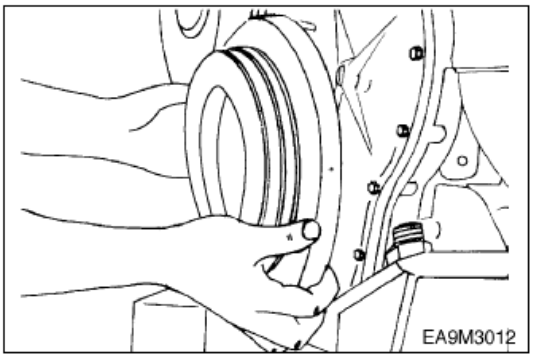

3.1.29 Timing gear case cover

- Disassemble the oil seal using an oil seal removing jig.
- Remove the cover fixing bolts and disassemble the cover from the timing gear case.

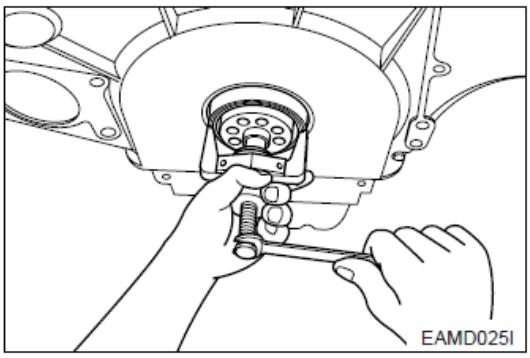

3.1.30 Oil pump

- Unscrew the bracket fixing bolts of the oil suction pipe.
- Unscrew the pipe fixing bolt of oil pump and disassemble the suction and supply oil pipe.
- Unscrew the oil pump fixing bolts, and disassemble the oil pump.

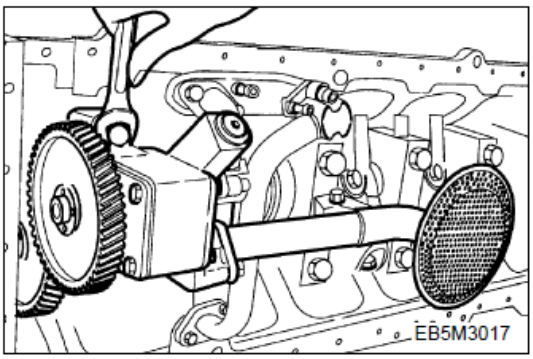

https://truckmanualshub.com/

3.1.31 Piston and connecting rod

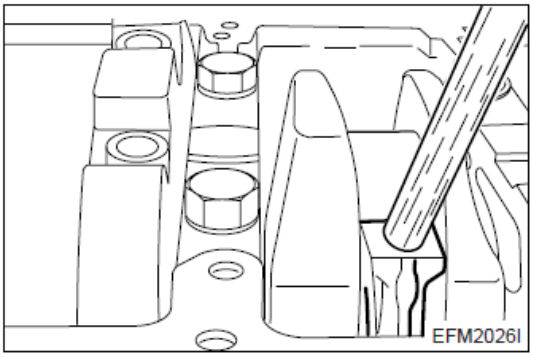

- Remove the connecting rod cap bolts in the reverse order of assembling but do same as the cylinder head bolt removal.
- Disassemble the upper/lower of connecting rod caps by tapping lightly with urethane hammer, and remove the bearing.
- By pushing the connecting rod with wooden bar from the direction of oil pan toward cylinder head, disassemble the piston assembly.
- The disassembled piston assembly should be handled to prevent bumping each other, and stored as the cylinder's order.
- In order for connecting rod cap not to be swapped, temporarily assemble to the corresponding connecting rod.

Disassembly of piston

(1) Remove the snap rings by means of a plier.

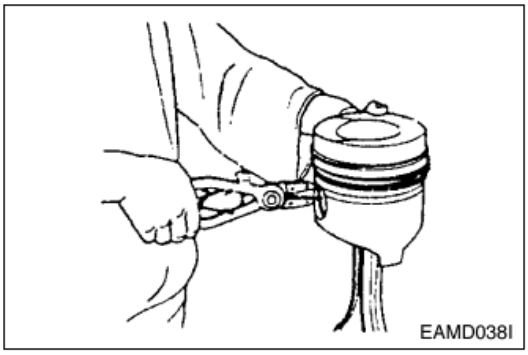

(2) Heat the piston with a electric heater, then take out the piston pin from the piston as tapping it with a round wooden bar.

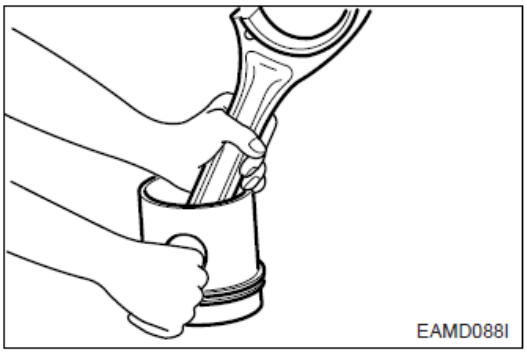

https://truckmanualshub.com/

(3) Remove the piston ring with a plier.

(4) Clean the piston thoroughly.

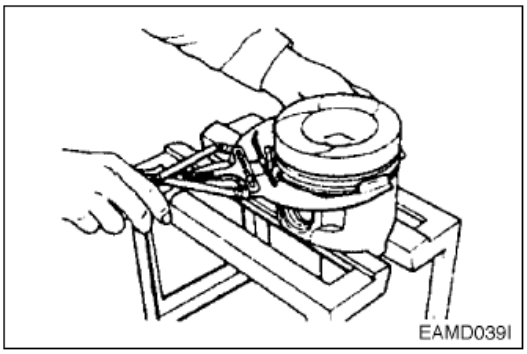

3.1.32 Cylinder liner

- Diassemble the cylinder liner with a special tool or hand but be careful not to generate any damage at cylinder block.

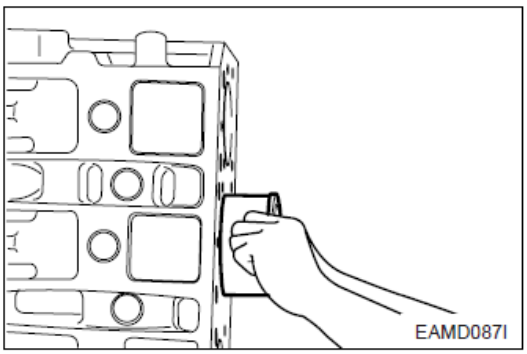

3.1.33 Cam shaft gear and idle gear

- Unscrew the camshaft gear fixing bolts and remove the camshaft gear.

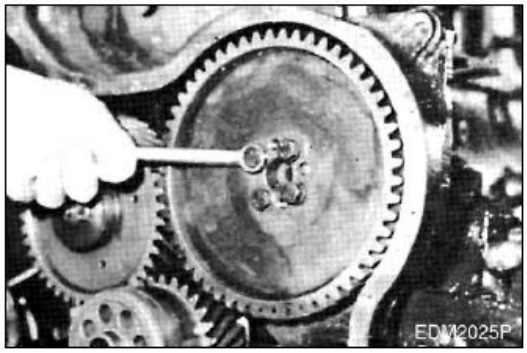

- Unscrew two bolts fixing the idle gear, then remove the idle gear and its pin.

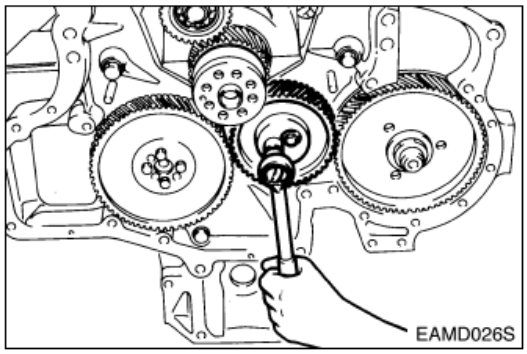

3.1.34 Fuel injection pump

- Disassembly the oil hose for lubrication.
- Remove the bolts and nuts of injection pump flange.
- Unscrew the injection pump fixing bolts and remove the injection pump by lifting it up.

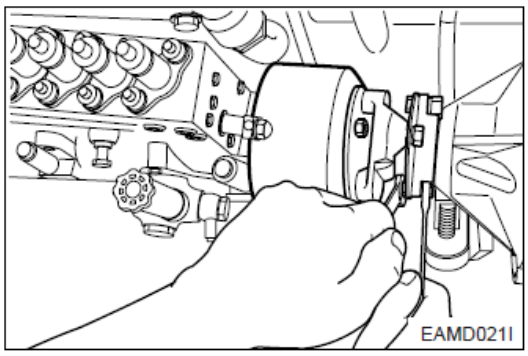

- Remove the bracket fixing bolts of injection pump, and disassemble by pulling the injection pump backward.

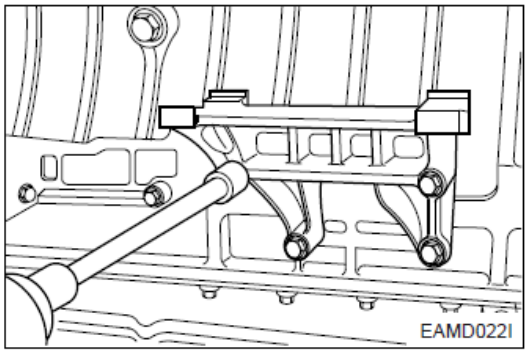

3.1.35 Water chamber cover

- Unscrew the fixing bolts and remove the water chamber cover.
- Remove the remnant gasket thoroughly.

3.1.36 Fly wheel

- Remove the flywheel fixing bolts and disassemble it.
- The bolt removal is done by the reverse order of assembling and by the steps.

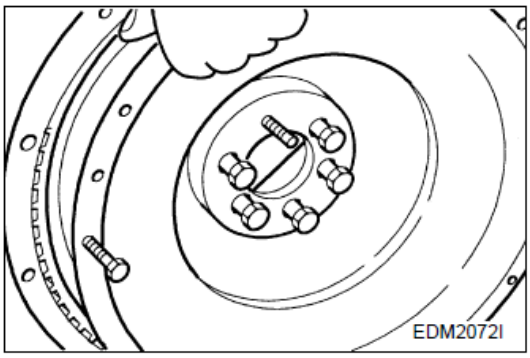

3.1.37 Fly wheel housing

- Remove the flywheel housing fixing bolts and disassemble the flywheel housing.
- Disassemble the oil seal of flywheel housing.

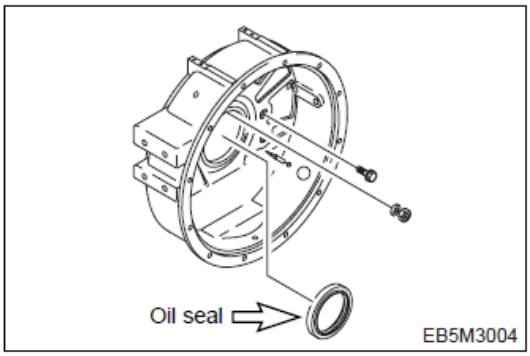

3.1.38 Injection pump drive gear

- Unscrew the drive gear housing fixing bolts and remove the drive gear assembly.

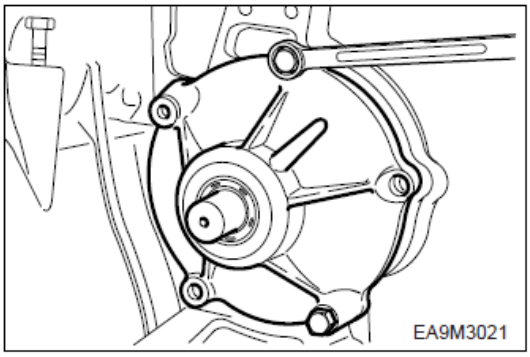

3.1.39 Timing gear case

- Remove the timing gear case assembling bolts.
- By tapping lightly with a urethane hammer the right and left back of timing gear case's connecting part, disassemble the timing gear case.

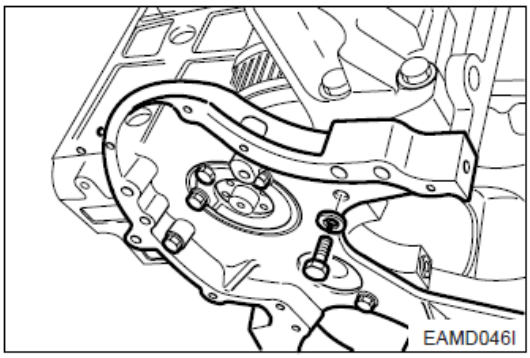

3.1.40 Bearing cap

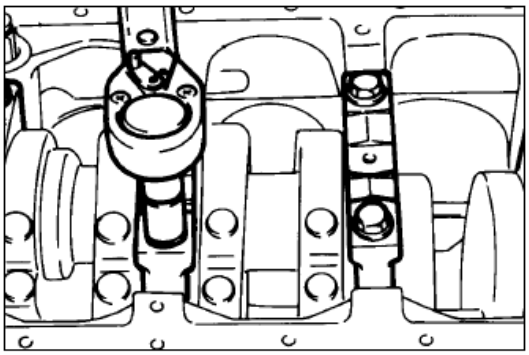

- Remove the bearing cap assembling bolts by the step in the reverse order of assembling, and disassemble the bearing cap. (Remove by the same way as the cylinder head bolts' removal.)
- Disassembled bearing caps are kept laid in order.

3.1.41 Crankshaft

- Assemble the bolts on the both side of crankshaft temporarily.
- Connect the rope to the bolts and lift the crankshaft by means of crane being careful not to give any damage on it.
- In order for the disassembled crankshaft to be prevented from bends or damage, put it on the special lathe and store.
- Disassemble the metal bearings in turn and store them.

  Note:

  Do not mingle with the metal bearings and bearing caps randomly. To prevent mixing, temporarily assemble the metal bearings to the corresponding bearing caps in turn.

3.1.42 Camshaft and tappet

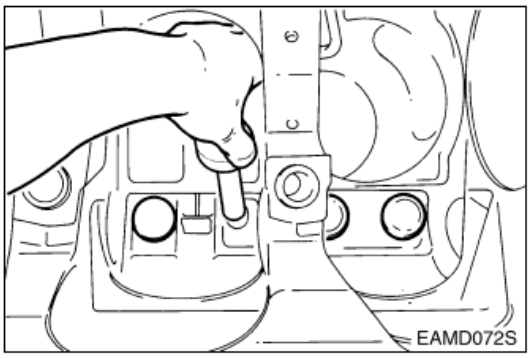

- In order for camshaft not to be damaged, disassemble turning it.
- In order for the disassembled camshaft to be prevented from bends or damage, put it on the special lathe and store.
- Pull out the tappet.
- As required, pull out the camshaft bush from the cylinder block by a press.
- Check for damage, scratch, wearing state and if abnormal, tear down.

https://truckmanualshub.com/

3.1.43 Oil spray nozzle (D1146TI, DE08TIS only)

- Remove the valve screws of oil spray nozzle and disassemble it.

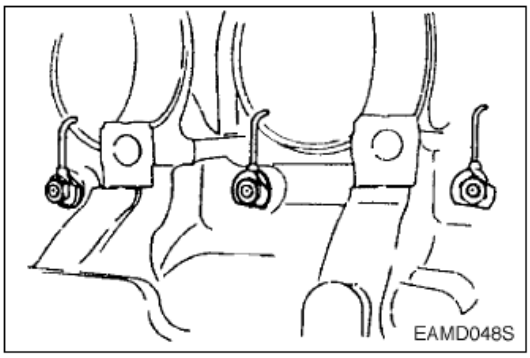

3.2 Inspection and Measurement on Major Parts

3.2.1 Cylinder block

- Clean the cylinder block thoroughly, and check for any crack or damage.
- If there is any crack or severe damage, replace it and if there is minor one, correct it.
- Check for any clogging or corrosion in the oil passage and water passage.
- Carry out a leakage test for any crack or air leaking. (Hydraulic test)
- Plug each cylinder block's water and oil discharge ports, and apply the air pressure of about 4kg/cm2 to intake port and soak it in water for about 1 minute to check if there is any leakage. (Water temperature: 70°C)

3.2.2 Cylinder head

1) Cylinder head assembly & disassembly

(1) Disassemble the cylinder assembly, and put it on the shelf for assembly or clean lathe.

Caution:

Prevent any damage to gasket's contact surface of the cylinder head.

(2) Disassemble the cotter pin, spring, spring seat pushing valve spring by a special tool.

(3) Pull out the intake and exhaust valves.

(4) The disassembled parts are kept laid in turn.

(5) Disassemble the valve stem seal.

(6) By means of the special tool, punch, pull out a valve guide.

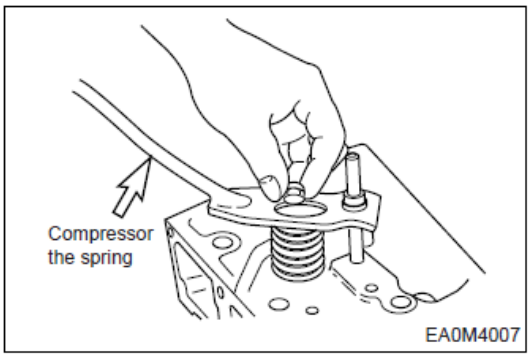

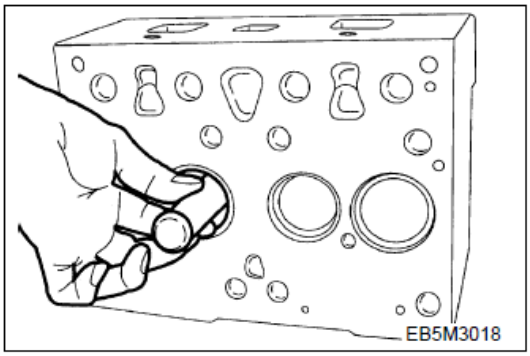

2) Inspection of cylinder head

(1) Check for the cylinder head.

• Remove carbon from the cylinder head lower surface, and then should be careful not to scratch the surface.

• Check any crack or damage that can not found by naked eyes through the hydraulic or magnetic particle test.

(2) Distortion of lower surface

• As shown in figure, measure the cylinder head's distortion at 6 directions with horizontal ruler and clearance gauge.

• If the measured value is beyond the limit value, correct it by means of the fine grinding paper or grinding machine.

• If it is beyond the max. allowable value, replace the cylinder head.

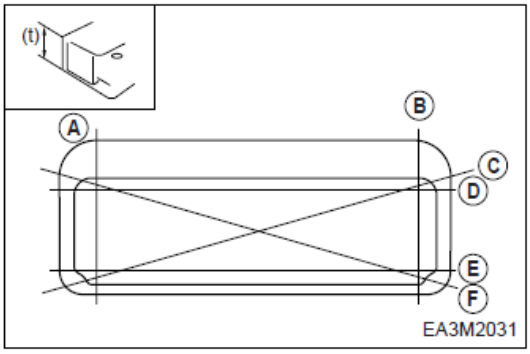

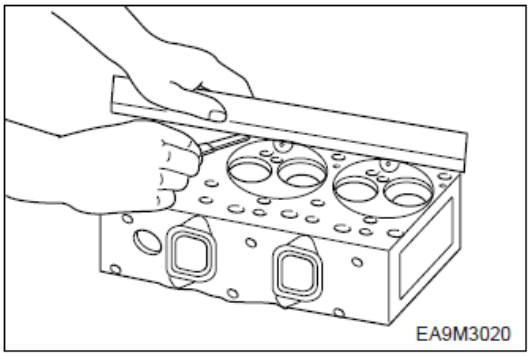

<Lower face warpage and height>

	Standard	Limit
Warpage	0.2 mm or less	0.3 mm
Thickness : t (reference)	109.9 ~ 110.1 mm	108.4 mm

(3) Flatness

Check the flatness of the installing surface of cylinder head's intake and exhaust manifolds with horizontal ruler and clearance gauge.

Standard	Limit
0.05 mm	0.2 mm

(4) The hydraulic test

The hydraulic test of cylinder head is same as the cylinder block test.

3) Inspection of valve and valve guide

(1) Valve

After cleaning valve with fuel, check it.

• Valve stem outer diameter

Measure the valve stem outer diameter at 3 positions (top, middle, and bottom), and check for any wear and if beyond the limit value, replace the valve.

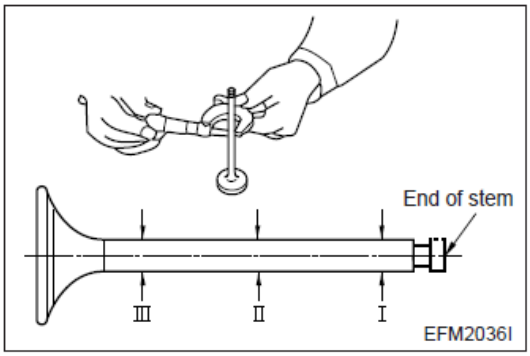

Dimension / Description	Standard	Limit
Intake valve stem	ϕ8.950 ~ ϕ8.970 mm	ϕ8.93 mm
Exhaust valve stem	ϕ8.935 ~ ϕ8.955 mm	ϕ8.91 mm

• Valve seat contacting faces

Check the valve seat contact surface for any crack and wear, and if necessary, correct with grinding paper, and if excessive, replace it.

• Valve head thickness

Measure the thickness of valve head and if beyond the limit value, replace the valve.

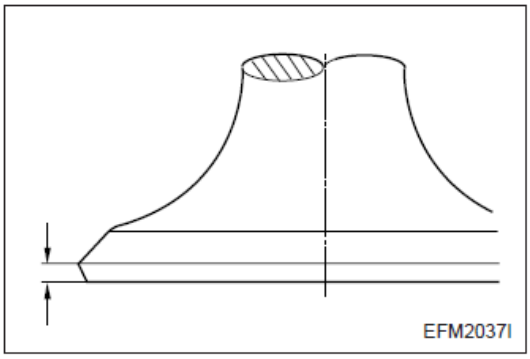

Dimension / Description	Standard	Limit
Intake valve	2.7 mm	1 mm or less
Exhaust valve	2.2 mm	1 mm or less

(2) Valve guide

• Insert a valve into cylinder head and measure the clearance between valve guide and valve by valve movement. If the clearance is excessive, measure the valve and replace the excessively worn valve or valve guide.

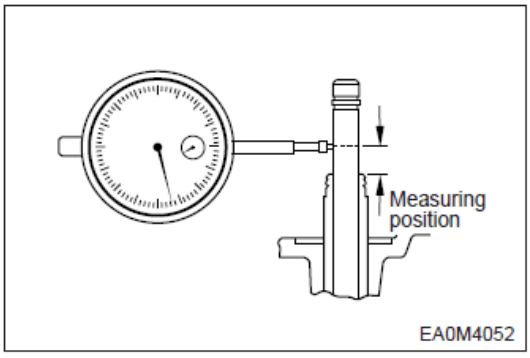

<Valve stem end play>

Dimension / Description	Standard	Limit
Intake valve	0.04 ~ 0.07 mm	0.2 mm
Exhaust valve	0.06 ~ 0.09 mm	0.25 mm

• Assemble the valve at cylinder head's valve guide and see if it is centered with the valve seat using a special tool.

3) Valve seat

• Contacting face amount

As for the valve seat's wear, measure the width of the contact surface with intake valve seat and exhaust valve seat. If beyond the limit value, replace the valve seat.

• Assemble the valve at the valve seat of the cylinder head, and check the amount of depression of the valve from the lower portion of the cylinder head using a dial gauge.

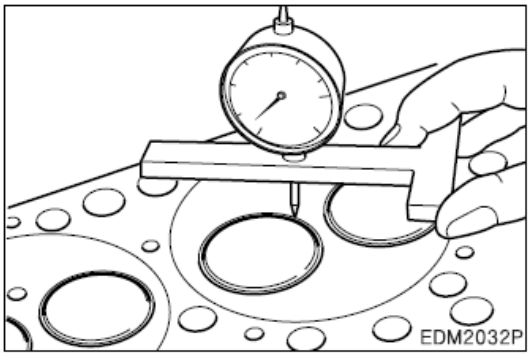

<Valve depression>

	Standard	Limit
Intake & Exhaust	0 ~ 0.3 mm	0.55 mm

If the amount of depression is beyond the specified limit, replace the valve seat.

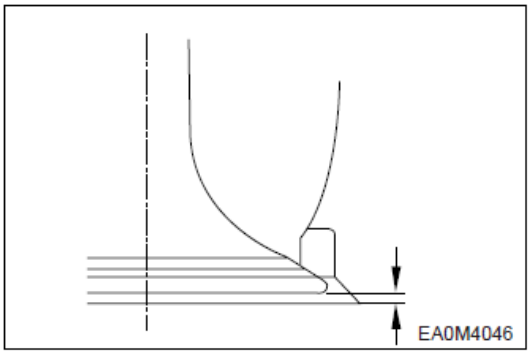

• For the disassembling of valve seat, by welding the welding bead to a valve seat rotating tool or valve seat, pull it out with a special tool.

• For the assembling of a new valve seat, by putting it among the dry ices of an ice box previously for about 2 hours for the cold shrinkage, and press it in the cylinder head by a special tool. (bench press)

• Apply valve lapping compound to the valve head seating face on the valve seat and lap the valve seat by turning it until it is seated in position, then wipe out the lapping compound.

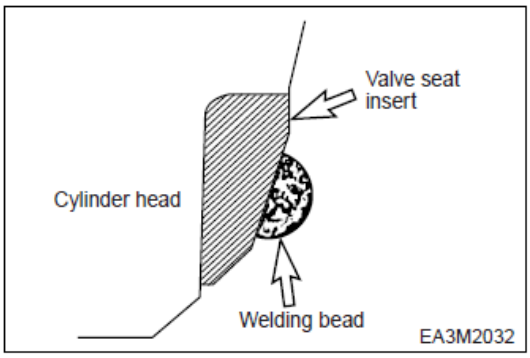

4) Valve spring

• Visual check

Check the appearance of valve spring and if necessary replace the spring.

• Valve spring free length

Use a vernier caliper to measure the valve spring free length.

If the measured value is less than the specified limit, the valve spring must be replaced.

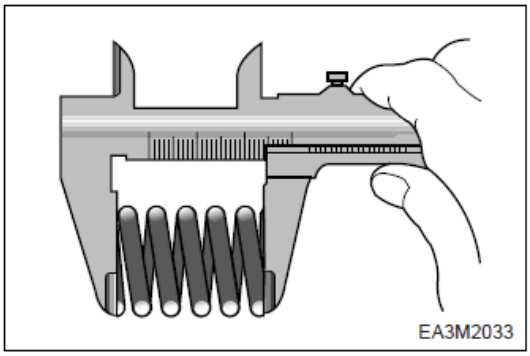

(mm)

Spring free Length		Standard	
Intake valve		64	
Exhaust valve	Inner	D1146/TI	60
		DE08TIS	73.8
	Outer	D1146/TI	71
		DE08TIS	77.7

• Valve spring inclination

Use a surface plate and a square to measure the valve spring inclination.

If the measured value exceeds the specified limit, the valve spring must be replaced.

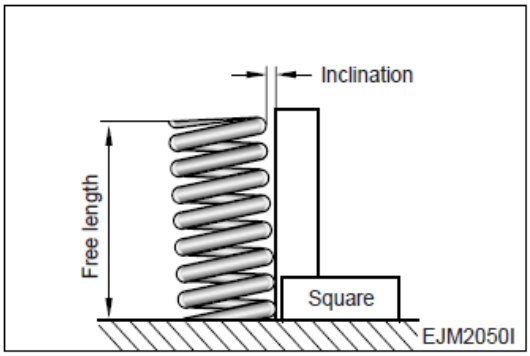

(mm)

	Standard	Limit
Valve Spring Inclination	Less than 1.8	2.7

• Valve spring tension

Use a spring tester to measure the valve spring tension if the measured value is less than the specified limit, the valve spring must be replaced.

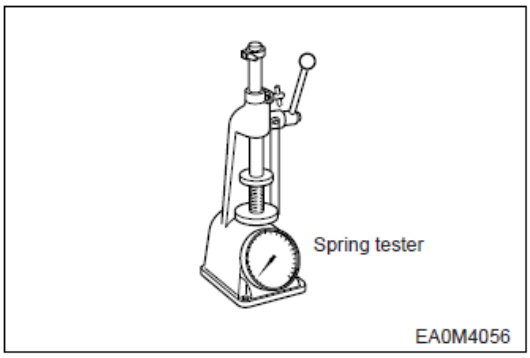

	Set Length		Spring force	Limit
Intake valve	Valve Spring Tension at 41mm Set Length		70 kg	± 3kg
Exhaust valve	Inner	38 mm	D1146/TI : 28.6 kg	± 6 %
			DE08TIS : 38 kg	± 2kg
	Outer	41 mm	D1146/TI : 66 kg	± 5 %
			DE08TIS : 75 kg	± 4kg

5) Assembling cylinder head

• Clean the cylinder head thoroughly.

• Replace the valve stem seal with new one, and by means of a special tool, press the stem seal into the valve guide of cylinder head.

• Coat engine oil to valve stem and valve guide and assemble the valve. However, be careful for the damage of valve stem seal.

• Install the lower seat of valve spring to the valve guide of cylinder head.

• After putting inner, outer springs, install the spring upper seat on it.

• Assemble the valve by inserting the valve cotter pressing the valve spring with a special tool.

• After installing the valve, check whether the valve is correctly installed or not tapping it lightly with urethane hammer.

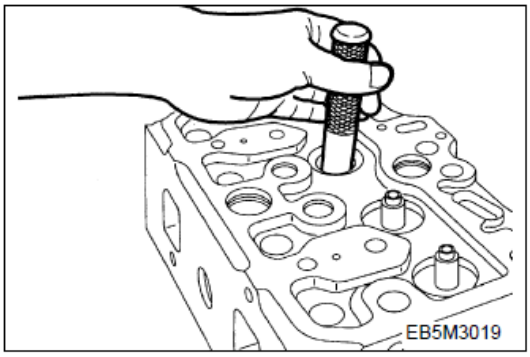

3.2.3 Rocker arm assembly

1) Disassembly

(1) Disassemble the snap rings that are located at both ends of rocker arm shaft by a plier.

(2) Disassemble in the order of washer, rocker arm bracket, rocker arm spring, rocker arm.

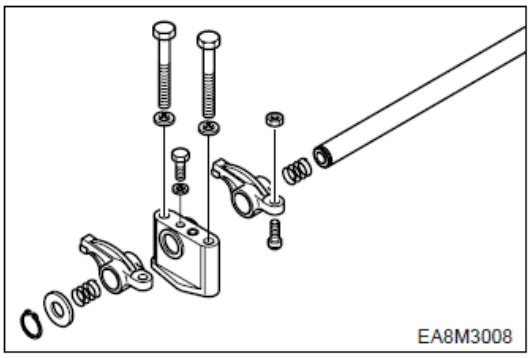

2) Inspection of rocker arm assembly

(1) Rocker arm shaft

- Rocker arm shaft run-out

  Place the rocker arm shaft on two V blocks and inspect the shaft for bend using a dial gauge.

  If the amount of this run-out is small, press the shaft with a bench press to correct the run-out Replace the shaft if the measured value exceeds the limit.

Limit	0.2 mm

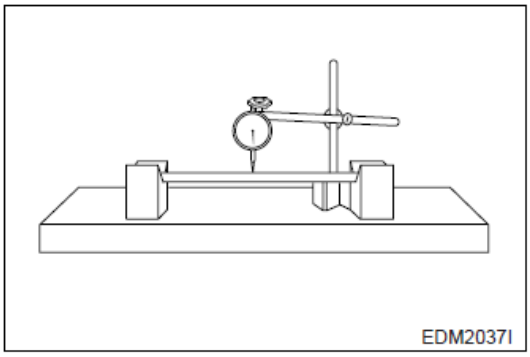

- Rocker arm shaft diameter

  With an outside micrometer, measure the rocker arm shaft diameter at the point where the rocker arms have been installed. Replace the rocker arm if the amount of wear is beyond the specified limit.

Standard	Limit
ϕ23.978 ~ ϕ23.959 mm	ϕ23.75 mm

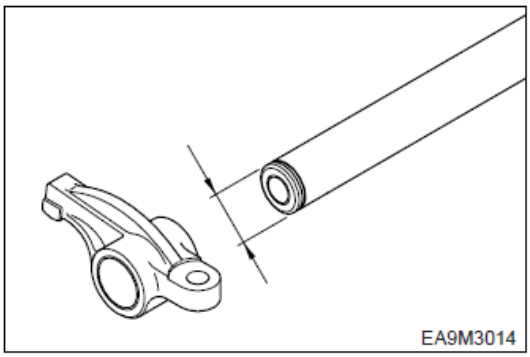

(2) Rocker arm

- Visual check

  Visually check the face of the rocker arm in contact with the valve stem end for scores and step wear. If the wear is small, correct it with an oil stone or grinding paper of fine grain size. Rocker arm with a considerable amount of step wear should be replaced.

• Rocker arm bushing diameter

Measure the inside diameter of the rocker arm bushing with an inside micrometer or vernier calipers, and compare the measured values with the rocker arm shaft diameter. If the clearance exceeds the limit, replace either bushing or shaft, whichever worn more.

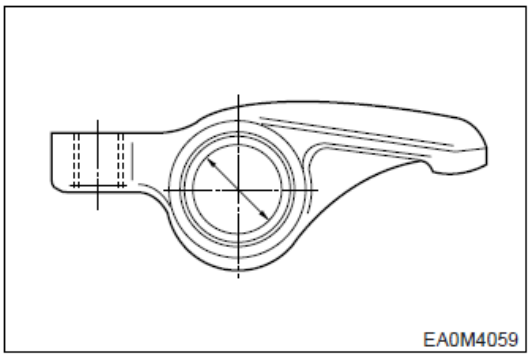

Standard	Limit
0.020 ~ 0.093 mm	0.3 mm or less

(3) Tappet and push rod

• Clearance

Measure the clearance of the tappet and tappet holes of the cylinder block. If the value is beyond the specified limit, replace tappets.

Standard	Limit
0.035 ~ 0.077 mm	0.15 mm

• Visual check of tappet

Visually check the face of the tappets in contact with the cam for pitting, scores or cracks, and replace if severely damaged. If the amount of cracks or pitting is small, correct with an oil stone or grinding paper.

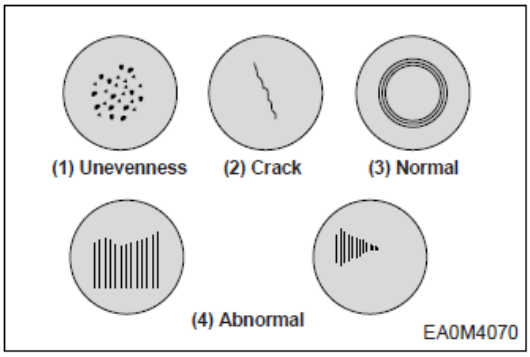

• Outside diameter of tappet

With an outside micrometer, measure the tappet outside diameter If the measured value is beyond the limit, replace tappets.

Standard	ϕ19.944 ~ ϕ19.965 mm

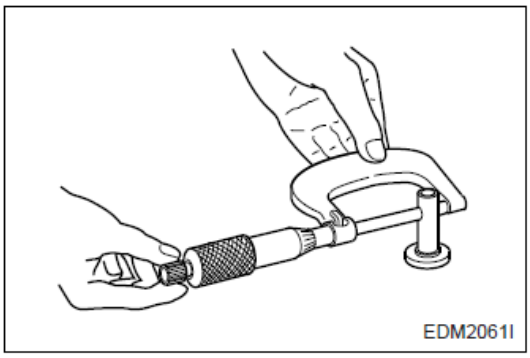

• Push rod run-out

Limit	0.3 mm or less

Use a feeler gauge to measure the push rod run-out. Roll the push rod along a smooth flat surface as shown in the figure.

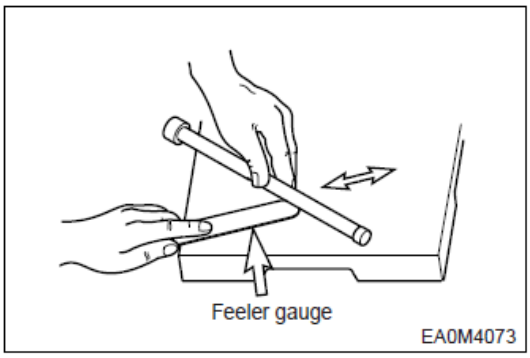

(4) Reassembling rocker arm assembly

Reassembling can be done in the reverse order of disassembling and following things should be heeded.

• Check the oil supply hole of rocker arm shaft for any clog and clean thoroughly.

• Be careful not to occur any swap of position and reverse assembly.

3.2.4 Camshaft

1) Camshaft end play

• Push the thrust plate toward the cam gear

• With a feeler gauge, measure the clearance between the thrust plate and camshaft journal.

• If the end play is excessive, replace the thrust plate.

Standard	Limit
0.28~ 0.43 mm	0.6 mm

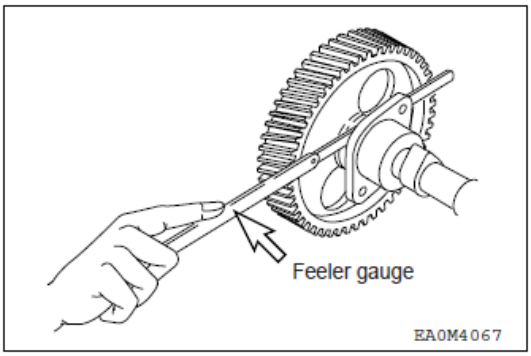

2) Cam

• Cam lobe height

unit : mm

		Standard	Limit
Cam lobe height (C)	Intake	49.15	48.85
	Exhaust	D1146/TI : 49.32 DE08TIS :49.35	49.00
Cam journal diameter (A,B)		ϕ57.86 ~ϕ57.88	ϕ57.52

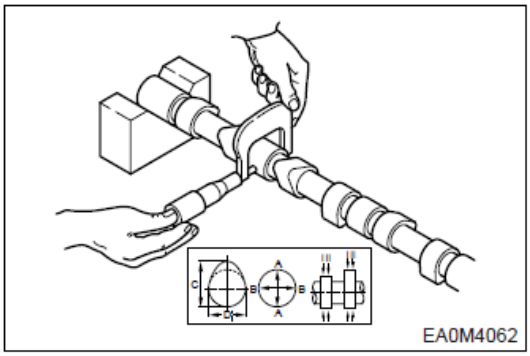

Use a micrometer to measure the cam lobe height and journal diameter.

If the measured number is less than the specified limit, the camshaft must replaced.

• Cam surface

Inspect the cam face for scratch or damage.

Slight step wear or damage on the cam face may be corrected with oil stone or oiled grinding paper. But, replace if severely damaged.

3) Cam shaft

• Clearance between camshaft journal and camshaft bush

With an outside micrometer, measure the camshaft journal diameter.

Measure the inside diameter of the camshaft bushing on the cylinder block using a cylinder bore indicator, and compare the measured value with the camshaft outside diameter to determine the clearance.

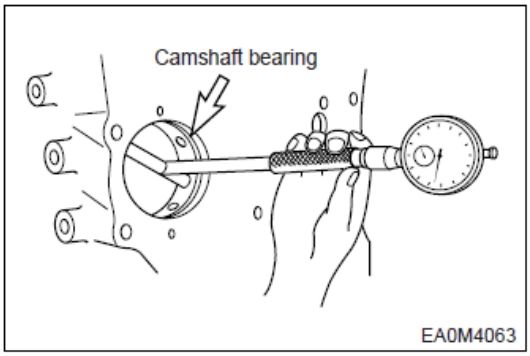

<Clearance>

Standard	Limit
0.12~ 0.17 mm	0.24 mm

Replace the bushing if the measured value is beyond the specified limit.

• Run-out

Support the camshaft on two V blocks and check for run-out using a dial indicator. Correct or replace the cam shaft if the amount of run-out is beyond the value indicating need for servicing.

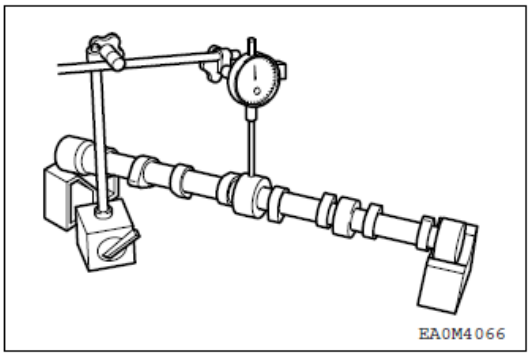

Standard	Limit
0.05 mm	0.2 mm

3.2.5 Crankshaft

1) Inspection of crankshaft

(1) Defect check

• By naked eyes, check for any scratch or damage on the crankshaft journal and crank pin.

• By means of magnetic particle test and color check, check the crankshaft for any crack and if found, replace it.

(2) Wear measuring

• With an outside micrometer measure the diameter of the crankshaft journals and pins in the directions as shown, and compare the measured values to determine the amount of wear.

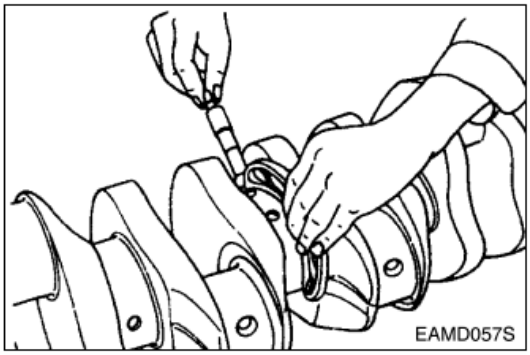

• If the amount of wear is beyond the limit, have the crankshaft ground and install undersize bearings. However, if the amount of wear is within the limit, you can correct the wear using an oil stone or oiled grinding paper of fine grain size. (Be sure to use grinding paper which has been immersed in oil.)

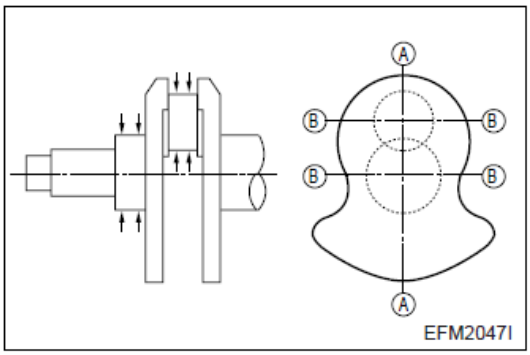

	Standard	Limit
Journal diameter	ϕ83.966 ~ ϕ83.988	ϕ83.000 mm
Pin diameter	ϕ70.971 ~ ϕ70.990	ϕ70.000 mm

• In case that pin's wear is more than the limit value, grind the crankshaft journal and crank pin, and use the undersized bearings.

CAUTION:

Be sure to use grinding paper which has been immersed in oil.

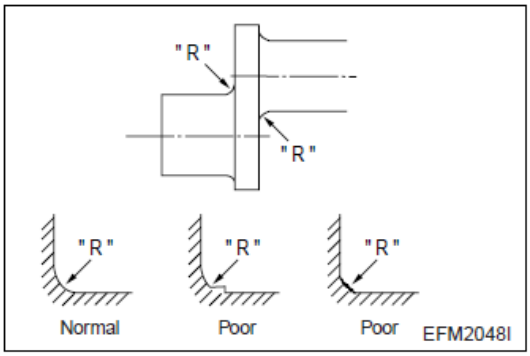

<Undersize bearings available>

- Standard
- 0.25 (Inside diameter is 0.25 mm lesser than the standard size.)
- 0.50 (Inside diameter is 0.50 mm lesser than the standard size.)
- 0.75 (Inside diameter is 0.75 mm lesser than the standard size.)
- 1.00 (Inside diameter is 1.00 mm lesser than the standard size.)

Undersize bearings are available in 4 different sizes as indicated above, and the crankshaft can be reused through the regrinding as described above.

"R" part's specified value

① Crank Pin's "R" : $4.5\ ^{0}_{-0.2}$

② Crank journal "R" : $4\ ^{0}_{-0.2}$

Caution:

In case of regrinding, the grinding the "R" part of bearing end should be correctly done and keep in mind to remove any jaws or coarse surface absolutely.

(3) Crankshaft run-out

- Support the crankshaft on V blocks.
- Turn the crankshaft with a dial indicator placed on the surface plate and take the amount of crankshaft run-out.

Standard	Limit
0.05 mm	0.1 mm

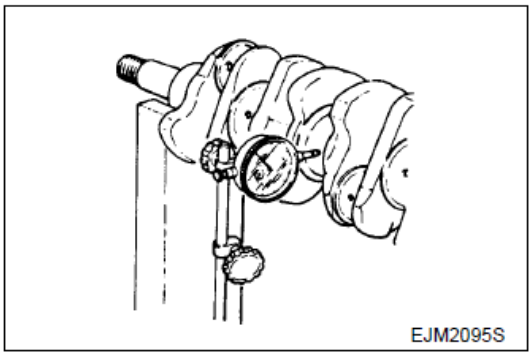

2) Crankshaft bearing and connecting rod

(1) Visual check

- Visually check the crankshaft bearing and connecting rod bearing for scores, uneven wear or damage.

(2) Oil clearance between crankshaft and bearing (Method 1: dial gauge)

- Main bearing clearance

  Install the main bearing in the cylinder block, tighten the bearing cap to specified torque, then measure the inside diameter.

Torque	30 kg•m

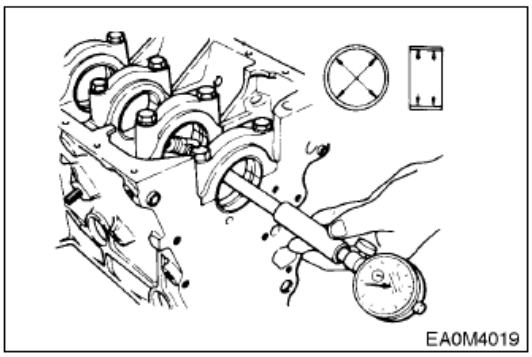

Compare the two values obtained through measurement of main bearing inside diameter with the

outside diameters of crankshaft journals to determine the oil clearance.

<Main bearing oil clearance>

Standard	Limit
0.052 ~ 0.122 mm	0.25 mm

• Connecting rod bearing clearance

Install the connecting rod bearing in the connecting rod bearing cap, tighten the connecting rod cap bolts to the specified torque, then measure the inside diameter.

Torque	18 kg•m

Compare the two values obtained through measurement of connecting rod bearing inside diameter with the outside diameters of crankshaft pins to determine the oil clearance.

Standard	Limit
0.034 ~ 0.098 mm	0.25 mm

• If the clearance deviates from the specified range, have the crankshaft journals and pins ground and install undersize bearings.

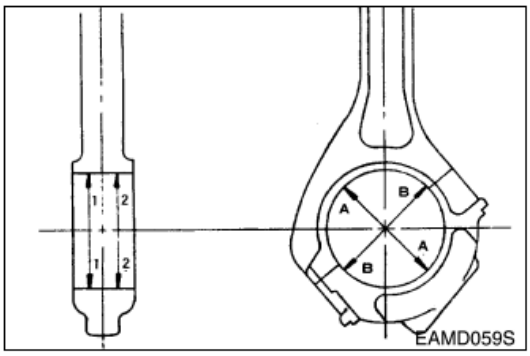

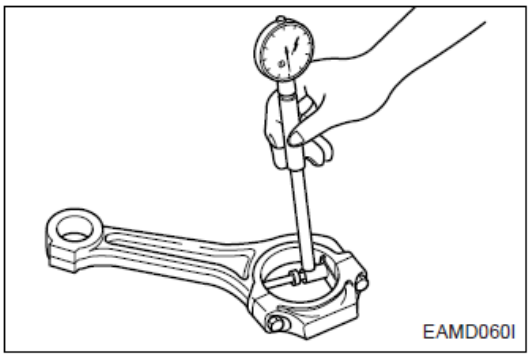

(3) Oil clearance between crankshaft and bearing (Method 2: plastic gauge)

• Assemble the crankshaft on the cylinder block and put plastic gauge on the journal and pin of crankshaft and then after assembling bearing cap, tighten the bolts at the specific torque. Again after disassembling the bearing cap by removing the bolts, take out the flatted plastic gauge and measure the width of plastic gauge by means of plastic gauge measuring scale. This is the oil clearance.

• The oil clearance too can be measured in the same manner

(4) Bearing spread and crush

- Inspection

  Check to see that the bearing requires a considerable amount of finger pressure at reassembly operation.

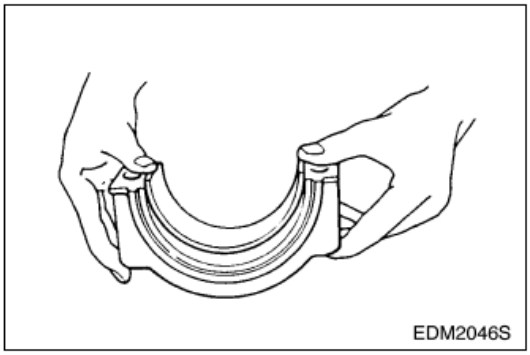

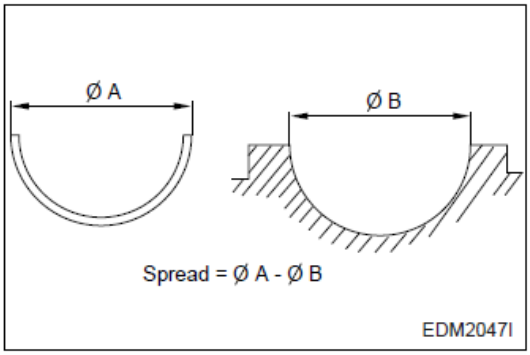

- Crankshaft bearing crush

  Install the bearing and cap in the cylinder block, retighten the bolts to specified torque, unscrew out one bolt completely, then measure the clearance between the bearing cap and cylinder block using a feeler gauge.

Standard	0.19 ~ 0.22 mm

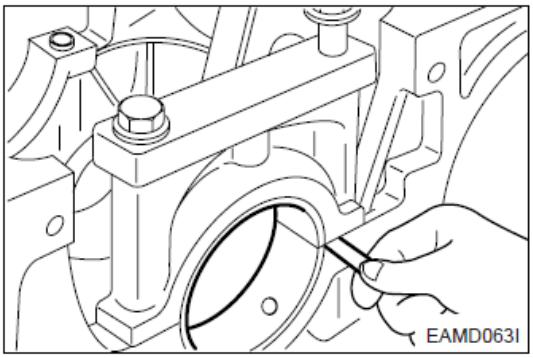

- Connecting rod bearing crush

  Install the bearing and cap in the connecting rod big end, retighten the bolts to specified torque, unscrew out one bolt completely, then measure the clearance between the bearing cap and connecting rod big end using a feeler gauge.

Standard	0.3 ~ 0.5 mm

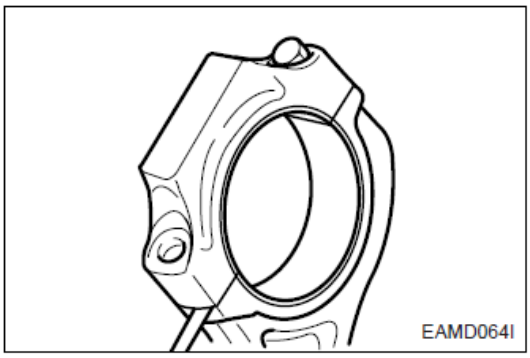

(5) Crank shaft end play

• Assemble the crankshaft to the cylinder block.

• With a dial gauge, measure crankshaft end play.

Standard	Limit
0.15 ~ 0.325 mm	0.5 mm

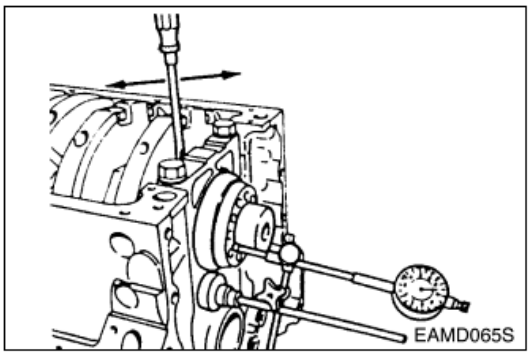

3.2.6 Piston assembly

1) Disassemby of piston assembly

Disassemble piston according to the disassembly process.

2) Piston inspection

(1) Visual check

Visually check the pistons for cracks, scuff or wear, paying particular attention to the ring groove.

(2) Clearance between the piston and cylinder liner

• With an outside micrometer, measure the piston outside diameter at a point 13mm away from the lower end of piston skirt in a direction at a right angle to the piston pin hole.

Standard	ϕ110.833 ~ ϕ110.897 mm

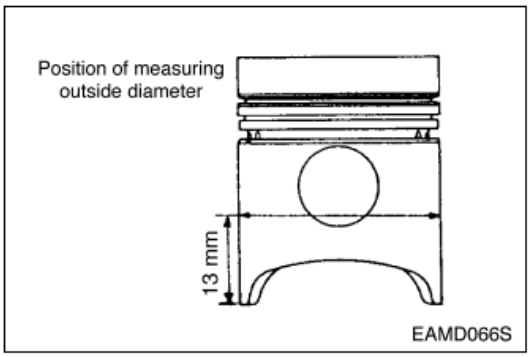

• Using a cylinder bore gauge, measure cylinder liner inside diameter at 3 points (cylinder top ring contacting face, middle, and oil ring contacting face on BDC) in a direction at an angle of 45°. Take the mean value with the largest and smallest values excepted.

Standard	Limit
ϕ111 ~ ϕ111.022 mm	ϕ111.122 mm

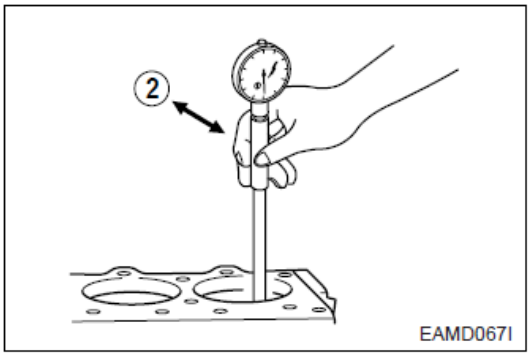

• The clearance is computed by subtracting the piston outside diameter from the cylinder liner inside diameter. Replace either piston or cylinder liner, whichever damaged more, if the clearance is beyond the specified limit.

<Clearance between piston and liner>

Standard	0.103~ 0.139 mm

3) Piston rings

(1) Visual check

Replace the piston rings with new ones if detected worn or broken when the engine is overhauled.

(2) Piston ring gap

• Insert the piston ring into the upper portion of the cylinder liner bore so that it is held at a right angle to the cylinder liner wall.

• Measure the piston ring gap with a feeler gauge.

	Standard	Limit
Top ring	0.40 ~ 0.60 mm	1.5 mm
2nd ring	0.40 ~ 0.60 mm	1.5 mm
Oil ring	0.30 ~ 0.50 mm	1.5 mm

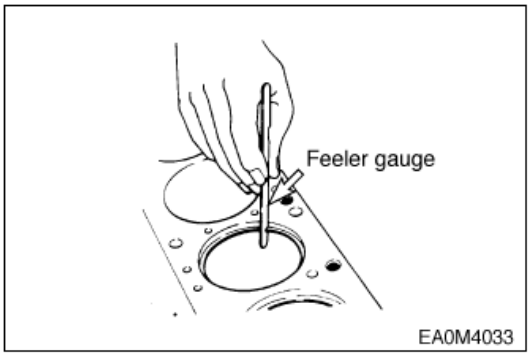

• Replace piston rings with new ones if the gap is beyond the limit.

(3) Piston ring side clearance

• Fit the compression ring and oil ring in the piston ring groove.

• With a feeler gauge, measure side clearance of each ring, and replace either the ring or piston if the measured value is beyond the specified limit.

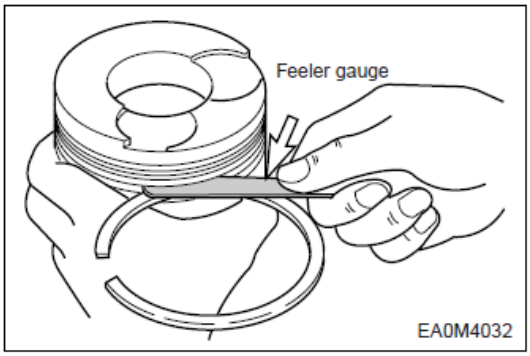

	Standard	Limit
Top ring	-	-
2nd ring	0.07 ~ 0.102 mm	0.15 mm
Oil ring	0.05 ~ 0.085 mm	0.15 mm

(4) Piston ring tension

With a tension tester, measure piston ring tension. Replace the piston ring if the measured value is beyond the limit.

	Standard
Top ring	2.58 ~ 3.88 kg
2nd ring	1.81 ~ 2.71 kg
Oil ring	3.57 ~ 5.03 kg

4) Piston pin inspection

(1) Wear

Measure the amount of wear on the piston pin at the points as shown. The measured values are beyond the limit (0.08 mm or greater), replace the pin.

Standard	Limit
ϕ41.994 ~ ϕ42.000 mm	ϕ41.94 mm

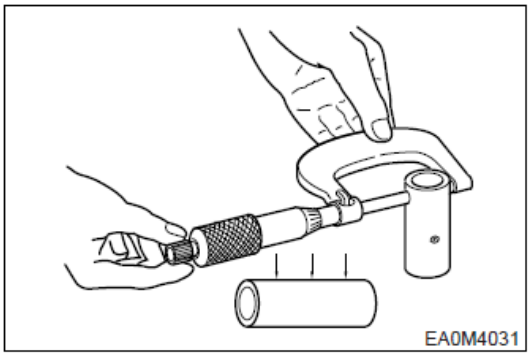

(2) Clearance

Measure the clearance between the piston pin and connecting rod bushing, and replace either of them, whichever damaged more, if the measured value is beyond the limit.

Standard	Limit
0.003 ~ 0.015 mm	0.08 mm

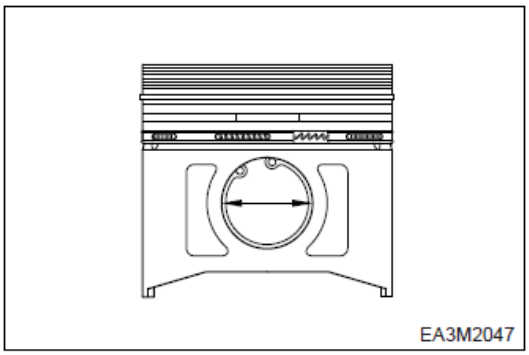

(3) Condition check

Check the engaged condition of the piston and piston pin. If it is possible to force the pin into the piston heated with piston heater, the piston is normal. When replacing the piston, be sure to replace the piston pin together.

5) Connecting rod inspection

(1) Distorsion

Check the connecting rod for distortion. As shown in the figure below, install the connecting rod to the connecting rod tester, and check for distortion using a feeler gauge. If the connecting rod is found distorted, never re-use it but replace with a new one.

(2) Holes alignment (parallelism)

Measure the alignment of the connecting rod piston pin bushing holes with connecting rod big end holes. At this time also, use both connecting rod tester and feeler gauge.

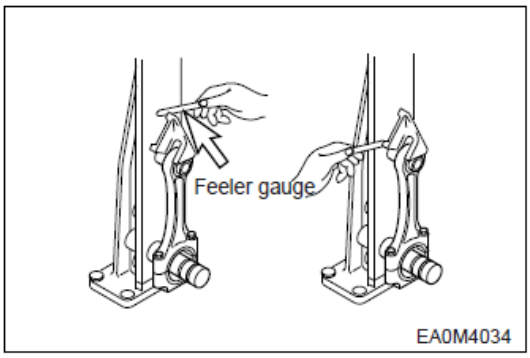

Standard	Limit
0.05 mm	0.1 mm or less

(3) Wear

• Assemble the connecting rod to the crankshaft and measure connecting rod big end side clearance using a feeler gauge.

• Assemble the connecting rod to the piston and measure connecting rod small end side clearance.

• If the measured values are beyond the limit, replace the connecting rod.

Limit	0.5 mm

3.2.7 Fuel injection nozzle projection (DE08TIS)

• Insert a seal ring on the cylinder head and assemble the injection nozzle

• Measure the clearance between the cylinder head bottom and nozzle tip. If the measured values are beyond the limit, replace the seal ring.

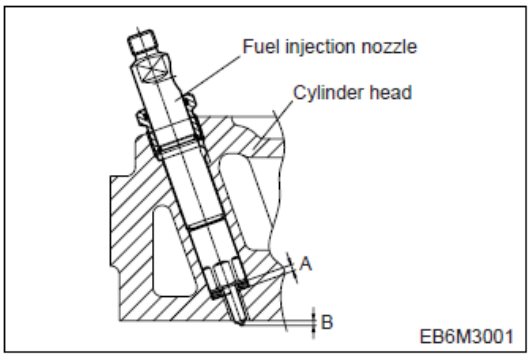

	Standard
A (Thickness of seal ring)	3.5 ± 0.1 mm
B (Projection of nozzle)	2.43 ~ 2.80 mm

3.3 Engine Reassembly

3.3.1 General precautions

- Clean all the disassembled parts, particularly oil and water ports, using compressed air, then check that they are free from restrictions.
- Arrange the general and special tools in order for engine assembly operation.
- To wet each sliding part, prepare the clean engine oil.
- Prepare service materials such as sealant, gaskets, etc.
- Discard used gaskets, seal rings, and consumable parts, and replace with new ones.
- Apply only the specified torque for bolts in the specified tightening order and avoid overtightening.
- Be sure to check that all the engine parts operate smoothly after being reassembled.
- Check the bolts for looseness after reassembly.
- After completing the engine reassembly operation, check if there is missing parts or shortage of parts.
- Keep your hands clean during the working.

3.3.2 Cylinder block

Cover the floor of the workshop with wood plate or thick paper to prevent damage to the cylinder head and place the cylinder block with the head fitting surface facing downward.

3.3.3 Oil spray nozzle (D1146TI, DE08TIS)

Tighten and assemble the oil spray nozzle flange with fixing bolts using the spray nozzle jig.

Torque	7 kg•m

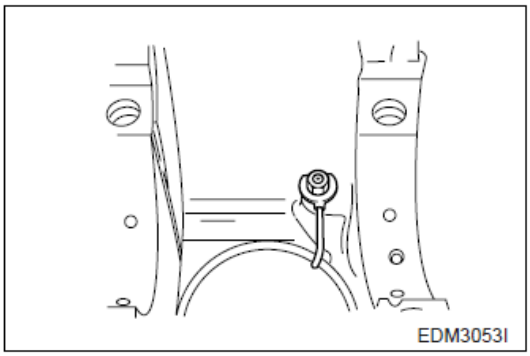

3.3.4 Tappet and cam shaft

- Undercool a new bush with dry ice for about 2 hours and press it into position in the cylinder block using a bench press. After the pressing operation, measure the inside diameter of the cam bush to check if it is not deformed.

• Apply engine oil to the entire face of the tappets and slide them into the tappet holes on the cylinder block.

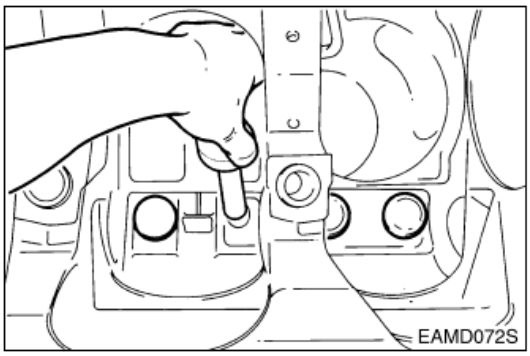

• Wet the cam bush inside diameter and camshaft with oil, and carefully assemble them while turning the camshaft.

Caution:

Be careful not to generate a damage to camshaft and bush.

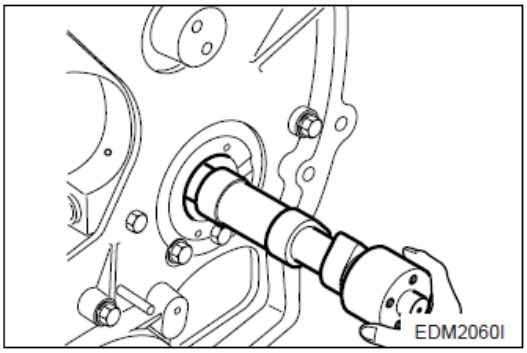

• Check to see that the camshaft rotates smoothly.

3.3.5 Crankshaft

• Install the main bearing (refer to assemble sequence: right figure) machined with two holes in the cylinder block so that the key is aligned with the key groove, then apply oil to the bearing surface.

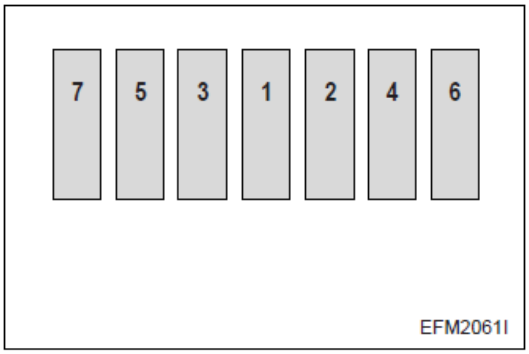

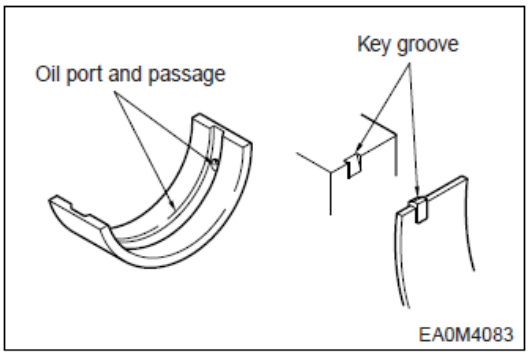

• Heat the crankshaft gear for at least 10 minutes to 120°C, then apply sealant (Loctite # 641) to the inside wall of the heated crankshaft gear evenly before inserting it to the end of crankshaft.

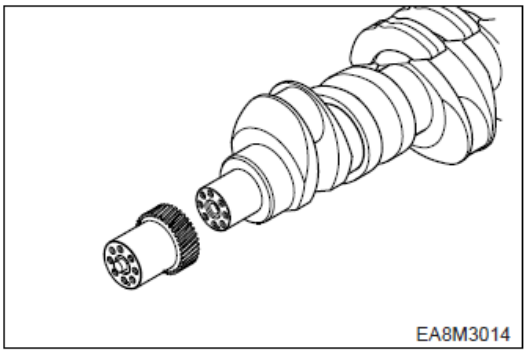

• Semi-tighten a bolt at both sides of the crankshaft, apply engine oil to journals and pins, then assemble the crankshaft with the cylinder block by tightening the fixing bolts.

Caution:

Coat engine oil to the pin and journal of crankshaft.

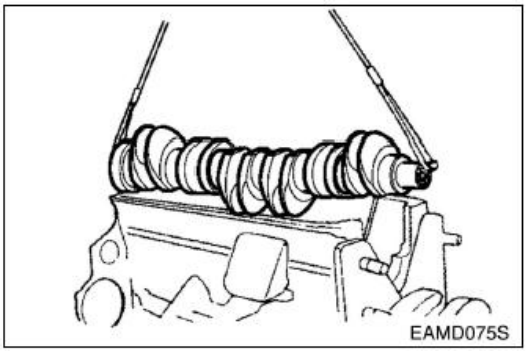

• Install the oiled thrust washers with the oil groove facing outward.

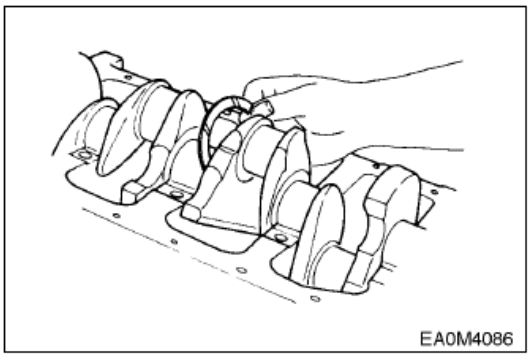

• Install the bearing and thrust washers to the bearing cap and apply oil to the bearing and thrust washers.

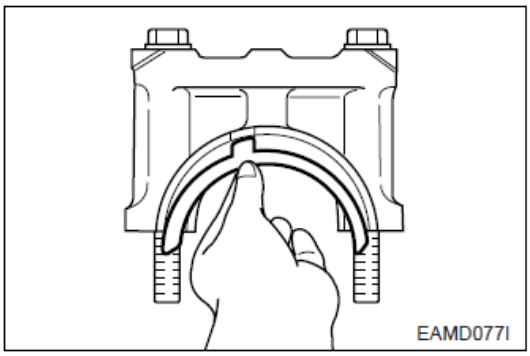

• Install the bearing cap by matching the cylinder block No. with the bearing cap No.

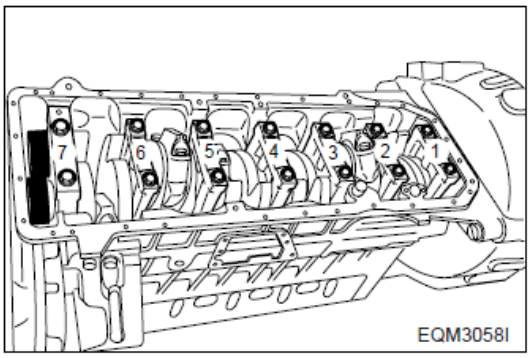

• Apply oil to the entire part of the bearing cap bolts, then tighten in tightening sequence to specified torque.

Torque	30 kg•m

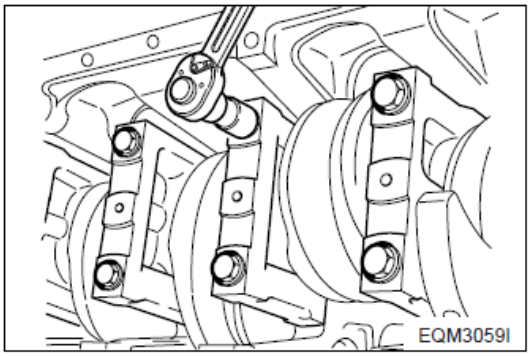

• After semi-tightening both bolts evenly, tighten them diagonally to the specified torque using a torque wrench as follows.

<Tightening order>

(1) First stage: Coat the cap bolts with engine oil

(2) Second stage: Temporary bolt screwing about 1 ~ 2 threads

(3) Third stage: With impact wrench, tighten up to about 15 kg.m

(4) Fourth stage: With torque wrench, tighten up to about 25 kg.m

(5) Fifth stage: By means of torque wrench, tighten finally in the specified torque. (30 kg.m).

• Tighten the bearing cap in the sequence of 4-3-5-2-6-1-7.

• Check to see that the assembled crankshaft turns smoothly with hand.

3.3.6 Flywheel housing

• Temporarily install the guide bar on the cylinder block.

• Apply gasket to the cylinder block.

• Using the dowel pin and guide bar, install the flywheel housing and tighten the fixing bolts in a diagonal sequence to specified torque. (Zigzag method)

Torque	8 kg•m

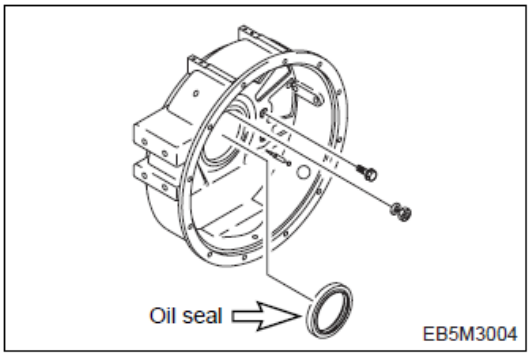

Caution:

When the bolts are tightened, remove the guide bar.

• The flywheel housing is assembled after the new oil seal was pressed (Coat engine oil over the outside of oil seal) before in the housing by a press.

• If any peripheral scar was generated due to oil seal at the oil seal contact surface of crankshaft, after inserting about 1 mm shim or thereabout in front of oil seal (Direction toward crankshaft.), measure and adjust.

3.3.7 Oil seal (Rear side)

• Apply lubricating oil to the outside of the oil seal and flywheel housing inside diameter and fit them over the crank shaft, then assemble the oil seal using an oil seal fitting jig.

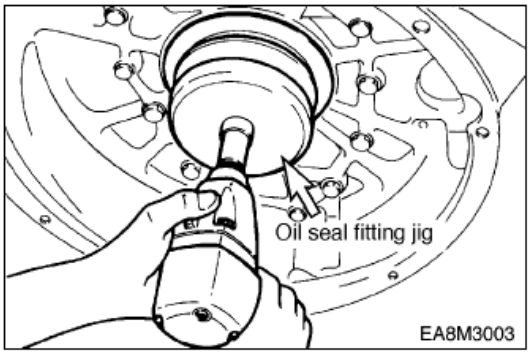

3.3.8 Flywheel

• Installation of flywheel ring gear

With a gas burner, heat the ring gear evenly until heat expansion takes place, then install it using a hammer.

Caution:

Do not allow the temperature of the ring gear to exceed 200 °C (390 °F).

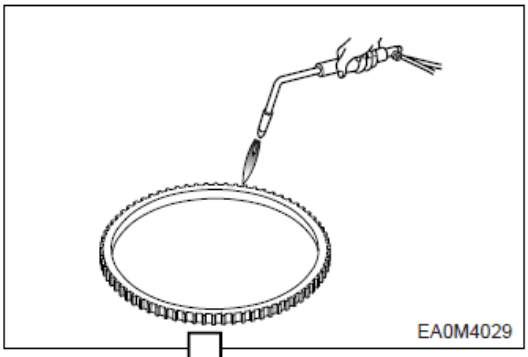

• By means of mandrel, assemble pilot bearing to the flywheel.

• By means of mandrel, press in the wear ring at the backward face.

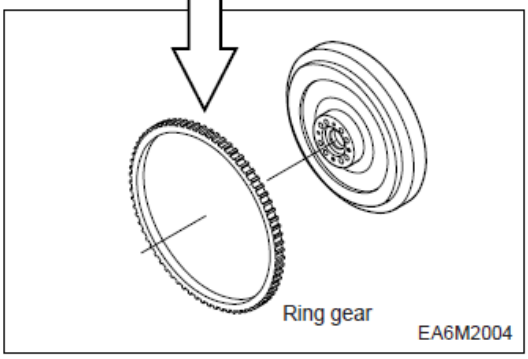

• Install a guide bar into a bolt hole on the crank shaft, and lift the flywheel to align the dowel pin with the pin hole on the flywheel for temporary assembly operation.

• Coat the adhesive (#271 Loctite) over the assembling bolts and install bolts in the remaining holes. After that take out the guide bar, then install a bolt in the hole where the guide bar had been inserted.

• According to the order of tightening tighten the fixing bolts using a torque wrench in a diagonal sequence to specified torque.

Torque	18 kg•m

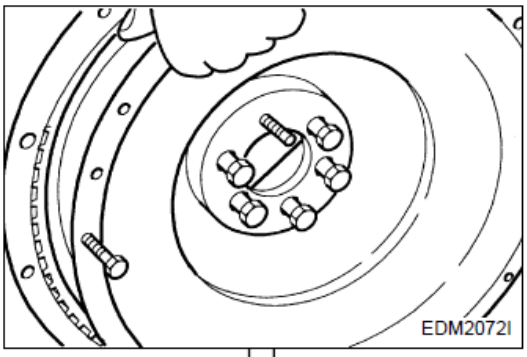

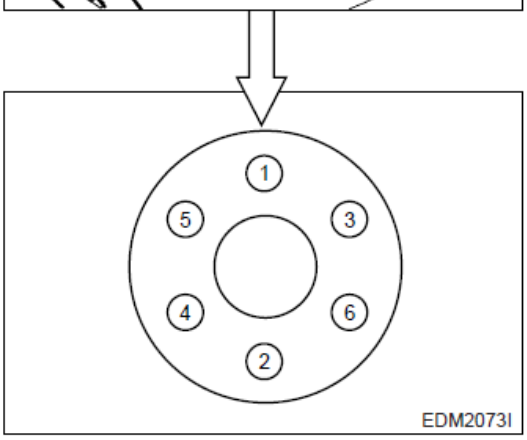

3.3.9 Magnetic pick-up sensor

• Move the lock nut to hexagonal side of sensor completely.

• Rotate (Clockwise) the pick-up sensor on fly wheel housing, until the end of it reach on fly wheel ring gear.

• Then rotate (Counter clockwise) the pick-up sensor for 270° (gap 1.0 mm) and fix lock nut.

• Tolerance limit is 27°. (gap L 0.1 mm)

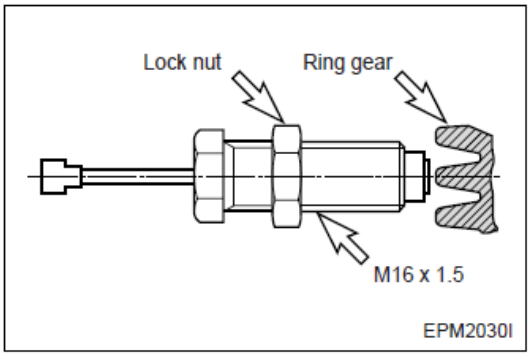

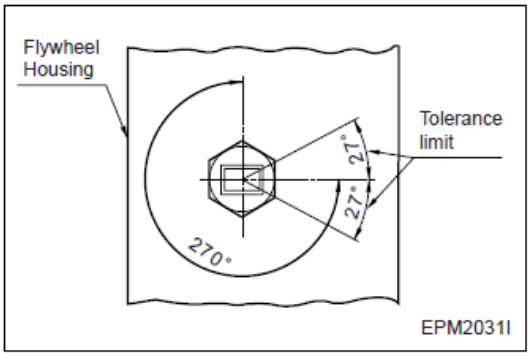

3.3.10 Water chamber cover

• Coat the adhesive over the water chamber cover (Particular around bolt holes) and after attaching the gasket, assemble it to the cylinder block using the bolts for assembling.

• As for tightening of bolts, after primarily tightening the bolts located at the both ends of cover (4ea at both sides) and middle bolts (Upper, lower 2ea) , tighten the rest.

3.3.11 Cylinder liner

• Stand the cylinder block so that the flywheel faces downward.

• Thoroughly clean the liner flange fitting surface and bore inside with compressed air to prevent the entry of foreign substances.

• After the cleaning operation, make the cylinder liner dried up and push it into the cylinder block by hand.

• Wet the liner inside diameter with engine oil.

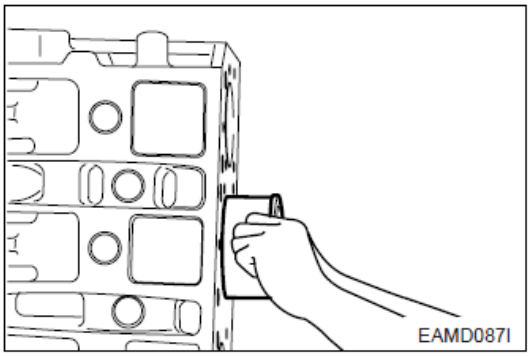

3.3.12 Piston and connecting rod

• Use a piston heater to heat the piston approximately 100 °C (212 °F) for 5 minutes.

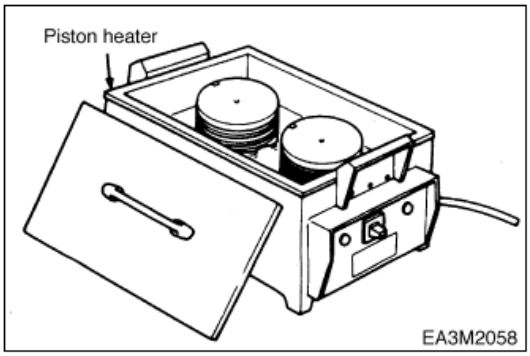

• Align the piston pin hole with the oiled connecting rod small end and press the piston pin (by lightly tapping with a rubber hammer) to assemble the connecting rod with the piston.

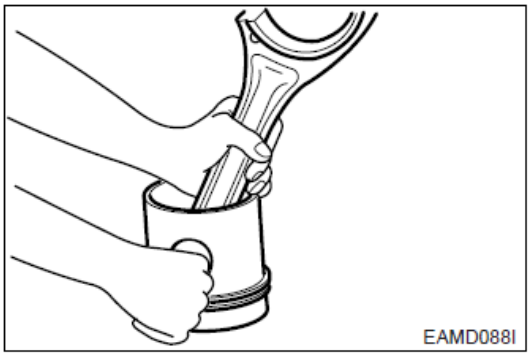

• Nothing the direction of the piston, make the longer side(machined with key groove on the bearing) of the connecting rod big end.

• On the piston head surface, the longer side connecting rod big end is in opposite direction from the valve seating surface as well as in the same direction with the narrow margin of the combustion chamber.

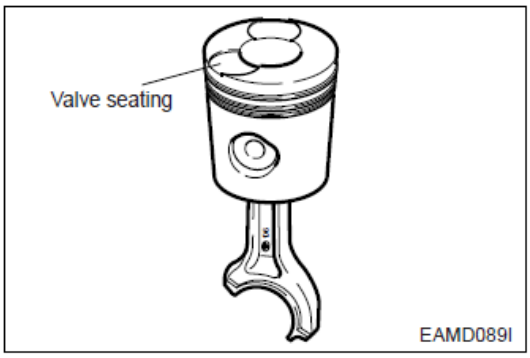

• Install the snap rings and check to see that it is securely assembled.

• Install the piston ring in the piston using piston ring pliers.

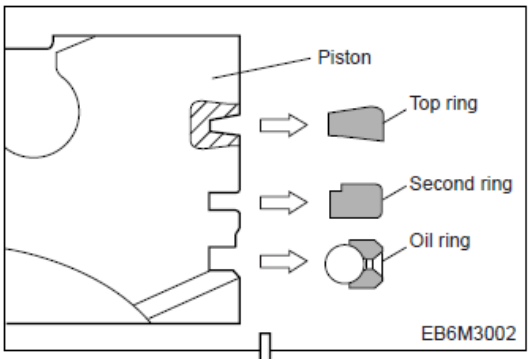

• Identify the mark “Y” or “TOP” on the ring end to prevent the top and bottom of the piston ring from being interchanged and make the marked portion face upward. (The surface marked as “Y” is upper surface.)

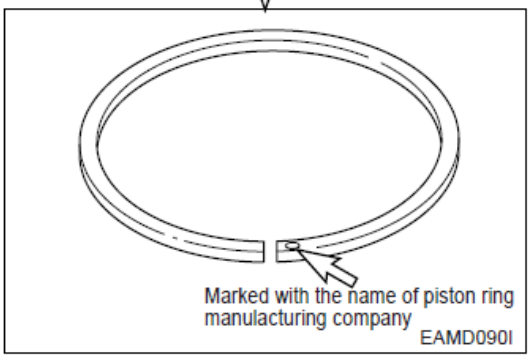

• Adjust the angle among individual piston ring gaps to 90° and fit a piston assembling jig onto the piston, Use care not to match the ring gaps with the pin direction.

• Install the bearing by aligning it with the connecting rod key groove and apply oil to the bearing and piston.

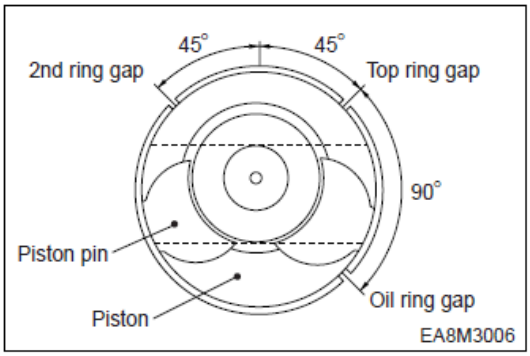

• Position the valve seating surface toward the tappet hole and insert the piston with hand.

Caution:

Use care not to damage the cylinder liner and piston, and slightly lift and insert the piston into the cylinder so that the ring may not be damaged by the fillet of the liner.

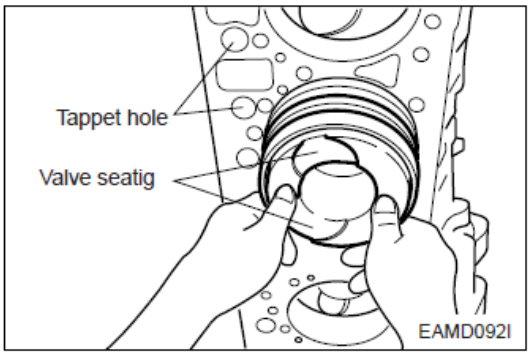

• Install the bearing in the connecting rod cap and apply oil.

Caution:

Make sure that the manufacture serial numbers impressed on the connecting rod cap and connecting rod big end are identical, and install the connecting rod cap by aligning it with dowel pin.

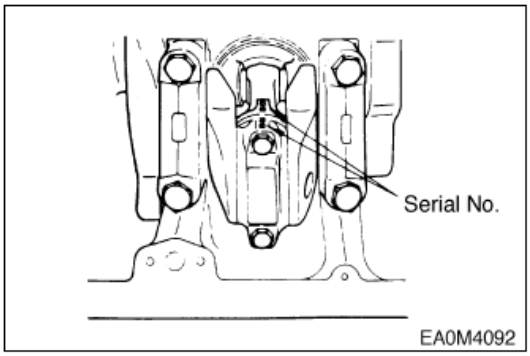

• Wet the fixing bolts with engine oil, semi-tighten them with hand, tighten them to the specified torque using a torque wrench as follows.

<Tightening order>

(1) First stage: Coat engine oil over bolts.

(2) Second stage: Temporary bolt screwing about 1 ~ 2 threads

(3) Third stage: With torque wrench, tighten up to about 10 kg.m

(4) Fourth stage: With torque wrench, tighten up to about 15 kg.m

(5) Fifth stage: By means of torque wrench, tighten finally in the specified torque. (18 kg.m).

Torque	18 kg•m

• When the connecting rod bearing cap bolts are tightened, check the connecting rod end play to the right and left with hand. If no end play is found, remove and reinstall or replace the connecting rod bearing cap.

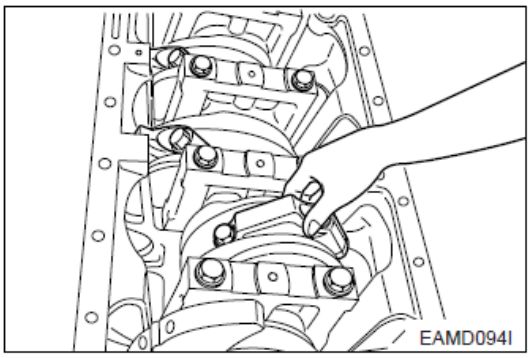

3.3.13 Timing gear case

• Mount a new gasket using dowel pin on the cylinder block.

• Put the time gear case to the cylinder block by aligning the dowel pin hole of timing gear case with its pin, and then assemble it by tapping lightly with an urethane hammer to the right and left (Particularly around dowel pin).

• Tighten the bolts for assembling to the specified torque. However, in case of tightening the bolts, tighten primarily the bolts of both end parts and then do the rest.

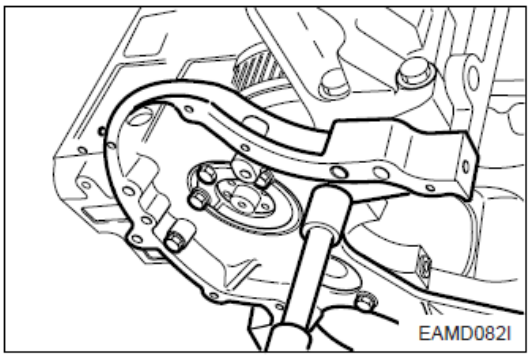

3.3.14 Timing gear and idle gear pin

• Install the oil pump idle gear onto the No.7 bearing cap.

• Install a thrust washer over the camshaft and assemble the cam gear by aligning it with camshaft dowel pin. Tighten the cam gear assembling bolts to the specified torque. (Zigzag method)

Torque	2.2 kg•m

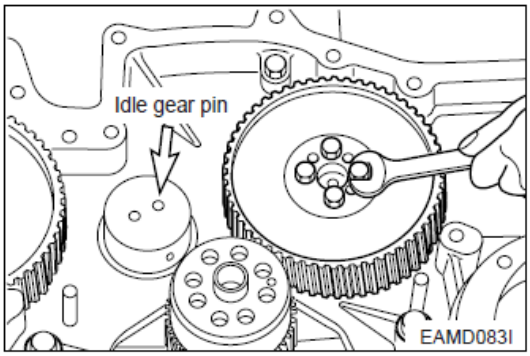

• With the oil port on the idle gear pin facing the cylinder block, install the idle gear pin.

• Idler gear pin with oil hole is assembled toward cylinder block.

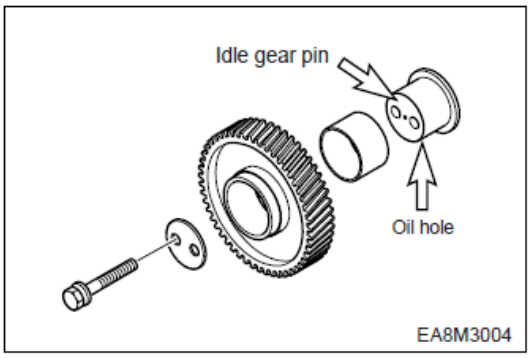

• Install the idle gear by coinciding the marks impressed on the crank gear, cam gear, fuel injection pump drive gear, and idle gear.

• Install a thrust washer on the idle gear and tighten to specified torque.

Torque	3.1 kg•m

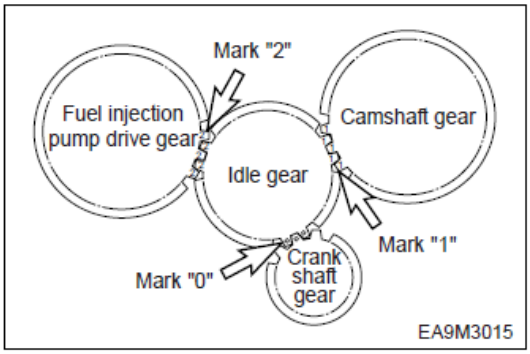

• Check and adjust the amount of backlash between gears using a feeler gauge.

Measuring position (between)	Backlash	Limit
cam gear & idle gear	0.16 ~ 0.28 mm	0.35 mm
crank gear & idle gear	0.16 ~ 0.28 mm	0.35 mm
injection pump & idle gear	0.16 ~ 0.28 mm	0.35 mm

3.3.15 Injection pump flange

• After assembling the fuel injection pump gear to the idle gear, tighten the assembling bolts of the injection pump flange.

• Mount gasket by aligning the bolt holes with the pin holes on the bearing housing.

• Turning the flywheel, adjust the pointer to the position of the engraved scale.

• After adjusting the injection timing of fuel injection pump drive gear, tighten the fixing bolts in the direction of fuel injection pump.

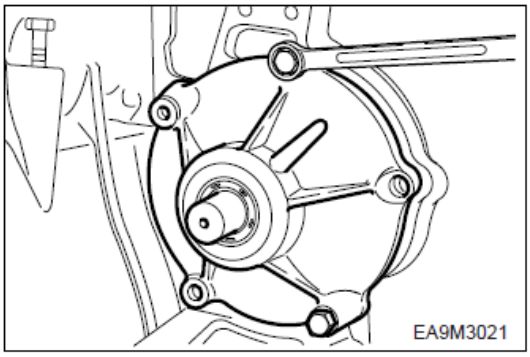

3.3.16 Fuel injection pump

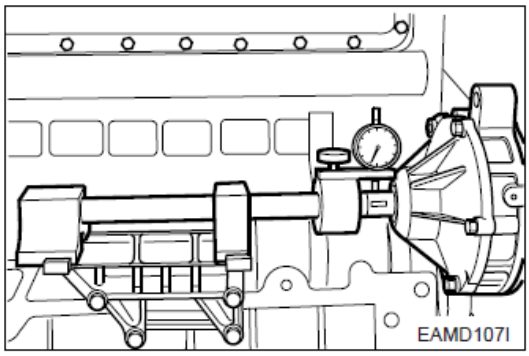

• Install the injection pump bracket in the cylinder block.

• After measuring the amount of run-out with an alignment setting jig, disassemble the bracket, adjust the shims, then reassemble it.

Run - out	0.2 mm or less

• Mount the top/bottom adjusting shims in the bracket and then mount the fuel injection pump.

• Tighten the fixing bolts in a diagonal sequence to specified torque.

Torque	4.4 kg•m

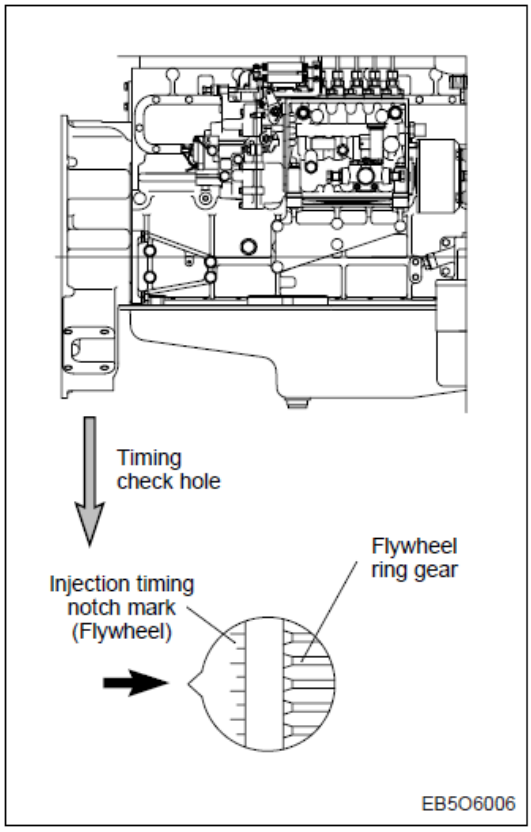

<Injection Timing Adjustment>

• Bring the piston of #1 cylinder to the compression TDC (OT) by turning the crankshaft. Again, turn 60° in the reverse direction of engine rotation.

• Disassemble the fuel injection pipe that connect the fuel injection pump and #1 injection nozzle.

• Disassemble the f el injection pump delivery valve holder, and after removing the valve and valve spring, again assemble the valve holder and then, on it assemble the pipe of “U” shape on it.

• Operating the priming pump of supply pump, turn the crankshaft slowly in the direction of engine rotation until the fuel will drop at the rate of a drop for 6 ~ 8 sec.

• Confirm then whether the indication point at the flywheel housing inspection hole and the engraved specified injection angle are coincided or not, and if the injection timing is not correct, adjust as follows.

(1) As above adjusting method, Please coincide the indication point at the flywheel housing's inspection hole with the flywheel's inspection angle.

<Fuel injection timing>

Model	Timing angle
DE08TIS	9 ± 1°

(2) Loosen the drive gear fixing bolt of injection pump a bit.

(3) After turning slowly the coupling of injection pump until the fuel will drop from #1 plunger at the rate of a drop for 6 ~ 8 sec., tighten the driving gear fixing bolt of fuel pump.

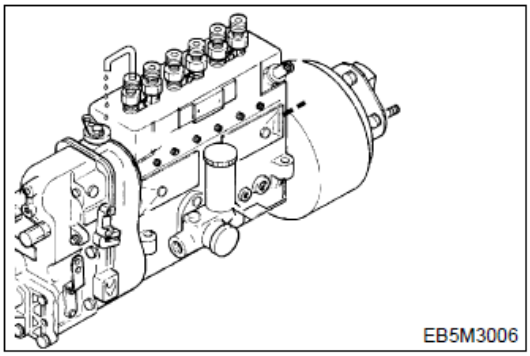

• After the adjustment of injection timing, disassemble the "U" shape pipe, the delivery valve and the valve spring.

• Turn the coupling until the notch mark of the indicator plate attached to the fuel injection pump is aligned with the notch mark of the coupling.

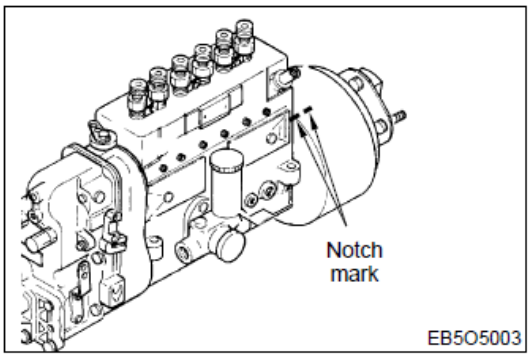

• Tighten the coupling fixing bolts and nuts to specified torque.

Torque	6.0 ~ 6.5 kg•m

• Install the oil delivery pipe and return pipe.

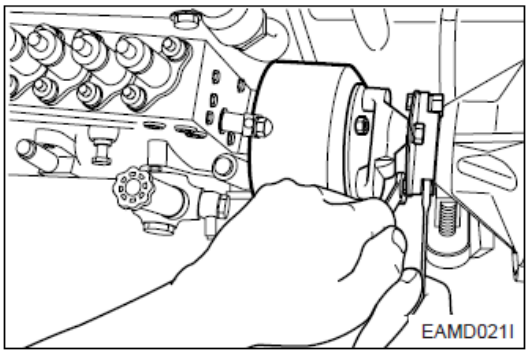

3.3.17 Oil pump and oil pipe

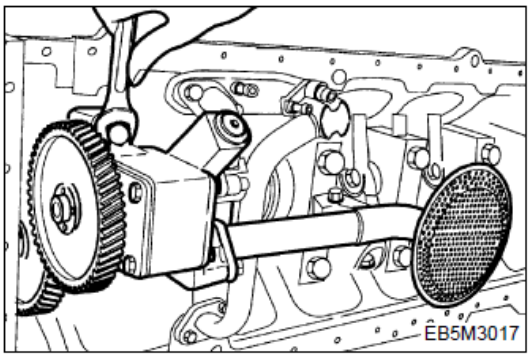

• Install a dowel pin in the No.7 bearing cap, then assemble the oil pump by tapping lightly with urethane hammer.

• Tighten the assembling bolts with specified torque.

Torque	4.4 kg•m

• Assemble the oil suction pipe with the delivery pipe to oil pump by the bolts.

3.3.18 Timing gear case cover

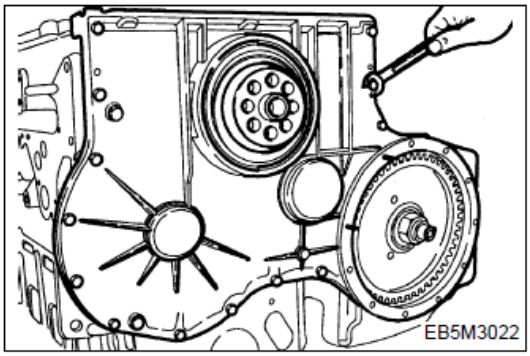

• Install dowel pin on the timing gear case.

• Mount a gasket by aligning the fixing bolt holes with those on the gasket.

• Align the dowel pin with the cover pin hole, then install the cover with light tap.

• Tighten the fixing bolts beginning with the oil pan fitting face.

Caution:

In the assembling, be careful not to be damaged by the crankshaft.

3.3.19 Front oil seal

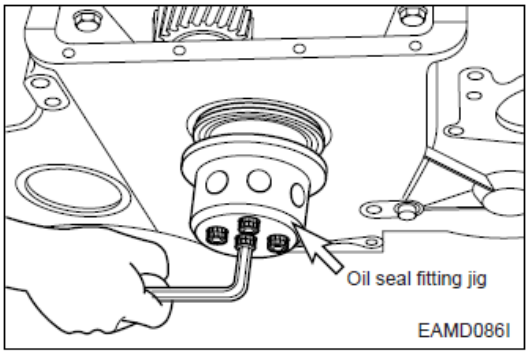

• Apply lubricating oil to the outside of the oil seal and the oil seal hole of the timing gear case cover.

• Put the new oil seal on the oil seal hole of timing gear case cover aligning the center of them, then assemble the oil seal using an oil seal fitting jig.

3.3.20 Water pump

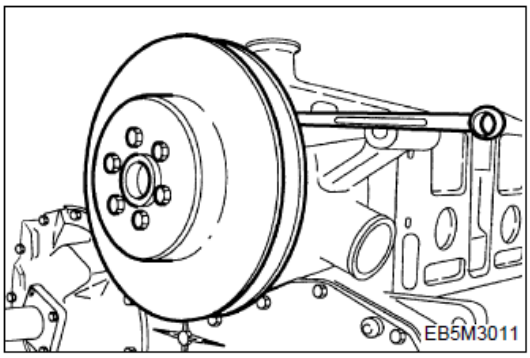

• Mount a new gasket.

• Install the water pump on the cylinder block and tighten the assembling bolts with specified torque.

Torque	2.2 kg•m

• Connect water pipes and by-pass pipe to the water pump.

• Connect a water pipe to the expansion tank.

3.3.21 Vibration damper

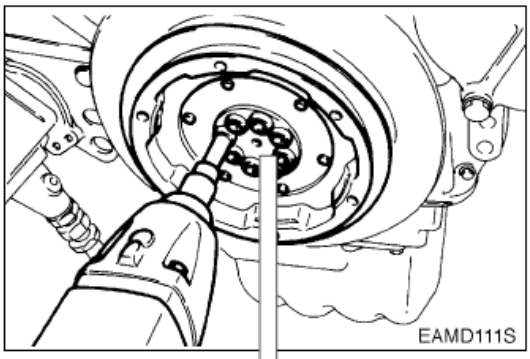

• Insert the vibration damper to the crankshaft, and assemble by tightening the assembling bolts at the specified tightening torque according to bolt tightening order. (refer to right figure.)

Torque	13 kg•m

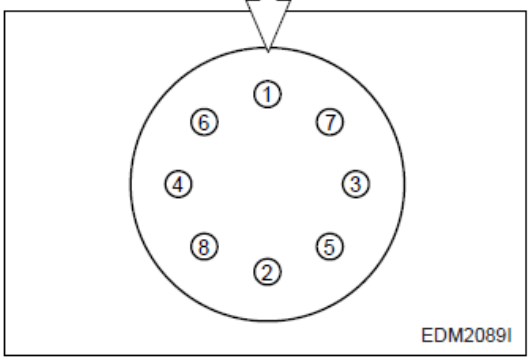

3.3.22 Oil pan

• Remove the gaskets thoroughly that project at the timing gear case, case cover of cylinder block, and the contacting part of flywheel housing by means of a scraper.

Caution:

Be careful for the gasket pieces not fall into the engine during the work.

• Coat the silicone at the gasket part that was removed (Contacting part), and attach the new oil pan gasket.

• Assemble the oil pan by tightening the oil pan assembling bolts, and when tightening bolts, primarily tighten the bolts (4ea) at the both ends, and then tighten the rest bolts to specified torque.

Torque	2.2 kg•m

Caution:

Align the bolt holes with gasket holes to prevent damage to the gasket and tighten.

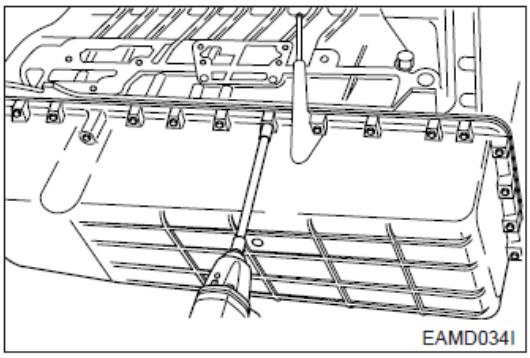

3.3.23 Oil filter

• Install the oil filter onto the cylinder block, and tighten the fixing bolts.

Torque	2.2 kg•m

• Apply engine oil to the oil filter cartridge o-ring and assemble the cartridge using a filter wrench.

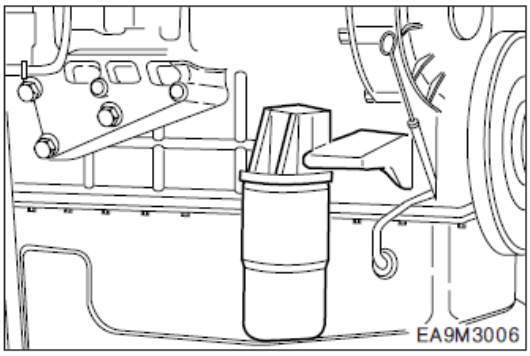

3.3.24 Oil cooler

• Install the gasket on the cylinder block.

• Assemble the oil cooler by tightening the assembling bolts.

• Connect the cooling water pipe with the cooling water pump and tighten a hose clamp.

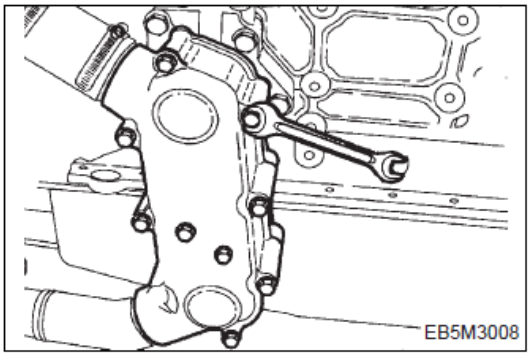

3.3.25 Starter

• Assemble the starter in position on the flywheel housing.

Torque	8.0 kg•m

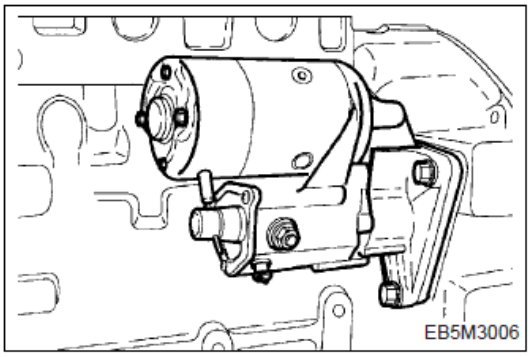

3.3.26 Intake and exhaust valves

• Identify the marks of “IN” and “EX” impressed on the valve head before assembling the valve with the valve head.

• With a valve stem seal fitting jig, assemble the valve stem seal on the valve guide.

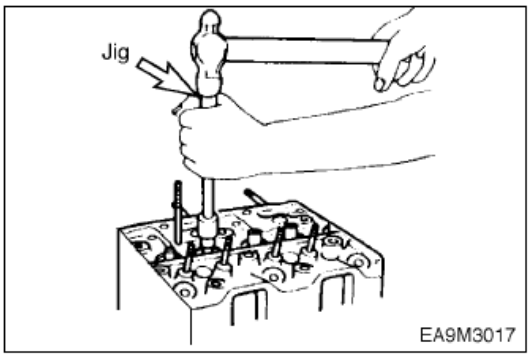

• After installing valve springs and spring retainer, press the retainer with a jig, then install the cotter pin.

• Tap the valve stem lightly with a rubber hammer to check that the valve is assembled correctly.

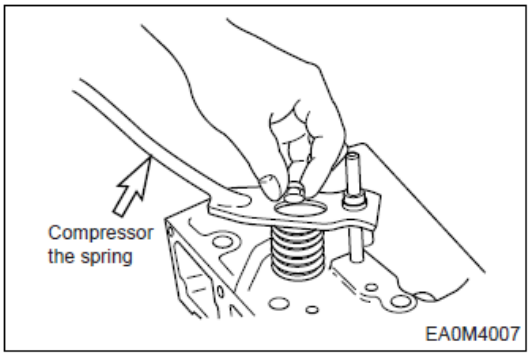

3.3.27 Cylinder head

• Blow the bolt holes of cylinder block with a compressed air and remove the foreign matter.

• Clean the head gasket contact surface thoroughly.

Caution:

However, be careful for the foreign material not to enter into the combustion chamber.

• Assemble the new head gasket by aligning the holes with dowel pins of cylinder block with “TOP” mark facing upward.

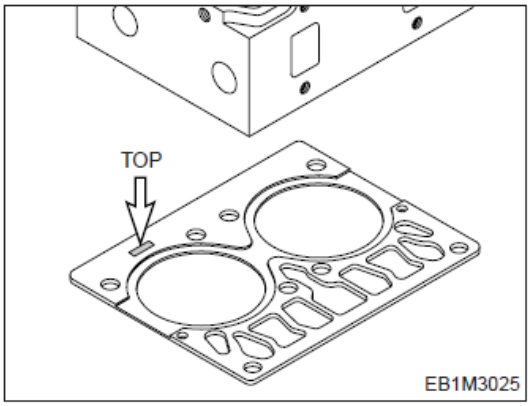

• Check the inside of combustion chamber for foreign substances, and carefully mount the cylinder head assembly in the block by aligning the dowel pin with the dowel pin hole.

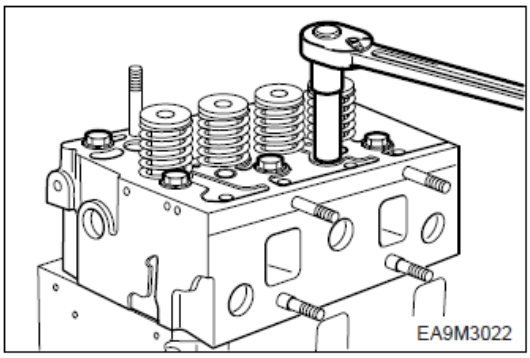

Caution:

Be careful not to damage the cylinder head gasket. If the dowel pin is not in alignment, lift the cylinder head again and then remount it.

Caution:

After tightening the cylinder head bolts, even at disassembling, the cylinder head gasket should be changed a new one.

• Coat the cylinder head bolts with engine oil, and tighten in proper sequence to the specified torque according to bolt tightening order (refer to the figure).

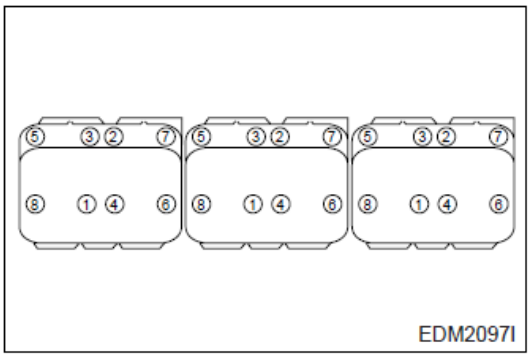

<Cylinder head bolts>

	Type 1	Type 2
Specification	TY 12.9T M14×1.5×146	TY 10.9T M14×1.5×150
Torque	24.5 kg•m	6 kg•m +180°+150° (Angle torque)

• However, before tightening bolts, the side parallel degree between cylinder heads should be adjusted.

<Tightening order of bolts by steps>

(1) First stage: Coat the bolts with engine oil.

(2) Second stage: Tighten 1 ~ 2 threads with hands.

(3) Third stage: Tighten at about 6 kg.m with a wrench.

(4) Fourth stage: Tighten at rotating angle method 180° with a wrench.

(5) Fifth stage: Finally, tighten at rotating angle method 150° with a torque wrench.

However, all bolts are tightened simultaneously by above steps.

• Coat the push rod with engine oil and insert it into the push rod hole.

3.3.28 Rocker arm assembly

• Apply lubricating oil to the rocker arm bush and shaft, and assemble the intermediate bracket with the rockerarm (rocker arm assembly) on the cylinder block using fixing bolts. In tightening the bolts, it must be done at the specified value using zigzag method.

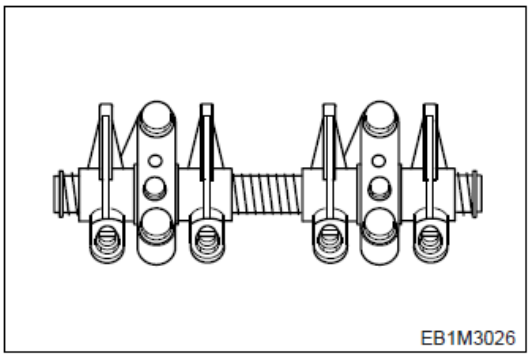

Torque	M10 ×1.5	4.4 kg·m
	M12 ×1.5	8.0 kg·m

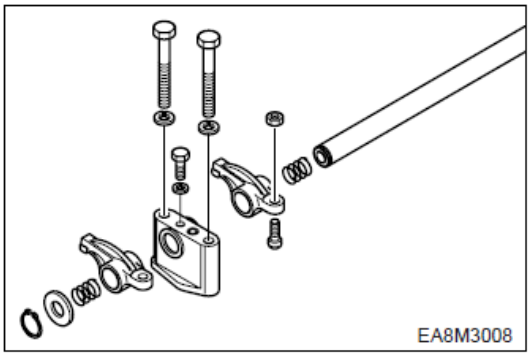

• Semi-install valve clearance adjusting bolts onto the rocker arm.

• Install the spring, rocker arm, bracket, rocker arm, spring, washer, and snap ring in the described sequence.

• Install the rocker arm and bracket in the same direction.

• Adjust the valve clearance as following guide.

<Guide for valve clearance adjustment>

• By turning the crankshaft, when the intake and exhaust of #6 cylinder (the sixth cylinder from the flywheel) overlap, that is, when #1 cylinder's piston come at the compression top dead center (OT), adjust the valve clearances by ⇧ mark indicated.

• After having turned the crankshaft by 360° and Intake & exhaust valves of #1 cylinder overlap, that is, when #6 cylinder is in the state of compression TDC (OT), the clearance indicated by ⬆ mark is adjusted.

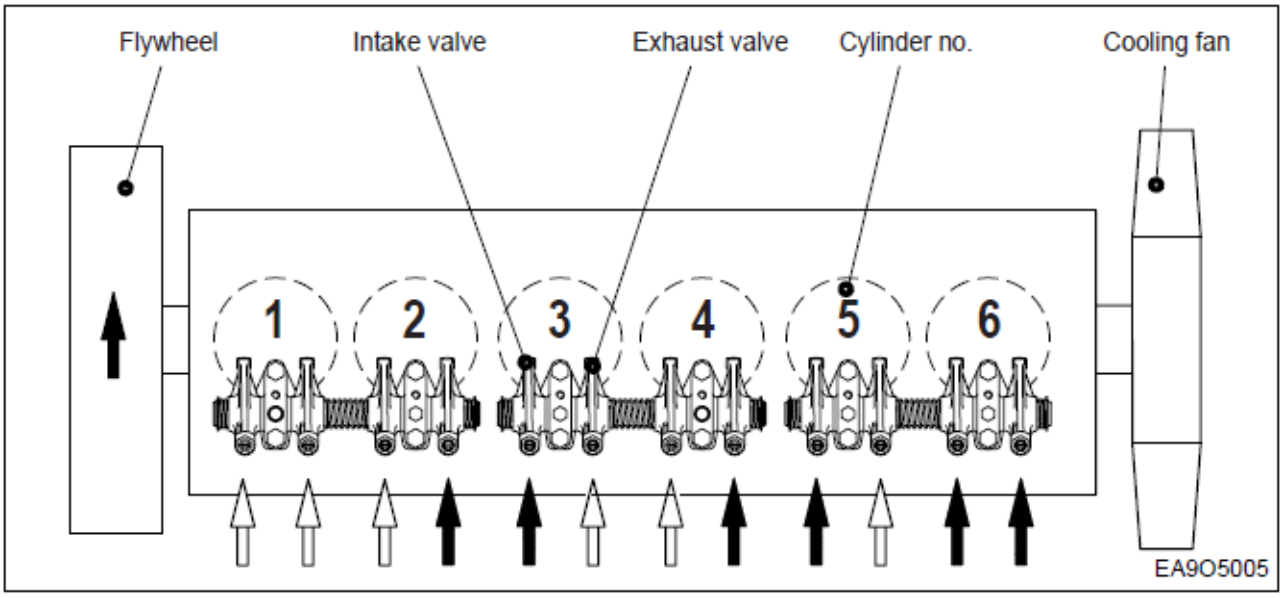

• To adjust the clearance, loosen the locknuts of rocker arm adjusting screws and push the feeler gauge of specified value between a rocker arm and a valve stem (to measure the clearance of the valve and rocker arm contacting part) and adjust the clearance with adjusting screw respectively and then tighten with the lock nut.

• As for the valve clearance, adjust it when in cold.

Model	Intake valve	Exhaust valve
DE08TIS	0.3 mm	0.3 mm

Caution:

(1) Crankshaft revolution is done by hands without using a starting motor.

(2) Turn it to the direction of engine rotation, but do not use the installing bolts at the turn.

(3) The cylinder no. and the order of intake and exhaust can be determined from the crank shaft pulley.

• Adjust valve clearance with a feeler gauge and tighten the fixing nuts to specified torque.

Torque	5.0 kg•m

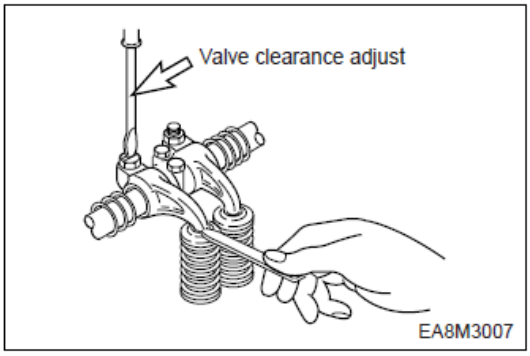

3.3.29 Intake manifold

• Put in the new gasket between the cylinder head and manifold, and assemble the intake manifold by tightening the assembling bolts.

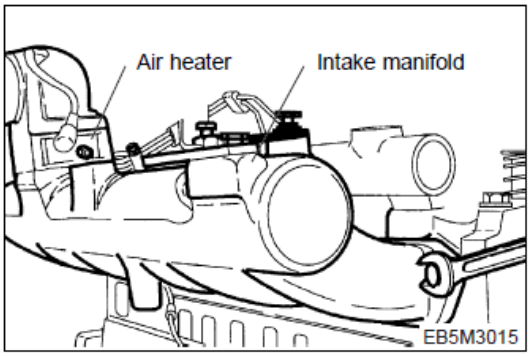

3.3.30 Exhaust manifold

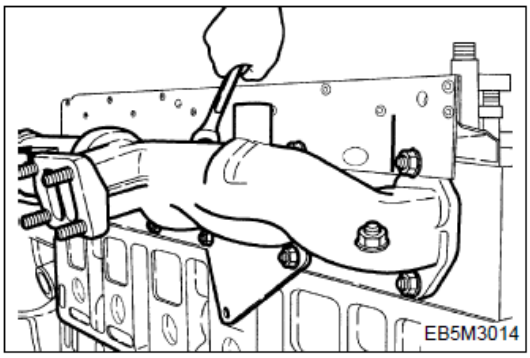

• Install the exhaust manifold gasket over the stud bolts by aligning the gasket with the exhaust port on the cylinder head so that the face and back of the gasket can be positioned correctly.

• Semi-assemble the exhaust manifold and install the heat resisting plate.

• Assemble them by tightening the assembling bolts. The tightening order of bolts is from the middle to left and right alternately.

Caution:

For upper and lower bolts differ in the length, so use the correct bolts.

3.3.31 Turbocharger (D1146TI, DE08TIS)

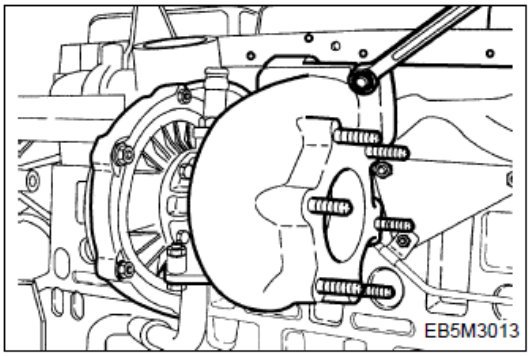

• Fit a new gasket over the stud bolts of the exhaust manifold before tightening those turbocharger fixing nuts.

• Install the oil supply pipe and return pipe.

• Tighten the clamps of rubber hose that is connected air pipe to the intercooler.

3.3.32 Cooling water pipe

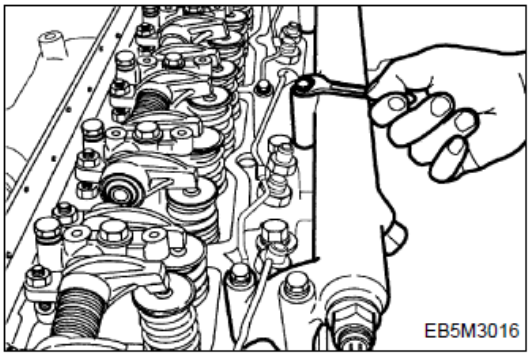

• Attach a new gasket on the cylinder head.

• Install the cooling water pipe and tightening the fixing bolt on it.

3.3.33 Idle pulley

• Assemble the air compressor mounting bracket on the timing gear case.

• Install the idle pulley on the air compressor mounting bracket and tightening the fixing bolt.

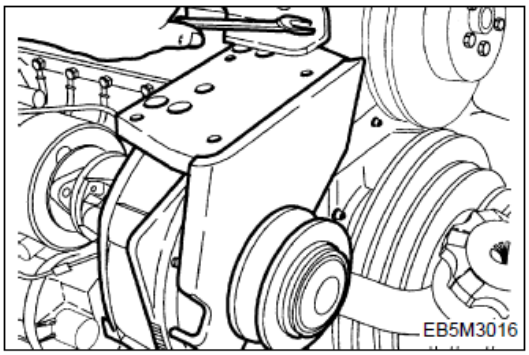

3.3.34 Air compressor & power steering pump

• Couple the power steering oil pump to the air compressor with the driving dog engaged.

• Insert the O-ring coated with grease into the oil outlet of the air compressor.

• Place the air compressor on the mounting bracket carefully and tighten the fixing bolts to the specified torque. (Carefully damage the O-ring)

• Assemble the oil feed pipe.

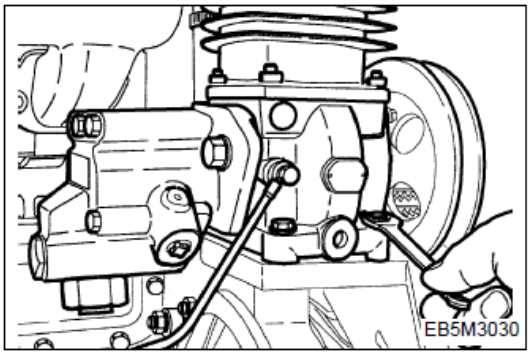

3.3.35 Alternator

• Install the alternator mounting bracket and supporter to the cylinder block, then tighten the fixing bolts.

• Install the alternator with fixing bolts to the mounting bracket.

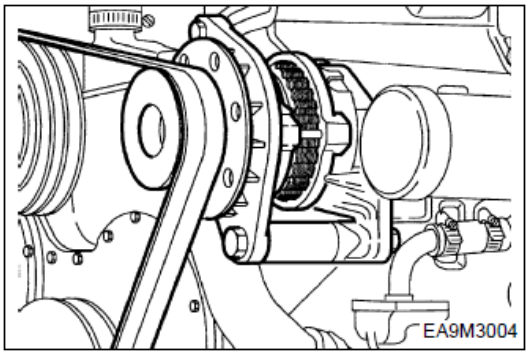

3.3.36 Fuel filter

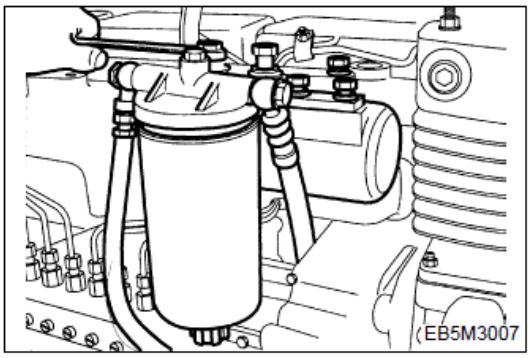

• Assemble the fuel filter with the intake manifold.

• Assemble the fuel feed hose according to the direction of an arrow impressed on the fuel filter head so that fuel can be fed in the sequence of FUEL FEED PUMP → FUEL FILTER → FUEL INJECTION PUMP.

3.3.37 Injection nozzle

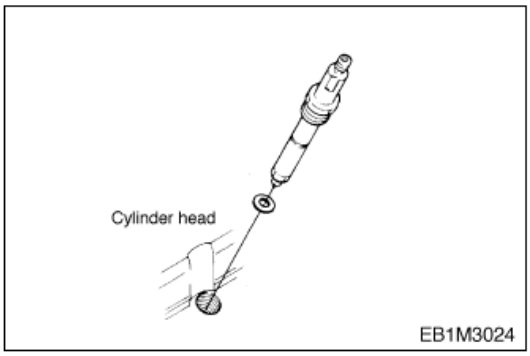

• Install a new seal ring in the nozzle hole of the cylinder head.

• As aligning the ball of nozzle with a groove in the nozzle hole, Insert the nozzle into the cylinder head and tighten the nozzle.

Torque	7.0 kg•m

3.3.38 Fuel injection pipe

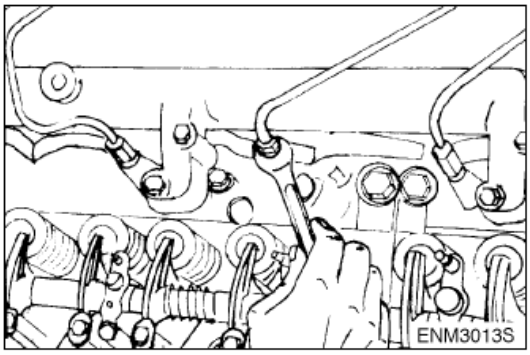

• Semi-assemble a nut at both ends of the fuel injection pipe and tighten them up one by one to specified torque.

Torque	3.0 kg•m

• Assemble the fuel return pipe on the nozzle holder.

• Connect the injection pump lubricating oil pipe with a hollow screw.

Caution:

Be sure not to damage the connection part due to over-tightening the hollow screw.

3.3.39 Cylinder head cover

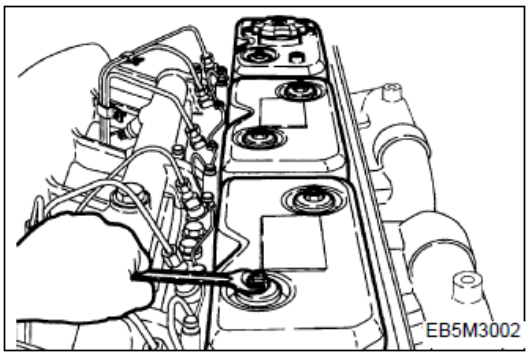

- Attach a new gasket on the cylinder head cover.
- Assemble the cylinder head cover to the cylinder head by tightening the cap bolts for fixing the cylinder head cover.

Torque	1.2 kg•m

- Assemble the breather and breather hose.
- Fit the oil filler cap on the cylinder head cover.

3.3.40 Cooling fan

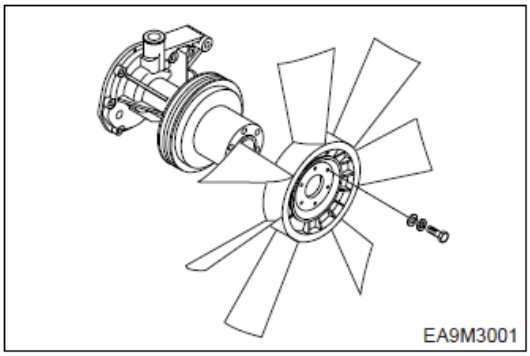

- Install the flange to the water pump pulley, then assemble the cooling fan to the pulley by tightening the fixing bolts.

Torque	4.4 kg•m

3.3.41 Belt

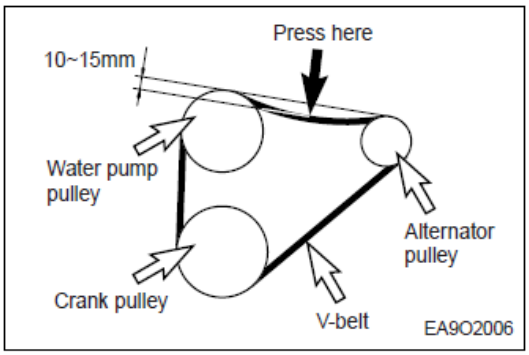

- Install the V-belt on the crank pulley,alternator pulley and water pump pulley.
- Adjust the V-belt tension using the tension adjusting support.

Poly belt will be properly tensioned if the deflection force “F” is applied midway between the belt’s tangent points with the pulley.

T = 0.015 X S (about 1.5 mm per 100mm)

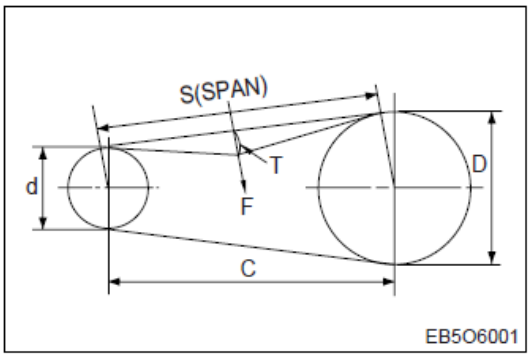

3.3.42 Oil level gauge

• Apply sealant (Locktite #262) to the bottom side of the guide tube.

• Then assemble the guide tube and oil level gauge on the oil pan.

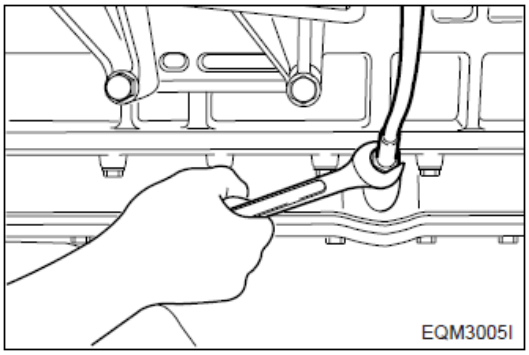

3.3.43 Others

• Assemble by connecting the other oil and fuel hoses.

3.4 BREAKING IN

3.4.1 Preparations for breaking-in

Fill of new engine oil through the oil filler cap.

- When measuring the oil level with the oil level gauge with the engine mounted, the oil level must indicate about 10mm above the max. line.
- Connect water hoses and fill up cooling water.
- Connect the fuel hoses to the fuel tank and to top(radiator or surge tank).
  Check the air bleeding of the fuel system.
- Connect the electrical systems such as starter, air heater, etc. with power source.

3.4.2 Operation of a new engine (Break-In)

Because the sliding surfaces of a new engine are not lapped enough, the oil film can be destroyed easily by overload or overspeed and the engine life-time may be shortened. Therefore the following things must be obeyed by all means.

Up to the first 1,000km(50 hours)

- Engine should be run at fast idling until the temperature of the engine becomes normal operating condition.
- Overload or continuous high speed operation should be avoided.
- High speed operation with no load should be prevented.
- Abrupt start and stop of the engine should be avoided.
- Engine speed must be under 70% of its maximum speed.
- Maintenance and inspection must be accomplished thoroughly.

3.4.3 Check points for break-in

During the break-in (the initial running of the engine) period, be particularly observant as follows:

a) Check engine oil level frequently. Maintain oil level in the safe range, between the “min.” and “max.” marks on dipstick.

Note:

If you have a problem getting a good oil level reading on dipstick, rotate the level gauge 180° and re-insert for check.

b) Watch the oil pressure warning lamp. If the lamp blinks, it may be oil pick-up screen is not covered with oil. Check oil level gauge. Add oil to the oil pan, if required. Do not overfill. If level is correct and the status still exists, see your DEALER for possible switch or oil pump and line malfunction.

Note :

Oil pressure will rise as RPM increases, and fall as RPM decreases. In addition, cold oil will generally show higher oil pressure for any specific RPM than hot oil. Both of these conditions reflect normal engine operation.

c) Watch the engine water temperature gauge and be sure there is proper water circulation. The water temperature gauge needle will fluctuate if water level in expansion tank is too low.

At the end of the break-in period, remove break-in oil and replace the oil filter. Fill oil pan with recommended engine oil. Refer to following table.

<Recommended Engine oil and capacity>

Engine oil capacity				Recommend oil
Model	Max. line (lit)	Min line (lit)	Total (lit)	API No.
DE08TIS	17	14	21	ACEA-E2 or ACEA-E3 (API CH-4)

* If long oil change intervals are to be used, ACEA-E3 oil must be used.

4 MAINTENANCE OF MAJOR COMPONENTS

4.1 Cooling System

4.1.1 General information

This engine is water-cooling type. Heat from the combustion chamber and engine oil heat are cooled down by coolant and radiated to the outside, resulting in the normal operation of the engine.

The water absorbing the oil heat and combustion chamber heat goes on to the thermostat through the water pipe, and circulates to the water pump if water temperature is lower than the valve opening temperature on the thermostat, while circulating to the radiator at water temperature higher than the valve opening temperature. At the radiator, the heat absorbed in the coolant is radiated to cool down and the coolant recirculates to the water pump.

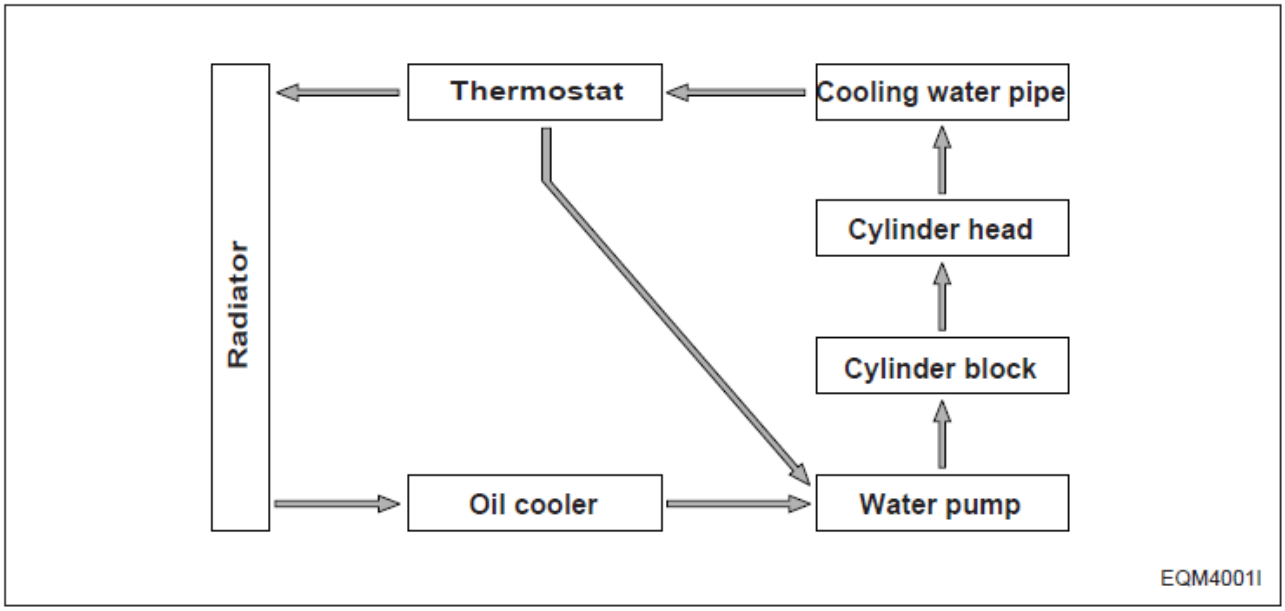

4.1.2 Specification

Item		Specifications	
1. Water pump	Type	Centrifugal type	
	Pump speed	2,000 rpm	2,700 rpm
	Delivery capacity	about 190 liter/min	about 280 liter/min
	Operation pressure	0.5 bar	0.8 bar
	Allowable back pressure	bellow 0.5 bar	
2. Thermostat	Operating temperature	79°C	83°C
	Valve lift	8mm or more (at 94°C)	8mm or more (at 94°C)
	Operating temperature	79 ~ 94°C	83 ~ 95°C
3. Cooling fan and belt			
Fan diameter - Number of blades		Truck : ϕ700mm - 8	
Fan belt tension		15mm deflection by thumb	

4.1.3 Thermostat

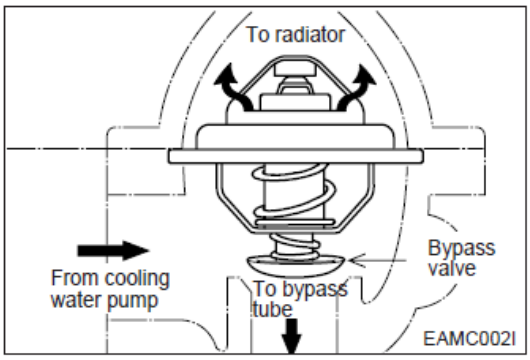

- General descriptions and main data

  The thermostat maintains a constant temperature of coolant and improves thermal efficiency of the engine by preventing heat loss.

  Namely, when the temperature of coolant is low, the thermostat valve is closed to make the coolant bypass to directly enter the water pump; when the coolant temperature rises to open wide the thermostat valve, the bypass circuit is closed and the water passage to the radiator is opened so that the coolant is forced to flow into the radiator.

Item	Specifications		
	In moderate climates		In tropical climates
	Bus	Truck	
Type	Wax-pallet type		Wax-pallet type
Open at	79 ℃	83 ℃	71 ℃
Open wide at	94℃	95℃	85℃
Valve lift	8 mm or more	10 mm or more	Bus : 8 mm or more Truck : 10 mm or more

Caution:

There are 3 kinds of thermostats according to surrounding and operating conditions. One is named by 71 °C , 79°C type and the other is 83 °C.

- Inspecting

  (1) Check the wax pallet and spring for damage.

  (2) Put the thermostat in a container of water, then heat the water slowly and check temperature with a thermometer. If the valve lift is 0.1 mm (starting to open) at temperature of 83 °C and 10 mm or more (full open) at temperature of 95 °C, the thermostat is normal.

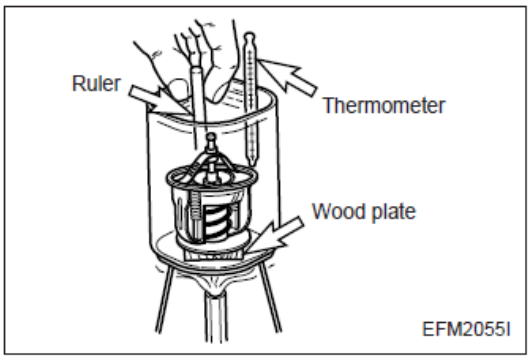

https://truckmanualshub.com/

• Replacing thermostat and precautions for handling

(1) Precautions for handling

The wax pallet type thermostat does not react as quickly as bellows type one to a variation of temperature of coolant. Such relatively slow reaction is mainly due to the large heat capacity of the wax pellet type thermostat. Therefore, to avoid a sharp rise of coolant temperature, it is essential to idle the engine sufficiently before running it. In cold weather, do not run the engine at overload or overspeed it immediately after starting off.

(2) When draining out or replenishing coolant, do it slowly so that air is bled sufficiently from the entire cooling system.

(3) Replacing thermostat

If the thermostat is detected defective, replace with a new one.

4.1.4 Diagnostics and troubleshooting

Complaints	Possible causes	Corrections
1. Engine overheating	• Lack of coolant • Radiator cap pressure valve spring weakened • Fan belt loosened or broken • Fan belt fouled with oil • Thermostat inoperative • Water pump defective • Restrictions in water passages due to deposit of scales • Injection timing incorrect • Restriction in radiator core • Gases leaking into water jacket due to broken cylinder head gasket	• Replenish coolant • Replace cap • Adjust or replace fan belt • Replace fan belt • Replace thermostat • Repair or replace • Clean radiator and water passages • Adjust injection timing correctly • Clean exterior of radiator • Replace cylinder head gasket
2. Engine overcooling	• Thermostat inoperative • Ambient temperature too low	• Replace thermostat • Install radiator curtain
3. Lack of coolant	• Radiator leaky • Radiator hoses loosely connected or damaged • Radiator cap valve spring weakened • Water pump leaky • Heater hoses loosely connected or broken • Cylinder head gasket leaky • Cylinder head or cylinder block cracked	• Correct or replace • Retighten clamps or replace hoses • Replace cap • Repair or replace • Tighten or replace hoses • Replace cylinder head gasket • Replace cylinder head block
4. Cooling system noisy	• Water pump bearing defective • Fan loosely fitted or bent • Fan out of balance • Fan belt defective	• Replace bearing • Retighten or replace fan • Replace fan • Replace fan belt

4.2 Lubricating System

4.2.1 General descriptions and specifications

- General descriptions

  All the engine oil pumped up from the oil pan by the gear type oil pump is filtrated through the oil cooler and oil filter, and this filtrated oil is forced through the main oil gallery in the cylinder block from where it is distributed to lubricate the various sliding parts, and fuel injection pump in order to ensure normal engine performance.

- Specifications

Item	Specifications	Item	Specifications
Lubricating system	Forced pressure circulation	Oil filter type	Full flow
Oil pump type	Gear type	Bypass for filter element	
Relief valve opening pressure	10±1.5 kg/cm²	Valve opening pressure	1.8 ~ 2.3 kg/cm²
Bypass for oil cooler		Bypass for entire oil filter	
Opening pressure	5+1 kg/cm²	Valve opening pressure	4.0 ~ 4.8 kg/cm²
Adjusting valve for spray nozzle			
Opening pressure	1.5 ~ 1.8 kg/cm²		

- Diagram of lubricating system

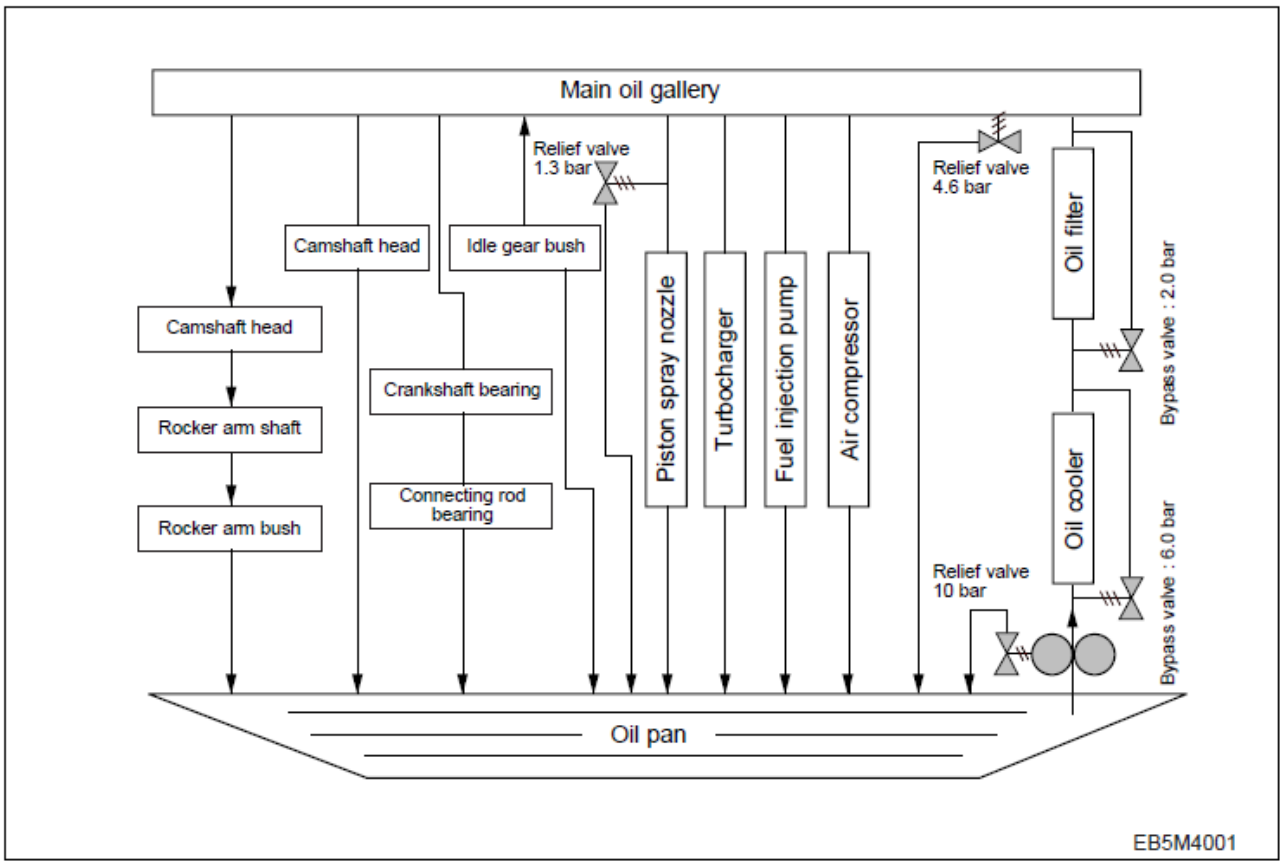

4.2.2 Oil pump

• Disassembly

(1) Disassembly of oil pump drive gear

a. Unscrew the screw and disassemble the oil relief valve.

b. Unfold the washer for the oil pump drive gear fixing nut and remove the nut.

c. Disassemble the drive gear.

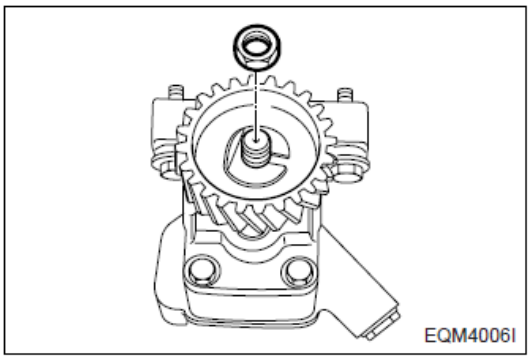

(2) Remove the oil pump cover fixing nuts and disassemble the oil pump cover.

The oil pump cover is fixed with the two dowel pins.

(3) Disassemble the drive gear and driven gear.

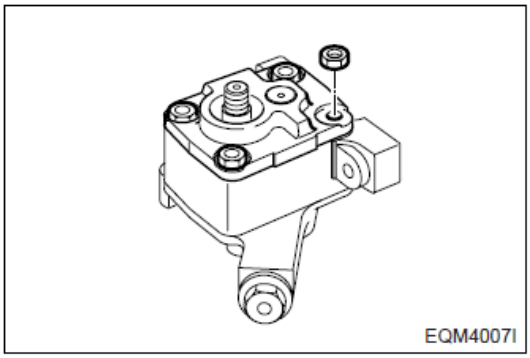

• Inspection and correction

(1) With steel rule and feeler gauge, measure the axial end play of the oil pump gear. Replace if the measured value is beyond the limit.

End play limit	0.025 ~ 0.089 mm

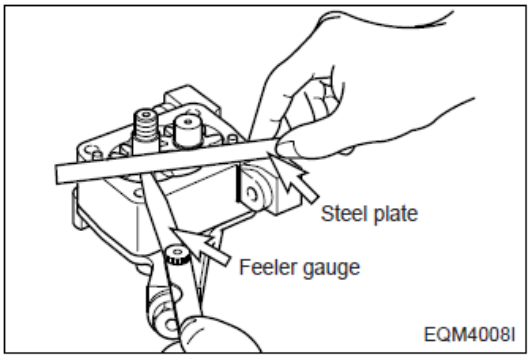

(2) With a feeler gauge, measure the amount of backlash between the oil pump drive gear and driven gear. Replace if the measured value is beyond the limit.

Backlash limit	0.50 ~ 0.64 mm

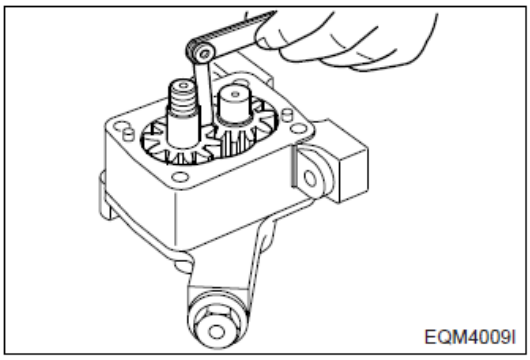

(3) Measuring clearance between drive shaft and bushing

a. Measure the outside diameters of the drive shaft and driven shaft, and replace if the measured values are less than the limit (N16.95mm)

Standard	ϕ16.95 ~ ϕ16.968 mm

b. Measure the inside diameter of the pump body bushing to determine the clearance between the bushing and shaft, and compare the measured value with the standard value to determine whether to replace or not.

Clearance	0.032 ~ 0.077 mm

• Reassembly

(1) For reassembly, reverse the disassembly sequence.

4.2.3 Diagnostics and troubleshooting

Complaints	Possible causes	Corrections
1. Oil consumption excessive	• Poor oil • Oil seal or packing leaky • Pistons or piston rings worn • Cylinder liner worn • Piston rings sticking • Valve guide oil seals or valve guides, or valve stem worn	• Use suggested oil • Replace • Replace pistons and/or piston rings • Replace cylinder liner • Replace pistons and/or piston rings • Replace
2. Oil pressure too low	• Poor oil • Relief valve sticking • Restrictions in oil pump strainer • Oil pump gear worn • Oil pump feed pipe cracked • Oil pump defective • Oil pressure gauge defective • Various bearings worn	• Use suggested oil • Replace • Clean strainer • Replace • Replace • Correct or replace • Correct or replace • Replace
3. Oil deteriorates quickly	• Restriction in oil filter • Gases leaking • Wrong oil used	• Replace filter element • Replace piston rings and cylinder liner • Use suggested oil

4.3 Fuel Injection Pump

4.3.1 General information of fuel system

The fuel system consists of the fuel tank, injection pump, injection nozzle, fuel filter, and fuel lines such as pipes and hoses necessary to connect those components.

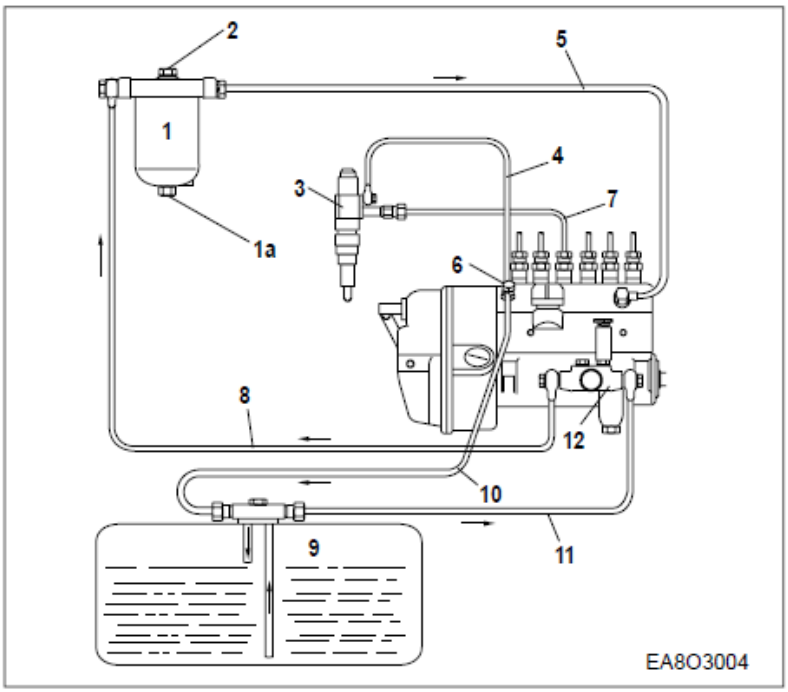

1. Fuel filter
1a. Water separater
2. Air bleeding screw (for fuel filter)
3. Injection nozzle
4. Overflow tube
5. Fuel pipe (filter→injection pump)
6. Overflow valve
7. Fuel injection pipe
8. Fuel pipe (manual pump→filter)
9. Fuel tank
10. Fuel return pipe
11. Suction pipe
12. Feed pump
13. Injection pump

4.3.2 Injection pump

The components relating to the injection pump should be serviced at regular intervals as the plunger and delivery valve may be worn after a given length of time for use and cause the deterioration of the engine.

Make sure that servicing should be performed at the professional maintenance shop as authorized by Bosch or Zexel Company.

For adjustment of fuel injection volume, refer to the ‘Specifications of fuel injection pump’ described on the following pages.

1) DE08TIS (225PS)

(1) Injection pump ass'y : 65.11101-7331 (106671-9960 ZEXEL)
- Injection pump : NP-PE6P120/721RS3S (106067-6280 ZEXEL)
- Governor : NP-EP/RLD300-1100P5JXR (105923-4810)
- Timer : 105681-2670
- Coupling : 105663-0470
- Plunger & barrel : 134153 -2420
- Delivery valve : 134180 - 0420

(2) Nozzle holder assembly : 65.10101-7087 (Y430 K02 049 BOSCH)
(3) Nozzle : 65.10102-6057 (0 433 171 694 BOSCH)
(4) Injection pipe : 65.10301-6049 , 65.10301-6052
(5) Firing order : 1 - 5 - 3 - 6 - 2 - 4
(6) Injection timing : BTDC 3°

(A) Test condition for injection pump	Nozzle & holder ass'y	Y430 k02 049 BOSCH	Opening pressure : 214±8 bar
	Injection pipe (ID x OD - L)	-	ϕ 2.2 x ϕ 6.35 – 650 mm
	Test oil	ISO4113	Temperature : 40 ± 5℃
(B) Engine standard parts	Nozzle & holder Ass'y	65.10102-6057	Nozzle (5 x ϕ 0.32)
		65.10101-7087	Opening pressure 1st : 184 kg/cm² 2nd : 286 kg/cm²
	Injection pipe (ID x OD - L)	65.10301-6076 65.10301-6077	ϕ 2.2 x ϕ 6.35 – 650 mm

Rack diagram and setting valve at each point

Power	Check point	Rack position (mm)	Pump speed (rpm)	Injection Q'ty on RIG (mm³ / 1,000st)		Press. (mmHg)
				(A) Test condition for inj. Pump	(B) Engine standard parts	
	A	R1(12.9)	1100	131 ± 2	-	-
	B	R1-1.5	600	(122)	-	-
	C	R2(R1-1.5)	500	(126)	-	(140)
	D	R2-1.0	500	(100)	-	50
	H	≠ 8.5	300	14.5 ± 1.5	-	-
	I	≠ R1	100	(160)	-	-

Governor weight	850 g	Lever ratio (min.)		1 : 1.1
Governor spring (outer)	k = 9.8 N/mm	Governor spring (inner)		k = 5.88 N/mm
Idle spring (outer)	k = 4.9 N/mm	Idle spring (inner)		k = 0.49 N/mm
Start spring	k = 0.049 N/mm	Delivery Valve	retraction pressure	0mm³, (ϕ8mm)
Boost spring	k = 23.5 N/mm		opening pressure	0.87 MPa
Plunger	ϕ12 Right hand 35 lead		spring	k=12.7 N/mm

(7) Governor adjustment (DE08TIS-225PS)

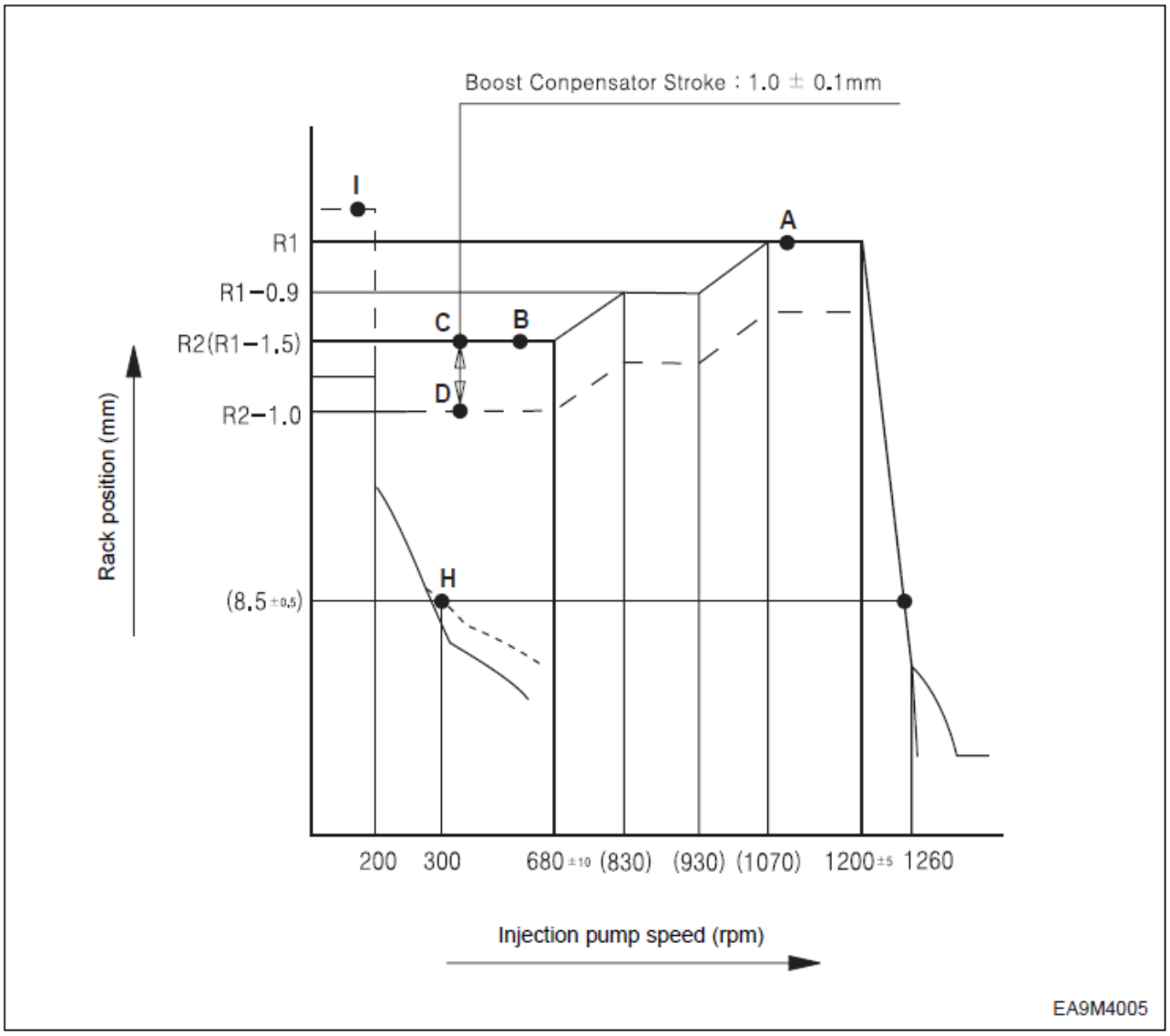

2) DE08TIS (240PS)

(1) Injection pump ass'y : 65.11101-7331 (106671-9960 ZEXEL)
- Injection pump : NP-PE6P120/721RS3S (106067-6280 ZEXEL)
- Governor : NP-EP/RLD300-1100P5JXR (105923-4810)
- Timer : 105681-2670
- Coupling : 105663-0470
- Plunger & barrel : 134153 -2420
- Delivery valve : 134180 - 0420

(2) Nozzle holder assembly : 65.10101-7087 (Y430 K02 049 BOSCH)

(3) Nozzle : 65.10102-6057 (0 433 171 694 BOSCH)

(4) Injection pipe : 65.10301-6049 , 65.10301-6052

(5) Firing order : 1 - 5 - 3 - 6 - 2 - 4

(6) Injection timing : BTDC 3°

(A) Test condition for injection pump	Nozzle & holder ass'y	Y430 k02 049 BOSCH	Opening pressure : 214±8 bar
	Injection pipe (ID x OD - L)	-	ϕ 2.2 x ϕ 6.35 – 650 mm
	Test oil	ISO4113	Temperature : 40 ± 5℃
(B) Engine standard parts	Nozzle & holder Ass'y	65.10102-6057	Nozzle (5 x ϕ 0.34)
		65.10101-7087	Opening pressure 1st : 184 kg/cm² 2nd : 286 kg/cm²
	Injection pipe (ID x OD - L)	65.10301-6076 65.10301-6077	ϕ 2.2 x ϕ 6.35 – 650 mm

Rack diagram and setting valve at each point

Power	Check point	Rack position (mm)	Pump speed (rpm)	Injection Q'ty on RIG (mm³ / 1,000st)		Press. (mmHg)
				(A) Test condition for inj. Pump	(B) Engine standard parts	
	A	R1(12.9)	1100	131 ± 2	-	-
	B	R1-1.5	600	(122)	-	-
	C	R2(R1-1.5)	500	(126)	-	(140)
	D	R2-1.0	500	(100)	-	50
	H	≠ 8.5	300	14.5 ± 1.5	-	-
	I	≠ R1	100	(160)	-	-

Governor weight	850 g	Lever ratio (min.)		1 : 1.1
Governor spring (outer)	k = 9.8 N/mm	Governor spring (inner)		k = 5.88 N/mm
Idle spring (outer)	k = 4.9 N/mm	Idle spring (inner)		k = 0.49 N/mm
Start spring	k = 0.049 N/mm	Delivery Valve	retraction pressure	0mm³, (ϕ8mm)
Boost spring	k = 23.5 N/mm		opening pressure	0.87 MPa
Plunger	ϕ12 Right hand 35 lead		spring	k=12.7 N/mm

(7) Governor adjustment (DE08TIS-240PS)

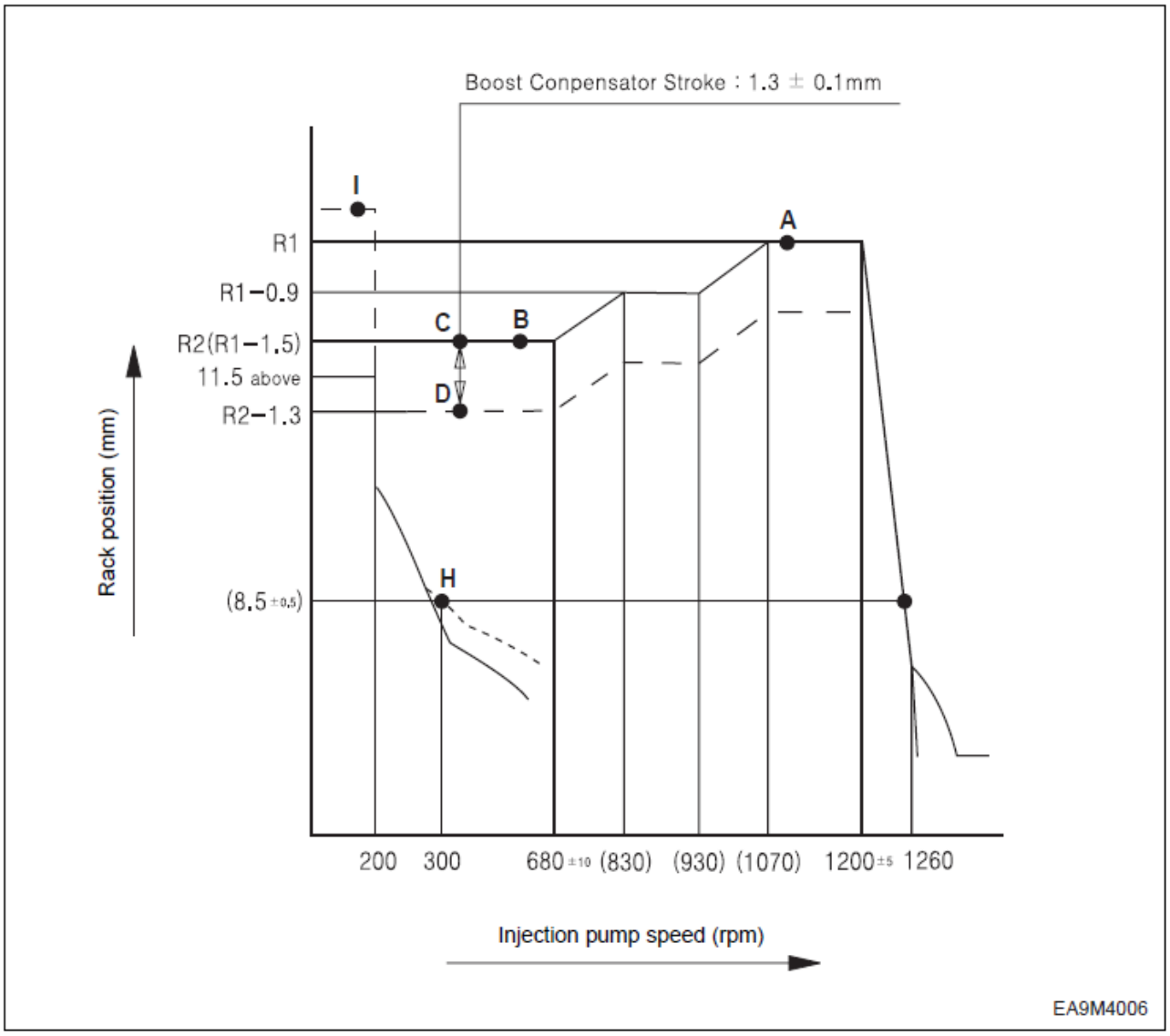

4.3.4 Fuel feed pump

1) General descriptions and construction

The P-type injection pump is mounted with K-ADS or KP type feed pump. These pumps have the same basic construction and operation, and the general descriptions of the KP type pump are given below:

The figures show its construction (right figure) and operation (below figure). The piston in the fuel feed pump is driven by the push rod and tappet via the camshaft of injection pump and performs reciprocating operation to control the suction and delivery of fuel. When the cam reaches the Bottom Dead Center as shown in the figure, the fuel is drawn in through the check valve on the inlet side.

The fuel pressurized as the cam rotates on flows through the check valve on the outlet side as shown in (B). If the feeding pressure increases abnormally, the spring is compressed, resulting in interrupting further delivery of fuel as shown in (C).

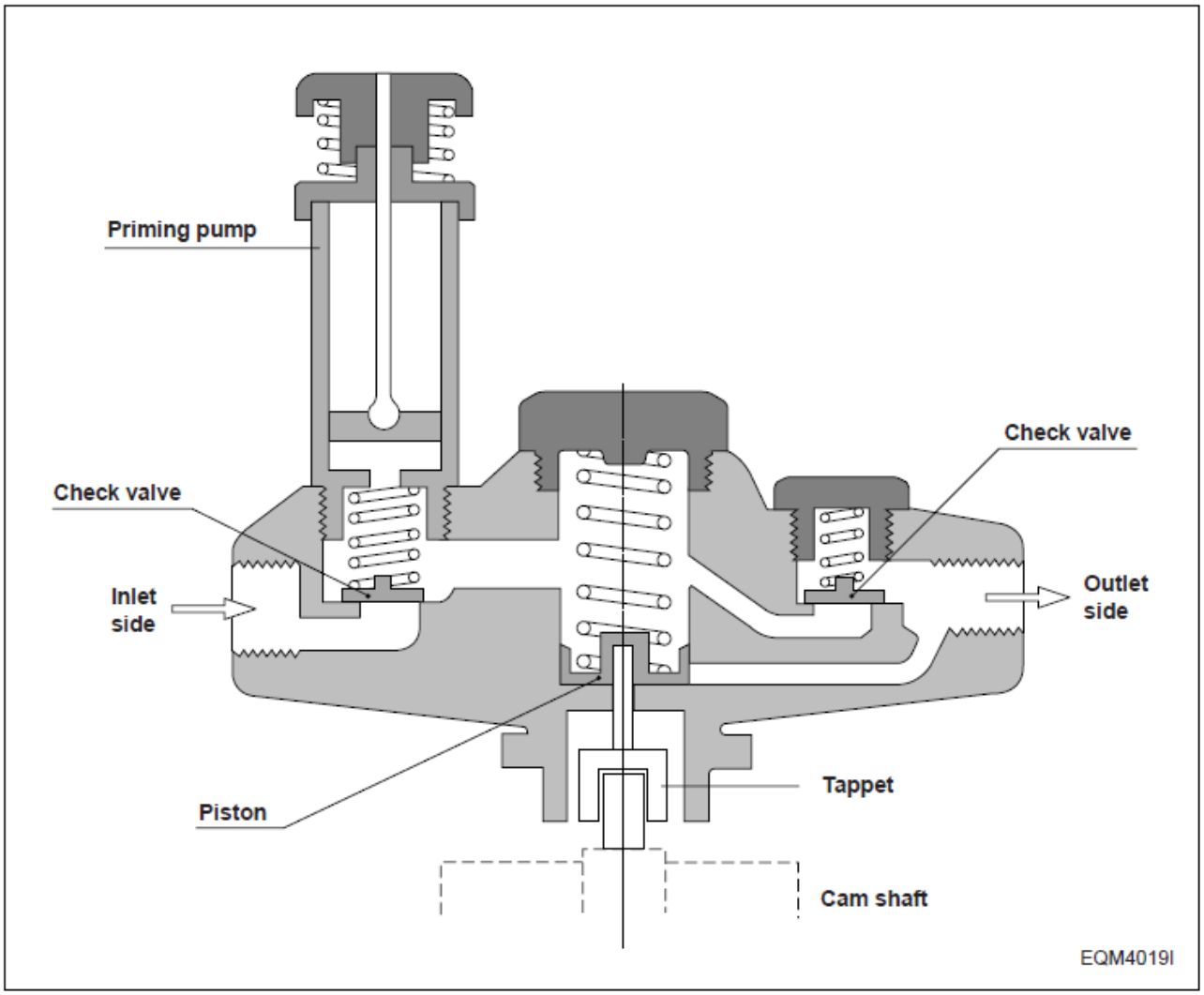

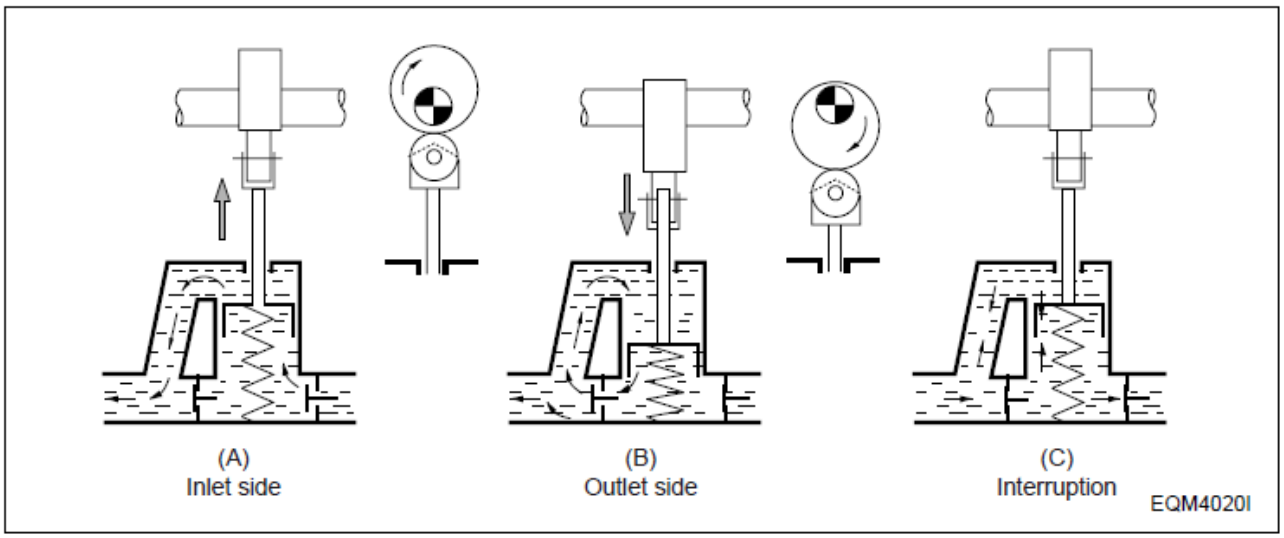

This feed pump is mounted with a priming pump designed to permit manual feeding of fuel from the fuel tank with the injection pump mounted in the engine. During the manual feeding operation, air must be bled from the fuel lines.

When using the priming pump, fix it securely to prevent the possible entry of moisture or other foreign substances in the inside of feed pump.

In addition, a strainer is fitted into joint bolt on the inlet side of the fuel feed pump to filtrate any foreign substances possibly mixed in fuel.

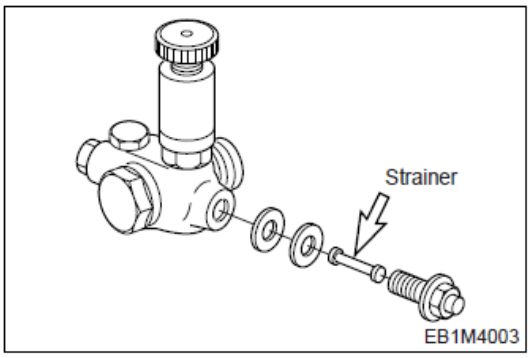

2) Disassembly

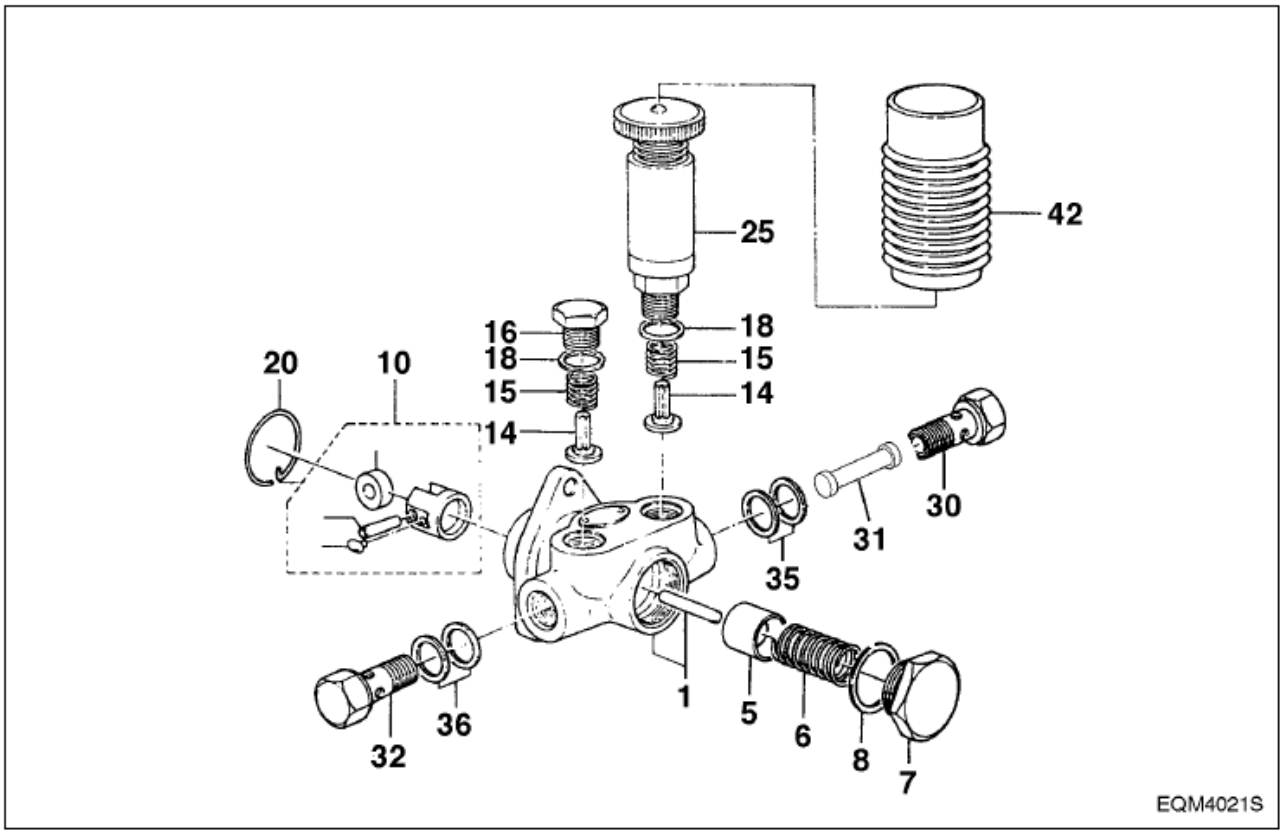

- Clamp the feed pump with a vise and disassemble the hollow screw (30, 32), strainer (31) and seal ring (35, 36).
- Take off the priming pump (25), plug (16), both seal rings (18), spring (15), and check valve (14).
- Take off the plug (7), seal ring (8), spring (6), and piston (5) on the piston side.
- Pull out the snap ring (20) holding the tappet (10).
- Disassemble the snap ring, then take off the tappet (10) and push rod (1).

3) Inspection

- If the check valve is damaged or scored on its seat face, replace it with a new one.
- Inspect the piston and tappet for damage.
- Replace the push rod if excessively worn, and replace together with the pump housing if required. The inspection for wear should be performed in the same procedure as for suction pressure test described below.

4) Reassembly

Reassembly operation is performed in reverse order of disassembly. All the gaskets must be replaced with new ones at reassembly.

5) Testing

(1) Suction capacity test

Connect one end of a hose to the inlet side of the feed pump and immerse the other end of it into the fuel tank as illustrated.

Hold the feed pump in position about 1 m above the level of fuel in the fuel tank.

Operate the tappet at the rate of 100 rpm and check to see if fuel is drawn in and delivered for 40 seconds or so.

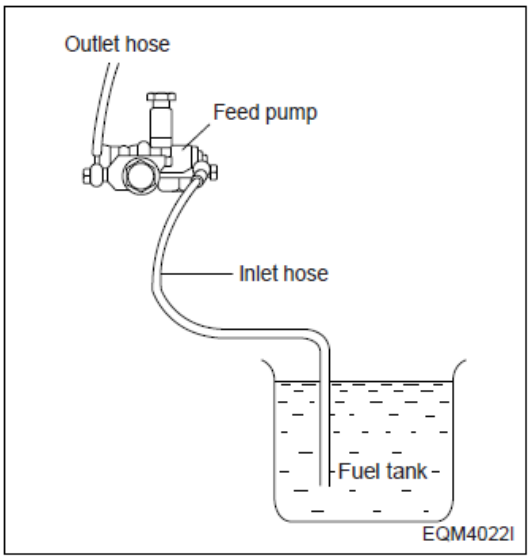

(2) Delivery test

Make a test with the feed pump mounted on a pump tester as illustrated. Operate the pump at the rate of 1,000 rpm and check to see if the pump delivery is more than 405 cc/15 seconds.

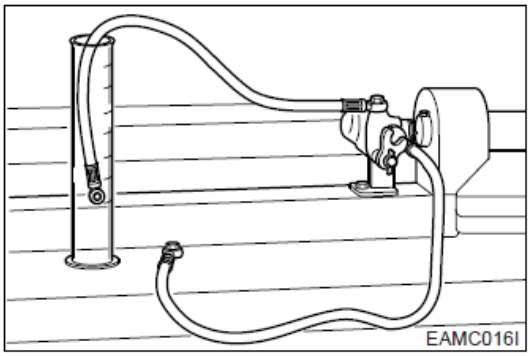

(3) Sealing test

Plug up the delivery port on the feed pump and apply compressed air of 2 kg/cm2 into the inlet side.

Submerge the feed pump in a container of diesel fuel and check for air leak.

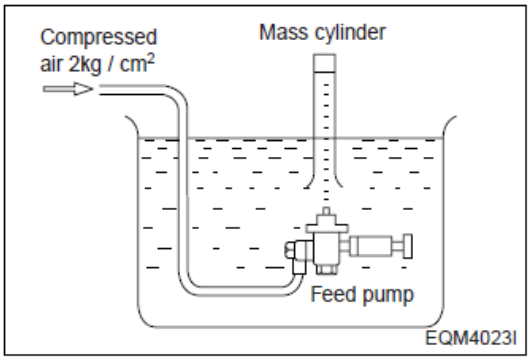

4.3.5 Injection nozzle

1) General descriptions

Pressurized fuel delivered from the fuel injection pump is sprayed into the combustion chamber past the injection nozzle at proper spray pressure and spray angle, then burnt completely to achieve effective engine performance.

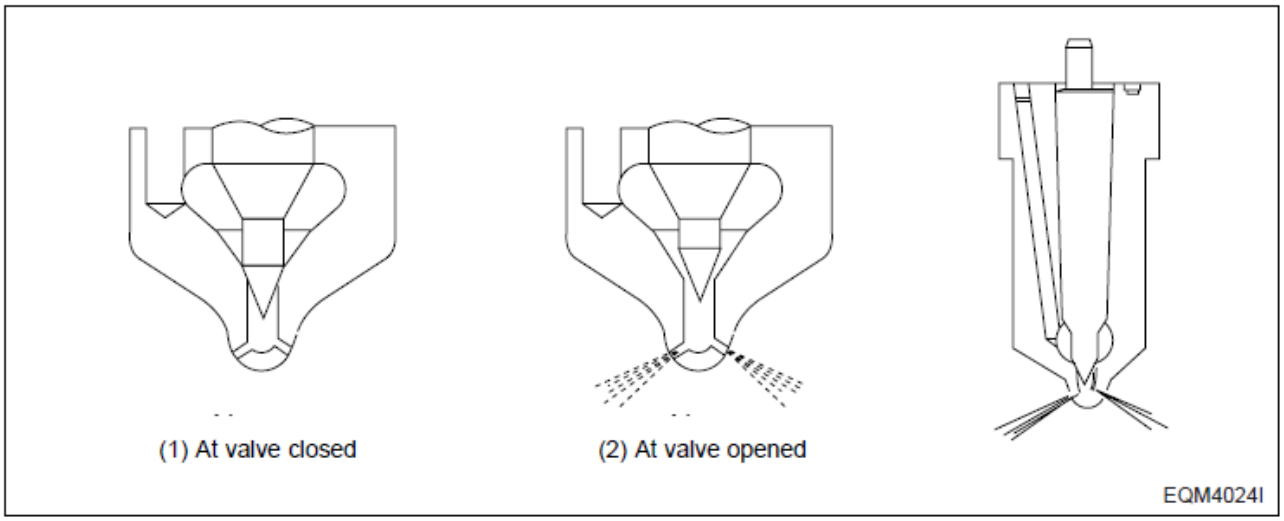

2) Construction

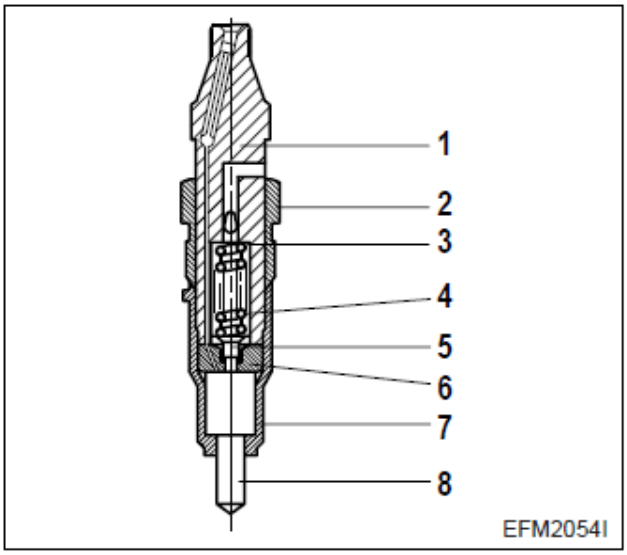

1. Nozzle holder
2. Union nut
3. Shim
4. Spring
5. Guide bush
6. Intermediate washer
7. Cap nut
8. Nozzle ass'y

3) Disassembly

- Clamp the nozzle assembly and remove the nozzle holder.
- Remove the nozzle nut and components inside.

4) Inspection

- Visually inspect the disassembled components for damage.

5) Reassembly

- After removing carbon deposit, submerge the nozzle in diesel oil and clean it.
- Replace all the seal rings with new ones.
- Assemble the parts and tighten them to specified torque.

6) Adjustment

- After reassembly, install the nozzle on a tester.
- With the adjusting screw loosened, operate the nozzle 2 ~ 3 times to bleed it.
- Operate the nozzle tester lever at the specified rate.
- Adjust the injection pressure to the standard pressure by spring tension shims.
- After adjusting the injection pressure, tighten the cap nut to specified torque.
- Re-check the injection pressure and see if the spray pattern is normal. Spray pattern should be uniform and free of spattering.

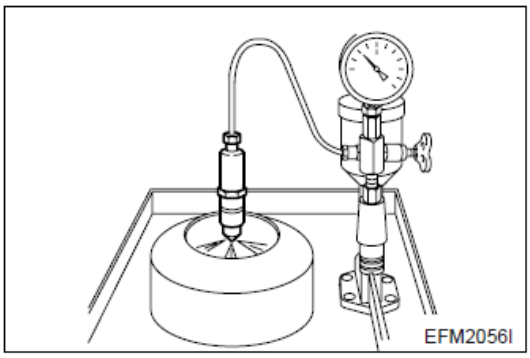

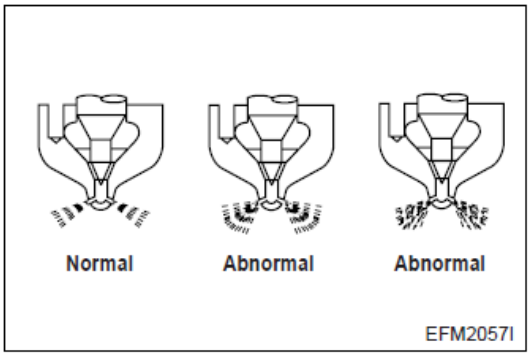

7) Testing

With the nozzle assembled to a nozzle tester and specified pressure applied, check the nozzle for fuel leakage.

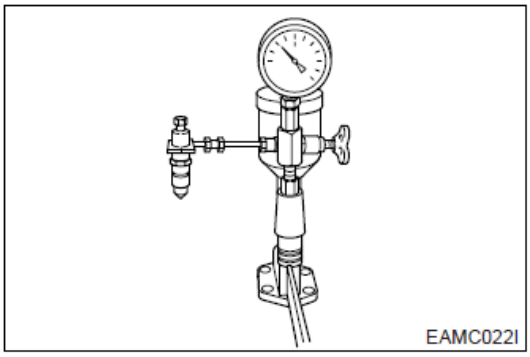

Engine Model	DE08TIS
Opening pressure	1st : 180 kg/cm² 2nd : 280 kg/cm²

4.3.6 Diagnostics and troubleshooting

Complaints	Possible causes	Corrections
1. Engine won't start 1) Fuel not being pumped out from feed pump	• Fuel pipes clogged or air into pipe line • Feed pump valve defective • Feed pump piston or Push rod sticking	Correct Replace Disassemble, correct
2) Fuel not being injected from injection pump	• Fuel filter element restricted • Air in fuel filter or injection pump • Plunger and/or delivery valve sticking or defective	Clean Bleed Disassemble, correct
3) Fuel injection timing Incorrect	• Injection pump not properly installed on pump bracket • Injection pump tappet incorrectly adjusted • Cams on cam shaft worn excessively	Check, correct Check, correct Replace
4) Injection nozzles inoperative	• Needle valves sticking • Fuel leaking past clearance between nozzle and needle valve • injection pressure incorrect	Correct or replace Correct or replace Adjust
2. Engine starts but stalls immediately	• Pipe from feed pump to injection pump clogged or filter clogged • Air in fuel • Feed pump delivery insufficient • Fuel delivery insufficient due to clogging of fuel tank air breather	Clean Bleed Disassemble, correct Replace breather
3. Engine lacks power	• Plunger worn excessively • Injection timing incorrect • Delivery valves defective • Nozzle leaks excessively • Nozzle not working normally	Replace Adjust Replace Correct or replace Disassemble, correct
4. Engine knocking	• Injection timing too fast • Nozzle injection pressure too high • Nozzles not working normally	Adjust Adjust Disassemble, correct
5. Engine knocks seriously producing excessive exhaust smoke	• Injection timing incorrect • Nozzle injection pressure too low • Nozzle spring broken • Nozzles not working normally • Plungers worn excessively • Delivery valves seat defective • Supply of fuel excessively	Adjust Adjust Replace Replace Adjust Replace Check feed pump

https://truckmanualshub.com/

Complaints	Possible causes	Corrections
6. Engine output unstable	• supply of fuel insufficient	Check feed pump
	• Air in fuel	Bleed
	• Water in fuel	Replace fuel
	• Operation of plungers unsmooth	Disassemble, correct
	• Movement of control rack sluggish	Disassemble, correct
	• Nozzles defective	Disassemble, correct
	• Injection starting pressure of each barrel incorrect	Adjust
	• Automatic timer defective	Disassemble, correct
7. Engine does not reach maximum speed	• Nozzles not working normally	Disassemble, correct
	• Governor defective	Disassemble, correct
8. Engine idling unstable sluggish	• Movement of control rod	Disassemble, correct
	• Operation of plungers unsmooth	Disassemble, correct
	• Control pinions not engaged with control rod correctly	Disassemble, correct

4.4 Turbocharger (D1146TI, DE08TIS)

4.4.1 Main data and specifications

1) Main data and specifications

Specification		D1146TI	DE08TIS	
			225PS	240PS
Turbocharger model		ALLIED SIGNAL 466721-12	HOLSET WH1E-8284AX/H14EC8	
At maximum output	Air pressure at compressor outlet	1.26 kg/cm²	1.33 kg/cm²	1.40 kg/cm²
	Air suction volume	16.8 m³/min	18.0 m³/min	18.4 m³/min
	Speed of turbine revolution	102,800 rpm	98,200 rpm	99,840 rpm
Maximum allowable speed		126,150 rpm	127,660 rpm	
Max. allowable temperature of exhaust gas at turbine inlet		750 °C	720 °C	
Lubricating system		External oil supply	External oil supply	
Weight		9.5 kg	14.4 kg	

2) Construction

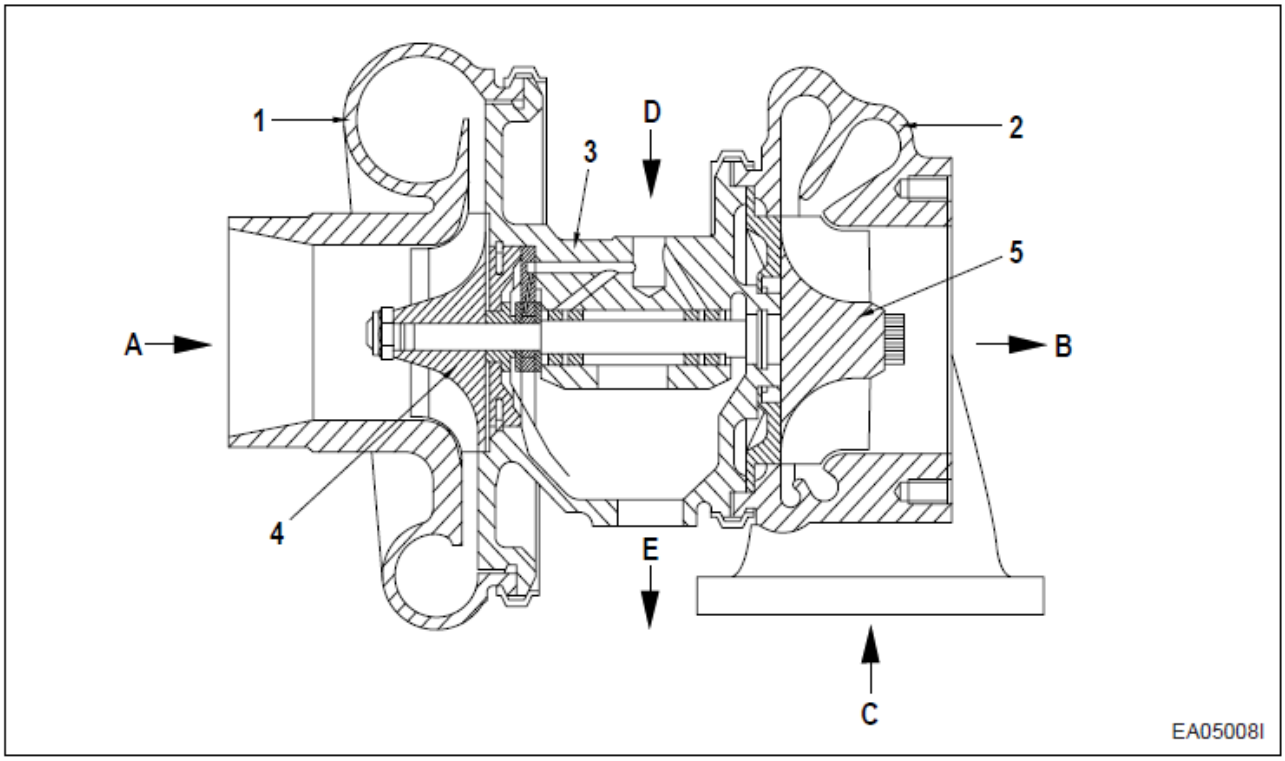

1. Impeller casing
2. Turbine casing
3. Bearing casing
4. Impeller
5. Turbine

A. Air inlet
B. Gas outlet
C. Gas inlet
D. Oil supply
E. Oil return

3) Construction

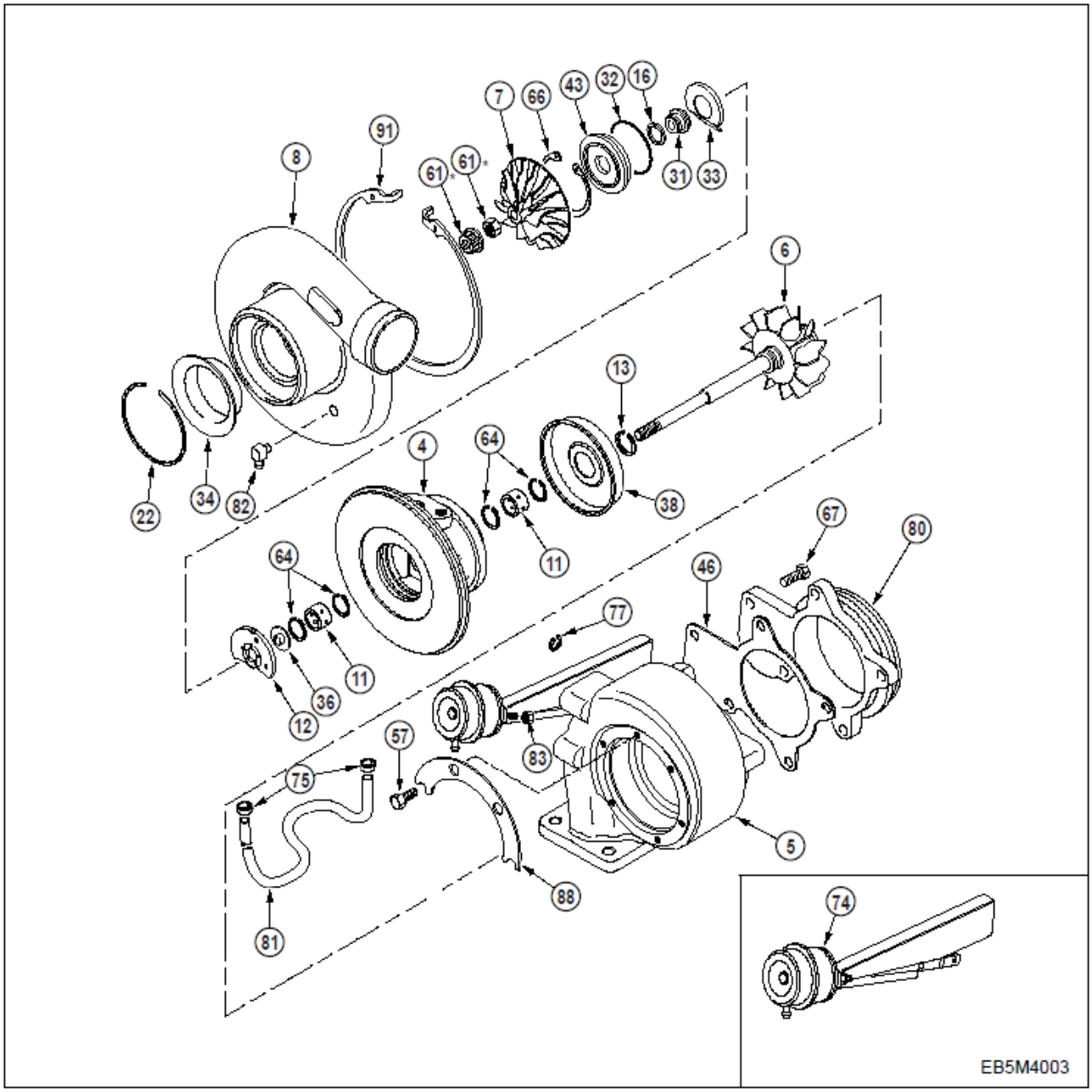

4	Bearing housing	32	O-ring	67	Hex bolt
5	Turbine housing	33	Oil baffle	74	Actuator ass`y
6	Turbine wheel ass`y	34	Inlet baffle	75	Hose clamp
7	Compressor wheel	36	Thrust collar	77	Actuator clip
8	Compressor housing	38	Heat protector cover	80	Cover plate
11	Journal bearing	43	Oil seal plate	81	Hose
12	Thrust bearing	46	Gasket	82	Elbow
13	Piston ring seal(turbine)	57	Hex bolt	83	Hex nut
16	Piston ring seal	61	Lock nut	88	Clamp plate
22	Retainer ring	64	Snap ring	91	Retaining ring
31	Oil stopper				

3) Operating principle

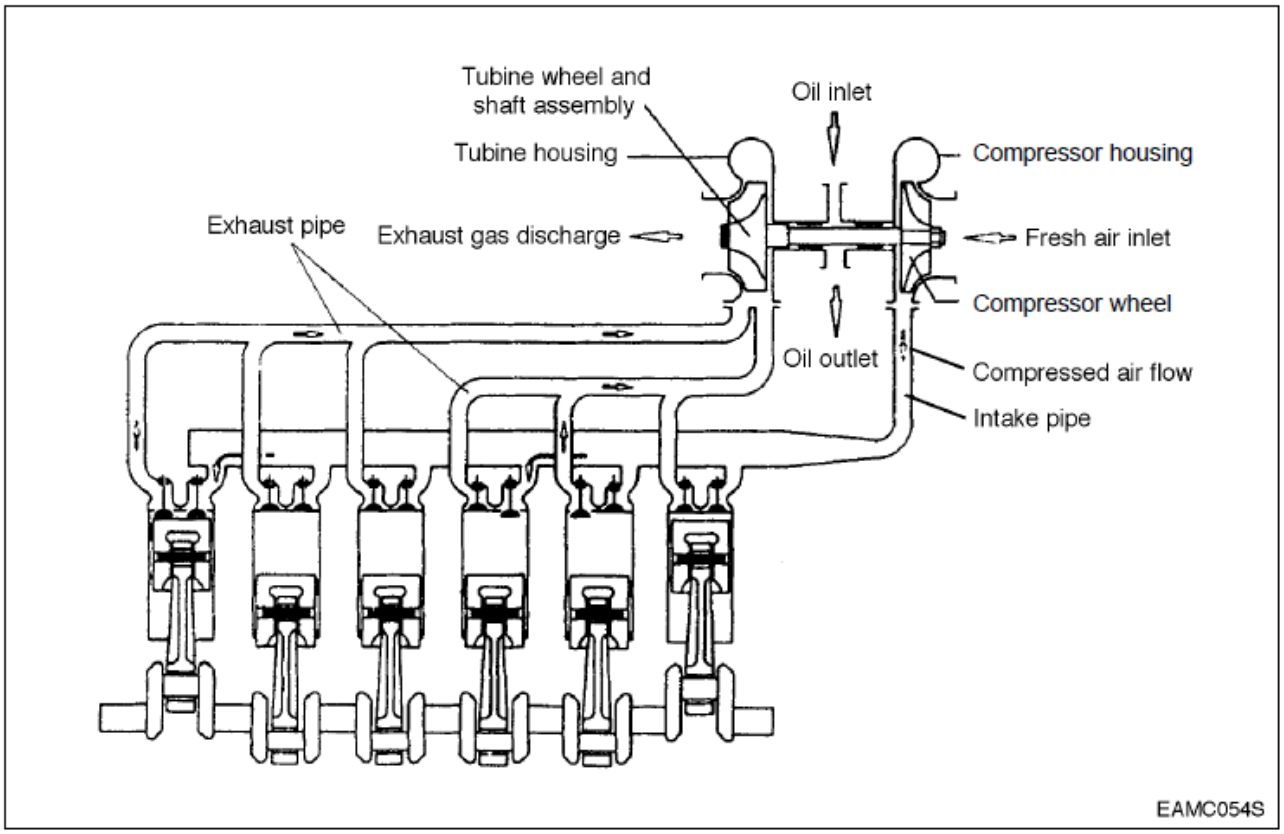

The turbocharger is a system designed to make use of the engine exhaust gas energy to charge high-density air into the cylinders, thereby to increase the engine output.

4.4.2 General descriptions

The engine output is determined by the fuel delivery volume and engine efficiency.

To burn the supplied fuel completely to change into effective power for the engine, the volume of air enough to burn the fuel completely should be supplied into the cylinders.

Therefore, the engine output is determined substantially by the cylinder capacity, and a greater volume of compressed air is charged into cylinders of given capacity, the greater engine output can be obtained as a greater volume of air charged into the cylinders burns so much more fuel.

As explained, the compressing of air to supply into the cylinders is called “Supercharging” and the making use of the energy of exhaust gas discharged from the combustion chamber to charge the compressed air into the cylinders is called “Turbocharging”.

4.4.3 Functions

1) Turbine

Exhaust gas discharged from the combustion chamber distributes its own energy to the turbine blades while passing the inside of the turbine housing, with the result that the turbine shaft can get rotating force. This is the operating principle of ‘turbine’, which is mounted with seal rings and heat protector to prevent exhaust gas from affecting the bearings adversely.

2) Compressor

The compressor, which is connected to the turbine over the one and same shaft to form a rotating body, takes in and compresses ambient air with rotating force transmitted from the turbine shaft. Then, the compressed air is delivered to the intake stake. This is the operating principle of the compressor.

3) Bearings

(1) Thrust bearing

The turbine wheel creates thrust force. Therefore, exercise care so that the shaft is not deviated from its the original position due to this thrust.

(2) Journal bearing

This journal bearing of floating type forms a dual oil film on both the inside and outside of the bearing so that the bearing can rotate independently. As the dual oil film plays a role as a damper, the sliding speed of the bearing surface becomes lower than the rotating speed of the shaft, resulting in assurance of stability in its movement.

4) Sealing-Compressor shaft

The compressor is of a dual construction type composed of seal plate and seal ring to prevent the leak of compressed air or lubricating oil.

4.4.4 Precautions for operation

1) Precautions for operation of engine

The following precautions should be observed when starting, operating, or stopping the engine:

Operations	Precautions	Reasons
When starting the engine	1) Check oil level 2) Crank the engine with starter to check the increase in oil pressure(until the needle of pressure gauge starts to move or pressure indicator lamp is actuated) before starting the engine. 3) When having replaced oil, oil filter element, or lubricating parts, or when having stopped the engine for extended period of time, or in a cold place, loosen the oil pipe connections and operate the starter motor until oil is discharged. After completing the operation, be sure to retighten the oil pipe connections portion before starting the engine.	2) Abrupt starting of the engine causes the engine to rotate with oil not being distributed not only to each part but also to the turbocharger, resulting in abnormal wear or seizure on the bearing due to insufficient supply of oil. 3) In the case of the engine stopped for extended time or in a cold place, oil fluidity within the pipes can be deteriorated
Immediately after starting	1) Run the engine at idle for 5 minutes after starting off. 2) Check each part for leakage of oil, gas, and air, and take proper measure.	1) Applying load abruptly If load is abruptly applied with the engine and turbocharger rotating unsmoothly, such parts that a sufficient amount of oil has not reached can be seized up. 2) Leakage of oil, gas, and air (especially, oil leak) causes drop in oil pressure and loss of oil results in seizure of the bearing.
During operation	Check the followings: 1) Oil pressure At idle: 0.8 kg/cm² or more At full load: 3.0 ~ 4.8 kg/cm² 2) If unusual sound or vibration is heard or felt, reduce engine revolutions slowly and locate the cause.	1) Excessively low oil pressure causes unusual wear or seizure of the bearing. Too high pressure causes oil leakage. 2) The engine is operated continuously with unusual sound or vibration not corrected, it can be damaged beyond repair.
When stopping the engine	1) Run the engine at idle for 5 minutes before stopping.	1) If the engine is put to a stop after being operated at high load, heat from the red-hot turbine blades is transmitted to the bearing portion and burns oil to cause seizure of the bearing metal and rotating shaft.

4.4.5 Walk-around check and servicing

As the condition of turbocharger depends greatly on how well the engine is serviced, it is very important to maintain the engine in accordance with the specified maintenance procedure.

1) Intake system

Pay particular attention to the air cleaner when servicing the intake system.

In the case of wet-type air cleaner, if the level of oil surface is lower than specified, cleaning effect is poor; if too high, the cleaner draws in oil to foul the case.

Especially, if the rotor is fouled, the sophisticatedly-tuned balance is broken to create vibration and to cause seizure and unusual wear to the bearing.

Therefore, it is very important to use a good quality air cleaner all the time.

In the case of dry-type air cleaner, it is essential to clean it to reduce intake resistance as much as possible.

2) Exhaust system

Pay particular attention to prevent gas leaks and seizure when servicing the exhaust system because leakage of exhaust gas from discharge pipes, turbocharger fixing portions, etc. lowers charging effect.

As such components as turbine chamber that becomes red-hot during operation use heat resisting steel nuts, do not interchange these nuts with ordinary steel nuts. In addition, apply anti-seizure coating to fixing nuts on the portions as designated.

3) Fuel system

If the full load stopper regulating the maximum injection volume and the maximum speed stopper regulating the maximum speed in the fuel injection pump are adjusted without using a pump tester, the turbocharger rotates at excessively rapid speed and may suffer damage.

Besides of it, if spray pattern from the fuel injection nozzles is bad or the injection timing is incorrect, temperature of exhaust gas rises up to affect the turbocharger adversely. To avoid such trouble, be sure to make a nozzle test.

4) Lubricating system

Pay particular attention to oil quality and oil filter change intervals when servicing the lubricating system. Deteriorated engine oil affects adversely not only the engine but torso the turbocharger. Suggested engine oils for the turbocharger-mounted engine are as follows:

Engine model	Recommend oil	
	SAE No.	API No.
D1146 D1146TI	SAE15W40	above CD or CE
DE08TIS	SAE15W40	ACEA-E2 or ACEA-E3 (API CH-4)

* If long oil change intervals are to be used, ACEA-E3 oil must be used.

4.4.6 Periodical checking and servicing

Make it a rule to check the turbocharger assembly for condition and contamination periodically.

1) Guide for checking the rotor for rotating condition

The inspection of the rotor assembly for rotating condition should be performed by the degree of unusual sound. If a sound detecting bar is used, install its tip on the turbocharger housing and increase the engine revolutions slowly. If a high-pitch sound is heard continuously, it means that the rotor assembly is not normal. In this case, as the metal bearing and rotor are likely to be in abnormal conditions, the turbocharger should be replaced or repaired.

2) Guide for checking rotor end play

Disassemble the turbocharger from the engine, then check the rotor axial play and radial play.

When disassembling the turbocharger, be sure to plug the oil inlet and outlet ports with taps, etc.

(1) Rotor axial play

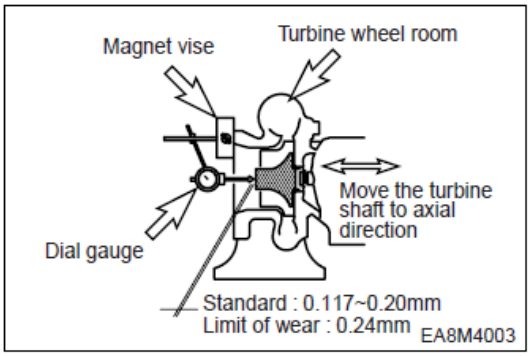

(2) Rotor radial play

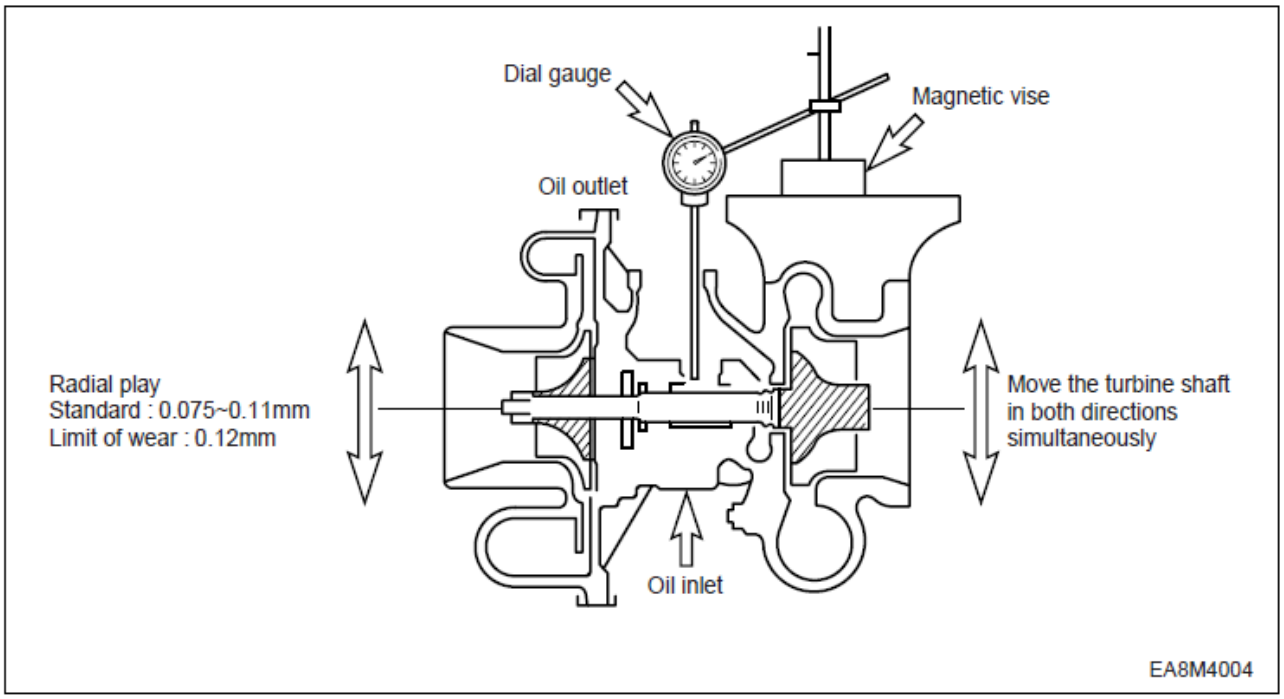

(3) If the measured axial and radial plays are beyond the limit of wear, replace or repair the turbocharger.

3) Guide for disassembling/cleaning and checking the turbocharger

First, disassemble the turbocharger from the engine and clean/check it with the oil inlet and outlet plugged with tape and so on.

4) Precautions for reassembling the turbocharger onto the engine

For reassembly of the turbocharger or handling it after reassembly operation, be sure to observe the following precautions:

Especially, exercise extreme care to prevent foreign matters from entering the inside of the turbocharger.

(1) Lubricating system

- Before reassembling the turbocharger onto the engine, inject new oil in the oil inlet port and lubricate the journal and thrust bearings by rotating them with hand.
- Clean not only the pipes installed between the engine and oil inlet port but also the oil outlet pipe and check them for damage or foreign matters.
- Assemble each joint on oil pipes securely to prevent oil leaks.

(2) Intake system

- Check the inside of the intake system for foreign matters.
- Assemble each joint on the intake duct and air cleaner securely to prevent air leaks.

(3) Exhaust system

- Check the inside of the exhaust system for foreign matters.
- Be sure to use heat resisting steel bolts and nuts. Do not interchange them with ordinary steel bolts and nuts when performing reassembly operation.
  Apply anti-seizure coating to the bolts and nuts.
- Assemble each joint on the exhaust pipes securely to prevent gas leaks.

4.4.7. Diagnostics and troubleshooting

Complaints	Possible causes	Corrections
1. Excessive black smoke	1) Air cleaner element clogged	Replace or clean
	2) Restrictions in air duct	Check and correct
	3) Leakage at intake manifold	Check and correct
	4) Turbocharger seized up and not rotating	Disassemble/repair or replace
	5) Turbine blades and compressor blades coming in contact with each other or damaged	Disassemble/repair or replace
	6) Exhaust piping deformed or clogged	Check and correct
2. Excessive white smoke	1) Oil leak into turbine and compressor	Disassemble/repair or replace
	2) Worn or damaged seal ring due to excessive wear of bearing	Disassemble/repair or replace
3. Low engine output	1) Gas leak at each part of exhaust system	Check and correct
	2) Air cleaner element restricted	Replace or clean
	3) Turbocharger fouled or damaged	Disassemble/repair or replace
	4) Leakage at discharge port on compressor side	Check and correct
4. Unusual sound or vibration	1) Rotor assembly coming in contact	Disassemble/repair or replace
	2) Unbalanced rotation of rotor	Disassemble/repair or replace
	3) Seized up	Disassemble/repair or replace
	4) Each joint loosened	Check and correct

https://truckmanualshub.com/

5 SPECIAL TOOL LIST

No.	Part No.	Figure	Tool Name	Remark
1	EF.123-014	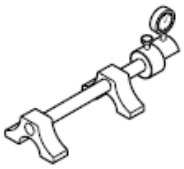	Injection pump setting ass'y	D1146/TI
	EF.123-015			DE08TIS
2	EF.123-127	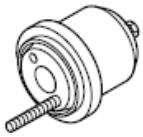	Oil seal insert ass'y (Front)	CR : made USA (up to 2000. Apr.)
	EF.123-173			NOK : made Japan (From 2000. may.)
3	EF.123-043	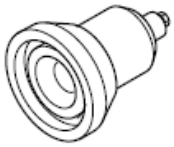	Oil seal insert ass'y (Rear)	CR : made USA (up to 2000. Apr.)
	EF.123-184			NOK : made Japan (From 2000. may.)
4	EF.123-052	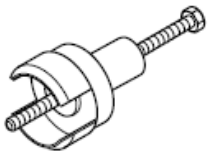	Oil seal puller ass'y (Front)	
5	EF.123-048	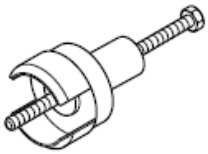	Oil seal puller ass'y (Rear)	
6	EU.2-0530	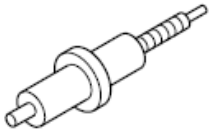	Cylinder pressure tester adapter	
7	EU.123-086	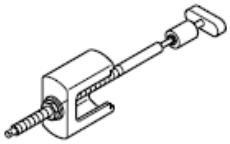	Cylinder liner puller ass'y	
8	EF.123-179	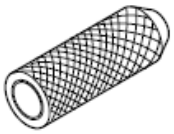	Valve stem seal punch	
9	EU.2-0131	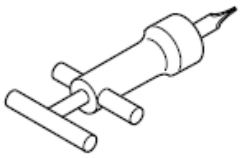	Valve clearance adjust ass'y	

No.	Part No.	Figure	Tool Name	Remark
10	EF.123.-065	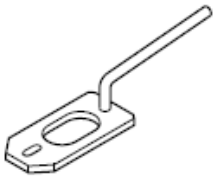	Valve spring press	
11	EU.2-0647	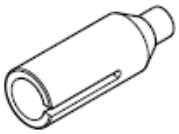	Crankshaft gear punch	
12	EF.123-064		Piston sleeve	D1146/TI DE08TIS
	EF.120-208			All engine
13	60.99901-0027	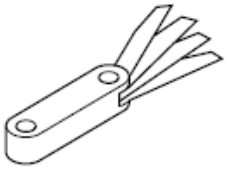	Feeler gauge	
14	T7610001E	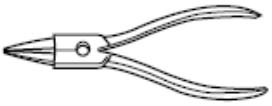	Snap ring plier	
15	T7621010E		Piston ring plier	

APPENDIX

• Tightening torque for major parts

Major Parts	Screw (Diameter x pitch)	Strength (grade)	Tightening Torque	Remarks
Cylinder head bolt	M14 × 1.5	10.9T	1st : 6.0 kg•m 2nd : 180° 3rd : 150° (Angle method)	
Connecting rod bearing cap bolt	M14 × 1.5	12.9T	1st : 10 kg•m 2nd : 15 kg•m 3rd : 18 kg•m	
Crankshaft main bearing cap bolt	M16 × 1.5	12.9T	1st : 15 kg•m 2nd : 25 kg•m 3rd : 30 kg•m	
Balance weight fixing bolt	M12 × 1.5	10.9T	9.0 kg•m	
Flywheel housing fixing bolt	M14 × 1.5	10.9T	8.0 kg•m	
Flywheel fixing bolt	M14 × 1.5	10.9T	21.5 kg•m	
Crankshaft pulley fixing bolt	M12 × 1.5	10.9T	13.4 kg•m	
Oil spray nozzle	M14 × 1.5	-	7.0 kg•m	

• Tightening torque for fuel injection pump system

Major Parts	Screw (Diameter x pitch)	Strength (grade)	Tightening Torque	Remarks
Injection nozzle nut	M28 × 1.5	-	7.0 ± 0.5 kg•m	
Injection pump bracket bolt	M10	8.8T	4.4 kg•m	
Injection pump coupling bolt	-	-	6.0 ~ 6.5 kg•m	
Injection pump driving gear nut	M24 × 1.5	8.8T	25.0 kg•m	
Injection pipe nut	M14 × 1.5	8.8T	3.0 kg•m	
Injection pump delivery valve holder	-	-	11.0 ~ 12.0 kg•m	

• Standard bolt tightening torque table

Refer to the following table for bolts other then described above

Diameter × pitch (mm)	Degree of strength										
	3.6	4.6	4.8	5.6	5.8	6.6	6.8	6.9	8.8	10.9	12.9
	(4A)	(4D)	(4S)	(5D)	(5S)	(6D)	(6S)	(6G)	(8G)	(10K)	(12K)
	Limit value for elasticity (kg/mm²)										
	20	24	32	30	40	36	48	54	64	90	108
	Tightening torque (kg•m)										
M5	0.15	0.16	0.25	0.22	0.31	0.28	0.43	0.48	0.5	0.75	0.9
M6	0.28	0.30	0.45	0.4	0.55	0.47	0.77	0.85	0.9	1.25	0.5
M7	0.43	0.46	0.7	0.63	0.83	0.78	1.2	1.3	1.4	1.95	2.35
M8	0.7	0.75	1.1	1	1.4	1.25	1.9	2.1	2.2	3.1	3.8
M8 × 1	0.73	0.8	1.2	1.1	1.5	1.34	2.1	2.3	2.4	3.35	4.1
M10	1.35	1.4	2.2	1.9	2.7	2.35	3.7	4.2	4.4	6.2	7.4
M10 × 1	1.5	1.6	2.5	2.1	3.1	2.8	4.3	4.9	5	7	8.4
M12	2.4	2.5	3.7	3.3	4.7	4.2	6.3	7.2	7.5	10.5	12.5
M12 × 1.5	2.55	2.7	4	3.5	5	4.6	6.8	7.7	8	11.2	13.4
M14	3.7	3.9	6	5.2	7.5	7	10	11.5	12	17	20
M14 × 1.5	4.1	4.3	6.6	5.7	8.3	7.5	11.1	12.5	13	18.5	22
M16	5.6	6	9	8	11.5	10.5	17.9	18.5	18	26	31
M16 × 1.5	6.2	6.5	9.7	8.6	12.5	11.3	17	19.5	20	28	33
M18	7.8	8.3	12.5	11	16	14.5	21	24.2	25	36	43
M18 × 1.5	9.1	9.5	14.5	12.5	18.5	16.7	24.5	27.5	28	41	49
M20	11.5	12	18	16	22	19	31.5	35	36	51	60
M20 × 1.5	12.8	13.5	20.5	18	25	22.5	35	39.5	41	58	68
M22	15.5	16	24.5	21	30	26	42	46	49	67	75
M22 × 1.5	17	18.5	28	24	34	29	47	52	56	75	85
M24	20.5	21.5	33	27	40	34	55	58	63	82	92
M24 × 1.5	23	25	37	31	45	38	61	67	74	93	103

Others:

1. The above torque rating have been determined to 70% or so of the limit value for bolt elasticity.
2. Tension is calculated by multiplying tensile strength by cross section of thread.
3. Special screws should be tightened to 85% or so of the standard value.

For example, a screw coated with MoS2 should be tightened to 60% or so of the standard value.

• Tightening torque for hollow screw (4-hole)

Material	M8	M10	M12	M14	M16	M18	M22	M26	M30	M38
SM25C	-	1.6	2.5	3.5	4.5	5.5	9.0	13.0	18.0	30.0
*SUM22L	0.8	1.8	3.0	4.0	5.5	6.5	11.0	16.0	20.0	35.0
STS304	0.8	1.8	3.0	4.0	5.5	6.5	11.0	16.0	20.0	35.0

*: Adopted in DOOSAN engine

• Maintenance specification table

Group	Part	Inspection Item		Stand value for assembly	Limit for use	Correction	Remark
Engine body	Cylinder block & liner	Inside diameter of Cylinder liner for wear		ϕ111 ~ ϕ111.022	ϕ111.122	Replace liner	Measure unworn portion beneath the rim of the upper side
		Amount of liner projection		0.03 ~ 0.08	-	Need amount of projection without fail	Projection difference between adjacent liners : 0.15 ↓
		The flatness of upper surface of cylinder block		0.05	-	Correct with a surface grinder	Referenced length : 200mm
		Hydraulic test for 1 minute (kg/cm²)		4		Replace if leaky	
	Cylinder head & valve	Valve seat depression	Intake	0~0.3	0.55	Replace valve seat	
			Exhaust	0~0.3	0.55		
		Cylinder head height		109.9 ~ 110.1	108.4	Replace cyl. head	
		Hydraulic test for 1 minute (kg/cm²)		4	-	Replace if leaky	Water temp. 70°C
Major moving parts	Piston	Outer dia. piston		ϕ110.883~ ϕ110.897		Replace liner	Measure at 13mm away from lower surface of piston
		Clearance between piston and liner		0.103~0.139	0.3	Replace one worn more	
		Width of piston ring grooves	Top ring	-		Replace piston if groove width is beyond specified value	
			2nd ring	3.06~3.08			
			Oil ring	4.04~4.06			
		Piston projection from cylinder block upper surface		0~0.12		Must exist	Measure unworn portion beneath the rim of the upper side
		Permissible weight difference of each piston		±15 g	96 g ↓	Replace piston	
	Piston ring	Piston ring gap	Top ring	0.40~0.60	1.5	Replace ring	Standard gauge inside diameter : ϕ108
			2nd ring	0.40~0.60	1.5		
			Oil ring	0.30~0.50	1.5		
		Piston ring side clearance	Top ring	-	-	Replace ring or piston	Limit for use if for standard clearance
			2nd ring	0.07~0.102	0.15		
			Oil ring	0.05~0.085	0.15		
		Direction of ring gap		-	-	Cross Install by 120°	
	Piston pin	Outer diameter of piston pin		ϕ41.994 ~ ϕ42	41.94	Replace piston pin	
		Clearance between piston pin and its bush		0.003 ~ 0.015	0.08	Replace one worn more	

(unit : mm)

Group	Part	Inspection Item	Stand value for assembly	Limit for use	Correction	Remark
Major moving parts	Crank shaft	Radial run-out of journal and pin	-	0.01	Correct with a grinder	Measure In horizontal installing the bearing and releasing one bolt
		Outside diameter of journal	ϕ83.966 ~ ϕ83.988	ϕ83	Use under sized bearings respectively(0.25, 0.5, 0.75, 1.0)	
		Outside diameter of pin	ϕ70.971~ ϕ70.990	ϕ70		
		Ellipticity of journal and pin	0.008	0.025		
		Concentricity of journal and pin	0.01	0.03		
		Taper of journal and pin	0.02	0.03		
		Clearance between crankshaft and bearing	0.052~0.122	0.25	Replace bearing	Measure at crown part not parting line
		End play of crankshaft	0.15~0.325	0.5	Replace thrust bearing	
		Run-out of crankshaft	0.06	0.1 ↓	Adjust by a press if bended	Measure at No.4 bearing (No. 1 & 7 bearing supported)
		Balance of crankshaft(g•cm)	60 ↓	60 or less	Check dynamic balance	Measure at 400 rpm
		Torque valve journal bearing cap bolt (kg•m)	30		Coat the bolt with engine oil	Clean out foreign objects on joining surface
		Crush height of journal bearing	0.08~0.110	-		Measure after tightening metal cap and releasing one stud
		Oil seal for wear (crank shaft rear)	-	-	Replace oil seal if oil leaking	
	Connec-ting rod	End play of con-rod	0.170 ~ 0.248	0.50	Replace con-rod	
		Clearance between con-rod bearing and crank pin	0.034 ~ 0.098	0.25	Replace bearing	
		Clearance between small end bush & piston pin	0.050~0.081	0.12		
		Crush height of con-rod bearing	0.04~0.07	-		Measure after installing the bearing and releasing one bolt
		Side clearance of big-end and small-end	-	0.50	Replace con-rod	
		Allowable weight difference per con-rods	30 g ↓	-		
		Torque valve of con-rod bearing cap bolt (kg•m)	18	-	Coat the bolt with engine oil	Clean out foreign objects on joining surface
	Cam shaft	Diameter of cam shaft journal	ϕ57.86~ϕ57.88	ϕ57.52		
		Clearance between cam shaft and cam bush	0.12~0.17	0.24	Replace cam bush	
		End play of camshaft	0.28~0.43	0.6	Replace thrust washer	
		Run-out of camshaft	0.05	0.2	Correct or replace the cam shaft	

(unit : mm)

Group	Part	Inspection Item		Stand value for assembly	Limit for use	Correction	Remark
Major moving parts	Timing gear	Clearance between idle shaft bush and idle shaft		0.025~0.091	0.15		
		End play of idle gear shaft		0.043~0.167	0.3	Replace thrust collar	
		Back-lash between gears(cam, idle, crank and injection)		0.16~0.28	0.35	Correct or replace gear	
Valve system	Valve	Diameter of intake valve stem		ϕ8.950~ϕ8.970	ϕ8.93	Replace valve & valve guide	When replacing valve, replace valve guide alike
		Diameter of exhaust valve stem		ϕ8.935~ϕ8.955	ϕ8.91		
		Clearance between valve stem and valve guide	Intake	0.030~0.065	0.15	Replace valve or valve guide	Replace one worn more
			Exhaust	0.045~0.080	0.15		
		Thickness of valve head	Intake	2.7	Max. 1	Replace valve	
			Exhaust	2.2			
		Clearance between valve guide and valve spring seat	Intake	2.0	-		
			Exhaust	2.0	-		
		Clearance between valve guide and cyl. head installing hole		-0.039~-0.010 (Press fit)			Spread oil over valve guide and press it into the hole
		Concentricity between valve stem and valve head		0.05			Without spring seat
		Intake valve spring	Free length(mm)	Approx.64	-	Replace valve spring	
			Tension force (when pressed to 41mm)kg	67~73	66.5		
			Squareness (along free length direction)	1.5°			
		Exhaust valve spring	Inner: Free length (mm)	D1146/TI : 60 DE08TIS : 73.8		Replace valve spring	
			Inner: Tension force(when pressed to 38mm)kg	D1146/TI : 26.9~30.3 DE08TIS : 36~40	-		
			Inner: Squreness (along free length direction)	1.5°			
			Outer: Free length	D1146/TI : 71 DE08TIS : 77.7		Replace valve spring	
			Outer: Tension force(when pressed to 41mm)kg	D1146/TI : 62.7~69.3 DE08TIS : 71~79	-		
			Outer: Squreness (along free length direction)	1.5°	-		

(unit : mm)

Group	Part	Inspection Item		Stand value for assembly	Limit for use	Correction	Remark
Valve system	Tappet	Valve clearance (at cold)	Intake	0.3	-	Adjust	
			Exhaust	0.3	-		
		Joining surface of valve stem and rocker arm bush		-	-	Grind or replace if severely pitted on tip of rocker arm and stem	
		Clearance between rocker arm shaft & rocker arm bush		0.040~0.113	0.2	Replace bush or shaft	
		Diameter of rocker arm shaft for wear		ϕ23.939 ~ ϕ23.96	ϕ23.75	Replace	
		Run-out of push rod		-	0.3	Replace	
		Clearance between tappet & tappet hole of cyl.bolck		0.035 ~ 0.077	0.15	Replace tappet	
		Diameter of tappet		ϕ19.944 ~ ϕ19.965	-	Replace tappet	
		Tappet face in contact with cam		-	-	Replace if severely worn or deformed	
Lubricating system	Oil pressure	Oil pressure (at normal speed)kg/cm²		4.8 or less	3.5	Check oil leakage and clearance between each part	
		Oil pressure (idling)kg/cm²		0.8~1.4	0.6	Use recommended oil	
	Oil temperature	Max. permissible oil temperature (˚C)		-	105		Must not exceed this valve
		Permissible oil temperature in short time (˚C)		-	120		
	Oil pump	Axial play of oil pump gear		0.055 ~ 0.105	-	Replace gear or cover	
		Clearance between gear shaft & oil pump cover hole		0.032 ~ 0.077	-		
		Clearance between drive gear shaft and cover hole		0.040 ~ 0.094	-	Replace bush or cover	
		Diameter of gear shaft		ϕ16.950 ~ ϕ16.968		Replace gear shaft	ϕ17e7
		Diameter of driving gear bush		ϕ28.000 ~ ϕ28.033		Replace bush	ϕ28e7
		Backlash	Between crank gear & idle gear	0.15 ~ 0.25	0.8	Adjust back-lash	
			Between oil pump drive gear & idle gear	0.15 ~ 0.25	0.8		

(unit : mm)

Group	Part	Inspection Item	Stand value for assembly	Limit for use	Correction	Remark
Lubricating system	Valve opening pressure	Oil pressure control valve (kg/cm²)	4.0 ~ 4.8	-	Replace valve	
		By-pass valve for filter element (kg/cm²)	1.8 ~ 2.3	-		
		By-pass valve for full oil filter (kg/cm²)	4.0 ~ 4.8	-		
		Relief valve for oil pump (kg/cm²)	8.5 ~ 11.5	-	Replace valve	
		Spray nozzle control valve (kg/cm²)	1.5 ~ 1.8	-		
	Oil filter	Damage of oil filter cartridge	-	-	Clean or replace	
Cooling system	Radiator	Radiator & water pump for corrosion, damage & improper connecting	-	-	Correct or replace	
		Test for leakage (air pressure) (kg/cm²)	1.0	-	Submerge in water and replace if air bubbles found	
		Pressure valve for opening pressure (kg/cm²)	0.5	-		
		Negative pressure valve for opening pressure (mmHg)	20	-		
	Water pump	Delivery volume l/min - Engine speed 2,700rpm - Water temp.80 ˚C - Back pressure : 0.8 kg/cm²	280	-	Check the water passage	For any restrictions
		Clearance between impeller & housing	0.35	-	Replace if impeller & housing are damaged	
		Perpendicularity of pulley	0.3		Adjust by a bench press	
		Fan belt depression(with thumb) mm	Approx. 15		Adjust	
	Cooling water temp	Operating temperature (permissible temp.) ˚C	79 ~ 95	-	Must not exceed this valve	
		Permissible temperature in a short time. ˚C	-	105		
	Thermostat	Thermostat opening temp. ˚C (under atmospheric pressure)	79	-	Replace	Type-II - Opening temp. : 83˚C - Full opening temp. : 95˚C
		Full opening temp. ˚C	94	-	Replace if defective Stroke min. 8mm	

(unit : mm)

Group	Part	Inspection Item	Stand value for assembly	Limit for use	Correction	Remark
Fuel system	Piping & others	Fuel pipe, injection pipe & nozzle holder for damage, cracks, improper packing, etc.	-	-	Repair or replace	
		Fuel filter cartridge for damage or dimple	-	-	Replace cartridge	
	Injection pressure of injection nozzle (kg/cm^2)		D1146 : 210 D1146TI : 214 DE08TIS : 1st 184 2nd 286	-	Adjust by shim	
	Operating pressure of overflow valve (kg/cm^2)		1.0 ~ 1.5	-	Replace valve	
	Projection height of nozzle from the cyl. head surface(mm)		2.53	-	Replace seal ring	
Inspection at completion	Running-in the engine		-	-	Refer to supplement "running-in"	
	Cylinder pressure	Compression pressure of cylinder (kg/cm^2)	24 ~ 28	24 or more	Correct	at 200rpm or more more(20 ˚C)
		Compression pressure difference of each cylinder	±10% or less against average		Correct	

https://truckmanualshub.com/

Transmission and Torque Converter

⚠ CAUTION!
Follow all safety recommendations and safe shop practices outlined in the front of this manual or those contained within this section. **Always use tools and equipment that is in good working order.** **Use lifting and hoisting equipment capable of safely handling load.** **Remember, that ultimately safety is your own personal responsibility.**

MODEL	SERIAL NUMBER RANGE
SD310	010001 and Up

Copyright 2012 DISD

July 2012

https://truckmanualshub.com/

TABLE OF CONTENTS

Preface……3
General Working Instructions……4
Important Labour Safety Instructions……5
Denomination of Legal Standards……6
Conversion Table for Dimensional Units……7
Torque limits for screws……8
Inscriptions on the Model Identification Plate and Instructions for Spare Parts Order…9
Possible versions Additional equipment……10
List of lubricants TE-ML 03……11
1. ELECTRO-HYDRAULIC GEARBOX CONTROL……12
2. TORQUE CONVERTER……75
3. GEARBOX……86
4. RETARDER……166
5. AXLE DELCLUTCH……179
6. AXLE DIFFERENTIAL……190
7. POWER TAKE-OFF CONTROLLABLE UNDER LOAS……211

https://truckmanualshub.com/

PREFACE

This documentation has been developped for the skilled Serviceman, trained by the Zahnradfabrik Passau for the Repair and Maintenance operations on ZF-Units.

Treated is a ZF-Serial product according to the design stage of the date of Edition.

However, due to further technical developments of the product, the repair of the unit at your disposal could require differents steps as well as other adjustment and testing specifications.

Therefore, we recommend to commit your ZF-Product to Masters and to Service-men, whose practical and theoretical training is constantly completed to the actual situation in our Training School.

The Service Stations, established by the Zahnradfabrik Friedrichshafen all over the world, offer you:

I. Constantly trained personnel

2. Prescribed installations, e.g. Special Tools

3. Genuine ZF-Spare Parts according to the latest phase of development

Here, all operations are carried out for you with utmost care and realibity.

Repair operations carried out by ZF-Service Stations, arc covered additionally within the terms of the actual contractual conditions, by the ZF-Warranty.

Damages caused by inappropriate or inexpert work, carried out by personnel foreign to ZF, and after-expenditures eventually arising from it, are excluded from this contractual responsibility.

This applies also in case of a renouncement of Genuine ZF-Spare Parts.

Zahnradfabrik Passau GmbH

Service Department

GENERAL WORKING INSTRUCTIONS

During all operations, pay attention to cleanliness and skilled working.

Therefore, Transmissions, removed from the vehicle, must be cleaned prior to open them

We assume that the Special Tools, specified by ZF, will be used.

The Special Tools have a 10-digh Subject-No. and are available from ZF-Passau.

After the disassembly, all components must be cleaned, especially corners, cavities and recesses of housing and covers.

The old selling compound must be carefully removed.

Check lubricating holes, grooves and pipes for free passage. They must be free of residues, foreign material or protective compounds.

The latter refers expecially to new parts.

Parts which have been inevitably damaged in a disassembly operation, must be generally replaced by new ones, e.g.: rotary seal rings, O-Rings, U-Section rings, cap boots, protective caps etc..

Components such as roller bearings, thrust washers, synchronizing parts etc. which are subject to normal wear in automotive operation, must be checked by the skilled Serviceman.

He will decide if the parts can be reused.

For the heating of bearings etc., hot plates, rod healers or heating furnaces must be used.

Never heat parts directly with the flame. An auxiliary solution would be to immerse the bearing in a vessel filled with oil, which is then heated with the flame.

In this way, damage to the bearings could be avoided.

Ball bearings, covers, flanges and parts like that must be heated to about 90° to 100° C.

Hot-mounted parts must be reset after cooling in order to assure a proper contact.

Before pressing shafts, bearings etc. in position, both parts must be lubricated.

During the reassembly, all specified adjustment values, testing specifications and torque limits must be respected.

After the repair, ZF-Units are filled up with oil.

The procedure and the permitted oil qualities can be taken from the Operator's Manual, resp. from the Lubrication Instructions and the corresponding List of Lubricants.

The Lists of Lubricants are available at all ZF-Service Stations.

After the oil filling, the oil level plugs and oil drain plugs must be tightened to the specified torque limits.

https://truckmanualshub.com/

IMPORTANT INSTRUCTIONS CONCERNING THE LABOUR SAFETY

In principle, Repairers of ZF-Units are themselves responsible for the labour safety.

The observance of all valid Safety Regulations and Legal Rules is a precondition to prevent damage to individuals and products during the Maintenance and Repair operations

Before starting the work, the Repairers have to make themselves familiar with these Regulations.

The proper Repair of these ZF-Products requires especially trained personnel.

The Repairer himself is obliged to provide for the training.

BEZEICHNG DER GESETZLICHEN EIHEITEN
PENOMINATION OF STANDARD DIMENSIONS
DENMINATION DES DIMENSIONSST AND ARDISEES

Hinwels : langenbezogene MaBe in kg/m. flacbenbezogene MaBe in t/m2

Note : linear density in kg/m. areal density in t/m2

Note ; Density lineaire en kg/m, Density superficiolle t/m2

Begriff **Unit** **Unitee**	**Formetrcichen**	**Neu** **alt** **New** **old** **Nouveau** **Vieu**	**Umrechnung** **Conversion** **Conversion**	**Bemerkungen** **Note** **Note**
Masse **Mass** **Mass**	**m**	**kg (Kilogramm)** **kg**		
Kraft **Force** **Force**	**F**	**N (Neweton)** **Kp**	**1 kp = 9.81 N**	
Arbeit **Work** **Travail**	**A**	**J(Joule)** **kpm**	**0.102 kpm=1J =Nm**	
Leistung **Power** **Puissance**	**P**	**KW (Kilowatt)** **PS(DIN)**	**1 PS=0.7355 KW** **1 KW =1.36 PS**	
Drehmoment **Torque** **Couple**	**T**	**Nm** **kpm** **(Newtonmeter)**	**1 pkm=9.81 Nm**	**T (Nm) =F(N)*r(m)**
Kraftmoment **Moment (Force)** **Moment (Fore)**	**M**	**Nm** **kpm** **(Newtonmeter)**	**1pkm=9.81Nm**	**M (Nm)=F (N)*l(m)**
Druck(Uber-) **Pressure(Overpress)** **Pression(Sur-)**	**po**	**Bar** **atm**	**1.02atm= 1,02 kp/cm2=** **1 bar =750 torr**	
Drehzahl **Speed** **Nombre de Tours**	**N**	**min-1**		

VERGLEICHSTABELLE FOR MASSEINHEITEN

CONVERSION TABLE

TABLEAU DE CONVERSION

25.4MM	=	1 in (inch)
1 kg (Kilogramm)	=	2,205 lb(poubds)
9,81 Nm(1 kpm)	=	7,233 ibf x ft(pound force foot)
1,356 Nm(0,138 kpm)	=	1 lbf x ft (pound force foot)
1 k g / cm	=	5,560 lb / in (pound per inch)
1 bar (1,02 kp/cm²)	=	14,233 psi (pound force per squar inch IbfTin²)
0,070 bar (0.071 kp/cm²)	=	1 psi (lbf/in²)
1 Liter	=	0,264 Gallon (Imp.)
4,456 Liter	=	1 Gallon (Imp.)
1 Liter	=	0,220 Gallon (US)
3,785 Liter	=	1 Gallon (US)
1609,344 m	=	1 Mile (Landmeile)
0° C (Celsius)	=	+ 32° F(Fahrenheit)
0 ° C (Celsius)	=	273,15Kelvin

TORQUE LIMITS FOR SCREWS (IN Nm) ACCORDING TO ZF-STANPARDS 148

Coefficient of friction: μ total = 0,12 for screws and nuts without after treatments as well as for phosphates nuts. Tighten by hand!

Torque limits, of not exspecially, can be taken from the following list:

Metric ISO-Standard Thread DIN 13, Page 13

Size	8.8		10.9		12.9
M4	2.8		4.1		4.8
M5	5.5		8.1		9.5
M6	9.5		14		16.5
M7	15.5		23		27
M8	23		34		40
M10	46		68		79
M12	79		117		135
M14	125		185		215
M16	195		280		330
M18	280		390		460
M20	390		560		650
M22	530		750		880
M24	670		960		1120
M27	1000		1400		1650
M30	1350		1900		2250
M33	1850		2600		3000
M36	2350		3300		3900
M39	3000		4300		5100

Metric ISO-Fine Tread DIN 13, Page 13

Abmessung	8.8		10.9		12.9
M8X1	24.6		36		43
M9X1	36		53		62
M10X1	52		76		89
M10X1.25	49		72		84
M12X1.25	87		125		150
M12X1.5	83		122		145
M14X1.5	135		200		235
M16X1.5	205		300		360
M18X1.5	310		440		520
M18X2	290		420		490
M20X1.5	430		620		720
M22X1.5	580		820		960
M24X1.5	760		1090		1270
M24X2	730		1040		1220
M27X1.5	1110		1580		1850
M27X2	1070		1500		1800
M30X1.5	1540		2190		2560
M30X2	1490		2120		2480
M33X1.5	2050		2920		3420
M33X2	2000		2800		3300
M36X1.5	2680		3820		4470
M36X3	32002500		3500		4100
M39X1.5	3430		4890		5720
M39X3	3200		4600		5300

INSCRIPTIONS ON A ZF-MODEL IDENTIFICATION PLATE FOR ZF-HYDROMEDIAREVERSING-TRANSMISSIONS:

1 =Gearbox type

2= Gearbox-No.

3 = ZF-Parts List-No.

4 =Total ratio of the Gearbox

5 =Value for the control pressure

6 =ZF-Parts List-No. of the Torque Converter

7 =Type of the ZF-Torque Converter

NOTES REGARDING THE SPARE PARTS ORDERS:

When ordering genuine ZF-Spare Parts, please indicate:

1. Gearbox type
2. Serial-No. See Model Identification Plate!
3. ZF-Parts List-No.
4. Mark and type of vehicle
5. Denomination of the spare part
6. Spare parts-No.
7. Way of transport

When all of the above required indications are considered, errors in the delivery of spare part order can be avoided!

Optional versions and additional equipment

for the transmissions of the WG range

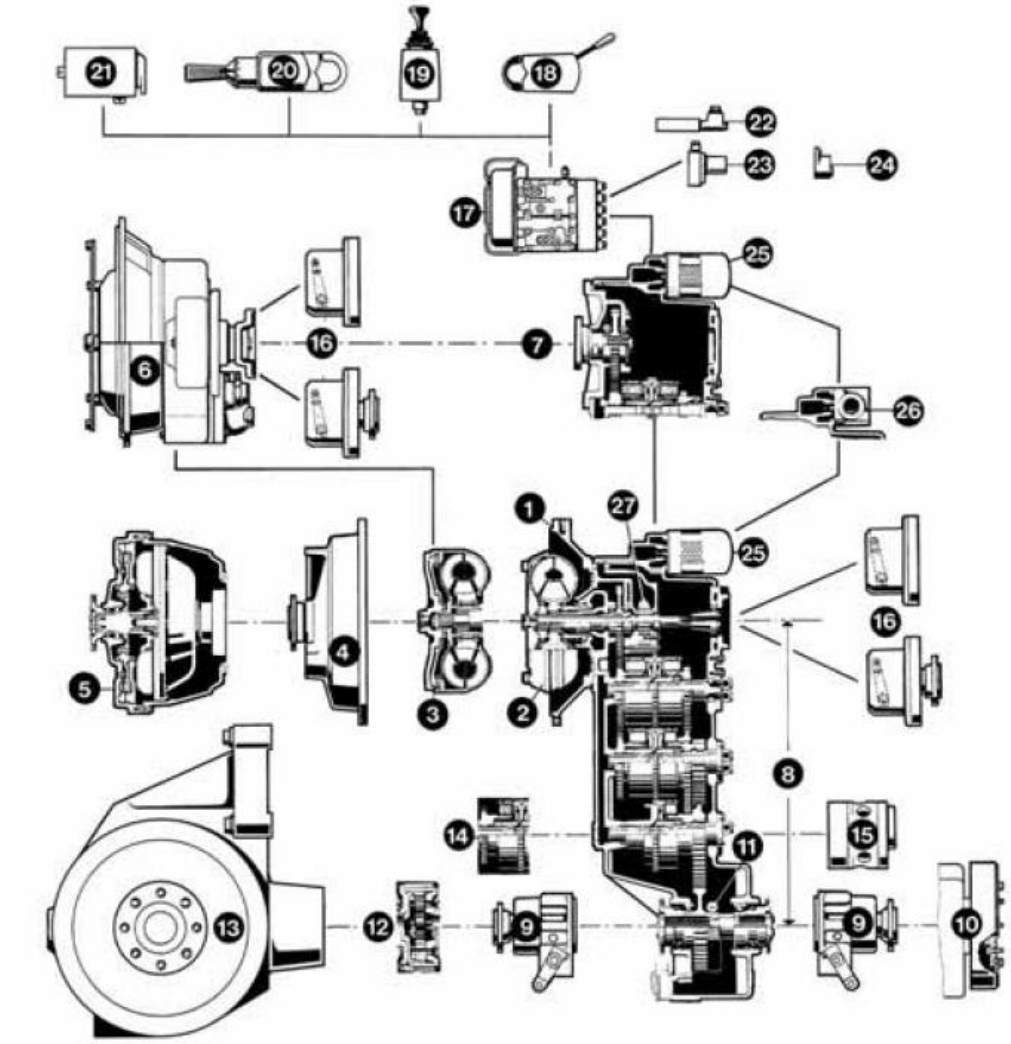

1 Converter housing for direct installation
2 Torque converter
3 Lock-up clutch
4 Cover for separate installation
5 Retarder
6 HN 500 converter transmission
7 Input flange (for separate installation)
8 Centre distance input/ output shafts
9 Axle disconnect unit
10 Parking brake
11 Speedometer connection
12 Inter-axle differential
13 Axle drive, flange-mounted
14 Multi-disc clutch for 4.5 and 6-speed version
15 Emergency steering pump
16 PTO unit, engine driven
17 Transmission control
18 Steering column switch SG 4/S G 6
19 Console switch SG 4/SG 6
20 Rotary reversing switch DW 1
21 Automatic control unite EST 2
22 Inching valve
23 Dual pressure control valve
24 Pressure cut-out
25 Micro-filter
26 Transmission connection for separate filter installation
27 Converter charge and shift pu mp

https://truckmanualshub.com/

Torque converter transmissions for off-road vehicles and machinery (construction plant, special vehicles, lift trucks)

List of Lubricants TE-ML 03

Transmission	**Approved lubricants**
WG 80/81/53/85 WO 100 WG 120/121 WG 150/151 WG I80/ 181 WG 200/201 WG 250 WG 65 HN 500 PW 45 H (I) PW25H PW 18 H HSt 210	Engine oils API CD/ CE/CF/ SF/ SG MIL-L-2104 O -D/ -E MILL-46152C/-D/-E • SAEI0W • SAE 10 W-30 • SAE 10 W-40 • SAE 15 W-40 • SAE 20 W-20 For commercial products see overleaf Automatic Transmission Fluids (ATF) only at ambient temperatures below - 1 0 ℃

Oil grade	**Minimum oil temperature for starting engine**	**Minimum oil temperature for starting vehicle moving**
- Engine oils		
SAE 20 W-20	- 10 °C	• 5 *C
SAE 15 W-40	- 15 ℃	- 0 °C
SAE 10 W. 10 W-30.10 W-40	- 2 0°C	- 5 °C
- ATF	- 30 °C	- 10 °C

The minimum oil temperature for starting the vehicle moving can be achieved by:

- at least 20 minutes' warm-up m "Neutral" setting
- preheating

At greasing points, use a multi-purpose grease with the following properties

lithium soap, drop point above 170℃. NLGI Class 2.

The grease must be anti-corrosive. water-resistant and walk stable.

Note to lubricant suppliers: Please inform ZF immediately of any changes to the composition or trade names of approved products, and of differences in quality between German) and ocher countries.

This list can be obtained through any 2P After-Sales Service point	Zahnradfabrik Passau GmbH Postfach 26 40 D-8390 Passau	Telephone Telex Telefax	(0851)494-0 57849zp d (0851)45340

https://truckmanualshub.com/

I. ELECTRO-HYDRAULIC GEARBOX CONTROL

ATTENTION :

In case of malfunctions of the Transmission because of a defective gearbox control, we recommend the replacement of the complete gearbox control.

The pressure-control curve of the replacement-gearbox control (see corresponding Spare Parts List) has been accordingly adapted to the Transmission Version, resp. to the Vehicle type.

Modifications concerning the pressure-control curve may not be carried out without agreement of ZF. Therefore, the repair of gearbox control units should be carried out by ZF Service stations only.

The relative shop equipment of our Service stations (gearbox control resp. transmission

test benches) as well as constantly trained personnel ensure a professional repair.

The following Disassembly and Reassembly Instructions (Page 1.01 - 1.73) will therefore be useful only as an Information for ZF-Service stations as well as for the Manufacturer of the vehicle, which are disposing of the required workshop equipment and especially trained personnel.

Note regarding the pressure control:

Diagram 1 (Basic diagram)

Pressure-control curve gear case

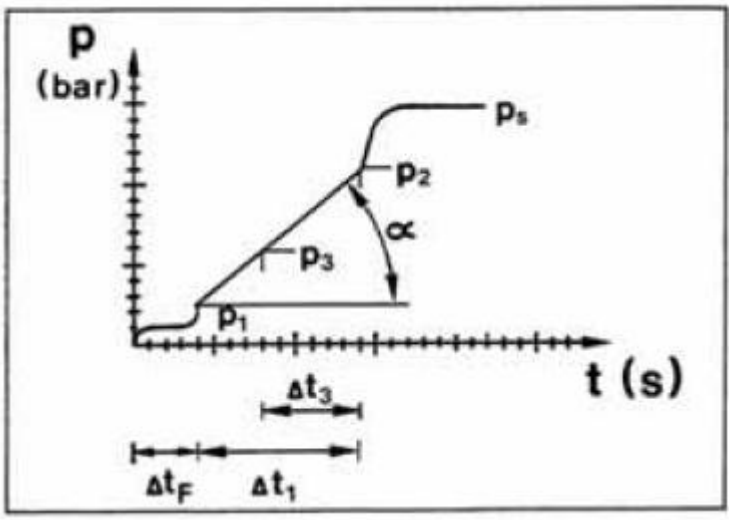

p = Pressure in box

t - Time in seconds

p1 =Modulation start

p2 =Modulation end

p3= Modulation start only in dependence

with 2-stage pressure control valve

ps =Control pressure

Δ tF =Filling time

Δ t1 = Modulation time

Δ t3 =Modulation time in dependence with

2-stage pressure control valve

Diagram 2 (Basic diagram)

Pressure-control curve WK

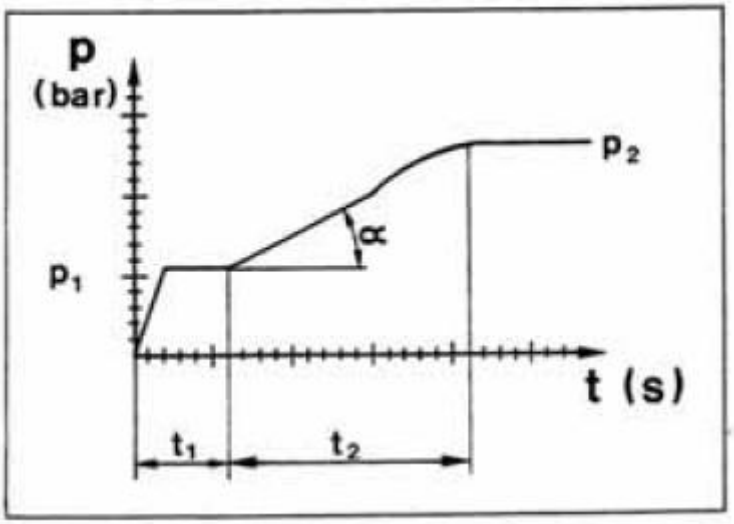

p' • Modulation start

p^2 - Modulation end

t1 - Filling time

t2 - Modulation time

ATTENTION:

The pressure-control curve is different according to the Transmission Version, resp. the vehicle type and will be adjusted by means of corresponding shims and diaphragms (optional)'

Note:

In the following Disassembly and Reassembly Instructions are three different gearbox control Variants treated.

1.1 Cast-iron gearbox control

1.2 Aluminium sand-casting gearbox control

1.3 Aluminium die-cast gearbox control with WK-Valve

1.2 Aluminium sand-casting gearbox control

With the help of the following Figures, the coordination of the single gearbox control variants can be visually identified because of the different casting contours!

1.1 Cast-iron gearbox control

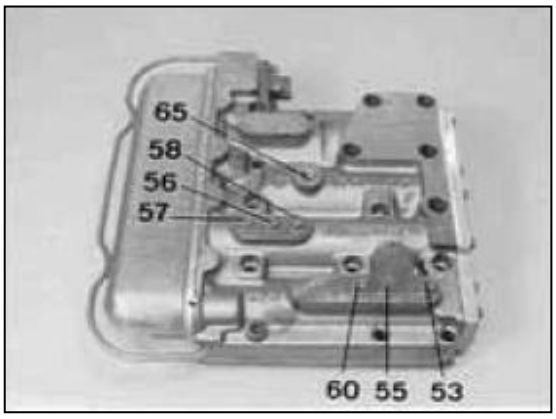

Measuring points for pressure oil:

65 = Central measuring point for system pressure (control pressure)
53 = Clutch KV
55 = Clutch KR
56 = Clutch K1
57 = Clutch K2
58 = Clutch K3
60 = Clutch K4

1.2 Aluminium sand-casting gearbox control

(e.g. 4 magnets)

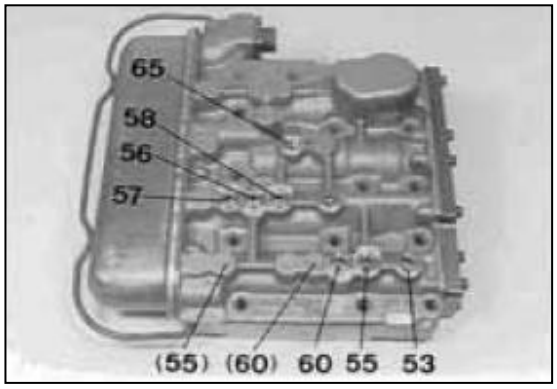

Measuring points for pressure oil:

65 = Central measuring point for system pressure (control pressure)
53 = Clutch KV
55 = Clutch KR
(55) = Clutch KR (in case of 5-mangnet Version)
56 = Clutch K1
57 = Clutch K2
58 = Dutch K3
60 = Clutch K4
(60) = Clutch K4 (in case of 5-magnct Version)

L3 Aluminium die-cast gearbox control

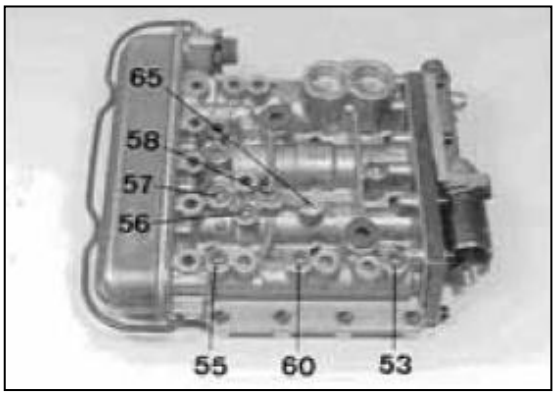

Measuring points for pressure oil:

65 = Central measuring point for system pressure (control pressure)
53 = Catch KV
55 = Clutch KR
56 = Clutch K1
57 = Clutch K2
58 = Clutch K3
60 = Clutch K4

Furthermore, the single gearbox control units can include WK-Valve, 2-stage pressure control valve as well as 4, resp. 5 magnets (only f*or* gearbox control 1.2).

Different steps resulting from this, can be carried out without great difficulty by qualified personnel, consulting the Perspective illustrations in the corresponding Spare Parts List!

https://truckmanualshub.com/

1.1 CAST-IRON GEARBOX CONTROL

1 . 1 . 1 Version 1: Standard Version (without WK and 2-stage pressure control valve)

1.1.1.1 DISASSEMBLY

Separate shift-control housing and channel plate from gear case (Figure 1 ...3).

Loosen socket head screws, install two adjusting screws (Arrows) and remove shift-control housing.

Now, remove gaskets and intermediate plate.

(S) Adjusting screws (M8) 5870 204 011

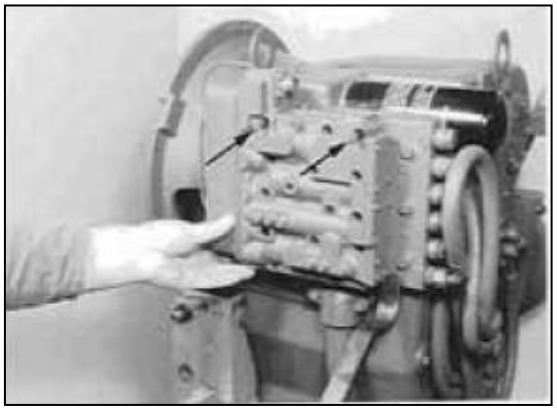

Figure 1

Now, remove gaskets and intermediate plate.

Remove delivery lines.

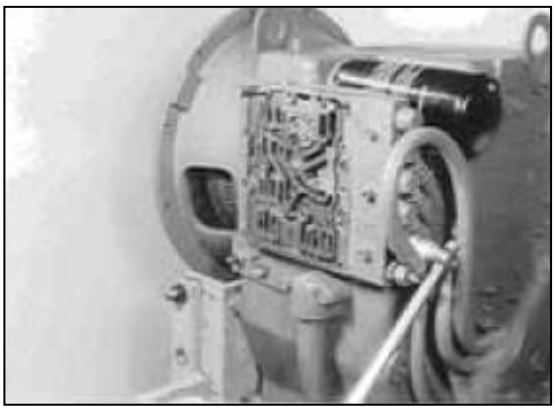

Figure 2

Loosen socket head screws and separate channel plate as well as gaskets and intermediate plate from the gear case.

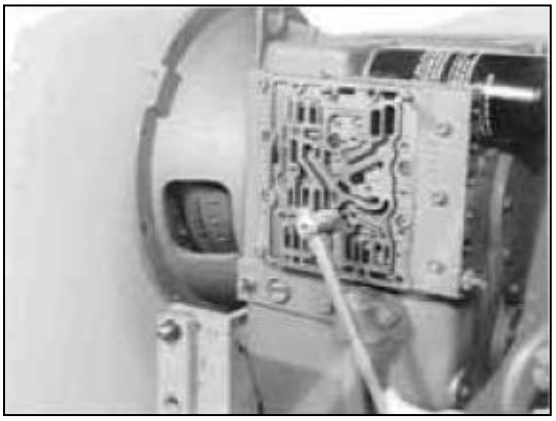

Figure 3

Relax spring clip and remove cover.

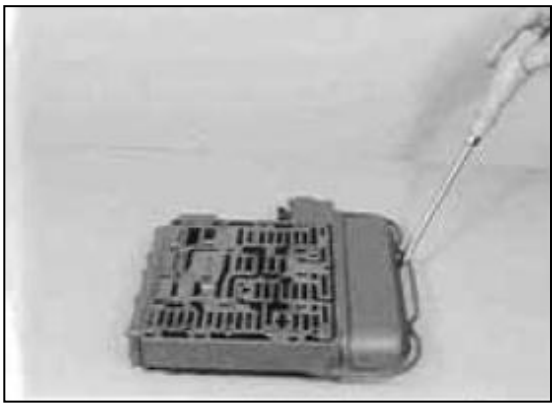

Figure 4

Pull off cable shoes, loosen the socket head screws and remove solenoid valves.

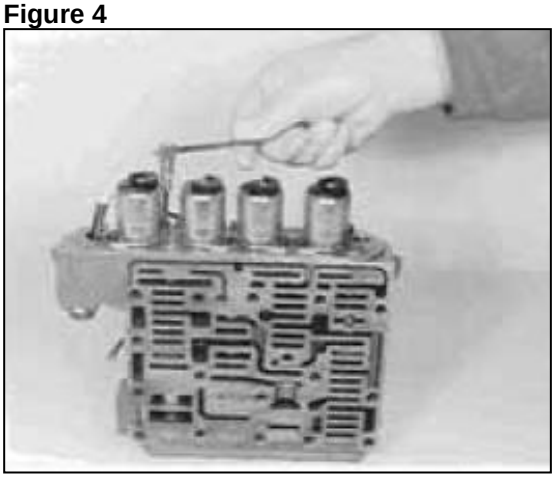

Figure 5

Remove components, see Figure on the right!

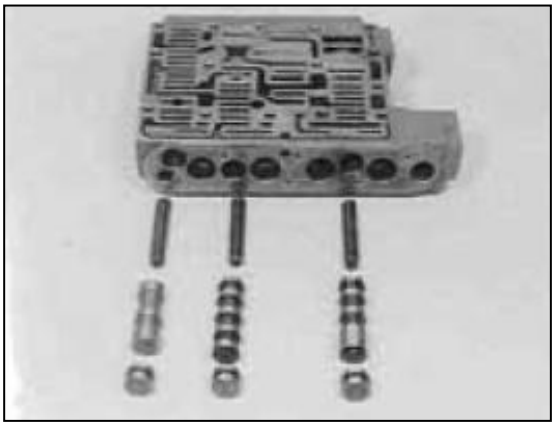

Figure 6

Loosen two hex. head screws and fix shift-control housing provisionally, using Special Tool (S).

Now, loosen the remaining hex. head screws and separate cover (is spring-loaded) from the valve body by uniform loosening of the nuts (S).

(S) Adjusting screws (M5) with nut 5870 204 036

(S) Adjusting screws (M6) with nut 5870 204 049

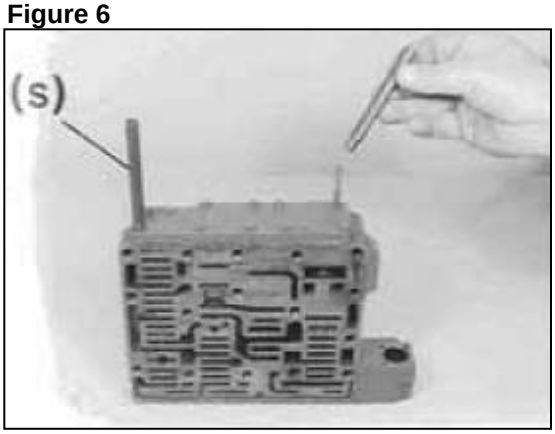

Figure 7

https://truckmanualshub.com/

Remove components, see Figure on the right !

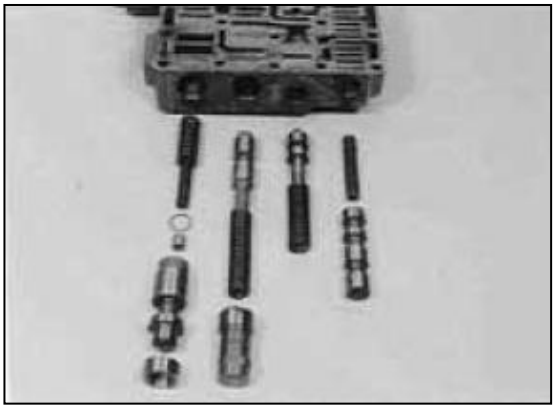

Figure 8

Remove stop plates (Arrows) and demount detent blocks.

NOTE ;

The use o f two spools in order to fix the detent block provisionally axially (Figure 10), avoids the tilting of the detent blocks, thus facilitating the disassembly !

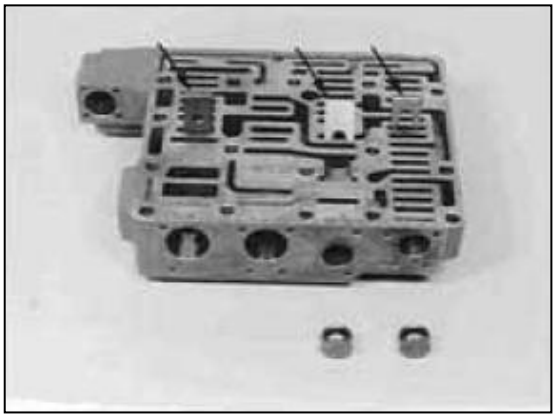

Figure 9

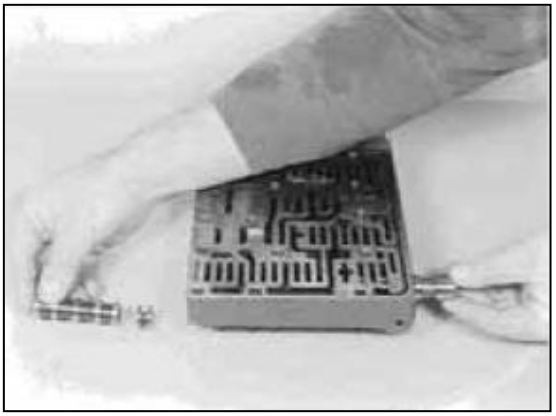

Figure 10

https://truckmanualshub.com/

1.1.1.2 REASSEMBLY

see also illustrated Tables, Page 26 !

NOTE :

Check all components for damage and renew if necessary !

Check free travel of the moving parts in the housing prior to the installation !

Spools can be exchanged individually !

Oil components prior to the reassembly !

Introduce detent blocks (1 and 2) into the bores and fix them by means of stop plates (3 and 4).

Install stop plate (5).

NOTE ;

Pay attention to the installation position of the various stop plates, see Figure on the right !

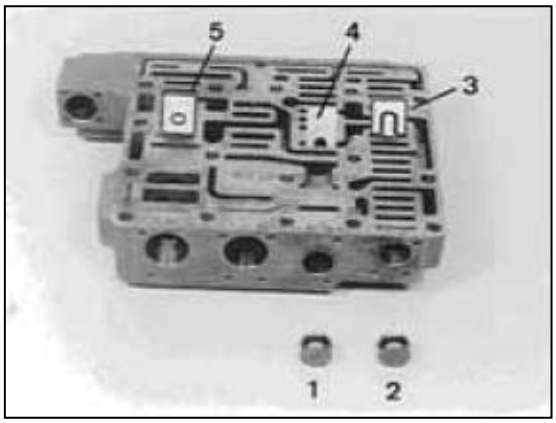

Figure 15

Install components :
1 = Valve body
2 = Spring (L = 88,6 mm)
3 = Spring (L = 52,0 mm)
1 = Disk (optional)
5 = Spacer
6 = Spool
7 = Sleeve
8 = Spool
9 = Spring (L =81,7 mm)
10 = Spool
11 = Spool
12 = Spring (L = 65,4 mm)
13 = Spring (L = 72,5 mm)
10 = Spool (total length 86,mm)
NOTE :
L= Length of the unloaded spring !
ps (control pressure) is determined by the disk (4)!
Pay attention to the General Instructions,
Page 12 ---14 !

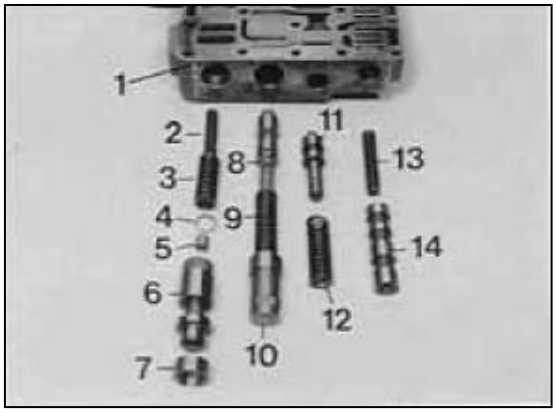

Figure 16

Install two adjusting screws (S) and mount flat gasket.
Place cover against shoulder, using nuts (S).
Now, fasten cover by means of screws.

Torque limit (M5/8.8)	5,5 Nm
(S) Adjusting screws (M5) with nut	5870 204 036
(S) Adjusting screws (M6) with nut	5870 204 049

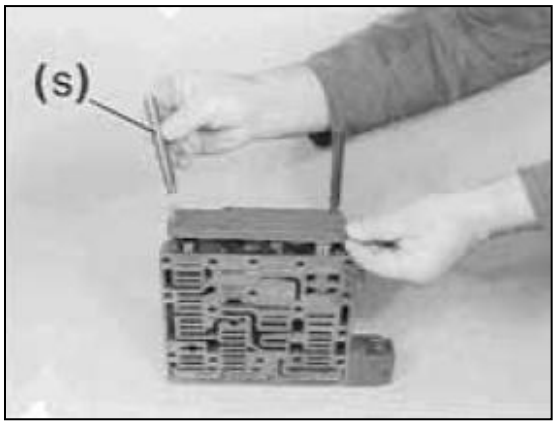

Figure 17

Install components :
1 = Valve body
2 = Spring (L = 72,5 mm)
3 = Spool (3 control surfaces)
4 = Spring (L = 72,5 mm)
5 = Spool (5 control surfaces)
6 = Spring (L = 72,5 mm)
7 = Spool (total length 72,0 mm)
8 = Detent block (3 pieces)
NOTE :
Install new O-Rings, see Arrows !

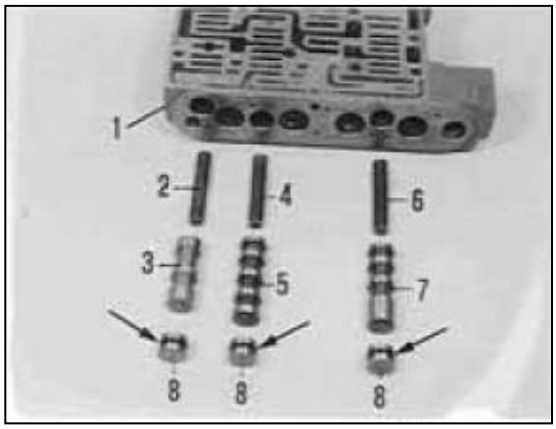

Figure 18

https://truckmanualshub.com/

Preload detent block and install solenoid valve.

Install remaining solenoid valves accordingly.

NOTE ;

Employ new O-Rings for solenoid valves !

Pay attention to the radial installation position of the solenoid valves, see Figure 21 !

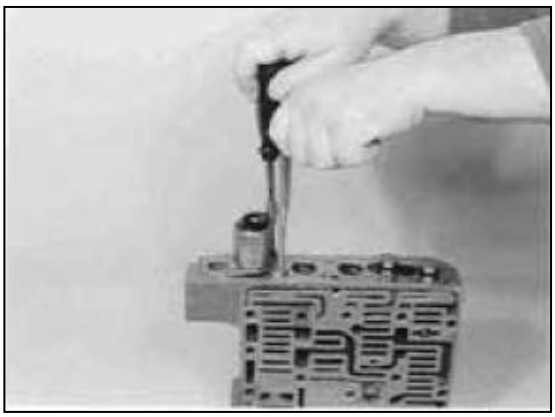

Figure 19

Install cable harness (mount new gaskets), fasten ground cable and connect solenoid valves (Figure 20).

NOTE :

Pay attention to the location of the plug nose, see Arrow/Figure 21 !

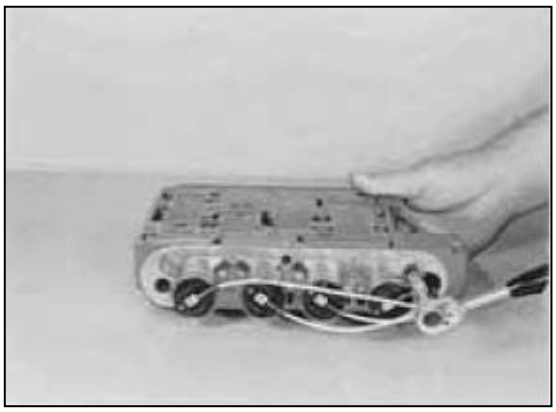

Figure 20

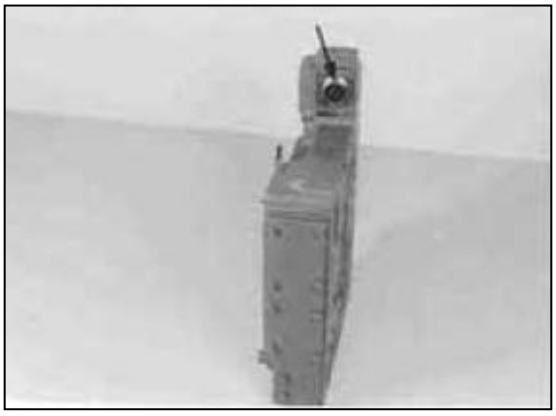

Figure 21

Mount new O-Ring (164.2 x 5.7) and fix cover by means of clamping collar.

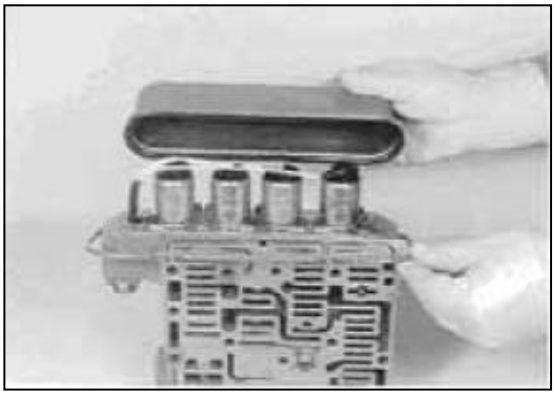

Figure 22

https://truckmanualshub.com/

Pre-assemble channel plate (Figure 23 and 24)

NOTE :

According to the gearshift Version, different channel plate variants are possible !

Pay attention to the Perspective Illustrations in the corresponding Spare Parts List !

The following Reassembly Instruction is treating the Standard Version (with control diaphragm and diaphragm for the backfeed) !

Wet thread of control diaphragm with Loctite (Type-No. 27C), install control diaphragm (Position, see Arrow 1), and secure it additionally by means of center punch.

Now, clean diaphragm from Loctite residues by means of compressed air.

Install diaphragm for the backfeed (Position, see Arrow 2) accordingly.

Insert thread plug (3) with Loctite (Type-No. 270).

Employ new sealing ring for connecting plug (4) and screw plug (Position, see Arrow 5), and install them.

Insert the two check valves (composed of balls and springs) in the channel plate.

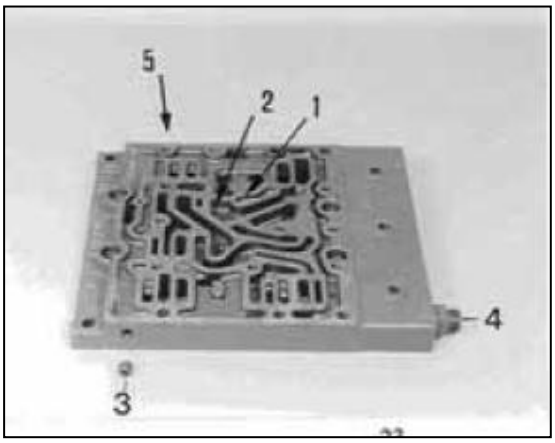

Figure 23

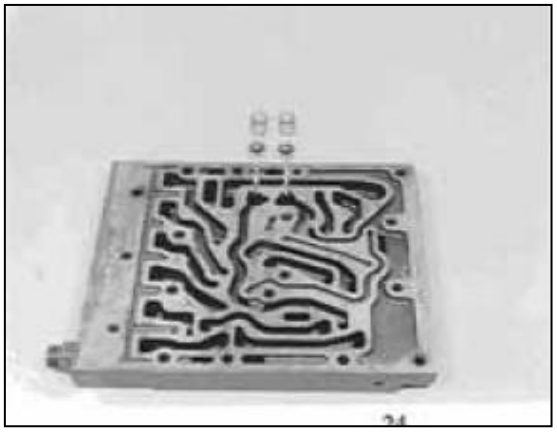

Figure 24

Attach channel plate and gearbox control (Figure 25 ... 30)

Install housing gasket.

NOTE :

Pay attention to the different gaskets, see Figure 25 and 26 !

(S) Adjusting screws (M8) 5870 200 011

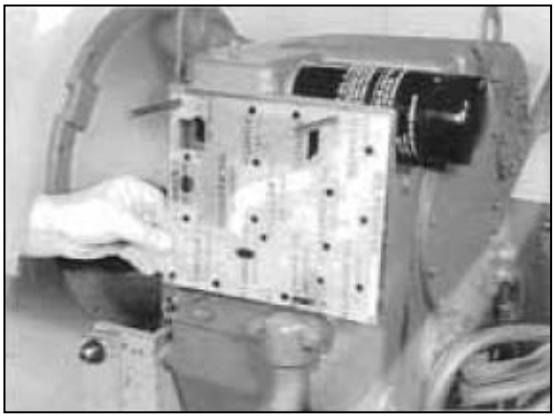

Figure25

https://truckmanualshub.com/

Install intermediate plate and 2nd gasket.

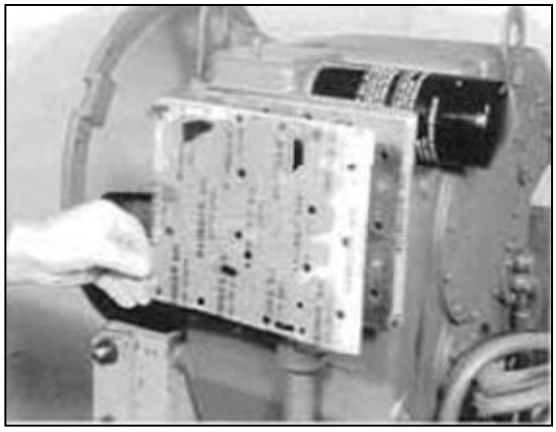

Figure 26

Assemble channel plate and fasten it by means of socket head screws.

Torque limit (M8/8.8) 23 Km

NOTE ;

Pay attention to a correct position of the ball seat valves !

Pay attention to the position of the various screws, see corresponding Spare Parts List !

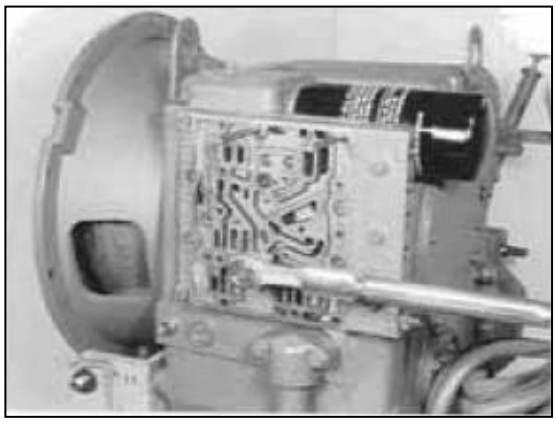

Figure 27

Assemble 1st gasket.

NOTE ;

Pay attention to the different gaskets, see Figure 28 and 29 !

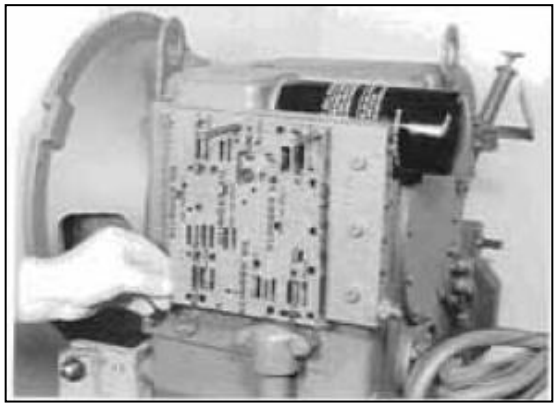

Figure 28

Install intermediate plate and 2nd gasket.

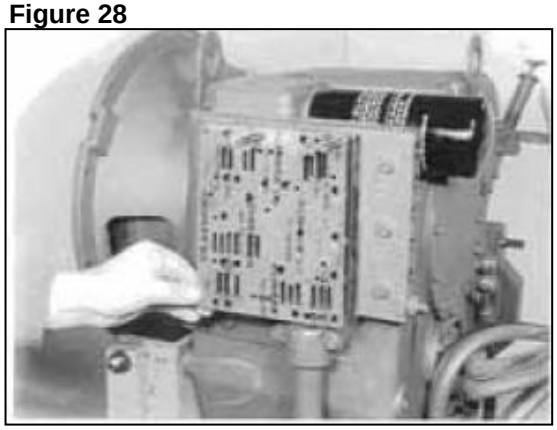

Figure 29

https://truckmanualshub.com/

Place gearbox control assembly against shoulder and fasten it by means of socket head screws.

Torque limit (M8/8.8) 23 Nm

NOTE :

Pay attention to the position of the different screws (lengths) !

Employ new sealing rings for the screw plugs (see Arrows) and install them !

Now, install delivery lines, see Perspective Illustrations in the corresponding Spare Parts List !

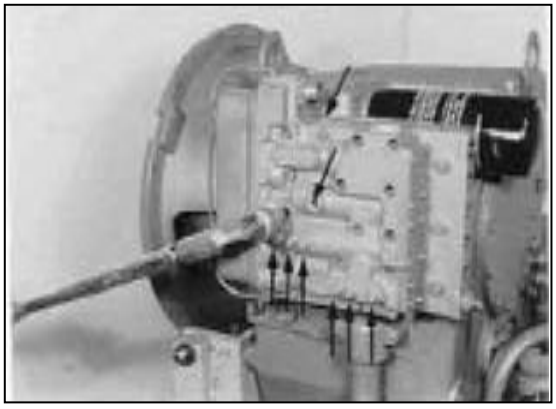

Figure 30

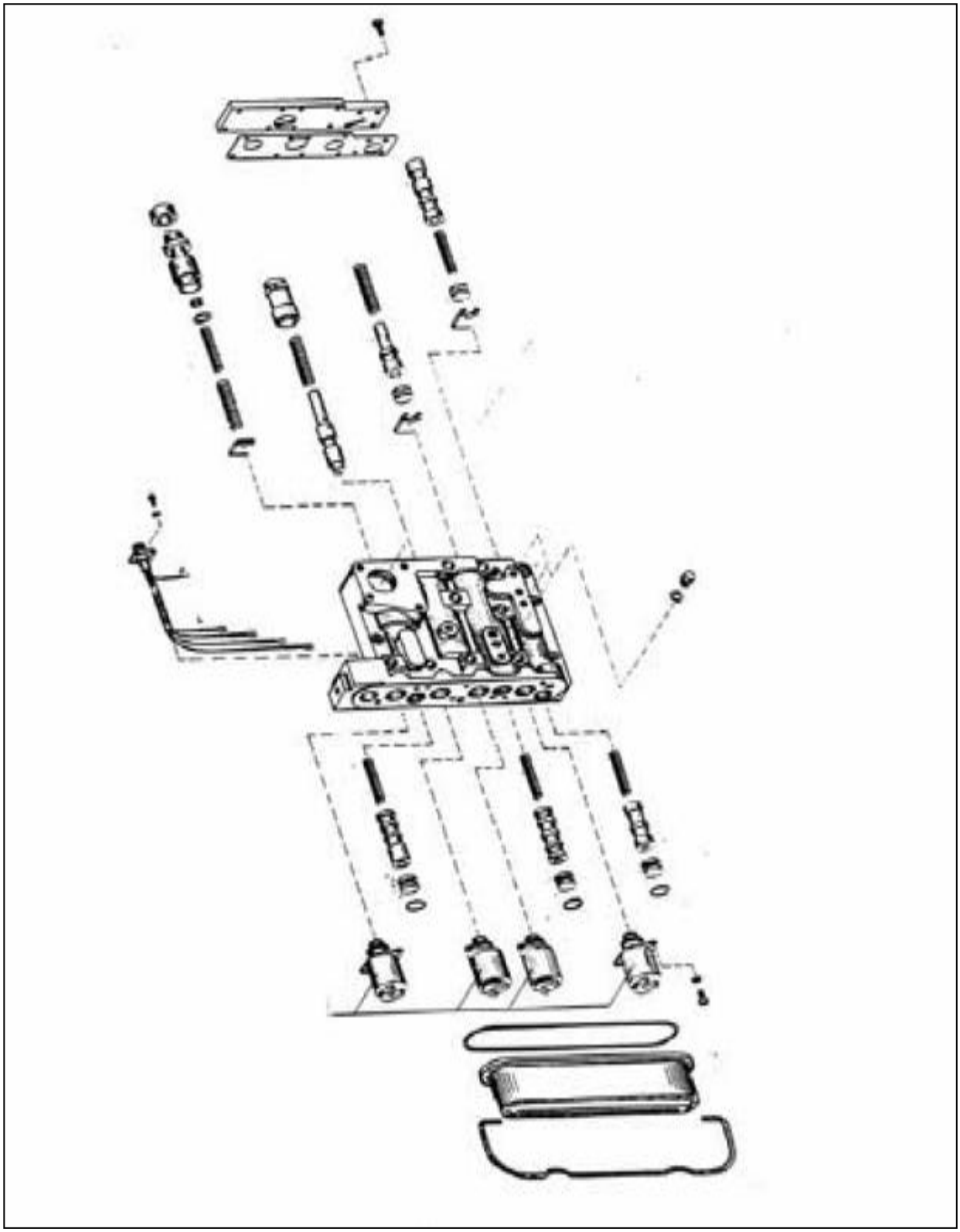

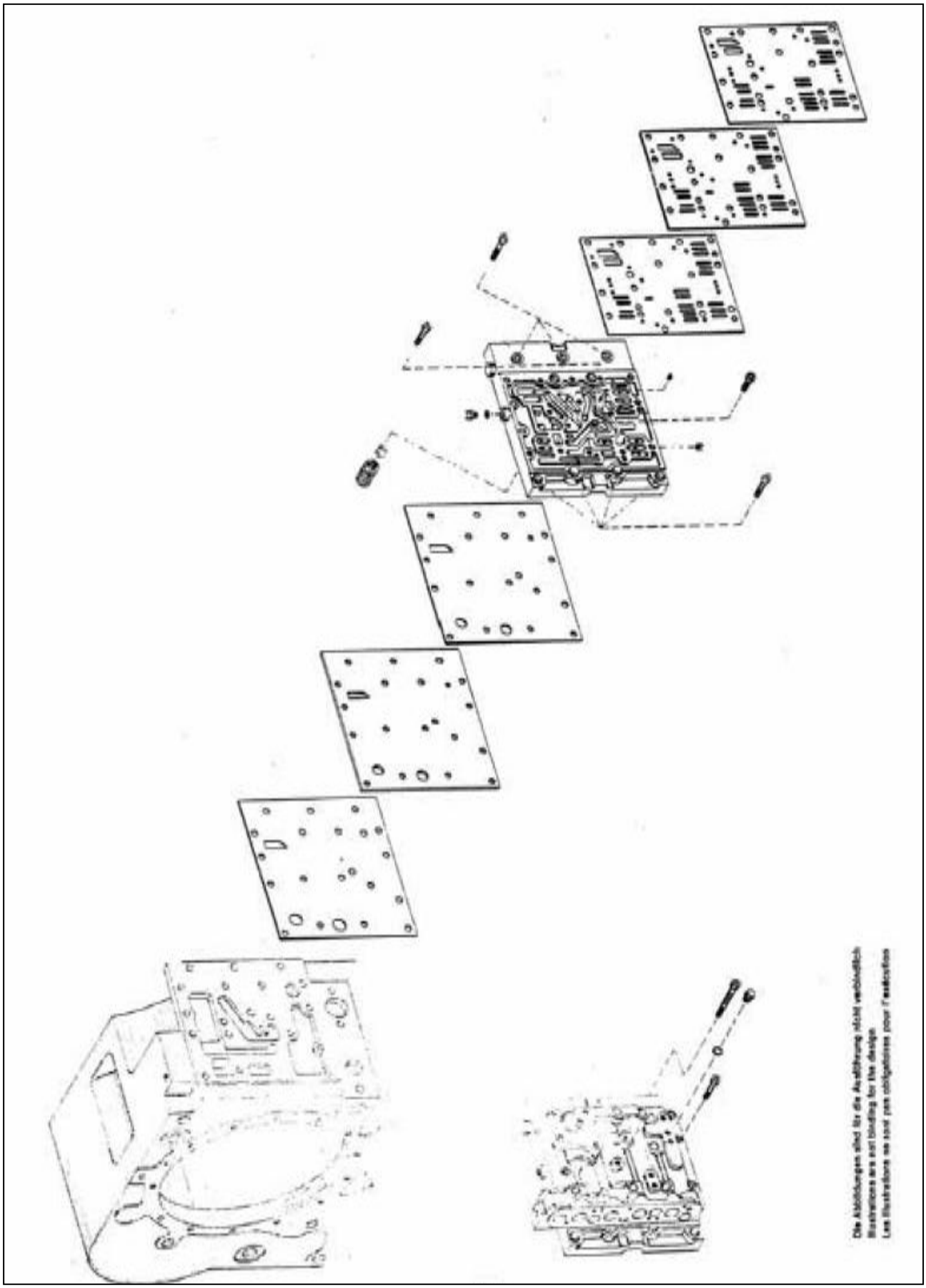
Die Abbildungen sind für die Ausführung nicht verbindlich
Illustrations are not binding for the design
Les illustrations ne sont pas obligatoires pour l'exécution

1.2 ALUMINIUM SAND-CASTING GEARBOX CONTROL

1.2.1 Version Ⅰ : With 4 Solenoid valves and attached 2-stage pressure control valve !

1.2.1.1 DISASSEMBLY

Remove delivery line.

(S) Adjusting screws (M8) 5870 204 011

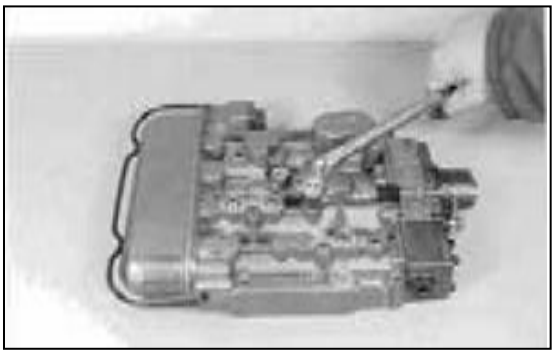

Figure 35

Relax spring clip and remove cover.

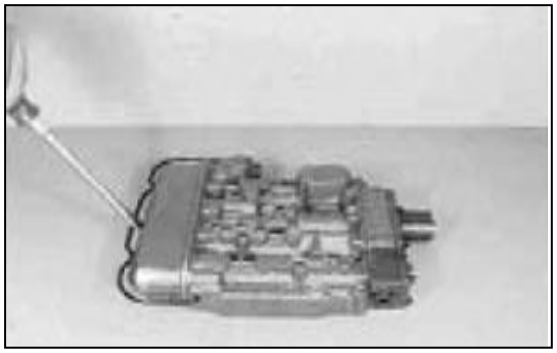

Figure 36

Pull oil cable shoes and remove cable harness.

Loosen socket head screws and remove solenoid valves.

Figure 37

Remove components, see Figure on the right !

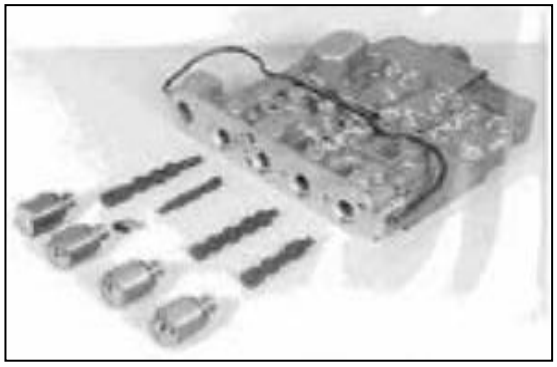

Figure 38

Loosen two socket head screws and fix shiftcontrol housing provisionally, using a Special Tool (S).
Now, loosen the remaining socket head screws and separate shift-control housing (is spring-loaded) from the valve body by uniform loosening of the nuts (S).

(S) Adjusting screws (M5) 5870 204 036 with nut

(S) Adjusting screws (M6) 5870 204 049 with nut

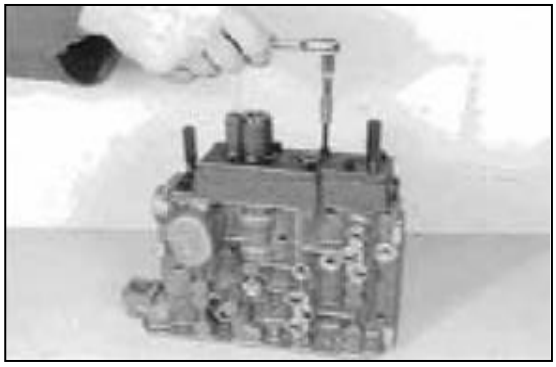

Figure 39

Dismantle pressure control valve.

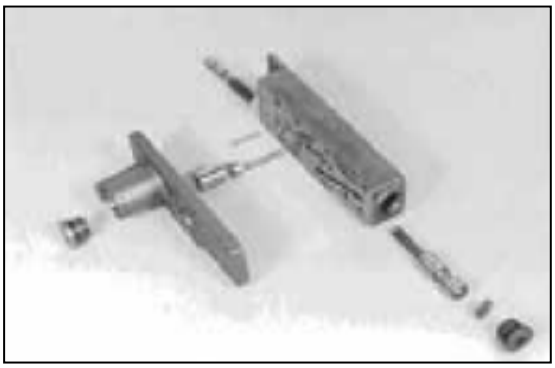

Figure 40

Remove components.

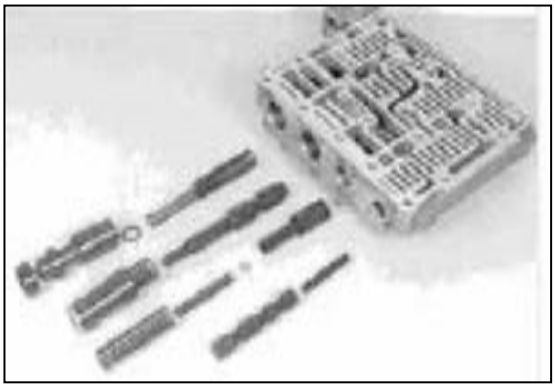

Figure 41

Remove stop plates (Arrows) and demount detent blocks (2x).

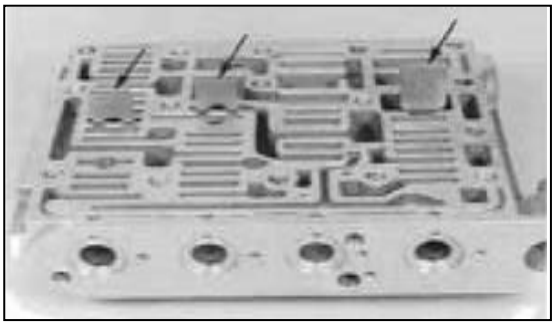

Figure 42

1 . 2 . 1 . 2 REASSEMBLY

see also Illustrated Tables, Page 1.26 and 1.27 !

NOTE :

Check all components for damage and renew if necessary !

Check free travel of the moving parts in the housing prior to the installation !

Spools can be exchanged individually !

Oil components prior to the reassembly !

Close the bores by means of balls (8 pieces Φ 4,50 mm).

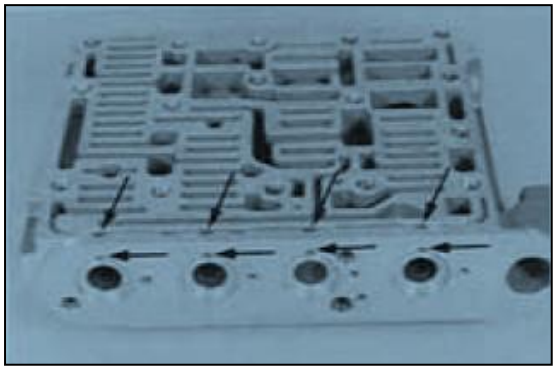

Figure 45

Introduce detent blocks (1 and 2) into the bores and fix them by means of stop plates (3 and 4).

Install detent block (5).

NOTE ;

Pay attention to the installation position !

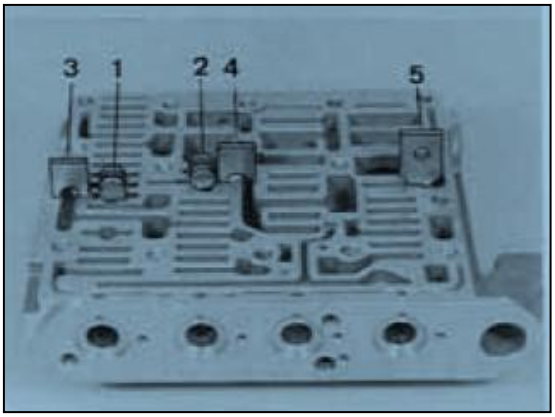

Figure 46

Install components :

1 = Spool (total length = 86,00 mm)

2 = Spring (L_o = 53,40 mm)

NOTE ;

L_o = Length of the unloaded spring !

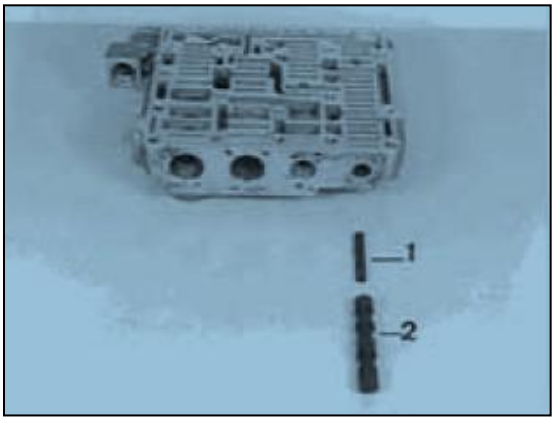

Figure 47

Reset valve：

Install components.

1 = Spool

2 = Disk(s) (optional)

3 = Spring (L_o = 58,00 mm)

4 = Spring (L_o = 65,40 mm)

NOTE:

p2 is determined by the disk 4

(pay attention to Notes, Page 12 ... 14) !

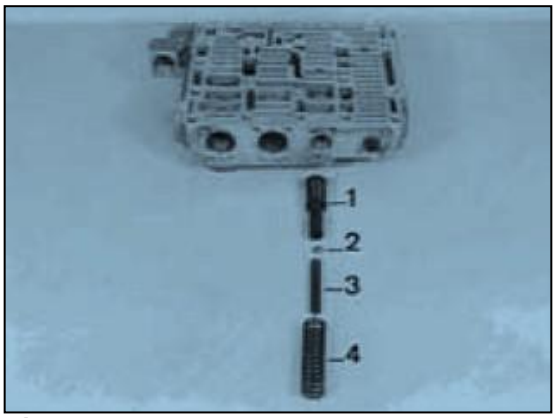

Figure 48

Pressure control valve :

Install components.

1 = Spool

2 = Spring (L_o = 132,40 mm)

3 = Spring (L_o = 76,70 mm)

4 = Spool

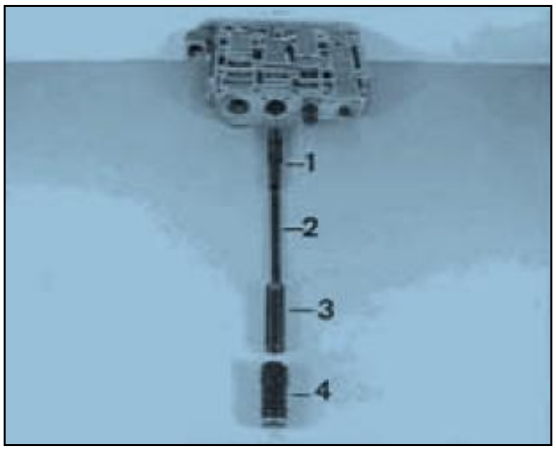

Figure 49

Control pressure valve :

Install components.

1 = Spring (L_o = 78,60 mm)

2 = Spring (L_o = 65,40 mm)

3 = Disk(s) (empirical value s = 3,00 mm)

4 = Disk(s) (empirical value s = 1,00 mn)

NOTE:

ps is deter mind by the disks 3 and 4

(pay attention to Notes, Page 12 ... 14) !

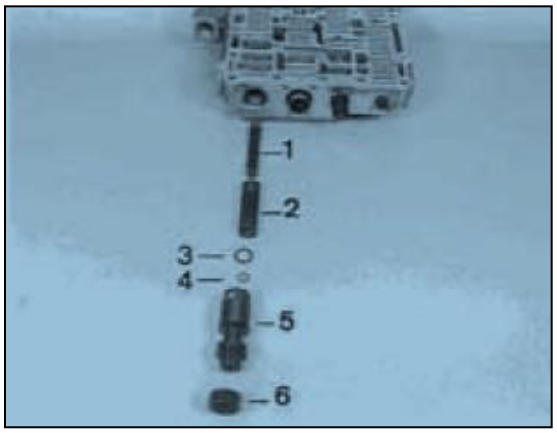

Figure 50

Pre-assemble 2-stage pressure control valve

(Figure 51… 53) :

Install diaphragm (optional).

NOTE ：

Wet thread of diaphragm with Loctite (Type No.270)!

Δ t1 is determined by the diaphragm

(pay attention to Notes, Page 12 ... 14)!

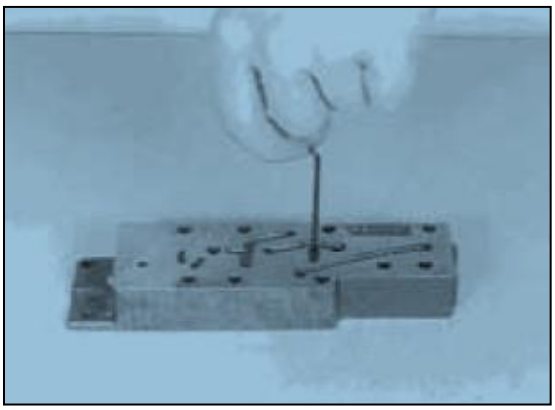

Figure 51

Install components :

1 = Intermediate plate

2 = Valve

3 = Compression spring (L_o = 29,90 mm)

4 = Straight pin

5 = Roller

6 = Spool

6a = Disk (s = 2,5 mm/empirical value)

7 = Spring (L_o = 70,90 mm)

8 = Disk(s)

9 = Screw plug (mount new O-Ring)

NOTE :

Insert compression spring (3) and valve (2) in the bore, preload and fix by means of straight pin (4) !

p3 is determined by the disk(s) 6a

(pay attention to Notes, Page 12 ... 14) !

Close the bore by means of ball (Φ 5 mm), s e e Arrow !

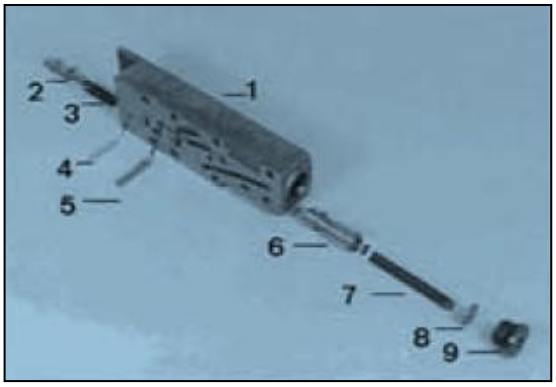

Figure 52

Figure 53

Install components and fix them by means of socket head screws and flat washers (Figure 54 and 55).

1 = Gasket

2 = Housing assembly

3 = Ring (optional)

4 = Spool

5 = Gasket

6 = Cover

7 = O-Ring

8 = Screw plug

NOTE ;

Δ t3 is determined by the ring (3)

(pay attention to Notes, Page 12 ... 14) !

Torque limit (M5/8.8) 5,5 Nm

(S) Adjusting screws (M5) 5870 204 036
with nut

(S) Adjusting screws (M6) 5870 204 049
with nut

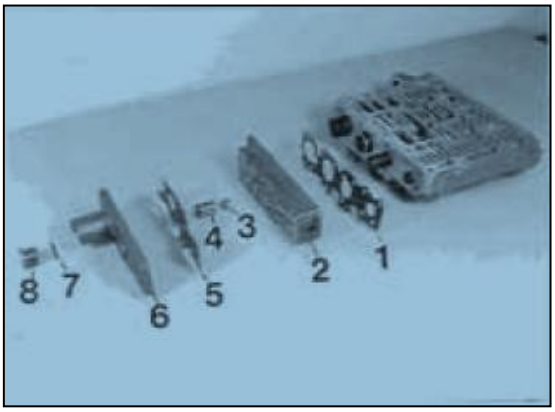

Figure 54

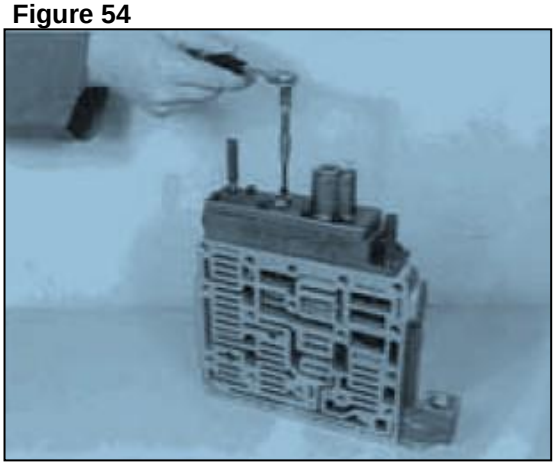

Figure 55

Install components ：

1 = Spring (L_o = 33,40 mm)

2 = Spool

3 = Spring (L_o = 53,40 mm)

4 = Spool

5 = Spool (reducing valve)

6 = Spring (L_o = 37,10 mm)

7 = Retaining plate

8 = Socket head screw

9 = Spring (L_o = 53,40 mm)

10 = Spool

NOTE:

Pay attention to the installation position of the components, see Figure 56 !

Torque limit (M5/S.8) 5,5 Nm

Insert the solenoid valves and fix them by means of retaining plate and socket head screws.

Torque limit (M5/8.8) 5,5 Nm

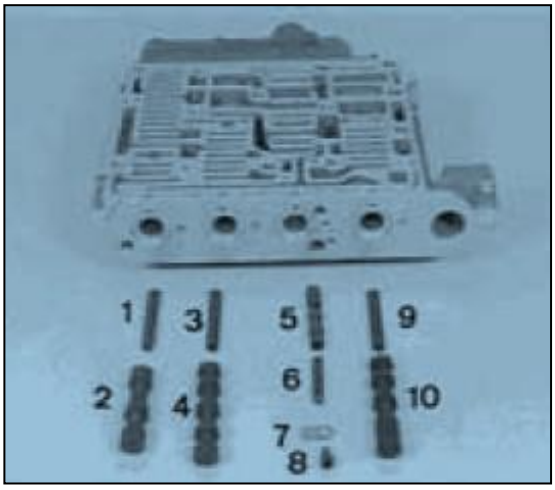

Figure 56

Insert the solenoid valves and fix them by means of retaining plate and socket head screws.

Torque limit (M5/8.8) 5,5 Nm

NOTE ;

Pay attention to the radial installation position of the solenoid valves, see Figure 59 !

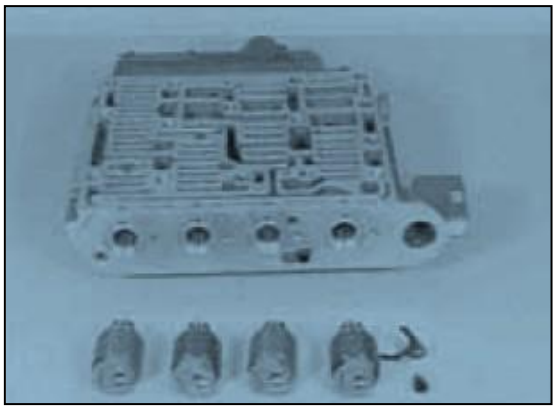

Figure 57

Install cable harness.

NOTE ;

Mount new gaskets !

Pay attention to the location of the plug nose, see Arrow !

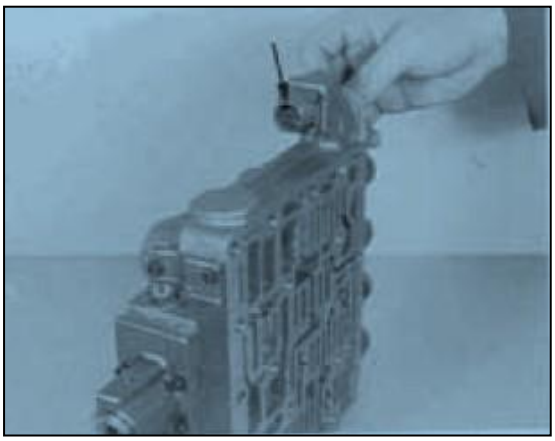

Figure 58

Connect solenoid valves according to the Illustration on the right.

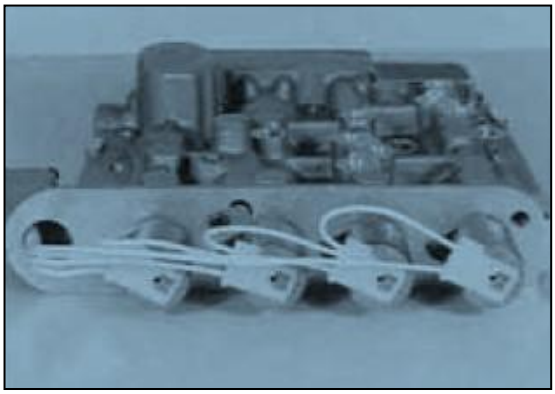

Figure 59

Mount new O-Ring (164,2 x 5,7 mm), see Arrow and fix cover by means of clamping collar.

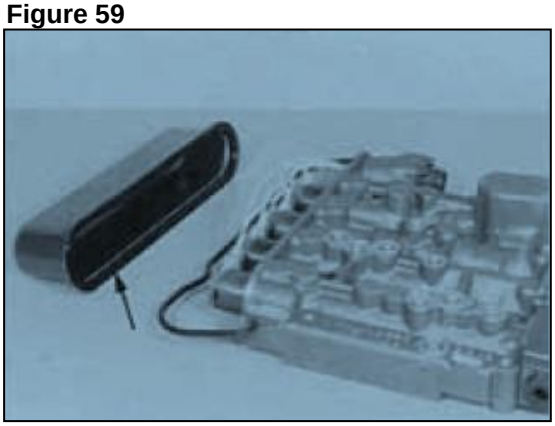

Figure 60

Intall delivery line 1, control pressure sender 2 (according to the Version) as well as screw plug.

NOTE :

Mount new sealing rings and O-Rings !

Pay attention to the Perspective Illustration of the corresponding Spare Parts List !

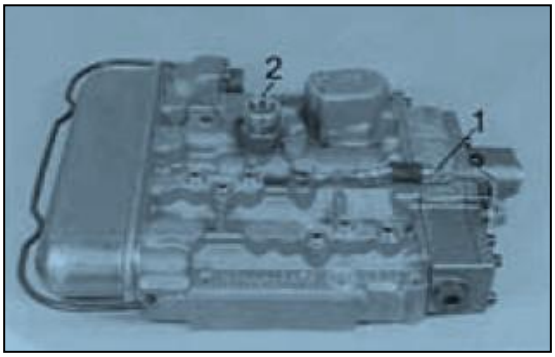

Figure 61

Pre-assemble channel plate (Figure 62… 64) :

NOTE ;

According to the gearshift Version, different channel plate variants are possible ! Pay attention to the Perspective Illustration of the corresponding Spare Parts List !

The following Reassembly Instruction is treating the Version with diaphragm for the backfeed (without control diaphragm) !

Wet thread of diaphragm with Loctite (Type No. 270), install diaphragm (Position, see Arrow 1) and secure it additionally by means of center punch.

Now, clean diaphragm from Loctite residues by meow of compressed air.

Install thread plug (Position, see Arrow 2) accordingly.

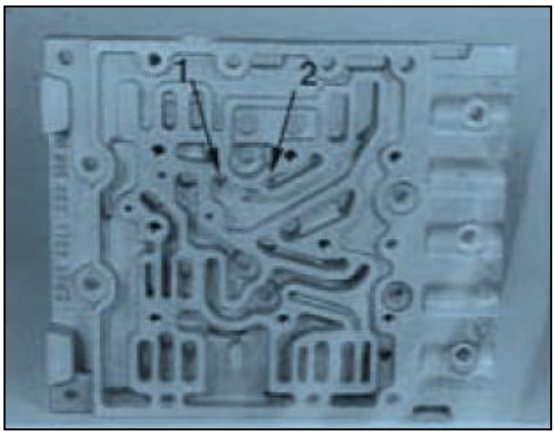

Figure 62

Install connecting pipe (1) and screw pljg (Arrow).

NOTE :

Mount new O-Rings !

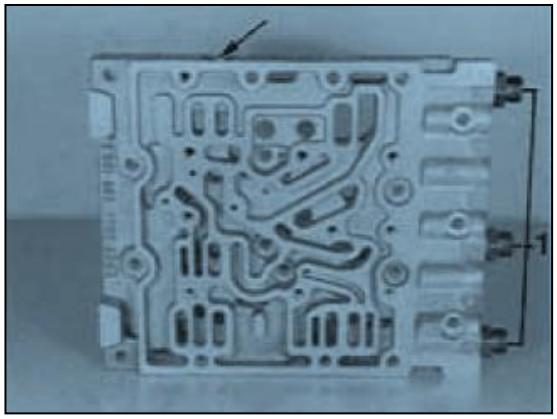

Figure 63

Insert the two check valves (composed of balls and springs) with grease in the countersinking of the channel plate (see Arrows).

NOTE :

Use only oil soluble grease !

Figure 64

Attach channel plate and gearbox control (Figure 65 ... 68) :

NOTE :

Pay attention to the installation position of the components, see corresponding Spare Parts List !

Install two adjusting screws.

Assemble housing gasket, intermediate plate and gasket.

(S) Adjusting screws (M8) 5870 204 011

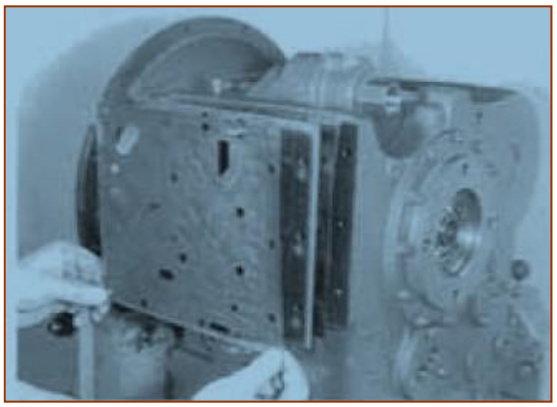

Figure 65

Assemble channel plate and fasten it by means of socket head screws.

Torque limit 20 Nm

NOTE ;

Pay attention to the installation position of the different socket head screws, see corresponding Spare Parts List !.

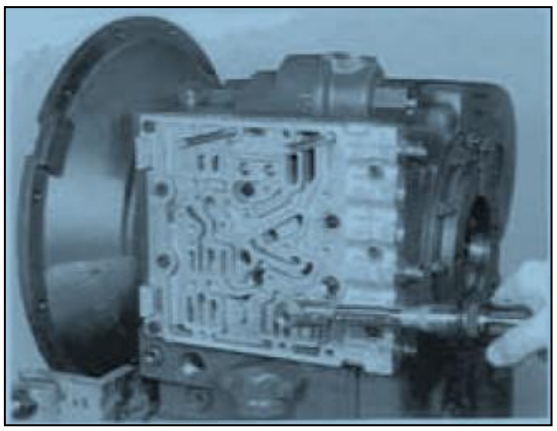

Figure 66

Assemble 1st gasket, intermediate plate and 2nd gasket.

NOTE :

Pay attention to the various gaskets, see corresponding Spare Parts List !

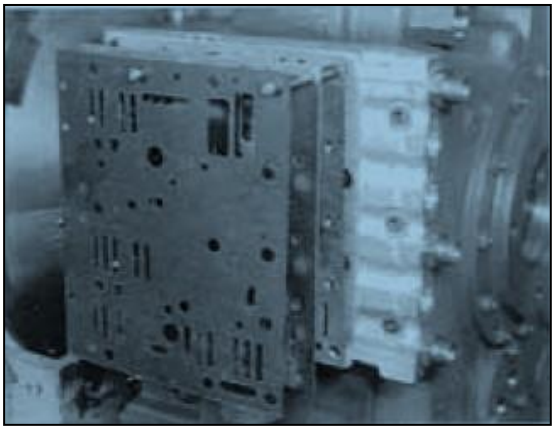

Figure 67

Place control unit against shoulder until contact is obtained and fasten it by means of hex. head screws (mount flat washers).

Torque limit 20 Nm

Install deliver/ lines according to the Illustration in the Spare Parts List !

NOTE ;

Mount new sealing rings !

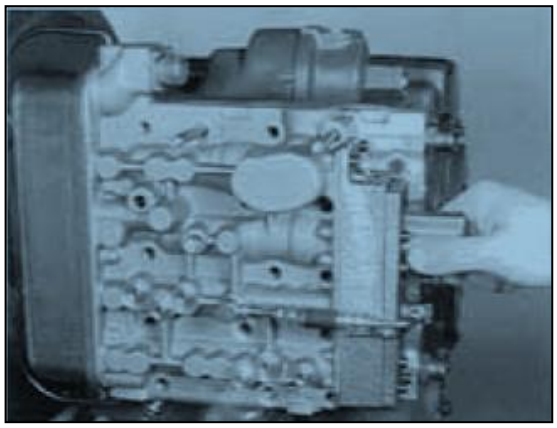

Figure 68

https://truckmanualshub.com/

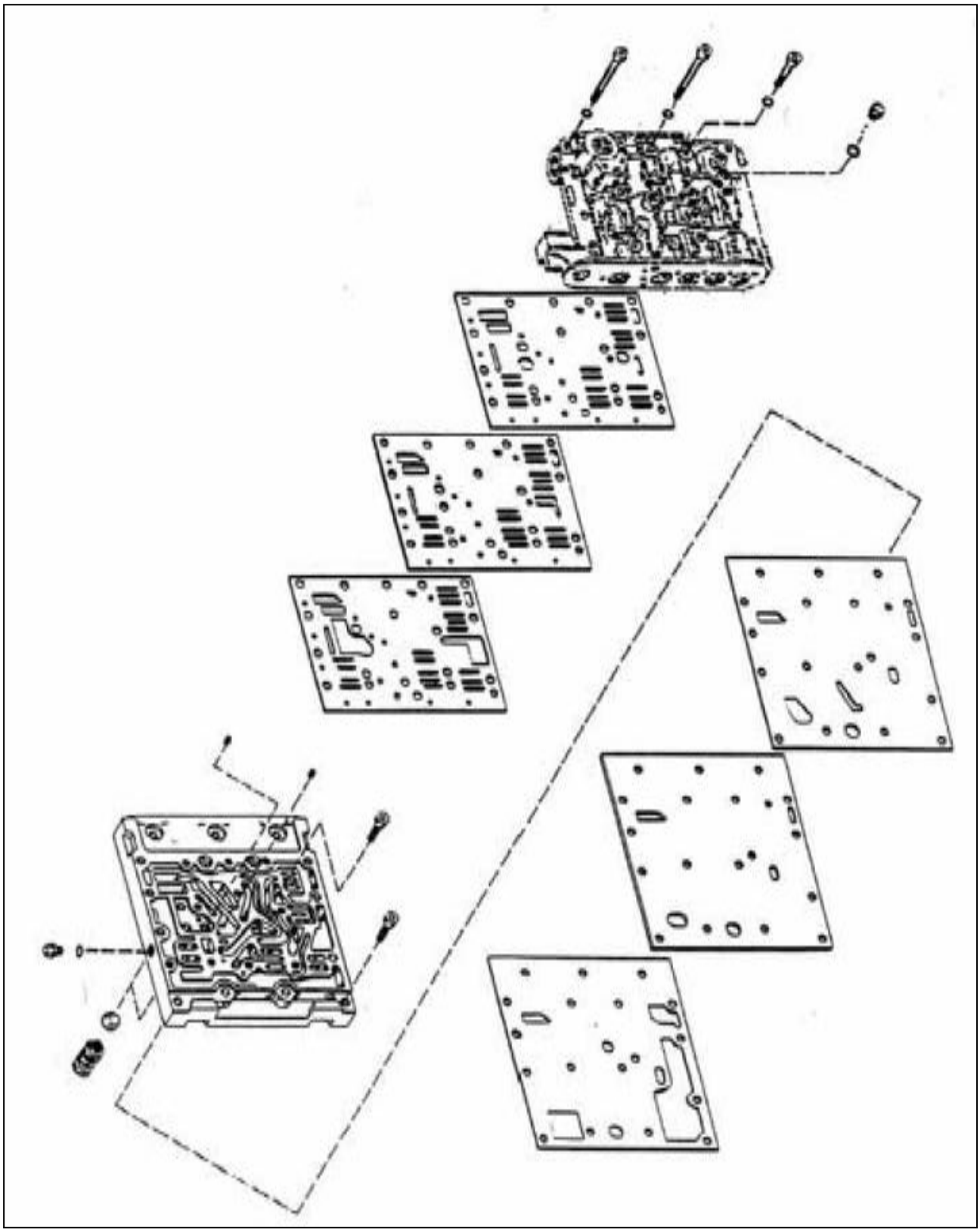

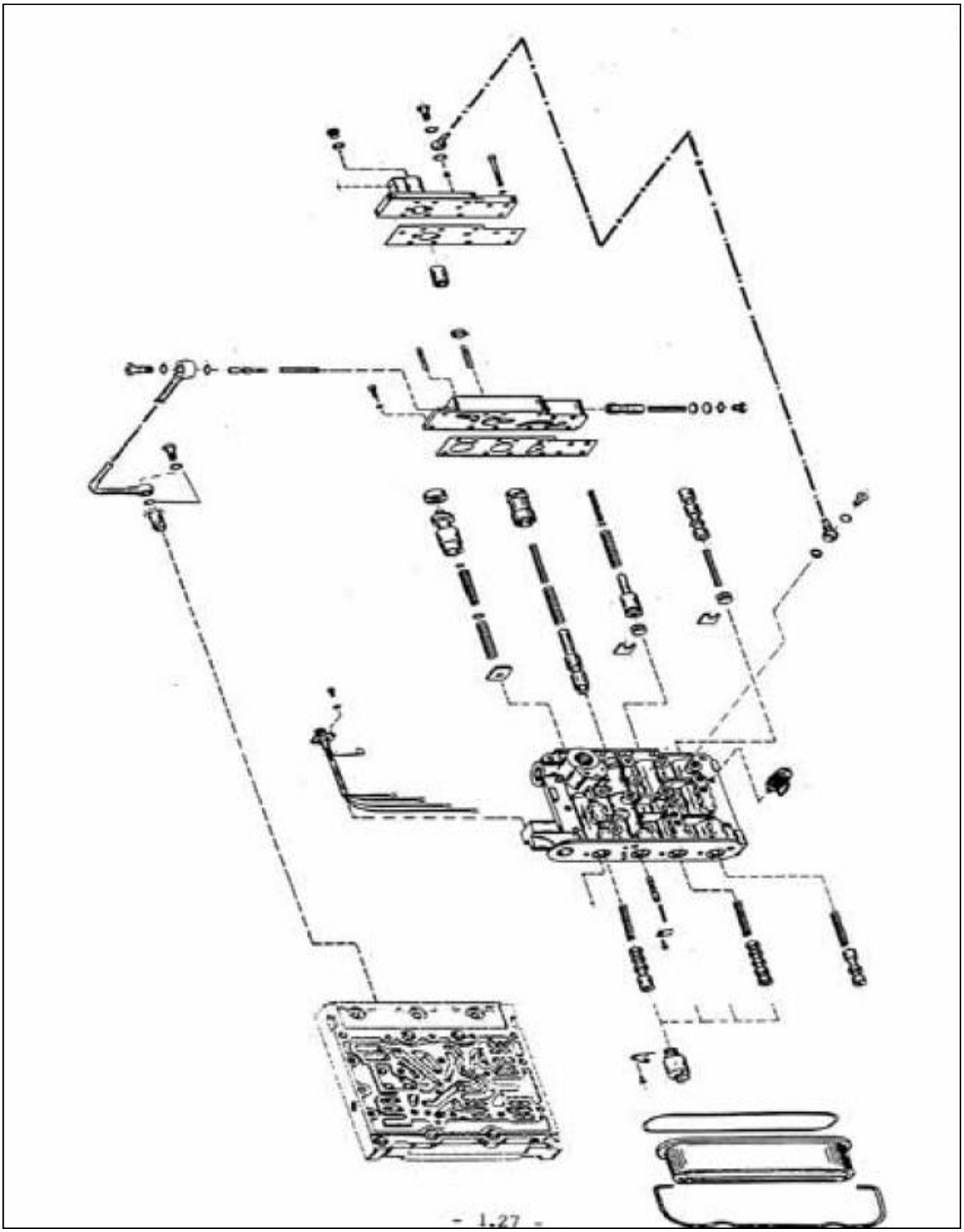
- 1.27 -

1.2.2 Version II : With 5 Solenoid valves and attached WK-Valve

1.2.2.1 DISASSEMBLY

Relax spring clip and remove cover.

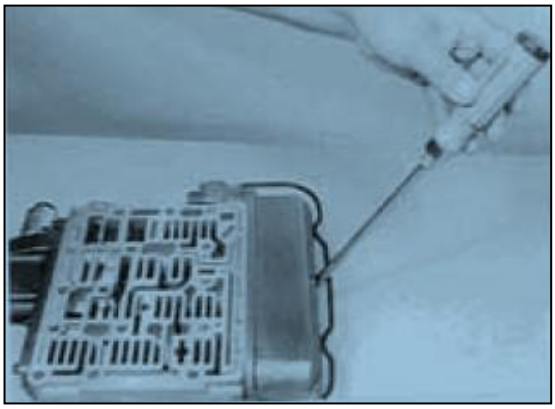

Figure 75

Pull off cable shoes.

Figure 76

Loosen socket head screws and remove solenoid valves.

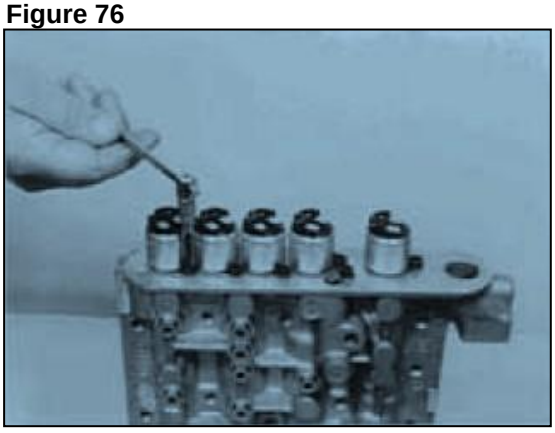

Figure 77

Remove components.

Figure 78

WK-Valve :

Remove components.

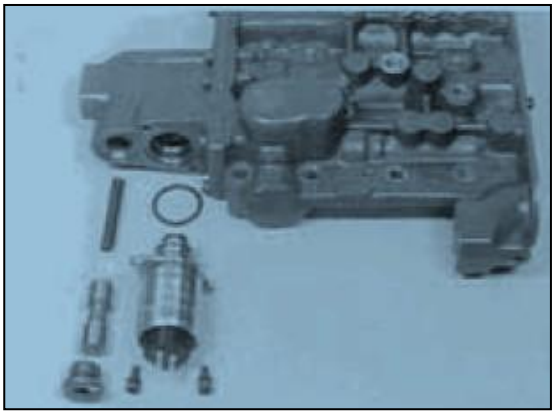

Figure 79

Loosen two socket head screws and fix shiftcontrol housing provisionally, using a Special Tool (S).

Now, loosen the remaining socket head screws and separate shift-control housing (is spring-loaded) from the valve body by uniform loosening of the nuts (S).

(S) Adjusting screws (M5) 870 204 036
with nut

(S) Adjusting screws (M6) 5870 204 049
with nut

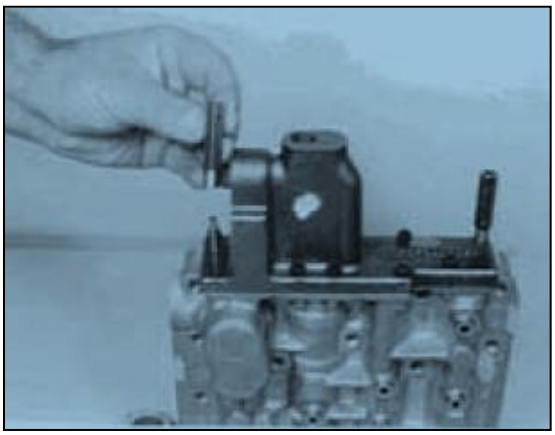

Figure 80

Remove components.

Figure 81

Remove stop plates (see Arrows) and demount the remaining components.

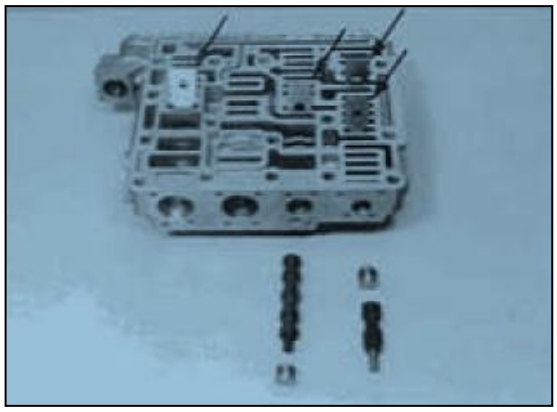

Figure 82

1.2.2.2 REASSEMBLY

see also Illustrated Tables, Page 1.35and1.37 !

NOTE:
Check all components for damage and renew if necessary !
Check free travel of the moving parts in the housing prior to the installation !
Spools can be exchanged individually !
Oil components prior to the reassembly !

Close the bores by means of balls (10 piecesΦ 4,50 mm) !
Introduce detent block 1 and fix it by means of the stop plate 4.
Install subsequently spool 2 and spring 3 (Lo = 51,3 mm), and fix them by means of the stop plate 5.
Install spool 6, spring 7 (Lo = 53,4 mm) and detent block 8, and fix them by means of the stop plate 9.
Insert detent block 10.

NOTE :
Pay attention to the installation position of the different stop plates, see Figure on the right !
Gearshift valve :
Install components.
1 = Spring (Lo = 53,40mm)
2 = Spool

Reset spool :
Install components.
1 = Spool
2 = Disk(s) (optional)
3 = Spring(Lo = 53,40 mm)
4 = Spring(Lo = 65,40 mm)
NOTE :
p2 is determined by the disk 4
(pay attention to Notes, Page 12 … 14) !

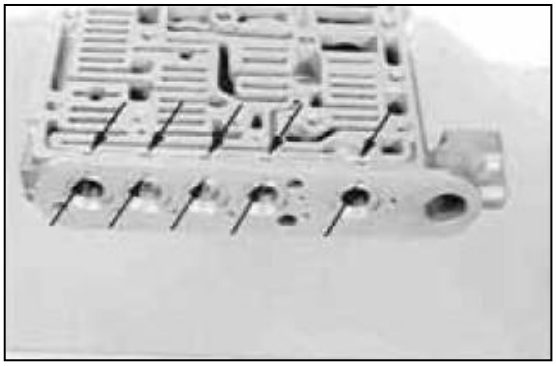

Figure 83

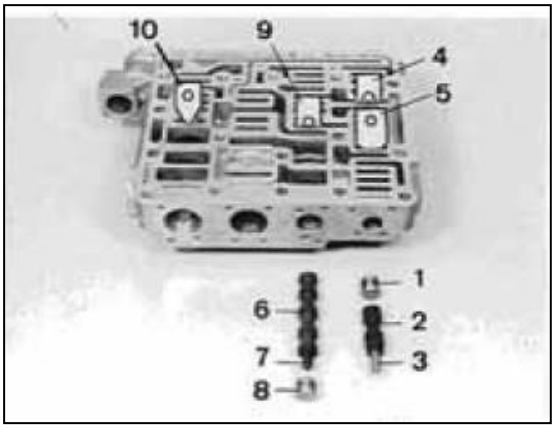

Figure 84

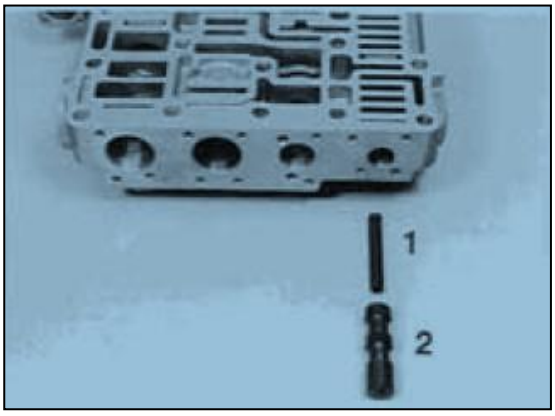

Figure 85

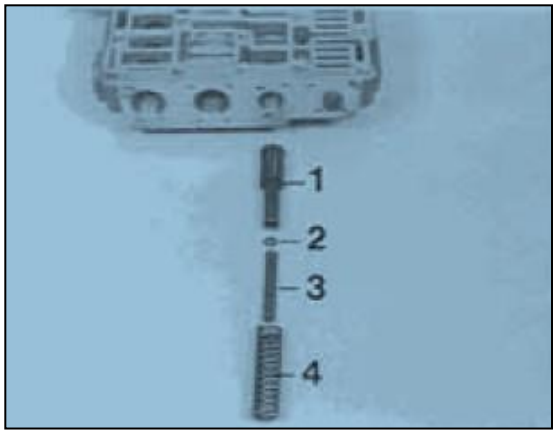

Figure 86

Pressure control valve :
Install components,
1 = Spool
2 = Disk (optional)
3 = Spring (L_0 = 76,70 mm)
4 = Spring (L_0 = 132,40 mm)
5 = Spool
NOTE ;
P1 is determined by the disk 2
(pay attention to Notes, Page 12 ... 14) !

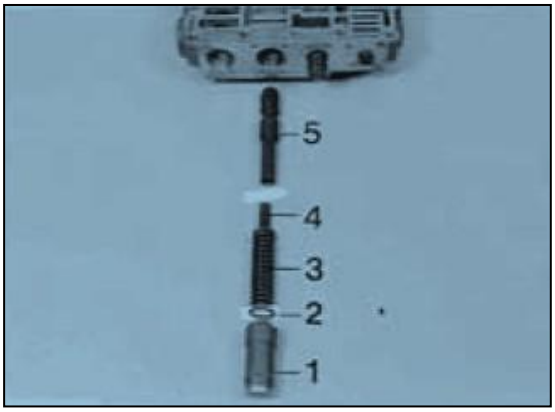

Figure 87

Control pressure valve :
Install components.
1 = Spring (L_0 = 65,40 mm)
2 = Spring (L_0= 78,60 mm)
3 = Disk(s) (optional)
4 = Disk(s) (optional)
5 = Spool
6 = Sleeve
NOTE :
P5 is determined by the disks 3 and 4
(pay attention to Notes, Page 12 ... 14) !

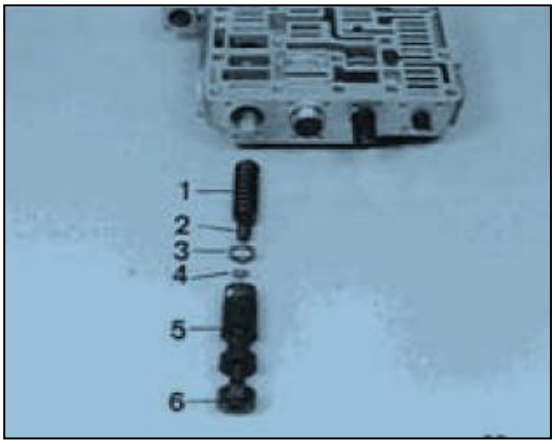

Figure 88

Pre-assemble and attach shift-control housing (WK) (Figure 89 ... 92)
Close the two bores by means of balls and install diaphragm.
1 = Bail (Φ 4,50 mm)
2 = Diaphragm (optional)
3 = Ball (Φ 7,00 mm)
NOTE :
Secure diaphragm by means of Loctite (Type No. 270) !
Now, clean diaphragm from Loctite residues by means of compressed air I
t2 (Modulation time-WK) is determined by the diaphragm 2
(pay attention to Notes Page 12 ... 14) !

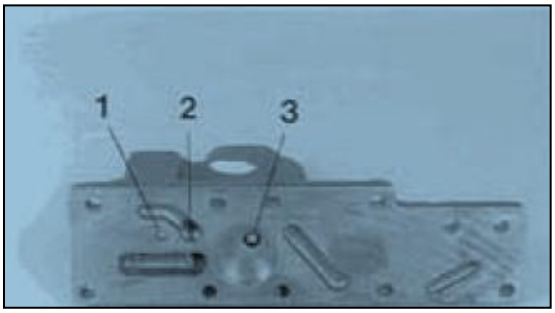

Figure 89

Install two adjusting screws (S) and mount gasket (Arrow).
(S) Adjusting screws (M5) 5870 204 036
with nut
(S) Adjusting screws (M6) 5870 204 049
with nut

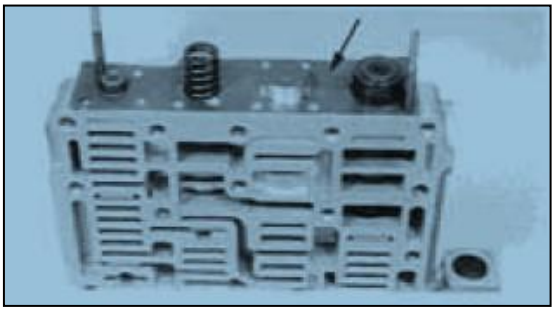
Figure 90

Pull shift-control housing by means of threaded bushings (S) against shoulder.
Now, fasten lousing by means of socket head screws.

Torque limit	(M5/8.8)	5,5 Nm
(S) Adjusting screws with nut	(M5)	5870 204 036
(S) Adjusting screws with nut	(M6)	5870 204 049

Install components :
1 = Shift-control housing
2 = O-Ring
3 = Solenoid valve
4 = Socket head screws (with spring washer)
5= Spring(L_0 = 53,40 mm)
6 = Disk(s) (optional)
7 = Spool
8 = Screw plug (with O-Ring)

NOTE:
p2 is determired by the disk 6
(pay attention to Notes, Page 12 ... 14) I

Install components :
1 = Shift-control housing
2 = Spring (Lo =51,30 mm)
3 = Spool
4 = Spool
5 = Spring (Lo =37,10 mm)
6 = Spool fixing (retaining plate and socket head screw)
7 = Spring (Lo = 53,40 mm)
8 = Spool
9 = Retaining plate and socket head screw
10 = Solenoid valves (5x)

NOTE :
Pay attention to the installation position of the solenoid valves, see Figure 95 !

Install cable harness.

NOTE :
Mount new gaskets 1
Pay attention to the location of the plug nose see Arrow !

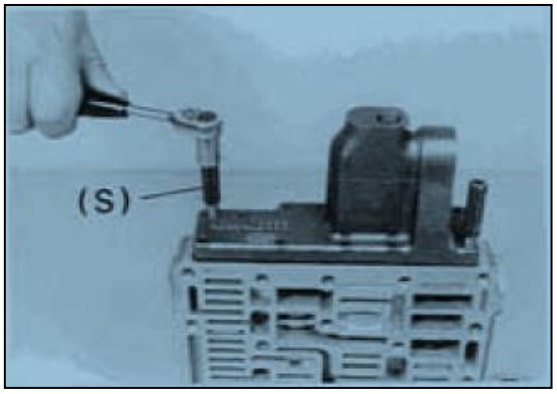

Figure 91

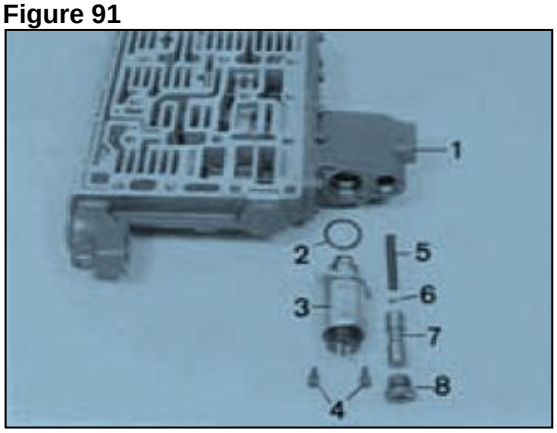

Figure 92

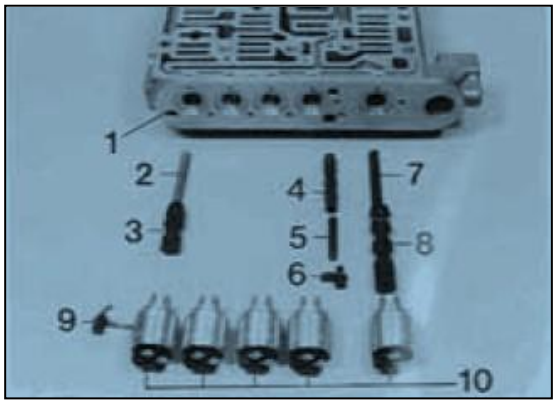

Figure 93

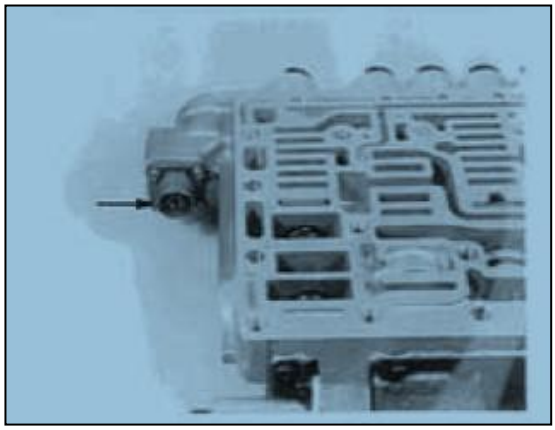

Figure 94

Connect solenoid valves according to the Illustration on the right..

Figure 95

Mount new O-Ring (164.2 x 5.7) and fix cover by means of clamping collar.

Figure 96

Install screw plugs as well as control pressure sender (according to the Version).

NOTE :

The Reassembly of the channel plate as well as the attachment of the gearbox control is treated on Page 32 ... 34 !

Pay attention to the Perspective Illustration of the corresponding Sparc Parts List !

(S) Adjusting screws (M8) 5870 204 011

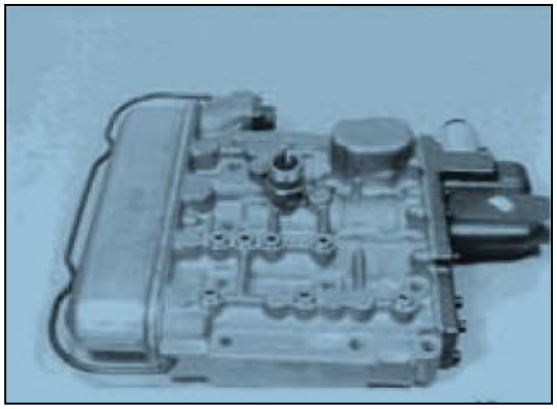

Figure 97

https://truckmanualshub.com/

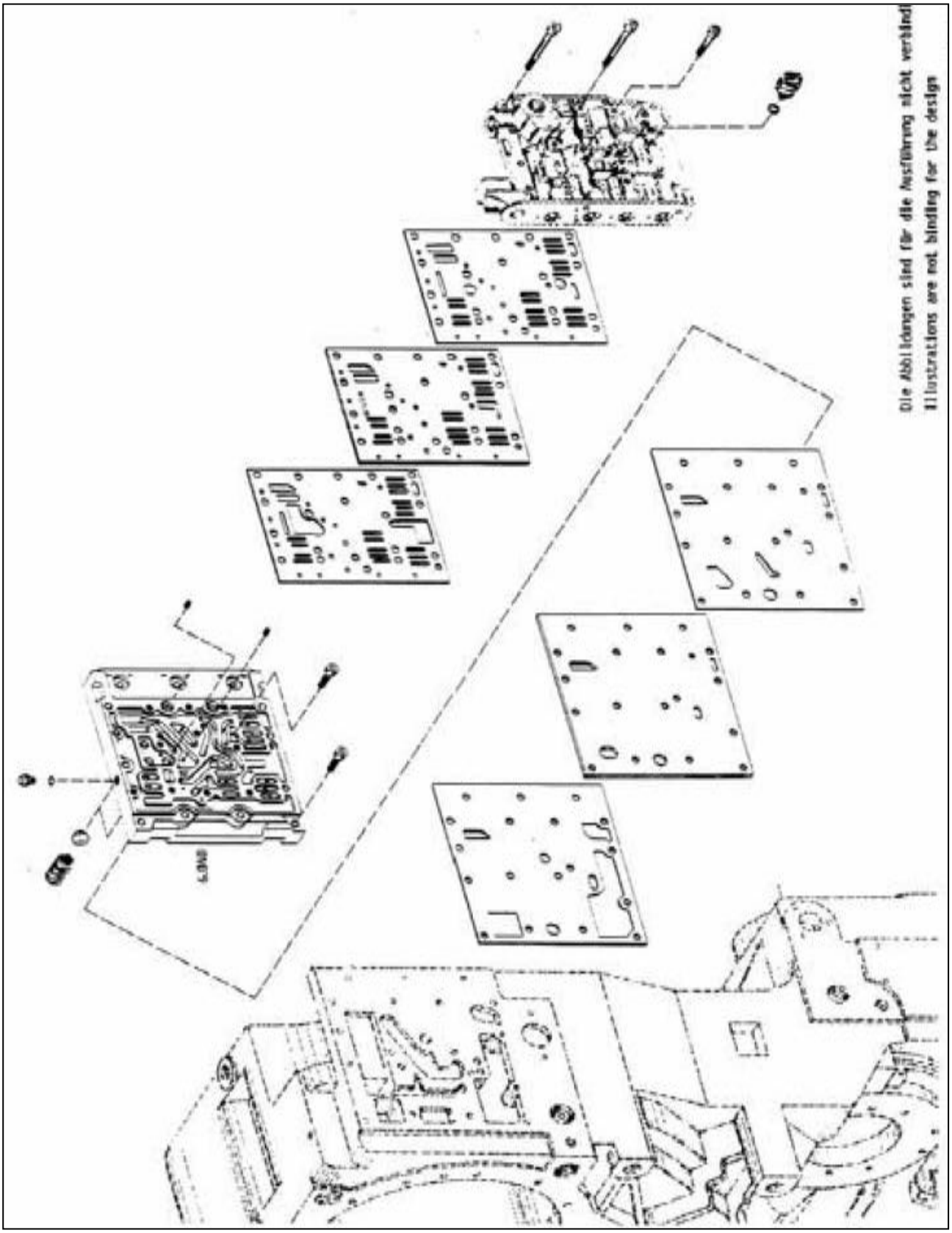

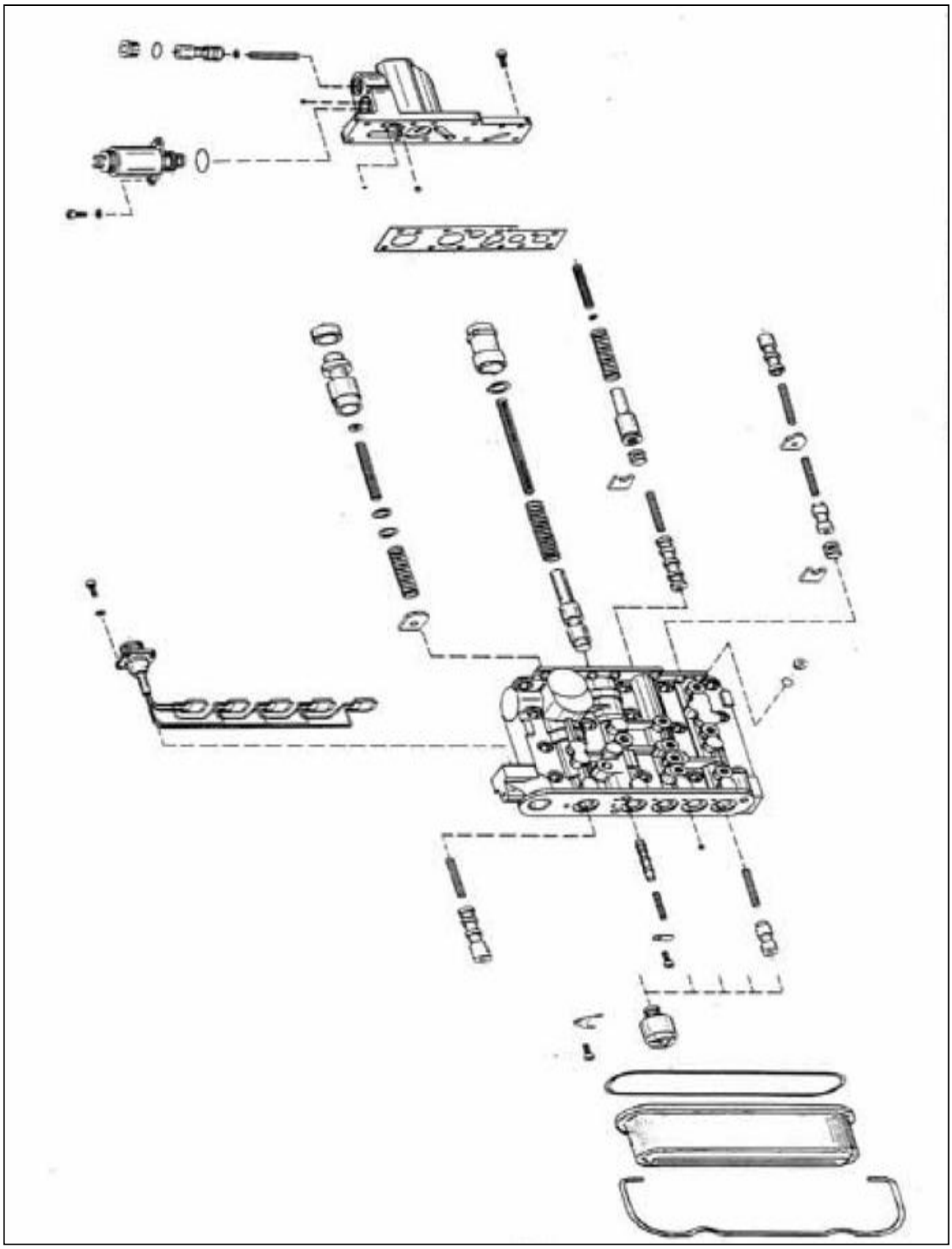

https://truckmanualshub.com/

1.3 ALUMINIUM DIE-CAST GEARBOX CONTROL

1.3.1 Version 1 : With WK-Valve

1.3.1.1 DISASSEMBLY

(S) Adjusting screws 5870 204 011

Relax spring clip and remove cover.

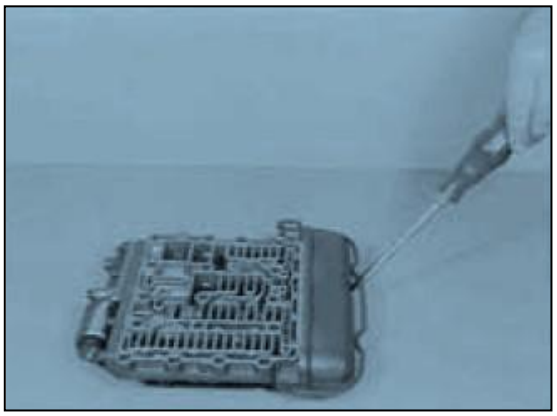

Figure 100

Pull off the cable shoes, loosen socket head screws and remove cable harness.

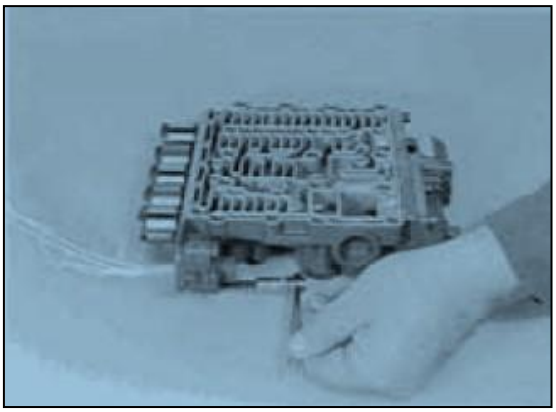

Figure 101

Loosen socket head screws and demount solenoid valves.

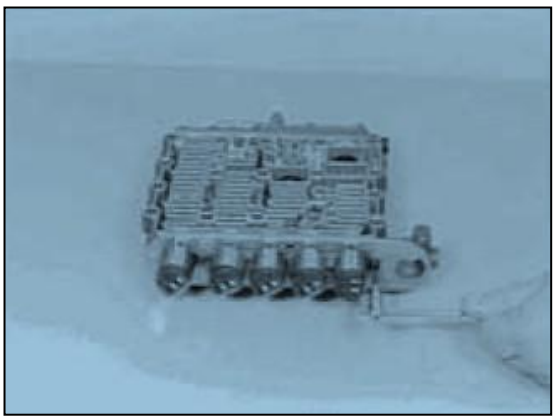

Figure 102

Remove components, see Figure on the right!

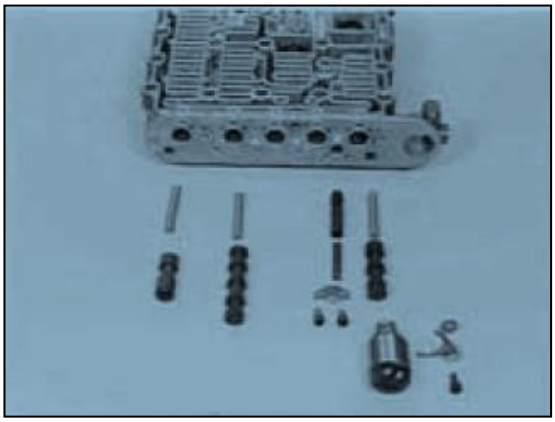

Figure 103

Remove and dismantle WK-Valve :

Loosen socket head screws and disassemble solenoid valve.

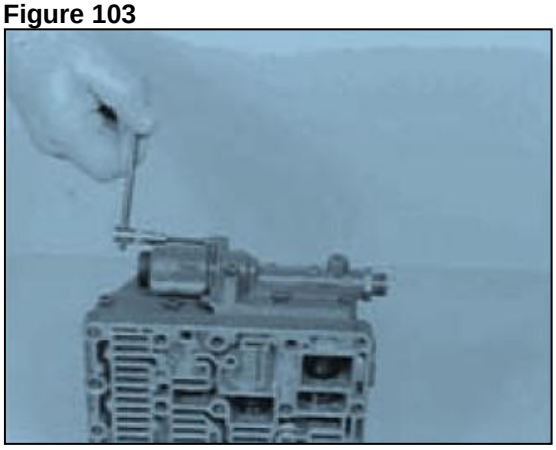

Figure 104

Separate WK-Shift-control housing from the valve body and dismantle it, see Figure on the right !

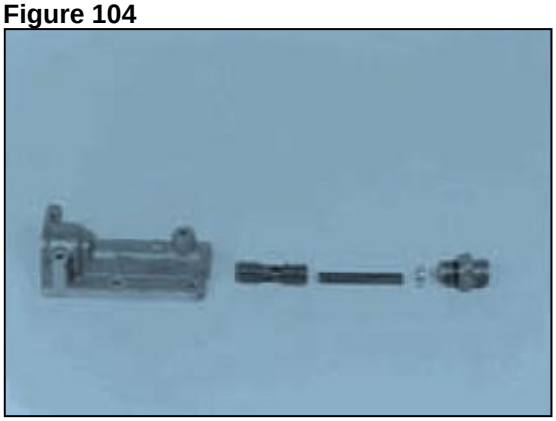

Figure 105

Loosen two socket head screws and fix the shift-control housing provisionally, using a Special Tool (S).

Now, loosen the remaining socket head screws and separate cover (is spring-loaded) from the valve body by uniform loosening of the nuts (S).

(S) Adjusting screws (M6) 5870 204 049
with nut

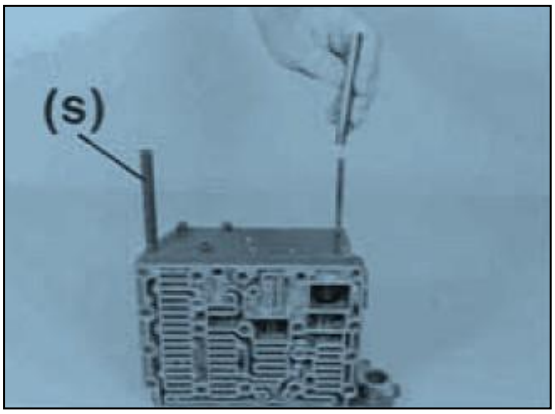

Figure 106

Remove components, see Figure on the right !

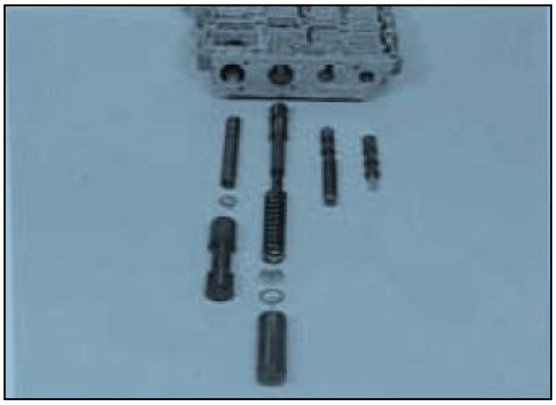

Figure 107

Remove stop plate and demount spring as well as spool.

NOTE :

Installation position of the stop plate, see Arrow!

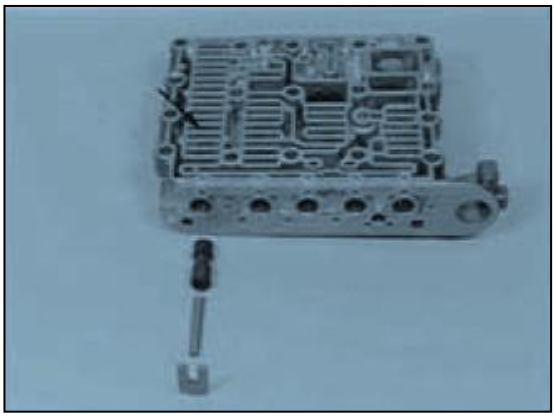

Figure 108

Remove diaphragm and check valves.

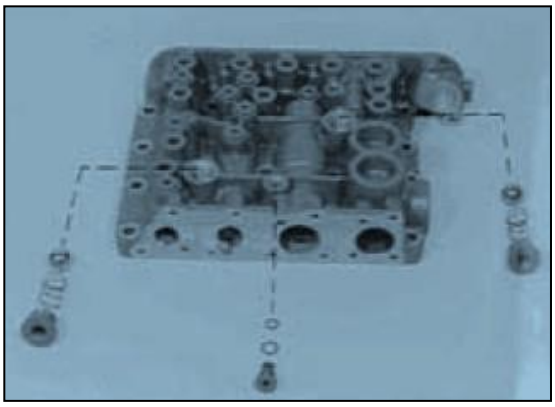

Figure 109

https://truckmanualshub.com/

1.3.1.2 REASSEMBLY

see also Illustrated Tables, Page 55and 56 !

NOTE :

Check all components for damage and renew if necessary !

Check free travel of the moving parts in the housing prior to the installation !

Spools can be exchanged individually !

Oil components prior to the reassembly !

Employ new O-Rings for all screw plugs (8 pieces) and install them.

Install check valves and diaphragm (optional).

NOTE :

Mount new O-Rings !

Fasten O-Ring 6 x 1.5 mm (Arrow) with grease on the end face of the diaphragm - makes the reassembly easier !

Use only oil soluble grease for the reassembly !

Δ t1 is determined by the diaphragm

(pay attention to Notes, Page 12 … 14)!

Torque limit :

Screw plug Ml10x 1	20 Nm
Screw plug Ml8x1.5	35 Nm
Diaphragm	20 Nm

Close the bores by means of balls (10 pieces, Φ 4,50 mm).

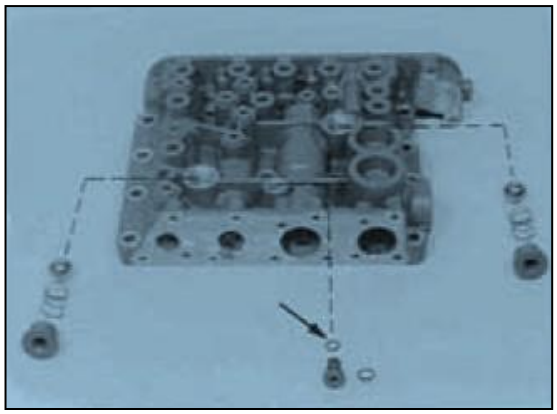

Figure 110

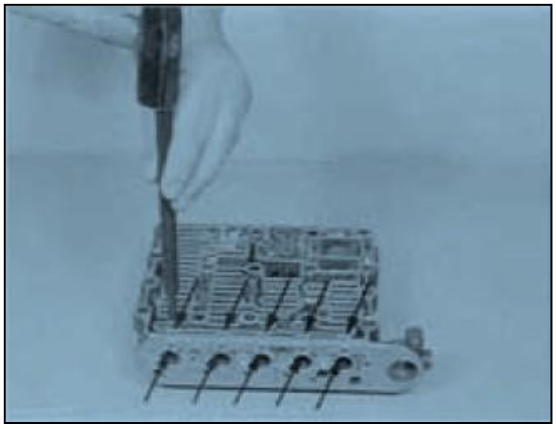

Figure 111

Control pressure valve :

Install components.

1 = Spring (L_0 = 96,20 mm)

2 = Disk(s) (optional)

3 = Spool

NOTE :

ps is determined by the disk

(pay attention to Notes, Page 12 ... 14) !

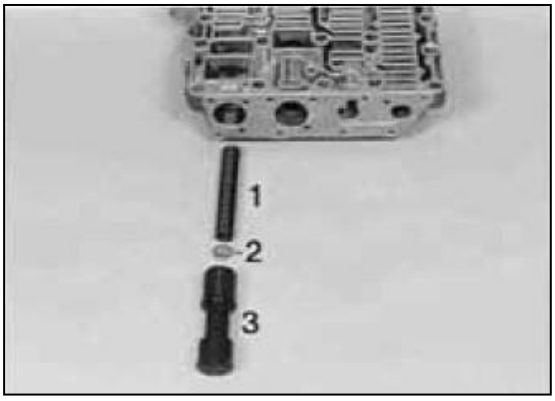

Figure 112

Pressure control valve :

Install components.

1 = Control spool

2 = Spring (L_0 = 124,10 mm)

3 = Spring (L_0= 77,10 mm)

4 = Disk

5 = Disk(s) (optional)

6 = Displacement spool

NOTE ;

Install disk with the countersinking facing the compressison spring !

P1 is determined by the disk 5

(pay attention to Notes Pages 12 ... 14) !

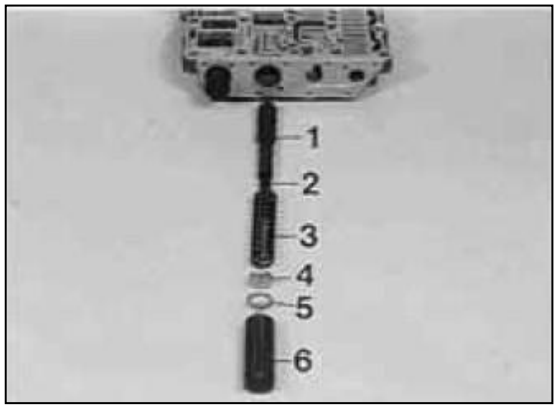

Figure 113

Reversing valve ;

Install components.

1 = Reversing spool

2 = Spring (L_0= 5 6 , 3 0 mm)

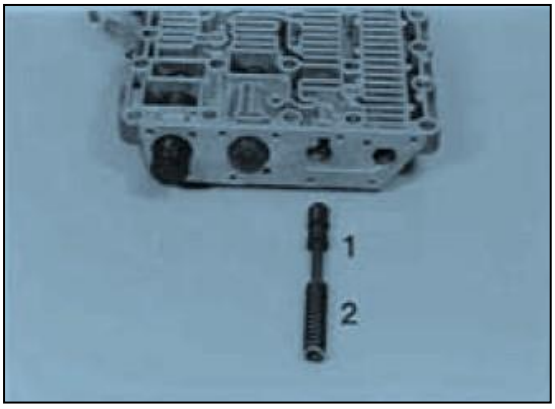

Figure 114

Control spool KV :

Install components.

1 = Spool (total length = 55,50 mm)

2 = Spring (L_0 = 51,30 mm)

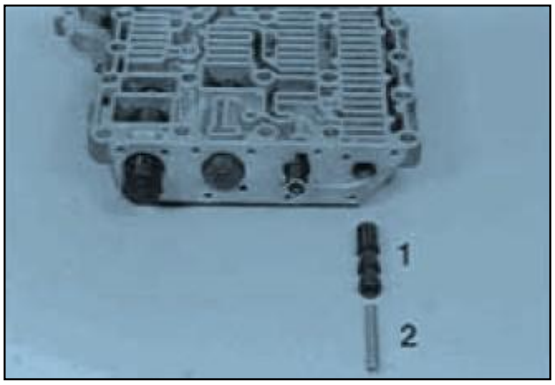

Figure 115

Install two adjusting screws (S) and assemble fat gasket (Arrow).

Now, pull cover against shoulder, using nuts (S) and fix it provisionally by means of socket head screws (4 pieces, see Figure 118).

(S) Adjusting screws (M6) 5870 204 049
with nut

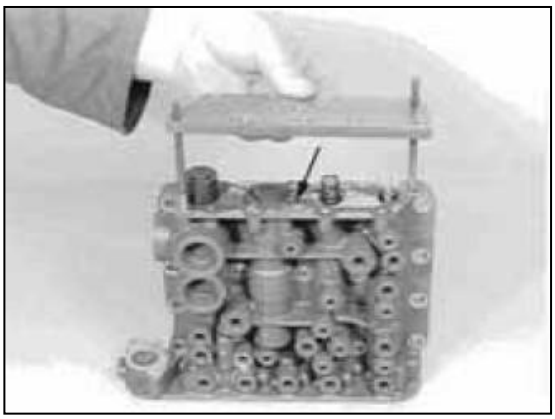

Figure 116

WK-Valve :

Install components.

1 = Shift-control housing

2 = O-Ring

3 = Screw plug

4 = Spool

5 = Disks (optional)

6 = Spring (Lo = 53,40 mm)

7 = Detent block (spring guide)

8 = O-Ring

9 = Connecting piece

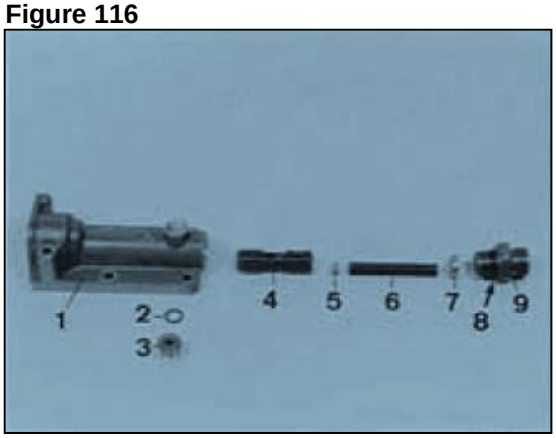

Figure 117

NOTE :

Install detent block 7 with the countersinking facing the spring !

p2 is determined by the disk 5

(pay attention to Notes, Page 12 ... 14 !

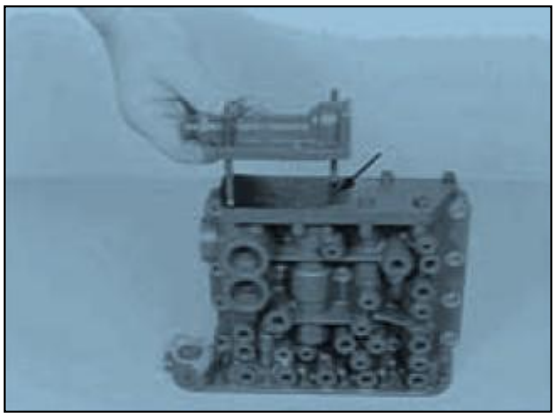

Figure 118

Install two adjusting screws and assemble flat gasket (Arrow).

Fasten shift-control housing and cover by means of socket head screws (mount flat washers).

Torque limit (M6/8.8) 9,5 Nm

(S) Adjusting screws (M6) 5870 204 049
with nut

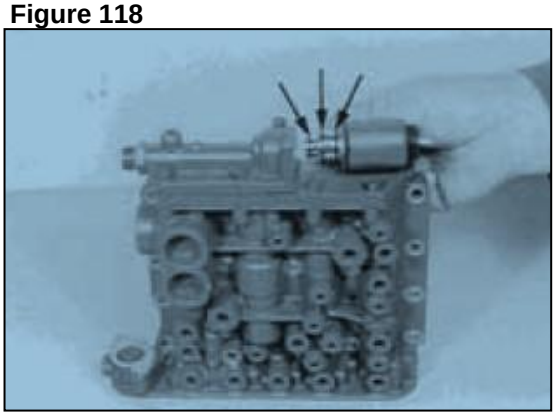

Figure 119

Mount new O-Rings (Arrows) and fasten solenoid valve by means of socket head screws (mount flat washers).

Torque limit (M5/8.8) 5,5 Nm

Introduce control spool (K4/KR) and compression spring (Lo = 51.30 mm), and fix them by means of stop plate.

NOTE :

Position of the stop plate, see Arrow !

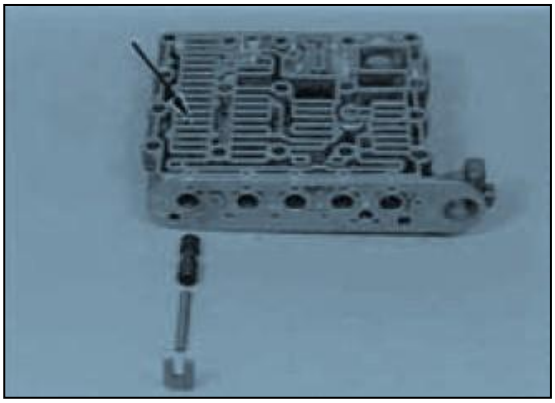

Figure 120

Install components (1 ... 10) :

1 = Spring (L_o = 51.30 mm)

2 = Control spool K4/KR

3 = Spring (L_o = 51.30 mm)

4 = Control spool K 1 / K 2 / K 3

5 = Spool

6 = Spring (L_o = 37.10 mm)

7 = Retaining plate

8 = Socket bead screws

9 = Spring (L_o = 51.30 mm)

10 = Pilot spool (total length = 52.50 mm)

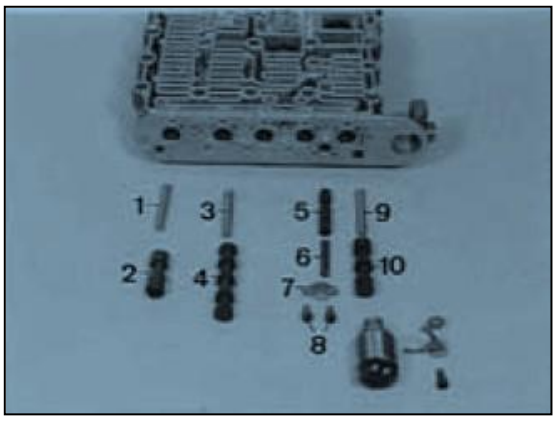

Figure 121

Insert solenoid valves and fix them by means of disks, retaining plates and socket head screws.

Torque limit (M5/8.8) 5.5 Nm

NOTE :

Pay attention to the installation position of the disks (mount between valve body and retaining plate), see Arrow !

Pay attention to the radial installation position of the solenoid valves, see also Figure 124 !

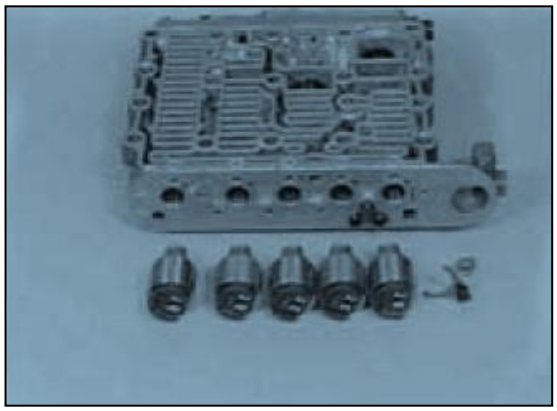

Figure 122

Install cable harness.

Torque limit (M6/8.8) 9.5 Nm

NOTE ;

Mount new gaskets !

Pay attention to the location of the plug nose see Arrow !

Figure 123

Connect solenoid valves according to the Figure on the right.

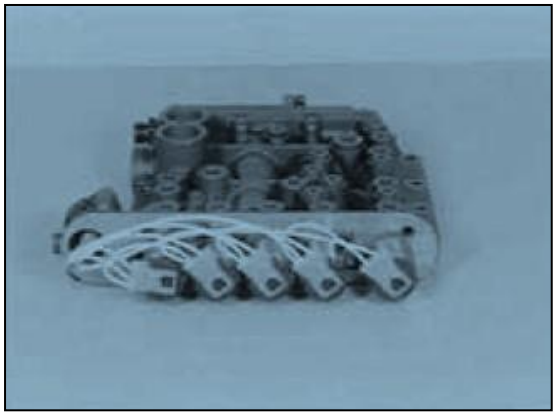

Figure 124

Mount new O-Ring (Arrow) and fix cover by means of clamping collar.

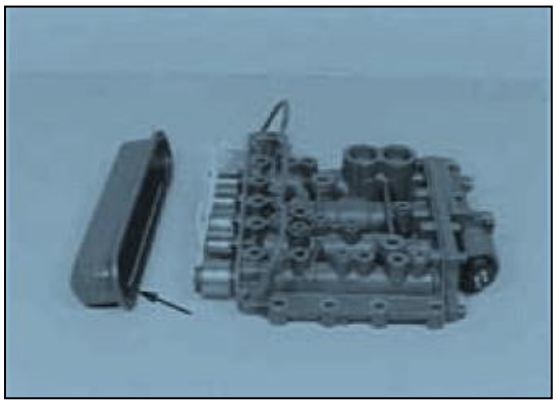

Figure 125

Pre-assemble and attach channel plate (Figure 126 ... 129) ;

Mount connecting pipe (1) and screw plug (2).

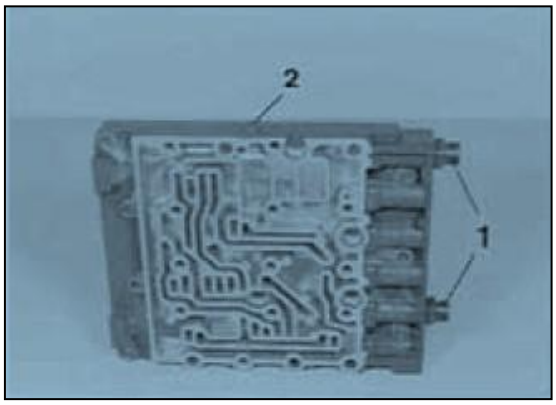

Figure 126

Install two adjusting screws and assemble housing gasket.

NOTE :

Pay attention to the different gaskets, see Figure 127 and 128 !

(S) Adjusting screws (M8) 5870 204 011

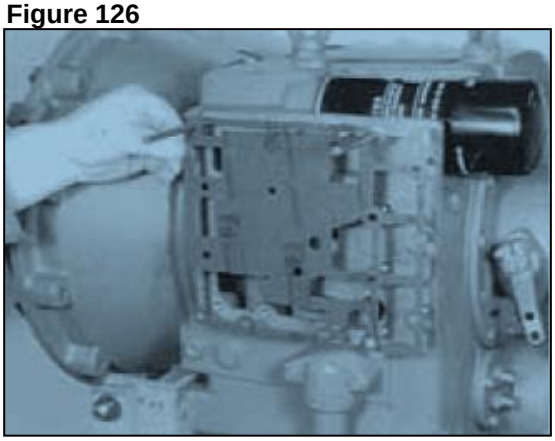

Figure 127

Install intermediate plate and 2nd gasket.

Figure 128

Assemble channel plate and fasten by means of socket head screws (mount flat washers).

Torque limit 20 Nm

NOTE :

Use only socket head screws, M8 x 35, DIN 6912 (with low head) !

Position of screws, see Arrows !

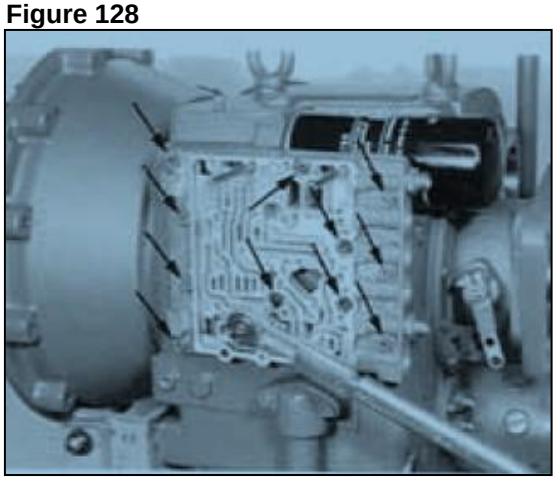

Figure 129

Attach gearbox control (Figure 130 ... 132) :

Assemble 1st gasket.

NOTE :

Pay attention to the different gaskets, see Figure 130 and 131 !

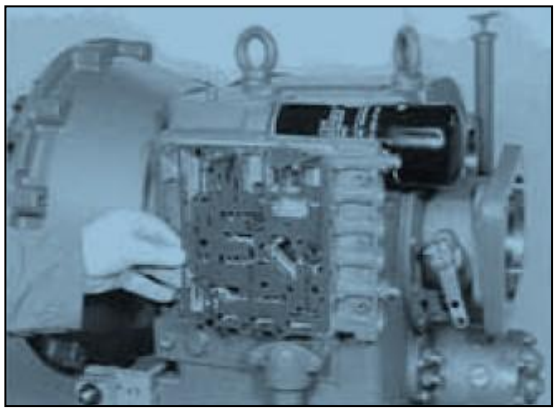

Figure 130

Assemble intermediate plate and 2nd gasket.

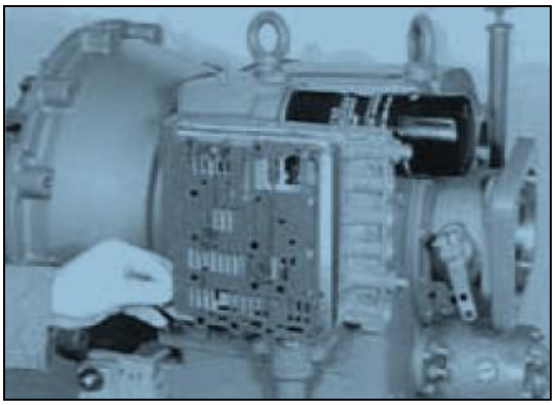

Figure 131

Assemble gearbox control and fasten it by means of socket head screws (8 pieces M8 x 65, 11 pieces M8 x 35 and I piece M8 x 63mm).

Torque limit 20 Nm

NOTE :

Mount flat washers !

Position of the socket head screw M8 x 63 mm, see Arrow !

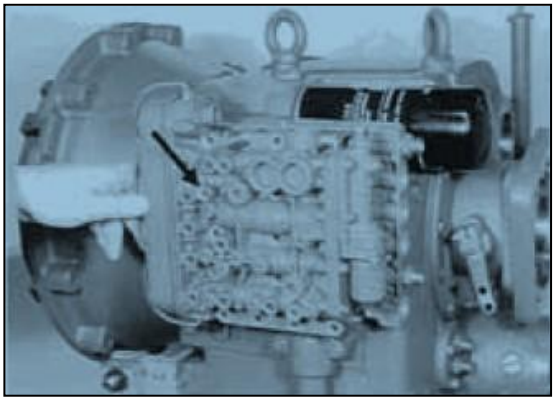

Figure 132

Install delivery lines, see Perspective illustration in the corresponding Spare Parts List !

https://truckmanualshub.com/

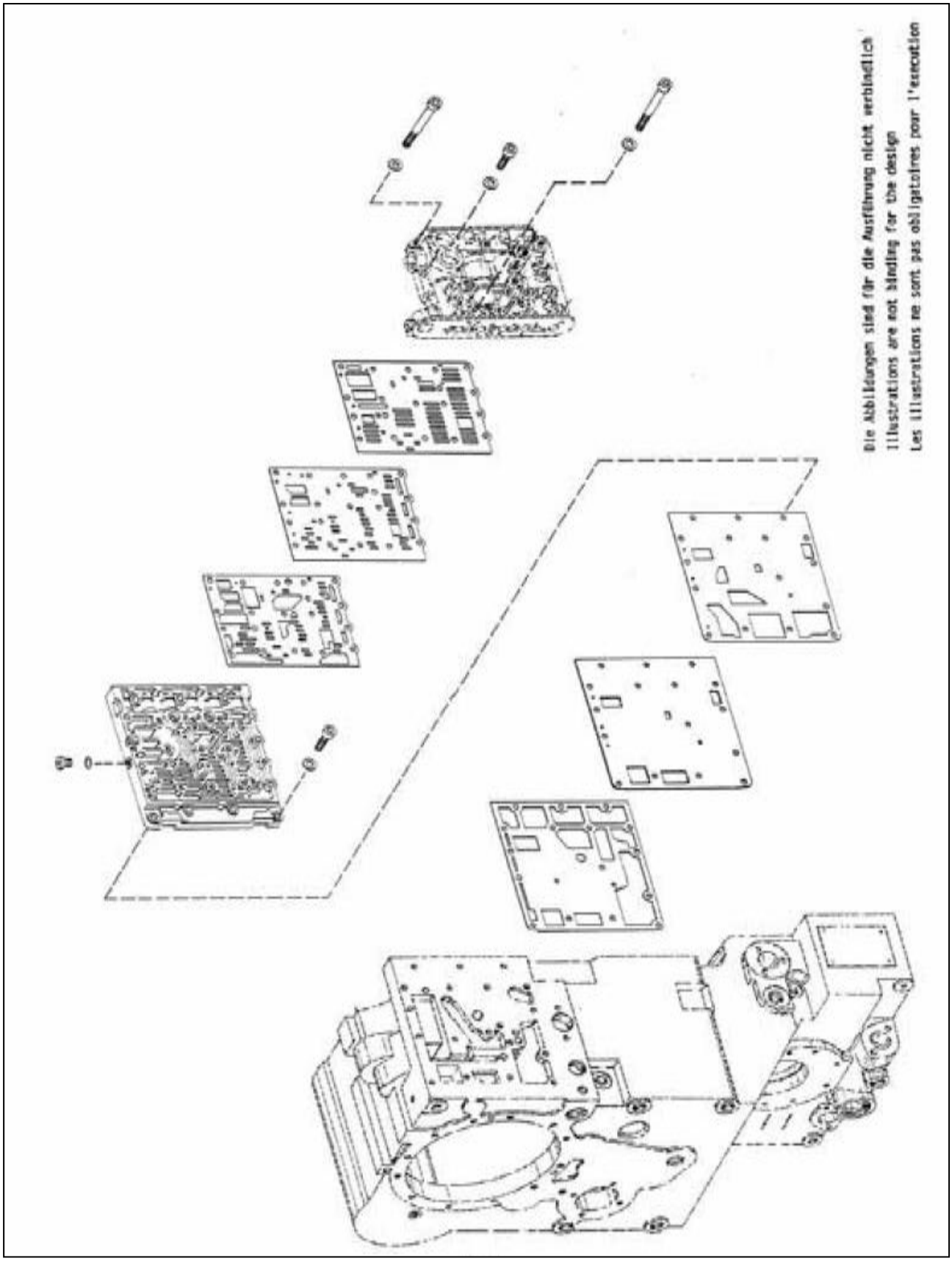

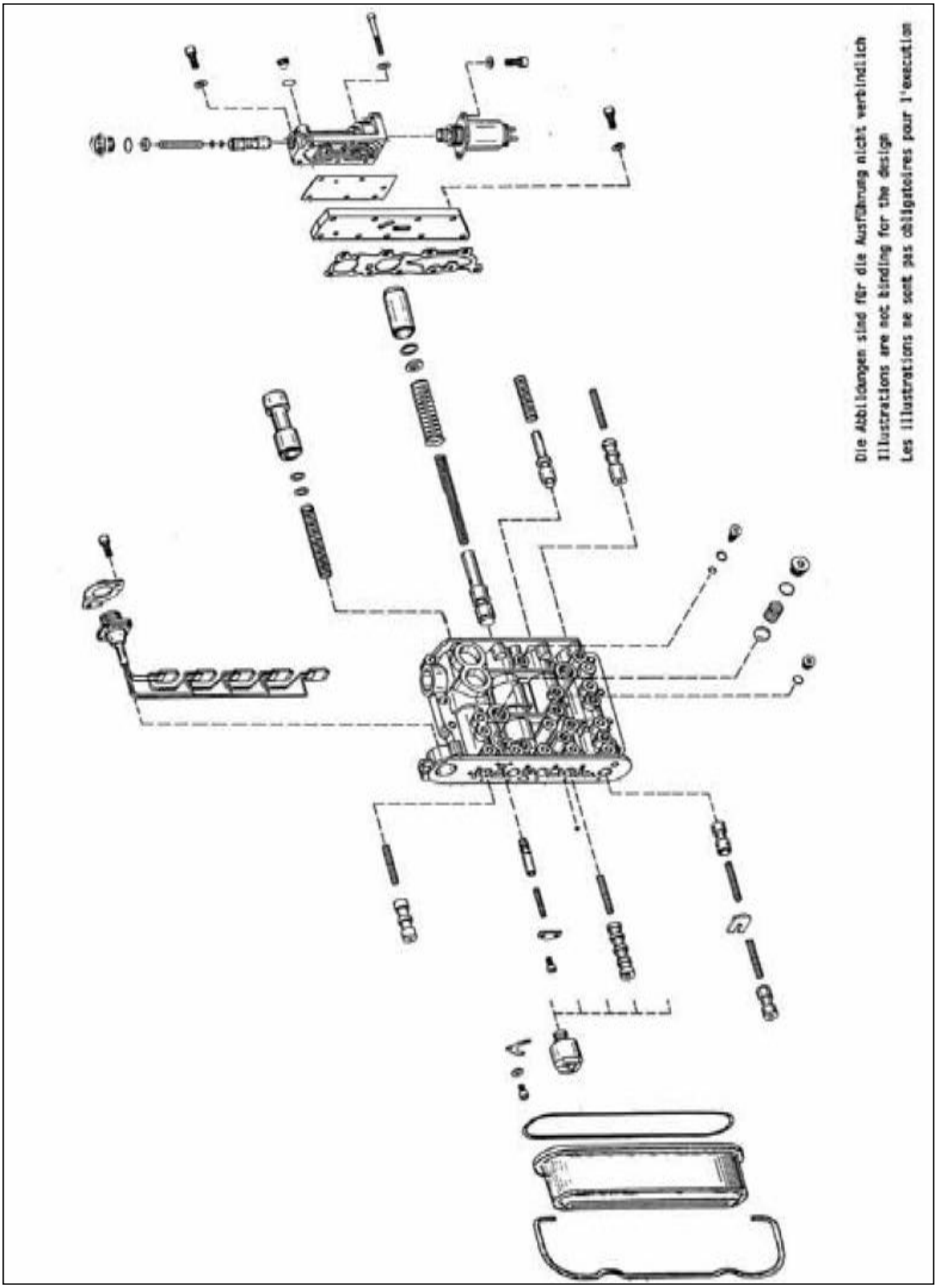
Die Abbildungen sind für die Ausführung nicht verbindlich
Illustrations are not binding for the design
Les illustrations ne sont pas obligatoires pour l'execution

1.3.2 Version 11 : With 2-stage pressure control valve

1.3.2.1 DISASSEMBLY

Relax spring clip and remove cover.

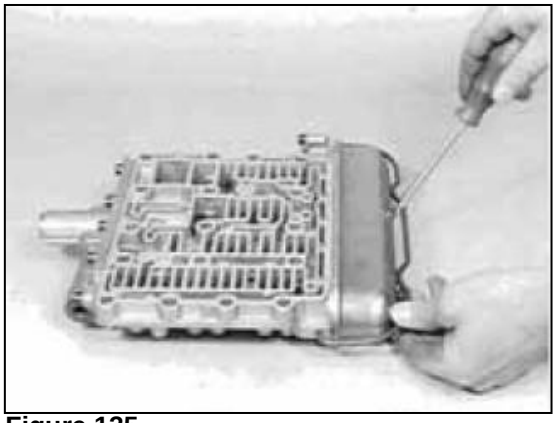

Figure 135

Pull off cable shoes, loosen the socket head screws and demount solenoid valves.

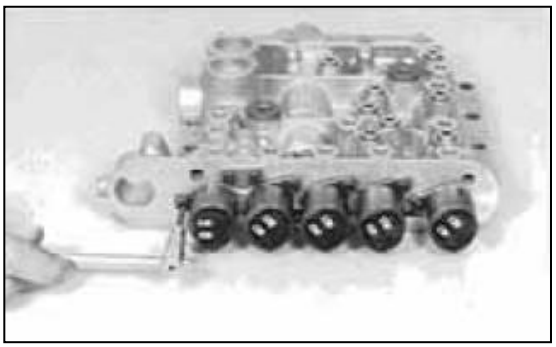

Remove components, see Figure on the right.

Figure 136

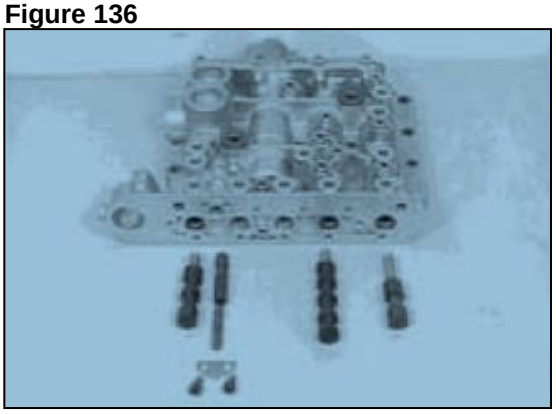

Loosen two socket head screws and fix shiftcontrol housing provisionally, using a Special Tool (S).
Now, loosen the remaining socket head screws and separate shift-control housing (is spring loaded) from the valve body by uniform loosening of the nuts (S).

(S) Adjusting screws (M6) 5870 204 049
with nut

Figure 137

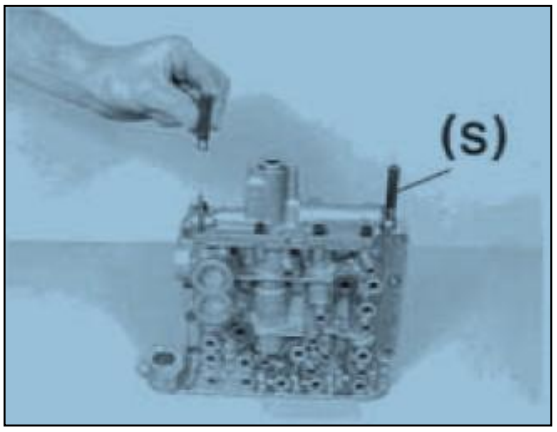

Figure 138

Remove components.

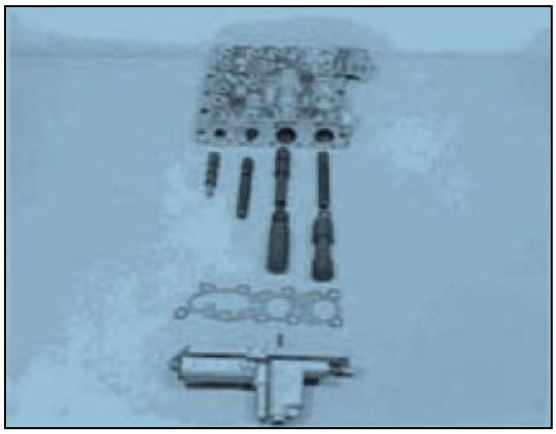

Figure 139

Remove stop plate and demount spool as well as spring.

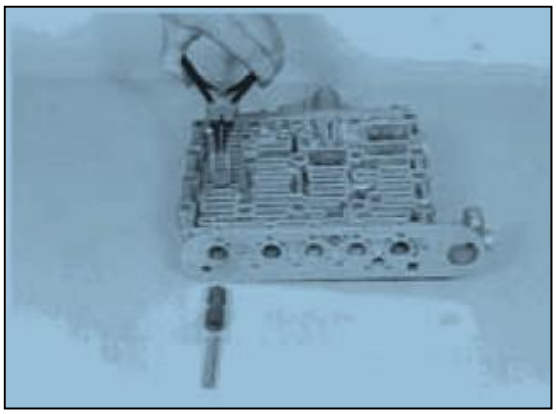

Figure 140

Dismantle pressure control valve, see Figure on the right.

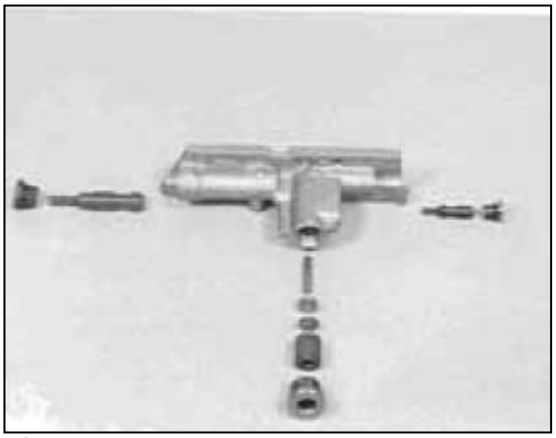

Figure 141

Remove diphragm and check valves.

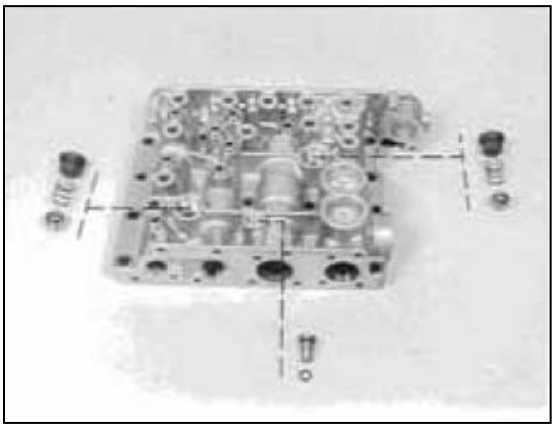

Figure 142

https://truckmanualshub.com/

1.3.2.2 REASSEMBLY

see also Illustrated Tables, Page 63 !

NOTE :

Check all components for damage and renew if necessary !

Check free travel of the moving parts in the housing prior to the installation !

Spools can be exchanged individually !

Oil components prior to the reassembly !

Employ new O-Rings for all screw plugs and install them.

Install check valves and diaphragm (optional).

NOTE ;

Mount new O-Rings !

Fasten O-Ring 6x1.5 mm (Arrow) with grease on the end face of the diaphragm - makes the reassembly easier !

Δ t 1 is determined by the diaphragm

(pay attention to Notes, Page 12

Torque limit :

Screw plugs Ml0x1	20 Nm
Screw plugs Ml8x1.5	35 Nm
Diaphragm	20 Nm

Close the bores by means of ball (10 pieces, Φ 4,50 mm).

Control pressure valve :

Install components.

1 = Spring (Lo = 96,20 mm)

2 = Disk(s) (optional)

3 = Spool .

ps is deter mired by the disk 2

(pay attention to Notes Page 12… 14) !

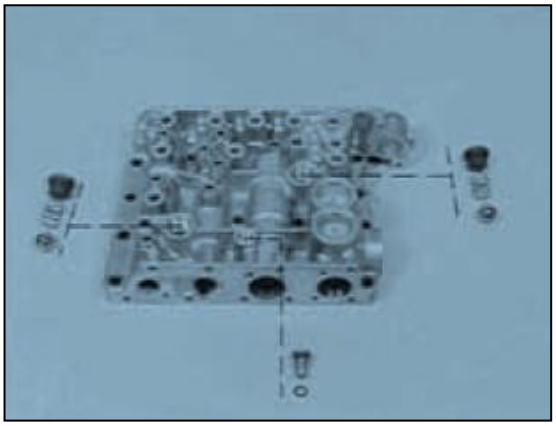

Figure 143

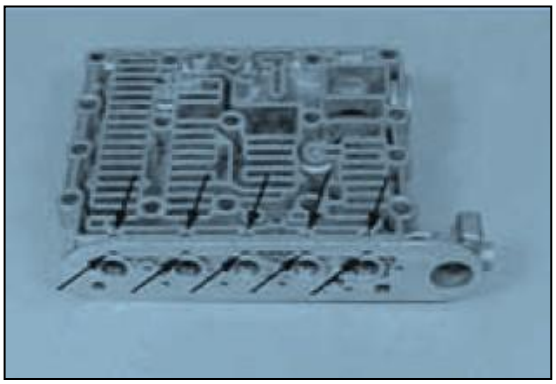

Figure 144

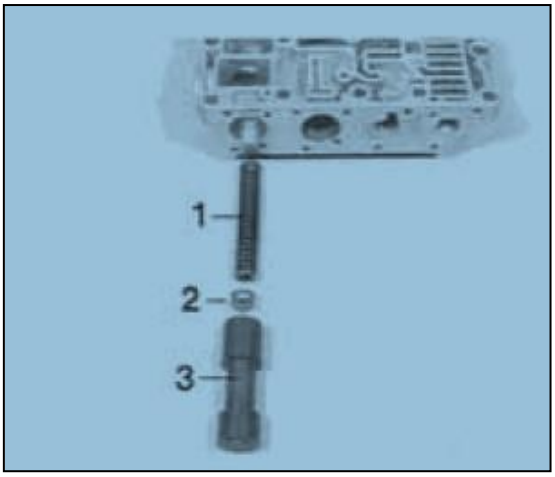

Figure 145

Install components :

1 = Control spool

2 = Spring (Lo =124.10 mm)

3 = Spring (Lo = 77.10 mm)

4 = Displacement spool

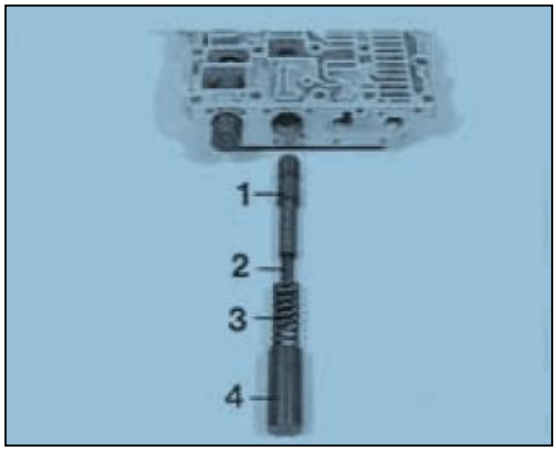

Figure 146

Install components :

1 = Reversing spool

2 = Disk(s) (optional)

3 = Spring (Lo = 56,30 mm)

NOTE ;

p2 is determined by the disk 2

(pay attention to Notes, Page 12 ... 14) !

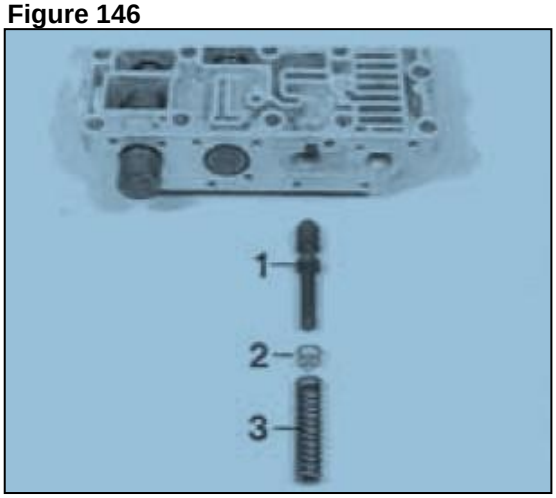

Figure 147

Install components :

1 = Control spool (total length = 55.50 mm)

2 = Spring (Lo = 51.30 mm)

NOTE :

Pay attention to the installation position of the spool, see Figure !

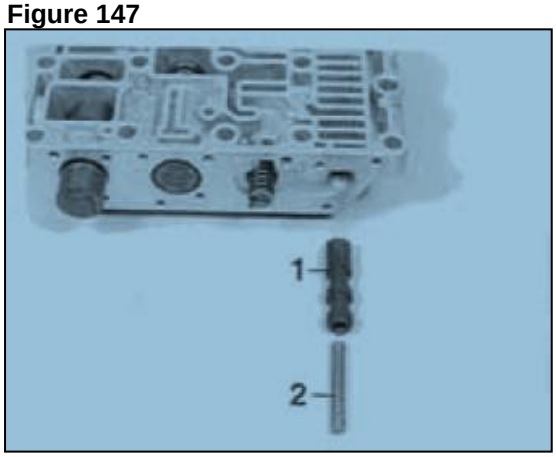

Figure 148

Pre-assemble and attach 2-stage pressure control valve (Figure 149 ~ 157) ;

Close the bores by means of balls (4 pieces, Φ 4.50 mm).

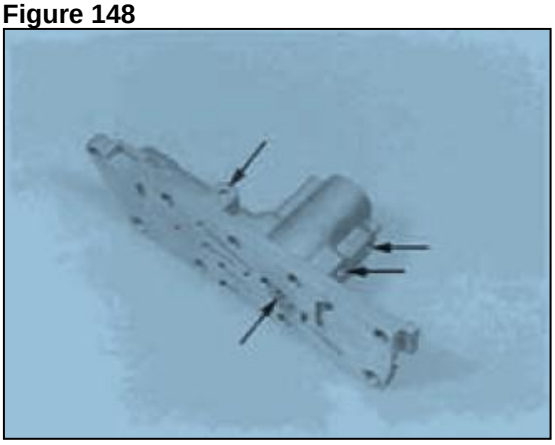

Figure 149

Install components ;
1 = Shift-control housing
2 = Spool
3 = Spring (L_0= 70,90 mm)
4 = Screw plug
5 = Cylindrical roller (6 x 32 mm)
6 = Ring(s) (optional)
7 = Spool
8 = Screw plug
9 = Spring (L_0 = 70,90 mm)
10 = Spool
11 = Screw plug

NOTE ;
p3 is determined by the ring 6
(pay attention to Notes, Page 12 ... 14) !
Pay attention to the installation position of the spool (7), bore is facing the screw plug !
Employ new O-Rings for screw plugs !

Install two adjusting screws (S) and assemble flat gasket.
Pull pre-assembled pressure control valve by means of nuts (S) against shoulder and fasten it subsequently by means of socket head screws (mount flat washers).

Torque limit (M6/8.8)		9.5 Nm
(S) Adjusting screw with nut	(M6)	5870 204 049

Introduce spool (2) and spring (1), preload and fix them by means of stop plate (3).
1 = Spring (L_0= 51,30 mm)
2 = Control spool (total length = 3 9 .5 0 mm)
3 = Stop plate

Install components ;
1 = Spring (Lo =51.30 mm)
2 = Control spool (total length 39.50 mm)
3 = Spring (Lo =51.30 mm)
4 = Control spool
5 = Spool (reducing valve)

6 = Spring (Lo = 37,10 mm)
7 = Retaining plate
8 = Socket head screws (2 pieces)
9 = Spring (Lo = 51,30 mm)
10 = Pilot spool (total length = 52,50 mm)

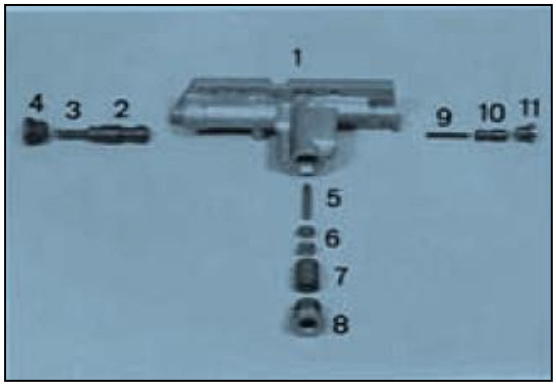

Figure 150

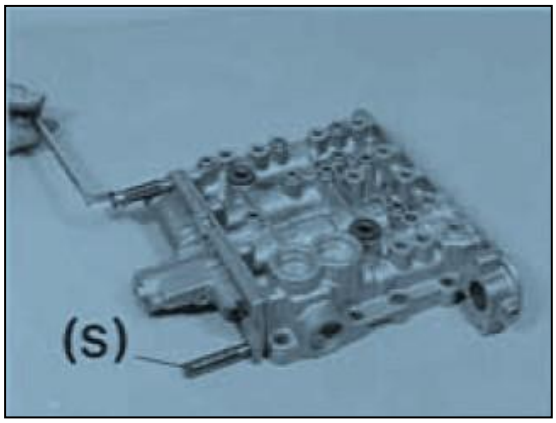

Figure 151

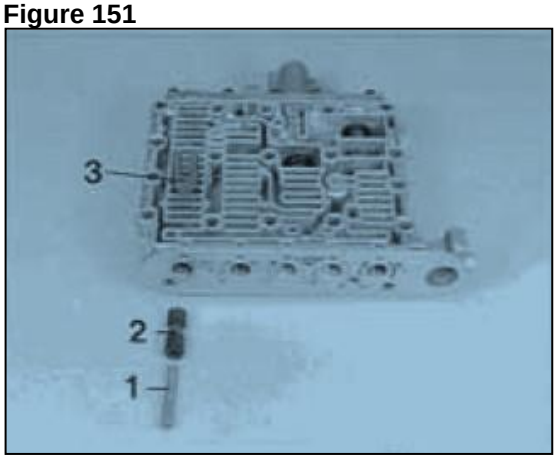

Figure 152

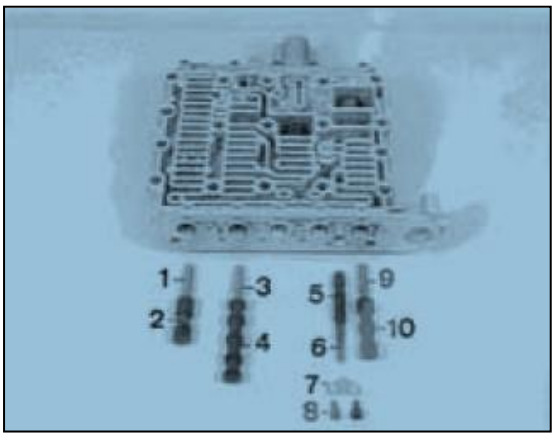

Figure 153

Insert the solenoid valves and fix them by means of disks, retaining plates and socket head screws.

Torque limit (M5/8.8) 5,5 Nm

NOTE :

Pay attention to the installation position of the disk (mount between valve body and retaining plate), see Arrow !

Pay attention to the radial installation position of the solenoid valves, see Figure 156 !

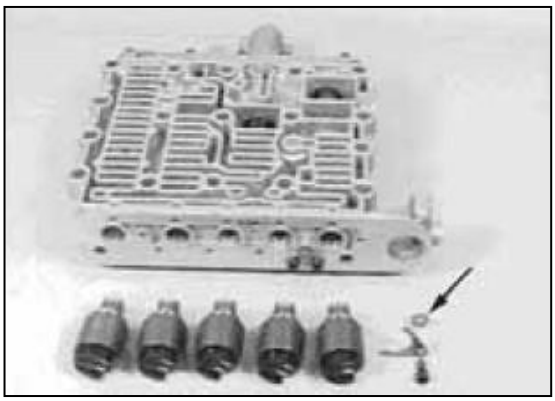

Figure 154

Install cable harness.

NOTE ;

Mount new gaskets !

Pay attention to the location of the plug nose, see Arrow !

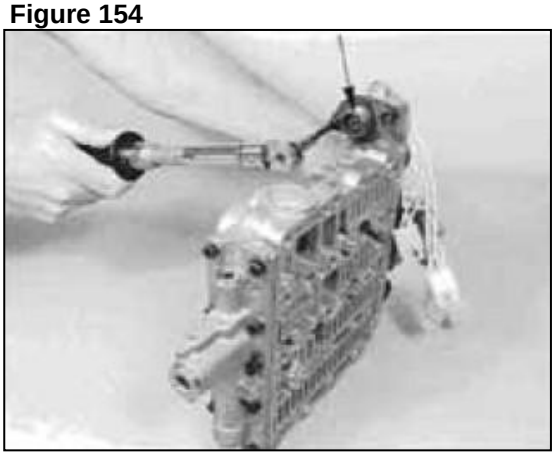

Figure 155

Connect the solenoid valves according to the Illustration on the right.

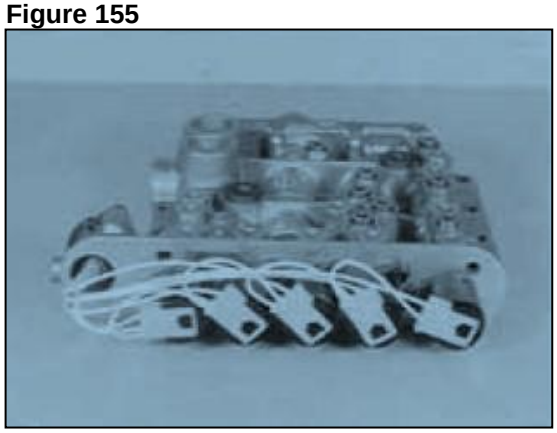

Figure 156

Mount new O-Ring, see Arrow, and fix the cover by means of clamping collar.

NOTE ;

The Reassembly of the channel plate as well as the attachment of the gearbox control arc treated on Page 52 ... 54 !

Pay attention to the Perspective Illustrations of the corresponding Spare Parts List !

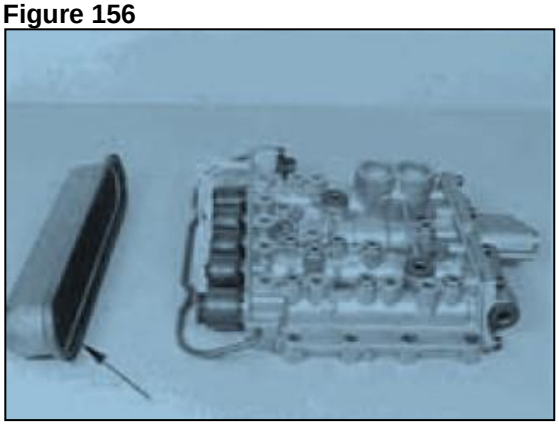

Figure 157

https://truckmanualshub.com/

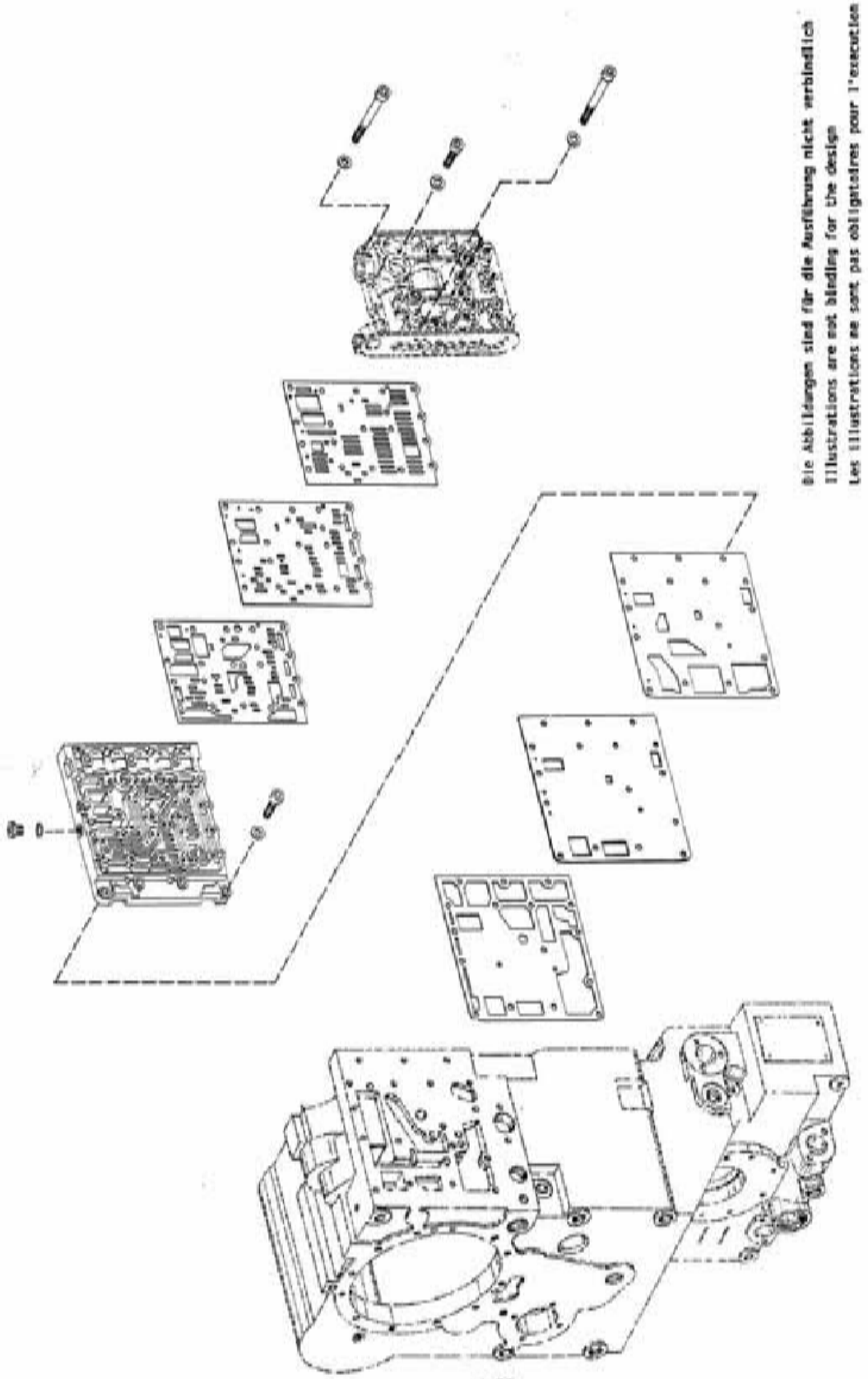

1.59

https://truckmanualshub.com/

1.3.3 Version Ⅲ : With WK-Valve and variable 2-stage pressure control valve.

1.3.3.1 DISASSEMBLY

Relax spring dip and remove cover.

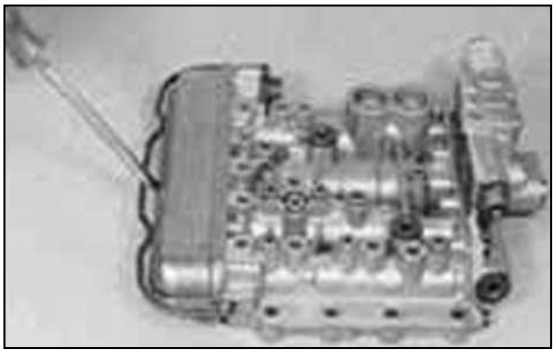

Pull off the cable shoes and remove cable harness.

Figure 161

Loosen socket head screws and remove solenoid valves

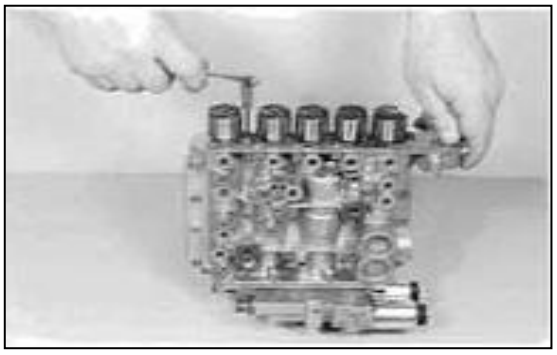

https://truckmanualshub.com/

Remove components, see Figure on the right.

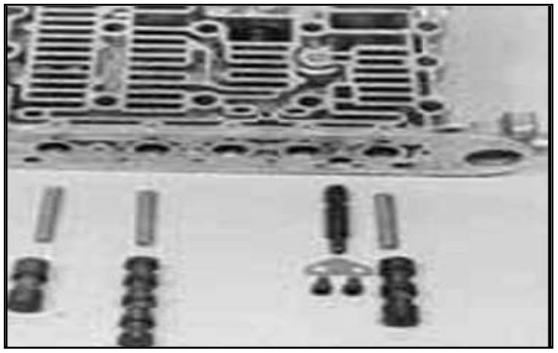

Figure 163

Loosen socket head screws and remove solenoid valve (2-stage pressure control valve).

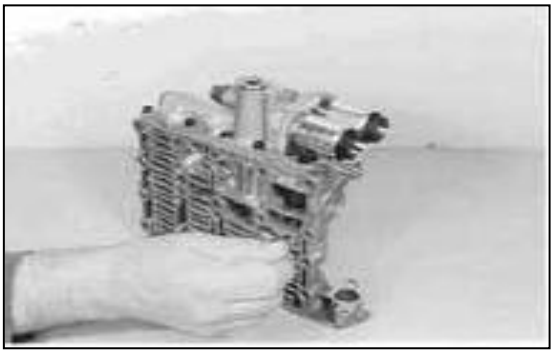

Figure 164

Loosen two socket head screws and fix shift control housing provisionally, using a Special Tool (S).
Now, loosen the remaining socket head screws and separate shift-control housing (is spring-loaded) from the valve body by uniform loosening of the nuts (S).

(S) Adjusting screws (M6) with nut 5870 204 049

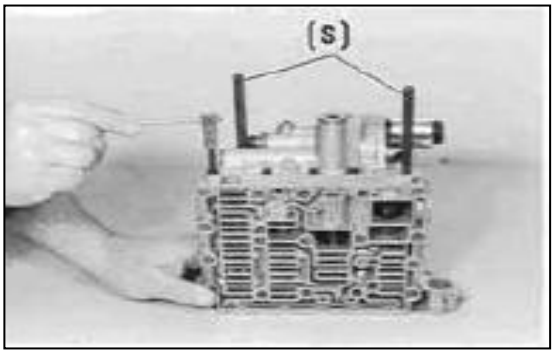

Figure 165

Remove components of the WK-Valve as well as of the 2-stage pressure control valve.

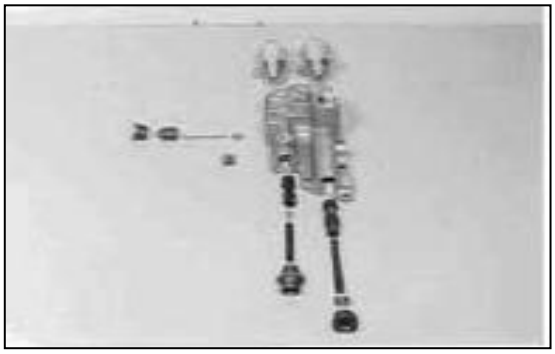

Figure 166

https://truckmanualshub.com/

Remove components, see Figure on the right!

Figure 167

Remove stop plate (Arrow) and spool as well as spring.

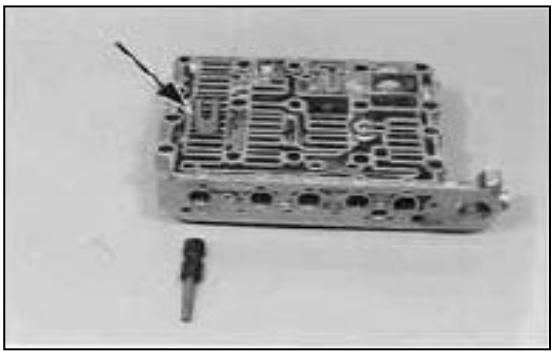

Figure 168

Remove diaphragm and check valves.

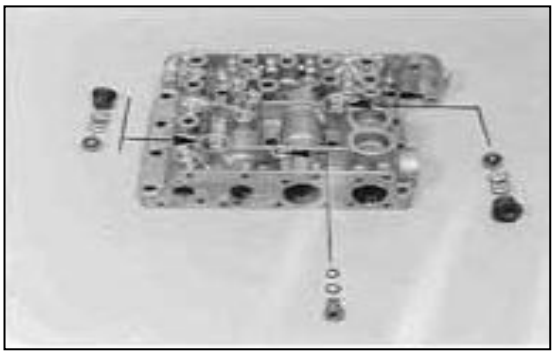

Figure 169

https://truckmanualshub.com/

1.3.3.2 REASSEMBLY

see also illustrated Table, Page 73 and 74 !

NOTE :

Check all components for damage and renew if necessary !

Check free travel of the moving parts in the housing prior to the installation !

Spools can be exchanged individually !

Oil components prior to the reassembly !

Ref. Figure 170 : 1 = Check valve (2x)
2 = Diaphragm
3 = Screw plugs

Install components according to the Illustration on the right.

NOTE ;

Employ new O-Rings for all screw plugs.

Figure 171 shows the positions of the O-Rings on the diaphragm 2.

(Fasten O-Ring 6 x 1,5 mm/Arrow 2 with grease) !

Δ t l is determined by the diaphragm 2
(pay attention to Notes, Page 12 ... 14) !

Torque limit :

Screw plug M10x 1	20 Nm
Screw plug Ml8x1,5	35 Nm
Diaphragm	20 Nm

Close the bores by means of balls (10 pieces Ø 4,50 mm).

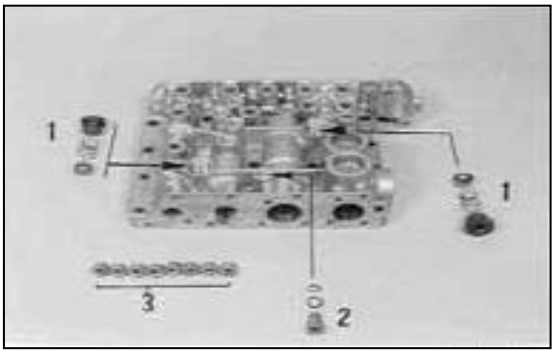

Figure 170

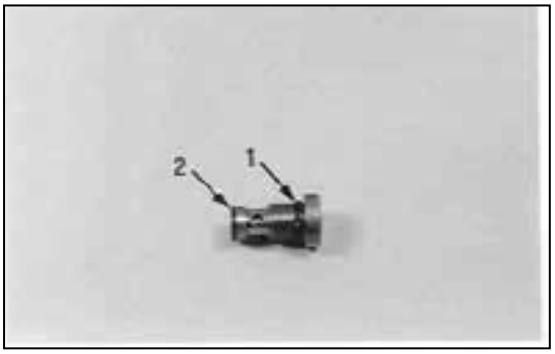

Figure 171

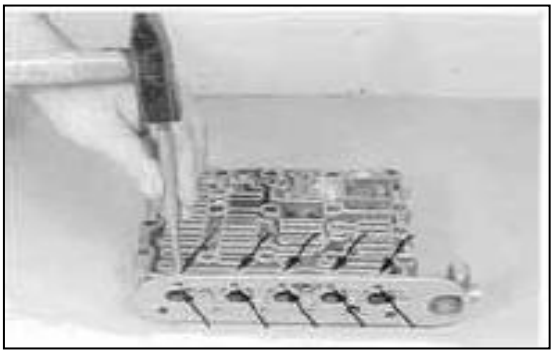

Figure 172

Control pressure valve :

Install components ;

1 = Spring (Lo = 96,20 mm)

2 = Disk(s) (optional)

3 = Spool

NOTE :

ps is determined by the disk 2

(pay attention to Notes, Page 12 ... 14) !

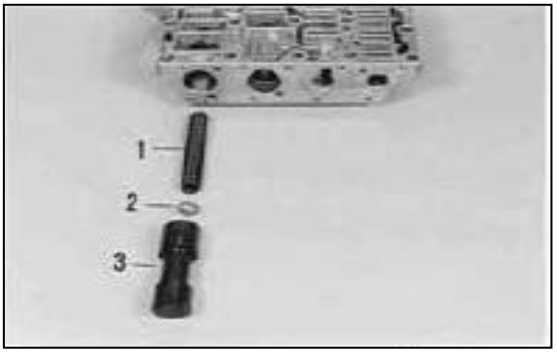

Figure 173

Pressure control valve :

Install components :

1 = Control spool

2 = Spring (Lo= 124,10 mm)

3 = Spring (Lo= 77,10 mm)

4 = Displacement spool

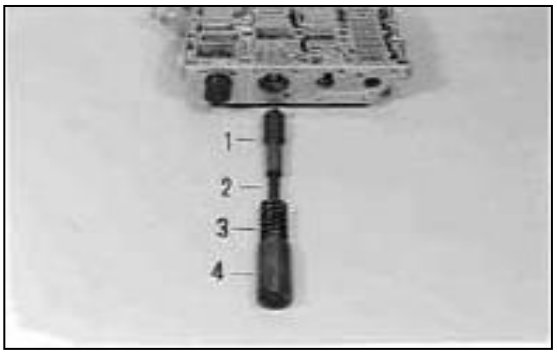

Figure 174

Reversing valve :

Install components :

1 = Spool

2 = Spring (Lo = 56,30 mm)

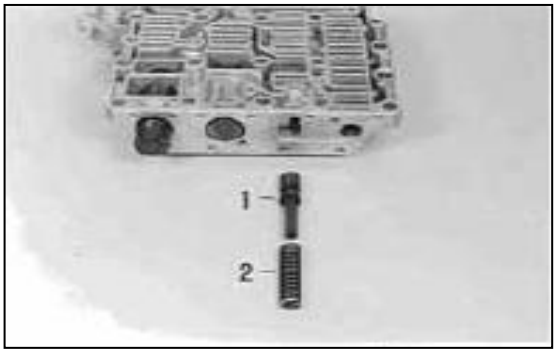

Figure 175

Control spool KV :

Install components

1 = Spool (total length = 55,50 mm)

2 = Spring (Lo = 51,30 mm)

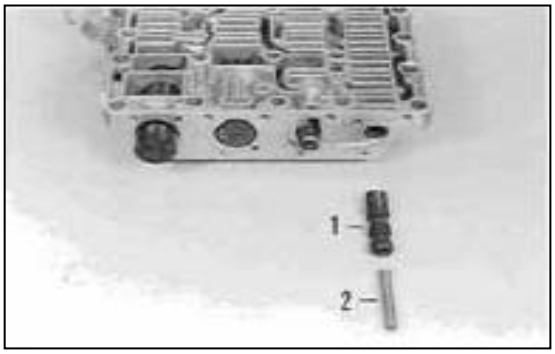

Figure 176

Pre-assemble shift-control housing (WK and pressure control valve) (Figure 177 ... 184);

Close the bores according to Figures 177 ... 179 by means of balls, sec Arrows !

6 pieces = Ball diameter 4,50 mm
2 pieces = Ball diameter 7,50 mm
1 piece = Ball diameter 6,00 mm

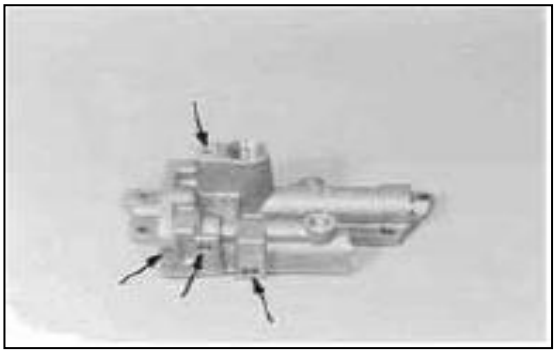

Figure 177

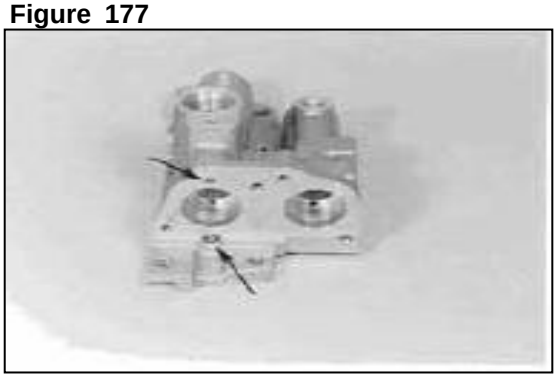

Figure 178

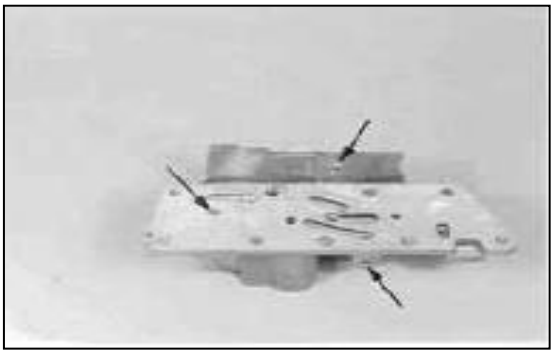

Figure 179

Screw diaphragm (wet thread with Loctite Type-No. 270) into the bore (Arrow) and fix it additionally by means of center punch.
Now, clean the diaphragm from Loctite residues by means of compressed air.

NOTE :

t2 is determined by the diaphragm.
(pay attention to Notes, Page 12 ... 14) !

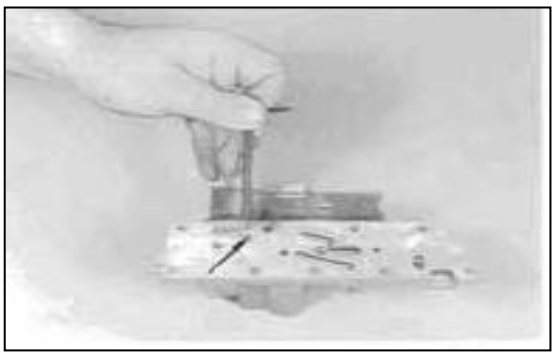

Figure 180

WK-Valve :

Install components ;

1 = Spool

2 = Disk(s) (optional)

3 = Spring (L o = 53,40 mm)

4 = Detent block

5 = O-Ring

6 = Connecting piece

NOTE ;

Install detent Mock with the countersinking facing the spring !

p2 (WK) is determined by the disk 2

(pay attention to Notes, Page 12 ... 14) !

Install screw plug (Arrow).

NOTE :

Assemble new O-Ring !

Torque limit (M10x 1) 20 Nm

2-stage Pressure control valve (Figure 183 and 184) :

Install components

1 = Spool

2 = Disk(s) (optional)

3 = Spring (Lo = 70,90 mm)

4 = Screw plug

5 = Needle roller

6 = Ring(s) (total thickness s=5,00mm/ empirical value)

7 = Spool

8 = Screw plug

NOTE

Mount new O-Rings, see Arrows !

Δ t3 is determined by the disk 2

p3 is determined by the ring 6

(pay attention to Notes, Page 12 ... 14) !

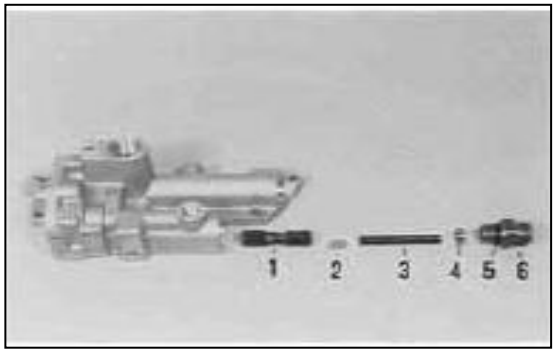

Figure 181

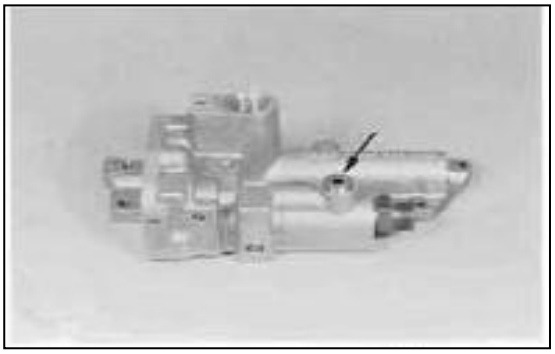

Figure 182

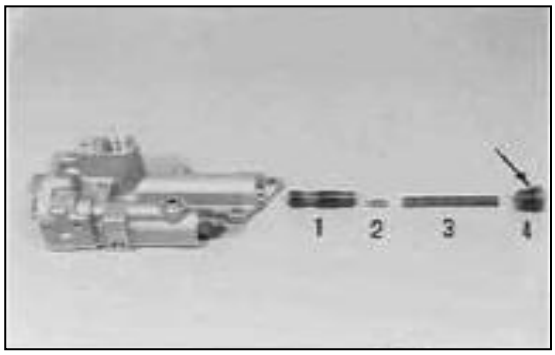

Figure 183

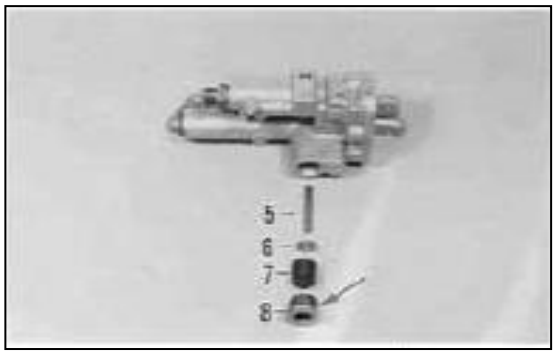

Figure 184

Install two adjusting screws (S) and assemble flat gasket (Arrow).

Pull shift-control housing against shoulder, using nuts (S).

Now, fasten shift-control housing by means of socket head screws (mount flat washers).

Torque limit (M6/8.8) 9,5 Nm

(S) Adjusting screws (M6) 5870 204 049
with nut

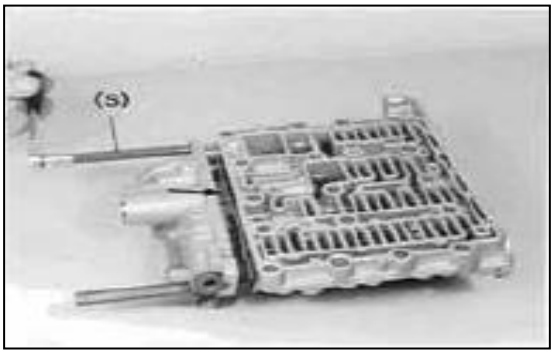

Figure 185

Fasten the two solenoid valves by means of socket head screws.

Torque limit (M5/8.8) 5,5 Nm

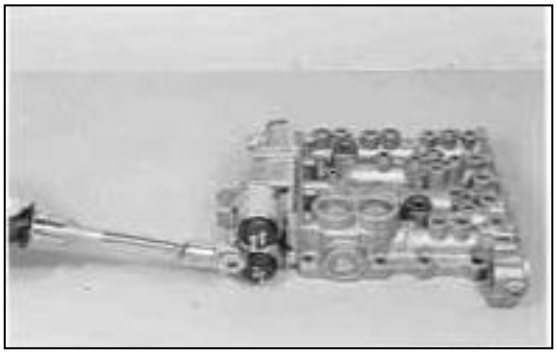

Figure 186

Assemble control spool (K4/KR) and compression spring (Lo = 51,30 mm) and fix them by means of stop plate.

NOTE ;

Position of stop plate, see Arrow !

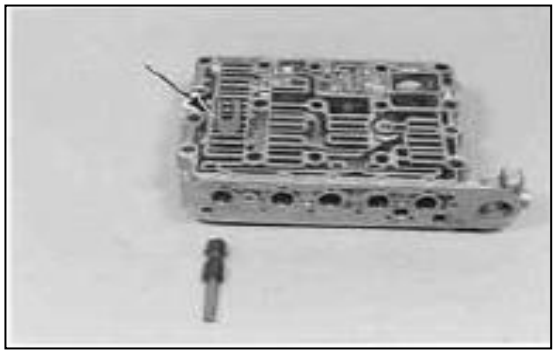

Figure 187

Install components :

1 = Spring (Lo = 51,30 mm)
2 = Control spool (K4/KR)
3 = Spring (Lo = 51,30 mm)
4 = Control spool (K1/K2/K3)
5 = Spool
6 = Spring (Lo = 3 7,1 0 mm)
7 = Retaining plate
8 = Socket head screws
9 = Spring (Lo = 51,30 mm)
10 = Pilot spool (total length = 52,50 mm)

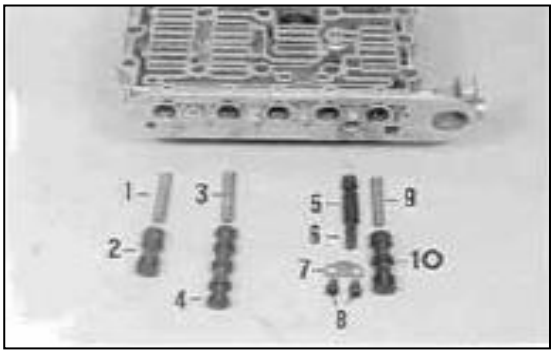

Figure 188

https://truckmanualshub.com/

Insert solenoid valves and fix them by means of disks, retaining plates and socket head screws.

Torque limit (M 5/8.8) 5,5 Nm

NOTE :

Pay attention to the installation position of the disks (mount between valve body and retaining plate), see Arrow !

Pay attention to the installation position of the solenoid valves, see also Figure 191 !

Install cable harness.

Torque limit (M6/8.8) 9,5 Nm

NOTE :

Mount new gaskets !

Pay attention to the location of the plug nose see Arrow !

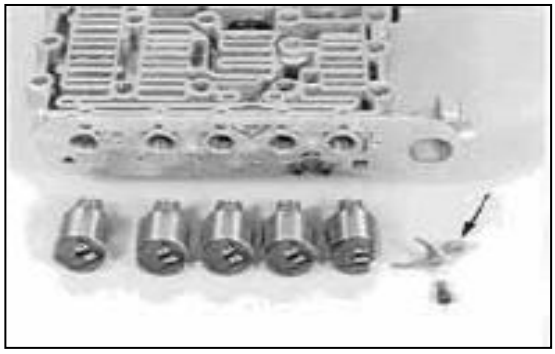

Figure 189

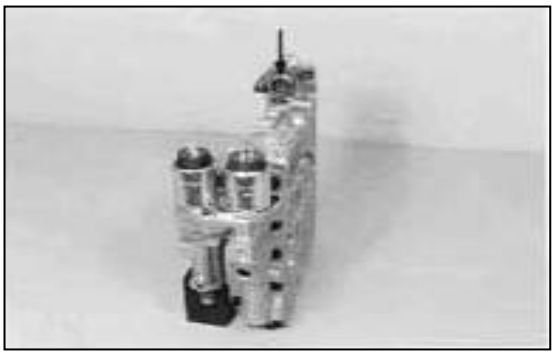

Figure 190

Connect solenoid valves according to the illustration on the right.

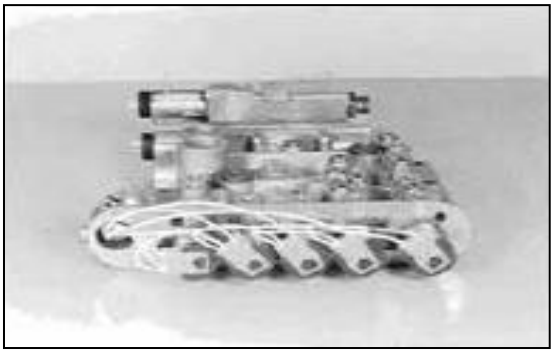

Figure 191

Mount new O-Ring (Arrow) and fix cover by means of clamping collar.

NOTE :

The reassembly of the channel plate as well as the attachment of the gearbox control, are treated on Page 52 ... 54 !

Pay attention to the Perspective Illustration of the corresponding Spare Parts List !

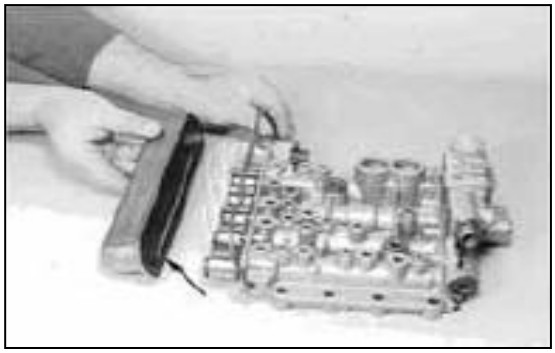

Figure 192

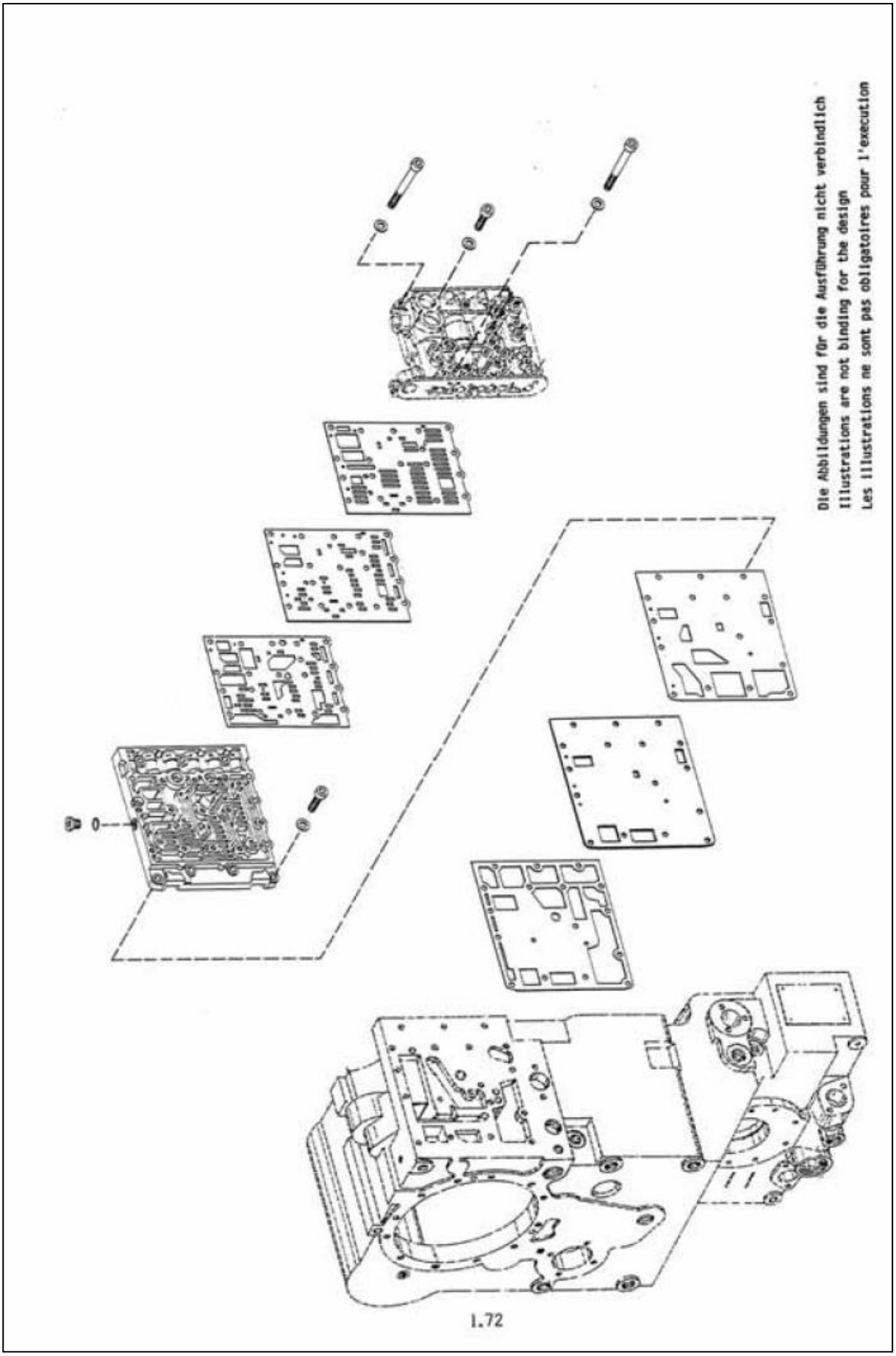
Die Abbildungen sind für die Ausführung nicht verbindlich
Illustrations are not binding for the design
Les illustrations ne sont pas obligatoires pour l'execution
1.72

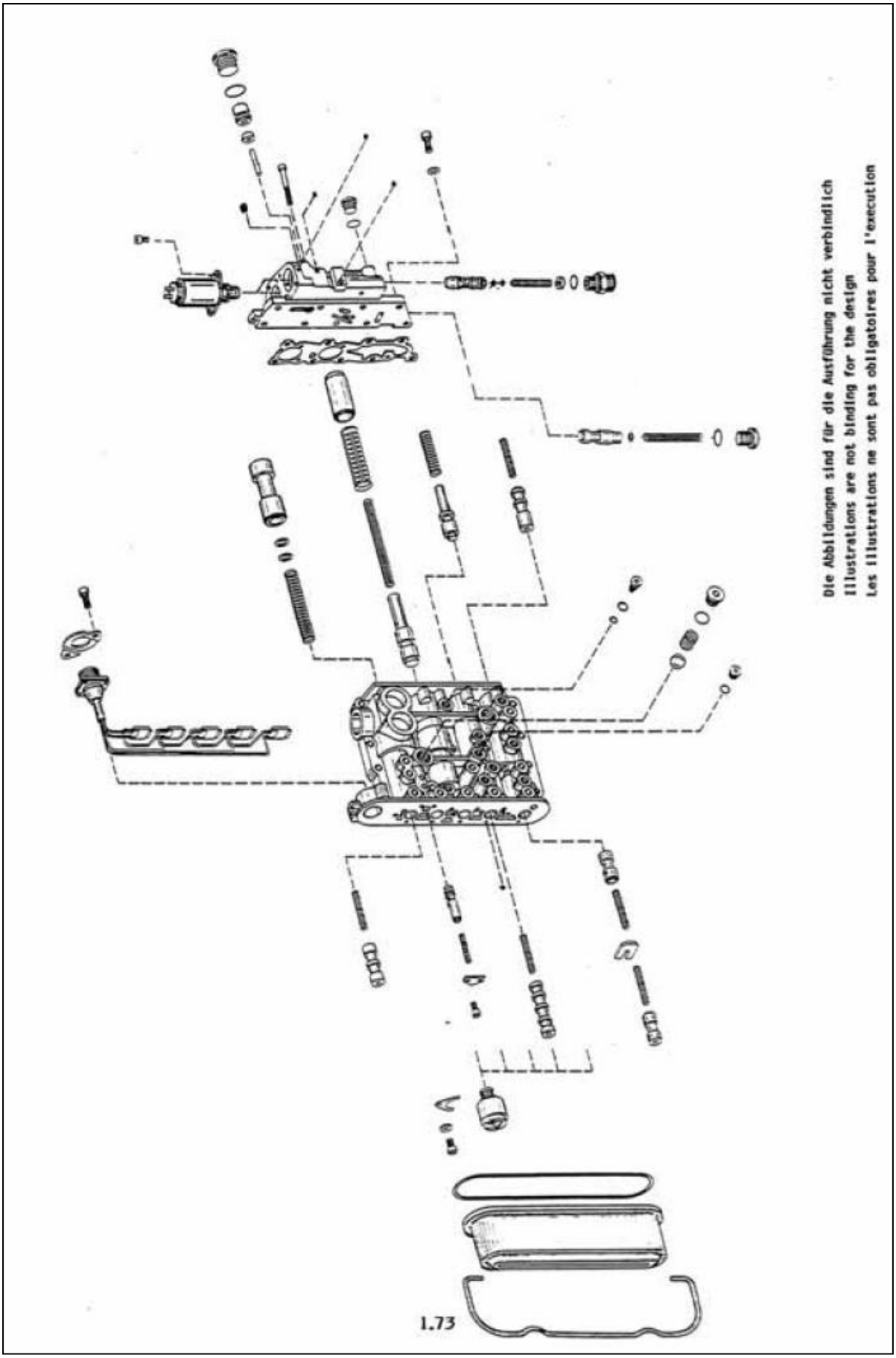
Die Abbildungen sind für die Ausführung nicht verbindlich
Illustrations are not binding for the design
Les illustrations ne sont pas obligatoires pour l'execution
1.73

2. TORQUE CONVERTER

Version: With converter connecting clutch (WK)

2.1 DISASSEMBLY

Separate the complete converter from the transmission by means of lifting device.

(S) Assembly car compl. with tilting device 5870 350 000

(S) Basic support 5870 350 014

(S) Support 5870 350 036

(S) Set of eye bolts 5870 204 002

Figure 1

Loosen screwed connection.

Figure 2

Install hex. head screw, tap impeller wheel loose and separate it from converter impeller cover, see Figure !

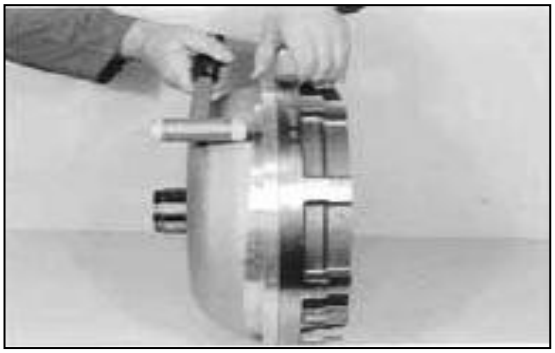

Figure 3

Loosen hex. head screws and remove impeller wheel flange.

Figure 4

https://truckmanualshub.com/

Press free wheel inner ring out of the stator and remove released components.

Figure 5

Squeeze out snap ring.

Figure 6

Press free wheel outer ring out of the stator.

Figure 7

Separate turbine wheel from converter impeller cover.

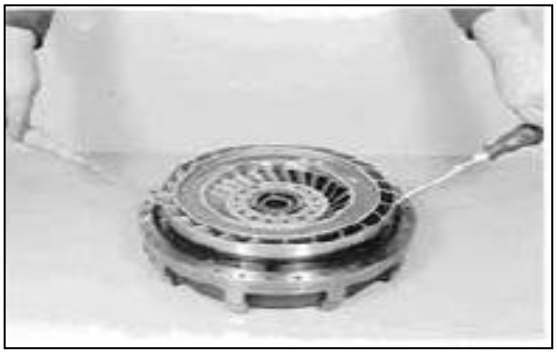

Figure 8

Loosen hex. head screws, remove backing plate and plate pack.

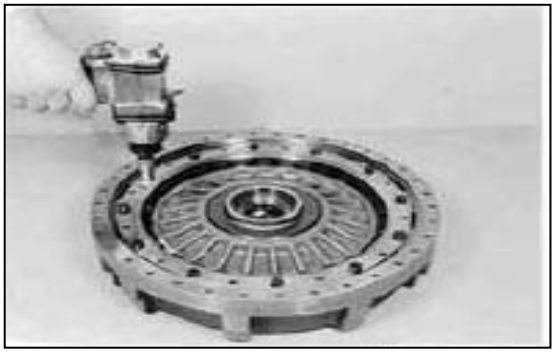

Figure 9

Remove cup spring and demount all driving pins (Arrow).

Figure 10

Separate piston from converter impeller cover by means of compressed air.

(S) Rubber cap 5870 509 009

Figure 11

Press profiled bush out of the converter impeller cover.

NOTE ;

The profiled bush is axially fixed by means of a snap ring which will be destroyed at the pressing out. !

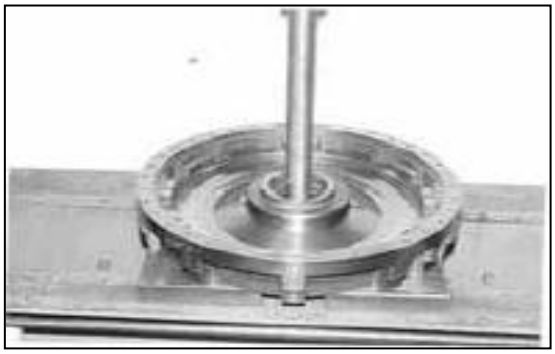

Figure 12

2.2 REASSEMBLY

Squeeze snap ring into the annular groove (Arrow) of the converter impeller cover.

NOTE :

Grease and align snap ring radially prior to reassemble the profiled bush (Figure 14) !

Figure 13

Install O-Ring (Arrow) and grease it.

Thread up profiled bush (S) and press the drive dog in until the snap ring engages in the annular groove.

NOTE :

The snap ring is expanded by means of the profiled bush (S)f thus allowing the reassembly of the drive dog !

(S) Profiled bush 5870 345 073

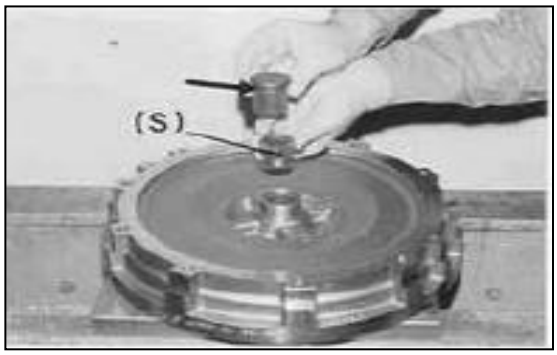

Figure 14

Install the two rectangular rings, see Arrows!

Oil piston bearing surfaces as well as rectangular rings and insert piston in the converter impeller cover until contact is obtained.

NOTE :

Expand the inner rectangular ring (140 x 149 x 2 mm) slightly, to ensure a correct contact in the piston recess !

Figure 15

Install all driving pins (12 pieces) into the bores.

Figure 16

Insert cup spring , with the concave side showing upwards (see draft , fig 17).

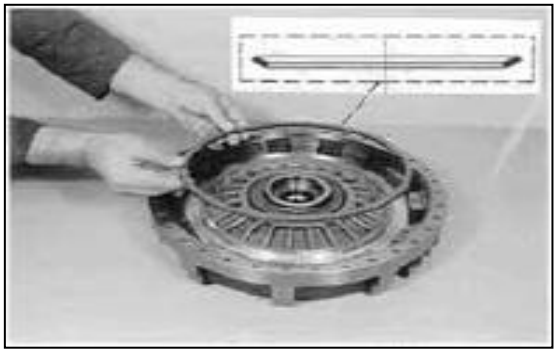

Figure 17

Install alternating outer and inner plates (2 pieces each), starting with one outer plate.

NOTE ;

In case of Versions with three outer and one inner plate, two outer plates have to be installed at first, followed by one inner plate and one outer plate as last plate !

Figure 18

<u>Check Clearance WK 0,4… 0,6 mm</u>

<u>(Figure 19 ... Example"A")</u>

Determine Dimension I from the straightedge to the outer plate.

Dimension Ⅰ e.g. 44,0 mm

(S) Straightedge 5870 200 022

(S) Digital depth gauge 5870 200 072

Figure 19

Determine Dimension II from the straightedge to the contact surface of the backing plate.

Dimension Ⅱ e.g. 43,5 mm

Figure 20

Example "A" :

Dimension Ⅰ	44,0 mm
Dimension Ⅱ	- 43,5 mm
Difference = Clearance	= 0.5 mm

NOTE :

Carry out any corrections by means of corresponding pistons (s = 9,2 mm, 9,8 mm and 10,5 mm) !

Assemble backing plate with the chamfering (Arrow) showing upwards and fasten it by means of hex, head screws.

Torque limit	(M8x25/10.9)	34 Nm
(S) Adjusting screw	(M8)	5870 204 011

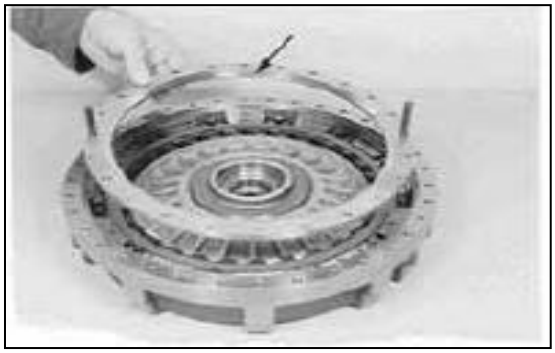

Figure 21

Fasten turbine wheel hub by means of hex. head screws (mount flat washers).

Torque limit	(M8xl8/8.8)	23 Nm

NOTE:

Secure hex. head screws with Loctite (Type-No. 270) !

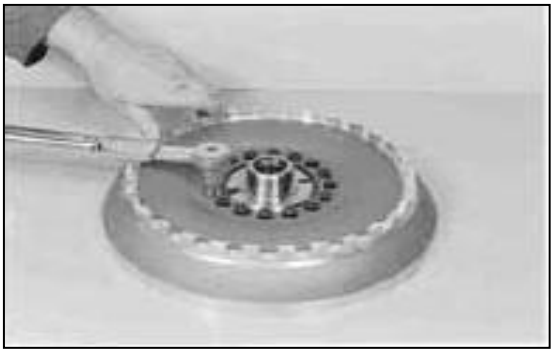

Figure 22

Heat the ball bearing and mount it against shoulder until contact is obtained.

Figure 23

Squeeze in rectangular ring (Arrow 1) and engage it.

Insert O-Ring (Arrow 2) in the recess of the turbine wheel hub and grease it.

Figure 24

Thread up pro-assembled turbine wheel until the inner plates have been received.

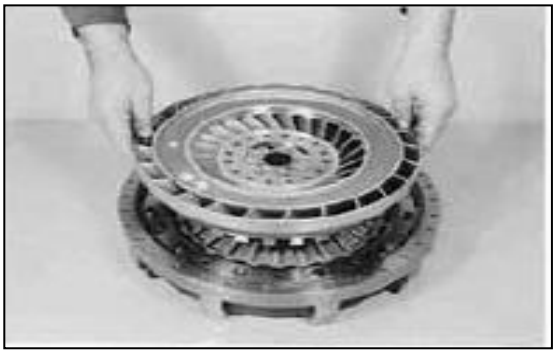

Figure 25

Heat stator and insert free wheel outer ring until contact s obtained.

Figure 26

Fix free wheel outer ring by means of snap ring.

Figure 27

The Illustration on the left shows the components of the stator.

1 = Shim (constant, s = 1,0 mm)

2 = Ball bearing

3 = Thrust washer (s = 1,5 mm)

4 = Free wheel inner ring

5 = Cylindrical rollers (28 pieces)

6 = Spring cap (28 pieces)

7 = Compression spring (28 pieces)

8 = Bearing roller (28 pieces)

9 = Stator

10 = Shim (optional, e.g. s = 0,2 mm)

NOTE ;

The stator end play is determined by means of shim 10, see Example "B" !

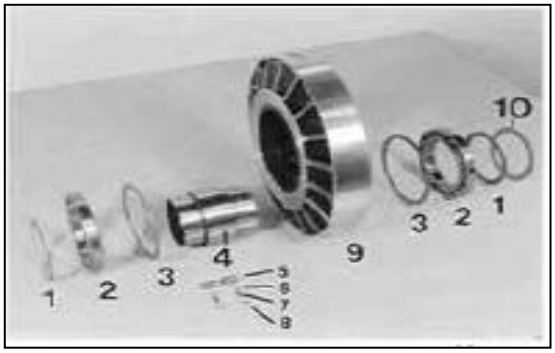

Figure 28

Insert bearing rollers, springs and spring caps (8, 7, and 6) according to the Illustration on the left with grease into the bores of the free wheel hub.

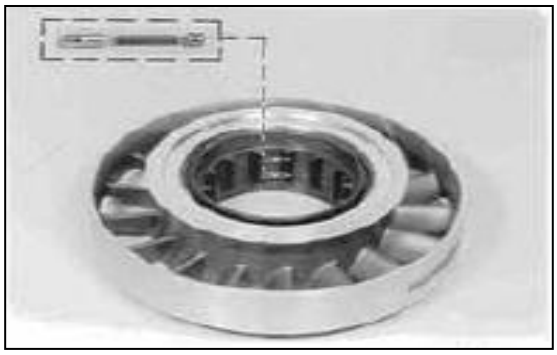

Figure 29

Place ball bearing (2) on the long hub side (24 mm) against shoulder, install thrust washer (3) s = 1,5 mm and press free wheel inner ring against shoulder.

Figure 30

Press spring caps by means of guide plate (S) into the free wheel ring until the cylindrical roller pairs (5) can be installed.

NOTE :

The second roller pair has to be installed opposite to the first roller pair - makes the installation of the remaining roller pairs easier!

(S) Guide plate 5870 345 020

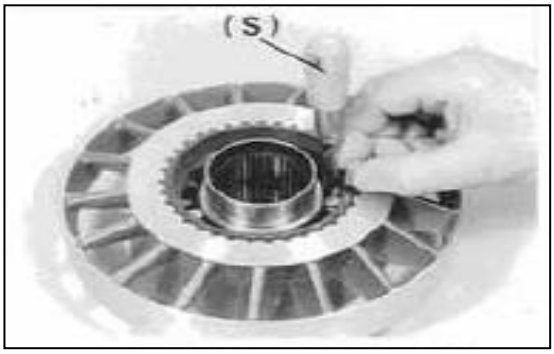

Figure 31

Mount thrust washer (3) s = 1,5 mm and press bearing against shoulder.

Figure 32

Install shim (1) s = 1,0 mm and shaft washer (60x85x4,75).

Figure 33

Opposite side :

Install shim (I) s = 1,0 mm, shim (10) (optional e.g. s = 0,5 mm) and shaft washer (60x85x4,75).

NOTE :

The end play of the stator is determined by means of shim (10) (e.g. s = 0,5 mm/empirical value) ! However, a later check (Figure 39 ... Example "B") is absolutely essential !

Figure 34

Mount housing washer (62x85x4,75 mm) and axial needle bearing (60x85x3 mm).

Figure 35

Insert stator with the reduced plane surface (Arrow) showing upwards until contact is obtained.

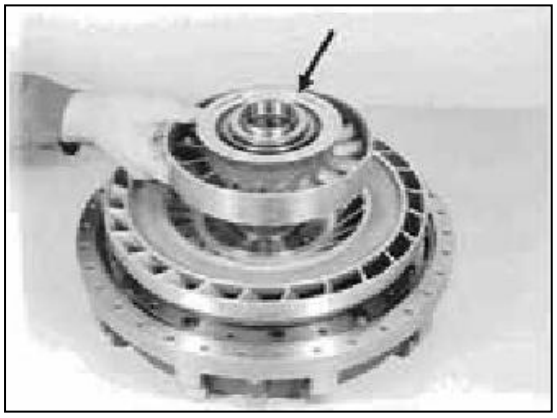

Figure 36

Install axial roller bearing and housing washer (62x85x4,75 mm).

Figure 37

Mount new flat gasket and fasten flange by means of hex. head screws (mount flat washers) on the impeller wheel.

Torque limit (M8xl8/8.8) 23 Nm

NOTE:

Pay attention to the radial installation position !

Secure hex. Head screws with Loctite (Type-No. 270) !

Figure 38

Check end play - Stator max. 0,2 mm (Figure 39 ... Example “B”)

Mount flat gasket (Arrow).

Determine Dimension Ⅰ from the flange mounted surface (gasket) to the plane surface/impeller wheel flange.

Dimension Ⅰ e.g.	88,05 mm
(S) Straightedge	5870 200 022
(S) Gauge blocks	5870 200 066
(S) Digital depth Gauge	5870 200 072

Figure 39

Measure Dimension Ⅱ from the flange-mounted surface (converter impeller cover) to the housing washer.

Dimension Ⅱ e.g. 87,95 mm

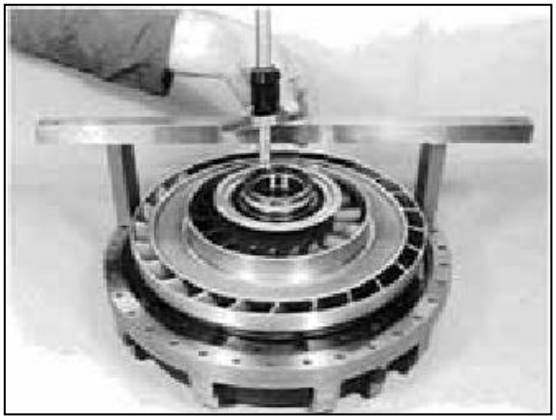

Figure 40

Example "B"

Dimension Ⅰ	88,05 mm
Dimension Ⅱ	- 87,95 mm
Difference s End play	0,10 mm

NOTE:

In case of deviations from the permitted end play (max. 0,2 mm) correct by means of corresponding shin !

The shim is illustrated on Figure 34 !

Screw two adjusting screws into the converter impeller cover and mount flat gasket.

Place impeller wheel against shoulder and fasten it by means of hex. head screws.

Torque limit (M8x32/8.8) 23 Nm

NOTE:

Install flat washers !

Pay attention to the radial position, see markings !

(S) Adjusting screw (M8) 5870 204 011

Figure 41

Squeeze the rectangular ring into the annular groove (Arrow) and engage it.

NOTE:

Install converter, see Page 163 !

Figure 42

3. GEARBOX

3.1 DISASSEMBLY

3.1.1 CONVERTER CHARGE PUMP and CONTROL PRESSURE PUMP

Loosen hollow screw and remove delivery line.

Figure 1

Loosen screwed connection (Figure 2) and separate engine connecting case from gear case by means of pry bars (Figure 3).

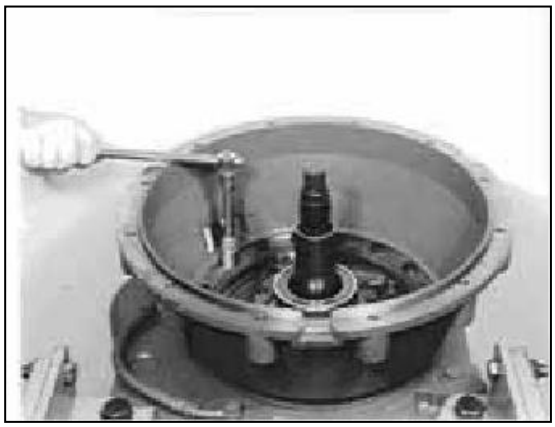

Figure 2

Figure 3

Loosen hollow screw and remove delivery line.

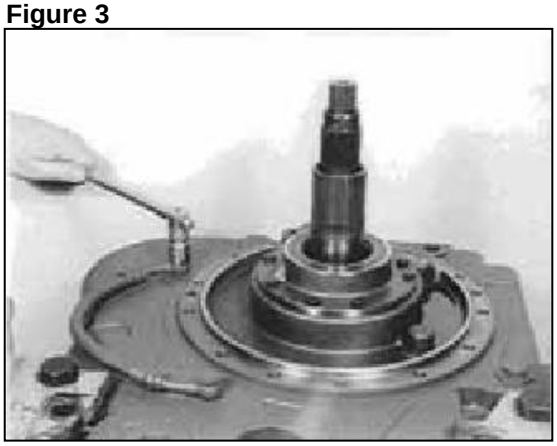

Figure 4

https://truckmanualshub.com/

Loosen hex. head screws.

Figure 5

Tap loose and remove bearing cap.

Figure 6

Fasten puller device at the oil supply flange by means of hex. head screws.

Pull converter charge pump and control pressure pump (complete) out of the housing bore.

(S) Back-off device 5870 000 062

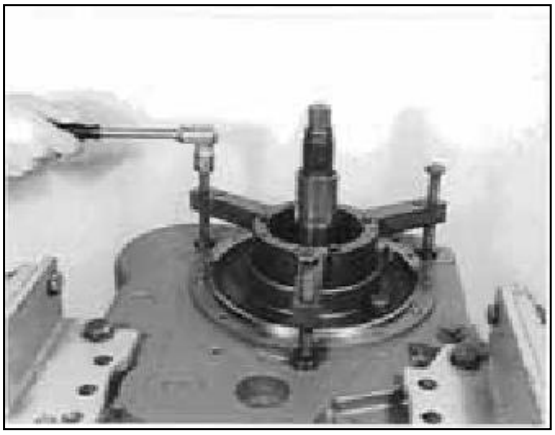

Figure 7

Loosen hex. head screws and separate pump from oil supply flange.

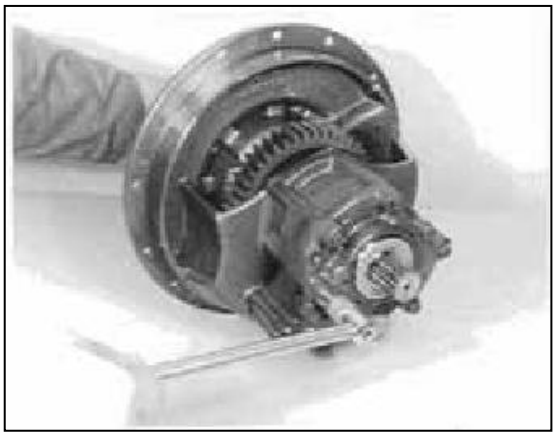

Figure 8 SPC000007

Remove rectangular ring (I) and circlip (2).

(S) Set of external snap ring pliers 5870 900 016

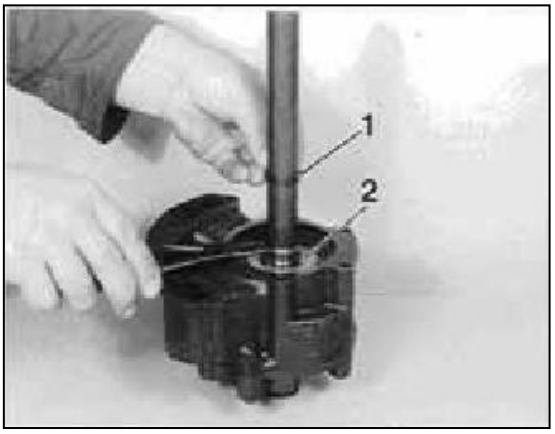

Figure 9

Press shaft out of the pump case.

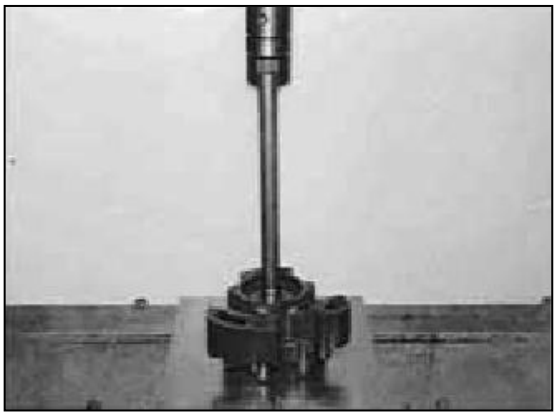

Figure 10

Check converter charge pump and control pressure pump (Figure 11 ... 14):

Remove the two straight pins by means of striker (Figure 11), loosen hex. head screws and remove cover (Figure 12) !

(S) Striker 5870 650 001

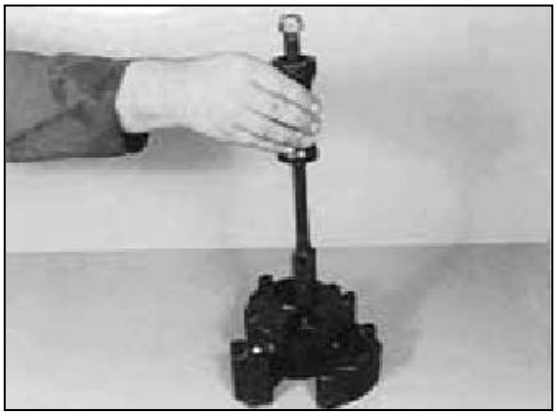

Figure 11

NOTE :

If traces of wear should be encountered in the pump case or on the housing cover, the complete pump has to be renewed !

Figure 12

Install rotor set, fix cover provisionally by means of hex. head screws and insert the straight pins (with the tapped hole showing upwards) until contact is obtained.

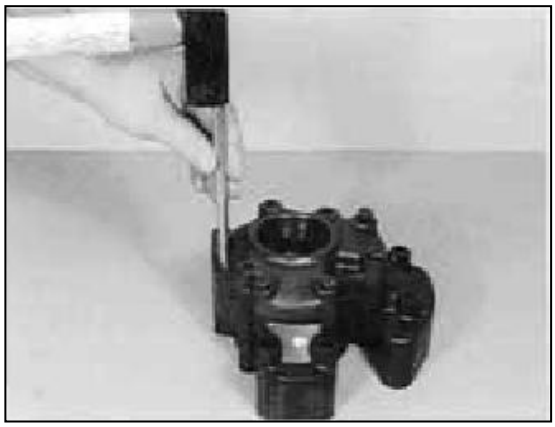

Figure 13

Fix the straight pins axially by means of caulkings (2x) and tighten hex. head screws finally.

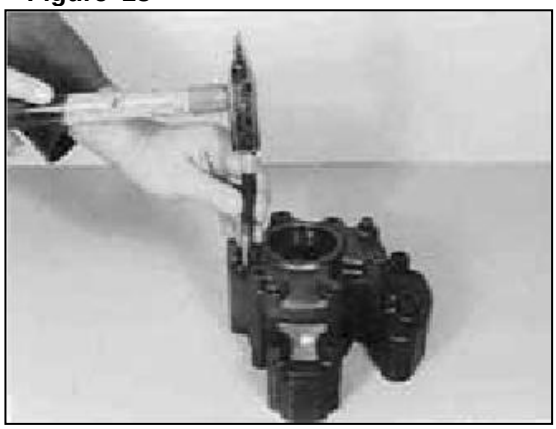

Figure 14

Remove converter relief valve (ball and spring).

Squeeze out circlip.

(S) Set of external snap ring pliers 5870 900 016

Figure 15

Press drive shaft in direction of Arrow until the spur gear is released.

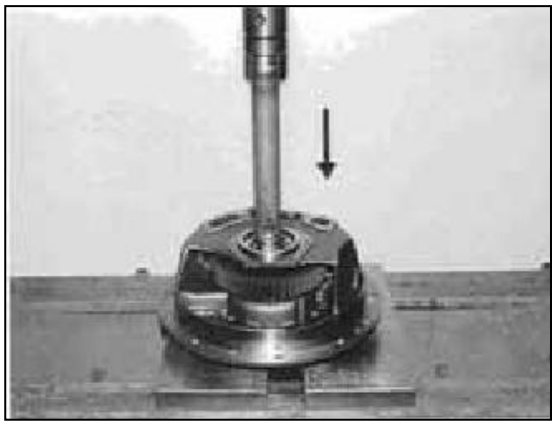

Figure 16

https://truckmanualshub.com/

Remove disk and spur gear.

NOTE :

According to the Version, with or without disk see corresponding Spare Parts List!

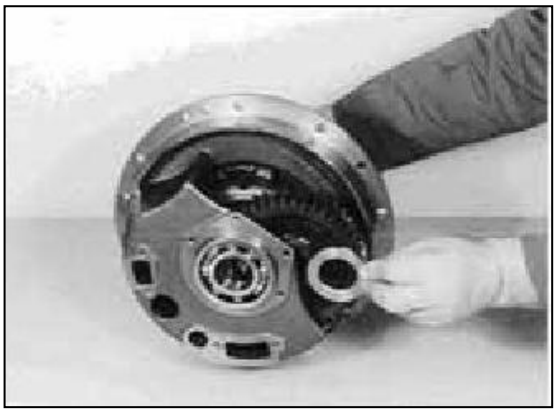

Figure 17

Remove ball bearing and drive shaft.

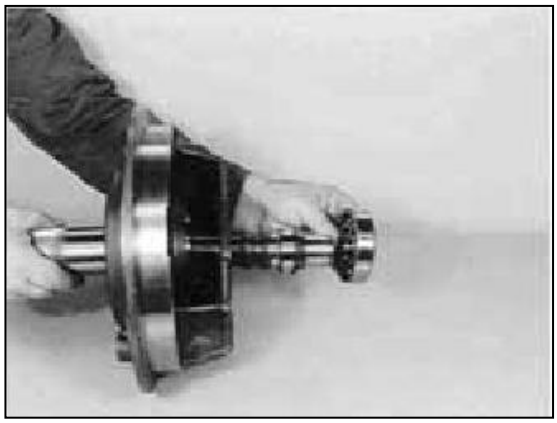

Figure 18

Pull roller bearing out of the bore.

(S) Internal puller	5870 300 014
(S) Back-up tool	5870 300 003

Figure 19

Remove temperature connection.

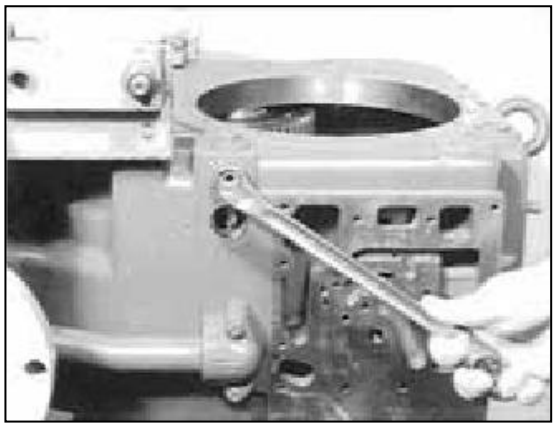

Figure 20

Loosen screw plug and remove converter control valve, composed of disk, compression spring, spool and valve sleeve.

Figure 21

Remove drive side inductive transmitter.

Figure 22

3.1.2 COAXIAL POWER TAKE-OFF (mechanical control)

Loosen clamping screw and remove lever (Arrow).

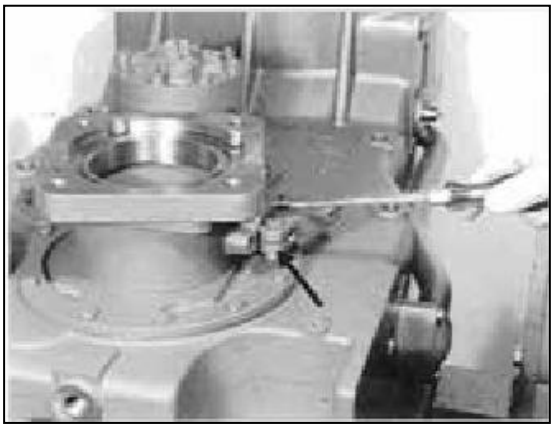

Figure 23

Remove Woodruff key and shift lever.

Figure 24

https://truckmanualshub.com/

Remove locking device.

Figure 25

Loosen socket head screws and remove housing.

Figure 26

Loosen hex. head screws and lift complete power take-off housing out of the bore.

(S) Set of eye bolts 5870 204 002

Figure 27

https://truckmanualshub.com/

Fasten power take-off in a vise.

Expand the two snap rings, align them centrically and drive the drive dog provisionally about 5 ... 10 mm ahead (direction of Arrow).

NOTE:

For this step, an assistant is absolutely necessary!

(S) Circlip pliers 5870 900 026

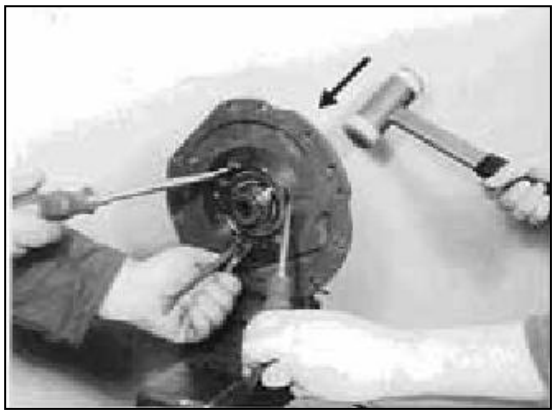

Figure 28

Squeeze out snap ring (Figure 29), tap the drive dog loose and drive it out of the spur gear, resp. housing bore (Figure 30).

NOTE:

Pay attention to the released components!

Figure 29

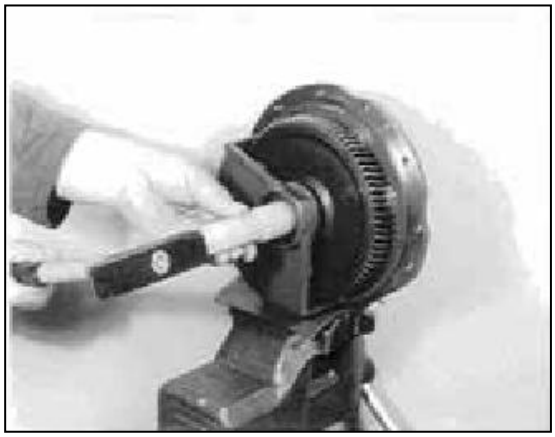

Figure 30

3.1.3 LATERAL POWER TAKE-OFF

Loosen socket head screws and remove pump flange.

Figure 31

Squeeze out circlip (housing interior).

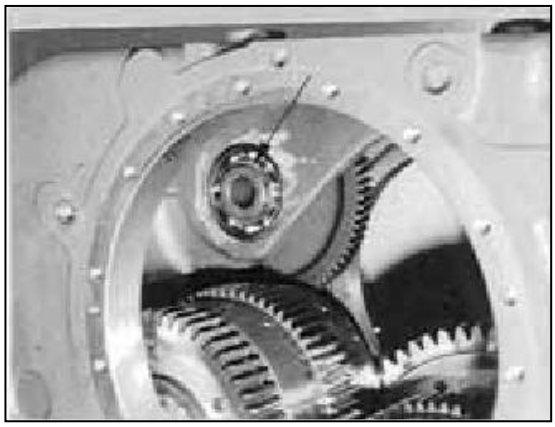

Figure 32

Pull drive dog, by means of internal puller out of the ball bearing, resp. spur gear and remove released spur gear.

(S) Internal puller 5870 300 006

(S) Back-up tool 5870 300 003

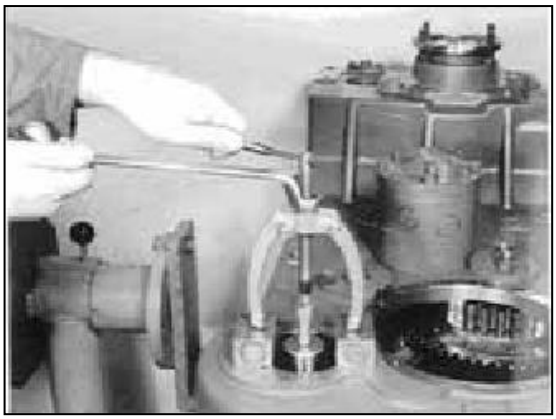

Figure 33

Expand snap rings, align them centrically, tap the ball bearing loose and drive it out of the housing bore.

NOTE:

Assistant necessary!

Figure 34

https://truckmanualshub.com/

3.1.4 REMOVE EMERGENCY STEERING PUMP

Loosen hex. nuts and separate emergency steering pomp from gear case.

Figure 35

https://truckmanualshub.com/

3.1.5 REMOVE MULTI-DISK CLUTCHES

NOTE;

In case of Versions with Spur Rear fixing K1, the two set screws (Arrows) have to be removed prior to the disassembly of the axle, see Figure on the right!

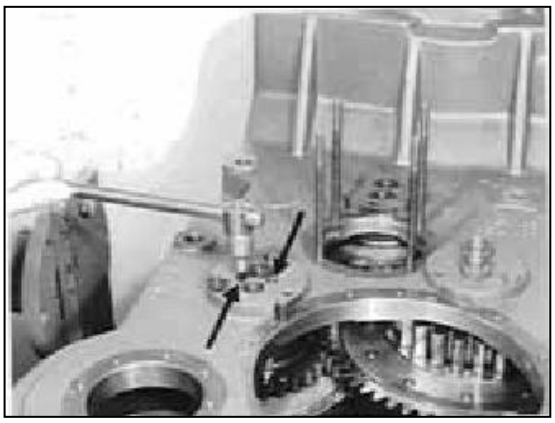

Figure 40

Loosen hex. nuts and pull axle by means of Special device out of the clutch, resp. gear case.

(S) Puller 5870 000 069

Figure 41

Lift clutch out of the gear case and deposit it.

NOTE:

Use lifting device!

Remove clutch KR/K2 accordingly.

In the case of clutch K4/K3, push the lower spacing washer to the rear. Only then, the clutch can be removed.

(S) Lifting device 5870 350 041

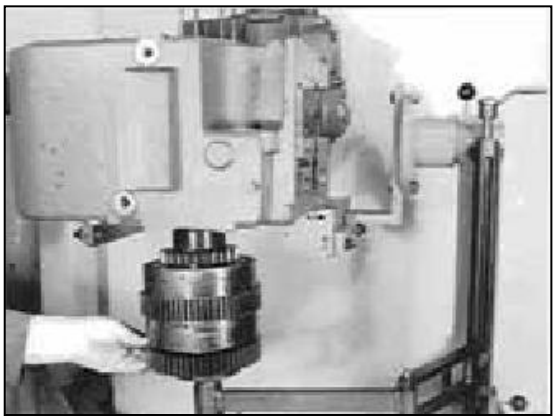

Figure 42

3.1.6 REMOVE COUNTERSHAFT ASSEMBLY

Remove closing cover.

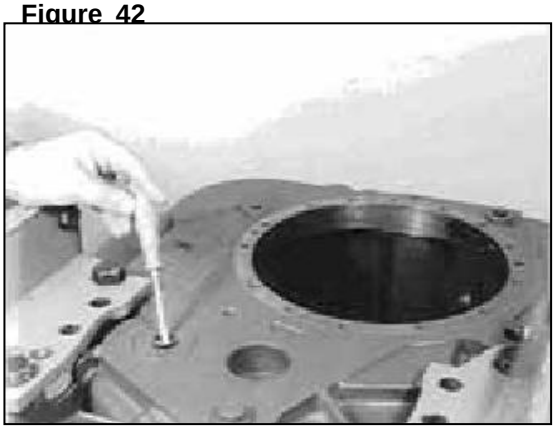

Figure 43

https://truckmanualshub.com/

Loosen socket head screw.

Figure 44

Pull axle by means of Special device out of the housing bore, resp. spur gear bearing.

(S) Puller 5870 000 0S3

Figure 45

Remove spur gear and disk.

Figure 46

https://truckmanualshub.com/

3.1.7 DISMANTLE MULTI-DISK CLUTCH

Remove spur gear K1 and demount components.

Figure 50

Squeeze out snap ring.

Figure 51

Remove plate pack.

Figure 52

Preload compression spring, squeeze out circlip and remove components.

(S) Assembly jig 5870 345 028

Figure 53

https://truckmanualshub.com/

Remove piston by means of clamping pliers.

(S) Clamping pliers 5870 900 007

Figure 54

Pull needle bush out of the bore, using internal puller.

NOTE:

The disassembly of the clutch KV, KR/K2 and K4/K3 has to be carried out accordingly.

(S) Internal puller 5870 300 014

(S) Back-up tool 5870 300 003

Figure 55

https://truckmanualshub.com/

3.1.8 FINAL DRIVE - VERSION WITH DRUM BRAKE

Remove lock plate and loosen hex. head screws.

Figure 60

Pry output flange off the shaft.

(S) Pry bar 5870 345 065

Figure 61

Tilt gear case 180°.

Loosen hex. head screws.

Figure 62

Separate brake drum from output flange.

(S) Crow bar 5870 345 071

Figure 63

https://truckmanualshub.com/

Remove lock plate and loosen hex. head screws.

Figure 64

Pull output flange from the shaft.

(S) Two-leg puller 5370 970 004

Figure 65

Unhook return springs and remove brake shoes.

(S) Brake spring pliers 5870 900 006

Figure 66

Pry shaft seed out of the housing bore.

(S) Crow bar 5870 345 071

Figure 67

https://truckmanualshub.com/

Squeeze out circlip and remove shim.

(S) Circlip pliers 5870 900 021

Figure 68

Loosen the two closing covers by central tapping and remove them.

Figure 69

Loosen the two hex. head screws and remove them along with flat washers.

Figure 70

Remove upper oil retainer.

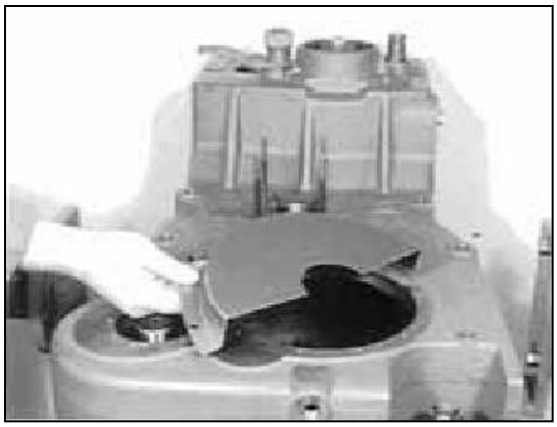

Figure 71

Drive output shaft by means of striker out of the output gear and remove it.

ATTENTION :

In case of the Version with a mechanical speedometer, the speedometer-drive shaft (complete) has to be removed prior to the disassembly of the output shaft !

(S) Puller	5870 023 017
(S) Puller	5870 023 026
(S) Striker	5870 650 001

Figure 72

Remove output gear and plate.

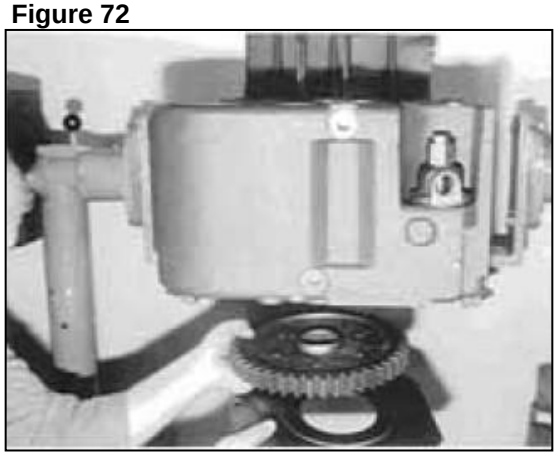

Figure 73

Squeeze out circlip and remove brake cam.

(S) Set of external snap ring pliers	5870 900 013

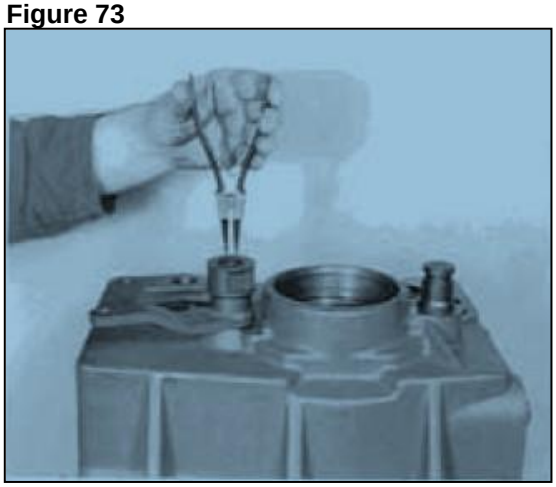

Figure 74

Drive the pin out of the housing bore and remove it.

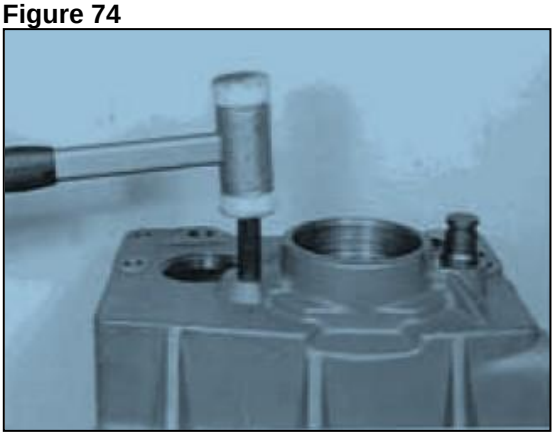

Figure 75

Loosen hex. lead screws (Figure 76) and pull pin by means of Special device out of the housing bore (Figure 77).

(S) Puller device 5870 000 066

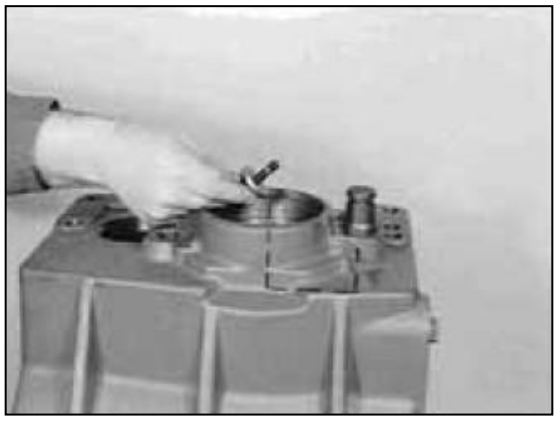

Figure 76

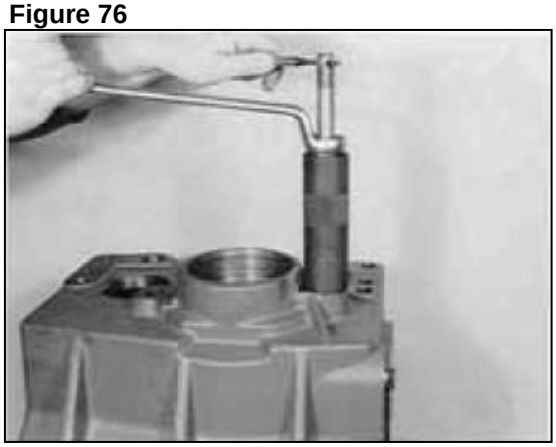

Figure 77

Tilt gear case 180°.

Pry shaft seal out of the housing bore.

Figure 78

Squeeze out circlip and remove spacing washer.

(S) Circlip pliers 5870 900 021

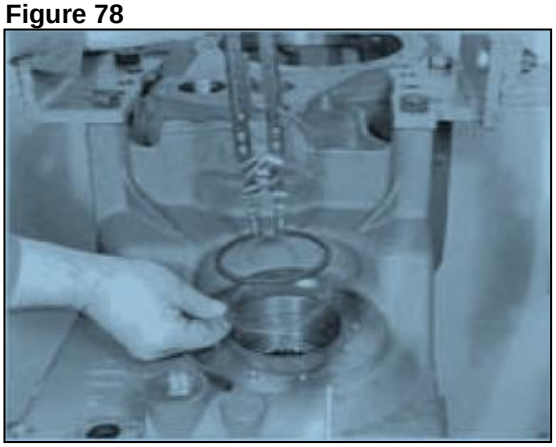

Figure 79

https://truckmanualshub.com/

3.2 REASSEMBLY

3.2.1 Final drive - Version with Drum brake

Install O-Ring (Arrow), insert pin until contact is obtained and fasten by means of housing washer, flat washer and hex. head screw.

NOTE :

Secure hex. head screw with Loctite (Type-No. 270) !

Figure 90

Illustration on the right shows the components of the brake cam.

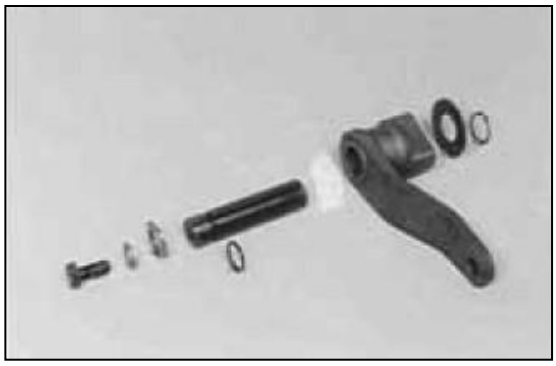

Figure 91

Pre-assemble brake cam according to Figure 91 and insert it in the housing bore until contact is obtained.

Now, tighten hex. head screw until the brake cam has got contact on the housing without play and pressure.

NOTE :

Secure hex. head screw with Loctite (Type-No. 270) !

Grease O-Ring (Arrow/Figure 92) !

Figure 92

NOTE:

For the following steps pay attention to the Draft (Figure 93) !

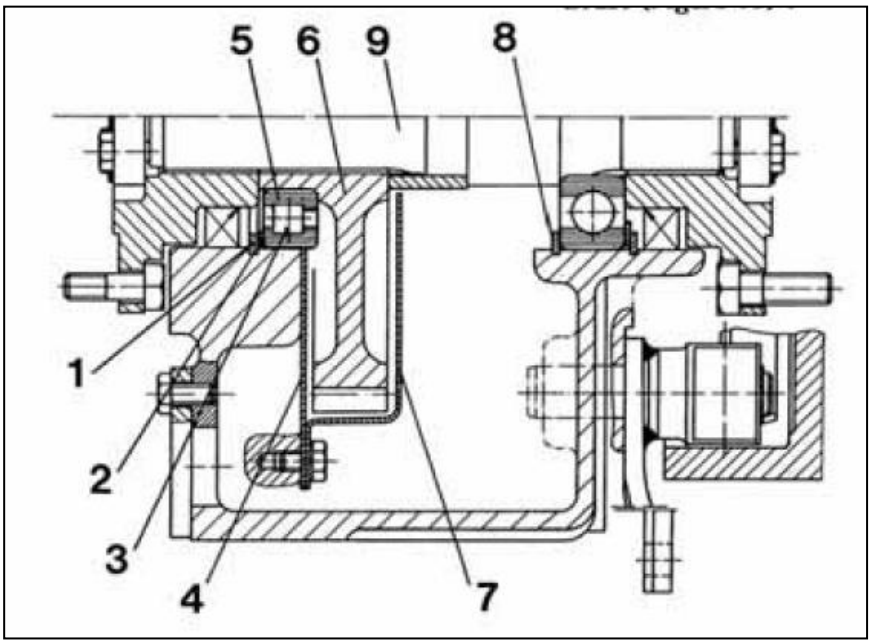

Figure 93

Squeeze in circlip 1.

Tilt gear case 180° .

(S) Clamping pliers 5870 900 021

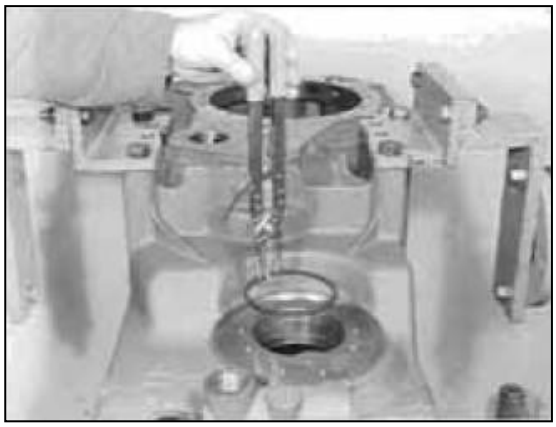

Figure 94

Lay shim 2 (e.g. s = 0,7 mm/empirical value) and roller bearing 3 upon circlip 1.

NOTE :

The end play of the output shaft bearing is determined by means of shim 2.

However, a later check of the end play (Figure 104 to Example "A") is absolutely essential !

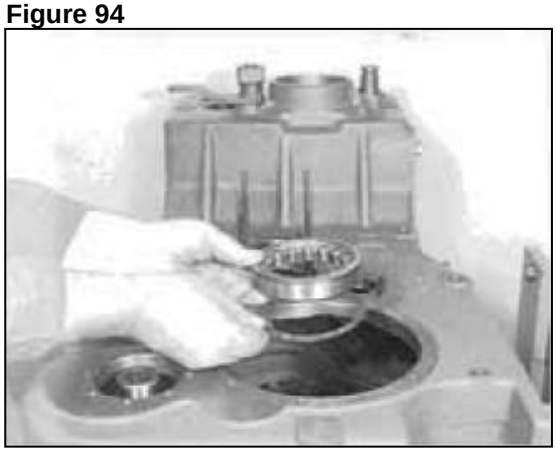

Figure 95

Introduce plate 4 through the large housing bore and lay it over the roller bearing 3.

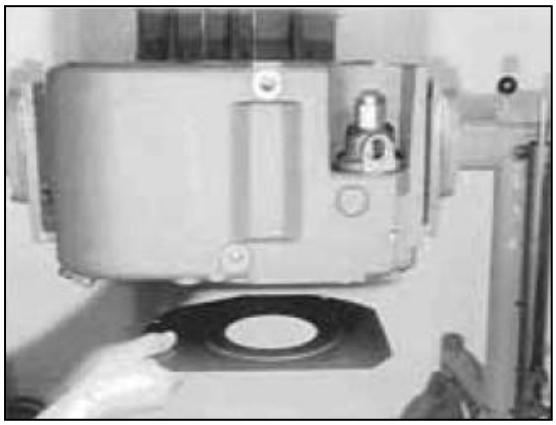

Figure 96

Heat bearing inner race 5 and assemble it until contact is obtained.

Figure 97

Position spur gear 6, see Draft !

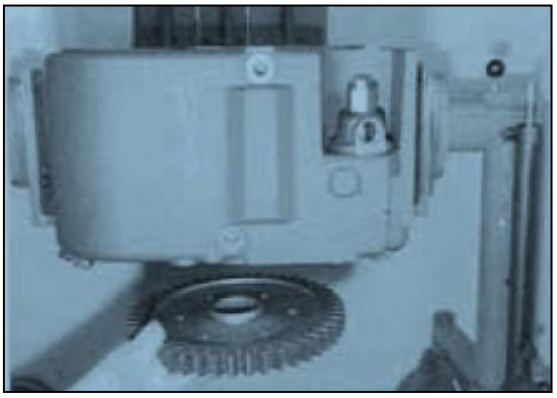

Figure 98

Position oil retainer 7, see Draft !

Figure 99

Fasten both plates by means of hex, head screws (install flat washers).

Torque limit (M8/8.8) 23 Nm

NOTE :

Secure hex. head screws with Loctite (Type-No. 270).

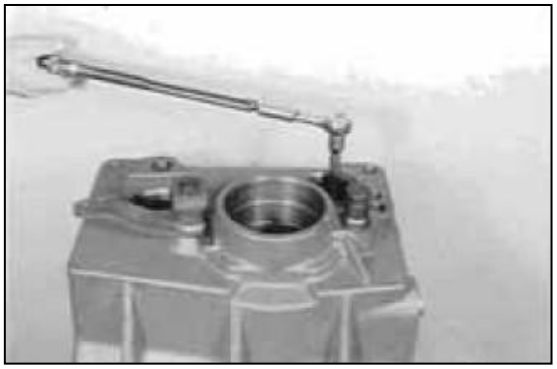

Figure 100

Squeeze in circlip 8.

(S) Clamping pliers 5870 900 021

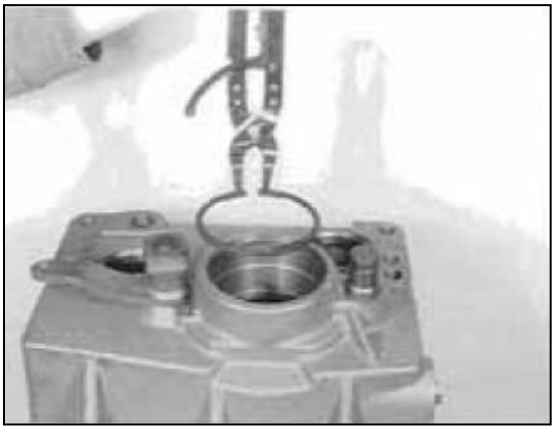

Figure 101

Press the speedometer-drive worm against shoulder.

NOTE :

In case of a Version without mechanical speedometer, a spacer has to be installed instead of the speedometer-drive worm !

Figure 102

Thread up output shaft 9 until contact is obtained.

Figure 103

\

https://truckmanualshub.com/

Cheek end play of the output shaft bearing = 0,3 ... 0,5 mm (Figure 104 ... Example "A"):

Measure Dimension I from the end face/output shaft to the contact face (ball bearing).

Dimension I e.g.	79,60 mm
(S) Digital depth gauge	5870 200 072

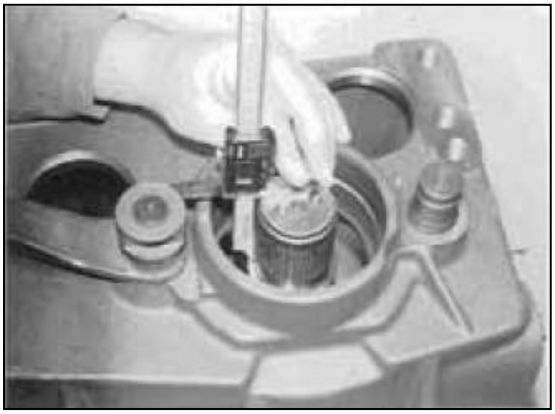

Figure 104

Determine Dimension II from the end face/output shaft to the upper plane surface of the circlip.

Dimension II e.g.	79,10 mm

Figure 105

Example *A* :

Dimension I	79,60 mm
Dimension II	- 79,10 mm
Difference = End play	= 0,50 mm

NOTE :

In case of deviations from the required end play, correct by means of a corresponding shim (2), see Figure 95 !

Press ball bearing against shoulder.

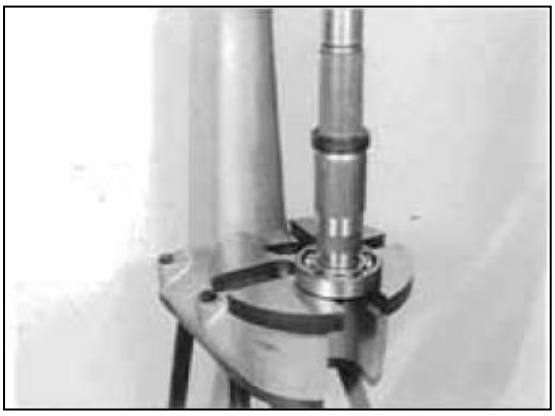

Figure 106

Heat housing bore and thread up output shaft until contact is obtained.

Figure 107

Fix ball bearing free of play by means of shim and circlip.

(S) Clamping pliers 5870 900 021

Figure 108

Install shaft seal with the sealing lip facing the oil chamber.

NOTE :

The exact installation position is obtained by application of the prescribed driver !

If the outer diameter of the shaft seal is rubberized, wet the sealing surface with spirit !

If not, use sealing compound (Curil T) !

Grease sealing lip !

(S) Driver 5870 048 067

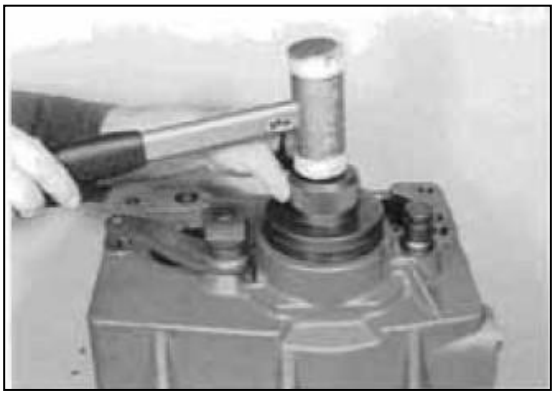

Figure 109

The Figure on the right shows a Version with two shaft seals (Version with fording ability) Installation position : Sealing lip of inner

shaft seal is facing the oil chamber. Sealing lip of outer shaft seal is showing outwards.

The installation depth is given by application of the prescribed driver 1

NOTE :

Fill space between upper and lower sealing lip with grease !

(S) Driver 5870 048 067

Figure 110

Install the two closing covers.

NOTE ;

Wet sealing surfaces with Loctite (Type-No. 270) !

(S) Driver	5870 057 015
(S) Handle	5870 260 002

Figure 111

Install brake shoes and engage return springs

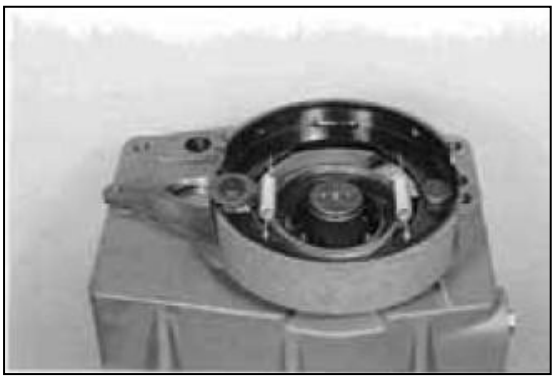

Figure 112

Insert hex. head screws in the bores of the output flange and press retaining plate (Arrow) against shoulder.

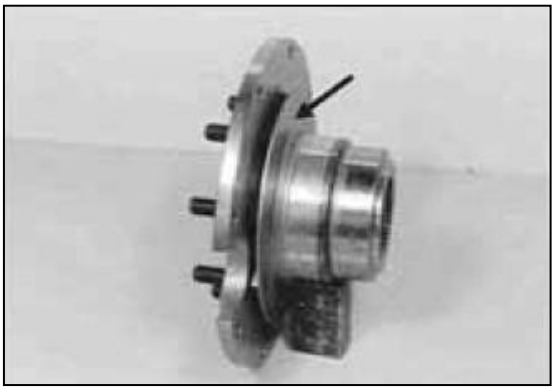

Figure 113

Heat output flange and assemble it until contact is obtained.

Figure 114

Fasten output flange by means of disk and hex. head screws.

NOTE :

Wet the contact surface of disk and screw heads with sealing compound !

Torque limit (Ml0/8.8) 46 Nm

Figure 115

Fix hex. head screws means of lock plate.

(S) Driver 5870 057 009

(S) Handle 5870 260 002

Figure 116

Assemble brake drum and fasten it by means of hex. head screws (mount flat washers).

Torque limit (Ml0/10.9) 68 Nm

(S) Adjusting screws (MI0) 5870 204 007

Figure 117

Tilt gear case 180° .

Install shaft seal (Arrow) with the sealing lip facing the oil chamber.

NOTE :

The exact installation position is obtained by application of the prescribed driver !

If the outer diameter of the shaft seal is rubberized, wet the sealing surface with spirit !

If not, use sealing compound (Curil T) !

Grease sealing lip !

(S) Driver 5870 048 067

Figure 118

Figure 119 shows a Version with 2 shaft seals (Version with fording ability).

Installation position : Sealing lip of inner shaft seal is facing the oil chamber !

Sealing lip of outer shaft seal is showing outwards.

The installation depth is obtained by application of the prescribed driver !

NOTE :

Fill space of upper and lower sealing lip with grease !

(S) Driver 5870 048 067

Figure 119

Insert hex. head screws in the bores, heat the output flange and assemble it until contact is obtained.

Figure 120

Fasten output flange by means of disk and hex. head screws.

NOTE :

Wet contact areas of disk and screw heads with sealing compound !

Torque limit (M10/8.8) 46 Nm

Figure 121

Fix hex. head screws means of lock plate.

(S) Driver 5870 057 009

(S) Handle 5870 260 002

Figure 122

3.2.2 Speedometer

The Illustration on the left shows the components.

1 = Speedometer-drive gear

2 = Speedometer-drive shaft

3 = Straight pin

4 = Speedometer connecting piece

5 = Shaft seal

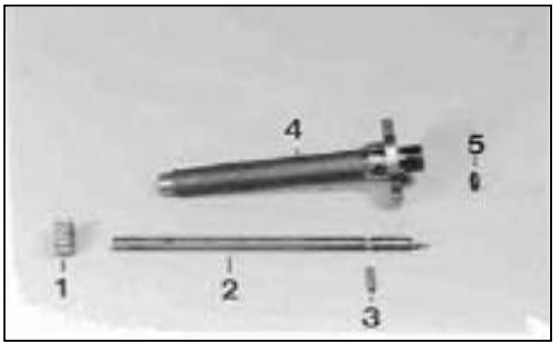

Figure 123

Press drive gear flat against the end face/ speedometer-drive shaft.

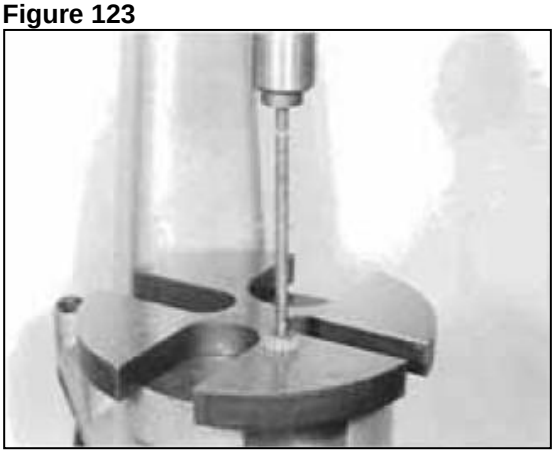

Figure 124

Introduce speedometer-drive shaft and fix it by means of straight pin.

Figure 125

Guide installer (S) over the speedometer-drive shaft and install shaft seal (Arrow) with the sealing lip facing the oil chamber.

(S) Driver 5870 048 072

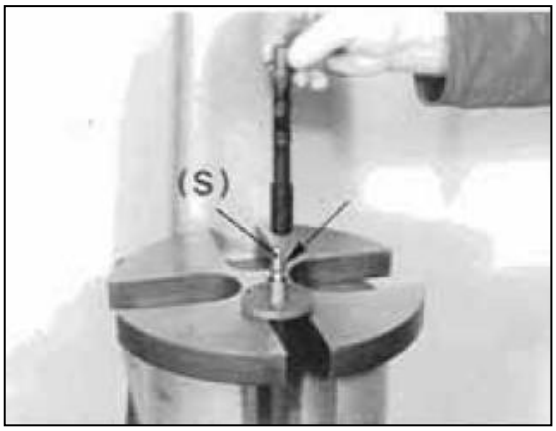

Figure 126

https://truckmanualshub.com/

Assemble flat gasket and fasten pre-assembled speedometer by means of hex. Head screws.

Torque limit (M8/8.8) 23 Nm

Figure 126

In case of the Version without speedometer. close the bore by means of cover (Arrow).

NOTE :

Wet sealing surfaces with Loctite (Type-No.270) !

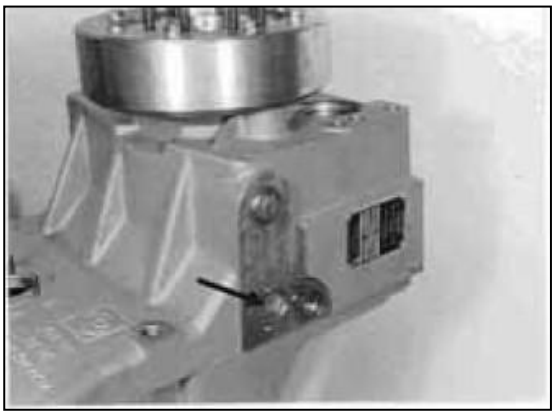

Figure 127

3.2.3 CLUTCH K4/K3

3.2.3.1 Pre-assemble plate carrier K4/K3

NOTE :

The following steps (Figure 132 ... 138) have to be carried out on both sides of the plate carrier !

The needle bush is marked on one end face.

Press needle bush carefully against shoulder, using drift (S).

NOTE :

At the pressing in, the marking must be showing upwards (to the drift) !

(S) Drift 5870 506 055

Check operation of the bleeder valves.

NOTE :

Ball may not stick, if necessary, clean it by means of compressed air or renew it !

Figure 132

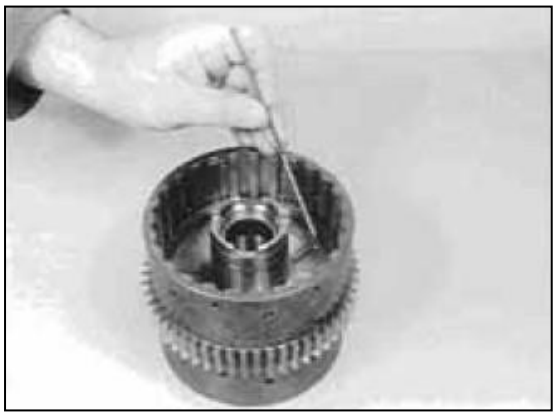

Figure 133

Insert the profiled sealing rings (Arrows) in the recesses of the piston with the sealing lip facing the pressure chamber.

NOTE ;

*— - — - — - = Pressure side !

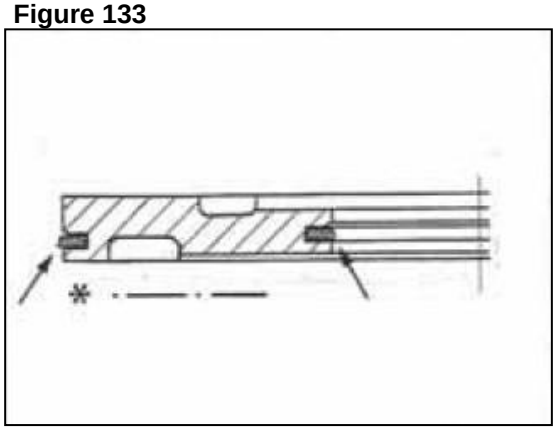

Figure 134

Oil profiled sealing rings and insert piston until contact is obtained.

NOTE ;

Use installer (s)!

(S) Installer 5870 651 023

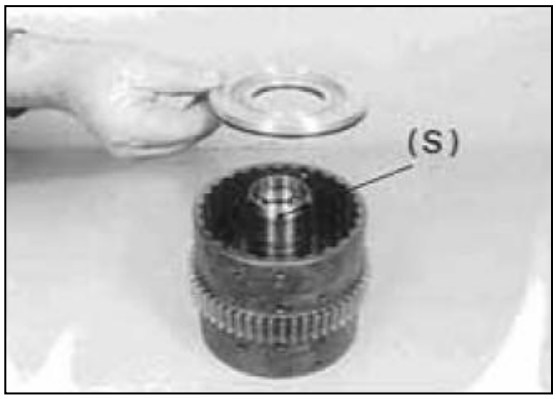

Figure 135

https://truckmanualshub.com/

Assemble lower spring guide (1), compression spring (2) and upper spring guide (3).

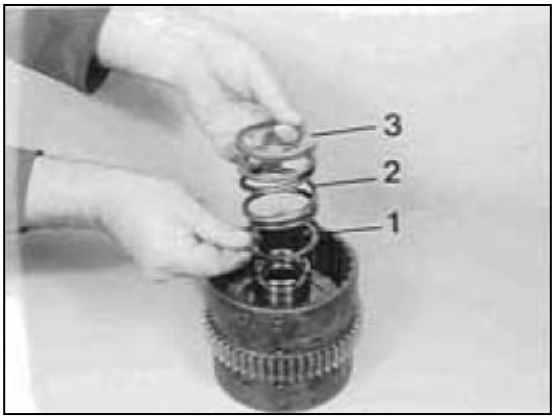

Figure 136

Mount guide ring (4) and circlip (5) (Figure 137), preload compression spring and fix the components by means of circlip (Figure 138).

Assembly jig 5870 345 028

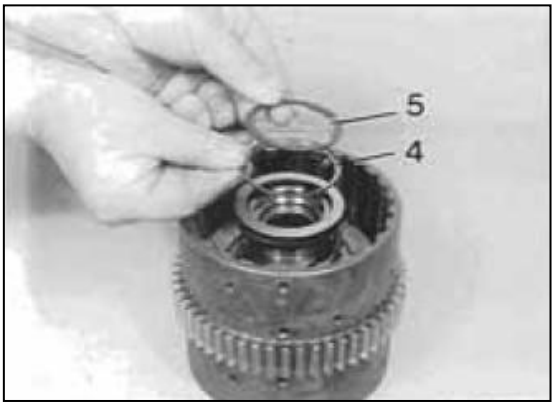

Figure 137

Figure 138

https://truckmanualshub.com/

PLATE INSTALLA TION

Ⅰ Determine Plate installation-No. (Page 118)

Ⅱ Table for plate installation (Page 119 ... 121)

Ⅲ. Example with Draft (Page122)

Ref. Ⅰ; Determine Plate installations-No. with the aid of the corresponding Spare Parts List.

The following List shows the abstract from a Spare Parts List.

A = Transmission Parts List

B = Group 151, Clutch KV/K1

C = Assembly Note - Plate installation

D = Plate installation-No.

4644 151 Group Ⓑ coupling			Quantity per model 4644 024 Ⓐ
Position No.	Part number	Description	077
		Assembling of the plate installation	
360	0750 116 100	Ball Bearing	1
390	4644 251 037	Disc carrier	1
		Coupling KV	
420	0501 309 014	O.Clutch Disc	8
434	4644 308 115	I.Clutch Disc	7
436		O.Clutch Disc	
	4644 308 014	S=2.0	1
	4644 308 115	S=1.5	1
		Coupling K1	
440	0501 309 541	O.Clutch Disc	7
442	0501 312 283	O.Clutch Disc	1
450	4644 308 329	I.Clutch Disc	3
452	4644 308 330	I.Clutch Disc	3
456		I.Clutch Disc	
	4644 308 329	S=2.0	1
	4644 308 330	S=2.5	1
	Ⓒ	Assembly Note Assembling of the plate installation O.Clutch Disc	
	Ⓓ	KV.NO.12 K1.NO.22	

Attention:

The Transmission Parts List (see Model Identification Plate) must be identical with the corresponding Parts list of the Spare Parts List!

The Plate installations-No. can be found on the left Table margin of the following Pages (119... 121)!

Ⅱ Table for Plate installation

Clutch KV to KR

		Type of plate	Quantity(n)	S(mm)	n s (mm)	ZF-No.
Plate installation-No. 10	WG-180/181 Loader version	Outer plate	9	2,0	18	0501 309 330
		Inner plate	4	2,0	8	4644 308 329
		Inner plate	3	2,5	7,5	4644 308 330*）
		Compensating plate (Inner plate)	1	2,0 or 2,5	2,0 or 2,5	4644 308 329 4644 308 330
		No. of friction surfaces	16			
		Plate clearance	2,2 …2,4			
Plate installation-No. 11	WG-200/201 Loader version	Outer plate	12	2,0	24	0501 309 330
		Inner plate	9	2,0	18	4644 308 329
		Inner plate	1	2,5	2,5	4644 308 330*）
		Compensating plate (Inner plate)	1	2,0 or 2,5	2,0 or 2,5	4644 308 329 4644 308 330
		No. of friction surfaces	22			
		Plate clearance	2,2 … 2,4			
Plate installation-No. 12	WG-180 bis 201 Truck crane	Outer plate	8	2,0	16	0501 309 541
		Inner plate	7	2,5	17.5	4644 308 330
		Inner plate				
		Compensating plate (Inner plate)	1	1,5 or 2,0	1,5 or 2,0	4644 308 115***) 4644 308 014***)
		No. of friction surfaces	14			
		Plate clearance	2,2 … 2,4			
Plate installation-No. 13	WG-180 bis 201 Truck crane without WK	Outer plate	8	2,0	16	0501 309 330
		Inner plate	7	2,5	17.5	4644 308 330
		Inner plate				
		Compensating plate (Inner plate)	1	1,5 or 2,0	1,5 or 2,0	4644 308 115***) 4644 308 014***)
		No. of friction surfaces	14			
		Plate clearance	2,2 … 2,4			
Plate installation-No. 14	WG-200/201 Loader version	Outer plate	10	2,0	20	0501 309 330
		Inner plate	8	3,0	24	4644 308 365
		Inner plate				
		Compensating plate (Inner plate)	1	2,0 or 2,5 or 3,0	2,0 or 2,5 or 3,0	4644 308 329) 4644 308 330 4644 308 365
		No. of friction surfaces	18			
		Plate clearance	2,6 … 2,8			
Plate installation-No. 15	WG-200 Graphite plate Loader version	Outer plate	10	2,0	20	0501 314 311
		Inner plate	8	3,0	24	0501 314 391
		Inner plate				
		Compensating plate (Inner plate)	1	2,0 or 2,5 or 3,0	2,0 or 2,5 or 3,0	0501 314 389 0501 314 388 0501 314 391
		No. of friction surfaces	18			
		Plate clearance	2,6 … 2,8			

Clutch K1 to K2

		Type of plate	Quantity(n)	S(mm)	n s (mm)	ZF-No.
Plate installation-No. 20	Standard WG-180 to 201	Outer plate	8	2,0	16	0501 309 330
		Inner plate	4	2,0	8	4642 308 329
		Inner plate	2	2,5	5	4642 308 330*)
		Compensating plate (Inner plate)	1	2,0 or 2,5	2,0 or 2,5	4642 308 329 4642 308 330
		No. of friction surfaces	14			
		Plate clearance	2,2 …2,4			
Plate installation-No. 21	WK-Version WG-180 to 201	Outer plate	8	2,0	16	0501 309 541
		Inner plate	4	2,0	8	4644 308 329
		Inner plate	2	2,5	5	4644 308 330*)
		Compensating plate (Inner plate)	1	2,0 or 2,5	2,0 or 2,5	4644 308 329 4644 308 330
		No. of friction surfaces	14			
		Plate clearance	2,2 … 2,4			
Plate installation-No. 22	WK-Vers WG-180 to 200 GD-shift control	Outer plate	7	2,0	14	0501 309 541
		Inner plate	1	2,0	2,0	0501 312 283**)
		Inner plate	3	2,0	6	4644 308 329
		Inner plate	3	2,5	7,5	4644 308 330*)
		Compensating plate (Inner plate)	1	2,0 or 2,5	2,0 or 2,5	4644 308 329 4644 308 330
		No. of friction surfaces	14			
		Plate clearance	2,2 … 2,4			
Plate installation-No. 23	WG-200 Graphite plate Loader version	Outer plate	8	2,0	16	0501 314 311
		Inner plate	4	2,0	8	0501 314 389
		Inner plate	2	2,5	5	0501 314 388
		Compensating plate (Inner plate)	1	2,0 or 2,5	2,0 or 2,5	0501 314 389 0501 314 388
		No. of friction surfaces	14			
		Plate clearance	2,2 … 2,4			

Clutch K3

		Type of plate	Quantity(n)	S(mm)	n s (mm)	ZF-No.
Plate installation-No. 30	Standard WG-180 to 201	Outer plate	10	2,0	20	05051 309 329
		Inner plate	1	1,5	1,5	4642 308 330
		Inner plate	6	2,0	12	4642 308 332
		Inner plate	1	2,5	2,5	4642 308 331*)
		Compensating plate (Inner plate)	1	1,5 or 2,0 or 2,5	1,5 or 2,0 or 2,5	4642 308 330 4642 308 332 4642 308 331
		No. of friction surfaces	18			
		Plate clearance	2,2 …2,4			
Plate installation-No. 31	WG-180 to 201 GD-Shift control	Outer plate	10	2,0	20	0501 309 329
		Outer plate	1	2,0	2,0	0501 312 280**)
		Inner plate	8	1,5	12	4642 308 330
		Inner plate	1	2,5	2,5	4642 308 331
		Compensating plate (Inner plate)	1	1,5 or 2,0 or 2,5	1,5 or 2,0 or 2,5	4642 308 330 4642 308 332 4642 308 331
		No. of friction surfaces	20			
		Plate clearance	2,2 … 2,4			
Plate installation-No. 32	WG-200 Graphite plate loader version	Outer plate	10	2,0	20	0501 314 310
		Inner plate	1	1,5	1,5	0501 314 387
		Inner plate	6	2,0	12	0501 314 385
		Inner plate	1	2,5	2,5	0501 314 386*)
		Compensating plate (Inner plate)	1	1,5 or 2,0 or 2,5	1,5 or 2,0 or 2,5	0501 314 387 0501 314 385 0501 314 386
		No. of friction surfaces	18			
		Plate clearance	2,2 … 2,4			

Clutch K4

		Type of plate	Quantity(n)	S(mm)	n s (mm)	ZF-No.
Plate installation-No. 40	**Standard WG-180 to 201**	Outer plate	9	2,0	18	0501 309 329
		Inner plate	4	1,5	6	4642 308 330
		Inner plate	2	2,0	4	4642 308 332
		Inner plate	1	2,5	2,5	4642 308 331*)
		Compensating plate (Inner plate)	1	1,5 or 2,0 or 2,5	1,5 or 2,0 or 2,5	4642 308 330 4642 308 332 4642 308 331
		No. of friction surfaces	16			
		Plate clearance	2,2 …2,4			
Plate installation-No. 41	**WG-200/201 Grader (Gear step)**	Outer plate	9	2,0	18	0501 309 329
		Outer plate	1	2,0	2,0	0501 312 280**)
		Inner plate	7	2,0	14	4642 308 332
		Inner plate	1	2,5	2,5	4642 308 331*)
		Compensating plate (Inner plate)	1	1,5 or 2,0 or 2,5	1,5 or 2,0 or 2,5	4642 308 330 4642 308 332 4642 308 331
		No. of friction surfaces	18			
		Plate clearance	2,2 … 2,4			
Plate installation-No. 41	**WG-200 Graphite plate loader version**	Outer plate	9	2,0	18	0501 314 310
		Inner plate	4	1,5	6	0501 314 387
		Inner plate	2	2,0	4	0501 314 385
		Inner plate	1	2,5	2,5	0501 314 386*)
		Compensating plate (Inner plate)	1	1,5 or 2,0 or 2,5	1,5 or 2,0 or 2,5	0501 314 387 0501 314 385 0501 314 386
		No. of friction surfaces	16			
		Plate clearance	2,2 … 2,4			

Note ref. *) **Install inner plate close to the piston.**

Note ref. **) **Outer plate one-sided coated -**
Install plate with the uncoated side facing the piston.

Note ref. *)** **Outer plate uncoated - install plate facing the piston.**
As second plate, a lining outer plate has to be installed.

Attention! **In case of plates with different thicknesses,**
the thinner plates must be always installed on the backing plate side!

III. EXAMPLE FOR PLATE INSTALLATION

The following Draft shows the plate installation of the Clutch KV and K1 !

Ref. Draft :

A = Clutch KV

(Plate installation-No. e.g. 12)

B = Clutch KI

(Plate installation-No. e.g. 22)

1 = Plate carrier

2 = Backing plate

3 = Piston

4 = Outer plates

5 = Outer plates

(one-sided coated)

6 = Compensating plate

(Outer plate uncoated)

7 = Inner plates

8 = Compensating plate

(Inner plate)

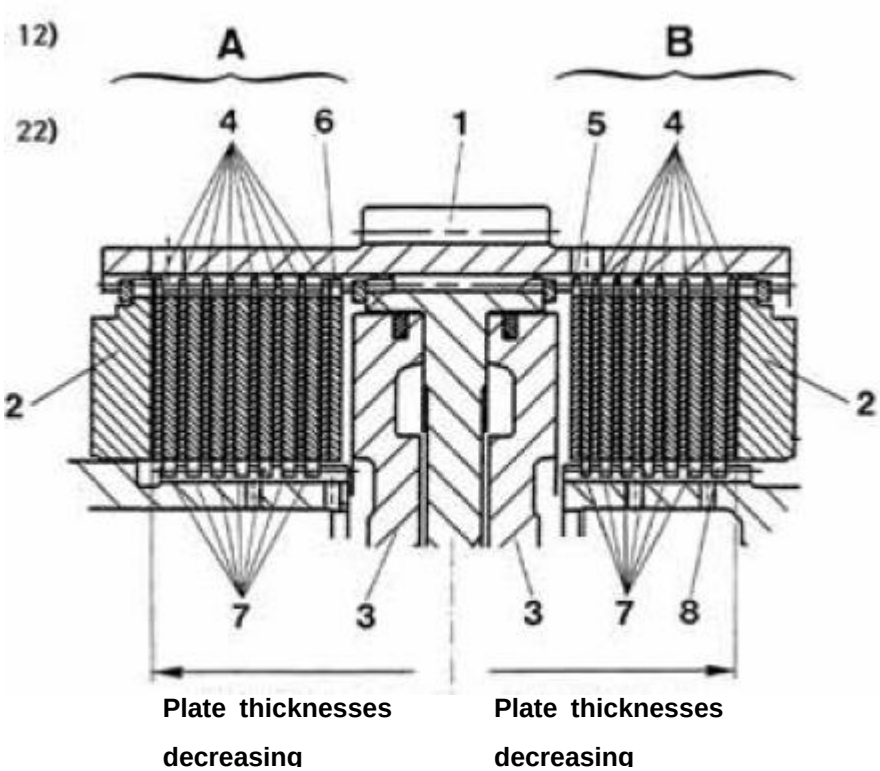

Attention :

In principle, the arrangement of the outer and inner plates has to be carried out alternately.

Starting with the piston side, the first plate must be one double-sided coated outer plate (Standard Version).

Exception "A" :

In case of Plate installation-No. 22,31 and 41, the first plate must be one one-sided coated outer plate, and in this case, the plate must be always installed with the uncoated side facing the piston !

Exception "B" :

In case of Plate installation-No. 12 and 13, the first plate must be one double-sided uncoated outer plate (compensating plate).

As second plate, one coated outer plate has to be installed.

Now, pile up the inner and outer plates alternately again !

3.2.3.2 Install plate pack

Install plate pack and replace backing plate.

NOTE :

Plate arrangement, see

Plate installation, Page 118 ... 122!

Figure 139

Fix plate pack by means of snap ring.

Figure 140

Check plate clearance (Figure 141 to Example “B”)

NOTE :

The plate clearance of the different clutches can be taken from the Table, Page 119 ... 122 !

In case of Plate installation-No.40, e.g. = 2,0 ... 2,4 mm !

Measure Dimension Ⅰ from the end face of the plate carrier to the backing plate.

Dimension Ⅰ e.g. 5,3 mm

Figure 141

Place backing plate against snap ring until contact is obtained (upwards), and determine Dimension Ⅱ.

Dimension Ⅱ e.g. 3,2 mm

Figure 142

Example "B" :

Dimension Ⅰ	5,3 mm
Dimension Ⅱ	- 3,2 mm
Difference = Plate clearance	2,1 mm

NOTE :

In case of deviations from the required plate clearance, correct by means of corresponding compensating plates.

The pre-assembly of the remaining clutches (K3, KV/K1 and KR/K2) has to be carried out accordingly.

3.2.3.3 Pre-assemble and install spur gear K4

ATTENTION :

According to the Transmission Version, resp. operating conditions, different spur gear bearings are possible, see corresponding Spare Parts List as well as Figures 143 and 144 !

Spur Rear K4, Version "A" (Figure 143)

1 = Thrust plate 5 = Spur gear

2 = Thrust washer 6 = Bearing inner race

3 = Collar shim 7 = Shim

4 = Roller cage (2x)

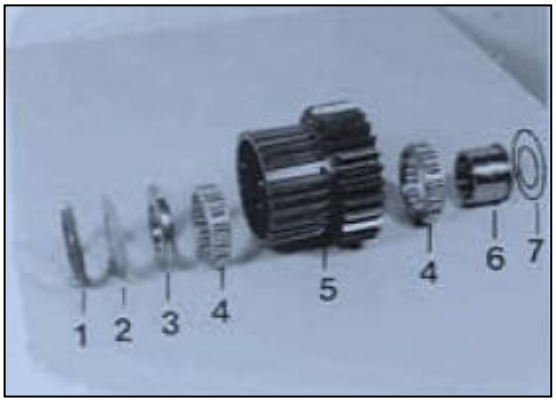

Figure 143

Spur gear K4, Version (Figure 144)

1 = Thrust plate

2 = Thrust washer

3 = Spur gear

U = Needle cage

5 = Thrust washer

6 = Thrust washer

7 = Compensating plate (optional)

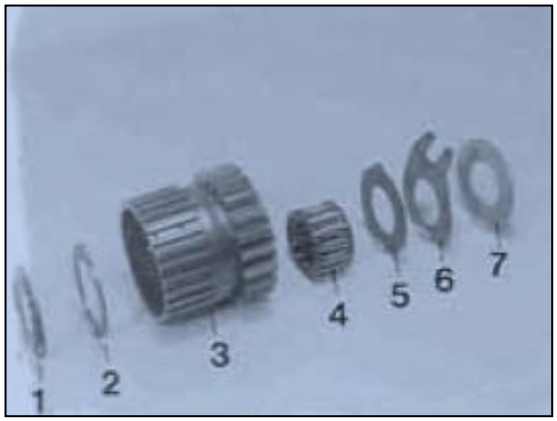

Figure 144

Install components 2 ... 6 (Figure 143), resp. 2 ... 4 (Figure 144), replace thrust plate (1) and introduce spur gear until all inner plates are received.

NOTE :

Make thrust plate (2) adhere with grease !

Figure 145

3.2.3.4 Install plate pack K3

Install plate pack and check clearance.

NOTE ;

Plate arrangement, see plate installation,

Page 119 ... 122 !

Figure 146

3.2.3.5 Pre-assemble and install spur gear K3

1 = Thrust plate

2 = Thrust washer

3 = Needle cage

4 = Spur gear

5 = Cylindrical rollers

NOTE :

Exchange cylindrical rollers 5 in sets only !

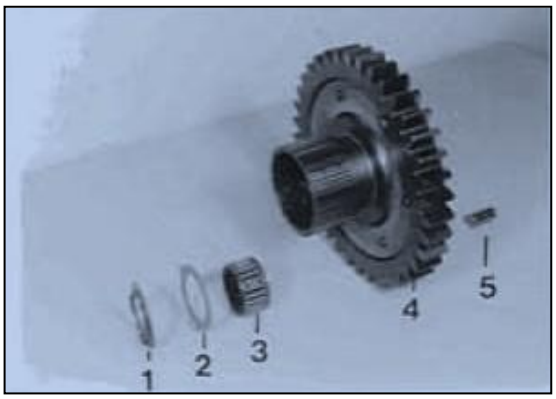

Figure 147a

Install components 2 ... 5, replace thrust plate 1 (Arrow) and introduce spur gear until all inner plates arc received.

NOTE ;

Make thrust washer 2 and cylindrical rollers 5 adhere with grease.

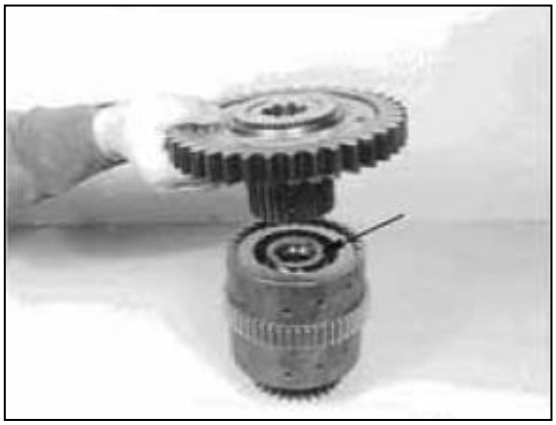

Figure 147b

3.2.3.6 Install clutch K4/K3

Adjust end play of clutch 0,1 ... 0,3 mm (Figure148 to Example “E”)

Determine Dimension I from the flange-mounted surface/axle to the plane surface/housing (Arrow).

Dimension I e.g. 251,15 mm

NOTE :

In case of spur gear bearing K4, Version "B" (Figure 144), lay forked washer and thrust washer upon the plane surface of the housing and measure up to the thrust washer.

Figure 148

Measure Dimension II from the butting face/bearing rollers to the flange-mounted surface.

Dimension II e.g. 21,00 mm

Example "C", for the determination of the housing dimension

Dimension I e.g. 251,15 mm

Dimension II e.g. - 21,00 mm

Difference = Housing dimension e.g. 230,15 mm

Place clutch on a suitable surface plate and determine Dimension 111 from the end face/cylindrical rollers to the surface plate.

Dimension III e.g. 227,20 mm

Example "D", for the determination of the installation dimension

Dimension III e.g. 227,20 mm

End play e.g. + 0,20 mm

gives installation dimension

- Clutch 227,40 mm

Example "E", for the determination of the shim

Housing dimension e.g. 230,15 mm

Installation dimension - Clutch - 227,40 mm

Difference = Shim e.g. 2,75 mm

Insert clutch K4/KR by means of lifting device into the housing and position it.

(S) Lifting device 5870 350 041

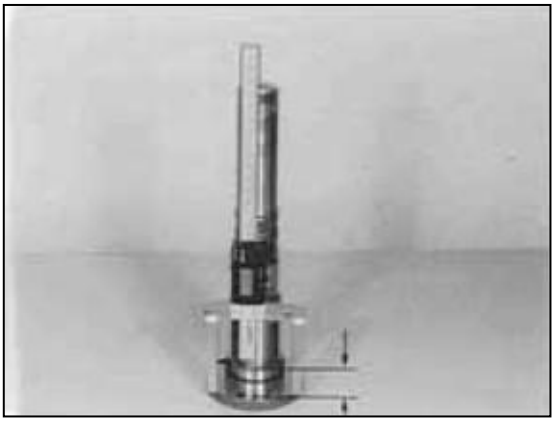

Figure 149

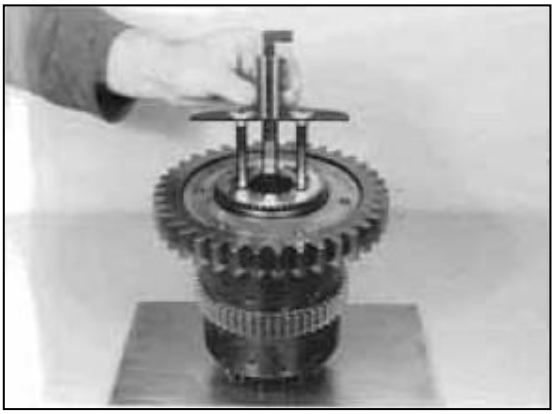

Figure 150

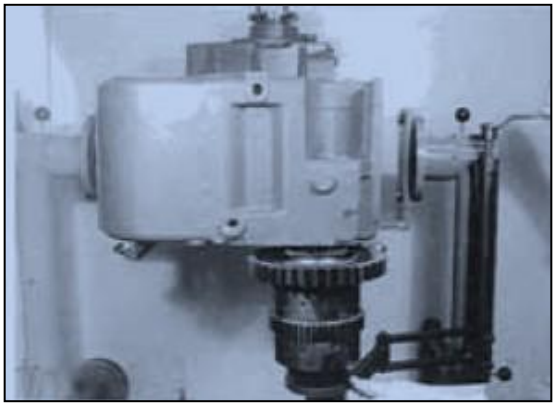

Figure 151

Align clutch by means of drift and fix it provisionally.

(S) Drift 5870 345 025

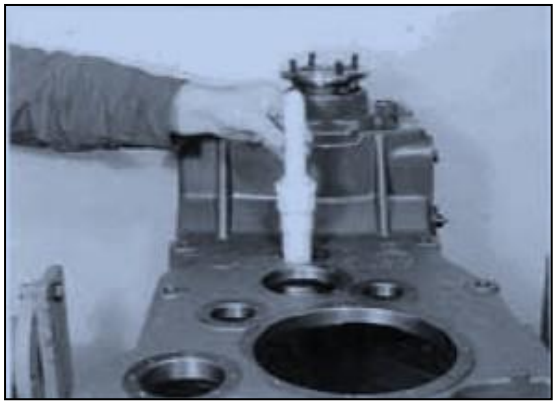

Figure 152

For the moment, tilt gear case 90° and push the compl. clutch opposite to the drive side against shoulder until contact is obtained.

Now, tilt gear case forward in the horizontal position.

Pull drift downwards until the shim (e.g. s = 2,75 mm, see Example "E") can be installed.

Now, align the complete clutch as well as the shim by means of drift again and fix it.

NOTE :

In case of spur gear bearing K4, Version "A", without forked washer and thrust washer (Figure 153) !

In case of spur gear bearing K4, Version MB", another forked washer as well as one thrust washer have to be installed in addition to the shim.

ATTENTION :

Pay attention to the radial installation position of the forked washer !

Now, tilt gear case back in the original position (180°).

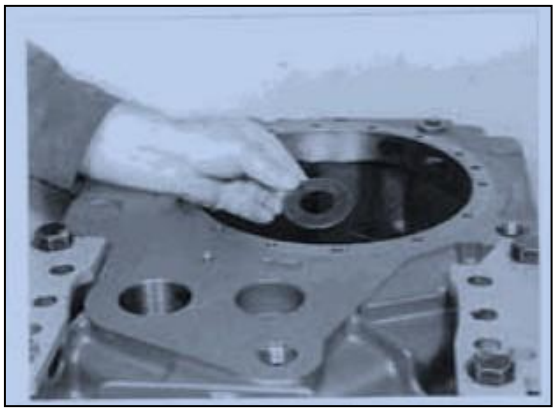

Figure 153

Squeeze in and engage rectangular rings (1).

Install O-Ring (2).

NOTE ;

Crease and align rectangular rings centrically.

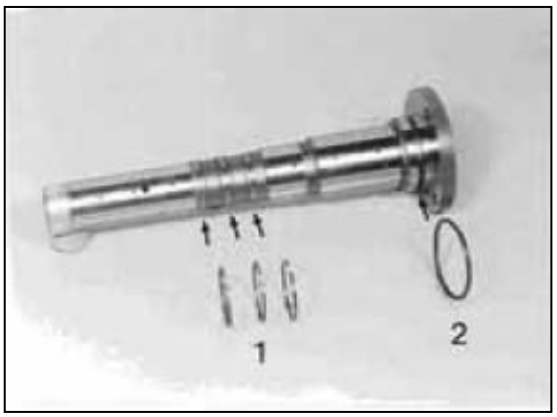

Figure 155

Install stud bolts, see Arrows !

NOTE :

Secure the stud bolts with Loctite (Type-No. 270) !

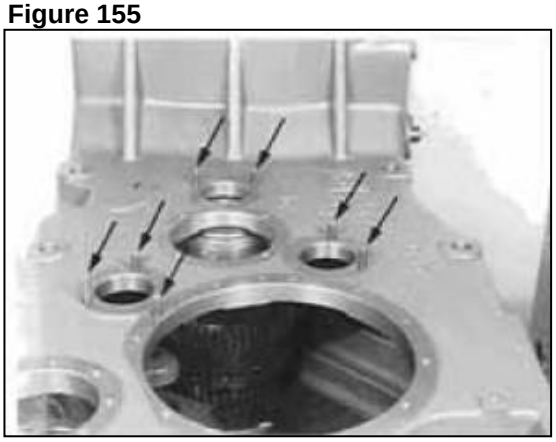

Figure 156

Heat housing bores (about 90° C).

(S) Hot-air blower	220 V	5870 221 503
(S) Hot-air blower	110 V	5870 221 501

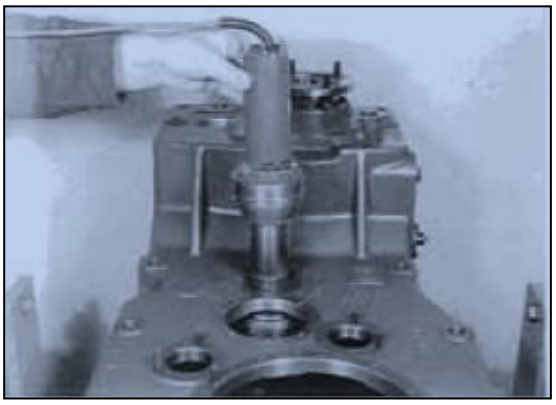

Figure 157

Thread up axle (compl.) until contact is obtained.

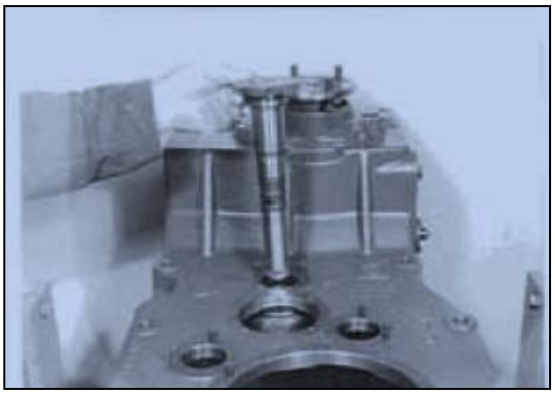

Figure 158

Fasten axle by means of hex. nuts.

Torque limit (M8/ 8.8) 23 Nm

Figure 159

Check end play of the clutch 0,1 ... 0,3 mm again and correct if necessary.

(S) Magnetic base 5870 200 055

(S) Dial indicator 5870 200 057

(S) Crow bar 5870 345 071

Figure 160

Check operation of the clutches KH and K3 by means of compressed air.

NOTE ;

If the components are correctly installed, the closing, resp. opening of the clutches is clearly audible !

Figure 161

3.2.4 Pre-assemble and install countershaft assembly

The illustration on the left shows the components.
1 = Closing cover
2 = Socket head screw
3 = O-Ring (installation position, see Arrow)
4 = Axle
5 = Shim
6 = Roller bearing
7 = Spur gear

NOTE :

The countershaft gear is marked on the end face. In the installed condition, the marking must be facing the drive side (upwards).

Insert shim and pre-assembled spur gear (Figure 163).

NOTE :

Pay attention to the installation position of the collar shim (Arrow) - radius on the inner diameter must show upwards !

Heat bearing bores and bearing inner race (about 90° C).

(S) Hot-air blower	220 V	5870 221 500
(S) Hot-air blower	110 V	5870 221 501

Insert axle until contact is obtained.

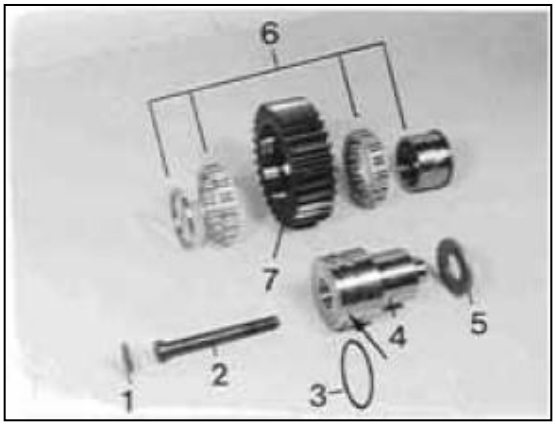

Figure 162

Figure 163

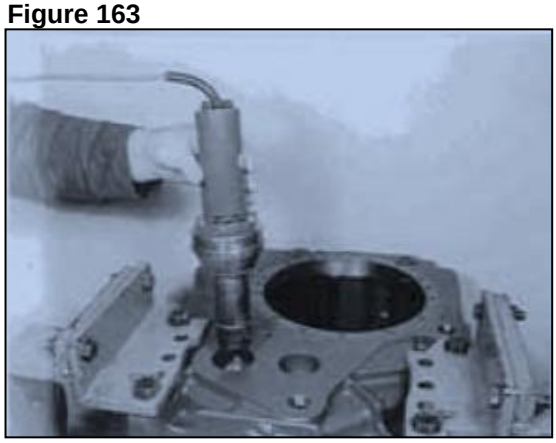

Figure 164

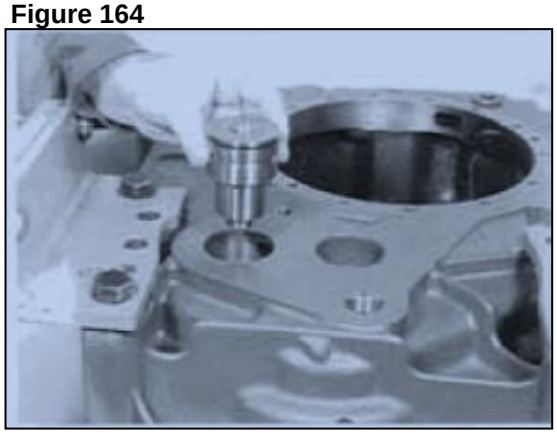

Figure 165

Fix the axle by means of socket head screw.

Torque limit (Ml2/10.9, DIN 7984) 80 Nm

NOTE :

Secure socket head screw with Loctite (Type-No. 242).

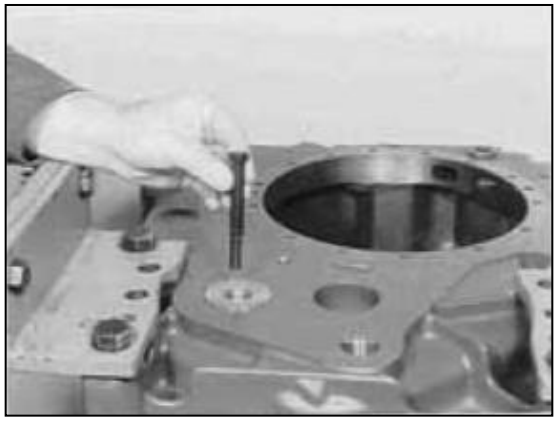

Figure 166

Install closing cover.

NOTE ;

Wet contact areas with Loctite (Type-No.270).

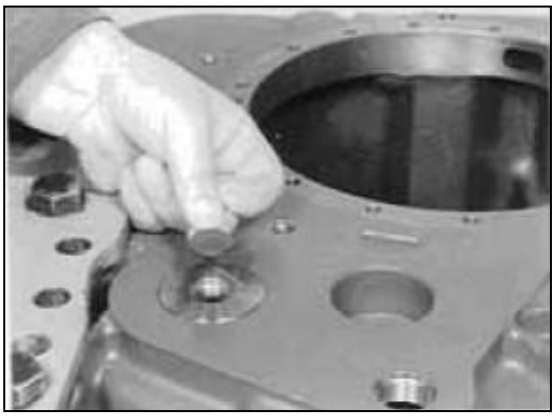

Figure 167

3.2.5 Clutch KR/K2

NOTE :

The pre-assembly of the plate carrier KR/K2 has to be carried out accordingly like that of the plate carrier K4/K3, see Page 116 and 117 .

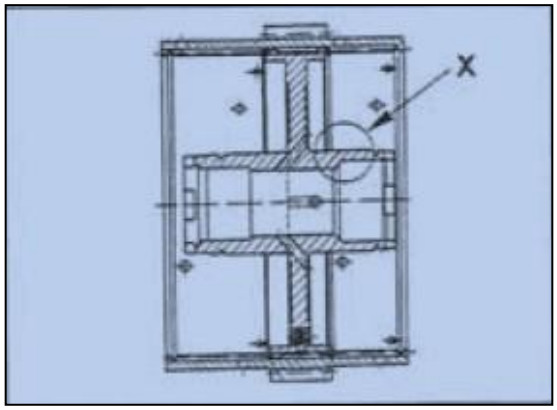

Figure 168

ATTENTION :

Pay attention to the different plate carriers !

Plate carrier KR/K2 in the zone X without oil hole (Figure 168).

Plate carrier KV/K1 in the zone X, with oil hole (Figure 169).

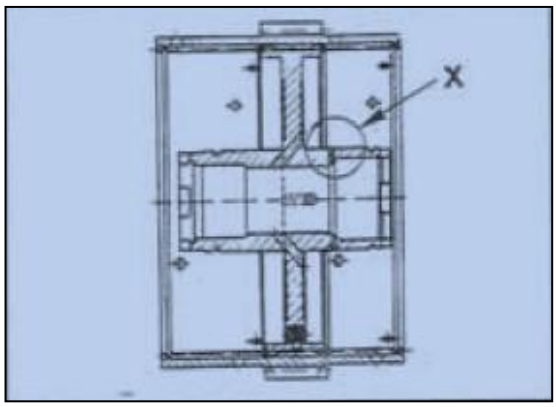

Figure 169

3.2.5.1 Plate pack KR

Install plate pack and check clearance.

NOTE :

Plate arrangement, see

Plate installation, Page 118 ... 122 !

Figure 170

3.2.5.2 Pre-assemble and install spur gear KR

NOTE :

According to the Transmission Version, resp. operating conditions, different spur gear bearings arc possible, see corresponding

Spare Parts List, as well as Fig.171, 172a and 172b !

Spur gear bearing KR, Version "A" Fig. 171

1 = Thrust plate
2 = Thrust washer
3 = Needle cage
4 = Spur gear
5 = Plate
6 = Hex. head screws
7 = Thrust washer
8 = Forked washer
9 = Shim (optional)

NOTE :

Secure hex. head screws (M6/8.8 = 9,5 Nm)

with Loctite (Type-No. 270) !

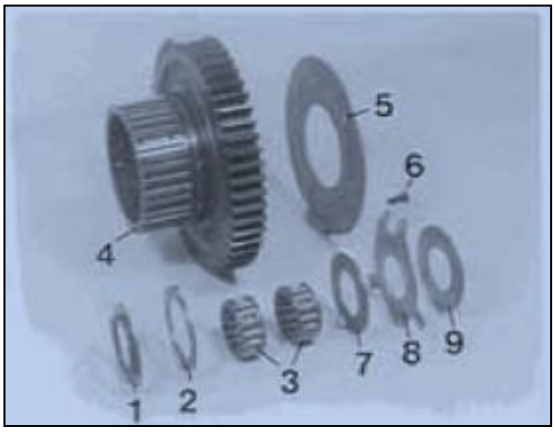

Figure 171

Spur gear bearing KR, Version “B" Fig. 172a

1 = Thrust plate
2 = Thrust washer
3 = Roller bearing (compl.)
4 = Spur gear
5 = Plate
6 = Hex. head screw
7 = Shim (optional)

NOTE :

Secure hex. head screws (M6/8.8 = 9,5 Nm)

with Loctite (Type-No. 270) !

Pay attention to the installation position of the bearing inner races (oil grooves), see Arrows !

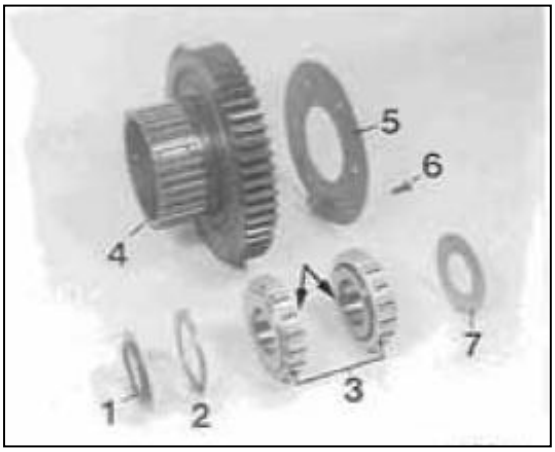

Figure 172a

Spur gear bearing KR, Version “C" Fig. 172 b)

1 = Thrust plate
2 = Thrust washer
3 = Thrust washer
4 = Cylindrical rollers(short)
5 = Disk
6 = Cylindrical rollers(long)
7 = Thrust washer
8 = Spur gear
9 = Plate
10 = Hex. head scrcws
11 = Thrust washer
12 = Forked washer
13 = Shim (optional)

NOTE :

Secure hex. head screws (M6/8.8 = 9,5 Nm) with Loctite (Type-No. 270) !

Install components 2 ... 6 (Fig. 171 and 172 a) resp. 2 ... 10 (Fig. 172 b).

Replace thrust plate 1 (Arrow) and thread up spur gear until all inner plates are received.

NOTE ;

Make thrust washers and cylindrical rollers adhere with grease !

3.2.5.3 Plate pack K2

Install plate pack and check clearance.

NOTE ;

Plate arrangement, see

Plate installation, Page 118 ... 122 !

3.2.5.4 Pre-assemble and install spur gear K2

NOTE :

According to the Transmission Version, resp. operating conditions, different spur gear bearings are possible, see corresponding Spare Parts List as well as the following Figures (175 and 176) !

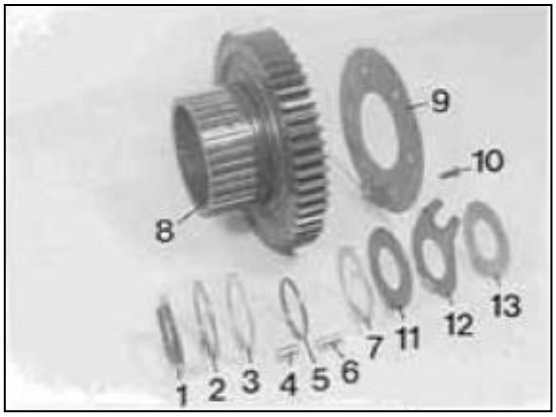

Figure 172b

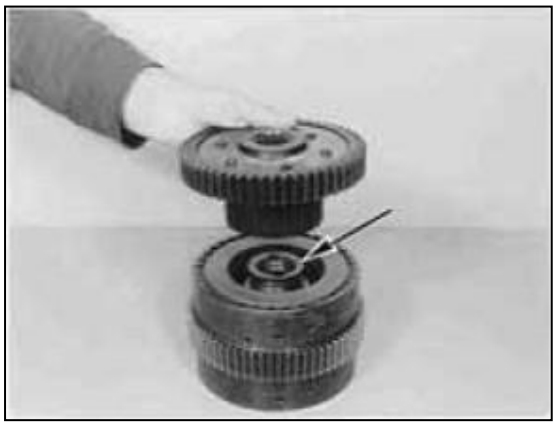

Figure 173

Figure 174

Spur gear bearing K2, Version "A" Fig. 175

1 = Thrust plate

2 = Thrust washer

3 = Angle ring

4 = Spur gear

5 = Roller cage (long)

6 = Angle ring

7 = Angle ring

8 = Roller cage (short)

NOTE :

Pay attention to the installation position of the roller cage (8), the larger inner diameter of the brass cage is showing outwards (Arrow) !

The broad butting faces of the angle rings are always facing the bearing rollers !

Make thrust washer (2) adhere with grease !

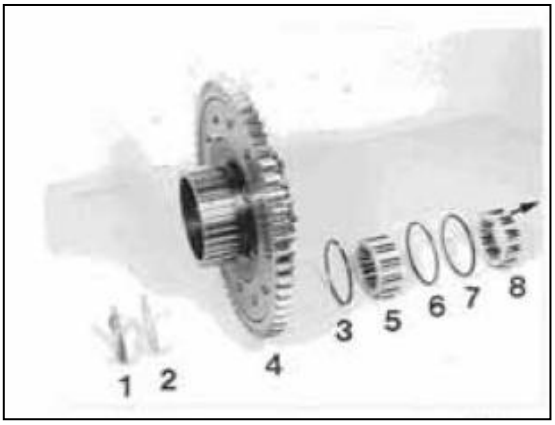

Figure 175

Spur gear bearing K2, Version "B" Fig. 176

1 = Thrust plate

2 = Thrust washer

3 = Spur gear

4 = Needle cage

5 = Ring

6 = Roller cage

NOTE :

pay attention to the installation position of the roller cage (5), the larger inner diameter of the brass cage is showing outwards (Arrow) !

In case of an equal inner diameter, the installation position is optional.

Make thrust washer adhere with grease !

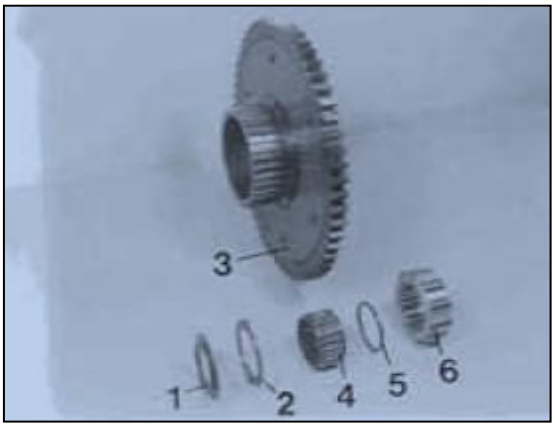

Figure 176

Install components 2 ... 8 (Figure 175), resp. 2 ... 6 (Figure 176).

Replace thrust plate 1 (Arrow) and thread up spur gear until all inner plates arc received.

NOTE :

Make thrust washer adhere with grease !

Figure 177

3.2.5.5 Install clutch KR/K2

Adjust end play of the clutch 0,1 ... 0,3 mm

(Figure 178 ... Example “H")

Insert forked washer and thrust washer (Arrow) and measure Dimension Ⅰ from the flange mounted surface to the thrust washer.

Dimension Ⅰ e.g. 252,20 mm

Now, remove forked washer and thrust washer again.

NOTE :

In case of spur gear bearing KR, Version "B" (Figure 172 a), measure up to the plane surface/housing (without forked washer and thrust washer) !

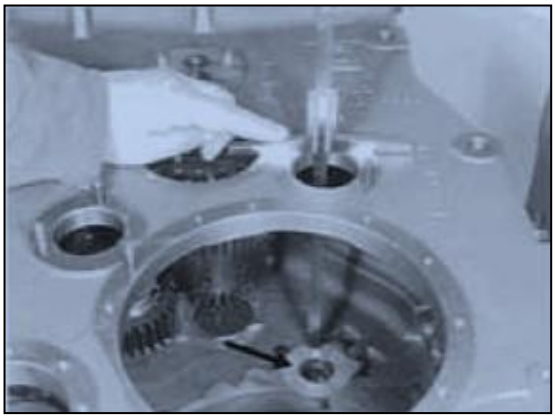

Figure 178

Measure Dimension II from the butting face/bearing rollers to the flange-mounted surface.

Dimension Ⅱ e.g. 22,55 mm

Example “F" for the determination of the housing dimension

Dimension Ⅰ e.g. 252,20 mm

Dimension Ⅱ e.g. - 22,55 mm

Difference = Housing dimension e.g. 229,65 mm

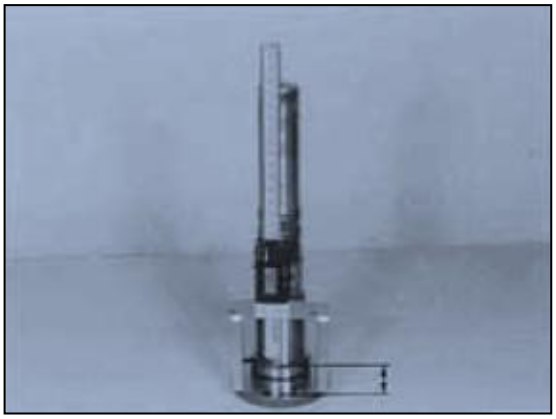

Figure 179

Put the clutch on a suitable surface plate and determine Dimension III from the end face/cylindrical rollers to the surface plate, see Figures 180 and 181 !

DimensionIII e.g. 227,65 mm

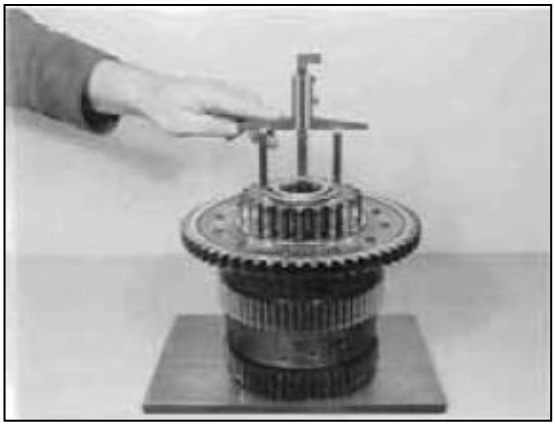

Figure 180

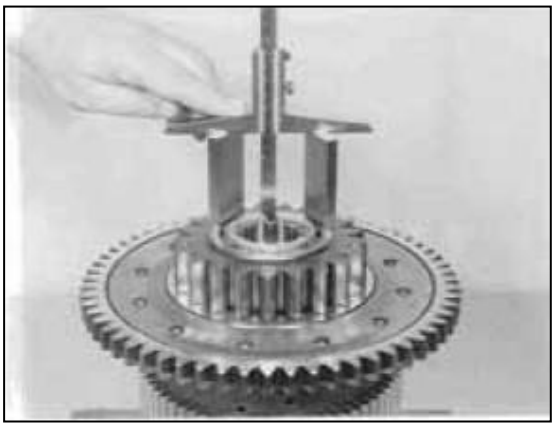

Figure 181

Example "G" for the determination of the installation dimension

DimensionIII e.g. 227,65 mm

End play e.g. + 0,20 mm

gives Installation Dimension

- Clutch e.g. 227,85 mm

Example "H" for the determination of the shim

Housing dimension e.g. 229,65 mm

Installation dimension

- Clutch e.g. – 227,85 mm

Difference = Shim e.g. s = 1,80 mm

Insert clutch KR/K2 in the housing, using lifting device.

NOTE :

The installation of the shims and the fixing of the clutch has to be done along with the clutch KV/K1 !

(S) Lifting device 5870 350 041

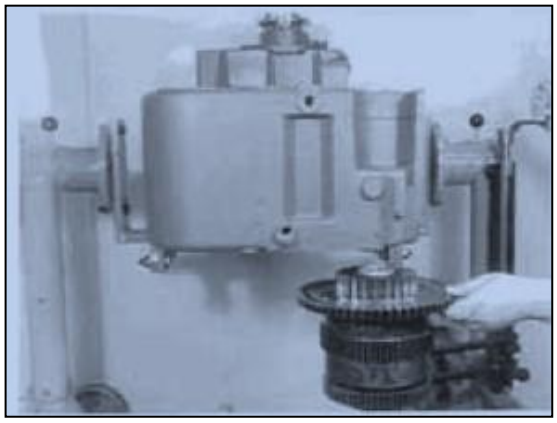

Figure 182

3.2.6 Clutch KV/K1

NOTE :

The pre-assembly of the plate carrier KV/K1 has to be carried out accordingly like that of the plate carrier K4/K3, see Page 116 and 117.

ATTENTION ;

Pay attention to the different plate carriers, see Figure 148 and 169 !

3.2.6.1 Plate pack KV

Install plate pack and check clearance.

NOTE :

Plate arrangement, see

Plate installation. Page 118 ... 122 !

3.2.6.2 Pre-assemble and install spur gear KV

NOTE ;

According to the Transmission Version, resp. operating conditions, different spur gear bearings are possible, see corresponding Spare Parts List as well as Figures 184 and 185 !

Spur gear bearing KV, Version "A" (Fig. 184)

1 = Thrust plate
2 = Thrust washer
3 = Roller bearing
4 = Spur gear
5 = Plate
6 = Hex. head screws (M6/8.8 = 9,5 Nm)
7 = Shim (optional)

NOTE :

Secure hex. head screws (5) with Loctite (Type-No. 270) ! Pay attention to the installation position of the bearing inner races (oil grooves), see Arrows !

Spur gear bearing KV, Version "B" (Fig. 185)

1 = Thrust plate
2 = Disk
3 = Thrust washer
4 = Cylindrical rollers(short)
5 = Disk
6 = Cylindrical rollers
7 = Thrust washer
8 = Spur gear
9 = Plate
10 = Hex.head screws (M6/8.8= 9,5 Nm)
11 = Thrust washer
12 = Forked washer

NOTE :

Secure hex. head screws (10) with Loctite (Type-No. 270) !

Install long cylindrical rollers (according to the Version) on the converter side !

Figure 183

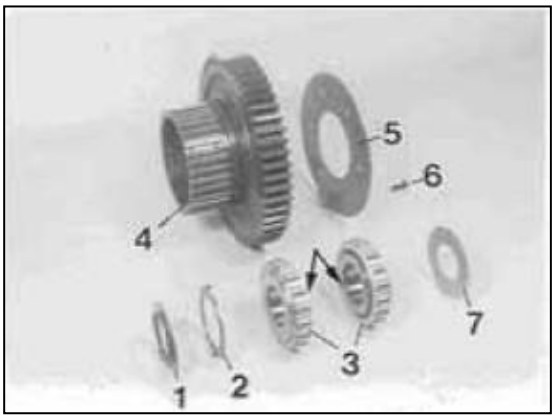

Figure 184

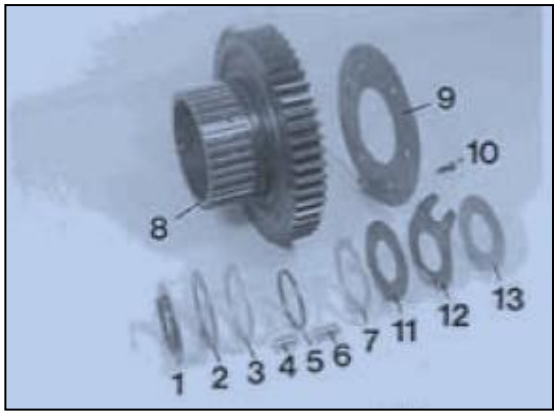

Figure 185

Install components 2 ... 6 (Figure 180), resp. 2 ... 10 (Figure 185).
Replace thrust plate 1 and thread up spur gear until all inner plates arc received.

NOTE :

Make thrust washers as well as cylindrical rollers adhere with grease.

Figure 186

3.2.6.3 Plate pack K1

Install plate pack and check clearance.

NOTE :

Plate arrangement, see

Plate installation, Page 118 ... 122 !

Figure 187

3.2.6.4 Pre-assemble and install spur gear K 1

NOTE :

According to the Transmission Version, resp. operating conditions, different spur gear bearings arc possible, see corresonding Spare Parts List as well as the following Figures(188 … 190) !

Spur gear bearing K1, Version "A" Fig. 188

1 = Thrust plate

2 = Thrust washer

3 = Needle cage

4 = Spur gear

5 = Sleeve

6 = Ball bearing

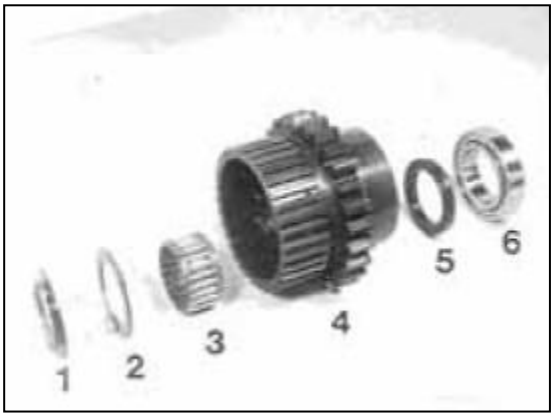

Figure 188

Spur gear bearing K1, Version "B" Fig. 189
1 = Thrust plate
2 = Thrust washer
3 = Spur gear
4 = Angle ring
5 = Roller cage
6 = Circlip (2x)
7 = Ball bearing
8 = Disk (optional)

NOTE :

Make thrust washer (2) adhere with grease.
Install broad butting faces of angle rings (4) always facing the bearing rollers. Adjust ball bearing (7) free of play by means of disk !

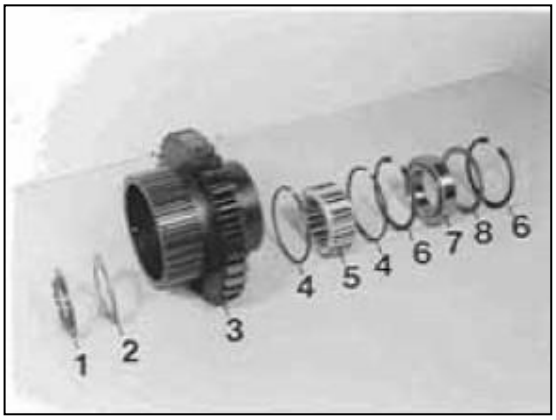

Figure 189

Spur gear bearing K1, Version "C" (K1-Fixing, Figure 190 and 191)
1 = Thrust plate
2 = Thrust washer
3 = Needle cage
4 = Spur gear
5 = Sleeve
6 = Ball bearing
7 = Disk (optional)
8 = Circlip

NOTE ;

Make thrust washer adhere with grease. Pay attention to :he installation position of the sleeve, Figure 190 !

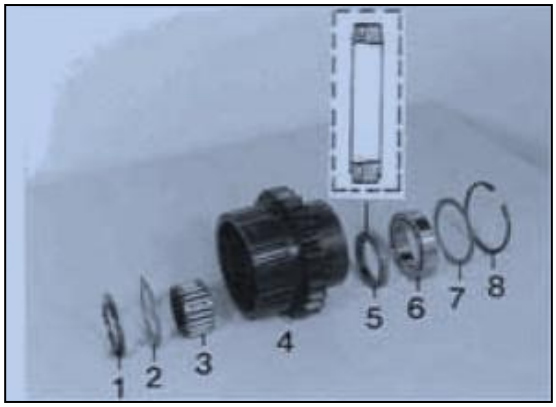

Figure 190

Adjust ball bearing (6) free of play by means of disk !
Figure 191 shows the fixing of the spur gear after the installation of the clutch.
1 = Clutch shaft
2 = Housing
3 = Cylindrical roller
4 = Sleeve
5 = Set screw
6 = Ball

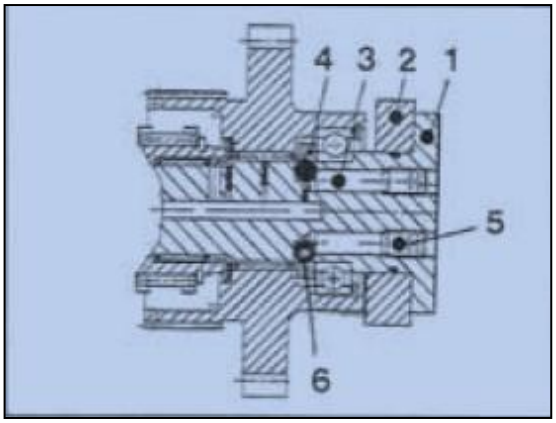

Figure 191

Install components according to Figure 188, 189, resp. 190.
Replace thrust plate (1) and thread up spur gear until all inner plates are received.

Figure 192

3.2.6.5 Install clutch KV/K1

Adjust end play of clutch 0,1 ... 0,3 mm
Determine Dimension Ⅰ from the flange-mounted surface/axle to the plane surface/housing.
Dimension 1 e.g. 254,40 mm

NOTE:

In case of spur gear bearing KV, Version "B" (Figure 185), lay forked washer and thrust washer upon the plane surface of the housing and measure up to the thrust washer.

Figure 193

Measure Dimension II from the butting face/bearing rollers to the flange-mounted surface.
Dimension Ⅱ e.g. 27,00 mm

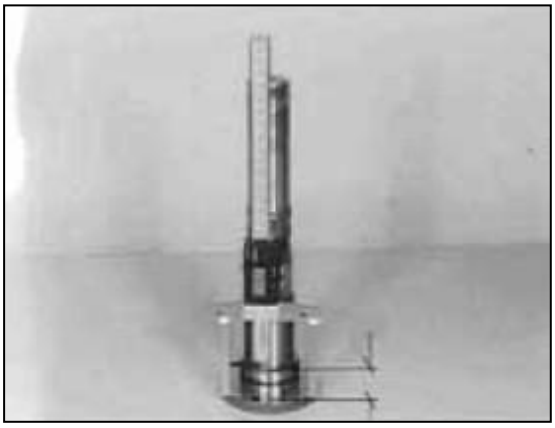

Figure 194

Example “J ” , for the determination of the housing dimension .

Dimension Ⅰ e.g.	254,40 mm
Dimension Ⅱ e.g.	- 27,00 mm
Difference = Housing dimension e.g.	227,40 mm

Place clutch on a suitable surface plate and determine Dimension III from the end face of the bearing inner race to the surface plate.

Dimension Ⅲ e.g. 223,80 mm

Example “K”, for the determination of the installation housing dimension .

Dimension Ⅲ e.g. 223,80 mm

End play e.g. + 0,20 mm

gives Installation dimension

- Clutch 224,00 mm

Example "L” for the determination of the shim

Housing dimension e.g. 227,40 mm

Installation dimension

- Clutch e.g. - 224,00 mm

Difference = Shim e.g. s = 3,40 mm

Figure 195

Insert clutch KV/K1 by means of lifting device in the housing and position it.

ATTENTION :

For different Transmission variants, the output gear of the lateral power take-off must be installed prior to the installation of the clutch axles KV/K1 and KR/K2 (narrow installation space).

If necessary, handle steps of Figure 216 ... 219 first.

Figure 196

Align the two clutches (KV/K1 and KR/K2) by means of drift and fix them provisionally.

(S) Montagedorn 5870 345 025

Figure 197

Install thrust washer, locked washer and shim, resp. shim (according to the Version)(Figure 198 ... 201)

For the moment, tilt housing 90° and place the complete clutches in direction of Arrow against shoulder.
Now, tilt gear case forward in the horizontal position.

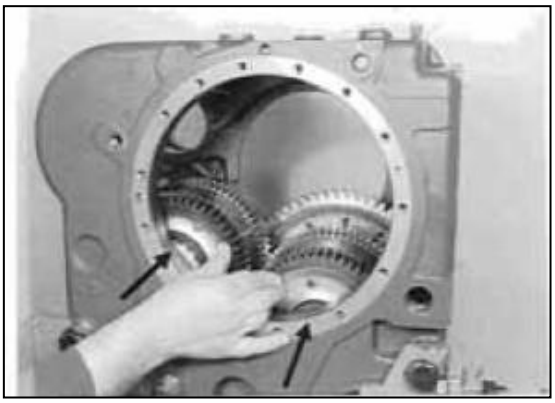

Figure 198

Pull drift downwards until the thrust washer, forked washer and shim (Figure 199), resp. the shim (Figure 200) can be installed.
Now, align the complete clutch as well as the shims again, using drift, and fix them.

NOTE :

Shim thickness for KV/KI and KR/K2, see corresponding Examples 1
Install thrust washer (plastic) facing the spur gear !
Pay attention to a correct fixing of the forked washer !

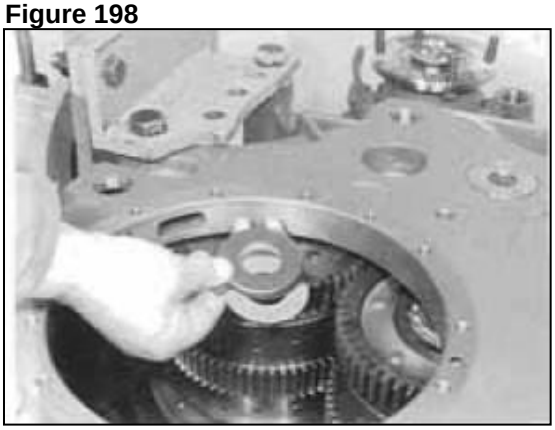

Figure 199

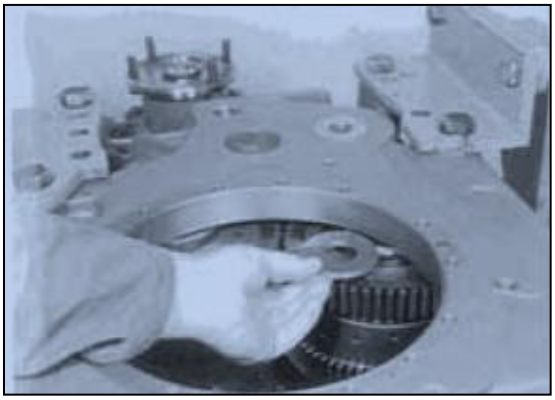

Figure 200

Tilt gear case in a vertical position (90°) and place the complete clutches in direction of Arrow against shoulder.
Now, tilt forward in the original position (Figure 197).

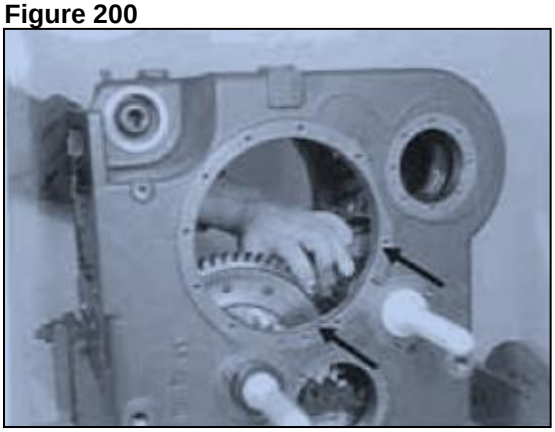

Figure 201

Install axle KR/K2 (Figure 202 ... 205)

Squeeze in rectangular rings (1) and engage them.

Install O-Ring (2).

NOTE ;

Grease rectangular rings and align them centrically !

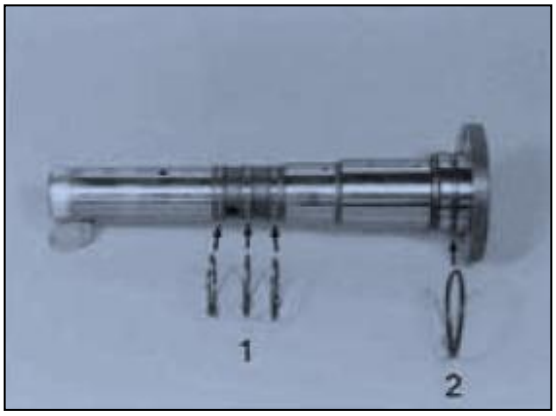

Figure 202

Heat housing bore (about 90° C).

(S) Hot-air blower	220 V	5870 221 500
(S) Hot-air blower	110 V	5870 221 501

Figure 203

Thread up axle (compl.) until contact is obtained.

Figure 204

Fasten axle by means of hex. nuts.

Torque limit (M8/ 8) 23 Nm

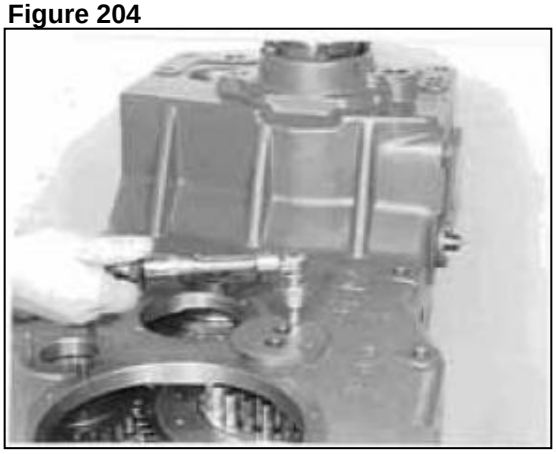

Figure 205

Check operation of clutches KR and K2 by means of compressed air.

NOTE :

If the components are correctly installed, the closing, resp. opening of the clutches is clearly audible !

Install axle KV/KI (Figure 207 ... 210)

NOTE :

The following steps (Figure 207 ... 210) are describing the installation of the clutch axle for the Version with internal Spur gear fixing K1 (see also Figure 190 and 191) !

In case of the Version without Spur gear fixing, install the clutch axle KV/KI accordingly as KR/K2 (Figure 202 ... 206).

Figure 206

The illustration on the left shows the components.

1= Clutch axle

2 = Rectangular rings (3 pieces)

3 = Ball (2 pieces)

4 = O-Ring

5 = Cylindrical roller (2 pieces)

6 = Set screw (2 pieces)

Squeeze in and engage rectangular rings. Install O-Ring.

Insert the two balls with grease in the bores (Arrow).

NOTE ;

Cylindrical rollers and set screws will be installed later !

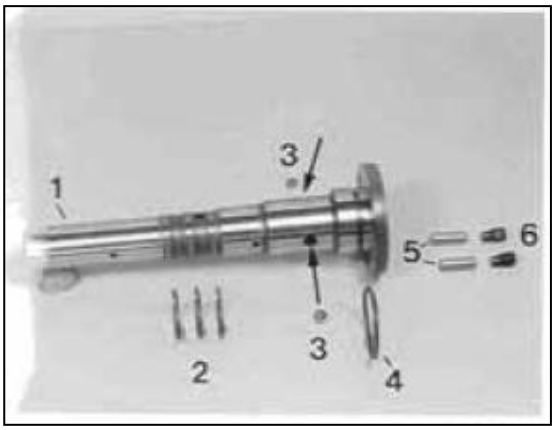

Figure 207

Heat housing bore (about 90℃) and introduce the pre-assembled axle until contact is obtained.

NOTE :

Crease and align rectangular rings centrically prior to the introduction of the axle !

Figure 208

Fasten axle by means of hex. nuts (2 pieces).

Torque limit (M8/8) 23 Nm

Figure 209

Insert cylindrical rollers with the conical surface showing downwards in the bores (Arrows), and fix them by means of set screws.

Torque limit 10 Nm

NOTE :

To ensure the correct fixing of the spur gear, the spur gear K1 must be lifted, at the uniform tightening of the two set screws, in direction of the Arrow !

Insert set screws with Loctite (Type-No. 241)!

Figure 210

Check operation of the clutches K1 and KV by means of compressed air.

NOTE :

If the components are correctly installed, the closing, resp. opening of the clutches is clearly audible I

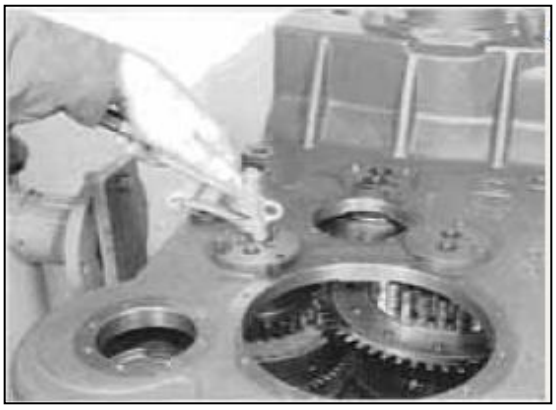

Figure 211

Check end play of the clutches 0,1 ... 0,3 mm again and correct if necessary !

Figure 212

3.2.7 Emergency steering pump

Squeeze in circlip (4), assemble spur gear (3) until contact is obtained and fix it free of play by means of disk (2) and circlip (1).
Introduce O-Ring into the annular groove (Arrow) and grease it.

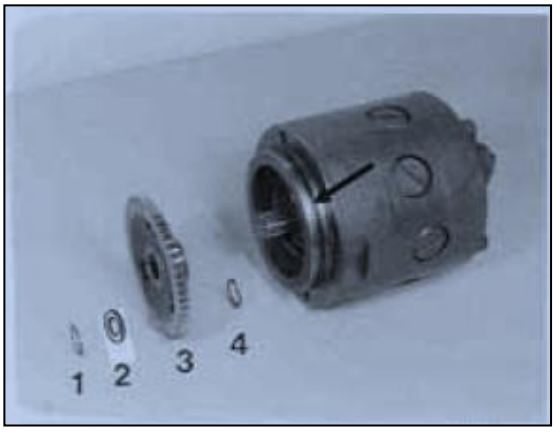

Figure 213

Insert studs (4 pieces) with Loctite (Type-No. 241) and assemble emergency steering pump until contact is obtained.

NOTE :

Pay attention to the radial installation position !
A slight rotation on the final drive makes the threading up easier !

Figure 214

Fasten emergency steering pump by means of hex. nuts.

Torque limit (M8/ 8) 23 Nm

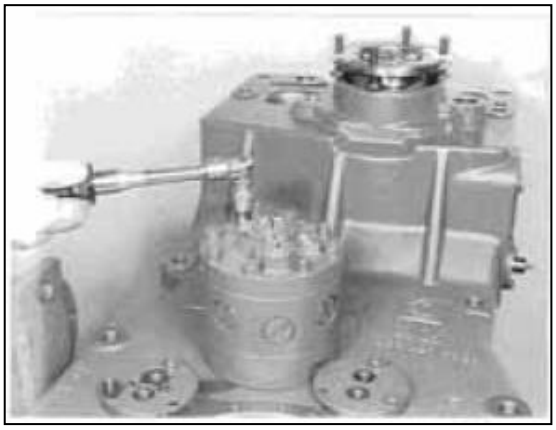

Figure 215

3.2.8 Lateral power take-off

Squeeze the two snap rings into the groove of the lower housing bore.

Figure 216

Lay expanding ring (S) upon the snap rings and mount ball bearing, with the recess showing upwards (Figure 217).

Now, tap and drive ball bearing in, until the upper snap ring engages in the ball bearing groove (Figure 218).

(S) Expanding ring 5870 345 038

Figure 217

Figure 218

Position spur gear with the long hub side showing downwards.

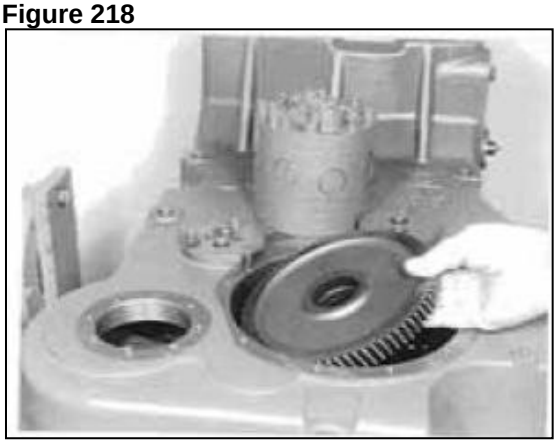

Figure 219

Squeeze snap ring into the annular groove (Arrow) of the driving shaft.

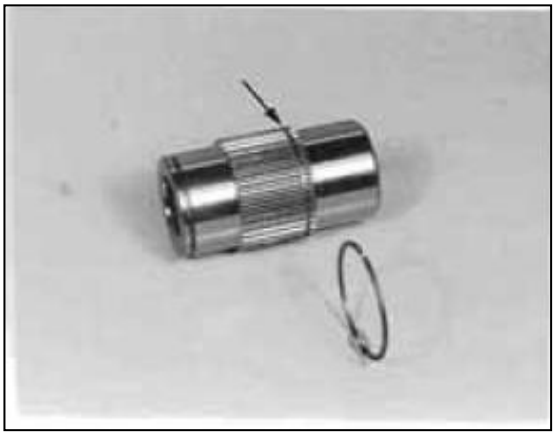

Figure 220

Heat ball bearing (Figure 221) and introduce driving shaft until contact is obtained (Figure 222).

Figure 221

Figure 222

Fix driving shaft by means of circlip (Arrow).

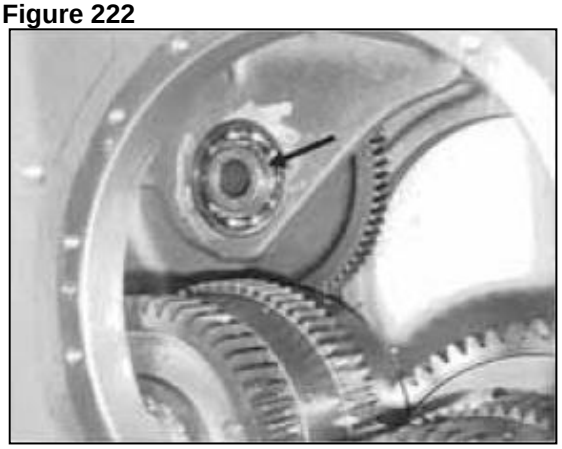

Figure 223

Press needle bush (Arrow) by means of drift into the pump flange until contact is obtained and fix it by engaging the snap ring.

NOTE ;

The needle bush is marked on one end face.

At the pressing in, the marking must be facing the drift (upwards).

(S) Drift 5870 506 060

Figure 224

Install two adjusting screws, mount flat gasket and place pump flange against shoulder.

(S) Adjusting screws (M8) 5870 200 011

Figure 225

Fasten pump flange by means of socket head screws.

Torque limit (M8/8.8, DIN 6912) 16 Nm

Figure 226

Install oil supply - power take-off.

NOTE :

Use new sealing rings !

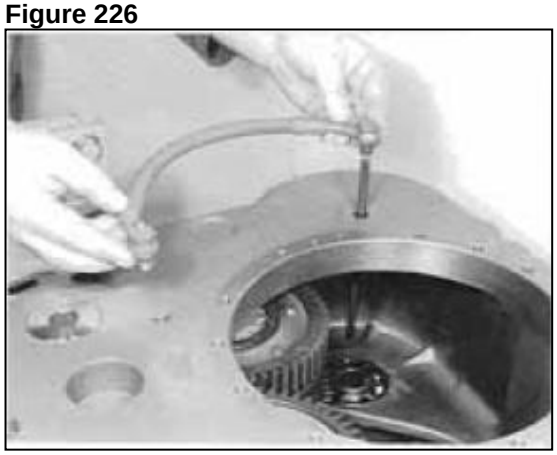

Figure 227

Fasten shield by means of hex. head screw (mount flat washer).

Torque limit (M8/8.8) 23 Nm

NOTE :

Secure hex. head screw with Loctite (Type-No. 241) !

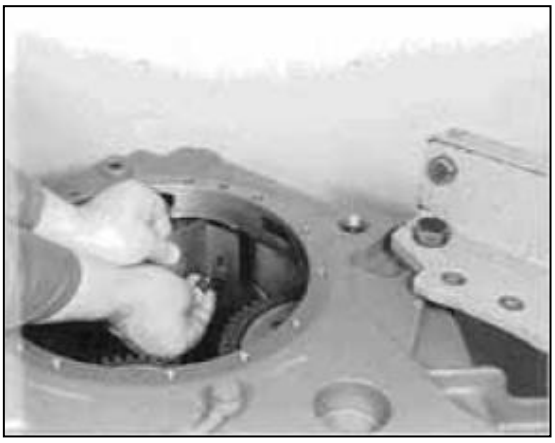

Figure 228

3.29 Converter control valve Components :

1 = Disk

2 = Spring

3 = Spool

4 = Valve sleeve

5 = O-Ring

6 = Screw plug

7 = Connecting piece (temperature)

8 = O-Ring

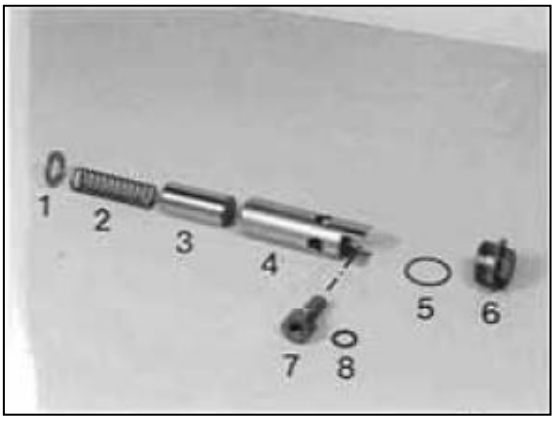

Thread up disk, spring, spool and the valve sleeve.

NOTE ;

Pay attention to the radial installation position of the valve sleeve !

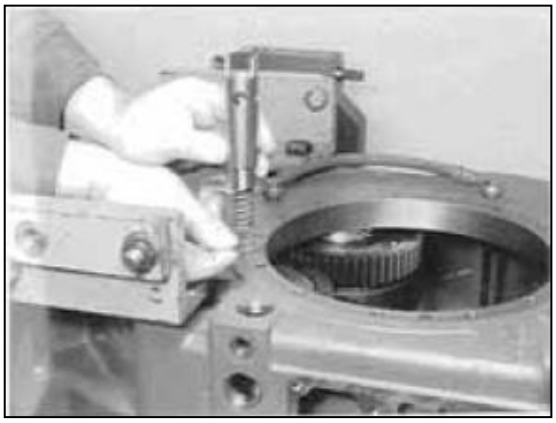

Figure 230

Install connecting piece.

NOTE :

Pay attention to the installation position, see Figure 229 !

Figure 231

Install screw plug.

Figure 232

Mount closing cover until it is flush.

NOTE ;

Wet sealing surface with Loctite (Type-No.270).

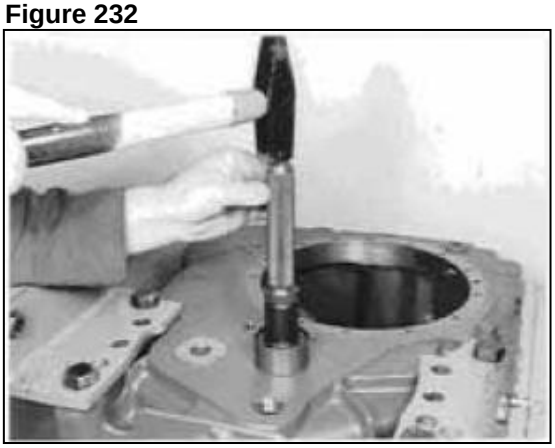

Figure 233

3.2.10 Converter charge pump and control pressure pump

Squeeze rectangular rings into the annular grooves of the drive shaft and engage them.

Insert the two roll pins (1,5x5 and 2,5x5 mm) flush-mounted in the bore (Arrow).

Figure 234

Press bearing outer race firmly against shoulder

Figure 235

Thread up drive shaft.

Figure 236

Install bearing inner race.

Figure 237

Position spur gear with the long hub side (Arrow) showing upwards (facing the ball bearing).

Figure 238

Back up drive shaft and oil supply flange by means of Assembly aid (S).

Assemble disk (according to the Version with or without).

NOTE :

The exact installation position of the drive shaft is determined by means of the Assembly aid !

(S) Assembly aid 5870 345 032

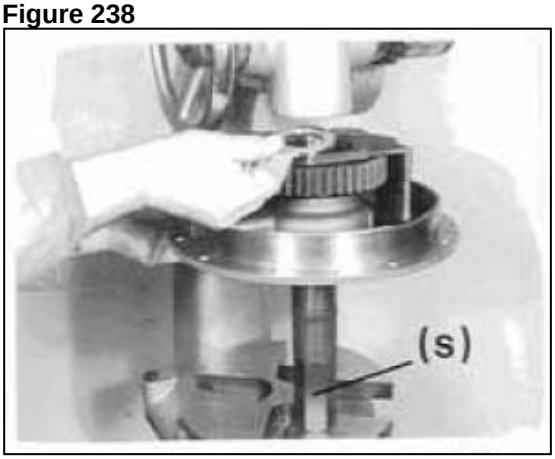

Figure 239

Press ball bearing against shoulder.

Figure 240

Squeeze circlip into the annular groove of the drive shaft.

Figure 241

The Illustration on the right shows the output shaft along with bearing as well as the pump.

1 = Circlip

2 = Ball bearing

3 = Shim (optional)

4 = Pump

5 = Ball bearing

6 = Circlip

7 =Rectangular ring

8 = Output shaft

9 = Adjusting spring

Squeeze in circlip (Arrow).

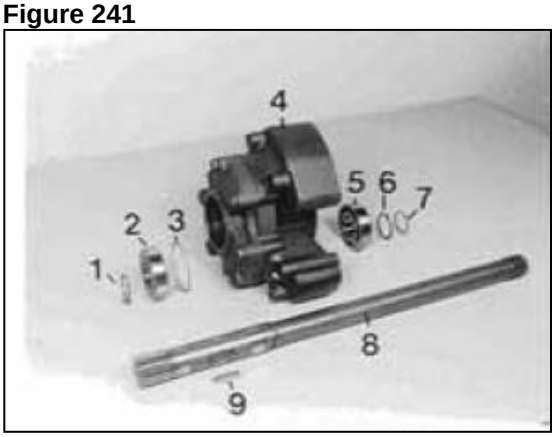

Figure 242

Press ball bearing against circlip until contact is obtained.

NOTE ;

Pay attention to the installation position of the ball bearing, closed bearing side is facing the circlip (upwards) !

Figure 243

Install adjusting spring (Arrow).

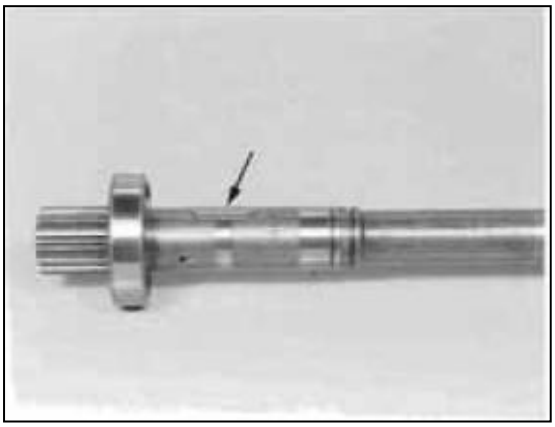

Figure 244

Install shim s = 0,8 mm (empirical value) and press output shaft against shoulder.

NOTE :

The end play of the output shaft of 0,2…0,4 mm is adjusted by means of shim (e.g.s = 0,8 mm) !

Figure 245

Press ball bearing against shoulder, with the closed side showing upwards.

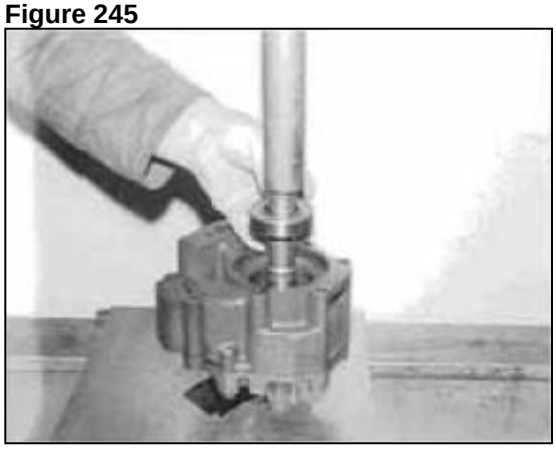

Figure 246

Squeeze in circlip.

Check end play 0,2 ... 0,4 mm between circlip and bearing inner race, using feeler gauge.

NOTE :

In case of deviations from the required end play, correct by means of shim (Figure 245).

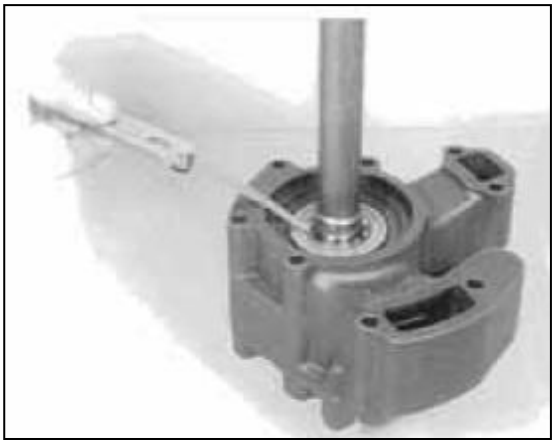

Figure 247

Relax the output shaft bearing by tapping.

NOTE ;

Use plastic hammer !

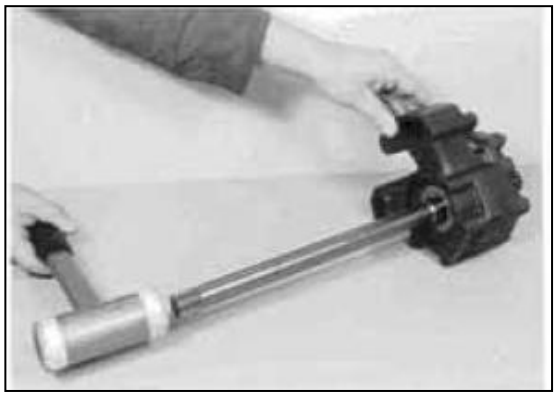

Figure 248

Squeeze in rectangular ring (Arrow) and engage it.

Now, grease rectangular ring and align it centrically.

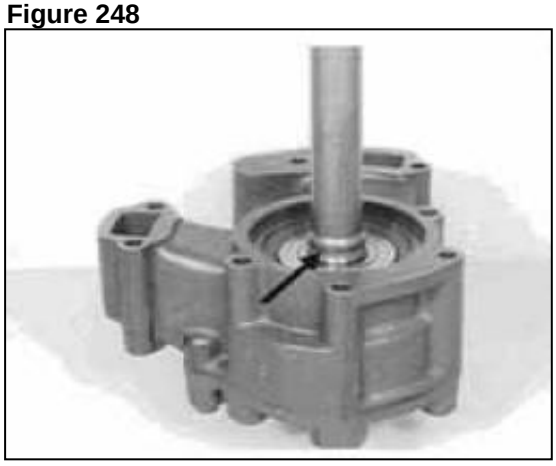

Figure 249

Adjust the end play of the drive shaft bearing 0,2 ... 0,4 mm (Figure 250 ... Example “M”)

Determine Dimension Ⅰ from the flange-mounted surface to the contact area/ball bearing.

Dimension Ⅰ e.g. 7,10 mm

Figure 250

Replace gasket and measure Dimension II from the end face/ball bearing to the gasket (flange-mounted surface).

Dimension 11 e.g. 6,05 mm

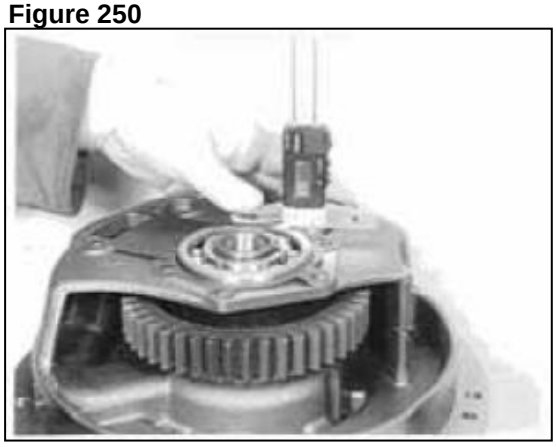

Figure 251

Example "M" ;

Dimension I	7,10 mm
Dimension II	- 6,05 mm
Difference	1,05 mm
Required end play e.g.	- 0,30 mm
gives Shim e.g.	s = 0,75 mm

Make shim (e.g. s = 0,75 mm) adhere with grease.

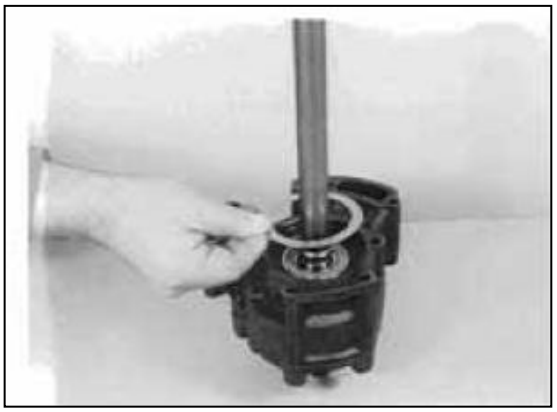

Figure 252

Install two adjusting screws, mount flat gasket and install converter relief valve (ball and spring).

(S) Adjusting screws (M8) 5870 204 011

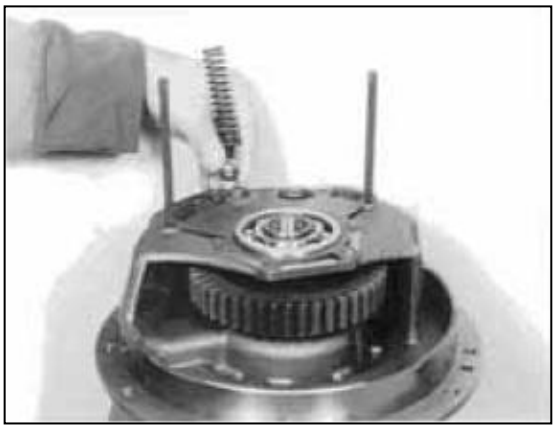

Figure 253

Place pre-assembled pump against oil supply flange and fasten it by means of hex. Head screws.

Torque limit (M8/8.8) 23 Nm

Figure 254

Relax the output shaft bearing by tapping and check the free movement of the spur gear.

Figure 255

Heat housing bore.

(S) Hot-air blower	220 V	5870 221 500
(S) Hot-air blower	110 V	5870 221 501
(S) Pre-heating sleeve		5870 801 003

Figure 256

Wet oil supply flange in the area of suction ports and pressure ports with Loctite (Type- No. 221).

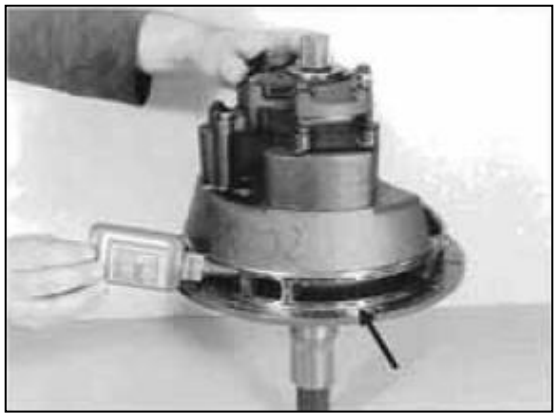

Figure 257

Install two adjusting screws. Install flat gasket (Arrow) and thread up oil supply flange until contact is obtained.

(S) Adjusting screws (M8) 5870 204 011

ATTENTION ;

For different Transmission Versions, one O-Ring must be installed instead of the flat gasket !

Installation position of the O-Ring see Arrow/ Figure 257 !

Figure 258

NOTE ;

To ensure an exact sealing of the suction ports and pressure ports, resp. to avoid the breaking away of the Loctite, fix oil supply flange by a provisional installation of the two outer roll pins (10x50 mm) as well as hex. head screws (3 pieces) radially and axially, see Figure 259 ! The inner roll pins (6x50 mm) arc installed only after the attachment of the engine connecting case (Figure 262).

Hardening time of the Loctite about 10…30 minutes.

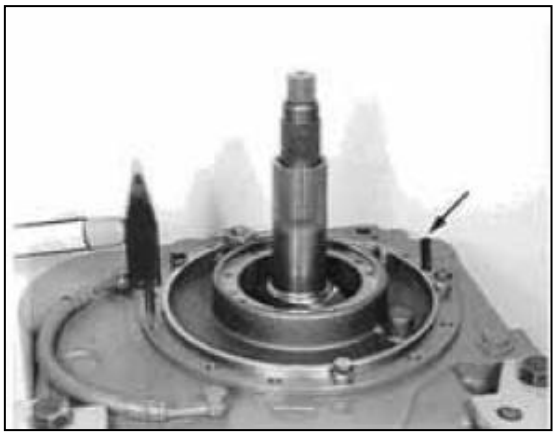

Figure 259

3.2.11 Engine connection

Install needle bearing (1) and shaft seal (2).

NOTE :

The needle bush is marked on one end face.

At the pressing in, the marking must be facing the drift (upwards) !

The exact installation position is obtained by application of the prescribed Special Tool.

Wet shaft seal outer diameter with sealing compound !

(S) Driver	5870 058 058
(S) Driver	5870 055 022
(S) Handle	5870 260 002

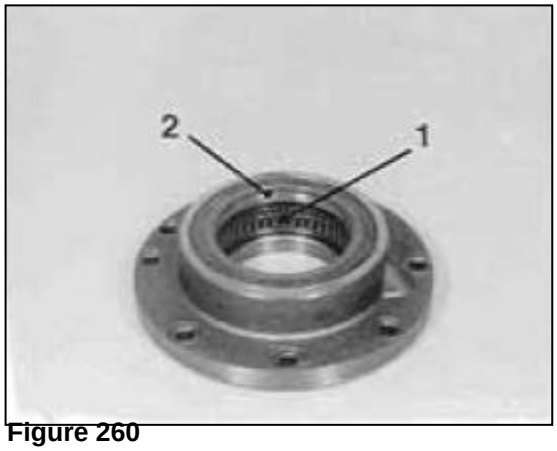

Figure 260

Install two adjusting screws and mount flat gasket.

Assemble bearing cap and fasten it by means of hex. head screws.

Torque limit (M8/8.8) 23 Nm

NOTE ;

Pay attention to the radial installation position!

(S) Adjusting screws (M8) 5870 204 011

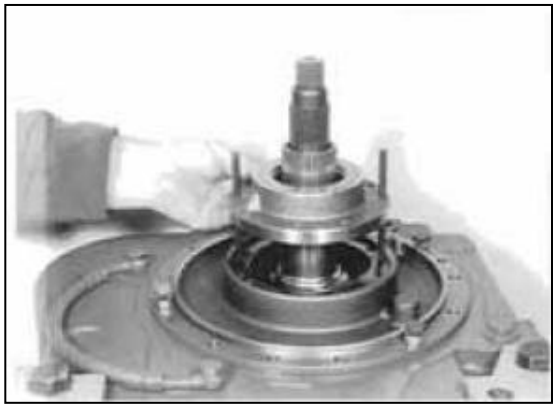

Figure 261

Fasten engine connecting case by means of hex. head screws and mount the two inner roll pins (6x50 mm).

Torque limit (Ml0/10.9) 68 Nm

Figure 262

Mount oil line (Arrow).

NOTE ;

Use new sealing rings !

Figure 263

3.2.12 Coaxial power take-off (controllable)

Install snap rings and needle bush.

NOTE :

The needle bush is marked on one end face.

At the pressing in, the marking must be facing the drift (S) !

(S) Drift 5870 506 060

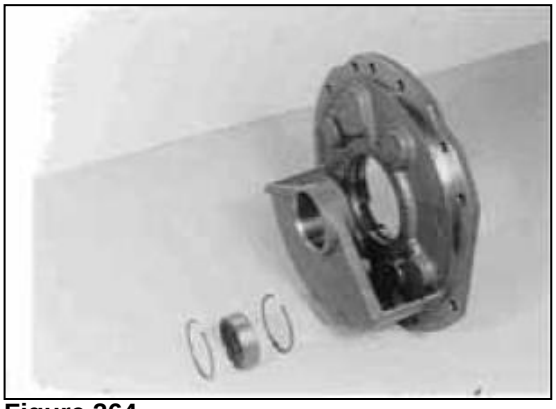

Figure 264

Squeeze the two snap rings into the annular groove of the housing.

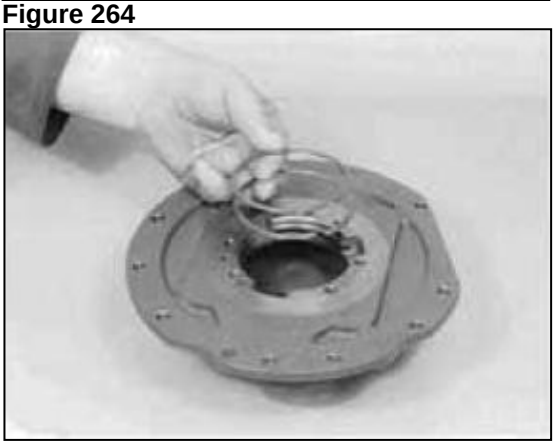

Figure 265

Assemble roller cage and collar shim, and fix them by means of circlip.

NOTE ;

Pay attention to the installation position of the roller cage (annular groove)!

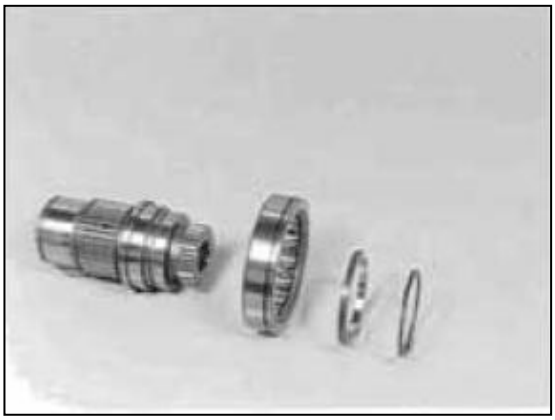

Figure 266

Position spur gear and thread up drive dog until the snap ring is located.

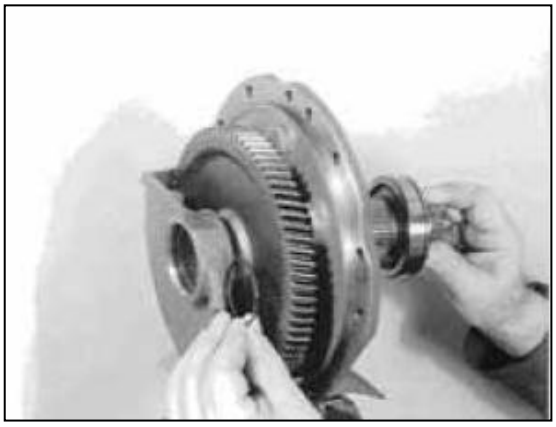

Figure 267

Expand the two snap rings, align them centrically and tap drive dog into the housing until the first snap ring engages in the annular groove of the roller bearing.

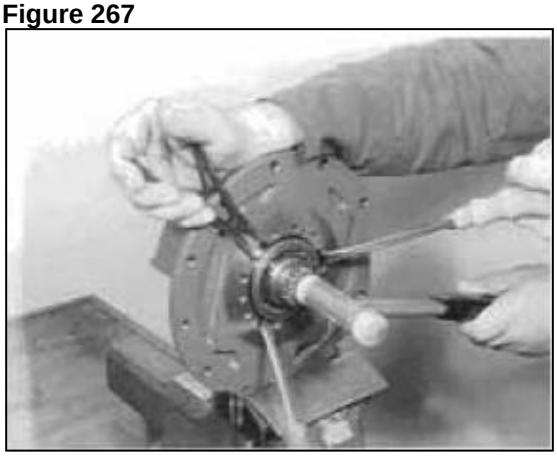

Figure 268

The illustration on the left shows the installation position of the snap rings, see Arrow!

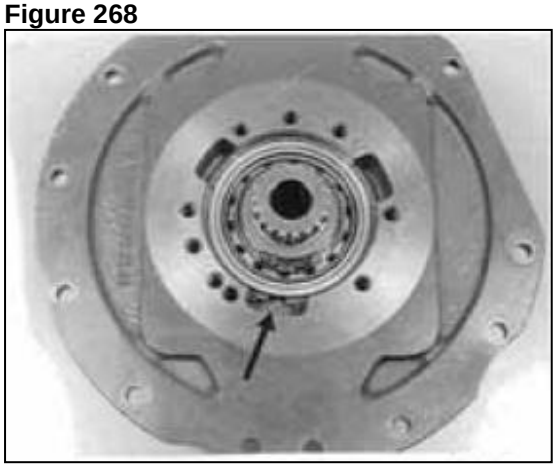

Figure 269

Locate snap ring finally, thus fixing the spur gear.

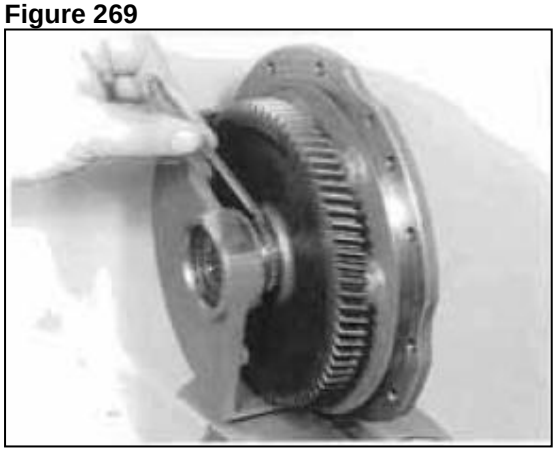

Figure 270

Relax the bearing by tapping.

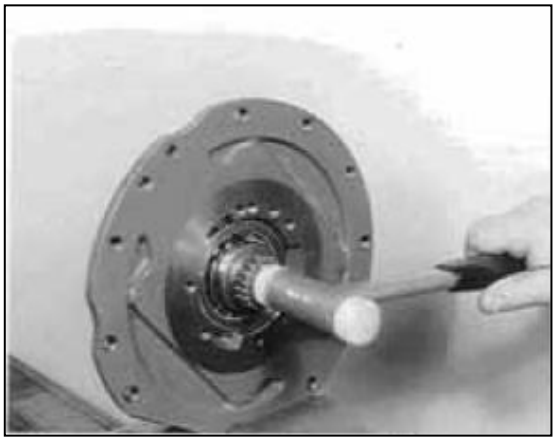

Figure 271

Insert stud (Arrow 1), install two adjusting screws and assemble flat gasket (Arrow 2).

NOTE ;

Insert stud with Loctite (Type-No. 242) !

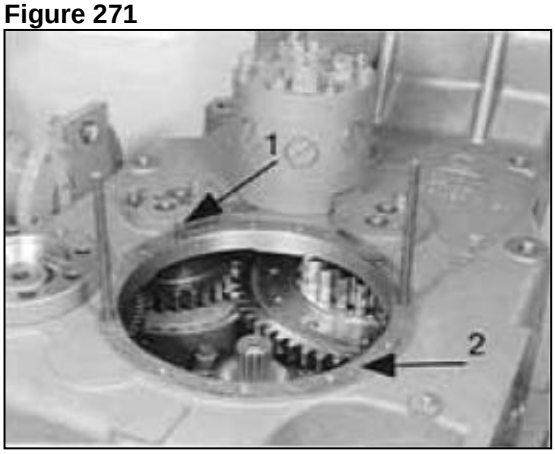

Figure 272

Thread up pre-assembled power take-off and fasten it by means of hex. head screws and hex. nuts.

Torque limit (M8/8.8) 23 Nm

Figure 273

Install shaft seal (Arrow) flush-mounted with the sealing lip showing inwards.

(S) Driver 5870 048 074

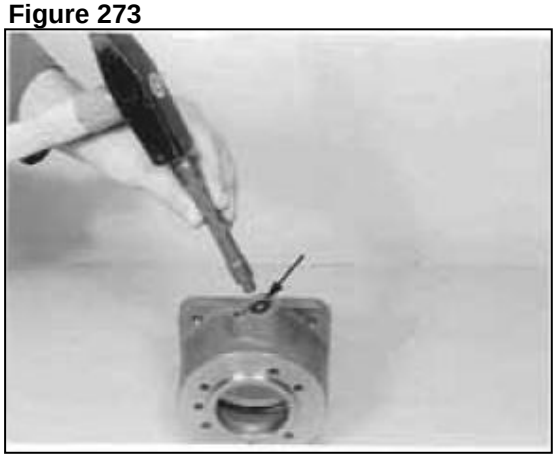

Figure 274

Install two adjusting screws and assemble flat gasket.

Place housing against shoulder and fasten it by means of socket head screws.

Torque limit (M8/I0.9) 34 Nm

Figure 275

Install shim (s = 3,0 mm), see Arrow and thread up shift fork.

NOTE ;

Use installer (S) !

(S) Installer 5870 651 018

Figure 276

Thread up locking device composed of pin and two compression springs, and fix it by means set screw.

NOTE ;

Insert the set screw with Loctite (Type-No. 242) !

Figure 277

Assemble shim (s = 1,5 mm) and install adjusting spring.

Install shift lever free of pressure (a small end play is permitted), and fix it by means of hex. head screw.

Figure 278

Insert O-Ring (Arrow), assemble pump flange and fasten it by means of socket head screws.

Torque limit (Ml2/8.8 DIN 7984) 55 Nm

NOTE :

Pay attention to the radial installation position of the pump flange !

Install sliding collar and sliding block prior to the reassembly of the pump !

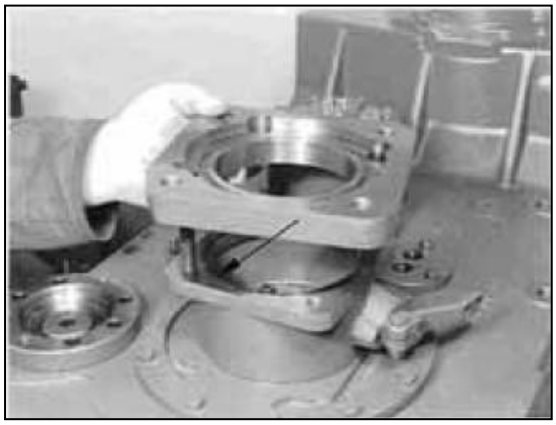

Figure 279

ATTENTION ;

The following Description and Illustrations show the attachment and installation of different assemblies and components, in relation to a specific Transmission Variant.

Deviating steps of other possible Versions can be carried out without difficulty by trained personnel.

In this connection, see also the Perspective Illustration of the corresponding Spare Parts Lists.

Thread up torque converter by means of lifting device until contact is obtained.

(S) Set of eye bolts 5870 204 002

Figure 280

Mount edge protection (Arrow) and fasten cover plate by means of hex. head screws (mount flat washers).

Torque limit (M6/8.8) 9,5 Nm

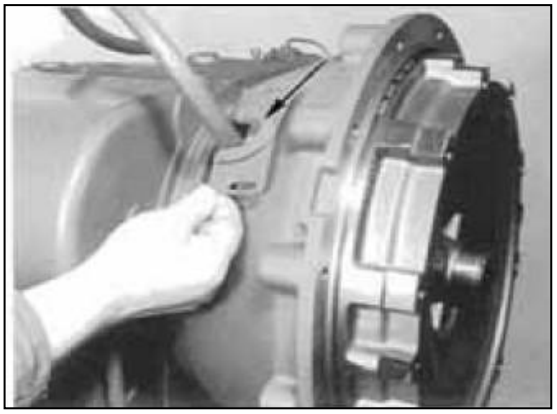

Figure 281

Install screw plug (Arrow 1) and breather (Arrow 2).

Figure 282

Mount suction pipe.

NOTE ;

Install new gaskets

Figure 283

Install oil level pipe.

NOTE ;

Install new gaskets as well as baffle plate.

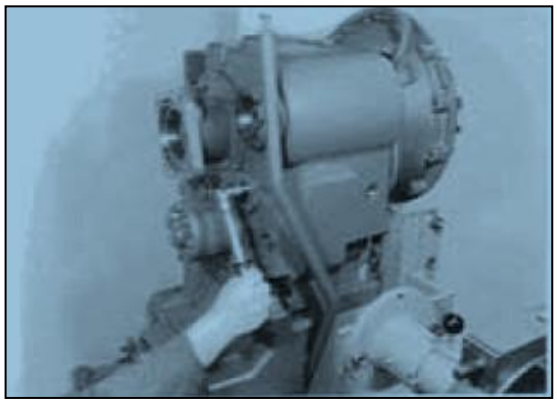

Figure 284

Install compl. cover plate.

NOTE ;

Install new gaskets.

Figure 285

3.2.1.3 Inductive transmitter

Adjust required gap $0{,}50^{+0{,}3}$ mm between the contact area/inductive transmitter and the spur gear (tooth tip).

Figure 286 to Example "N".

Ref. Figure 286 ; 1 = Inductive transmitter
2 = Shim
3 = Measuring pin(S)

Measuring pin (S) 5870 200 040

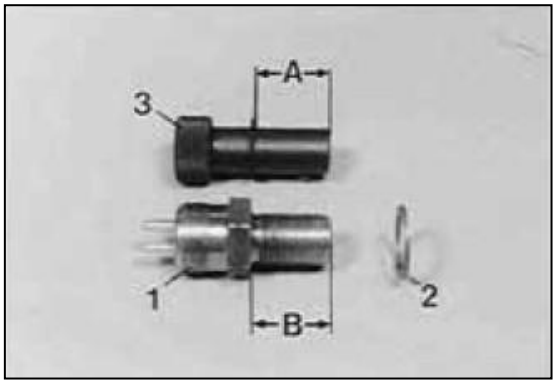

Figure 286

Insert measuring pin until the end face has got contact on the tooth tip of the spur gear as well as the circlip is located on the screwin surface of the housing.

NOTE ;

The tooth tip must be centrically located to the housing bore, if necessary, align the spur gear accordingly !

Figure 287

Remove measuring pin and measure Dimension "A" from the end face/measuring pin to the circlip (see Figure 286).

Dimension “A” e.g. 26,00 mm

Determine Dimension "B" from the contact surface/inductive transmitter to the contact area (see Figure 286).

Dimension "B” e.g. 27,10 mm

Example "N” :

Dimension "A”	26,00 mm
required gap e.g.	- 0,60 mm
Difference = Adjustment dimension	25,40 mm
Dimension "B”	27,10 mm
Adjustment dimension	- 25,40 mm
Difference = Shim(s) e.g.	1,70 mm

Assemble corresponding shim and install the inductive transmitter.

NOTE :

Wet thread of inductive transmitter with sealing compound !

4. RETARDER

4.1 DISASSEMBLY

Loosen hose lines.

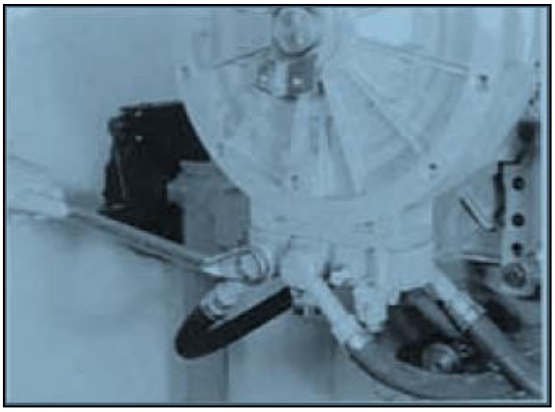

Figure 1

Loosen hex. head screws and remove retarder valve.

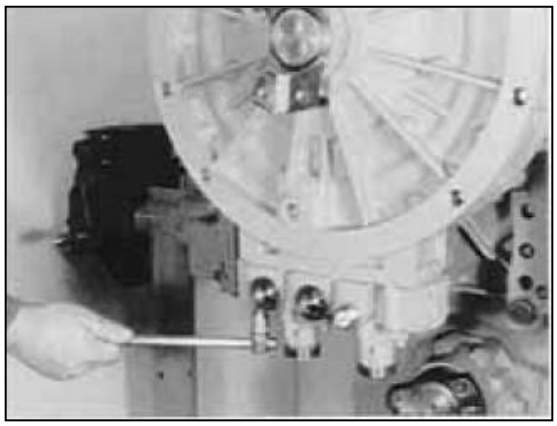

Figure 2

Demount temperature sensor and the two connecting pieces (see Arrows).

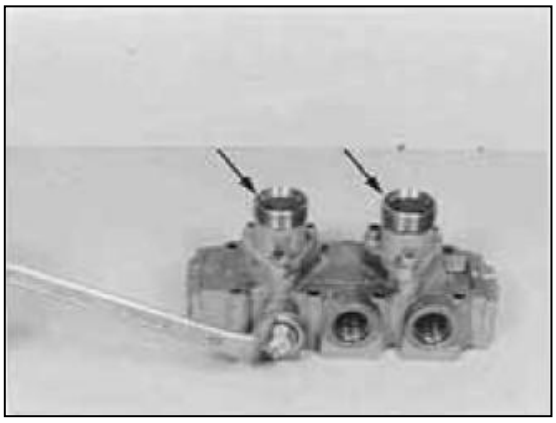

Figure 3

Loosen hex. head screws, remove the two covers and demount components.

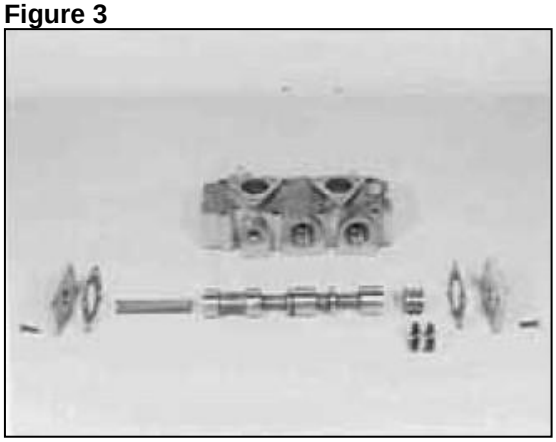

Figure 4

Tilt gear case 90°.

Remove lock plate.

Loosen hex. head screws and pull off output flange.

NOTE ;

If only operations on the transmission are necessary, the complete retarder can be separated from the converter compartment by loosening the screwed connection (Figure 8)!

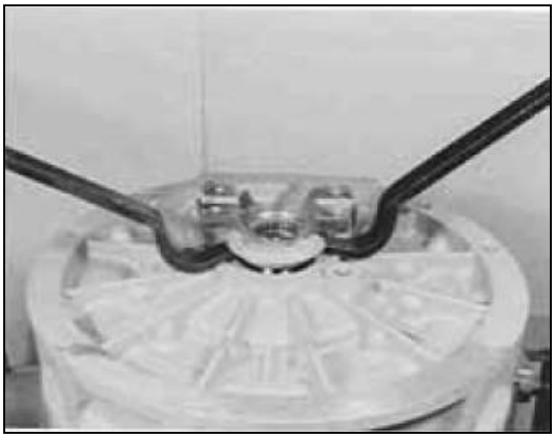

Figure 5

Loosen screw plug.

Figure 6

Loosen first hex. head screw and remove it by means of magnetic rod.

Remove the remaining hex. head screws accordingly.

Figure 7

Loosen screwed connection.

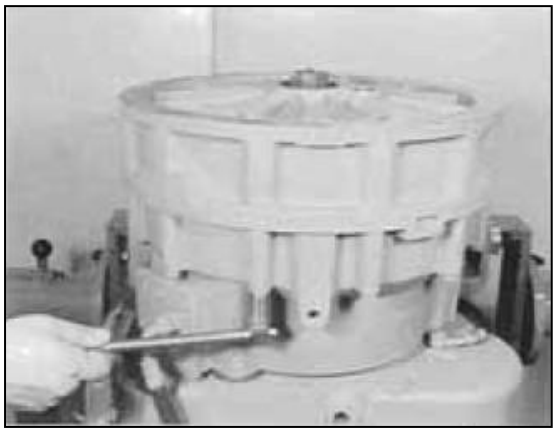

Figure 8

https://truckmanualshub.com/

Separate the complete retarder from the converter compartment, using lifting device.

(S) Set of eye bolts 5870 204 002

Figure 9

Loosen socket head screws.

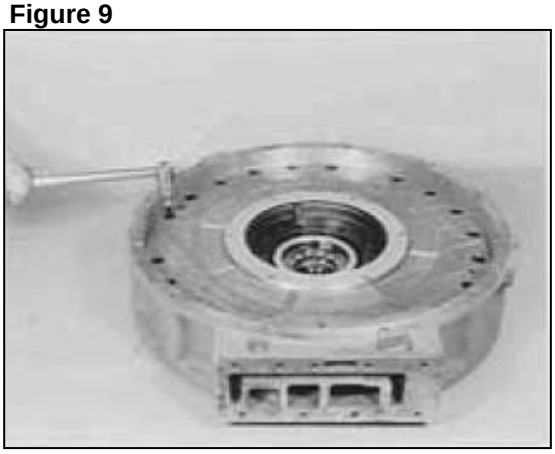

Figure 10

Separate cover from stator.

(S) Set of eye bolts 5870 204 002

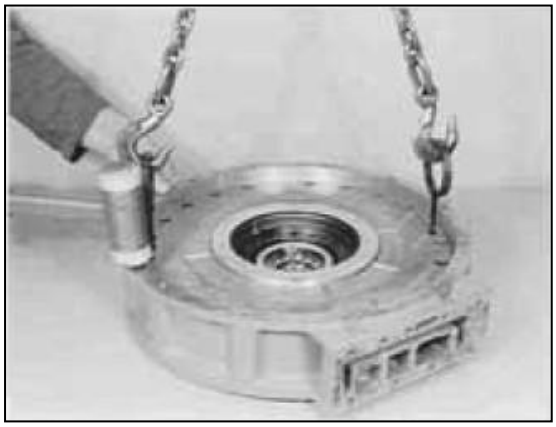

Figure 11

Remove rectangular ring.

Figure 12

https://truckmanualshub.com/

Remove rotor.

Figure 13

Loosen screwed connection and remove thrust ring.

Figure 14

Remove stator ring.

NOTE :

Pay attention to the released components !

Figure 16

Squeeze out circlip and remove shim.

Figure 16

https://truckmanualshub.com/

Remove shaft seal.

(S) Pry bar 5870 345 065

Figure 17

Drive 4-point bearing out of the bore.

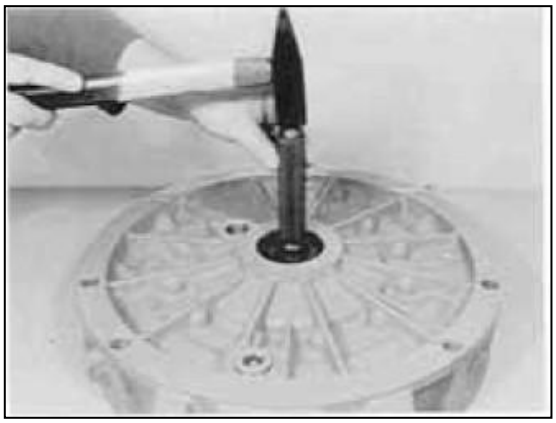

Figure 18

4.2 REASSEMBLY

4.2.1 Pre-assemble and attach Retarder

Heat bearing bore and insert 4-point bearing firmly against shoulder.

Figure 20

Adjust the 4-point bearing free of play by means of disk (optional) and circlip.

NOTE :

Pay attention that the two bearing inner races are present !

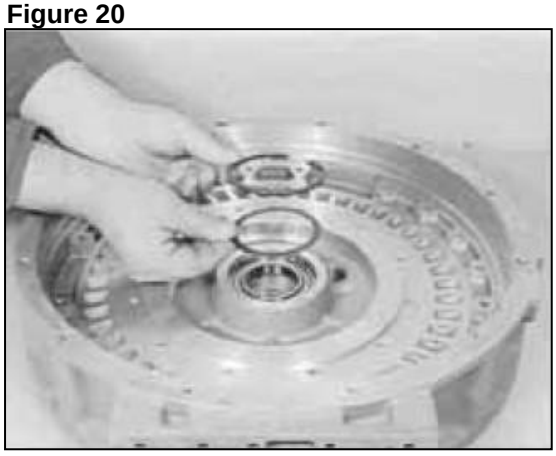

Figure 21

If necessary, insert upper bearing inner race and intall shaft seal.

NOTE :

The exact installtion position is obtained by application of the prescribed driver !

(S) Driver 5870 048 068

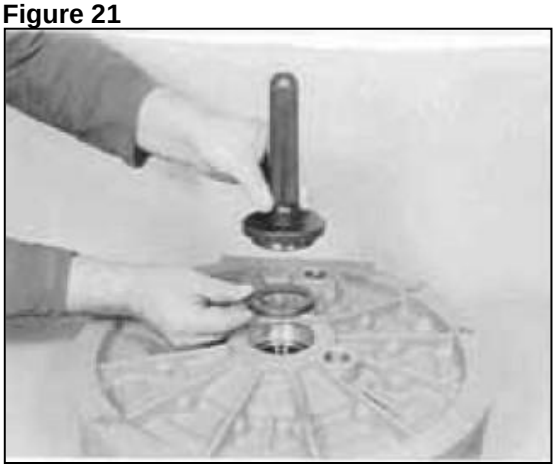

Figure 22

Install stator ring.

Figure 23

Fasten thrust ring by means of hex. Head screws.

Torque limit (M8/8.8) 23 Nm

NOTE :

Secure hex. head screws with Loctite (Type-No. 241) !

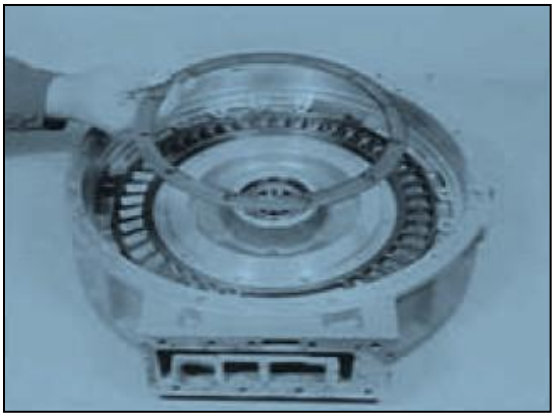

Figure 24

Pre-assemble dampers (3 pieces) according to Figure 25 and 26.

NOTE ;

Pay attention to the installation dimension B = l,6 mm !

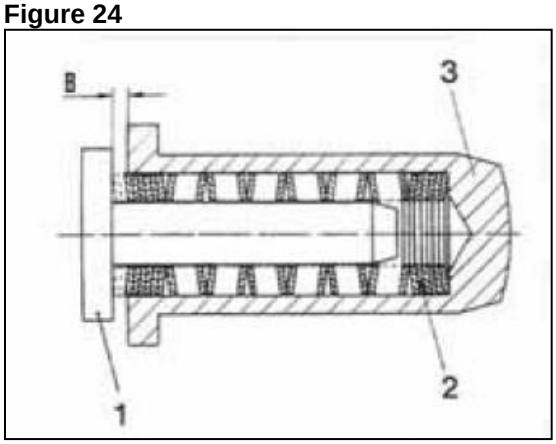

Figure 25

Ref. Figure 23 and 26 :

1 = Guide pin

2 = Cup spring packs (8 packs with 6 cup springs each)

3 = Spring guide

4 = Compression spring

5 = Spring guide

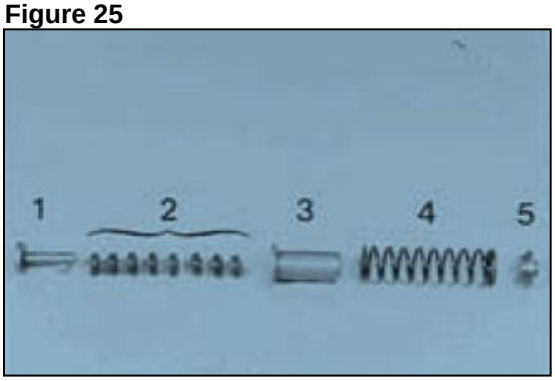

Figure 26

Install pre-assembled dampers, see Arrows !

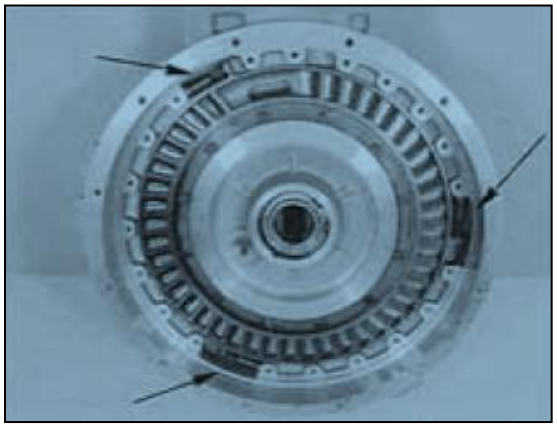

Figure 27

https://truckmanualshub.com/

Slide rectangular ring into the recess of the rotor and preload it by means of 3 straight pinsΦ 6 mm (Assembly aid) (Figure 28 and29).

(3x) Straight pin 0631 306 178

Figure 28

Figure 29

Oil rectangular ring, slide rotor into the stator case until contact is obtained and remove straight pins again.

Figure 30

Slide second rectangular ring into the recess (Figure 31).

Make the bore of the rectangular ring as well as of the rotor overlap and fix rectangular ring by means of suitable pin (Φ 1 mm) (Figure 32).

Figure 31

Figure 32

Insert O-Ring in the annular groove of the cover (Arrow Ⅰ) and grease it.

Install two adjusting screws and insert cover until contact: is obtained.

NOTE :

Pay attention to the radial installation position (oil duct, see Arrow 2) !

(S) Adjusting screws (M8) 5870 204 011

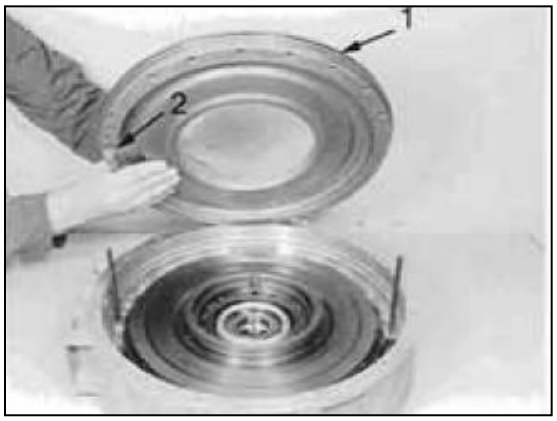

Figure 33

Now, remove guide pin (Assembly aid) again and fasten cover by means of socket head screws (mount flat washers).

NOTE :

Secure socket head screws with Loctite (Type-No. 640) !

Torque limit (M8/I0.9) 34 Nm

Figure 34

Fasten oil slinger by means of countersunk screws.

NOTE ;

Wet thread of countersunk screws with Loctite (Type-No. 640) !

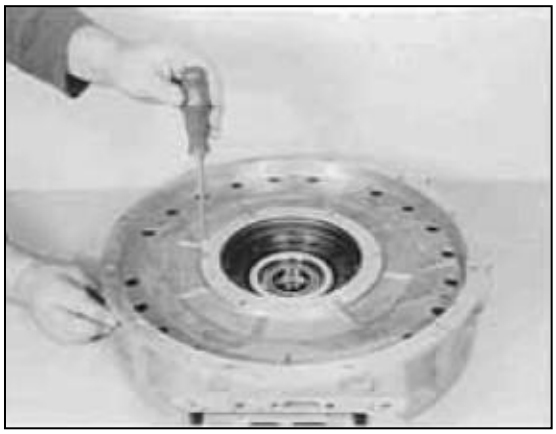

Figure 35

Adjust gap between Rotor and Stator ring = 0,8 … 1,6 mm (Figure 36 ... 38) :

Measure Dimension Ⅰ from the contact surface (4-point bearing) to the flange-mounted surface.

Dimension Ⅰ e.g.	12,00 mm
(S) Straightedge	5870 200 022
(S) Gauge blocks	5870 200 046
(S) Digital depth gauge	5870 200 072

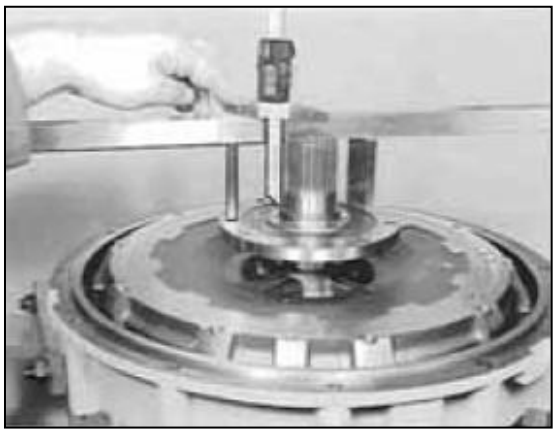

Figure 36

Determine Dimension Ⅱ from the flange mounted surface (drive flange) to the bearing inner race.

Dimension Ⅱ e.g.	10,65 mm
EXAMPLE "A" ;	
Dimension Ⅰ	12,00 mm
Dimension Ⅱ	-10,65 mm
Difference	1,35 mm
Required gap	
Rotor-Stator ring e.g.	- 1,20 mm
gives Shim	s = 0,15 mm

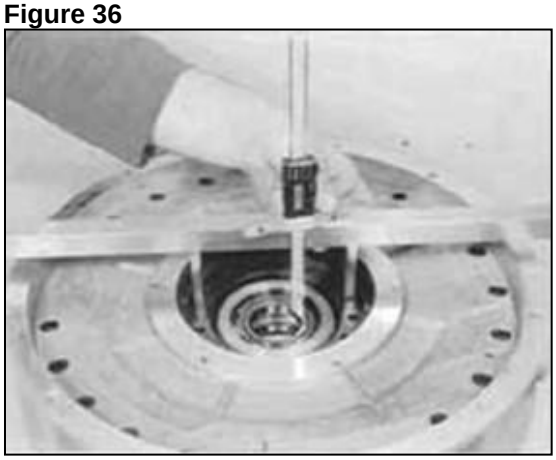

Figure 37

Assemble shim (e.g. s = 0,15 mm).

Figure 38

Heat bearing inner race and place it against shoulder.

NOTE ;

Pay attention to the installation position, ball running surface is showing upwards !

Figure 39

Mount flat gasket, assemble the retarder until contact is obtained and fasten it by means of hex. head screws.

Torque limit (M10/8.8) 46 Nm

Figure 40

Fasten rotor at the drive flange.

NOTE :

Tighten hex. head screws uniformly (180° displaced) and secure them with Loctite (Type-No. 241) !

Torque limit (M10/8.8) 46 Nm

Figure 41

Install the two screw plugs, see Arrows !

NOTE ;

Install new O-Rings !

Figure 42

Assemble drive flange and fasten it by means of disk and hex. head screws.

NOTE :

Wet contact area of disk with sealing compound !

Torque limit (M8/10.9) 34 Nm

Now, fix hex. head screws by means of lock plate.

(S) Driver 5870 057 010

(S) Handle 5870 260 002

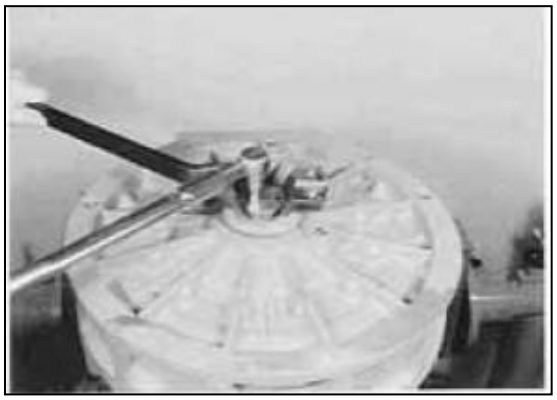

Figure 43

4.2.2 Pre-assemble and attach Retarder valve

Install components according to the Figure on the right.

1 = Case
2 = Hex. head screw
3 = Cover
4 = Gasket
5 = Compression spring
6 = Spool
7 = Spool
8 = Grooved rings

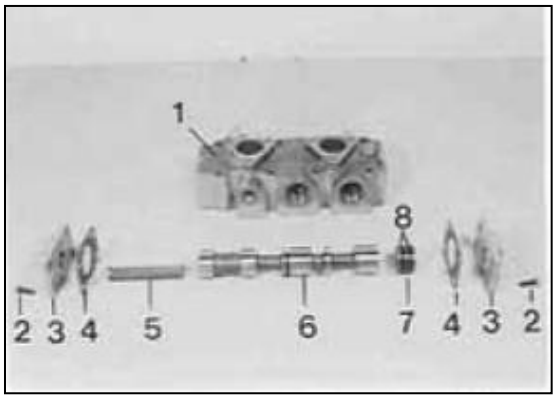

Figure 44

NOTE ;

Install grooved rings (8) with the sealing lip facing the pressure chamber !

Fasten the two connecting pieces by means of socket head screws.

Install temperature sensor (Arrow).

NOTE :

Install new O-Rings !

Torque limit (M8/8.8) 23 Nm

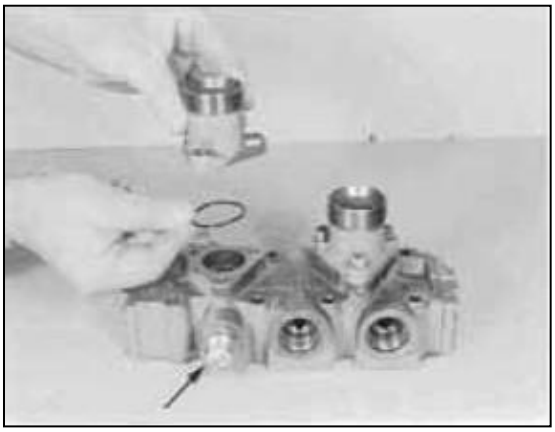

Figure 45

Install screw plug (Arrow).

NOTE ;

Install new O-Ring !

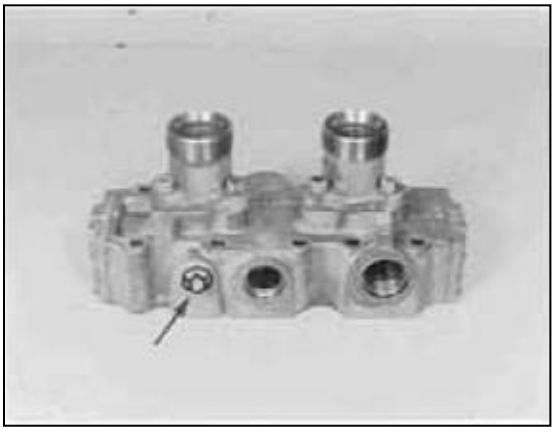

Figure 46

Install two adjusting screws.

Assemble first gasket, intermediate plate and second gasket.

(S) Adjusting screws (M8) 5870 204 011

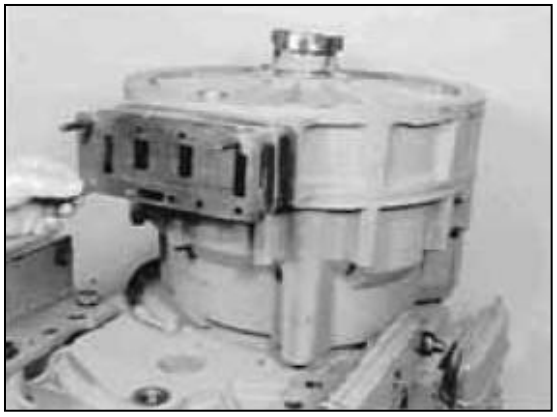

Figure 47

Place retarder valve against shoulder and fasten it by means of hex. head screws.

Torque limit (M8/8.8) 23 Nm

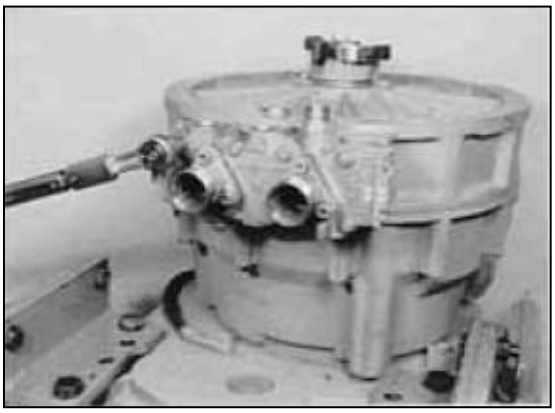

Figure 48

4.2.3 Install delivery lines

Install delivery lines according to the Draft on the right.

1 = To the Retarder

2 = Converter exit

3 = Return to Sump

4 = To the Lubrication

NOTE :

Install new O-Rings.

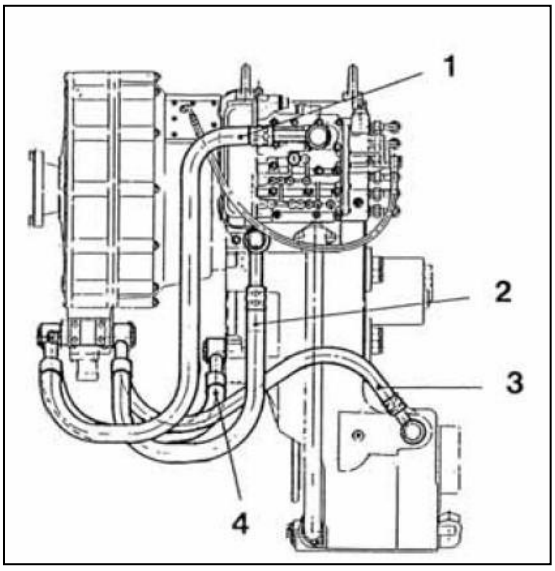

Figure 49

5. AXLE DECLUTCH

5.1 DISASSEMBLY

Loosen socket head screws and separate axle declutch from gear case.

(S) Pry bar 5870 345 065

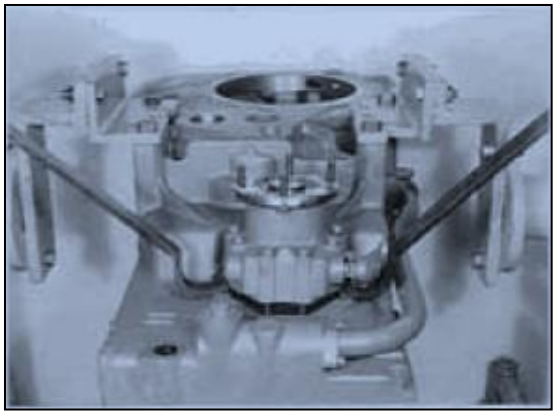

Figure 1

Remove lock plate, loosen hex. head screws and remove disk.

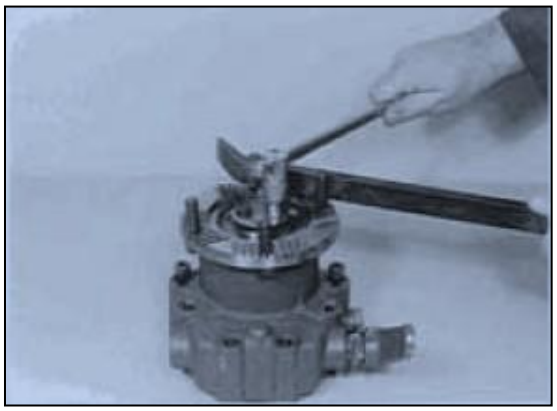

Figure 2

Pull flange from output shaft.

(S) Three-leg puller 5870 971 003

Figure 3

https://truckmanualshub.com/

Pry shaft seal out of the bore.

(S) Crowbar 5870 345 071

Figure 4

Squeeze out circlip.

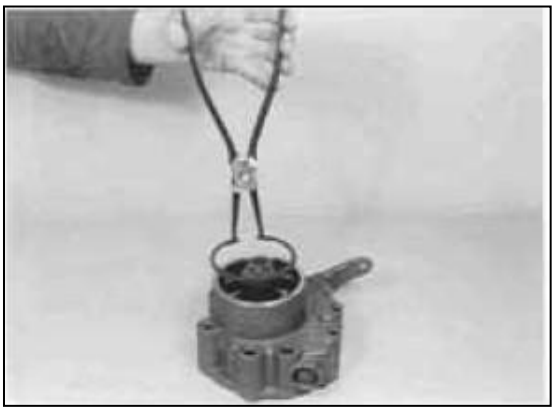

Figure 5

Press output shaft out of the housing.

Figure 6

https://truckmanualshub.com/

Remove sliding collar.

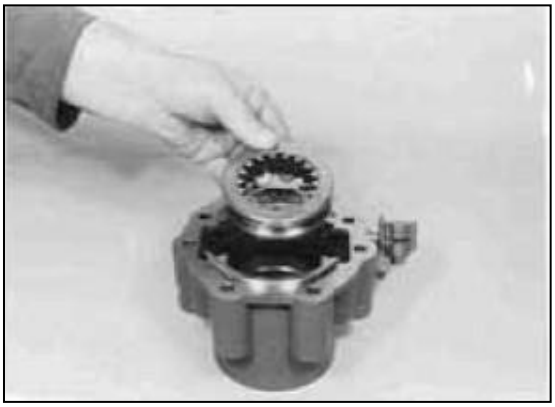

Figure 7

Loosen the two set screws and remove gearshift shaft.

If necessary, separate shift lever from gearshift shaft - mark radial installation position !

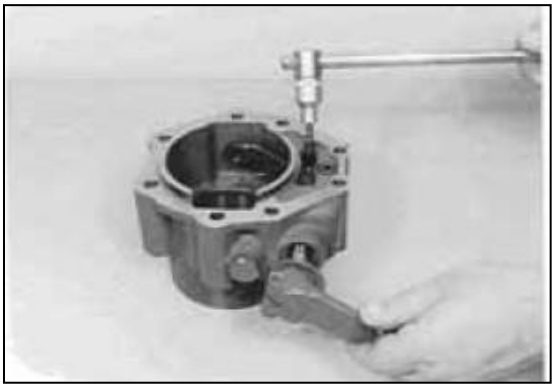

Figure 8

Demount locking device and remove shift fork.

Figure 9

Squeeze out circlip and remove shim(s).

Figure 10

https://truckmanualshub.com/

Demount sleeve and disk.

Figure 11

Remove needle bearing.

Figure 12

5.2 REASSEMBLY

Press ball bearing in until contact is obtained.

Figure 15

Adjust ball bearing free of play by means of disk and circlip.

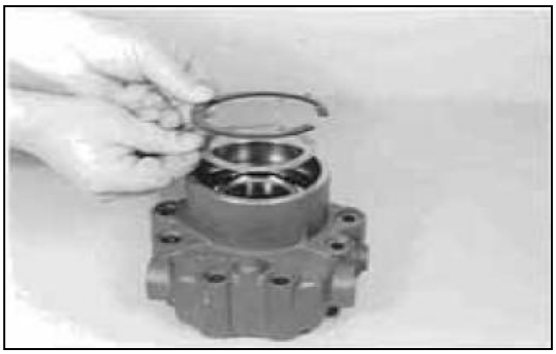

Figure 16

Install shaft seal (Arrow) with the sealing lip facing the oil chamber.

NOTE :

The exact installation position is obtained by application of the prescribed driver (S) !

If the outer diameter of the shaft seal is rubberized, wet the sealing surface with spirit !

If not, use sealing compound (Curilt T) !

Grease sealing lip !

(S) Driver 5870 048 057

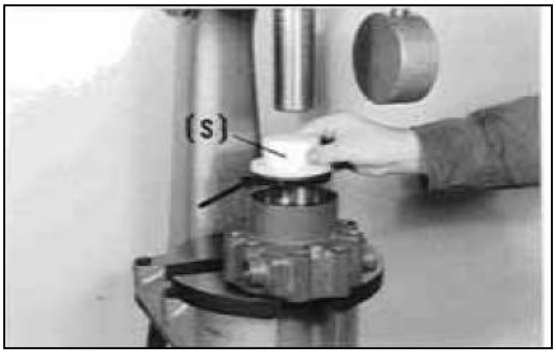

Figure 17

Insert shaft seal until contact is obtained.

NOTE :

Wet rubberized outer diameter with spirit !

Grease sealing lip !

(S) Driver 5870 048 031

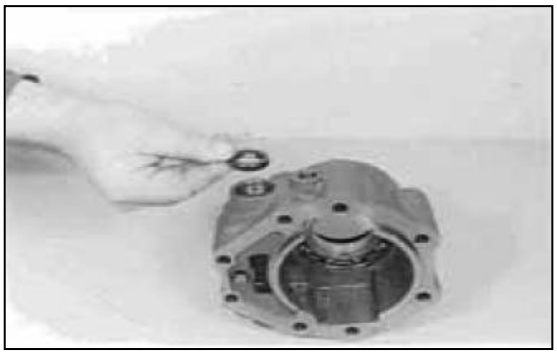

Figure 18

Insert shim (1) and straight pin (2) in the housing bore (Arrow).

NOTE :

The overlapping of the locating bore to the countersinking-shift fork is determined by means of shim(s), e.g. s = 0,50 mm (empirical value) I

However, a later check (Figure 27) is absolutely essential !

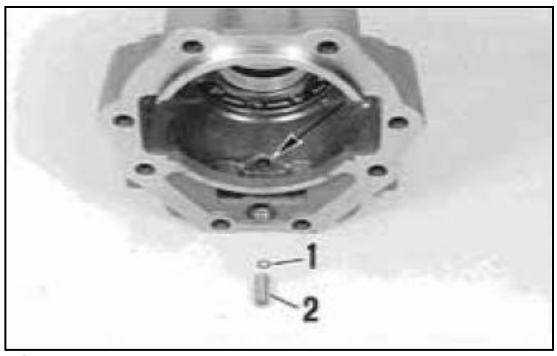

Figure 19

Install sliding blocks (Arrow I), position shift fork and fix by means of gearshift shaft.

NOTE :

Pay attention to the installation position of the sliding blocks, see Figure !

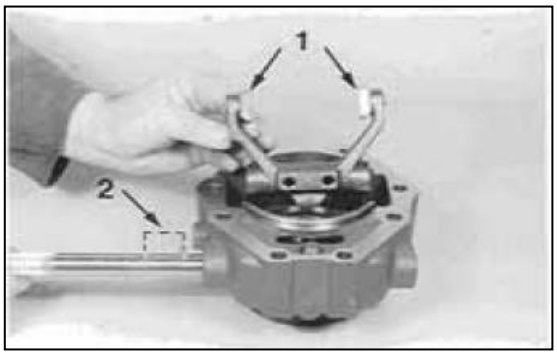

Figure 20

Realize the overlapping of the gearshift shaft countersinkings (Arrow 2, Figure 20) and the tapped holes of the shift fork, and install the two set screws.

NOTE :

Secure set screws with Loctite (Type-No.242) !

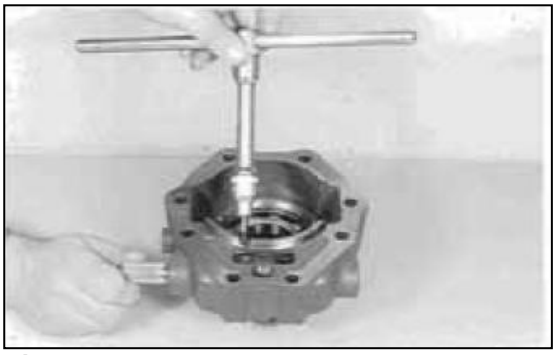

Figure 21

Insert disk.

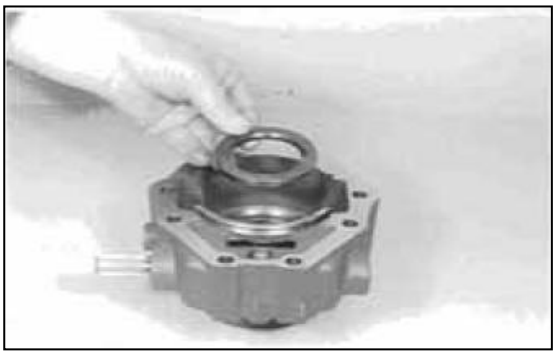

Figure 22

Thread up sliding collar.

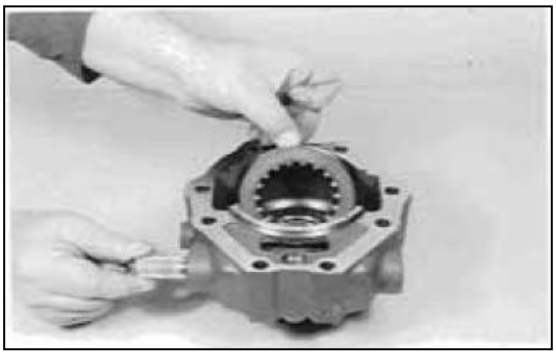

Figure 23

Thread up output shaft and press it against shoulder.

Figure 24

Assemble shim(s), e.g. s = 2,00 mm and mount socket head screws.

Torque limit (M10/8.8, DIN 7984) 32Nm

NOTE :

By means of shim, e.g. s = 2,00 mm (empirical value), the sliding collar will be adjusted free of pressure (Figure 26) !

Secure socket head screw with Loctite (Type- No. 242) !

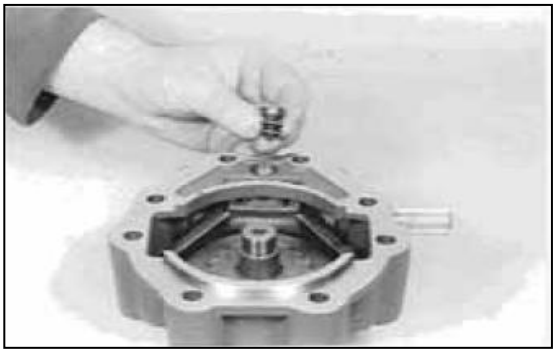

Figure 25

Cheek the pressureless condition of the sliding collar !

NOTE :

In a pressureless condition, a small tilting play on the sliding collar can be noted !

If necessary, correct by means of shim (Figure25) !

Figure 26

Bring shift fork, in direction of Arrow, to the upper stop position (final drive is engaged).
In this position, the countersinking of the shift fork must be centric to the tapped hole of the housing.
If necessary, correct by means of corresponding shims (Figure 19) !

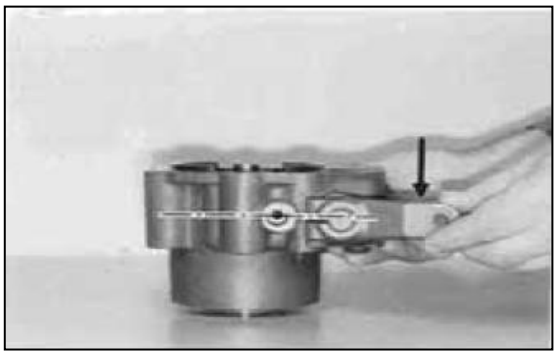

Figure 27

The Illustration on the left shows the components of the locking screw.
1 = Spring bush
2 = Sealing ring
3 = Compression spring
4 = Ball

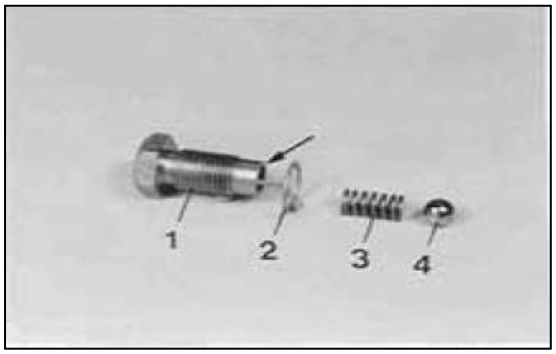

Figure 28

Fix the ball by indents (3 x 120°) on the end face of the spring bush (see Arrow, Figure28).
Insert compression spring and ball in the spring bush and preload them in a vise.

Figure 29

Assemble new sealing ring and install locking screw.

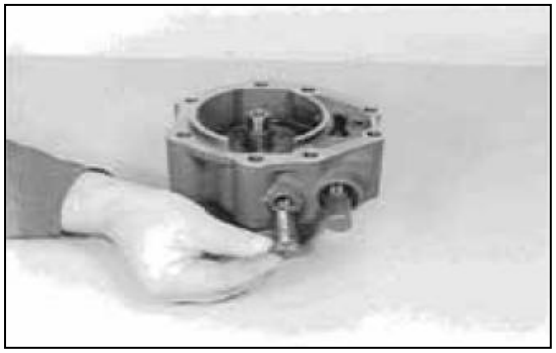

Figure 30

https://truckmanualshub.com/

Assemble shift lever flush-mounted to the end face of the shaft and fix it by means of clamping screw.

NOTE :

Radial installation position of the shift lever according to the Indications of the Manufacturer of the vehicle, resp. according to the markings !

Figure 31

Insert closing cover (Arrow) until contact is obtained and fix it by slight central tapping.

NOTE :

Wet sealing surfaces with Loctite (Type-No. 270) !

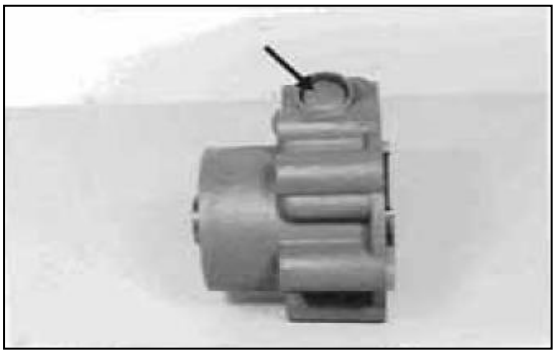

Figure 32

Insert socket head screws (Arrow) in the housing bores.

Insert hex. head screws in the bores of the output flange, heat output flange and assemble it until contact is obtained.

NOTE ;

Pay attention to a correct contact !

If necessary, press it against shoulder, see Figure 34 !

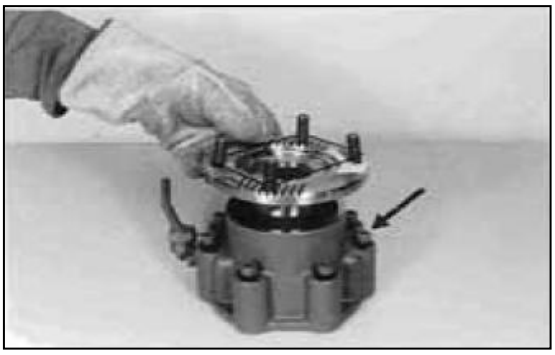

Figure 33

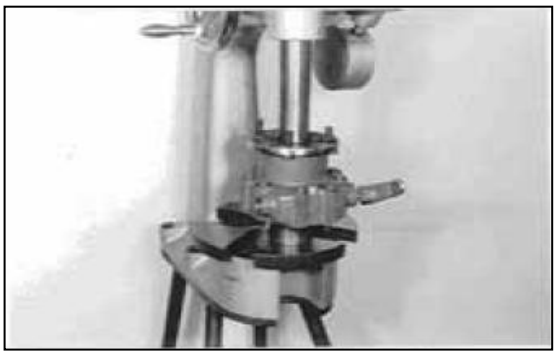

Figure 34

Fasten output flange by means of disk and hex. head screws.

NOTE :

Wet contact area of the disk and the screw heads with sealing compound !

Torque limit (M8/10.9) 34 Nm

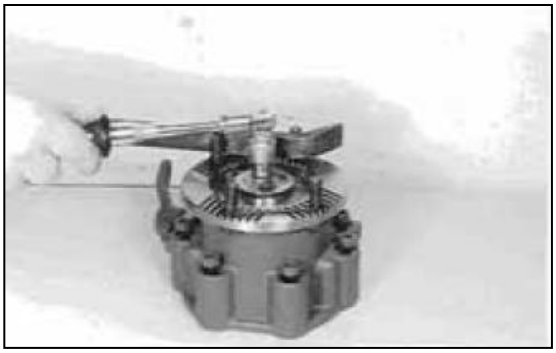

Figure 35

Fix hex. head screws by means of lock plate.

(S) Driver 5870 057 011

(S) Handle 5870 260 002

Figure 36

Install disk and assemble driving bush.

NOTE :

Pay attention to the installation position of the driving bush, see Figure !

Figure 37

Fix driving bush free of play by means of shim(s) and circlip.

Figure 38

https://truckmanualshub.com/

Insert needle ring (Arrow) in the output shaft bore.

Install two adjusting screws and assemble flat gasket.

(S) Adjusting screws (MI0) 5870 204 021

Figure 39

Place axle declutch assembly against housing until contact is obtained, and fasten it by means of socket head screws.

Torque limit (M10/8.8) 46 Nm

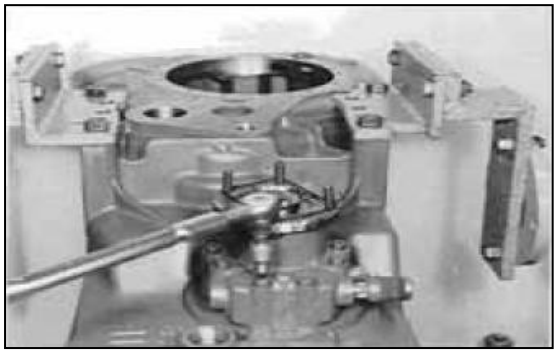

Figure 40

6. AXLE DIFFERENTIAL

6.1 SHIFT-CONTROL HOUSING

6.1.1 DISASSEMBLY

Pull off output flange.

Figure 1

Loosen socke head screws and separate axle declutch unit from gear case by means of pry bar.

(S) Pry bar 5870 345 065

Figure 2

Remove hollow shaft.

Figure 3

Loosen the two socket head screws and remove them along with disk.

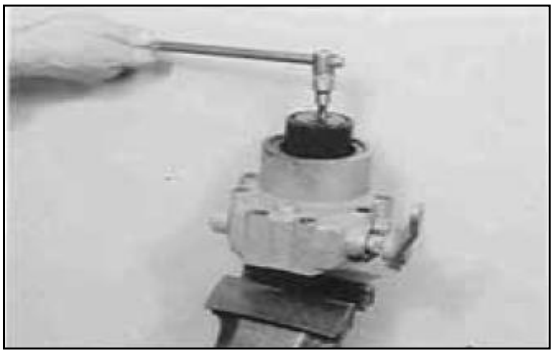

Figure 4

https://truckmanualshub.com/

Pull sleeve from the output shaft.

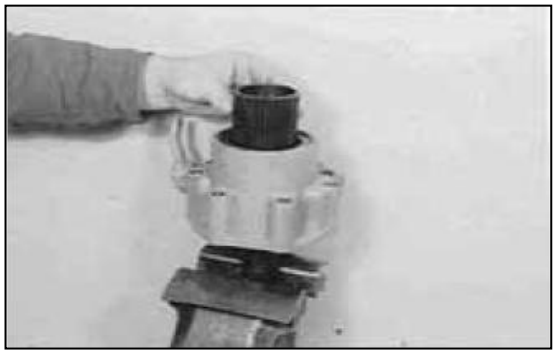

Figure 5

Press output shaft out of the housing.

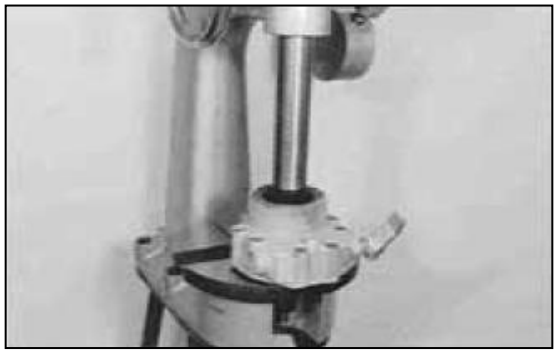

Figure 6

Demount locking screw and shift lever, and remove sliding collar.

NOTE :

Mark the radial installation position of the shift lever !

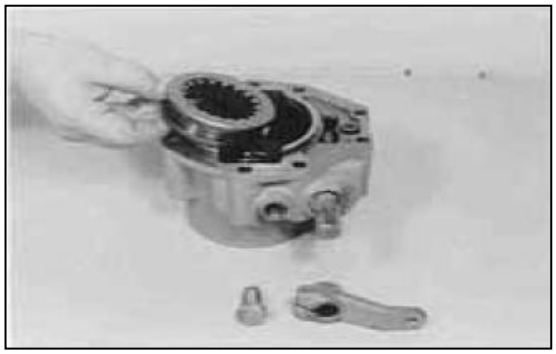

Figure 7

Loosen the two set screws.

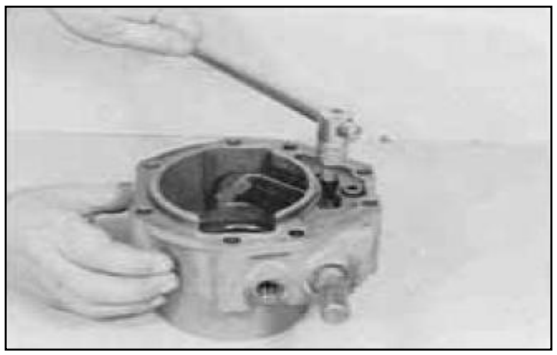

Figure 8

https://truckmanualshub.com/

Demount gearshift shaft and remove the shift fork.

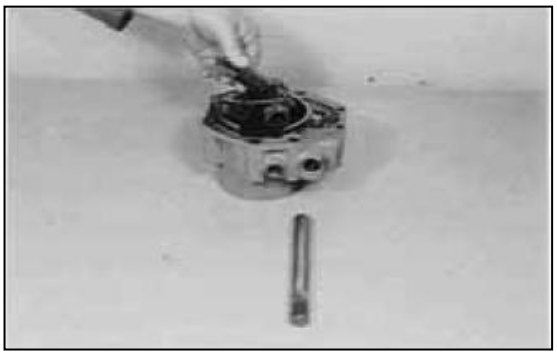

Figure 9

Remove disk.

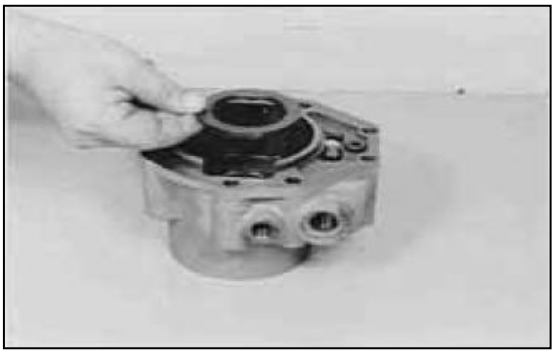

Figure 10

Fasten housing in a vise - use protecting jaws and pry shaft seal out of the housing bore.

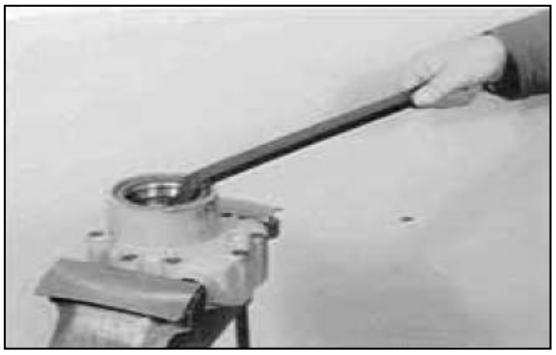

Figure 11

Remove sleeve and squeeze circlip out.

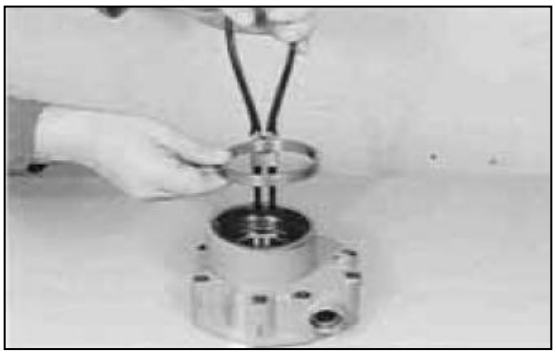

Figure 12

Press ball bearing out of the housing bore.

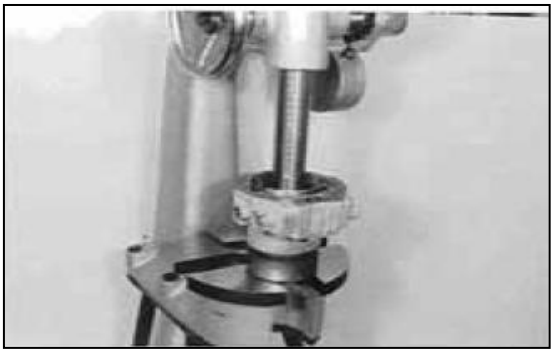

Figure 13

6.1.2 REASSEMBLY

Press ball bearing against shoulder until contact is obtained.

Figure 15

Fix ball bearing by means of circlip and lay sleeve upon it.

Figure 16

Install shaft seal with the sealing lip lacing the oil chamber.

NOTE ;

By application of the prescribed driver, the exact installation position is obtained !

If the outer diameter of the shaft seal is rubberized, wet the sealing surface with spirit!

If not, use a sealing compound !

Grease sealing lip !

(S) Driver 5870 048 134

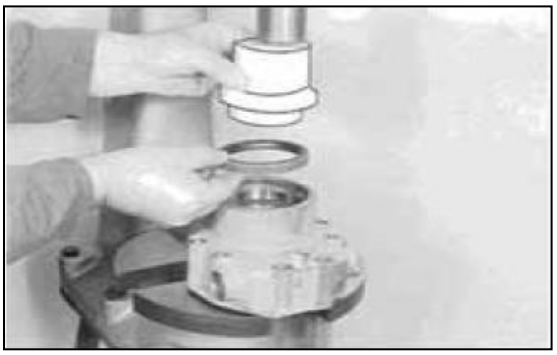

Figure 17

Insert shaft seal until contact is obtained.

NOTE :

Wet rubberized outer diameter with spirit !

Grease sealing lip !

(S) Driver 5870 048 031

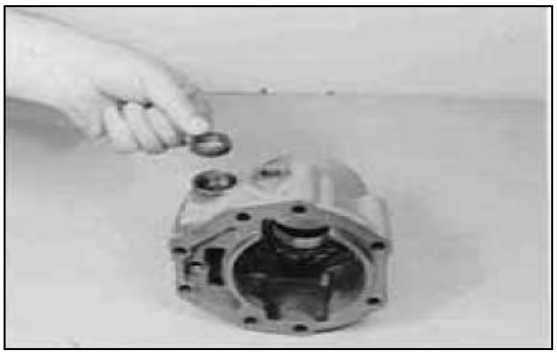

Figure 18

Insert shims (1) and straight pin (2) in the housing bore (Arrow).

NOTE :

The shifting travel is adjusted with the shims, total thickness s = 0,6 mm (empirical value) !

However, a later check is absolutely essential (see Figure 25) !

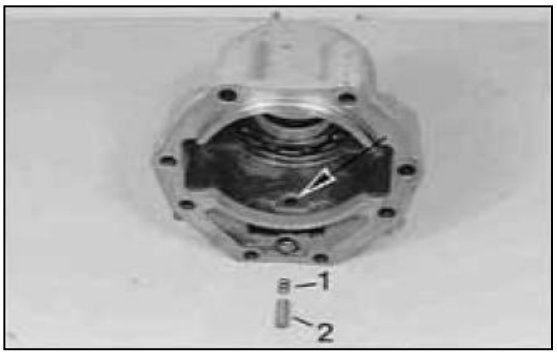

Figure 19

Install sliding blocks (Arrows 1), position shift fork and fix it by means of gearshift shaft.

NOTE :

Pay attention to the installation position of the sliding blocks - chamfered end face is showing to the rear !

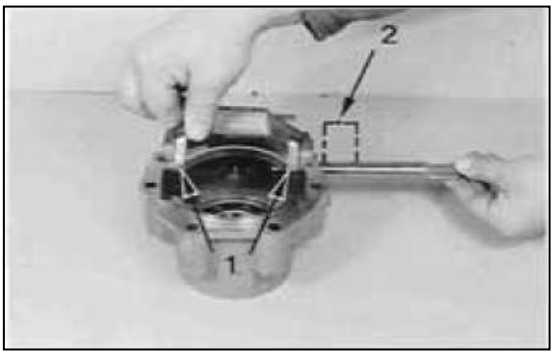

Figure 20

Realize the overlapaping of the gearshift shaft countersinkings (Arrow, Figure 20), and the tapped holes of the shift fork, and install the two set screws.

NOTE ;

Secure set screws with Loctite (Typc-No.242)!

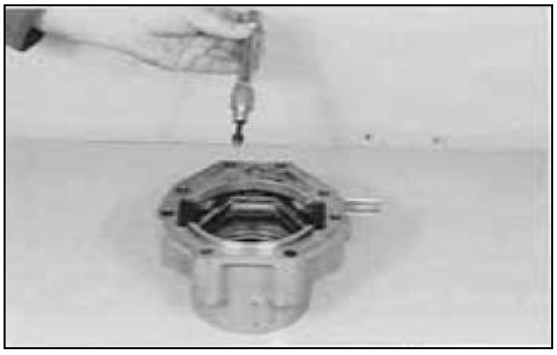

Figure 21

Insert disk and assemble sliding collar.

Figure 22

Introduce output shaft and press it against shoulder until contact is obtained.

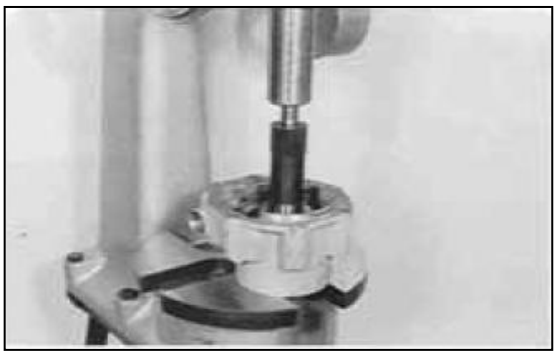

Figure 23

Assemble the hollow shaft in order to check the shifting travel.

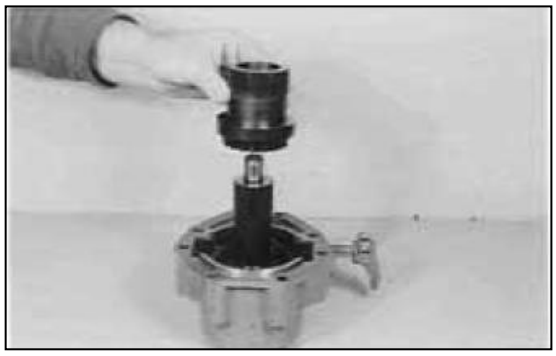

Figure 24

Place sliding collar by means of gearshift lever into the upper stop position (direction of Arrow) and determine the play between sliding collar and plane surface-hollow shaft.

NOTE ;

If the required end play = 0.1 ... 0.2 mm is not obtained, correct with corresponding shims (see Figure 19) !

Now, remove hollow shaft again.

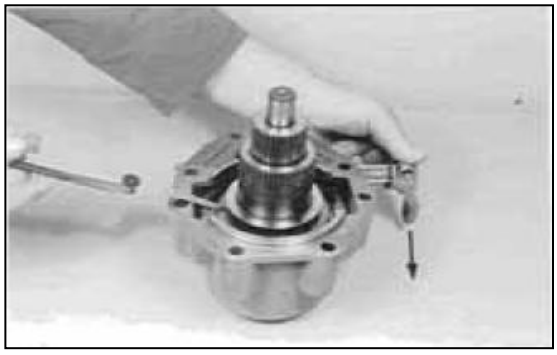

Figure 25

Assemble shim(s) e.g. s = 2.00 mm and install socket head screw.

Torque limit (Ml0/8.8 DIN 7984) 32 Nm

NOTE :

The sliding collar is adjusted free of pressure by the shim s = 2,00 mm (empirical value) (Figure 27) !

Secure socket head screw with Loctite (Type-No. 242) !

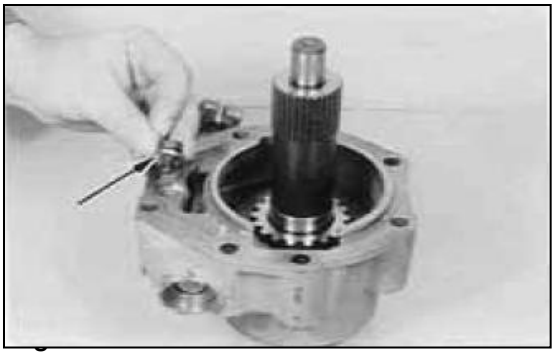

Place sliding collar by means of gearshift lever into the lower stop position and check the pressureless condition.

NOTE ;

In case of a correct adjustment, a slight tilting play on the sliding collar can be noted !

If necessary, correct it by means of shim (Arrow/ Figure 26) !

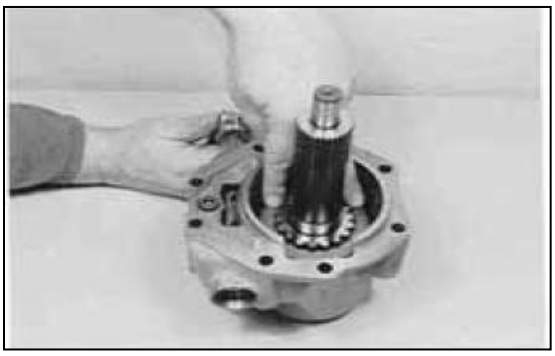

Figure 27

The Illustration on the right shows the components of the locking screw.

1 = Spring bush

2 = Sealing ring

3 = Compression spring

4 = Ball

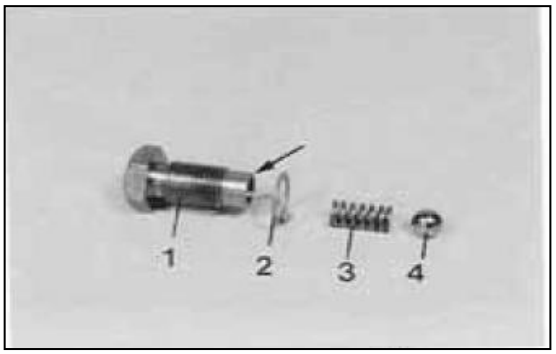

Figure 28

Insert compression spring and ball in the spring bush and preload them in a vise.

Fix the ball by indents (3 x 120°) on the end face of the spring bush (see Arrow Figure 28).

Figure 29

Assemble new sealing ring and install locking screw (Arrow I).

Assemble gearshift lever (Arrow 2) flush mounted and fix it by means of hex. Head screw.

NOTE :

Radial installation position of the gearshift lever according to the Indications of the

Manufacturer of the vehicle, resp. according to the markings !

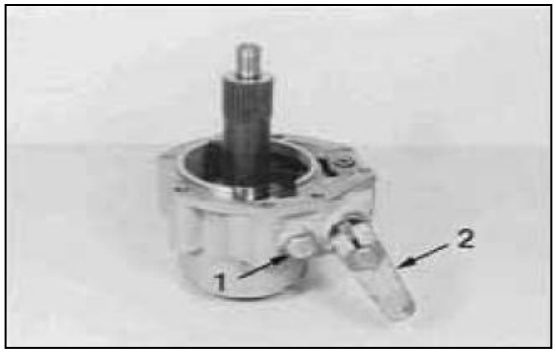

Figure 30

Insert closing cover (Arrow) until contact is obtained and fix it by slight central tapping.

NOTE ;

Wet sealing surfaces with Loctite (Type-No. 270) !

Figure 31

Insert disk and assemble sleeve.

NOTE :

Pay attention to the installation position of the sleeve !

Figure 32

Fix sleeve by means of disk and socket head screws.

Torque limit (M10/8.8 DIN 6912) 32 Nm

NOTE :

Secure socket head screws with Loctite (Type- No. 270) !

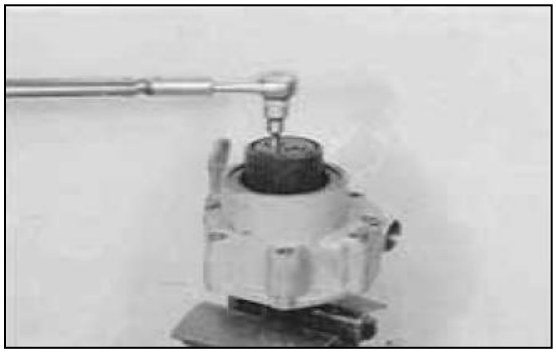

Figure 33

6.2 DIFFERENTIAL

6.2.1 Remove and dismantle differential

Pull roller bearing by means of puller device out of the housing bore.

(S) Internal puller 5870 300 010

Figure35

Tilt gear case 180°.

Loosen hex. head screws and pull output flange from the shaft

(s) Clamping yoke 5870 240 025

Figure 36

Pry shaft seal out of the housing bore.

(S) Pry bar 5870 345 071

Figure 37

Remove circlip and shim.

(S) Clamping pliers 5870 900 021

Figure 38

https://truckmanualshub.com/

Loosen hex. head screws and pull complete speedometer drive out of the housing bore.

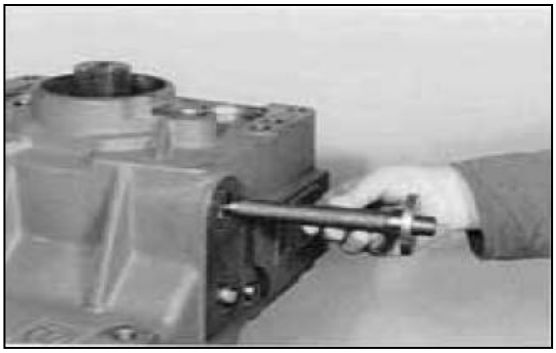

Figure 39

Drive output shaft by means of striker out of the housing bore.

(S) Striker 870 650 001

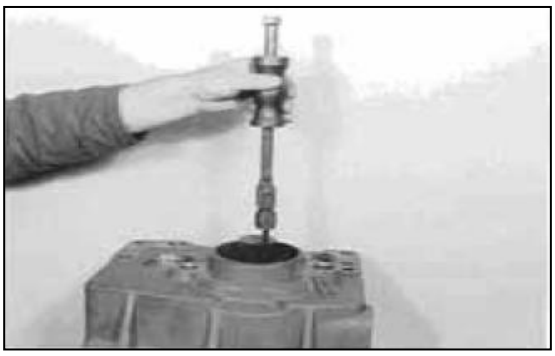

Figure 40

Squeeze circlip out and remove shim.

Figure 41

Pull roller bearing out of the housing bore.

(S) Puller 5870 300 010

Figure 42

https://truckmanualshub.com/

Loosen closing cover by central tapping and remove it.

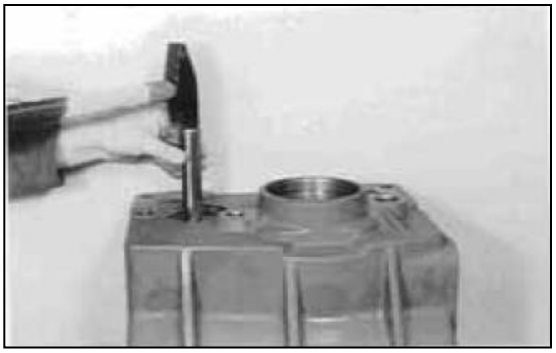

Figure 43

Loosen hex. head screws and remove them along with flat washers (Figure 44).

Now, take cover plate out of the gear case (Figure 45).

Figure 44

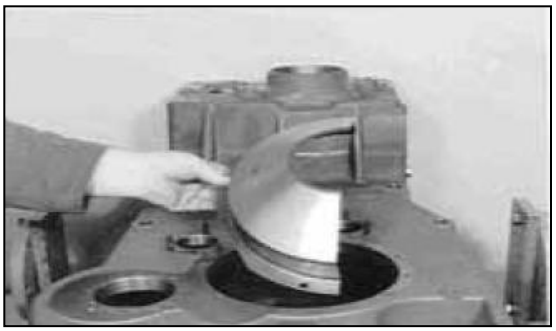

Figure 45

Loosen socket head screws and remove supporting tube.

NOTE ;

Socket head screws are secured with Loctite !

(S) Allen screw A/F-8 5870 290 001

Figure 46

https://truckmanualshub.com/

Tilt gear case 180°.

Take cover plate out of the housing.

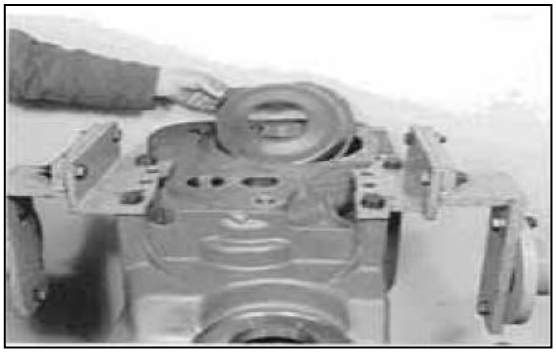

Figure 47

Loosen the screw connection (Figure 48) and separate the supporting plate by means of back-off screw (M8) from the output gear (Figure 49).

(S) Back-off screws (M8) 5870 204 008

Figure 48

Figure 49

Take supporting plate out of the gear case.

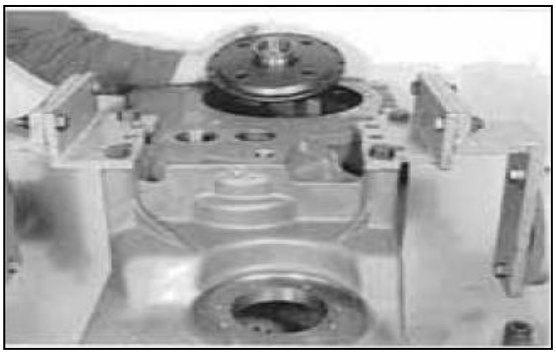

Figure 50

https://truckmanualshub.com/

Displace output gear in direction of arrow until the removal of the planetary carrier is ensured.

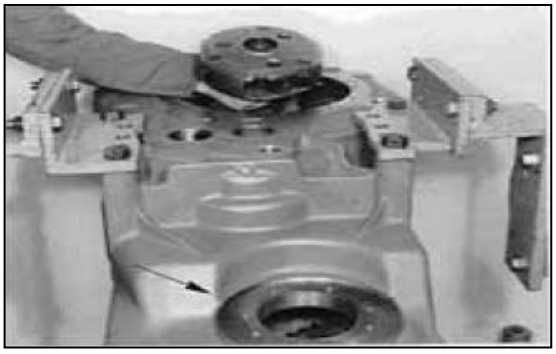

Figure 51

Take the output gear out of the gear case.

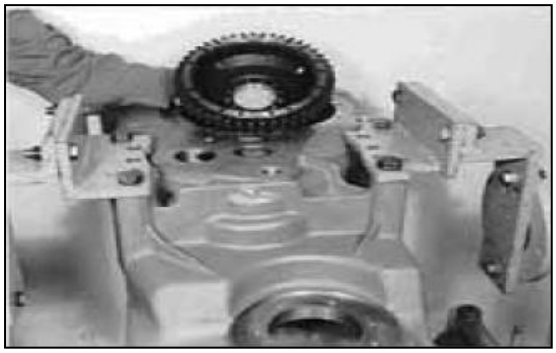

Figure 52

Drive roll pins carefully in until contact is obtained.

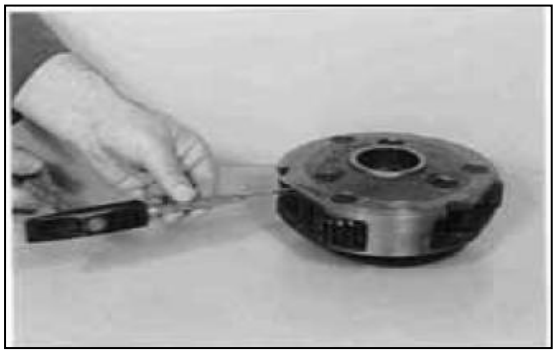

Figure 53

Press planetary shafts out of the bores and remove released components.

Figure 54

6.2.2Pre-assemble and install differential

The Illustration on the left shows the com-ponents of the planetary carrier.

1 = Planetary carrier

2 = Thrust washer

3 = Sun gear

4 = Thrust washer (small inner diameter)

5 = Thrust washer

6 =Planetary gear

7 = Needle rollers (replace in sets only)

8 = Roll pin

9 = Planetary shafts

Install sun gear and thrust washers (Figure 56).

NOTE:

Pay attention to the installation position of the thrust washer 4 (smaller inner diameter) see Arrow!

Insert needle rollers 7 with grease in the planetary gear.

Position planetary gear as well as thrust washers and align them centrically.

Undercool planetary shafts, introduce and fix them by means of roll pin.

Install the remaining planetary gears accordingly.

NOTE:

Pay attention to the installation position of the planetary shafts (lubricating hole)!

Figure 58 shows the installation position of the roll pins!

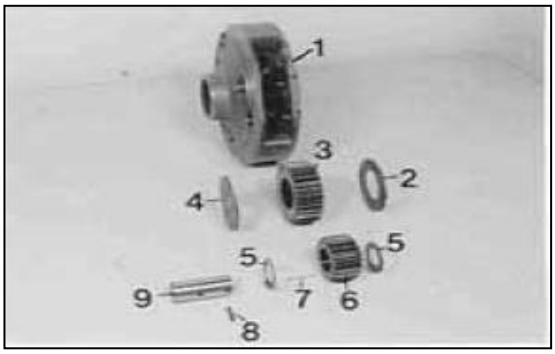

Figure 55

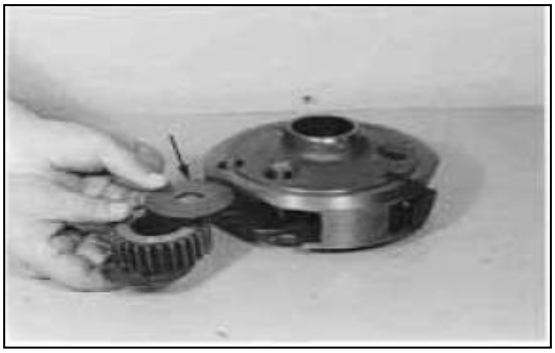

Figure 56

Figure 57

Figure 58

Insert output gear in the housing and displace it in direction of Arrow, to make the later reassembly of the planetary carrier possible.

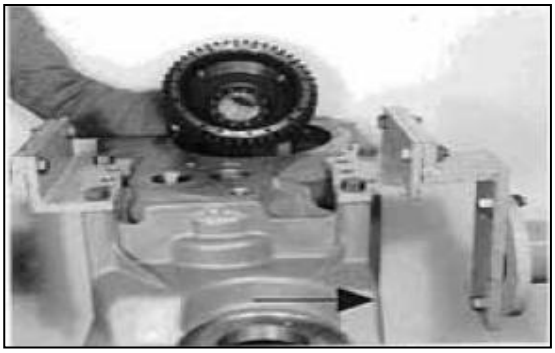

Figure 59

Introduce planetary carrier with the long hub side showing downwards, into the internal gear.

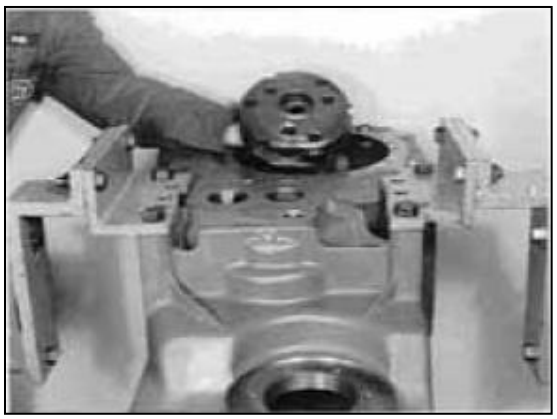

Figure 60

Lay supporting plate upon the output gear (Figure 61) and fix it by uniform tightening of the socket head screws (Figure 62).

Torque limit (Ml0/10.9) 68 Nm

NOTE:

Secure socket head screws with Loctite (Type No. 241)!

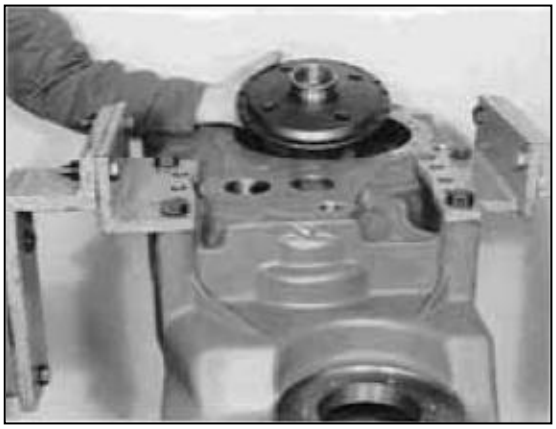

Figure 61

Figure 62

Lay cover plate upon the supporting plate (Figure 63).

Now, tilt gear case 180° .

ATTENTION:

Differential is not fixed!

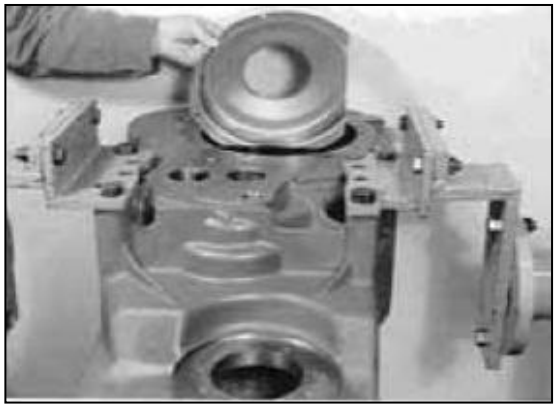

Figure 63

Squeeze in the first snap ring, press needle bearing against shoulder and fix it by means of second snap ring.

NOTE:

Install the needle bearing with the reinforced shell facing the pressing tool!

(S) Pressure piece 5870 100 035

Figure 64

Introduce supporting tube and fasten it by means of socket head screws.

Torque limit (Ml0/10.9) 68 Nm

NOTE :

Secure socket head screws with Loctite (Type-No. 241)!

(S) Allen screw A/F-8 5870 290 00I

Figure 65

Insert roller bearing until the supporting tube is received.

NOTE:

In order to ensure a possible disassembly, the roller bearing must be installed with the open cage side showing outwards (on top)!

The exact fixing is carried out later!

Figure 66

Insert cover plate in the gear case.

Figure 67

Position the two cover plates and fasten them by means of hex. head screws (install flat washers).

Torque limit (M8/8.8) 23 Nm

NOTE:

Secure hex. head screws with Loctite (Type-No. 241) !

Figure 68

Tilt gear case 180°.

Insert roller bearing until contact is obtained.

NOTE :

Pay attention to the installation position, open cage side of roller bearing is showing outwards (on top)!

Figure 69

Insert sleeve (Arrow) flush-mounted in the hollow shaft.

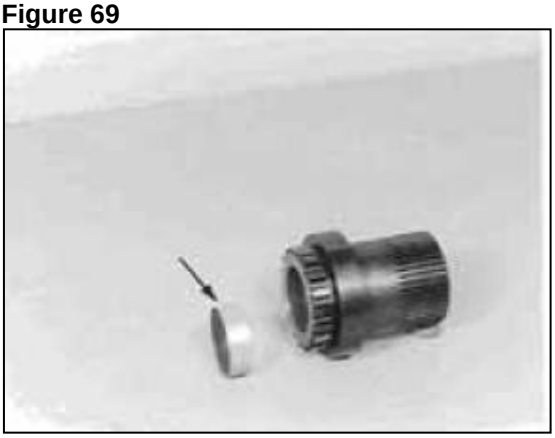

Figure 70

Introduce hollow shaft until contact is obtained.

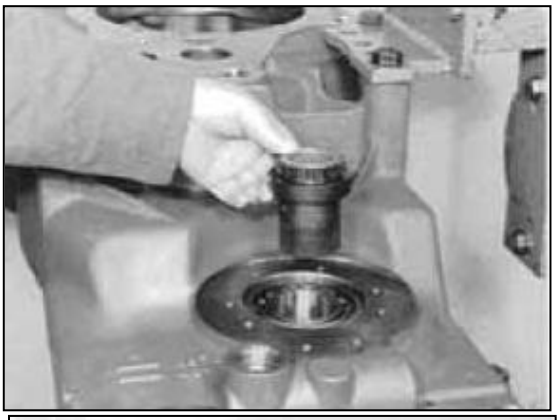

Install two adjusting screws, replace 11a: gasket and place compl. shift-control housing against gear case until contact is obtained.

Fasten shift-control housing by means of socket head screws and install output flange (Arrow).

Torque limit (Ml0/8.8 DIN 7984) 32 Nm

(S) Adjusting screws (MI0) 5870 204 007

Figure 71

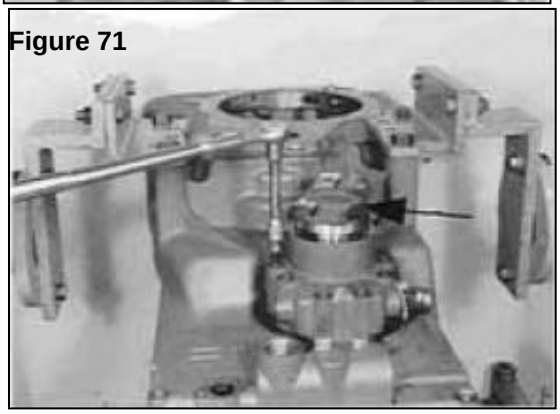

Figure 72

Tilt gear case 180°.

Drive differential assembly by careful tapping upon the roller bearing downwards, until the exact contact of the lower roller bearing (Figure 69) on the shift-control housing (Figure 72) is ensured.

Figure 73

Adjust end play of the differential 0,4 0,6 mm (Figure 74 ... 76)

Squeeze in circlip.

(S) Clamping pliers 5870 900 021

Figure 74

Push circlip in direction of Arrow against shoulder and determine play between circlip and end face/bearing outer race, using feeler gauge.

Dimension Ⅰ e.g. 1,50 mm

Figure 75

EXAMPLE "A" :

Dimension I e.g. 1,50 mm

required end play (0,4 ... 0,6 mm)

e.g. – 0,50 mm

Difference = Shim e.g. s = 1,00 mm

Install shim e.g. 1,00 mm (see Example "A") and squeeze circlip in.

Figure 76

Insert needle bush 1 flush-mounted in the bore of the output shaft 2.

Press ball bearing 3 against shoulder until contact is obtained.

NOTE :

Install needle bush with the reinforced shell facing the pressing tool!

(S) Driver 5870 058 023

(S) Handle 5870 260 002

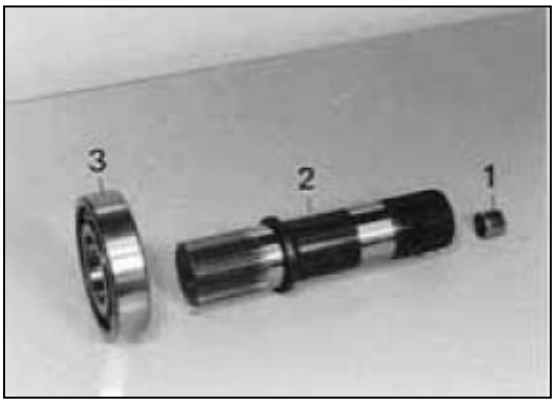

Figure 77

Introduce pre-assembled output shaft until contact is obtained.

NOTE:

Pay attention to the exact contact of the ball bearing!

Figure 78

Fix ball bearing free of play by means of shim and circlip.

Figure 79

Install shaft seal with the sealing lip facing the oil chamber.

NOTE:

By application of the prescribed driver, the exact installation position is obtained!

If the outer diameter of the shaft seal is rubberized, wet the sealing surface with spirit!

If not, use a sealing compound!

Grease sealing lip!

(S) Driver 5870 048 150

Figure 80

Assemble up output flange and fasten it by means of disk and hex. head screws.

NOTE:

Wet contact surface of disk and screw heads with sealing compound !

Torque limit (M10/8.8) 46 Nm

Now, fix hex. head screws with lock plate.

(S) Clamping yoke 5870 240 025

(S) Driver 5870 057 009

(S) Handle 5870 260 002

Figure 81

Install the two closing covers.

NOTE:

Wet sealing surfaces with Loctite (Type-No.270)!

(S) Driver	5870 057 015
(S) Handle	5870 260 002

Figure 82

Fasten closing covers by means of hex. Head screws and mount screw plug (Arrow).

NOTE:

In tall new flat gasket as well as O-Ring !

Torque limit (Hex. head screws M8/8.8)	23 Nm
Torque limit (Screw plug M22x1.5)	60 Nm

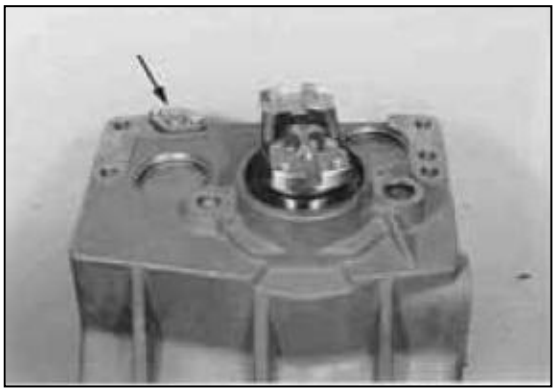

Figure 83

Assemble flat gasket and fasten speedometer (compl.) by means of hex. head screws on the gear case.

Torque limit (M8/8.8) 23 Nm

Figure 84

7. POWER TAKE-OFF

CONTROLLABLE UNDER LOAD

7.1 DISASSEMBLY

Loosen hex. head screws and remove shift-control housing

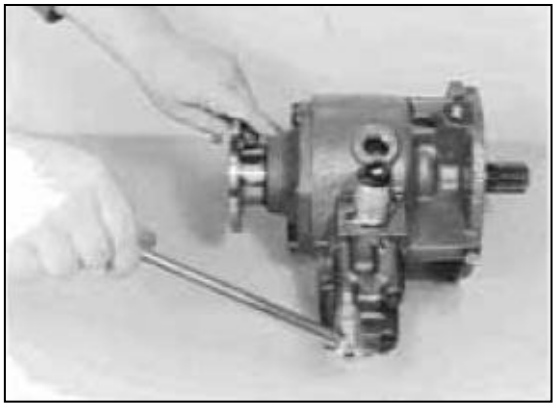

Figure 1

Remove components according to the Illustration on the right.

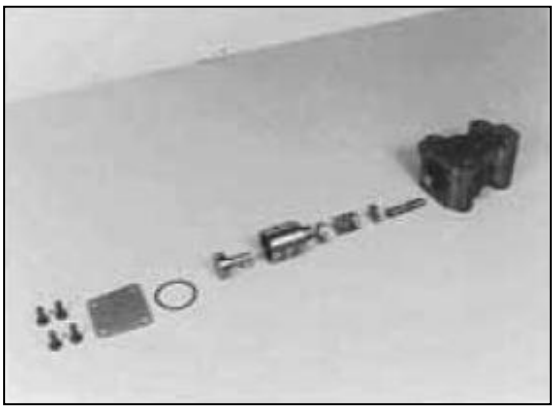

Figure 2

Loosen socket head screws and remove solenoid valve.

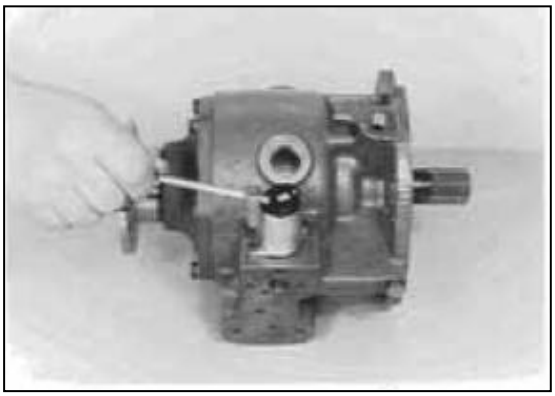

Figure 3

Loosen hex. head screws and pull the output flange from the output shaft, using puller.

(S) Clamping yoke 5870 240 025

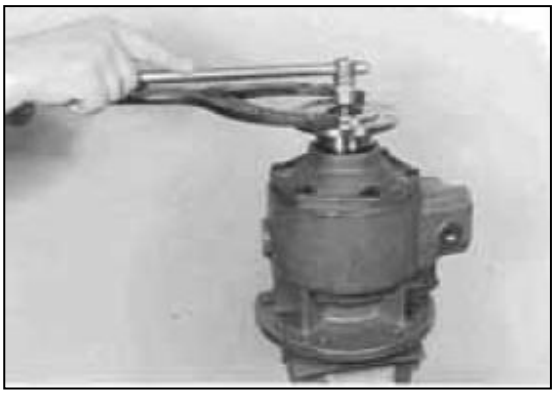

Figure 4

https://truckmanualshub.com/

Pry shaft seal out of the housing bore.

Figure 5

Loosen hex. head screws and pull complete clutch out of the housing.

Figure 6

Squeeze circlip out and remove backing plate as well as plate pack.

(S) Clamping pliers 5870 900 021

Figure 7

Remove rectangular ring.

Figure 8

https://truckmanualshub.com/

Preload compression spring, squeeze circlip out and remove released components.

(S) Assembly jig 5870 345 028

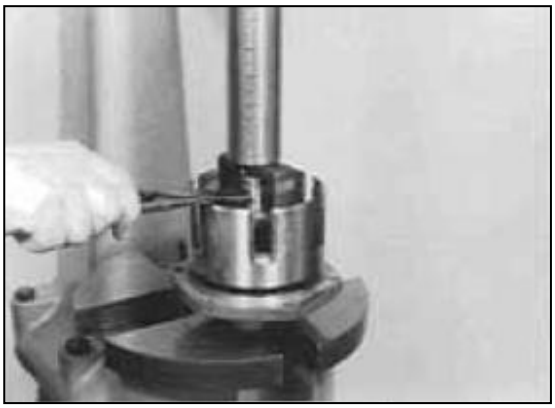

Figure 9

Remove piston.

(S) Clamping pliers 5870 900 007

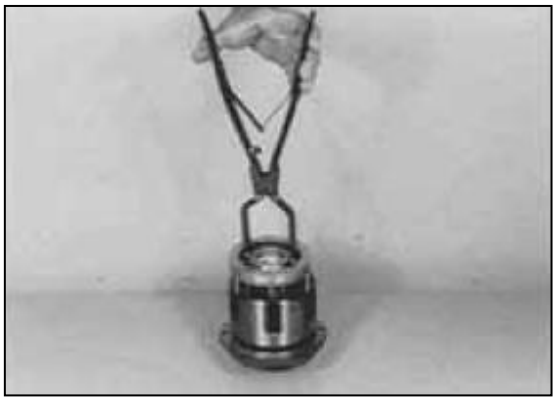

Figure 10

Squeeze out circlip.

Figure 11

Press output shaft (compl.) out of the ball bearing.

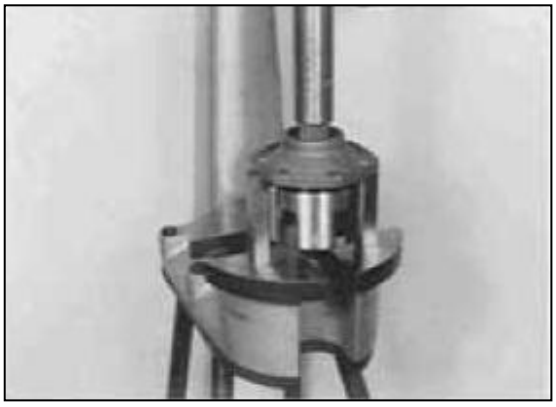

Figure 12

Squeeze circlip out.

Figure 13

Press ball bearing out of the cover.

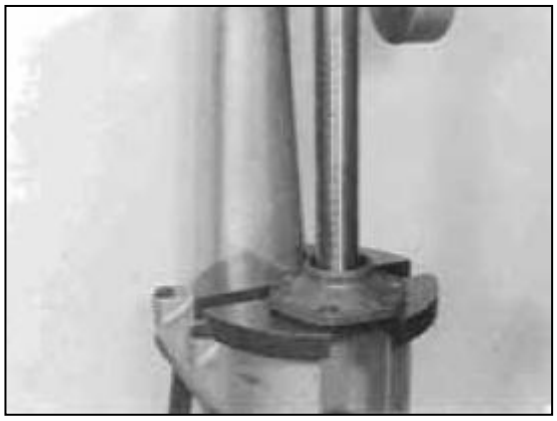

Figure 14

Preload circlip (Arrow), align it centrically and squeeze it out.

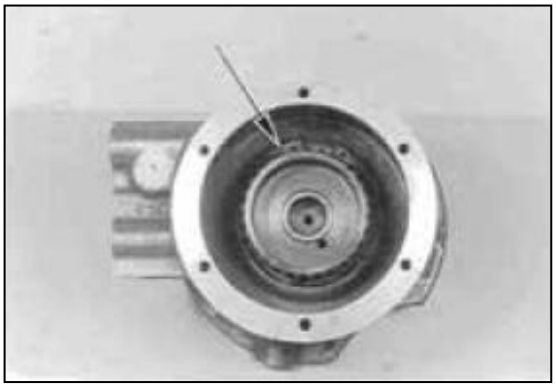

Figure 15

Press drive shaft out of the housing bore.

Figure 16

https://truckmanualshub.com/

Squeeze out snap rings (3 pieces).

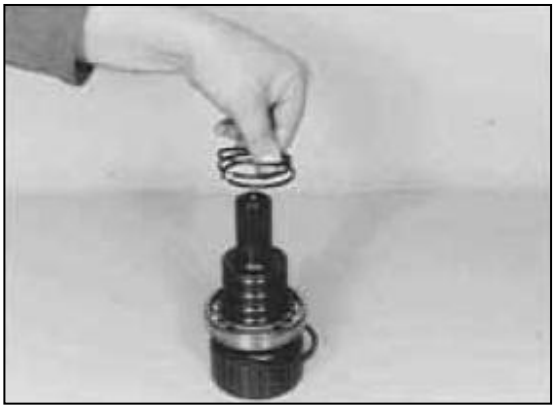

Figure 17

Squeeze circlip out.

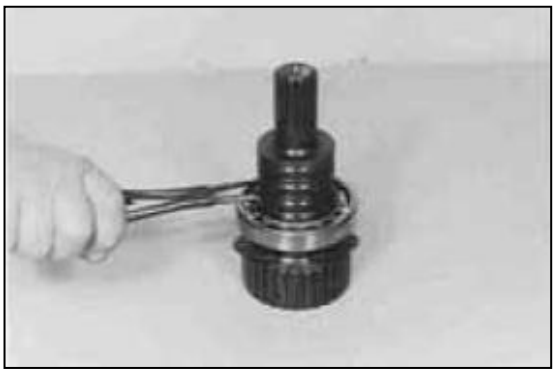

Figure 18

Press ball bearing from the drive shaft.

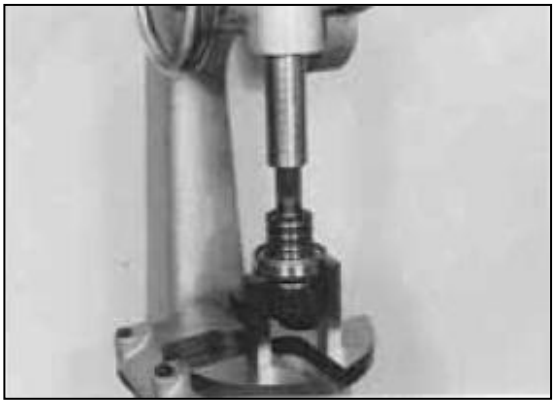

Figure 19

Pull needle bush out of the drive shaft bore.

(S) Internal puller 5870 300 004

(S) Back-up tool 5870 300 003

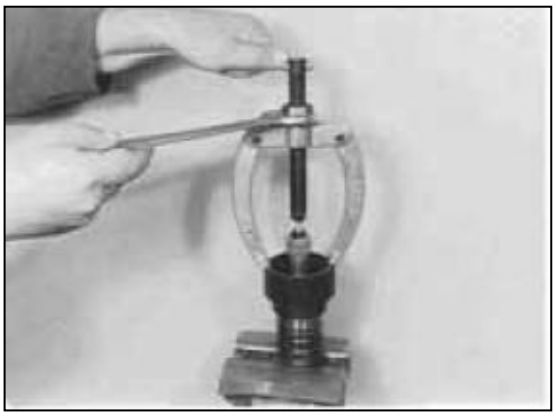

Figure 20

7.2 REASSEMBLY

Close the two bores by means of set screws see Arrows !

NOTE:

Insert set screws with Loctite (Type-No.270).

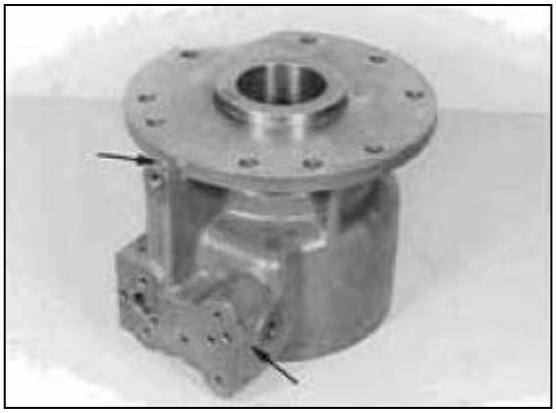

Figure 21

Mount circlip and press ball bearing against shoulder until contact is obtained.

Figure 22

Insert needle bush in the drive shaft bore until contact is obtained.

NOTE ;

Install needle bush with the reinforced shell facing the pressing tool.

(S) Driver	5870 058 013
(S) Handle	5870 260 002

Figure 23

Fix ball bearing by means of circlip.

Figure 24

https://truckmanualshub.com/

Squeeze in and engage snap rings (3 pieces).

Now, grease snap rings and align them centrically.

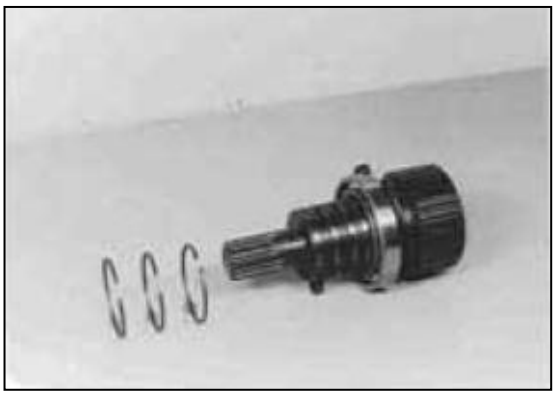

Figure 25

Press drive shaft into the housing bore until contact is obtained.

Figure 26

Preload circlip, align centrically and squeeze it into the annular groove of the housing.

Figure 27

Install radial lip-type sealing rings according to the Figure on the left.

1 = Piston

2 = Radial lip-type sealing ring (internal)

3 = Radial lip-type sealing ring (external)

4 = Pressure side

NOTE :

Sealing lip facing the pressure side !

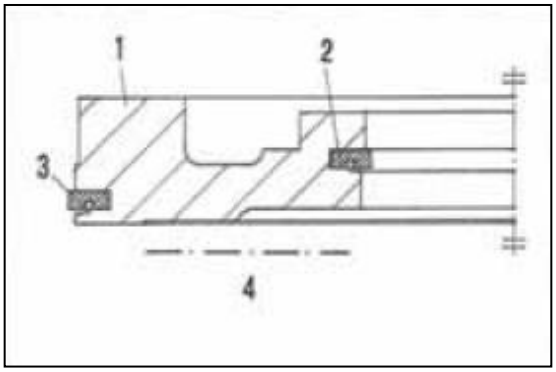

Figure 28

Oil radial lip-type sealing rings and insert piston carefully until contact is obtained.

(S) Clamping pliers 5870 900 007

Figure 29

Install compression spring and disk.

NOTE :

Install disk with the reduced plane surface facing the compression spring !

Figure 30

Preload compression spring by means of assembly jig (S) and fix it by means of circlip (Arrow).

(S) Assembly jig 5870 345 028

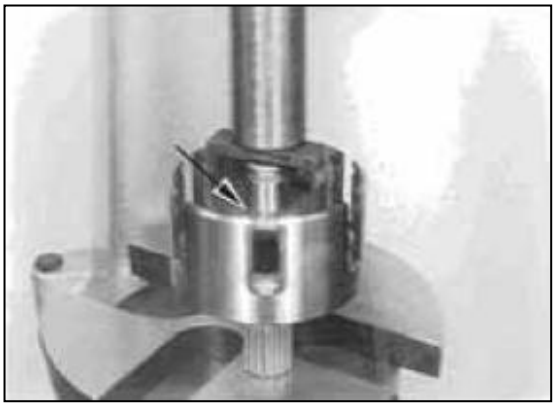

Figure 31

Assemble outer and inner plates alternately, starting with one outer plate.

NOTE ;

Quantity of outer and inner plates, see corresponding Spare Parts List !

Oil plate pack prior to the installation !

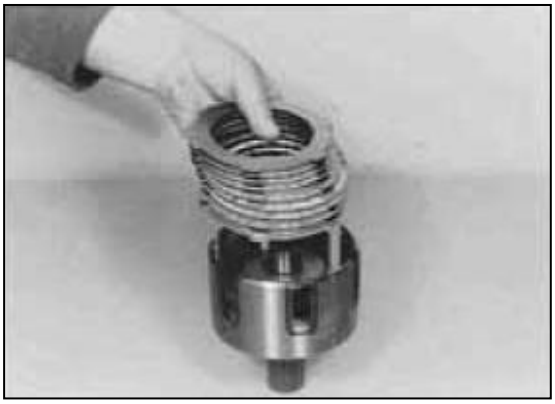

Figure 32

Mount backing plate and fix plate pack by means of circlip.

(S) Clamping pliers 5870 900 021

Figure 33

Check operation of the clutch by means of compressed air.

Figure 34

Squeeze rectangular ring into the annular groove (Arrow) and engage it.

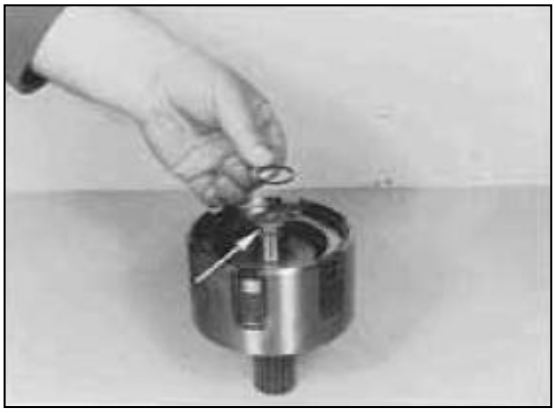

Figure 35

Press ball bearing against shoulder until contact is obtained.

Figure 36

Fix ball bearing by means of circlip.

Figure 37

Install shaft seal with the sealing lip facing the oil chamber (downwards).

NOTE :

By appliation of the prescribed driver, the exact installation position is obtained !

If the outer diameter of the shaft seal is rubberized, wet the sealing surface with spirit !

If not, use a sealing compound !

Crease scaling lip !

(S) Driver	5870 055 05«
(S) Handle	5870 260 002

Figure 38

Support the bearing inner race of the ball bearing and press cover against shoulder until contact is obtained.

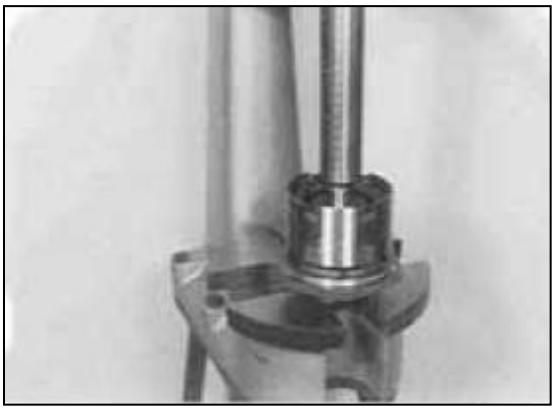

Figure 39

Heat output flange and press it against shoulder until contact is obtained.

Figure 40

Fix output flange by means of disk and hex. head screws.

Torque limit (M8/8.8) 23 Nm

NOTE :

Wet contact surface of disk as well as of the screw heads with sealing compound !

Insert hex. head screws with Loctite (Type-No. 241) !

(S) Clamping yoke 5870 240 025

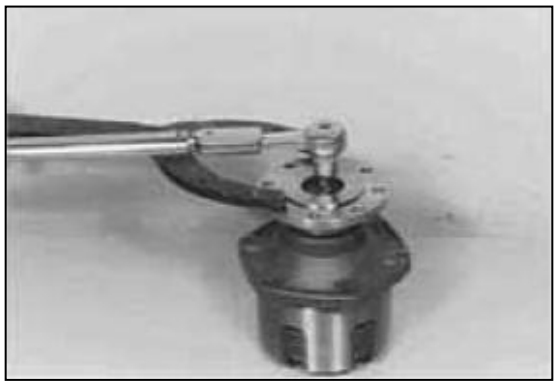

Figure 41

Install two adjusting screws and replace flat gasket.

Grease rectangular ring (Figure 35), align it centrically and introduce the complete clutch until contact is obtained.

(S) Adjusting screws (M8) 5870 204 011

Figure 42

Fasten clutch by means of hex. head screws.

Torque limit (M8/8.8) 23 Nm

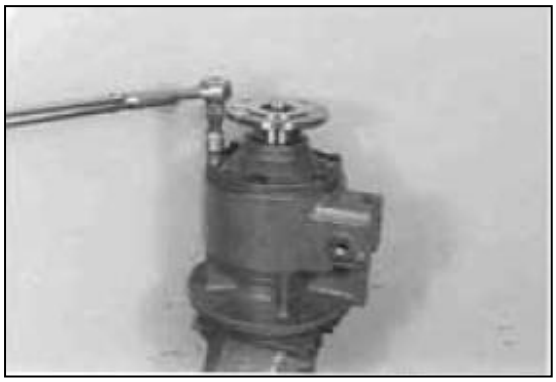

Figure 43

Make O-Ring (26 x 3 mm, see Arrow) adhere with grease in the countersinking Of the housing.

Introduce solenoid valve until contact is obtained and fasten it by means of socket head screws.

Torque limit (M 5/8.8) 5,5 Nm

NOTE ;

Employ new O-Rings for the solenoid valve !

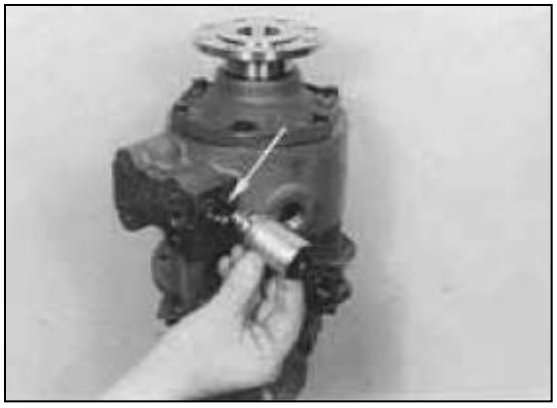

Figure 44

Install components according to the Illustration on the left.

1= Housing

2 = Spool

3= Disk

4 = Spring

5 = Disk

6 = Sleeve

7 = Spool

8 = O-Ring

9 = Cover

10 = Hex. head screw

Torque limit (M6/8.8) 9,5 Nm

NOTE:

Pay attention to the installation position of the spool (2) !

Install disk (5) with the chamfering facing the sleeve !

Install two adjusting screws and assemble flat gasket as well as shift-control housing.

Now, fasten shift-control housing by means of hex. head screws (use flat washers).

Torque limit (M8/8.8) 23 Nm

(S) Adjusting screws (M8) 5870 204 011

Install screw plug (Arrow).

NOTE :

Install new sealing ring !

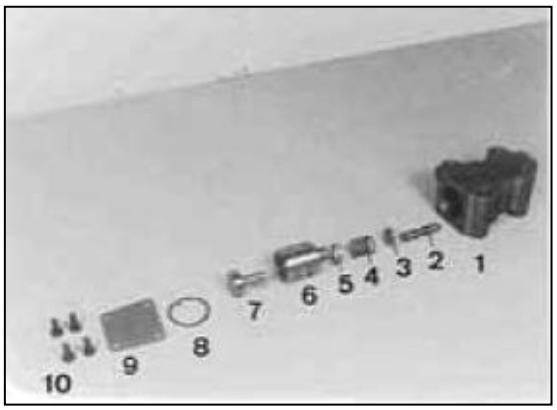

Figure 45

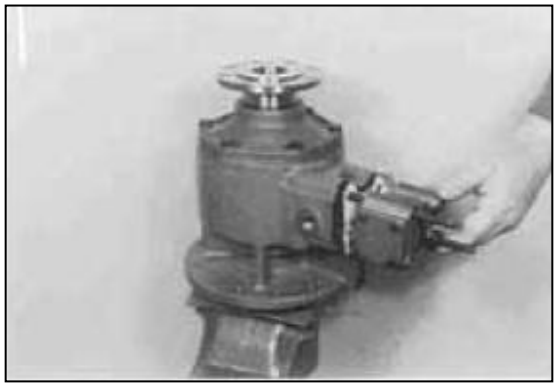

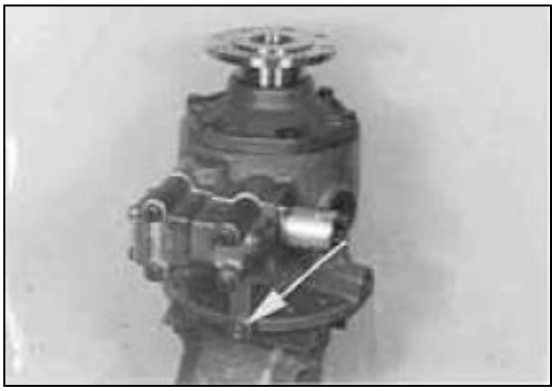

Figure 47

https://truckmanualshub.com/

FRONT AXLE

⚠ CAUTION!

Follow all safety recommendations and safe shop practices outlined in the front of this manual or those contained within this section.

Always use tools and equipment that is in good working order.

Use lifting and hoisting equipment capable of safely handling load.

Remember, that ultimately safety is your own personal responsibility.

MODEL	SERIAL NUMBER RANGE
SD310	010001 and Up

Copyright 2012 DISD

July 2012

https://truckmanualshub.com/

TABLE OF CONTENTS

GENERAL DESCRIPTION **3**
STRUCTURE CHART 3
BASIC PARAMETERS OF DRIVEG AXLE 3
INTERNAL STRUCTURE OF DRIVE AXLE 3
PARTS LIST 4
ASSEMBLY 4
HOUSING ASSEMBLY AXLE 5
ASSEMBLE OF HUB DRIVE AXLE 6
MAIN DRIVE ASSEMBLY 8
DRIVE AXLE BRAKE ASSEMBLY 10
SCHEDULED MAINTENANCE **11**
EVERY MONTH MAINTENANCE 11
EVERY HALF YEAR MAINTENANCE 11
EVERY YEAR MAINTENANCE 11
GENERAL DISASSEMBLY AND REASSEMBLY INSTRUCTIONS **12**
AXLE DISASSEMBLY 13
DISASSEMBLY OF DRIVE AXLE 13
ASSEMBLY DISMANTLING 18
AXLE REASSEMBLY **27**
AXLE ASSEMBLY 27
ASSEMBLY PARTS ASSEMBLING 33

GENERAL DESCRIPTION

Structure chart

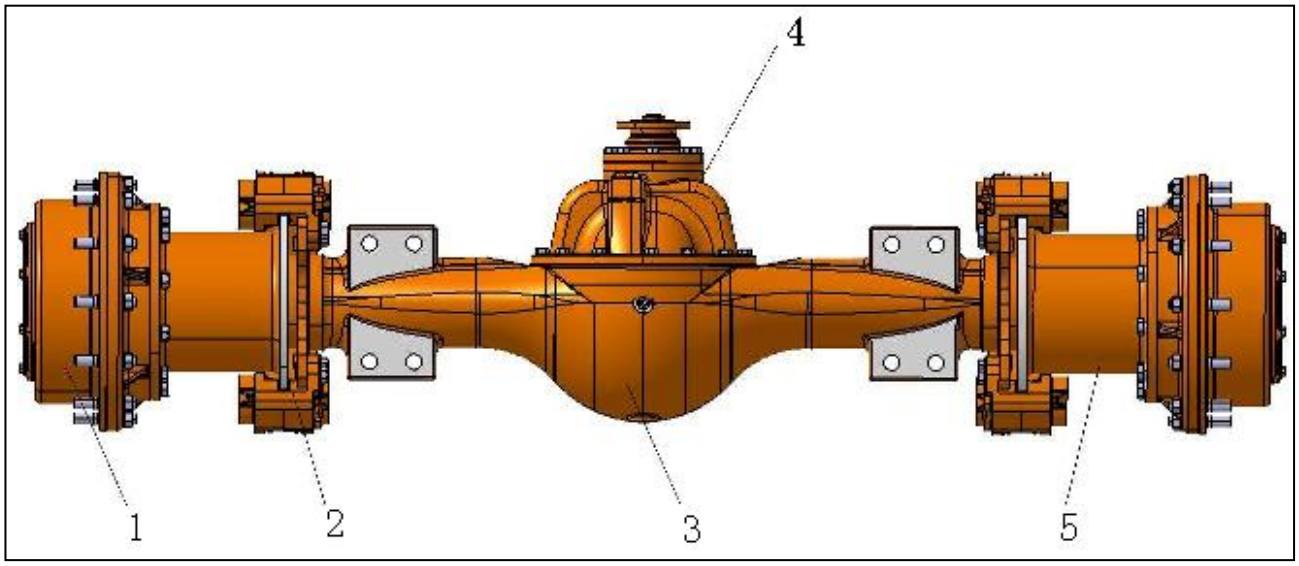

Figure 1

1.EDGE REDUCER ASS'Y 2.BRAKE CLAMP ASS'Y 3.SHELL 4.MAIN REDUCER ASS'Y 5.HUB ASS'Y

Basic parameters of drive axle:

Main drive	Type	Spiral bevel gear grade one reduction
	Reduction ratio	4.625
Hub reduction gear	Type	Grade one planet reduction
	Reduction ratio	4.94
Axle oil	GB13895-1992 gear oil	27L

Internal structure of drive axle

Drive axle assembly is one of the most important spare parts of transmission system, its main function is reduce rotation speed from gear box and increase torque, and make wheels at both sides having speed difference. Besides, it also plays the role of bearing and transmitting. Drive axle assembly of loader is mainly composed of shell, main drive (including differential mechanism), semiaxis, hub reduction gear, brake caliper assembly and other parts. Of which, the parts having reduction and differential function is main driver and hub reduction gear; power transmission between main drive and hub reduction gear is realized through semiaxis, multiple spline at both sides of semiaxis and axle shaft gear of differential mechanism and sun gear of hub reduction gear mesh with each other to realize power connection between main drive and hub reduction gear.

PARTS LIST

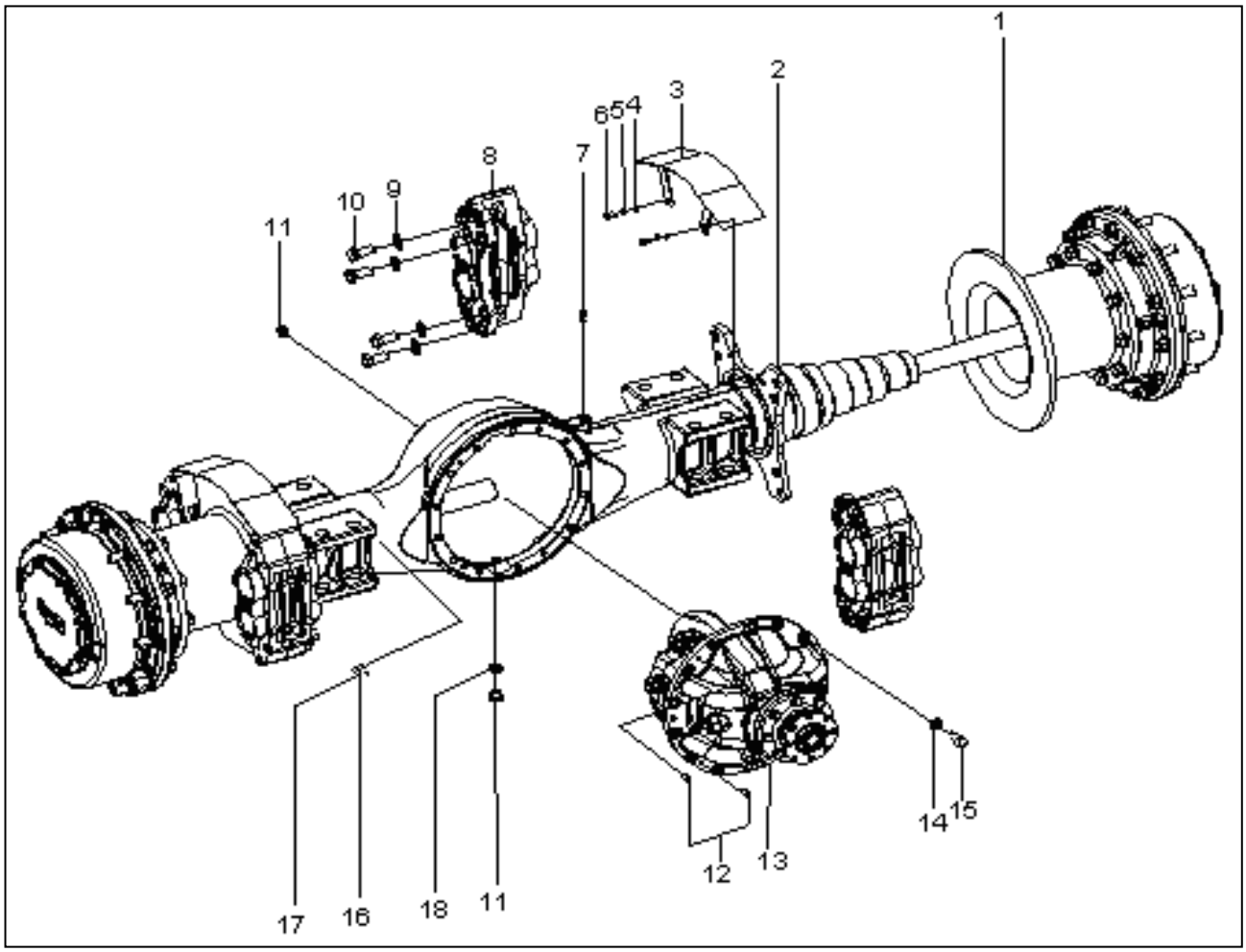

Figure 2

Reference Number	Description	Reference Number	Description
1	REDUCER ASSY,WHEEL	11	PLUG,MAGNETIC
2	HOUSING ASSY, AXLE	12	D10×30 PIN
3	COVER ASSY	130	REDUCER ASSY,MAIN
4	8 WASHER,PLAIN	14	16 WASHER, SPRING
5	8 WASHER, SPRING	15	M16×1.5×40-8.8 BOLT
6	M8×20-8.8 BOLT	16	PLETE,NAME
7	BREATHER	17	RIVET
8	BRAKE UNIT	18	WASHER,SEAL
9	20 WASHER, SPRING		
10	M20×1.5×55-10.9 BOLT		

HOUSING ASSY, AXLE

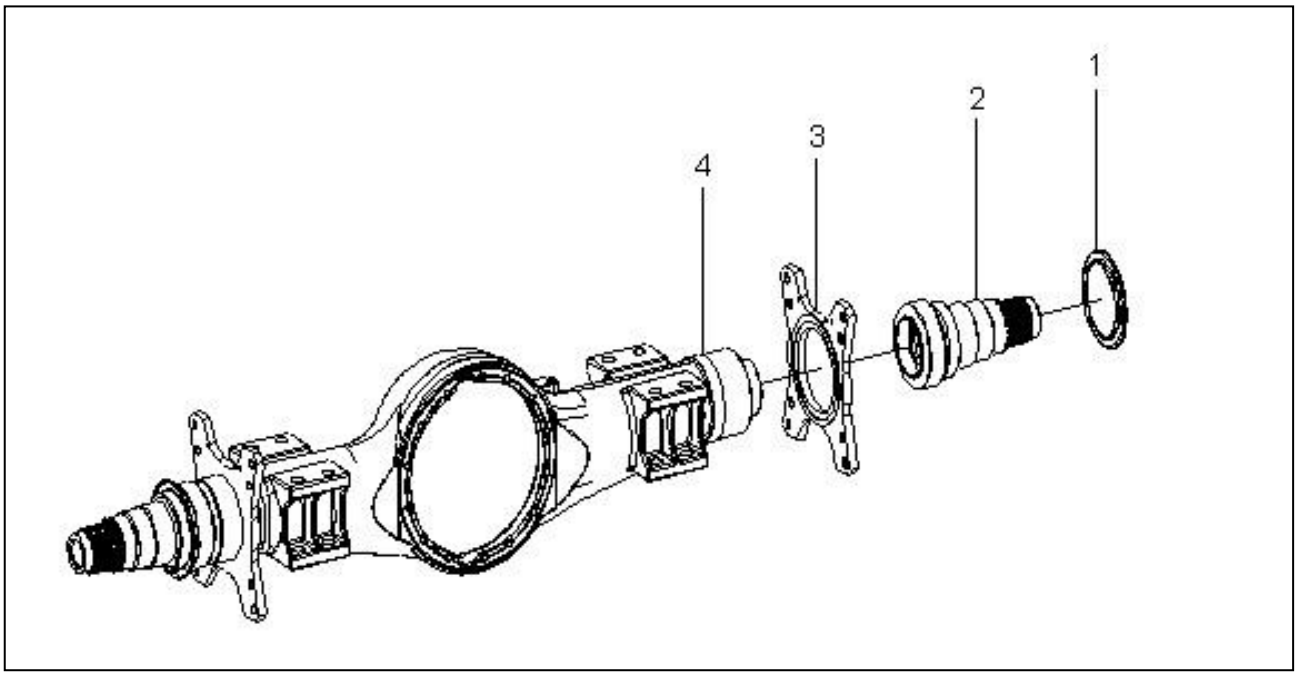

Figure 3

Reference Number	Description	Reference Number	Description
1	CAP,DUST	3	PLATE,MOUNTINGA
2	SPINDLE,DRIVE AXLE	4	HOUSING,AXLE

Hub drive axle assembly

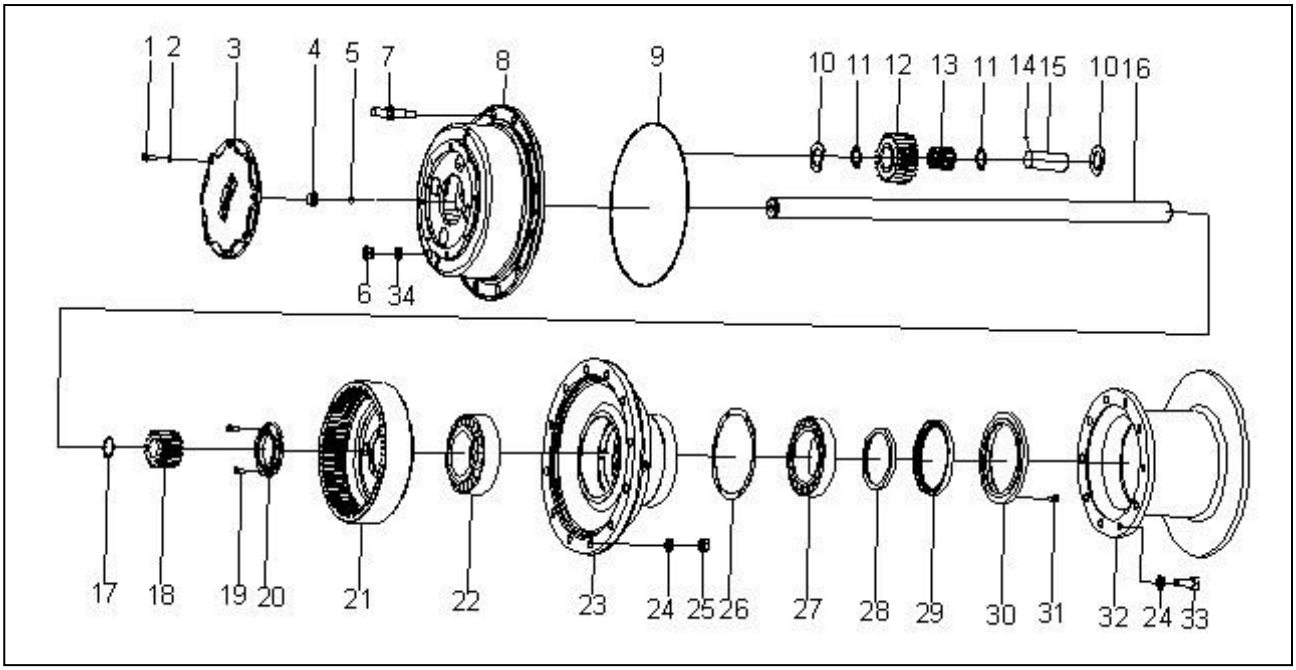

Figure 4

Reference Number	Description	Reference Number	Description
1	M10×30-8.8 BOLT	18	GEAR，SUN
2	10 WASHER, SPRING	19	BLOT
3	CAP,END	20	NUT,ADJUSTING
4	PAD	21	GEAR,RING
5	STEEL BALL	22	BEARING,TAPER ROLLER
6	PLUG,MAGNETIC	23	HUB
7	BOLT，HUB	24	20 WASHER,SPRING
8	CARRIER,PLANETARY GEAR	25	M20×1.5-8 NUT
9	RING,O	26	GASKET
10	WASHER	27	BEARING,TAPER ROLLER
11	SPACER	28	SLEEVE
12	GEAR,PLANET	29	SEAL
13	BEARING,NEEDLE	30	HOLDER,OIL SEAL
14	STEEL BALL	31	M8×20-10.9BOLT
15	SHAFT	32	DISK,BRAKE
16	SHAFT,AXLE	33	M20×1.5×50-8.8 BOLT
17	RING,RETAININ	34	WASHER, SEAL

Main drive assembly

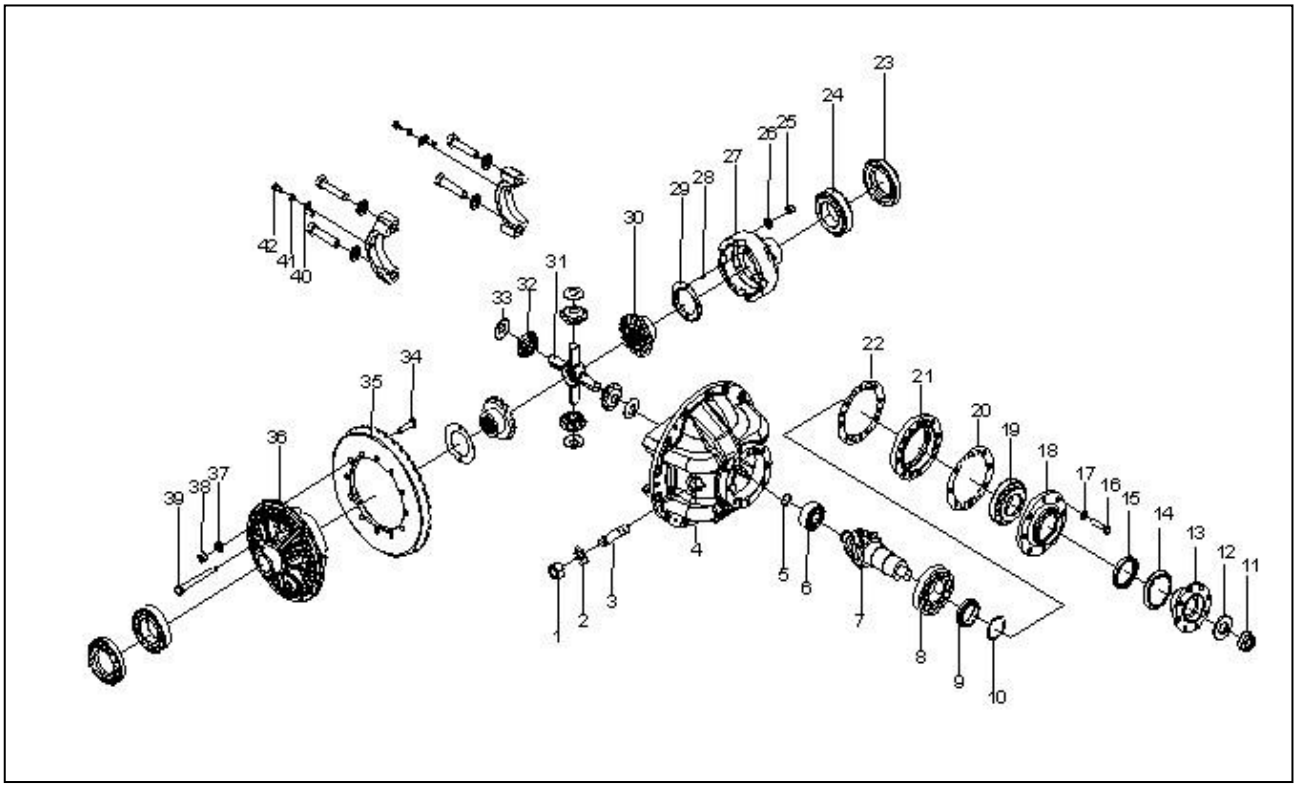

Figure 5

Reference Number	Description	Reference Number	Description
1	M27×2-05 NUT	22-1	SHIM
2	WASHER, LOCK	22-2	SHIM
3	BOLT	22-3	SHIM
4	CASE,MAIN REDUCTION	23	NUT,ADJUSTING
5	RING,RETAINING	24	BEARING,TAPER ROLLER
6	BEARING,ROLLER	25	M16×1.5-10 NUT
7	PINION	26	WASHER, PLAIN
8	BEARING,TAPER ROLLER	27	CASE,DIFFERENTIAL
9	SLEEVE	28	PIN
10-1	SHIM	29	WASHER
10-2	SHIM	30	GEAR,DIFFERENTIAL
10-3	SHIM	31	SPIDER
10-4	SHIM	32	GEAR,DIFFERENTIAL
11	NUT	33	WASHER
12	WASHER, PLAIN	34	BOLT
13	FLANGE,ASSY	35	GEAR,HELICAL
14	CAP,DUST	36	CASE,DIFFERENTIAL
15	SEAL	37	WASHER
16	M14×60-8.8 BLOT	38	M16×1.5-10 NUT
17	14WASHER, SPRING	39	M16×1.5×150-10.9 BLOT
18	HOLDER，OIL SEAL	40	PLATE,FIXED
19	BEARING,TAPER ROLLER	41	10WASHER,SPRING
20	GASKET,FLANGE	42	M10×1×20-8.8BOLT
21	SUPPORT,BEARING		

Drive axle brake assembly

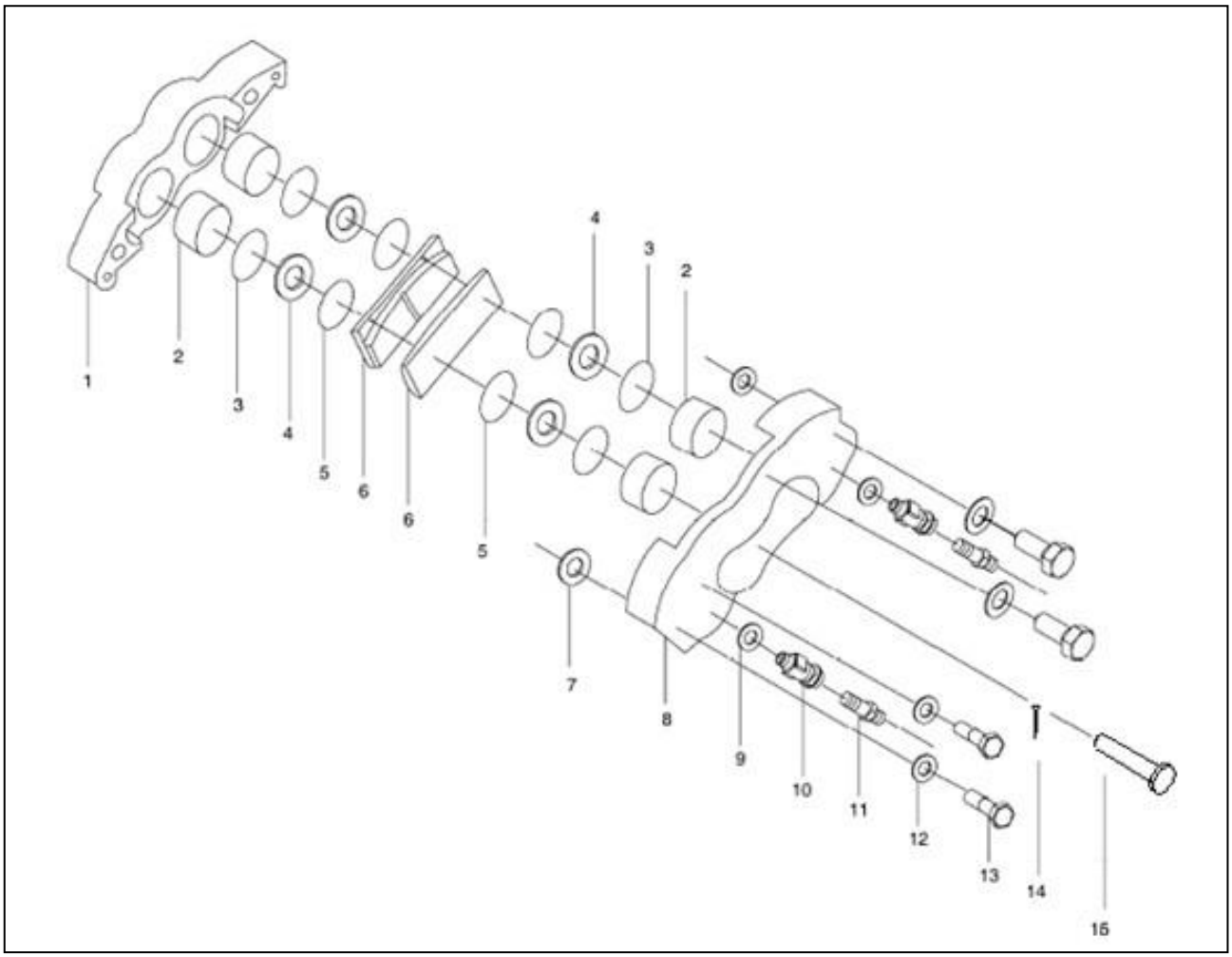

Figure 6

Reference Number	Description	Reference Number	Description
1	EXTERIOR BRAKE	9	20×1.6 “O” RING
2	PISTON	10	SUPPORT,DEFLATING VALVE
3	RECTANGULAR SEAL	11	DEFLATING VALVE
4	DUST CASE	12	WASHER
5	BLOCK RING	13	BOLT
6	BRAKE DISK	14	SPLIT PIN
7	20×2.4 “O” RING	15	PIN
8	INNER BRAKE		

SCHEDULED MAINTENANCE

Oil of new drive axle must be replaced after working for 15 days (about 100 working hours), oil shall be replaced once after working for every six months (about 1200 working hours) in following days.

Every month maintenance：

1. Check abrasion condition of brake disc, if there is disruptive abrasion; please handle in time if there is any.
2. Check abrasion condition of brake block to guarantee separation and reunion of brake caliper is flexible; it shall be replaced in time when brake block is wearing close to abrasion line (at the bottom of groove).
3. Check if oil level of shell complies with requirements, please add new oil if the oil level descends.
4. Keep axle clean, keep vent pipe smooth, and avoid silt going into axle. Check loosening condition of all fasteners, especially rim nuts, if it is loosed, please refasten again.

Every half year maintenance：

Lubrication oil in axle shall be replaced every half a year, different brands of lubrication oil shall be adopted for different areas and seasons. Please refer to 4.2 for oil replacing method.

Every year maintenance：

Overhaul checking every working year:

1. Check the gap, mesh and abrasion condition of spiral bevel gear of main reducer.
2. Check abrasion condition of differential mechanism gear.
3. Check abrasion condition of hub gear.
4. Check abrasion condition of needle bearing of hub planetary gear.
5. Requirements of installation and debugging items after overhaul checking:

1） After assembling, axle shaft gear and bevel gear shall move flexibly with hand touching rather than locking. The Min. gear backlash of gear is 0.18-0.23mm. Tooth length and tooth height of contacting area of two gears cannot be less than 50%.

2） In order to guarantee enough bearing rigidity of active spiral gear, before assembling oil seal and sealing cover, adopt gradually reducing spacer shim between wo tapered roller bearing to give 1.0-1.5N.m preloaded torque to roller bearing.

3） Gear backlash between the driving and driven spiral bevel gear is 0.25-0.45mm, the changing amount cannot be more than 0.15mm, gear backlash can be realized through adjusting nuts of both sides of differential mechanism and spacer shim of bearing sleeve. Tooth surface contacting area shall guarantee direction of tooth length and tooth height is not less than 50%, contacting position shall be at the middle side of tooth surface and closer to the smaller side.

4） Adjusting of bearing clearance of shell at both sides of drive axle: Fasten adjusting nuts, give 28-38N.m preload to shell roller bearing, and then lock two round nuts with screw fastening

https://truckmanualshub.com/

GENERAL DISASSEMBLY AND REASSEMBLY INSTRUCTIONS

⚠ WARNING!
Never use gasoline, solvents, or other flammable fluids to clean components. Only use approved commercial solvents that are nonflammable and nontoxic.

IMPORTANT
Use only GENUINE DOOSAN SPARE PARTS to warrant proper operations and prevent interchangeability problems.

GENERAL INSTRUCTIONS

1. Thoroughly clean and dry axle before disassembly.
2. All components should be thoroughly cleaned and dried before reassembly. Dirt, chips, and foreign material may cause failures.
3. All ducts and castings should be thoroughly cleaned and dried to remove dirt, chips, and foreign material to prevent damage after reassembly.
4. Reassembly should be done in a clean shop, and should be as dust free as possible.
5. Make sure tools and equipment are at hand.
6. When reassembling Daewoo strongly recommends to replace the following parts with new.
   - Seal Rings.
   - O-rings.
   - Gaskets.
   - Threaded rings with notched collar.
   - Any component damaged during disassembly.
7. When mounting heat fitted components, make sure of their proper position and direction of assembly, after they have cooled.
8. To heat bearings, use proper heating plates, piping, or suitable ovens.

   NOTE: *Never heat parts by using a torch. Oil bath, heated by a torch, maybe used to warm components.*
9. Lubricate all sections concerned when reassembling shafts, bearings, etc.
10. Lubricate O-rings before installing them in relevant seats to prevent kinking during assembly, such a position would impair proper sealing.
11. Replace gears only in matched sets to make sure of proper tooth mating.

AXLE DISASSEMBLY

Drive axle disassembly

1. Put drive axle on supporting and make sure main driver assembly is upward.

Figure 7

2. Dismantle brake caliper dust cover

Loosen bolts of dust cover with tools of relative specifications (such as sleeve, open end wrench, etc, same as following situation, which will not state again).

Figure 8

3. Dismantle brake caliper assembly

Loosen the connection bolts between brake caliper and brake caliper support, dismantle brake caliper assemble.

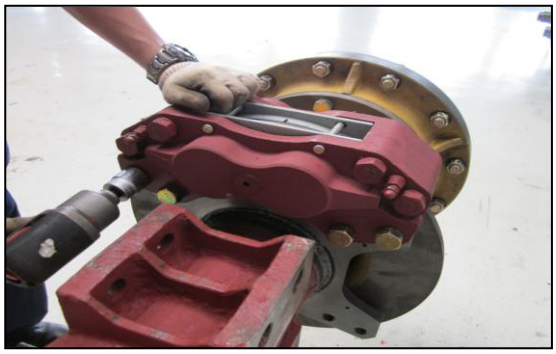

Figure 9

4. Release gear oil from

Loosen hub oil releasing drain plug and shell oil releasing drain plug, turn on slowly with hands to avoid oil spilling.

Note： *Store gear oil with clean container.*

Figure 10

5. Release gear oil from shell

Turn on oil releasing bolts axle end cap to release gear oil.

Note：*Store gear oil with clean container.*

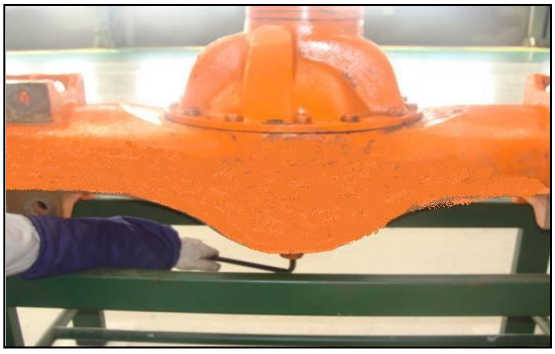

Figure 11

6. Dismantle end cap

Loosen connection bolts between planet carrier and end cap, then get end cap from hub reducer assembly with jackscrew, dismantle end cap.

Figure 12

7. Dismantle locating block

Take down locating block with hands.

Note：*If it is tight when taking down, please use assistant tools to pry out.*

Figure 13

8. Dismantle stop collar

Dismantle stop collar from semiaxis with stop collar pincers.

Note: *Before dismantling stop collar, pull out a section of semiaxis from shell.*

Note: *It must clamp firmly when using stop collar pincers to avoid safety hazard when it is popup.*

Figure 14

9. Dismantle sun gear

Dismantle semiaxis from sun gear.

Figure 15

10. Dismantle semiaxis

Take semiaxis from shell slightly.

Figure 16

11. Hub reducer

First loosen rim bolts with relative tools, then loosen rim from planet carrier with jackscrew and dismantle planet carrier assembly.

Note: *Please slowly loosen planet carrier to avoid safety hazard resulted from dropping of planet carrier assembly.*

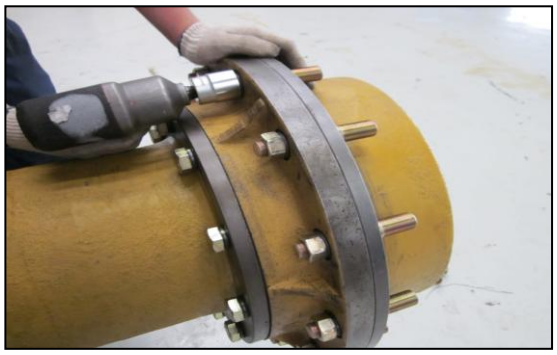

Figure 17

12. O Ring

Dismantle O ring from planet carrier.

Figure 18

13. Dismantle round bolts

Pry up wire of bolt, loosen the clamp bolt of round nuts ,then dismantle round nuts.

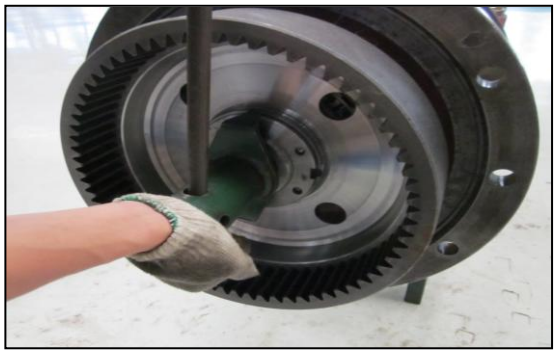

Figure 19

14. Dismantle internal gear

Take internal gear out by slightly rocking.

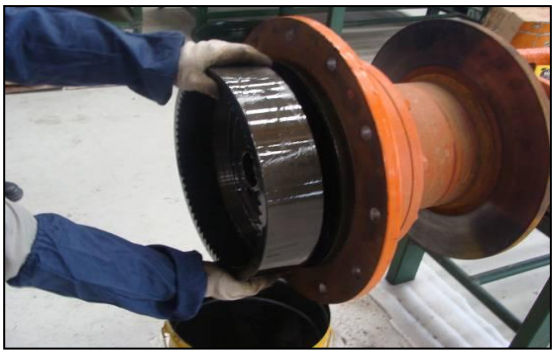

Figure 20

15. Dismantle wheel hub assembly

Take wheel hub assembly from supporting axle.

Note: *During hanging and dismantling process, please keep axis of wheel hub assembly is in line with axis of hub reduction supporting axle to avoid scratching oil surface and internal spare parts during dismantling process.*

Figure 21

16. Dismantle spacer bush
Take out spacer bush.

Remark：Dismantle all parts at the other side with the same method.

Figure 22

17. Dismantle main drive assembly

Dismantle connection bolts between main drive and shell assembly, take out main drive with jackscrew, and suspend main drive assembly.

Note: *When suspending main drive assembly, guarantee suspending and dismantling tools are at the above of main drive assembly to avoid spare parts inside are knocked again during suspending and dismantling process.*

Figure 23

Assembly dismantling

Dismantle planet carrier assembly

1. Put planet carrier on working platform horizontally.

Figure 24

2. Take out planet axle with tools.

Figure 25

3. Take out steel balls.

Figure 26

4. Take out planet wheel and gasket.

Figure 27

5. Take out baffle ring and quill roller from inside of planet wheel.

Figure 28

Dismantle hub assembly

1. Put hub assembly on working platform.

Figure 29

2. Loosen connection bolts between brake disc and hub.

Figure 30

3. Take out brake disc.

Figure 31

4. Loosened bolt of oil seal seat ,Take out oil seal seat and asbestos gasket.

Figure 32

5. Take out bearing.

Figure 33

Dismantle main drive assembly

1. Put main drive assembly (input flange upward) horizontally and fixed on supporting.

Figure 34

2. Dismantle thrust bolts.

Figure 35

3. Dismantle locknut and washer.

Figure 36

4. Take out input flange.

Figure 37

5. Dismantle connection bolts between sealing cover and bearing sleeve, take out sealing cover.

Figure 38

6. Turn main drive for 180°,dismantle bolts of Fastening lock plate, take out lock plate.

Figure 39

7. Mark with signs so that they can be back to original position during assembling.

Figure 40

8. Dismantle connection bolts of bearing seat and take out bearing seat.

Figure 41

9. Dismantle adjusting nuts.

Figure 42

10. Dismantle bearing outer ring.

Figure 43

11. Hang out differential mechanism assembly.

Note: *Keep balance when hanging out to avoid safety hazard.*

Figure 44

12. Separate active spiral bevel gear assembly and bracket with jackscrew.

Figure 45

Dismantle differential assembly

1. Put differential assembly vertically on working platform, and guarantee it is stable.

Figure 46

2. Dismantle bearing on left and right shell of differential mechanism.

Figure 47

3. Loosen connection nuts between driven spiral bevel gear and right shell of differential mechanism, dismantle driven spiral bevel gear.

Note: *Check or mark sign before dismantling driven spiral bevel gear so that it can be assembled to original position.*

Figure 48

4. Loosen connection screws of left and right shell, separate shell of differential mechanism.

Note: *Before taking out driven spiral bevel gear, please checkor mark assembling sign first so that it can be placed back to the original position.*

Figure 49

5. Take out semiaxis gear gasket and semiaxis gear.

Figure 50

6. Take out joint cross and differential gear together, take out differential gear gasket and gear from joint cross.

Figure 51

7. Take out semiaxis gear gasket and gear.

Figure 52

Dismantle active spiral bevel gear assembly

1. Put active spiral bevel gear assembly on working platform, support flange of bearing sleeve, clamp down on thread end of active spiral bevel gear assembly with down device.

Note: *Do not clamp too much to avoid damaging flange, pull out bearing sleeve from active spiral bevel gear assembly.*

Figure 53

2. Reverse bevel gear assembly and take out inner bearing ring

Figure 54

3. Take out bearing block.

Figure 55

4. Take out adjusting gasket.

Figure 56

5. Take out spacer bush.

Figure 57

AXLE REASSEMBLY

Axle assembly

1. Shell

Clean shell and suspend with special supporting. Fasten gummed plug screw at oil inlet and oil filler.

Note: *Plug screw fastening torque：175 ~ 235 Nm*

Note: *Letai 262 taper thread sealant.*

Figure 58

2. Spacer bush

Overturn shell and install bearing spacer bush.

Chamfered side of the spacer faced axle hump.

Figure 59

3. Wheel hub assembly

Coat lubrication grease on hub supporting axle of shell assembly, assembly wheel hub assembly on both sides of supporting axle of shell assembly. Assembly bearing inner ring on the larger side of wheel hub.

Figure 60

4. Internal gear

Assemble internal gear of drive axle at multiple spline at the end of supporting bearing.

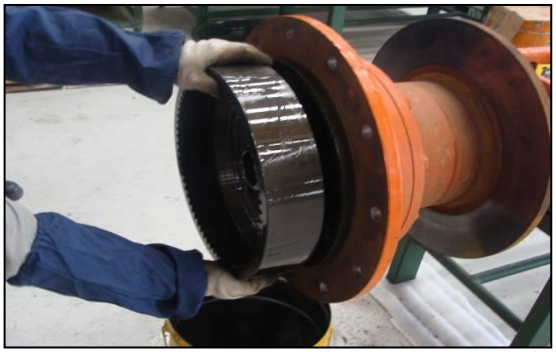

Figure 61

5. Round nuts

(1)Assemble round nuts and fasten. Knock internal gear slightly with copper stick to make internal gear in place.

Figure 62

Note: *Grapple theΦ22.5 hole on wheel hub with push and pull ergometer, pull ergometer along with tangential direction, indication on ergometer is 160±10N, if the indication is not within the range of 160±10N, adjust tightness degree of round bolts according to the indication until it is within the range of 160±10N. In the end, coat Letai 262 thread fastening sealant for 5~6 from the second thread hole of internal gear (form a liquid level at 1/3 circle of thread), then fasten bolts, and fix round nuts.*

Note: *Before dynamometry, rotate hub wheel for more than 5 times.*

Letai 262 thread fastening sealant

Figure 63

(2) Tighten the bolt of round nuts ,then tighten with Wire.

Note: *fastening torque：60±10Nm*

Figure 64

6. Assemble O sealing ring

Assemble O sealing ring on hub assemble.

Figure 65

7. Install planet carrier assembly

Assemble planet carrier assembly and O sealing ring on wheel hub with rim bolts, gaskets and nuts.

Note: *fastening torque：500±10Nm*

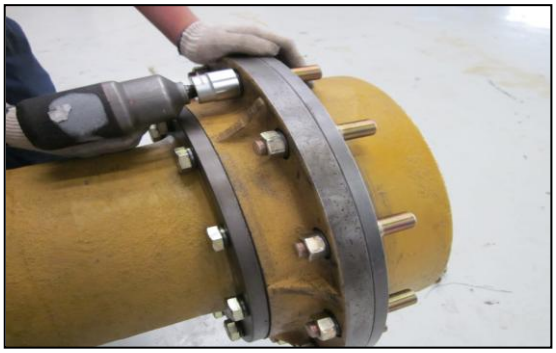

Figure 66

8. Assemble semiaxis

Install semiaxis assembly with sun gear on hub (pay attention to semiaxis multiple spline and gear assembly).

Figure 67

9. Assemble sun gear

Assemble sun gear at one side of semiaxis with baffle ring groove

Figure 68

10. Assemble baffle ring

Assemble baffle ring with baffle ring used for axle.

Note: *It must be clamped firmly when using baffle ring pincer to avoid safety hazard when it is popping out during assembling process.*

Figure 69

11. Assemble locating block

Stake steel ball on locating block, it can rotate flexibly after staking steel ball.

Figure 70

12. Assemble end cap

Assemble end cap

Note: *Fasten all screws according to symmetrical and crossing principle.*

Fastening torque：110 ~ 130Nm,

Letai Silicone Rubber 598 planar sealant

Letai 262 thread fastening sealant

Figure 71

13. Assemble brake caliper assembly

Assemble disc brake on brake caliper supporting, fix with bolts and gaskets.

Note: *Fastening torque：550±40Nm*

Coat Letai 262 thread fastening sealant at 20mm length at thread end during assembling.

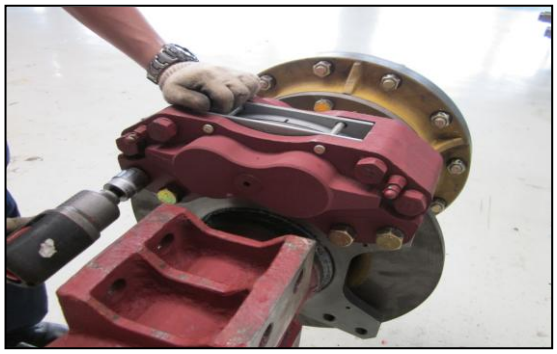

Figure 72

14. Assemble dust cover on brake caliper

tighten bolts of the dust cover with appropriate tooling.

Note: *Fastening torque：25±5 Nm,*

Figure 73

15. Assemble main drive assembly

Coat Letai 598 silicon rubber surface sealant at the joint surface between shell and bracket, coatφ3～φ6 glue soluting ring with sealing surrounding inside of thread hole at the large end of shell. The coated sealant cannot be in the air for more than ten minutes.

Note: *Letai 598 silicon rubber surface sealant*

Figure 74

16. Assemble main drive

Hand up main drive assembly with overhead crane, put main drive at main drive shell of the axle, assemble locating pin.

Figure 75

17. Assemble bolts

Coat proper Letai 262 threat fastening sealant on bolts, the coating position is 15mm length at thread end. Fasten main drive assembly and shell assembly with bolts and gaskets.

Note: *Fastening torque：180 ~ 210Nm*

Letai 262 threat fastening sealant

Fasten all screws according to symmetrical and crossing principle.

Figure 76

18. Add oil

Add 17L 85W/90 GL-5 gear oil (GB13895-1992) in axle bag of shell and fasten plug screws.

Note: *use 85W/90 GL-5 gear oil*

Anaerobic type pipe threat sealant

Fastening torque：175 ~ 235 Nm

Figure 77

Inject 5L (subject to overflowing from planet carrier) 85W/90 GL-5 gear oil (GB13895-1992) into two hub reducers and fasten plug screws.

Note: *85W/90 GL-5 gear oil*

Anaerobic type pipe threat sealant

Fastening torque：175 ~ 235 Nm

Figure 78

Assembly parts assembling

Install hub assembly

1. Keep the large end of hub upward, assemble bearing outer ring .

Figure 79

2. turn over to keep the small end of hub upward and assemble bearing outer ring.

Figure 80

3. Bearing inner ring assembled.

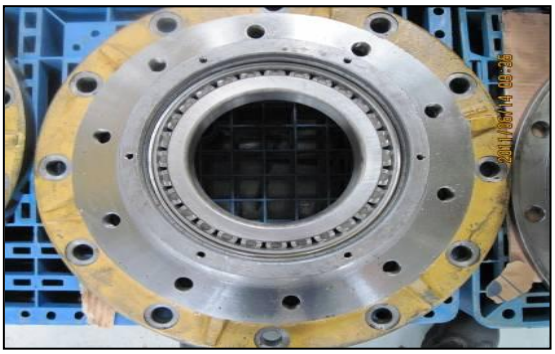

Figure 81

4. Check completeness of oil seal. Coat lubrication oil in oil seal seat evenly, and assemble oil seal in oil seal seat.

Figure 82

5. Assemble asbestos gasket before oil seal on the small side of hub,then screw the bolts tight

Note: *Fastening torque：40 ~ 10Nm*

Letai 262 threat fastening sealant

Fasten all screws according to symmetrical and crossing principle.

Figure 83

6. Assemble brake disc on hub and fasten with bolts and gaskets.

Note: *Fastening torque：360±20Nm*

Fasten all screws according to symmetrical and crossing principle.

Figure 84

Assemble planet carrier assembly

1. Stick lubrication grease quill roller (27 units each) on walls of inner holes of planet gears, assemble baffle ring in the middle of quill roller.

Figure 85

2. Assemble gaskets at both sides of planet gear,.

Figure 86

3. Assemble the planet gear with quill roller to the seat hole of planet carrier.

Figure 87

4. Assemble steel balls in holes of planet gear shaft, steel ball shall aim at semi circle of planet carrier, go through the inner hole of planet gear and gasket and assemble on planet carrier. After assembly, planet gear shall rotate flexibly there is no blocking.

Figure 88

Install of main drive assembly

1. Assemble rolling bearing on bear neck of the terminal with pressure machine, rotate to the left on active spiral bevel gear front axle, and rotate to the right side.

Figure 89

2. Assemble circlip.

Figure 90

3. Press inner ring into rolling bearing with press ure machine at the other side

Figure 91

4. Turn over gear and assemble outer ring of gear

Figure 92

5. Install spacer bush

Figure 93

6. Install gaskets

Figure 94

7. Install bearing sleeve

Figure 95

8. Press inner ring of antifriction bearing in the end.

Note: when assembling main reducer, taper rolling bearing shall have certain tightness that is on the basis of eliminating bearing clearance and give certain preload. The purpose is to reduce axial force caused during transmission process which will result in axial displacement, improve supporting rigidity, and guarantee normal mesh of bevel gear pair. But if it is too tight, it will accelerate abrasion of taper rolling bearing. Press with P= 5420 kg pressure at the top side of inner ring of rolling bearing, grapple Φ14.5 hole with pull and push ergometer, pull ergometer along with tangential direction, indication of ergometer when pushing shall be 17.34-30.06N, if the indication is not within the range of 17.34-30.06N, increase or reduce thickness of spacer shim, repeat the above process until the indication is within 17.34-30.06N.

Figure 96

Figure 97

Assemble of differential assembly

1. Assemble rolling bearing at the bearing position of right shell terminal of differential mechanism.

Figure 98

2. Assemble rolling bearing at the bearing position of left shell terminal of differential mechanism.

Figure 99

3. Assemble pins at the position of left shell terminal of differential mechanism.

Figure 100

4. Assemble semiaxis gear

Assemble semi axis gear gasket in left shell of differential mechanism

Note: *the side of gasket with groove shall toward to the direction of joint cross*

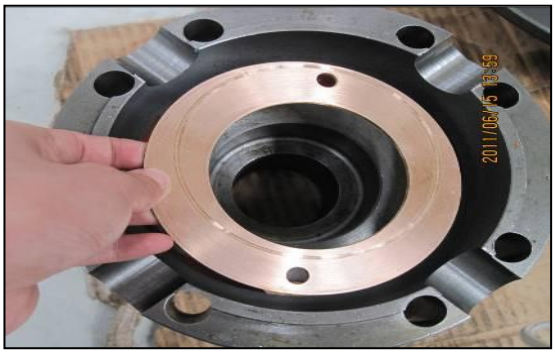

Figure 101

5. Install semiaxis gear

Figure 102

6. Assemble joint cross assembly

Assemble bevel gear (internal of small terminal) and bevel gear gasket on four axles of joint cross.

Note: *Lubricate with grease when assembling bevel gear and bevel gear gasket*

Figure 103

7. Differential mechanism shell

Assemble joint cross in right shell of differential mechanism to make bevel gear and semiaxis gear mesh, turn over left shell assembly of differential mechanism to assemble right shell assembly of differential mechanism, join right shell and left shells of differential mechanism with bolts and fasten with gaskets and nuts.

Note: *Nuts fastening torque: 180 ~ 210Nm*

Note: *Guarantee assembling mark of right shell and left shell of differential mechanism align.*

Note: *Coat proper Letai 262 thread fastening sealant at the thread bottom within 12mm length.*

Note: *After assembling, semiaxis gear and taper gear can be rotated manually without blocking.*

Figure 104

Figure 105

8. Install driven spiral bevel gear

Aim at assembling mark, fasten driven spiral bevel gear (Rotate to the left for rear axle, rotate to the right for front axle) with bolts, gaskets and nuts, and fasten screws.

Note: *Nuts fastening torque 280±25Nm。*

Note: *Coat proper Letai 262 thread fastening sealant at the thread bottom within 12mm length.*

Note: *Judging method of left and right spiral: face to positive side of gear, right rotation refers to the spiral gear rotates to large terminal clockwise; on the contrary, left rotation refers to the spiral gear rotates to large terminal anticlockwise.*

Figure 106

Install main reducer

1. Assemble copper gasket on bracket. Apply a small amount of sealant on upper and lower sides of the gasket and smooth.

Note: *Make 3 rectangle hole of the copper gasket aimed 3 oil port of the bracket.*

Note: *Coat proper Letai 598 fastening sealant*

Figure 107

2. Install the assembled active sprial bevel gear assembly in bracket

Figure 108

3. Coat sealant line with diameter 2-4mm at the small end, refer to the picture for sealant line; sealant line and diameter of bearing sleeve (the other side of gasket) shall be done according to the above requirements.

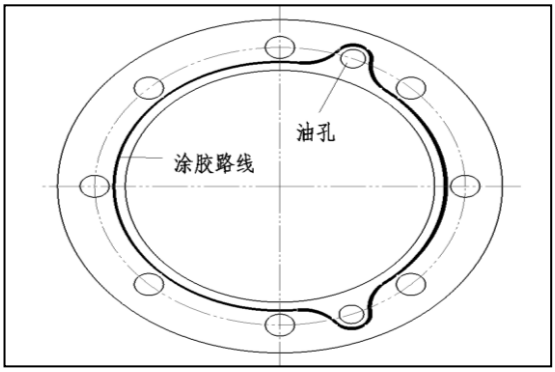

Figure 109

4. Assemble sealing cover

Press oil seal in sealing cover.

Note: *Coat a layer of proper lubrication oil when assembling oil seal.*

Figure 110

5. Install input flange

Put gasket on the end face of bracket, install sealing cover assembly (coat lubrication grease on oil seal according to common requirements of drive axle), and connect with bracket with bolts and gaskets.

Note: *Screw fastening torque 145±5Nm*

Figure 111

6. Install input flange.

Figure 112

7. Coat sealant on one end face of gasket, the surface with sealant is downward, install gasket.

Note: *Letai 598 sealant*

Figure 113

8. Install round screws and fasten.

Note: *Screw fastening torque：320 ~ 400 Nm*

Note: *Letai 598 sealant*

Figure 114

9. Install differential assembly

Turnover tracket, install differential assembly in bracket.

Figure 115

10. Install bearing seat with gaskets and bolts (bolts shall be a little bit tight). Install adjustable nuts.

Note: *Two bearing seats cannot be exchanged.*

Note: *Coat proper thread sealant on the length of 15～25mm on thread end surface of bolts.*

Figure 116

Figure 117

11. Adjust spiral bevel gear

Adjustment of spiral bevel gear mesh condition refers to adjustment of mesh zone and back lash, when adjusting back lash of spiral bevel gear pair, dial gauge can be used to touch the gear surface of large side edge of driven spiral bevel gear, then rotate driven spiral bevel gear to measure back lash directly, the clearance shall be 0.2～0.35mm. Adjusting method of back mesh is

Figure 118

to twist adjusting nuts to change position of driven spiral bevel gear (when it is necessary, move active spiral bevel gear assembly to adjust). If the clearance is larger than the regulated value, approach active spiral bevel gear from driven spiral bevel gear; otherwise be away from it. In order to keep the adjusted preload of taper rolling bearing of differential mechanism, twisting numbers of adjusting nuts at one side shall be equal to twisting numbers of adjusting nuts at the other side.

When adjusting contact zone of spiral bevel gear pair, coat red color (red lead powder) on driven spiral bevel gear teeth (coat three teeth usually), rotate driven spiral bevel gear with hands repeatedly, check contacting moulage. Adjust the correct position of spiral bevel gear mesh moulage: it shall not be less than 50% along with teeth height direction and teeth length direction, mesh moulage of driven bevel gear shall be close to the center, and in the middle of teeth height, smaller than the small end on teeth length direction. Increasing preload of differential bearing: after adjusting back lash of spiral bevel gear well, it shall guarantee the clearance between taper rolling bearing at both sides of differential mechanism is 0. Following is the adjusting methods.

Adjustment of contact zone and back lash when installing spiral bevel gear

Contact zone of driven spiral bevel gear	Adjusting method	Gear moving direction
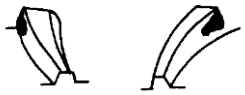	Move driven gear to the direction of active gear, if the clearance is too small, move active gear outside	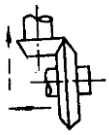
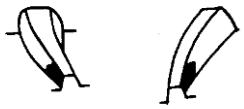	Move driven gear away from active gear, if the clearance is too large, move active gear inside	
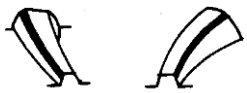	Move active gear to the direction of driven gear, if the clearance is too small, move driven gear inside and outside	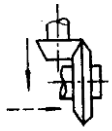
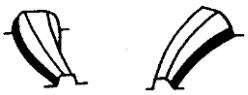	Move active gear away from driven gear, if clearance is too large, move driven gear inside	

Method of adjusting mesh zone is usually increasing and decreasing adjusting gaskets and rotating adjusting nuts. Adjusting of contact zone will affect performance and service life greatly, it shall be carried out carefully.

Note: *After adjusting, clean off red lead powder.*

12. Install locking plate

Fasten the fixed bolts on bearing seat, fastening torque is 410 ~ 510Nm. Put locking plate at the right position, fix it on bearing seat with bolts and gaskets, and fasten fixing bolts of locking plate.

Note: *Fastening torque 40 ~ 50Nm*、460±50Nm
Note: *Coat proper Letai 262 thread fastening sealant on 5-10mm length at the end surface of fixing bolt.*
Note: *Coat Letai 262 thread fastening sealant*

Figure 119

13. Install thrust bolts

Overturn carrier, press copper cover into the side with thrust bolts, twist into the center of carrier, make copper contact with the back of driven spiral bevel gear of differential assembly, reverse for 1/6-1/4 circles, fasten with nuts and lock plate.

Note: *Letai 598 sealant*

Figure 120

14. Bend one of the teeth of lock pate to avoid loosening of nuts.

Figure 121

https://truckmanualshub.com/

REAR AXLE

⚠ CAUTION!
Follow all safety recommendations and safe shop practices outlined in the front of this manual or those contained within this section. **Always use tools and equipment that is in good working order.** **Use lifting and hoisting equipment capable of safely handling load.** **Remember, that ultimately safety is your own personal responsibility.**

MODEL	SERIAL NUMBER RANGE
SD310	010001 and Up

Copyright 2012 DISD

July 2012

https://truckmanualshub.com/

TABLE OF CONTENTS

GENERAL DESCRIPTION **3**
STRUCTURE CHART 3
BASIC PARAMETERS OF DRIVEG AXLE 3
INTERNAL STRUCTURE OF DRIVE AXLE 3
PARTS LIST 4
ASSEMBLY 4
HOUSING ASSEMBLY AXLE 5
ASSEMBLE OF HUB DRIVE AXLE 6
MAIN DRIVE ASSEMBLY 8
DRIVE AXLE BRAKE ASSEMBLY 10
SCHEDULED MAINTENANCE **11**
EVERY MONTH MAINTENANCE 11
EVERY HALF YEAR MAINTENANCE 11
EVERY YEAR MAINTENANCE 11
GENERAL DISASSEMBLY AND REASSEMBLY INSTRUCTIONS **12**
AXLE DISASSEMBLY **13**
DISASSEMBLY OF DRIVE AXLE 13
ASSEMBLY DISMANTLING 17
AXLE REASSEMBLY **26**
AXLE ASSEMBLY 26
ASSEMBLY PARTS ASSEMBLING 32

GENERAL DESCRIPTION

Structure chart

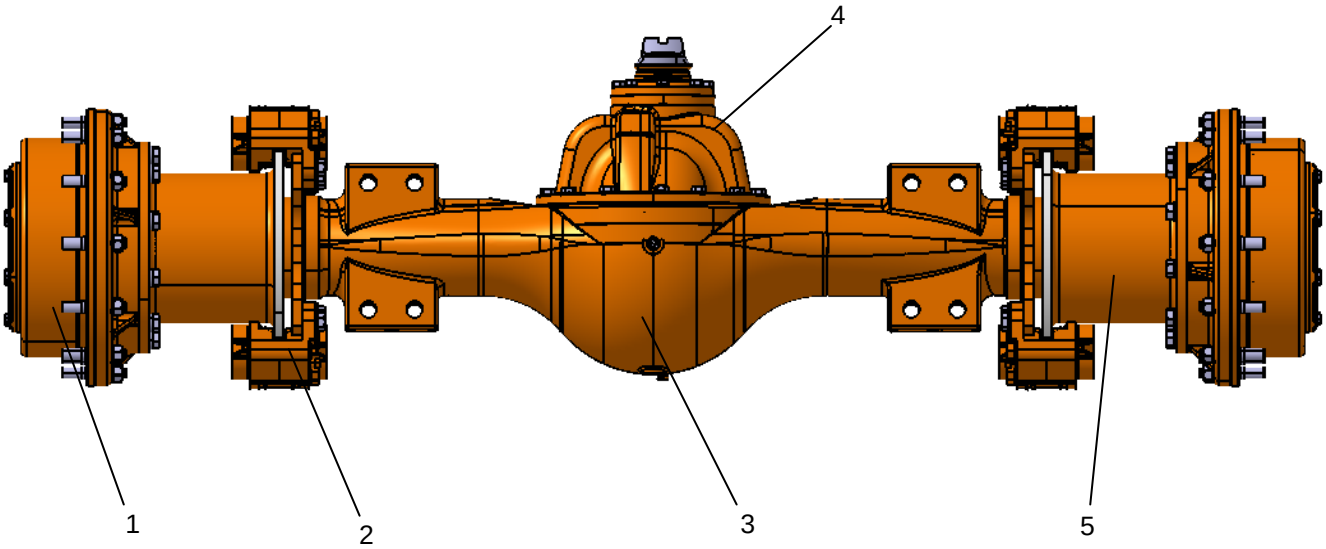

Figure 1

1.EDGE REDUCER ASS'Y 2.BRAKE CLAMP ASS'Y 3.SHELL 4.MAIN REDUCER ASS'Y 5.HUB ASS'Y

Basic parameters of drive axle:

Main drive	Type	Spiral bevel gear grade one reduction
	Reduction ratio	4.625
Hub reduction gear	Type	Grade one planet reduction
	Reduction ratio	4.94
Axle oil	GB13895-1992 gear oil	27L

Internal structure of drive axle

Drive axle assembly is one of the most important spare parts of transmission system, its main function is reduce rotation speed from gear box and increase torque, and make wheels at both sides having speed difference. Besides, it also plays the role of bearing and transmitting. Drive axle assembly of loader is mainly composed of shell, main drive (including differential mechanism), semiaxis, hub reduction gear, brake caliper assembly and other parts. Of which, the parts having reduction and differential function is main driver and hub reduction gear; power transmission between main drive and hub reduction gear is realized through semiaxis, multiple spline at both sides of semiaxis and axle shaft gear of differential mechanism and sun gear of hub reduction gear mesh with each other to realize power connection between main drive and hub reduction gear.

PARTS LIST

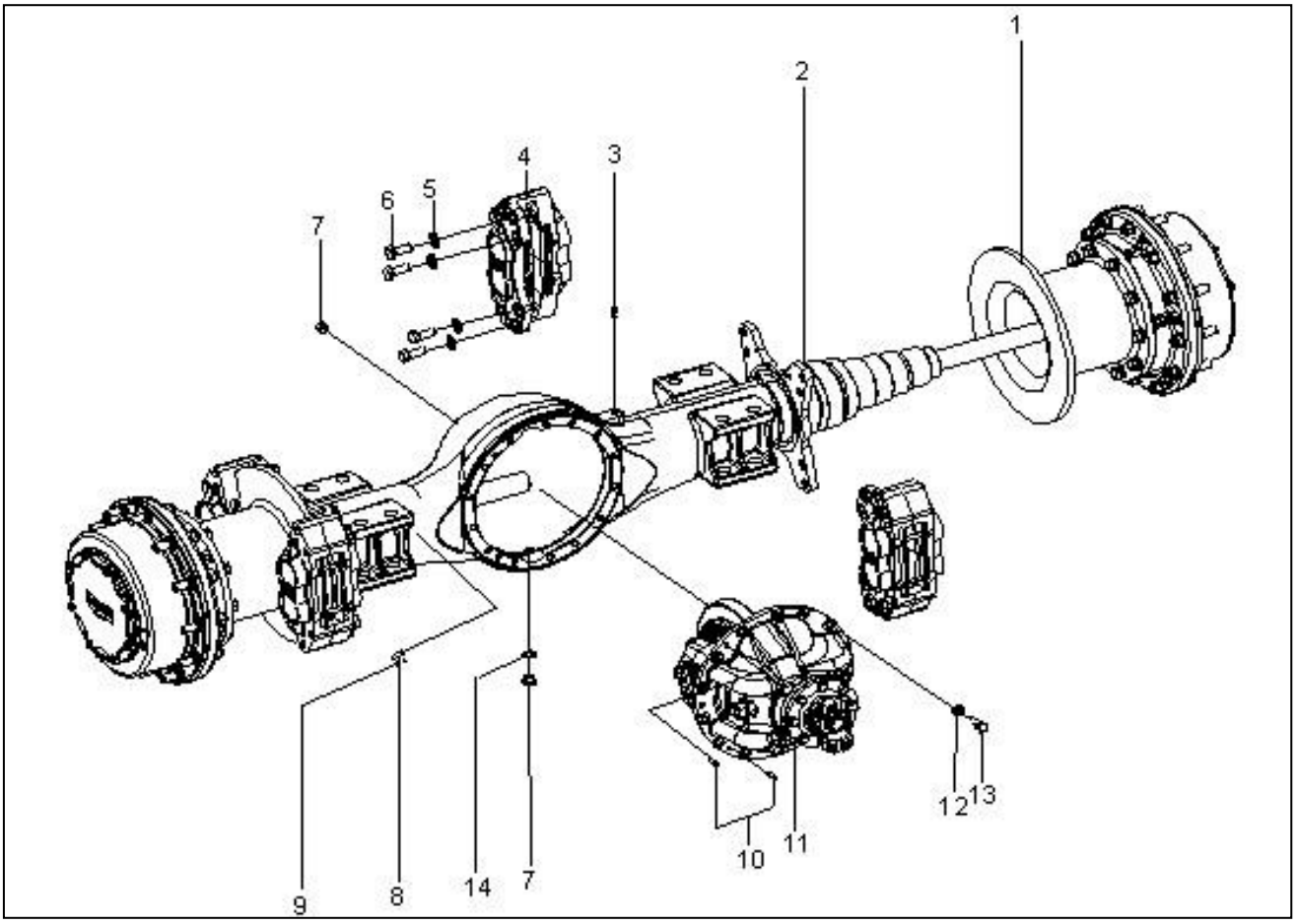

Figure 2

Reference Number	Description	Reference Number	Description
1	REDUCER ASSY,WHEEL	11	REDUCER ASSY,MAIN
2	HOUSING ASSY, AXLE	12	16 WASHER, SPRING
3	BREATHER	13	M16×1.5×40-8.8 BOLT
4	BRAKE UNIT	14	WASHER,SEAL
5	20 WASHER, SPRING	15	
6	M20×1.5×55-10.9 BOLT	16	
7	PLUG,MAGNETIC	17	
8	PLETE,NAME	18	
9	RIVET		
10	D10×30 PIN		

HOUSING ASSY, AXLE

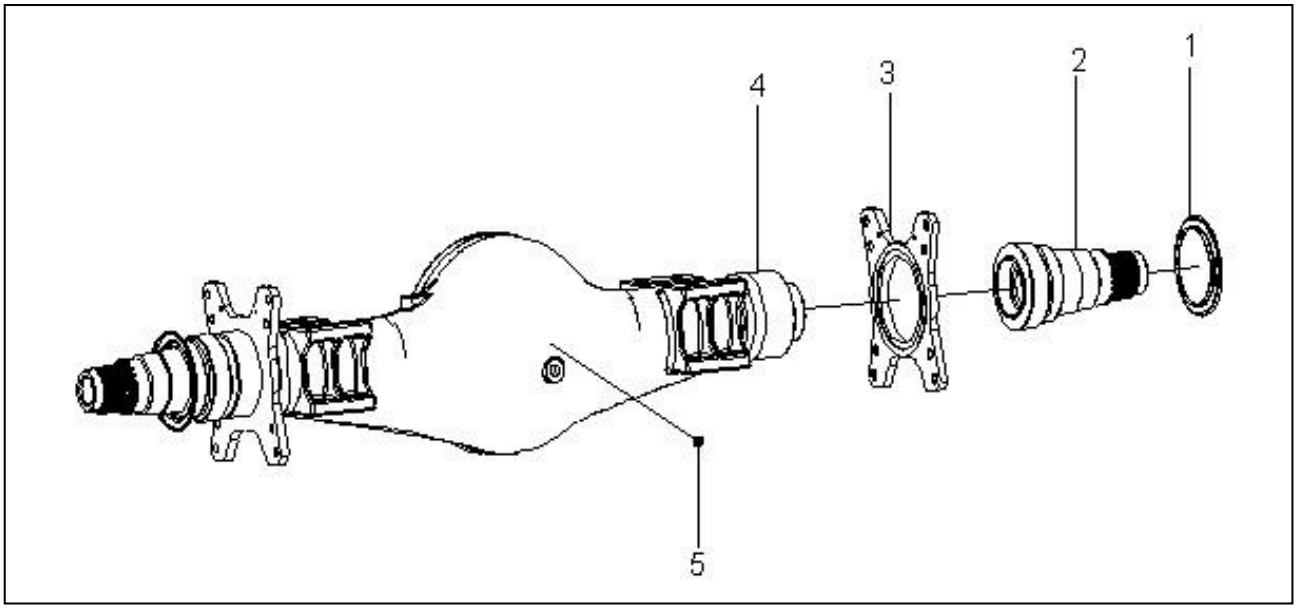

Figure 3

Reference Number	Description	Reference Number	Description
1	CAP,DUST	4	HOUSING,AXLE
2	SPINDLE,DRIVE AXLE	5	SEAT
3	PLATE,MOUNTINGA		

Hub drive axle assembly

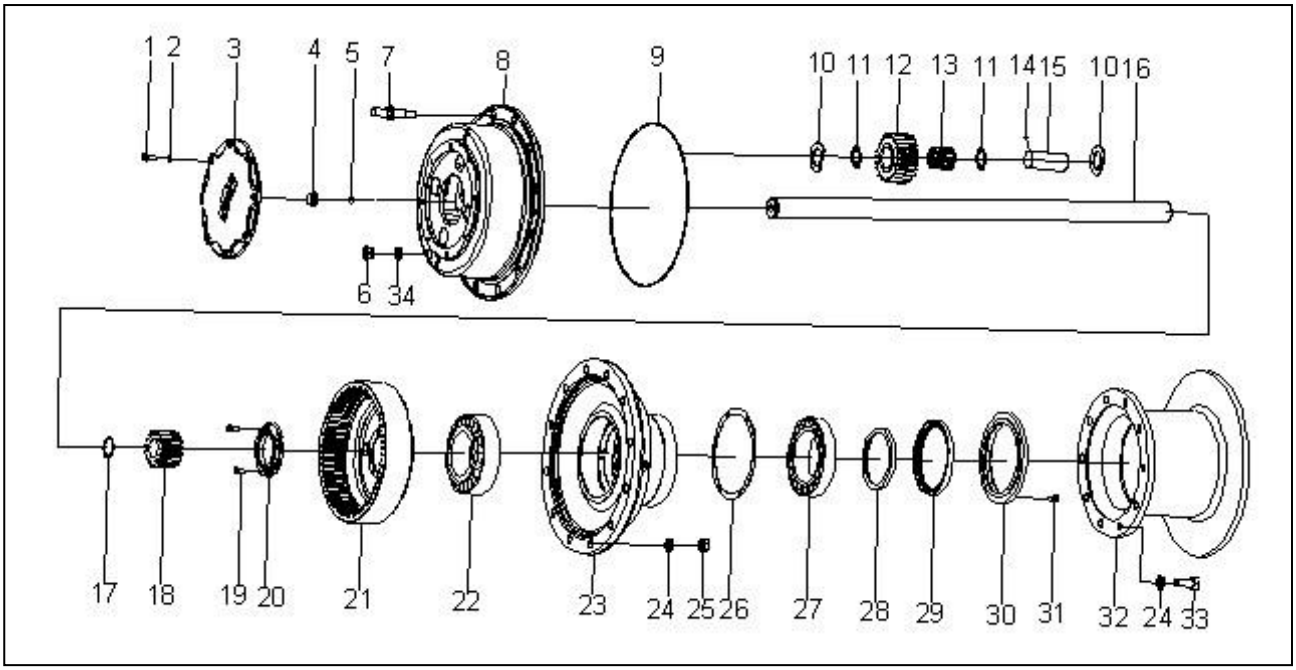

Figure 4

Reference Number	Description	Reference Number	Description
1	M10×30-8.8 BOLT	18	GEAR，SUN
2	10 WASHER, SPRING	19	BLOT
3	CAP,END	20	NUT,ADJUSTING
4	PAD	21	GEAR,RING
5	STEEL BALL	22	BEARING,TAPER ROLLER
6	PLUG,MAGNETIC	23	HUB
7	BOLT，HUB	24	20 WASHER,SPRING
8	CARRIER,PLANETARY GEAR	25	M20×1.5-8 NUT
9	RING,O	26	GASKET
10	WASHER	27	BEARING,TAPER ROLLER
11	SPACER	28	SLEEVE
12	GEAR,PLANET	29	SEAL
13	BEARING,NEEDLE	30	HOLDER,OIL SEAL
14	STEEL BALL	31	M8×20-10.9BOLT
15	SHAFT	32	DISK,BRAKE
16	SHAFT,AXLE	33	M20×1.5×50-8.8 BOLT
17	RING,RETAININ	34	WASHER, SEAL

Main drive assembly

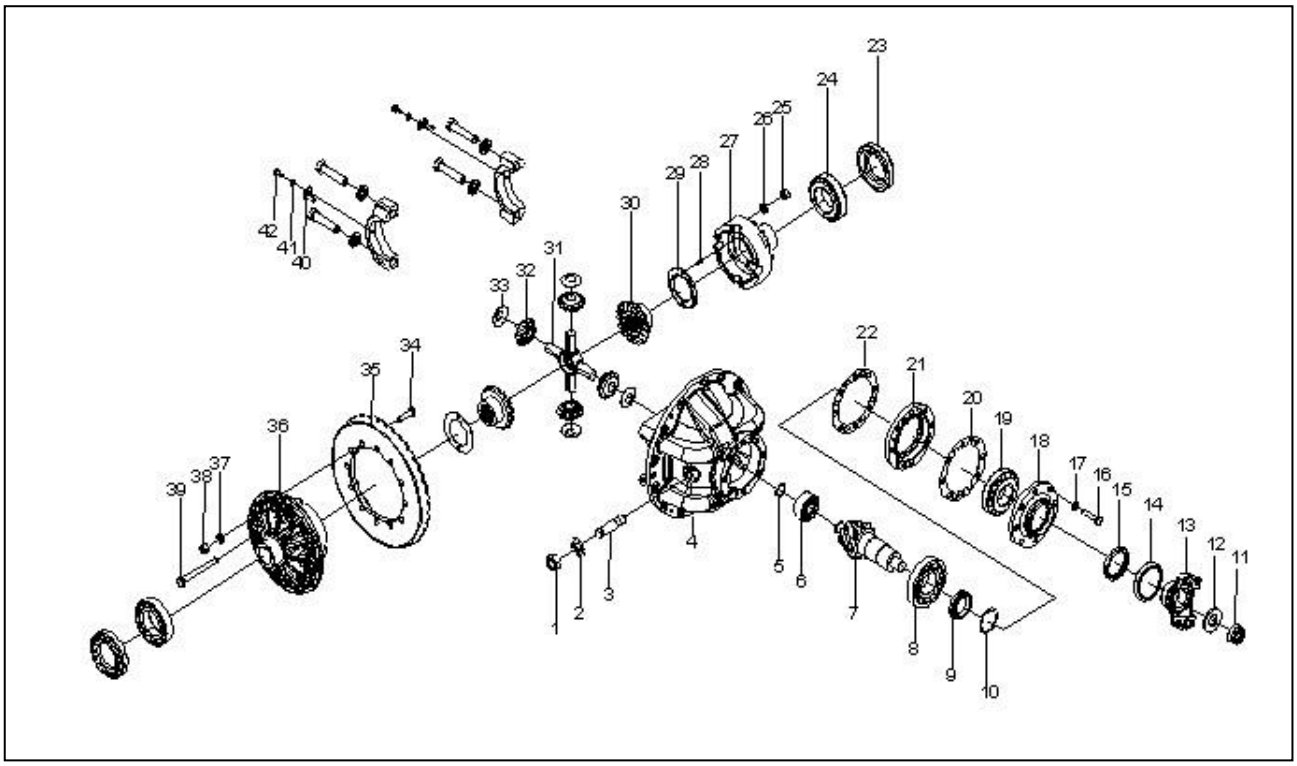

Figure 5

Reference Number	Description	Reference Number	Description
1	M27×2-05 NUT	22-1	SHIM
2	WASHER, LOCK	22-2	SHIM
3	BOLT	22-3	SHIM
4	CASE,MAIN REDUCTION	23	NUT,ADJUSTING
5	RING,RETAINING	24	BEARING,TAPER ROLLER
6	BEARING,ROLLER	25	M16×1.5-10 NUT
7	PINION	26	WASHER, PLAIN
8	BEARING,TAPER ROLLER	27	CASE,DIFFERENTIAL
9	SLEEVE	28	PIN
10-1	SHIM	29	WASHER
10-2	SHIM	30	GEAR,DIFFERENTIAL
10-3	SHIM	31	SPIDER
10-4	SHIM	32	GEAR,DIFFERENTIAL
11	NUT	33	WASHER
12	WASHER, PLAIN	34	BOLT
13	FLANGE,ASSY	35	GEAR,HELICAL
14	CAP,DUST	36	CASE,DIFFERENTIAL
15	SEAL	37	WASHER
16	M14×60-8.8 BLOT	38	M16×1.5-10 NUT
17	14WASHER, SPRING	39	M16×1.5×150-10.9 BLOT
18	HOLDER，OIL SEAL	40	PLATE,FIXED
19	BEARING,TAPER ROLLER	41	10WASHER,SPRING
20	GASKET,FLANGE	42	M10×1×20-8.8BOLT
21	SUPPORT,BEARING		

Drive axle brake assembly

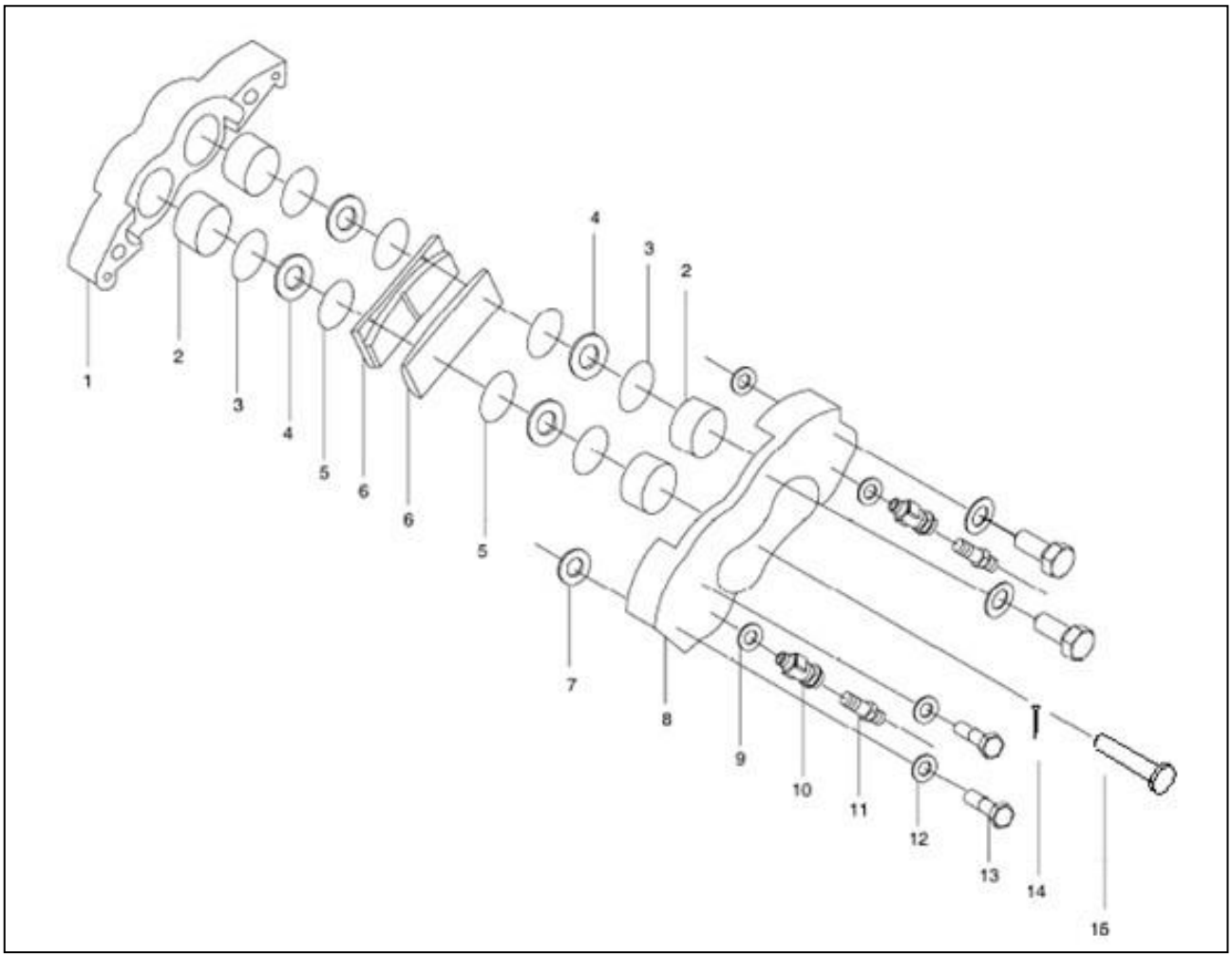

Figure 6

Reference Number	Description	Reference Number	Description
1	EXTERIOR BRAKE	9	20×1.6 “O” RING
2	PISTON	10	SUPPORT,DEFLATING VALVE
3	RECTANGULAR SEAL	11	DEFLATING VALVE
4	DUST CASE	12	WASHER
5	BLOCK RING	13	BOLT
6	BRAKE DISK	14	SPLIT PIN
7	20×2.4 “O” RING	15	PIN
8	INNER BRAKE		

SCHEDULED MAINTENANCE

Oil of new drive axle must be replaced after working for 15 days (about 100 working hours), oil shall be replaced once after working for every six months (about 1200 working hours) in following days.

Every month maintenance：

1. Check abrasion condition of brake disc, if there is disruptive abrasion; please handle in time if there is any.
2. Check abrasion condition of brake block to guarantee separation and reunion of brake caliper is flexible; it shall be replaced in time when brake block is wearing close to abrasion line (at the bottom of groove).
3. Check if oil level of shell complies with requirements, please add new oil if the oil level descends.
4. Keep axle clean, keep vent pipe smooth, and avoid silt going into axle. Check loosening condition of all fasteners, especially rim nuts, if it is loosed, please refasten again.

Every half year maintenance：

Lubrication oil in axle shall be replaced every half a year, different brands of lubrication oil shall be adopted for different areas and seasons. Please refer to 4.2 for oil replacing method.

Every year maintenance：

Overhaul checking every working year:

1. Check the gap, mesh and abrasion condition of spiral bevel gear of main reducer.
2. Check abrasion condition of differential mechanism gear.
3. Check abrasion condition of hub gear.
4. Check abrasion condition of needle bearing of hub planetary gear.
5. Requirements of installation and debugging items after overhaul checking:

1） After assembling, axle shaft gear and bevel gear shall move flexibly with hand touching rather than locking. The Min. gear backlash of gear is 0.18-0.23mm. Tooth length and tooth height of contacting area of two gears cannot be less than 50%.

2） In order to guarantee enough bearing rigidity of active spiral gear, before assembling oil seal and sealing cover, adopt gradually reducing spacer shim between wo tapered roller bearing to give 1.0-1.5N.m preloaded torque to roller bearing.

3） Gear backlash between the driving and driven spiral bevel gear is 0.25-0.45mm, the changing amount cannot be more than 0.15mm, gear backlash can be realized through adjusting nuts of both sides of differential mechanism and spacer shim of bearing sleeve. Tooth surface contacting area shall guarantee direction of tooth length and tooth height is not less than 50%, contacting position shall be at the middle side of tooth surface and closer to the smaller side.

4） Adjusting of bearing clearance of shell at both sides of drive axle: Fasten adjusting nuts, give 28-38N.m preload to shell roller bearing, and then lock two round nuts with screw fastening

https://truckmanualshub.com/

GENERAL DISASSEMBLY AND REASSEMBLY INSTRUCTIONS

⚠ WARNING!
Never use gasoline, solvents, or other flammable fluids to clean components. Only use approved commercial solvents that are nonflammable and nontoxic.

IMPORTANT
Use only GENUINE DOOSAN SPARE PARTS to warrant proper operations and prevent interchangeability problems.

GENERAL INSTRUCTIONS

1. Thoroughly clean and dry axle before disassembly.
2. All components should be thoroughly cleaned and dried before reassembly. Dirt, chips, and foreign material may cause failures.
3. All ducts and castings should be thoroughly cleaned and dried to remove dirt, chips, and foreign material to prevent damage after reassembly.
4. Reassembly should be done in a clean shop, and should be as dust free as possible.
5. Make sure tools and equipment are at hand.
6. When reassembling Daewoo strongly recommends to replace the following parts with new.
   - Seal Rings.
   - O-rings.
   - Gaskets.
   - Threaded rings with notched collar.
   - Any component damaged during disassembly.
7. When mounting heat fitted components, make sure of their proper position and direction of assembly, after they have cooled.
8. To heat bearings, use proper heating plates, piping, or suitable ovens.

   NOTE: *Never heat parts by using a torch. Oil bath, heated by a torch, maybe used to warm components.*
9. Lubricate all sections concerned when reassembling shafts, bearings, etc.
10. Lubricate O-rings before installing them in relevant seats to prevent kinking during assembly, such a position would impair proper sealing.
11. Replace gears only in matched sets to make sure of proper tooth mating.

AXLE DISASSEMBLY

Drive axle disassembly

1. Put drive axle on supporting and make sure main driver assembly is upward.

Figure 7

2. Dismantle brake caliper assembly

Loosen the connection bolts between brake caliper and brake caliper support, dismantle brake caliper assemble.

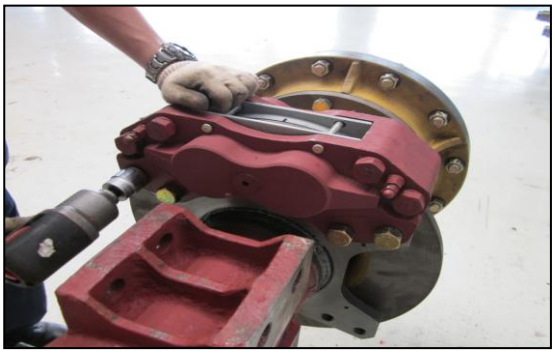

Figure 8

3. Release gear oil from

Loosen hub oil releasing drain plug and shell oil releasing drain plug, turn on slowly with hands to avoid oil spilling.

Note：*Store gear oil with clean container.*

Figure 9

4. Release gear oil from shell

Turn on oil releasing bolts axle end cap to release gear oil.

Note：*Store gear oil with clean container.*

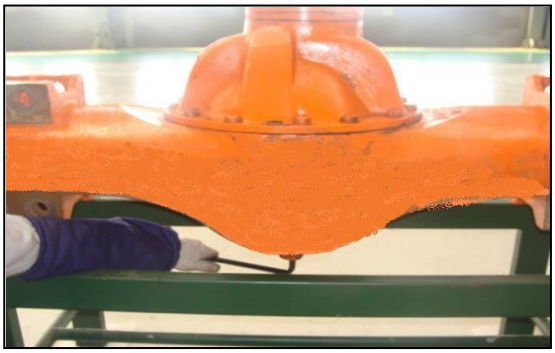

Figure 10

5. Dismantle end cap

Loosen connection bolts between planet carrier and end cap, then get end cap from hub reducer assembly with jackscrew, dismantle end cap.

Figure 11

6. Dismantle locating block

Take down locating block with hands.

Note：*If it is tight when taking down, please use assistant tools to pry out.*

Figure 12

7. Dismantle stop collar

Dismantle stop collar from semiaxis with stop collar pincers.

Note: *Before dismantling stop collar, pull out a section of semiaxis from shell.*

Note: *It must clamp firmly when using stop collar pincers to avoid safety hazard when it is popup.*

Figure 13

8. Dismantle sun gear

Dismantle semiaxis from sun gear.

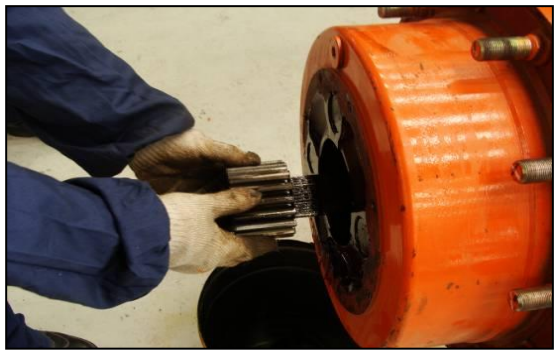

Figure 14

9. Dismantle semiaxis

Take semiaxis from shell slightly.

Figure 15

10. Hub reducer

First loosen rim bolts with relative tools, then loosen rim from planet carrier with jackscrew and dismantle planet carrier assembly.

Note: *Please slowly loosen planet carrier to avoid safety hazard resulted from dropping of planet carrier assembly.*

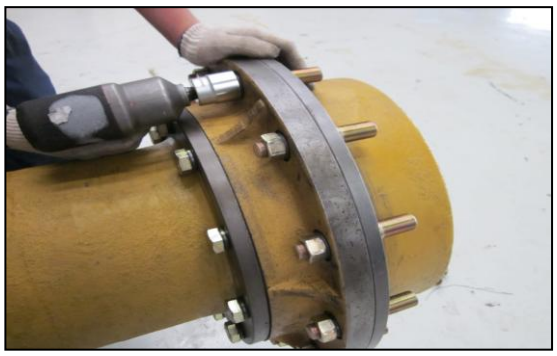

Figure 16

11. O Ring

Dismantle O ring from planet carrier.

Figure 17

12. Dismantle round bolts

Pry up wire of bolt, loosen the clamp bolt of round nuts ,then dismantle round nuts.

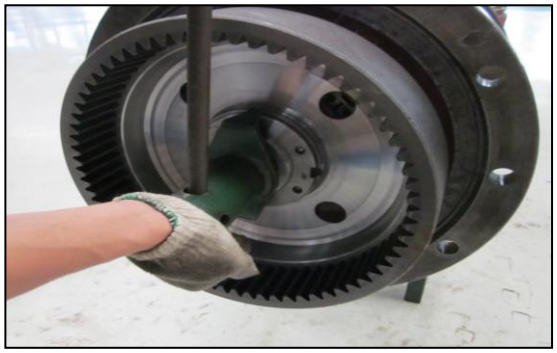

Figure 18

13. Dismantle internal gear

Take internal gear out by slightly rocking.

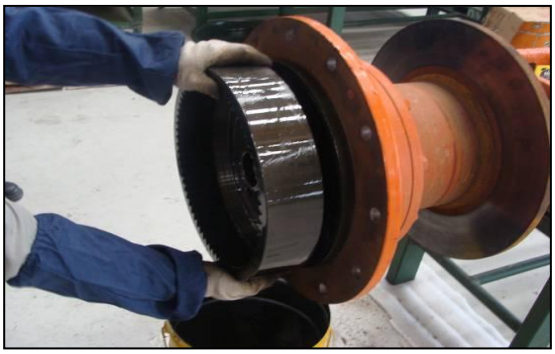

Figure 19

14. Dismantle wheel hub assembly

Take wheel hub assembly from supporting axle.

Note: *During hanging and dismantling process, please keep axis of wheel hub assembly is in line with axis of hub reduction supporting axle to avoid scratching oil surface and internal spare parts during dismantling process.*

Figure 20

15. Dismantle spacer bush

Take out spacer bush.

Remark：Dismantle all parts at the other side with the same method.

Figure 21

16. Dismantle main drive assembly

Dismantle connection bolts between main drive and shell assembly, take out main drive with jackscrew, and suspend main drive assembly.

Note: *When suspending main drive assembly, guarantee suspending and dismantling tools are at the above of main drive assembly to avoid spare parts inside are knocked again during suspending and dismantling process.*

Figure 22

Assembly dismantling

Dismantle planet carrier assembly

1. Put planet carrier on working platform horizontally.

Figure 23

2. Take out planet axle with tools.

Figure 24

3. Take out steel balls.

Figure 25

4. Take out planet wheel and gasket.

Figure 26

5. Take out baffle ring and quill roller from inside of planet wheel.

Figure 27

Dismantle hub assembly

1. Put hub assembly on working platform.

Figure 28

2. Loosen connection bolts between brake disc and hub.

Figure 39

3. Take out brake disc.

Figure 30

4. Loosened bolt of oil seal seat ,Take out oil seal seat and asbestos gasket.

Figure 31

5. Take out bearing.

Figure 32

Dismantle main drive assembly

1. Put main drive assembly (input flange upward) horizontally and fixed on supporting.

Figure 33

2. Dismantle thrust bolts.

Figure 34

3. Dismantle locknut and washer.

Figure 35

4. Take out input flange.

Figure 36

5. Dismantle connection bolts between sealing cover and bearing sleeve, take out sealing cover.

Figure 37

6. Turn main drive for 180°,dismantle bolts of Fastening lock plate, take out lock plate.

Figure 38

7. Mark with signs so that they can be back to original position during assembling.

Figure 39

8. Dismantle connection bolts of bearing seat and take out bearing seat.

Figure 40

9. Dismantle adjusting nuts.

Figure 41

10. Dismantle bearing outer ring.

Figure 42

11. Hang out differential mechanism assembly.

Note: *Keep balance when hanging out to avoid safety hazard.*

Figure 43

12. Separate active spiral bevel gear assembly and bracket with jackscrew.

Figure 44

Dismantle differential assembly

1. Put differential assembly vertically on working platform, and guarantee it is stable.

Figure 45

2. Dismantle bearing on left and right shell of differential mechanism.

Figure 46

3. Loosen connection nuts between driven spiral bevel gear and right shell of differential mechanism, dismantle driven spiral bevel gear.

Note: *Check or mark sign before dismantling driven spiral bevel gear so that it can be assembled to original position.*

Figure 47

4. Loosen connection screws of left and right shell, separate shell of differential mechanism.

Note: *Before taking out driven spiral bevel gear, please checkor mark assembling sign first so that it can be placed back to the original position.*

Figure 48

5. Take out semiaxis gear gasket and semiaxis gear.

Figure 49

6. Take out joint cross and differential gear together, take out differential gear gasket and gear from joint cross.

Figure 50

7. Take out semiaxis gear gasket and gear.

Figure 51

Dismantle active spiral bevel gear assembly

1. Put active spiral bevel gear assembly on working platform, support flange of bearing sleeve, clamp down on thread end of active spiral bevel gear assembly with down device.

Note: *Do not clamp too much to avoid damaging flange, pull out bearing sleeve from active spiral bevel gear assembly.*

Figure 52

2. Reverse bevel gear assembly and take out inner bearing ring

Figure 53

3. Take out bearing block.

Figure 54

4. Take out adjusting gasket.

Figure 55

5. Take out spacer bush.

Figure 56

AXLE REASSEMBLY

Axle assembly

3． Shell

Clean shell and suspend with special supporting. Fasten gummed plug screw at oil inlet and oil filler.

Note: *Plug screw fastening torque：175 ~ 235 Nm*

Note: *Letai 262 taper thread sealant.*

Figure 57

2. Spacer bush

Overturn shell and install bearing spacer bush.

Chamfered side of the spacer faced axle hump.

Figure 58

3. Wheel hub assembly

Coat lubrication grease on hub supporting axle of shell assembly, assembly wheel hub assembly on both sides of supporting axle of shell assembly. Assembly bearing inner ring on the larger side of wheel hub.

Figure 59

4. Internal gear

Assemble internal gear of drive axle at multiple spline at the end of supporting bearing.

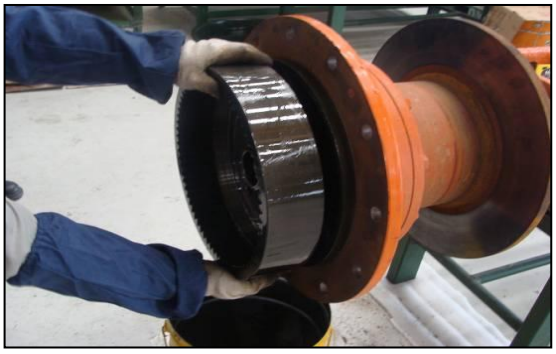

Figure 60

5. Round nuts

(1)Assemble round nuts and fasten. Knock internal gear slightly with copper stick to make internal gear in place.

Figure 61

Note: *Grapple theΦ22.5 hole on wheel hub with push and pull ergometer, pull ergometer along with tangential direction, indication on ergometer is 160±10N, if the indication is not within the range of 160±10N, adjust tightness degree of round bolts according to the indication until it is within the range of 160±10N. In the end, coat Letai 262 thread fastening sealant for 5~6 from the second thread hole of internal gear (form a liquid level at 1/3 circle of thread), then fasten bolts, and fix round nuts.*

Note: *Before dynamometry, rotate hub wheel for more than 5 times.*

Letai 262 thread fastening sealant

Figure 62

(2) Tighten the bolt of round nuts ,then tighten with Wire.

Note: *fastening torque：60±10Nm*

Figure 63

6. Assemble O sealing ring

Assemble O sealing ring on hub assemble.

Figure 64

7. Install planet carrier assembly

Assemble planet carrier assembly and O sealing ring on wheel hub with rim bolts, gaskets and nuts.

Note: *fastening torque：500±10Nm*

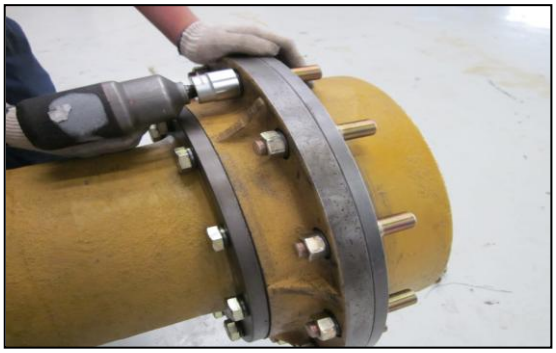

Figure 65

8. Assemble semiaxis

Install semiaxis assembly with sun gear on hub (pay attention to semiaxis multiple spline and gear assembly).

Figure 66

9. Assemble sun gear

Assemble sun gear at one side of semiaxis with baffle ring groove

Figure 67

10. Assemble baffle ring

Assemble baffle ring with baffle ring used for axle.

Note: *It must be clamped firmly when using baffle ring pincer to avoid safety hazard when it is popping out during assembling process.*

Figure 68

11. Assemble locating block

Stake steel ball on locating block, it can rotate flexibly after staking steel ball.

Figure 69

12. Assemble end cap

Assemble end cap

Note: *Fasten all screws according to symmetrical and crossing principle.*

Fastening torque：110 ~ 130Nm,

Letai Silicone Rubber 598 planar sealant

Letai 262 thread fastening sealant

Figure 70

13. Assemble brake caliper assembly

Assemble disc brake on brake caliper supporting, fix with bolts and gaskets.

Note: *Fastening torque：550±40Nm*

Coat Letai 262 thread fastening sealant at 20mm length at thread end during assembling.

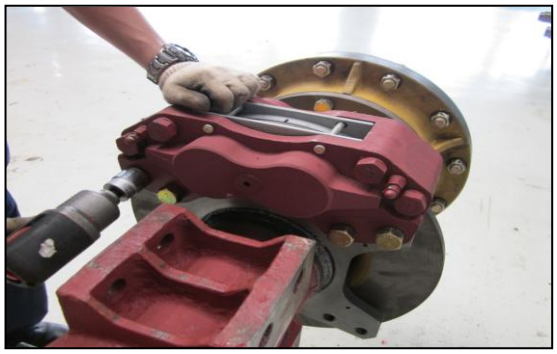

Figure 71

14. Assemble main drive assembly

Coat Letai 598 silicon rubber surface sealant at the joint surface between shell and bracket, coatφ3～φ6 glue soluting ring with sealing surrounding inside of thread hole at the large end of shell. The coated sealant cannot be in the air for more than ten minutes.

Note: *Letai 598 silicon rubber surface sealant*

Figure 72

15. Assemble main drive

Hand up main drive assembly with overhead crane, put main drive at main drive shell of the axle, assemble locating pin.

Figure 73

16. Assemble bolts

Coat proper Letai 262 threat fastening sealant on bolts, the coating position is 15mm length at thread end. Fasten main drive assembly and shell assembly with bolts and gaskets.

Note: *Fastening torque：180 ~ 210Nm*

Letai 262 threat fastening sealant

Fasten all screws according to symmetrical and crossing principle.

Figure 74

17. Add oil

Add 17L 85W/90 GL-5 gear oil (GB13895-1992) in axle bag of shell and fasten plug screws.

Note: *use 85W/90 GL-5 gear oil*

Anaerobic type pipe threat sealant

Fastening torque：175 ~ 235 Nm

Figure 75

Inject 5L (subject to overflowing from planet carrier) 85W/90 GL-5 gear oil (GB13895-1992) into two hub reducers and fasten plug screws.

Note: *85W/90 GL-5 gear oil*

Anaerobic type pipe threat sealant

Fastening torque：175 ~ 235 Nm

Figure 76

Assembly parts assembling

Install hub assembly

1. Keep the large end of hub upward, assemble bearing outer ring .

Figure 77

4. turn over to keep the small end of hub upward and assemble bearing outer ring.

Figure 78

3. Bearing inner ring assembled.

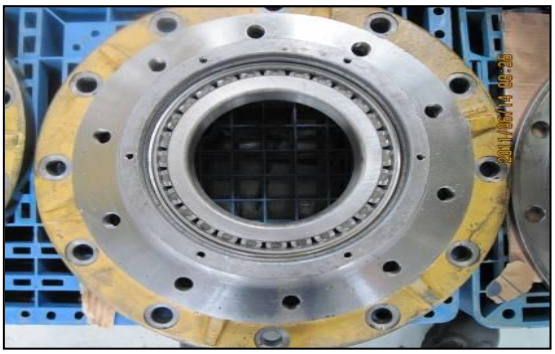

Figure 79

4. Check completeness of oil seal. Coat lubrication oil in oil seal seat evenly, and assemble oil seal in oil seal seat.

Figure 80

5. Assemble asbestos gasket before oil seal on the small side of hub,then screw the bolts tight

Note: *Fastening torque：40 ~ 10Nm*

Letai 262 threat fastening sealant

Fasten all screws according to symmetrical and crossing principle.

Figure 81

6. Assemble brake disc on hub and fasten with bolts and gaskets.

Note: *Fastening torque：360±20Nm*

Fasten all screws according to symmetrical and crossing principle.

Figure 82

Assemble planet carrier assembly

1. Stick lubrication grease quill roller (27 units each) on walls of inner holes of planet gears, assemble baffle ring in the middle of quill roller.

Figure 83

2. Assemble gaskets at both sides of planet gear,.

Figure 84

3. Assemble the planet gear with quill roller to the seat hole of planet carrier.

Figure 85

4. Assemble steel balls in holes of planet gear shaft, steel ball shall aim at semi circle of planet carrier, go through the inner hole of planet gear and gasket and assemble on planet carrier. After assembly, planet gear shall rotate flexibly there is no blocking.

Figure 86

Install of main drive assembly

1. Assemble rolling bearing on bear neck of the terminal with pressure machine, rotate to the left on active spiral bevel gear Rear Axle, and rotate to the right side.

Figure 87

2. Assemble circlip.

Figure 88

3. Press inner ring into rolling bearing with press ure machine at the other side

Figure 89

4. Turn over gear and assemble outer ring of gear

Figure 90

5. Install spacer bush

Figure 91

6. Install gaskets

Figure 92

7. Install bearing sleeve

Figure 93

8. Press inner ring of antifriction bearing in the end.

Note: when assembling main reducer, taper rolling bearing shall have certain tightness that is on the basis of eliminating bearing clearance and give certain preload. The purpose is to reduce axial force caused during transmission process which will result in axial displacement, improve supporting rigidity, and guarantee normal mesh of bevel gear pair. But if it is too tight, it will accelerate abrasion of taper rolling bearing. Press with P= 5420 kg pressure at the top side of inner ring of rolling bearing, grapple Φ14.5 hole with pull and push ergometer, pull ergometer along with tangential direction, indication of ergometer when pushing shall be 17.34-30.06N, if the indication is not within the range of 17.34-30.06N, increase or reduce thickness of spacer shim, repeat the above process until the indication is within 17.34-30.06N.

Figure 94

Figure 95

Assemble of differential assembly

2. Assemble rolling bearing at the bearing position of right shell terminal of differential mechanism.

Figure 96

2. Assemble rolling bearing at the bearing position of left shell terminal of differential mechanism.

Figure 97

3. Assemble pins at the position of left shell terminal of differential mechanism.

Figure 98

5. Assemble semiaxis gear

Assemble semi axis gear gasket in left shell of differential mechanism

Note: *the side of gasket with groove shall toward to the direction of joint cross*

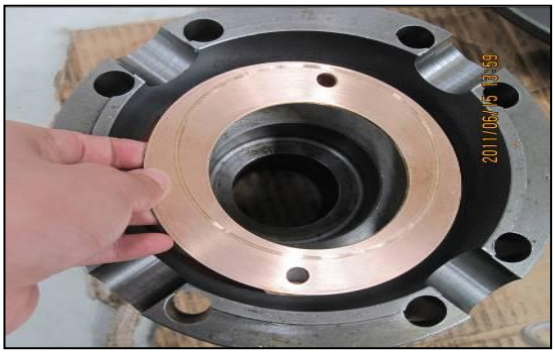

Figure 99

5. Install semiaxis gear

Figure 100

6. Assemble joint cross assembly

Assemble bevel gear (internal of small terminal) and bevel gear gasket on four axles of joint cross.

Note: *Lubricate with grease when assembling bevel gear and bevel gear gasket*

Figure 101

7. Differential mechanism shell

Assemble joint cross in right shell of differential mechanism to make bevel gear and semiaxis gear mesh, turn over left shell assembly of differential mechanism to assemble right shell assembly of differential mechanism, join right shell and left shells of differential mechanism with bolts and fasten with gaskets and nuts.

Note: *Nuts fastening torque: 180 ~ 210Nm*

Note: *Guarantee assembling mark of right shell and left shell of differential mechanism align.*

Note: *Coat proper Letai 262 thread fastening sealant at the thread bottom within 12mm length.*

Note: *After assembling, semiaxis gear and taper gear can be rotated manually without blocking.*

Figure 102

Figure 103

8. Install driven spiral bevel gear

Aim at assembling mark, fasten driven spiral bevel gear (Rotate to the left for rear axle, rotate to the right for front axle) with bolts, gaskets and nuts, and fasten screws.

Note: *Nuts fastening torque 280±25Nm。*

Note: *Coat proper Letai 262 thread fastening sealant at the thread bottom within 12mm length.*

Note: *Judging method of left and right spiral: face to positive side of gear, right rotation refers to the spiral gear rotates to large terminal clockwise; on the contrary, left rotation refers to the spiral gear rotates to large terminal anticlockwise.*

Figure 104

Install main reducer

1. Assemble copper gasket on bracket. Apply a small amount of sealant on upper and lower sides of the gasket and smooth.

Note: *Make 3 rectangle hole of the copper gasket aimed 3 oil port of the bracket.*

Note: *Coat proper Letai 598 fastening sealant*

Figure 105

2. Install the assembled active sprial bevel gear assembly in bracket

Figure 106

3. Coat sealant line with diameter 2-4mm at the small end, refer to the picture for sealant line; sealant line and diameter of bearing sleeve (the other side of gasket) shall be done according to the above requirements.

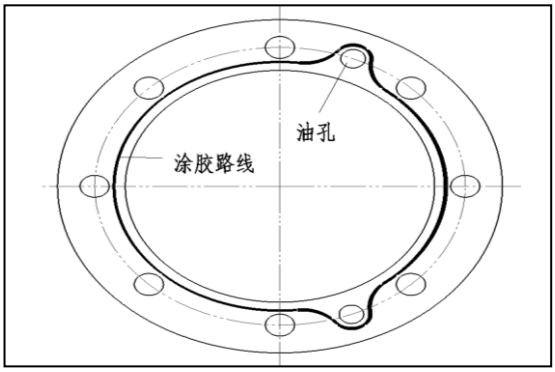

Figure 107

4. Assemble sealing cover

Press oil seal in sealing cover.

Note: *Coat a layer of proper lubrication oil when assembling oil seal.*

Figure 108

5. Install input flange

Put gasket on the end face of bracket, install sealing cover assembly (coat lubrication grease on oil seal according to common requirements of drive axle), and connect with bracket with bolts and gaskets.

Note: *Screw fastening torque 145±5Nm*

Figure 109

6. Install input flange.

Figure 110

7. Coat sealant on one end face of gasket, the surface with sealant is downward, install gasket.

Note: *Letai 598 sealant*

Figure 111

8. Install round screws and fasten.

Note: *Screw fastening torque：320 ~ 400 Nm*

Note: *Letai 598 sealant*

Figure 112

9. Install differential assembly

Turnover tracket, install differential assembly in bracket.

Figure 113

10. Install bearing seat with gaskets and bolts (bolts shall be a little bit tight). Install adjustable nuts.

Note: *Two bearing seats cannot be exchanged.*

Note: *Coat proper thread sealant on the length of 15～25mm on thread end surface of bolts.*

Figure 114

Figure 115

11. Adjust spiral bevel gear

Adjustment of spiral bevel gear mesh condition refers to adjustment of mesh zone and back lash, when adjusting back lash of spiral bevel gear pair, dial gauge can be used to touch the gear surface of large side edge of driven spiral bevel gear, then rotate driven spiral bevel gear to measure back lash directly, the clearance shall be 0.2～0.35mm. Adjusting method of back mesh is

Figure 116

to twist adjusting nuts to change position of driven spiral bevel gear (when it is necessary, move active spiral bevel gear assembly to adjust). If the clearance is larger than the regulated value, approach active spiral bevel gear from driven spiral bevel gear; otherwise be away from it. In order to keep the adjusted preload of taper rolling bearing of differential mechanism, twisting numbers of adjusting nuts at one side shall be equal to twisting numbers of adjusting nuts at the other side.

When adjusting contact zone of spiral bevel gear pair, coat red color (red lead powder) on driven spiral bevel gear teeth (coat three teeth usually), rotate driven spiral bevel gear with hands repeatedly, check contacting moulage. Adjust the correct position of spiral bevel gear mesh moulage: it shall not be less than 50% along with teeth height direction and teeth length direction, mesh moulage of driven bevel gear shall be close to the center, and in the middle of teeth height, smaller than the small end on teeth length direction. Increasing preload of differential bearing: after adjusting back lash of spiral bevel gear well, it shall guarantee the clearance between taper rolling bearing at both sides of differential mechanism is 0. Following is the adjusting methods.

Adjustment of contact zone and back lash when installing spiral bevel gear

Contact zone of driven spiral bevel gear	Adjusting method	Gear moving direction
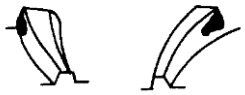	Move driven gear to the direction of active gear, if the clearance is too small, move active gear outside	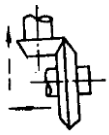
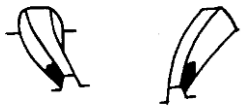	Move driven gear away from active gear, if the clearance is too large, move active gear inside	
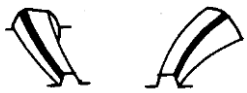	Move active gear to the direction of driven gear, if the clearance is too small, move driven gear inside and outside	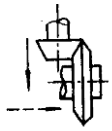
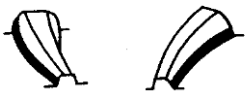	Move active gear away from driven gear, if clearance is too large, move driven gear inside	

Method of adjusting mesh zone is usually increasing and decreasing adjusting gaskets and rotating adjusting nuts. Adjusting of contact zone will affect performance and service life greatly, it shall be carried out carefully.

Note: *After adjusting, clean off red lead powder.*

12. Install locking plate

Fasten the fixed bolts on bearing seat, fastening torque is 410 ~ 510Nm. Put locking plate at the right position, fix it on bearing seat with bolts and gaskets, and fasten fixing bolts of locking plate.

Note: *Fastening torque 40 ~ 50Nm*、460±50Nm
Note: *Coat proper Letai 262 thread fastening sealant on 5-10mm length at the end surface of fixing bolt.*
Note: *Coat Letai 262 thread fastening sealant*

Figure 117

13. Install thrust bolts

Overturn carrier, press copper cover into the side with thrust bolts, twist into the center of carrier, make copper contact with the back of driven spiral bevel gear of differential assembly, reverse for 1/6-1/4 circles, fasten with nuts and lock plate.

Note: *Letai 598 sealant*

Figure 118

14. Bend one of the teeth of lock pate to avoid loosening of nuts.

Figure 119

https://truckmanualshub.com/

https://truckmanualshub.com/

HYDRAULICS

https://truckmanualshub.com/

https://truckmanualshub.com/

CYLINDERS

⚠ CAUTION!
Follow all safety recommendations and safe shop practices outlined in the front of this manual or those contained within this section. **Always use tools and equipment that is in good working order.** **Use lifting and hoisting equipment capable of safely handling load.** **Remember, that ultimately safety is your own personal responsibility.**

MODEL	SERIAL NUMBER RANGE
SD310	010001 and Up

Copyright 2012 DISD

July 2012

https://truckmanualshub.com/

TABLE OF CONTENTS

GENERAL DESCRIPTION..... 3
WORKING PRINCIPLE..... 3
DETAILED LIST OF SPARE PARTS..... 4
DISASSEMBLING AND ASSEMBLING STEPS..... 5

https://truckmanualshub.com/

General Description

Working principle

It is usually composed of cylinder body, piston rod and sealing parts, intertal of cylinder body is divided into two parts and connect with a oil hold respectively. Since compression of liquid is very small, when oil coming into one oil hole, piston will be propelled to make oil going out from another oil hole, piston drives piston rod stretching (compressing), on the contrary as before.

Cylinder is the implementing part of the straight line movement of output force and piston effective area and the pressure difference at both sides. It is used to change hydraulic energy into mechanic energy. The input of cylinder is flow rate and pressure of fluid, the output is speed and force of straight line movement. Piston of cylinder can finish straight line alternating motion, the output straight line displacement is limited. Cylinder is the energy converting device from hydraulic energy to mechanic energy for alternating straight line movement. Cylinder is basically composed of cylinder barrel, cylinder cover, piston, piston rod, sealing device and cushioning device.

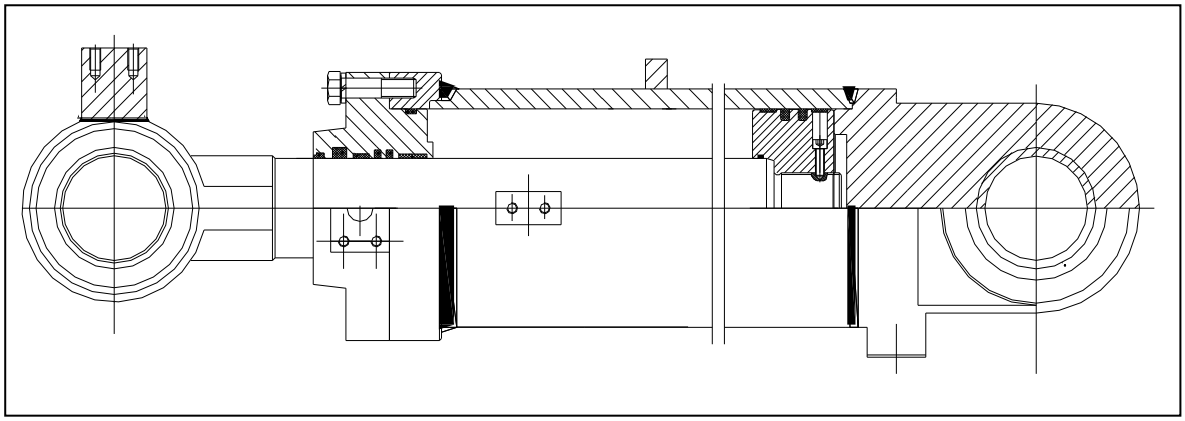

Figure 1

Detailed list of spare parts

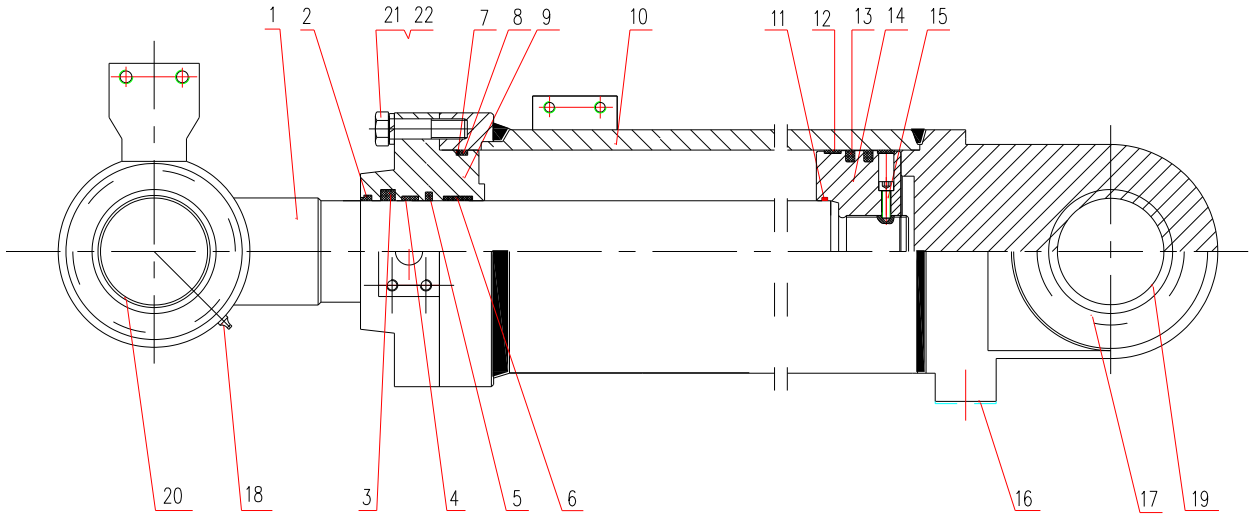

Figure 2

Reference Number	Description	Reference Number	Description
1	Cylinder rod	12	Support ring
2	Dust ring	13	SPGO
3	Obturating ring	14	Piston
4	Support ring	15	Socket head cap screw
5	Cushion seal	16	Port protecting cover
6	Support ring	17	Hole protecting cover
7	Four fluorine block circle	18	Oil cup
8	O-RING	19	Cylinder end bush
9	Guide sleeve	20	bush
10	Cylinder block	21	Bolt
11	O-RING	22	Washer

Disassembling and assembling steps

Disassembling steps

Prepare a container which can store all hydraulic oil of the maintained cylinder, hydraulic oil will flow out from cylinder.

1. Put the cylinder on special supporting vertically, screw down bolts of cylinder cover with pneumatic wrench or torque wrench (refer to figure 3).

Figure 3

2. Hang piston rod assembly out from cylinder and put it on special protective support. (refer to figure 4)

Figure 4

3. Twist piston lock screw with special tools (refer to figure 5).

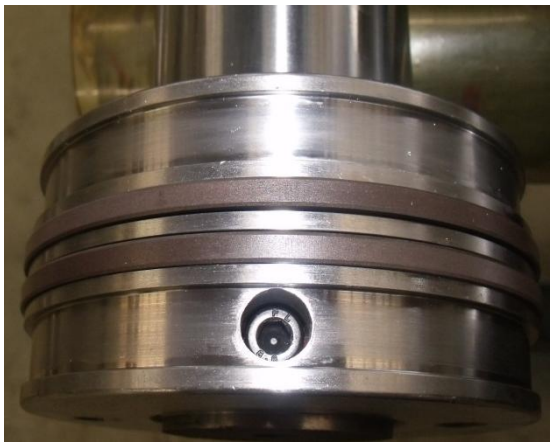

Figure 5

4. Dismantle piston with special piston tightening tool and jackhammer (refer to figure 6).

Figure 6

5. Dismantle piston and cylinder cover assembly (refer to figure 7).

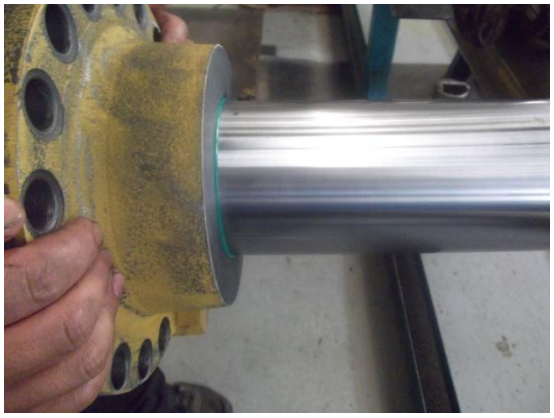

Figure 7

6. Dismantle sealing parts with special tools (refer to figure 8).

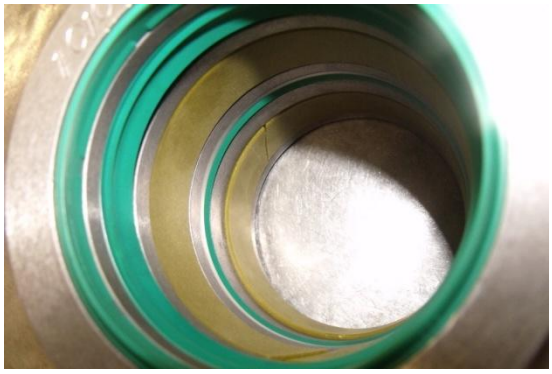

Figure 8

Assembling steps

1. Install sealing parts of cylinder (refer to figure 9).

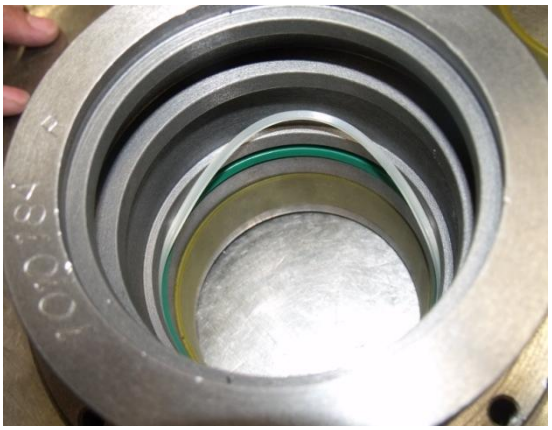

Figure 9

2. Install cylinder cover assembly (refer to figure 10).

Figure 10

3. Install piston with special tools (refer to figure 11).

Figure 11

4. Screw down piston bolts with special tools (refer to figure 12).

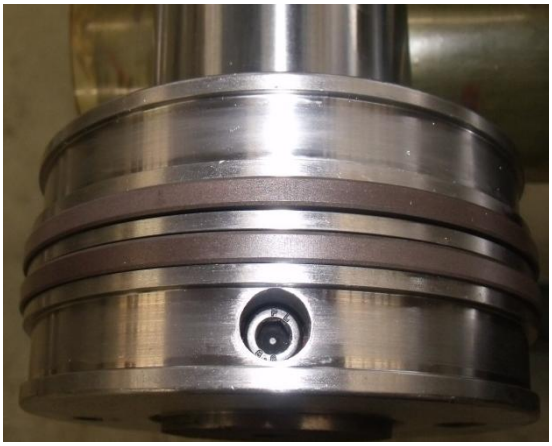

Figure 12

5、Put piston rod in cylinder barrel (refer to figure 13).

Figure 13

6. Screw down bolts of cylinder cover and cylinder barrel (refer to figure 14).

Figure 14

https://truckmanualshub.com/

Main Pump

⚠ CAUTION!
Follow all safety recommendations and safe shop practices outlined in the front of this manual or those contained within this section. **Always use tools and equipment that is in good working order.** **Use lifting and hoisting equipment capable of safely handling load.** **Remember, that ultimately safety is your own personal responsibility.**

MODEL	SERIAL NUMBER RANGE
SD310	010001 and Up

Copyright 2012 DISD

July 2012

https://truckmanualshub.com/

TABLE OF CONTENTS

GENERAL DESCRIPTION..... 3
WORK PRINCIPLE.. 3
DETAILED LIST OF SPARE PARTS.. 4
PARTS REPLACEMENT PRINCIPLES.. 5
PREPARATION BEFORE DISASSEMBLING.....6
DISASSEMBLY AND ASSEMBLY STEPS.. 6

GENERAL DESCRIPTION

Work principle

When active gear 4 rotates with clockwise direction, driven gear 10 rotates with anti-clockwise direction, partial vaccum is formed when teeth of two gears are away from the area in oil in side (left area shown in the figure), with effect of atmospheric pressure, hydraulic oil enters oil suction chamber of oil pump and fills in teeth area. At the other oil outlet side, the size is smaller because of gear mesh, hydraulic oil is squeezed out, gear keeps rotating, gear teeth keeps squeezing out hydraulic oil to enter into work oilway and realize constant oil supplying of the system.

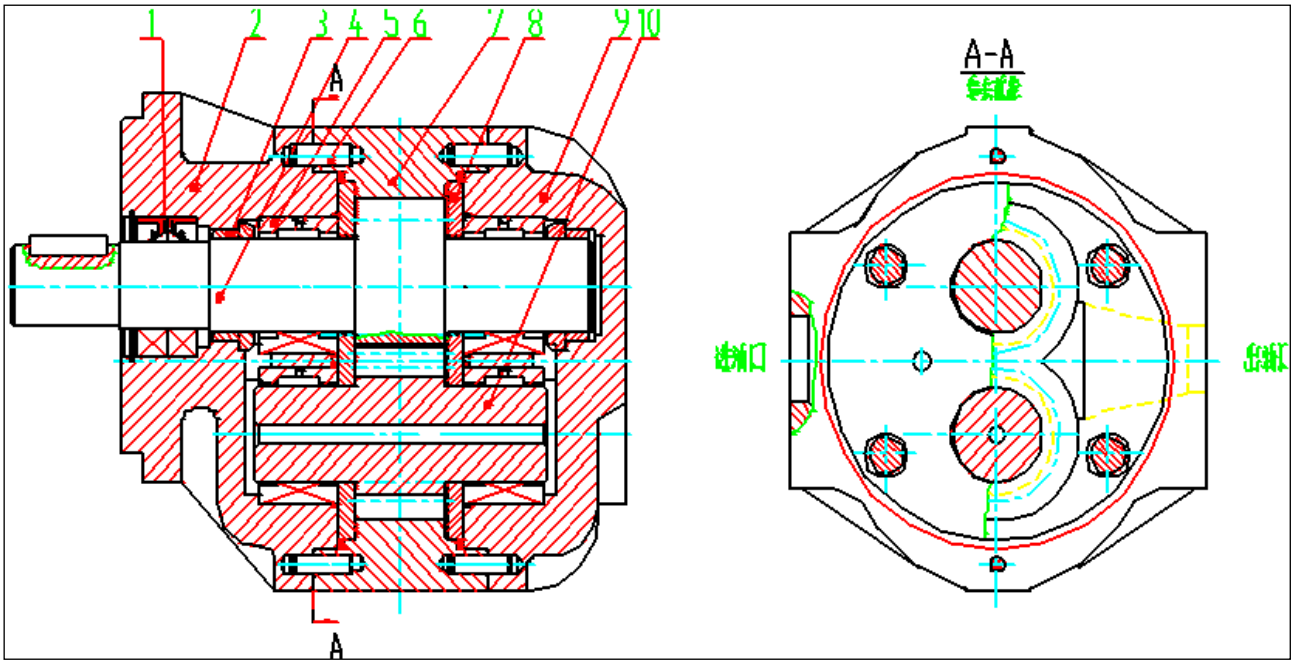

Figure 1

https://truckmanualshub.com/

PARTS LIST

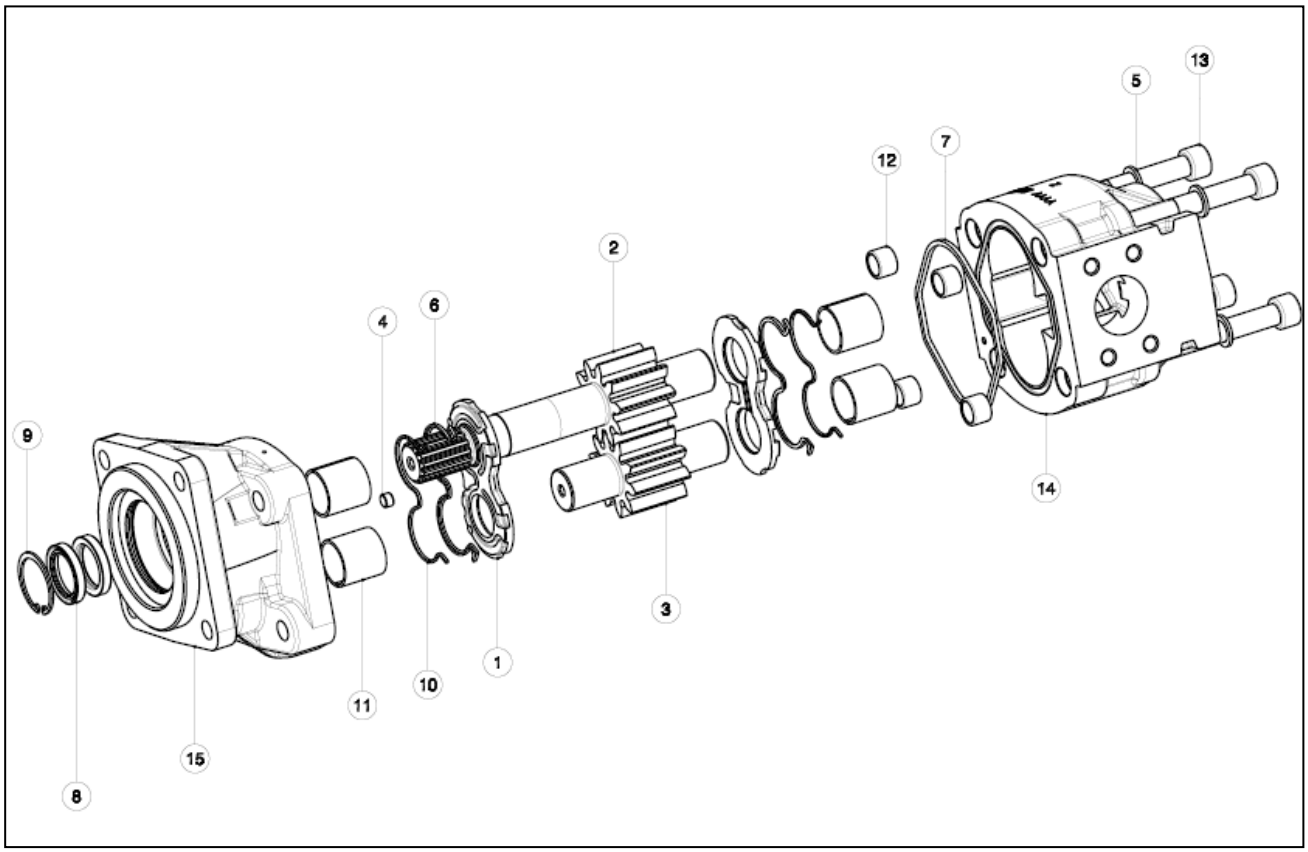

Figure 2

Reference Number	Description	Reference Number	Description
1	Thrust Palte	9	Ring
2	Drive Shaft	10	Back-up Ring
3	Driven Gear	11	Sleeve Bearing
4	Grub Screw	12	Steel Bushes
5	Washer	13	Screw
6	Seal	14	Body
7	Parker Ring	15	Front Cover
8	Shaft Seal		

Parts replacement principle

If main pump needs to be repaired to reach the original performance index, parts replacement principle must be followed to replace parts, following is the detailed replacing rules:

1. Side plate: replace side plate when it is scratched, there is pit, spray and finishing layer sheds, burnt, deformed and cavitation corrosion.
2. Gear: replace gear when one of the following conditions happens: shaft diameter of gear shaft is scratched or worn in sealing zone; teeth surface of gear is worn, scratched, broken or deformed; addendum circle is damaged seriously; multiple spline or flat key and spindle nose are worn, deformed and broken.
3. Castings (front cover, pump body, and rear cover):

   3.1 If there is flaw on castings, and sealing zone has chip, rust, deformed pin hole, then replace castings.

   3.2 Replace pump body when one of the following conditions happens: oil mouth is broken, pump body is broken and rusty; when bore depth of pump body ＞0.08mm.
4. Round pin: round pin must be replaced when the matching does not comply with requirements, pin is broke and deformed, replace the front cover, pump body and rear cover matched with round pin when it is necessary.
5. Rolling bearing: new parts must be replaced when quill roller drops, retainer is damages, quill roller has surface pitting, roller path has surface pitting, oversintering.
6. Secondary sealing ring: replace with new parts when there is inner diameter abrasion, end face abrasion, thickness is milled, deformed, surface is coarse.
7. Non-metal sealing parts: all non-metal sealing parts must be replaced.
8. Outboard bearing: replace with new parts when parts are worn and rusty.
9. Fastener: replace it when it is drawn out, deformed and damaged.

Preparation before disassembling

1. Clean the surface of pump, and check if the surface has chip and rust.
2. Check model and factory releasing number on nameplate, if there is no nameplate on pump, check factory releasing number at seam allowance of front cover.
3. Fill in relative information on main pump returned for maintenance card before disassembling, such as manufacturer, applicable machine model, applicable working condition, pump model, factory releasing number, factory releasing date, head and marks of fabricator, working parameters (pressure, rotation, impact and the constant running time at the highest pressure) on main machine, total working time of main pump and reason for returning for maintenance, etc.
4. Make sure the production is released from the factory as a whole and it is not disassembled after releasing, otherwise it is not maintained.
5. If there is external leaking, do gas tightness checking to the entire pump and find out leaking position.
6. Check tightening torque of bolts (screw down bolts again with torque wrench, record the Max. tightening torque), learn if tightening torque of all bolts have reached the required specification.

Disassembly and assembly steps

Disassembly steps

1. Loosen and remove the assembling bolts and washers from the pump

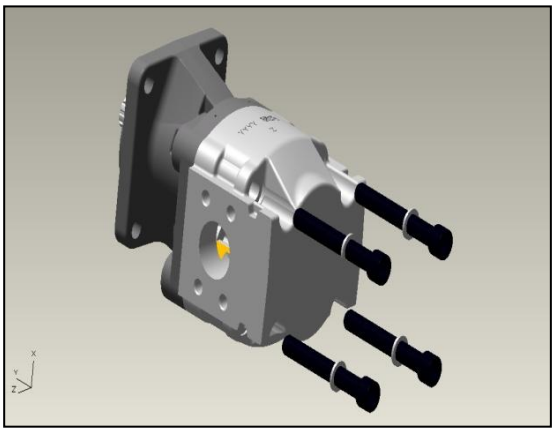

Figure 3

https://truckmanualshub.com/

2. ① Remove mounting flange taking care to keep it as straight as possible during removal.
Tap around the edge with rubber mallet in order to break away from the body.
☞Ensure that while removing it, the drive shaft and other components remain position. Use proper tool to avoid shaft seal damage by sharp endge of shaft

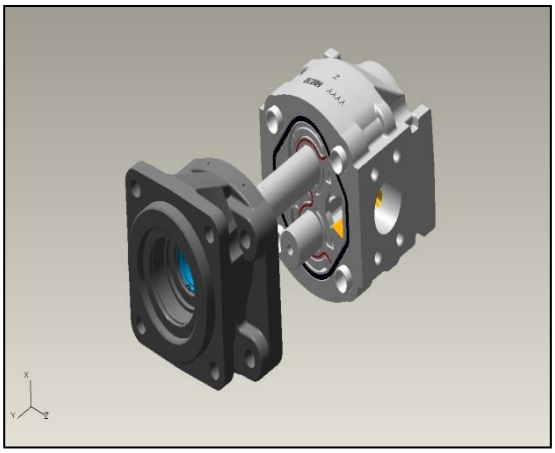
Figure 4

3. Take out snap ring with proper tool and Remove 2 shaft seal with (-) screwdriver.

☞Take out the shaft seals only needed.
Shaft seals disassembled from the mounting flange is not reusable

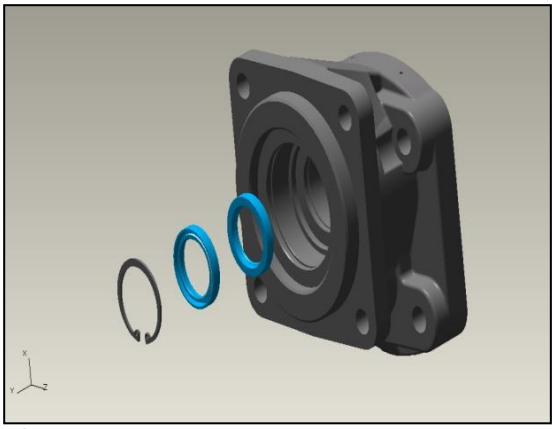
Figure 5

4. ① Remove the pressure plate with prearranged parts, O-ring & back up ring from the working section and examine it carefully.
② Take out square O-ring from the groove on the body.
☞Be careful not to give any damage on the surface of rings.

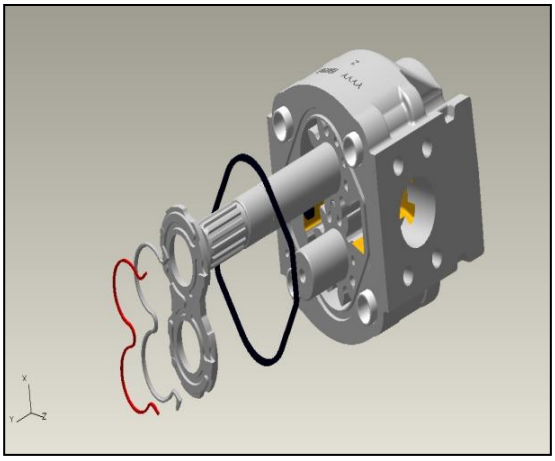
Figure 6

https://truckmanualshub.com/

7. ① Pull out driving gear & driven gear keeping gears as straight as possible.

② Remove other pressure plate on rear side with same way for front side

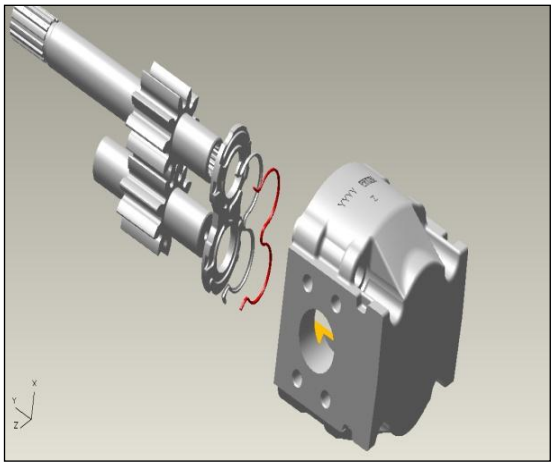

Figure 7

Assembly process

Assembling of sealing framework assembly

pressure plates for 1st working section

1. pressure plates for 1st working section

① Smear clean grease on pressure plate groove

②Locate O-ring into the grove on the aluminum pressure plate.

③Locate back-up ring upon the O-ring.

Figure 8

working body

2. ①Smear clean grease on the square groove

②Insert square rings into the groove and 4 alignment pins.

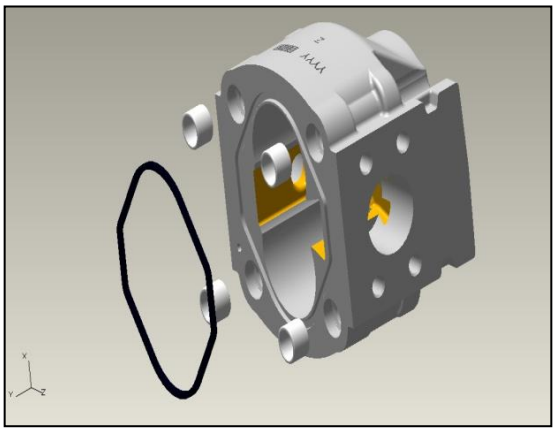

Figure 9

3. ① Locate shaft seal inside shaft hole to the end.
② insert snap ring and locate it into the groove prearranged.

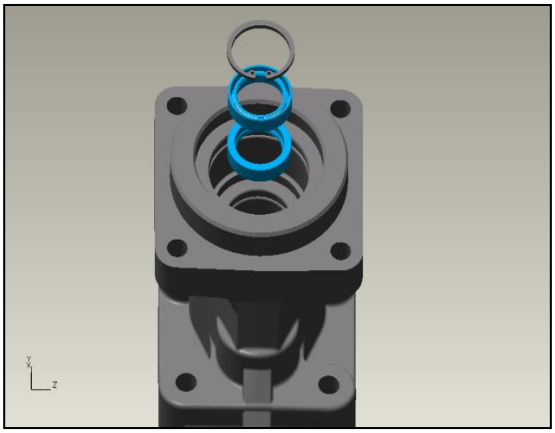

Figure 10

4. ① prepare cleaned 2nd body prearranged guard pins and square O- ring.
② Insert a pressure plate prearranged O-ring & back-up ring inside of body.

Opened area of O-ring should face to suction side. And O-ring side should face to the body.

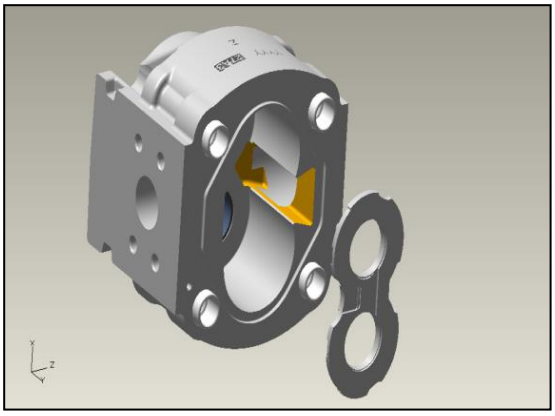

Figure 11

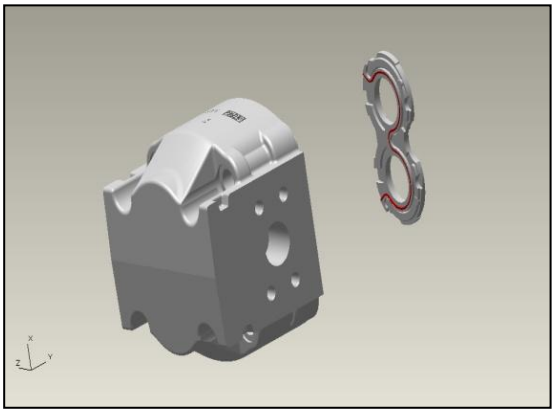

Figure 12

https://truckmanualshub.com/

5. ① Locate driving gear and driven gear keeping as straight as possible during assembling.
② Locate one of pressure plates pre-assembled.

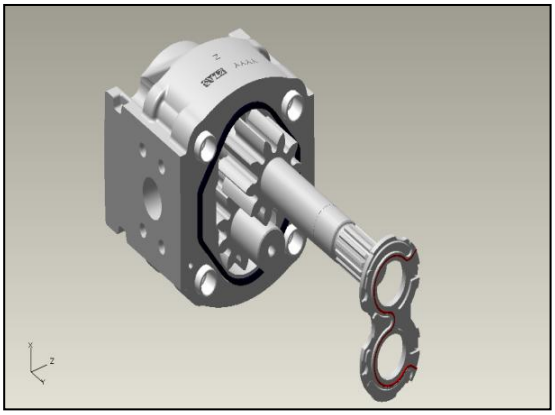

Figure 13

6. ① Assemble mounting flange to the body, use proper tools in order to avoid any damage on the shaft seals by sharp edge of shaft.
☞ Smear clean grease on the lips of shaft seals before assembling.

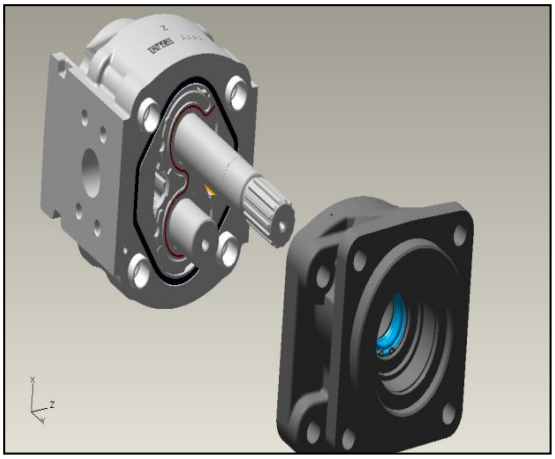

Figure 14

7. Assemble the bolts and tighten the bolts with in a crisscross pattern to a torque value of 280 Nm.

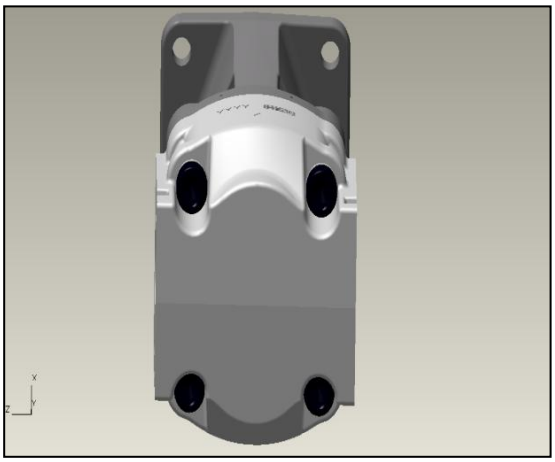

Figure 15

https://truckmanualshub.com/

Steer Pump

⚠ CAUTION!
Follow all safety recommendations and safe shop practices outlined in the front of this manual or those contained within this section. **Always use tools and equipment that is in good working order.** **Use lifting and hoisting equipment capable of safely handling load.** **Remember, that ultimately safety is your own personal responsibility.**

MODEL	SERIAL NUMBER RANGE
SD310	010001 and Up

Copyright 2012 DISD

July 2012

https://truckmanualshub.com/

TABLE OF CONTENTS

GENERAL DESCRIPTION..... 3
WORKING PRINCIPLE.. 3
DETAILED LIST OF SPARE PARTS.. 4
PARTS REPLACEMENT PRINCIPLE.. 6
PREPARATION BEFORE DISASSEMBLING..... 6
DISASSEMBLY AND ASSEMBLY STEPS.. 7

GENERAL DESCRIPTION

Work principle

When active gear 4 rotates with clockwise direction, driven gear 10 rotates with anti-clockwise direction, partial vaccum is formed when teeth of two gears are away from the area in oil in side (left area shown in the figure), with effect of atmospheric pressure, hydraulic oil enters oil suction chamber of oil pump and fills in teeth area. At the other oil outlet side, the size is smaller because of gear mesh, hydraulic oil is squeezed out, gear keeps rotating, gear teeth keeps squeezing out hydraulic oil to enter into work oilway and realize constant oil supplying of the system.

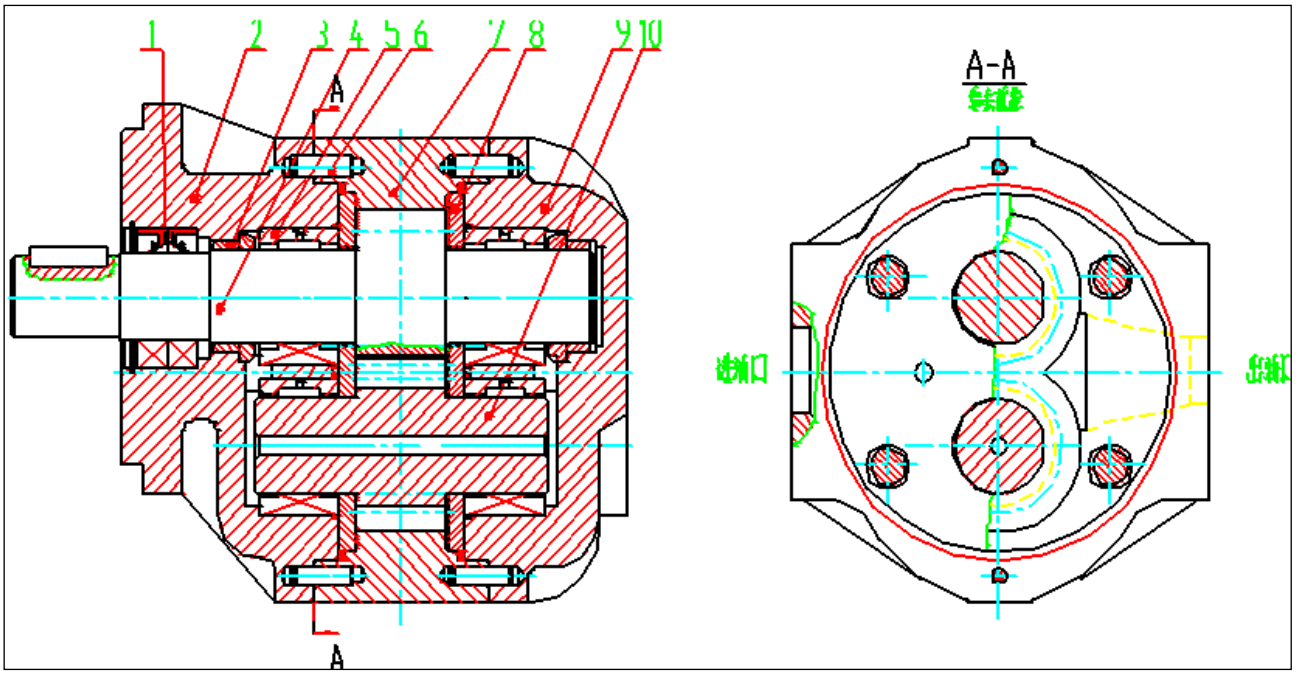

Figure 1

PARTS LIST

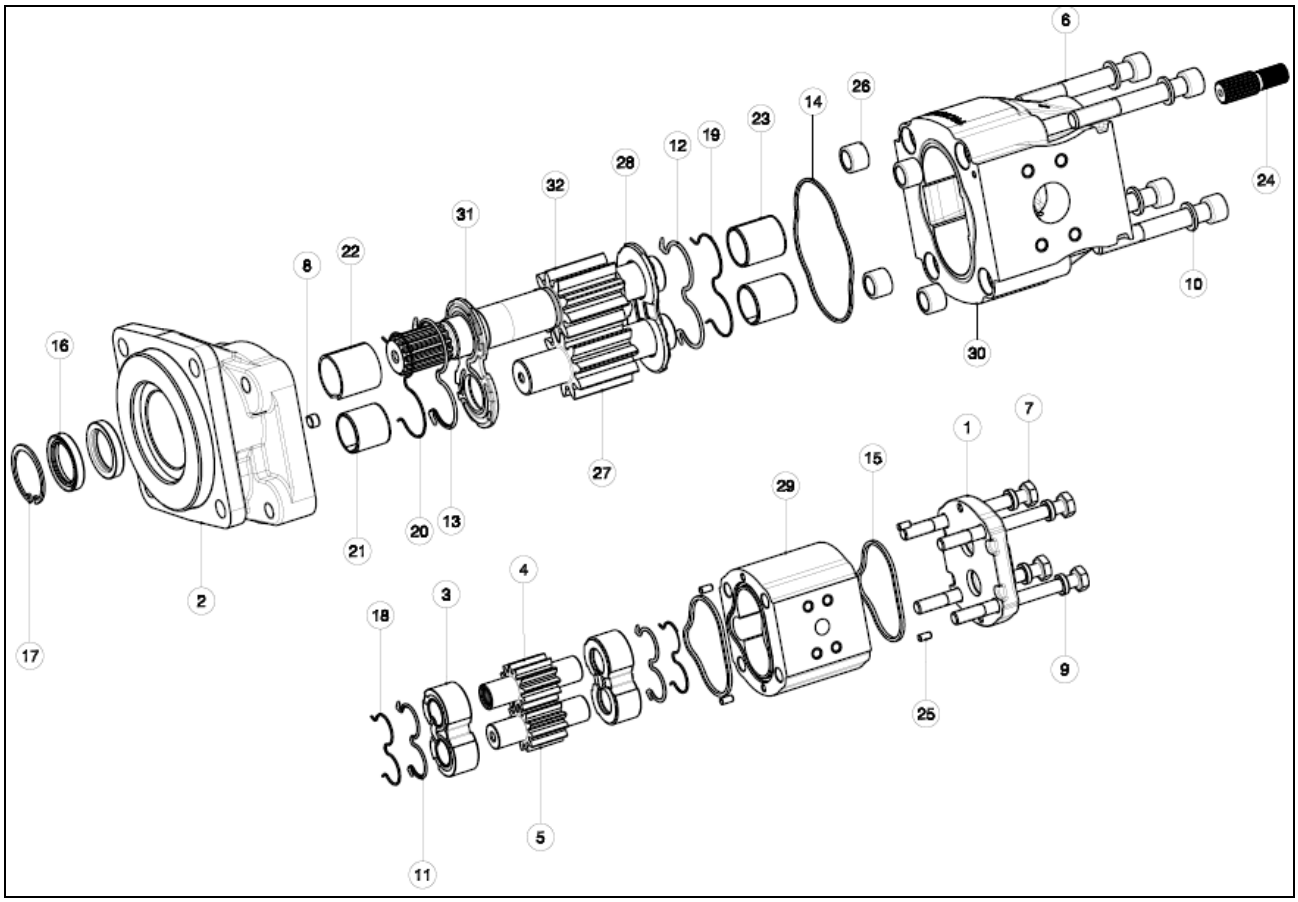

Figure 2

Reference Number	Description	Reference Number	Description
1	Rear Cover	17	Ring
2	Cover	18	Antiextrusion PL-K20
3	Thrust Plate	19	Antiextrusion Ring
4	Drive Gear	20	Upper Antiextrusion Ring
5	Driven Gear	21	Sleeve Bearing
6	Screw TCEI	22	Upper Sleeve Bearing
7	Screw TE	23	Sleeve Bearing MB
8	Grub Screw	24	HUB
9	Washer 10	25	Dowel Pin
10	Washer 14	26	Steel Bushes
11	Seal PL-K20	27	Driven Gear
12	Seal FP-KP-HD30	28	Thrust Plate
13	Upper Seal	29	Body PL20
14	Standard Seal	30	Body PL30
15	Seal PL20	31	Upper Thrust Plate
16	Shaft Seal	32	Drive Shaft

Parts replacement principle

If main pump needs to be repaired to reach the original performance index, parts replacement principle must be followed to replace parts, following is the detailed replacing rules:

1. Side plate: replace side plate when it is scratched, there is pit, spray and finishing layer sheds, burnt, deformed and cavitati on corrosion.

2. Gear: replace gear when one of the following conditions happens: shaft diameter of gear shaft is scratched or worn in sealing zone; teeth surface of gear is worn, scratched, broken or deformed; addendum circle is damaged seriously; multiple spline or flat key and spindle nose are worn, deformed and broken.

3. Castings (front cover, pump body, and rear cover):

3.1 If there is flaw on castings, and sealing zone has chip, rust, deformed pin hole, then replace castings.

3.2 Replace pump body when one of the following conditions happens: oil mouth is broken, pump body is broken and rusty; when bore depth of pump body ＞0.08mm.

4. Round pin: round pin must be replaced when the matching does not comply with requirements, pin is broke and deformed, replace the front cover, pump body and rear cover matched with round pin when it is necessary.

5. Rolling bearing and sliding bearing

5.1 Rolling bearing: new parts must be replaced when quill roller drops, retainer is damages, quill roller has surface pitting, roller path has surface pitting, oversintering.

5.2 Sliding bearing: if one of the following conditions happens, bearing must be replaced: bearing surface is scratched, painting coat sheds, or copper basement is exposed.

6. Secondary sealing ring: replace with new parts when there is inner diameter abrasion, end face abrasion, thickness is milled, deformed, surface is coarse.

7. Non-metal sealing parts: all non-metal sealing parts must be replaced.

8. Outboard bearing: replace with new parts when parts are worn and rusty.

9. Fastener: replace it when it is drawn out, deformed and damaged.

Preparation before disassembling

1. Clean the surface of pump, and check if the surface has chip and rust.

2. Check model and factory releasing number on nameplate, if there is no nameplate on pump, check factory releasing number at seam allowance of front cover.

3. Fill in relative information on main pump returned for maintenance card before disassembling, such as manufacturer, applicable machine model, applicable working condition, pump model, factory releasing number, factory releasing date, head and marks of fabricator, working parameters (pressure, rotation, impact and the constant running time at the highest pressure) on main machine, total working time of main pump and reason for returning for maintenance, etc.

4. Make sure the production is released from the factory as a whole and it is not disassembled after releasing, otherwise it is not maintained.

5. If there is external leaking, do gas tightness checking to the entire pump and find out leaking position.

6. Check tightening torque of bolts (screw down bolts again with torque wrench, record the Max. tightening torque), learn if tightening torque of all bolts have reached the required specification.

https://truckmanualshub.com/

Disassembly and assembly steps

Disassembly steps

1. ①Loosen and remove the assembling bolts and washers from the 2nd pump.

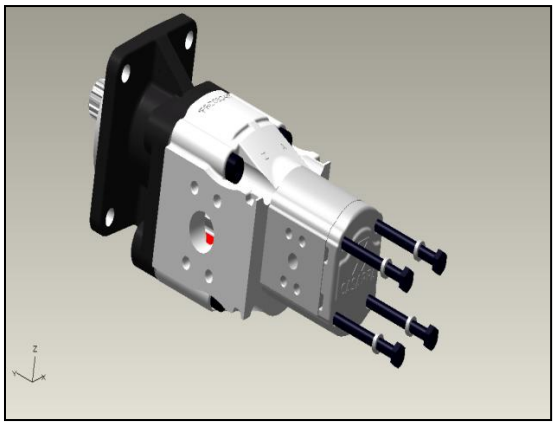

Figure 3

2. ①Remove the complete 2nd working section.
②Remove through hub

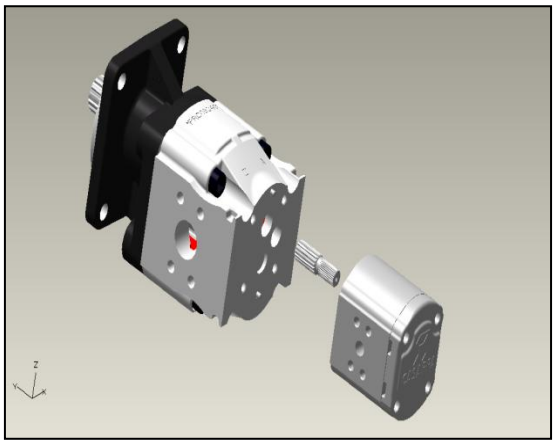

Figure 4

3. ① Loosen and remove the assembling bolts and washers from the 1st pump.

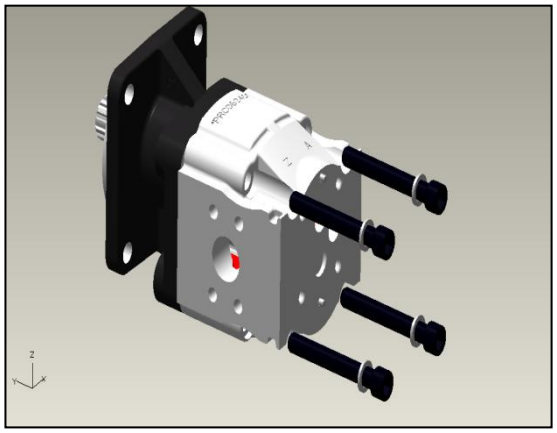

Figure 5

4. ① Remove mounting flange taking care to keep it as straight as possible during removal.
Tap around the edge with rubber mallet in order to break away from the body.
☞Ensure that while removing it, the drive shaft and other components remain position. Use proper tool to avoid shaft seal damage by sharp edge of shaft

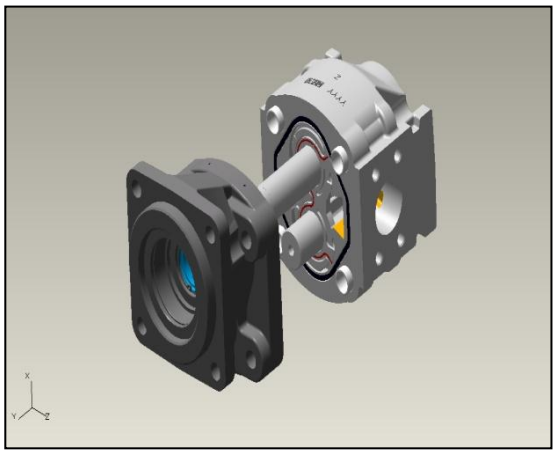
Figure 6

5. ① Take out snap ring with proper tool and Remove 2 shaft seal with (-) screwdriver.
☞Take out the shaft seals only needed: Shaft seals disassembled from the mounting flange is not reusable

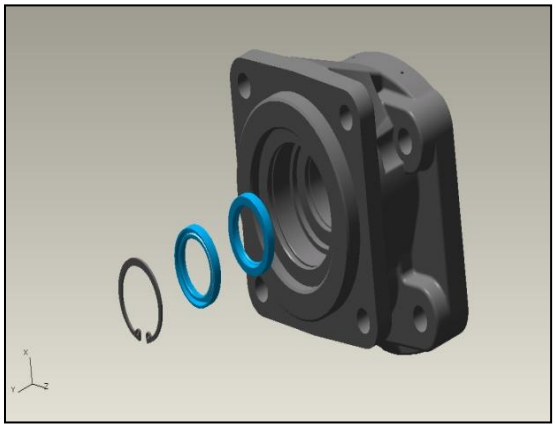
Figure 7

6. ① Remove the pressure plate with prearranged parts, O-ring & back up ring from the working section and examine it carefully.
② Take out square O-ring from the groove on the body.
☞Be careful not to give any damage on the surface of rings.

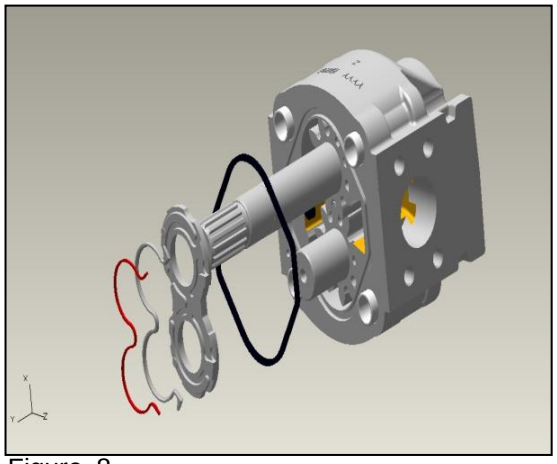
Figure 8

7. ① Pull out driving gear & driven gear keeping gears as straight as possible.

② Remove other pressure plate on rear side with same way for front side

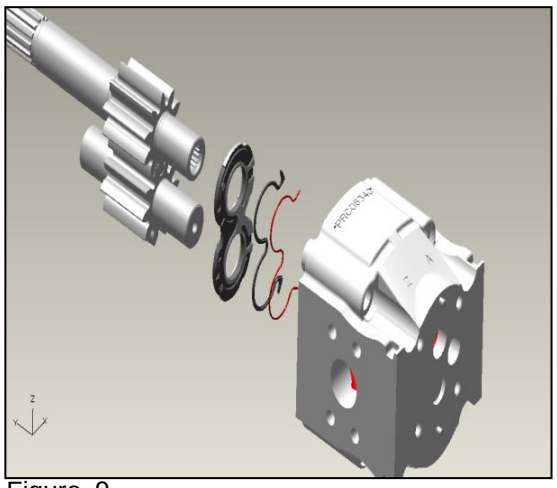

Figure 9

8. ①Remove the pressure plate with prearranged parts, O-ring & back up ring from the working section and examine it carefully.

②Pull out driving gear & driven gear keeping gears as straight as possible.

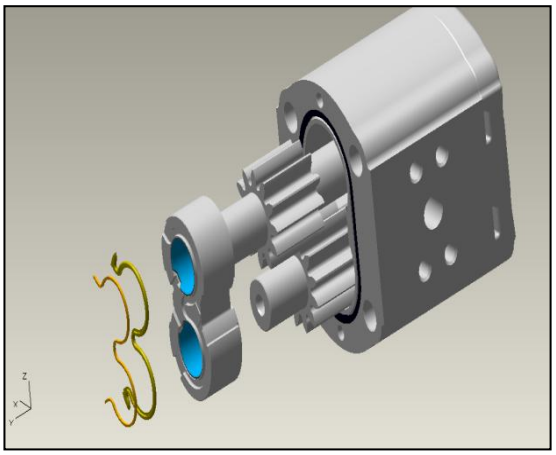

Figure 10

9. ①Remove rear cover and other pressure plate at rear side with same way for front side.

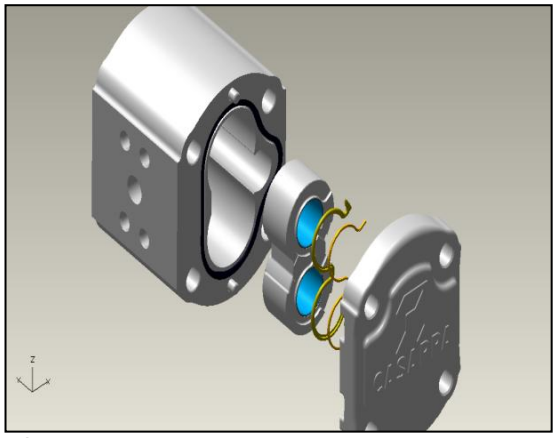

Figure 11

10. ①Take out two square rings from the body.

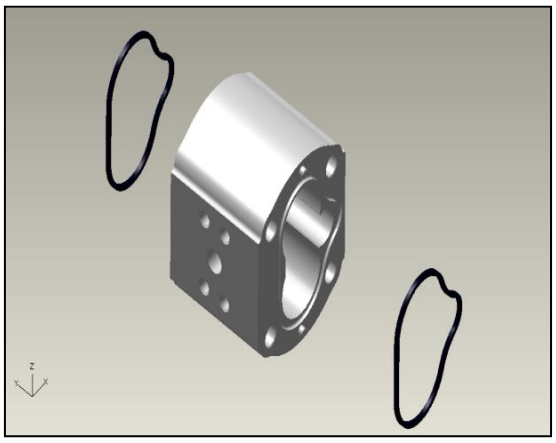

Figure 12

Assembling steps

Assembling of front cover assembly

1. ① Smear clean grease on pressure plate groove ②Locate O-ring into the grove on the aluminum pressure plate.

③Locate back-up ring upon the O-ring.

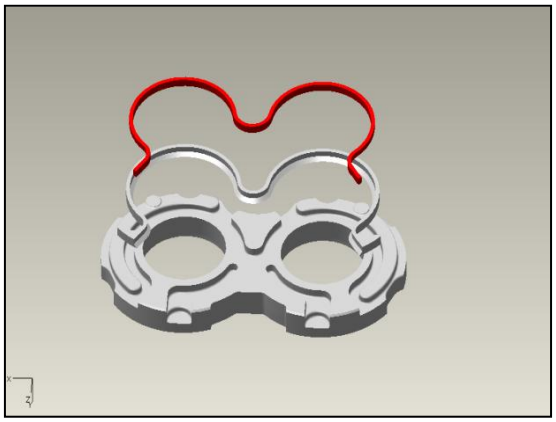

Figure 13

2. ① repeat same procedure.

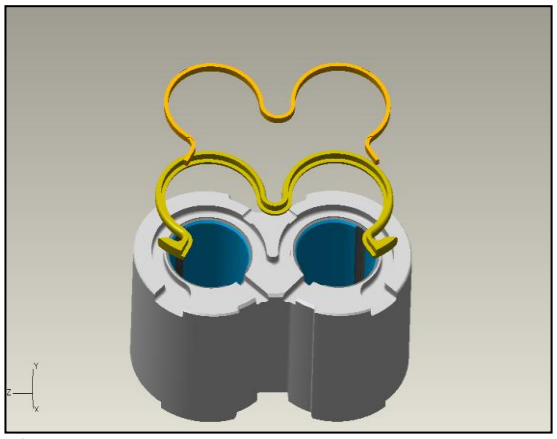

Figure 14

https://truckmanualshub.com/

3. ①Smear clean grease on the square groove
②Insert square rings into the groove and 4 alignment pins.

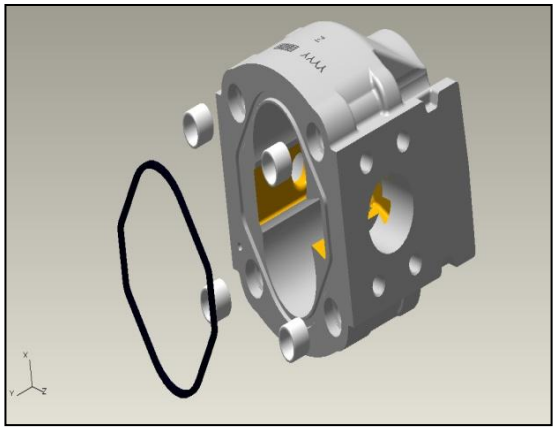

Figure 15

4. ①put one of preassembled pressure plates into the body and locate two gears, then load another plate upon the gears.
☞ pay attention the positions of gears and directions of pressure plates

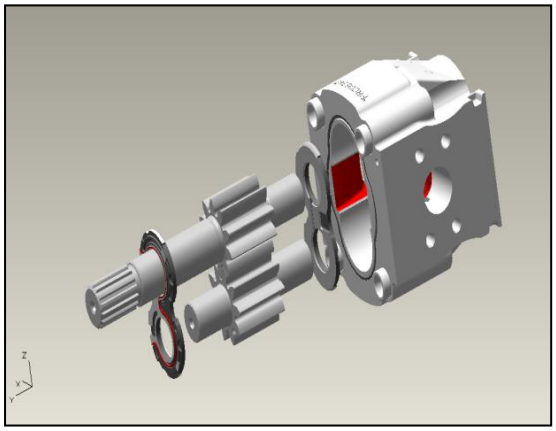

Figure 16

5. ①Smear clean grease on the square grooves
②insert square rings into the grooves.

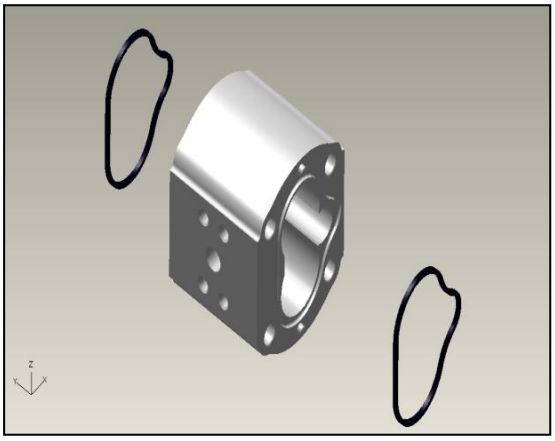

Figure 17

6. ①put one of preassembled pressure plates into the body and locate two gears, then load another plate upon the gears.

☞ pay attention the positions of gears and directions of pressure plates.

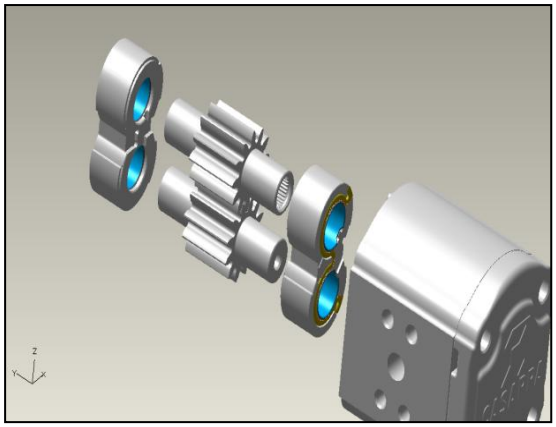

Figure 18

7. ① Locate shaft seal inside shaft hole to the end.

② insert snap ring and locate it into the groove prearranged.

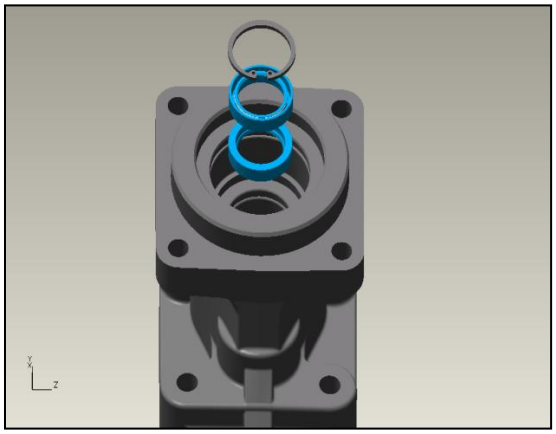

Figure 19

8. ① Assemble mounting flange to the body, use proper tools in order to avoid any damage on the shaft seals by sharp edge of shaft

☞ Smear clean grease on the lips of shaft seals before assembling.

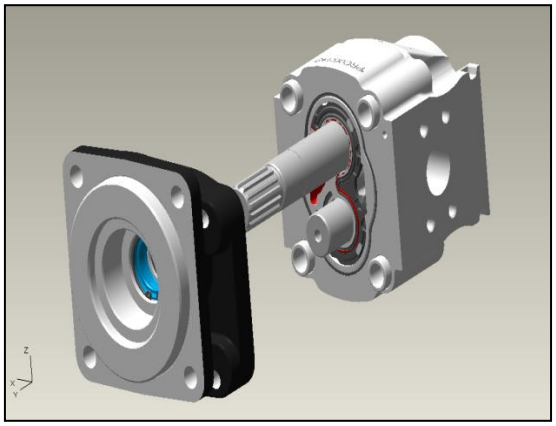

Figure 20

https://truckmanualshub.com/

9. ① Assemble the bolts and tighten the bolts with in a crisscross pattern to a torque value of 140 Nm.

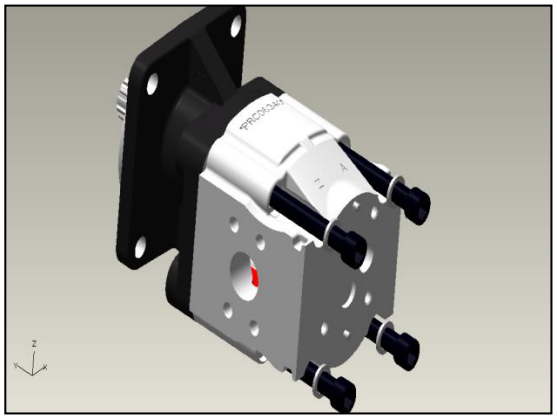

Figure 21

10. ① insert a through shaft to the 1st working section.

② locate 2nd working section to the rear of 1st working section

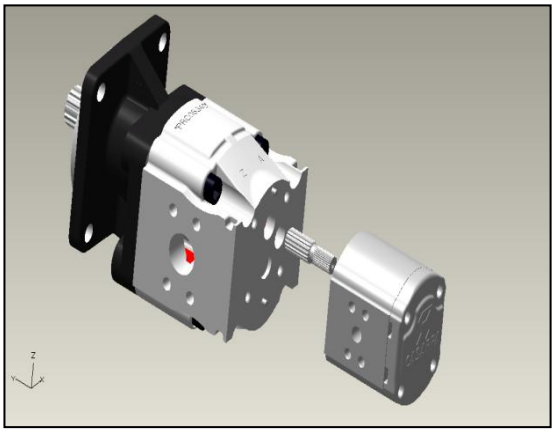

Figure 22

11. ① Assemble the bolts and tighten the bolts with in a crisscross pattern to a torque value of 45 Nm.

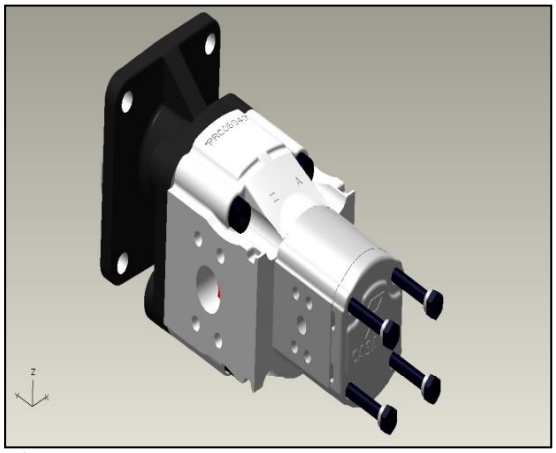

Figure 23

https://truckmanualshub.com/

12. ① Check that the pump rotates freely when the drive shaft is turned by hand, if not a possible, plate seal may be pinched.

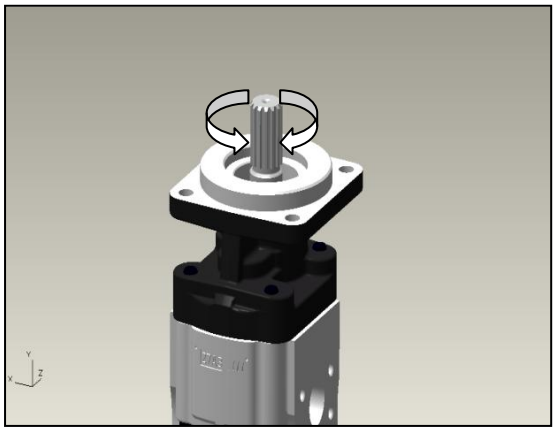

Figure 24

https://truckmanualshub.com/

Main Control Valve

1. CAUTION!
Follow all safety recommendations and safe shop practices outlined in the front of this manual or those contained within this section. **Always use tools and equipment that is in good working order.** **Use lifting and hoisting equipment capable of safely handling load.** **Remember, that ultimately safety is your own personal responsibility.**

MODEL	SERIAL NUMBER RANGE
SD310	010001 and Up

Copyright 2012 DISD

July 2012

https://truckmanualshub.com/

TABLE OF CONTENTS

GENERAL DESCRIPTION.....3
SCHEMATIC DIAGRAM..... 3
DETAILED LIST OF SPARE PARTS..... 4
DISASSEMBLY AND ASSEMBLY STEPS..... 5
BASIC FAULTS AND OVERCOMING..... 7

General description

1. Source: the hydraulic multi-way directional valve is domestic assorting parts for 950B, 966D and 980S wheel loaders introduced in from abroad.

2. Purpose: the valve is combined with DJS pilot valve, mainly used for ZL40, ZL50, ZL60 and other medium and large size loaders, it can also be used for hydraulic system of bulldozers and other medium and large size engineering machines.

3. Characteristics:

a. Adopt decompression type pilot valve to control which reduce reversing operating force greatly;

b. Improve jogging feature of multi-way valve greatly;

c. Relief valve, overload valve, oil compensating valve and check valve adopt plug-in mounting which has good generality and easy for maintenance;

d. Four floating is easily realized on the basis of three main valves, which make four main valve structure simple;

e. It is convenient for pipe lay out, and reduces pressure loss of the system.

4. **Schematic diagram**

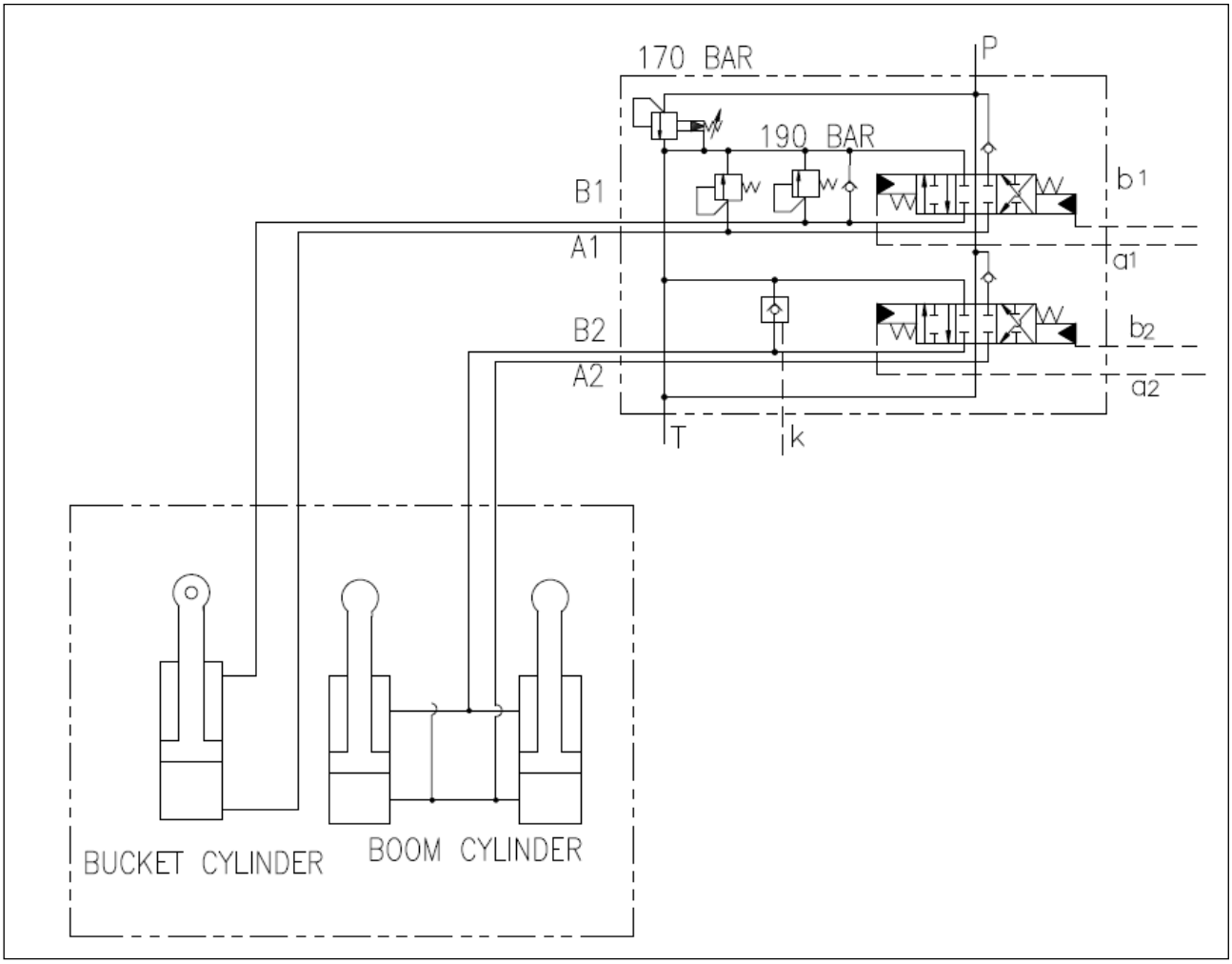

Figure 1

Detailed list of spare parts

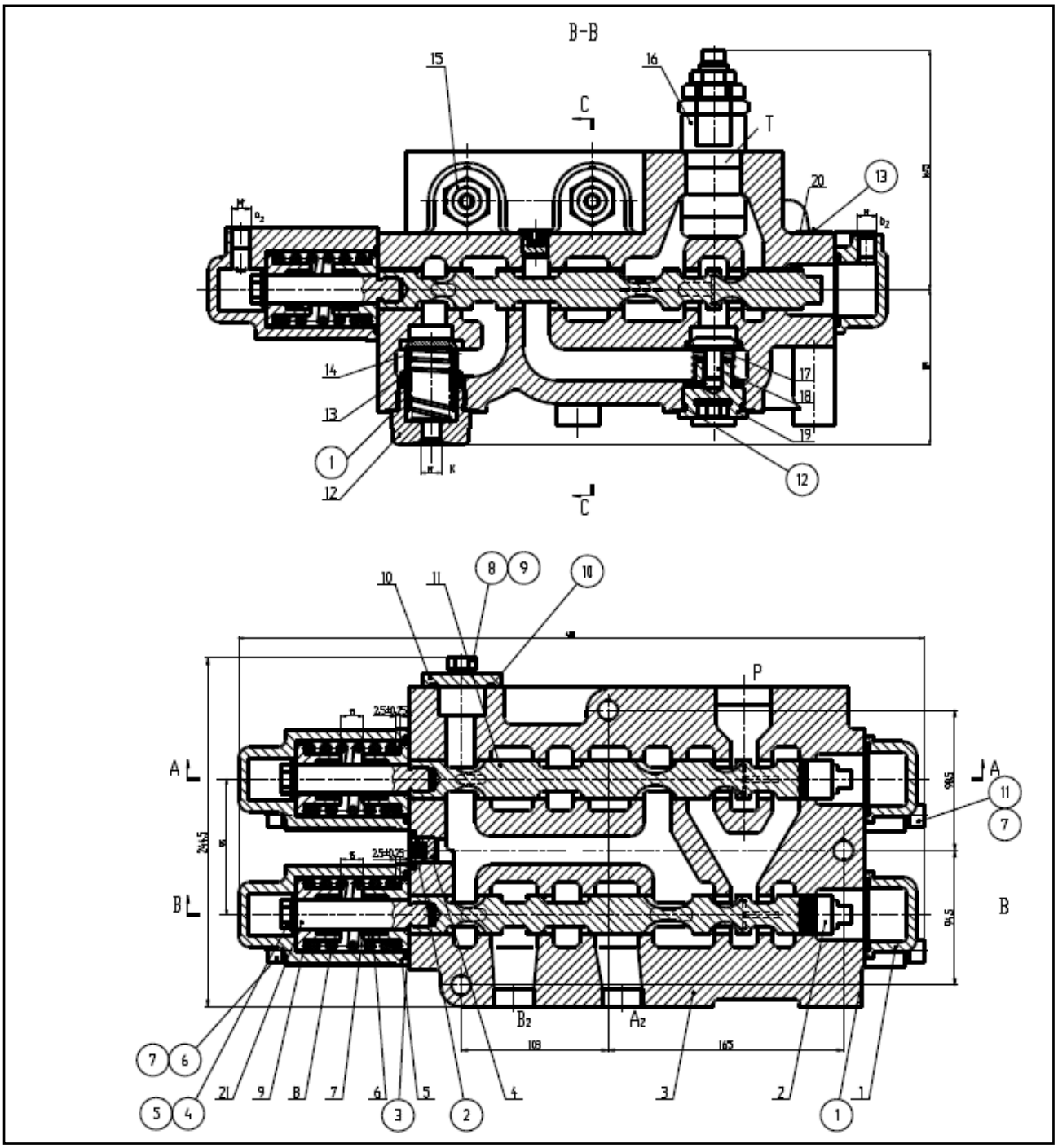

Figure 2

Reference Number	Description	Reference Number	Description
1	Cover	18	Check valve
2	Boom Valve spool	19	Cover
3	Valve body	20	Name Plate
4	Check valve	21	Spool joint
5	Cover	①	O-Ring 50x3.1
6	Spring seat	②	O-Ring 20x2.4
7	Spring	③	O-Ring 60x3.1
8	Spring	④	Gasket2
9	Spring gasket	⑤	Bolt M12x20
10	Cover board	⑥	Bolt M10x100
11	Bucket valve spool	⑦	Gasket10
12	Cover	⑧	Gasket12
13	Spring	⑨	Bolt M12x30
14	Make up valve	⑩	O-Ring 45x3.1
15	Overload valve	⑾	Bolt M10x45
16	Relief valve	⑿	O-Ring 44x3.5
17	Spring	⒀	Rivet 2x4

Disassembly and assembly steps

When repairing the entire valve, put multi-way valve at a flat and clean place, clean all parts after disassembly and then assemble.

1. Dismantle and assemble overload valve and relief valve, do not loosen locknut when dismantling, put wrench at cartridge valve, marksigns on high and low pressure overload valve. Check sealing ring of cartridge valve; assemble again when it is confirmed well.

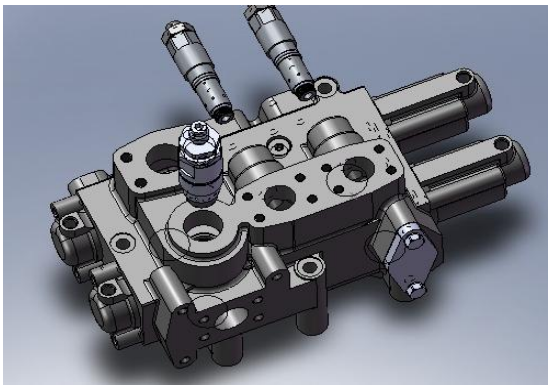

Figure 3

2. Dismantle end cap at both sides with innerhexagon screw, check if sealing ring is good. Pull out valve rod from long end cap; check if the valve rod and valve surface is impacted; install valve rod to valve when it is moving smoothly and there is no blockage, put O ring in oil seal groove of end cap, keep end cap connection oil mouth upward when installing end cap, fastening torque of end cap bolts is 35～40N.m.

Figure 4

3. If valve rod end spring needs to be replaced, fix valve rod with special fixture, screw out end cap bolts with wrench. Check if the spring is broken or deformed, when installing spring and valve rod, the clearance between return spring and spring seat when spring is at free state is around 2.5mm.

Figure 5

4. Dismantle and assemble check valve. Dismantle three end caps of check valve with inner hexagon screw, mark on each end cap with chalk, check if the check valve is leaking by checking if the spring is deformed and surface normal line of check valve is good. Guarantee check valve and valve seat can move flexibly during installation; while check if 1.0 hole on tope of the hydraulic control check valve is blocked before installation. Check if all screw plugs are complete, check if screw plug is screw down and sealing ring is complete when oil is leaking.

Figure 6

Basic faults and overcoming

S/N	Faults	Reasons	Overcoming methods
1	Working pressure is not enough	Pressure of relief valve is regulated too low	Adjust pressure of relief valve
		Slide valve of relief valve is blocked	Dismantle, clean and assemble again
		Pressure regulation spring is broken	Replace with new one
		System pipe pressure is lost too much	Replace pipeline or regulate pressure of relief valve within the allowable pressure range
2	Working flow is not enough	Oil supply of the system is not enough	Check oil source, check oil pump
		Leakage in valve is large	
		a. Oil temperature is too high, viscosity decreases	a. Take measures to reduce oil temperature
		b. Selection of oil is improper	b. Replace oil
		c. Clearance between slide valve and valve is too large	c. Replace slide valve according to reasonable clearance
		Fault of relief valve	Repair relief valve
3	Resetting does not work	Resetting spring is damaged or deformed	Replace new ones
		There is pollutant between valve rod and valve	Clean parts
4	External leakage	Sealing ring is damaged	Replace new ones
		Fasteners are loosed	Screw down fasteners
5	Slippage of swing arm is large	Clearance between muti-way valve and valve rod increases	Replace valve rod
6	Rotating bucket falls	Overload valve or oil compensating valve is blocked by pollutant	Dismantle, clean and reassemble

https://truckmanualshub.com/

https://truckmanualshub.com/

Feed Unit

⚠ CAUTION!
Follow all safety recommendations and safe shop practices outlined in the front of this manual or those contained within this section. **Always use tools and equipment that is in good working order.** **Use lifting and hoisting equipment capable of safely handling load.** **Remember, that ultimately safety is your own personal responsibility.**

MODEL	SERIAL NUMBER RANGE
SD310	010001 and Up

Copyright 2012 DISD

July 2012

https://truckmanualshub.com/

TABLE OF CONTENTS

GENERAL DESCRIPTION.. 3
WORK PRINCIPLE.. 3
DETAILED LIST OF SPARE PARTS..... 4
DISASSEMBLY AND ASSEMBLY STEPS.. 5

https://truckmanualshub.com/

GENERAL DESCRIPTION

Work principle

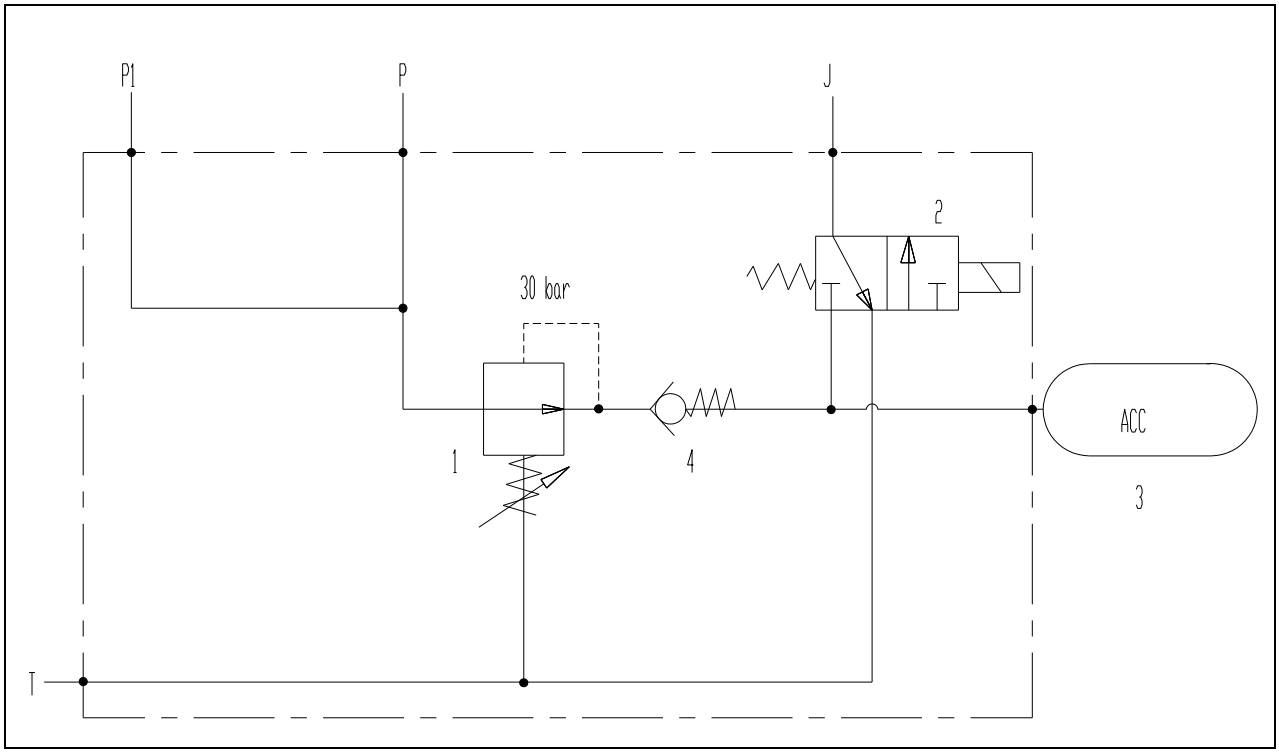

Figure 1

https://truckmanualshub.com/

DETAILED LIST OF SPARE PARTS

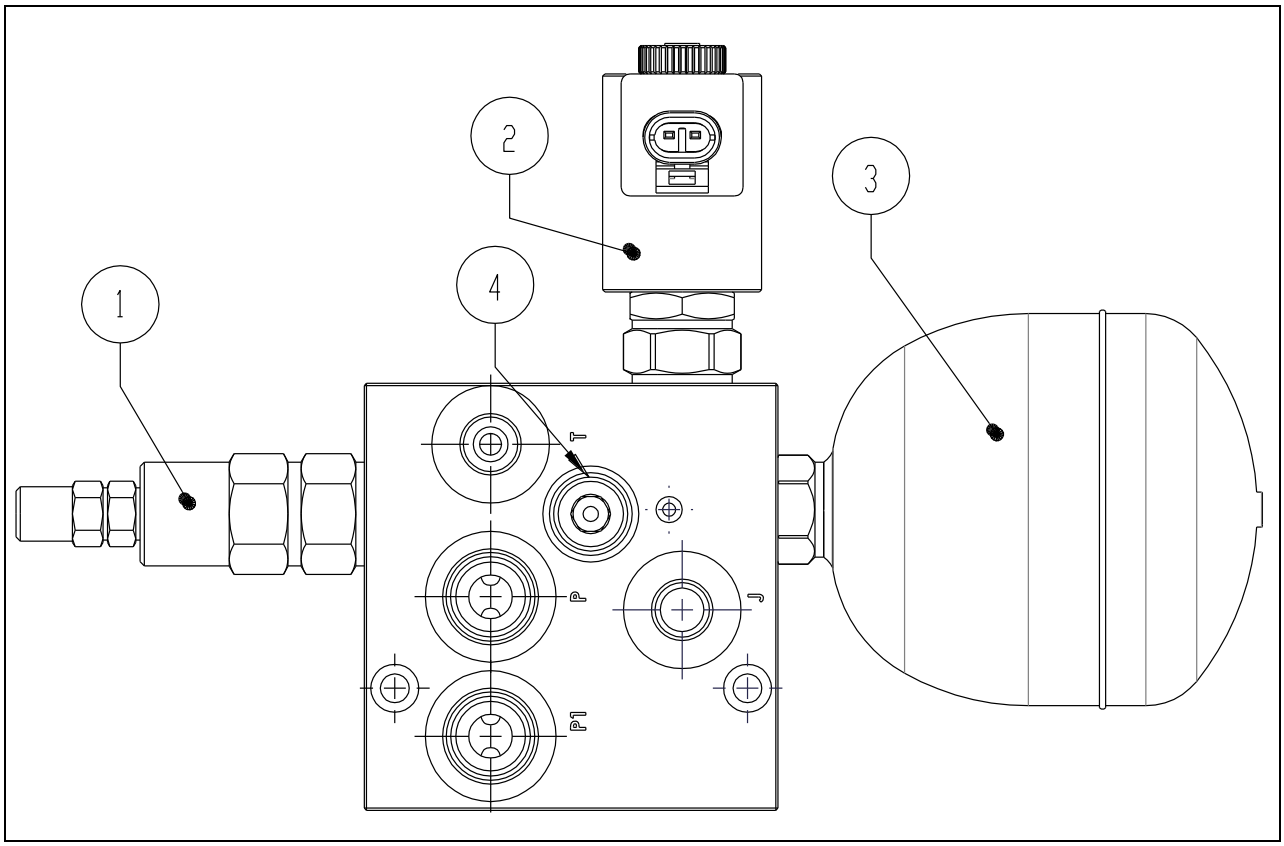

Figure 2

Reference Number	Description	Reference Number	Description
1	Reducing Valve	3	Accumulator
2	Solenoid Valve	4	Plug

https://truckmanualshub.com/

Disassembly and assembly steps

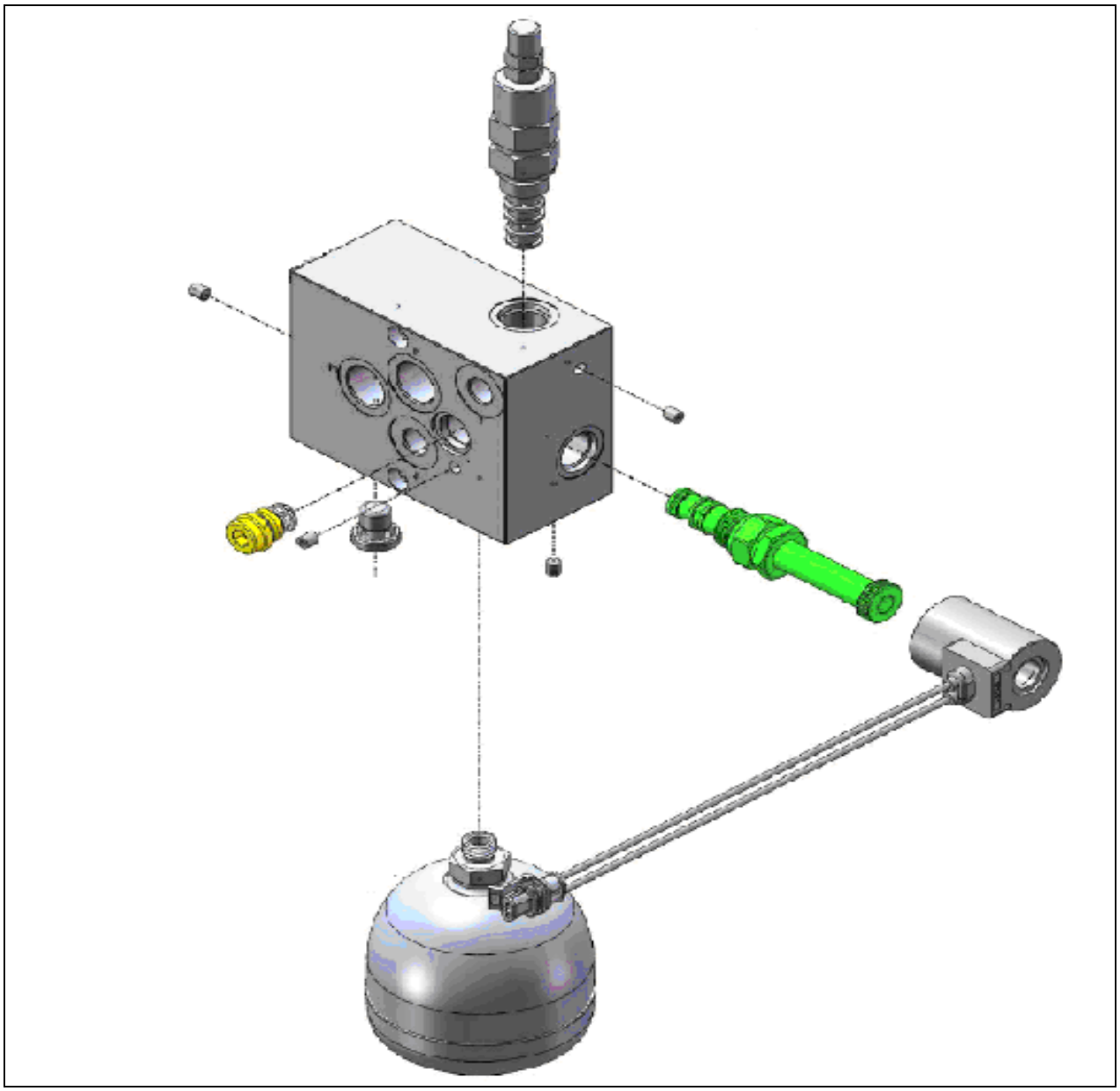

Figure 3

https://truckmanualshub.com/

https://truckmanualshub.com/

Priority Valve

⚠ CAUTION!
Follow all safety recommendations and safe shop practices outlined in the front of this manual or those contained within this section. **Always use tools and equipment that is in good working order.** **Use lifting and hoisting equipment capable of safely handling load.** **Remember, that ultimately safety is your own personal responsibility.**

MODEL	SERIAL NUMBER RANGE
SD310	010001 and Up

Copyright 2012 DISD

July 2012

https://truckmanualshub.com/

TABLE OF CONTENTS

GENERAL DESCRIPTION.....3
WORK PRINCIPLE.....3
DETAILED LIST OF SPARE PARTS.....4
DISASSEMBLY STEPS OF PRIORITY VALVE 5
MATTERS NEED ATTENTION FOR DISASSEMBLING PRIORITY VALVE……..... 6
ASSEMBLY STEPS OF PRIORITY VALVE.....7
MATTERS NEED ATTENTION FOR ASSEMBLING PRIORITY VALVE..... 8
TOOLS FOR DISASSEMBLY AND ASSEMBLY..... 8

General Description

Work principle

YSF25 steering control valve is control valve parts of steering system, its premise is to guarantee oil supplying to steering system preferentially, when the loader is working under high pressure and small flowrate, the extra oil of steering system can discharge load automatically under lower pressure. Load discharging pressure can be regulated by relief valve according to working conditions, this makes up the shortage of priority valve, reduces power consumption and reduce temperature rising of the system.

The valve is installed at steering oilway, it is between steering pump and load sensing hydraulic steering gear. P mouth is oil inlet which is connected with steering pump. CF mouth is the steering mouth connected with oil inlet of steering gear, EF mouth is the work mouth connected with multiway valve, LS mouth is control mouth connected with load sensing mouth of steering gear, T is load discharging mouth connected with oil tank.

When the load does lifting work, oil from steering pump goes through P mouth and a hole and reaches right side of priority valve spool, it will overcome control pressure of priority valve spring with the effect of pressure oil, pushes priority spool moving to the left, oil from steering pump opens check valve and goes to work system through EF mouth to satisfy big flow rate requirements of the loader. When the loader is under high pressure and small flowrate, high pressure oil of EF mouth will make load discharging relief valve I start, control oil goes to the left side of load discharging spool through oilway, reaches T mouth through c small hole, the pressure difference makes load discharging spool overcome spring force of relief valve and move to the right, oil from P mouth will go to load discharge mouth T and discharge load directly.

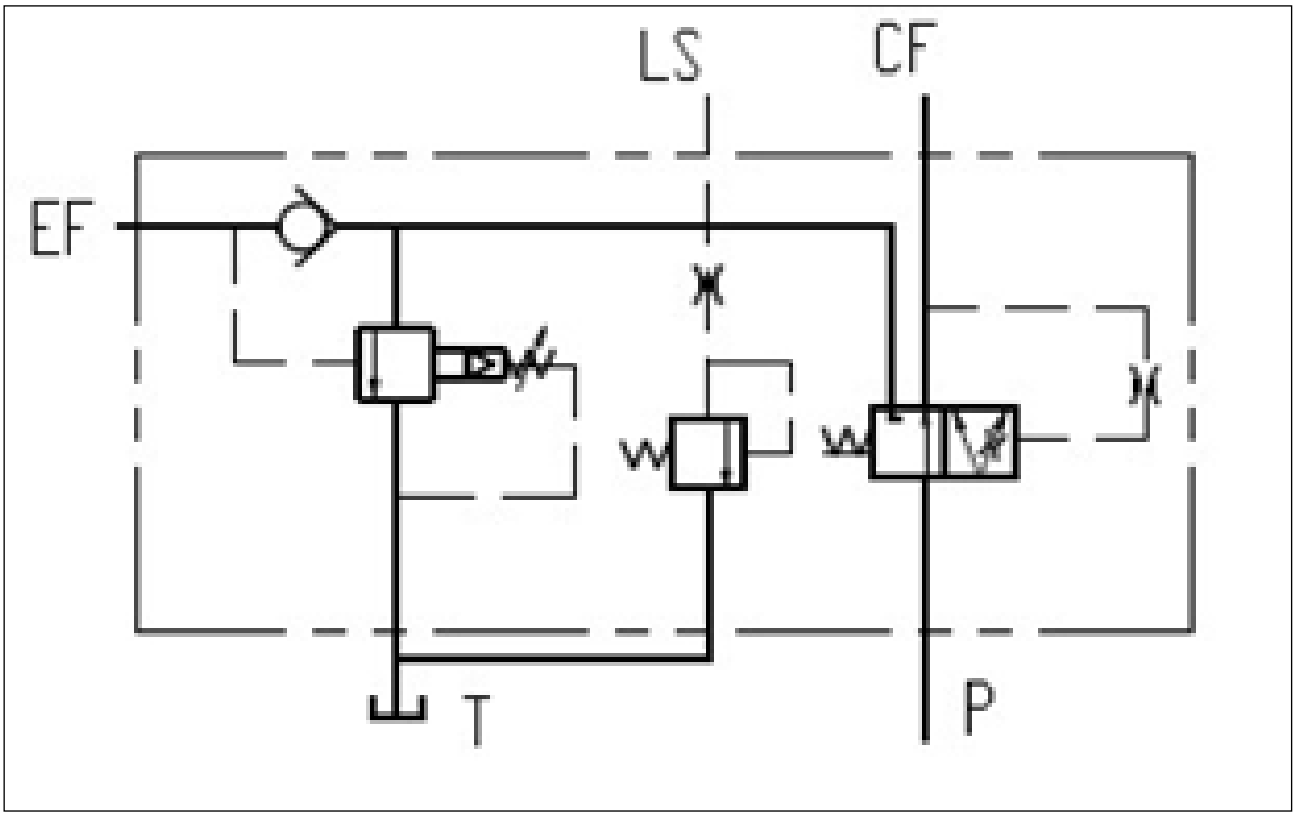

Figure1

Detailed list of spare parts

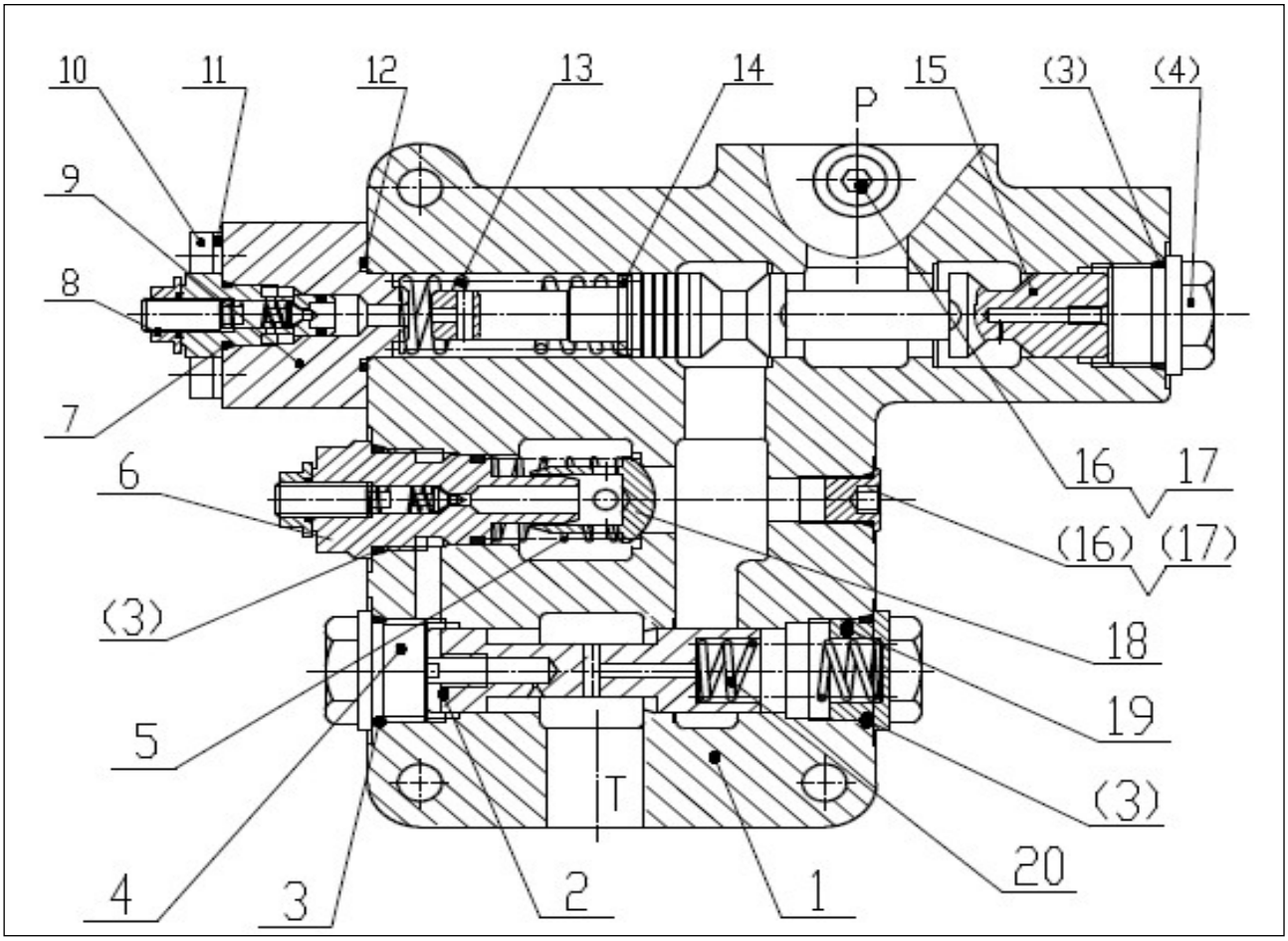

Figure2

Reference Number	Description	Reference Number	Description
1	Valve body	11	Gasket 10
2	Valve spool	12	O-Ring 28X2.65
3	O-Ring 26.5X2.65	13	Priority Valve Spring
4	Plug Ⅰ	14	Priority Valve Gasket
5	Check Valve Spring	15	Priority Spool
6	Relief Valve Ⅰ	16	O-Ring 11.8X2.1
7	O-Ring 15X1.8	17	Plug
8	Relief Valve Ⅱ	18	Check Valve
9	Relief Valve seat	19	Plug Ⅱ
10	Bolt M10X50	20	Relief Valve Spring

Disassembly steps of priority valve

1. Screw off screw plug I on the left, take out load discharging spool, load discharging spring, screw out plug II from the right side.

Tools: torque (electric) wrench, m27 sleeve

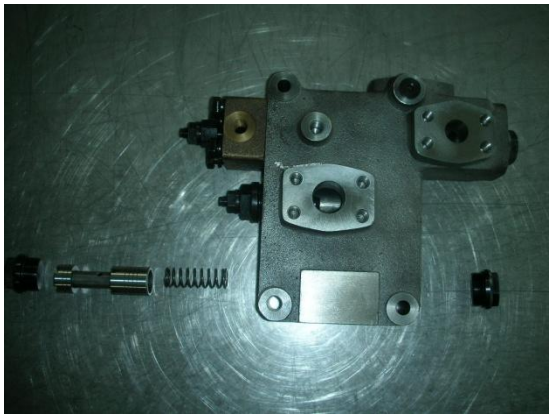

Figure 3

2. Open relief valve I from the left side, take out check valve spring, check valve, and screw out plug from the right side.

Tools: torque (electric) wrench, m27 sleeve, m6 inner hexagonal spearhead

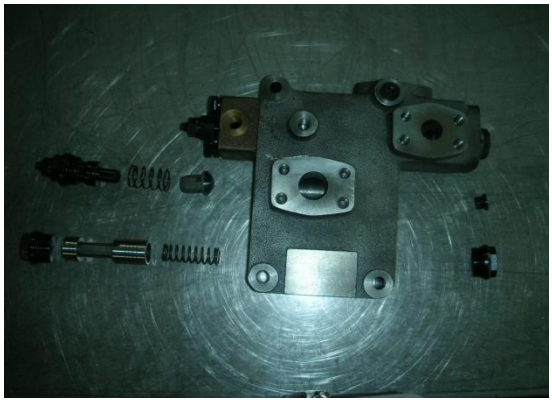

Figure 4

3. Screw off relief valve I and relief valve seat on the left, take out priority spring, priority spool and screw out plug I from the right side.

Tools: torque (electric) wrench, m27 sleeve, m22 sleeve and m16 sleeve

Figure 5

https://truckmanualshub.com/

Matters need attention for disassembling priority valve

1. Plug of pressure mouth is only screwed out when testing pressure; it does not belong to disassembling range (same principle for assembling).
2. Pull out valve spool slowly, pay attention to protect valve body hole, plug combination surface and thread from damaging.
3. Check if O ring is deformed, trimmed and aged after disassembling, usually O ring cannot be used again after disassembling.
4. After disassembling, valve body and spool shall be cleaned with 32# hydraulic oil, check if spool surface has obvious scratch; do not use spool and valve body if there is scratch.

Assembling steps of priority valve

1. Install relief valve II, relief valve seat, priority spring, priority spool and plug I into valve body from left to right.

Tools: torque (electric) wrench, m27 sleeve, m22 sleeve and m16 sleeve

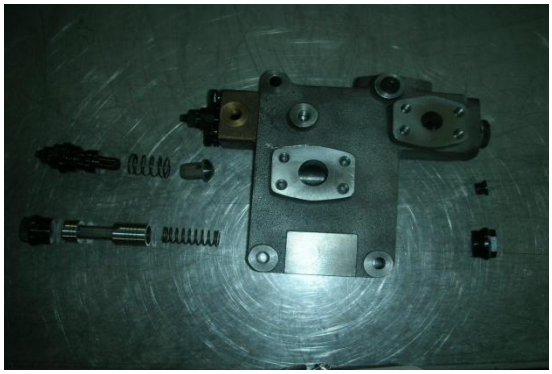

Figure 6

2. Install relief valve I, check valve spring, check valve and plug into valve body from left to right.

Tools: torque (electric) wrench, m27 sleeve, m6 inner hexagonal spearhead

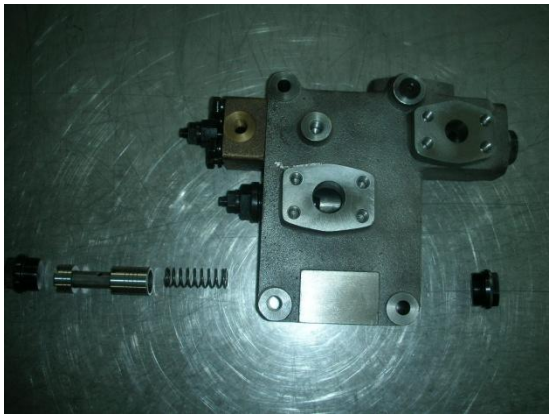

Figure 7

3. Install plug I, load discharging valve spring, load discharging valve spool and plug II into valve body from left to right.

Tools: torque (electric) wrench, m27 sleeve

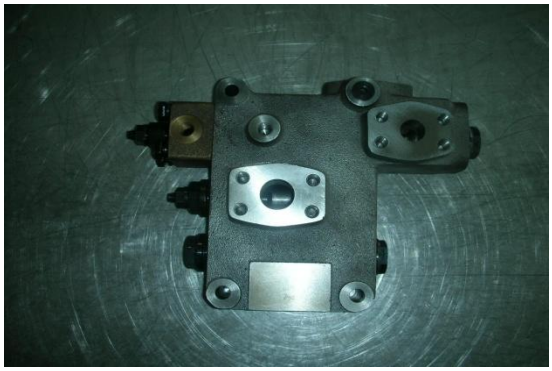

Figure 8

Matters need attention for assembling priority valve

1. Keep all parts clean before assembling.
2. During installation, all spools shall be installed slowly and guarantee they can slide flexibly, if there is blockage, grind spool surface and sharp corner slightly with find abrasive paper, reclean the valve.
3. Avoid to damage trim of O ring when screwing on screw plug, it is better to coat grease on the surface before installation.

Tools for disassembly and assembly

Main tools for disassembly and assembly are:

Torque wrench

(Electric wrench)

M27 sleeve

M22 sleeve

M16 sleeve

M6 inner hexagonal spearhead

Figure 9

https://truckmanualshub.com/

Steering Unit

⚠ CAUTION!
Follow all safety recommendations and safe shop practices outlined in the front of this manual or those contained within this section. **Always use tools and equipment that is in good working order.** **Use lifting and hoisting equipment capable of safely handling load.** **Remember, that ultimately safety is your own personal responsibility.**

MODEL	SERIAL NUMBER RANGE
SD310	010001 and Up

https://truckmanualshub.com/

TABLE OF CONTENTS

GENERAL DESCRIPTION.....3
WORK PRINCIPLE.....3
DETAILED LIST OF SPARE PARTS.....4
DISASSEMBLY STEPS OF STEERING UNIT 5
ASSEMBLY STEPS OF STEERING UNIT..... 11
MATTERS NEED ATTENTION FOR DISASSEMBLING STEERING UNIT..... 14

General description Work principle

When steering unit is in the middle, spool and valve bush is at meso-position with the effect of spring lamination, oil from oil pump will enter spool from two rows of holes of valve bush and spool, then returns to oil tank throug T oil mouth.

When steering wheel turns right (or left), spool is driven to turn to the right (or left), since the Max. rotation quantity between spool and valve bush is 10.5°, so spool rotates against valve bush, at this moment, oil groove is connected with oil inlet way of valve bush, oil goes through valve bush and oil groove of spool, returns to rotor and stator from valve bush, drives rotor rotating against stator. At the same time, oil from rotor and stator enters one of the chamber of cylinder through oil mouth A (or B) to make cylinder piston stretch out (compress inside), and push sheering wheel turns right (or left), oil from the other chamber of cylinder enters valve bush through oil mouth B (or A), returns oil groove through spool, and goes back to oil tank through T oil mouth from valve bush.

The relative rotation angle of spool and valve bush is 1.5°, oil way is connected, and rotation of rotor makes oil connects with cylinder, oil supplying quantity and rotation angle of steering wheel become direct ratio.

When steering wheel turns right (or left) for an angle and keeps the state, since the above mentioned oilway is open and oil from oil pump will push rotor to turn right (left), when rotation angle of rotor is the same with rotation angle of steering wheel, since valve bush and rotor is connected through linkage axle, so rotor will drive valve bush to turn right (or left) to keep the same angle with steering wheel. At this moment, valve bush and spool form the position without rotation angle, oilway going to rotor and oil cylinder is closed, oil from oil pump will go into spool through two rows of holes through valve bush and spool, oil goes back to oil tank through T oil way from valve bush. At this time, tyre stops moving, this is hydraulic feedback servo action.

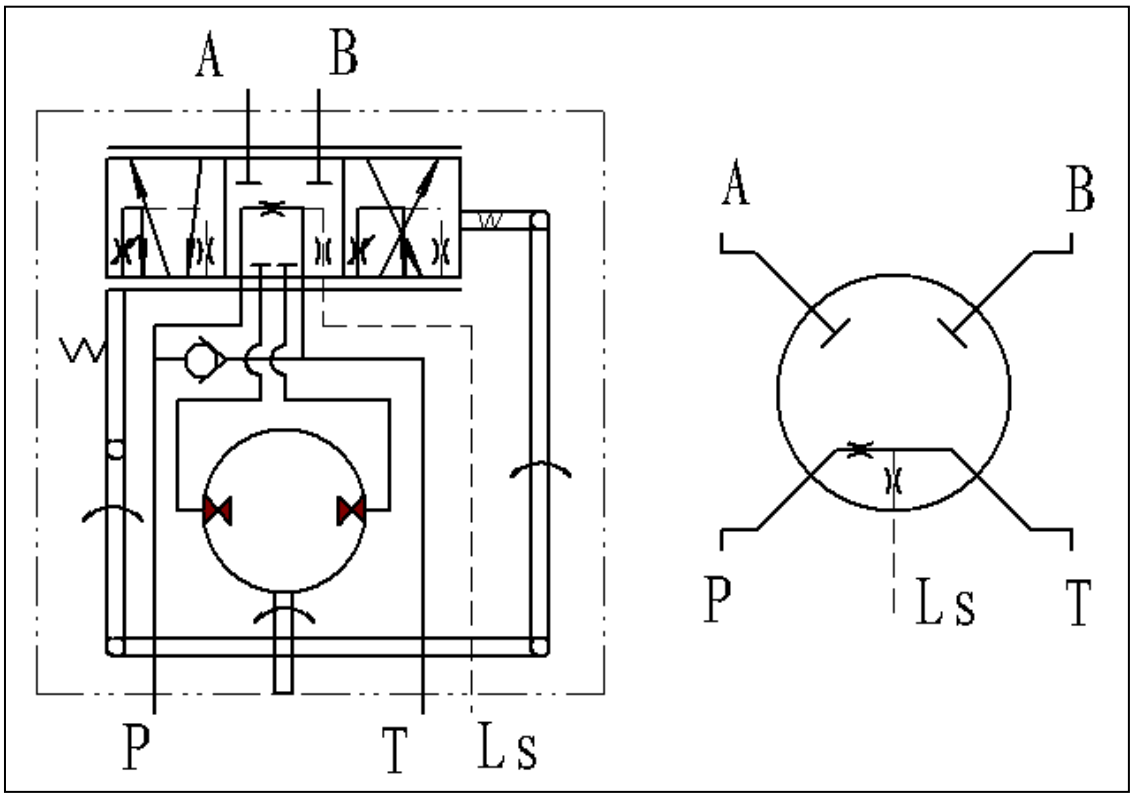

Figure 1

Detailed list of spare parts

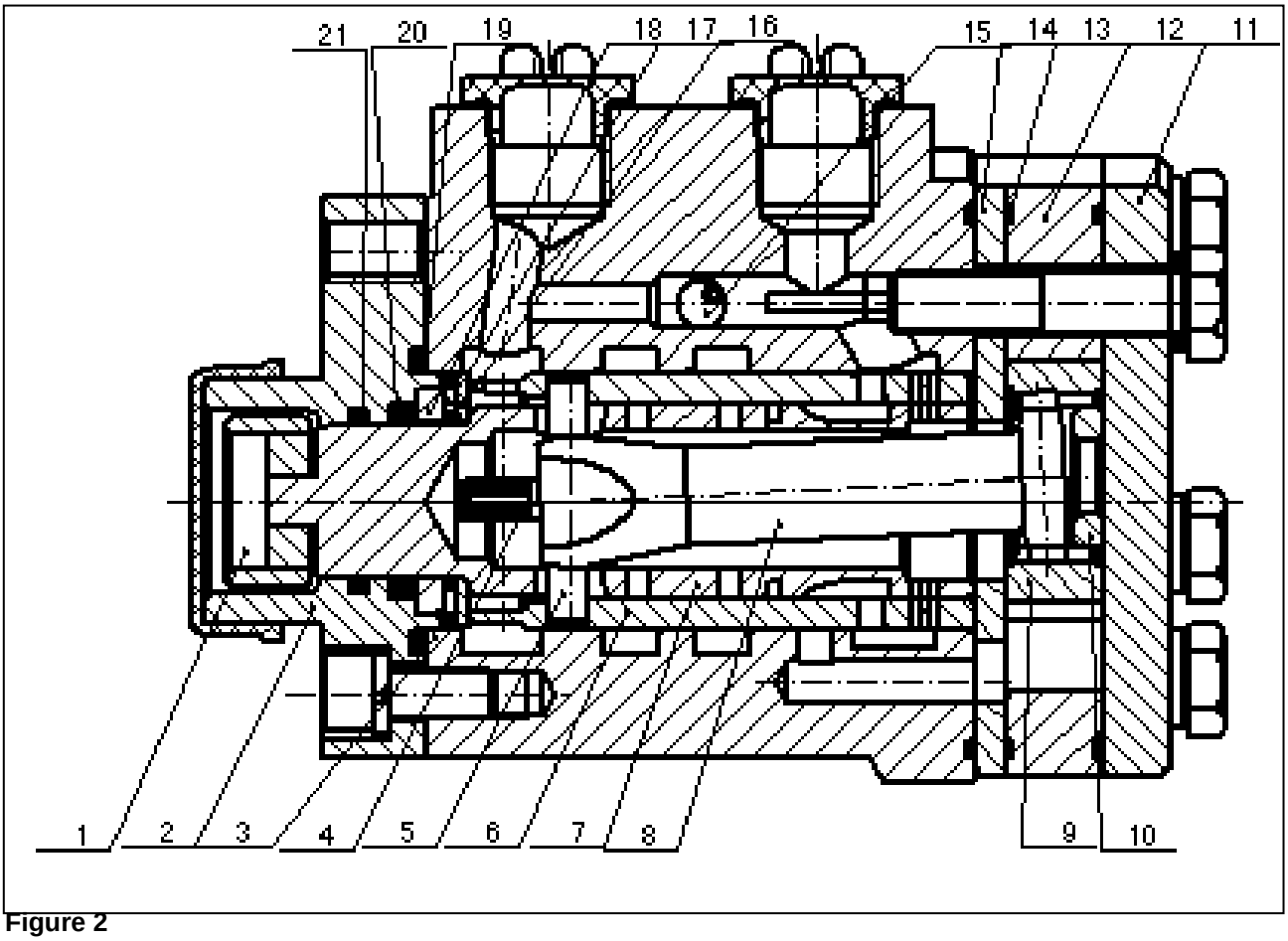

Figure 2

Reference Number	Description	Reference Number	Description
1	Cross Link block	12	Stator
2	Front cover	13	O-Ring
3	Valve body	14	Spacer Plate
4	Spring lamination	15	Steel Ball
5	Pin	16	Big Baffle Rring
6	Valve bush	17	Thrust Ball Bearing
7	Valve spool	18	Small Baffle Ring
8	Linkage Shaft	19	O-Ring
9	Rotor	20	X-Ring
10	Limited Post	20	O-Ring
11	Rear Cover		

Disassembly steps of steering unit

1. Take out link block.

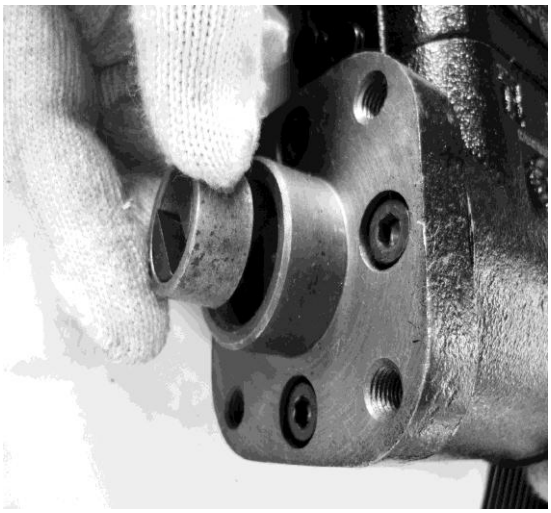

Figure 3

2. Take out front cover.

Figure 4

3. Take out multi-roll bearing

Figure 5

4. Take out bolts of rear cover.

Figure 6

5. Take out rear cover.

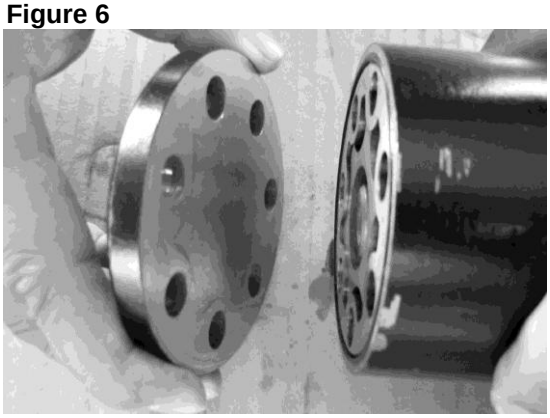

Figure 7

6. Dismantle stator

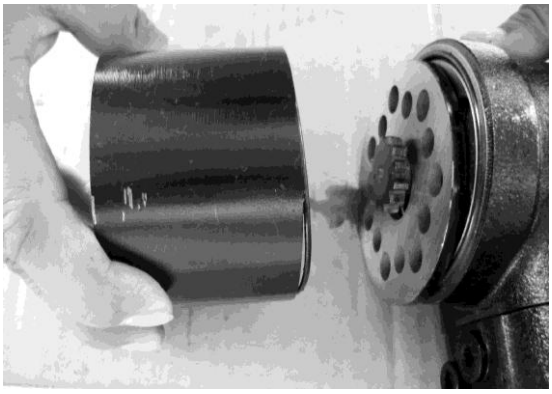

Figure 8

7. Dismantle O-RING

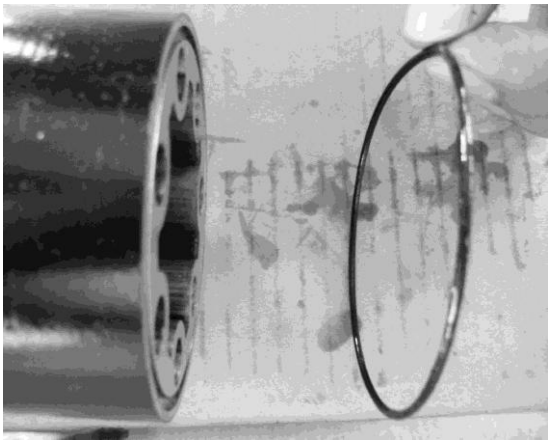

Figure 9

8. Dismantle rotor.

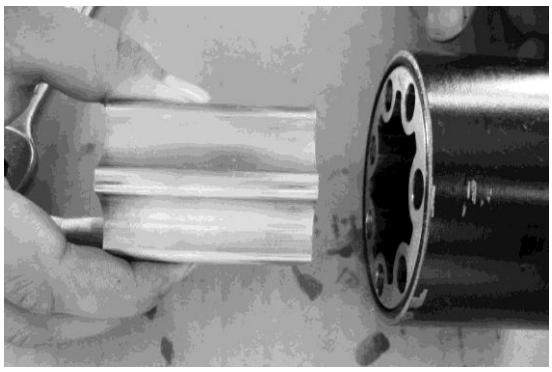

Figure 10

9. Take out limitation block

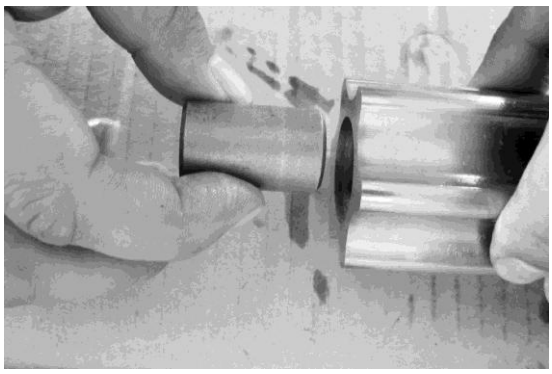

Figure 11

10. Take out link axle

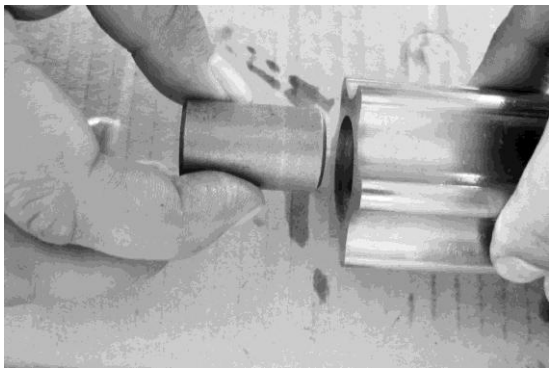

Figure 12

11. Take out clapboard

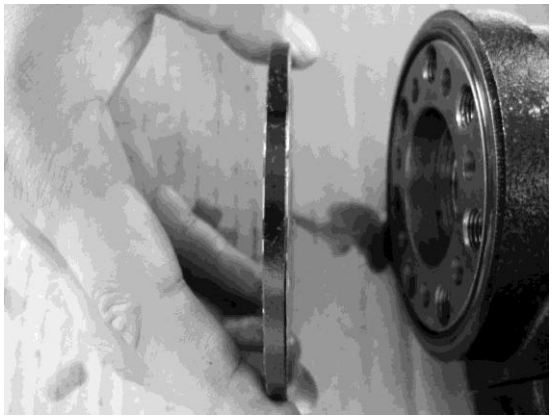

Figure 13

12. Take out valve bush and spool assembly

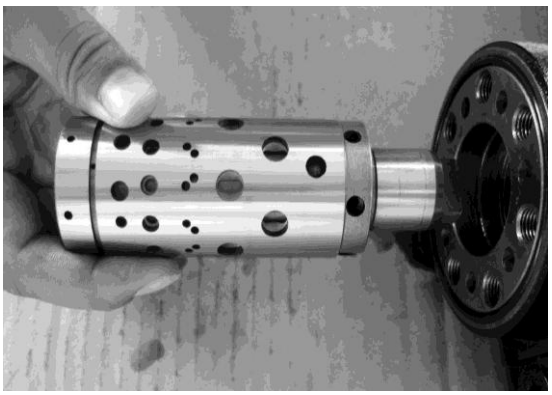

Figure 14

13. Take out pin

Figure 15

14. Take out spring lamination

Figure 16

15. Take out valve spool

Figure 17

16. Dismantle valve block

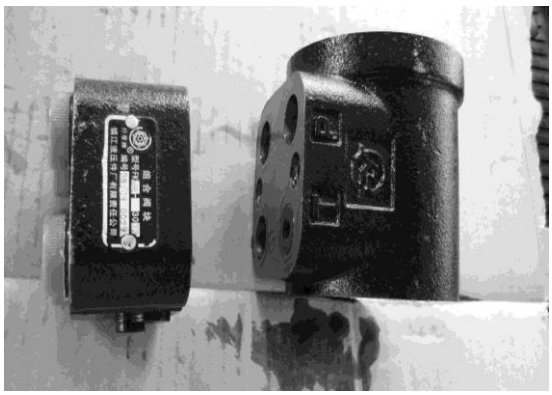

Figure 18

17. Take out check valve

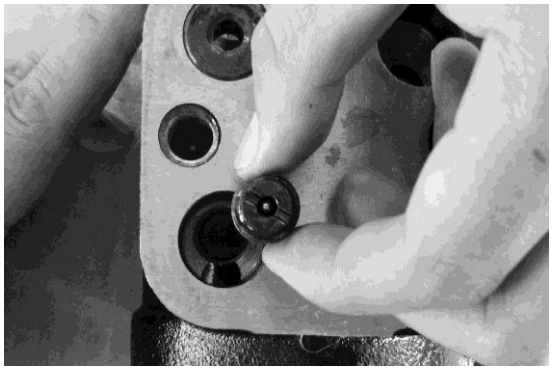

Figure 19

18. Take out oil return throttle valve

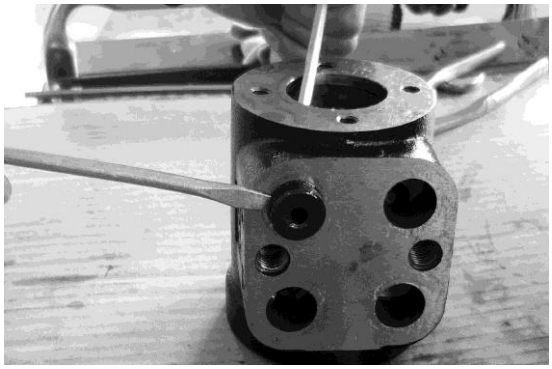

Figure 20

19. Take out oil inlet throttle valve

Figure 21

https://truckmanualshub.com/

20. Take out oil compensating valve (4EA)

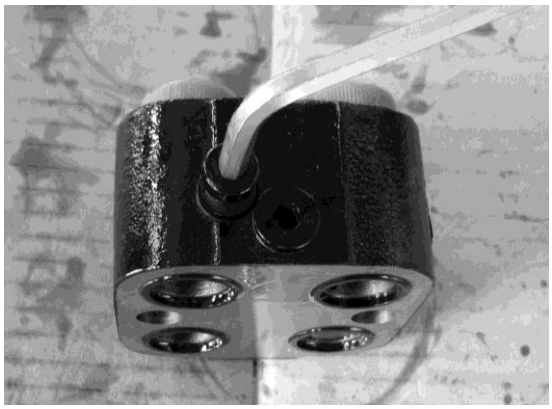

Figure 22

Assembly steps of steering unit

1. Keep four bolt holes of valve body upward.

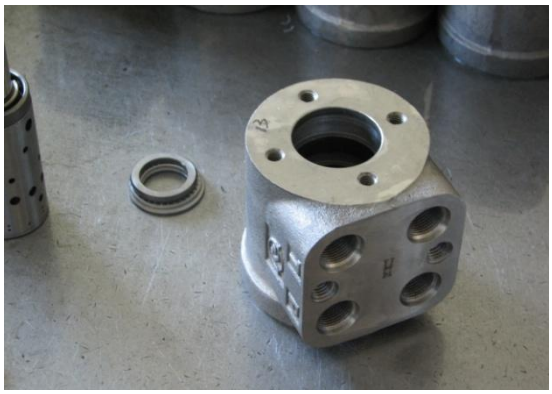

Figure 23

2. Install valve spool, valve bush, spring lamination and pin.

Figure 24

3. Install well assembled valve spool and valve bush into valve body

Figure 25

4. Install big baffle ring, needle roller thrust bearing and small baffle ring

Figure 26

5. Install front cover with well assembled sealing ring

Figure 27

6. Keep fourteen holes of steering unit upward

Figure 28

7. Install sealing ring

Figure 29

8. Put Φ8mm steel balls into the thread holes as shown in the picture

Figure 30

9. Install spacer plate and align the holes.

Figure 31

10. Install couple axle, stop dial pin with linkage shaft

Figure 32

11. Install turn stator vice (note: mark on linkage shaft shall align with groove on rotor)

Figure 33

12. Install upper limitation column and sealing ring

Figure 34

13. Install rear cover, combined gasket, bolts, the position shown in the picture by arrow is cotter bolt.

Figure 35

Matters need attention during assembling

1. Clean all parts (except rubber ring) with gasoline or kerosene before assembling. If there is paint on combination surface, clean with acetone, it is forbidden to clean parts with cotton yarn or cloth, soft banister brush or silk shall be used to clean parts, it is better to blow with compressed air, after steering unit is installed well, add 50-100ml hydraulic oil before install in machines, turn around spool, install in machine for test if everything is normal
2. Combination surface of valve body, spacer plate, stator and rear cover must be highly clean, do not knock or scratch.
3. There is spot mark on end surface of rotor and linkage shaft, that is teeth of linkage shaft groove shall align with multiple spline groove inside rotor teeth bottom, pay attention to the relative position during installation.
4. Bolts of rear cover shall adopt qualified combined gaskets.
5. When fastening seven bolts of rear cover, screw on every two bolts in order, screw on gradually, the fastening torque is 40～50 N.m.
6. (Note) “P”, ”T”, ”A”, “B” oil mouth of valve body and valve block shall align with each other one by one during installation.

https://truckmanualshub.com/

Motor

⚠ CAUTION!
Follow all safety recommendations and safe shop practices outlined in the front of this manual or those contained within this section. **Always use tools and equipment that is in good working order.** **Use lifting and hoisting equipment capable of safely handling load.** **Remember, that ultimately safety is your own personal responsibility.**

MODEL	SERIAL NUMBER RANGE
SD310	010001 and Up

Copyright 2012 DISD

July 2012

https://truckmanualshub.com/

TABLE OF CONTENTS

GENERAL DESCRIPTION..... 3
WORK PRINCIPLE DIAGRAM.. 3
DETAILED LIST OF SPARE PARTS.. 4
PARTS REPLACEMENT PRINCIPLES.. 5
PREPARATION BEFORE DISASSEMBLING.. 5
DISASSEMBLY AND ASSEMBLY STEPS. 6

https://truckmanualshub.com/

GENERAL DESCRIPTION

Work principle diagram

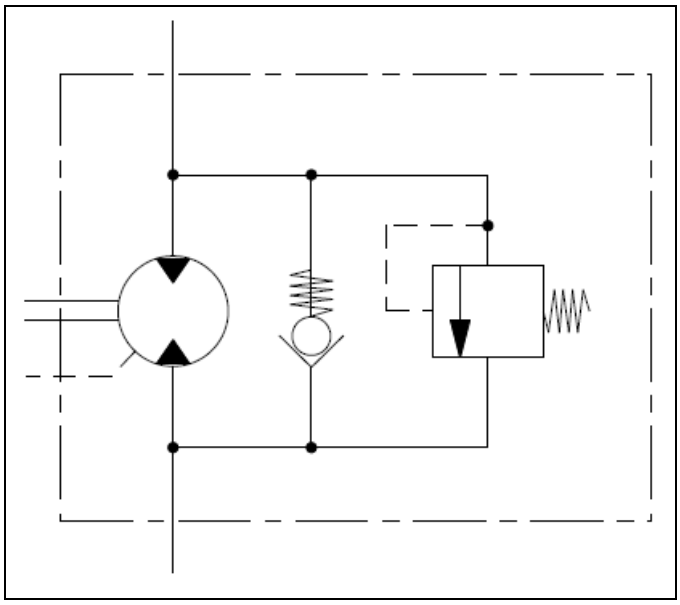

Figure 1

PARTS LIST

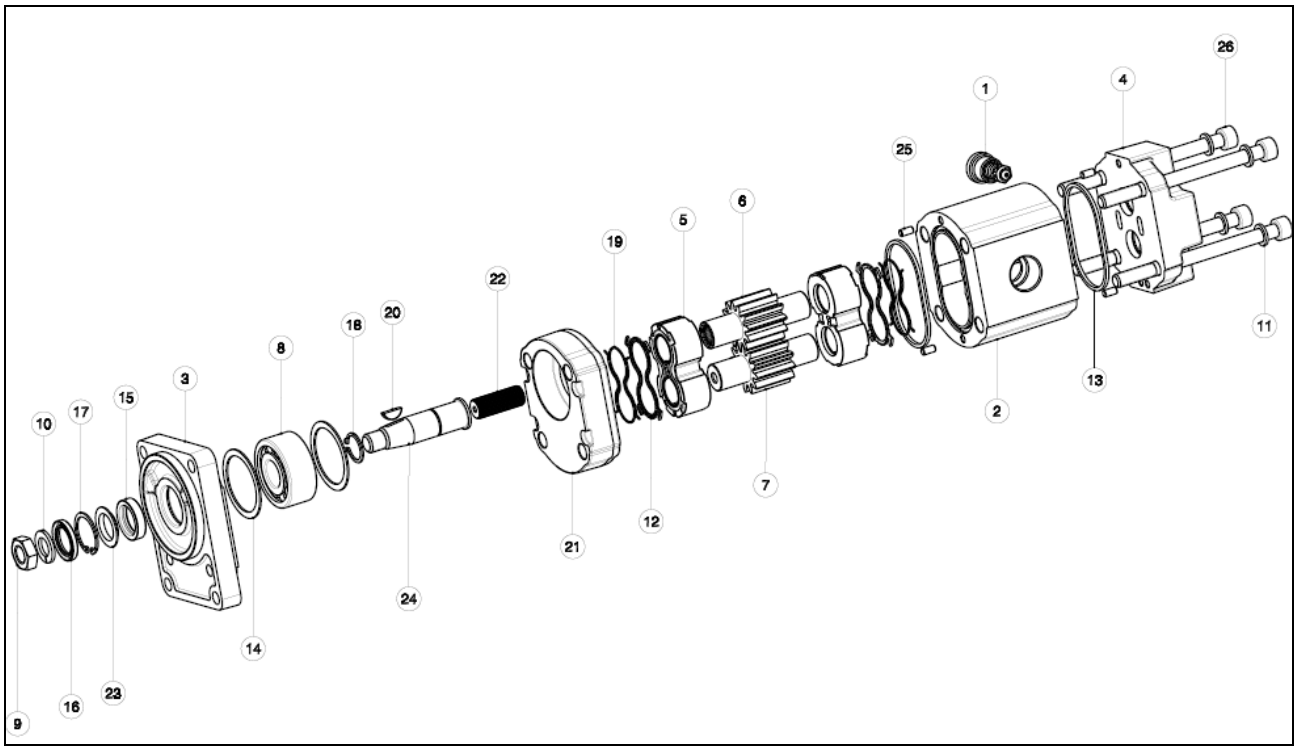

Figure 2

Reference Number	Description	Reference Number	Description
1	Valve	14	Guarnizione
2	Body	15	Shaft Seal BA
3	Front Cover	16	Shaft Seal G
4	Rear Cover	17	Ring 30
5	Thrust Plate	18	Ring 20
6	Drive Gear	19	Antiextrusion
7	Driven Gear	20	Key
8	Ball Bearing	21	Flange
9	Nut	22	HUB
10	Washer B14	23	Back-up Washer
11	Washer 10	24	Support Shaft
12	Seal PL20	25	Dowel Pin
13	Standard Seal PL20	26	Screw

Parts replacement principle

1. Check immediately that any spare parts you receive have not been damaged in shipment.
2. Always work in a clean environment.
3. Wash all components in solvent and blow dry with compressed air before refitting.
4. Take care not to damage rubber seals.
5. Avoid damaging precision machined surfaces.
6. Components should fit into their housings without excessive force. If force is necessary, this normally means that the component does not have the correct dimensional tolerances of is aligned incorrectly.
7. When hand pressure is insufficient, only use presses or rubber hammer to fit components.
8. Never strike components with steel hammers.
9. Steel bush must be fitted only with a suitable press.
10. Do not use hammers to fit bearings.
11. Always respect the direction of rotation when assembling components.

Preparation before disassembling

1. Clean the surface of motor, and check if the surface has chip and rust.
2. Check model and factory releasing number on nameplate, if there is no nameplate on motor, check factory releasing number at seam allowance of front cover.
3. Fill in relative information on motor returned for maintenance card before disassembling, such as manufacturer, applicable machine model, applicable working condition, motor model, factory releasing number, factory releasing date, head and marks of fabricator, working parameters (pressure, rotation, impact and the constant running time at the highest pressure) on main machine, total working time of motor and reason for returning for maintenance, etc.
4. Make sure the production is released from the factory as a whole and it is not disassembled after releasing, otherwise it is not maintained.
5. If there is external leaking, do gas tightness checking to the entire motor and find out leaking position.
6. Check tightening torque of bolts (screw down bolts again with torque wrench, record the Max. tightening torque), learn if tightening torque of all bolts have reached the required specification.

https://truckmanualshub.com/

Disassembly and assembly steps

Disassembly steps

1. Loosen and remove the locking nut and washer, key from the shaft.

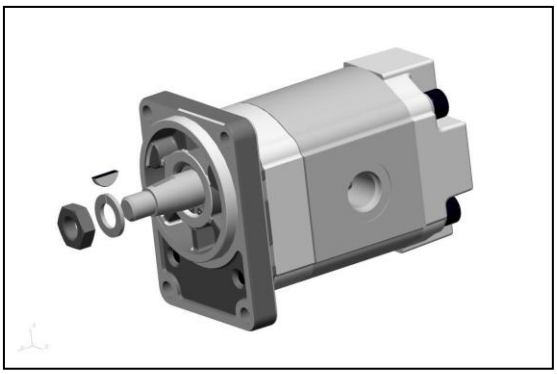

Figure 3

2. ①Loosen and remove the assembling bolts and washers from the motor.

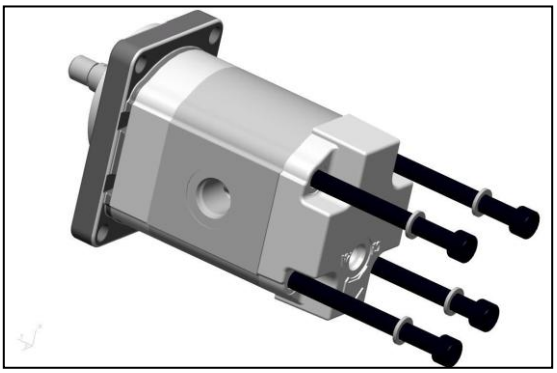

Figure 4

3. ①Loosen and remove the valves from the cover.

☞ follow step 3 & 4 only when you need to change O-rings of the plugs or valves.

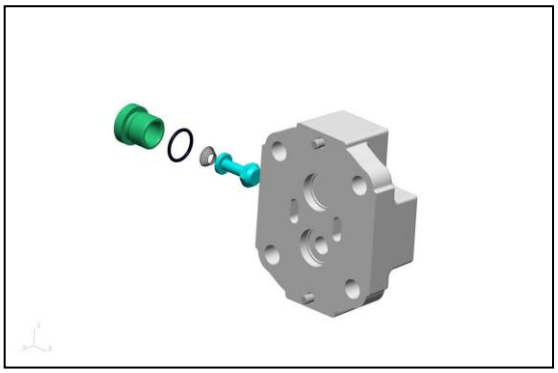

Figure 5

https://truckmanualshub.com/

4. ① Remove mounting flange taking care to keep it as straight as possible during removal.

☞Ensure that while removing it, the drive shaft and other components remain position.

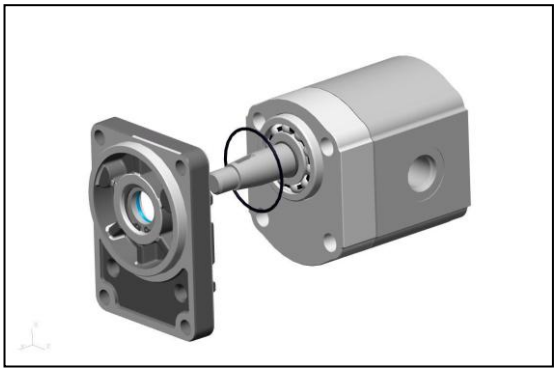

Figure 6

5. ① Remove shaft seal with (-) screwdriver and take out snap ring with proper tool and shaft seal again.

☞Take out the shaft seals only needed.

Shaft seals disassembled from the mounting flange is not reusable

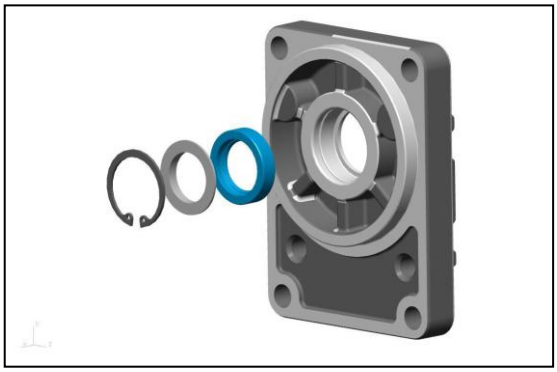

Figure 7

6. ① Take out 2nd flange, bearing assembled

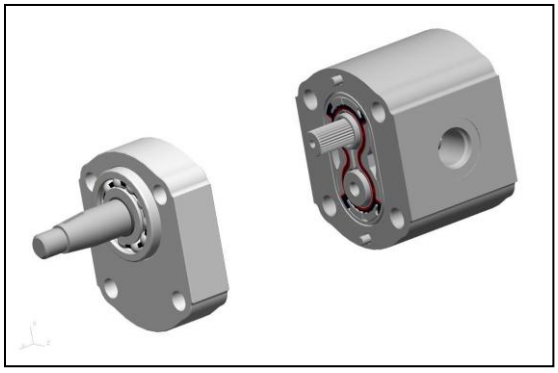

Figure 8

7. ① Take out bearing & shaft assembly from the flange.

☞Only when the O-ring inside should be changed.

② Remove snap ring, then take out shaft to rear side.

☞ following this process only for changing bearing or shaft.

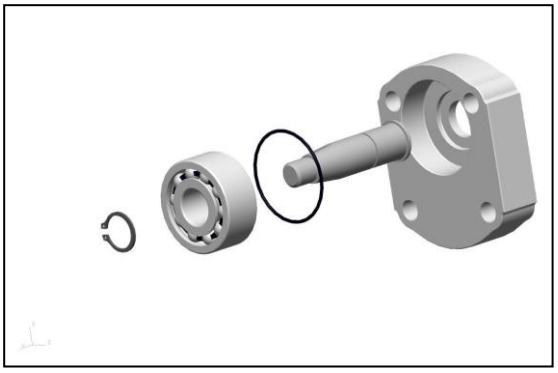

Figure 9

8. ① Remove the pressure plate with prearranged parts, O-ring & back up ring from the working section and examine it carefully.

② Pull out driving gear & driven gear keeping gears as straight as possible

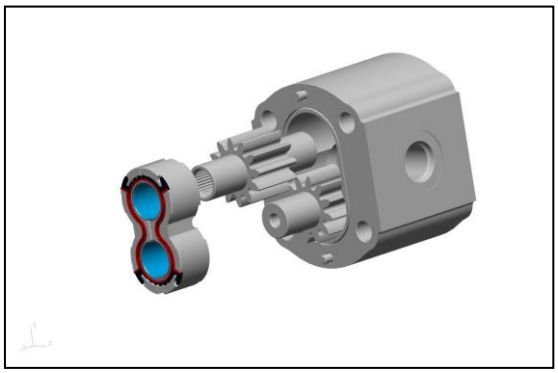

Figure 10

9. Remove other pressure plate on rear side with same way for front side. .

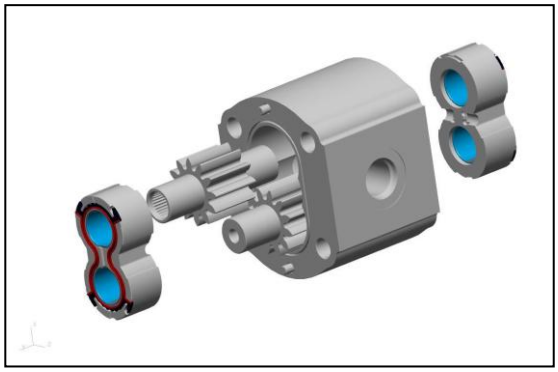

Figure 11

https://truckmanualshub.com/

Assembly process

Assembling of sealing framework assembly

1. ① Locate O-ring into the grove on the aluminum pressure plate.

② Locate back-up ring upon the O-ring.

③ Smear clean grease on the O-ring & back-up ring to fix their position while moving.

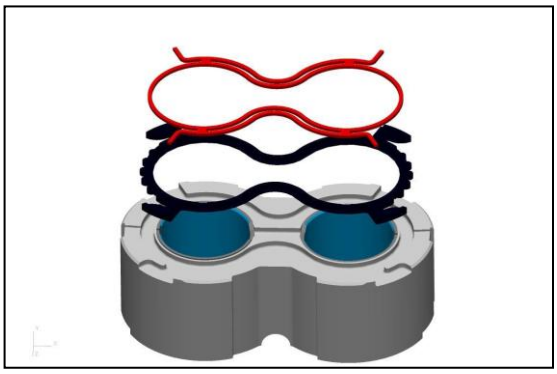

Figure 12

2. ① insert square rings into the grooves.

Shape of square ring is different depend on direction of body.

② Smear clean grease on the square rings to fix their position while moving.

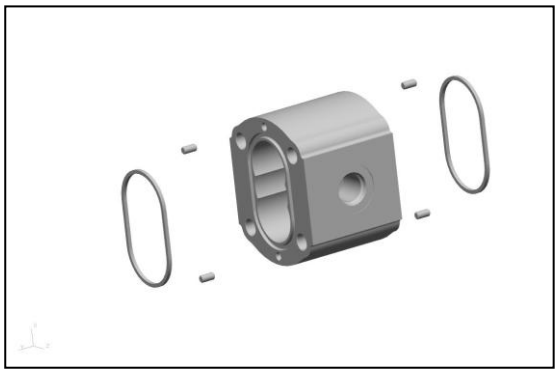

Figure 13

3. ① Locate O-ring first and fix the position with grease.

② Insert bearing & shaft assembly. Use small hammer to fit the bearing into the flange.

☞ be careful not to give any damage to the bearing.

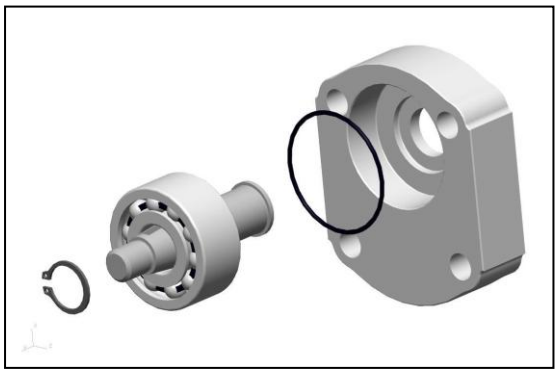

Figure 14

https://truckmanualshub.com/

4. ① Insert shaft seal & backup washer.

② Insert snap ring and push it until to reach it to the groove.

③ Insert last shaft seal into the flange inside out.

④ Locate O-ring first and fix the position with grease.

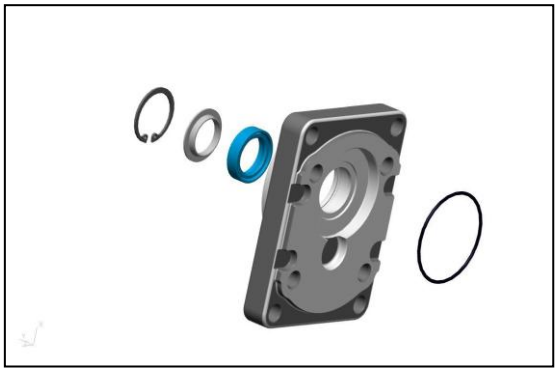

Figure 15

5. Load working body on the rear cover.

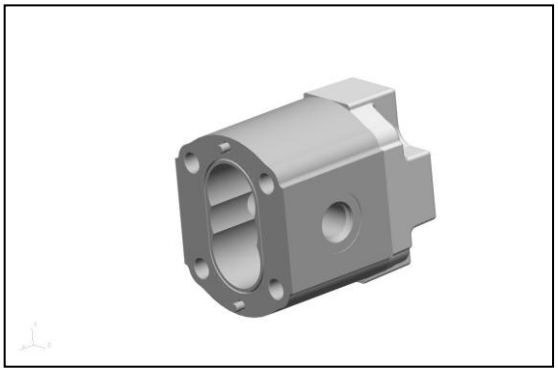

Figure 16

6. ① Insert pressure plate until it its face meet the rear cover.

② Locate driving gear and driven gear keeping as straight as possible during assembling

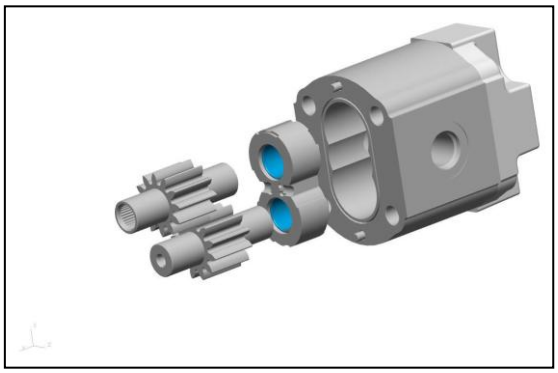

Figure 17

7. ① Locate one of pressure plates prepared.

② Insert through shaft into driving gear.

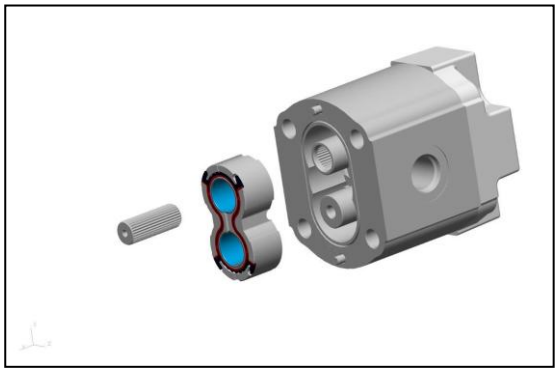

Figure 18

https://truckmanualshub.com/

8. Load pre-assembled bearing flange on the working body.

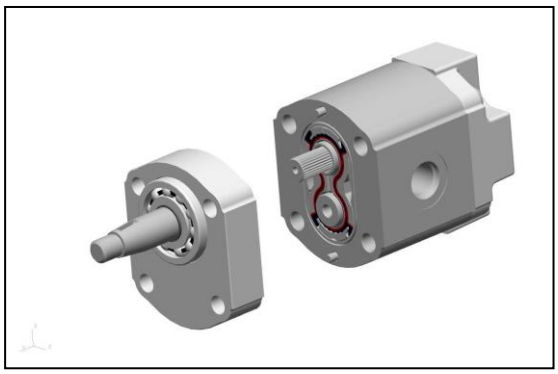

Figure 19

8. ① Load pre-assembled mounting flange on the bearing flange.

☞ Smear clean grease on the lips of shaft seals before assembling

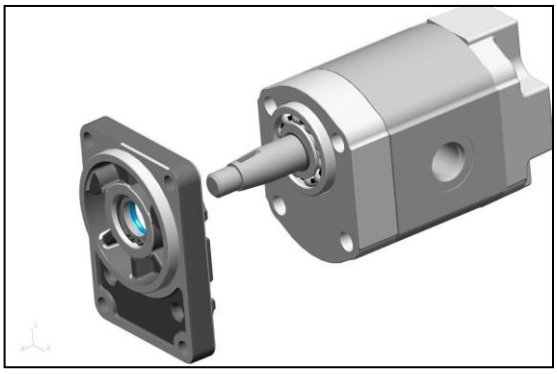

Figure 20

9. ① Assemble the bolts and tighten the bolts with in a crisscross pattern to a torque value of 45 Nm.

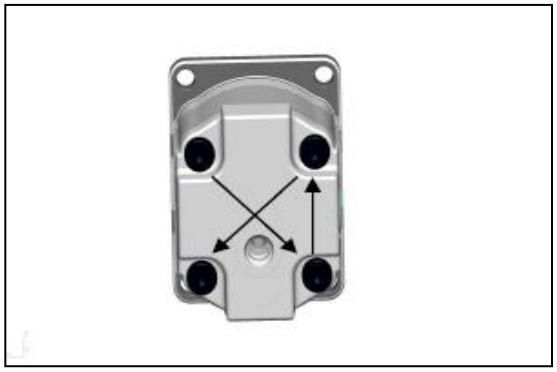

Figure 21

10. ① Locate a key on the shaft and load washer and nut.

② Check that the pump rotates freely when the drive shaft is turned by hand, if not a possible, plate seal may be pinched.

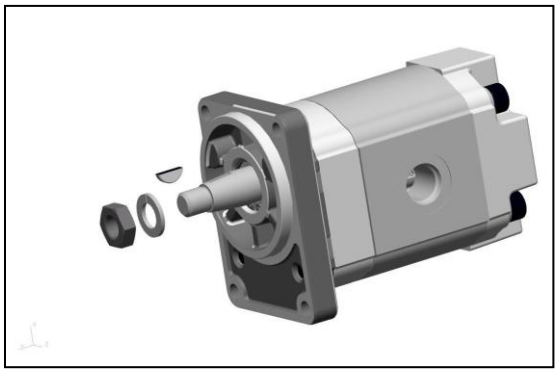

Figure 22

https://truckmanualshub.com/

https://truckmanualshub.com/

HYDRAULIC OIL TANK

⚠ CAUTION!
Follow all safety recommendations and safe shop practices outlined in the front of this manual or those contained within this section. **Always use tools and equipment that is in good working order.** **Use lifting and hoisting equipment capable of safely handling load.** **Remember, that ultimately safety is your own personal responsibility.**

MODEL	SERIAL NUMBER RANGE
SD310	010001 and Up

Copyright 2012 DISD

July 2012

https://truckmanualshub.com/

TABLE OF CONTENTS

General Description..... 3
Parts List 3
Specifications..... 4

GENERAL DESCRIPTION

PARTS LIST

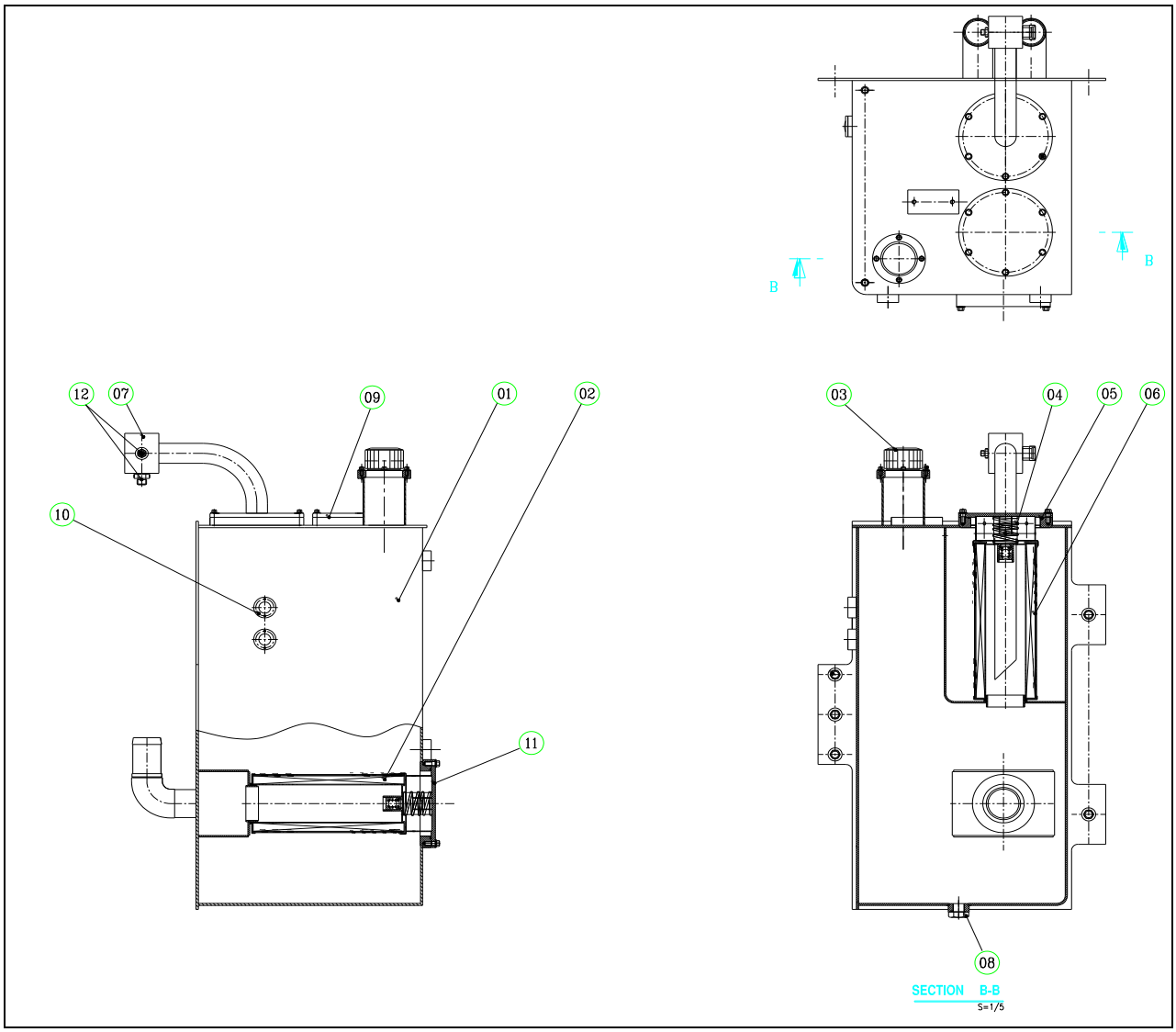

Figure 1

Reference Number	Description	Reference Number	Description
01	Oil Tank	07	Return pipe
02	Filter	08	Drain Plug
03	Filter	09	Cover
04	Spring	10	Level Gauge
05	O-ring	11	Flange
06	Return Filter	12	Adapter

SPECIFICATIONS

	SD310
Type	Pressure seal
Volume (system)	177 L
Oil filter	
Opening pressure	0.035 MPa
Oil suction filter	
Filter rating	100μ
Pressure drop	0.05 MPa @1000L/min
Oil return filter	
Filter rating	12μ
Pressure drop	0.045 MPa @800L/min

https://truckmanualshub.com/

Hydraulic Schematic (SD310)

⚠ CAUTION!
Follow all safety recommendations and safe shop practices outlined in the front of this manual or those contained within this section. **Always use tools and equipment that is in good working order.** **Use lifting and hoisting equipment capable of safely handling load.** **Remember, that ultimately safety is your own personal responsibility.**

MODEL	SERIAL NUMBER RANGE
SD310	010001 and Up

Copyright 2012 DISD

July 2012

https://truckmanualshub.com/

TABLE OF CONTENTS

GENERAL DESCRIPTION..... 3
SCHEMATIC DIAGRAM..... 3

https://truckmanualshub.com/

General description

Schematic diagram

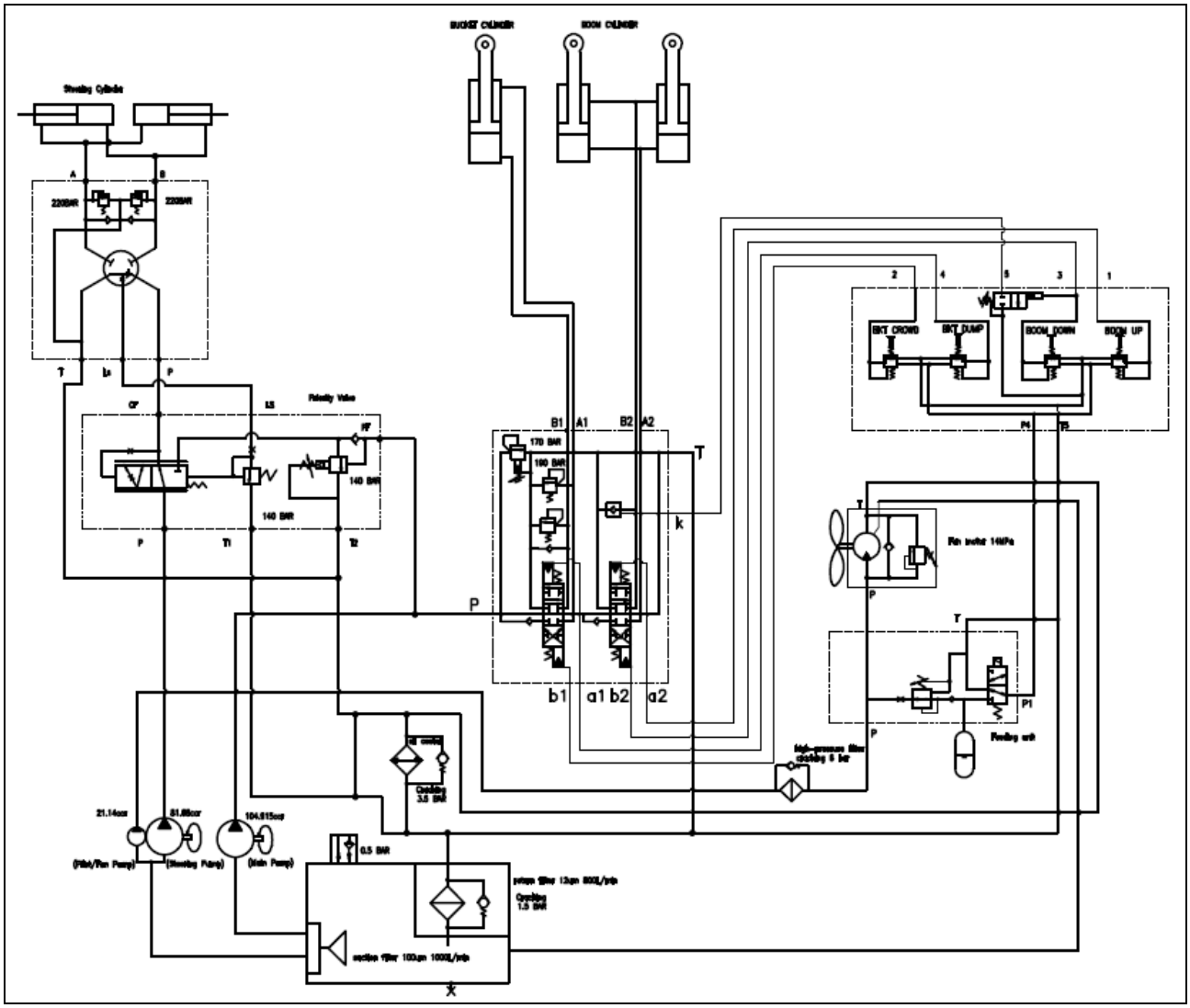

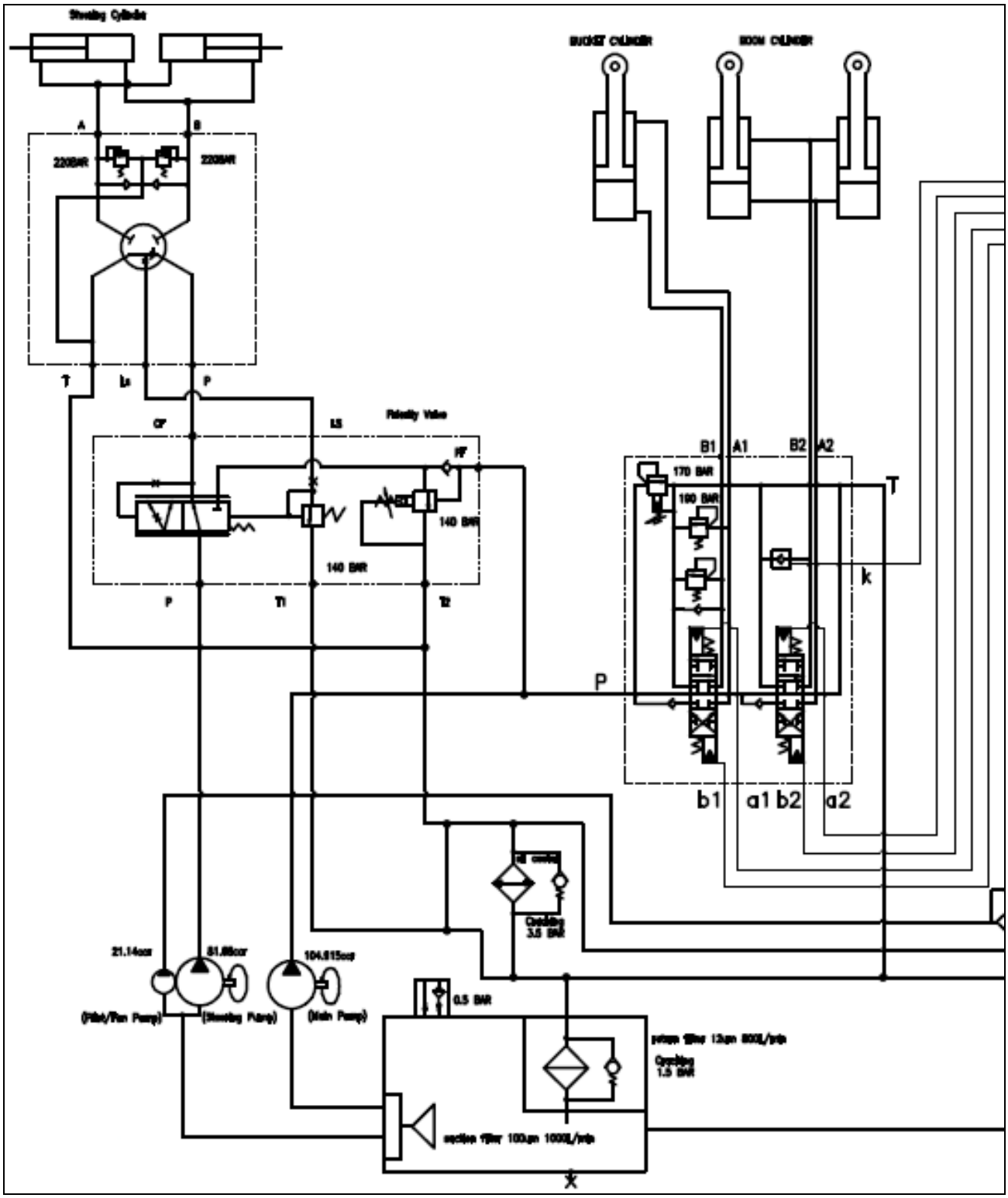
Steering Cylinder
BUCKET CYLINDER
BOOM CYLINDER
A
B
220BAR
220BAR
T
LS
P
CF
LS
Priority Valve
PF
140 BAR
140 BAR
P
T1
T2
B1
A1
B2
A2
170 BAR
190 BAR
T
k
P
b1
a1
b2
a2
21.14cc
81.88cc
104.815cc
(Pilot/Fan Pump)
(Steering Pump)
(Main Pump)
0.5 BAR
Opening 3.5 BAR
Opening 1.5 BAR
suction filter 100μm 1000L/min
X

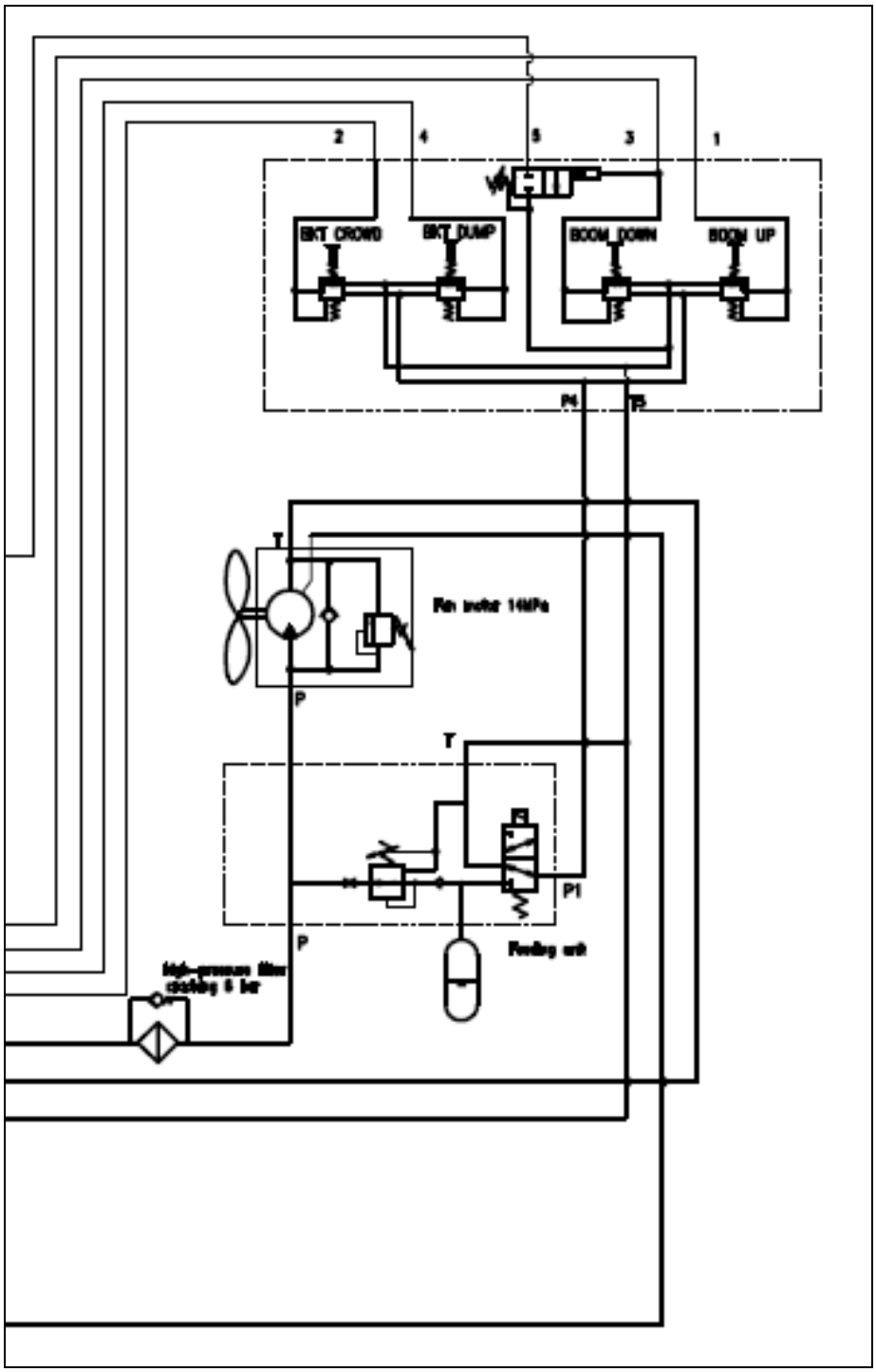
2
4
5
3
1
BKT CROWD
BKT DUMP
BOOM DOWN
BOOM UP
P4
T5
T
P
T
P1
P

https://truckmanualshub.com/

https://truckmanualshub.com/

BRAKE

https://truckmanualshub.com/

https://truckmanualshub.com/

BRAKE SYSTEM

CAUTION!

Follow all safety recommendations and safe shop practices outlined in the front of this manual or those contained within this section.

Always use tools and equipment that is in good working order.

Use lifting and hoisting equipment capable of safely handling load.

Remember, that ultimately safety is your own personal responsibility.

MODEL	SERIAL NUMBER RANGE
SD310	010001 and Up

Copyright 2012 DISD

July 2012

https://truckmanualshub.com/

TABLE OF CONTENTS

GENERAL DESCRIPTION……..……..3
STRUCTURE OF TRAVELLING BRAKE 3
WORKING PRINCIPLE OF TRAVELLING BRAKE 3
PARTS LIST 4
STRUCTURE CHART OF BRAKE SYSTEM 4
OIL-WATER SEPARATOR 6
PNEUMATIC BRAKE VALVE 7
BOOSTER PUMP 8
SPECIAL TOOLS AND MATERIALS 8
SYSTEM MAINTENANCE AND FAILURES ANALYSIS 9

General Description

Structure of Travelling Brake:

It usually includes air compressor, oil-water separation combination valve (oil-water separator, pressure control valve), air tank, pneumatic brake valve, air booster pump and caliper disc brake. If it is equipped with emergency braking function, it usually also includes emergency and stopping brake control valve, brake air chamber, quick release valve. In air circuit of brake system, there are some other accessories, such as switch of brake light, switch of power off, etc.

Working Principle of Travelling Brake:

Compressed air is output from air compressor driven by engine, and enters into air tank through oil-water separation combination valve (oil-water separator, pressure control valve). When air pressure in air tank reaches the highest braking pressure (usually around 0.784MPa) of brake system, pressure control valve will close the exit going to air tank, open load discharging mouth and discharge the compressed air from air compressor to the air directly. When compressed air in air tank reaches the lowest pressure (usually around 0.71MPa) of brake system, pressure control valve will open the exit going to air tank, and close load discharging mouth to let compressed air from air compressor into air tank for supplementation until the compressed air in air tank reaches the highest working pressure of brake system.
Following is the fundamental diagram:

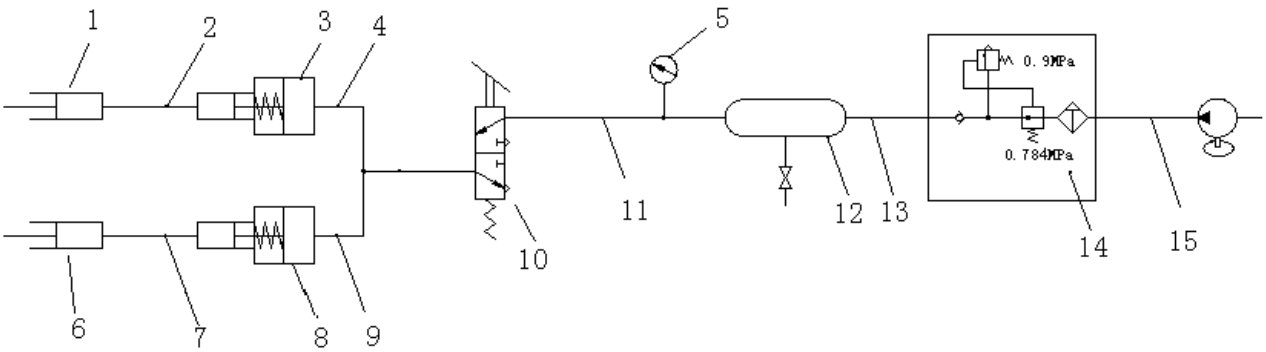

Figure 1

Reference Number	Description	Reference Number	Description
1	REAR AXLE	9	HOSE
2	HOSE	10	PEDAL
3	PUMP	11	HOSE
4	HOSE	12	ACCUMULATOR
5	SWITCH;PRESSURE	13	HOSE
6	FRONT AXLE	14	VALVE
7	HOSE	15	HOSE
8	PUMP		

PARTS LIST

2. Structure Chart of Brake System

3.

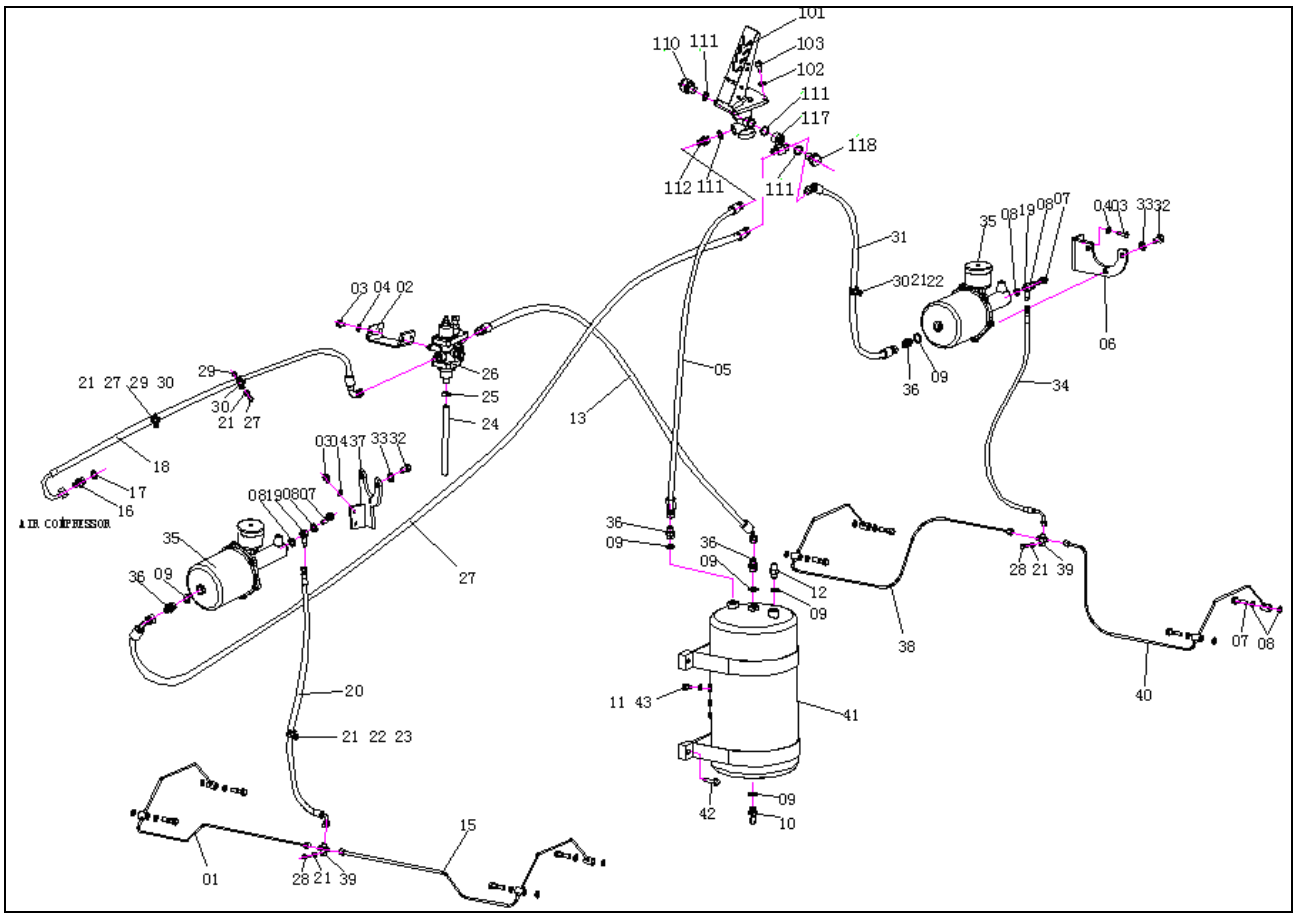

Figure 2

Reference Number	Description	Reference Number	Description
1	PIPE	30	CLIP
2	BRACKET	31	HOSE,
3	BOLT	32	BOLT
4	WASHER;PLAIN	33	WASHER;PLAIN
5	HOSE	34	HOSE
6	PLATE	35	PUMP
7	BOLT	36	ADAPTER
8	O-RING	37	PLATE
9	SEAL RING	38	PIPE
10	VALVE	39	TEE
11	PLUG	40	PIPE
12	VALVE	41	ACCUMULATOR
13	HOSE	42	BOLT
14	HOSE	43	SEAL RING
15	PIPE		BRAKE ASSY
16	ADAPTER	101	VALVE,BRAKE PEDAL
17	WASHER;PLAIN	102	WASHER;PLAIN
18	HOSE	103	BOLT
19	ADAPTER	110	SWITCH,LAMP
20	HOSE	111	SEAL RING
21	WASHER;PLAIN	112	ADAPTER
22	BOLT	117	ADAPTER
23	CLIP	118	BOLT
24	HOSE		
25	CLAMP		
26	VALVE		
27	BOLT		
28	BOLT		
29	NUT		

2. Oil-water separator

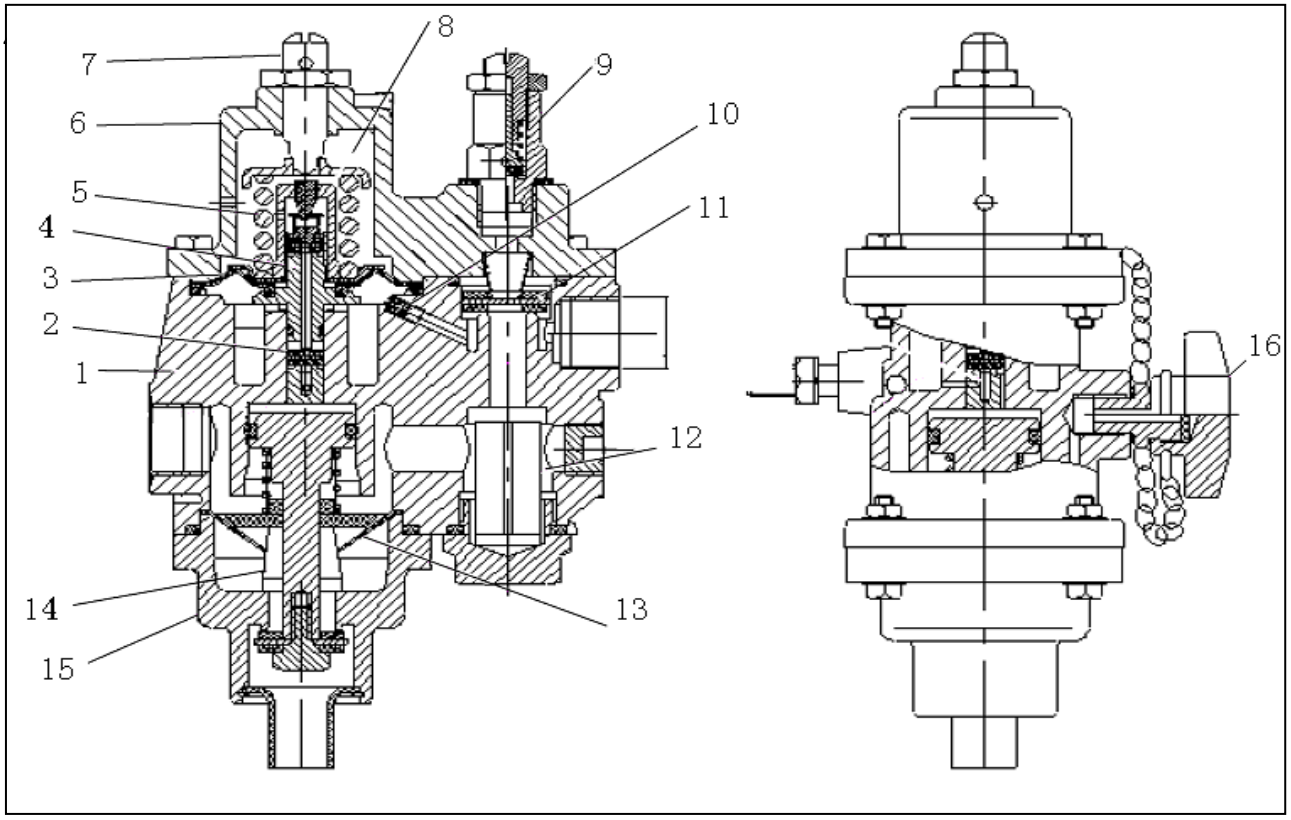

Figure 3

Reference Number	Description	Reference Number	Description
1	SHELL ASS'Y	9	RELIEF VALVE ASS'Y
2	REGULATING VALVE	10	ORIFICE PLUG
3	EAR DRUM	11	ONE-WAY VALVE
4	STEM	12	FILTER ASS'Y
5	REGULATING SPRING	13	OIL COLLECTOR
6	UPPER COVER	14	AIR BLEEDING PISTON
7	REGULATING SCREW	15	LOWER SHELL
8	CONTROLING PISTON ASS'Y	16	AEROFIOL NUT

3. Pneumatic brake valve

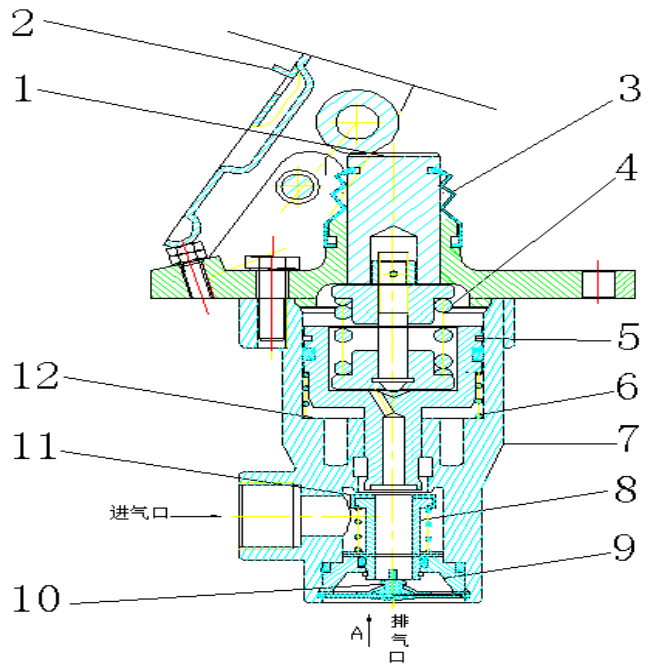

Figure 4

Reference Number	Description	Reference Number	Description
1	MANDRIL	7	VALVE BODY
2	PEDAL ASS'Y	8	INTAKE VALVE ASS'Y
3	ANTIDUST COVER	9	VALVE ASS'Y
4	BALANCING SPRING	10	OUTLET VALVE ASS'Y
5	PISTON ASS'Y	11	SEALING FIN
6	PISTON FOUR SPRING	12	SPRING SEAT

4. Booster pump

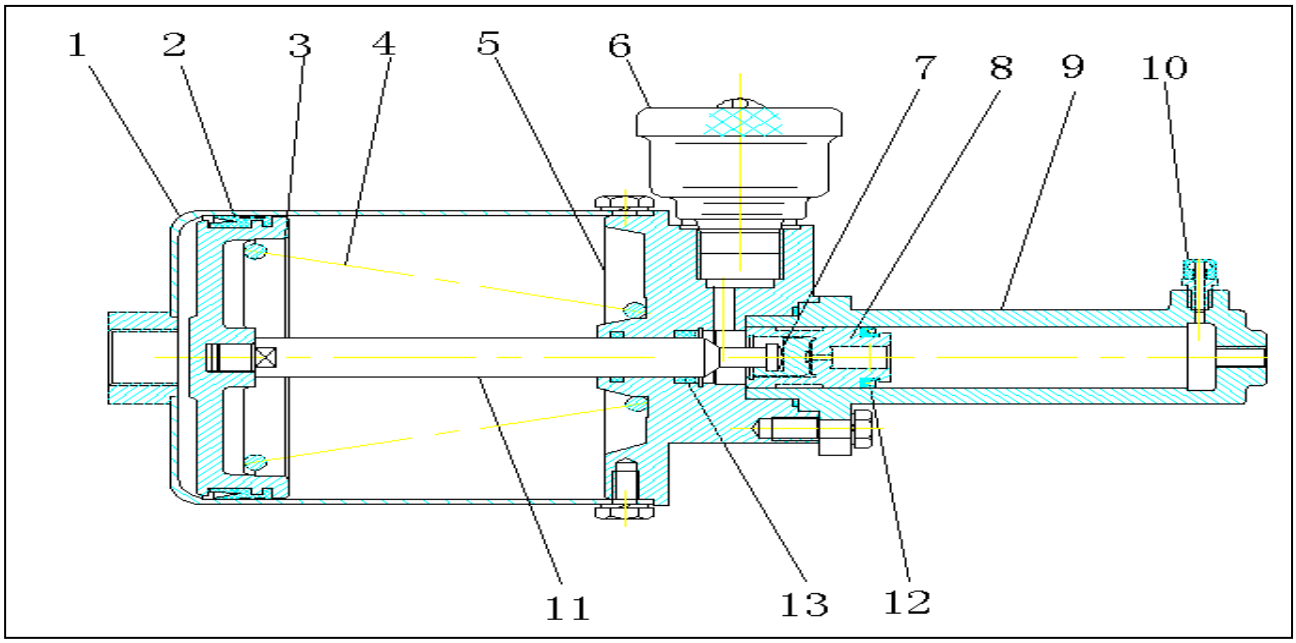

Figure 5

Reference Number	Description	Reference Number	Description
1	STRENGTH CYLINDER	8	PISTON
2	Y-SEAL RING	9	BREAKING PUMP
3	PISTON	10	AIR OUTLET SCREW
4	RELEASING SPRING	11	PUSHING BORER
5	ENDPLATE	12	MAIN PUMP FUR BOWL
6	STORAGE CUP	13	X-SEAL RING
7	PUTTING SEAT		

SPECIAL TOOLS AND MATERIALS

LUBRICANTS, SEALANTS AND OIL

System Maintenance and Failures Analysis

Brake caliper is locking

The so called “locking” failure refers to brake caliper does not return to the original position, that is one of the common failures of brake system. There are many reasons causing such kind failures, such as brake caliper is blocked, booster pump is blocked or brake caliper valve is blocked. If the brake caliper of front and rear bridge is locking, it is may caused by blocking of pneumatic brake caliper. When the failures are solved, loosen pipeline between booster pump and brake caliper, manually chek if the brake caliper can return, if it does not work, it may be caused by blocking of brake caliper, if it can be returned manually, but booster pump may be blocked.

No brake or brake distance is too long

1. Pressure adjustment is improper, which causes pressure of compressed air is too low, brake moment is too small. Adjust pressure gauge to the regulated range.
2. It may be caused because air compressor is air leaking or air inlet and outlet valve are blocked because wearing of cylinder barrel and piston ring is too much, driving belt is too loosened. The worn parts shall be replaced in time.
3. Foot brake valve is adjusted improperly, when brake pedal is stepped to the end, air inlet valve of brake valve is not totally opened, air throttle is caused, air pressure becomes weak when going through foot brake valve, and it cannot reach rated working pressure. Adjust the adjusting screw of brake pedal.
4. Failure of booster pump: sealing ring of booster pump is worn, compressed air goes into low pressure chamber, and movement of brake pump piston is slow, or even there is no moving distance, which cause braking power is not enough; compensation hole of brake pump is blocked by dirt, brake fluid cannot go into ante chamber of piston and oil in brake oilway is not enough.

Brake lags behind

1. Air in brake system is not evacuated, air is compressed when braking, air resets when releasing brake, which affects returning of friction plate.
2. Brake air pressure is not enough;
3. Piston of brake caliper is blocked;
4. Foot brake air bleeder or filter screen is blocked, return spring of valve core is broken, piston cannot return and blocks outlet of air hole, which makes brake air discharging is not smooth, brake pressure and oil pressure cannot reduce quickly, brake moment cannot be released, thus it is laged behind.
5. The hole of non-pressure chamber of booster pump connecting with air is blocked or return spring is broken, which affects sensitivity of chamber piston return and cause lag.

Braking deviation

The direct reason of braking deviation is the brake moments of the left side and right side wheels are different, the common phenomenons are:

1. Brake caliper of one side of the wheel is locking, it is hard to trip off during travelling, and usually the rectangle sealing ring of brake caliper is broken.
2. When stepping foot pedal, one side brake caliper is braking, while the other side is inside leaking and oilway is blocked, brake fluid cannot go into brake caliper, which makes different brake moments and causes deviation. Under such kind of condition, please check if the sealing rings of gas cap and brake caliper are turned up or the pipelines are blocked.

There is birdle during braking, and brake is hot

1. Connection screws between brake caliper and drive axle are loosed, they rub, impact or abrade each other.
2. There are hard things between brake lining and brake disc.

Storage and usage of brake fluid

1. Brake fluid belongs to inflammable goods; please pay Note to avoid evaporation and fire during usage and storage.
2. Brake fluid shall be stored in warehouse or other assigned place, but it cannot be stored in open air and close to hot source to avoid deteriorating and become invalid.
3. The using department shall set up independent room for storage and there must be obvoid marks.
4. It is forbidden to mix and use brake fluid of different brands to avoid layering and lose braking effect.
5. There must be special containers to store brake fluid to avoid mixing of other oil and cause reaction and invalidity.
6. Containers storing brake fluid must be clean and covered to avoid mechanical sundries and water. If the surface of brake fluid has dust and sundries, they must be removed before using, do not mix them, clean and special tool shall be used to add brake fluid.

Replacement of brake fluid and Notes:

Technicians shall guide clients to use and replace brake fluid strictly, when following conditions appear, all brake fluid must be replaced immediately.

1. When brake fluid is mixed with mineral substance, such as gas oil and diesel.
2. When vehicle is travelling normally, brake is light and heavy.
3. When brake fluid in the system is less or when the vehicle having liquid level is warning.
4. When oil color of brake fluid is muddy or there are sundries and sediment.

Notes during replacement:

1. When replacing brake fluid, clean the residual liquid in brake system, and check new brake liquid.
2. When replacing brake fluid, try to reduce the contacting time between brake fluid and air to avoid reducing performance of brake fluid.
3. Before replacing brake fluid, it is better to clean brake system with alcohol, release air in the oilway after replacement.

Treatment of air source

1. Clean air filter core in time.
2. Release water from air tank in time.

https://truckmanualshub.com/

PARKING SYSTEM

⚠ CAUTION!

Follow all safety recommendations and safe shop practices outlined in the front of this manual or those contained within this section.

Always use tools and equipment that is in good working order.

Use lifting and hoisting equipment capable of safely handling load.

Remember, that ultimately safety is your own personal responsibility.

MODEL	SERIAL NUMBER RANGE
SD310	010001 and Up

Copyright 2012 DISD

July 2012

https://truckmanualshub.com/

TABLE OF CONTENTS

GENERAL DESCRIPTION 3
STRUCTURE OF PARKING BRAKE 3
WORKING PRINCIPLE OF PARKING BRAKE 3
PARTS LIST 4
ASSEMBLY STRUCTURE CHART 4

https://truckmanualshub.com/

General Description

Structure of parking brake：

Brake is located at the front end of output axle of gearbox.

Driven method is pneumatic control. Pneumatic control usually has emergency brake function. When brake pressure is lower than safe pressure, the system can stop loader automatically.

Working principle of parking brake:

When the loader is driven normally, emergency and parking brake control valve are normally open. Compressed air from air tank goes through emergency and parking brake control valve, quick release valve, one part goes into brake chamber to push piston, compressed spring in brake chamber and store energy. The other part goes into the small chamber of stop valve of variable speed control valve, and connects with shift gear oilway. When emergency and parking brake are needed, emergency and parking brake valve is controlled to stop compressed air, brake chamber, compressed air in stop valve chamber will be discharged into air through quick release valve, shift gear oilway is stopped, gear box is on empty gear automatically, at the same time spring in brake chamber is released to push piston driven shoe brake in brake chamber to realize parking brake or emergency brake. When pressure of brake system is lower than safe pressure (0.3MPa usually), emergency and parking brake control valve will act automatically to realize emergency brake.

PARTS LIST

Assembly structure chart

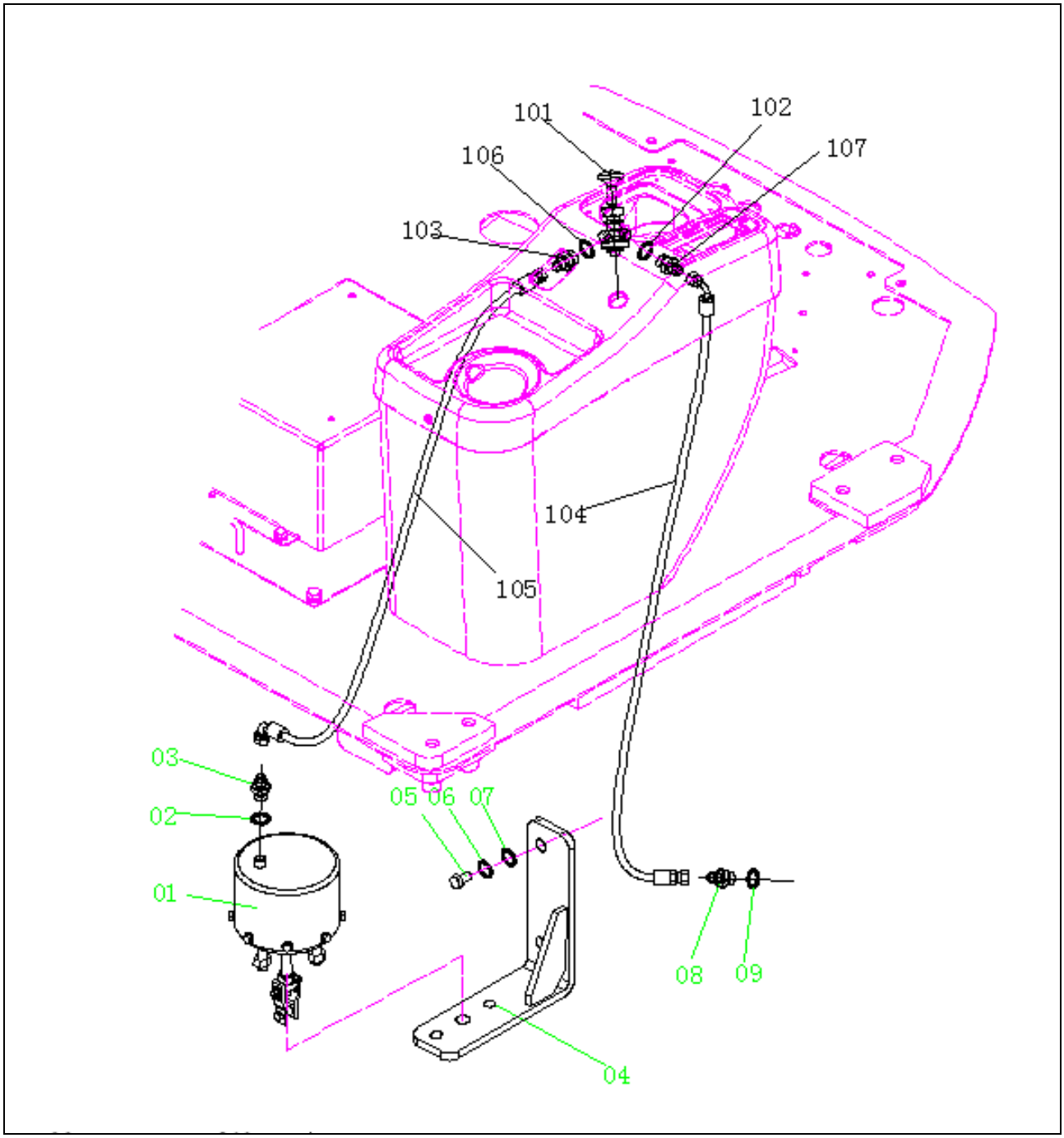

Figure 1

https://truckmanualshub.com/

Reference Number	Description	Reference Number	Description
1	ACCUMULATOR	9	WASHER
2	WASHER	101	VALVE;CONTROL
3	ADAPTER	102	WASHER
4	BRACKET	103	ADAPTER
5	ADAPTER	104	HOSE ,AIR
6	WASHER;SPRING	105	HOSE ,AIR
7	WASHER;PLAIN	106	WASHER
8	ADAPTER	107	ADAPTER

https://truckmanualshub.com/

https://truckmanualshub.com/

ELECTRICAL SYSTEM

https://truckmanualshub.com/

https://truckmanualshub.com/

AIR CONDITIONER

CAUTION!
Follow all safety recommendations and safe shop practices outlined in the front of this manual or those contained within this section. **Always use tools and equipment that is in good working order.** **Use lifting and hoisting equipment capable of safely handling load.** **Remember, that ultimately safety is your own personal responsibility.**

MODEL	SERIAL NUMBER RANGE
SD310	010001 and Up

Copyright 2012 DISD

July 2012

https://truckmanualshub.com/

TABLE OF CONTENTS

GENERAL DESCRIPTION.....3
CIRCULATION OF REFRIGERATION AGENT.....4
CONTROL PANEL.....6
AC SYSTEM CIRCUIT DIAGRAM.....7
MAINTENANCE.....8
TROUBLE SHOOTING.....10

GENERAL DESCRIPTION

Heater and AC evaporator share one air blower, and it is loacted at the front side of driving cab. When it is necessary, the driver can install it in control panel room at the right of control platform to control indoor temperature.

AC of the machine has three functions of refrigeration, heating and natural wind.

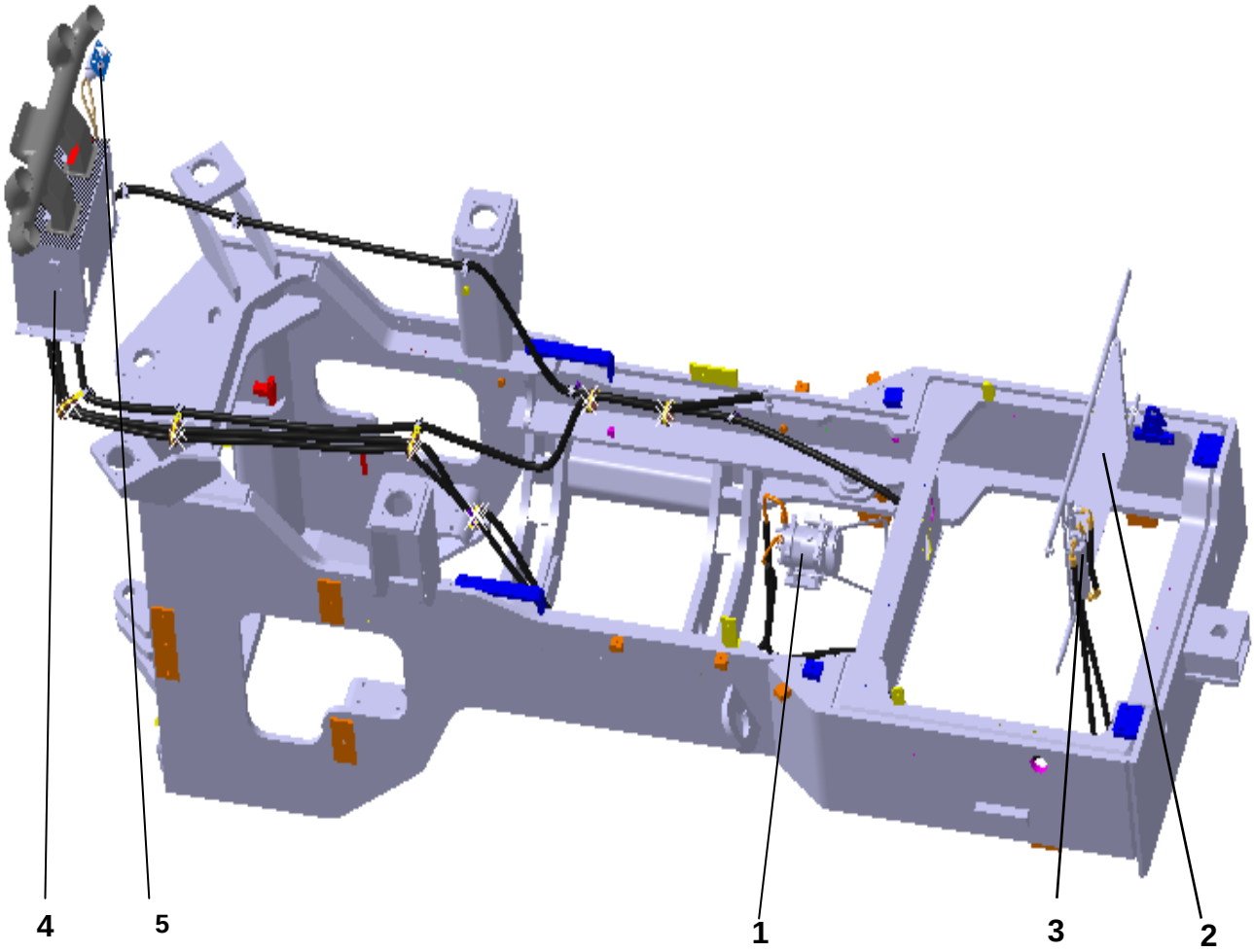

Figure 1. AC system schematic diagram

Reference Number	Description	Reference Number	Description
1	Compressor	4	Evaporator
2	Condenser	5	Control Panel
3	Receiver/Drier		

Circulation of refrigeration agent

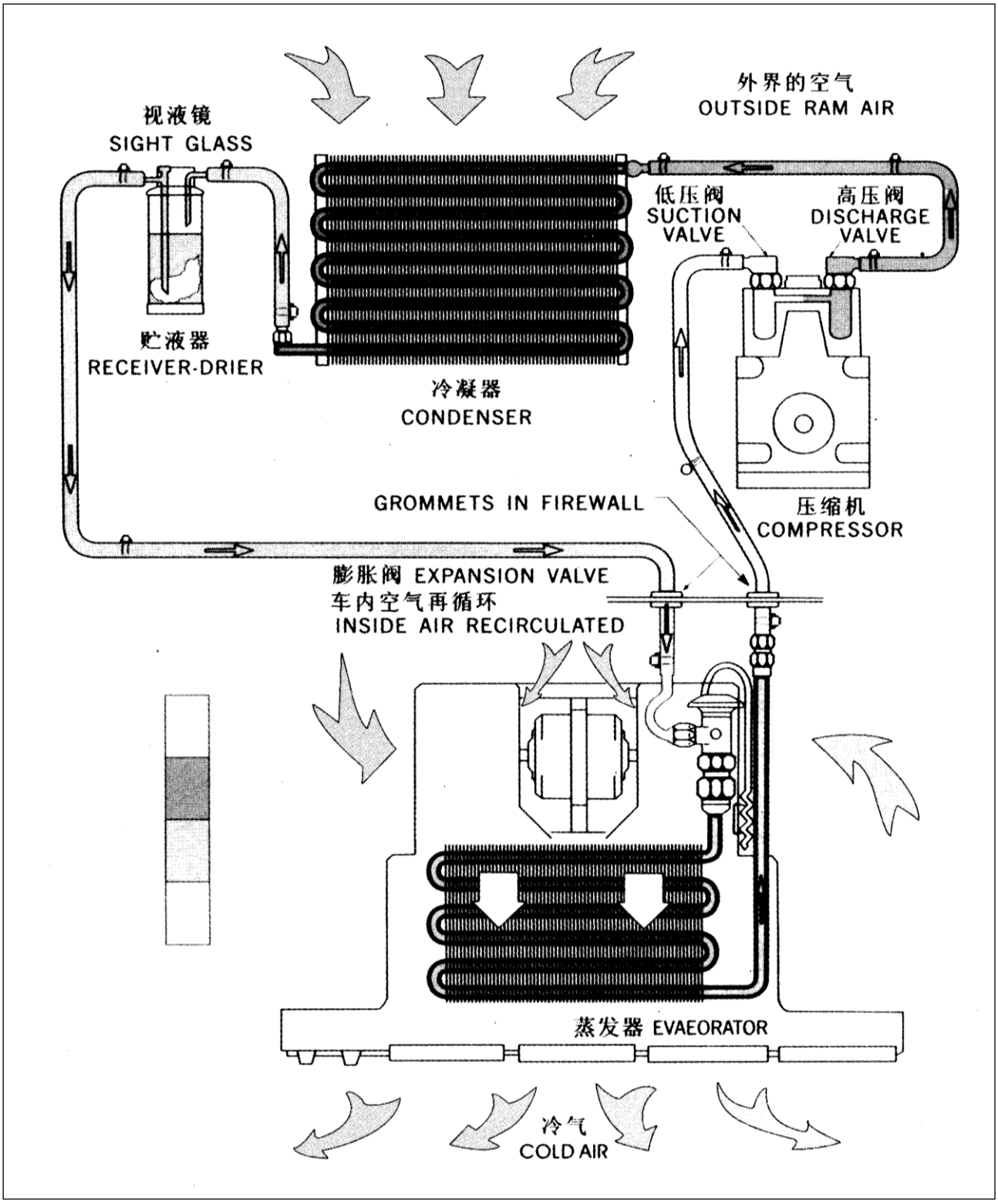

Figure 2. Refrigeration agent circulation schematic diagram

https://truckmanualshub.com/

- Refrigeration agent (R134a) is compressed to 15kg/cm2（213psi）within sight view.
- Compressed refrigeration agent flows into condenser under high temperature (about 80℃（176°F）).
- Refrigeration agent of condenser is cooled down by condensation fan to about 60℃. At the same time, refrigeration agent is changed from gas state to liquid state, even if the temperature is reduced from 80°— 60℃（176°— 140°F）to 20℃（68°F）.
- Refrigeration agent is sprayed ubti evaporator in gas state through expansion valve. And pressure is reduced for 2 kg/cm2（28psi）, and temperature is reduced, too. The result is refrigeration agent absorbs heat from surrounding air to create refrigeration effect, refrigeration agent is changed from gas state to liquid state.
- Refrigeration agent flows into compressor in gas state again and repeat the above process.

⚠ CAUTION!

Refrigeration agent is compressed and sealed in AC system. Special protective measures are needed when injecting or releasing refrigeration agent correctly. It is strictlly controlled by laws to release refrigeration agent into air. Before maintaining or repair AC, please obey the orders of all federation, states and districts, refrigeration agent used in the system must reach or exceed R134a specifications or environmental standards issued later.

Control panel

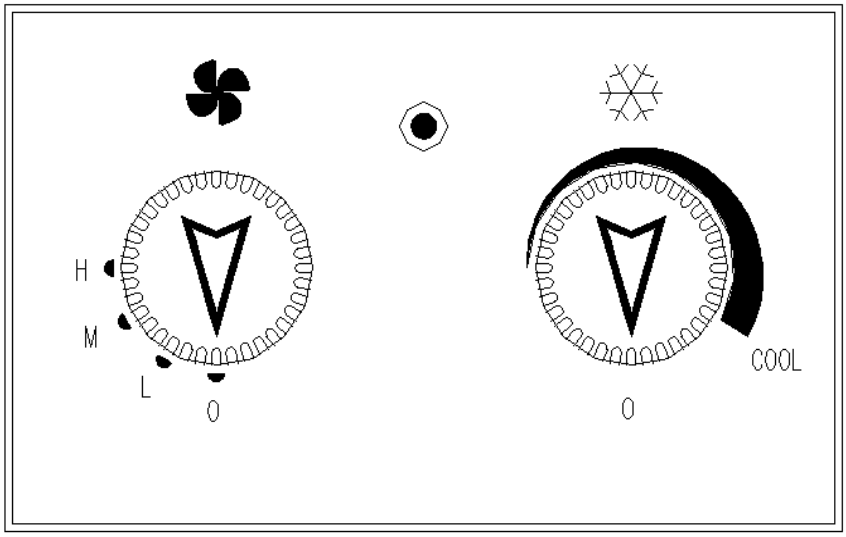

Figure 3. AC control panel diagram

Control specifications

Control item	Control switch	Control specifications
Rotation speed control of air blower	CLOSE” switch “LOW SPEED” switch “INTERMEDIATE SPEED” switch HIGH SPEED” switch	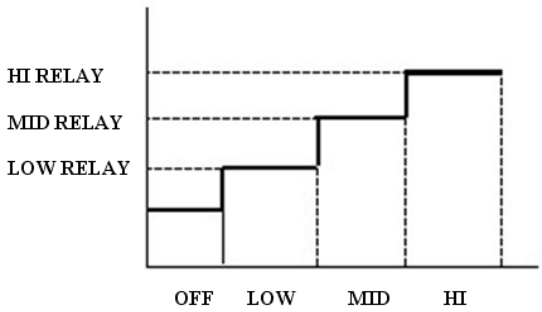
Compressor control	Temperature sensor	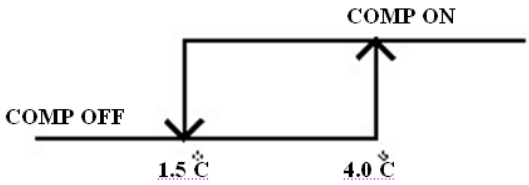

AC system circuit diagram

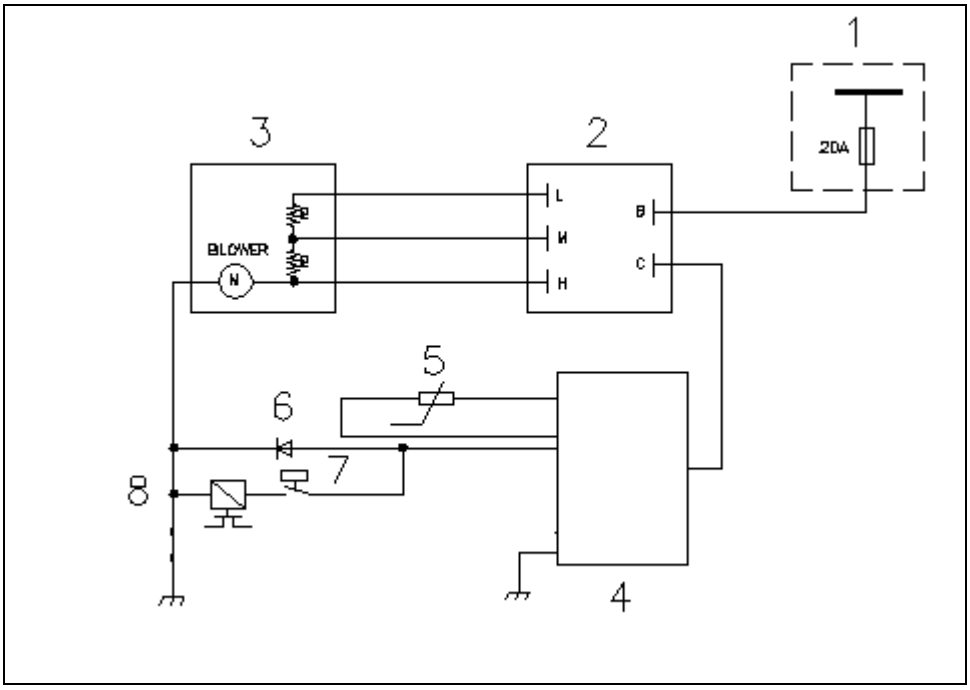

Figure 4. AC system circuit diagram

Reference Number	Description	Reference Number	Description
1	Fuse Box	5	Temperature Sensor
2	Blower Switch	6	LED
3	Blower	7	Press. Cut Off Switch
4	Thermistor	8	Compressor

Maintenance

3. AC outdoors radiator-“condenser” must be cleaned regularly; refer to figure 5.

   Treatment method: dismantle condensing fan, condenser is completely exposes, wash with water, but do not use high water pressure to avoid lodging of condenser fan and affect radiation effect;
   Maintenance standard: wash once a month in summer, if working environment is too bad, increase washing times properly.

Figure 5

4. Check if fixed bolts of compressor are loosed regularly, if belt of compressor is loosed; refer to figure 6.
   Checking method: visually check if AC bolts are loosed, checking method of belt tightness degree: put about 10kg force on middle of belt, force is downward, descending amplitude of belt is about 10-15mm, it cannot be too high or too low; maintenance standard: check once a week in summer.

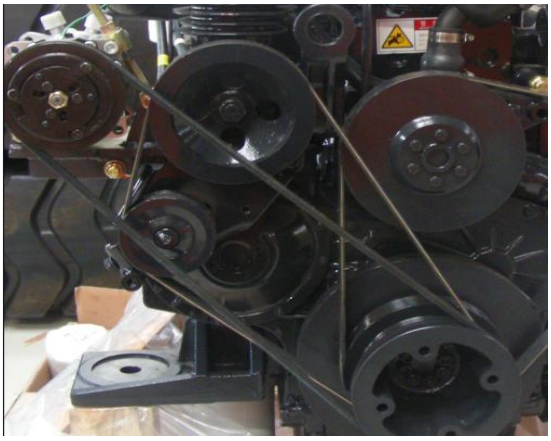

Figure 6

5. Check if there is refrigeration agent in the system
   Checking method: check Freon injection mouth of compressor head (refer to the picture), screw off plastic plug, poke with keys or other sharp things (its structure is like the air tap of tyre), check if there is large amount of air jets out, if there is no air or air current is very small, it proves that Freon is leaked (wear gloves and protect eyes during operation, do not burn skin and eyes with refrigeration agent).

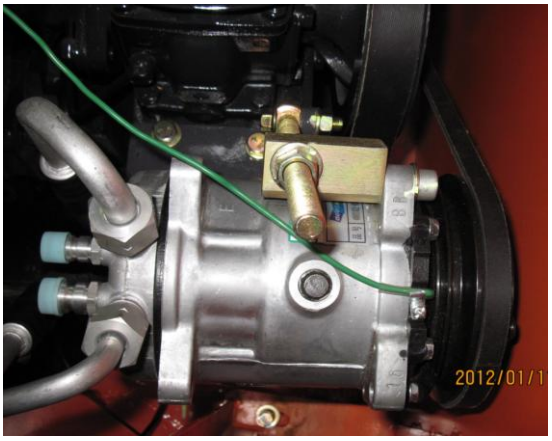

Figure 7

6. Power on checking of the entire machine

Open AC control panel, turn III gear switch to H gear and check if there is wind coming from evaporator and if wind is big enough.

Turn on temperature control switch on AC control panel and turns to the maximum clockwisely, check if indication light is on, at the same time, listen if AC compressor is absorbing (turn on and turn off temperature control switch repeatedly, there should be clear and melodious absorbing “Pata, pata” at compressor).

Figure 8

7. Confirmation of charging amount of refrigeration agent

Charging amount of refrigeration agent R134a of the AC system is 1000±50g, the process is vaccumizing, charging and retrieving.

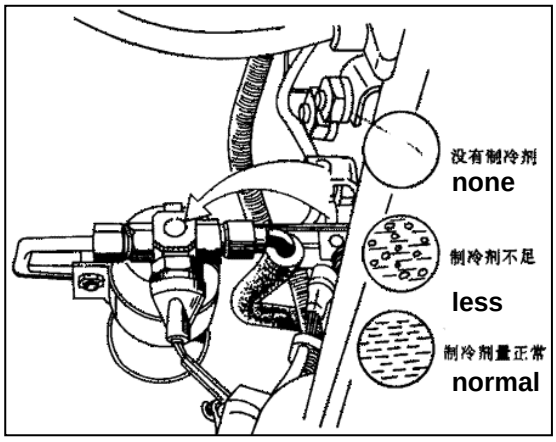

Figure 9

Comparison table between liquid sight glass state of reservoir and trouble analysis

Liquid sight glass state	Trouble analysis
Liquid sight glass is lacte, bubbles can be seen at the moment of turning on and turning off AC, and bubbles become transparent suddendly.	Freon charging quantity is proper
Few bubbles flowing, compressor head is hot, refrigeration output is not enough, high and low pressure of the system are both very low.	Freon charging quantity is not enough or the system is leaking
Turn on and turn off AC, it is hard to see bubbles flowing, compressor head is cold, high and low pressure of the system are both high.	Freon is over charged
Freon charging is proper, AC does not refrigerate, it is hard to see bubbles flowing in reservoir, low pressure is negative.	Expansion valve is dirty and blocked or frozen and blocked, it shall be solved by professional personnel

https://truckmanualshub.com/

Trouble shooting

Following is the common troubles and reasons

1. The entire AC system is power off

- Reason analysis
  - Fuse of AC is burnout.
  - Wiring harness of AC power is not connected.

2. Evaporation fan is running, after turning on temperature control switch, indication light is not on, condensation fan and compressor do not work.

- Reason analysis
  - Indoor temperature of driving cab is lower than 4º
  - Temperature sensing detector is open circuit or not connected.
  - AC temperature control switch relay is broken.

3. Evaporation fan rotates, condensation fan rotates, compressor does not absorb

  - Coil of compressor clutch is broken
  - High/low pressure switch is broken.
  - Freon is leaked
  - Circuit from high/low pressure switch to compressor is open.

4. Evaporation fan does not run, condensation fan runs, compressor absorbs

  - Earth wire of evaporation fan drops, or earth wire contact is not good.
  - III gear switch is broken
  - Evaporation fan is broken

https://truckmanualshub.com/

ELECTRICAL SYSTEM (SD310)

⚠ CAUTION!
Follow all safety recommendations and safe shop practices outlined in the front of this manual or those contained within this section. **Always use tools and equipment that is in good working order.** **Use lifting and hoisting equipment capable of safely handling load.** **Remember, that ultimately safety is your own personal responsibility.**

MODEL	SERIAL NUMBER RANGE
SD310	010001 and Up

Copyright 2012 DISD

July 2012

https://truckmanualshub.com/

TABLE OF CONTENTS

Overview 3
Electric Wire Color 3
Electric Supply System.....4
Engine Starting Circuit.....6
Operation During Start Process.....6
Operation After Start Process.....6
Engine Preheating System.....8
Principle of Operation.....8
Engine Stop System.....10
Working process before engine is started 10
Work process of engine flameout.....10
Charging System.....12
Monitoring System.....14
Instrument panel.....15
Windshield Wiper.....21
Lighting System.....23
Electric Detent System.....25
Electric return Circuit 25
Swing arm lifting limitation system 26
Automatic bucket laid flat system.....26
Proximity Switch.....26
Electric Speed Control System.....27

https://truckmanualshub.com/

OVERVIEW

Voltage of electrical system of the machine is DC 24V, the rated voltage of all electrical parts is 24V. Electrical cable wire adopts single wire system, and negative earth is adopted. Electrical system includes two serial 12V storage batteries and three phase DC generator with entire rectifier. Wire harness of the system can be distinguished by different insulation colour. Each colour symbol used for electrical system is listed below.

Electric Wire Color

Symbol	Color
W	White
G	Green
Or	Orange
B	Black
L	Blue
Lg	Light Green

Symbol	Color
R	Red
Gr	Gray
P	Pink
Y	Yellow
Br	Brown
V	Violet

NOTE: *RW: Red wire with White stripe.*
R - Base Color, W - Stripe Color.
NOTE: *0.85G: Nominal sectional area of wire core less insulator = 0.85 mm2 (0.03 in2).*

ELECTRIC SUPPLY SYSTEM

Power circuit supplies electric current to each electrical part. It is composed of storage battery, gnerator, fusible line and fuse box. Negative electrode of storage battery is earth connected and connects with balance weight.

Even if keys switch is at “OFF” position, when the general power is switched off, storage battery stil supplies electric current to following parts, and returns back to fuse box through fusible link.

3. Input terminal of storage battery relay power supply.
4. Key switch terminal “B”.
5. Cabin light power supply terminal.
6. General stop electromagnet power input terminal.
7. Generator terminal “B”.
8. Preheat relay power input terminal.

When switch of keys is at “ON” and “START” position, electric current flows to fusible wire from storage battery, reaches key switch terminal “B”/”BR” through fuse box, and reaches storage battery relay control terminal “+” through guide line, activate storage battery relay coil and make the system power on.
When all contact terminals of storage battery are connected well, electrical device can be operated.

When generator does not work, all electrical equipments power source is supplied by storage battery. Once diesel engine is started, power will be supplied by generator.

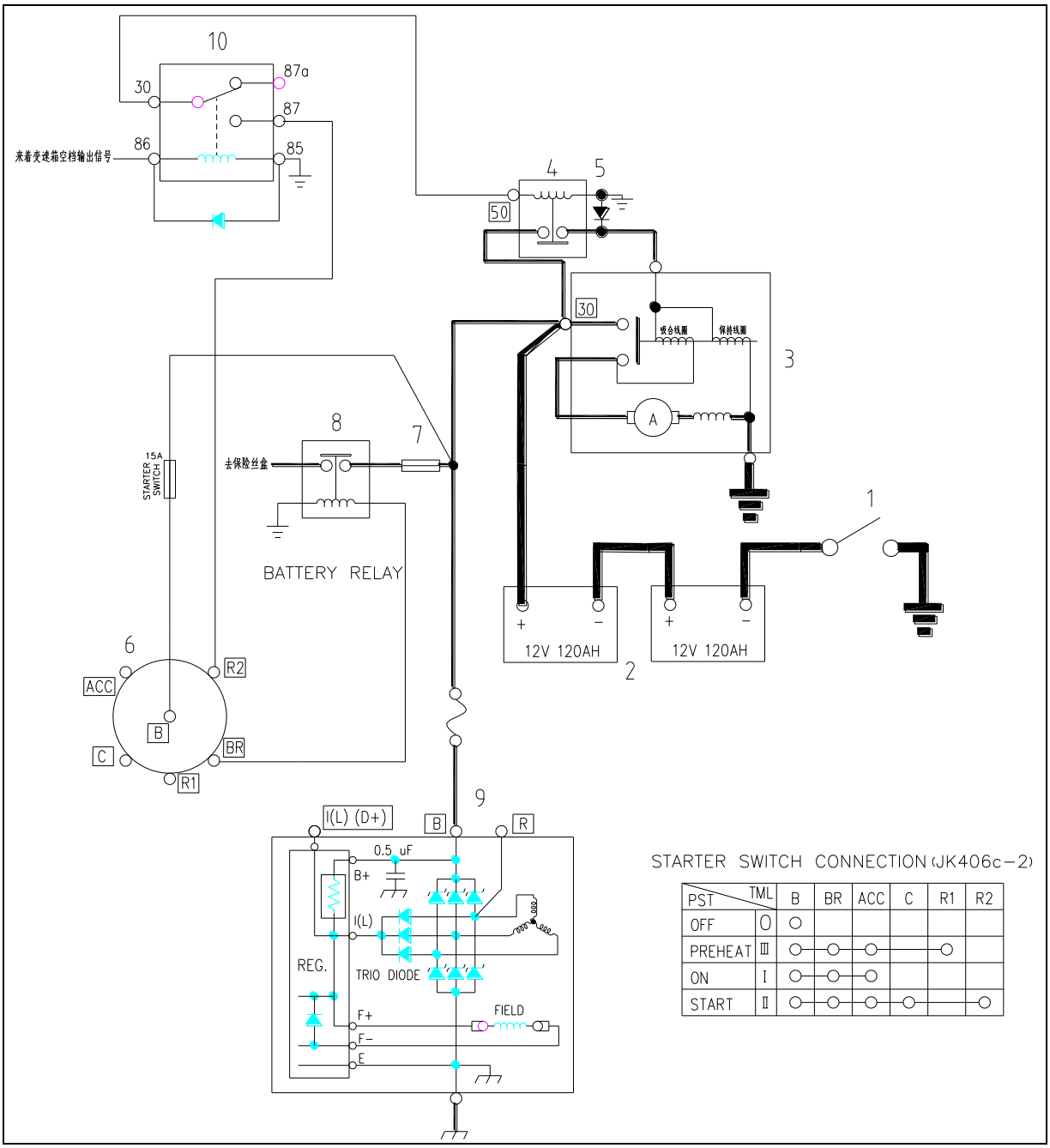

Figure 1. Power supply circuit diagram

Reference Number	Description	Reference Number	Description
1	Disconnect Switch	6	Starter Switch
2	Battery	7	Fuse
3	Starter	8	Battery Relay
4	Starter Relay	9	Alternator
5	Diode	10	Saftey Start Relay

ENGINE STARTING CIRCUIT

Operation During Start Process

Turn key switch (6) to “ON” position, connect terminal “B” and “BR”, output electric current starts power relay (8), then fuse box is power on. Make control handle gear in neutral position，relay（10）is power on and get through “87a” and “30”

Then key switch (6) is turned to “ON” position, terminal “R2” and “B” are connected, starter relay (4) is started, then other contact terminals “B” and “PP” are connected, active gear of starter (3) is propelled to contact ring gear of flywheel and connect with contact terminal of starter.

Electric current comes out from storage battery (2), goes through terminal “B” and “PP” of starter relay (4) and arrives at starter (3) terminal “50”.

Operation After Start Process

Once generator is started, the belt will drive AC generator (9) to create electric current. Electric current goes through generator (9) terminal “B”, safety plate (7), power relay (8) terminal “B” and supply power to fuse box.

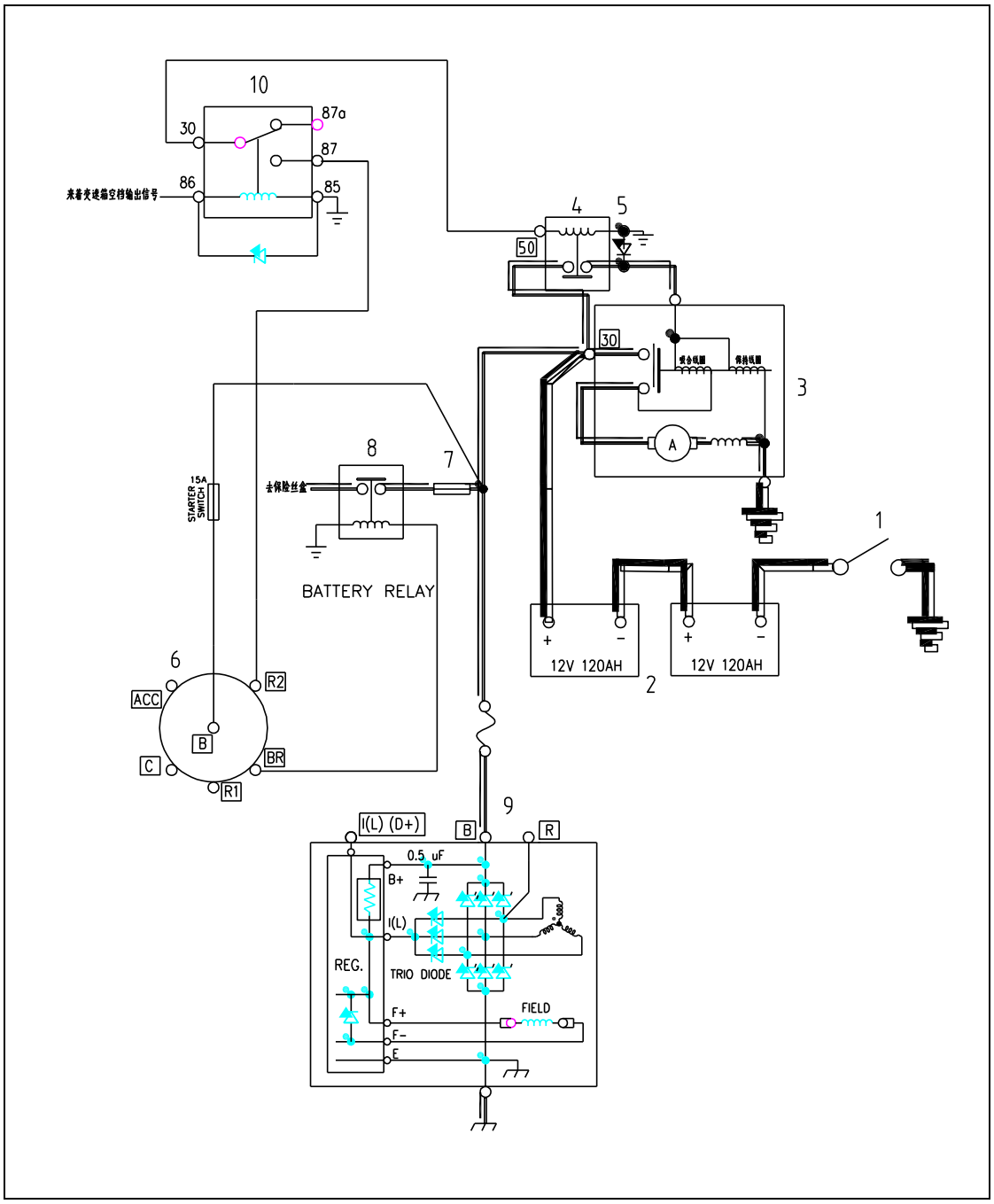

Figure 2. Starter circuit

Reference Number	Description	Reference Number	Description
1	Disconnect Switch	6	Starter Switch
2	Battery	7	Fuse
3	Starter	8	Battery Relay
4	Starter Relay	9	Alternator
5	Diode	10	Saftey Start Relay

Engine Preheating System

Engine preheating system is Intake preheating system, its main functions are: heat air inlet temperature through Heating air intake to solve the problem that engine is difficult to be started in winter resulted from low temperature. Main parts include: temperature sensor (11), preheating controller (7), preheating indicator (12), preheating relay (8), and preheating plug (9).

Working principle:

8. Preheating switch (4) is turned on;
9. When water temperature of engine is higher than 25℃ (water temperature Rt resistivity is smaller than 800Ω), controllor (7) is not at preheating state, preheating indicator light (12) is off;
10. When water temperature of engine is lower than 25℃ (water temperature Rt resistivity is smaller than 800Ω), controllor (7) is at preheating state; preheating time is related with water temperature;
11. When preheating time T1 is up, preheating indicator light (12) is off (if ignition switch is off during preheating time, controller stops working), it enters into period waiting for starting;
12. ①Turn off starting gear (ON) of ignition switch (4) during this period (preheating plug is power on during this period), preheating is on again, The time T2 is 300S;

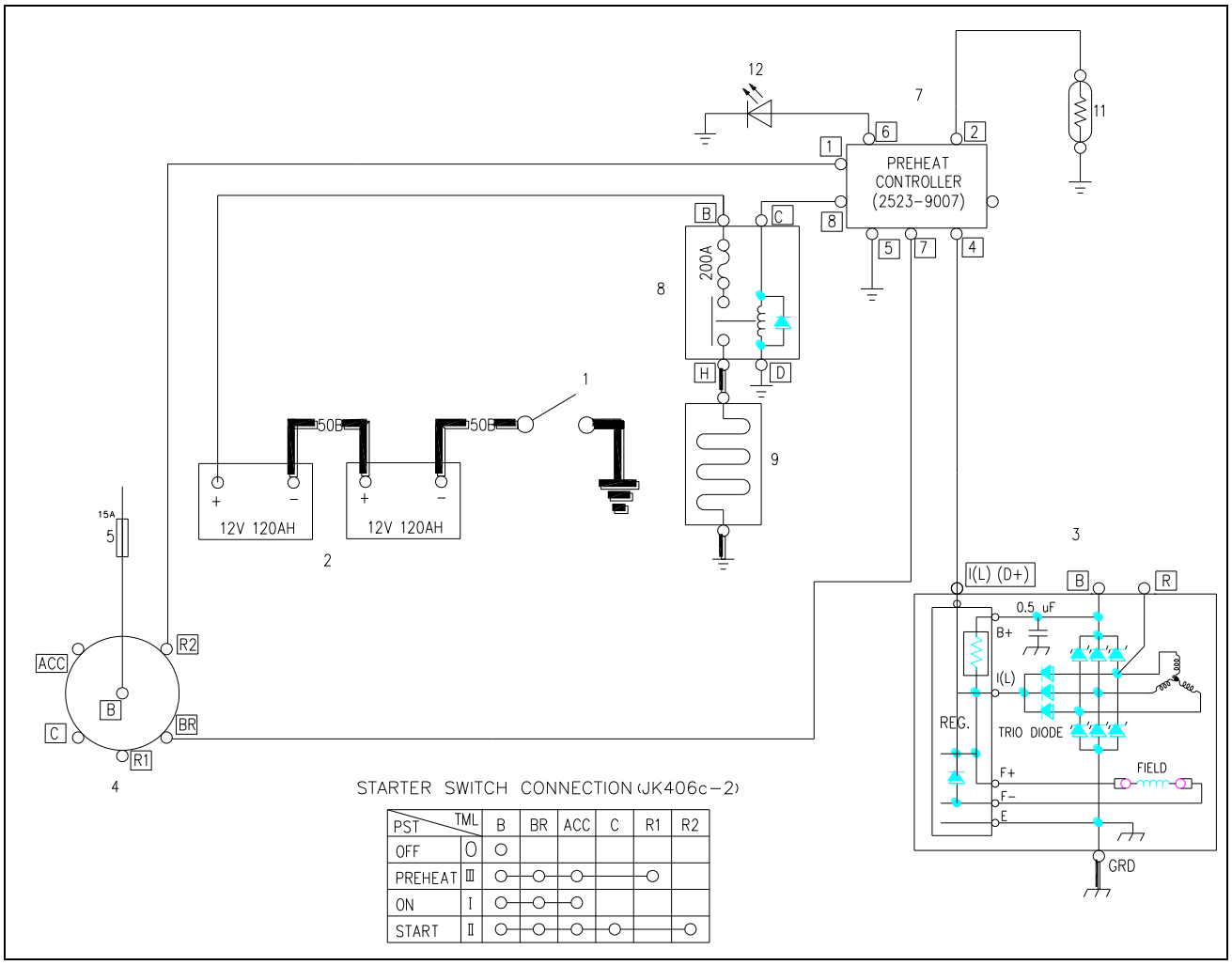

PST \ TML		B	BR	ACC	C	R1	R2
OFF	0	○					
PREHEAT	Ⅲ	○	○	○		○	
ON	Ⅰ	○	○	○			
START	Ⅱ	○	○	○	○		○

Figure 3. Control circuit of preheating system

Reference Number	Description	Reference Number	Description
1	Disconnect Switch	7	Preheat Controller
2	Battery	8	Preheat Relay
3	Alternator	9	Pre heater
4	Starter Switch	11	Water Temperature Sensor
5	Fuse	12	Preheat Indicator

ENGINE STOP SYSTEM

Engine stopping system is composed of key switch (4), flameout electromagnet (6) and flameout relay (5). There are two kinds of work process: before engine is started and engine flameout.

Working process before engine is started:

When key switch (4) is turned to “ON” gear, its terminal “ACC” and “B” is connected. Electric current goes through security of electrical box (3) through positive pole of storage battery (2) and “B” and “ACC” terminals of key switch, goes through holding coil of flameout electromagnet and earth connected and forms circuit.

Turns key switch(4) to “START” gear, terminals “ACC”, “C” and “B” are connected. Electric current goes through insurance of electrical box (3) from positive pole of storage battery (2) and terminals “B” and “C” of key switch, flameout relay (5) coil is power on and works, flameout electromagnet (6) terminal 85 is power on, pulls in coil and works, fuel injection pump is opened and lever is closed.

Then key switch will be back to “ON” gear automatically, pulling in coil is broken, while coil is kept to be power on, keep the state of lever closing.

Work process of engine flameout:

Turns key switch (4) to “OFF” gear, its terminals “ACC” and “C” are power off. Electric current going through flameout electromagnet (6) holding circuit and flameout replay (5) coil is cut off. Closing lever of fuel injection pump is reset, fuel supplying is stopped, engine flames out.

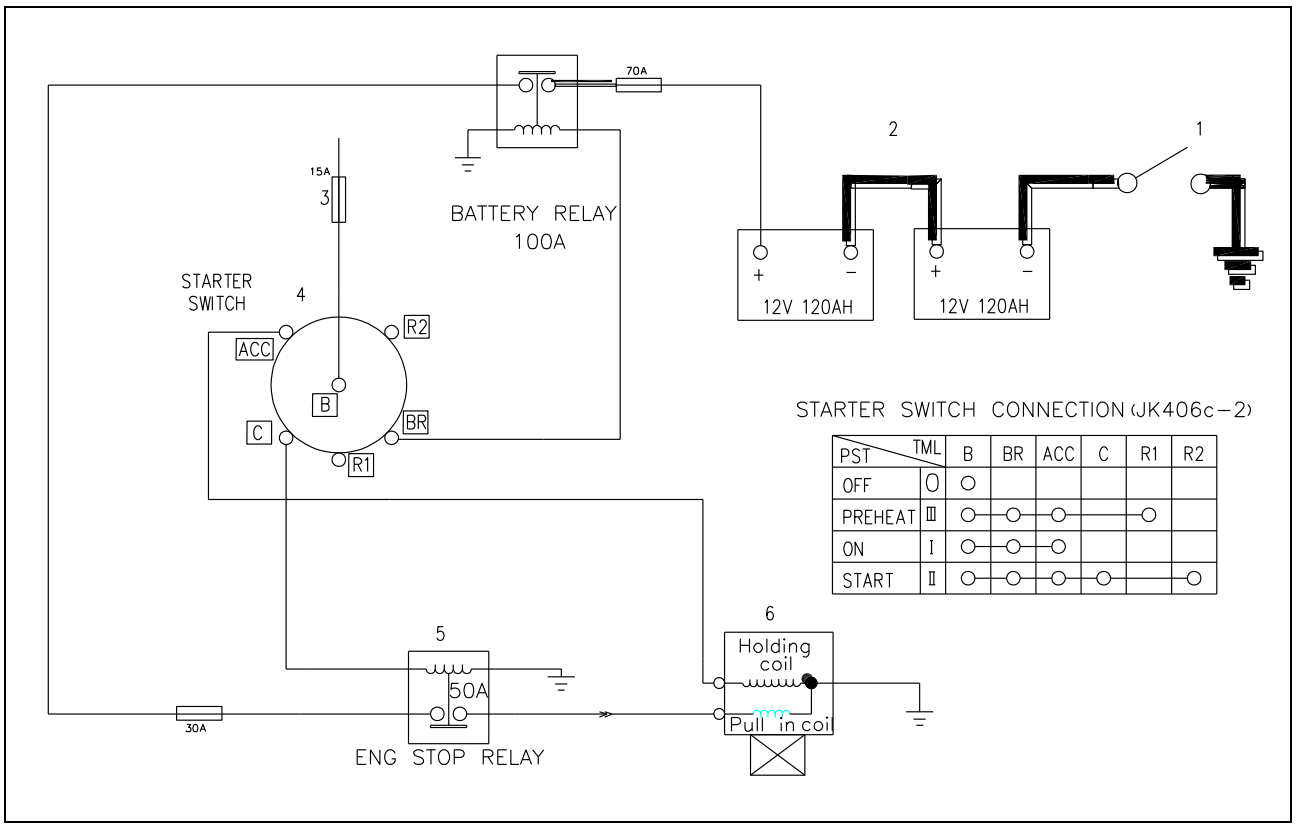

Figure 4. Engine stalling system

Reference Number	Description	Reference Number	Description
1	Disconnect Switch	4	Starter Switch
2	Battery	5	Engine Stop Relay
3	Fuse	6	Engine Stop Motor

Charging System

Turn key switch (3) to “ON” position, its terminals “BR” and “B” are connected, power relay (6) acts, electric current coming from storage battery (2) goes through fuse box (4), power relay (6), charging indication light (8) and excitation resistance (9) and reaches “D+” terminal of generator (5), earth connected and forms a circuit, charging indication light (8) is on to warn and supplies excitation electric current for generator (5). After engine is started, generator (5) starts charging. Electric current comes from terminal “B+” of generator (5), goes through fuse box (4) and reaches storage battery (2). Charging indication light (8) is off.

Generator (5) also supplies power to other electrical parts through fuse box (4) and power relay (6).

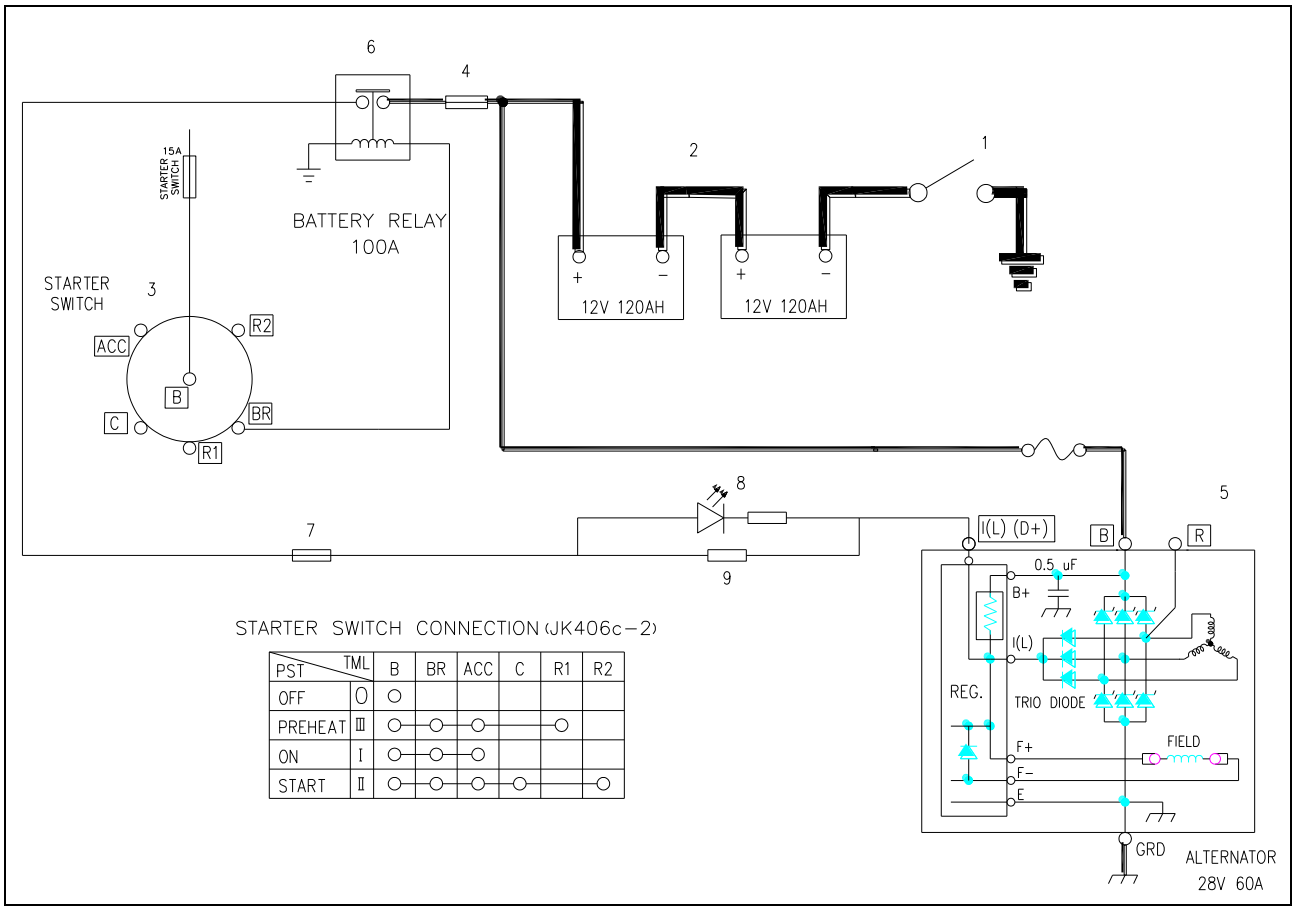

Figure 5. Charging system circuit diagram

Reference Number	Description	Reference Number	Description
1	Disconnect Switch	6	Battery Relay
2	Battery	7	Diode
3	Starter Switch	8	Charge Indicator
4	Fuse Box	9	Resistor
5	Alternator		

Monitoring System

Monitoring system of the equipment includes all kinds of oil pressure gauges, oil pressure sensor plug, water temperature gauge, water temperature sensor plug, voltmeter, barometer and low pressure warning device, etc.

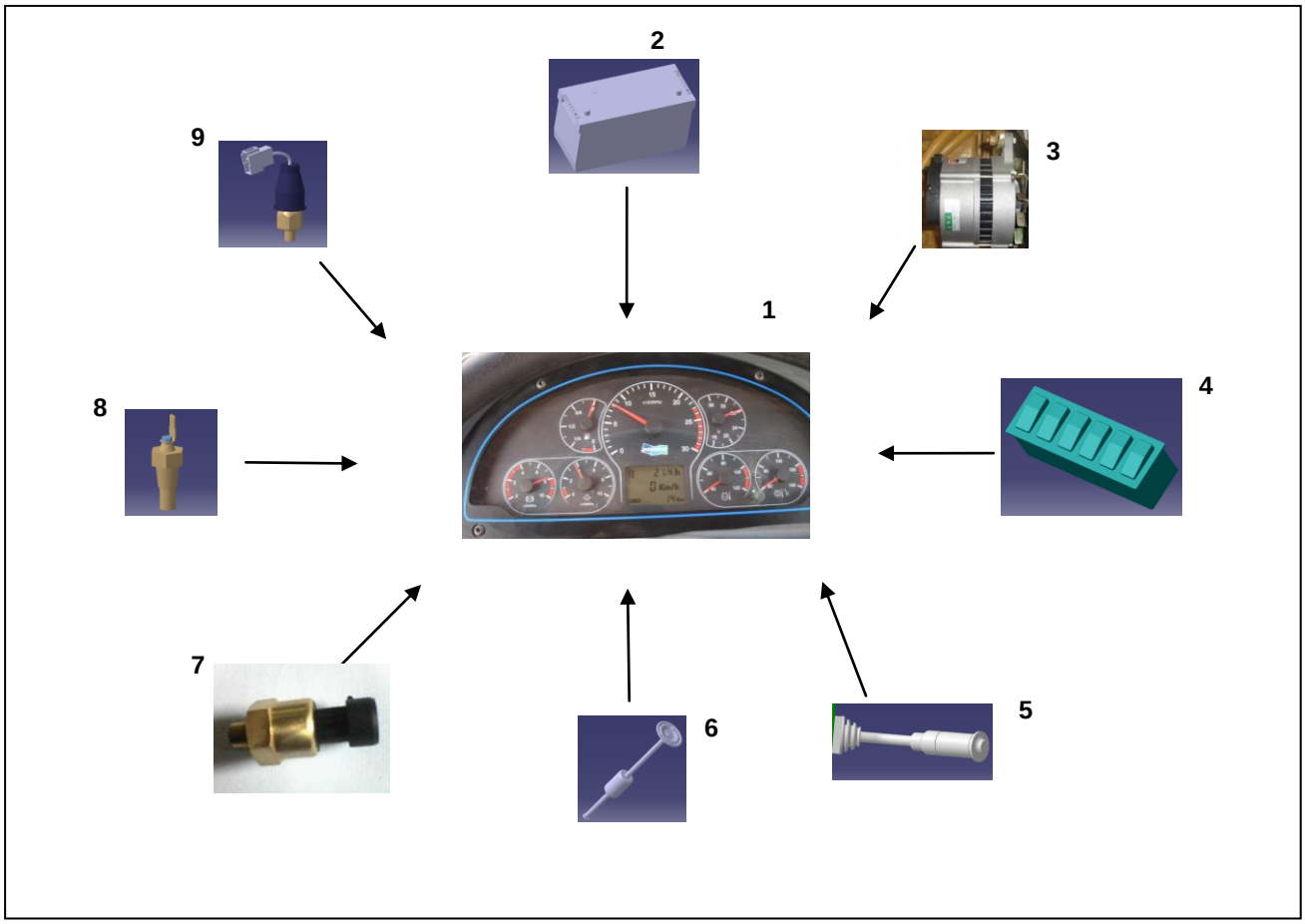

Figure 6. Monitoring system

Reference Number	Description	Reference Number	Description
1	Gauge Panel	6	Fuel Sensor
2	Battery	7	Sensor
3	Alternator	8	Temperature Sensor
4	Rocker Switch	9	Back Buzzer Switch
5	Switchgroup		

Monitoring system will process information collected from all sensors, the instrument panel will indicate all data and warning signals.

Instrument panel

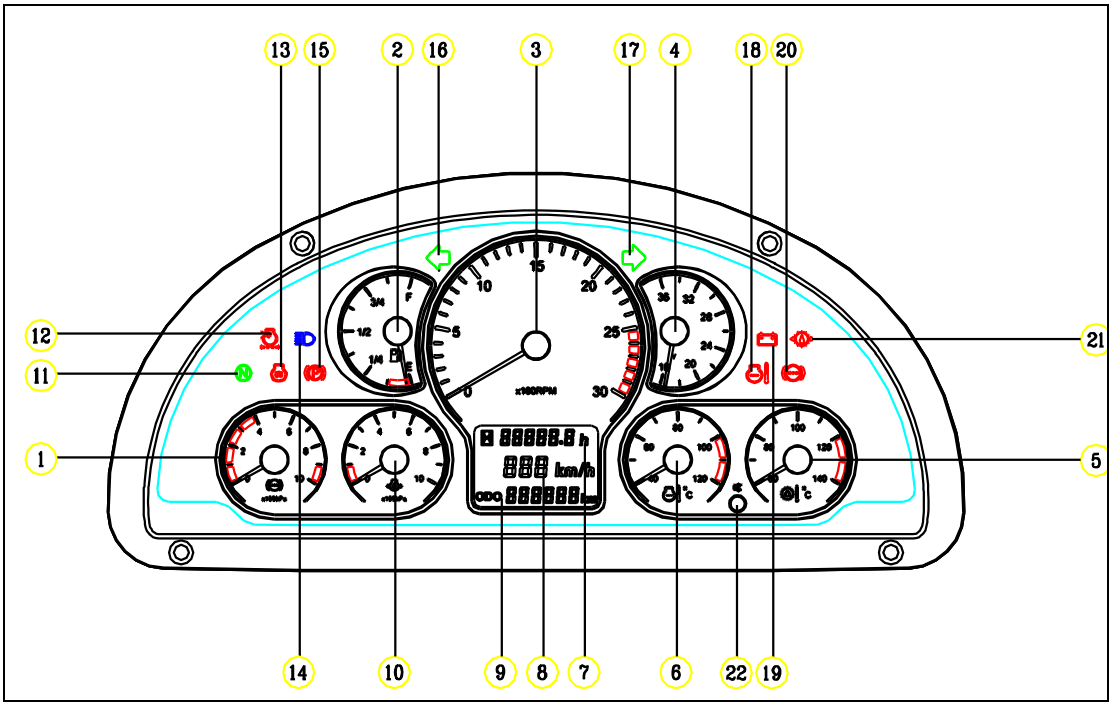

Figure 7. Instrument panel arrangement plan

Reference Number	Description	Reference Number	Description
1	Air Pressure Meter	12	Air filter plugging warning indicator
2	Fuel Gauge	13	Preheat Indicator
3	Tachometer	14	High Beam Indicator
4	Voltage meter	15	Parking Brake Indicator
5	Torque Converter Oil Temperature Meter	16	Turn and Hazard Warning Light
6	Engine Coolant Temperature Gauge	17	Turn and Hazard Warning Light
7	Hour meter	18	Water temperature too high warning light
8	Speedometer	19	Charging Warning Light
9	Odometer	20	Brake low pressure warning light
10	Engine oil pressure meter	21	TM Oil pressure too low warning light
11	Neutral position indicator	22	

Instruments

Function	Display	Sensor Specification	
		Input Terminal	Input Specification
Air Pressure Meter	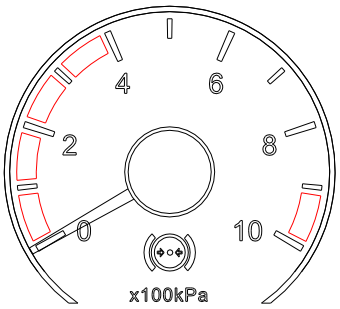	CN-29	0.1MPa——0.9V 0.4MPa——2.1V 0.6MPa——2.9V 0.7MPa——3.3V 0.8MPa——3.7V
Fuel Gauge	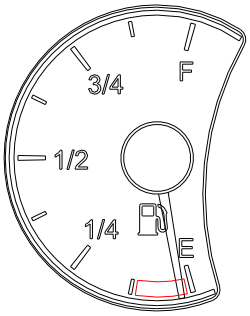	CN-03	0——80 欧姆 1/2——32 欧姆 F——8 欧姆
Tachometer	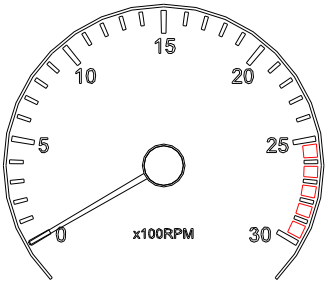	CN-10	12.66 脉冲/转
Voltage meter	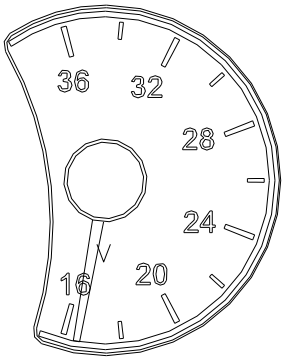	CN-11	

Function	Display	Sensor Specification	
		Input Terminal	Input Specification
Torque Converter Oil Temperature Meter	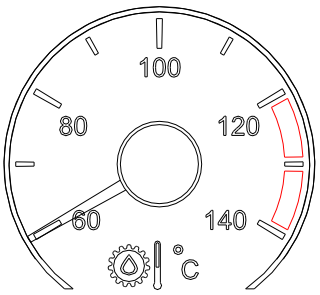	CN-09	0℃——98.96KΩ 60℃——2.476KΩ 80℃——1.25KΩ 100℃——0.6744KΩ 120℃——0.4071KΩ
Engine Coolant Temperature Gauge	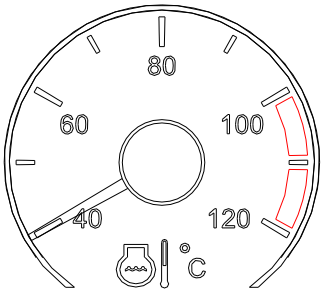	CN-02	0℃——98.96KΩ 40℃——5.312KΩ 60℃——2.476KΩ 80℃——1.25KΩ 100℃——0.6744KΩ 120℃——0.4071KΩ
Hour meter Speedometer Odometer	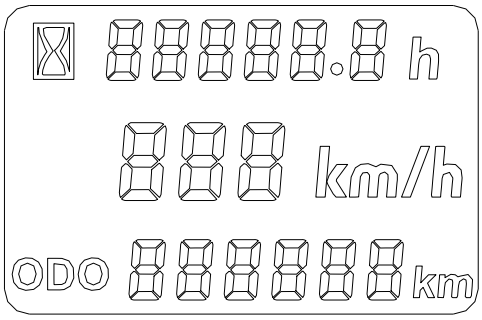	CN-04 CN-27	
Engine oil pressure meter	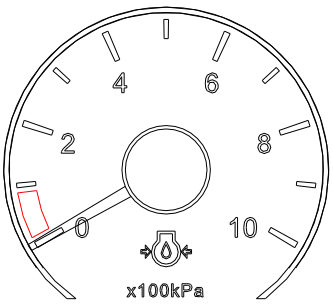	CN-08	0.1MPa——0.9V 0.2MPa——1.3V 0.3MPa——1.7V 0.4MPa——2.1V

Indication light

功 能	显 示	输入端子	操 作	备注
	Turn left and dangerous indication light	CN-24	The light is on when turning left signal or dangerous warning light is turned on (the Max. terminal input is 24V)	
	Turn right and dangerous indication light	CN-22	The light is on when turning right signal or dangerous warning light is turned on (the Max. terminal input is 24V)	
	Charging	CN-16	The light is on when not charging (Generator D + terminal output voltage reduces to 24V)	Under normal condition, light is on when starting, light is off when engine starts working
	Headlights on full beam	CN-25	The light is on when headlight on full beam is turned on (The Max. terminal input is 24V)	
	Oil pressure of gear box	CN-17	The light is on when pressure decreses to 1.1Mpa.	
	Preheat	CN-01	The light is on when preheating system is working	
	Parking brake	CN-18	The light is on when brake switch is turned on (pressure switch is off when pressure is more than 0.3Mpa, the Max. input terminal is 24V)	When braking, the light is on before engine is started under any conditions.

https://truckmanualshub.com/

功 能	显 示	输入端子	操 作	备注
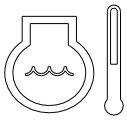	water temperture.	CN-02	When the engine temperature more than 103 ℃, the lamp is lit,	
	Nertral position	CN-06	When control handle in a neutral position, the lamp is lit,	
	filter	CN-20	When pressure vacuum reach 6KPa, lamp is lit	
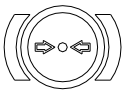	Brake pressure	CN-29	When pressure is reduced to 0.4 MPa ,the lamp is lit,	

Schematic diagram of monitoring system

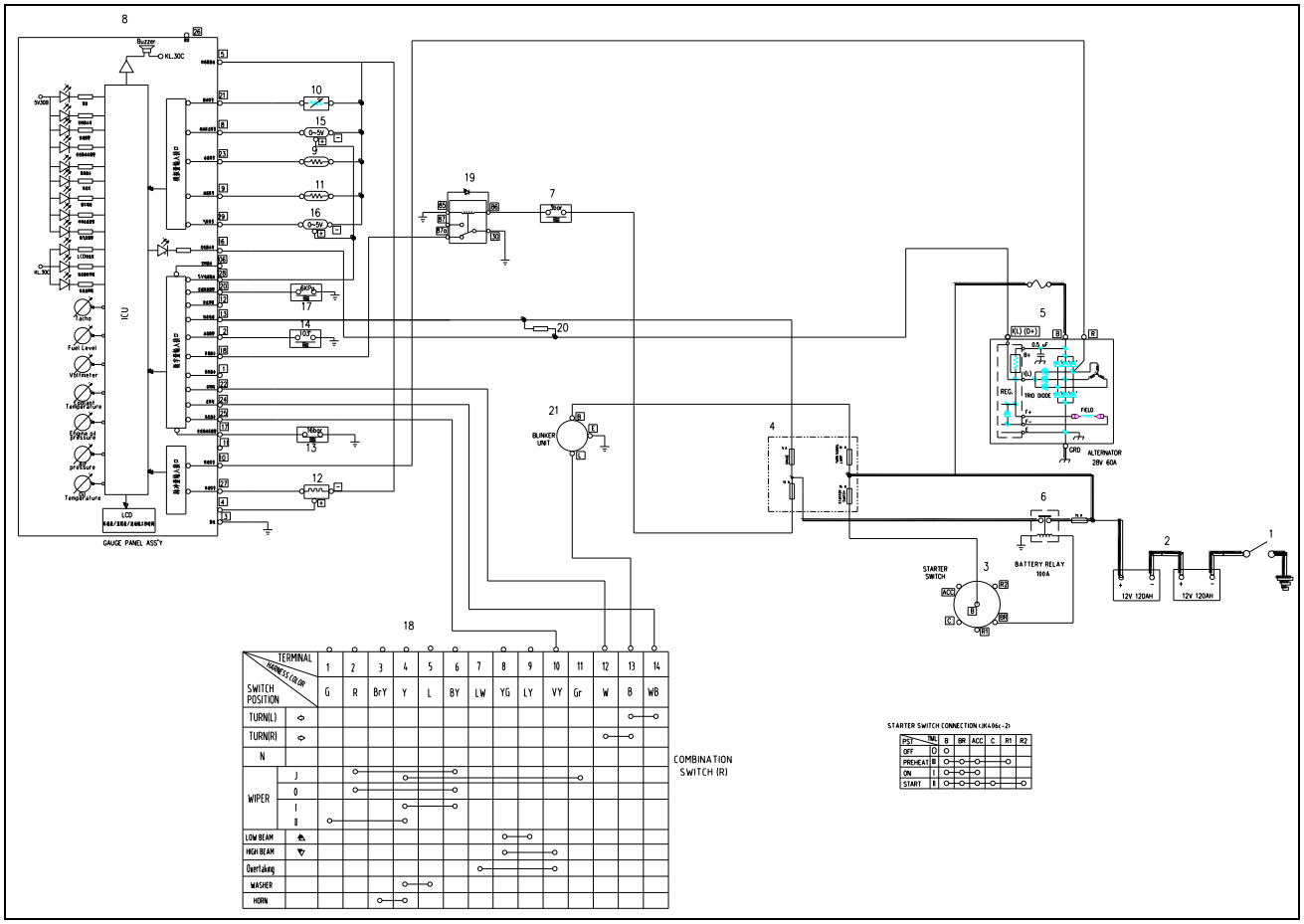

Figure 8. Schematic diagram of monitoring system

Reference Number	Description	Reference Number	Description
1	Disconnect Switch	12	Speed Sensor
2	Battery	13	T/M Oil Pressure Switch
3	Starter Switch	14	Water temp. Switch
4	Fuse Box	15	Eng. Oil Pressure Switch
5	Alternator	16	Air Pressure Alarm Switch
6	Starter Relay	17	Empty filter jams switch
7	Park press switch	18	Combination Switch
8	Gauge Panel	19	Relay
9	Water Temperature Sensor	20	Excitation resistance
10	Fuel Sensor	21	Blinker Unit
11	Transmission Temp Sensor		

Windshield Wiper

Windshield wiper can be operated by combination switch (2).

1. Low speed wiper (I gear)
   When wiper is running with low speed, electric current comes from fuse box (1), goes through wire inlet terminal and terminal “L” of wiper motor (3), reaches terminal “6” and “4” of combination switch (2) and connects with earth.
2. High speed wiper (II gear)
   When wiper is running with high speed, electric current comes from fuse box (1), goes through wire inlet terminal and terminal “H” of wiper motor (3), reaches terminal “1” and “4” of combination switch (2) and connects with earth.

Through the rocket switch (7) control rear window wiper blade and scrubber

1 .Single windshield wipers gear (not automatic reset)
When Wiper blade in the running gear, the current from the fuse box (1) through the windscreen wiper motor (5) into line terminal to rocket switch (7) terminal "4", "2", then grounding.

2. The windshield wipers and scrubber combination gear (can be automatically reset).
When Wiper blade in the running gear, the current from the fuse box (1) through the windscreen wiper motor (5) and washing machine (6) into line terminal to rocket switch (7) terminal "1", "7",then grounding.

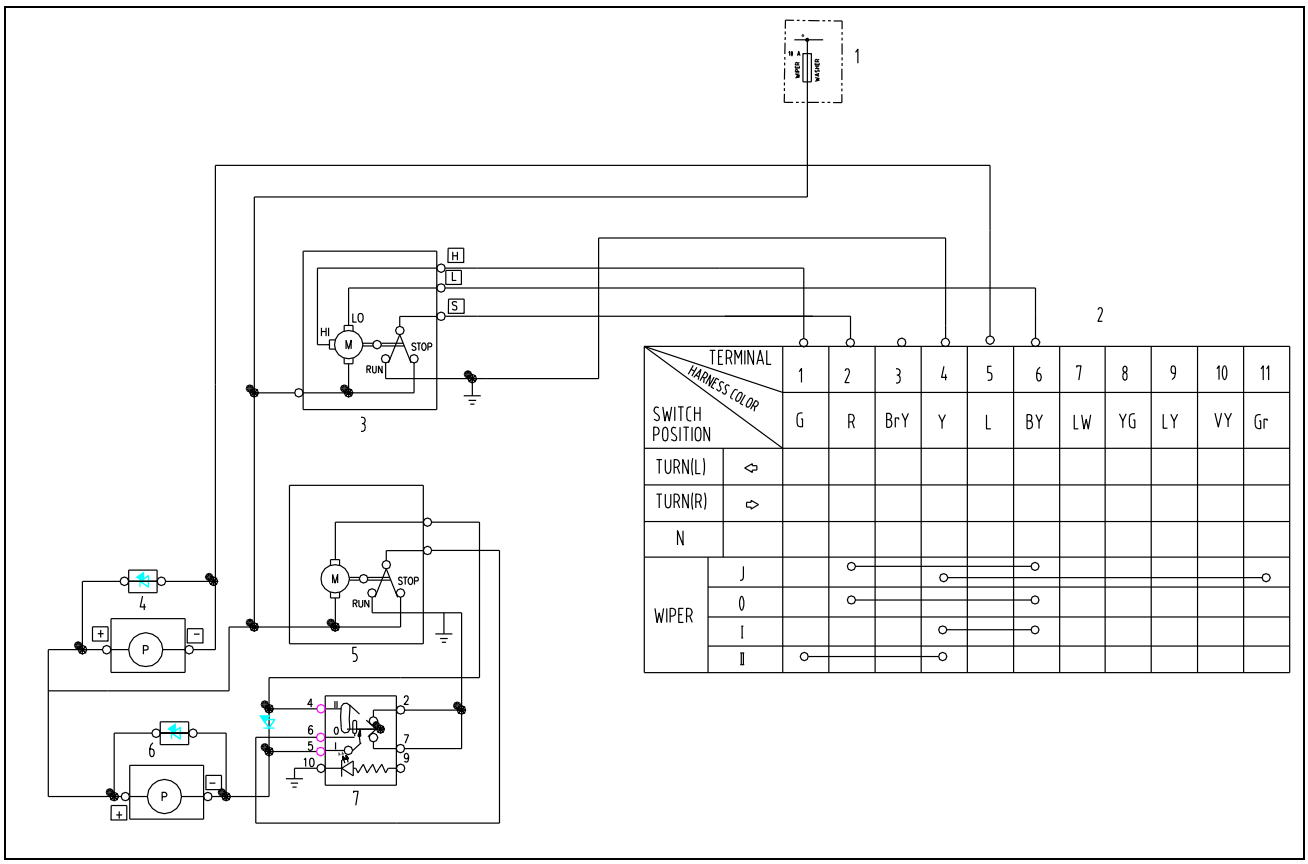

Figure 9. Circuit diagram of windshield wiper

Reference Number	Description	Reference Number	Description
1	Fuse Box	5	Rear Wiper
2	Combination Switch	6	Rear Washer
3	Wiper	7	Rocker switch
4	Washer		

Lighting System

Lamping system includes big lamp, position lamp, turning signal lamp, dangerous lamp, parking lamp, working ligh and switches of all lamps.

- When indoor lamp (4) is turned on, electric current goes to indoor lamp from fuse box (1), indoor lamp is on.
- Press front lamp switch (18), combination switch (2) is turned to passing lamp, terminal “8” and “9” are connected, electric current from fuse box (1) is sent to coil terminal “86” of passing lamp relay (6), passing lamp relay (6) works, its terminal “30” and “87” are connected, passing lamp of front lamp(12) and (13) gets power and works.
- Press front lamp switch (18), combination switch (2) is turned to distance lamp, terminal “8” and “10” are connected, electric current from fuse box (1) is sent to coil terminal “86” of distance lamp relay (5), distance lamp relay (5) works, its terminal “30” and “87” are connected, distance lamp of front lamp (12) and (13) gets power and works.
- Combination switch (2) is turned to left handed rotation, its terminal “13” and “14” are connected, electric current from fuse box (1) goes through flasher (7), combination switch (2) and reaches left turning lamp of front combination lamp (12) and rear combination lamp (14).
- Combination switch (2) is turned to right handed rotation, its terminal “13” and “12” are connected, electric current from fuse box (1) goes through flasher (7), combination switch (2) and reaches right turning lamp of front combination lamp (13) and rear combination lamp (15).
- When brake switch (3) works, electric current from fuse box (1), reaches brake lamp of rear combination lamp (14) and rear combination lamp (15), brake lamp works.
- When pressing switch of position lamp (17), its terminal “5” and “1” are connected. Electric current from fuse box (1) reaches small lamps of (10), (11, (16), (17), and (18), and front combination lamp (120 and (13), position lamp of rear combination lamp (14) and (15).
- When pressing switch of working lamp (10), its terminal “5” and “1” are connected. Electric current from fuse box (1) reaches working lamp (9), working lamp is on.
- When pressing rear lamp switch (11), its terminal “5” and “1” are connected. Electric current from fuse box (1) reaches working lamp (8), rear working lamp is on.
- When pressing dangerous lamp (16), terminal “5” and “1”, “2” and “37” are connected. Electric current from fuse box (1) is sent to turnning lamp of front combination lamp (12) and (13), and rear combination lamp (14) and (15).
- When control handle in reverse position, the electrical signals that relay (19) work, make contact "95", "96" conduction, the current from the fuse box (1) sent to the back-up light of the combination lights (14), (15) .

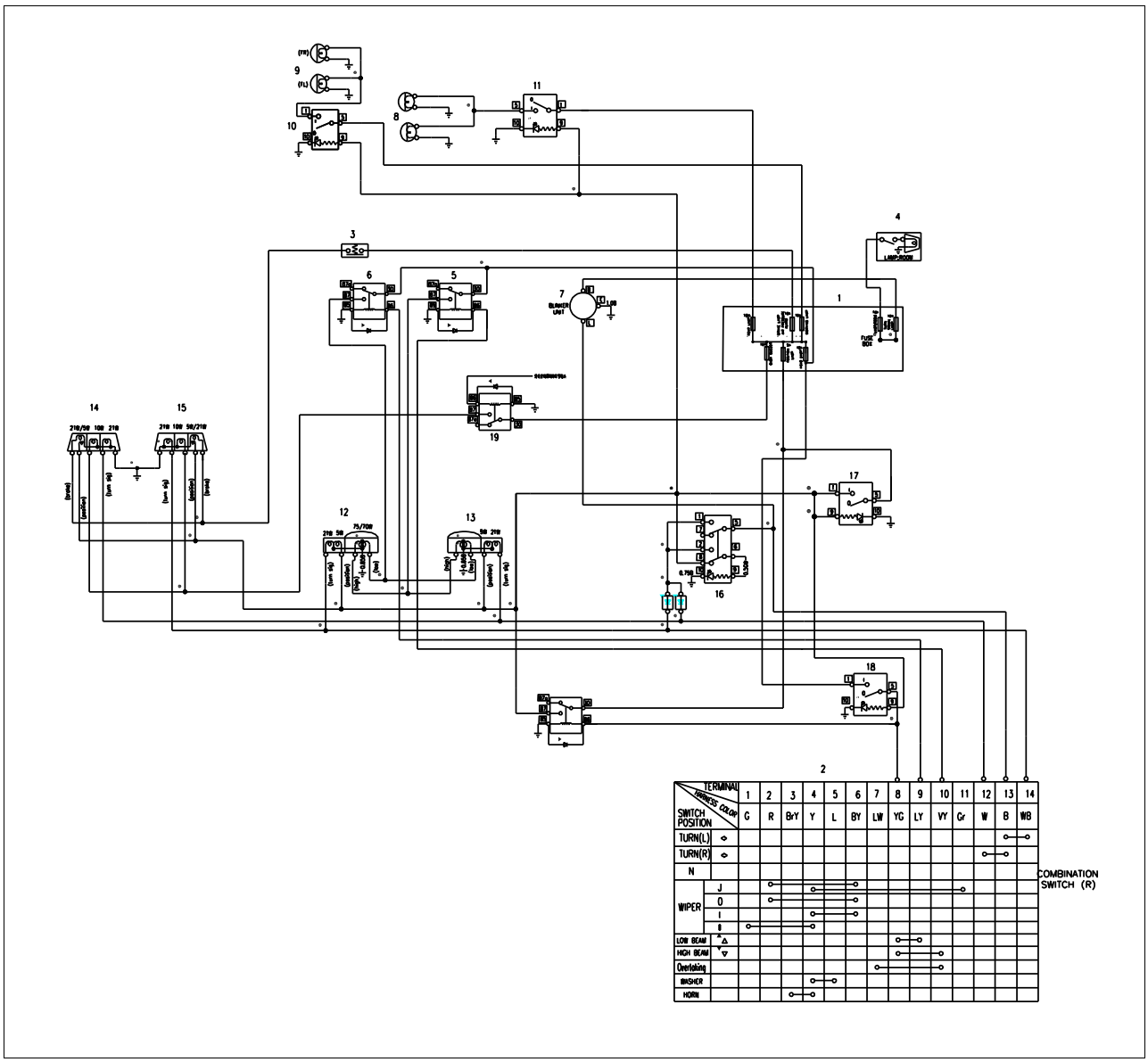

Figure 10. Lighting system circuit diagram

Reference Number	Description	Reference Number	Description
1	Fuse Box	11	Rear Lamp Switch
2	Combination Switch	12	Front Combination Lamp(L)
3	Stop Lamp Switch	13	Front Combination Lamp(R)
4	Room Lamp	14	Rear Combination Lamp(L)
5	High Lamp Relay	15	Rear Combination Lamp(R)
6	Low Lamp Relay	16	Hazard Switch
7	Blinker Unit	17	Position Lamp Switch
8	Rear Lamp	18	Front Lamp Switch
9	Working Lamp	19	Back Relay
10	Working Lamp Switch		

Electric Detent System

Electric detent system includes swing arm lifting limitation system and cylinder automatic laid flat system.

Electric return circuit

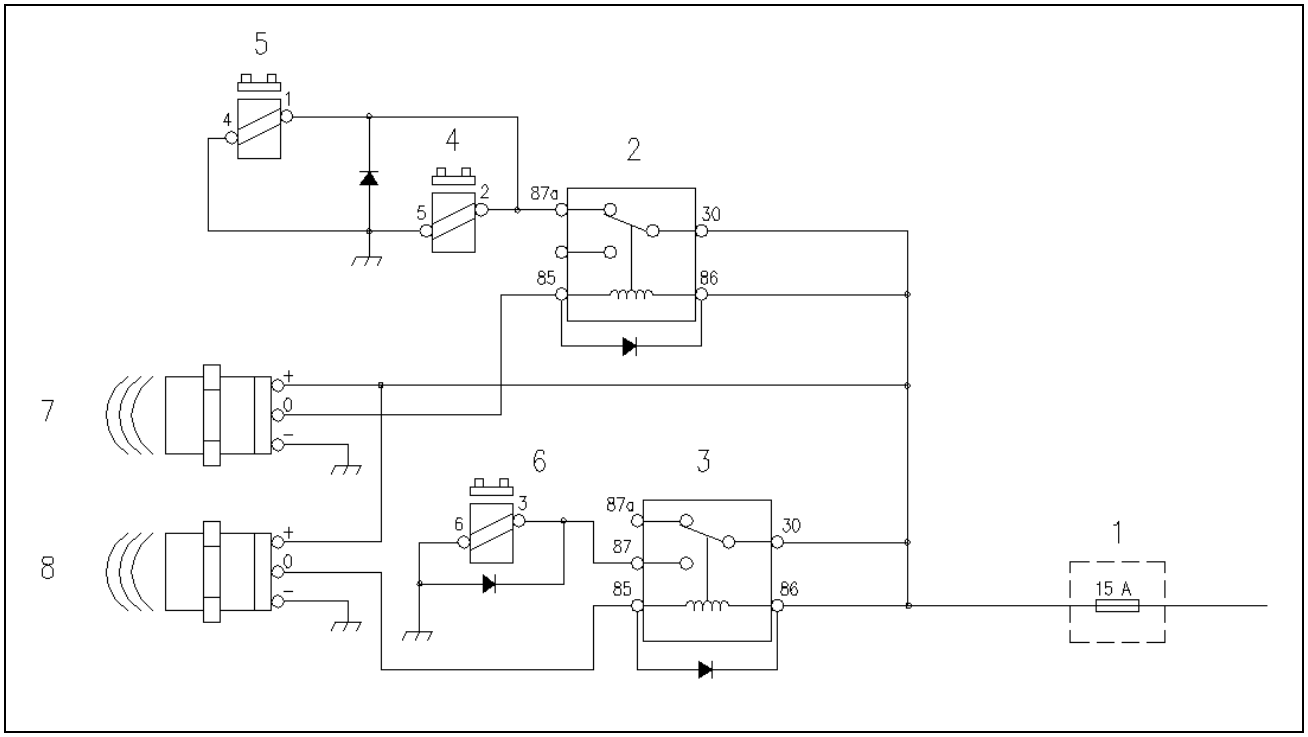

Figure 11. Electric detent system circuit

Reference Number	Description	Reference Number	Description
1	Fuse Box	5	Float Magnet
2	Raise Relay	6	Return to Dig Magnet
3	Return to Dig Relay	7	Proximity Switch 1
4	Raise Magnet	8	Proximity Switch 2

Swing arm lifting limitation system

1. Swing arm lifting limitation

When swing arm operation handle is pulled to the rear limitation position, swing arm operation handle will be gripped by swing arm lifting electromagnet (4) (swing arm operation handle will not return to meso position after loosening hands), swing arm will keep lifting; when swing arm reaches the limitation, proximity switch (7) works, its terminal “0” and “-” are connected, coil of lifting relay (2) is power on and works, its terminal “30” and “87a” disconnect. Lifting limitation electromagnet (4) and float electromagnet (5) are power off and lose suction ability, swing arm operation handle will return meso position automatically with the effect of resetting spring, lifting hydraulic circuit of cylinder is cut off, and swing arm does not lift again.

2. Swing arm floating device

When swing arm operation handle is pushed to the limitation, swing arm operation handle will be gripped by swing arm floating electromagnet (5) (swing arm operation handle will not return to meso position after loosening hands), at this moment, swing arm is at floating state, the swing arm operation handle will return meso position when releasing swing arm floating state. When swing arm descends, it can be pushed to flating position, swing arm will descend with effect of dead weight. At this moment, the driver can operate other items (such as flat bucket) with the right hand, thus working efficiency is improved. Push swing arm operation handle to floating position during slicking, bucket will rise along with rising of ground, and will not damage the road.

Automatic bucket laid flat system

When bucket is at material discharging state, pull bucket operation handle to rear limitation, since proximity switch (8) is at suction state, its terminal “0” and “-” are connected, automatic laid flat relay (3) coil is power on and pulls in, bucket operation handle is gripped by bucket collecting holding electromagnet (6) and keep at the rear limitation position (bucket operation handle will not return to meso position after loosening hand), bucket will keep rotating backward until reaching limitation, proximity switch (8) acts, its terminal “0” and “-” are disconnected, automatic laid flat replay (3) is power off and disconnect, bucket collecting holding electromagnet loses power and gripping ability, bucket operation handle returns to meso position with effect of resetting spring, bucket stops rotating, swing arm descends, when bucket reaches to the ground, bucket bottom is flat with the ground.

Proximity switch

Operating distance：10mm ± 1mm；

Operation indication light： Indication light is on when proximity switch is acting.

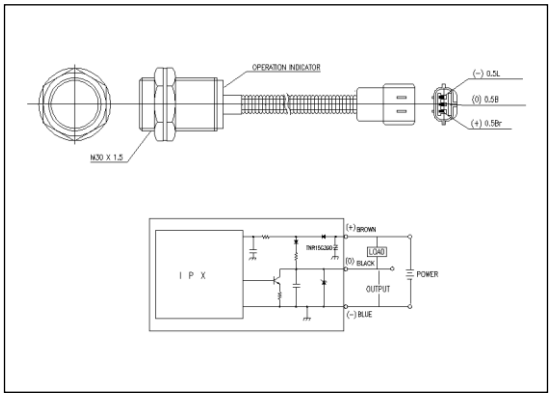

Figure 12. proximity switch

Electronic speed control system

According to the input signal through the transmission control valve Y1 ~ Y5 action combination, decided to gear state;

	●Magnet under Voltage										
	Forward				Reverse			Neutral			
Speed	**1**	**2**	**3**	**4**	**1**	**2**	**3**	**1**	**2**	**3**	**4**
M1					●	●	●				
M2	●				●			●			
M3	●	●	●								
M4	●	●			●	●		●	●		
M5				●							
Clutch	**KV**	**KV**	**KV**	**K4**	**KR**	**KR**	**KR**	**K3**			
Clutch	**K1**	**K2**	**K3**	**K3**	**K1**	**K2**	**K3**				

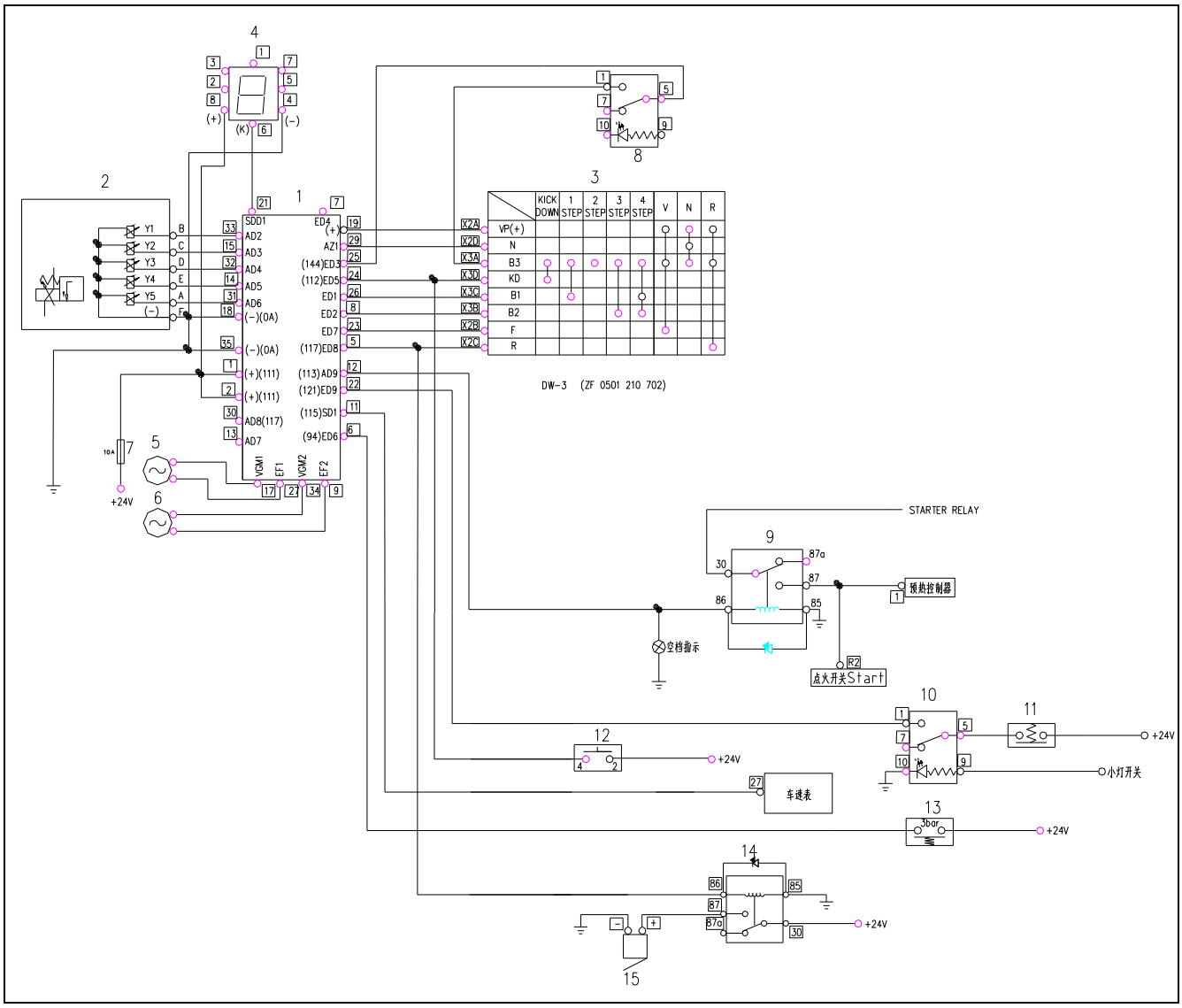

Figure 11. Variable speed control system

Reference Number	Description	Reference Number	Description
1	CONTROLLER	8	AUTO/MANU SW
2	VALVE ASS'Y	9	SAFETY START RELAY
3	T/M SELECTOR SWITCH	10	T/M CUT OFF SW
4	DIAGNOSE	11	BRAKE AIR PRESS SW
5	SENSOR	12	DOWN SHIFT SW (KD)
6	SENSOR	13	PARK PRESS SW
7	FUSE	14	BACK BUZZER RELAY

https://truckmanualshub.com/

SPC000027

Electrical SCHEMATIC (SD310)

⚠ CAUTION!
Follow all safety recommendations and safe shop practices outlined in the front of this manual or those contained within this section. **Always use tools and equipment that is in good working order.** **Use lifting and hoisting equipment capable of safely handling load.** **Remember, that ultimately safety is your own personal responsibility.**

Copyright 2012 DISD

July 2012

https://truckmanualshub.com/

TABLE OF CONTENTS

General Description.....3
SD310.....4

General Description

Schematic diagram shown in this section is shown in folio page.

The overlapped edge has been considered for convenient copy, a complete schematic diagram can be formed when they are put together.

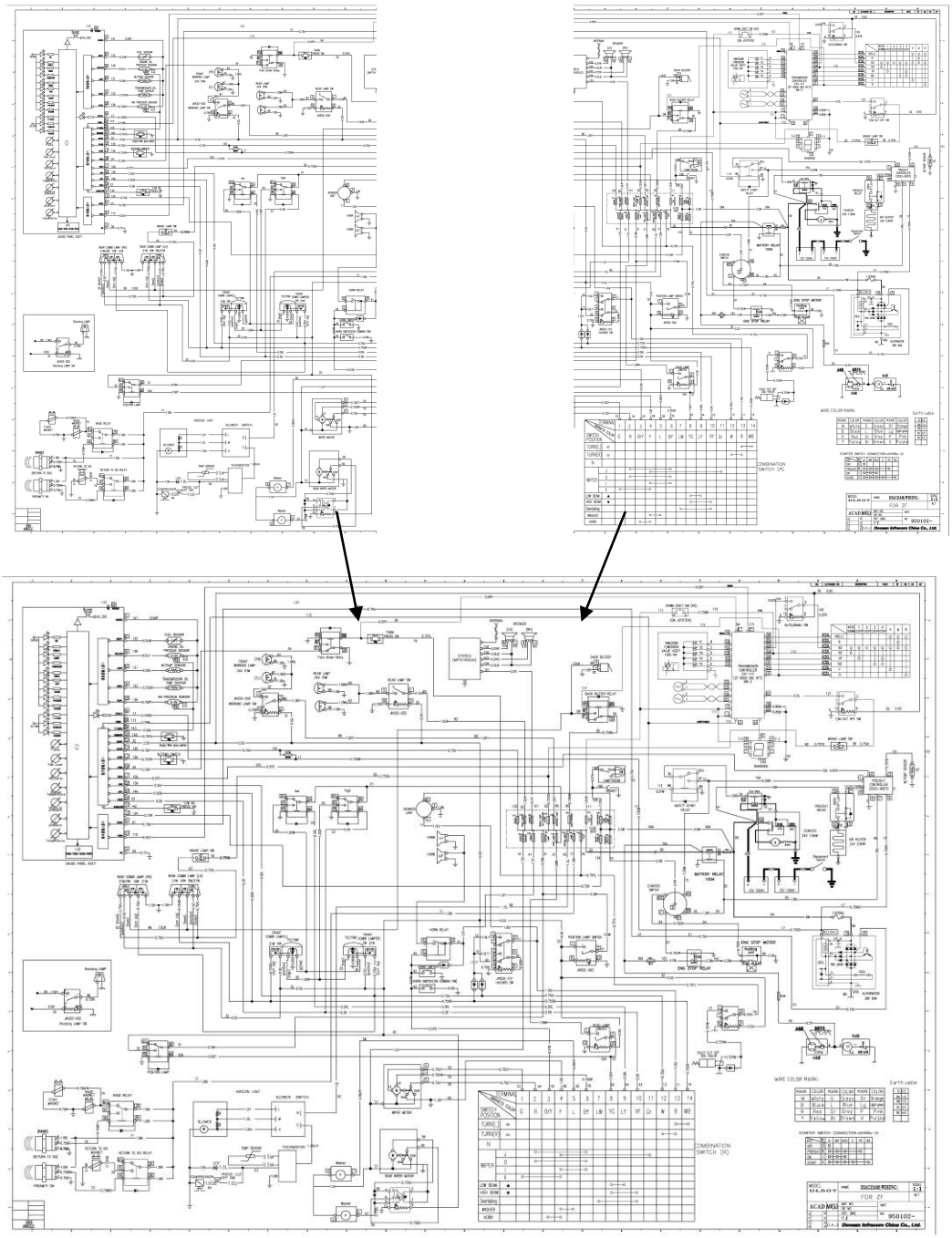

Figure 1

SD310（ZF）

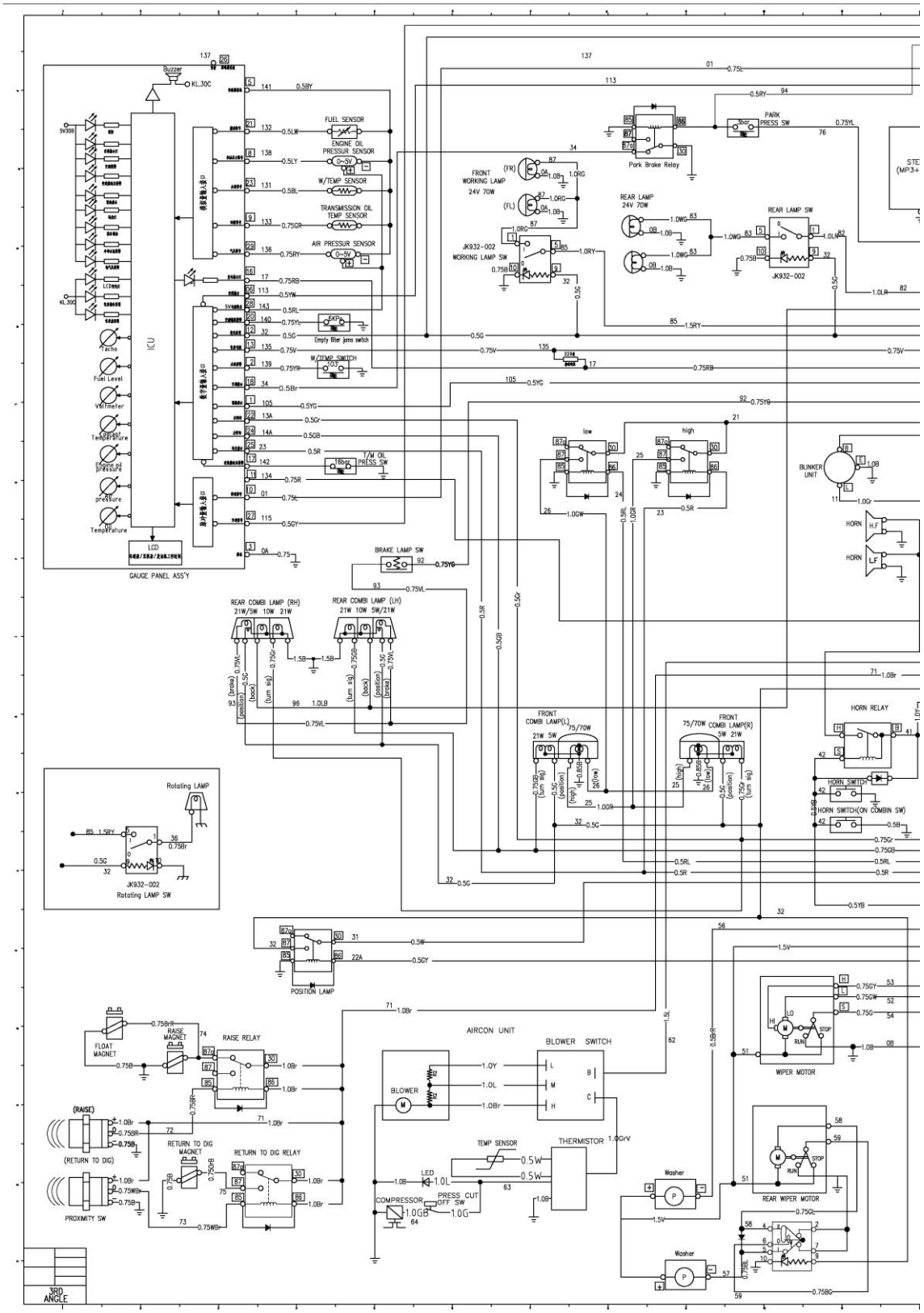
GAUGE PANEL ASS'Y
ICU
LCD
Buzzer
KL.30C
KL.30
FUEL SENSOR
ENGINE OIL PRESSUR SENSOR
W/TEMP SENSOR
TRANSMISSION OIL TEMP SENSOR
AIR PRESSUR SENSOR
Empty filter jams switch
W/TEMP SWITCH
T/M OIL PRESS SW
BRAKE LAMP SW
PARK PRESS SW
Park Brake Relay
FRONT WORKING LAMP 24V 70W
JK932-002 WORKING LAMP SW
REAR LAMP 24V 70W
REAR LAMP SW
JK932-002
BLINKER UNIT
HORN
HORN RELAY
HORN SWITCH
HORN SWITCH(ON COMBIN SW)
REAR COMBI LAMP (RH) 21W/5W 10W 21W
REAR COMBI LAMP (LH) 21W 10W 5W/21W
FRONT COMBI LAMP(L) 21W 5W 75/70W
FRONT COMBI LAMP(R) 75/70W 5W 21W
Rotating LAMP
JK932-002 Rotating LAMP SW
POSITION LAMP
FLOAT MAGNET
RAISE MAGNET
RAISE RELAY
(RAISE)
(RETURN TO DIG)
PROXIMITY SW
RETURN TO DIG MAGNET
RETURN TO DIG RELAY
AIRCON UNIT
BLOWER
BLOWER SWITCH
TEMP SENSOR
THERMISTOR
LED
COMPRESSOR
PRESS CUT OFF SW
WIPER MOTOR
REAR WIPER MOTOR
Washer
3RD ANGLE

https://truckmanualshub.com/

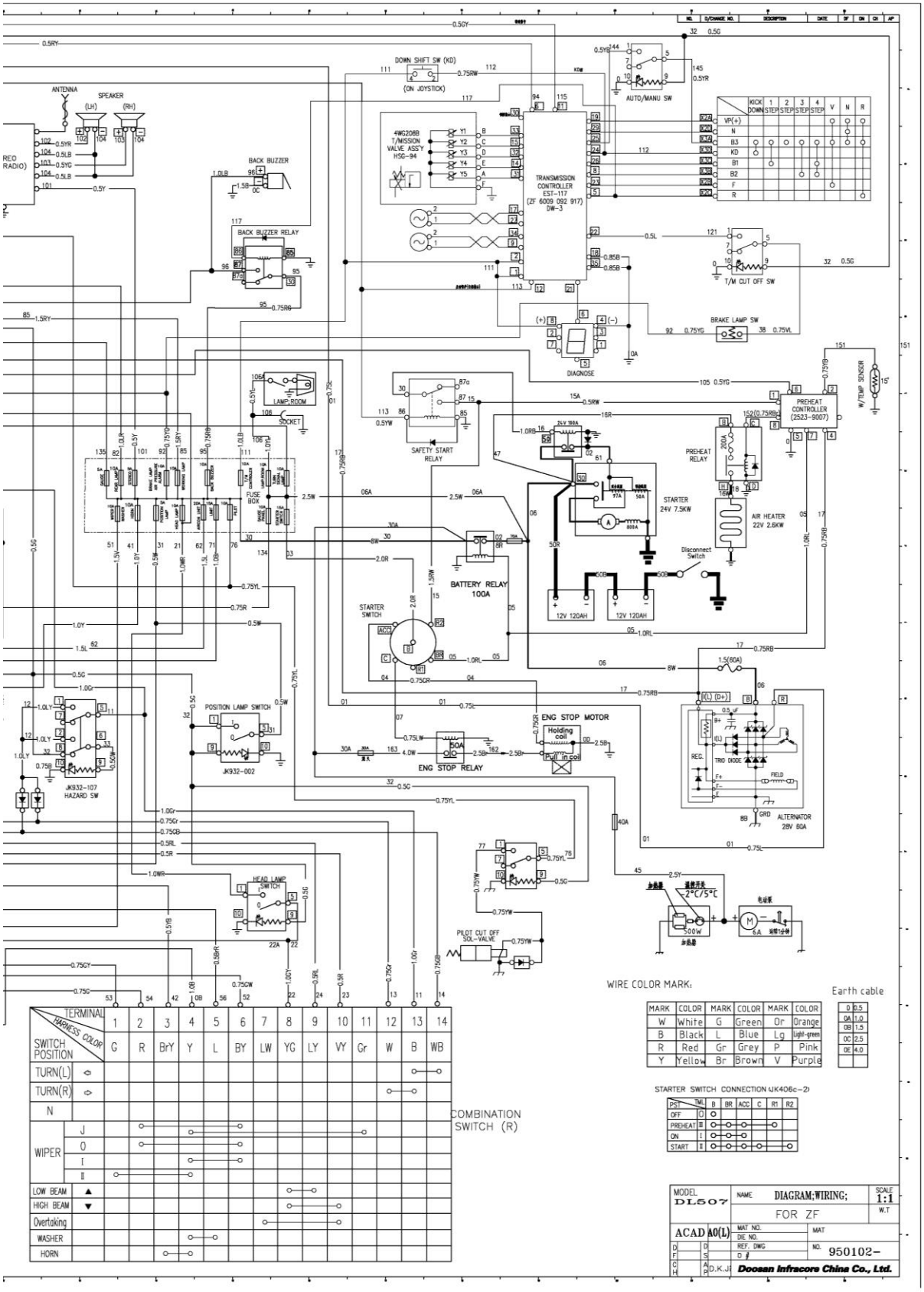

MARK	COLOR	MARK	COLOR	MARK	COLOR
W	White	G	Green	Or	Orange
B	Black	L	Blue	Lg	Light-green
R	Red	Gr	Grey	P	Pink
Y	Yellow	Br	Brown	V	Purple

0	0.5
0A	1.0
0B	1.5
0C	2.5
0E	4.0

TERMINAL / HARNESS COLOR / SWITCH POSITION		1	2	3	4	5	6	7	8	9	10	11	12	13	14
		G	R	BrY	Y	L	BY	LW	YG	LY	VY	Gr	W	B	WB
TURN(L)															
TURN(R)															
N															
WIPER	J														
	O														
	I														
	II														
LOW BEAM	▲														
HIGH BEAM	▼														
Overtaking															
WASHER															
HORN															

https://truckmanualshub.com/

https://truckmanualshub.com/

ATTACHMENTS

https://truckmanualshub.com/