https://truckmanualshub.com/

Kioti CK35 Series Cab

** CK35 model Shown with optional equipment

Kioti CK35 Series Cab

This ROPS cab is designed and built to fit the Kioti C27 and CK35.

Designed and Built by:

Tektite Manufacturing Inc:
24157 Hwy 3
P.O. Box 639
Winkler, MB
R6W 4A8
Canada
PH: 204-331-3463
Fax: 204-331-4159
sales@tektite.ca

One year standard product warranty provided by Tektite.

Caution

** Please read installation instructions and follow all safety statements before attempting operating this ROPS product.

** A copy of this operator manual should be kept with the machine operating manuals.

Downloaded from www.Manualslib.com manuals search engine

https://truckmanualshub.com/

Tektite Manufacturing Incorporated thanks you for purchasing a Kioti CK35 series ROPS cab! Tektite has worked very hard to design and build this ROPS product and we hope that it provides you with many years of ROPS protection.

Tektite's ROPS products are designed to provide safe and dependable service during operation when they are properly maintained according to the instructions. Please read this operator manual carefully before using this ROPS product.

The photos/illustrations provided in this manual may not provide all the detail needed, and are for reference only.

All directions provided are from the reference point of the tractor seat facing the steering wheel. All left and right references are from this view point.

For reference, please fill in the information below. This will assist your dealer in providing service for this ROPS. It is advisable that this information be provided to your insurance company as well in the event that the tractor is lost or damaged.

Vehicle Model: _____

ROPS Serial Number: _____

Date of Purchase: _____

Dealer Name: _____

Downloaded from www.Manualslib.com manuals search engine

https://truckmanualshub.com/

Limited Warranty

Tektite Manufacturing Inc. (Tektite) warrants to the original purchaser (the "Claimant"), that Tektite products will be free from defective materials or workmanship, under normal use and service, for a period of (1) full year (or 1500 hours, whichever is less) from the original invoice date. Tektite's liability under this Limited Warranty is limited to the repair or (at the discretion of Tektite) the replacement of those components of its products, which were manufactured by Tektite that are defective in materials or workmanship. Tektite shall have no liability under this Limited Warranty unless Tektite is notified of the defect during the stated Warranty Period.

All returns require a Returned Material Authorization Number (RMA#). Warranty claims must be submitted to Tektite at 1-204-331-3463 prior to written authorization. All warranty work not pre-authorized by Tektite will not be covered by this warranty agreement. Claimant must arrange shipping of the returned and repaired or replaced product or component from Tektite plant in Winkler, Manitoba at the Claimant's own risk and expense. Tektite must receive all returns within (30) days of issuance of a RMA#. Limitations and Exclusions: Tektite has no responsibility to a Claimant under this Limited Warranty or on any other basis for any of the following:

a) defects caused, in whole or in part, by accident or misuse, negligence or failure to maintain the product or component ;
b) products or components sold to a customer on an "as is" basis;
c) wiper blades, light bulbs, fuses, clear vinyl or other consumables;
d) glass where the point of failure has not been preserved intact and delivered to Tektite for analysis of the cause of the failure;
e) products or components which have been modified after shipping from Tektite to its customer;
f) transportation charges for returned, repaired or replacement items;
g) defects that are subject of an Tektite initiated recall where the Claimant fails to comply with the terms of the recall notice that comes to the attention of the Claimant;
h) components of Tektite products that are manufactured by third parties (Tektite's only obligation in relation to such components shall be to accord to the Claimant the benefit of any transferable warranty accorded to Tektite by third party manufacturer);
i) defects in workmanship or materials in products or components that are repaired or replaced by Tektite unless Tektite is notified of the new defect within the Warranty Period that applied to the original product or component that has been repaired or replaced;
j) defects that result, in whole or in part, from inadequate engineering or specifications provided to Tektite by its customer;
k) any actual or alleged deficiency in technical or engineering services or advice provided by Tektite to its customer whether provided for valuable consideration or otherwise;
l) consequential damages, or any other damages whether foreseeable or not, resulting from the defect or any delay in remedying the defect; and
m) any breach or alleged breach of any implied warranty of merchantability or fitness for particular purpose of use;
n) defects or part failure due to misuse or failure to follow recommended cab installation procedures;
o) travel expenses, including mileage.

This Limited Warranty expresses the entire obligation of Tektite, its officers, directors, agents and employees, to its customer or any Claimant in respect of any defect in workmanship, or materials of any product or component sold or manufactured by Tektite whether on grounds of breach of contract, negligence or other tortuous liability, breach of express or implied warranty or other basis in law of any jurisdiction.

Acceptance by a customer of delivery of products of Tektite constitutes acceptance of this Limited Warranty in lieu of all other warranties express or implied including without limitation all implied warranties of merchantability or fitness for particular purpose or use and constitutes acceptance by customer of the exclusions and limitations of the liability of Tektite set out above.

*Labor rate fixed at a maximum of $75.00 per hour (U.S.) and $75.00 per hour (CDN) based on Tektite determination of applicable hours.

Downloaded from www.Manualslib.com manuals search engine

https://truckmanualshub.com/

Safety Precautions

Safety First

Read these instructions carefully. It is essential that you read the instructions and safety regulations before you attempt to assemble or use the features that are on this cab/ROPS.

Danger: Indicates an immediate hazardous situation which, if not avoided, will result in death or serious injury.

Warning: Indicates a potentially hazardous situation which, if not avoided, may result in death or serious injury.

Caution: Indicates a potentially hazardous situation which, if not avoided, may result in minor or moderate injury.

Important: Indicates that cab or property damage may result if instructions are not carefully followed.

NOTE: All products are designed to give safe, dependable service if they are operated and maintained according to instructions. It is the owner's responsibility to be certain anyone operating this product reads this manual, and all other applicable manuals, to become familiar with this cab and all safety precautions. Failure to do so could result in serious personal injury or cab damage. If you have any questions, consult your dealer. Read and understand this manual before operation.

NOTE: A safe operator is the best assurance against accidents. All operators, no matter how experienced they may be, should read this operator manual and all other related manuals before attempting to operate features in this cab/ROPS and operate the base tractor. Please read the following section and pay particular attention to all safety recommendations contained in this manual and those labelled on the cab and on the tractor.

Downloaded from www.Manualslib.com manuals search engine

https://truckmanualshub.com/

General Safety

1. Never let an unqualified or untrained driver operate the mower.
2. Keep a fire extinguisher, with ABC rating securely fastened in the ROPS. Maintain it and be familiar with its use.
3. Do not carry passengers.
4. Never operate the mower in a closed building for a prolonged period. Ensure adequate ventilation is present, as engine exhaust fumes are poisonous and can kill.
5. Always keep sleeves, jackets or other loose clothing relatively tight and belted. Loose clothing may catch on moving parts and result in severe personal injury or death.
6. Provide a first-aid kit, securely attached inside of the ROPS for use in case of accident.
7. Never jump from the mower. There is a danger of tripping or falling on protruding parts.
8. Use steps and hand holds when mounting and dismounting the mower, or for servicing components too high to reach from the ground.
9. When seated in the ROPS, fasten seat belt before starting the engine. A proper seat belt must be worn at all times when using a ROPS.
10. Safety devices and shields are intended to protect operators from injury or death. Under no circumstances should they be modified, disabled or removed.

Operating Safety

1. Always operate the mower controls while sitting in the operator's seat.
2. Lock seat in position and buckle seat belt before operating the mower.
3. Avoid abrupt sharp turns at high speeds.
4. On sloped terrain, do not make sharp turns as machine stability could be compromised.
5. Operate the mower smoothly, avoid abrupt starts and stops.
6. Keep all shields in place when operating the mower.
7. Do not operate the mower when you are tired, sick, or impaired.
8. Never operate the mower in confined areas; visibility next to the tractor is reduced. Injury to bystanders or damage to the ROPS or equipment may result.

Safety

Carefully review the procedures given in this manual and the mower operator's manual with all operators annually. It is important that all operators become familiar with, and follow safety precautions. Operating instructions must be given to everyone using the tractor before operation and at least once yearly thereafter in compliance with OSHA Regulations 1928.57 (United States).

Downloaded from www.Manualslib.com manuals search engine

https://truckmanualshub.com/

Safe Operation on Rough Terrain

1. Drive the mower slowly on hillsides and curves to eliminate the danger of tipping. Avoid slopes which are too steep for safe operation. Avoid sharp uphill turns.
2. Always drive slowly enough over rough ground or obstructions. Drive at speeds slows enough to ensure your safety.
3. When driving out of a ditch, gully, or up a steep hillside, engage the clutch slowly. Avoid sharp uphill turns.
4. When descending steep grades, select a sufficiently low gear to maintain control with minimum use of braking.
5. Use caution when driving near the edge of a ditch or gully. It may cave in, causing the mower to roll over.
6. Be alert when operating near trees, slopes and around obstructions. Tree branches can cause damage to ROPS components.

Maintenance Safety

1. Remove mud, crop residue, chains, and tools from steps and operator's platform. They may interfere with pedal operation or entry/exit from mower.
2. When servicing components are too high to reach from the ground use steps and handholds. Do not use fenders or shields that are not designed as steps.

Safe Highway Operation

1. Before operating the mower on, or near, public roadways check with your local authorities for any local regulations that will affect you.
2. Equip towed implements with slow moving vehicle (SMV) signs when traveling on public roads.
3. Install additional lights on implement rear to safeguard against rear end collisions.
4. Use hazard warning flashers as required by law when transporting or driving on public roads. If the mower had warning flashers removed when mounting the ROPS, they must be replaced prior to operation on public roads.
5. Keep to the right, yielding right-of-way traffic, especially if pulling implements. Pull off the road and stop to allow motorists to pass. Drive on the road shoulder, if permitted by law.
6. Use extreme caution when pulling heavy loads at road speeds. Avoid hard application of the mower brakes at high speed.
7. Always drive slowly near curbs, approaches or ditches.
8. If equipped, ensure headlights are aligned so they will not blind the operator's of oncoming vehicles. If the mower is not equipped with turn signals and law requires them, install them prior to operating on or near public roads.

Downloaded from www.Manualslib.com manuals search engine

https://truckmanualshub.com/

9. Use your turn signals, checking for traffic well in advance of turning**.** If the mower is not equipped with turn signals and law requires them, install them prior to operating on or near public roads.

Safety Decals

1. Keep decals clean. Remove dirt with a wet clean cloth when necessary.
2. Replace safety decals if destroyed, missing, painted over or unreadable. If any safety decals are covered or obscured when the ROPS is mounted, it is recommended that you purchase replacement decals from the mower manufacturer. Mount them in a readable location at, or near, their original location before operating the mower.
3. New ROPS decals and mower decals are available from your mower dealer.

ROPS Safety

1. Install the ROPS in accordance with Tektite mounting instructions. Failure to do so may affect the ROPS ability to withstand a roll over.
2. If the ROPS is subjected to alteration, structural damage or involved in an over turn accident, the entire structure must be replaced. Failure to do so may result in injury or death in the event of a roll over.
3. If the mower in not equipped with seat belts, purchase approved seat belts from the mower manufacturer or Tektite prior to operating the mower.
4. Always fasten seat belts prior to operating the mower.
5. Always operate the mower from the operator's seat.
6. Remove mud, crop residue, chains and tools from steps and operator's platform. They may interfere with pedal operation or entry/exit from the mower.
7. Remove all loose chains, tools, and equipment from the operator's platform. Failure to do so may cause injury or death in the event of a roll over.
8. Do not install the ROPS on a mower model that the ROPS is not designated for (compatible mower designations are printed on the ROPS serial number plate). The ROPS is designed specifically for individual models to ensure ROPS requirements will be met. Installing the ROPS on a non designated mower may result in injury or death.

Emergency Exits

This ROPS cab has 2 exits, which may be used in an emergency: left and right side doors.

Downloaded from www.Manualslib.com manuals search engine

https://truckmanualshub.com/

Operating Instructions

Important

The following section locates, identifies and briefly describes the functions of all cab controls. All operators should familiarize themselves with control location and function prior to operating the mower. Failure to do so may result in unsafe operation of the mower and possible injury or death to operators and bystanders.

There are two switch plates located in the headliner. The following switches are available and their functionality is described.

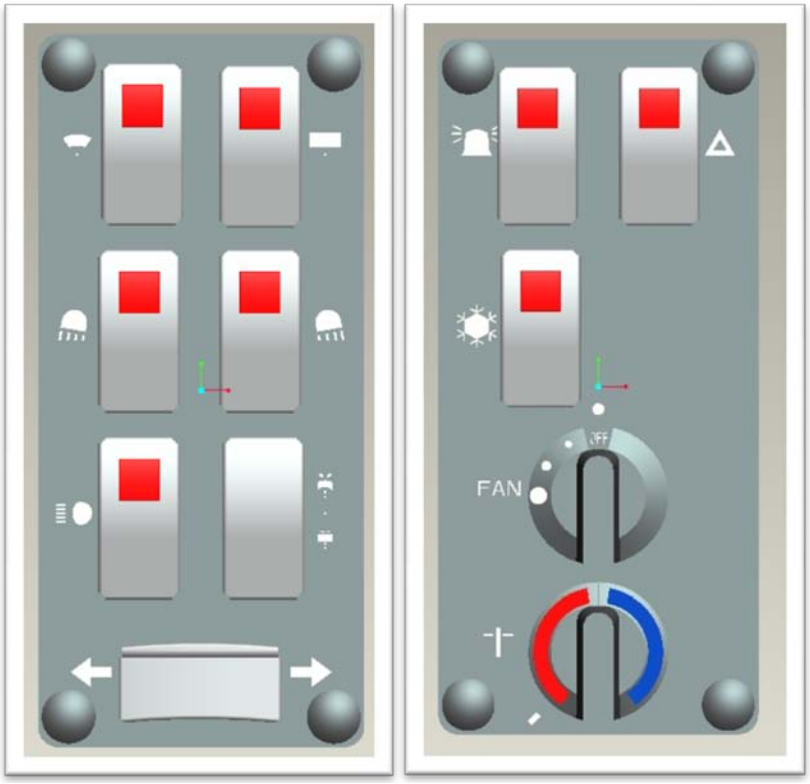

Left Switch Plate

1. **Front Wiper Rocker Switch (standard)**
Low position: Off
High position: On
Note: indicator light activates when wiper is on.

2. **Rear Wiper Rocker Switch (optional)**
Low position: Off

Downloaded from www.Manualslib.com manuals search engine

https://truckmanualshub.com/

High position: On
Note: indicator light activates when wiper is on.

3. **Front Work Light Rocker Switch (optional)**
Low position: Off
High position: On
Note: indicator light activates when work lights are on.

4. **Rear Work Light Rocker Switch (optional)**
Low position: Off
High position: On
Note: indicator light activates when work light is on.

5. **Head Lights Rocker Switch (optional)**
Low position: Off
High position: On
Note: indicator light activates when head lights are on.

6. **Front and Rear Washer Rocker Switch (optional)**
Low position: Momentary – On Rear Washer
Middle position: Off
High position: Momentary – On Front Washer

7. **Turn Signal Rocker Switch (optional)**
Left position: On
Middle position: Off
Right position: On

Right Switch Plate

1. **Beacon Rocker Switch (standard)**
Low position: Off
High position: On
Note: indicator light activates when beacon is on.

2. **Hazard Rocker Switch (optional)**
Low position: Off
High position: On
Note: indicator light activates when 4-way flashers are on.

3. **Air Conditioner Rocker Switch (optional)**
Low position: Off
High position: On
Note: indicator light activates when air conditioner is on.

Downloaded from www.Manualslib.com manuals search engine

https://truckmanualshub.com/

4. **Fan Rotary Switch (optional)**
Indicator mark above switch indicates whether fan is operational or not.

5. **Temperature Control Rotary Switch (optional)**
Indicator mark at lower left corner indicates current temperature setting. Rotate to increase heat output or to decrease heat output of heating system. When air conditioner is being used, it is recommended that the switch be at maximum cooling position.

Cab Circuit Protection

The Tektite ROPS cab is wired to provide maximum protection against accidental battery rundown and circuit overload. A relay in the cab is ignition activated and prevents the operator from accidentally leaving fan motors, lights on after turning the tractor off and leaving for the day. A circuit breaker is provided to prevent the cab electrical components from drawing more power than they should be able to from a dead short. The cab electrical components are also fused individually, and the fuse block is located in the headliner, directly above the door opening on the left side. Locate the 3” snap cap, and with a small flat screw driver you can remove the cap to examine the fuses provided. A decal on the fuse block indicates which fuse is for which electrical option.

Downloaded from www.Manualslib.com manuals search engine

https://truckmanualshub.com/

After your ROPS Cab has been installed:

Before starting a mower equipped with a Tektite ROPS cab:

1. Clear the operator platform of all tools. Tools left in or around the ROPS and mower can cause operator interference which could lead to bodily injury and/or damage the machine.
2. Inspect the ROPS and mower to ensure all bolts are tight and re-tighten if required.
3. Ensure that all pedals, levers, and controls have adequate clearance for normal operation.
4. Ensure that all electrical components of both the ROPS and mower operate normally.
5. Ensure your door latches properly onto the striker pin. Immediately after installation, the ROPS frame may flex slightly from installation, and the door latch will need to be re-aligned for proper operation. Loosen the striker pin, striker mounting plate and door latch as necessary to get a proper alignment of the door striker.

Service Parts Breakdowns:

Following are parts breakdowns for components that may require service parts replacement during the life of the ROPS. If you require replacement parts, please contact the dealer that you purchased the ROPS from and indicate which parts you require.

Downloaded from www.Manualslib.com manuals search engine

https://truckmanualshub.com/

Index	Service Part #	File Name	Description	Qty
1	A00-0013	TEKT-0009	5MM Bushing	12
2	A00-0014	THICK-BUSHING	8MM Bushing	6
3	A00-0020	STEP-BOLT1-4X1-1-4	Step Bolt, 1/4" x 1 1/4", MB	6
4	A00-0021	FLANGE-NUT-1-4	Flange Nut, 1/4", YD	6
5	B01-0003	CCT225-022	Front Window Glass	1
6	B01-0011	CCT225-058	Windshield Weatherstripping	1

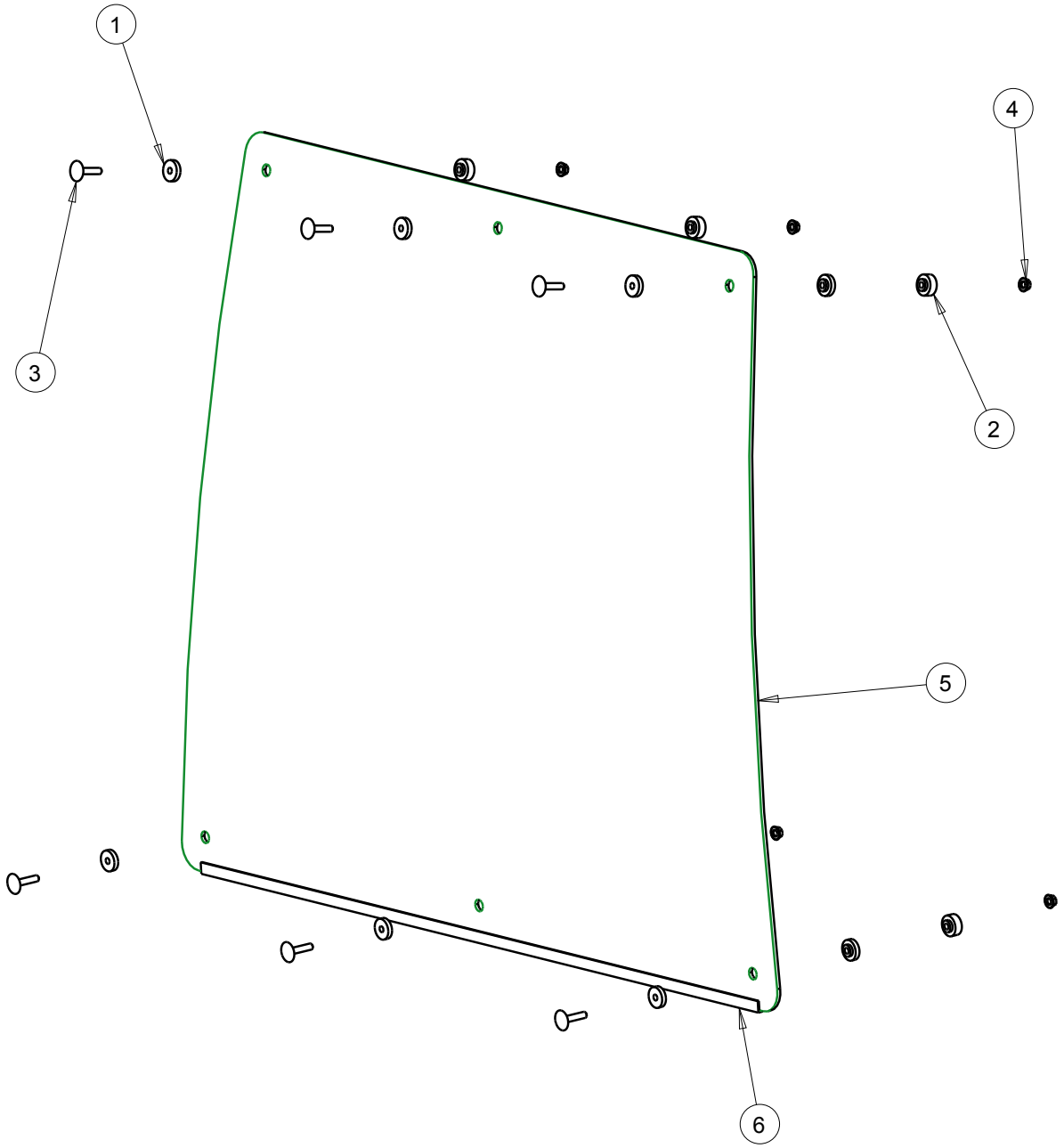

SCALE 0.220

Notice of Confidentiality

This material is property of Tektite Manufacturing Inc and is not to be used by the recipient for any purpose other than the purpose for which it was transmitted. The material remains the property of Tektite and shall be returned upon request. The material may not be reproduced or disclosed to third parties without the written consent of Tektite.

Tolerances:
Unless otherwise specified
X.X = ± 1/16"
Angular = ± 1.0 °

Tektite Manufacturing Inc.
24157 Hwy 3, Box 639, Winkler MB, R6W 4A8, Canada

Req'd:	CNC:	Description: Windshield Assembly Breakdown	
Drawn By: *Daryl Furkalo*	Date: 2010-06-18	Units: Imp.	File Name: CCT225-ASM-014
Checked By:	Date:	Size: B	

Downloaded from www.Manualslib.com manuals search engine

Index	Service Part #	File Name	Description	Qty
1	A00-0013	TEKT-0009	5MM Bushing	14
2	A00-0014	THICK-BUSHING	8MM Bushing	6
3	A00-0019	STEP-BOLT1-4X1	Step Bolt, 1/4" x 1", MB	1
4	A00-0020	STEP-BOLT1-4X1-1-4	Step Bolt, 1/4" x 1 1/4", MB	6
5	A00-0021	FLANGE-NUT-1-4	Flange Nut, 1/4", YD	7
6	A00-0033	315-080	Rear Wiper Shaft Grommet	1
7	A00-0043	WWF-MOTOR	WWF Wiper Motor, 1" Shaft	1
8	B01-0002	CCT225-021	Rear Window Glass	1
9	B01-0010	CCT225-057	Rear Window Weatherstripping	1

https://truckmanualshub.com/

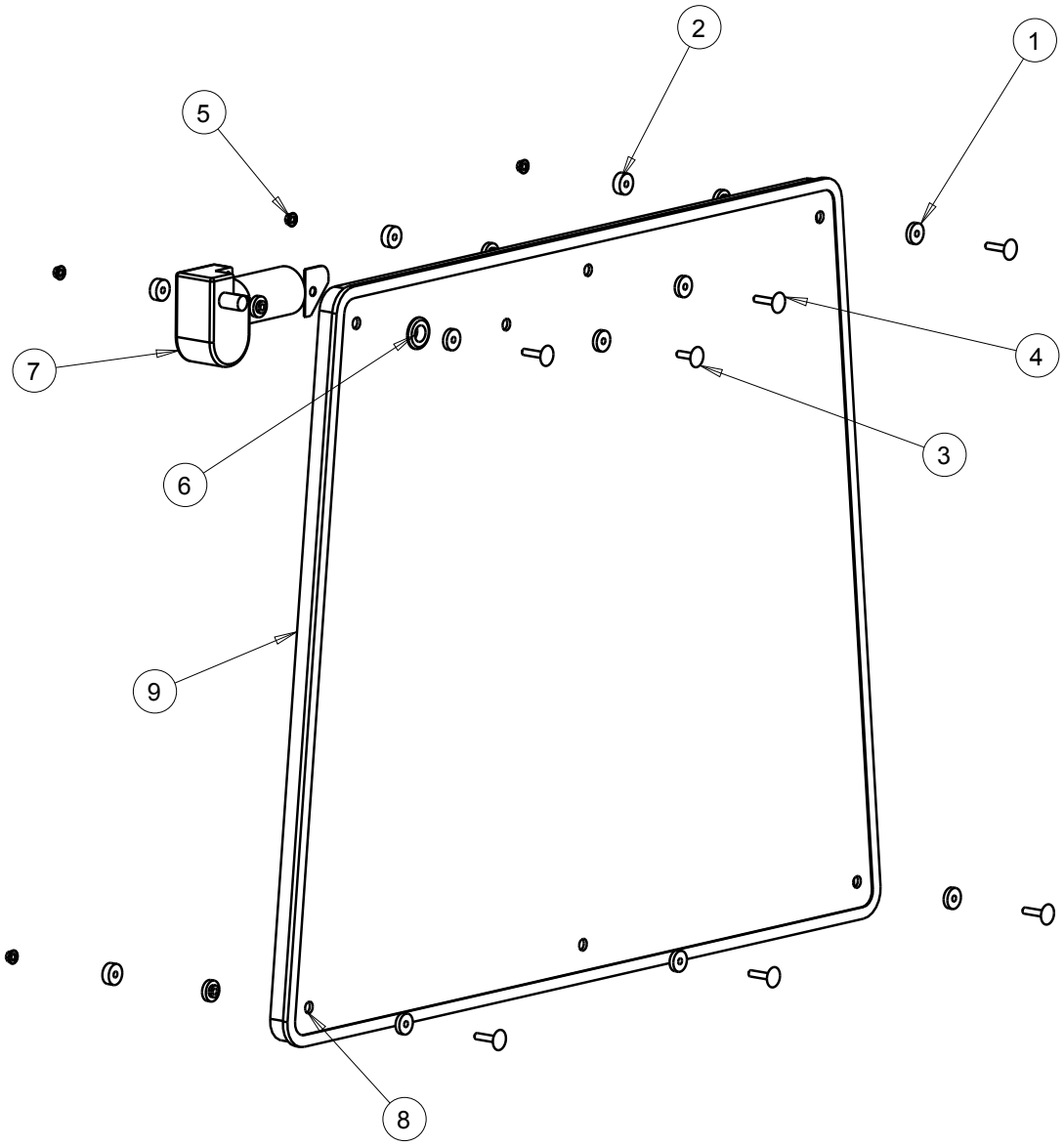

SCALE 0.200

Notice of Confidentiality

This material is property of Tektite Manufacturing Inc and is not to be used by the recipient for any purpose other than the purpose for which it was transmitted. The material remains the property of Tektite and shall be returned upon request. The material may not be reproduced or disclosed to third parties without the written consent of Tektite.

Tolerances:
Unless otherwise specified
X.X = ± 1/16"
Angular = ± 1.0 °

Tektite Manufacturing Inc.
24157 Hwy 3, Box 639, Winkler MB, R6W 4A8, Canada

Req'd:	CNC:	Description: Rear Window Assembly	
Drawn By: *Daryl Furkalo*	Date: 2010-06-17	Units: Imp.	File Name: CCT225-ASM-013_OP
Checked By:	Date:	Size: B	

Downloaded from www.Manualslib.com manuals search engine

https://truckmanualshub.com/

Index	Service Part #	File Name	Description	Qty
1	A00-0013	TEKT-0009	5MM Bushing	8
2	A00-0019	STEP-BOLT1-4X1	Step Bolt, 1/4" x 1", MB	4
3	A00-0021	FLANGE-NUT-1-4	Flange Nut, 1/4", YD	4
4	A00-0045	TEKT-0004	Side Window Slider Bracket	1
5	A00-0046	TEKT-ASM-002R	Side Window Hinge Right	2
6	A00-0056	TEKT-0020	Side Window Latch, L60775	1
7	A00-0058	CARRIAGE_BOLT-5-16X1	Bolt, Carriage, 5/16"x 1", YD	1
8	A00-0164	LOCK-NUT-5-16	Nylon Lock Nut, 5/16", YD	1
9	B01-0004	CCT225-023	Side Window Glass	1
10	B01-0009	CCT225-056R	Side Window Weather Seal	1

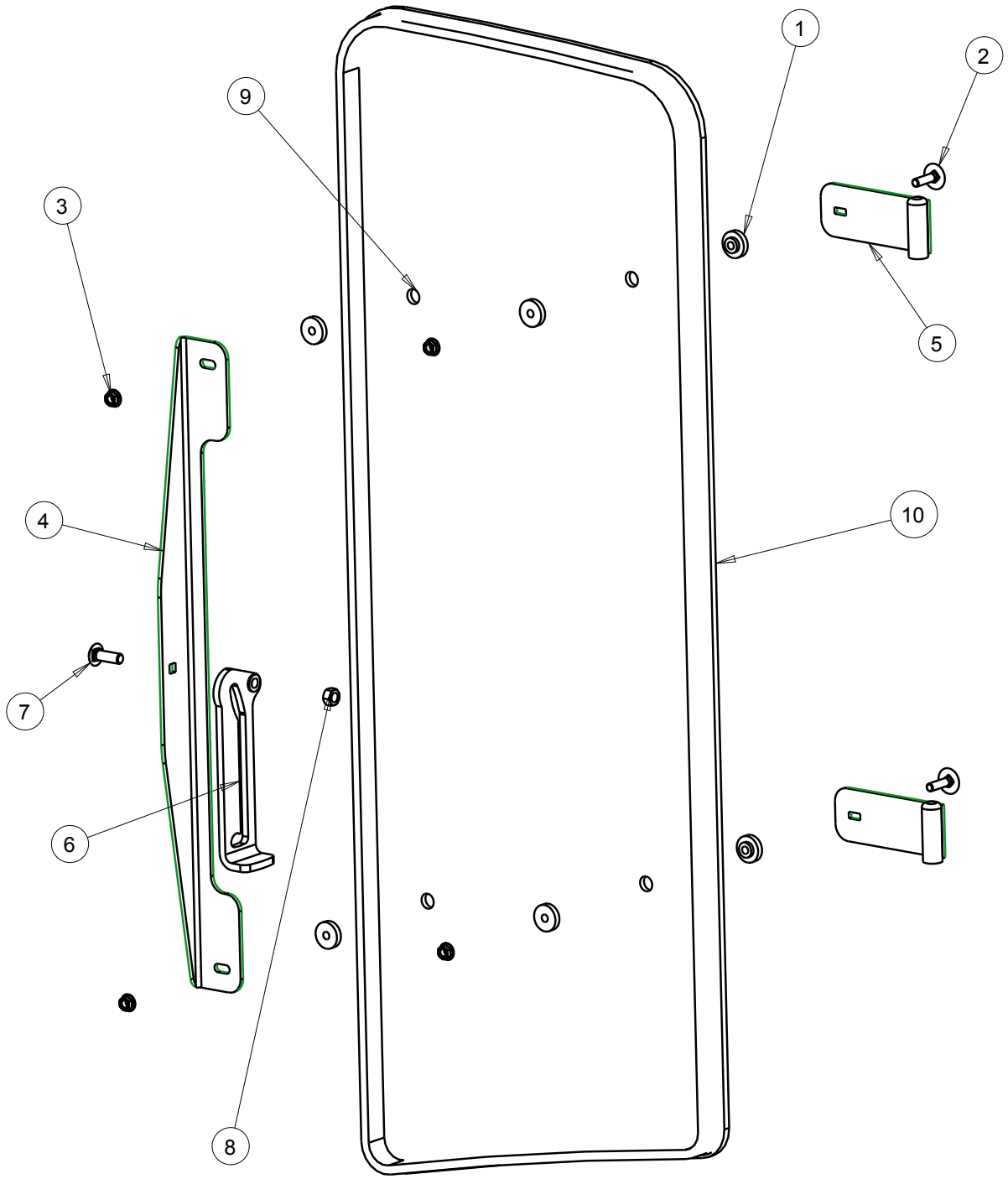

SCALE 0.300

Notice of Confidentiality

This material is property of Tektite Manufacturing Inc and is not to be used by the recipient for any purpose other than the purpose for which it was transmitted. The material remains the property of Tektite and shall be returned upon request. The material may not be reproduced or disclosed to third parties without the written consent of Tektite.

Tolerances:
Unless otherwise specified
X.X = ± 1/16"
Angular = ± 1.0 °

Tektite Manufacturing Inc.
24157 Hwy 3, Box 639, Winkler MB, R6W 4A8, Canada

Req'd:	CNC:	Description: Right Side Window Assembly	
Drawn By: *Daryl Furkalo*	Date: 2012-03-22	Units: Imp.	File Name: CCT225-ASM-012_OP
Checked By:	Date:	Size: B	

Downloaded from www.Manualslib.com manuals search engine

https://truckmanualshub.com/

Index	Service Part #	File Name	Description	Qty
1	A00-0013	TEKT-0009	5MM Bushing	8
2	A00-0019	STEP-BOLT1-4X1	Step Bolt, 1/4" x 1", MB	4
3	A00-0021	FLANGE-NUT-1-4	Flange Nut, 1/4", YD	4
4	A00-0044	TEKT-ASM-002	Side Window Hinge Weldment	2
5	A00-0045	TEKT-0004	Side Window Slider Bracket	1
6	A00-0057	TEKT-0020MIR	Side Window Latch, L60776	1
7	A00-0058	CARRIAGE_BOLT-5-16X1	Bolt, Carriage, 5/16"x 1", YD	1
8	A00-0164	LOCK-NUT-5-16	Nylon Lock Nut, 5/16", YD	1
9	B01-0004	CCT225-023	Side Window Glass	1
10	B01-0009	CCT225-056	Side Window Weather Seal	1

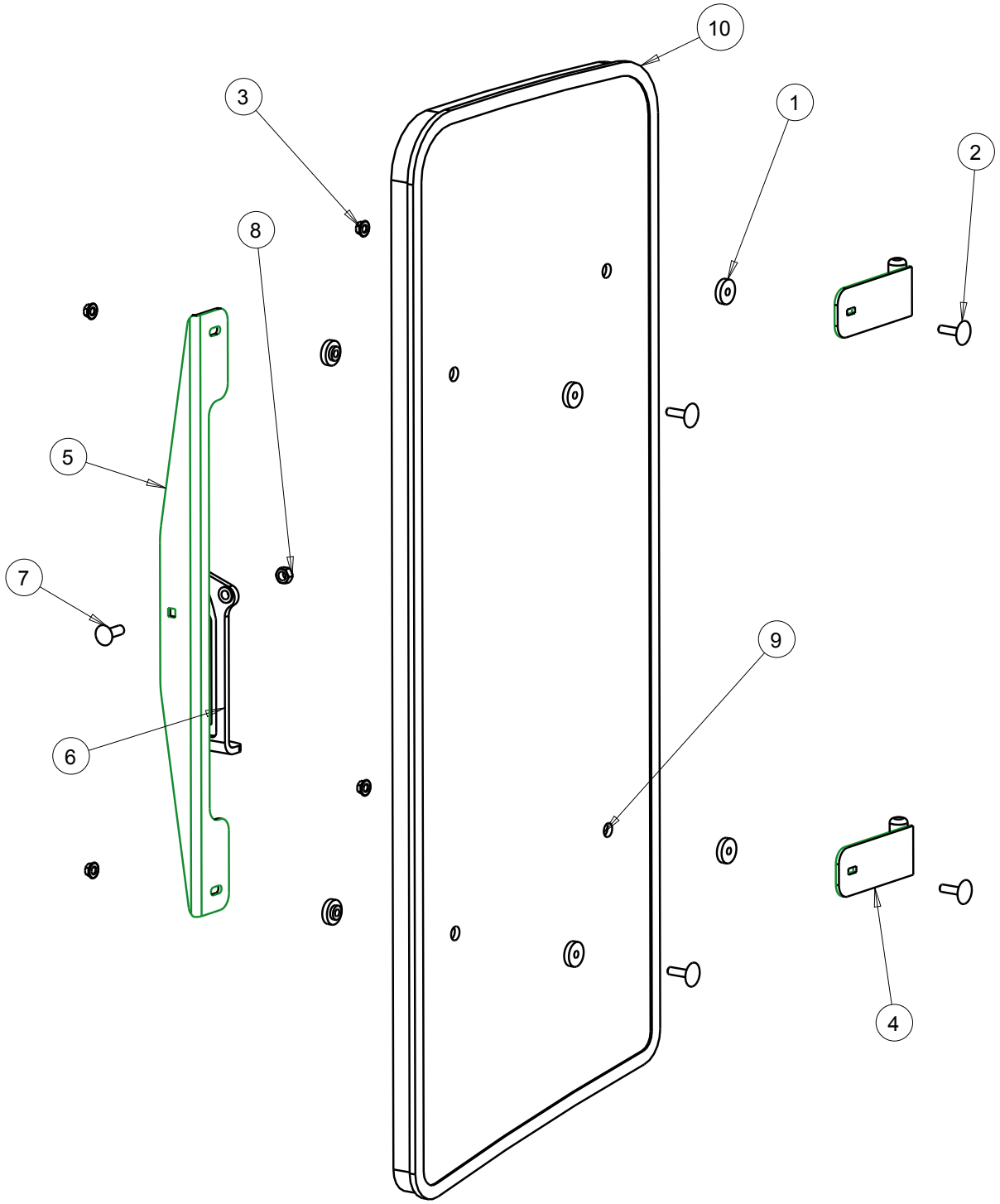

SCALE 0.280

Notice of Confidentiality

This material is property of Tektite Manufacturing Inc and is not to be used by the recipient for any purpose other than the purpose for which it was transmitted. The material remains the property of Tektite and shall be returned upon request. The material may not be reproduced or disclosed to third parties without the written consent of Tektite.

Tolerances:
Unless otherwise specified
X.X = ± 1/16"
Angular = ± 1.0 °

Tektite Manufacturing Inc.
24157 Hwy 3, Box 639, Winkler MB, R6W 4A8, Canada

Req'd:	CNC:	Description: Left Side Window Assembly	
Drawn By: *Daryl Furkalo*	Date: 2012-03-22	Units: Imp.	File Name: CCT225-ASM-011_OP
Checked By:	Date:	Size: B	

Downloaded from www.Manualslib.com manuals search engine

https://truckmanualshub.com/

Index	Service Part #	File Name	Description	Qty
1	A00-0001	DLP-HANDLE	Outside Push Button Handle	1
2	A00-0002	LEFT-LATCH	Suicide Door Left Latch	1
3	A00-0013	TEKT-0009	5MM Bushing	13
4	A00-0018	STEP-BOLT1-4X1-1-2	Step Bolt, 1/4" x 1 1/2", MB	2
5	A00-0020	STEP-BOLT1-4X1-1-4	Step Bolt, 1/4" x 1 1/4", MB	4
6	A00-0021	FLANGE-NUT-1-4	Flange Nut, 1/4", YD	8
7	A00-0022	FLANGE_BOLT_M6X25	Flange Bolt, M6x25, YD	1
8	A00-0039	TEKT-ASM-001	Left Door Hinge Weldment	1
9	A00-0040	REID-RST-160-RST-163	Grab Handle	1
10	A00-0041	TEKTITE-DECAL	Tektite Cab Decal - Solid White	1
11	A00-0118	FLANGE_BOLT_1-4X1	Flange Bolt, 1/4" x 1", YD	2
12	A00-0228	TEKT-ASM-029	Left Door Hinge Weldment, Lower	1
13	B01-0005	CCT225-024	Door Glass	1
14	B01-0006	CCT225-ASM-006	Left Cab Door Weldment	1
15	B01-0008	CCT225-053	Door Weather Stripping	1

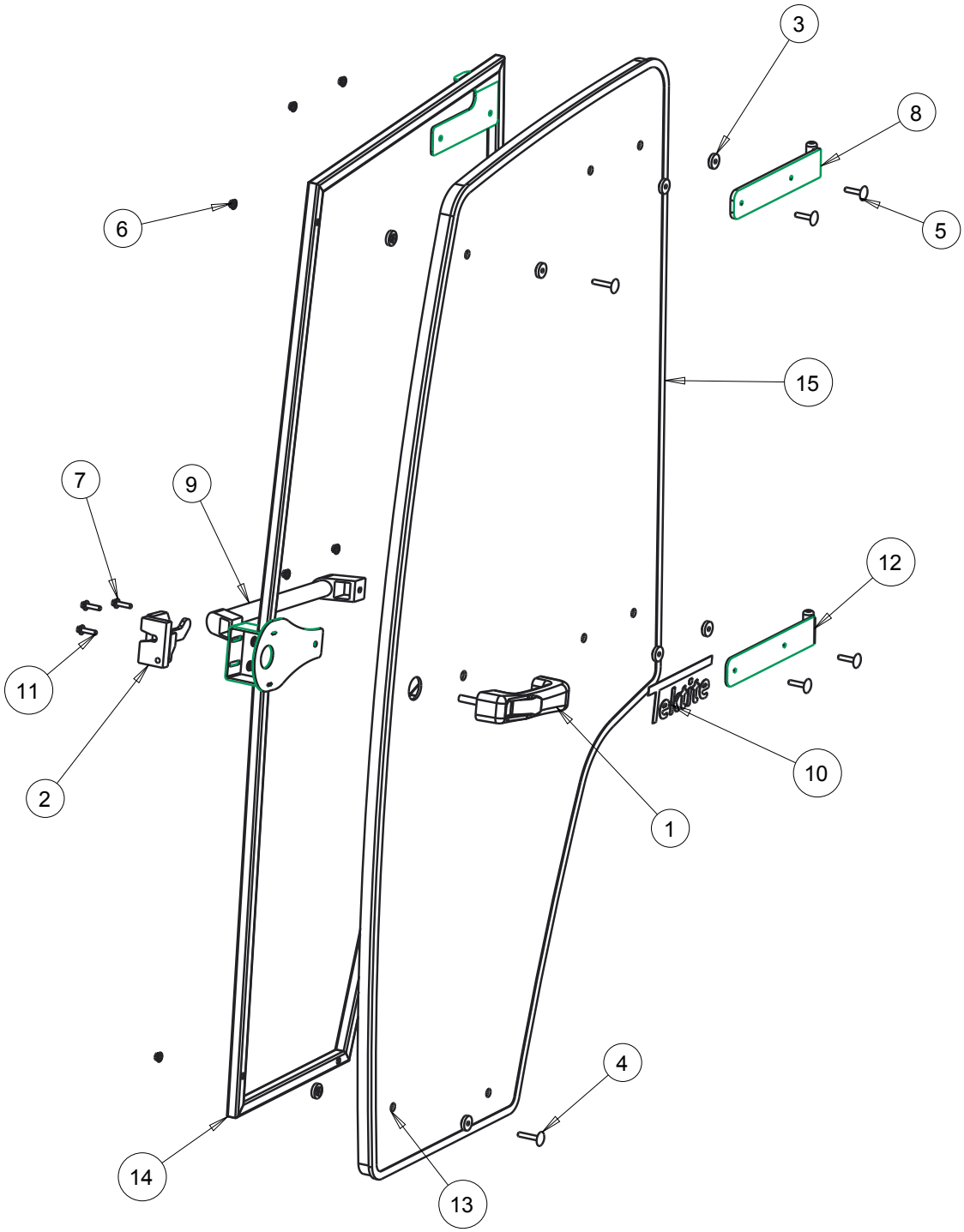

SCALE 0.160

Notice of Confidentiality

This material is property of Tektite Manufacturing Inc and is not to be used by the recipient for any purpose other than the purpose for which it was transmitted. The material remains the property of Tektite and shall be returned upon request. The material may not be reproduced or disclosed to third parties without the written consent of Tektite.

Tolerances:
Unless otherwise specified
X.X = ±1/16"
Angular = ± 1.0°

Tektite Manufacturing Inc.
24157 Hwy 3, Box 639, Winkler MB, R6W 4A8, Canada

Req'd:	CNC:	Description: Left Door Assembly	
Drawn By: *Daryl Furkalo*	Date: 2013-08-06	Units: Imp.	File Name: CCT225-ASM-009_OP
Checked By:	Date:	Size: B	

Downloaded from www.Manualslib.com manuals search engine

https://truckmanualshub.com/

Index	Service Part #	File Name	Description	Qty
1	A00-0001	DLP-HANDLE	Outside Push Button Handle	1
2	A00-0003	RIGHT-LATCH	Suicide Door Right Latch	1
3	A00-0013	TEKT-0009	5MM Bushing	13
4	A00-0018	STEP-BOLT1-4X1-1-2	Step Bolt, 1/4" x 1 1/2", MB	2
5	A00-0020	STEP-BOLT1-4X1-1-4	Step Bolt, 1/4" x 1 1/4", MB	4
6	A00-0021	FLANGE-NUT-1-4	Flange Nut, 1/4", YD	8
7	A00-0022	FLANGE_BOLT_M6X25	Flange Bolt, M6x25, YD	1
8	A00-0040	REID-RST-160-RST-163	Grab Handle	1
9	A00-0041	TEKTITE-DECAL	Tektite Cab Decal - Solid White	1
10	A00-0042	TEKT-ASM-001R	Right Cab Door Hinge Weldment, Upper	1
11	A00-0118	FLANGE_BOLT_1-4X1	Flange Bolt, 1/4" x 1", YD	2
12	A00-0229	TEKT-ASM-029R	Right Door Hinge Weldment, Lower	1
13	B01-0005	CCT225-024	Door Glass	1
14	B01-0007	CCT225-ASM-006_RT	Right Cab Door Weldment	1
15	B01-0008	CCT225-053R	Door Weather Stripping	1

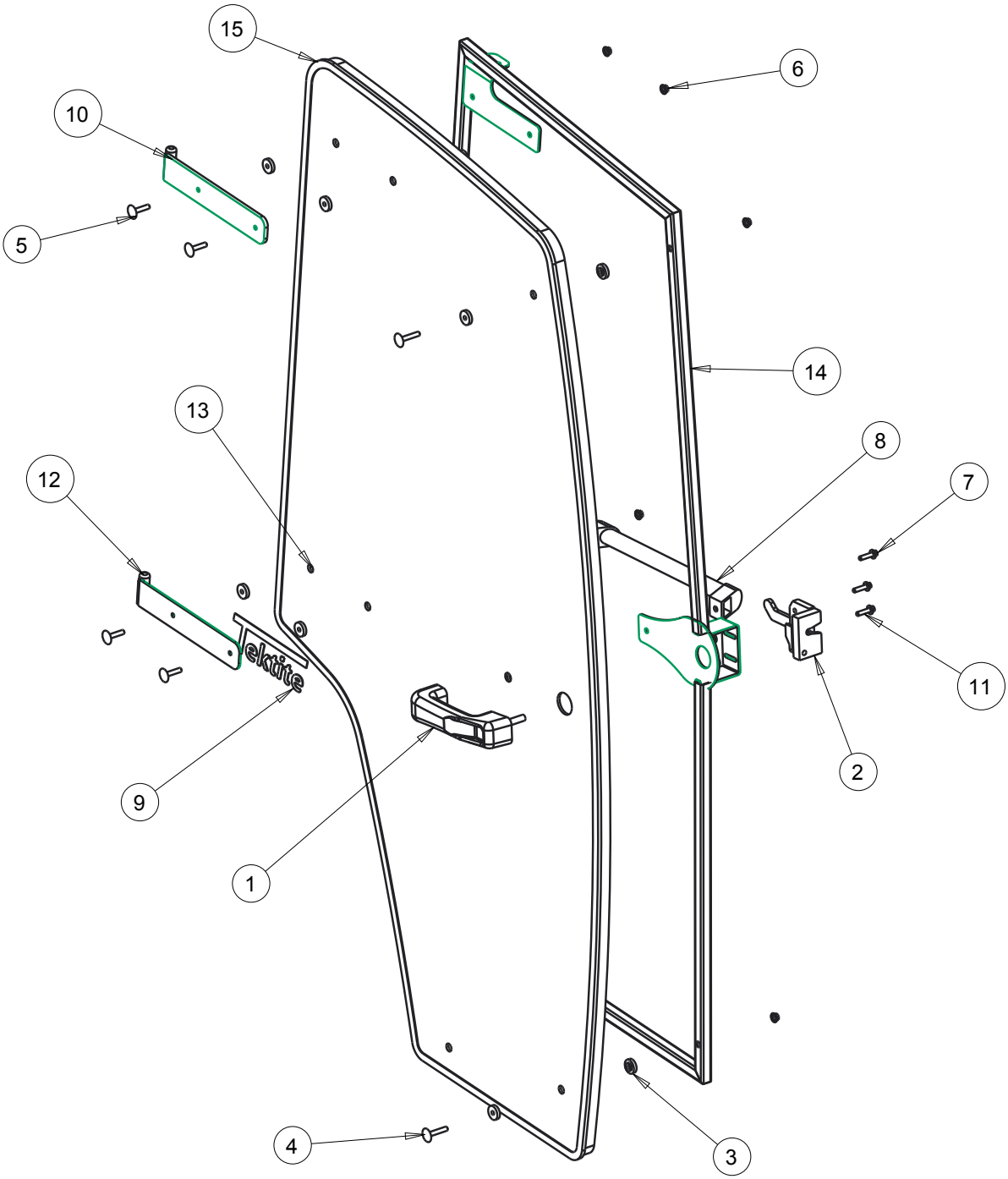

Notice of Confidentiality

This material is property of Tektite Manufacturing Inc and is not to be used by the recipient for any purpose other than the purpose for which it was transmitted. The material remains the property of Tektite and shall be returned upon request. The material may not be reproduced or disclosed to third parties without the written consent of Tektite.

Tolerances:
Unless otherwise specified
X.X = ±1/16"
Angular = ± 1.0°

Tektite Manufacturing Inc.
24157 Hwy 3, Box 639, Winkler MB, R6W 4A8, Canada

Req'd:	CNC:	Description: Right Door Assembly	
Drawn By: *Daryl Furkalo*	Date: 2013-08-06	Units: Imp.	File Name: CCT225-ASM-010_OP
Checked By:	Date:	Size: B	

Downloaded from www.Manualslib.com manuals search engine

https://truckmanualshub.com/

Index	Service Part #	File Name	Description	Qty
1	A00-0008	TEKT-0077	Front Turn Signal Light LED, Amber	2
2	A00-0009	TEKT-0079	Oval LED Light Grommet	2
3	A00-0010	TEKT-0078	Round Grommet, LED Light	2
4	A00-0011	TEKT-0080	Round Turn Light	2
5	A00-0078	RED-DOT-CONDENSOR	Red Dot Condensor 77R1602	1
6	B01-0001	KUF2880-ROOF	Roof	1

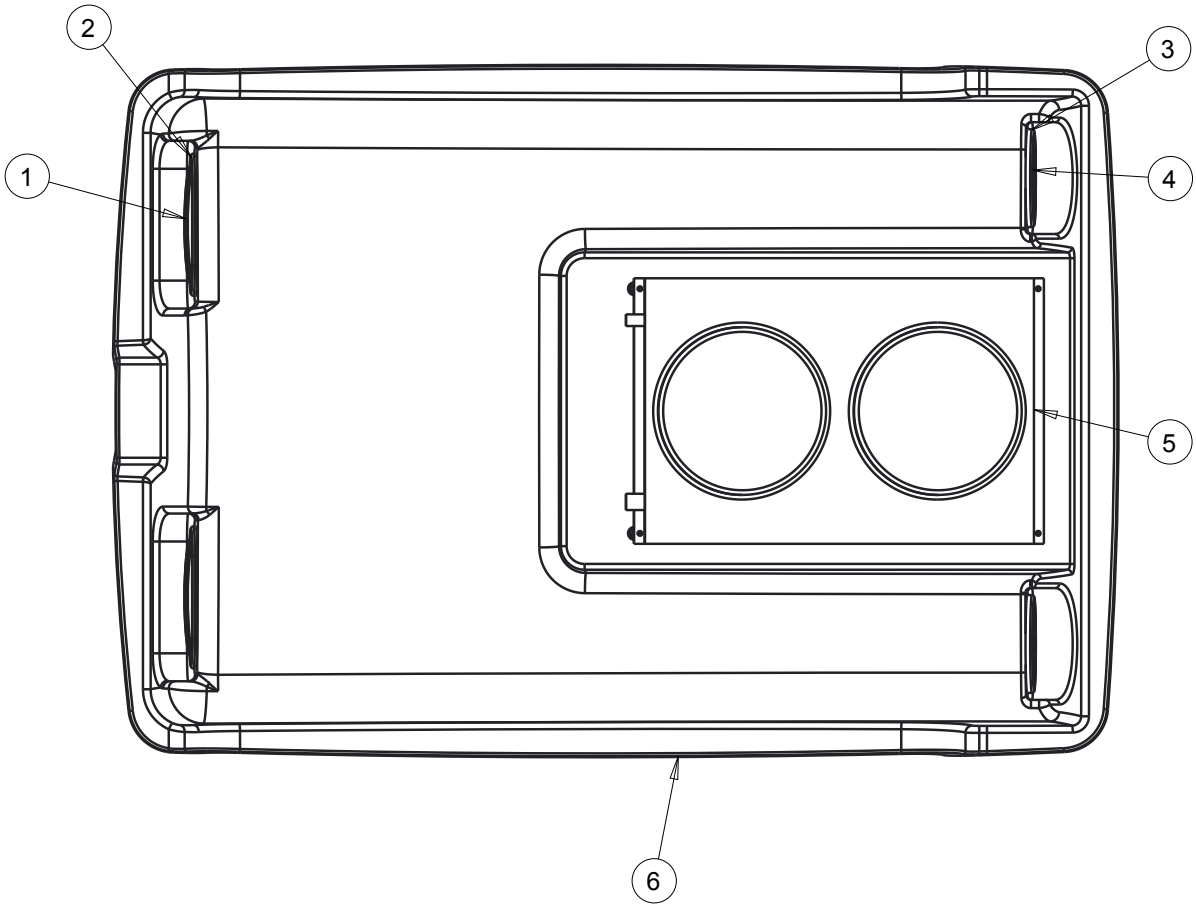

Notice of Confidentiality

This material is property of Tektite Manufacturing Inc and is not to be used by the recipient for any purpose other than the purpose for which it was transmitted. The material remains the property of Tektite and shall be returned upon request. The material may not be reproduced or disclosed to third parties without the written consent of Tektite.

Tolerances:
Unless otherwise specified
X.X = ±1/16"
Angular = ± 1.0°

Tektite Manufacturing Inc.
24157 Hwy 3, Box 639, Winkler MB, R6W 4A8, Canada

Req'd:	CNC:	Description: Roof Assembly	
Drawn By: *Daryl Furkalo*	Date: 2013-02-01	Units: Imp.	File Name: KUF2880-ROOF-ASM
Checked By:	Date:	Size: B	

Downloaded from www.Manualslib.com manuals search engine

Index	Service Part #	File Name	Description	Qty
1	A00-0166	TEKT-0103	Condensor Fan	2
2	A00-0220	TEKT-0101	Base Condenser Coil	1
3	A00-0221	TEKT-0102	Condensor Assembly Steel Shroud	1

https://truckmanualshub.com/

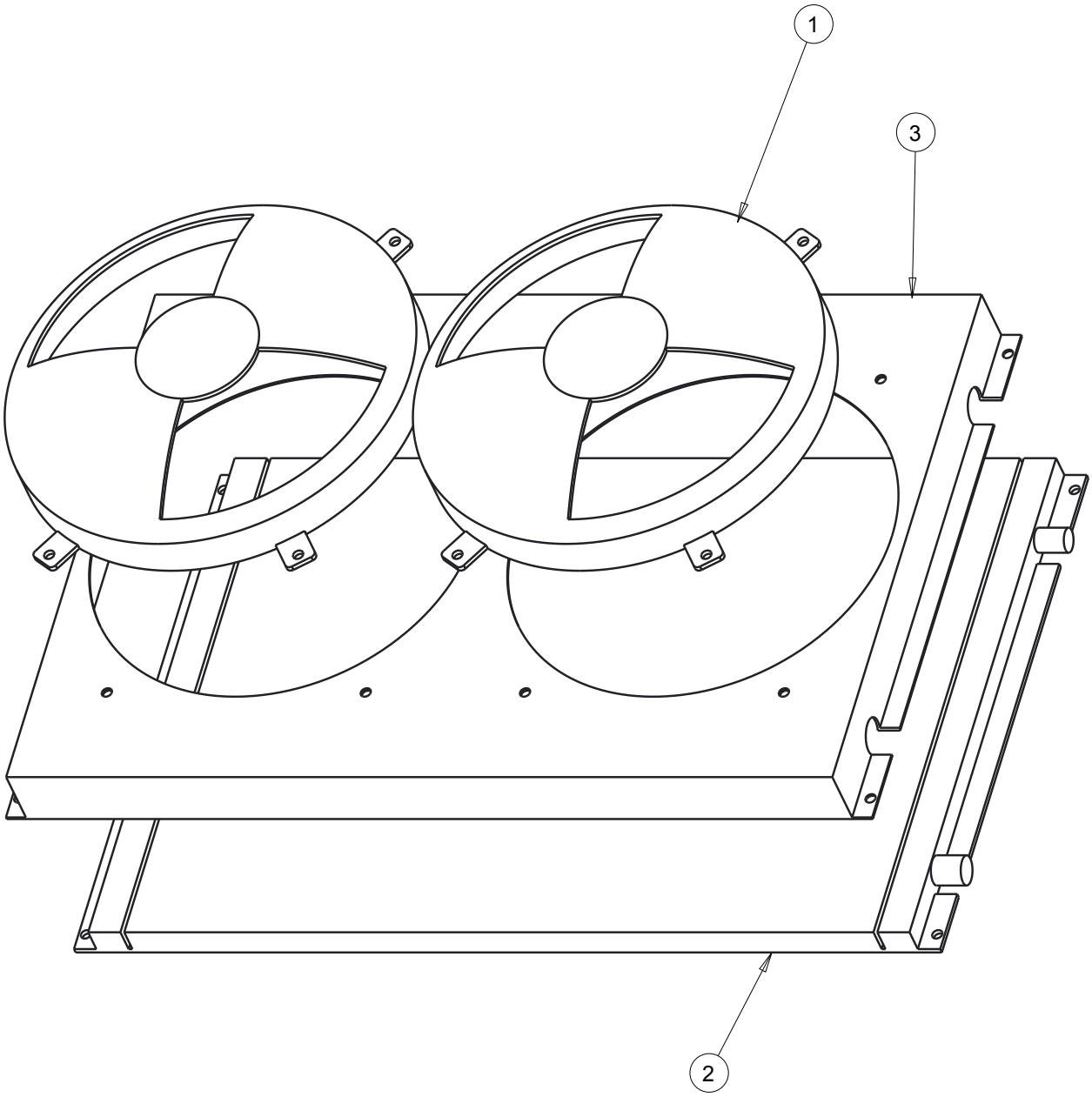

Notice of Confidentiality

This material is property of Tektite Manufacturing Inc and is not to be used by the recipient for any purpose other than the purpose for which it was transmitted. The material remains the property of Tektite and shall be returned upon request. The material may not be reproduced or disclosed to third parties without the written consent of Tektite.

Tolerances:
Unless otherwise specified
X.X = ±1/16"
Angular = ± 1.0°

Tektite Manufacturing Inc.
24157 Hwy 3, Box 639, Winkler MB, R6W 4A8, Canada

Req'd:	CNC:	Description: Condensor Assembly Breakdown	
Drawn By: *Daryl Furkalo*	Date: 2013-07-04	Units: Imp.	File Name: TEKT-ASM-026
Checked By:	Date:	Size: B	

Downloaded from www.Manualslib.com manuals search engine

https://truckmanualshub.com/

Index	Service Part #	File Name	Description	Qty
1	A00-0019	STEP-BOLT1-4X1	Step Bolt, 1/4" x 1", MB	4
2	A00-0021	FLANGE-NUT-1-4	Flange Nut, 1/4", YD	4
3	A00-0025	BALL-LOUVER	2 1/2" Ball Louver	4
4	A00-0028	TEKT-0088	Red Dot Drier	1
5	A00-0081	KUF2880-HEADLINER-REV1	Headliner	1
6	A00-0097	TEKT-0082	Water Valve	1
7	A00-0105	R-2300-2_090902	Heater A/C Blower Unit, 2300	1
8	A00-0171	TEKT-0089	Binary Switch	1
9	A00-0173	TEKT-0090	Louver Hose	1
10	A00-0204	TEKT-ASM-011	Louver Hose Mount Plate, 2300	1
11	A00-0205	TEKT-0008_REV1	Red Dot 2300 Mount Bracket	1

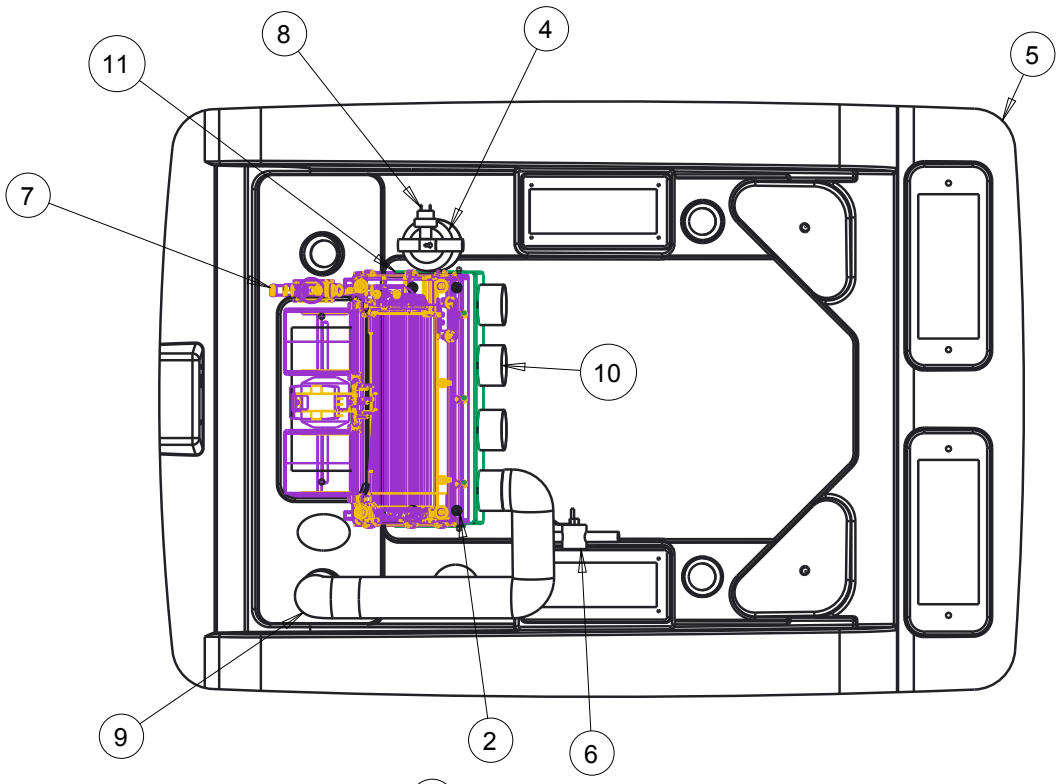

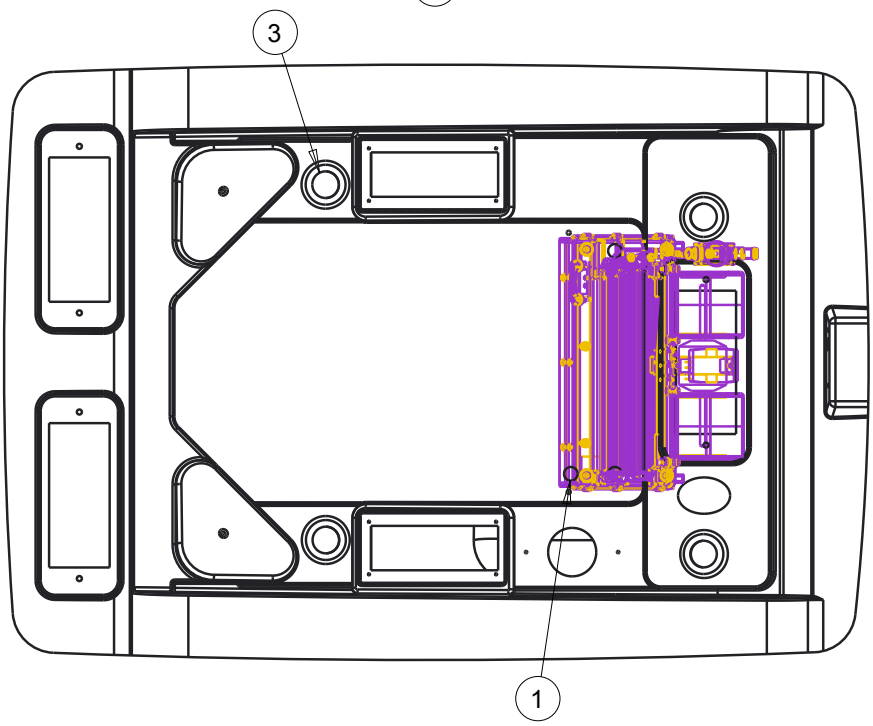

Notice of Confidentiality

This material is property of Tektite Manufacturing Inc and is not to be used by the recipient for any purpose other than the purpose for which it was transmitted. The material remains the property of Tektite and shall be returned upon request. The material may not be reproduced or disclosed to third parties without the written consent of Tektite.

Tolerances:
Unless otherwise specified

X.X = ±1/16"
Angular = ± 1.0°

Tektite Manufacturing Inc.
24157 Hwy 3, Box 639, Winkler MB, R6W 4A8, Canada

Req'd:	CNC:	Description: A/C Compatible Additional Parts	
Drawn By: *Daryl Furkalo*	Date: 2013-02-13	Units: Imp.	File Name: TEKT-ASM-020_AC-ASM
Checked By:	Date:	Size: B	

Downloaded from www.Manualslib.com manuals search engine

https://truckmanualshub.com/

Index	Service Part #	File Name	Description	Qty
1	A00-0006	TEKT-0074	Cabin Air Filter	2
2	A00-0016	TEKT-0075	Domelight LED	1
3	A00-0017	305-1002	Panto Mount Plate	1
4	A00-0025	BALL-LOUVER	2 1/2" Ball Louver	4
5	A00-0026	OSCILLATING-FAN	Oscillating Fan	1
6	A00-0038	TEKT-0076	3" Plug Button	1
7	A00-0055	TEKT-0019	Fir Tree Fastener	2
8	A00-0070	REID-KBP-262-KBP-265	Knob, Knurled, 1/4"	6
9	A00-0071	LEFT-SWITCHPLATE-ASM	Left Switchplate Assembly	1
10	A00-0072	RIGHT-SWITCH-PLATE-ASM	Right Switchplate Assembly	1
11	A00-0073	FILTER-COVER	Filter Cover	3
12	A00-0074	TEKT-ASM-004	Fuse Block Assembly	1
13	A00-0075	WWJ-MOTOR-ASM	Front Wiper Motor, WWJ	1
14	A00-0076	TEKT-0026	1/4" Panel Nut	6
15	A00-0081	KUF2880-HEADLINER-REV1	Headliner	1
16	A00-0082	KUF2880-049	Headliner Upholstery	1
17	A00-0083	KUF2880-060	Front Filter Upholstery	1

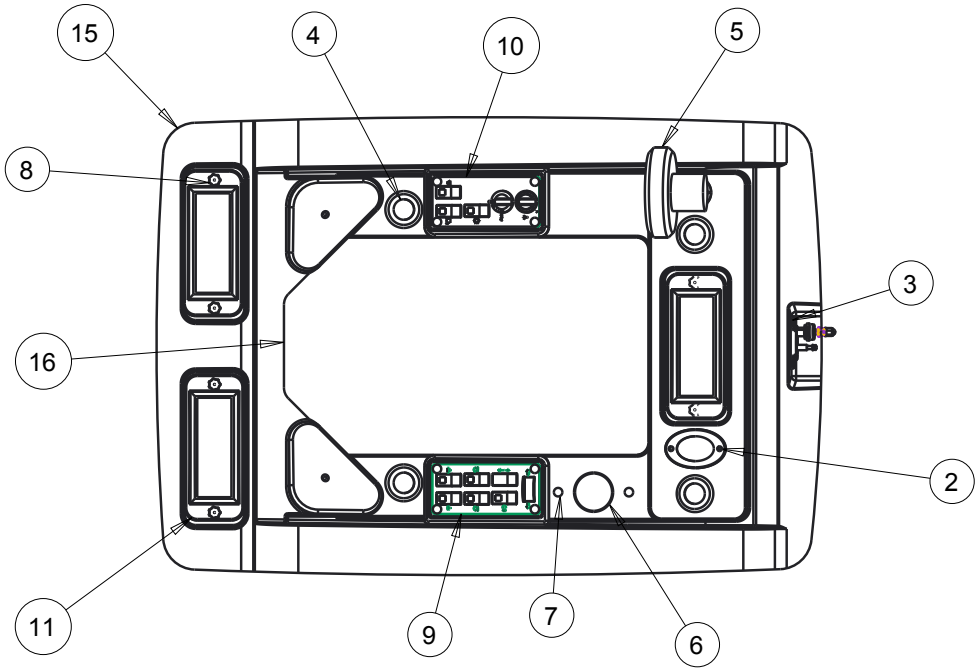

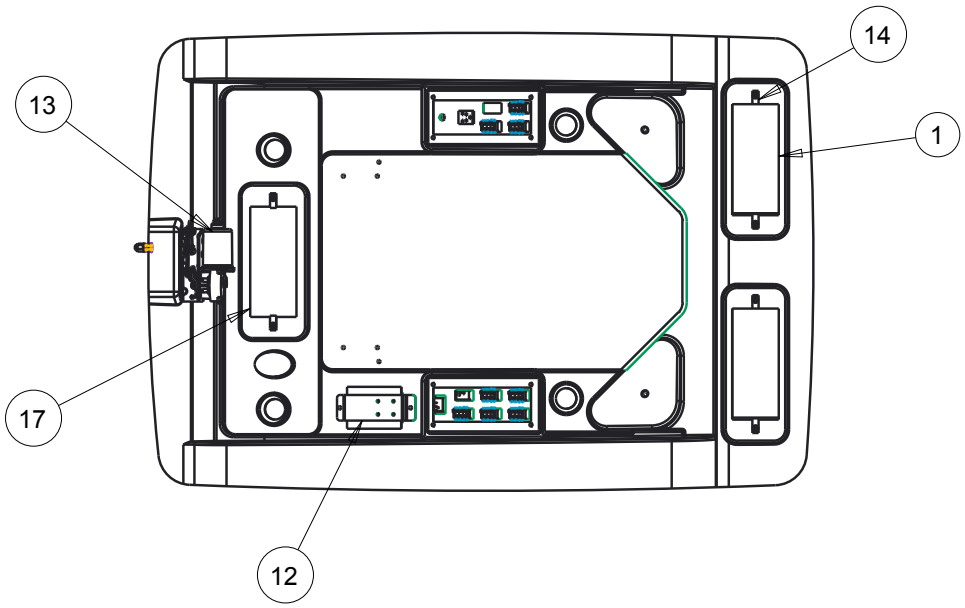

Notice of Confidentiality

This material is property of Tektite Manufacturing Inc and is not to be used by the recipient for any purpose other than the purpose for which it was transmitted. The material remains the property of Tektite and shall be returned upon request. The material may not be reproduced or disclosed to third parties without the written consent of Tektite.

Tolerances:
Unless otherwise specified
X.X = ±1/16"
Angular = ± 1.0°

Tektite Manufacturing Inc.
24157 Hwy 3, Box 639, Winkler MB, R6W 4A8, Canada

Req'd:	CNC:	Description: Headliner Assembly Breakdown	
Drawn By: *Daryl Furkalo*	Date: 2013-02-01	Units: Imp.	File Name: KUF2880-HEADLINER-ASM
Checked By:	Date:	Size: B	

Downloaded from www.Manualslib.com manuals search engine

https://truckmanualshub.com/

Index	Service Part #	File Name	Description	Qty
1	A00-0076	TEKT-0026	1/4" Panel Nut	3
2	A00-0089	TEKT-0059	Heater Core	1
3	A00-0090	TEKT-0065	Upper Blower Housing	1
4	A00-0091	TEKT-0066	Blower Housing Lower	1
5	A00-0097	TEKT-0082	Water Valve	1
6	A00-0100	FLANGE_BOLT_1-4X1-2	Flange Bolt, 1/4" x 1/2", YD	3
7	A00-0157	TEKT-ASM-015	Bottom Heater Shroud Weldment	1
8	A00-0158	TEKT-ASM-014	Top Heater Shroud Weldment	1
9	A00-0159	TEKT-0067	Rotary Squirrel Cage	2
10	A00-0162	TEKT-0081	Fan Motor	1

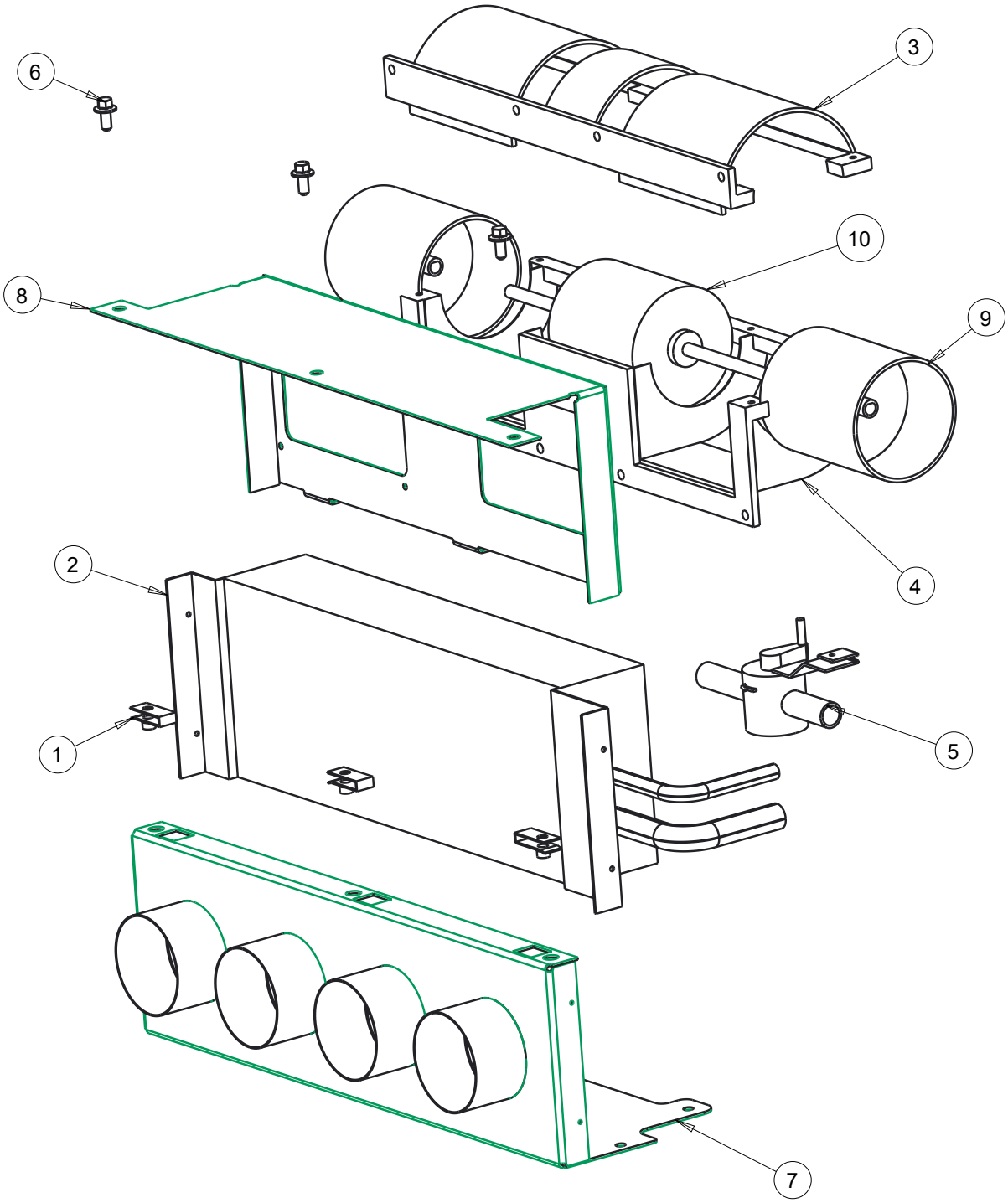

Notice of Confidentiality

This material is property of Tektite Manufacturing Inc and is not to be used by the recipient for any purpose other than the purpose for which it was transmitted. The material remains the property of Tektite and shall be returned upon request. The material may not be reproduced or disclosed to third parties without the written consent of Tektite.

Tolerances:
Unless otherwise specified
X.X = ±1/16"
Angular = ± 1.0°

Tektite Manufacturing Inc.
24157 Hwy 3, Box 639, Winkler MB, R6W 4A8, Canada

Req'd:	CNC:	Description: Tektite In-House Heater Assembly	
Drawn By: *Daryl Furkalo*	Date: 2013-02-01	Units: Imp.	File Name: TEKT-ASM-016_OP
Checked By:	Date:	Size: B	

Downloaded from www.Manualslib.com manuals search engine

https://truckmanualshub.com/

Index	Service Part #	File Name	Description	Qty
1	A00-0007	FAN-SWITCH	4-Position Fan Switch	1
2	A00-0053	TEKT-0017	Temp Control Knob	1
3	A00-0054	TEKT-0018	Fan Speed Control Knob	1
4	A00-0055	TEKT-0019	Fir Tree Fastener	4
5	A00-0065	TEKT-ASM-005	On-Off Switch w/Lens	3
6	A00-0068	RIGHT-CAB-SWITCHPLATE	Right Switchplate	1
7	A00-0069	RIGHT-CAB-SWITCHPLATE-DECAL	Right Switchplate Decal	1

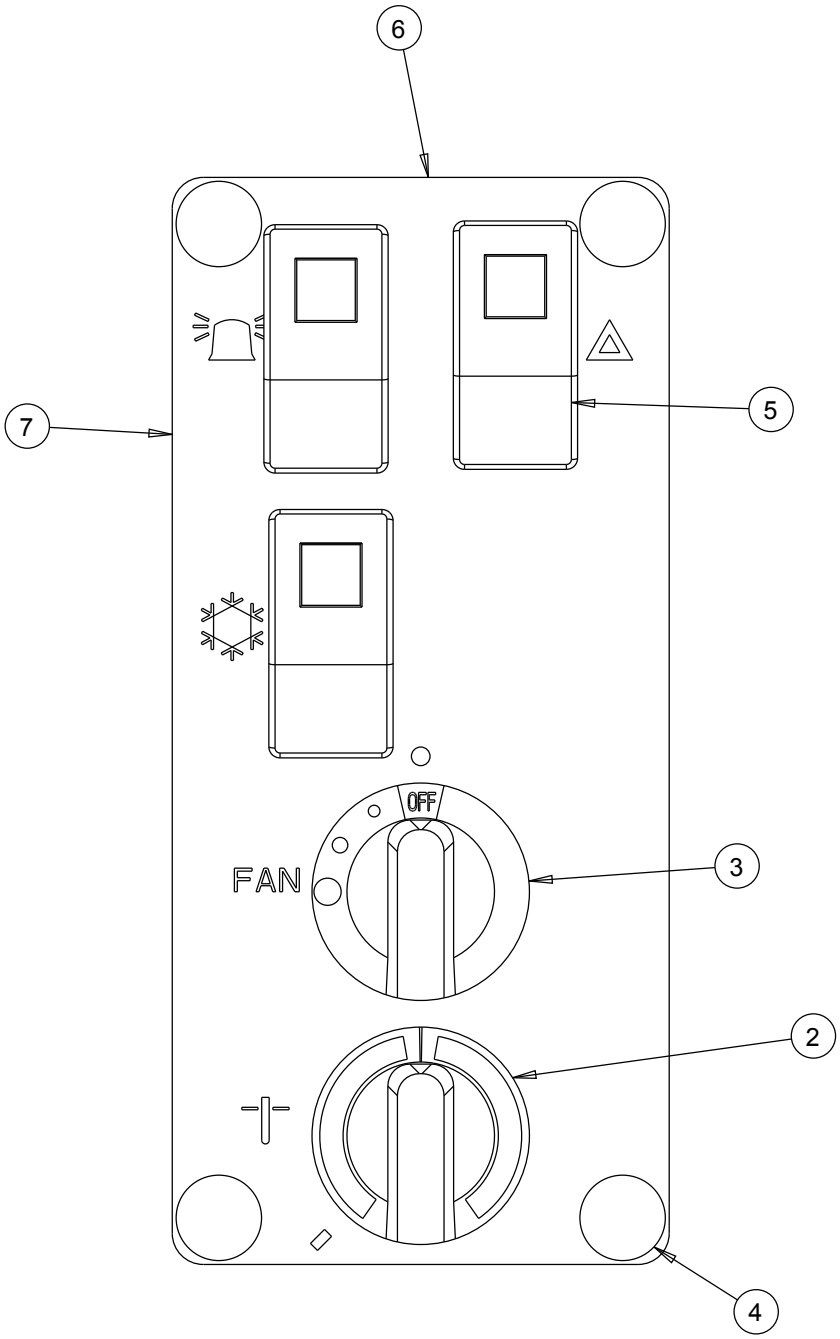

SCALE 1.000

Notice of Confidentiality

This material is property of Tektite Manufacturing Inc and is not to be used by the recipient for any purpose other than the purpose for which it was transmitted. The material remains the property of Tektite and shall be returned upon request. The material may not be reproduced or disclosed to third parties without the written consent of Tektite.

Tolerances:
Unless otherwise specified
X.X = ± 1/16"
Angular = ± 1.0 °

Tektite Manufacturing Inc.
24157 Hwy 3, Box 639, Winkler MB, R6W 4A8, Canada

Req'd:	CNC:	Description: Cab Switch Plate Right	
Drawn By: *Daryl Furkalo*	Date: 2009-03-09	Units: Imp.	File Name: RIGHT-SWITCH-PLATE-ASM
Checked By:	Date:	Size: B	

Downloaded from www.Manualslib.com manuals search engine

https://truckmanualshub.com/

Index	Service Part #	File Name	Description	Qty
1	A00-0055	TEKT-0019	Fir Tree Fastener	4
2	A00-0063	LEFT-CAB-SWITCHPLATE	Left Switchplate	1
3	A00-0064	LEFT-CAB-SWITCHPLATE-DECAL	Left Switchplate Decal	1
4	A00-0065	TEKT-ASM-005	On-Off Switch w/Lens	5
5	A00-0066	TEKT-ASM-006	On-Off-On Rocker No Lens	1
6	A00-0067	TEKT-ASM-007	Mom-Off-Mom Rocker Switch	1

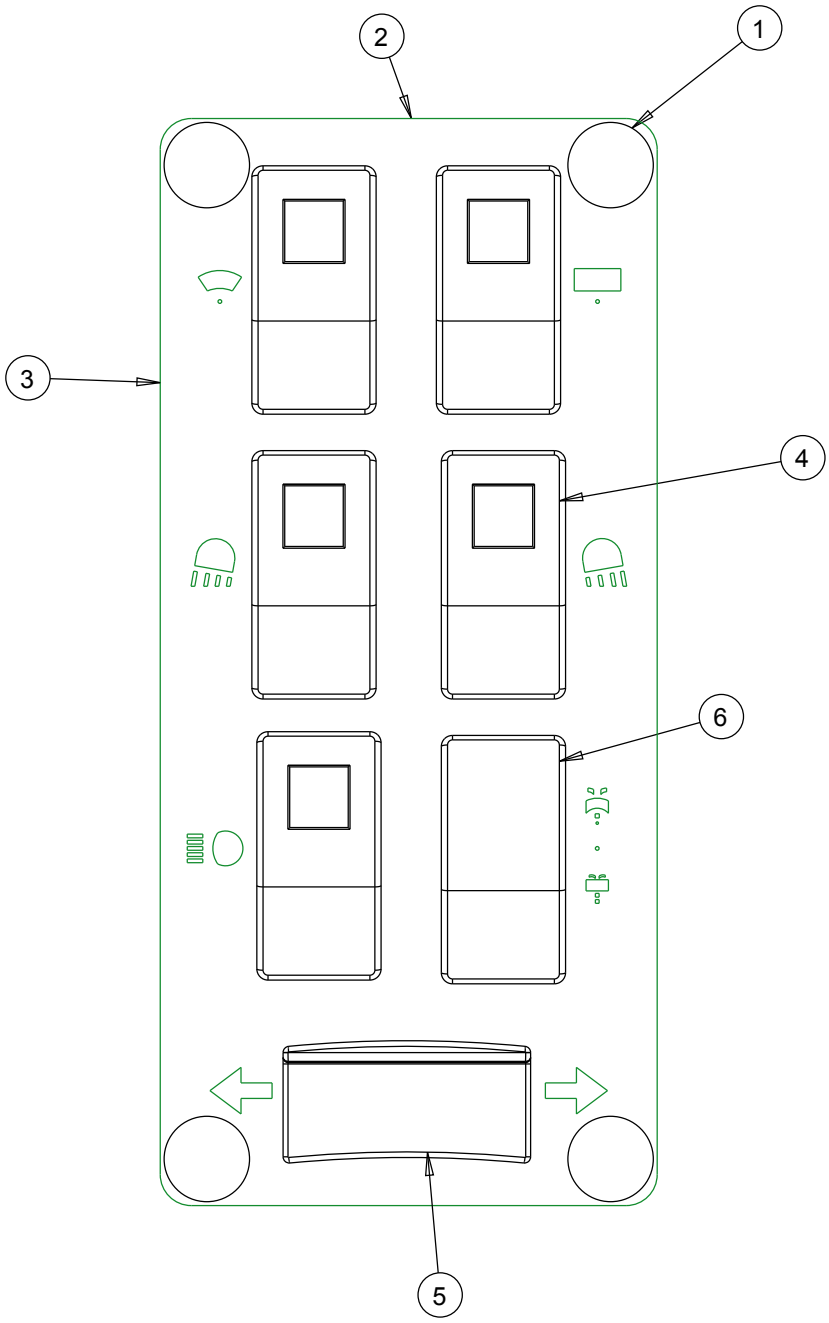

SCALE 1.000

Notice of Confidentiality

This material is property of Tektite Manufacturing Inc and is not to be used by the recipient for any purpose other than the purpose for which it was transmitted. The material remains the property of Tektite and shall be returned upon request. The material may not be reproduced or disclosed to third parties without the written consent of Tektite.

Tolerances:
Unless otherwise specified
X.X = ± 1/16"
Angular = ± 1.0 °

Tektite Manufacturing Inc.
24157 Hwy 3, Box 639, Winkler MB, R6W 4A8, Canada

Req'd:	CNC:	Description: Operator Manual Switch Plate Left	
Drawn By: *Daryl Furkalo*	Date: 2009-03-09	Units: Imp.	File Name: LEFT-SWITCHPLATE-ASM
Checked By:	Date:	Size: B	

Downloaded from www.Manualslib.com manuals search engine

https://truckmanualshub.com/

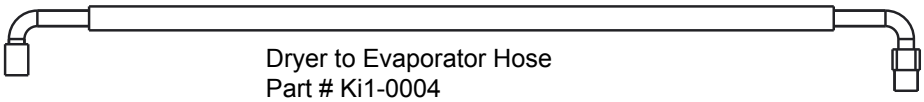

Dryer to Evaporator Hose
Part # Ki1-0004

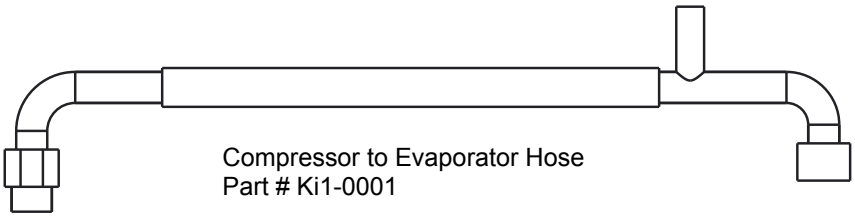

Compressor to Evaporator Hose
Part # Ki1-0001

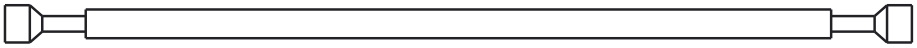

Condenser to Dryer Hose
Part # Ki1-0003

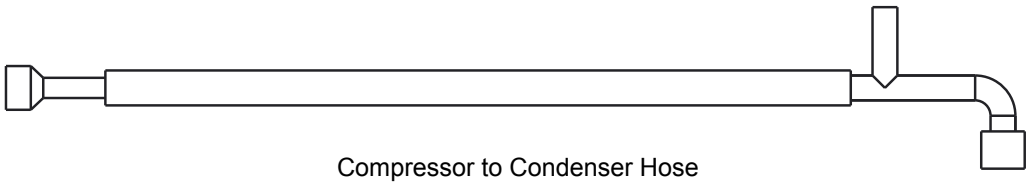

Compressor to Condenser Hose
Part # Ki1-0002

Notice of Confidentiality

This material is property of Tektite Manufacturing Inc and is not to be used by the recipient for any purpose other than the purpose for which it was transmitted. The material remains the property of Tektite and shall be returned upon request. The material may not be reproduced or disclosed to third parties without the written consent of Tektite.

Tolerances:
Unless otherwise specified

X.X = ±1/16"
Angular = ± 1.0°

Tektite Manufacturing Inc.
24157 Hwy 3, Box 639, Winkler MB, R6W 4A8, Canada

Req'd: 1 req		Description: A/C Hoses Breakdown	
Drawn By: *Daryl Furkalo*	Date: 2013-05-29	Units: Imp.	File Name:
Checked By:	Date:	Size: B	

Downloaded from www.Manualslib.com manuals search engine