https://truckmanualshub.com/

FOREWORD

This manual covers the service procedures of the TOYOTA FORKLIFT 50-4FD100~135, 50-4FDK150,160. Please use this manual for providing quick, correct servicing of the corresponding forklift models.

This manual deals with the above models as of August 2008. Please understand that disagreement can take place between the descriptions in the manual and actual vehicles due to change in design and specifications. Any change or modifications thereafter will be informed by Toyota Industrial Equipment Parts & Service News.

For the service procedures of the mounted engine, read the repair manuals listed below as reference together with this manual.

(Reference)
Repair manuals related to this manual are as follows:

TOYOTA INDUSTRIAL EQUIPMENT J08E-UM ENGINE
REPAIR MANUAL (No.)

TOYOTA Material Handling Company
A Division of TOYOTA INDUSTRIES CORPORATION

https://truckmanualshub.com/

SECTION INDEX

NAME	SECTION
GENERAL	0
ENGINE	1
TORQUE CONVERTER & TRANSMISSION	2
PROPELLER SHAFT	3
FRONT AXLE & DIFFERENTIAL	4
REAR AXLE	5
STEERING	6
BRAKE	7
BODY	8
MATERIAL HANDLING SYSTEM	9
MAST	10
CYLINDER	11
OIL PUMP	12
OIL CONTROL VALVE	13
HYDRAULIC PIPING	14
OPS	15
APPENDIX	16

https://truckmanualshub.com/

GENERAL

Page

VEHICLE EXTERIOR VIEWS 0-2

VEHICLE MODEL 0-4

FRAME NUMBER 0-4

HOW TO USE THIS MANUAL 0-5

- EXPLANATION METHOD 0-5
- TERMINOLOGY 0-6
- ABBREVIATIONS 0-6

OPERATING TIPS 0-7

- GENERAL 0-7
- JACKING UP 0-8
- HOISTING THE VEHICLE 0-9
- WIRE ROPE SUSPENSION ANGLE LIST 0-10
- SAFE LOAD FOR EACH WIRE ROPE SUSPENSION ANGLE 0-11
- MEMBER WEIGHTS 0-11
- ELECTRICAL PARTS INSPECTION 0-14

BOLT & NUT TIGHTENING TORQUE 0-15

- BOLT STRENGTH CLASS IDENTIFICATION METHOD AND TIGHTENING TORQUE 0-15
- HEXAGON FLANGE BOLT TIGHTENING TORQUE 0-17

PRECOATED BOLTS (BOLTS WITH SEAL LOCK AGENT COATING ON THREADS) 0-17

HIGH PRESSURE HOSE FITTING TIGHTENING TORQUE 0-18

RECOMMENDED LUBRICANT QUANTITY & TYPES 0-19

LUBRICATION CHART 0-20

PERIODIC MAINTENANCE 0-21

PERIODIC REPLACEMENT OF PARTS AND LUBRICANTS 0-26

https://truckmanualshub.com/

VEHICLE EXTERIOR VIEWS

HEADGUARD MODEL

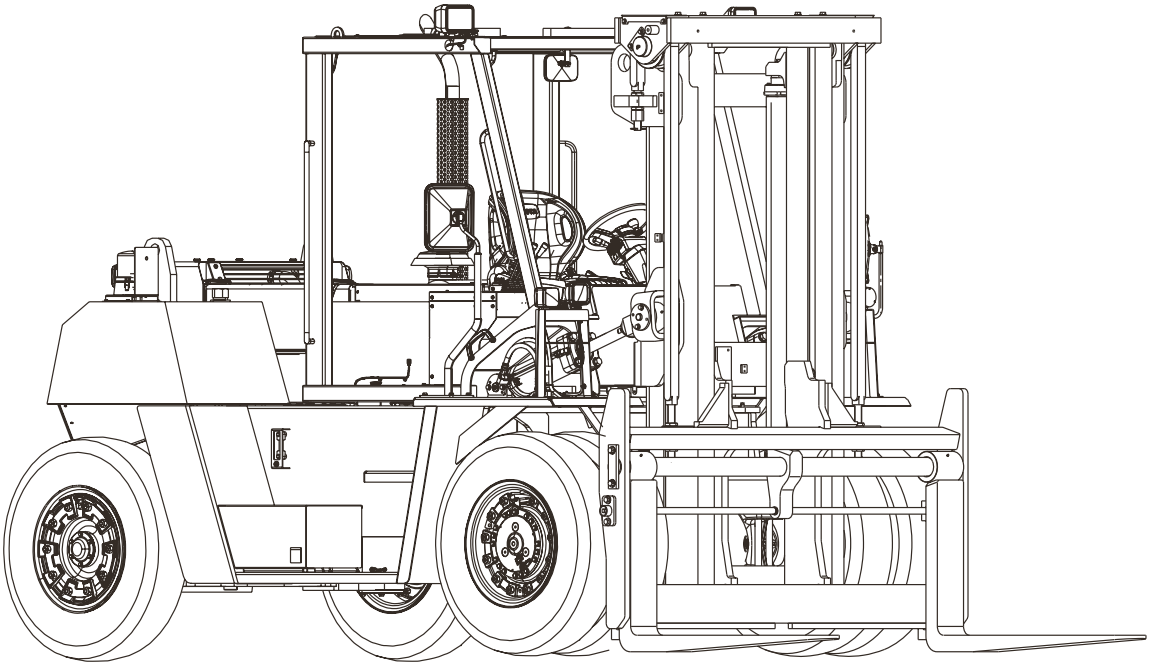

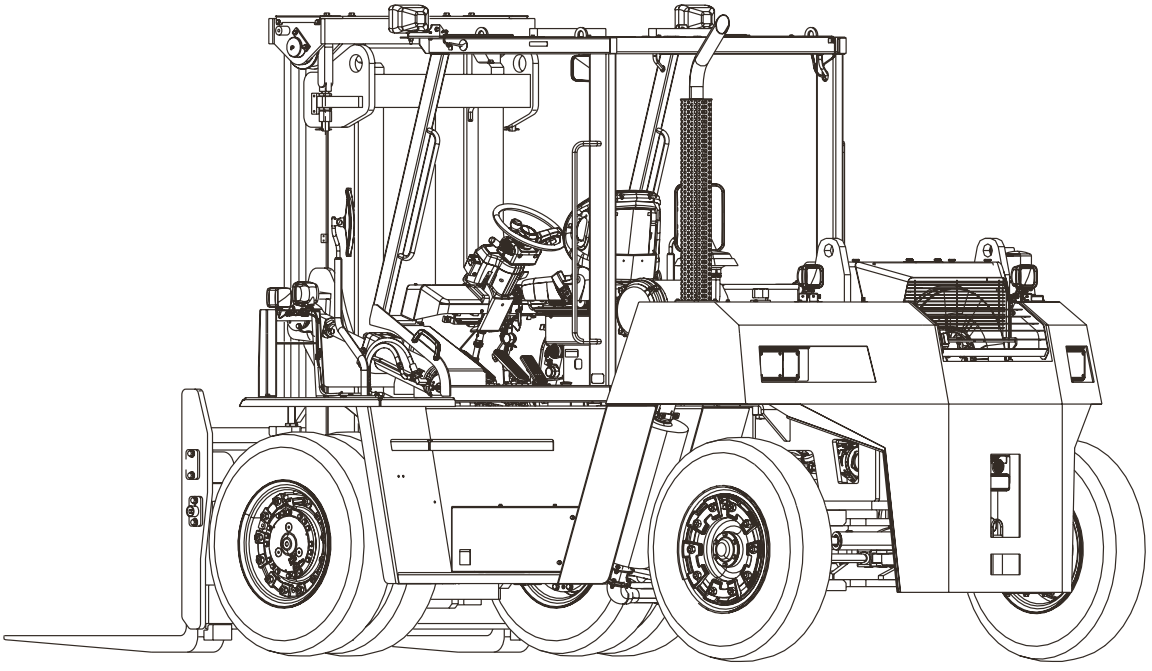

CABIN MODEL

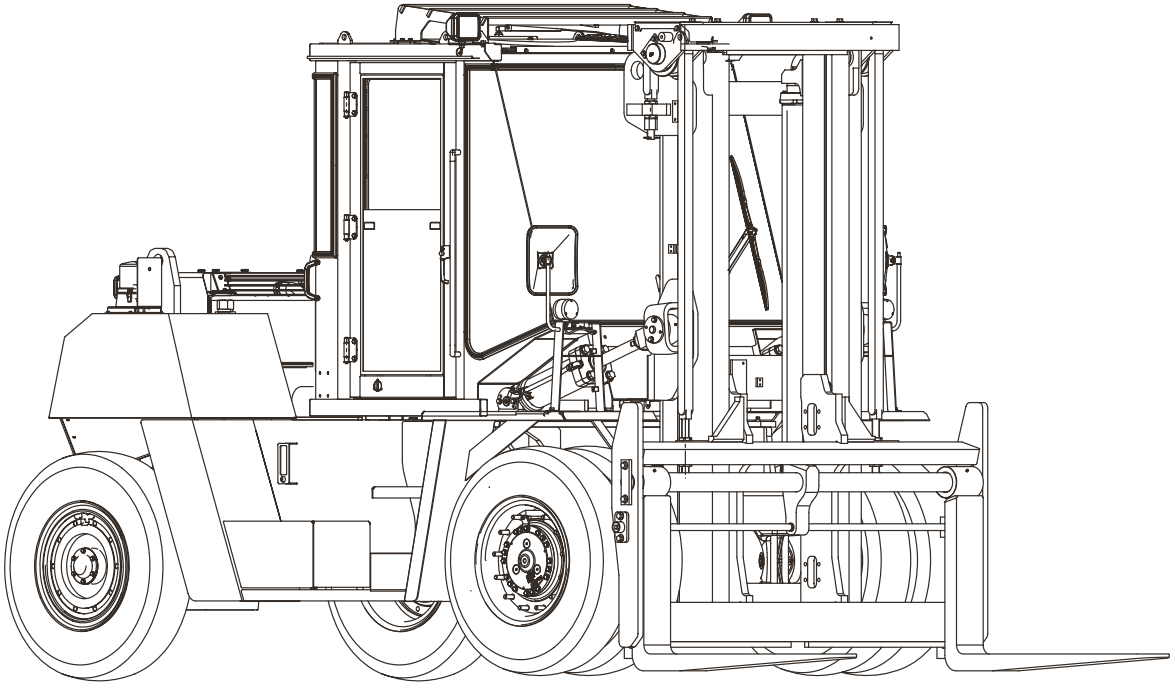

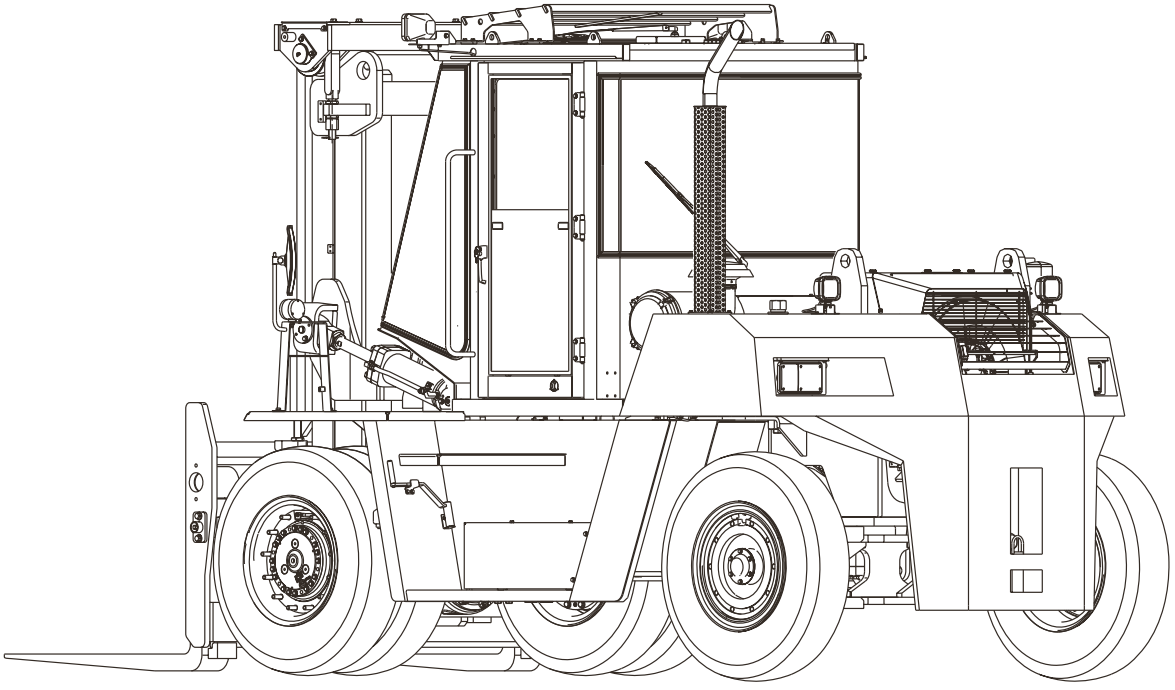

https://truckmanualshub.com/

VEHICLE MODEL

Payload	Vehicle model	Standard load center	Engine model
10 ton	50-4FD100	600 mm (23.6 in)	J08E-UM
11.5 ton	50-4FD115		
12 ton	50-4FD120		
13.5 ton	50-4FD135		
15 ton	50-4FDK150		
16 ton	50-4FDK160		

FRAME NUMBER

Vehicle model	Punching format
50-4FD100	4FD120-50011
50-4FD115	
50-4FD120	
50-4FD135	4FDK160-50011
50-4FDK150	
50-4FDK160	
Punching position	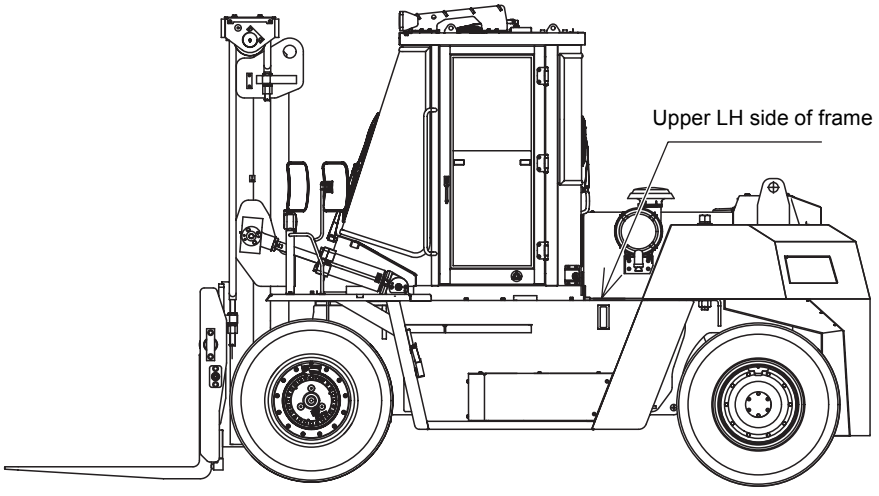

https://truckmanualshub.com/

HOW TO USE THIS MANUAL

EXPLANATION METHOD

1. Operating procedure

Description example

DISASSEMBLY•INSPECTION•REASSEMBLY

Tightening torque unit → N•m (kgf•cm) [ft•lbf]

•The numbers may partially be omitted in the illustration.

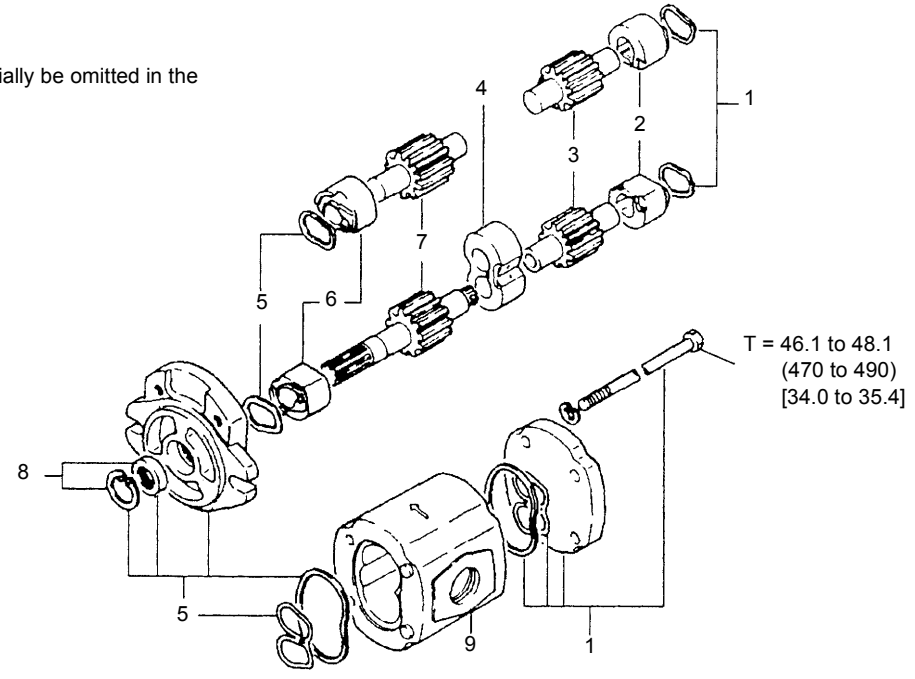

Disassembly Procedure

1 Remove the cover. **[Point 1]**
2 Remove the bushing. **[Point 2]**
3 Remove the gear.

Operation to be explained

Point Operations

Explanation of operation point with illustration

[POINT 1]
Disassembly:
Make match marks before removing the pump cover.

[POINT 2]
Inspection:
Measure the bushing inside diameter.
Limit: 19.12 mm

Explanation of abbreviations used for point operations

Removal	Reassembly
Installation	Adjustment
Disassembly	Inspection

https://truckmanualshub.com/

2. Matters omitted from this manual
   This manual omits descriptions of the following jobs, but perform them in actual operation:
   (1) Cleaning and washing of removed parts as required
   (2) Visual inspection (partially described)

TERMINOLOGY

Caution:
Important matters, negligence of which may cause accidents. Be sure to observe them.

Note:
Important matters, negligence of which may cause failures, or matters in operation procedure requiring special attention.
Standard: Value showing the allowable range in inspection or adjustment.
Limit: The maximum or minimum value allowed in inspection or adjustment.

ABBREVIATIONS

Abbreviation	Meaning	Abbreviation	Meaning
ASSY	Assembly	SAE	Society of Automotive Engineers (USA)
LH	Lefthand	SAS	System of Active Stability
LLC	Long Life Coolant	SST	Special Service Tool
L/	Less	STD	Standard
M/T	Manual Transmission	T/C	Torque Converter & Transmission
OPT	Option	T=	Tightening Torque
O/S	Oversize	○○T	Number of teeth (○○T)
PS	Power Steering	U/S	Undersize
RH	Righthand	W/	With

https://truckmanualshub.com/

OPERATING TIPS

GENERAL

1. Safe operation
   (1) After jacking up, always support the vehicle with wooden blocks and rigid stands.
   (2) When hoisting the vehicle, use wire ropes with sufficient reserve in load capacity.
   (3) Always disconnect the battery plug before the inspection or servicing of electrical parts.
   (4) The operator must always extract and carry the engine key when entering the area under the vehicle.
   (5) When 2 or more persons work as a group, always assign an instructor and operate according to his instructions.
2. Tactful operation
   (1) Prepare the tools, necessary measuring instruments (circuit tester, megohmmeter, oil pressure gauge, etc.) and SSTs before starting operation.
   (2) Check the cable color and wiring state before disconnecting any wiring.
   (3) When overhauling functional parts, complicated sections or related mechanisms, arrange the parts neatly to avoid confusion.
   (4) When disassembling and inspecting a precision part such as the control valve, use clean tools and operate in a clean location.
   (5) Always follow the specified operation steps for disassembly, inspection, reassembly and adjustment.
   (6) Always replace gaskets, packing, O-rings, self-locking nuts and cotterpins with new ones whenever they are disassembled.
   (7) Use genuine Toyota parts for replacement.
   (8) Use specified bolts and nuts and observe the specified tightening torque when reassembling. (Tighten to the medium value of the specified tightening torque range.) If no tightening torque is specified, use the value given in the "standard tightening torque table".
3. Defect status check
   Do not start disassembly and/or replacement immediately, but first check that disassembly and/or replacement is necessary for the defect.
4. Waste fluid disposal
   Always use a proper container to collect draining waste fluid from the vehicle.
   Careless discharge of oil, fuel, coolant, oil filter, battery or other harmful substance may adversely affect human health and the environment. Always collect and sort them well, and ask specialized companies for appropriate disposal.

https://truckmanualshub.com/

JACKING UP

When jacking up the vehicle, always observe the following instructions.

- When the fork is loaded, unload it and park the vehicle on a flat surface. Do not park on an inclined or rough ground.
- Use a jack with ample capacity and jack up the vehicle at the specified jack-up point. Jacking up at any other point is dangerous.
- Always support the load of jacked-up vehicle with wooden blocks at specified points. Supporting the vehicle only with the jack is very dangerous.
- Never, under any circumstances, put any part of the body (including hands and feet) under the jacked-up vehicle.

Reference weight

kg (lb)

Vehicle model		50-4FD100	50-4FD115	50-4FD120	50-4FD135	50-4FDK150	50-4FDK160
Vehicle overall weight		13570 (29916)	14650 (32297)	15120 (33334)	16040 (35362)	18070 (39837)	18630 (41072)
Front axle load	W/mast ASSY	6860 (15124)	6970 (15366)	6950 (15322)	7750 (17086)	8630 (19026)	8580 (18915)
Rear wheel load	W/mast ASSY	6710 (14793)	7680 (16931)	8170 (18012)	8290 (18276)	9440 (20811)	10050 (22156)

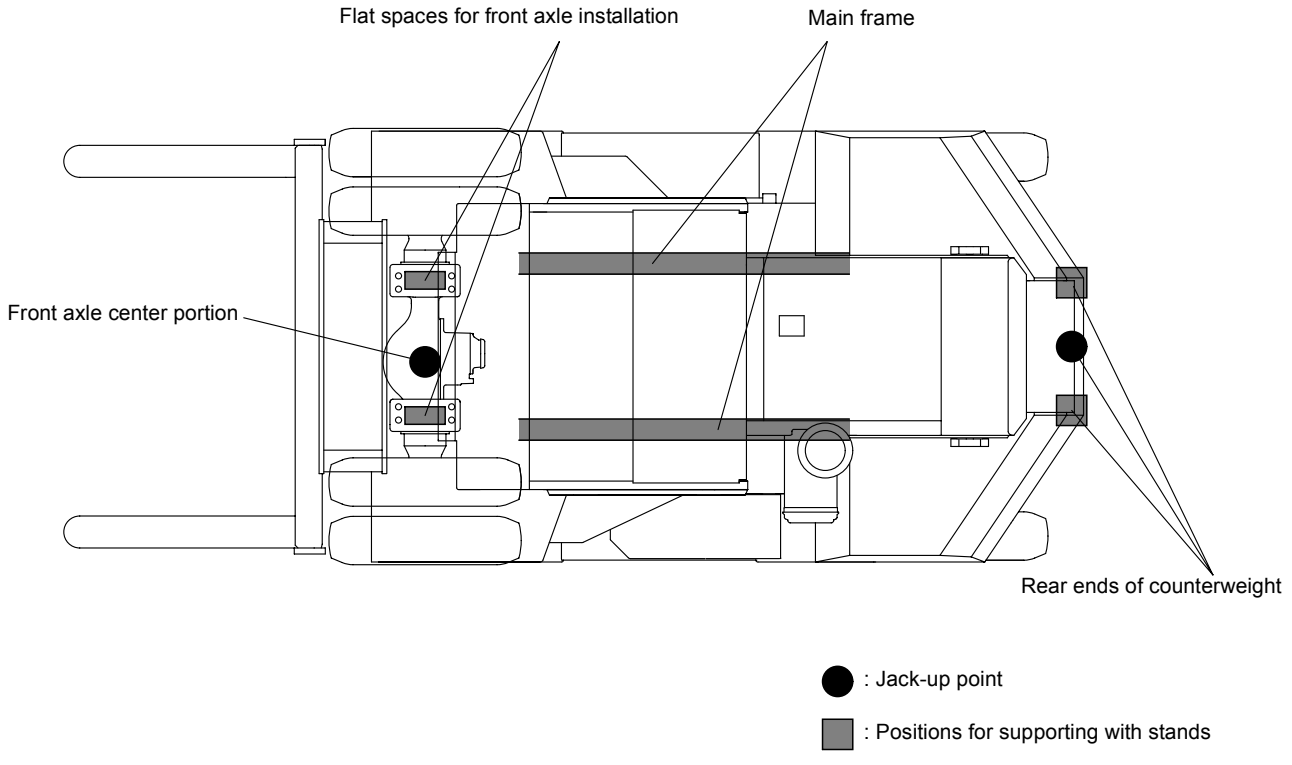

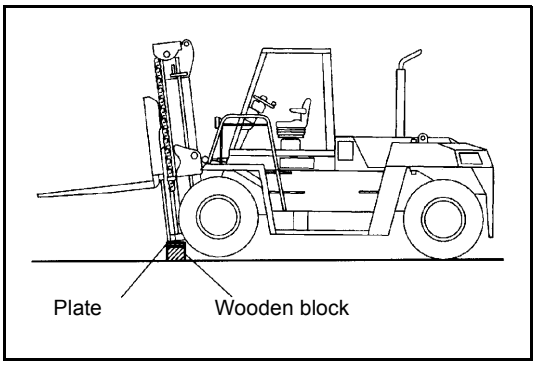

When the mast ASSY is installed on the vehicle, it is also possible to jack up the front side of the vehicle as follows:

1. Lift the lift bracket to a height not obstructing operation.
2. Place wooden blocks and a plate under the outer mast.
3. Tilt the mast forward to raise the front of the vehicle.
4. Support the flat spaces of the front axle mounting portion with stands.

HOISTING THE VEHICLE

Always hoist the vehicle as specified in the specified position. Never hoist by any other attachment section as it is very dangerous.

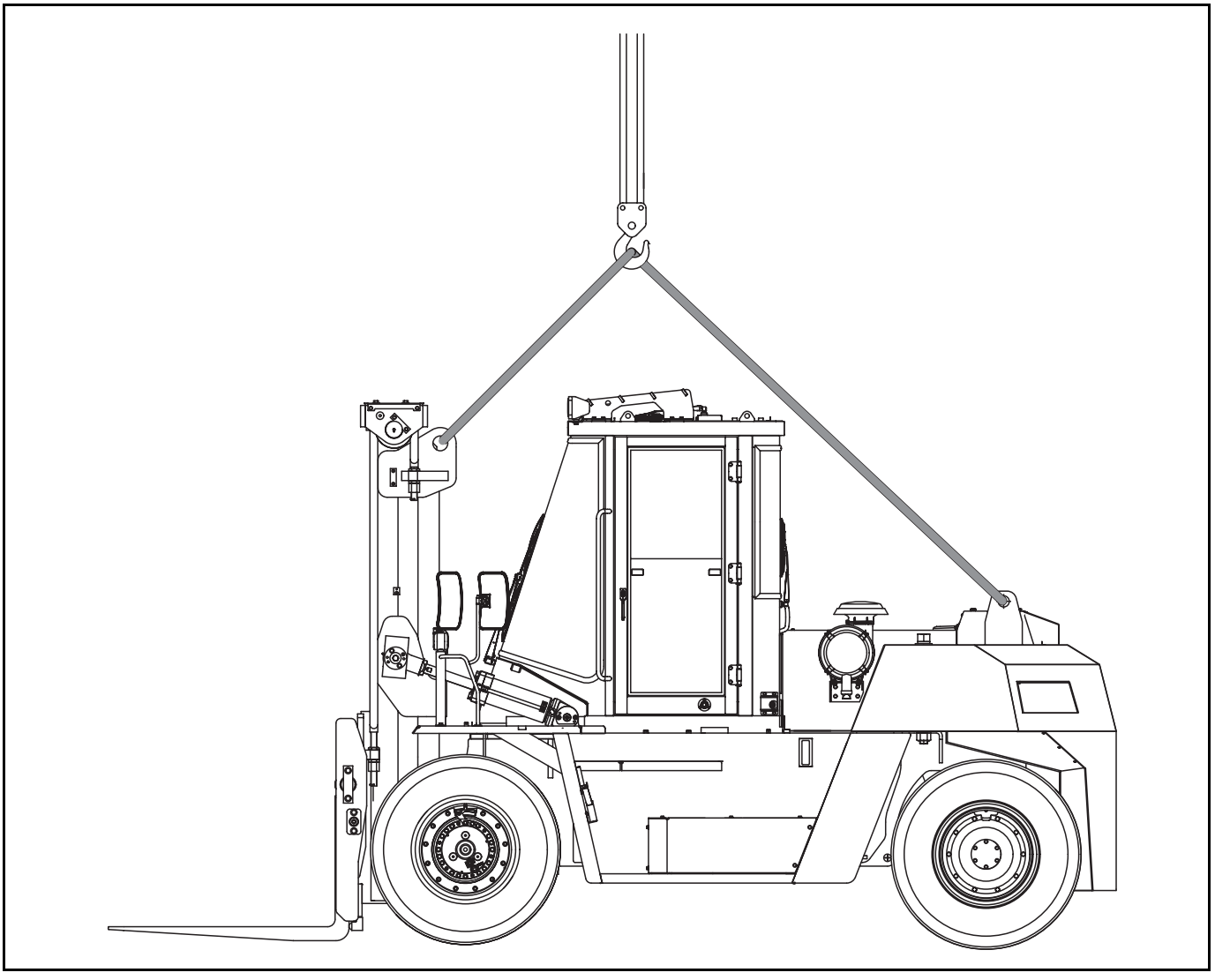

Caution:
Hoist the vehicle only for loading/unloading at the time of vehicle shipment. Do not hoist the vehicle while ordinary servicing jobs.

https://truckmanualshub.com/

WIRE ROPE SUSPENSION ANGLE LIST

Lifting angle	Tension	Com-pression	Suspension method	Lifting angle	Tension	Com-pression	Suspension method
0°	1.00 time	0 time	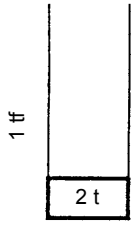	90°	1.41 time	1.00 time	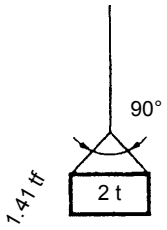
30°	1.04 time	0.27 time	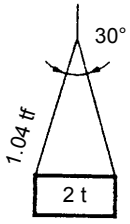	120°	2.00 time	1.73 time	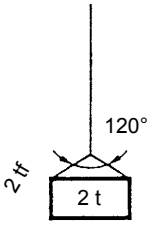
60°	1.16 time	0.58 time	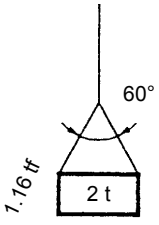				

SAFE LOAD FOR EACH WIRE ROPE SUSPENSION ANGLE

Unit: N (tf) [lbf]

Rope diameter	Cutting load	Single-rope suspension	Two-rope suspension				Four-rope suspension			
		0°	0°	30°	60°	90°	0°	30°	60°	90°
6 mm (0.24 in)	21380 (2.18) [4807]	3040 (0.31) [683.6]	6080 (0.62) [1367]	5880 (0.6) [1323]	5200 (0.53) [1169]	4310 (0.44) [970]	12160 (1.24) [2734]	11770 (1.2) [2646]	10400 (1.06) [2337]	8630 (0.88) [1940]
8 mm (0.32 in)	31480 (3.21) [7078]	4410 (0.45) [992.3]	8830 (0.9) [1985]	8530 (0.87) [1918]	7650 (0.78) [1720]	6280 (0.64) [1411]	17650 (1.8) [3969]	17060 (1.74) [3937]	15300 (1.56) [3440]	12550 (1.28) [2322]
10 mm (0.4 in)	49230 (5.02) [11.69]	6960 (0.71) [1565.6]	14020 (1.43) [3153]	13440 (1.37) [3021]	11770 (1.2) [2646]	9810 (1.0) [2205]	27460 (2.8) [6174]	26480 (2.7) [5954]	23540 (2.4) [5292]	19610 (2.0) [4410]
12.5 mm (0.5 in)	76880 (7.84) [17387]	10980 (1.12) [2469.5]	21570 (2.2) [4851]	21280 (2.1) [4631]	18630 (1.9) [4190]	14710 (1.5) [3308]	43150 (4.4) [9702]	41190 (4.2) [9261]	37270 (3.8) [8379]	29420 (3.0) [6615]
14 mm (0.56 in)	96400 (9.83) [21675]	13730 (1.4) [3087]	27460 (2.8) [6174]	26480 (2.7) [5954]	23540 (2.4) [5292]	18630 (1.9) [4190]	54920 (5.6) [12348]	52960 (5.4) [11907]	47070 (4.8) [10584]	37270 (3.8) [8379]

MEMBER WEIGHTS

Vehicle weight

kg (lb)

Specifications	Weight					
	50-4FD100	50-4FD115	50-4FD120	50-4FD135	50-4FDK150	50-4FDK160
Headguard Mast V mast, lifting height: 3000 Fork length: 1220 mm Attachment A31	13420 (29585)	14500 (32000)	14970 (33000)	15890 (35030)	17920 (39510)	18480 (40740)

Weight increase when the attachment is installed

kg (lb)

Attachment type	Weight					
	50-4FD100	50-4FD115	50-4FD120	50-4FD135	50-4FDK150	50-4FDK160
A35	110 (243)	150 (331)	150 (331)	160 (353)	100 (220)	100 (220)
E3	490 (1080)	530 (1168)	530 (1168)	590 (1300)	450 (992)	450 (992)
E3A35	530 (1168)	560 (1235)	560 (1235)	620 (1367)	480 (1058)	480 (1058)

Weight increase when the cabin air conditioner is installed: 230 kg

https://truckmanualshub.com/

Mast weight (including lift bracket and excluding the fork)

kg (lb)

Mast type	Lifting height mm (in)	Mast ASSY weight					
		50-4FD100	50-4FD115	50-4FD120	50-4FD135	50-4FDK150	50-4FDK160
V	3000 (118)	2560 (5644)	2650 (5842)	2650 (5842)	2920 (6437)	3730 (8223)	3730 (8223)
	3300 (130)	2620 (5776)	2720 (5997)	2720 (5997)	3000 (6614)	3830 (8444)	3830 (8444)
	3500 (138)	2660 (5864)	2770 (6107)	2770 (6107)	3060 (6746)	3900 (8598)	3900 (8598)
	3700 (146)	2700 (5952)	2820 (6217)	2820 (6217)	3100 (6834)	3940 (8686)	3940 (8686)
	4000 (157)	2760 (6085)	2890 (6371)	2890 (6371)	3200 (7055)	4130 (9105)	4130 (9105)
	4500 (177)	2930 (6459)	3070 (6768)	3070 (6768)	3360 (7407)	4280 (9436)	4280 (9436)
	5000 (197)	3050 (6724)	3240 (7143)	3240 (7143)	3570 (7870)	4540 (10009)	4540 (10009)
	5500 (217)	3160 (6967)	3380 (7452)	3380 (7452)	3720 (8201)	4690 (10340)	4690 (10340)
	6000 (236)	3230 (7121)	3500 (7716)	3500 (7716)	3850 (8488)	4830 (10648)	4830 (10648)
FV	3000 (118)	2610 (5754)	- -	- -	- -	- -	- -
	3500 (138)	2730 (6019)	- -	- -	- -	- -	- -
	4000 (157)	2850 (6283)	- -	- -	- -	- -	- -
	4500 (177)	2990 (6592)	- -	- -	- -	- -	- -
	5000 (197)	3180 (7011)	- -	- -	- -	- -	- -
FSV	4000 (157)	3080 (6790)	3550 (7826)	3550 (7826)	3810 (8400)	- -	- -
	5000 (197)	3310 (7297)	3800 (8377)	3800 (8377)	4080 (8995)	- -	- -
	6000 (236)	3710 (8179)	4220 (9303)	4220 (9303)	4520 (9965)	- -	- -

https://truckmanualshub.com/

Fork weight

kg (lb)

Fork length mm (in)	Weight (for 2 forks)					
	50-4FD100	50-4FD115	50-4FD120	50-4FD135	50-4FDK150	50-4FDK160
1220 (48.0)	370 (816)	410 (904)	410 (904)	470 (1036)	470 (1036)	520 (1146)
1370 (53.9)	390 (860)	430 (948)	430 (948)	500 (1102)	500 (1102)	550 (1213)
1520 (59.8)	410 (904)	450 (992)	450 (992)	520 (1146)	520 (1146)	580 (1279)
1670 (65.7)	430 (948)	470 (1036)	470 (1036)	550 (1213)	550 (1213)	610 (1345)
1820 (71.7)	450 (992)	500 (1102)	500 (1102)	570 (1257)	570 (1257)	630 (1389)
2440 (96.1)	600 (1323)	670 (1477)	670 (1477)	730 (1609)	730 (1609)	810 (1786)

Member weights

kg (lb)

Member name	Weight					
	50-4FD100	50-4FD115	50-4FD120	50-4FD135	50-4FDK150	50-4FDK160
Engine ASSY	520 (1146)	←	←	←	←	←
Torque converter & transmission ASSY	455 (1000)	←	←	←	←	←
Front axle	1075 (2370)	←	←	←	←	←
Counterweight	3860 (8510)	4720 (10405)	5180 (11420)	5420 (11950)	6640 (14640)	7080 (15610)
Cabin ASSY	550 (1212)	←	←	←	←	←
Rear axle ASSY	710 (1565)	←	←	←	←	←
Tilt Cylinder	40 (88)	←	←	←	←	←
Lift Cylinder	90 (198)	←	←	←	←	←
Oil pump	35 (77)	←	←	←	←	←
Oil control valve	75 (165)	←	←	←	←	←

https://truckmanualshub.com/

ELECTRICAL PARTS INSPECTION

1. Always disconnect the battery plug before inspecting or servicing electrical parts.
2. Pay sufficient attention when handling electronic parts.

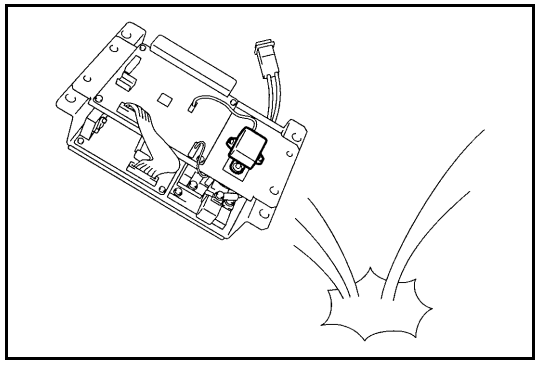

(1) Never subject electronic parts, such as computers and relays, to impact.
(2) Never expose electronic parts to high temperature or moisture.
(3) Do not touch connector terminals, as they may be deformed or damaged due to static electricity.

3. Use a circuit tester that matches the object and purpose of measurement.

Analog type: This type is convenient for observing movement during operation and the operating condition. The measured value is only for reference or guideline.

Digital type: A fairly accurate reading is possible. However, it is difficult to observe operation or movement.

1 Difference between results of measurement with analog and digital types
* The results of measurements using the analog type and the digital type may be different. Use the circuit tester according to its instruction manual.
Differences between the polarities of the analog type and the digital type are described below.

(1) Analog circuit tester

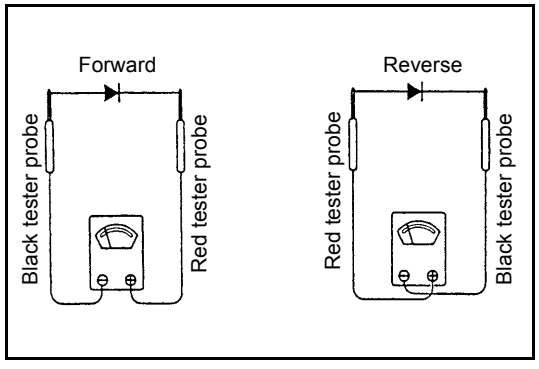

Example of measurement result
Tester range: kΩ range

Forward direction: Continuity 11 kΩ
Reverse direction: No continuity ∞

(2) Digital circuit tester

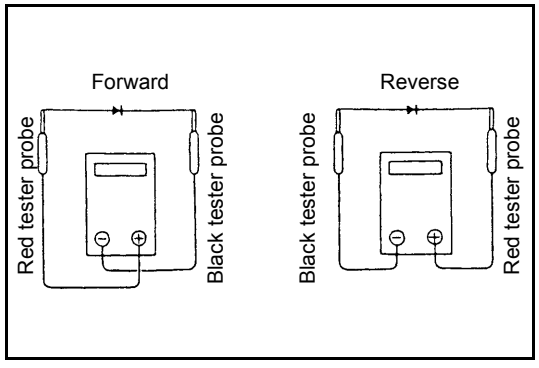

Example of measurement result
Tester range: 2 MΩ

Forward direction: Continuity 2 MΩ
Reverse direction: No continuity

https://truckmanualshub.com/

BOLT & NUT TIGHTENING TORQUE

Standard bolt & nut tightening torque
Tightening torques of standard bolts and nuts are not indicated throughout the manual.
Use the charts and table below to judge the standard tightening torque.

1. Judge the tightening torque for the hexagon head bolt, welded bolt or stud bolt having the standard bearing surface according to the tightening torque table by identifying the bolt strength class from the table below.
2. Judge the tightening torque for the hexagon flange bolt based on the threading diameter.
3. The nut tightening torque can be judged from its corresponding bolt type.

BOLT STRENGTH CLASS IDENTIFICATION METHOD AND TIGHTENING TORQUE

Identification by actual part

Type	Shape and class	Class
Hexagon head bolt (standard)	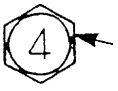 Number in relief or hallmark on the head	4 = 4T 5 = 5T 6 = 6T 7 = 7T 8 = 8T
	No mark	4T
	Bolt with two raised lines on head	5T
	Bolt with three raised lines on head	7T
	Bolt with four raised lines on head	8T
Welded bolt	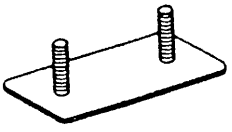	4T
Stud bolt	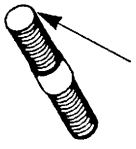 No mark	4T
	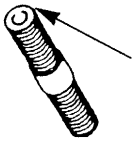 2 mm groove(s) on one/both edge(s)	6T

https://truckmanualshub.com/

Identification by part No.

Type	Part No.	Shape
Hexagon bolt	91611-40625 Nominal length Nominal diameter Class	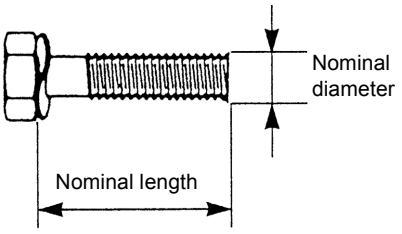
Stud bolt	92132-40614 Nominal length (mm) Nominal diameter Class	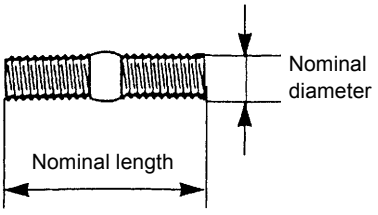

Tightening torque table

Class	Nominal diameter mm	Pitch mm	Standard tightening torque		
			N•m	kgf•cm	ft•lbf
4T	6	1.0	5.4	55	48 in•lbf
	8	1.25	13	130	9
	10	1.25	25	260	19
	12	1.25	47	480	35
	14	1.5	75	760	55
	16	1.5	113	1150	83
5T	6	1.0	6.5	65	56 in•lbf
	8	1.25	16	160	12
	10	1.25	32	330	24
	12	1.25	59	600	43
	14	1.5	91	930	67
	16	1.5	137	1400	101
6T	6	1.0	7.8	80	69 in•lbf
	8	1.25	19	195	14
	10	1.25	39	400	29
	12	1.25	72	730	53
	14	1.5	108	1100	80
	16	1.5	172	1750	127
7T	6	1.0	11	110	8
	8	1.25	25	260	19
	10	1.25	52	530	38
	12	1.25	95	970	70
	14	1.5	147	1500	108
	16	1.5	226	2300	166
8T	6	1.0	12	125	9
	8	1.25	29	300	22
	10	1.25	61	620	45
	12	1.25	108	1100	80
	14	1.5	172	1750	127
	16	1.5	265	2700	195

https://truckmanualshub.com/

HEXAGON FLANGE BOLT TIGHTENING TORQUE

Nominal diameter mm	Pitch mm	Standard tightening torque N•m (kgf•cm) [ft•lbf]	Remarks
5	0.8	7.5 (76.5) [5.5]	
			Built-in washer
6	1.0	12.5 (128) [9.2]	
		13 (133) [9.6]	Built-in washer
8	1.25	31 (316) [22.9]	
		30 (306) [22.1]	Built-in washer
10	1.25	64 (653) [47.2]	
		63 (643) [46.5]	Built-in washer
12	1.25	115 (1173) [84.9]	
		115 (1173) [84.9]	Built-in washer
14	1.5	180 (1837) [133]	
		180 (1837) [133]	Built-in washer
16	1.5	280 (2857) [207]	
		275 (2806) [203]	Built-in washer

PRECOATED BOLTS (BOLTS WITH SEAL LOCK AGENT COATING ON THREADS)

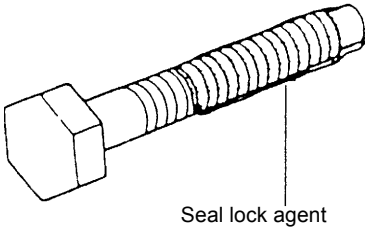

1. Do not use the precoat bolt as it is in either of the following cases:
   (1) After it has been removed.
   (2) When it has been moved by tightness check, etc. (Loosened or tightened.)

Note:
For torque check, tighten the bolt at the lower limit of the allowable tightening torque range; if the bolt moves, retighten it according to the steps below.

2. How to reuse precoated bolts
   (1) Wash the bolt and threaded hole.
   (The threaded hole must be washed even when replacing the bolt with a new one.)
   (2) Completely dry the washed parts by blowing with air.
   (3) Apply the specified seal lock agent on the bolt threaded portion.

https://truckmanualshub.com/

HIGH PRESSURE HOSE FITTING TIGHTENING TORQUE

1. When connecting a high pressure hose, wipe the hose fitting and corresponding nipple contact surfaces with a clean cloth to remove foreign matter and dirt. Also check that there are no dents or other damage on the contact surfaces before installation.
2. When installing a high-pressure hose, align the hose metal joint with the nipple and tighten the bolt so as to maintain alignment.
3. The maximum tightening torque must not exceed twice the standard tightening torque.

Nominal diameter of screw	Standard tightening torque N•m (kgf•cm) [ft•lbf]		Hose inside diameter mm (in)
	Standard	Tightening range	
7/16-20UNF	25 (250) [18.1]	24 to 26 (240 to 270) [17.4 to 19.5]	6 (0.24)
9/16-18UNF	49 (500) [36.2]	47 to 52 (480 to 530) [34.7 to 38.3]	9 (0.35)
3/4-16UNF	59 (600) [43.4]	56 to 62 (570 to 630) [41.2 to 45.6]	12 (0.47)
7/8-14UNF	59 (600) [43.4]	56 to 62 (570 to 630) [41.2 to 45.6]	12 (0.47), 15 (0.59)
1•1/16-12UNF	118 (1200) [86.8]	112 to 123 (1140 to 1250) [82.5 to 90.4]	19 (0.75)
1•5/16-12UNF	137 (1400) [101.3]	130 to 144 (1330 to 1470) [96.2 to 106.4]	25 (0.98)
PF1/4	25 (250) [18.1]	24 to 26 (240 to 270) [17.4 to 19.5]	6 (0.24)
PF3/8	49 (500) [36.2]	47 to 52 (480 to 530) [34.7 to 38.3]	9 (0.35)
PF1/2	59 (600) [43.4]	56 to 62 (570 to 630) [41.2 to 45.6]	12 (0.47)
PF3/4	118 (1200) [86.8]	112 to 123 (1140 to 1250) [82.5 to 90.4]	19 (0.75)
PF1	137 (1400) [101.3]	130 to 144 (1330 to 1470) [96.2 to 106.4]	25 (0.98)

RECOMMENDED LUBRICANT QUANTITY & TYPES

Applicable portion	STD	Russian specification	Quantity l (US gal)
Engine	Genuine Toyota diesel oil New special II	Apollo diesel oil CD (5W-30)	14.0 (3.7)
Engine coolant (excluding reservoir tank)	Genuine Toyota long life coolant (30% or 50%)	Genuine Toyota long life coolant (50%)	25.0 (6.6)
Radiator reservoir tank (FULL mark position)	Genuine Toyota long life coolant (30% or 50%)	Genuine Toyota long life coolant (50%)	1.5 (0.40)
Torque converter & transmission	Genuine Toyota auto fluid special	Castle auto fluid special W	30.0 (7.9)
Differential	Genuine Toyota hypoid gear oil (SAE90)	Castle hypoid gear oil W	18.0 (4.8)
Planetary gears (each of LH and RH)	Genuine Toyota hypoid gear oil (SAE90)	Castle hypoid gear oil W	1.7 (0.45)
Each chassis part	Genuine Toyota MP grease Genuine Toyota chassis grease special	Castle hypoid gear oil W	1.7 (0.45)
Brake fluid	Shell Donax TD (at factory shipment) Mobil fluid 424 Chevron 1000THF	Shell Donax TD (at factory shipment) Mobil fluid 424 Chevron 1000THF	0.5 (0.13)
Brake cooling oil	Shell Donax TD (at factory shipment) Mobil fluid 424 Chevron 1000THF	Shell Donax TD (at factory shipment) Mobil fluid 424 Chevron 1000THF	18 (4.8)
Hydraulic oil	Genuine Toyota hydraulic oil (ISOVG32)	Daphne super-hydro 28XT	146.0 (38.6) (10 to 12 ton) 155.0 (40.9) (13.5 to 16 ton)
Fuel tank	Gas oil (JIS No.2 or superior)	Gas oil (JIS No.2 or superior)	320.0 (84.5)

https://truckmanualshub.com/

LUBRICATION CHART

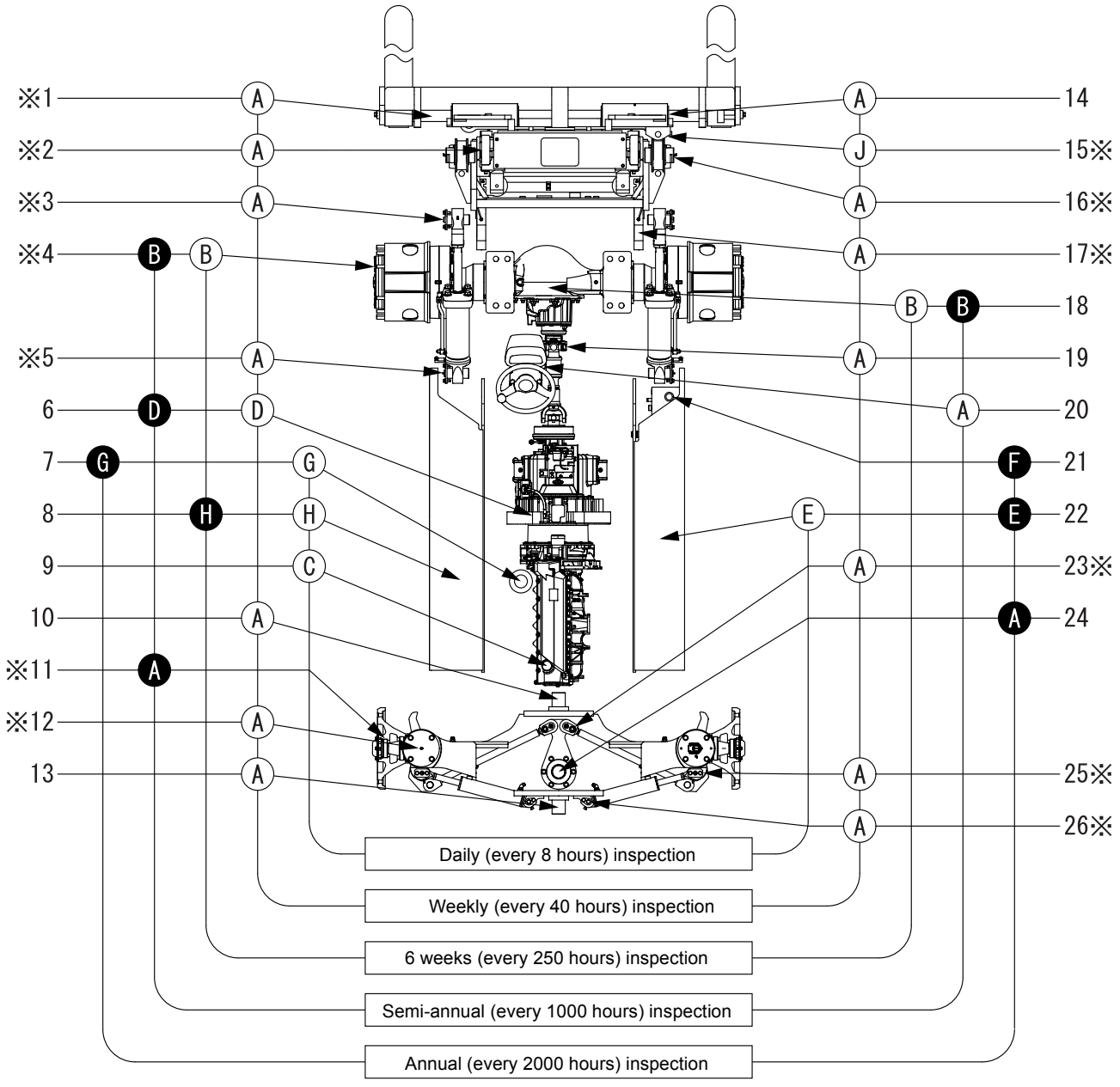

○: Inspection & addition
●: Replacement
*: Both LH and RH

A: Genuine Toyota MP grease (STD)
Castle hypoid gear oil W (Russian specification)
B: Genuine Toyota hypoid gear oil (SAE90, STD)
Castle hypoid gear oil W (Russia specification)
C: Genuine Toyota diesel oil new special II (STD)
Apollo diesel oil CD (5W-30, Russian specification)
D: Genuine Toyota auto fluid special (STD)
Castle auto fluid special W (Russian specification)
E: Genuine Toyota hydraulic oil (ISO VG32, STD)
Daphne super hydro 28 XT (Russian specification)
F: Shell Donax TD (SAE10W, SAE20W, SAE10W-30)
G: Genuine Toyota brake fluid 2500H
H: Gas oil (JIS No. 2 or equivalent)
J: FGeneral lubricating oil (SAE30 to 90)

1. Lift bracket shaft
2. Lift roller pin
   Side roller pin
3. Tilt cylinder front pin
4. Planetary gear
5. Tilt cylinder rear pin
6. Torque converter case
7. Brake fluid reservoir tank
8. Fuel tank
9. Engine
10. Rear axle beam front pin
11. Rear wheel bearing
12. Steering knuckle
13. Rear axle beam rear pin
14. Side shift cylinder
15. Chain
16. Chain wheel pin
17. Mast support bushing
18. Differential gear
19. Propeller shaft
20. Tilt steering lock device
21. Brake cooling oil tank
22. Oil tank
23. Tie rod pin
24. Bell crank pin
25. Rear axle cylinder rod end pin
26. Rear axle cylinder end pin

PERIODIC MAINTENANCE

INSPECTION METHOD

I: Inspection, repair or replacement if required
M: Measurement, repair or adjustment if required
T: Retightening C: Cleaning L: Lubrication
*: For new vehicle *1: Flaw detector

Item \ Inspection Period		Every 6 weeks / Every 250 hours	Every 3 months / Every 500 hours	Every 6 months / Every 1000 hours	Every 12 months / Every 2000 hours
STEERING SYSTEM					
Steering wheel	Play, loosening and looseness	I	←	←	←
	Function	I	←	←	←
Steering valve	Oil leak	I	←	←	←
	Loosened mounting	T	←	←	←
Tie rod and bell crank	Looseness, loosening and damage	T	←	←	←
Steering knuckle	Kingpin looseness	T	←	←	←
	Cracks and deformation				I
Power steering	Oil leak	I	←	←	←
	Loosened mounting	T	←	←	←
	Power steering hose replacement				I
	Power steering rubber parts replacement				I
Steering synchro-nizer	Function	I	←	←	←
	Loosened or damaged sensor mounting	I	←	←	←
	Functional parts damage and deformation	I	←	←	←
	Loosened of damaged wire harness	I	←	←	←
BRAKE SYSTEM					
Brake valve	Brake valve function	I	←	←	←
	Braking performance	I	←	←	←
	Uneven braking	M	←	←	←
	Valve air leak				I
	Valve rubber parts replacement				I
Parking brake switch	Switch function	I	←	←	←
	Braking performance	I	←	←	←
Brake hose and pipe	Leak, crack and mounting state	I	←	←	←
	Loosened joint or clamp	I	←	←	←
	Brake fluid reservoir hose replacement				I
Air cham-ber and magnetic valve	Function, wear and damage				I
	Air chamber rubber parts replacement				I

https://truckmanualshub.com/

Item	Inspection Period	Every 6 weeks / Every 250 hours	Every 3 months / Every 500 hours	Every 6 months / Every 1000 hours	Every 12 months / Every 2000 hours
STEERING SYNCHRONIZER					
Air compressor and air tank	Air cleaner clogging	I	←	←	←
	Water draining from air tank	I	←	←	←
	Compressor hose replacement				I
	Rubber parts replacement				I
	Check valve air tightness				I
	Air tank safety valve function				I
	Air compressor regulator function	I	←	←	←
	Air tank damage and deformation				I
Brake fluid reservoir tank	Leak and fluid level	I	←	←	←
Air master	Function, wear and damage				I
	Air leak and oil leak				I
	Air master rubber parts replacement				I
	Brake fluid replacement				I
Disc brake	Function, wear and damage				I
	Oil leak				I
	Disc wear				I
	Loosened mounting				T
Center brake drum and lining	Loosened drum mounting		T	←	←
	Clearance between drum and lining	I	←	←	←
	Lining wear				I
	Drum wear and damage				I
Brake cooler	Oil leak			I	←
	Damage and deformation			I	←
	Loosened mounting			T	←
DRIVE UNIT					
Front axle	Damage and deformation				I
Rear axle	Damage and deformation				I
Wheel	Tire pressure	I	←	←	←
	Tire cracks and damage	I	←	←	←
	Abnormal tire wear	I	←	←	←
	Tire tread depth	I	←	←	←
	Metal piece, stone and other foreign matter on tire	I	←	←	←
	Rim side ring and disc wheel damage	I	←	←	←
	Rear wheel bearing looseness	I	←	←	←
	Abnormal sound from rear wheel bearing	I	←	←	←
	Rear wheel bearing grease replacement				I

Item	Inspection Period	Every 6 weeks / Every 250 hours	Every 3 months / Every 500 hours	Every 6 months / Every 1000 hours	Every 12 months / Every 2000 hours
POWER TRANSMISSION SYSTEM					
Transmission & torque converter	Oil leak and oil level	I	←	←	←
	Control valve and clutch functions	I	←	←	←
	Inching valve function	I	←	←	←
	Torque converter stall inspection and hydraulic pressure measurement			T	←
	Torque converter oil replacement				I
	Torque converter oil filter replacement				I
	Torque converter rubber hose replacement				I
Propeller shaft and drive shaft	Loosened joint		T	←	←
	Looseness at spline portion				I
	Looseness at universal joint				I
	Propeller shaft runout				I
	Axle shaft twist and crack		I	←	←
Differential	Oil leak and oil level		I	←	←
	Differential oil replacement				I
	Bolts and nuts looseness				I
Planetary gear	Oil leak and oil level	I	←	←	←
	Planetary gear oil replacement				I
ELECTRICAL SYSTEM					
Battery	Fluid level	I	←	←	←
	Fluid specific gravity		I	←	←
	Terminal connection state		I	←	←
Electrical wiring	Loosened or damaged connection	I	←	←	←
	Wire harness damage and clamp loosening	I	←	←	←
	Fuses	I	←	←	←
Starting motor	Pinion gear meshing state	I	←	←	←
Charger	Charging function	I	←	←	←
Preheater	Glow plug function			I	←
MATERIAL HANDLING SYSTEM					
Fork	Fork deformation and wear	I	←	←	←
	Fork root and tooth weld crack and wear	I	←	←	←
	Fork shifter damage and wear	I	←	←	←
Mast and lift bracket	Deformed or damaged part and crack at welded portion	I	←	←	←
	Roller bearing looseness	I	←	←	←
	Mast and lift bracket looseness	I	←	←	←
	Mast support bushing wear and damage				I
	Roller and roller pin looseness and damage				I
	Chain greasing condition	I	←	←	←
	Chain deformation, damage and rusting	I	←	←	←

https://truckmanualshub.com/

Item	Inspection Period	Every 6 weeks / Every 250 hours	Every 3 months / Every 500 hours	Every 6 months / Every 1000 hours	Every 12 months / Every 2000 hours
MATERIAL HANDLING SYSTEM					
Mast and lift bracket	Chain tension	I	←	←	←
	Chain anchor bolt abnormality	I	←	←	←
	Chain wheel deformation and damage	I	←	←	←
	Chain wheel bearing looseness	T	←	←	←
Various attach-ments	Abnormality and mounting condition of each part	I	←	←	←
HYDRAULIC SYSTEM					
Cylinders (lift and tilt)	Rod, rod screw and rod end loosening, defor-mation and damage	T	←	←	←
	Cylinder operation	I	←	←	←
	Natural drop and natural forward tilt	I	←	←	←
	Oil leak and damage	I	←	←	←
	Pin and cylinder bearing wear and damage	I	←	←	←
	Cylinder mounting loosening and damage	I	←	←	←
	Lifting speed	M	←	←	←
	Uneven movement	I	←	←	←
Oil pump	Oil leak and abnormal sound	I	←	←	←
	Drive gear wear	I	←	←	←
Hydraulic tank	Oil level and contamination	I	←	←	←
	Oil leak	I	←	←	←
	Tank and oil strainer cleaning			C	←
Control lever	Loose mounting	I	←	←	←
	Operation	I	←	←	←
Oil control valve	Oil leak	I	←	←	←
	Lift lock valve and tilt lock valve functions	I	←	←	←
	Relief pressure measurement				M
Hydraulic hose and piping	Oil leak, looseness, loosening, deformation and damage	T	←	←	←
	Hydraulic hose replacement	I	←	←	←
SAFETY DEVICE, ETC.					
Cabin	Deformation, crack and damage				I
	Crack at welded portion				I
	Deteriorated or cracked weather-strip and sili-cone bond				I
	Cabin mounting rubber deterioration and dam-age				I
Lighting system and direction indicator	Action	I	←	←	←
	Lighting or flashing status, fouling and damage	I	←	←	←

https://truckmanualshub.com/

Item	Inspection Period	Every 6 weeks / Every 250 hours	Every 3 months / Every 500 hours	Every 6 months / Every 1000 hours	Every 12 months / Every 2000 hours
SAFETY DEVICE, ETC.					
Horn	Sounding condition	I	←	←	←
	Action	I	←	←	←
Back-up buzzer	Sounding condition	I	←	←	←
	Action	I	←	←	←
Rearview mirror	Rear reflection on status	I	←	←	←
	Dirt and damage	I	←	←	←
Instruments	Action	I	←	←	←
Exhaust pipe and muffler	Muffler rubber mount	I	←	←	←
	Loosened or damaged mounting	I	←	←	←
Seat	Seatbelt condition	I	←	←	←
	Loosened or damaged mounting	I	←	←	←
	Seatbelt damage and function	I	←	←	←
Body	Damaged or cracked frame, and cross member, etc.				I
	Bolts and nuts looseness				T
Others	Chassis parts grease-up condition	L	←	←	←
	Steering link system and universal joint grease-up	L	←	←	←

https://truckmanualshub.com/

PERIODIC REPLACEMENT OF PARTS AND LUBRICANTS

: Replacement

Item \ Replacement cycle	Every 6 weeks	Every 3 months	Every 6 months	Every 12 months
	Every 250 hours	Every 500 hours	Every 1000 hours	Every 2000 hours
Engine oil	●	←	←	←
Engine oil filter	●※ 1	●	←	←
Engine coolant			←	← ●※ 4
Air cleaner element				●
Fuel filter			●	←
Fuel hose				●※ 5
Torque converter & transmission oil			●	←
Torque converter & transmission oil filter			●	←
Torque converter & transmission rubber hoses				●※ 5
Differential oil			●	←
Rear wheel bearing grease			●	←
Planetary gear oil			●	←
Power steering hose				●※ 5
Power steering rubber parts				●※ 5
Brake air circuit rubber parts (valve, air chamber, air master, etc.)				●
Air dryer element				●
Air compressor hose				●
Air compressor rubber parts				●
Brake cooling oil	●※ 2,3	●※ 2,3		●※ 5
Brake cooling oil filter	●※ 2			
Brake fluid reservoir hose				●※ 5
Hydraulic oil			●	←
Hydraulic oil filter	●※ 1			←
Hydraulic hose				●※ 5
Lift chain				●※ 6

※ 1:For new vehicl
※ 3:For brand new vehicles, replace in sooner period between two hundred hours or three months.
※ 3:When replacing the brake cooling oil, check and clean the suction filter at the same time.
※ 4:LLC every 2 years
※ 5:Every 2 years
※ 6:Every 3 years

https://truckmanualshub.com/

ENGINE

	Page
GENERAL	0-3
FEATURES	0-4
LUBRICATION SYSTEM	0-10
LUBRICATION SYSTEM DIAGRAM	0-11
COMPONENTS	0-12
FAN BELT ADJUSTMENT PROCEDURE	0-25
BLEEDING AIR FROM FUEL SYSTEM	0-26
ENGINE ASSY	0-27
REMOVAL•INSTALLATION	0-27
RADIATOR ASSY	0-30
REMOVAL•INSTALLATION	0-30
AIR CLEANER	0-31
AIR CLEANER CLEANING•INSPECTION	0-31
CLOGGING WARNING SYSTEM INSPECTION	0-32
BATTERY INSPECTION	0-33
ACTION UPON LIGHTNING OF COMBINATION METER	0-34
SST	0-35
CONNECTION	0-36
DIAGNOSIS CODE	0-37

https://truckmanualshub.com/

GENERAL

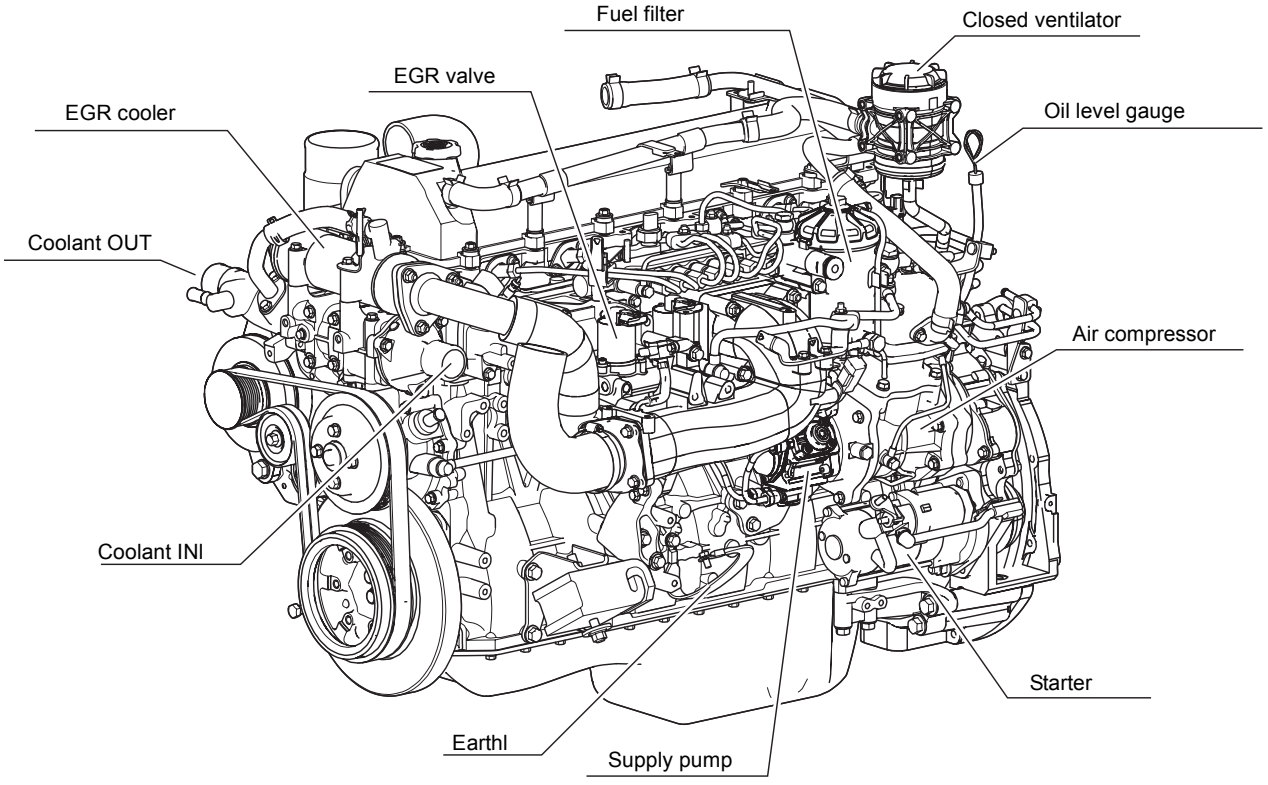

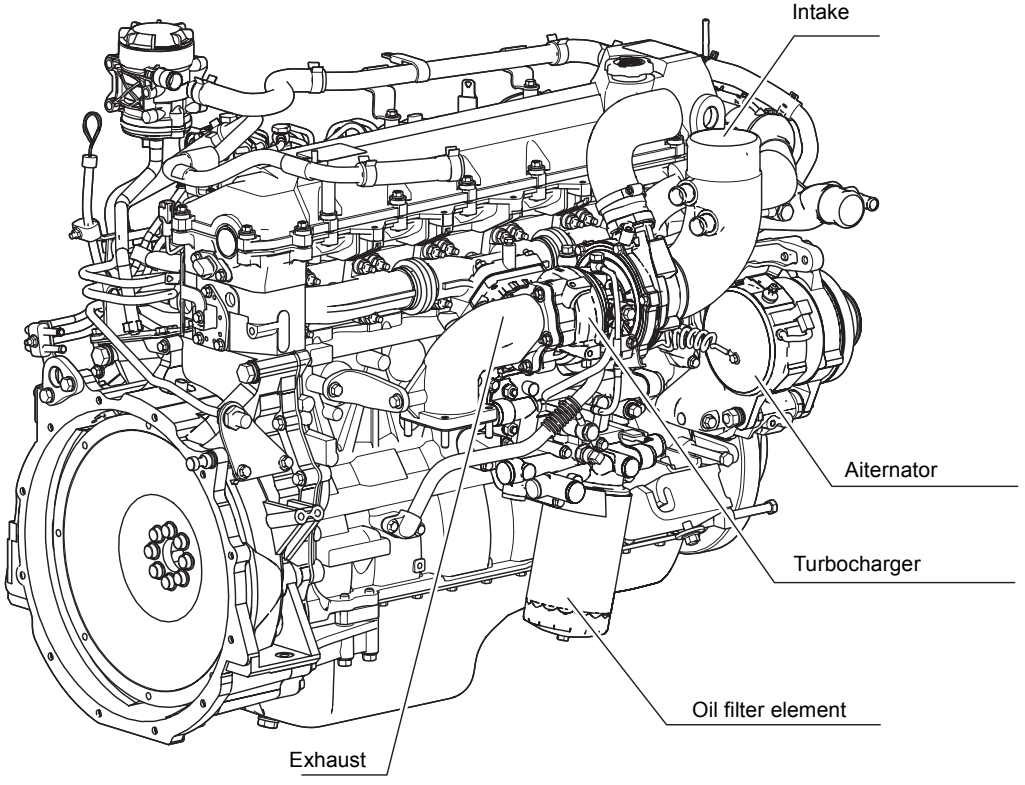

FEATURES

Engine mechanical (piston, piston pin and piston ring)

Structure

Piston and piston pin

- The heat-resistant aluminum alloy is used for the piston. The specially shaped combustion chamber is adopted in order to realize excellent combustion and fuel-efficiency.
- The outer shape of the piston is optimally profiled with taking a thermal expansion and piston oscillations into account.
- The skirt coating is adopted for the piston in order to reduce noises.
- Piston cooling jet system is used to cool down in order to maintain the appropriate temperature.
- The structure with a cooling cavity ensures reliability for high pressure.
- Insufficient jets due to deformed or improperly installed cooling jet cause defectiveness in cooling the piston, possibly ending up with malfunctions.
- The piston pin is made of case hardening steel, to which the full-floating type is applied, providing endurance for high-load.

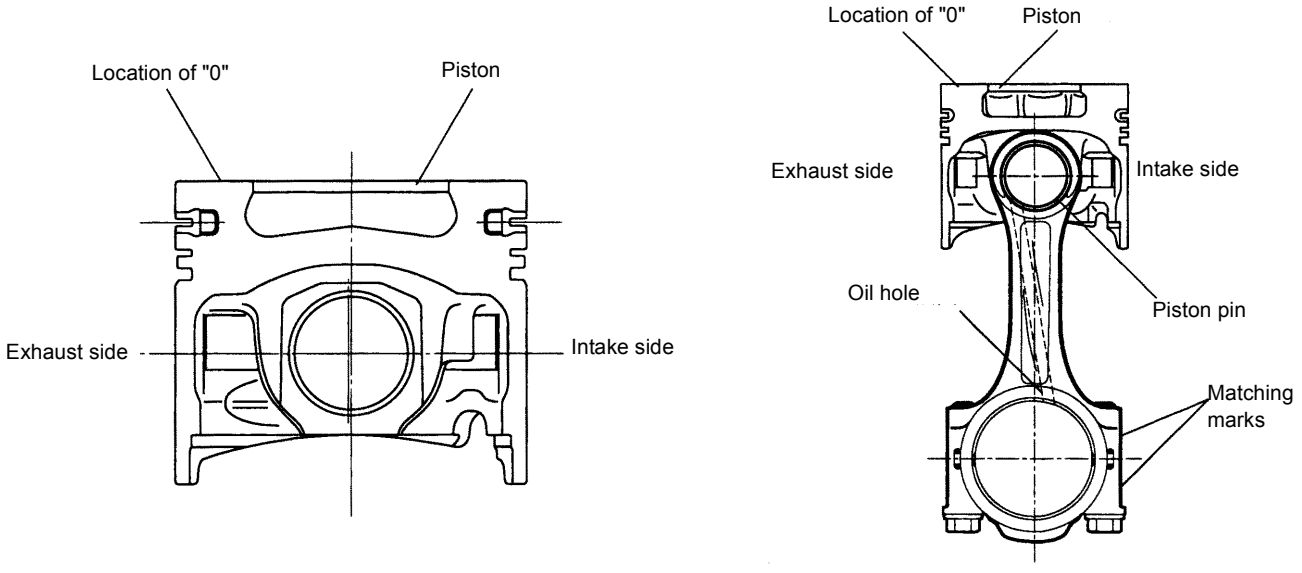

Piston and piston pin

https://truckmanualshub.com/

Engine mechanical (connecting rod and crank shaft)

Structure

Connecting rod

- The connecting rod is made of forged carbon steel. Its large end is horizontally split, which has advantages in rigidity. The bush made of lead bronze with the oil groove in the center is pressed in its small end.
- The connecting rod bolts are tightened by the plastic region tightening method.

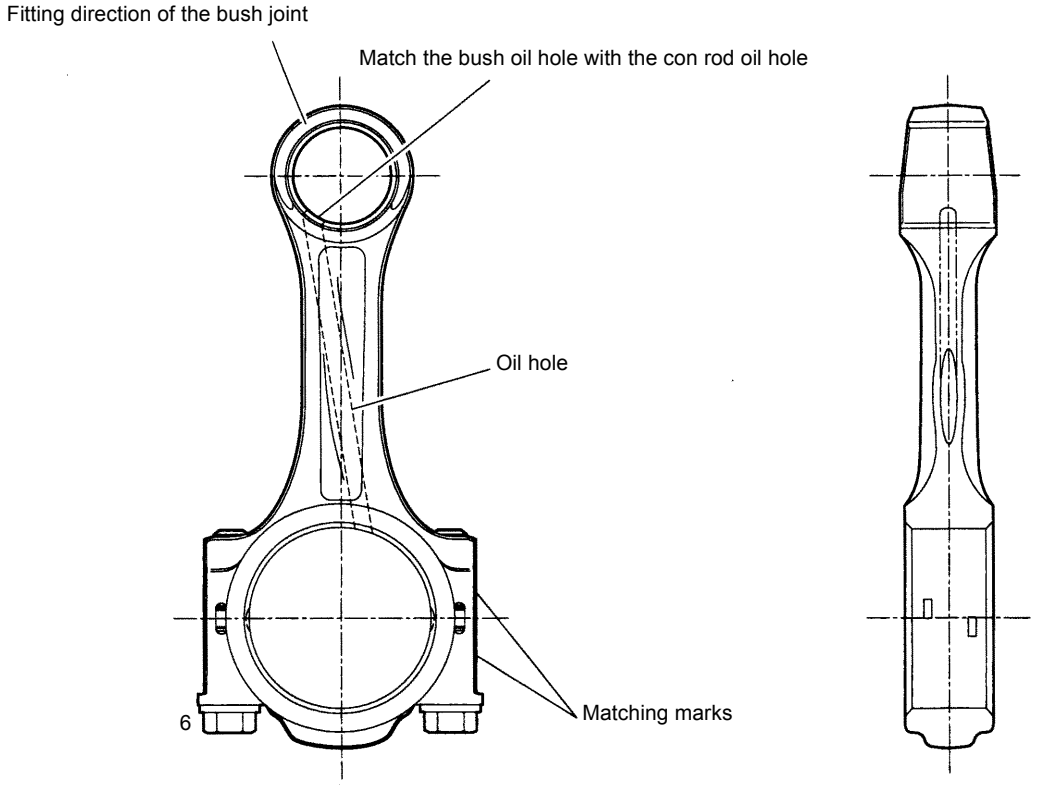

Connecting rod (Looking at from the front of the engine)

- As shown in the illustration, the plastic region tightening method is the way of tightening the bolts in the plastic region where the change in the axial tension against the extension of the bolt is few. This method has following characteristics.

Stable axial tension can be obtained: Because fluctuation in the axial tension is small comparing to elastic region tightening, the axial tension can be stabilized.
High axial tension can be obtained.
There is a limit in reuse: Because plastic elongation is added at every time of it is reused, the frequency of reuse is limited.
Refer to the J08E engine repair manual ( ) when reusing.

https://truckmanualshub.com/

Cam shaft

- The camshaft is manufactured by knockdown system. The cam lobe and the com journal are pressed in a hollow carbon steel tube. The cam lobe is welded.
- By adopting a special profile for the cam, together with improving inhalation efficiency, quiet operation can be expected.
- The valve lift is optimized and the intake-air volume is heightened in order to improve combustion efficiency.

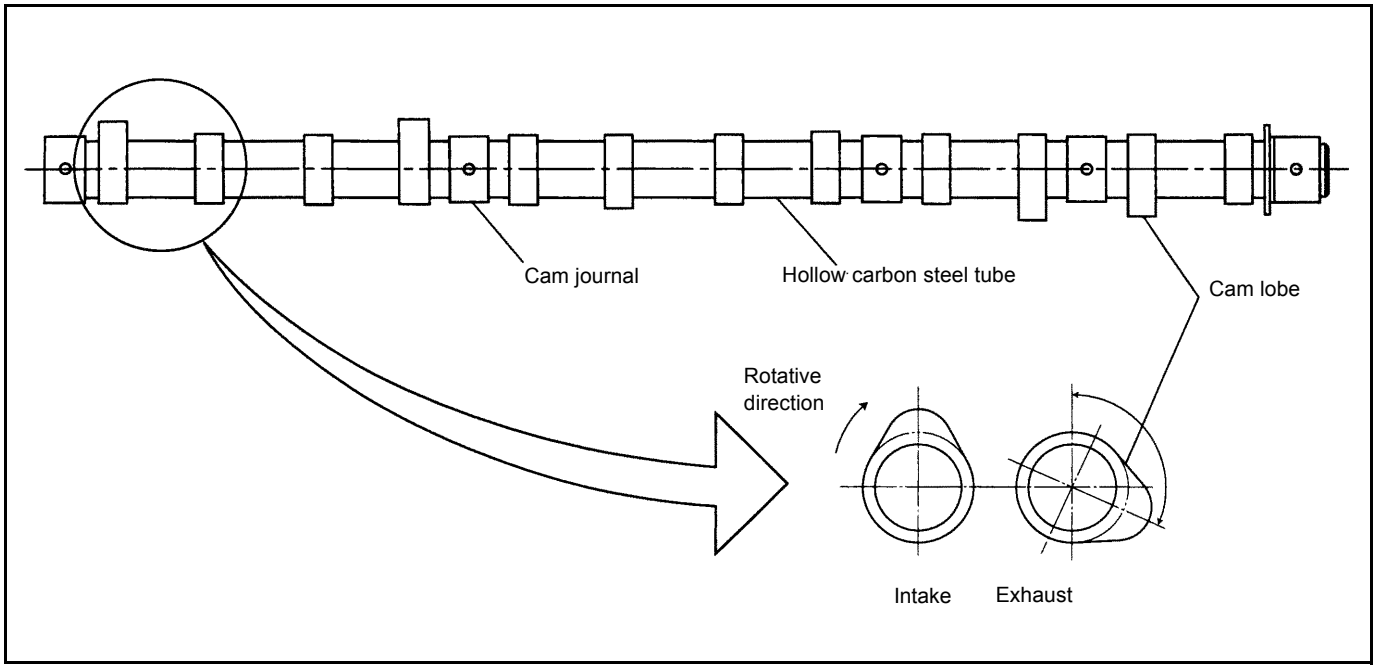

https://truckmanualshub.com/

SYSTEM BLOCK DIAGRAM

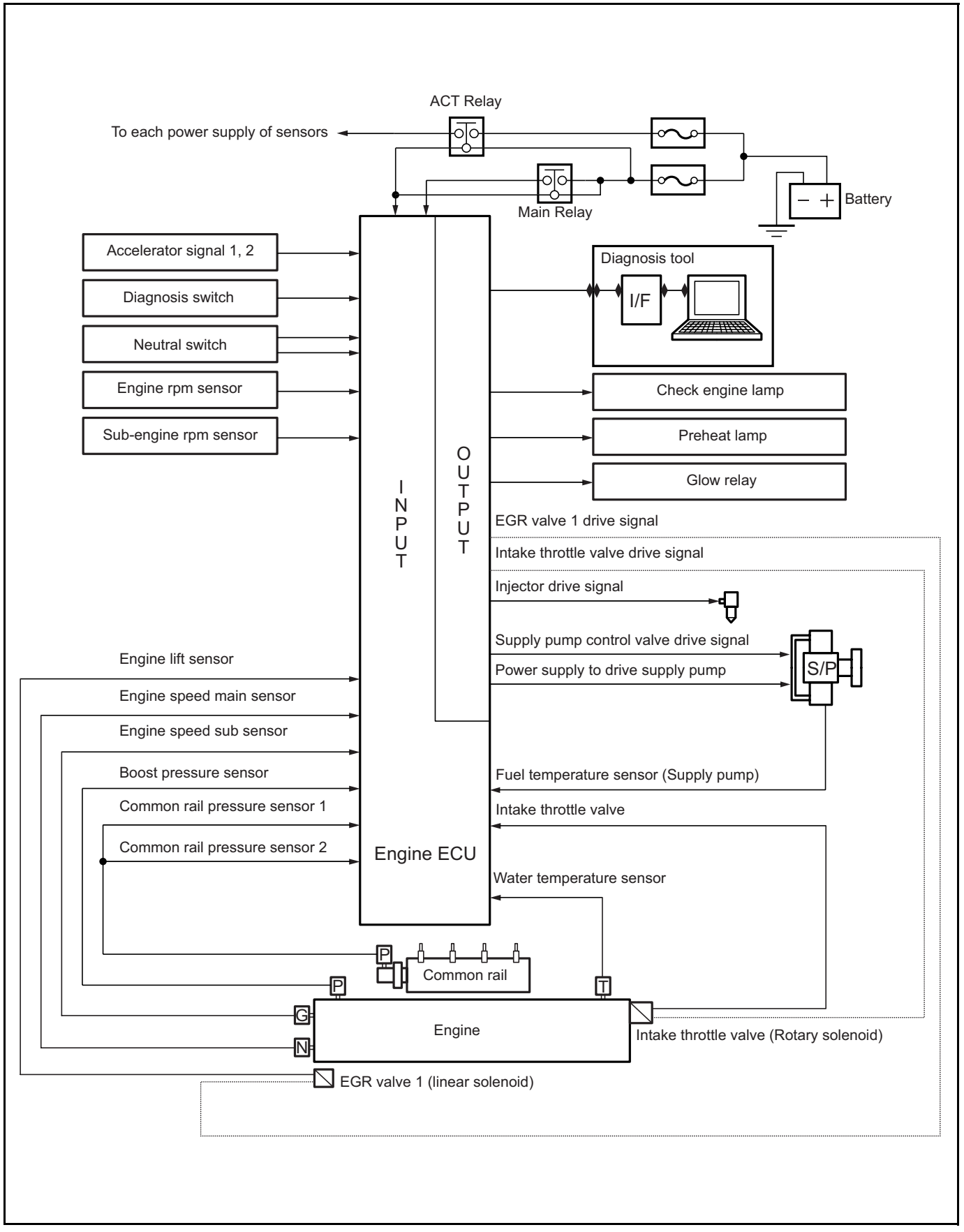

EGR valve

- To correspond to the automobile exhaust gas regulations of 2005, the computerized double-seated valve linear solenoid type of EGR valve was adopted.
- The computerized double-seated valve linear solenoid type of EGR valve was adopted in order to improve accuracy in adjustment and to reduce particulates and Nox altogether.
- By adopting the EGR valve lift sensor and giving feedback of the EGR valve opening degree to the engine ECU, EGR can be controlled optimally.

Operation of EGR valve

- In order to improve the performance of purifying the exhaust emission by EGR, feedback is controlled by the EGR valve opening degree to adjust the oxygen density in the intake-air that changes by EGR to the applicable target value for engine conditions (engine speed, supercharging pressure, temperatures of each section, load, intake-air volume).
- In order to expand the EGR area, the EGR volume is controlled by the valve opening degree with the lift sensor, based on the intake-air valve opening degree and the variable nozzle turbo opening degree that have been setup in advance.

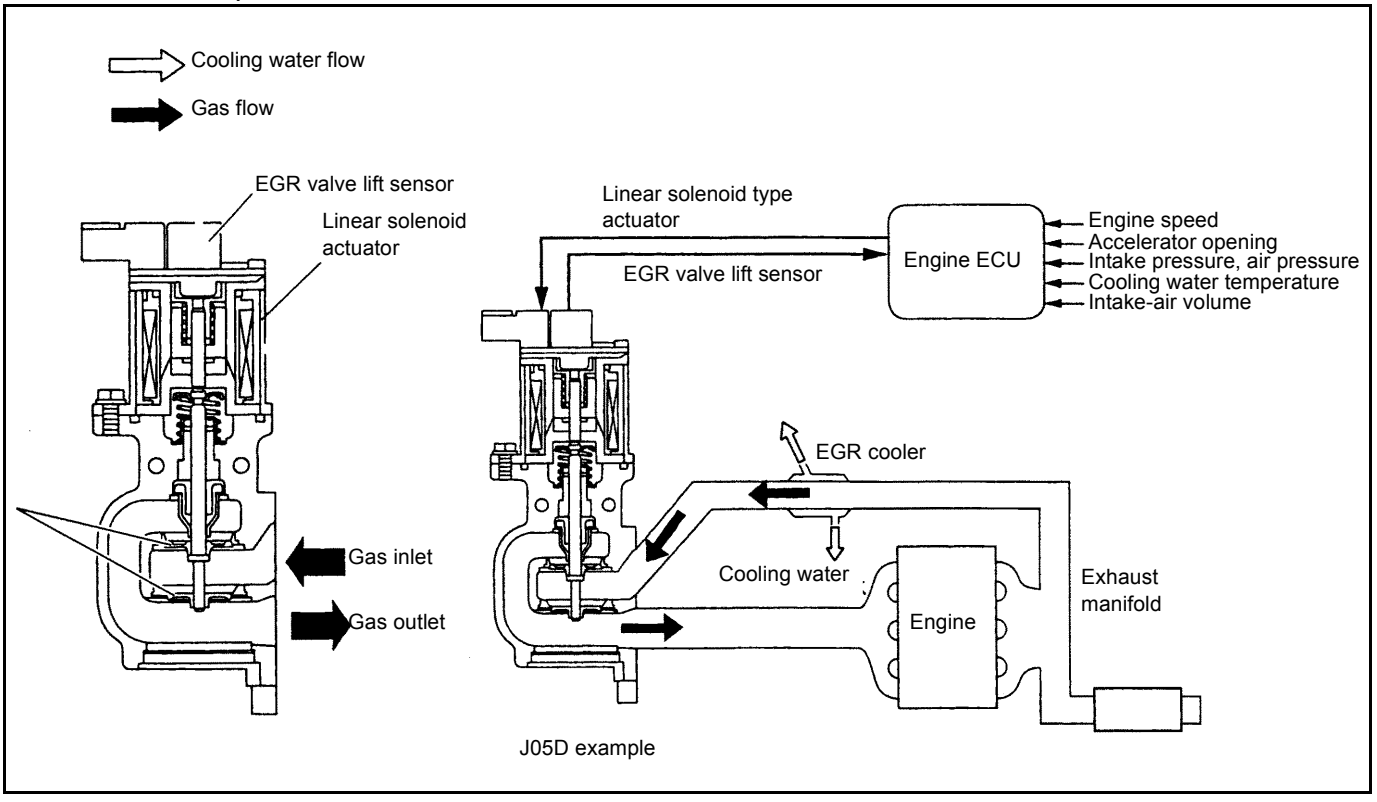

https://truckmanualshub.com/

Structure

- The flame-proof resin that is light and oil resistant is used for the main body of the closed ventilator. For the oil separate part, element-less type, which is maintenance-free, is adopted.
- To separate the oil mist in the blowby gas, there is a slewing part for the centrifugation and a filtering part for crash and separation inside. Also there is a PCV valve to adjust the inner pressure of the crankcase.
- On the body side, there are two ports. The upper port is for pumping out, linking to the intake-pipe, and the lower port is for intaking the blowby of the engine. Also on the under side of the body, there is a port to separate the oil mist included in the blowby gas and drain the liquefied oil.
- Concerning operation, when engine starts, negative pressure is generated in the intake-pipe, and the PCV valve sucks the blowby gas in the intake-pipe with adjusting the pressure inside the crankcase. At this time, the oil mist in the blowby gas is liquefied through centrifugation with slewing and crash and separation with filtering, and is returned to the oil pan.

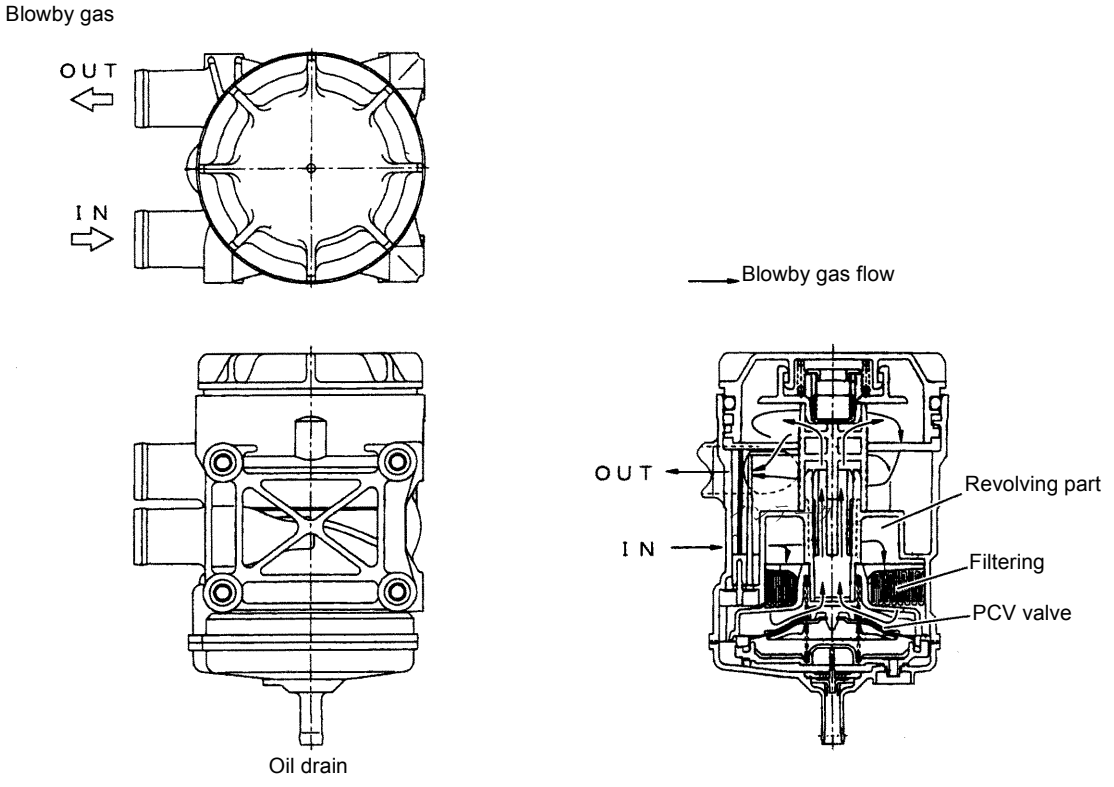

LUBRICATION SYSTEM

SPECIFICATION

Lubrication method	Pressure lubrication by gear pump
Oil filters	Paper filters for both full flow and bypass
Lubricating oil cooler	Water cooled multi plate type

GENERAL DESCRIPTION

- Oil in the oil pan is drawn up through a strainer by the oil pump housed at the rear end of the cylinder block and then lead into the oil cooler where it exchanges heat with cooling water. Then it is lead through the oil filter and fed into the main oil hole in the cylinder block.
- From the main oil hole, oil is distributed to crankshaft journals, cam shaft and the rocker arm shaft for lubrication.
- After lubricating each journal position (main bearing) of the crankshaft, the oil then proceeds through the oil hole in the crankshaft and reaches the pin section to lubricate the large end of the connecting rod.
- Meanwhile, some oil from journal positions on the crankshaft goes into a sub-oil hole and is directed to the piston cooling jet at each cylinder to cool down each piston.
- Lubrication of the air compressor and supply pump drive gear is provided by oil coming through an oil passage branching off from the line that leads to the sub-oil hole.
- Oil supplied to the camshaft passes through the oil hole in the camshaft and is distributed to each journal for lubrication.
- Oil supplied to the rocker arm shaft is distributed through the oil hole in the rocker arm shaft to each rocker arm bushing for lubrication, and then goes through the oil hole in each locker arm to lubricate rollers and roller pins.
- Lubrication of each idle gear is provided by oil passing through either the main oil hole or sub-oil hole.
- Pressure of the oil in the system is controlled by a regulator valve so that the standard maximum pressure of 530±40 kPa (5.4±0.4 kgf/cm^2) [76.8±5.7 psi] is maintained. When the temperature is low and oil pressure is high, the safety valve on the oil pump opens [valve opening pressure: 1646 kPa (16.8 kgf/cm^2) [239 psi]] and returns oil to the oil pan.
- Insufficient oil supply due to clogging in the oil cooler or oil filter is prevented by the safety valves [oil cooler side valve opening pressure: 392±40 kPa (4.0±0.4 kgf/cm^2) [57±5.7 psi], oil filter side valve opening presuure: 147±10 kPa (1.5±0.1 kgf/cm^2) [21±1.4 psi]].
- Pressure used by the oil pressure switch is taken from the secondary side of the oil filter, and each piston cooling jet is equipped with a check valve [injection pressure: 245 kPa (2.5 kgf/cm^2) [36 psi]] for appropriate cooling.

https://truckmanualshub.com/

LUBRICATION SYSTEM DIAGRAM

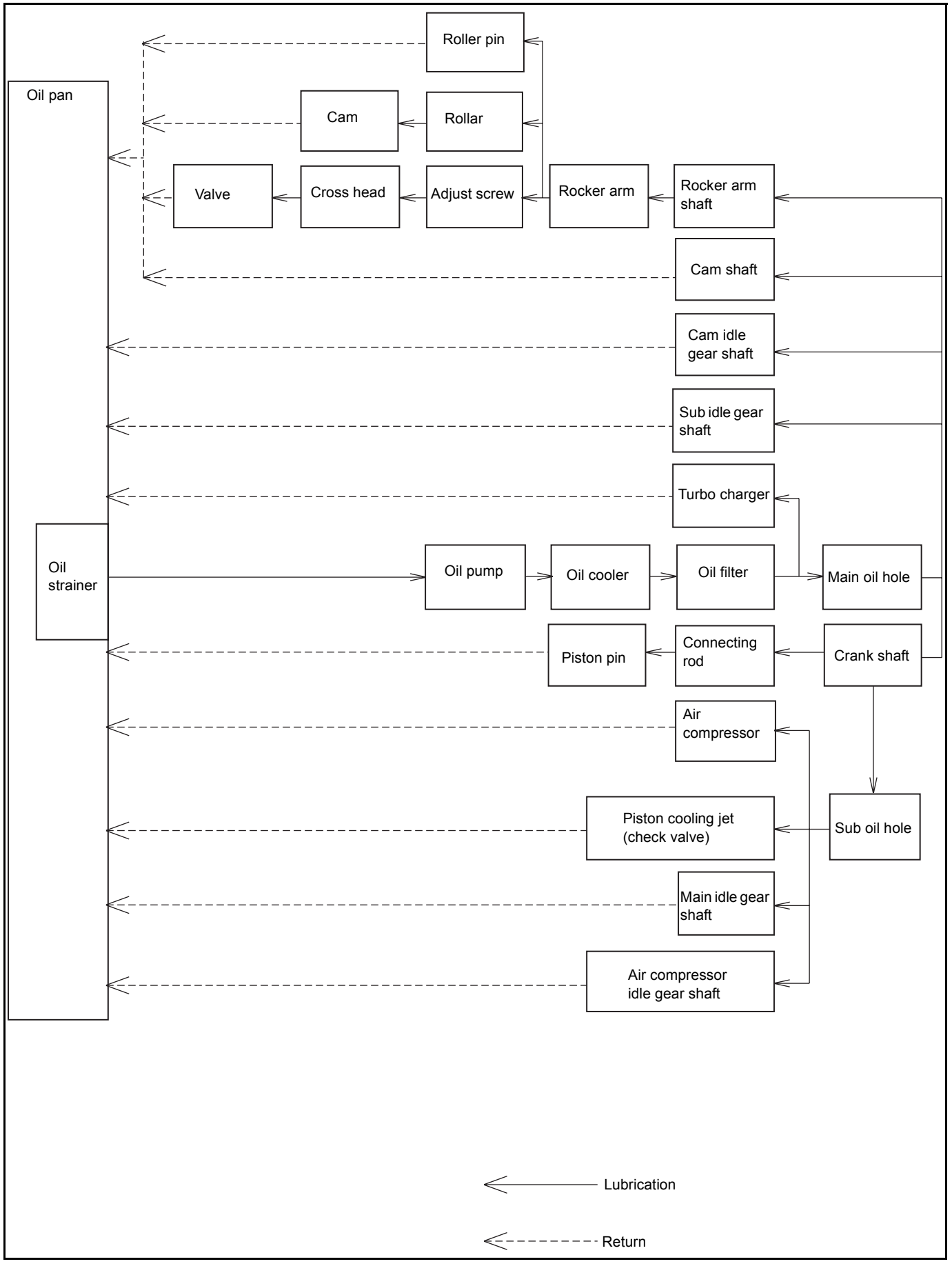

https://truckmanualshub.com/

COMPONENTS

AIR CLEANER

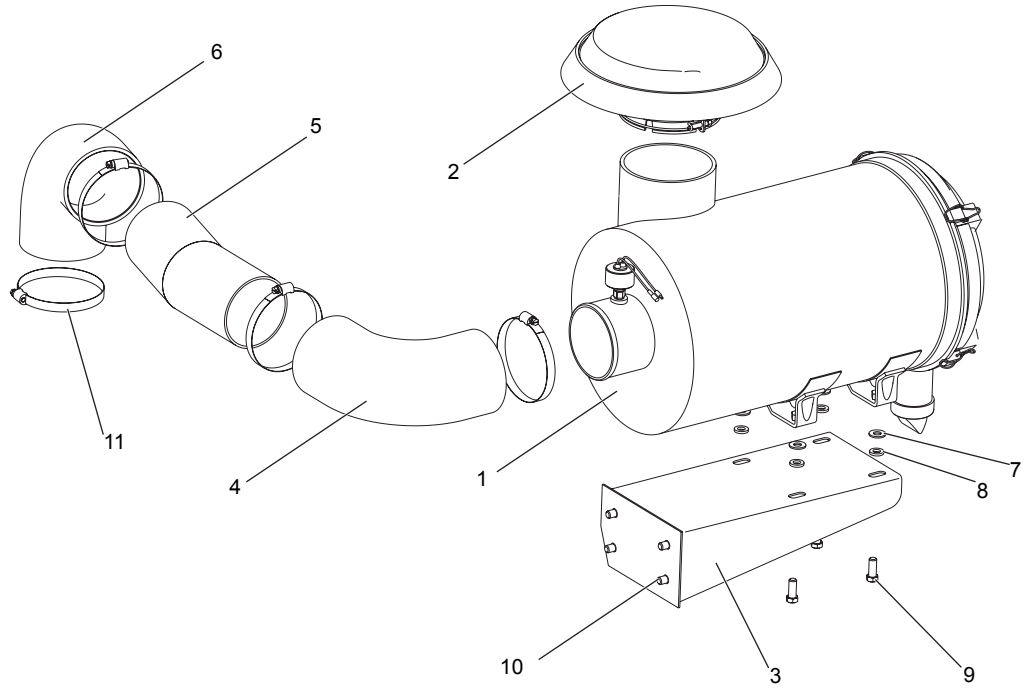

No.	Name	Quantity
1	AIR CLEANER	1
2	CAP	1
3	BRACKET	1
4	HOSE	1
5	PIPE, INTAKE	1
6	HOSE	1
7	WASHER, PLATE	4
8	WASHER, SPRING	4
9	BOLT	4
10	FLANGE BOLT	4
11	HOSE CLAMP	4

https://truckmanualshub.com/

COOLING SYSTEM GENERAL

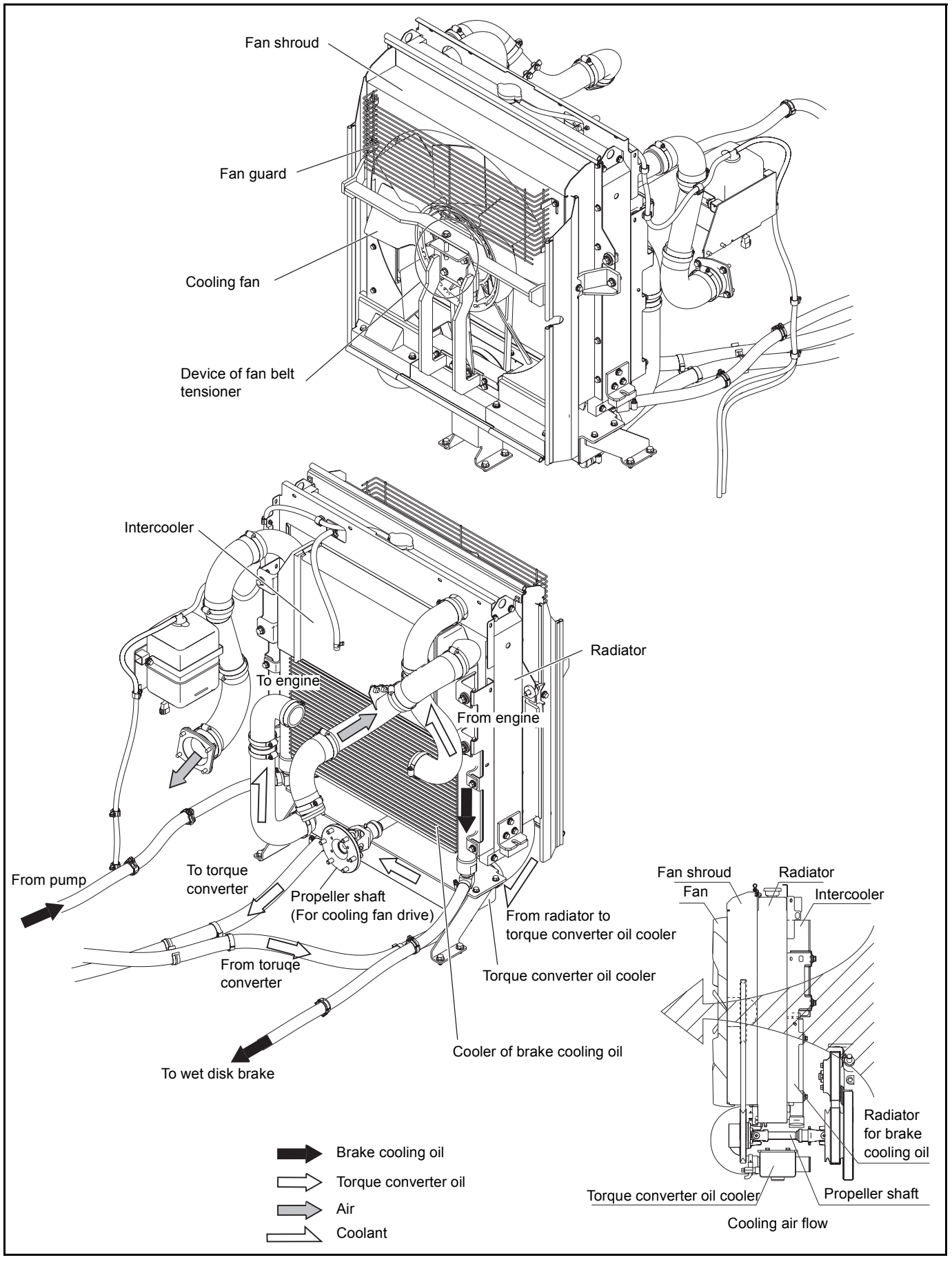

COMPONENT
DUCT

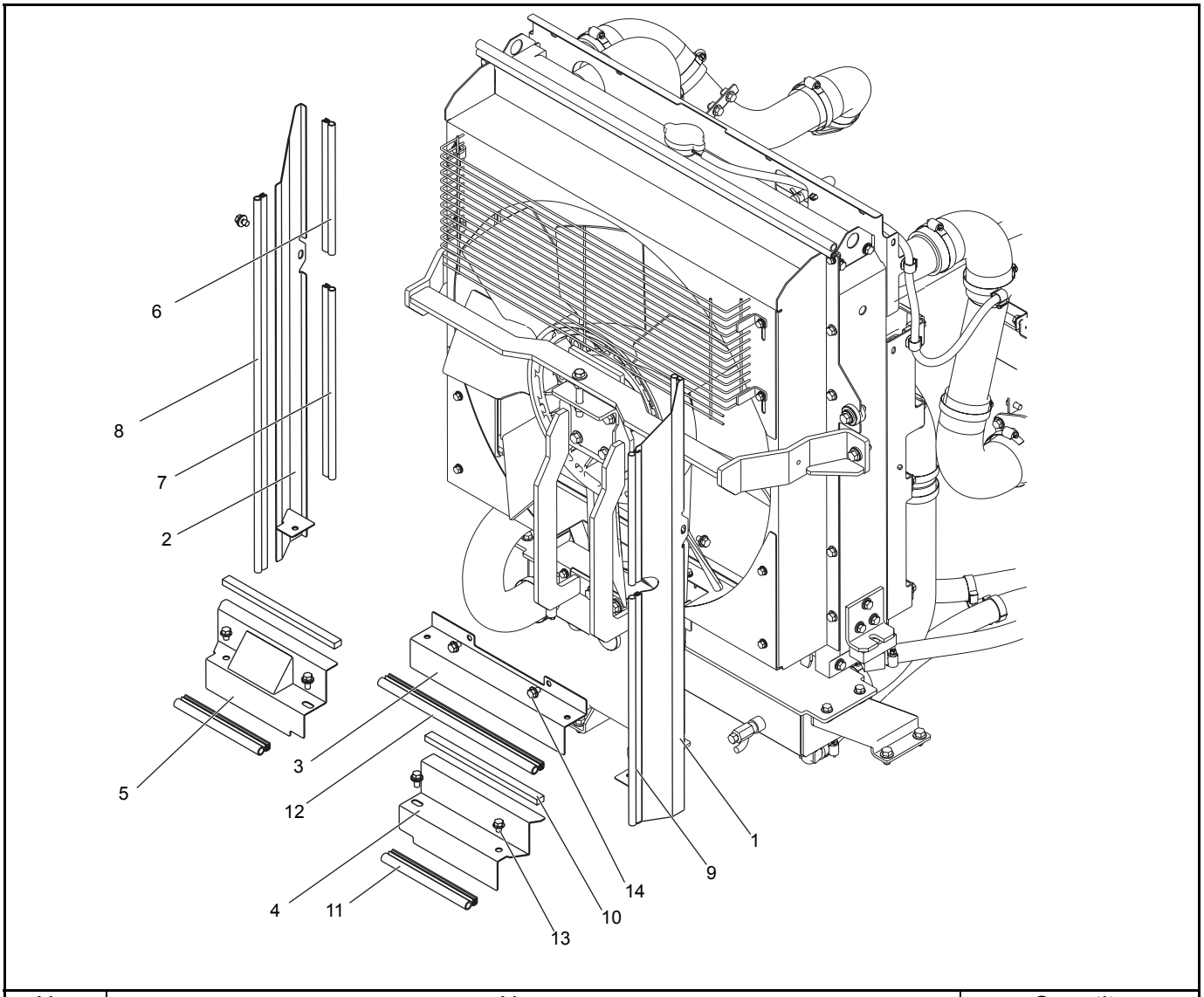

No.	Name	Quantity
1	DUCT, RH	1
2	DUCT, LH	1
3	DUCT, UNDER	1
4	DUCT, UNDER, RH	1
5	DUCT, UNDER, LH	1
6	SEAL	3
7	SEAL	2
8	SEAL	1
9	SEAL	1
10	SPONG	2
11	SEAL	2
12	SEAL	1
13	FRANGE BOLT	4
14	FRANGE BOLT	4

https://truckmanualshub.com/

FAN SUPPORT

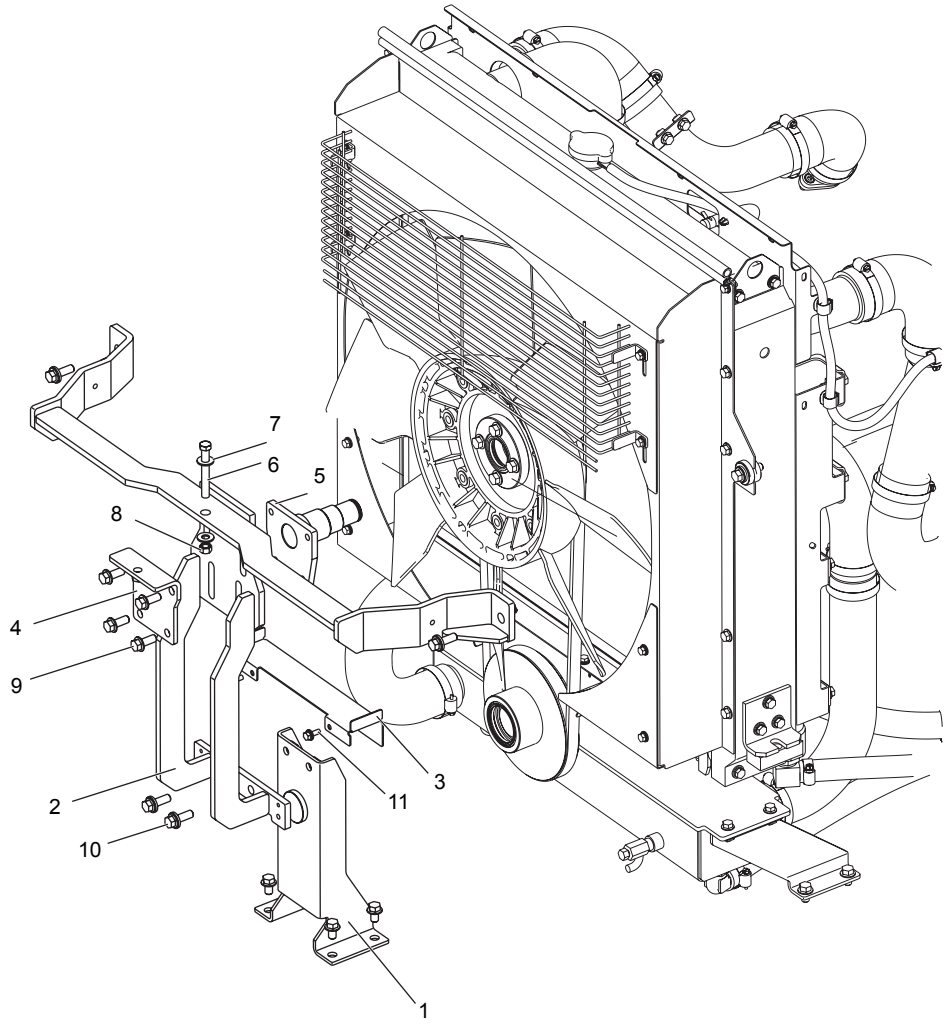

No.	Name	Quantity
1	PULLEY BRACKET, LWR	1
2	PLATE, FAN	1
3	PULLEY COVER	1
4	SUPPORT, FAN HOUSING	1
5	PULLEY BRACKET, UPR	1
6	ADJUST BOLT	1
7	WASHER, PLATE	2
8	LOCK NUT	1
9	FRANGE BOLT	8
10	FRANGE BOLT	2
11	FRANGE BOLT	2

FAN DRIVEN

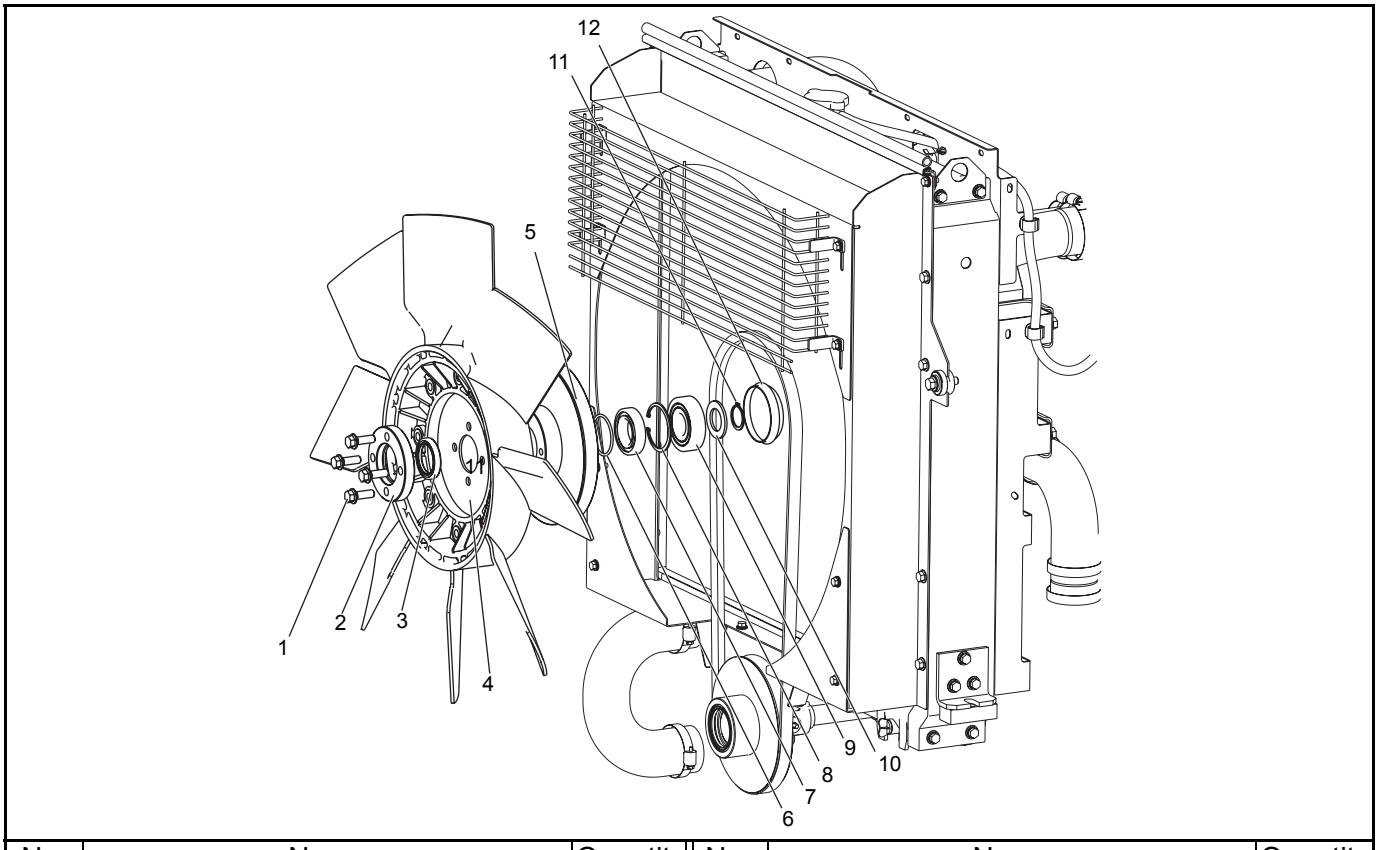

No.	Name	Quantity	No.	Name	Quantity
1	FLANGE BOLT	4	7	BEARING	1
2	BOSS	1	8	SNAP RING	1
3	OIL SEAL	1	9	BEARING	1
4	FAN	1	10	WASHER, PLATE	1
5	FAN PULLEY	1	11	SNAP RING	1
6	O-RING	1	12	CAP	1

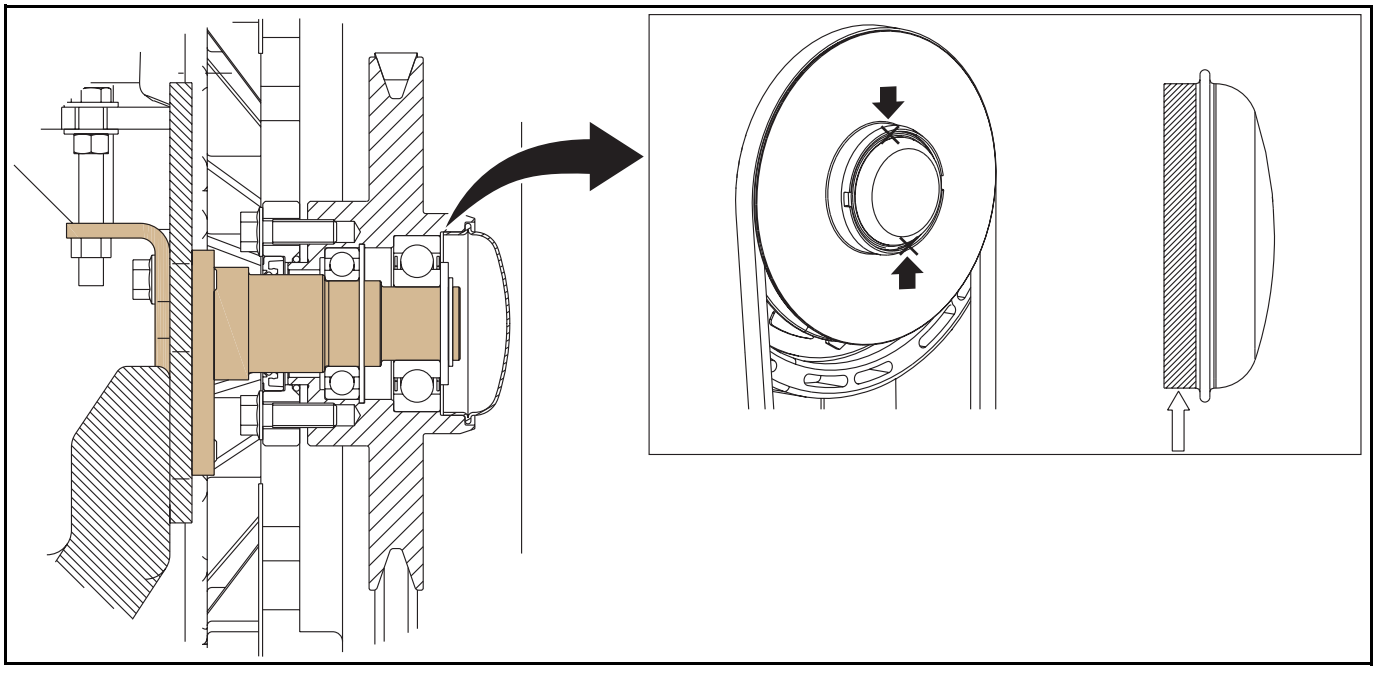

1. Apply sealing agent (08833-76002-71) to the entire periphery of the cap.
2. After fitting the cap, apply the caulking to two locations.

https://truckmanualshub.com/

FAN DRIVE

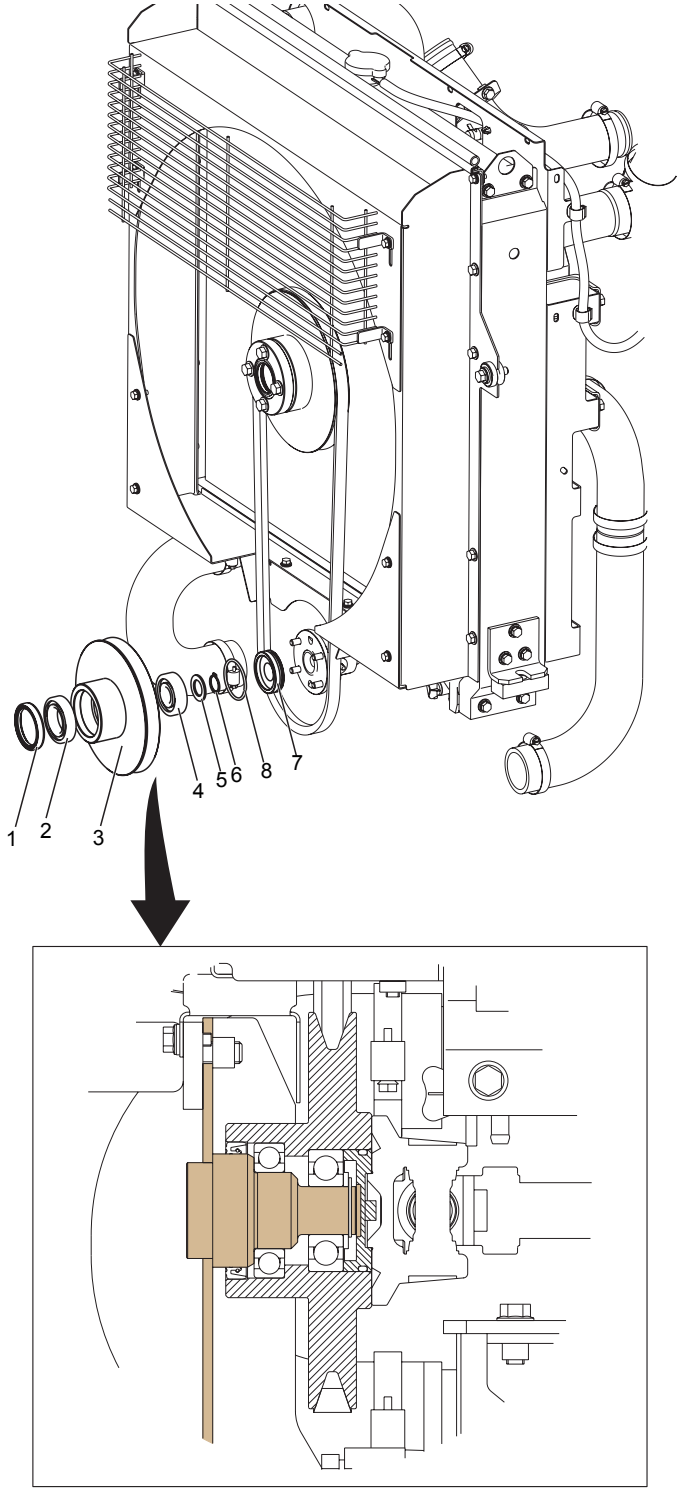

No.	Name	Quantity
1	OIL SEAL	1
2	BEARING	1
3	FAN PULLEY	1
4	BEARING	1
5	WASHER, PLATE	1
6	SNAP RING	1
7	O-RING	1
8	PULLEY COVER	1

FAN SHROUD

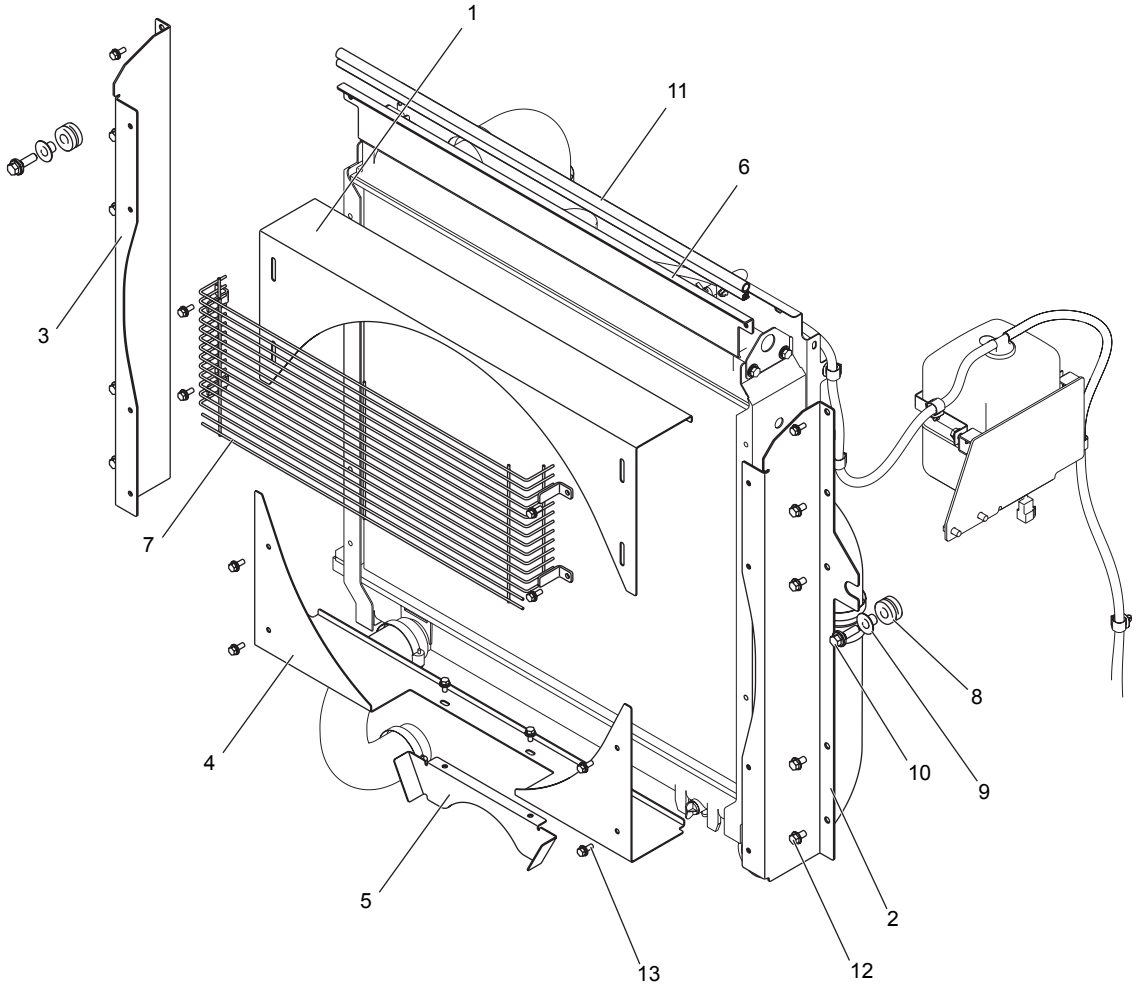

No.	Name	Quantity
1	FAN SHROUD, UPR	1
2	FAN SHROUD, RH	1
3	FAN SHROUD, LH	1
4	FAN SHROUD, LWR	1
5	PULLEY COVER	1
6	FAN SHROUD, UPR	1
7	FAN GUARD	1
8	INSULATOR	2
9	SPACER	2
10	BOLT	2
11	SEAL	1
12	FLANGE BOLT	8
13	FLANGE BOLT	12

https://truckmanualshub.com/

FAN DRIVE SHAFT

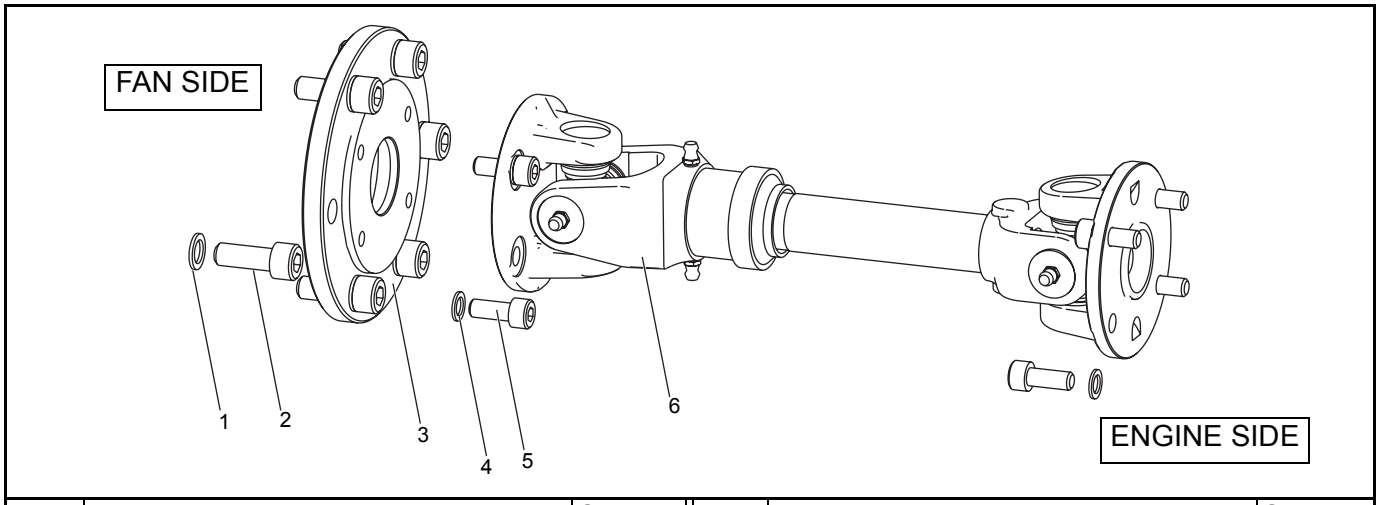

No.	Name	Quantity	No.	Name	Quantity
1	WASHER, CD SPRING	6	4	WASHER, CD SPRING	8
2	BOLT, SOCKET	6	5	BOLT, SOCKET	8
3	PLATE, FLANGE YOKE SET	1	6	FAN DRIVE SHAFT	1

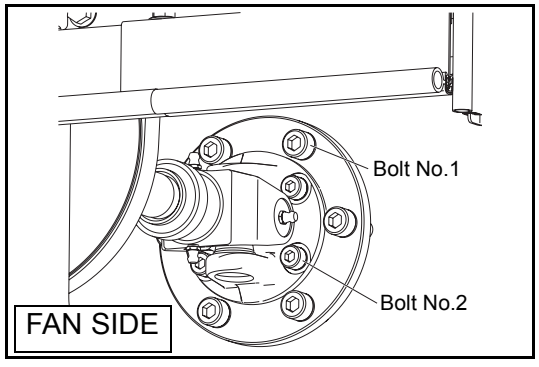

1. Bolt No.1 tightening torque 33.6 to 78.4Nm
   Bolt No.2 tightening torque 30 to 40Nm
   Apply sealing agent (08833-76002-71) to the screw parts, to both No.1 and No.2.

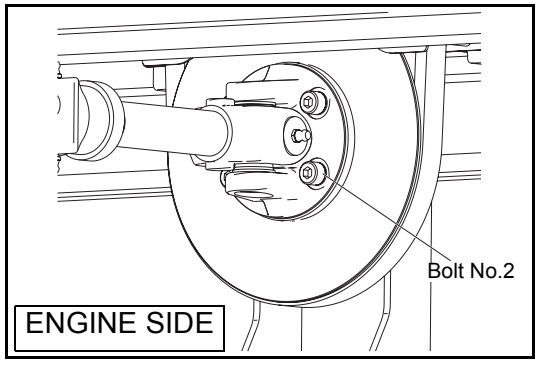

2. Bolt No.2 tightening torque 30 to 40Nm
   Apply sealing agent (08833-76002-71) on the set bolt threaded portion before reassembly.

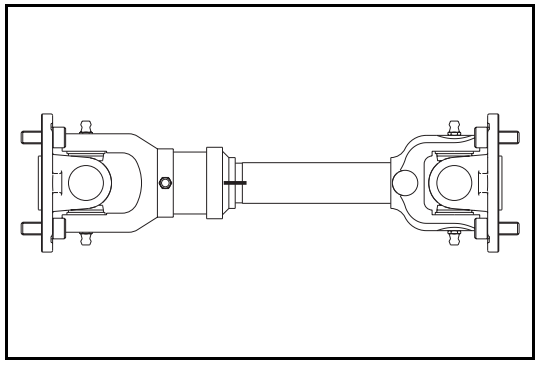

3. When breaking down the fan drive shaft, put matching marks on.
   When reassembling, match the matching marks.

https://truckmanualshub.com/

INTER COOLER

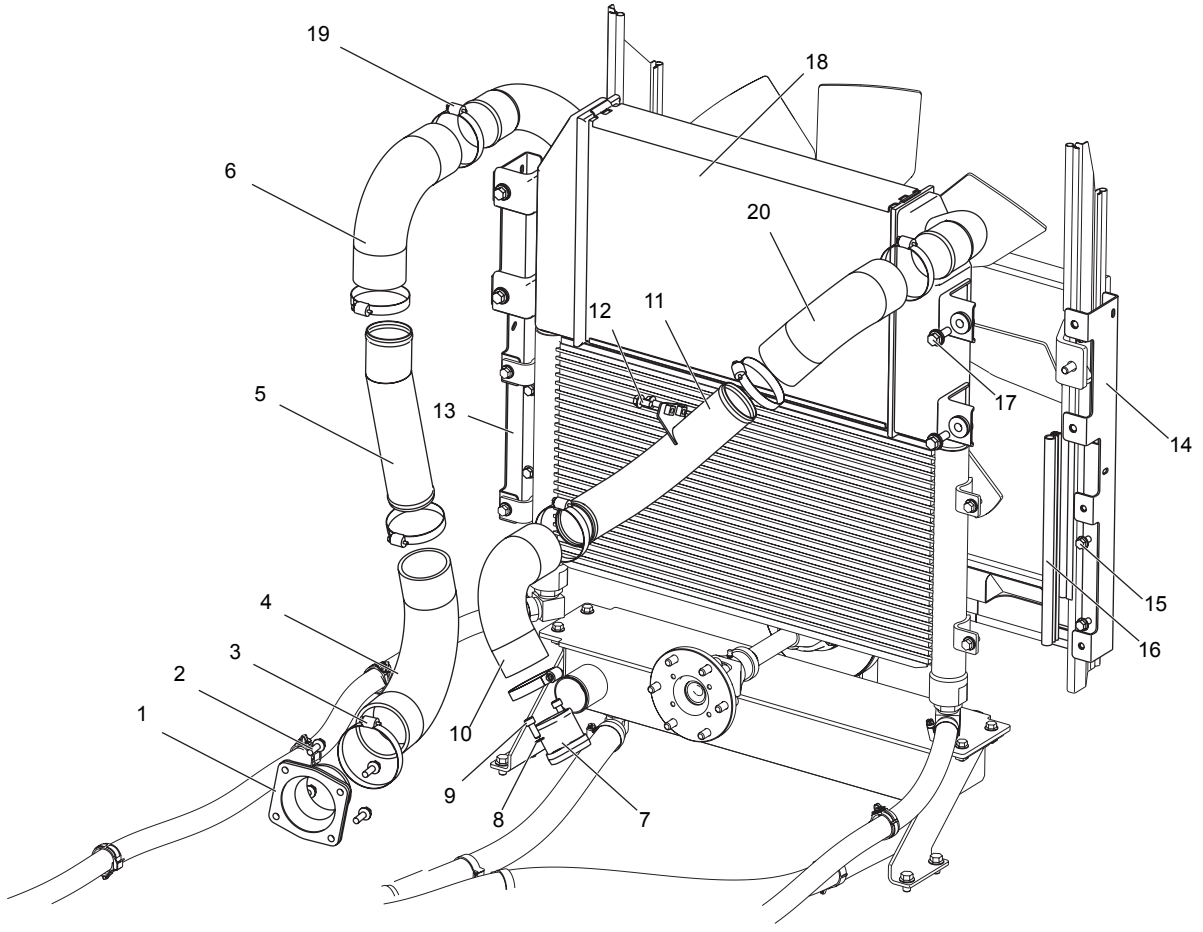

No.	Name	Quantity
1	FLANGE, AIR INTAKE	1
2	FLANGE BOLT	4
3	HOSE CLAMP	1
4	HOSE, INTERCOOLER OUTLET, No.2	1
5	PIPE, INTERCOOLER OUTLET	1
6	HOSE, INTERCOOLER OUTLET, No.1	1
7	FLANGE TURBO OUTLET	1
8	WASHER, CD SPRING	2
9	BOLT, SOCKET	2
10	HOSE, INTERCOOLER INLET, No.1	1
11	PIPE	1
12	FLANGE BOLT	2
13	PLATE, RH	1
14	PLATE, LH	1
15	FLANGE BOLT	6
16	SEAL	2
17	FLANGE BOLT W/SPRING	4
18	INTERCOOLER	1
19	HOSE CLAMP	7
20	HOSE, INTERCOOLER INLET,No.2	1

https://truckmanualshub.com/

BRAKE COOLING OIL COOLER

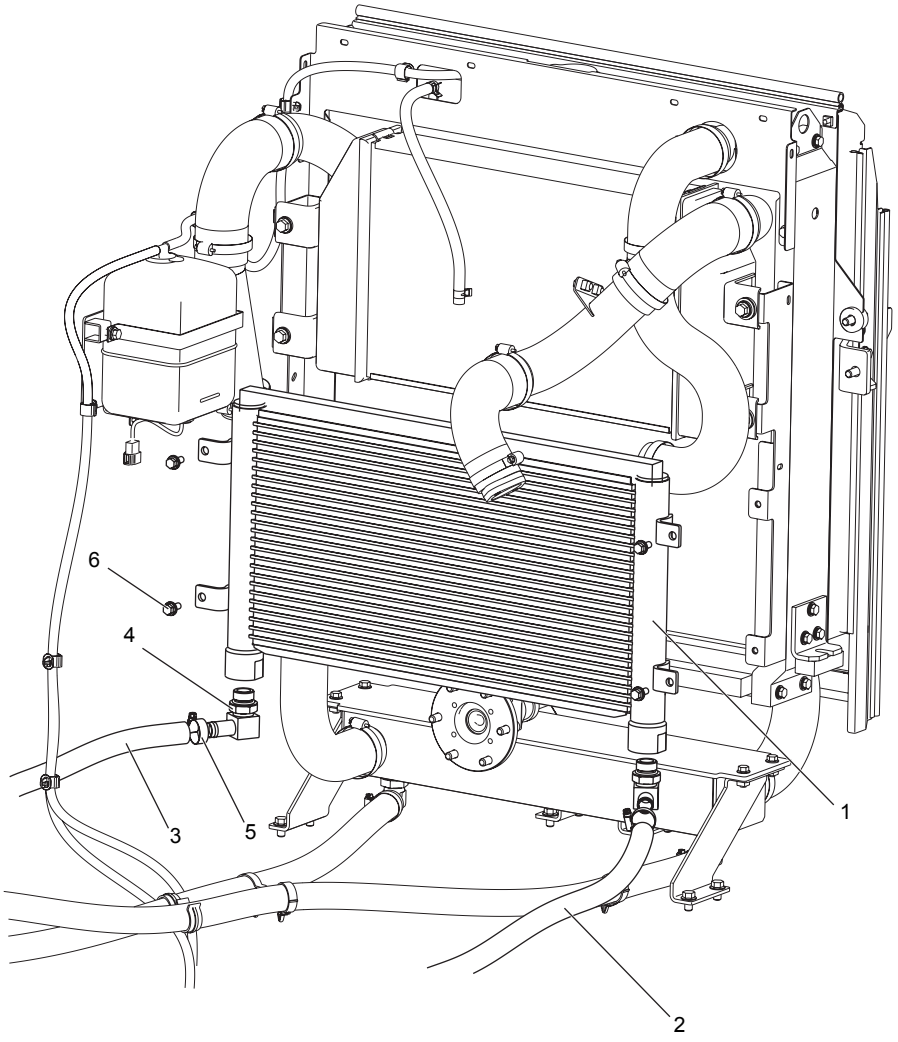

No.	Name	Quantity
1	BRAKE COOLING OIL COOLER	1
2	HOSE	1
3	HOSE	1
4	FITTING	2
5	CLAMP	2
6	FLANGE BOLT	4

TORQUE CONVERTER OIL COOLER

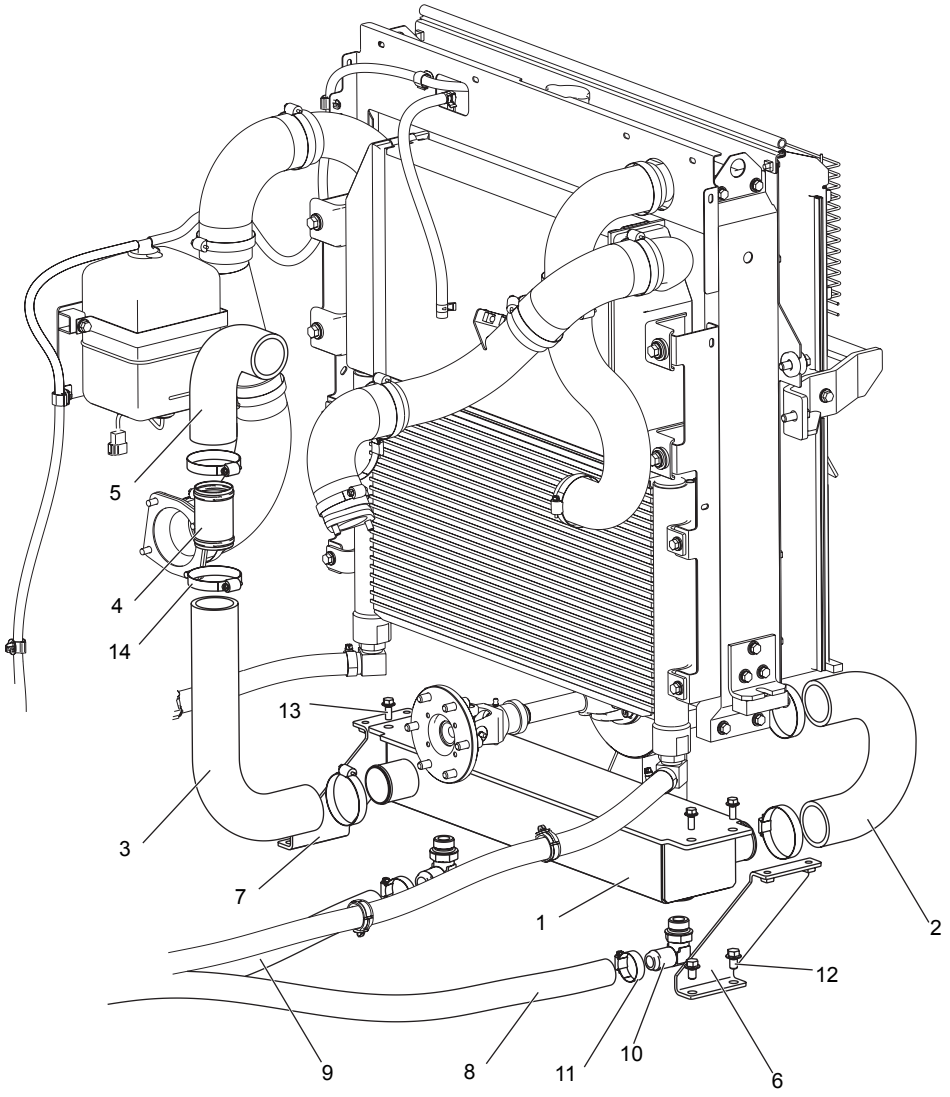

No.	Name	Quantity
1	TORQUE CONVERTER OIL COOLER	1
2	HOSE, RADIATOR OUTLET	1
3	HOSE, COOLER OUTLET	1
4	PIPE	1
5	HOSE	1
6	COOLER BRACKET, LH	1
7	COOLER BRACKET, RH	1
8	HOSE	1
9	HOSE	1
10	FITTING	2
11	CLAMP	2
12	FLANGE BOLT	4
13	FLANGE BOLT	4
14	CLAMP	5

https://truckmanualshub.com/

MUFFLER

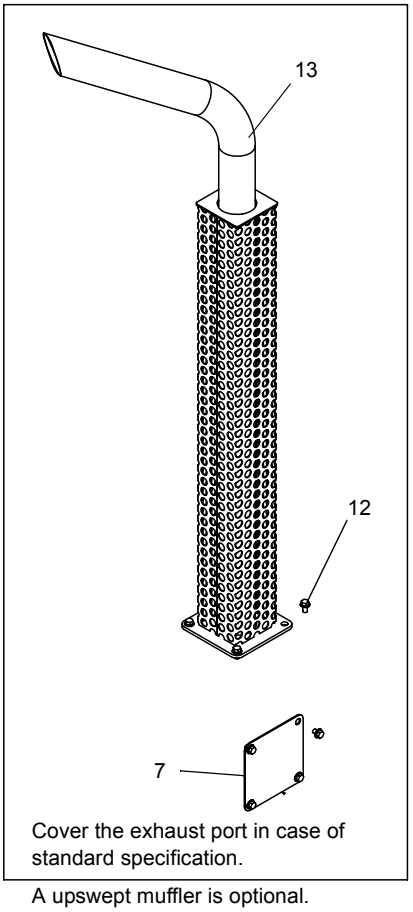

A upswept muffler is optional.

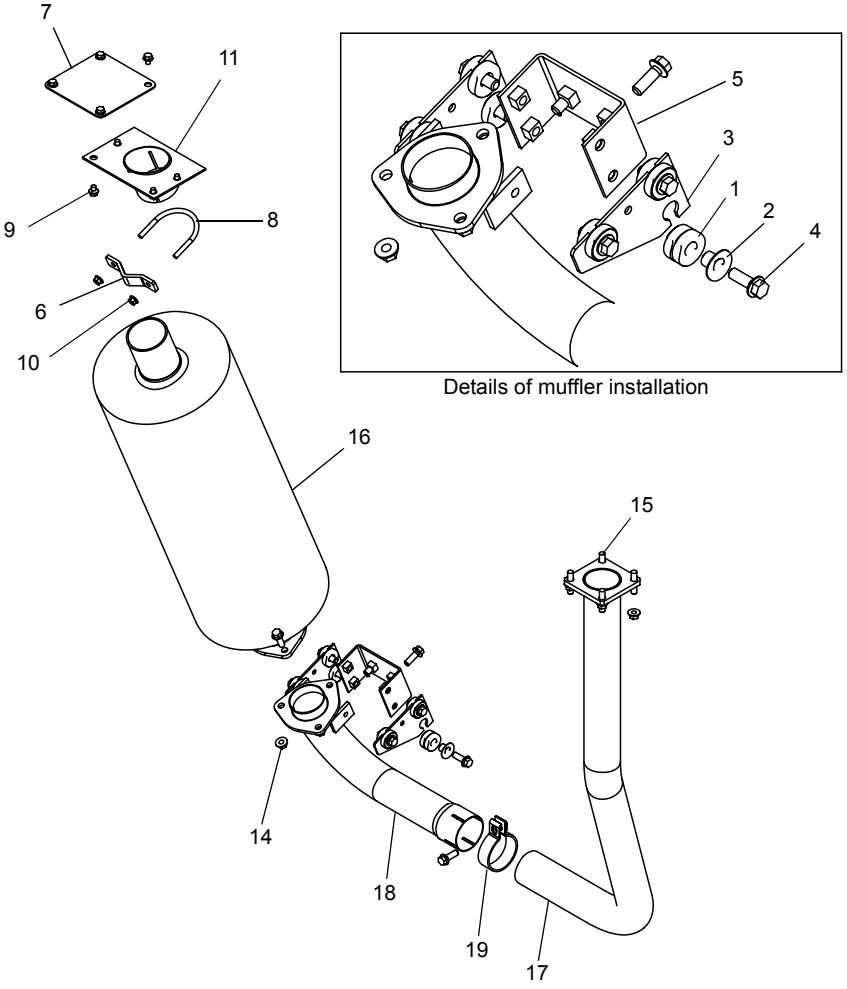

Details of muffler installation

No.	Name	Quantity
1	INSULATOR	6
2	SPACER	6
3	PLATE	2
4	BOLT, FLANGE	12
5	BRACKET SUB-ASSY, EXHAUST	1
6	CLAMP, EXHAUST PIPE	1
7	FLANGE, EXHAUST	2
8	BOLT, U	1
9	BOLT, FLANGE	12
10	NUT, FLANGE	2
11	BRACKET SUB-ASSY, EXHAUST PIPE	1
12	BOLT, FLANGE	4
13	UPSWEPT, EXHAUST	1
14	NUT, FLANGE	7
15	STUD BOLT	1
16	MUFFLER SUB ASSY	1
17	PIPE SUB-ASSY, EXHAUST	1
18	PIPE SUB-ASSY, EXHAUST	1
19	CLAMP SUB-ASSY	1

https://truckmanualshub.com/

ACCELERATOR

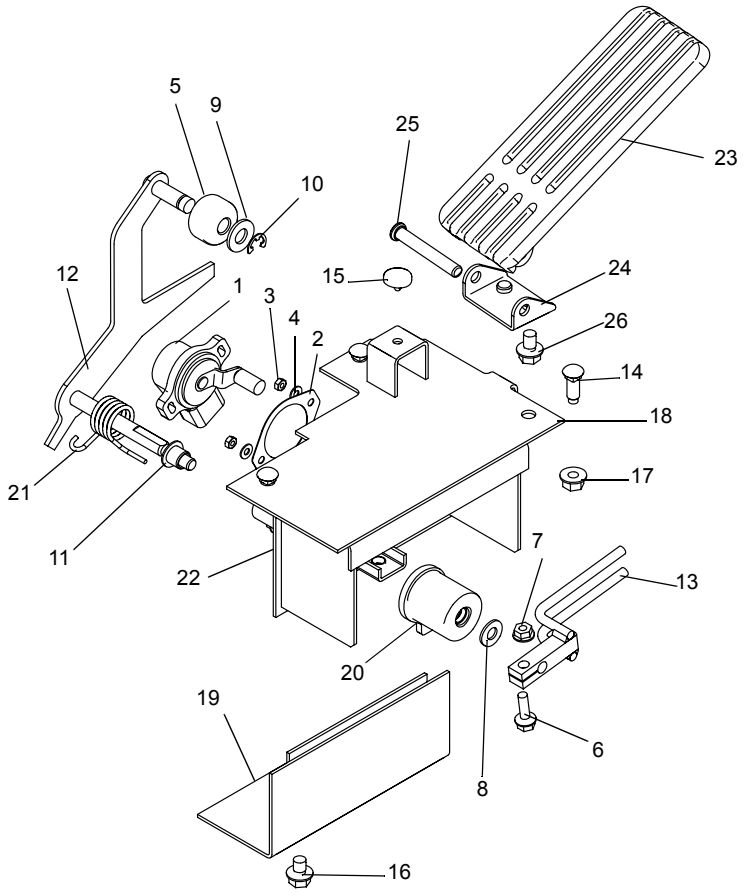

No.	Name	Quantity
1	SENSOR ASSY, ROTARY POSITION	1
2	GASKET, SENSOR	1
3	NUT	2
4	WASHER, PLATE	2
5	ROLLER, ACCEL LINK	1
6	BOLT, FLANGE	1
7	NUT, FLANGE	1
8	WASHER, PLATE	1
9	WASHER, PLATE	1
10	RING, E	1
11	BUSHING	2
12	ARM SUB-ASSY, ACCEL	1
13	ARM SUB-ASSY, SENSOR	1
14	BOLT, FLAT HEAD SQUARE NECK	3
15	CUSHION	2
16	BOLT, FLANGE	1
17	NUT, FLANGE	3
18	BRACKET SUB-ASSY, ACCEL ARM	1
19	COVER SUB-ASSY	1
20	SPRING ASSY, ACCELERATOR	1
21	SPRING, TORSION	1
22	BRACKET, ACCEL ARM	1
23	PEDAL, ACCEL	1
24	BRACKET, PEDAL	1
25	PIN, W/HEAD	1
26	BOLT, FLANGE	2

https://truckmanualshub.com/

FAN BELT ADJUSTMENT PROCEDURE

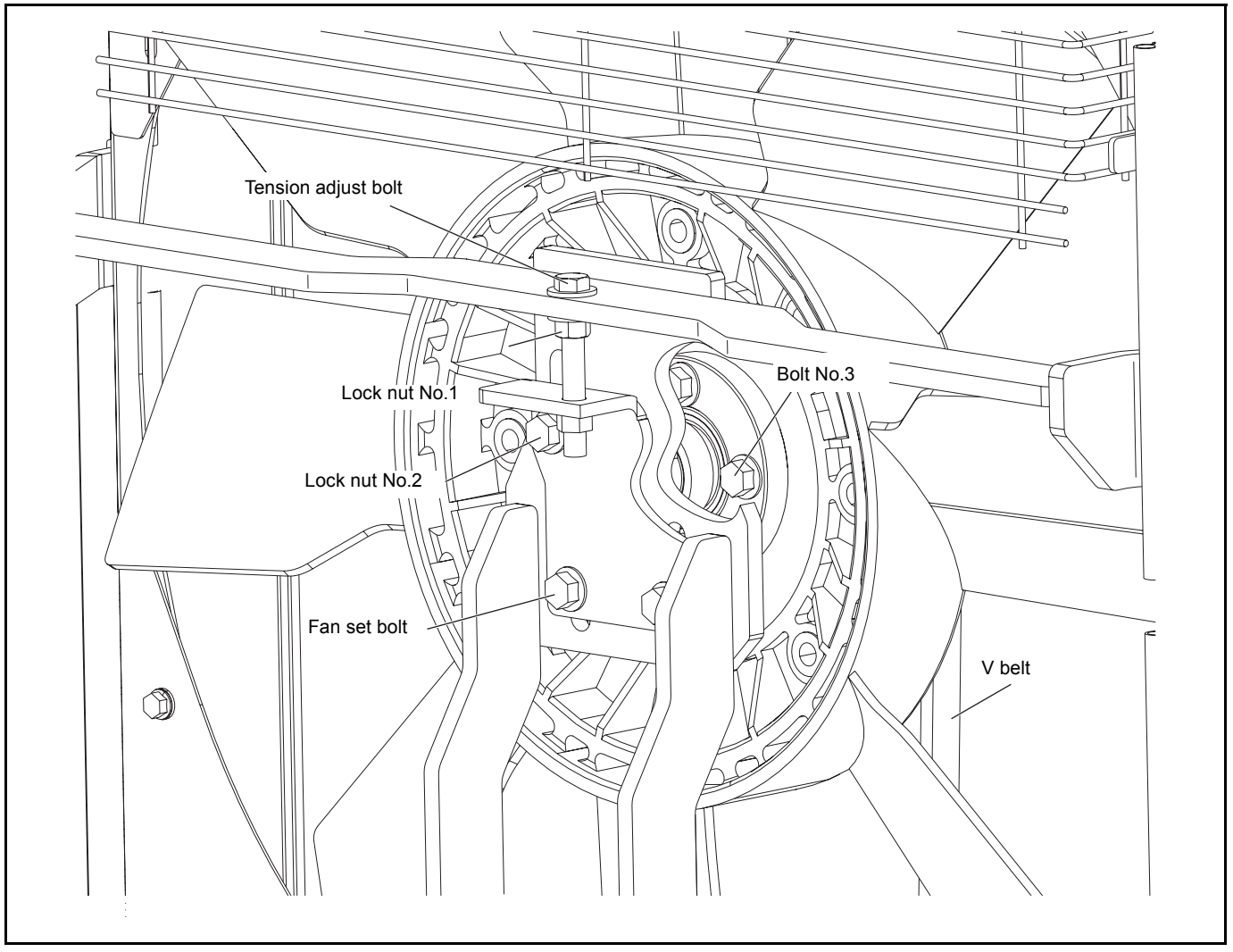

V-belt tension adjustment standard

Brand new parts: 520 ~ 760Nm
After using five minutes or longer: 300 ~ 560Nm

Adjustment procedure

1. Loosen the lock nuts No.1 and No.2.
2. Loosen the fan fixing bolts. (four)
3. Adjust the tension of the V-belt with a tension adjustment bolt.
4. Tighten the fan fixing bolts. (four)
5. Tighten the lock nut No.2.
6. Measure the tension of the V-belt.
   Used SST: 09216-76002-71
7. Within the standard value: Tighten the lock nut No.1.
   Value other than the standard: Readjust the tension of the V-belt with a tension adjustment bolt.

https://truckmanualshub.com/

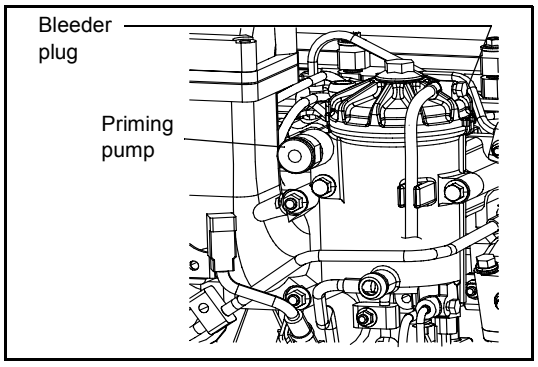

BLEEDING AIR FROM FUEL SYSTEM

1. Place a container to receive the discharged fuel under the tip end of the hose connected to the fuel filter.
2. Free the priming pump by rotating it counterclockwise.
3. Apply a pressure by operating the priming pump up and down, and bleed air by loosening the bleeder plug.
4. Tighten and fix the priming pump while holding it.
5. Wipe the fuel from the neighboring area.

https://truckmanualshub.com/

ENGINE ASSY

REMOVAL•INSTALLATION

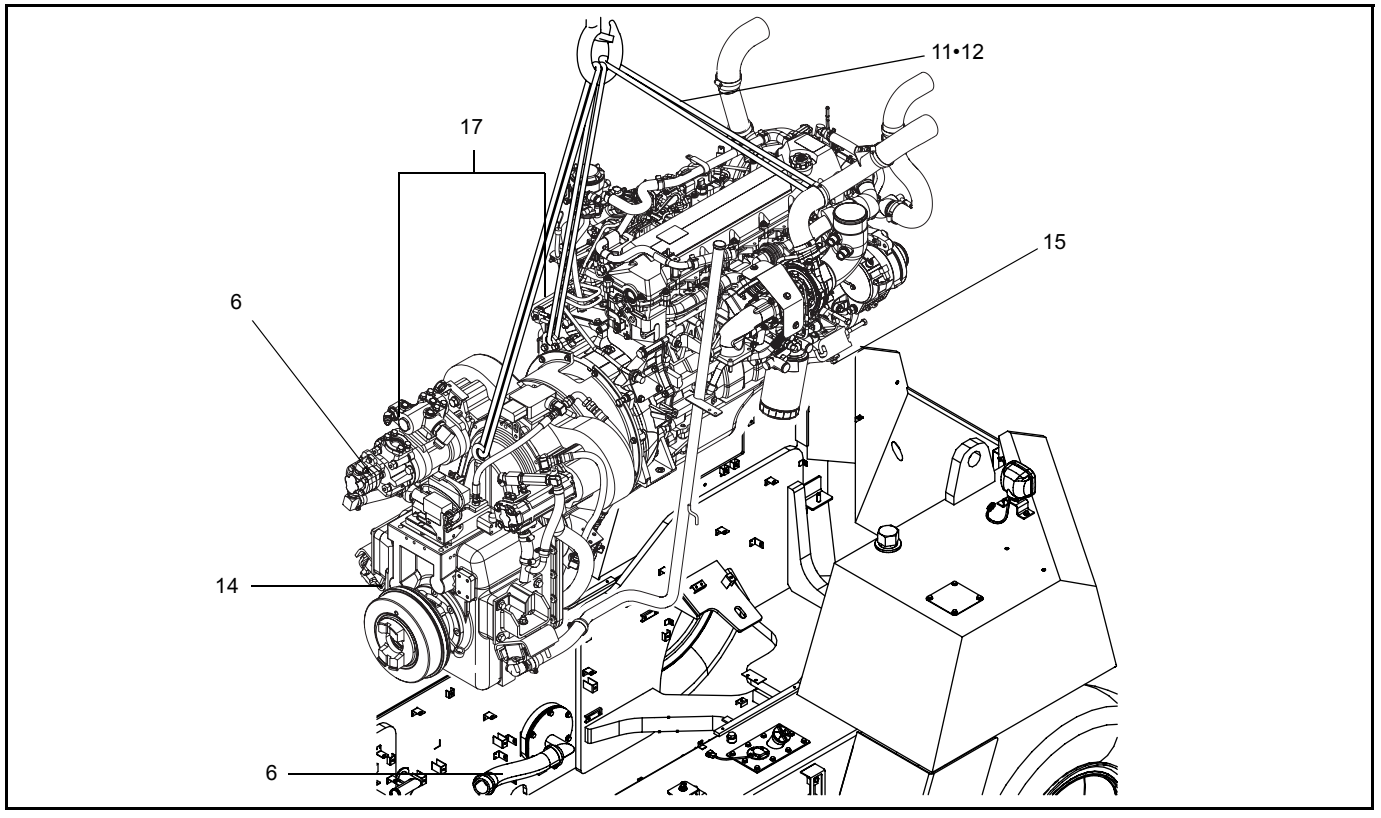

Removal Procedure

1 Park the vehicle on a flat ground and chock the wheels.
2 Remove the cabin or head guard. (See P.8-30.)
3 Disconnect the battery ⊖ terminal.
4 Disconnect the radiator hose. (See P.1-27.)
5 Remove the propeller shaft for cooling.
6 Disconnect the fuel piping and wiring from the engine.
7 Disconnect the piping from the hydraulic oil pump at the torque converter. **[Point 1]**
8 Disconnect the torque converter cooler hose.
9 Disconnect the exhaust pipe.
10 Disconnect the inching piping.
11 Disconnect the wiring from the torque converter.
12 Sling the engine and torque converter with hoisting wires. **[Point 2]**
13 Temporarily hoist the engine W/torque converter and transmission.
14 Remove the nut from the torque converter mounting rubber. **[Point 3]**
15 Remove nuts from the engine mounting rubber.
16 Remove the engine W/torque converter and transmission.
17 Place the engine and torque converter transmission on the work bench on the floor.**[Point 5]**
18 Remove the torque converter end plate cover.
19 Remove the flexible plate set bolts. **[Point 4]**
20 Remove the torque converter housing set bolts, and disconnect the torque converter and transmission ASSY from the engine ASSY.

https://truckmanualshub.com/

Installation Procedure

The installation procedure is the reverse of the removal procedure.

Note:
- **After installation, bleed air from the fuel system.**
- **Prepare an oil receiver since the hydraulic oil will run out when the piping is disconnected.**

Caution:
At the time of maintenance, inspection, adjustment or replacement of the torque converter ASSY, remove the parking brake air chamber before disconnecting the battery ⊖ terminal.

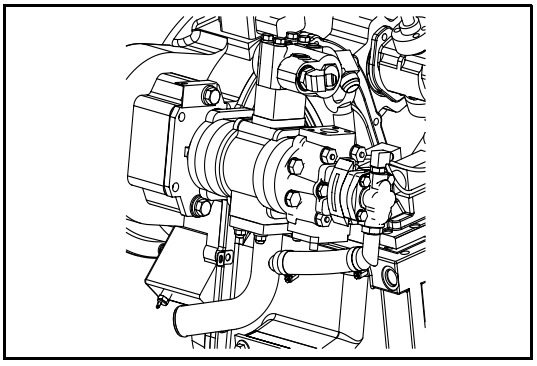

Point Operations

[Point 1]

Removal•Installation:
Disconnect the piping to make the material handling pump as illustrated at left.

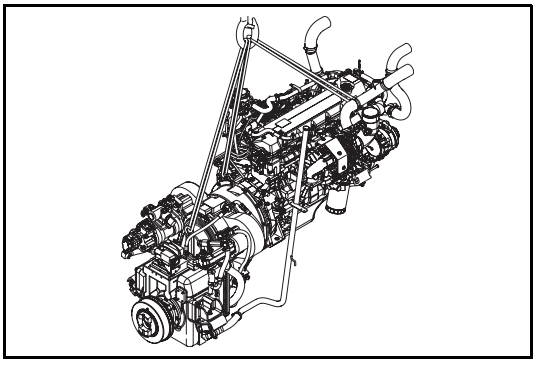

[Point 2]

Removal•Installation:
Hoisting

Position	Weight	Center of gravity
Engine side :2 places Torque converter side :1 place	Approx. 1,200 kg (2645 lb)	Above the contact surface between the engine and torque converter

Caution:
Do not remove the torque converter level gage piping but fix it on the engine side.

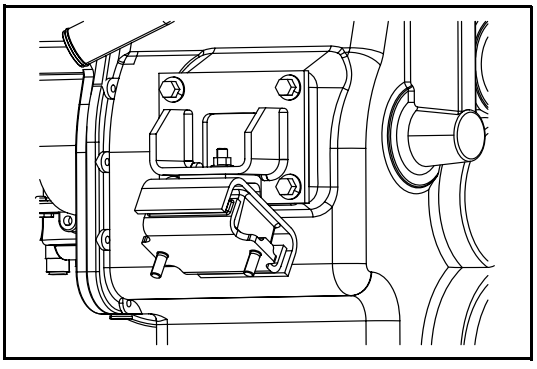

[Point 3]

Removal•Installation:
Remove the lower nuts on both the engine and torque converter sides for easy positioning at the time of reinstallation on the vehicle.

https://truckmanualshub.com/

Thank you very much for your reading.

Please Click Here Then Get More Information.