https://truckmanualshub.com/

SHOP MANUAL

KOMATSU

6D125 SERIES

DIESEL ENGINE

© 1995 KOMATSU
All Rights Reserved
10-95(01)05501

https://truckmanualshub.com/

CONTENTS

No. of page

01 GENERAL 01-001

11 STRUCTURE AND FUNCTION 11-001

12 TESTING AND ADJUSTING 12-001

13 DISASSEMBLY AND ASSEMBLY 13-001

14 MAINTENANCE STANDARD 14-001

15 REPAIR AND REPLACEMENT OF PARTS 15-001

https://truckmanualshub.com/

SAFETY

SAFETY NOTICE

IMPORTANT SAFETY NOTICE

Proper service and repair is extremely important for safe machine operation. The service and repair techniques recommended by Komatsu and described in this manual are both effective and safe. Some of these techniques require the use of tools specially designed by Komatsu for the specific purpose.

To prevent injury to workers, the symbol ⚠ is used to mark safety precautions in this manual. The cautions accompanying these symbols should always be followed carefully. If any dangerous situation arises or may possibly arise, first consider safety, and take the necessary actions to deal with the situation.

GENERAL PRECAUTIONS

Mistakes in operation are extremely dangerous. Read the Operation and Maintenance Manual carefully BEFORE operating the machine.

1. Before carrying out any greasing or repairs, read all the precautions given on the decals which are fixed to the machine.
2. When carrying out any operation, always wear safety shoes and helmet. Do not wear loose work clothes, or clothes with buttons missing.
   - Always wear safety glasses when hitting parts with a hammer.
   - Always wear safety glasses when grinding parts with a grinder, etc.
3. If welding repairs are needed, always have a trained, experienced welder carry out the work. When carrying out welding work, always wear welding gloves, apron, hand shield, cap and other clothes suited for welding work.
4. When carrying out any operation with two or more workers, always agree on the operating procedure before starting. Always inform your fellow workers before starting any step of the operation. Before starting work, hang UNDER REPAIR signs on the controls in the operator's compartment.
5. Keep all tools in good condition and learn the correct way to use them.
6. Decide a place in the repair workshop to keep tools and removed parts. Always keep the tools and parts in their correct places. Always keep the work area clean and make sure that there is no dirt or oil on the floor. Smoke only in the areas provided for smoking. Never smoke while working.

PREPARATIONS FOR WORK

7. Before adding oil or making any repairs, park the machine on hard, level ground, and block the wheels or tracks to prevent the machine from moving.
8. Before starting work, lower blade, ripper, bucket or any other work equipment to the ground. If this is not possible, insert the safety pin or use blocks to prevent the work equipment from falling. In addition, be sure to lock all the control levers and hang warning signs on them.
9. When disassembling or assembling, support the machine with blocks, jacks or stands before starting work.
10. Remove all mud and oil from the steps or other places used to get on and off the machine. Always use the handrails, ladders or steps when getting on or off the machine. Never jump on or off the machine. If it is impossible to use the handrails, ladders or steps, use a stand to provide safe footing.

https://truckmanualshub.com/

PRECAUTIONS DURING WORK

11. When removing the oil filler cap, drain plug or hydraulic pressure measuring plugs, loosen them slowly to prevent the oil from spurting out.
    Before disconnecting or removing components of the oil, water or air circuits, first remove the pressure completely from the circuit.
12. The water and oil in the circuits are hot when the engine is stopped, so be careful not to get burned.
    Wait for the oil and water to cool before carrying out any work on the oil or water circuits.
13. Before starting work, remove the leads from the battery. Always remove the lead from the negative (–) terminal first.
14. When raising heavy components, use a hoist or crane.
    Check that the wire rope, chains and hooks are free from damage.
    Always use lifting equipment which has ample capacity.
    Install the lifting equipment at the correct places. Use a hoist or crane and operate slowly to prevent the component from hitting any other part. Do not work with any part still raised by the hoist or crane.
15. When removing covers which are under internal pressure or under pressure from a spring, always leave two bolts in position on opposite sides. Slowly release the pressure, then slowly loosen the bolts to remove.
16. When removing components, be careful not to break or damage the wiring. Damaged wiring may cause electrical fires.
17. When removing piping, stop the fuel or oil from spilling out. If any fuel or oil drips onto the floor, wipe it up immediately. Fuel or oil on the floor can cause you to slip, or can even start fires.
18. As a general rule, do not use gasoline to wash parts. In particular, use only the minimum of gasoline when washing electrical parts.
19. Be sure to assemble all parts again in their original places.
    Replace any damaged parts with new parts.
    - When installing hoses and wires, be sure that they will not be damaged by contact with other parts when the machine is being operated.
20. When installing high pressure hoses, make sure that they are not twisted. Damaged tubes are dangerous, so be extremely careful when installing tubes for high pressure circuits. Also, check that connecting parts are correctly installed.
21. When assembling or installing parts, always use the specified tightening torques. When installing protective parts such as guards, or parts which vibrate violently or rotate at high speed, be particularly careful to check that they are installed correctly.
22. When aligning two holes, never insert your fingers or hand. Be careful not to get your fingers caught in a hole.
23. When measuring hydraulic pressure, check that the measuring tool is correctly assembled before taking any measurements.
24. Take care when removing or installing the tracks of track-type machines.
    When removing the track, the track separates suddenly, so never let anyone stand at either end of the track.

https://truckmanualshub.com/

FOREWORD

GENERAL

This shop manual has been prepared as an aid to improve the quality of repairs by giving the serviceman an accurate understanding of the product and by showing him the correct way to perform repairs and make judgements. Make sure you understand the contents of this manual and use it to full effect at every opportunity.

This shop manual mainly contains the necessary technical information for operations performed in a service workshop. For ease of understanding, the manual is divided into the following chapters; these chapters are further divided into the each main group of components.

STRUCTURE AND FUNCTION

This section explains the structure and function of each component. It serves not only to give an understanding of the structure, but also serves as reference material for troubleshooting.

TESTING AND ADJUSTING

This section explains checks to be made before and after performing repairs, as well as adjustments to be made at completion of the checks and repairs.
Troubleshooting charts correlating "Problems" to "Causes" are also included in this section.

DISASSEMBLY AND ASSEMBLY

This section explains the order to be followed when removing, installing, disassembling or assembling each component, as well as precautions to be taken for these operations.

MAINTENANCE STANDARD

This section gives the judgement standards when inspecting disassembled parts.

NOTICE

The specifications contained in this shop manual are subject to change at any time and without any advance notice. Use the specifications given in the book with the latest date.

https://truckmanualshub.com/

HOW TO READ THE SHOP MANUAL

VOLUMES

Shop manuals are issued as a guide to carrying out repairs. They are divided as follows:

Chassis volume: Issued for every machine model
Engine volume: Issued for each engine series
Electrical volume:
Attachments volume:
} Each issued as one volume to cover all models

These various volumes are designed to avoid duplicating the same information. Therefore, to deal with all repairs for any model , it is necessary that chassis, engine, electrical and attachment volumes be available.

DISTRIBUTION AND UPDATING

Any additions, amendments or other changes will be sent to KOMATSU distributors. Get the most up-to-date information before you start any work.

FILING METHOD

1. See the page number on the bottom of the page. File the pages in correct order.
2. Following examples show how to read the page number.
   Example 1 (Chassis volume):

   10 - 3
   - 10 — Item number (10. Structure and Function)
   - 3 — Consecutive page number for each item.

   Example 2 (Engine volume):

   12 - 5
   - 12 — Unit number (1. Engine)
   - 12 — Item number (2. Testing and Adjusting)
   - 5 — Consecutive page number for each item.

3. Additional pages: Additional pages are indicated by a hyphen (-) and number after the page number. File as in the example.
   Example:

10-4		12-203
10-4-1	Added pages	12-203-1
10-4-2		12-203-2
10-5		12-204

REVISED EDITION MARK

When a manual is revised, an edition mark (①②③....) is recorded on the bottom of the pages.

REVISIONS

Revised pages are shown in the LIST OF REVISED PAGES next to the CONTENTS page.

SYMBOLS

So that the shop manual can be of ample practical use, important safety and quality portions are marked with the following symbols.

Symbol	Item	Remarks
⚠	Safety	Special safety precautions are necessary when performing the work.
★	Caution	Special technical precautions or other precautions for preserving standards are necessary when performing the work.
kg	Weight	Weight of parts of systems. Caution necessary when selecting hoisting wire, or when working posture is important, etc.
kgm	Tightening torque	Places that require special attention for the tightening torque during assembly.
	Coat	Places to be coated with adhesives and lubricants, etc.
ℓ	Oil, water	Places where oil, water or fuel must be added, and the capacity.
	Drain	Places where oil or water must be drained, and quantity to be drained.

https://truckmanualshub.com/

HOISTING INSTRUCTIONS

HOISTING

> Heavy parts (25 kg or more) must be lifted with a hoist, etc. In the **DISASSEMBLY AND ASSEMBLY** section, every part weighing 25 kg or more is indicated clearly with the symbol kg

- If a part cannot be smoothly removed from the machine by hoisting, the following checks should be made:
  1) Check for removal of all bolts fastening the part to the relative parts.
  2) Check for existence of another part causing interference with the part to be removed.

WIRE ROPES

1) Use adequate ropes depending on the weight of parts to be hoisted, referring to the table below:

Wire ropes
(Standard "Z" or "S" twist ropes without galvanizing)

Rope diameter	Allowable load	
mm	KN	tons
10	9.8	1.0
11.2	13.7	1.4
12.5	15.7	1.6
14	21.6	2.2
16	27.5	2.8
18	35.3	3.6
20	43.1	4.4
22.4	54.9	5.6
30	98.1	10.0
40	176.5	18.0
50	274.6	28.0
60	392.2	40.0

★ The allowable load value is estimated to be one-sixth or one-seventh of the breaking strength of the rope used.

2) Sling wire ropes from the middle portion of the hook.

Slinging near the edge of the hook may cause the rope to slip off the hook during hoisting, and a serious accident can result. Hooks have maximum strength at the middle portion.

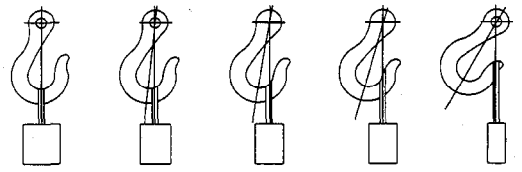

SAD00479

3) Do not sling a heavy load with one rope alone, but sling with two or more ropes symmetrically wound onto the load.
   Slinging with one rope may cause turning of the load during hoisting, untwisting of the rope, or slipping of the rope from its original winding position on the load, which can result in a dangerous accident.

4) Do not sling a heavy load with ropes forming a wide hanging angle from the hook. When hoisting a load with two or more ropes, the force subjected to each rope will increase with the hanging angles. The table below shows the variation of allowable load KN (kg) when hoisting is made with two ropes, each of which is allowed to sling up to 9.8 KN (1000 kg) vertically, at various hanging angles.
   When two ropes sling a load vertically, up to 19.6 KN (2000 kg) of total weight can be suspended. This weight becomes 9.8 KN (1000 kg) when two ropes make a 120° hanging angle. On the other hand, two ropes are subjected to an excessive force as large as 39.2 KN (4000 kg) if they sling a 19.6 KN (2000 kg) load at a lifting angle of 150°.

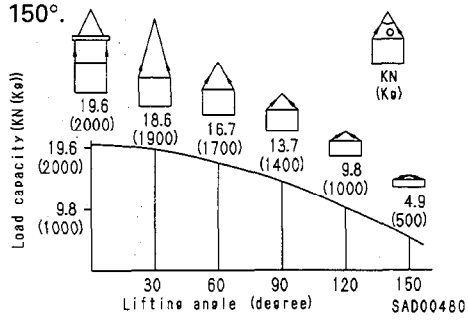

SAD00480

https://truckmanualshub.com/

COATING MATERIALS

The recommended coating materials prescribed in Komatsu Shop Manuals are listed below.

Category	Komatsu code	Part No.	Q'ty	Container	Main applications, features
Adhesive	LT–1A	790–129–9030	150 g	Tube	• Used to prevent rubber gaskets, rubber cushions, and cork plugs from coming out
	LT–1B	790–129–9050	20 g (x2)	Plastic container	• Used in places requiring an immediately effective, strong adhesive. Used for plastics (except polyethylene, polypropylene, tetrafluoroethylene, and vinyl chloride), rubber, metal, and non-metal.
	LT–2	09940–00030	50 g	Plastic container	• Features: Resistance to heat, chemicals • Used for anti-loosening and sealant purposes for bolts and plugs.
	LT–3	790–129–9060 (Set of adhesive and hardenging agent)	Adhesive :1 Kg Hardening agent: :500 g	Can	• Used as adhesive or sealant for metal, glass, plastic
	LT–4	790–129–9040	250 g	Plastic container	• Used as sealant for machined holes
	(Loctite 648–50)	79A–129–9110	50 cc	—	• Features: Resistance to heat, chemicals • Used at joint portions subject to high temperature
Gasket sealant	LG–1	790–129–9010	200 g	Tube	• Used as adhesive or sealant for gaskets and packings of power train case, etc.
	LG–3	790–129–9070	1 Kg	Can	• Features: Resistance to heat • Used as sealant for flange surfaces and bolts at high temperature locations, used to prevent seizure • Used as sealant for heat resistant gasket for high temperature locations such as engine precombustion chamber, exhaust pipe
	LG–4	790–129–9020	200 g	Tube	• Features: Resistance to water, oil • Used as sealant for flange surface, thread • Also possible to use as sealant for flanges with large clearance • Used as sealant for mating surfaces of final drive case, transmission case
	LG–5	790–129–9080	1 Kg	Plastic container	• Used as sealant for various threads, pipe joints, flanges • Used as sealant for tapered plugs, elbows, nipples of hydraulic piping
	LG–6	09940–00011	250 g	Tube	• Features: Silicon based, resistance to heat, cold • Used as sealant for flange surface, thread • Used as sealant for oil pan, final drive case, etc.
	LG–7	09920–00150	150 g	Tube	• Features: Silicon based, quick hardening type • Used as sealant for flywheel housing, intake manifold, oil pan, thermostat housing, etc.
Rust prevention lubricant	LM-G	09940–00051	60 g	Can	• Used as lubricant for sliding parts (to prevent squeaking)
Molybdenum disulphide lubricant	LM-P	09940–00040	200 g	Tube	• Used to prevent seizure or scuffing of the thread when press fitting or shrink fitting • Used as lubricant for linkage, bearings, etc.
Lithium grease	G2–LI	SYG–350LI SYG–400LI SYG–400LI–A SYG–160LI SYGA–160CNLI	Various	Various	• General purpose type
Calcium grease	G2–CA	SSG2–400CA SYG2–350CA SYG2–400CA–A SYG2–160CA SYGA–16CNCA	Various	Various	• Used for normal temperature, light load bearing at places in contact with water or steam
Molybdenum disulphide grease	—	SYG2–400M	400 g (10 per case)	Bellows type	• Used for places with heavy load

https://truckmanualshub.com/

STANDARD TIGHTENING TORQUE

STANDARD TIGHTENING TORQUES OF BOLTS AND NUTS

The following charts give the standard tightening torques of bolts and nuts. Exceptions are given in section of **DISASSEMBLY AND ASSEMBLY**.

1 Kgm = 9.806 Nm

Thread diameter of bolt	Width across flats	SAD00481	SAD00482
mm	mm	Nm	kgm
6	10	13.2±1.4	1.35±0.15
8	13	31.4±2.9	3.2±0.3
10	17	65.7±6.8	6.7±0.7
12	19	112±9.8	11.5±1.0
14	22	177±19	18.0±2.0
16	24	279±29	28.5±3
18	27	383±39	39±4
20	30	549±58	56±6
22	32	745±78	76±8
24	36	927±98	94.5±10
27	41	1320±140	135±15
30	46	1720±190	175±20
33	50	2210±240	225±25
36	55	2750±290	280±30
39	60	3280±340	335±35

★ This torque table does not apply to the bolts with which nylon packings or other nonferrous metal washers are to be used, or which require tightening to otherwise specified torque.

https://truckmanualshub.com/

TIGHTENING TORQUE OF SPLIT FLANGE BOLTS

Use these torques for split flange bolts.

Thread diameter of bolt	Width across flats	Tightening torque	
mm	mm	Nm	kgm
10	14	65.7±6.8	6.7±0.7
12	17	112±9.8	11.5±1
16	22	279±29	28.5±3

TIGHTENING TORQUE FOR FLARED NUTS

Use these torques for flared part of nut.

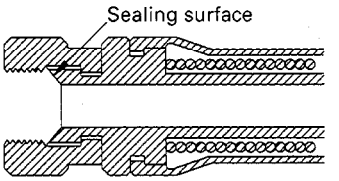

SAD00483

Thread diameter of nut part	Width across flats of nut part	Tightening torque	
mm	mm	Nm	kgm
14	19	24.5±4.9	2.5±0.5
18	24	49±19.6	5±2
22	27	78.5±19.6	8±2
24	32	137.3±29.4	14±3
30	36	176.5±29.4	18±3
33	41	196.1±49	20±5
36	46	245.2±49	25±5
42	55	294.2±49	30±5

https://truckmanualshub.com/

ELECTRIC WIRE CODE

In the wiring diagrams, various colors and symbols are employed to indicate the thickness of wires. This wire code table will help you understand WIRING DIAGRAMS.
Example: 5WB indicates a cable having a nominal number 5 and white coating with black stripe.

CLASSIFICATION BY THICKNESS

Nominal number	Copper wire			Cable O.D. (mm)	Current rating (A)	Applicable circuit
	Number of strands	Dia. of strands (mm)	Cross section (mm^2)			
0.85	11	0.32	0.88	2.4	12	Starting, lighting, signal etc.
2	26	0.32	2.09	3.1	20	Lighting, signal etc.
5	65	0.32	5.23	4.6	37	Charging and signal
15	84	0.45	13.36	7.0	59	Starting (Glow plug)
40	85	0.80	42.73	11.4	135	Starting
60	127	0.80	63.84	13.6	178	Starting
100	217	0.80	109.1	17.6	230	Starting

CLASSIFICATION BY COLOR AND CODE

Priority	Classification \ Circuits		Charging	Ground	Starting	Lighting	Instrument	Signal	Other
1	Primary	Code	W	B	B	R	Y	G	L
		Color	White	Black	Black	Red	Yellow	Green	Blue
2	Auxiliary	Code	WR	—	BW	RW	YR	GW	LW
		Color	White & Red	—	Black & White	Red & White	Yellow & Red	Green & White	Blue & White
3		Code	WB	—	BY	RB	YB	GR	LR
		Color	White & Black	—	Black & Yellow	Red & Black	Yellow & Black	Green & Red	Blue & Red
4		Code	WL	—	BR	RY	YG	GY	LY
		Color	White & Blue	—	Black & Red	Red & Yellow	Yellow & Green	Green & Yellow	Blue & Yellow
5		Code	WG	—	—	RG	YL	GB	LB
		Color	White & Green	—	—	Red & Green	Yellow & Blue	Green & Black	Blue & Black
6		Code	—	—	—	RL	YW	GL	—
		Color	—	—	—	Red & Blue	Yellow & White	Green & Blue	—

https://truckmanualshub.com/

CONVERSION TABLE

METHOD OF USING THE CONVERSION TABLE

The Conversion Table in this section is provided to enable simple conversion of figures. For details of the method of using the Conversion Table, see the example given below.

EXAMPLE

- Method of using the Conversion Table to convert from millimeters to inches

1. Convert 55 mm into inches.
   (1) Locate the number 50 in the vertical column at the left side, take this as Ⓐ, then draw a horizontal line from Ⓐ.
   (2) Locate the number 5 in the row across the top, take this as Ⓑ, then draw a perpendicular line down from Ⓑ.
   (3) Take the point where the two lines cross as Ⓒ. This point Ⓒ gives the value when converting from millimeters to inches. Therefore, 55 mm = 2.165 inches.

2. Convert 550 mm into inches.
   (1) The number 550 does not appear in the table, so divide by 10 (move the decimal point one place to the left) to convert it to 55 mm.
   (2) Carry out the same procedure as above to convert 55 mm to 2.165 inches.
   (3) The original value (550 mm) was divided by 10, so multiply 2.165 inches by 10 (move the decimal point one place to the right) to return to the original value. This gives 550 mm = 21.65 inches.

Millimeters to inches

1 mm = 0.03937 in

	0	1	2	3	4	5 Ⓑ	6	7	8	9
0	0	0.039	0.079	0.118	0.157	0.197	0.236	0.276	0.315	0.354
10	0.394	0.433	0.472	0.512	0.551	0.591	0.630	0.669	0.709	0.748
20	0.787	0.827	0.866	0.906	0.945	0.984	1.024	1.063	1.102	1.142
30	1.181	1.220	1.260	1.299	1.339	1.378	1.417	1.457	1.496	1.536
40	1.575	1.614	1.654	1.693	1.732	1.772	1.811	1.850	1.890	1.929
Ⓐ 50	1.969	2.008	2.047	2.087	2.126	Ⓒ 2.165	2.205	2.244	2.283	2.323
60	2.362	2.402	2.441	2.480	2.520	2.559	2.598	2.638	2.677	2.717
70	2.756	2.795	2.835	2.874	2.913	2.953	2.992	3.032	3.071	3.110
80	3.150	3.189	3.228	3.268	3.307	3.346	3.386	3.425	3.465	3.504
90	3.543	3.583	3.622	3.661	3.701	3.740	3.780	3.819	3.858	3.898

https://truckmanualshub.com/

Millimeters to Inches

1 mm = 0.03937 in

	0	1	2	3	4	5	6	7	8	9
0	0	0.039	0.079	0.118	0.157	0.197	0.236	0.276	0.315	0.354
10	0.394	0.433	0.472	0.512	0.551	0.591	0.630	0.669	0.709	0.748
20	0.787	0.827	0.866	0.906	0.945	0.984	1.024	1.063	1.102	1.142
30	1.181	1.220	1.260	1.299	1.339	1.378	1.417	1.457	1.496	1.536
40	1.575	1.614	1.654	1.693	1.732	1.772	1.811	1.850	1.890	1.929
50	1.969	2.008	2.047	2.087	2.126	2.165	2.205	2.244	2.283	2.323
60	2.362	2.402	2.441	2.480	2.520	2.559	2.598	2.638	2.677	2.717
70	2.756	2.795	2.835	2.874	2.913	2.953	2.992	3.032	3.071	3.110
80	3.150	3.189	3.228	3.268	3.307	3.346	3.386	3.425	3.465	3.504
90	3.543	3.583	3.622	3.661	3.701	3.740	3.780	3.819	3.858	3.898

Kilogram to Pound

1 kg = 2.2046 lb

	0	1	2	3	4	5	6	7	8	9
0	0	2.20	4.41	6.61	8.82	11.02	13.23	15.43	17.64	19.84
10	22.05	24.25	26.46	28.66	30.86	33.07	35.27	37.48	39.68	41.89
20	44.09	46.30	48.50	50.71	51.91	55.12	57.32	59.53	61.73	63.93
30	66.14	68.34	70.55	72.75	74.96	77.16	79.37	81.57	83.78	85.98
40	88.18	90.39	92.59	94.80	97.00	99.21	101.41	103.62	105.82	108.03
50	110.23	112.44	114.64	116.85	119.05	121.25	123.46	125.66	127.87	130.07
60	132.28	134.48	136.69	138.89	141.10	143.30	145.51	147.71	149.91	152.12
70	154.32	156.53	158.73	160.94	163.14	165.35	167.55	169.76	171.96	174.17
80	176.37	178.57	180.78	182.98	185.19	187.39	189.60	191.80	194.01	196.21
90	198.42	200.62	202.83	205.03	207.24	209.44	211.64	213.85	216.05	218.26

https://truckmanualshub.com/

Liter to U.S. Gallon

1ℓ = 0.2642 U.S. Gal

	0	1	2	3	4	5	6	7	8	9
0	0	0.264	0.528	0.793	1.057	1.321	1.585	1.849	2.113	2.378
10	2.642	2.906	3.170	3.434	3.698	3.963	4.227	4.491	4.755	5.019
20	5.283	5.548	5.812	6.076	6.340	6.604	6.869	7.133	7.397	7.661
30	7.925	8.189	8.454	8.718	8.982	9.246	9.510	9.774	10.039	10.303
40	10.567	10.831	11.095	11.359	11.624	11.888	12.152	12.416	12.680	12.944
50	13.209	13.473	13.737	14.001	14.265	14.529	14.795	15.058	15.322	15.586
60	15.850	16.115	16.379	16.643	16.907	17.171	17.435	17.700	17.964	18.228
70	18.492	18.756	19.020	19.285	19.549	19.813	20.077	20.341	20.605	20.870
80	21.134	21.398	21.662	21.926	22.190	22.455	22.719	22.983	23.247	23.511
90	23.775	24.040	24.304	24.568	24.832	25.096	25.361	25.625	25.889	26.153

Liter to U.K. Gallon

1ℓ = 0.21997 U.K. Gal

	0	1	2	3	4	5	6	7	8	9
0	0	0.220	0.440	0.660	0.880	1.100	1.320	1.540	1.760	1.980
10	2.200	2.420	2.640	2.860	3.080	3.300	3.520	3.740	3.950	4.179
20	4.399	4.619	4.839	5.059	5.279	5.499	5.719	5.939	6.159	6.379
30	6.599	6.819	7.039	7.259	7.479	7.969	7.919	8.139	8.359	8.579
40	8.799	9.019	9.239	9.459	9.679	9.899	10.119	10.339	10.559	10.778
50	10.998	11.281	11.438	11.658	11.878	12.098	12.318	12.528	12.758	12.978
60	13.198	13.418	13.638	13.858	14.078	14.298	14.518	14.738	14.958	15.178
70	15.398	15.618	15.838	16.058	16.278	16.498	16.718	16.938	17.158	17.378
80	17.598	17.818	18.037	18.257	18.477	18.697	18.917	19.137	19.357	19.577
90	19.797	20.017	20.237	20.457	20.677	20.897	21.117	21.337	21.557	21.777

https://truckmanualshub.com/

kgm to ft. lb

1 kgm = 7.233 ft. lb

	0	1	2	3	4	5	6	7	8	9
0	0	7.2	14.5	21.7	28.9	36.2	43.4	50.6	57.9	65.1
10	72.3	79.6	86.8	94.0	101.3	108.5	115.7	123.0	130.2	137.4
20	144.7	151.9	159.1	166.4	173.6	180.8	188.1	195.3	202.5	209.8
30	217.0	224.2	231.5	238.7	245.9	253.2	260.4	267.6	274.9	282.1
40	289.3	296.6	303.8	311.0	318.3	325.5	332.7	340.0	347.2	354.4
50	361.7	368.9	376.1	383.4	390.6	397.8	405.1	412.3	419.5	426.8
60	434.0	441.2	448.5	455.7	462.9	470.2	477.4	484.6	491.8	499.1
70	506.3	513.5	520.8	528.0	535.2	542.5	549.7	556.9	564.2	571.4
80	578.6	585.9	593.1	600.3	607.6	614.8	622.0	629.3	636.5	643.7
90	651.0	658.2	665.4	672.7	679.9	687.1	694.4	701.6	708.8	716.1
100	723.3	730.5	737.8	745.0	752.2	759.5	766.7	773.9	781.2	788.4
110	795.6	802.9	810.1	817.3	824.6	831.8	839.0	846.3	853.5	860.7
120	868.0	875.2	882.4	889.7	896.9	904.1	911.4	918.6	925.8	933.1
130	940.3	947.5	954.8	962.0	969.2	976.5	983.7	990.9	998.2	1005.4
140	1012.6	1019.9	1027.1	1034.3	1041.5	1048.8	1056.0	1063.2	1070.5	1077.7
150	1084.9	1092.2	1099.4	1106.6	1113.9	1121.1	1128.3	1135.6	1142.8	1150.0
160	1157.3	1164.5	1171.7	1179.0	1186.2	1193.4	1200.7	1207.9	1215.1	1222.4
170	1129.6	1236.8	1244.1	1251.3	1258.5	1265.8	1273.0	1280.1	1287.5	1294.7
180	1301.9	1309.2	1316.4	1323.6	1330.9	1338.1	1345.3	1352.6	1359.8	1367.0
190	1374.3	1381.5	1388.7	1396.0	1403.2	1410.4	1417.7	1424.9	1432.1	1439.4

https://truckmanualshub.com/

kg/cm² to lb/in²

1kg/cm² = 14.2233 lb/in²

	0	1	2	3	4	5	6	7	8	9
0	0	14.2	28.4	42.7	56.9	71.1	85.3	99.6	113.8	128.0
10	142.2	156.5	170.7	184.9	199.1	213.4	227.6	241.8	256.0	270.2
20	284.5	298.7	312.9	327.1	341.4	355.6	369.8	384.0	398.3	412.5
30	426.7	440.9	455.1	469.4	483.6	497.8	512.0	526.3	540.5	554.7
40	568.9	583.2	597.4	611.6	625.8	640.1	654.3	668.5	682.7	696.9
50	711.2	725.4	739.6	753.8	768.1	782.3	796.5	810.7	825.0	839.2
60	853.4	867.6	881.8	896.1	910.3	924.5	938.7	953.0	967.2	981.4
70	995.6	1010	1024	1038	1053	1067	1081	1095	1109	1124
80	1138	1152	1166	1181	1195	1209	1223	1237	1252	1266
90	1280	1294	1309	1323	1337	1351	1365	1380	1394	1408
100	1422	1437	1451	1465	1479	1493	1508	1522	1536	1550
110	1565	1579	1593	1607	1621	1636	1650	1664	1678	1693
120	1707	1721	1735	1749	1764	1778	1792	1806	1821	1835
130	1849	1863	1877	1892	1906	1920	1934	1949	1963	1977
140	1991	2005	2020	2034	2048	2062	2077	2091	2105	2119
150	2134	2148	2162	2176	2190	2205	2219	2233	2247	2262
160	2276	2290	2304	2318	2333	2347	2361	2375	2389	2404
170	2418	2432	2446	2460	2475	2489	2503	2518	2532	2546
180	2560	2574	2589	2603	2617	2631	2646	2660	2674	2688
190	2702	2717	2731	2745	2759	2773	2788	2802	2816	2830
200	2845	2859	2873	2887	2901	2916	2930	2944	2958	2973
210	2987	3001	3015	3030	3044	3058	3072	3086	3101	3115
220	3129	3143	3158	3172	3186	3200	3214	3229	3243	3257
230	3271	3286	3300	3314	3328	3343	3357	3371	3385	3399
240	3414	3428	3442	3456	3470	3485	3499	3513	3527	3542

https://truckmanualshub.com/

Temperature

Fahrenheit-Centigrade Conversion ; a simple way to convert a Fahrenheit temperature reading into a Centigrade temperature reading or vice versa is to enter the accompanying table in the center or boldface column of figures.

These figures refer to the temperature in either Fahrenheit or Centigrade degrees.

If it is desired to convert from Fahrenheit to Centigrade degrees, consider the center column as a table of Fahrenheit temperatures and read the corresponding Centigrade temperature in the column at the left.

If it is desired to convert from Centigrade to Fahrenheit degrees, consider the center column as a table of Centigrade values, and read the corresponding Fahrenheit temperature on the right.

1°C = 33.8°F

°C		°F	°C		°F	°C		°F	°C		°F
−40.4	**−40**	−40.0	−11.7	**11**	51.8	7.8	**46**	114.8	27.2	**81**	117.8
−37.2	**−35**	−31.0	−11.1	**12**	53.6	8.3	**47**	116.6	27.8	**82**	179.6
−34.4	**−30**	−22.0	−10.6	**13**	55.4	8.9	**48**	118.4	28.3	**83**	181.4
−31.7	**−25**	−13.0	−10.0	**14**	57.2	9.4	**49**	120.2	28.9	**84**	183.2
−28.9	**−20**	−4.0	−9.4	**15**	59.0	10.0	**50**	122.0	29.4	**85**	185.0
−28.3	**−19**	−2.2	−8.9	**16**	60.8	10.6	**51**	123.8	30.0	**86**	186.8
−27.8	**−18**	−0.4	−8.3	**17**	62.6	11.1	**52**	125.6	30.6	**87**	188.6
−27.2	**−17**	1.4	−7.8	**18**	64.4	11.7	**53**	127.4	31.1	**88**	190.4
−26.7	**−16**	3.2	−7.2	**19**	66.2	12.2	**54**	129.2	31.7	**89**	192.2
−26.1	**−15**	5.0	−6.7	**20**	68.0	12.8	**55**	131.0	32.2	**90**	194.0
−25.6	**−14**	6.8	−6.1	**21**	69.8	13.3	**56**	132.8	32.8	**91**	195.8
−25.0	**−13**	8.6	−5.6	**22**	71.6	13.9	**57**	134.6	33.3	**92**	197.6
−24.4	**−12**	10.4	−5.0	**23**	73.4	14.4	**58**	136.4	33.9	**93**	199.4
−23.9	**−11**	12.2	−4.4	**24**	75.2	15.0	**59**	138.2	34.4	**94**	201.2
−23.3	**−10**	14.0	−3.9	**25**	77.0	15.6	**60**	140.0	35.0	**95**	203.0
−22.8	**−9**	15.8	−3.3	**26**	78.8	16.1	**61**	141.8	35.6	**96**	204.8
−22.2	**−8**	17.6	−2.8	**27**	80.6	16.7	**62**	143.6	36.1	**97**	206.6
−21.7	**−7**	19.4	−2.2	**28**	82.4	17.2	**63**	145.4	36.7	**98**	208.4
−21.1	**−6**	21.2	−1.7	**29**	84.2	17.8	**64**	147.2	37.2	**99**	210.2
−20.6	**−5**	23.0	−1.1	**30**	86.0	18.3	**65**	149.0	37.8	**100**	212.0
−20.0	**−4**	24.8	−0.6	**31**	87.8	18.9	**66**	150.8	40.6	**105**	221.0
−19.4	**−3**	26.6	0	**32**	89.6	19.4	**67**	152.6	43.3	**110**	230.0
−18.9	**−2**	28.4	0.6	**33**	91.4	20.0	**68**	154.4	46.1	**115**	239.0
−18.3	**−1**	30.2	1.1	**34**	93.2	20.6	**69**	156.2	48.9	**120**	248.0
−17.8	**0**	32.0	1.7	**35**	95.0	21.1	**70**	158.0	51.7	**125**	257.0
−17.2	**1**	33.8	2.2	**36**	96.8	21.7	**71**	159.8	54.4	**130**	266.0
−16.7	**2**	35.6	2.8	**37**	98.6	22.2	**72**	161.6	57.2	**135**	275.0
−16.1	**3**	37.4	3.3	**38**	100.4	22.8	**73**	163.4	60.0	**140**	284.0
−15.6	**4**	39.2	3.9	**39**	102.2	23.3	**74**	165.2	62.7	**145**	293.0
−15.0	**5**	41.0	4.4	**40**	104.0	23.9	**75**	167.0	65.6	**150**	302.0
−14.4	**6**	42.8	5.0	**41**	105.8	24.4	**76**	168.8	68.3	**155**	311.0
−13.9	**7**	44.6	5.6	**42**	107.6	25.0	**77**	170.6	71.1	**160**	320.0
−13.3	**8**	46.4	6.1	**43**	109.4	25.6	**78**	172.4	73.9	**165**	329.0
−12.8	**9**	48.2	6.7	**44**	111.2	26.1	**79**	174.2	76.7	**170**	338.0
−12.2	**10**	50.0	7.2	**45**	113.0	26.7	**80**	176.0	79.4	**175**	347.0

https://truckmanualshub.com/

ENGINE
01 GENERAL

General view 01-002
Specifications 01-004
General assembly drawing 01-010
Engine performance curve 01-018
Weight table 01-040

https://truckmanualshub.com/

GENERAL VIEW

6D125-1

★ The configulation may differ depending on the product on which the engine is mounted.

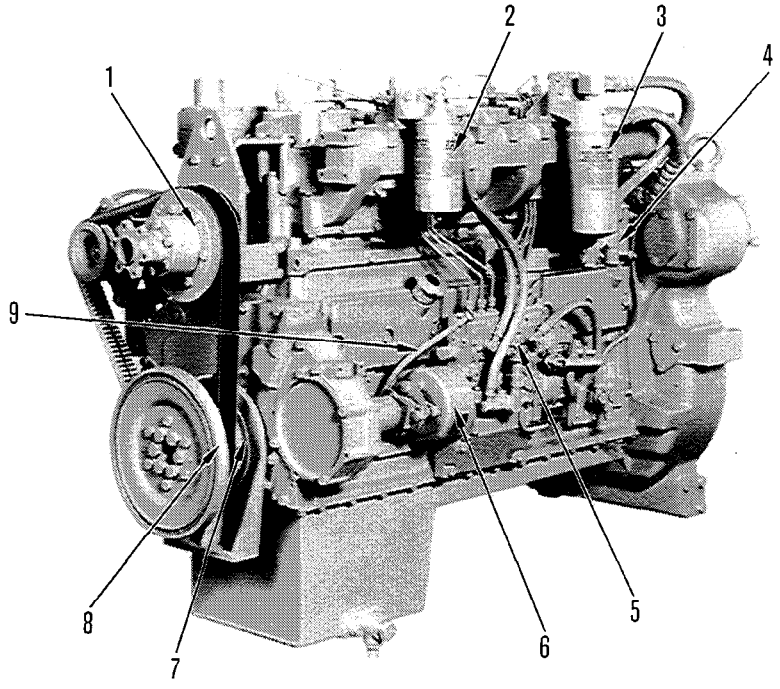

6150P001

1. Fan pulley
2. Fuel filter
3. Oil filter
4. Adapter
5. Fuel injection pump
6. Automatic timer
7. Crankshaft pulley
8. Vibration damper
9. Dipstick

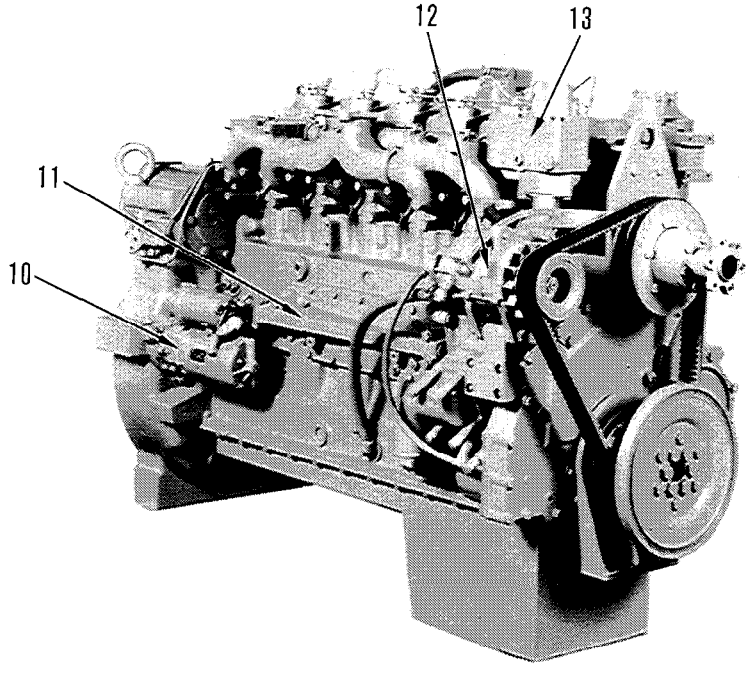

6150P002

10. Starting motor
11. Oil cooler
12. Alternator
13. Thermostat housing

https://truckmanualshub.com/

S6D125-1

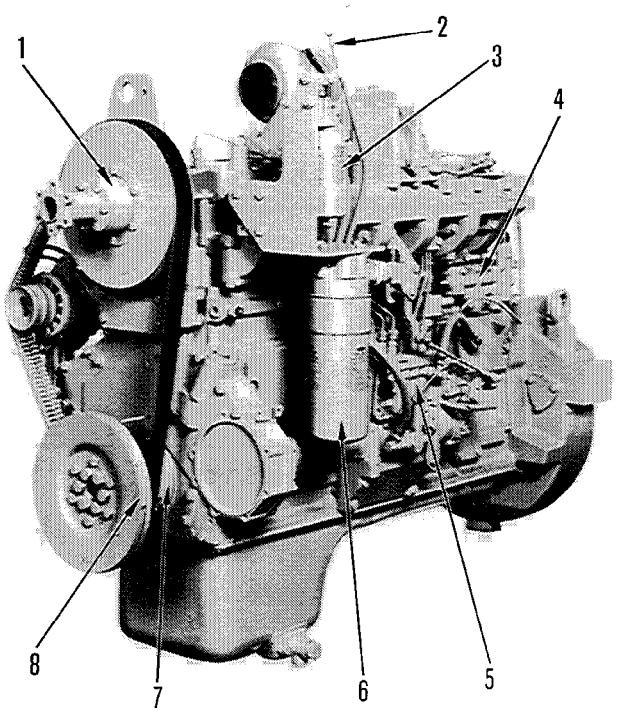

6150P003

1. Fan pulley
2. Dipstick
3. Fuel filter
4. Adapter
5. Fuel injection pump
6. Oil filter
7. Crankshaft pulley
8. Vibration damper

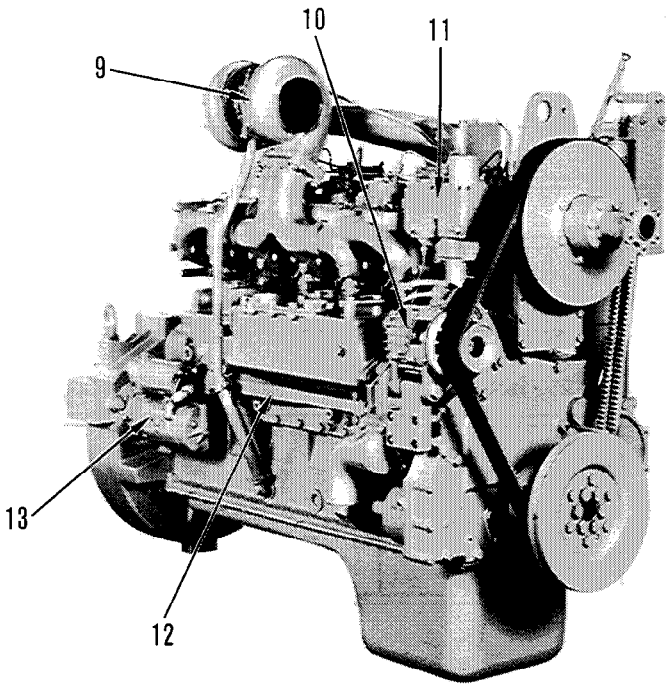

6150P004

9. Turbocharger
10. Alternator
11. Thermostat housing
12. Oil cooler
13. Starting motor

https://truckmanualshub.com/

SPECIFICATIONS

Engine model			6D125-1		
Applicable machine			D50A-17 D50P-17	D50F-17	D53A-17 D53P-17
Number of cylinder — Bore x Stroke		(mm)	6 — 125 x 150		
Total piston displacement		(cc)	11,040		
Firing order			1 — 5 — 3 — 6 — 2 — 4		
Dimensions	Overall length	(mm)	1,533	1,532	1,440
	Overall width	(mm)	850	850	850
	Overall height (excluding exhaust pipe)	(mm)	1,555	1,555	1,555
	Overall height (including exhaust pipe)	(mm)	—	—	—
Performance	Flywheel horsepower	(HP/rpm)	120/1,750	138/1,900	124/1,900
	Maximum torque	(kgm/rpm)	65.5/1,100	66/1,300	62.5/1,300
	High idling speed	(rpm)	1,875 — 1,975	2,050 — 2,150	2,050 — 2,150
	Low idling speed	(rpm)	650 — 700	650 — 700	600 — 650
	Minimum fuel consumption ratio	(g/HPh)	155	155	156
Dry weight		(kg)	1,090	1,090	970
Fuel pump			Bosch PE — NB type		
Governor			Bosch RSV Centrifugal, all-speed type		
Lubricating oil amount (refill capacity)		(ℓ)	30 (26)	30 (26)	30 (26)
Coolant amount (engine only)		(ℓ)	21	21	21
Alternator			24V, 13A	24V, 13A	24V, 13A
Starting motor			24V, 7.5 kw	24V, 7.5 kw	24V, 7.5 kw
Battery			12V 150Ah x 2	12V 150Ah x 2	12V 150Ah x 2
Turbocharger			—	—	—
Air compressor			—	—	—
Others			—	—	—

https://truckmanualshub.com/

Thank you very much for your reading.

Please Click Here Then Get More Information.