https://truckmanualshub.com/

X4 Long Front

210X4LF 250X4LF 350X4LF

SPECIFICATIONS

Link-Belt
EXCAVATORS

https://truckmanualshub.com/

Factory-Built to Deliver More Performance

Link-Belt X4 Series Long reach excavators are versatile and tough enough to take on a variety of dredging, cleaning and sloping applications. All models feature innovative EPA Final Tier 4 engines from Isuzu that strike the ultimate balance between power, productivity and fuel efficiency. You will experience up to 8% improved fuel economy in the base machine, with the added benefit of no costly diesel particulate filters (DPF) to maintain or replace. These machines are all factory-built to insure maximum strength, performance and reliability. Settle in to the roomiest, most accommodating cab in their class, with more legroom and a new high back, heated seat for shift-long comfort.

https://truckmanualshub.com/

Attention To Details At Every Level

(A) Quiet, pressurized cab offers **excellent visibility** and **comfortable, best-in-class seating**. Enough floor space to accommodate the largest of work boots, with roomy cup holders and storage compartments for cell phones, snacks and other personal items.

(B) 7" high-definition LCD monitor **keeps you connected to your machine and work environment**. RemoteCARE® telematics keeps a watchful eye on performance, maintenance intervals and theft deterrence...included on all Long Fronts with no subscription fees.

(C) Three power modes (Speed Priority, Heavy and Applied Power) let you **choose the best blend of power, precision and fuel savings** for the work you're doing.

(D) Ergonomic joysticks **fit your hand perfectly**.

(E) **Factory-built boom and arm** deliver uncompromised strength and durability across tough applications like sloping and dredging. Ulti-Flow™ hydraulic system features electronically-controlled pumps, a new solenoid valve and a new control valve with a 30% larger hydraulic passage area.

(F) Robust undercarriage features **larger track rollers and thicker plating for longer life**. Unique side-frame design **reduces dirt accumulation** and is **easier to clean**.

(G) Full-time, rear-view camera display is standard; add the WAVES™ option for a **seamless 270° view around the machine**.

(H) 2.5% DEF (Diesel Exhaust Fluid) consumption rate, combined with **one of the largest DEF tank capacities** lets you **work long hours between refills**.

All improvements and percentage increases are in reference to Link-Belt X3 Series excavators, unless otherwise stated

https://truckmanualshub.com/

210X4 LF Specifications

Engine

Isuzu AR-4HK1X Final Tier 4 turbocharged diesel engine
SAE J 1349 net hp ..... 160 hp (119.3 kW) @ 1,800 rpm
Displacement ..... 317 cu in (5.2 L)
Maximum torque ..... 457 lbf-ft (620 Nm) @ 1,600 rpm
Starter 24V-5.0kW
Alternator ..... 50 amp
Battery ..... (2) 12-volt 92 amp hours

Hydraulic System

Hydraulic Pumps

Pump Output ..... 2 x 55.7 gpm (211 L/min)
Pilot Pump Maximum Flow ..... 4.8 gpm (18 L/min)

Relief Valve Settings

Boom Up / Arm Out ..... 4,970 psi (34.3 MPa)
in Power Boost ..... 5,410 psi (37.3 MPa)
Arm In ..... 3,330 psi (23.0 MPa)
Boom Down ..... 4,270 psi (29.4 MPa)
Bucket ..... 3,620 psi (25.0 MPa)
Swing Circuit ..... 3,480 psi (24.0 MPa)
Travel Circuit ..... 4,970 psi (34.3 MPa)

Hydraulic Cylinders

number of cylinders - bore x stroke

Boom ..... 2 - 4.7" x 49.4" (120 mm x 1,255 mm)
Arm ..... 1 - 5.7" x 64.1" (145 mm x 1,627 mm)
Bucket ..... 3.7" x 34.7" (95 mm x 881 mm)

Swing

Swing Speed ..... 11.5 rpm
Tail Swing ..... 9' 2" (2.79 m)
Swing Torque ..... 38,500 lbf-ft (52.2 kNm)

Undercarriage

Carrier Rollers ..... 2 per Side
Track Rollers ..... 8 per Side
Track Link Pitch ..... 7.48" (190 mm)
Shoes ..... 49 per Side
Shoe Width ..... 31.5" (800 mm)
Ground Pressure ..... 5.37 psi (0.037 MPa)

Travel System

Travel Speeds ..... 2.1 - 3.5 mph (3.4 - 5.6 km/h)
Drawbar Pull ..... 42,300 lbf (188 kN)
Gradeability ..... 70% (35°)

Attachment

Boom ..... 28' 7" (8.70 m)

Available Arms	Digging Force
• 21' 0" (6.40 m)	10,300 lbf (46 kN)
• Bucket Digging Force	14,600 lbf (65 kN)

Capacities

Fuel Tank ..... 108 Gallons (410.0 Liters)
Hydraulic System ..... 66 Gallons (250.0 Liters)
Hydraulic Tank ..... 39 Gallons (147.0 Liters)
Final Drive (per side) ..... 1.3 Gallons (5.0 Liters)
Swing Drive ..... 1.3 Gallons (5.0 Liters)
Engine Oil ..... 6.1 Gallons (23.1 Liters)
DEF Tank ..... 31.7 Gallons (120.0 Liters)
Coolant System ..... 8.3 Gallons (31.4 Liters)

Operating Weight

Working weight with 31.5" (800 mm) shoes, 28' 7" (8.70 m) boom, 21' 0" (6.40 m) arm, 728 lb. (340 kg) bucket, 10,362 lb. (4 700 kg) counterweight
..... 51 900 lbs. (23,500 kg)

210X4 LF Travel Dimensions

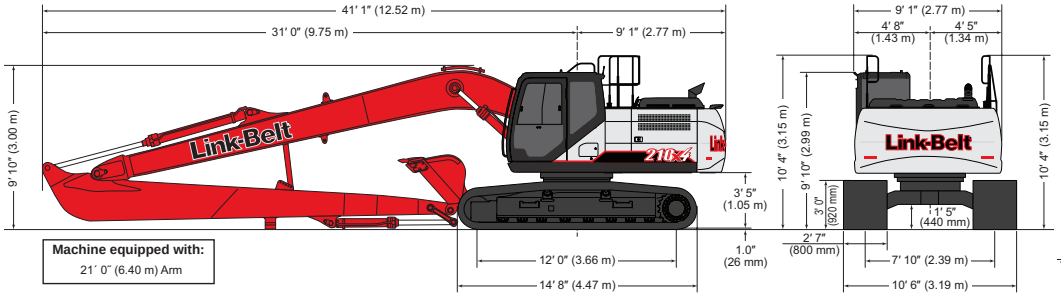

210X4 LF Working Range

Machine Equipped with 28' 7" (8.70 m) Boom	Arm 21' 0" (6.40 m)
A. Maximum reach	51' 2" (15.60 m)
B. Maximum reach @ ground level	50' 10" (15.49 m)
C. Maximum dig depth	39' 5" (12.01 m)
D. Maximum dig height	42' 7" (12.97 m)
E. Maximum dump height	35' 2" (10.73 m)
F. Digging depth 8' (2.44 m) level bottom	39' 0" (11.89 m)
G. Bucket rotation	178°
H. Maximum vertical wall depth	33' 10" (10.30 m)

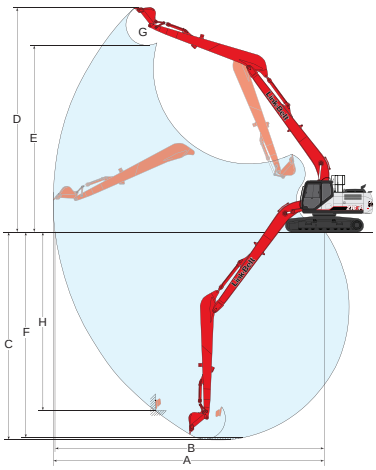

https://truckmanualshub.com/

210X4 LF Lifting Capacities

Radius of Load 21' 0" (6.40 m) Arm with 28' 7" (8.70 m) Boom and 750 lb. (340 kg) Bucket with Power-Boost Applied													
End / Side		5' 0" (1.5 m)		10' 0" (3.0 m)		15' 0" (4.5 m)		20' 0" (6.0 m)		25' 0" (7.5 m)		30' 0" (9.0 m)	
		End	Side	End	Side	End	Side	End	Side	End	Side	End	Side
+20' 0"	lbs												
(6.0 m)	kg												
+15' 0"	lbs											5,050*	5,050*
(4.5 m)	kg											2 340*	2 340*
+10' 0"	lbs			10,550*	10,550*	7,050*	7,050*	8,300*	8,300*	6,850*	6,850*	5,950*	5,900
(3.0 m)	kg			5 340*	5 340*	3 480*	3 480*	3 850*	3 850*	3 180*	3 180*	2 750*	2 750*
+5' 0"	lbs			7,300*	7,300*	14,700*	14,700*	10,350*	10,200*	8,150*	7,400	6,800*	5,550
(1.5 m)	kg			3 110*	3 110*	6 850*	6 850*	4 800*	4 720	3 760*	3 440	3 130*	2 570
Ground	lbs	2,500*	2,500*	5,300*	5,300*	13,450*	13,450*	12,150*	9,200	9,300*	6,700	7,600*	5,050
Line	kg	1 120*	1 120*	2 330*	2 330*	5 820*	5 820*	5 620*	4 270	4 290*	3 110	3 500*	2 350
-5' 0"	lbs	4,100*	4,100*	6,100*	6,100*	11,100*	11,100*	13,400*	8,400	10,050	6,150	7,700	4,650
(1.5 m)	kg	1 850*	1 850*	2 710*	2 710*	4 880*	4 880*	6 190*	3 900	4 670	2 850	3 580	2 180
-10' 0"	lbs	5,650*	5,650*	7,300*	7,300*	11,350*	11,350*	13,550	7,950	9,700	5,800	7,400	4,400
(3.0 m)	kg	2 530*	2 530*	3 260*	3 260*	5 010*	5 010*	6 300	3 700	4 510	2 690	3 440	2 050
-15' 0"	lbs	7,150*	7,150*	8,750*	8,750*	12,600*	11,950*	13,400	7,850	9,500	5,650	7,250	4,300
(4.5 m)	kg	3 200*	3 200*	3 900*	3 900*	5 560*	5 490*	6 230	3 640	4 430	2 620	3 370	1 990
-20' 0"	lbs	8,650*	8,650*	10,500*	10,500*	14,550*	12,350	13,450	7,950	9,550	5,650	7,250	4,300
(6.0 m)	kg	3 850*	3 850*	4 670*	4 670*	6 410*	5 740	6 250	3 680	4 430	2 630	3 370	1 990
-25' 0"	lbs	10,750*	10,750*	13,100*	13,100*	17,650*	12,750	13,500*	8,150	9,700	5,850	7,400	4,450
(7.5 m)	kg	4 790*	4 790*	5 800*	5 800*	7 780*	5 920	6 250*	3 780	4 490	2 700	3 430	2 060
-30' 0"	lbs	12,550*	12,550*	16,250*	16,250*	16,100*	13,350	12,200*	8,550	9,600*	6,150	7,550	4,750
(9.0 m)	kg	5 650*	5 650*	7 160*	7 160*	7 510*	6 170	5 700*	3 960	4 500*	2 840	3 520	2 190
-35' 0"	lbs			18,050*	18,050*	12,950*	12,950*	9,900*	9,100	7,550*	6,650		
(10.5 m)	kg			8 390*	8 390*	6 160*	6 160*	4 720*	4 230	3 650*	3 100		

Radius of Load 21' 0" (6.40 m) Arm with 28' 7" (8.70 m) Boom and 750 lb. (340 kg) Bucket with Power-Boost Applied											
End / Side		35' 0" (10.5 m)		40' 0" (12.0 m)		45' 0" (13.5 m)		50' 0" (15.0 m)		Cap. at Max. Reach	
		End	Side	End	Side	End	Side	End	Side	End	Side
+40' 0"	lbs									2,200*	2,200*
(12.0 m)	kg									980*	980*
+35' 0"	lbs			2,900*	2,900*					2,050*	2,050*
(10.5 m)	kg			1 560*	1 560*					910*	910*
+30' 0"	lbs			3,750*	3,750*					1,950*	1,950*
(9.0 m)	kg			1 740*	1 740*					880*	880*
+25' 0"	lbs			4,000*	3,950	3,300*	3,000			1,900*	1,900*
(7.5 m)	kg			1 810*	1 810*	1 720*	1 430			870*	870*
+20' 0"	lbs	4,200*	4,200*	4,150*	3,900	4,000*	2,950			1,900*	1,900*
(6.0 m)	kg	1 920*	1 920*	1 900*	1 830*	1 840*	1 390			870*	870*
+15' 0"	lbs	4,700*	4,700*	4,450*	3,700	4,250*	2,800			1,950*	1,950*
(4.5 m)	kg	2 150*	2 150*	2 030*	1 740	1 970*	1 330			890*	890*
+10' 0"	lbs	5,300*	4,550	4,850*	3,500	4,450	2,650	2,250*	2,000	2,050*	2,000
(3.0 m)	kg	2 440*	2 130	2 220*	1 630	2 060	1 260	1 390*	960	930*	900
+5' 0"	lbs	5,900*	4,200	5,250	3,250	4,250	2,500	2,450*	1,950	2,200*	1,900
(1.5 m)	kg	2 720*	1 970	2 430*	1 520	2 000	1 180	1 500*	910	990*	860
Ground	lbs	6,350	3,900	5,100	3,050	4,150	2,400			2,350*	1,900
Line	kg	2 940	1 820	2 370	1 420	1 930	1 120			1 070*	850
-5' 0"	lbs	6,050	3,650	4,900	2,850	4,000	2,250			2,600*	1,900
(1.5 m)	kg	2 820	1 690	2 280	1 340	1 870	1 060			1 170*	870
-10' 0"	lbs	5,850	3,450	4,750	2,750	3,950	2,200			2,950*	2,000
(3.0 m)	kg	2 730	1 610	2 210	1 280	1 830	1 030			1 320*	910
-15' 0"	lbs	5,750	3,350	4,700	2,700	3,450*	2,200			3,400*	2,200
(4.5 m)	kg	2 680	1 560	2 190	1 250	1 840	1 030			1 530*	990
-20' 0"	lbs	5,800	3,400	4,800	2,750					4,100*	2,500
(6.0 m)	kg	2 690	1 570	2 210	1 280					1 840*	1 130
-25' 0"	lbs	5,950	3,550							5,150	3,050
(7.5 m)	kg	2 750	1 640							2 310	1 350
-30' 0"	lbs									6,250*	3,950
(9.0 m)	kg									2 820*	1 730
-35' 0"	lbs									6,600*	5,750
(10.5 m)	kg									2 980*	2 470

Notes: Lifting capacities

1. Lifting capacities shown should not be exceeded. Weight of all lifting accessories must be deducted from the above lifting capacities.
2. Lifting capacities are based on machine standing on firm, uniform supporting surface. User must make allowances for job conditions such as soft or uneven ground.
3. Lifting capacities shown do not exceed 75% of minimum tipping loads or 87% of hydraulic capacities. **Capacities marked with an asterisk (*) are limited by hydraulic capacities.**
4. Least stable position is over the side.
5. Operator should be fully acquainted with the Operator's Manual & Operating Safety Booklet, furnished by LBX before operating the machine.
6. Capacities apply only to the machine as originally manufactured and normally equipped by LBX Company, LLC.
7. Lift capacity ratings are based on ISO 10567, "Earthmoving Machinery - Hydraulic Excavators - Lift Capacity."

https://truckmanualshub.com/

250X4 LF Specifications

Engine

Isuzu AQ-4HK1X Final Tier 4 turbocharged diesel engine

SAE J 1349 net horsepower... 177 hp (132 kW) @ 2,000 rpm
Displacement ..... 317 cu in (5.2 L)
Maximum Torque ..... 458 lbf-ft (621 Nm) @ 1,800 rpm
Starter 24V-5.0kW
Alternator ..... 50 amp
Battery ..... (2) 12-volt 92 amp hours

Hydraulic System

Hydraulic Pumps

Pump Output ..... 2 x 61.8 gpm (234 L/min)
Pilot Pump Maximum Flow ..... 5.3 gpm (20 L/min)

Relief Valve Settings

Boom/Arm/Bucket ..... 4,970 psi (34.3 MPa)
in Power Boost ..... 5,410 psi (37.3 MPa)
Swing Circuit ..... 3,920 psi (27.0 MPa)
Travel Circuit ..... 4,970 psi (34.3 MPa)

Hydraulic Cylinders

number of cylinders - bore x stroke

Boom ..... 2 - 5.1" x 52.6" (130 mm x 1,335 mm)
Arm ..... 1 - 5.9" x 68.4" (150 mm x 1,737 mm)
Bucket ..... 3.7" x 34.7" (95 mm x 881 mm)

Swing

Swing Speed ..... 10.6 rpm
Tail Swing ..... 9' 8" (2.95 m)
Swing Torque ..... 51,500 lbf-ft (69.8 kNm)

Undercarriage

Carrier Rollers ..... 2 per Side
Track Rollers ..... 9 per Side
Track Link Pitch ..... 7.48" (190 mm)
Shoes ..... 51 per Side
Shoe Width ..... 31.5" (800 mm)
Ground Pressure ..... 6.24 psi (0.043 MPa)

Travel System

Travel Speeds ..... 2.2 - 3.4 mph (3.5 - 5.5 km/h)
Drawbar Pull ..... 45,000 lbf (200 kN)
Gradeability ..... 70% (35°)

Attachment

Boom ..... 33′ 9″ (10.3 m)

Available Arms	Digging Force
• 26′ 3″(8.00 m)	9,060 lbf (40 kN)
• Bucket Digging Force	17,300 lbf (77 kN)

Capacities

Fuel Tank ..... 108 Gallons (410.0 Liters)
Hydraulic System ..... 66 Gallons (250.0 Liters)
Hydraulic Tank ..... 39 Gallons (147.0 Liters)
Final Drive (per side) ..... 1.3 Gallons (5.0 Liters)
Swing Drive ..... 2.6 Gallons (9.7 Liters)
Engine Oil ..... 6.1 Gallons (23.1 Liters)
DEF Tank ..... 31.7 Gallons (120.0 Liters)
Coolant System ..... 8.3 Gallons (31.4 Liters)

Operating Weight - No Tool

Working weight with 31.5"(800 mm) shoes, 33' 9" (10.3 m) boom, 26' 3" (8.0 m) arm, 750 lb. (340 kg) bucket, 16,200 lb. (7 350 kg) counterweight
..... 63,600 lbs. (28 800 kg)

250X4 LF Travel Dimensions

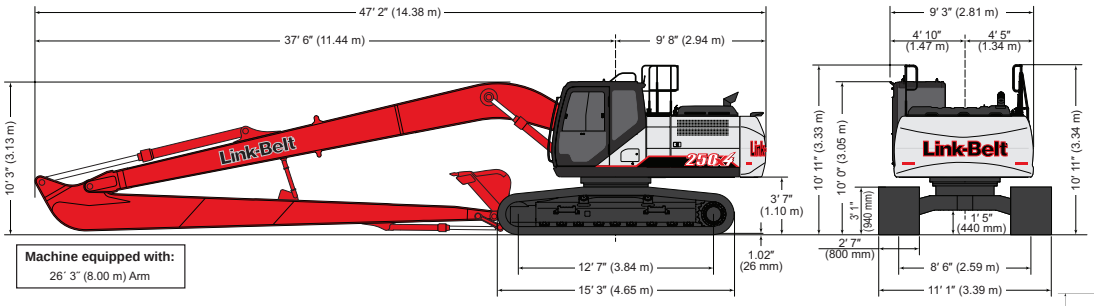

250X4 LF Working Range

Machine Equipped with 33′ 9″ (10.3 m) Boom	Arm 26′ 3″ (8.00 m)
A. Maximum reach	60' 0" (18.32 m)
B. Maximum reach @ ground level	59' 9" (18.22 m)
C. Maximum dig depth	47' 9" (14.56 m)
D. Maximum dig height	45' 9" (13.95 m)
E. Maximum dump height	38' 8" (11.78 m)
F. Digging depth 8' (2.44 m) level bottom	47' 3" (14.41 m)
G. Bucket rotation	178°
H. Maximum vertical wall depth	39' 10" (12.13 m)

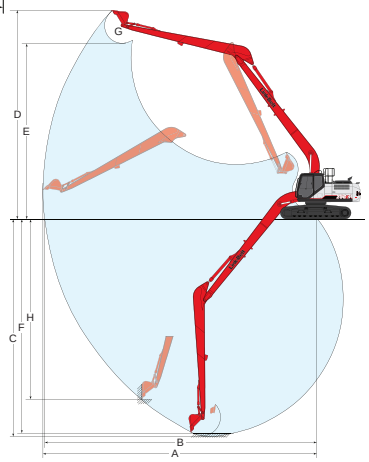

https://truckmanualshub.com/

250X4 LF Lifting Capacities

Radius of Load 26' 3" (8.00 m) Arm with 33' 9" (10.3 m) Boom and 750 lb. (340 kg) Bucket with Power-Boost Applied													
End / Side		5' 0" (1.5 m)		10' 0" (3.0 m)		15' 0" (4.5 m)		20' 0" (6.0 m)		25' 0" (7.5 m)		30' 0" (9.0 m)	
		End	Side	End	Side	End	Side	End	Side	End	Side	End	Side
+10' 0" (3.0 m)	lbs			8,600*	8,600*	5,800*	5,800*	4,750*	4,750*	7,900*	7,900*	6,750*	6,750*
	kg			3 810*	3 810*	3 070*	3 070*	2 490*	2 490*	3 690*	3 690*	3 120*	3 120*
+5' 0" (1.5 m)	lbs			4,650*	4,650*	16,400*	16,400*	12,200*	12,200*	9,450*	9,450*	7,750*	7,750*
	kg			1 980*	1 980*	7 470*	7 470*	5 670*	5 670*	4 370*	4 370*	3 590*	3 590*
Ground Line	lbs	1,450*	1,450*	3,400*	3,400*	8,450*	8,450*	14,250*	13,200	10,800*	9,750	8,700*	7,500
	kg	650*	650*	1 490*	1 490*	3 680*	3 680*	6 600*	6 100	4 990*	4 520	4 020*	3 480
-5' 0" (1.5 m)	lbs	2,600*	2,600*	3,950*	3,950*	7,200*	7,200*	14,500*	11,900	11,900*	8,850	9,500*	6,850
	kg	1 180*	1 180*	1 760*	1 760*	3 170*	3 170*	6 290*	5 530	5 490*	4 110	4 390*	3 190
-10' 0" (3.0 m)	lbs	3,700*	3,700*	4,900*	4,900*	7,500*	7,500*	12,700*	11,150	12,650*	8,250	10,150*	6,400
	kg	1 670*	1 670*	2 190*	2 190*	3 310*	3 310*	5 560*	5 180	5 850*	3 820	4 680*	2 970
-15' 0" (4.5 m)	lbs	4,850*	4,850*	6,000*	6,000*	8,250*	8,250*	12,750*	10,800	12,950	7,850	9,950	6,100
	kg	2 160*	2 160*	2 680*	2 680*	3 670*	3 670*	5 580*	5 010	6 010	3 660	4 610	2 830
-20' 0" (6.0 m)	lbs	6,000*	6,000*	7,200*	7,200*	9,350*	9,350*	13,600*	10,800	12,800	7,750	9,800	5,950
	kg	2 680*	2 680*	3 220*	3 220*	4 160*	4 160*	5 970*	5 000	5 940	3 610	4 540	2 760
-25' 0" (7.5 m)	lbs	7,250*	7,250*	8,450*	8,450*	10,750*	10,750*	15,150*	10,900	12,850	7,800	9,800	5,950
	kg	3 230*	3 230*	3 760*	3 760*	4 760*	4 760*	6 630*	5 070	5 950	3 630	4 540	2 770
-30' 0" (9.0 m)	lbs	8,600*	8,600*	10,100*	10,100*	12,750*	12,750*	16,100*	11,200	12,750*	8,000	9,900	6,100
	kg	3 830*	3 830*	4 480*	4 480*	5 610*	5 610*	7 460*	5 200	5 910*	3 710	4 600	2 830
-35' 0" (10.5 m)	lbs	10,100*	10,100*	12,150*	12,150*	15,350*	15,350*	14,950*	11,650	11,950*	8,350	9,750*	6,400
	kg	4 540*	4 540*	5 380*	5 380*	6 740*	6 740*	6 970*	5 390	5 560*	3 860	4 550*	2 950
-40' 0" (12.0 m)	lbs			14,400*	14,400*	17,000*	17,000*	13,150*	12,300	10,500*	8,850	8,550*	6,850
	kg			6 430*	6 430*	7 840*	7 840*	6 180*	5 670	4 950*	4 080	4 040*	3 140
-45' 0" (13.5 m)	lbs							10,200*	10,200*	8,050*	8,050*		
	kg							4 940*	4 940*	3 930*	3 930*		

Radius of Load 26' 3" (8.00 m) Arm with 33' 9" (10.3 m) Boom and 750 lb. (340 kg) Bucket with Power-Boost Applied													
End / Side		35' 0" (10.5 m)		40' 0" (12.0 m)		45' 0" (13.5 m)		50' 0" (15.0 m)		55' 0" (16.5 m)		Cap at Max. Reach	
		End	Side	End	Side	End	Side	End	Side	End	Side	End	Side
+40' 0" (12.0 m)	lbs											2,850*	2,850*
	kg											1 290*	1 290*
+35' 0" (10.5 m)	lbs							3,550*	3,550*			2,800*	2,800*
	kg							1 630*	1 630*			1 260*	1 260*
+30' 0" (9.0 m)	lbs					3,700*	3,700*	3,750*	3,750*			2,750*	2,750*
	kg					1 670*	1 670*	1 700*	1 700*			1 250*	1 250*
+25' 0" (7.5 m)	lbs					3,850*	3,850*	3,850*	3,850	3,550*	3,100	2,800*	2,800*
	kg					1 750*	1 750*	1 750*	1 750*	1 700*	1 470	1 260*	1 260*
+20' 0" (6.0 m)	lbs					4,100*	4,100*	4,000*	3,850	3,850*	3,000	2,850*	2,600
	kg					1 870*	1 870*	1 820*	1 800*	1 780*	1 420	1 280*	1 170
+15' 0" (4.5 m)	lbs			4,700*	4,700*	4,400*	4,400*	4,200*	3,700	4,050*	2,900	2,900*	2,400
	kg			2 180*	2 180*	2 030*	2 030*	1 920*	1 730	1 870*	1 360	1 320*	1 080
+10' 0" (3.0 m)	lbs	5,900*	5,900*	5,300*	5,300*	4,800*	4,350	4,500*	3,450	4,250*	2,750	3,050*	2,250
	kg	2 740*	2 740*	2 440*	2 440*	2 220*	2 040	2 060*	1 630	1 950*	1 300	1 380*	1 010
+5' 0" (1.5 m)	lbs	6,650*	6,400	5,850*	5,100	5,250*	4,100	4,800*	3,250	4,350	2,600	3,200*	2,150
	kg	3 070*	2 970	2 700*	2 380	2 420*	1 910	2 210*	1 530	2 030*	1 230	1 460*	970
Ground Line	lbs	7,350*	5,900	6,350*	4,700	5,650*	3,800	5,050	3,050	4,200	2,450	3,450*	2,100
	kg	3 380*	2 750	2 940*	2 200	2 610*	1 780	2 340	1 440	1 970	1 160	1 560*	950
-5' 0" (1.5 m)	lbs	7,950*	5,450	6,850*	4,400	5,800	3,550	4,850	2,900	4,100	2,350	3,700*	2,100
	kg	3 660*	2 540	3 150*	2 040	2 700	1 660	2 260	1 350	1 910	1 100	1 680*	950
-10' 0" (3.0 m)	lbs	8,200	5,100	6,700	4,100	5,600	3,350	4,700	2,750	4,000	2,250	3,800	2,150
	kg	3 810	2 370	3 130	1 920	2 600	1 570	2 190	1 290	1 870	1 060	1 730	970
-15' 0" (4.5 m)	lbs	7,950	4,850	6,500	3,900	5,450	3,200	4,600	2,650			4,000	2,250
	kg	3 690	2 250	3 030	1 830	2 540	1 500	2 150	1 250			1 810	1 020
-20' 0" (6.0 m)	lbs	7,800	4,700	6,400	3,850	5,400	3,150	4,600	2,650			4,300	2,450
	kg	3 630	2 190	2 980	1 780	2 500	1 470	2 140	1 230			1 940	1 100
-25' 0" (7.5 m)	lbs	7,800	4,750	6,450	3,850	5,450	3,200					4,750	2,750
	kg	3 630	2 200	2 990	1 790	2 520	1 490					2 130	1 230
-30' 0" (9.0 m)	lbs	7,950	4,850	6,550	4,000	5,600	3,350					5,400	3,200
	kg	3 670	2 250	3 040	1 840	2 580	1 550					2 420	1 440
-35' 0" (10.5 m)	lbs	8,050	5,100	6,650*	4,250							6,300*	3,950
	kg	3 730	2 360*	3 100	1 960							2 840*	1 750
-40' 0" (12.0 m)	lbs	6,850*	5,350									6,750*	5,250
	kg	3 280*	2 540									3 050*	2 290
-45' 0" (13.5 m)	lbs											7,150*	7,150*
	kg											3 220*	3 220*

Notes: Lifting capacities

1. Lifting capacities shown should not be exceeded. Weight of all lifting accessories must be deducted from the above lifting capacities.
2. Lifting capacities are based on machine standing on firm, uniform supporting surface. User must make allowances for job conditions such as soft or uneven ground.
3. Lifting capacities shown do not exceed 75% of minimum tipping loads or 87% of hydraulic capacities. Capacities marked with an **asterisk (*) are limited by hydraulic capacities.**
4. Least stable position is over the side.
5. Operator should be fully acquainted with the Operator's Manual & Operating Safety Booklet, furnished by LBX before operating the machine.
6. Capacities apply only to the machine as originally manufactured and normally equipped by LBX Company, LLC.
7. Lift capacity ratings are based on ISO 10567, "Earthmoving Machinery - Hydraulic Excavators - Lift Capacity."

https://truckmanualshub.com/

350X4 LF Specifications

Engine

Isuzu AQ-6HK1X Final Tier 4 turbocharged diesel engine

SAE J 1349 net horsepower	268 hp (200 kW) @ 1,900 rpm
Displacement	475 cu in (7.8 L)
Maximum Torque	729 lbf-ft (988 Nm) @ 1,500 rpm
Starter	24V-5.0kW
Alternator	50 amp
Battery	(2) 12-volt 128 amp hours

Hydraulic System

Hydraulic Pumps

Pump Output	2 x 79.3 gpm (300 L/min)
Pilot Pump Maximum Flow	7.5 gpm (28.5 L/min)

Relief Valve Settings

Boom Up / Arm	4,970 psi (34.3 MPa)
in Power Boost	5,410 psi (37.3 MPa)
Boom Down	2,990 psi (20.6 MPa)
Bucket	3,840 psi (26.5 MPa)
Swing Circuit	4,050 psi (27.9 MPa)
Travel Circuit	4,970 psi (34.3 MPa)

Hydraulic Cylinders

	number of cylinders - bore x stroke
Boom	2 - 5.7" x 58.9" (145 mm x 1,495 mm)
Arm	1 - 5.9" x 68.4" (150 mm x 1,737 mm)
Bucket	4.7" x 39.8" (120 mm x 1,010 mm)

Swing

Swing Speed	9.7 rpm
Tail Swing	11' 8" (3.55 m)
Swing Torque	76,000 lbf-ft (103 kNm)

Undercarriage

Carrier Rollers	2 per Side
Track Rollers	8 per Side
Track Link Pitch	8.5" (216 mm)
Shoes	48 per Side
Shoe Width	31.5" (800 mm)
Ground Pressure	8.12 psi (0.056 MPa)

Travel System

Travel Speeds	2.1 - 3.5 mph (3.4 - 5.7 km/h)
Drawbar Pull	59,600 lbf (265 kN)
Gradeability	70% (35°)

Attachment

Boom	35' 9" (10.78 m)
Available Arm	Digging Force
• 25' 2" (7.63 m)	14,900 lbf (66.2 kN)
with Auto Power Boost	16,200 lbf (72 kN)
• Bucket Digging Force	24,500 lbf (109 kN)

Capacities

Fuel Tank	153 Gallons (580 Liters)
Hydraulic System	92 Gallons (350 Liters)
Hydraulic Tank	46 Gallons (175 Liters)
Final Drive (per side)	2.5 Gallons (9.5 Liters)
Swing Drive	1.3 Gallons (5 Liters)
Engine Oil	12.7 Gallons (48 Liters)
DEF Tank	40 Gallons (152 Liters)
Coolant System	10 Gallons (38 Liters)

Operating Weight - No Tool

Working weight with 31.5" (800 mm) shoes, 35' 9" (10.78 m) boom, 25' 2" (7.63 m) arm, 1,460 lb. (660 kg) bucket, 19,400 lb. (8 800 kg) counterweight ..... 88 200 lbs. (40,000 kg)

350X4 LF Travel Dimensions

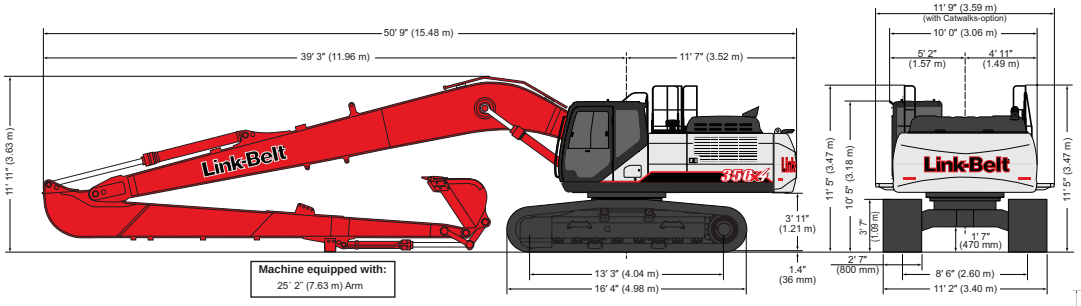

350X4 LF Working Range

Machine Equipped with 35' 9" (10.78 m) Boom	Arm 25' 2" (7.63 m)
A. Maximum reach	61' 3" (18.66 m)
B. Maximum reach @ ground level	60' 9" (18.54 m)
C. Maximum dig depth	46' 3" (14.1 m)
D. Maximum dig height	48' 6" (14.77 m)
E. Maximum dump height	39' 8" (12.08 m)
F. Digging depth 8' (2.44 m) level bottom	45' 11" (13.99 m)
G. Bucket rotation	177°
H. Maximum vertical wall depth	41' 8" (12.69 m)

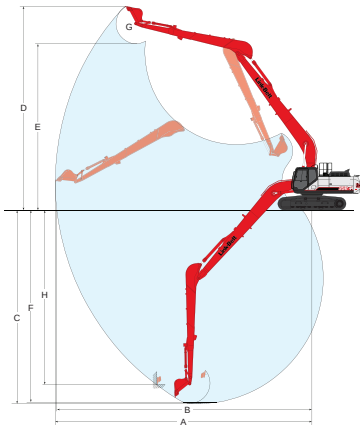

https://truckmanualshub.com/

350X4 LF Lifting Capacities

Radius of Load 25' 2" (7.63 m) Arm with 35' 9" (10.78 m) Boom and 1,460 lb. (662 kg) Bucket with Power-Boost Applied															
End / Side		5' 0" (1.5 m)		10' 0" (3.0 m)		15' 0" (4.5 m)		20' 0" (6.0 m)		25' 0" (7.5 m)		30' 0" (9.0 m)		35' 0" (10.5 m)	
		End	Side	End	Side	End	Side	End	Side	End	Side	End	Side	End	Side
15' 0" (4.5 m)	lbs											8,450*	8,450*	7,250*	7,250*
	kg											3 910*	3 910*	3 360*	3 360*
+10' 0" (3.0 m)	lbs					21,500*	21,500*	15,850*	15,850*	11,850*	11,850*	9,500*	9,500*	8,000*	8,000*
	kg					8 710*	8 710*	7 400*	7 400*	5 520*	5 520*	4 400*	4 400*	3 700*	3 700*
+5' 0" (1.5 m)	lbs					9,600*	9,600*	18,400*	18,400*	13,550*	13,550*	10,650*	10,650*	8,750*	8,500
	kg					4 080*	4 080*	8 540*	8 510	6 290*	6 290*	4 940*	4 940*	4 050*	3 940
Ground Line	lbs			3,300*	3,300*	8,200*	8,200*	18,500*	16,800	14,800*	12,450	11,600*	9,750	9,450*	7,750
	kg			1 460*	1 460*	3 570*	3 570*	7 960*	7 780	6 850*	5 780	5 370*	4 510	4 370*	3 600
-5' 0" (1.5 m)	lbs	4,650*	4,650*	5,400*	5,400*	8,950*	8,950*	16,400*	15,750	15,550*	11,550	12,250*	9,000	10,000*	7,150
	kg	2 110*	2 110*	2 400*	2 400*	3 950*	3 950*	7 140*	7 140*	7 190*	5 370	5 670*	4 180	4 620*	3 340
-10' 0" (3.0 m)	lbs	6,500*	6,500*	7,400*	7,400*	10,500*	10,500*	16,700*	15,300	15,850*	11,100	12,600*	8,550	10,300*	6,750
	kg	2 920*	2 920*	3 310*	3 310*	4 650*	4 650*	7 330*	7 070	7 330*	5 150	5 830*	3 970	4 770*	3 150
-15' 0" (4.5 m)	lbs	8,450*	8,450*	9,650*	9,650*	12,450*	12,450*	18,200*	15,250	15,750*	10,900	12,650*	8,300	10,400*	6,550
	kg	3 790*	3 790*	4 290*	4 290*	5 530*	5 530*	8 000*	7 080	7 290*	5 060	5 860*	3 850	4 830*	3 040
-20' 0" (6.0 m)	lbs	10,500*	10,500*	12,000*	12,000*	14,850*	14,850*	19,500*	15,400	15,300*	10,900	12,400*	8,200	10,300*	6,450
	kg	4 710*	4 710*	5 340*	5 340*	6 580*	6 580*	9 010*	7 160	7 090*	5 060	5 750*	3 820	4 760*	3 000
-25' 0" (7.5 m)	lbs	12,600*	12,600*	14,500*	14,500*	17,750*	17,750*	18,300*	15,750	14,550*	11,100	11,850*	8,300	9,850*	6,500
	kg	5 630*	5 630*	6 450*	6 450*	7 860*	7 860*	8 480*	7 310	6 740*	5 140	5 490*	3 860	4 570*	3 020
-30' 0" (9.0 m)	lbs			17,250*	17,250*	20,750*	20,750*	16,500*	16,200*	13,250*	11,450	10,800*	8,550	9,000*	6,700
	kg			7 660*	7 660*	9 320*	9 320*	7 690*	7 520*	6 180*	5 300	5 050*	3 970	4 210*	3 100
-35' 0" (10.5 m)	lbs					17,600*	17,600*	14,000*	14,000*	11,350*	11,350*	9,250*	8,950	7,600*	7,050
	kg					8 290*	8 290*	6 590*	6 590*	5 340*	5 340*	4 360*	4 150	3 610*	3 250
-40' 0" (12.0 m)	lbs							10,400*	10,400*	8,450*	8,450*	6,750*	6,750*		
	kg							5 030*	5 030*	4 100*	4 100*	3 300*	3 300*		

Radius of Load 25' 2" (7.63 m) Arm with 35' 9" (10.78 m) Boom and 1,460 lb. (662 kg) Bucket with Power-Boost Applied															
End / Side		40' 0" (12.0 m)		45' 0" (13.5 m)		50' 0" (15.0 m)		55' 0" (16.5 m)		60' 0" (18.0 m)		Cap at Max. Reach			
		End	Side	End	Side	End	Side	End	Side	End	Side	End	Side		
+40' 0" (12.0 m)	lbs											800*	800*		
	kg											350*	350*		
+35' 0" (10.5 m)	lbs			3,200*	3,200*	1,900*	1,900*					700*	700*		
	kg			1 560*	1 560*	1 050*	1 050*					330*	330*		
+30' 0" (9.0 m)	lbs			4,000*	4,000*	2,900*	2,900*	750*	750*			700*	700*		
	kg			1 910*	1 910*	1 440*	1 440*	620*	620*			320*	320*		
+25' 0" (7.5 m)	lbs	5,500*	5,500*	4,800*	4,800*	3,650*	3,650*	1,900*	1,900*			700*	700*		
	kg	2 540*	2 540*	2 280*	2 280*	1 760*	1 760*	1 070*	1 070*			320*	320*		
+20' 0" (6.0 m)	lbs	5,950*	5,950*	5,450*	5,450*	4,350*	4,350*	2,700*	2,700*			750*	750*		
	kg	2 740*	2 740*	2 500*	2 500*	2 090*	2 090*	1 420*	1 420*			340*	340*		
+15' 0" (4.5 m)	lbs	6,400*	6,400*	5,750*	5,750*	5,150*	4,950	3,400*	3,400*			850*	850*		
	kg	2 960*	2 960*	2 660*	2 660*	2 420*	2 320	1 720*	1 720*			380*	380*		
+10' 0" (3.0 m)	lbs	6,950*	6,950*	6,150*	5,850	5,550*	4,600	4,000*	3,600	950*	950*	950*	950*		
	kg	3 200*	3 200*	2 830*	2 730	2 550*	2 170	2 010*	1 710	760*	760*	420*	420*		
+5' 0" (1.5 m)	lbs	7,450*	6,750	6,500*	5,400	5,800*	4,300	4,500*	3,400	1,150*	1,150*	1,050*	1,050*		
	kg	3 440*	3 150	3 000*	2 530	2 670*	2 020	2 260*	1 610	860*	860*	480*	480*		
Ground Line	lbs	7,950*	6,200	6,850*	5,000	6,000*	4,000	4,850*	3,200			1,250*	1,250*		
	kg	3 670*	2 900	3 160*	2 340	2 780*	1 890	2 460*	1 510			560*	560*		
-5' 0" (1.5 m)	lbs	8,350*	5,800	7,150*	4,650	6,200*	3,750	4,900*	3,050			1,500*	1,500*		
	kg	3 870*	2 700	3 310*	2 190	2 880*	1 770	2 530*	1 430			670*	670*		
-10' 0" (3.0 m)	lbs	8,650*	5,450	7,350*	4,400	6,350*	3,600	4,350*	2,900			1,800*	1,800*		
	kg	4 000*	2 550	3 410*	2 070	2 940*	1 680	2 370*	1 370			800*	800*		
-15' 0" (4.5 m)	lbs	8,750*	5,250	7,400*	4,250	6,350*	3,500	3,000*	2,850			2,200*	2,200*		
	kg	4 050*	2 450	3 440*	1 990	2 950*	1 630	1 860*	1 340			980*	980*		
-20' 0" (6.0 m)	lbs	8,600*	5,150	7,300*	4,200	6,150*	3,450					2,750*	2,750*		
	kg	4 000*	2 410	3 390*	1 960	2 880*	1 610					1 230*	1 230*		
-25' 0" (7.5 m)	lbs	8,250*	5,200	6,900*	4,250	3,900*	3,550					3,550*	3,500		
	kg	3 840*	2 420	3 230*	1 980	2 470*	1 650					1 570*	1 570*		
-30' 0" (9.0 m)	lbs	7,450*	5,350	6,100*	4,450							4,800*	4,250		
	kg	3 510*	2 490	2 890*	2 050							2 100*	1 880		
-35' 0" (10.5 m)	lbs	6,100*	5,700									5,650*	5,400		
	kg	2 940*	2 630									2 570*	2 380		
-40' 0" (12.0 m)	lbs											5,300*	5,300*		
	kg											2 430*	2 430*		

Notes: Lifting capacities

1. Lifting capacities shown should not be exceeded. Weight of all lifting accessories must be deducted from the above lifting capacities.
2. Lifting capacities are based on machine standing on firm, uniform supporting surface. User must make allowances for job conditions such as soft or uneven ground.
3. Lifting capacities shown do not exceed 75% of minimum tipping loads or 87% of hydraulic capacities. **Capacities marked with an asterisk (*) are limited by hydraulic capacities.**
4. Least stable position is over the side.
5. Operator should be fully acquainted with the Operator's Manual & Operating Safety Booklet, furnished by LBX before operating the machine.
6. Capacities apply only to the machine as originally manufactured and normally equipped by LBX Company, LLC.
7. Lift capacity ratings are based on ISO 10567, "Earthmoving Machinery - Hydraulic Excavators - Lift Capacity."

https://truckmanualshub.com/

Long Front Bucket Sizes

210X4 LF Bucket Sizes

Bucket Type	SAE Heaped Capacity yd³	SAE Heaped Capacity m³	Width Outside Lip in	Width Outside Lip mm	Bucket Weight lbs	Bucket Weight kg	Number of Teeth	Arm Length 21′ 0″ (6.40 m)
STDP Standard duty plate	0.50	0.38	24	610	791	359	4	H
	0.66	0.50	30	762	889	403	4	M
	0.82	0.63	36	914	1007	457	5	L
	0.98	0.75	42	1067	1110	503	6	NA
DITCH	0.77	0.59	54	1372	903	410	0	M
	0.86	0.66	60	1524	964	437	0	L
	0.95	0.73	60	1524	998	453	0	L

Approval Code For Arm/Bucket Combinations

H.....Heavy material (up to 3,370 lbs./yd³)
M.....Medium material (up to 2,700 lbs./yd³)
L.....Light material (up to 2,020 lbs./yd³)
N/A..... Not applicable

250X4 LF Bucket Sizes

Bucket Type	SAE Heaped Capacity yd³	SAE Heaped Capacity m³	Width Outside Lip in	Width Outside Lip mm	Bucket Weight lbs	Bucket Weight kg	Number of Teeth	Arm Length 26′ 3″ (8.00 m)
STDP Standard duty plate	0.50	0.38	24	610	791	359	4	H
	0.66	0.50	30	762	889	403	4	M
	0.82	0.63	36	914	1007	457	5	L
	0.88	0.67	42	1067	1110	503	6	L
DITCH	0.77	0.59	54	1372	903	410	0	M
	0.86	0.66	60	1524	964	437	0	L
	0.95	0.73	60	1524	998	453	0	L

Approval Code For Arm/Bucket Combinations

H.....Heavy material (up to 3,370 lbs./yd³)
M.....Medium material (up to 2,700 lbs./yd³)
L.....Light material (up to 2,020 lbs./yd³)
N/A..... Not applicable

350X4 LF Bucket Sizes

Bucket Type	SAE Heaped Capacity yd³	SAE Heaped Capacity m³	Width Outside Lip in	Width Outside Lip mm	Bucket Weight lbs	Bucket Weight kg	Number of Teeth	Arm Length 25′ 2″ (7.63 m)
STDP Standard duty plate	0.65	0.50	24	610	1151	522	4	H
	0.87	0.67	30	762	1265	574	4	H
	1.09	0.83	36	914	1433	650	5	M
	1.31	1.00	42	1067	1570	712	5	L
DITCH	1.08	0.83	60	1524	1470	667	0	M
	1.2	0.92	66	1676	1557	706	0	L
	1.33	1.01	72	1829	1596	723	0	L
	1.4	1.07	64	1626	1651	749	0	L

Approval Code For Arm/Bucket Combinations

H.....Heavy material (up to 3,370 lbs./yd³)
M.....Medium material (up to 2,700 lbs./yd³)
L.....Light material (up to 2,020 lbs./yd³)
N/A..... Not applicable

RemoteCARE®

Telematics With No Subscription Fee

RemoteCARE® lets you remotely monitor and track machine location, operational performance, working status and periodic maintenance requirements - now at no cost to you. It tracks and records both routine and major service intervals for your machines, giving you more flexibility and control when scheduling maintenance procedures. It also lets you be more proactive if potential failure conditions arise; whenever a diagnostic trouble code (DTC) is detected, a warning message appears on the machine display, and an e-mail alert is automatically sent to you. RemoteCARE also assists in theft prevention by offering 24/7 surveillance and geofencing capabilities.

FREE Subscription Includes:

- ✓ 24/7 Remote Monitoring and Security
- ✓ Machine Location
- ✓ Geo-fence & Curfew Range
- ✓ Actual Fuel Consumption
- ✓ Fuel Levels
- ✓ Hour Meter Reading
- ✓ Radiator Water Temperature
- ✓ Machine Working Time/Idle Time
- ✓ Attachment Working Hours
- ✓ Working Modes
- ✓ Service Maintenance Reminders
- ✓ Service Warnings

RemoteCARE® App

Manage your Link-Belt equipment with this user friendly telematics management tool with GPS technology. The RemoteCARE App provides timely and reliable machine utilization.

App features include...

- Machine location
- Fuel efficiency
- DTC notification history
- Fuel consumption
- Analytical snapshots
- Favorite list
- Utilization report
- Idle rate

Download Apple or Android app at **lbxco.com/apps** for phone & tablet.

https://truckmanualshub.com/

Standard & Optional Equipment

Long Front Standard Equipment

CAB

- 12V Power Outlet
- AM/FM Sound System
- Anti-Theft Device
- Auxiliary Switches on Control Lever
- Cab Filter - External
- Cab Handrails
- Cab Interior Light
- Cab ISO-Mounts
- Cab Light (2)
- Clear Roof Window
- Climate Control A/C and Heater
- Cup Holder
- Defroster
- Digital Clock
- Emergency Exit and Hammer
- Face Vent
- Floor Mat
- FOPS Level 1 Certified
- Cab OPG Level 1
- Front Window One-Touch Lock
- Gate Lock Hydraulic Activation
- Horn
- Hour Meter (Digital)
- LCD Color Monitor
- Magazine Storage Rack
- Maintenance Interval Reminders
- MP3 Auxiliary Input Jack
- On-Board Diagnostic System
- One-Piece Right Window
- Radio Mute Switch
- Rear View Camera
- Rear View Mirrors (2)
- RemoteCARE Support System (GPS)
- Roof Sun Shade
- ROPS Certified Structure
- Safety Glass Windows
- SCM Air-Suspension Seat
- Seat Recline
- Selectable Monitor Languages
- Small Storage
- Travel Alarm with Cancel Switch
- Trip Meter (Digital)
- Wiper & Washer
- Wiper Switch on RH Joystick

ENGINE

- 50A Alternator
- Air Filter (Double Element)
- Air Filter Restriction Indicator
- Auto Warm-Up System
- Auto-Idle
- Auto-Idle Engine Shutdown
- Battery Disconnect Switch
- EGR (Exhaust Gas Recirculation)
- Cooling Fan
- Diesel Oxidation Catalyst (DOC)
- Drain for Fuel Tank
- Dual Remote Fuel Filters with Water Separators
- EGR Coolers
- Emergency Engine Stop
- Engine Idle System
- Engine Oil Sample Port
- Engine Protection Feature
- External Fuel Gauge
- External DEF Gauge
- Fan Housing
- Fuel Cooler
- Fuel Filter Restriction Indicator
- Fuel Management System
- Fuel Usage History
- Fuel Usage Monitor
- Glow Plug Pre-Heat
- Idle-Start
- Intercooler
- Neutral Start
- One-Touch Idle
- Passive Emissions Regeneration
- Radiator / Oil Cooler / Intercooler Protective Screen
- Remote Engine Oil Drain
- Remote Oil Filter
- Selective Catalytic Reduction (SCR)
- DEF Gauge on Monitor
- VGT Turbocharger

HYDRAULICS

- Anti-Drift Valve
- Arm Regeneration
- Arm Speed Assistance (2 Pump Flow)
- Attachment Cushion Valve
- Auto Swing Priority
- Auxiliary Flow Control
- Auxiliary Tool Settings (Memory)
- Auxiliary Valve
- Boom Regeneration
- Boom Speed Assistance (2 Pump Flow)
- Bucket Curl Assist
- Control Levers Pre-Wired for Auxiliary Hyd.
- Pattern Control Valve (2 way)
- Electronically Controlled Hydraulic Pumps
- Fire Wall
- Free Swing
- Hydraulic Filter Restriction Indicator
- Hydraulic Oil Sample Port
- Long Life Hydraulic Oil (5,000 Hour)
- Neutral Pump De-Stroke
- Oil Cooler
- Power Boost
- Power Save
- Pressure Reading on Monitor
- Pump Stand-By Pressure
- Single Pedal Travel

UNDERCARRIAGE

- Carbody Belly Pan (Swivel Guarding)
- Center Track Guide (single)
- Lashing Points (Tie-Downs)
- Sealed Link Chain
- Steps
- Strutted Track Chain
- X-Pattern Carbody

UPPERSTRUCTURE

- Belly Pans
- Center Cover (Over Main CV)
- Fuel Tank Belly Pan
- Hand Rail (RH access)
- ISO Guard Rails
- Lockable Fuel Cap and Service Doors
- Lockable Tool Box
- Work Lights (Boom and Tool Box)

ATTACHMENT

- Auxiliary Boom Pipe Brackets
- Boom Work Light
- Bucket Anti-Clatter Device
- Chrome Pins
- Easy Maintenance System (EMS)
- Remote Lube Bank
- Teardrop Pin Retention Keepers

PARTS KIT

- Bucket Anti-Clatter Device
- Engine Manual
- Engine Oil Filter
- Filter Wrench
- Fuel Filters
- Grease Gun
- Green Plug Drain Hose for Engine Oil Drain
- Hydraulic Return Filter
- Ignition Keys
- Pilot Circuit Hydraulic Filter
- Rearview Mirrors
- Work Light for Boom

Long Front Optional Equipment

CAB

- 270° WAVES™ Camera System
- Cab Light (2 LED)
- Cab Sun Screen (rear)
- FOPS Head Guard (Level 2)
- Front Guard (Mesh)
- Cab OPG Level 2
- LED Light Kit for Side Camera (1)
- LED Lights for Rear Camera (2)
- Rain Deflector
- SCM Seat with Tilt & Heater

ENGINE

- 85A, 90A Alternator
- Refuel Pump

HYDRAULICS

- Hose Burst Check Valve
- Proportional Hydraulic Controls

AUXILIARY HYDRAULIC OPTIONS

- Single-Acting Aux. w/ Proportional Joysticks
- Multi-Function Aux. w/ Proportional Joysticks
- Multi-Function Aux. w/ in-cab pressure setting control
- Double-Acting Aux. w/ Proportional Joysticks
- Secondary Aux. w/ Proportional Joysticks

UNDERCARRIAGE

- 600 mm (23.5 in) 3-Bar Steel Grousers
- 700 mm (27.5 in) 3-Bar Steel Grousers
- 800 mm (31.5 in) 3-Bar Steel Grousers
- 850 mm (33.5 in) 3-Bar Steel Grousers
- Center Track Guide (triple)

UPPERSTRUCTURE

- Rubber Bumper Guards

ATTACHMENT

- HD Bucket Linkage

https://truckmanualshub.com/

X4 Long Front

All Link-Belt X4 Long Fronts are factory-built to help you reach further and dig deeper with confidence. They are designed to deliver power and versatility for sloping, trenching, dredging and cleaning applications. Expect more production from the 350 X4 LF, the only factory-built long reach excavator available in this size range.

Rock-Solid Warranty Coverage

X4 Long Front machines are backed by a 3 year/3,000 hour Full Machine Warranty*; 3 year/5,000 hrs. Powertrain Warranty, 3 year/10,000 hrs. Machine Structures Warranty; 5 year/3,000 hrs. EPA Emissions Warranty, along with participation in the X4 Fluid Analysis Program for the life of the warranty.

**Applies only to 2018 X4 or newer serialized models.*

Customer Support is Just a Call Away

A network of Link-Belt Excavator dealers across the U.S. and Canada is waiting to serve you. Expect fast and dependable service, backed by 24/7 access to parts.

LBX Company is the proud maker of quality Link-Belt excavators and is located in Lexington, KY.

#LBX2397 Litho in USA 1/19 LBX® and Link-Belt® are registered trademarks. Copyright 2019. All rights reserved.
We are constantly improving our products and therefore reserve the right to change designs and specifications.

Link-Belt EXCAVATORS
www.lbxco.com