https://truckmanualshub.com/

BOMAG

FAYAT GROUP

Operating instructions
Maintenance instructions

Original operating instructions

BT 60/4 / BT 65/4

S/N 101 540 52 2391 > / S/N 101 540 53 4211 >

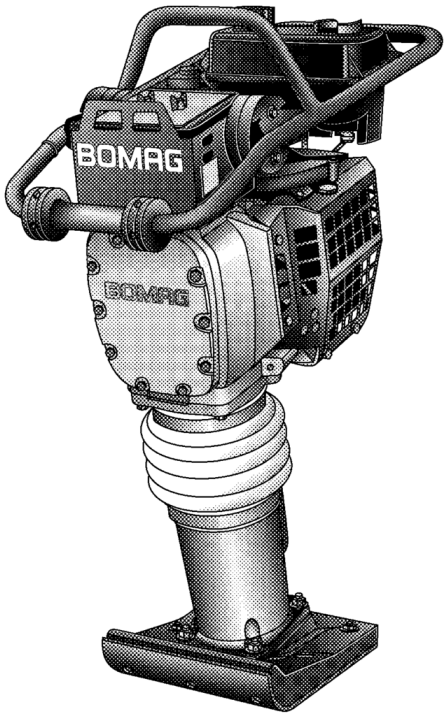

Vibratory Tampers

Catalogue No.
008 066 01

02/2010

Downloaded from www.Manualslib.com manuals search engine

https://truckmanualshub.com/

If the machine is equipped with a battery :

CALIFORNIA
Proposition 65 Warning

Battery posts, terminals and related accessories contain lead and lead compounds, chemicals known to the State of California to cause cancer and birth defects or other reproductive harm.
Wash hands after handling.

If the machine is equipped with a diesel engine :

CALIFORNIA
Proposition 65 Warning

The engine exhaust and some of its constituents are known to the state of California to cause cancer, birth defects, and other reproductive harm.

Downloaded from www.Manualslib.com manuals search engine

https://truckmanualshub.com/

These BOMAG machines are products from the wide product range of BOMAG machines for earth and asphalt construction, refuse compaction and stabilizing/recycling.

BOMAG's vast experience in connection with state-of-the-art production and testing methods, such as lifetime tests of all important components and highest quality demands guarantee maximum reliability of your machine.

This manual comprises:

- Safety regulations
- Operating instructions
- Maintenance instructions
- Trouble shooting

Using these instructions will

- help you to become familiar with the machine.
- avoid malfunctions caused by unprofessional operation.

Compliance with the maintenance instructions will

- enhance the reliability of the machine on construction sites,
- prolong the lifetime of the machine,
- reduce repair costs and downtimes.

BOMAG will not assume liability for the function of the machine

- if it is handled in a way not complying with the usual modes of use,
- if it is used for purposes other than those mentioned in these instructions.

No warranty claims can be lodged in case of damage resulting from

- operating errors,
- insufficient maintenance and
- wrong fuels and lubricants.

Please note!

This manual was written for operators and maintenance personnel on construction sites.

These operating and maintenance instructions are part of the machine.

You should only operate the machine after you have been instructed and in compliance with these instructions.

Strictly observe the safety regulations.

Please observe also the guidelines of the Civil Engineering Liability Association "Safety Rules for the Operation of Road Rollers and Soil Compactors" and all relevant accident prevention regulations.

For your own personal safety you should only use original spare parts from BOMAG.

In the course of technical development we reserve the right for technical modifications without prior notification.

These operating and maintenance instructions are also available in other languages.

Apart from that, the spare parts catalogue is available from your BOMAG dealer against the serial number of your machine.

Your BOMAG dealer will also supply you with information about the correct use of our machines in soil and asphalt construction.

The above notes do not constitute an extension of the warranty and liability conditions specified in the general terms of business of BOMAG.

We wish you successful work with your BOMAG machine.

BOMAG GmbH

Printed in Germany

Copyright by BOMAG

Downloaded from www.Manualslib.com manuals search engine

https://truckmanualshub.com/

Foreword

Please fill in

. . . . . .

Machine type (Fig. 1)

. . . . . .

Serial-number (Fig. 1 and 2)

. . . . . .

Engine type (Fig. 3)

. . . . . .

Engine number (Fig. 3)

i Note

Supplement the above data together with the commissioning protocol.

During commissioning our organisation will instruct you in the operation and maintenance of the machine.

Please observe strictly the safety regulations and all notes on risks and dangers!

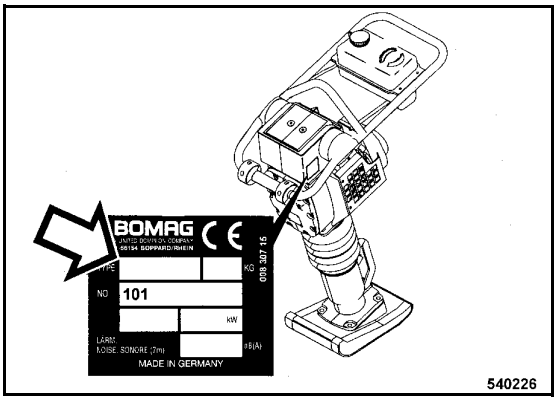

Fig. 1

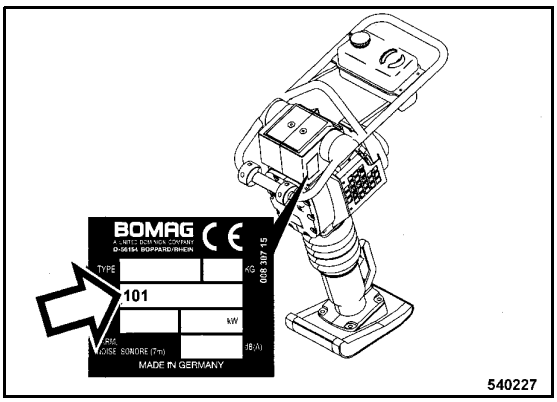

Fig. 2

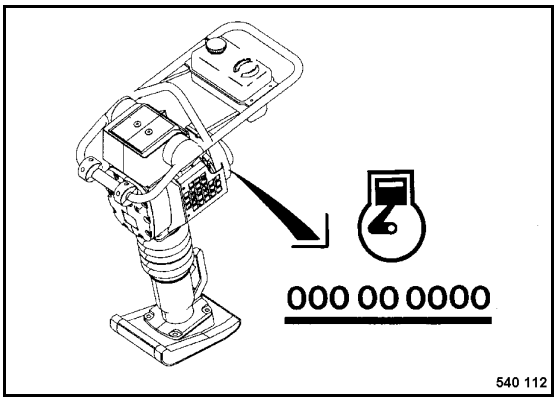

Fig. 3

Downloaded from www.Manualslib.com manuals search engine

https://truckmanualshub.com/

Table of Contents

Technical Data **7**

Safety regulations **11**

Indicators and Controls **17**

3.1 General notes 18

3.2 Controls 18

Operation **21**

4.1 General 22

4.2 Tests before taking into operation 22

4.3 Starting the engine 23

4.4 Work/operation 25

4.5 Shutting down the engine 27

4.6 Changing the tamper foot plate 28

4.7 Loading/transport 28

Maintenance **31**

5.1 General notes on maintenance 32

5.2 Fuels and lubricants 33

5.3 Table of fuels and lubricants 34

5.4 Running-in instructions 35

5.5 Maintenance table 36

5.6 Cleaning the machine 37

5.7 Checking the bellows on the tamper 37

5.8 Check the engine oil level 38

5.9 Checking the fuel level 39

5.10 Engine oil change 41

5.11 Cleaning, checking the spark plug, replacing if necessary 42

5.12 Taper plate, tighten the bolts 42

5.13 Checking the oil level in the tamper foot 43

5.14 Check, adjust the valve clearance 45

5.15 Change the fuel filter 47

5.16 Cleaning the fuel screen 48

5.17 Oil change in tamper foot 49

5.18 Clean, change the double dry air filter cartridge 51

Trouble shooting **53**

6.1 General notes 54

6.2 Engine problems 55

Downloaded from www.Manualslib.com manuals search engine

https://truckmanualshub.com/

Table of Contents

Downloaded from www.Manualslib.com manuals search engine

https://truckmanualshub.com/

1 Technical Data

Downloaded from www.Manualslib.com manuals search engine

https://truckmanualshub.com/

Technical Data

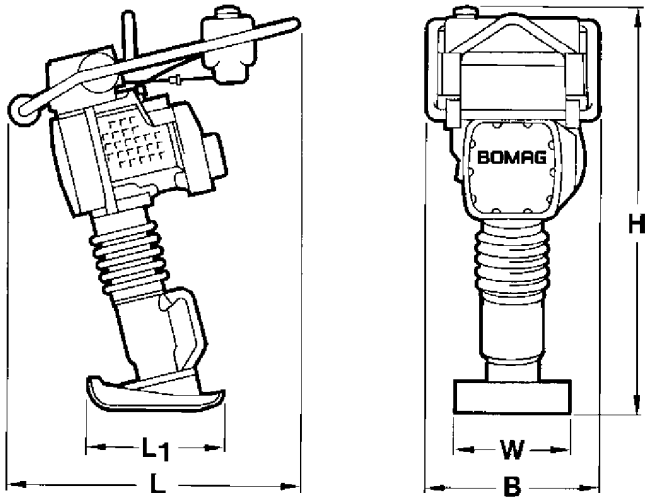

540009

Fig. 4

Dimensions in mm	B	H	L	L1	W
BT 60/4	350	960	735	335	280
BT 65/4	350	1000	735	335	280

*		**BT 60/4**	**BT 65/4**
Weight			
Basic weight	kg	61	67
Operating weight (CECE)	kg	62	68
Travel characteristics			
Max. working speed (depending on soil)	m/min	20	20
Max. areal output (depending on soil)	m^2/h	336	336
Drive			
Engine manufacturer		Honda	Honda
Type		GX 100	GX 100
Cooling		Air	Air
Number of cylinders		1	1
Displacement	cm^3	98	98
Rated power ISO 9249	kW	2.2	2.2
Rated speed	rpm	4200	4200

Downloaded from www.Manualslib.com manuals search engine

https://truckmanualshub.com/

*		BT 60/4	BT 65/4
Exciter system			
Drive system		mechanical	mechanical
Frequency	Hz	10 – 11.8	10 – 11.8
Impact force	kN	13.5	16.2
Filling capacities			
Fuel tank	l	3.0	3.0
Oil in tamper foot	l	0.8	1.0
Engine oil	l	0.3	0.3

* The right for technical modifications remains reserved

Downloaded from www.Manualslib.com manuals search engine

https://truckmanualshub.com/

The following noise and vibration data acc. to

- EC Machine Regulation edition 2006/42/EC

- the noise regulation 2000/14/EG, noise protection guideline 2003/10/EC

- Vibration Protection Regulation 2002/44/EC

were determined during conditions typical for this type of equipment and by application of harmonized standards.

During operation these values may vary because of the existing operating conditions.

Noise value

Sound pressure level on the place of the operator:

BT 60/4: L_{pA} = 98 dB(A), determined acc. to ISO 11204 and EN 500

BT 65/4: L_{pA} = 95 dB(A), determined acc. to ISO 11204 and EN 500

Guaranteed sound power level:

BT 60/4: L_{WA} = 108 dB(A), determined acc. to ISO 3744 and EN 500

BT 65/4: L_{WA} = 106 dB(A), determined acc. to ISO 3744 and EN 500

⚠ Danger

Loss of hearing!

Wear your personal noise protection means (ear defenders) before starting operation.

Vibration value

Hand-arm vibration:

Vector total of the weighted effective acceleration in three orthogonal directions:

Weighted total vibration value

BT 60/4 a_{hv} = 9.3 m/sec^2 on crushed rock determined acc. to ISO 5349 and EN 500

BT 65/4 a_{hv} = 9.0 m/sec^2 on crushed rock determined acc. to ISO 5349 and EN 500

⚠ Caution

Observe the daily vibration load (Industrial safety acc. to 2002/44/EEC).

Downloaded from www.Manualslib.com manuals search engine

https://truckmanualshub.com/

2 Safety regulations

Downloaded from www.Manualslib.com manuals search engine

https://truckmanualshub.com/

General

This BOMAG machine has been built in compliance with the latest technical standard and complies with the applicable regulations and technical rules. However, dangers for persons and property may arise from this machine, if:

- it is used for purposes other than the ones it is intended for,
- it is operated by untrained personnel,
- it is changed or converted in an unprofessional way,
- the safety instructions are not observed.

Each person involved in the operation, maintenance and repair of the machine must therefore read and comply with these safety regulations. If necessary, this must be confirmed by obtaining the signature of the customer.

Furthermore, the following obviously also applies:

- applicable accident prevention instructions,
- generally accepted safety and road traffic regulations,
- country specific safety regulations. It is the duty of the operator to be acquainted with these instructions and to apply these accordingly. This applies also for local regulations concerning different types of handling work. Should the recommendations in these instructions be different from the regulations valid in your country, you must comply with the safety regulations valid in your country.

Intended use

This machine must only be used for:

- Compaction of all types of soils
- Repair work in all types of soil
- Reinforcement of walkways
- Work in trenches
- Backfills and compaction of marginal strips

Unintended use

However, dangers may arise from this machine if it is operated by untrained personnel or if it is subjected of unintended use.

For example:

- Working in horizontal direction
- Ramming of poles
- Vibrating of paving blocks

It is not permitted to stand on the machine while working.

Starting and operation of the machine in explosive environments is prohibited.

Remaining dangers, remaining risks

Despite careful work and compliance with standards and regulations it cannot be ruled out that further dangers may arise when working with and handling the machine.

Both the machine as well as all other system components comply with the currently valid safety regulations. Nevertheless, remaining risks cannot be ruled out completely, even when using the machine for the purpose it is intended for and following all information given in the operating instructions.

A remaining risk can also not be excluded beyond the actual danger zone of the machine. Persons remaining in this area must pay particular attention to the machine, so that they can react immediately in case of a possible malfunction, an incident or failure etc.

All persons remaining ion the area of the machine must be informed about the dangers that arise from the operation of the machine.

Regular safety inspections

Have the machine inspected by an expert (properly trained person) once every year.

Who is allowed to operate the machine?

The machine must only be operated by trained and authorized persons which are at least 18 years of age. The responsibilities for the operation of the machine are to be clearly specified and complied with.

Persons under the influence of alcohol, medication or drugs must not operate, service or repair the machine.

Downloaded from www.Manualslib.com manuals search engine

https://truckmanualshub.com/

Maintenance and repairs require very specific knowledge and must therefore only be carried out by trained and qualified personnel.

Conversions and alterations to the machine.

Unauthorized conversions to the machine are prohibited for safety reasons.

Original parts and accessories have been specially designed for this machine. We wish to make expressly clear that we have not tested or authorized any original parts or special equipment not supplied by us. The installation and/or use of such products can impair the active and/or passive driving safety. The manufacturer expressly excludes any liability for damage resulting from the use of non-original parts or accessories.

Damage, deficiencies, misuse of safety installations

Machines which are not safe to operate must be immediately taken out of service and shall not be used, until these deficiencies have been properly rectified.

Safety installations and switches must neither be removed nor must they be made ineffective.

Safety notes in the operating and maintenance instructions:

⚠ Danger

Sections marked like this point out possible dangers for persons.

⚠ Caution

Sections marked like that point out possible dangers for the machine or for parts of the machine.

i Note

Sections marked like this provide technical information concerning the optimal economical utilization of the machine.

Loading the machine

Always shut the engine down to transport the tamper or to lay it on its side.

Secure the machine against tipping over or slipping off.

Persons are highly endangered if they step or stand under a suspended load.

With the machine suspended be aware that the machine may swing about.

Secure the machine on the transport vehicle against rolling, slipping and turning over.

Starting the machine

Before starting

Become acquainted with the equipment, the control elements, the working principle of the machine and the working area.

Wear your personal protective outfit (hard hat, safety boots, etc.). Wear ear defenders.

Before starting the machine check whether:

- the machine shows any obvious faults
- all guards and safety elements are in place
- the controls are fully functional
- the machine is free of oily and combustible material
- all grips are free of grease, oils, fuel, dirt, snow and ice.

Use only machines which are serviced at regular intervals.

Starting and operation of the machine is closed rooms and trenches

Exhaust gases are highly dangerous! Always ensure an adequate supply of fresh air when starting and operating in closed rooms and trenches!

Operation

- Guide the machine and take care that you do not hurt your hands on any obstructions, danger of accident.
- Watch out for unusual noises and the development of smoke. Find the cause and have the fault corrected.
- Do not hold the throttle lever in the area below I, as this may damage the centrifugal clutch.
- Do not take your hands off the machine while the engine is running.
- Keep your feet away from the tamper foot

Downloaded from www.Manualslib.com manuals search engine

https://truckmanualshub.com/

Parking the machine

Stand the machine on ground as level as possible.

Before leaving the machine:

- Secure the machine against tipping over.

Filling in fuel

Refuel only with the engine shut down.

Do not refuel in closed rooms.

No open fire, do not smoke.

Do not spill any fuel. Catch running out fuel, do not let it seep into the ground.

Do not inhale any fuel fumes.

Avoid contact with skin and eyes.

Do not swallow.

Maintenance

Maintenance work must only be carried out by qualified and authorized personnel.

Keep unauthorized persons away from the machine.

Do not perform maintenance work while the engine is running.

Park the machine on level and firm ground.

Working on the fuel system

No open fire, do not smoke, do not spill any fuel.

Catch running out fuel, do not let it seep into the ground and dispose of environmentally.

Do not breath in fuel fumes.

Working on the engine

When working on the fuel filter make sure that no dirt falls into the air channel.

Do not work on the hot exhaust, risk of burns!

When working on the exhaust channel of the engine make sure that no combustion residues fall into the cylinder.

Do not touch the piston with the cleaning tools.

Working on the tamper foot

Wipe off spilled oil, catch running out oil and dispose of environmentally.

Store oily material in a specially marked container and dispose of environmentally.

Cleaning

Do not clean the machine while the engine is running.

Do not use gasoline or other inflammable substances to clean the machine.

When using steam cleaning equipment do not subject electric parts and insulating material to the direct water jet or cover them beforehand.

Do not guide the water jet directly into the air filter, into the exhaust or into the air intake opening.

After the maintenance work

Reinstall all protective devices after completing maintenance.

Repair

Repairs must only be carried out by qualified and authorized personnel. Always follow our repair instructions.

Exhaust gases are highly dangerous! Always ensure an adequate supply of fresh air when starting in closed rooms!

Attach a warning tag to the steering bow if the machine is defective.

- Do not mix the nozzle in the carburettor up by mistake.
- Adjust the idling speed regulator screw exactly.
- Do not damage the blower wheel when working on the magnetic ignition.
- Always replace self locking nuts.
- Do not open the foot cover on the tamper foot, spring tension. Danger of accident!
- Observe the prescribed tightening torques.

Information and safety stickers/decals on the machine

Keep safety stickers in good and legible condition (see parts manual) and comply with their meaning.

Replace damaged and illegible stickers/decals.

Downloaded from www.Manualslib.com manuals search engine

https://truckmanualshub.com/

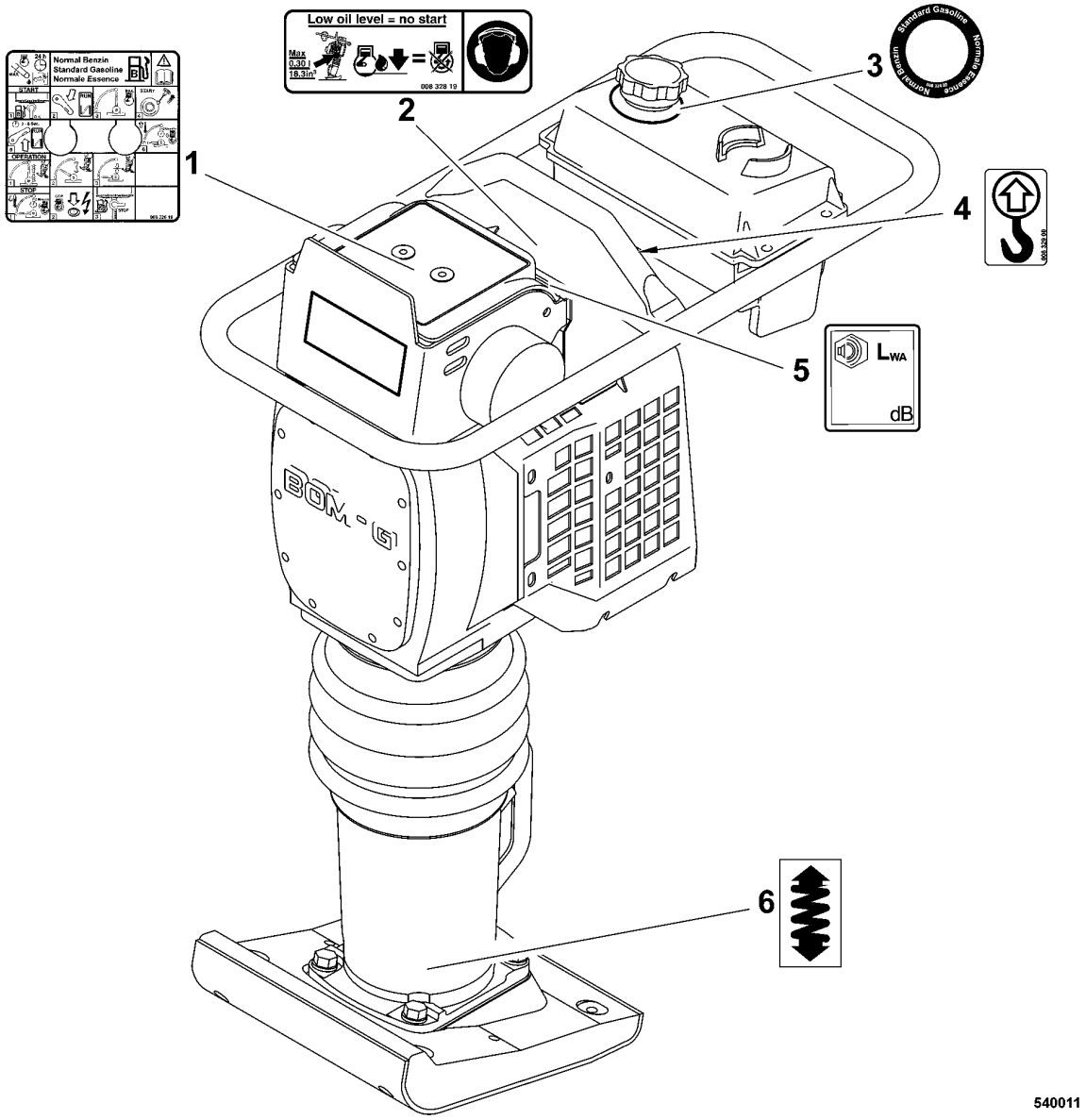

Fig. 5

1 Brief operating instructions
2 Information sticker "Oil level" and instruction sticker "Wear ear defenders"
3 Information sticker "Gasoline"
4 Information sticker "Lifting point"
5 Information sticker "Guaranteed sound capacity level"
6 Warning sticker "Spring"

Downloaded from www.Manualslib.com manuals search engine

https://truckmanualshub.com/

Downloaded from www.Manualslib.com manuals search engine

https://truckmanualshub.com/

3 Indicators and Controls

Downloaded from www.Manualslib.com manuals search engine

https://truckmanualshub.com/

3.1 General notes

Please read this section thoroughly before operating this machine if you are not yet conversant with the indicators and control elements. All functions are described in detail hereunder.

Paragraph 4 Operation contains only concise descriptions of the individual operating steps.

3.2 Controls

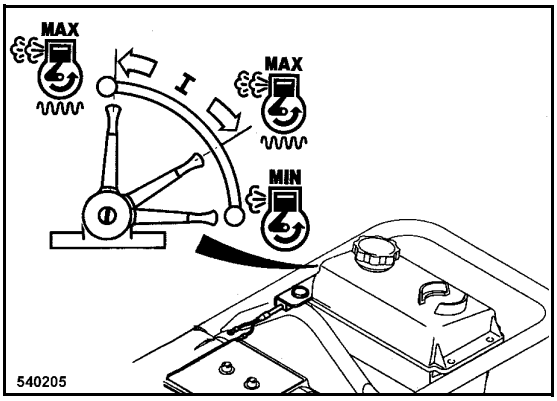

Fig. 6

No. 1 = Throttle lever

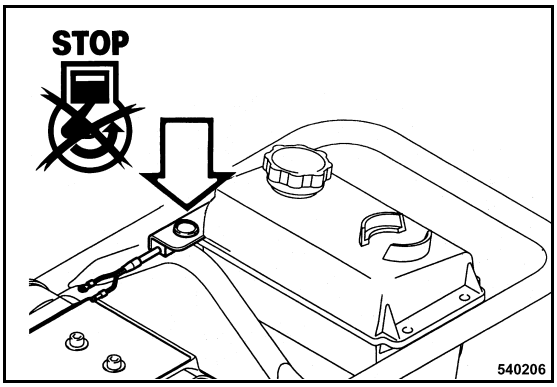

Fig. 7

No. 2 = Engine stop button

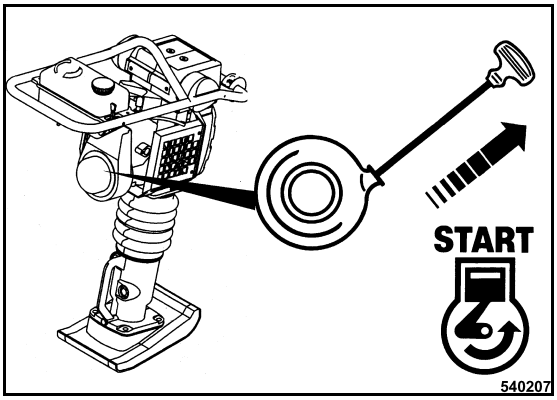

Fig. 8

No. 3 = Recoil starter

Downloaded from www.Manualslib.com manuals search engine

https://truckmanualshub.com/

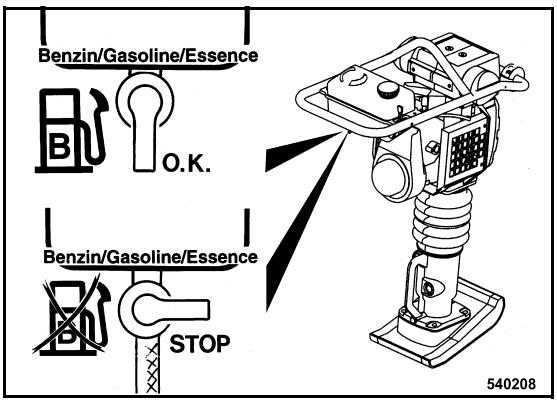

Fig. 9

No. 4 = Fuel cock

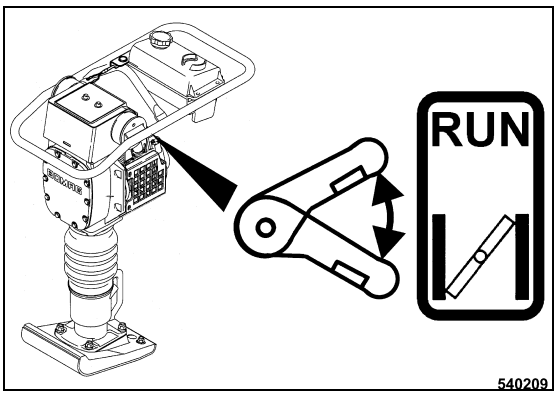

Fig. 10

No. 5 = Choke lever

Downloaded from www.Manualslib.com manuals search engine

https://truckmanualshub.com/

Downloaded from www.Manualslib.com manuals search engine

https://truckmanualshub.com/

4 Operation

Downloaded from www.Manualslib.com manuals search engine

https://truckmanualshub.com/

4.1 General

If you are not yet acquainted with the controls and indicating elements on this machine you should thoroughly read chapter 3 “Indicators and control elements” before starting work.

All indicators and control elements are described in detail in this chapter.

4.2 Tests before taking into operation

i Note

During the running in time the idle speed may increase because of the enhanced moveability of the engine. Idle speed between 1700 and 2000 rpm.

The running in time of the vibratory tamper is 10 operating hours.

The following inspections must be carried out before each working day or before a longer working period.

⚠ Danger

Danger of accident!

Please observe strictly the safety regulations in chapter 2 of this instruction manual!

- Park the machine on ground as level as possible.

Check:

- condition of engine and machine
- fuel tank and fuel lines for leaks
- screw joints for tight fit

i Note

For a description of the following tasks refer to the chapter "Daily maintenance".

- concertina wall for damage and leaks

i Note

Important! The engine cannot be started if the engine oil level is too low.

- Engine oil level
- Fuel level

Downloaded from www.Manualslib.com manuals search engine

https://truckmanualshub.com/

4.3 Starting the engine

⚠ Danger

Exhaust gases are highly dangerous!

Always ensure an adequate supply of fresh air when starting and operating in closed rooms and trenches!

⚠ Danger

Danger of accident!

Always hold on to the machine.

Keep your feet away from the tamper plate, because the vibration starts immediately.

Always keep an eye on a running machine.

⚠ Danger

Loss of hearing!

Wear your personal noise protection means (ear defenders) before starting operation.

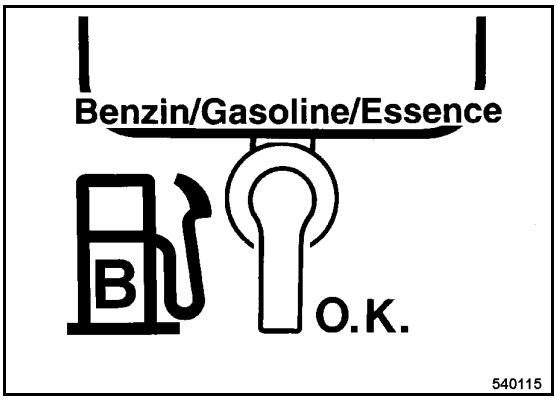

Fig. 11

- Open the fuel cock (Fig. 11).

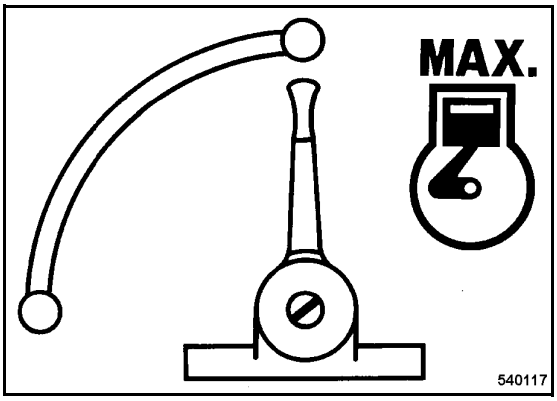

Fig. 12

- Set the throttle lever (Fig. 12) to position "MAX".

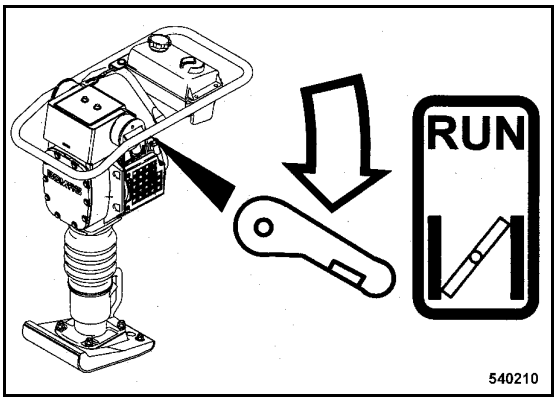

Fig. 13

- Close the choke (Fig. 13).

i Note

Always close the choke to start a cold and warm engine.

Downloaded from www.Manualslib.com manuals search engine

https://truckmanualshub.com/

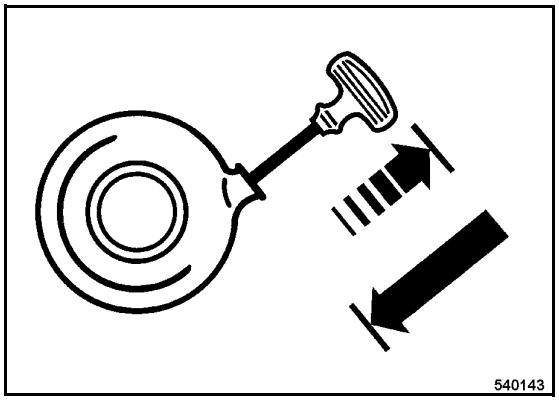

Fig. 14

- Pull the rope by the starter handle (Fig. 14) until resistance can be felt.
- Let the starter handle run back to initial position.

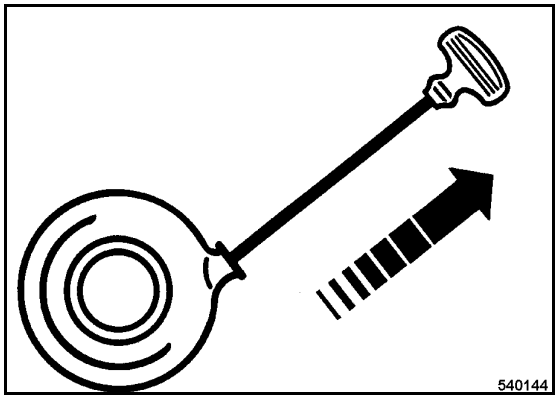

Fig. 15

- Pull the starter handle quickly and with power (Fig. 15).

⚠ Caution

Do not let the starter handle hit back.

- Guide the starter handle back to initial position by hand.
- If the engine does not start during the first attempt, repeat the starting process.

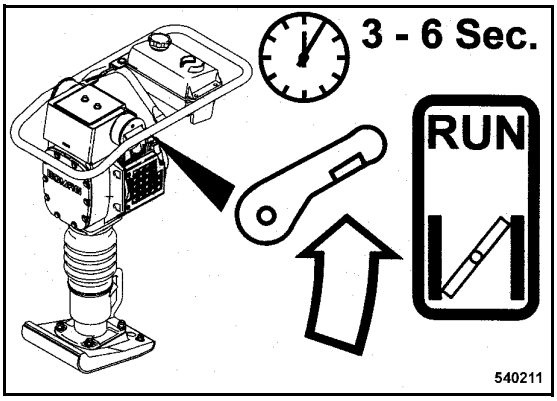

Fig. 16

- Open the choke (Fig. 16) 3 to 6 seconds after the engine has started running.

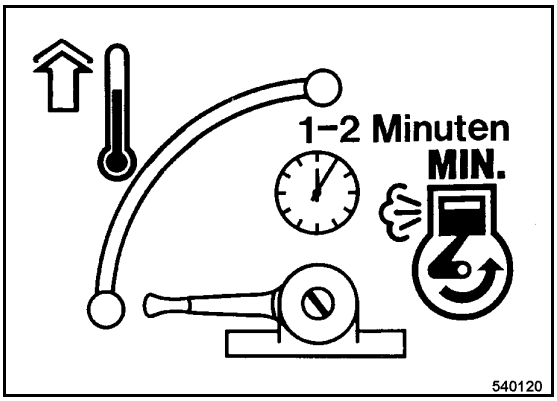

Fig. 17

- Set the throttle lever (Fig. 17) to position "MIN" and let the engine run warm for 1 to 2 minutes.

i Note

Once the engine has warmed up you can start to work with the tamper.

Starting under cold weather conditions

- If the engine stops again after approx. 3 to 5 seconds, close the choke again and repeat the starting process.

Engine oil level too low

The engine does not start if the oil level is too low.

- Check the engine oil level, fill up if necessary.
- Repeat the starting procedure.

Downloaded from www.Manualslib.com manuals search engine

https://truckmanualshub.com/

Engine "drowned"

i Note

When the choke is closed and the starter rope is pulled several times, the engine draws in too much fuel and will probably not start.

Remedy

- Close the fuel cock.
- Open the choke.
- Set the throttle lever to full speed position.
- Operate the recoil starter until the engine starts.

i Note

If the engine does not start after 10 to 20 attempts

- pull off the spark plug socket.
- unscrew the spark plug.
- operate the starter several times.
- Dry the spark plug with a clean cloth or blow it dry with compressed air. If necessary clean with a wire brush.
- Screw the spark plug back in and plug the spark plug socket back on.
- Repeat the starting procedure.

4.4 Work/operation

⚠ Danger

Danger of accident!

Guide the machine only with the handle.

Do not let the machine run unattended.

Use your personal noise protection means (ear defenders).

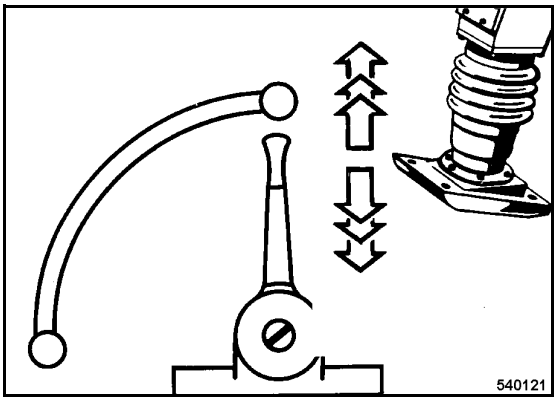

Fig. 18

- Set the throttle lever (Fig. 18) to "MAX"-position.
- The machine works at max. frequency.

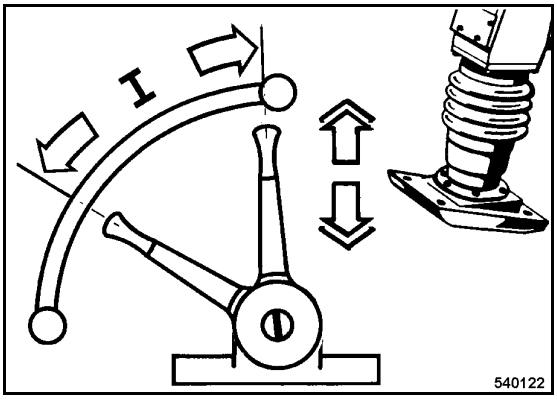

Fig. 19

- In order to achieve a smooth running of the machine adjust the throttle lever in the range I (Fig. 19), depending on the condition and the density of the soil.

Downloaded from www.Manualslib.com manuals search engine

https://truckmanualshub.com/

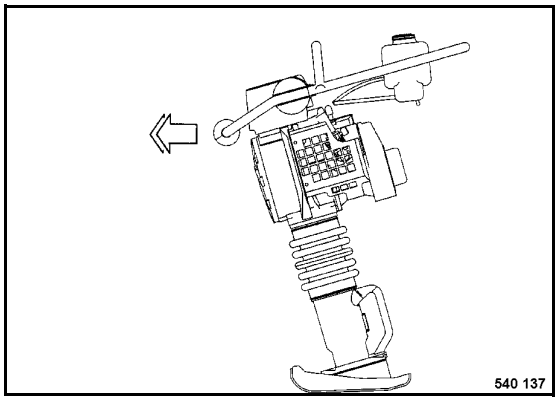

Fig. 20

- The travel speed can be influenced by altering the load on the steering handle (Fig. 20).

No load = slowly forward

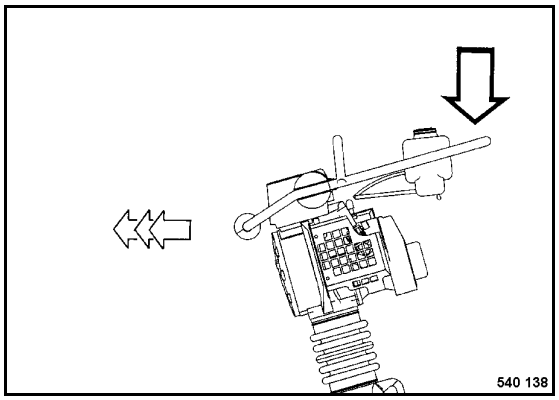

Fig. 21

- The travel speed can also be influenced by varying the pressing force on the steering bow (Fig. 21).

Strong force = fast forward

i Note

The lift height of the material to be compacted should not be higher, than the tamper can manage.

If the tamper should get out of rhythm on highly compacted ground, smooth running can be achieved by slightly changing the engine speed and/or the inclination of the tamper.

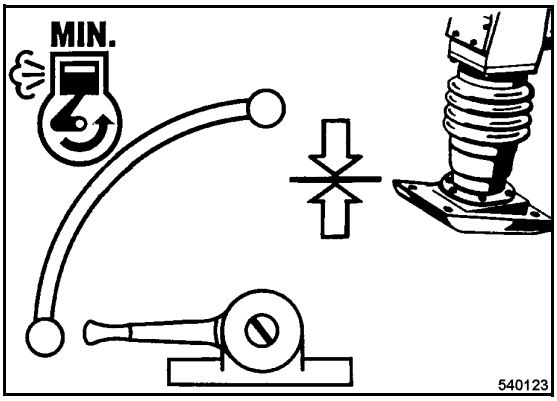

Fig. 22

- During short breaks you should always set the throttle lever to "MIN"-position (Fig. 22).

i Note

This avoids premature wear of the centrifugal clutch and reduces the fuel consumption

Downloaded from www.Manualslib.com manuals search engine

https://truckmanualshub.com/

4.5 Shutting down the engine

⚠ Caution

Do not shut the engine down all of the sudden from full speed, but let it idle for a while for temperature equalization.

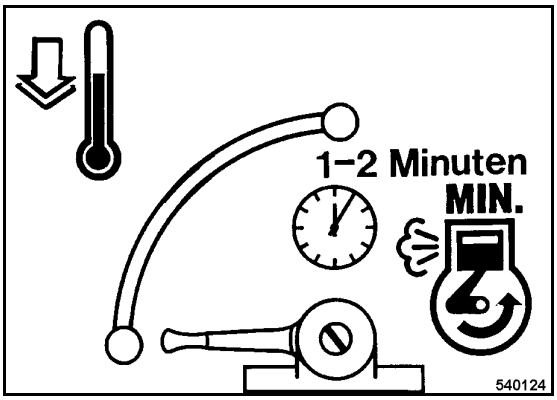

Fig. 23

- Move the throttle lever (Fig. 23) back to idle speed position.
- Run the engine for a short while in idle speed.

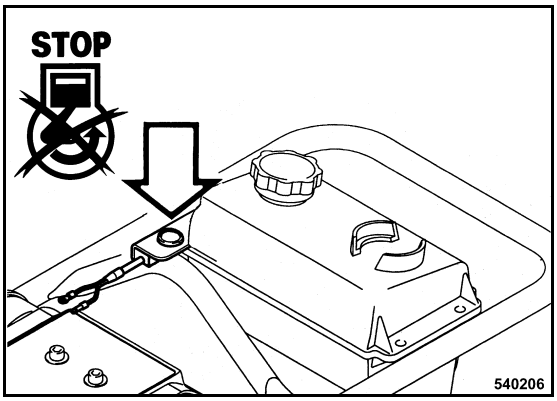

Fig. 24

- Press the engine shut-down button (Fig. 24).

⚠ Danger

Danger of burning!

Immediately after shutting down the engine is still hot, do not touch the exhaust.

Park the machine so that it cannot turn over.

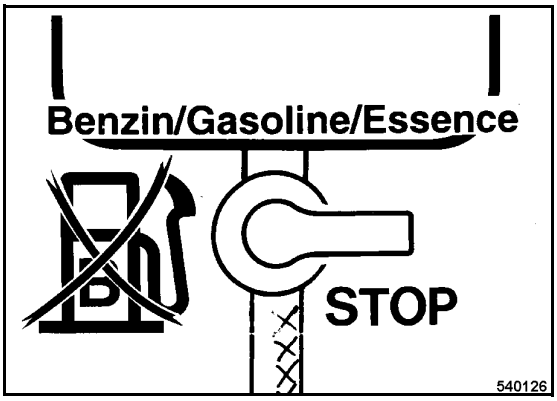

Fig. 25

- Set the fuel valve (Fig. 25) to "STOP" position (closed).

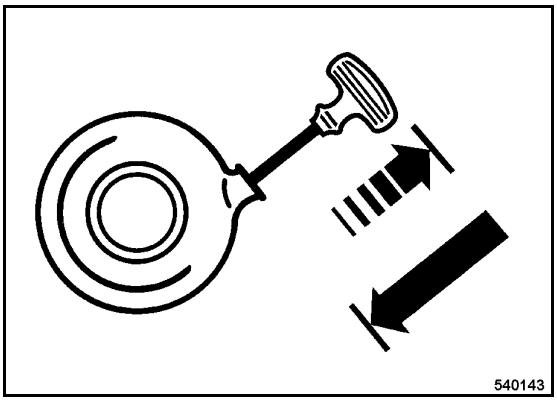

Fig. 26

- Pull the rope by the starter handle (Fig. 26) until resistance can be felt.
- Let the starter handle run back to initial position.

i Note

This procedure protects against moisture deposits inside the engine.

Downloaded from www.Manualslib.com manuals search engine

https://truckmanualshub.com/

4.6 Changing the tamper foot plate

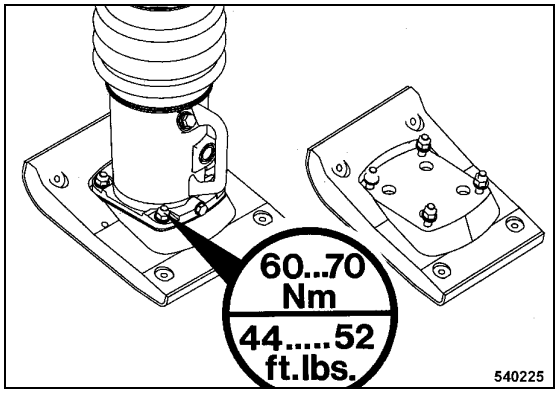

Fig. 27

- After changing the tamper foot plate (Fig. 27) tighten the 4 fastening screws with a tightening torque of 60 to 70 Nm (44 to 52 ft.lbs).

i Note

When changing the tamper foot to a different width use only genuine BOMAG parts.

After changing the tamper foot check the engine speed, adjust it if necessary.

4.7 Loading/transport

⚠ Danger

Danger of accident!

Always shut the engine down to transport the tamper or to lay it on its side.

Make sure that persons are not endangered by the machine tipping or sliding off.

Lash the machine down, so that it is secured against rolling, sliding and turning over.

For lifting the machine attach the lifting gear only to the cross strut of the steering handle.

The machine should not swing about when being lifted.

Do not stand or step under loads being lifted.

Use only safe lifting gear of sufficient load bearing capacity Minimum lifting capacity of lifting gear: see operating weight in chapter "Technical Data".

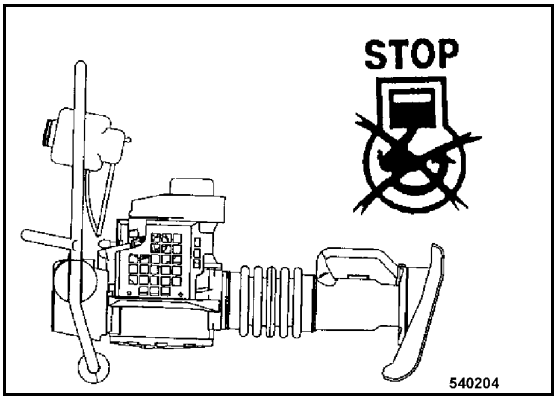

Fig. 28

- Always shut the engine down to transport the tamper or to lay it on its side.
- Lay down the tamper (Fig. 28) to transport it on the rollers.

Downloaded from www.Manualslib.com manuals search engine

https://truckmanualshub.com/

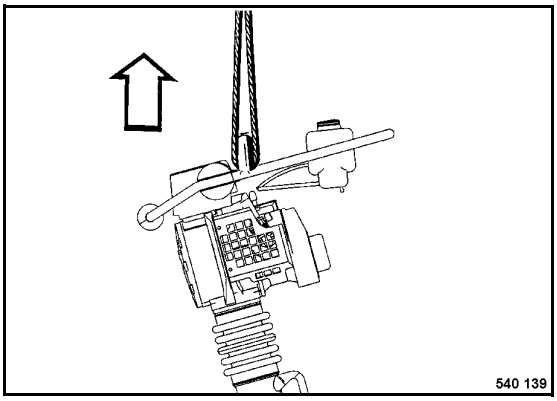

Fig. 29

- For loading the machine attach the lifting gear only to the cross strut of the steering handle (Fig. 29).

Downloaded from www.Manualslib.com manuals search engine

https://truckmanualshub.com/

Downloaded from www.Manualslib.com manuals search engine

https://truckmanualshub.com/

5 Maintenance

Downloaded from www.Manualslib.com manuals search engine

https://truckmanualshub.com/

5.1 General notes on maintenance

When performing maintenance work ensure strict compliance with the respective safety instructions and particularly the safety regulations mentioned in chapter 2 of these operating and maintenance instructions.

Thorough maintenance of the machine guarantees far longer safe functioning of the machine and prolongs the lifetime of important components. The effort needed for this work is only little compared with the problems that may arise when not observing this rule.

- Always clean machine and engine thoroughly before starting maintenance work.
- For maintenance work stand the tamper on level ground and secure it against tipping over.
- Perform maintenance work only with the motor switched off.

Environment

During maintenance work catch all oils and fuels and do not let them seep into the ground or into the sewage system. Dispose of oils and fuels environmentally.

Notes on the fuel system

The lifetime of the diesel engine mainly depends on the purity of the fuel.

- Keep fuel clean ofd any contamination and water.
- Keep used filters in a separate waste container and dispose of environmentally.
- When choosing the storage place for fuel make sure that spilled fuel will not harm the environment.

Notes on the performance of the engine

On diesel engines both combustion air and fuel injection quantities are thoroughly adapted to each other and determine power, temperature level and exhaust gas quality of the engine.

If your engine has to work permanently in "thin air" (at higher altitudes) and under full load, you should consult the customer service of BOMAG or the customer service of the engine manufacturer.

Frequent causes of faults

- Operating errors
- Incorrect, inadequate maintenance

If you cannot locate the cause of a fault or rectify it yourself by following the trouble shooting chart, you should contact the service departments at our branch offices or dealers.

Downloaded from www.Manualslib.com manuals search engine

https://truckmanualshub.com/

5.2 Fuels and lubricants

Engine oil

Quality

The oil is an essential factor for the performance and lifetime of the engine.

Use engine oil for four-stroke engines which meets or even exceeds the requirements for API-service class SJ or higher (or equivalent).

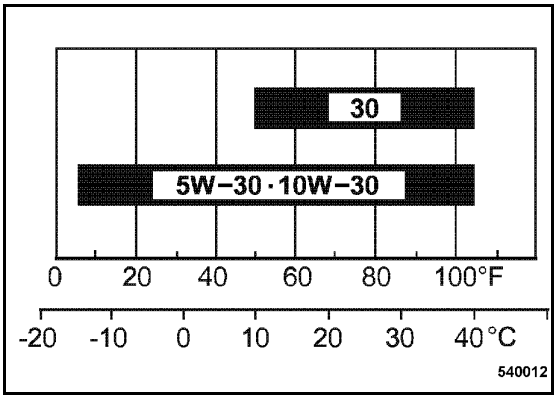

Fig. 30

viscosity

Since lubrication oil changes its viscosity with the temperature, the ambient temperature at the operating location of the engine is of utmost importance when choosing the viscosity class (SAE-class) (see diagram (Fig. 30)).

SAE10W-30 is recommended for general use under any temperature. When using single purpose oil you must choose the correct viscosity for the area of use.

Temperature related lubrication oil changes can be avoided by using multi-purpose oils. The following oil change intervals apply also when using multi-purpose oils.

Change intervals

The longest permissible time the lubrication oil should remain in an engine is 1/2 year or 100 operating hours.

Fuel

Quality

The engine has been approved for operation with unleaded gasoline with a octane number of 86 or higher (research octane number of 91).

Use only commercially available brand fuel.

You can use unleaded standard grade petrol with maximum 10 percent by volume of ethanol (E10) or maximum 5 percent by volume of methanol.

Methanol must also contain co-solvents and corrosion inhibitors.

Using fuels with higher ethanol or methanol contents exceeding the values specified above may cause starting difficulties and/or performance problems. Damage may also occur to metal, rubber or plastic parts in the fuel system.

Engine damage and performance problems caused by the use of fuels with higher ethanol or methanol percentages than the ones specified above are not covered under warranty.

Tamper foot oil

Use gear oil Titan Speed SAE 75W-90.

Downloaded from www.Manualslib.com manuals search engine

https://truckmanualshub.com/

5.3 Table of fuels and lubricants

Assembly	Fuel or lubricant		Quantity approx.
	Summer	Winter	**Attention** Observe the level marks
Engine			
- Engine oil	Engine oil API SJ or higher SAE 10W/30 (-20 °C to +30 °C)		0,3 l to oil level mark
	SAE 30 (+10 °C to +30 °C)		
- Fuel	Gasoline (unleaded)		3.0 l
Padfoot	Titan Speed SAE 75W-90		BT60/4: 0.75 l BT65/4: 1.0 l

Downloaded from www.Manualslib.com manuals search engine

https://truckmanualshub.com/

5.4 Running-in instructions

The following maintenance work must be performed when running in new machines or overhauled engines:

⚠ Caution

During the running-in period, up to approx. 200 operating hours, check the engine oil level twice every day.

Depending on the load the engine is subjected to, the oil consumption will drop to the normal level after approx. 100 to 200 operating hours.

After approx. 20 operating hours

- Change the engine oil.
- Check maximum engine speed, adjust if necessary.
- Check engine and machine for leaks.
- Retighten the fastening screws on air filter exhaust, fuel tank and other attachments.
- Retighten the bolted connections on the machine.

Downloaded from www.Manualslib.com manuals search engine

https://truckmanualshub.com/

5.5 Maintenance table

No.	Maintenance work	Comment	daily	monthly	annually	as required
5.6	Clean the machine	in case of extreme dust clean every day	X			
5.7	Check the bellows on the tamper		X			
5.8	Check the engine oil level	Dipstick mark	X			
5.9	Check the fuel level		X			
5.10	Change the engine oil	at least every 100 operating hours or 1x per year		X		
5.11	Clean, check the spark plug, replace if necessary			X		
5.12	Taper plate, tighten the bolts			X		
5.13	Check the oil level in the tamper foot	Inspection glass		X		
5.14	Check, adjust the valve clearance	Intake: 0.15 mm Exhaust: 0.20 mm			X	
5.15	Change the fuel filter				X	
5.16	Clean the fuel screen				X	
5.17	Oil change in tamper foot				X	
5.18	Clean, change the double dry air filter cartridge	in case of a drop in the max. engine speed				X

Downloaded from www.Manualslib.com manuals search engine

https://truckmanualshub.com/

5.6 Cleaning the machine

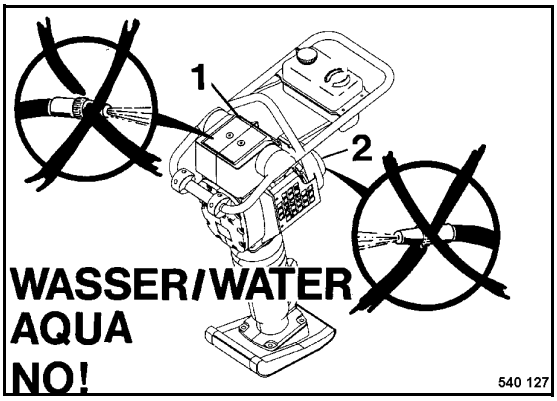

Fig. 31

- Do not guide the water jet directly into the air filter 1 (Fig. 31) and into the starter/air intake (2).

5.7 Checking the bellows on the tamper

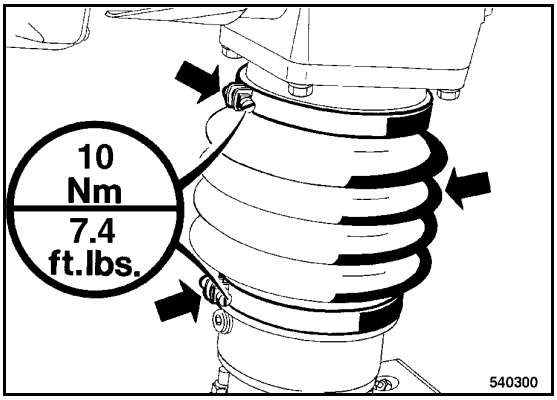

Fig. 32

- Check the condition of the bellows, inspect for damage and tight fit.
- Check the hose clamps for tight fit (Fig. 32).

Downloaded from www.Manualslib.com manuals search engine

https://truckmanualshub.com/

5.8 Check the engine oil level

⚠ Caution

Check the engine oil level with highest care, to avoid over or underfilling of the engine. Underfilling can damage the engine. Overfilling causes excessive development of smoke and can also lead to engine damage

i Note

The engine cannot be started if the engine oil level is too low.

- Stand the tamper on flat and level ground.
- Shut down the engine.

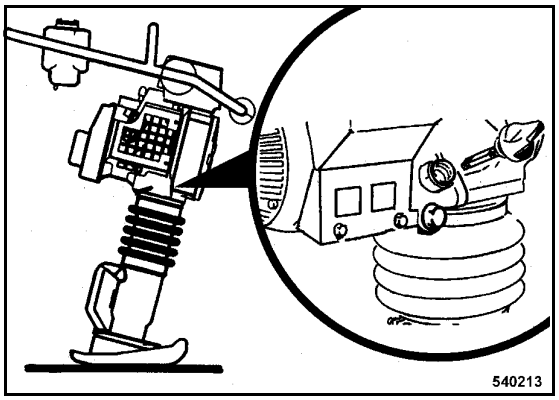

Fig. 33

- Pull out the dipstick (Fig. 33) and wipe it clean with a lint-free, clean cloth.

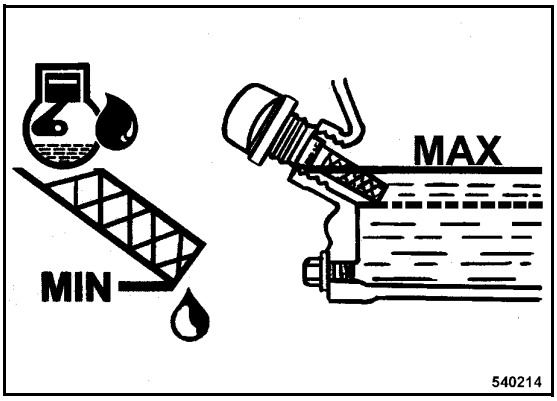

Fig. 34

- The oil level must reach the bottom edge of the filler bore (Fig. 34), maximum level.
- To check the oil level insert the dipstick, but do not screw it in.
- If the oil level is too low top up oil immediately.
- Push the dipstick in again.

For quality of oil refer to the table of fuels and lubricants.

- After approx. 1 minute. check the oil level again with the engine shut down.

Downloaded from www.Manualslib.com manuals search engine

https://truckmanualshub.com/

5.9 Checking the fuel level

⚠ Danger

Fire hazard!

When working on the fuel system do not use open fire, do not smoke, do not spill any fuel.

Do not refuel in closed rooms.

Shut down the engine, close the fuel valve.

⚠ Danger

Health hazard!

Do not inhale any fuel fumes.

⚠ Caution

Contaminated fuel can cause malfunction or even damage of the engine.

For quality and quantity of oil refer to the "table of fuels and lubricants".

Environment

Catch running out fuel, do not let it seep into the ground.

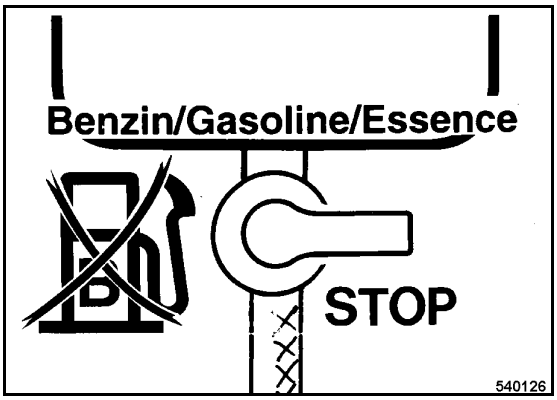

Fig. 35

- Set the fuel valve (Fig. 35) to "STOP" position (closed).

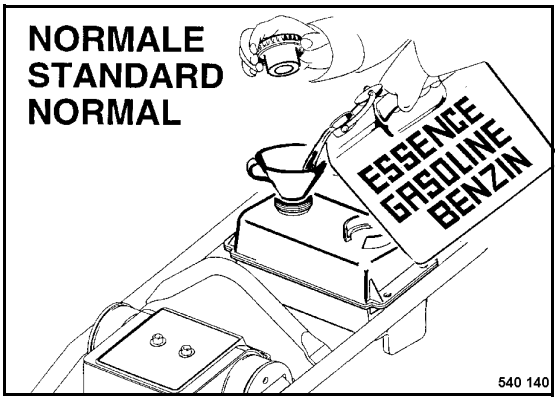

Fig. 36

- Clean the area around the filler cover, unscrew the filler cover (Fig. 36).
- Fill in fuel through a funnel with screen.
- Close the tank again.

Downloaded from www.Manualslib.com manuals search engine

https://truckmanualshub.com/

Downloaded from www.Manualslib.com manuals search engine

https://truckmanualshub.com/

5.10 Engine oil change

⚠ Danger

Danger of sclading when draining off hot oil.

⚠ Caution

Park the machine on level ground.

Drain the engine oil only when the engine is warm.

⚠ Caution

Check the engine oil level with highest care, to avoid over or underfilling of the engine. Underfilling or overfilling can damage the engine.

Environment

Catch running out old oil, do not let it seep into the ground and dispose off environmentally.

i Note

The engine cannot be started if the engine oil level is too low.

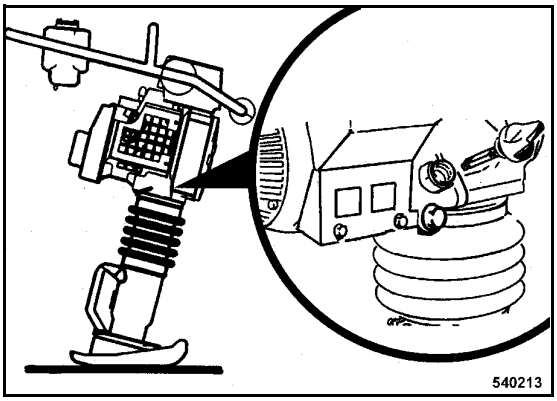

Fig. 37

- Remove the oil dipstick (Fig. 37).

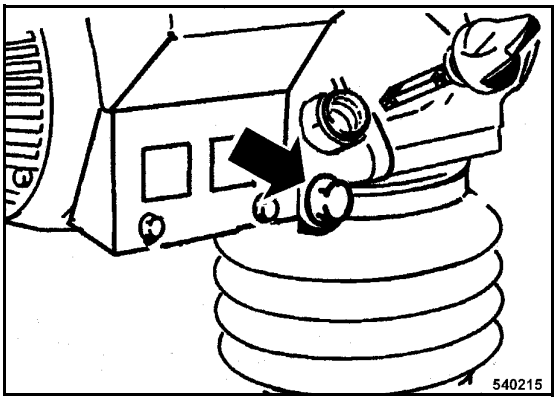

Fig. 38

- Unscrew the oil drain plug (Fig. 38), let the old oil run out and catch it.
- Clean the drain plug and screw it back in with a new seal ring.
- Fill in fresh engine oil through the oil filler opening.

For quality and quantity of oil refer to the "table of fuels and lubricants".

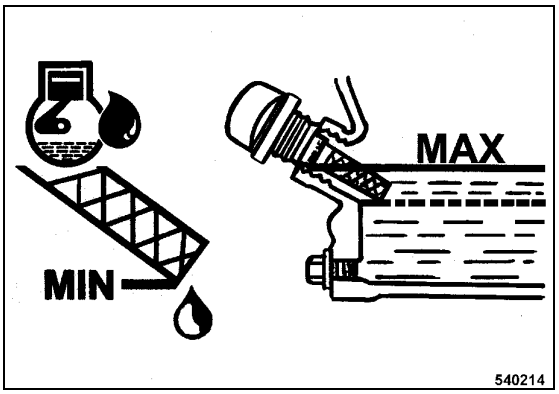

Fig. 39

- The oil level must reach the bottom edge of the filler bore (Fig. 39), top up if necessary.
- Insert the oil dipstick.
- Perform a test run, inspect the drain plug for leaks and check the oil level.

Downloaded from www.Manualslib.com manuals search engine

https://truckmanualshub.com/

5.11 Cleaning, checking the spark plug, replacing if necessary

⚠ Danger

Danger of burning!

Let the engine cool down for approx. 15 minutes before cleaning/changing the spark plug.

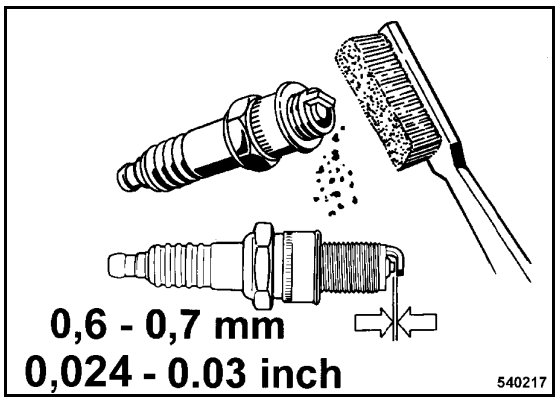

Fig. 40

- Pull the spark plug socket off.
- Unscrew the spark plug, check the spark plug visually and clean it if necessary (Fig. 40).

i Note

In case of excessive combustion residuals or burned off electrodes replace the spark plug, ensure correct heat value of the spark plug.

- Check the electrode gap with a feeler gauge, if necessary adjust the gap to 0.6...0.7 mm.

Spark plugs:

NGK: CR5HSB

Denso: U16FSR-UB

⚠ Caution

Do not use spark plugs with incorrect heat value.

5.12 Taper plate, tighten the bolts

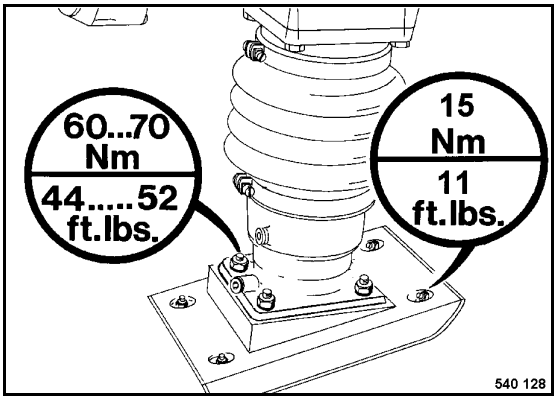

Fig. 41

- Retighten the screws (Fig. 41).

Downloaded from www.Manualslib.com manuals search engine

https://truckmanualshub.com/

5.13 Checking the oil level in the tamper foot

i Note

Stand the tamper of level ground for a short while, so that all oil can run into the housing.

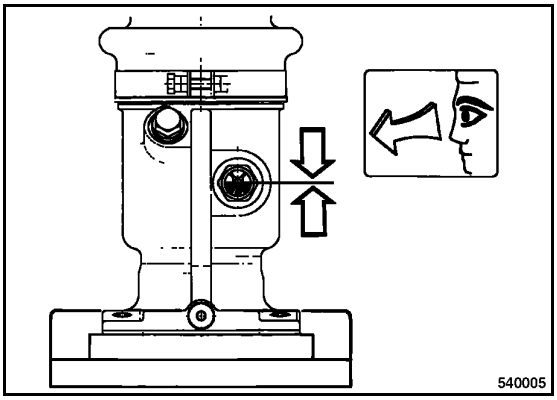

Fig. 42

- Clean the sight glass (Fig. 42).
- Check the oil level.
- The oil must be visible in the inspection glass, if necessary fill in oil accordingly.

For quality and quantity of oil refer to the "table of fuels and lubricants".

Downloaded from www.Manualslib.com manuals search engine

https://truckmanualshub.com/

Downloaded from www.Manualslib.com manuals search engine

https://truckmanualshub.com/

5.14 Check, adjust the valve clearance

i Note

Check and adjust only when the engine is cold (20 +/- 10 °C). If necessary have this work performed by a specialist workshop. Valve clearance:

Intake valve (IN) = 0.15 mm (0.006 in)

Exhaust valve (EX) = 0.20 mm (0.008 in)

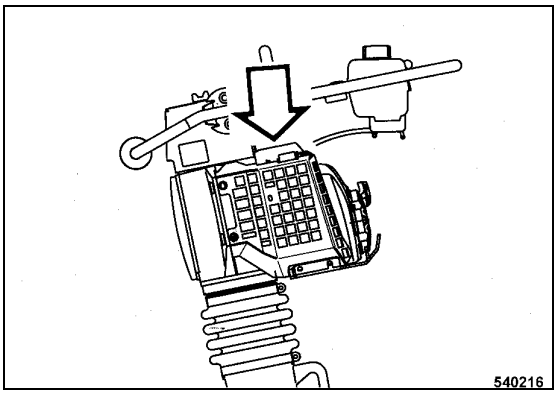

Fig. 43

- Remove the top engine cover (Fig. 43).

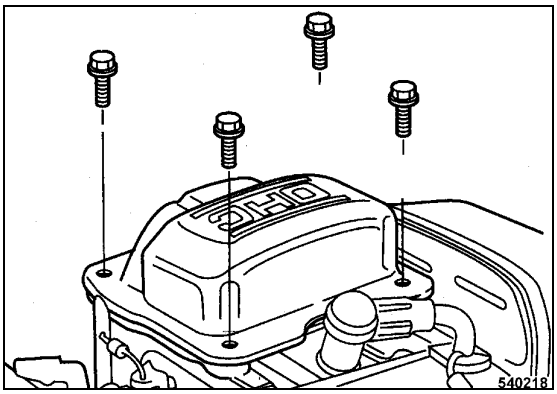

Fig. 44

- Unscrew the fastening screws for the cylinder head cover (Fig. 44).

⚠ Caution

Do not apply force to remove the cylinder head cover.

Replace the cylinder head cover if it is dented.

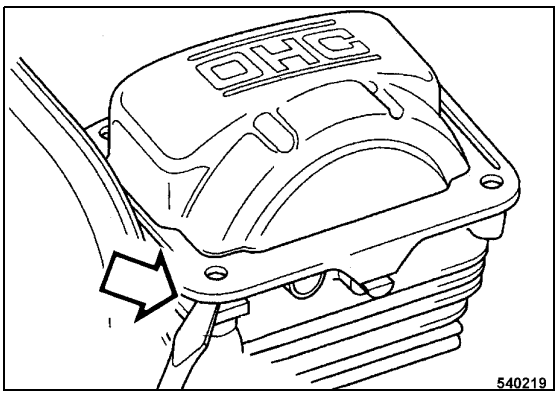

Fig. 45

- Insert the screw driver into the recess (Fig. 45) and take the cylinder head cover carefully off.

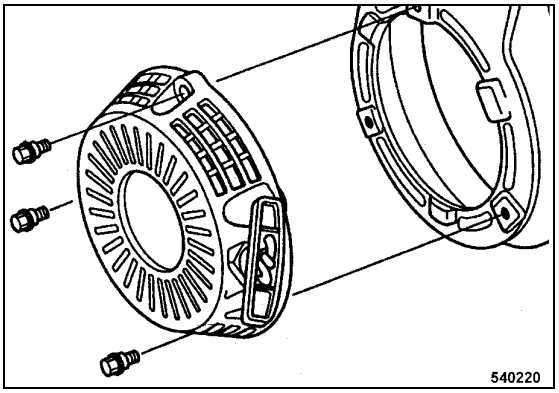

Fig. 46

- Remove the recoil starter (Fig. 46).

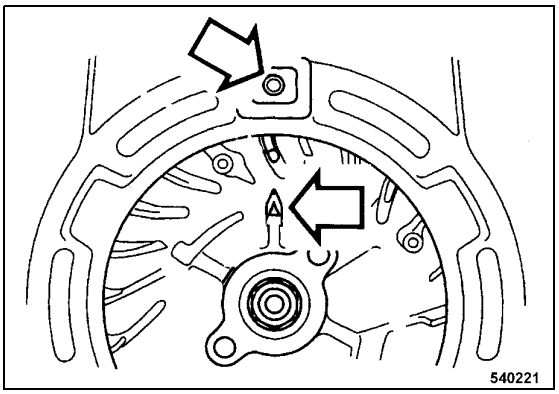

Fig. 47

- Align the alignment mark Δ on the flywheel rib with the top bore in the fan cover (Fig. 47).

Downloaded from www.Manualslib.com manuals search engine

https://truckmanualshub.com/

i Note

The piston is in top dead centre of the compression stroke.

However, if the exhaust valve is open when aligning the marks, the flywheel must be turned further by 360°.

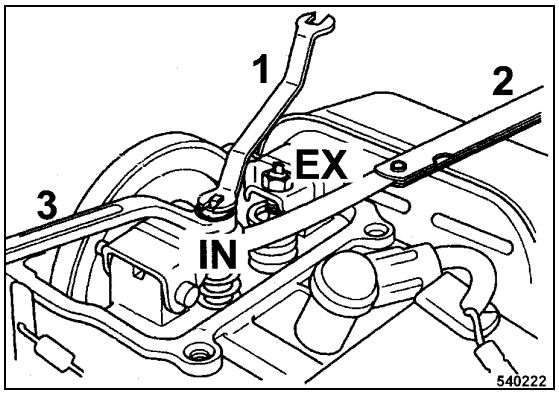

Fig. 48

- Measure the valve clearance between valve adjustment screw and valve with a feeler gauge 2 (Fig. 48).

Valve clearance

Intake valve (IN) = 0.15 mm (0.006 in)

Exhaust valve (EX) = 0.20 mm (0.008 in)

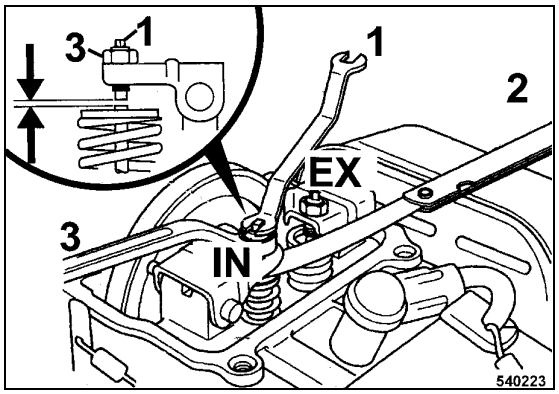

Fig. 49

- To adjust the valve hold valve adjustment screw 1 (Fig. 49) and slacken locking screw (2).
- Turn the valve adjustment screw in or out in order to achieve the specified valve clearance.
- Retighten the locking screw with a tightening torque of 7.5 Nm (5.4 lbsft).

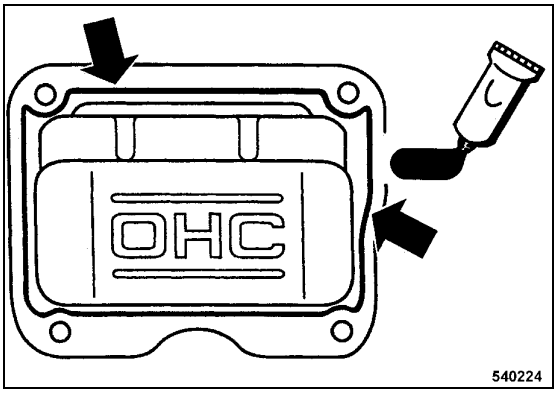

Fig. 50

- Clean the sealing faces on cylinder head cover and cylinder block.
- Apply a bead of liquid gasket (Three Bond 1207B or similar) with a diameter of approx. 1.5 to 2 mm to the inside of the cylinder head cover (Fig. 50).

i Note

Attach the cylinder head cover within the next 10 minutes.

Wait another 20 minutes before starting the engine.

Downloaded from www.Manualslib.com manuals search engine

https://truckmanualshub.com/

5.15 Change the fuel filter

Danger

Fire hazard!

When working on the fuel system do not use open fire, do not smoke.

Do not spill any fuel.

Danger

Health hazard!

Do not inhale any fuel fumes.

Environment

Catch running out fuel, do not let it seep into the ground.

Dispose of the used fuel filter environmentally.

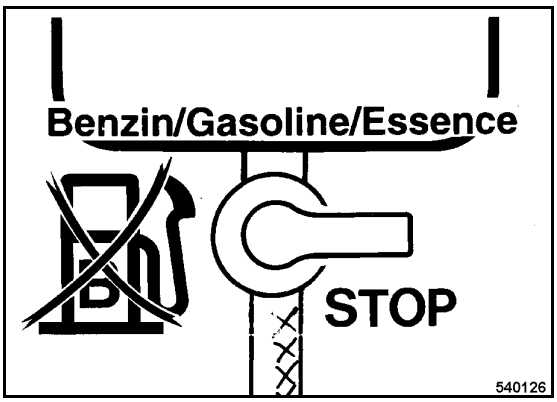

Fig. 51

- Set the fuel valve (Fig. 51) to "STOP" position (closed).

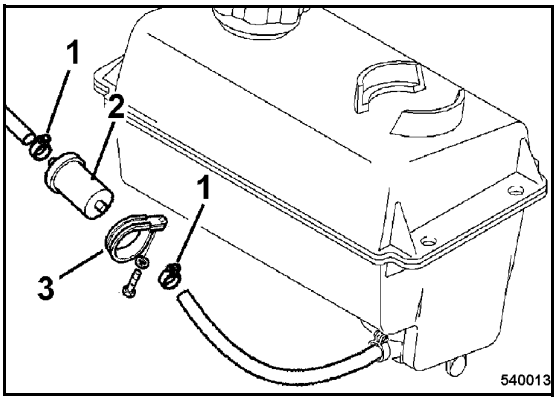

Fig. 52

- Loosen hose clamp (1) (Fig. 52) and pull the fuel hoses off the fuel filter.
- Loosen the clamping screws (3) and take off the fuel filter (2).
- Install the new fuel filter and observe the flow direction (arrow).
- Fasten clamps and hose clips.

Downloaded from www.Manualslib.com manuals search engine

https://truckmanualshub.com/

5.16 Cleaning the fuel screen

Danger

Fire hazard!

When working on the fuel system do not use open fire, do not smoke and do not spill any fuel.

Clean the fuel screen filter only when the engine is cold.

Danger

Health hazard!

Do not inhale any fuel fumes.

Environment

Catch running out fuel and dispose of environmentally.

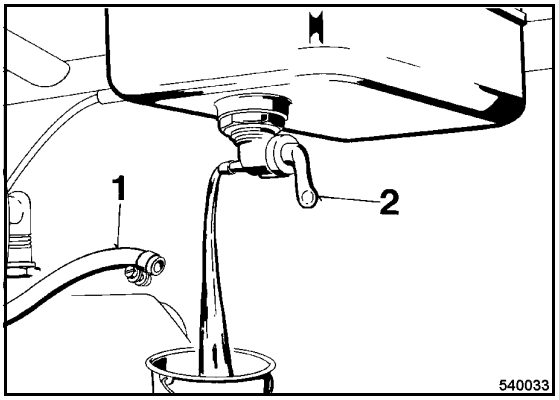

Fig. 53

- Disconnect fuel hose (1) (Fig. 53) from fuel cock (2). Open the fuel cock, drain off fuel.
- Unscrew fuel valve (2).

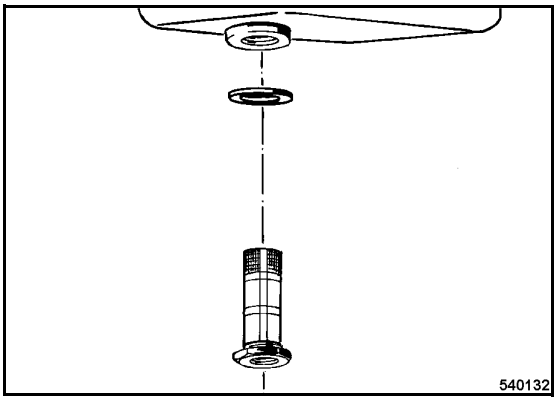

Fig. 54

- Unscrew the fuel screen (Fig. 54) and clean it with gasoline.
- Check the condition of the screen grid (holes), replace if necessary.

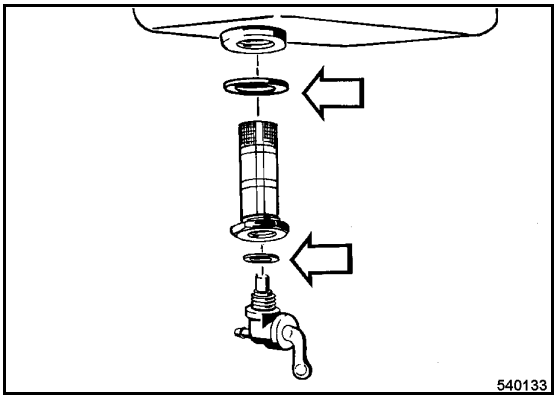

Fig. 55

- Screw fuel screen and fuel valve back ijn, both with new seals (Fig. 55).

Downloaded from www.Manualslib.com manuals search engine

https://truckmanualshub.com/

5.17 Oil change in tamper foot

⚠ Caution

Ensure strict cleanliness.

Change the oil at operating temperature.

Environment

Catch running out old oil, do not let it seep into the ground and dispose off environmentally.

- Tip the tamper backwards.

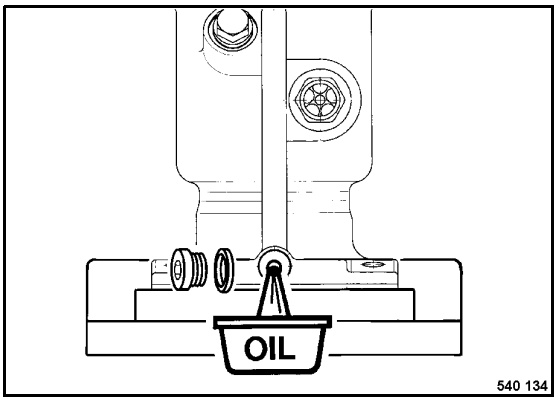

Fig. 56

- Clean and unscrew the oil drain plug (Fig. 56), let the old oil run out and catch it.
- Check the seal on the drain plug, replace if necessary.
- Turn the drain plug in and tighten it.

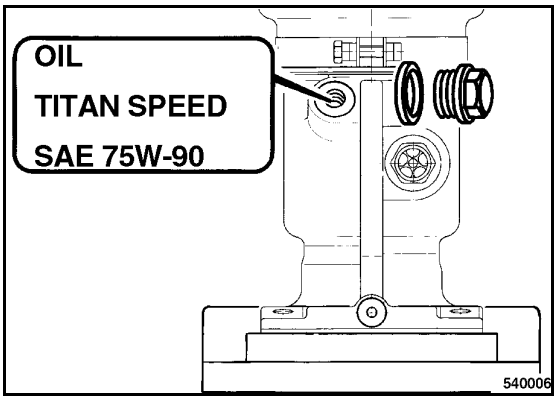

Fig. 57

- Stand the tamper on its foot and secure it against tipping over.
- Clean the filler plug (Fig. 57) and unscrew it.
- Fill in new oil.

For quality and quantity of oil refer to the "table of fuels and lubricants".

- Screw the filler plug back in with a new seal ring.

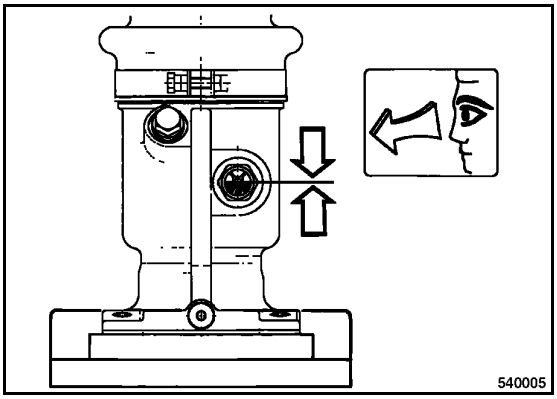

Fig. 58

- Clean the inspection glass (Fig. 58) and check the oil level.
- The oil must be visible in the inspection glass, if necessary fill in oil accordingly.

Downloaded from www.Manualslib.com manuals search engine

https://truckmanualshub.com/

Downloaded from www.Manualslib.com manuals search engine

https://truckmanualshub.com/

5.18 Clean, change the double dry air filter cartridge

i Note

Contamination of the air filter cartridge depends mainly on the proportion of dust in the intake air, if necessary clean every day.

In case of wet or sticky contamination replace the double filter cartridge.

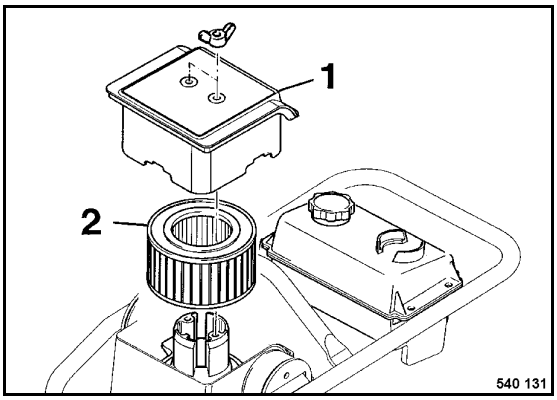

Fig. 59

- Remove cover 1 (Fig. 59), take filter cartridge (2) carefully out.

⚠ Caution

Make sure that no dirt falls into the air intake channel.

Visual inspection/cleaning

⚠ Danger

Eye injury!

Wear protective clothing (goggles, gloves).

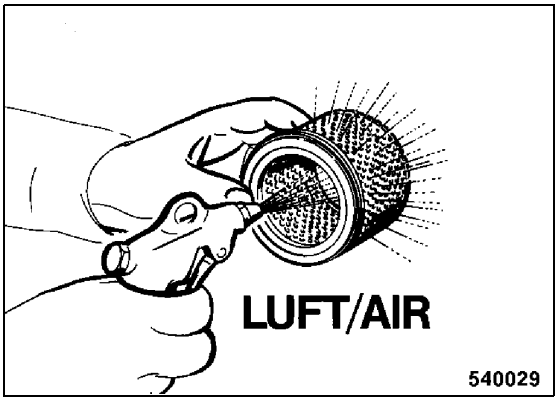

Fig. 60

- In case of dry fine dust blow out the filter cartridge carefully from inside to outside with dry, clean compressed air (Fig. 60) (max. 6 bar).

i Note

Before installation check seals and filter cartridge for damage, replace if necessary.

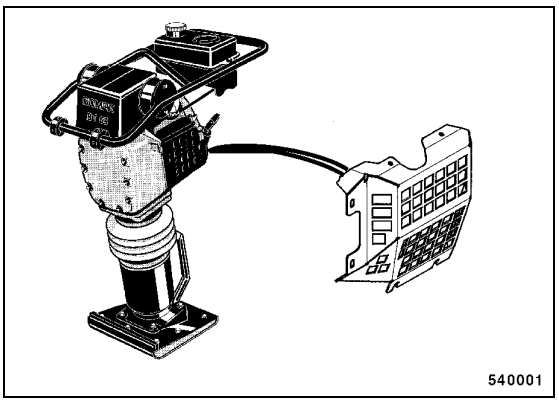

Fig. 61

- Remove the protection grid on the left hand side of the engine (Fig. 61).

Downloaded from www.Manualslib.com manuals search engine

https://truckmanualshub.com/

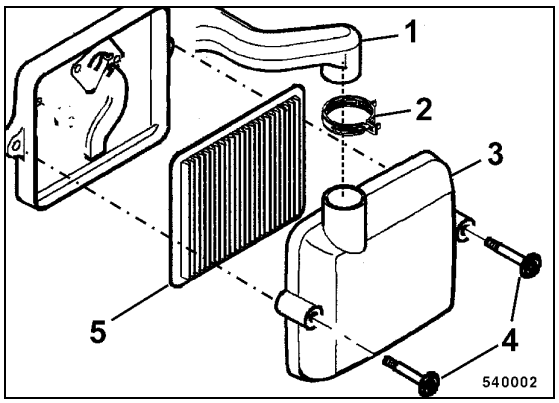

Fig. 62

- Loosen hose clamp 2 (Fig. 62) and pull the air supply hose (1) off the air filter housing.
- Unscrew two fastening screws (4) and remove cover (3) from the air filter housing.
- Pull the dry air filter cartridge (5) out of the housing.

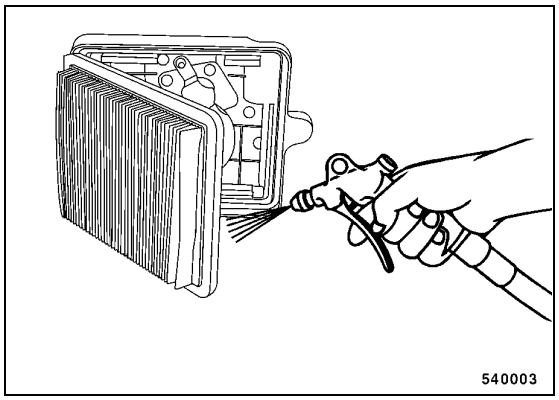

Fig. 63

- If soiled with dry fine dust blow the dry air filter out from the clean air side (Fig. 63).
- Clean the air filter housing.

⚠ Caution

Make sure that no dirt falls into the air intake channel.

i Note

Before installation check seals and dry air filter for damage, replace if necessary.

Downloaded from www.Manualslib.com manuals search engine

https://truckmanualshub.com/

6 Trouble shooting

Downloaded from www.Manualslib.com manuals search engine

https://truckmanualshub.com/

6.1 General notes

The following work must only be carried out by qualified and trained personnel or by the BOMAG sales service.

Please observe strictly the safety regulations in chapter 2 of these operating and maintenance instructions.

Faults occur frequently due to the fact, that the machine has not been properly operated or serviced. Therefore, whenever a fault occurs, read through these instructions on correct operation and maintenance. If you cannot locate the cause of the fault or eliminate it yourself by following the trouble shooting charts, you should contact our customer service departments at our branch office or dealers.

On the following pages you will find a selection of fault remedies. It is quite obvious that we were not able to list all possible causes for faults.

Downloaded from www.Manualslib.com manuals search engine

https://truckmanualshub.com/

6.2 Engine problems

Fault	Possible cause	Remedy
Engine does not start	Fuel tank empty	Filling in fuel
	Fuel system clogged	Clean the fuel screen in the tank Replace the fuel filter Clean the fuel screen in the carburettor
	Fuel nozzle clogged	Clean the fuel nozzle
	No ignition spark	Clean spark plug Replace the spark plug
	Engine oil level too low	Check the engine oil level
	Stop switch defective	Replace stop switch
	No fuel in carburettor	Check the fuel supply
Engine does not crank when operating the starter	Starter defective	Replace starter
	Spring broken	Replace starter
Starter rope of recoil starter does not return to initial position	Dirt	Clean the starter
	Spring broken	Replace starter
Engine stops frequently in short intervals	Fuel system clogged	Clean the fuel screen in the tank Replace the fuel filter Clean the fuel screen in the carburettor
Engine does not run with full speed	Throttle cable defective	replace
	Throttle cable incorrectly adjusted	Adjust the throttle cable
	Air filter clogged	Clean or replace the filter cartridge
	Too high engine oil level	Drain engine oil down to "MAX" level (clean intake manifold)
	Engine defective	Replace the engine/have the fault corrected
	Carburettor defective	Replace the carburettor
	Exhaust blocked	clean
Engine runs with high speed, but no vibration	Centrifugal clutch defective	Change the centrifugal clutch
	Mechanical defect	Have repaired by the customer service of BOMAG.

Downloaded from www.Manualslib.com manuals search engine

https://truckmanualshub.com/

Downloaded from www.Manualslib.com manuals search engine

https://truckmanualshub.com/

BOMAG

We will help you - immediately!

Operating, maintenance, repair instructions and spare parts catalogues

- in situ:

- Safe and simple trouble shooting
- Secure access to required spare parts
- Easy to understand – from experts for users

Contact us or your BOMAG distributor!

englisch

Downloaded from www.Manualslib.com manuals search engine

https://truckmanualshub.com/

Head Office/Hauptsitz

BOMAG
Hellerwald
56154 Boppard
GERMANY
Tel.: +49 6742 100-0
Fax: +49 6742 3090
e-mail: germany@bomag.com
www.bomag.com

BOMAG
Niederlassung Berlin
Gewerbestraße 3
15366 Dahlwitz-Hoppegarten
GERMANY
Tel.: +49 3342 369410
Fax: +49 3342 369436
e-mail: nlberlin@bomag.de

BOMAG
Niederlassung Boppard
Hellerwald
56154 Boppard
GERMANY
Tel.: +49 6742 1000
Fax: +49 6742 100392
e-mail: nlboppard@bomag.de

BOMAG
Niederlassung Chemnitz
Querstraße 6
09247 Chemnitz
GERMANY
Tel.: +49 3722 51590
Fax: +49 3722 515951
e-mail: nlchemnitz@bomag.de

BOMAG
Niederlassung Hannover
Dieselstraße 44
30827 Garbsen-Berenbostel
GERMANY
Tel.: +49 5131 70060
Fax: +49 5131 6766
e-mail: nlhannover@bomag.de

BOMAG
Niederlassung München
Otto-Hahn-Ring 3
85301 Schweitenkirchen
GERMANY
Tel.: +49 8444 91840
Fax: +49 8444 918420
e-mail: nlmuenchen@bomag.de

BOMAG
Niederlassung Stuttgart
Uferstraße 22
73630 Remshalden-Grunbach
GERMANY
Tel.: +49 7151 986293
Fax: +49 7151 9862959
e-mail: nlstuttgart@bomag.de

BOMAG
Maschinenhandelsgesellschaft m.b.H.
Porschestraße 9
1230 Wien
AUSTRIA
Tel.: +43 1 69040-0
Fax: +43 1 69040-20
e-mail: austria@bomag.com

BOMAG (CANADA), INC.
3455 Semenyk Court
Mississauga, Ontario L5C 4P9
CANADA
Tel.: +1 905 361 9961
Fax: +1 905 361 9962
e-mail: canada@bomag.com

BOMAG (China)
Compaction Machinery Co. Ltd.
No. 2808 West Huancheng Road
Shanghai Comprehensive Industrial Zone (Fengxian)
Shanghai 201401
CHINA
Tel.: +86 21 33655566
Fax: +86 21 33655508
e-mail: china@bomag.com

BOMAG S.A.F.
2, avenue du Général de Gaulle
91170 Viry-Chatillon
FRANCE
Tel.: +33 1 69578600
Fax: +33 1 69962660
e-mail: france@bomag.com

BOMAG (GREAT BRITAIN), LTD.
Sheldon Way, Larkfield
Aylesford
Kent ME20 6SE
GREAT BRITAIN
Tel.: +44 1622 716611
Fax: +44 1622 718385
e-mail: gb@bomag.com

BOMAG Italia Srl.
Z.I. Via Mella, 6
25015 Desenzano del Garda (BS)
ITALY
Tel.: +39 030 9127263
Fax: +39 030 9127278
e-mail: italy@bomag.com

BOMAG Japan Co. Ltd.
12-7, Daidoh-Cho 2-Chome
Akashi-City
Hyogo-Pref 673-0029
JAPAN
Tel.: +81 78 924 1631
Fax: +81 78 924 1633
e-mail: japan@bomag.com

BOMAG Polska Sp. z.o.o.
Ul. Szyszkowa 52
02 285 Warzawa
Poland
Tel.: +48 22 482 0400
Fax: +48 22 482 04 01
e-mail: poland@bomag.com

BOMAG GmbH
300 Beach Road
The Concourse, #38-03
Singapore 199555
SINGAPORE
Tel.: +65 294 1277
Fax: +65 294 1377
e-mail: singapore@bomag.com.sg

BOMAG Americas, Inc.
2000 Kentville Road
Kewanee, Illinois 61443
U.S.A.
Tel.: +1 309 8533571
Fax: +1 309 8520350
e-mail: usa@bomag.com

Printed in Germany

Downloaded from www.Manualslib.com manuals search engine