STEERING

TABLE OF CONTENTS

page

STEERING
DESCRIPTION 2
OPERATION 2
DIAGNOSIS AND TESTING
POWER STEERING SYSTEM 2
POWER STEERING FLOW AND PRESSURE . . . 4
SPECIAL TOOLS
STEERING 6

page

COLUMN 7
GEAR - INDEPENDENT FRONT SUSPENSION . . 38
GEAR - LINK/COIL 43
LINKAGE - INDEPENDENT FRONT SUSPENSION 62
LINKAGE - LINK/COIL 66
PUMP 76
PUMP - SRT10 92

STEERING

DESCRIPTION

CAUTION: MOPAR® ATF+4 is to be used in the power steering system. No other power steering or automatic transmission fluid is to be used in the system. Damage may result to the power steering pump and system if any other fluid is used, and do not overfill.

Power steering systems consist of:

- Steering column
- Rack and pinion steering gear
- Belt driven hydraulic steering pump
- Pump pressure and return hoses
- Oil Cooler

OPERATION

The steering column shaft is attached to the gear pinion. The rotation of the pinion moves the gear rack from side-to-side. This lateral action of the rack pushes and pulls the tie rods (4) to change the direction of the front wheels.

Power assist is provided by an engine mounted hydraulic pump which supplies hydraulic fluid pressure to the steering gear (6).

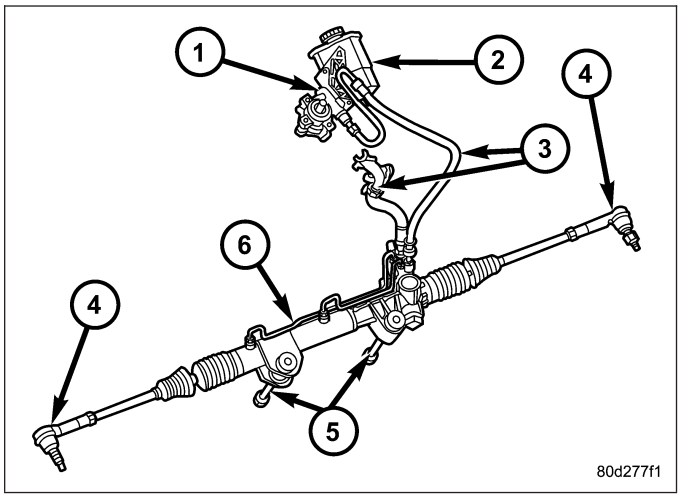

DIAGNOSIS AND TESTING

POWER STEERING SYSTEM

There is some noise in all power steering systems. One of the most common is a hissing sound evident at a standstill parking. Or when the steering wheel is at the end of it's travel. Hiss is a high frequency noise similar to that of a water tap being closed slowly. The noise is present in all valves that have a high velocity fluid passing through an orifice. There is no relationship between this noise and steering performance.

STEERING NOISE

CONDITION	POSSIBLE CAUSES	CORRECTION
OBJECTIONAL HISS OR WHISTLE	1. Steering intermediate shaft to dash panel seal. 2. Noisy valve in power steering gear.	1. Check and repair seal at dash panel. 2. Replace steering gear.

CONDITION	POSSIBLE CAUSES	CORRECTION
RATTLE OR CLUNK	1. Gear mounting bolts loose.	1. Tighten bolts to specification.
	2. Loose or damaged suspension components.	2. Inspect and repair suspension.
	3. Internal gear noise.	3. Replace steering gear.
	4. Pressure hose in contact with other components.	4. Reposition hose.
	5. Loose or damaged intermediate shaft or column.	5. Inspect and repair or replace.
CHIRP OR SQUEAL	1. Loose belt.	1. Adjust or replace.
WHINE OR GROWL	1. Low fluid level.	1. Fill to proper level.
	2. Pressure hose in contact with other components.	2. Reposition hose.
	3. Internal pump noise.	3. Replace pump.
	4. Air in fluid	4. Check for leaks, Evacuate air from P/S system.
SUCKING AIR SOUND	1. Loose return line clamp.	1. Replace clamp.
	2. O-ring missing or damaged on hose fitting.	2. Replace o-ring.
	3. Low fluid level.	3. Fill to proper level.
	4. Air leak between pump and reservoir.	4. Repair as necessary.
	5. Reservoir cap not installed correctly.	5. Install reservoir cap correctly.
SCRUBBING OR KNOCKING	1. Wrong tire size.	1. Verify tire size.

BINDING AND STICKING

CONDITION	POSSIBLE CAUSE	CORRECTION
DIFFICULT TO TURN WHEEL STICKS OR BINDS	1. Low fluid level.	1. Fill to proper level.
	2. Tire pressure.	2. Adjust tire pressure.
	3. Steering components (ball joints/tie rod ends).	3 Inspect and repair as necessary.
	4. Loose belt.	4. Adjust or replace.
	5. Low pump pressure.	5. Pressure test and replace if necessary.
	6. Column shaft coupler binding.	6. Replace coupler.
	7. Steering gear worn.	7. Replace gear.
	8. Pump seized / Stuck valve	8. Replace pump.

INSUFFICIENT ASST. OR POOR RETURN TO CENTER

CONDITION	POSSIBLE CAUSE	CORRECTION
HARD TURNING OR MOMENTARY INCREASE IN TURNING EFFORT	1. Tire pressure.	1. Adjust tire pressure.
	2. Low fluid level.	2. Fill to proper level.
	3. Loose belt.	3. Adjust or replace.
	4. Low pump pressure.	4. Pressure test and repair as necessary.
	5. Internal gear leak.	5. Replace gear.
STEERING WHEEL DOES NOT WANT TO RETURN TO CENTER POSITION	1. Tire pressure.	1. Adjust tire pressure.
	2. Wheel alignment.	2. Align front end.
	3. Lack of lubrication.	3. Inspect and lubricate suspension components.
	4. High friction in steering gear.	4. Replace gear.

LOOSE STEERING AND VEHICLE LEAD

CONDITION	POSSIBLE CAUSE	CORRECTION
EXCESSIVE PLAY IN STEERING WHEEL	1. Worn or loose suspension or steering components.	1. Inspect and repair as necessary.
	2. Worn or loose wheel bearings.	2. Inspect and repair or adjust bearings.
	3. Steering gear mounting.	3. Tighten gear mounting bolts to specification.
	4. Gear out of adjustment.	4. Replace gear.
	5. Worn or loose steering coupler.	5. Inspect and replace as necessary.
VEHICLE PULLS OR LEADS TO ONE SIDE.	1. Tire Pressure.	1. Adjust tire pressure.
	2. Radial tire lead.	2. Rotate tires.
	3. Brakes dragging.	3. Repair as necessary.
	4. Wheel alignment.	4. Align front end.
	5. Steering gear valve bias.	5. Replace steering gear.

POWER STEERING FLOW AND PRESSURE

The following procedure is used to test the operation of the power steering system on the vehicle. This test will provide the gallons per minute (GPM) or flow rate of the power steering pump along with the maximum relief pressure. Perform test any time a power steering system problem is present. This test will determine if the power steering pump or power steering gear is not functioning properly. The following pressure and flow test is performed using Power Steering Analyzer Tool kit 6815 and Adapter Kit 6893.

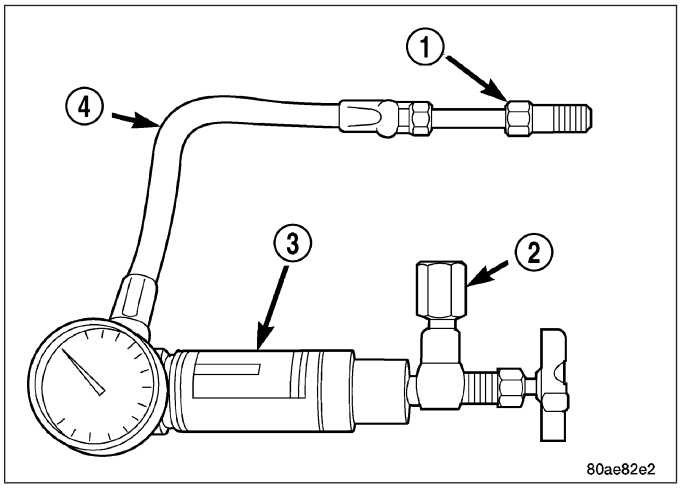

FLOW AND PRESSURE TEST

1. Check the power steering belt to ensure it is in good condition and adjusted properly.
2. Connect pressure gauge hose from the Power Steering Analyzer to adapter 6826.
3. Connect tube 6825A to Power Steering Analyzer test valve end.
4. Disconnect the high pressure hose from the power steering pump.
5. Connect the tube 6825A to the pump fitting.
6. Connect the power steering hose from the steering gear to the adapter 6826.

NOTE: If fluid leaked from the steering system, it should be filled to correct lervel prior to starting the engine.

7. Open the test valve completely.
8. Start engine and let idle long enough to circulate power steering fluid through flow/pressure test gauge and to get air out of the fluid. Then shut off engine.
9. Check fluid level, add fluid as necessary. Start engine again and let idle.
10. Gauge should read below 862 kPa (125 psi), if above, inspect the hoses for restrictions and repair as necessary. The initial pressure reading should be in the range of 345-552 kPa (50-80 psi).
11. Increase the engine speed to 1500 RPM and read the flow meter. If the flow rate (GPM) is below specification, (refer to pump specification chart for GPM) the pump should be replaced.

CAUTION: The following test procedure involves testing maximum pump pressure output and flow control valve operation. Do not leave valve closed for more than three seconds as the pump could be damaged.

12. Close valve fully three times and record highest pressure indicated each time. **All three readings must be above specifications and within 345 kPa (50 psi) of each other.**
    - Pressures above specifications but not within 345 kPa (50 psi) of each other, replace pump.
    - Pressures within 345 kPa (50 psi) of each other but below specifications, replace pump.
13. Open the test valve and turn the steering wheel to the extreme left and right positions three times against the stops. Record the highest pressure reading at each position. Compare readings to the pump specifications chart. If pressures readings are not within 50 psi of each other, the gear is leaking internally and must be replaced.

CAUTION: Do not force the pump to operate against the stops for more than 2 to 3 seconds at a time because, pump damage will result.

PUMP SPECIFICATION

ENGINE	RELIEF PRESSURE ± 65	FLOW RATE (GPM) AT 1500 RPM
1500 series	11032 kPa (1615 ± 65 psi)	3.1 - 3.5
2500 & 3500 series	12400 kPa (1800 ± 50 psi)	3.5 - 4.0

SPECIAL TOOLS

STEERING

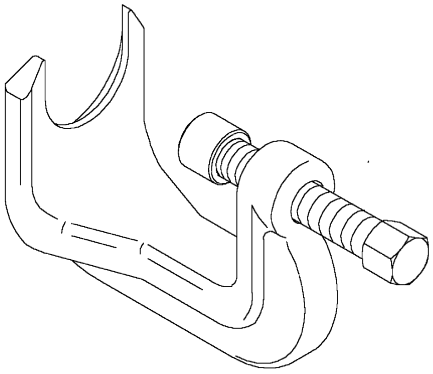

PULLER - 8677

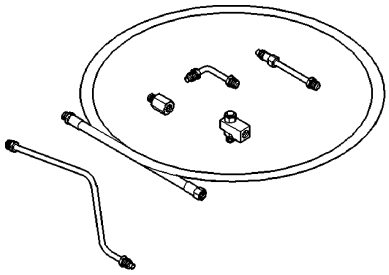

ADAPTERS, POWER STEERING FLOW/PRESSURE TESTER - 6893

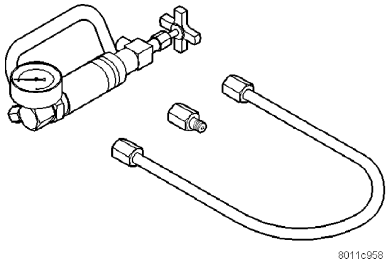

ANALYZER SET, POWER STEERING FLOW/ PRESSURE 6815

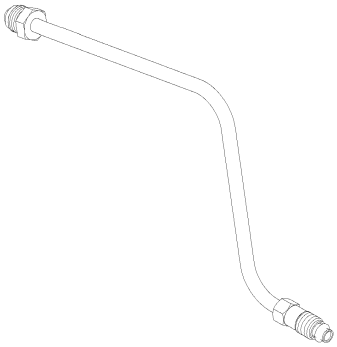

ADAPTER, POWER STEERING FLOW/PRESSURE - 6825A

COLUMN

TABLE OF CONTENTS

page

COLUMN
DESCRIPTION
DESCRIPTION 8
DESCRIPTION - SRT10 9
DIAGNOSIS AND TESTING
STEERING COLUMN 9
REMOVAL 9
INSTALLATION 12
SPECIFICATIONS
TORQUE 14
IGNITION SWITCH
DESCRIPTION 15
OPERATION 15
DIAGNOSIS AND TESTING
IGNITION SWITCH 15
REMOVAL 16
INSTALLATION 17
IGNITION SWITCH - SRT10
REMOVAL - SRT10 19
INSTALLATION - SRT10 21
KEY-IN IGNITION SWITCH
DESCRIPTION 22
DIAGNOSIS AND TESTING
IGNITION SWITCH AND KEY LOCK
CYLINDER 22

page

KEY CYLINDER
REMOVAL 23
INSTALLATION 23
STEERING WHEEL
REMOVAL 24
INSTALLATION 24
TILT LEVER KNOB RELEASE
REMOVAL 25
INSTALLATION 26
GEAR SHIFT LEVER
REMOVAL 28
INSTALLATION 29
UPPER STEERING COUPLING
REMOVAL 32
INSTALLATION 33
LOWER STEERING COUPLING
REMOVAL
ALL LD & HD EXCEPT 4X4 HD 34
4X4 HD 34
INSTALLATION
ALL LD & HD EXCEPT 4X4 HD 36
4X4 HD 36

COLUMN

DESCRIPTION

DESCRIPTION

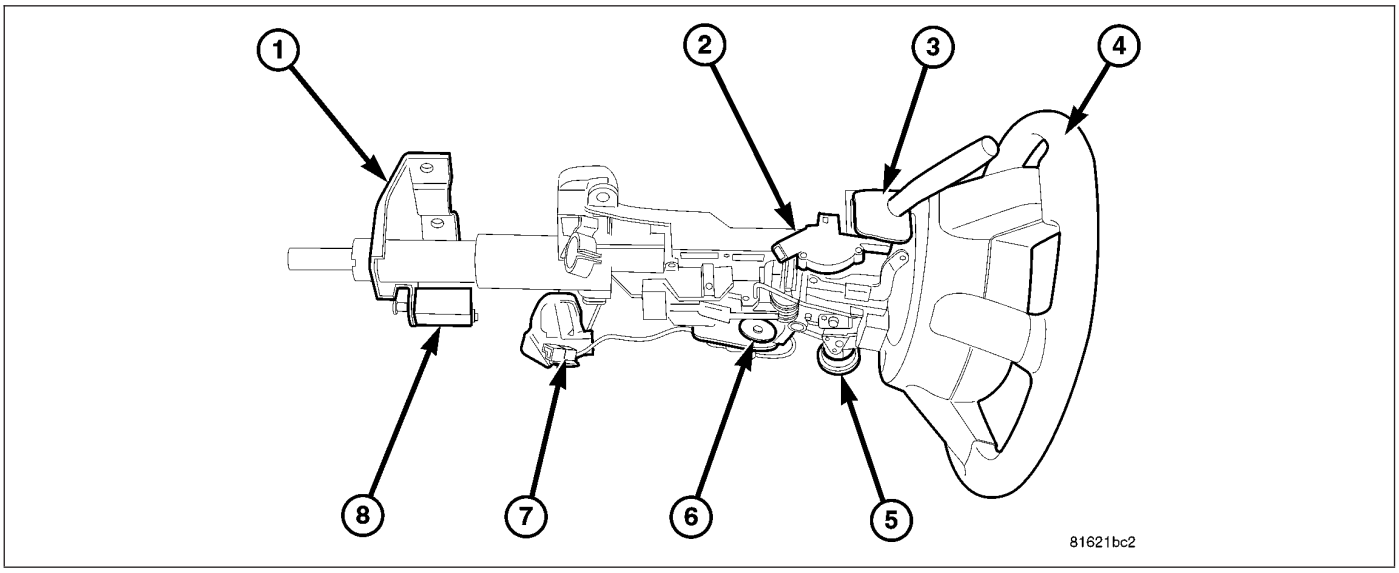

NOTE: The steering column on vehicles with an automatic transmission may not be equipped with an internal locking shaft that allows the ignition key cylinder to be locked with the key. Alternative methods of locking the steering wheel for service will have to be used.

The tilt and standard column (1) has been designed to be serviced as an assembly; less wiring, switches, shrouds, steering wheel (4), etc. Most steering column components can be serviced without removing the steering column from the vehicle.

To service the steering wheel, switches or airbag, refer to Restraints and follow all WARNINGS and CAUTIONS.

WARNING: The airbag system is a sensitive, complex electro-mechanical unit. Before attempting to diagnose, remove or install the airbag system components you must first disconnect and isolate the battery negative (ground) cable. Then wait two minutes for the system capacitor to discharge. Failure to do so could result in accidental deployment of the airbag and possible personal injury. The fasteners, screws, and bolts, originally used for the airbag components, have special coatings and are specifically designed for the airbag system. They must never be replaced with any substitutes. Anytime a new fastener is needed, replace with the correct fasteners provided in the service package or fasteners listed in the parts books.

CAUTION: Do not hammer on steering column shaft. This may cause damage to the shaft or bearing.

CAUTION: Do not attempt to remove the pivot bolts to disassemble the tilting mechanism. Do not remove shaft lock plate or plate retainer. This will damage the column.

CAUTION: Do not attempt to remove or modify the park lock slider or link.

NOTE: When servicing the steering wheel after removing the old bolt, a new bolt must be used when installing.

NOTE: When servicing the coupler a new bolt must be used when installing.

DESCRIPTION - SRT10

The SRT-10 column has no **START** position on the key cylinder. The push starter button switch is mounted on the Instrument panel center stack. All SRT-10 columns are Tilt columns, Standard cab trucks come with manual transmissions, Quad cab trucks come equipped with automatic transmissions.

DIAGNOSIS AND TESTING

STEERING COLUMN

If the vehicle is involved in a front end collision/the air bag has deployed the column must be inspected. This inspection will determine if the Column has collapsed. Inspect the column mounting capsules visually and manually push and pull them to check for separation or fractures. If capsules are fractured or have moved the column MUST be replaced.

REMOVAL

WARNING: Before servicing the steering column the airbag system must be disarmed. Refer to electrical restraint system for service procedures. Failure to do so may result in accidental deployment of the airbag and possible personal injury.

CAUTION: All fasteners must be torqued to specification to ensure proper operation of the steering column.

1. Position the front wheels **straight ahead**.
2. Disconnect the negative (ground) cable from the battery.
3. Remove the airbag, (Refer to 8 - ELECTRICAL/RESTRAINTS/DRIVER AIRBAG - REMOVAL).
4. Remove the steering wheel (1) with special tool CJ98–1 (2) or an appropriate steering wheel puller. (Refer to 19 - STEERING/COLUMN/STEERING WHEEL - REMOVAL).

CAUTION: Ensure the puller bolts are fully engaged into the steering wheel and not into the clockspring, before attempting to remove the wheel. Failure to do so may damage the steering wheel/clockspring.

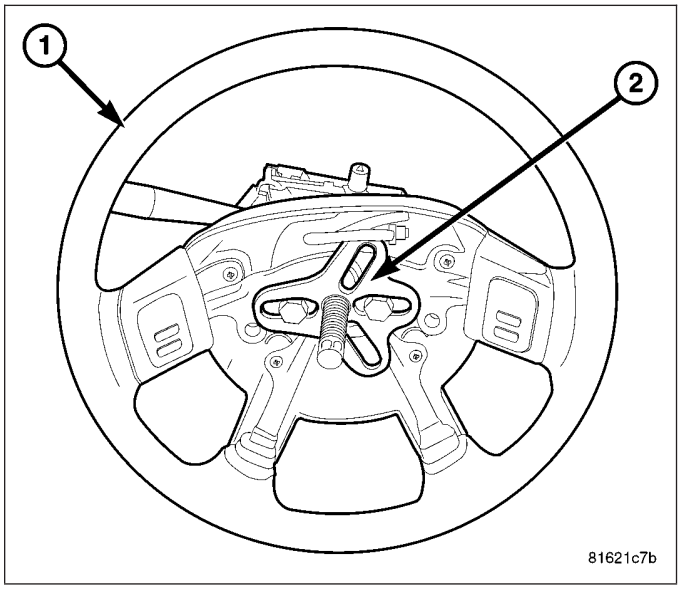

5. Remove the kneeblocker (2) and the steering column opening cover (1) (Refer to 23 - BODY/INSTRUMENT PANEL/STEERING COLUMN OPENING COVER - REMOVAL).

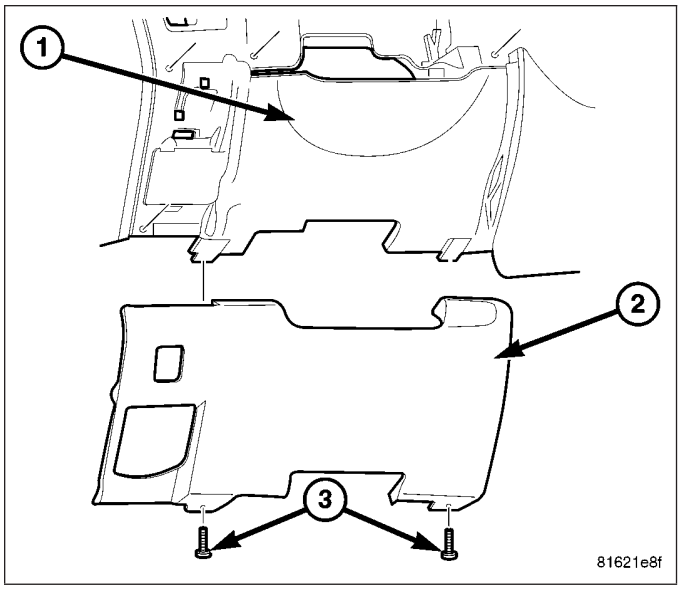

6. Remove the screw (1) securing the tilt lever knob (2).

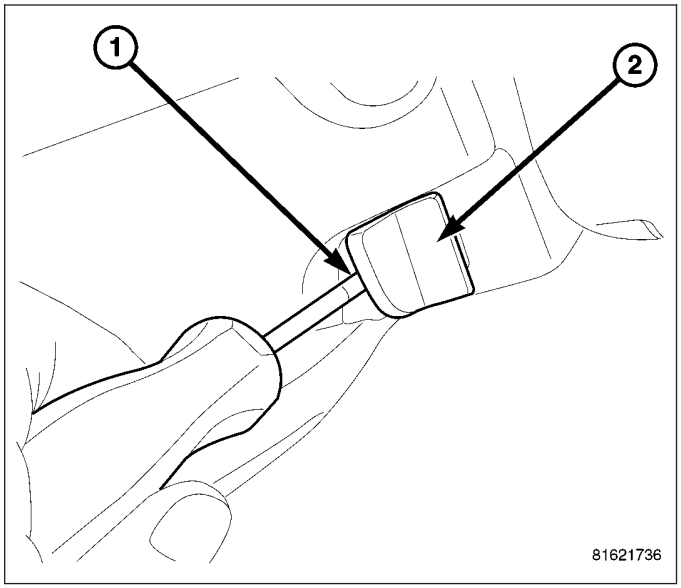

7. Remove the column shrouds (1&2).

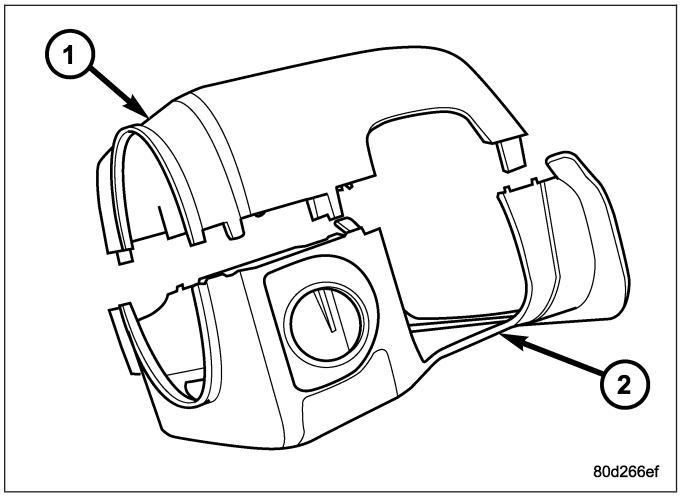

8. Remove the clock spring, (Refer to 8 - ELECTRICAL/RESTRAINTS/CLOCKSPRING - REMOVAL).
9. Disconnect the wiring harness (8) to the column.
10. Remove the shift cable (5) from the column shift lever actuator (4) (Refer to 21 - TRANSMISSION/TRANSAXLE/AUTOMATIC - 32RH/GEAR SHIFT CABLE - REMOVAL).
11. Release the shift cable (5) from the column bracket (7) and remove it from the bracket.

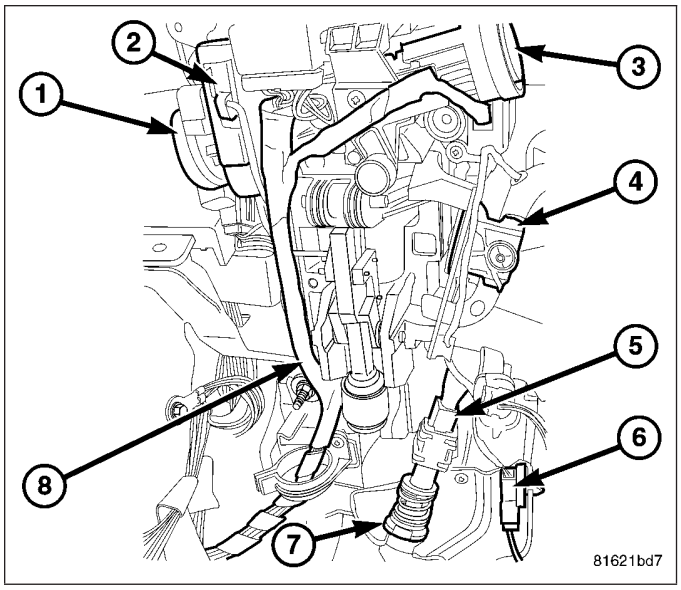

12. Remove the upper steering shaft coupler bolt (2).
13. Separate the shaft from the coupler (3).

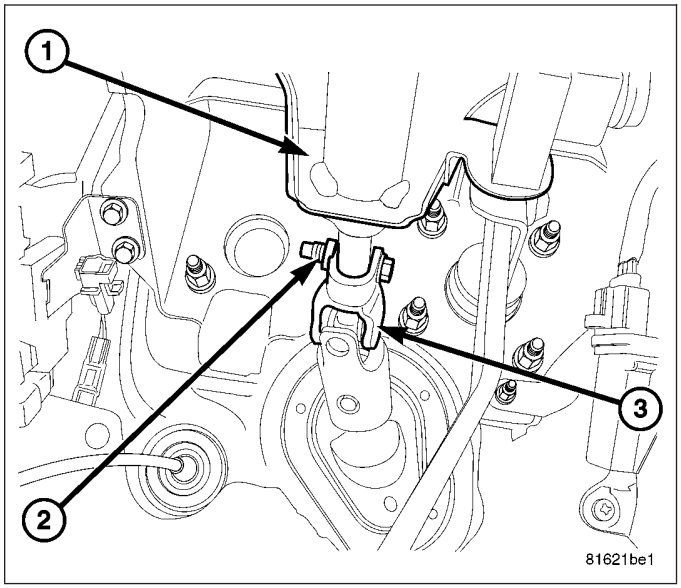

14. Remove the brake light switch (2) and discard (Refer to 8 - ELECTRICAL/LAMPS/LIGHTING - EXTERIOR/BRAKE LAMP SWITCH - REMOVAL).
15. Remove the four steering column mounting nuts (1 & 3).

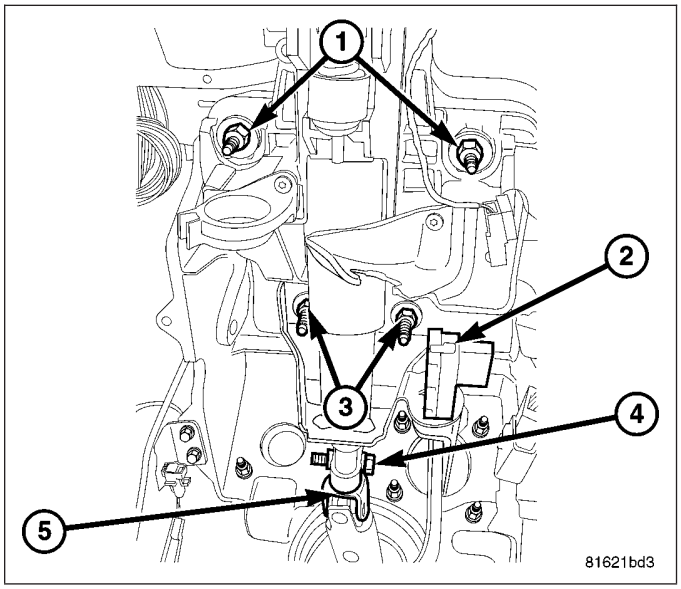

16. Remove the steering column assembly (6) from the vehicle.
17. Disassemble or transfer any components to be replaced.

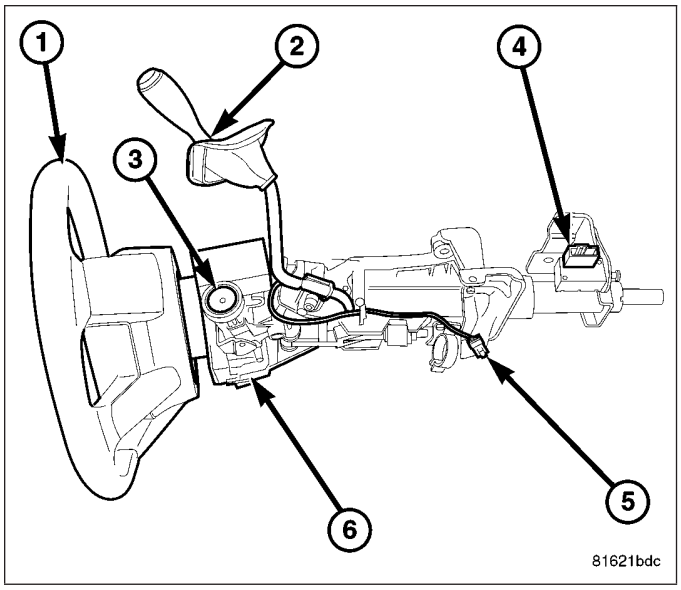

INSTALLATION

WARNING: Before servicing the steering column the airbag system must be disarmed. Refer to electrical restraint system for service procedures. Failure to do so may result in accidental deployment of the airbag and possible personal injury.

CAUTION: All fasteners must be torqued to specification to ensure proper operation of the steering column.

1. Position the steering column on the dash panel support and loosely install the mounting nuts (1&3).
2. Firmly slide the steering column upward against the studs in dash panel and hand tighten the nuts.
3. Install the steering shaft coupler (5) on the steering shaft and loosely install a **new** bolt (4).
4. Center steering column in dash opening and tighten mounting nuts (1&3) to 28 N·m (250 in. lbs.).

NOTE: Torque the upper left nut first then the lower right nut. Then torque the lower left nut then the upper right nut.

NOTE: A new bolt must be used for reinstallation.

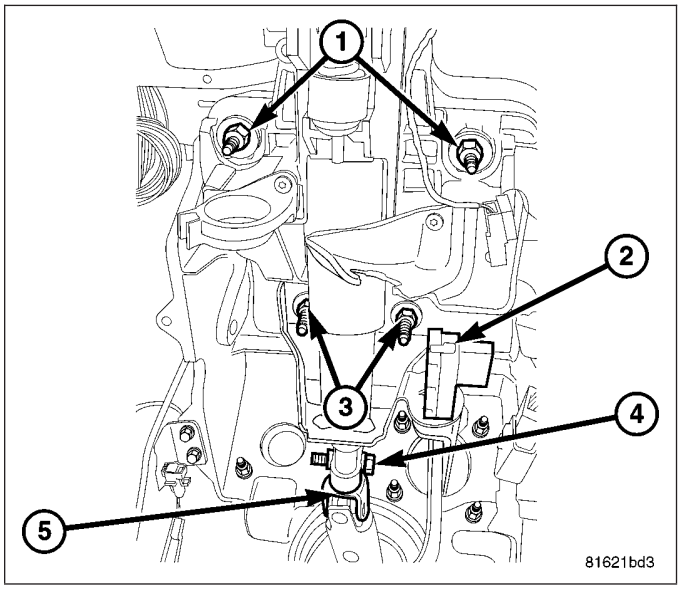

5. Tighten the coupler bolt (4) to 57 N·m (42 ft. lbs.).
6. Install a new brake light switch (2) (Refer to 8 - ELECTRICAL/LAMPS/LIGHTING - EXTERIOR/BRAKE LAMP SWITCH - REMOVAL).

7. Install the shifter cable (5). (Refer to 21 - TRANSMISSION/TRANSAXLE/AUTOMATIC - 32RH/GEAR SHIFT CABLE - INSTALLATION)
8. Connect the wiring harness (8) to the column.
9. Install the clockspring (Refer to 8 - ELECTRICAL/RESTRAINTS/CLOCKSPRING - REMOVAL).

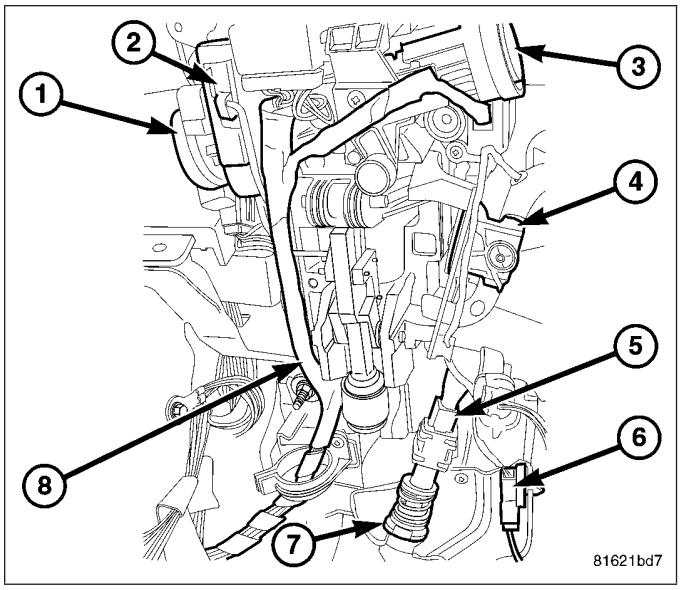

10. Install the shrouds (1&2).

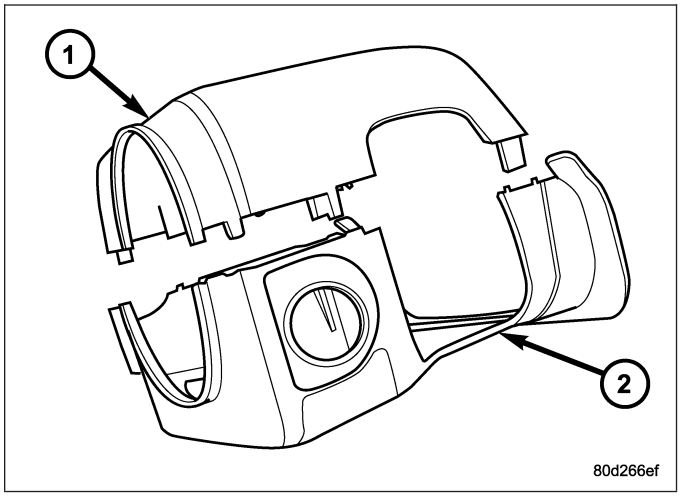

11. Align the spline on the wheel hub to shaft.
12. Then install the steering wheel and install a **new** bolt. Tighten the bolt to 61 N·m (45 ft. lbs.).
13. Install the airbag (Refer to 8 - ELECTRICAL/RESTRAINTS/DRIVER AIRBAG - INSTALLATION).
14. Install the tilt lever knob (2).

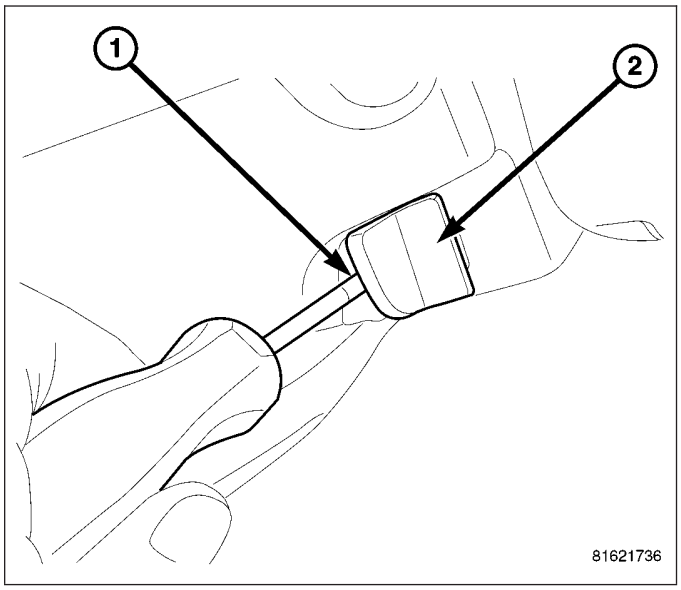

15. Install the steering column opening cover (1) and kneeblocker (2) (Refer to 23 - BODY/INSTRUMENT PANEL/STEERING COLUMN OPENING COVER - INSTALLATION).
16. Install the negative battery terminal.
17. Test the operation of the horn, Electronic PRNDL Indicator, lights and any other functions that are steering column operated.

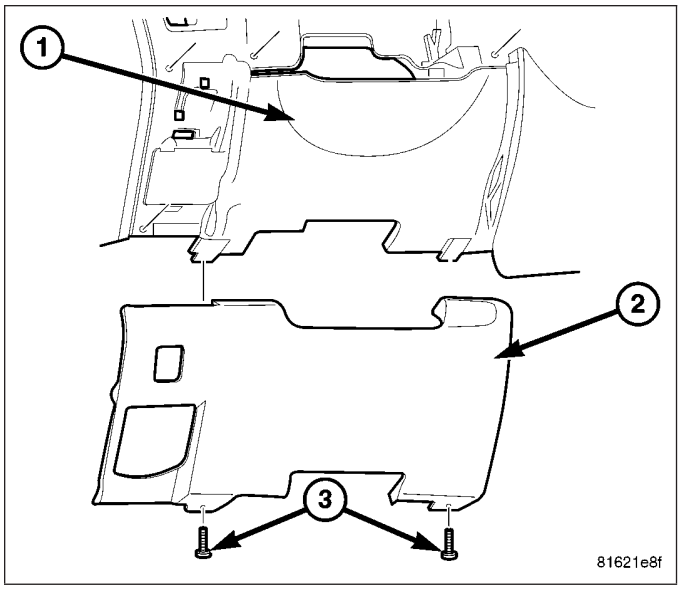

SPECIFICATIONS

TORQUE

TORQUE SPECIFICATIONS

DESCRIPTION	N·m	Ft. Lbs.	In. Lbs.
Steering Coupling Upper Pinch Bolt LD & HD	57	42	—
Steering Coupling Upper Pinch Bolt 4X4 HD	57	42	–
Steering Coupling Lower Pinch Bolt LD & HD	57	42	—
Steering Coupling Lower Pinch Bolt SRT10	38	28	—
Steering Coupling Lower Pinch Bolt 4X4 HD	28	21	250
Steering Wheel Bolt	61	45	—
Ignitiion Switch Mounting Screws	3	—	26
Tilt Lever Release Mounting Screws	4.5	—	40

IGNITION SWITCH

DESCRIPTION

The ignition switch (1) is located on the steering column. It is used as the main on/off switching device for most electrical components. The mechanical key cylinder is used to engage/disengage the electrical ignition switch.

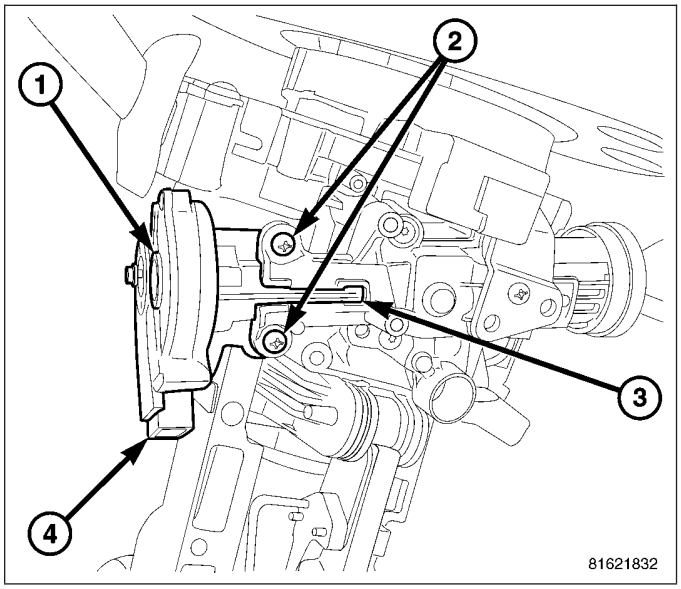

OPERATION

Vehicles equipped with an automatic transmission and a steering column mounted shifter: an interlock device is located within the shift cable. This interlock device is used to lock the transmission shifter in the PARK position when the key cylinder is in any position and the brake pedal is not depressed.

DIAGNOSIS AND TESTING

IGNITION SWITCH

TEST AND REPAIR

If the key removal effort is excessive on a vehicle with a automatic transmission first adjust the shift linkage (5), (Refer to 21 - TRANSMISSION/TRANSAXLE/AUTOMATIC - 46RE/GEAR SHIFT CABLE - ADJUSTMENTS).

If the ignition switch (1) effort is excessive remove the ignition key cylinder (3) from the steering column. (Refer to 19 - STEERING/COLUMN/LOCK CYLINDER HOUSING - REMOVAL). Check the turning effort of the key cylinder. If the ignition key cylinder effort is excessive replace the key cylinder (3).

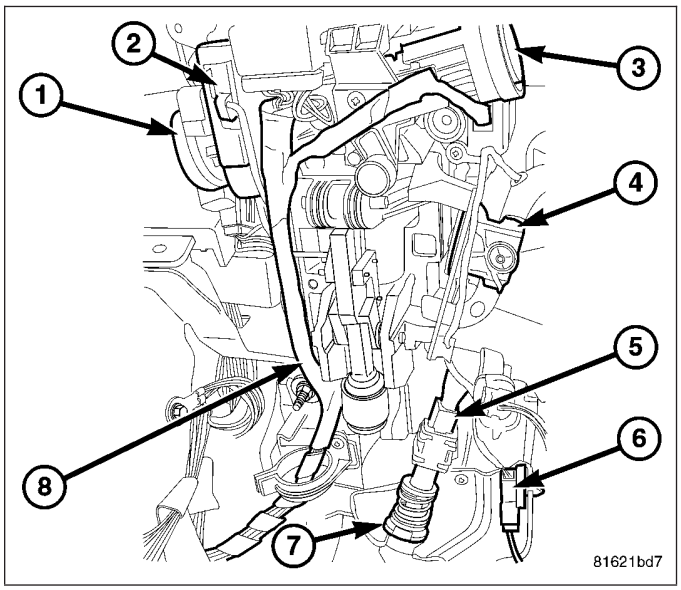

REMOVAL

SERVICE PRECAUTIONS

NOTE: The steering column on vehicles equipped with an automatic transmission is not equipped with an internal locking shaft with the ignition cylinder. Alternative methods of locking the steering wheel for service will have to be used.

To service the steering wheel, switches or airbag, Refer to Electrical Restraints and follow all WARNINGS and CAUTIONS.

WARNING: The airbag system is a sensitive, complex electro-mechanical unit. Before attempting to diagnose, remove or install the airbag system components you must first disconnect and isolate the battery negative (ground) cable. Then wait two minutes for the system capacitor to discharge. Failure to do so could result in accidental deployment of the airbag and possible personal injury. The fasteners, screws, and bolts, originally used for the airbag components, have special coatings and are specifically designed for the airbag system. They must never be replaced with any substitutes. Anytime a new fastener is needed, replace with the correct fasteners provided in the service package or fasteners listed in the parts books.

CAUTION: Do not hammer on steering column shaft. This may cause damage to the shaft or bearing.

CAUTION: Do not attempt to remove the pivot bolts to disassemble the tilting mechanism.

The ignition key must be in the key cylinder for cylinder removal. The key cylinder must be removed first before removing ignition switch.

1. Remove the negative (ground) cable from the battery.
2. Disable the airbag, (Refer to 8 - ELECTRICAL/RESTRAINTS/DRIVER AIRBAG - REMOVAL).
3. Remove the kneeblocker and steering column reinforcement panel.
4. Remove the lower and upper shrouds.
5. Remove key cylinder. (Refer to 19 - STEERING/COLUMN/LOCK CYLINDER HOUSING - REMOVAL).
6. Remove the tilt lever release knob bracket. (if equipped).

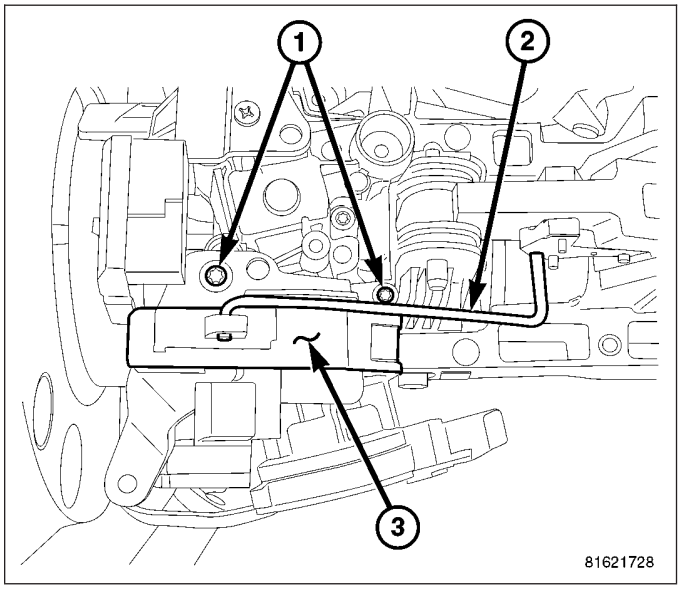

7. Disconnect the electrical connector at rear of ignition switch (4).
8. Remove ignition switch mounting screws (2).
9. Using a small screwdriver, push on locking tab (3) and remove switch (1) from steering column.

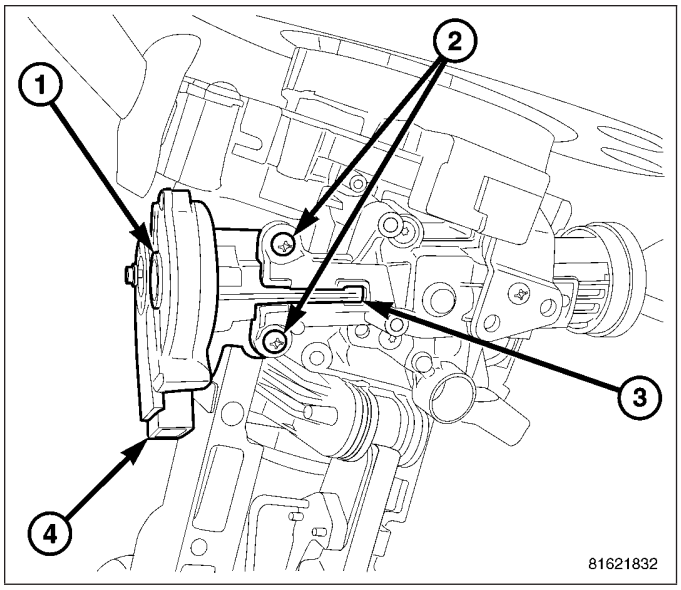

INSTALLATION

The ignition key must be in the key cylinder for cylinder installation. The key cylinder must be removed first before installing ignition switch.

1. Before installing ignition switch (1), rotate the slot in the switch to the ON position.
2. Position switch (1) to column and install the mounting screws (2). Tighten screw to 3 N·m (26 in. lbs.).
3. Connect the electrical connector to rear of the ignition switch (4). Make sure that locking tabs are fully seated into wiring connector.

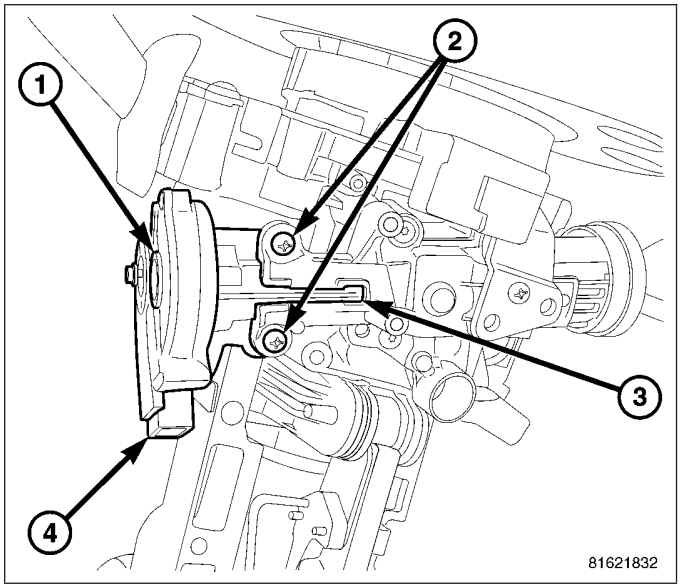

4. Install the tilt lever release bracket mounting screws. Tighten screws to 4.5 N·m (40 in. lbs.).
5. Install the key cylinder.
6. Install steering column upper and lower shrouds.
7. Install the steering column reinforcement and knee-blocker.
8. Enable the airbag system. (Refer to 8 - ELECTRICAL/RESTRAINTS/DRIVER AIRBAG - INSTALLATION).

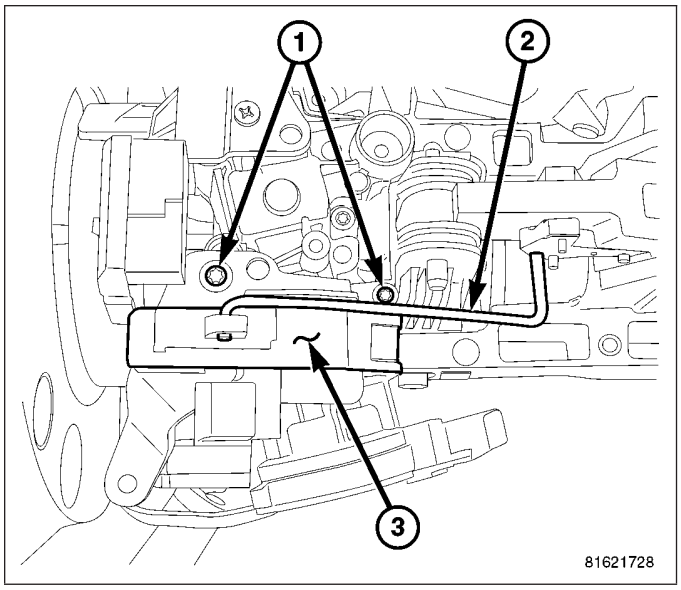

IGNITION SWITCH - SRT10

REMOVAL - SRT10

The ignition switch (1) attaches to the lock cylinder housing (2) on the end opposite the lock cylinder. For ignition switch terminal and circuit identification, refer to the Wiring Diagrams sections.

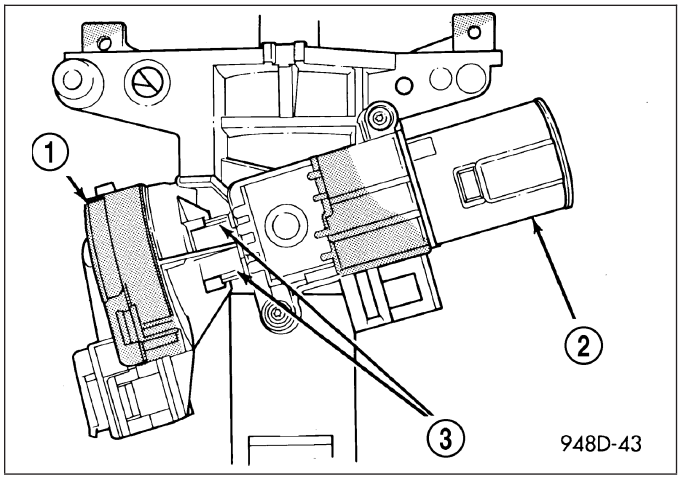

1. Disconnect negative cable from battery.
2. Place key cylinder in RUN position. Through the hole in the lower shroud (2), depress lock cylinder retaining tab and remove key cylinder.
3. Remove upper and lower shrouds (3) from steering column.

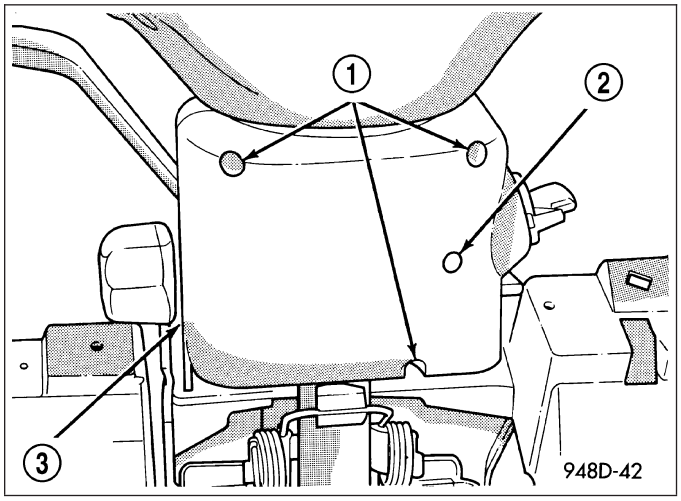

4. Disconnect electrical connectors from ignition switch (1).

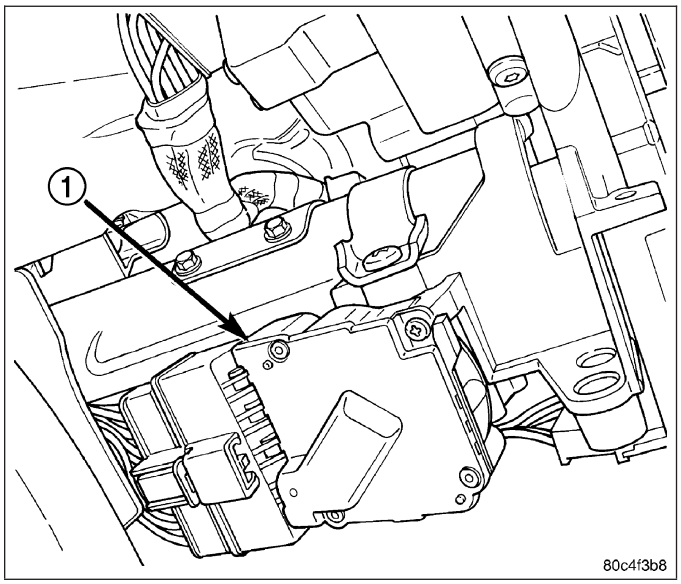

5. Remove the 2 screws on the top of the multi-function switch and relocate.

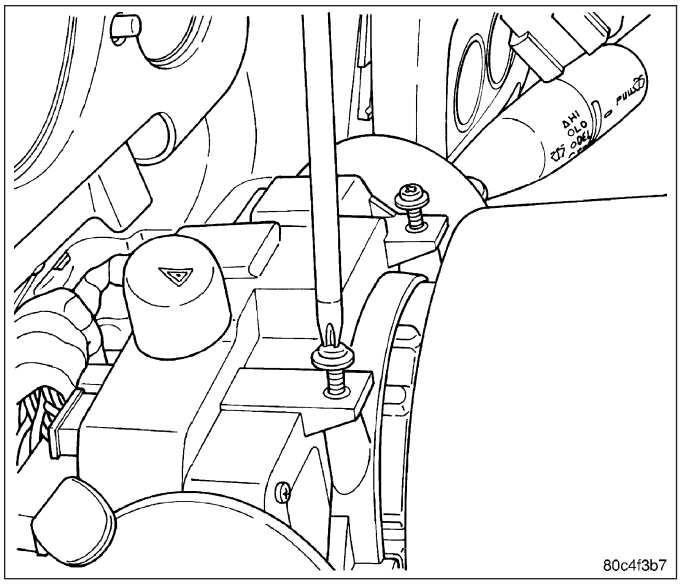

6. Remove ignition switch mounting screw with a #10 Torx® bit.

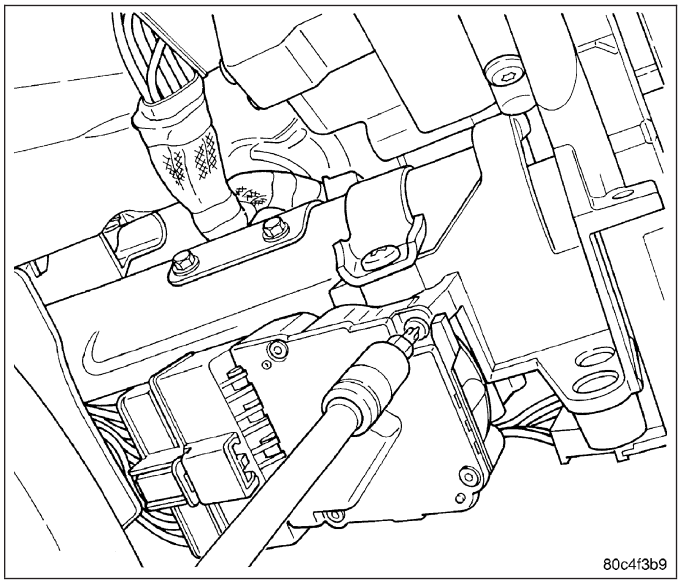

7. Pull ignition switch from steering column.

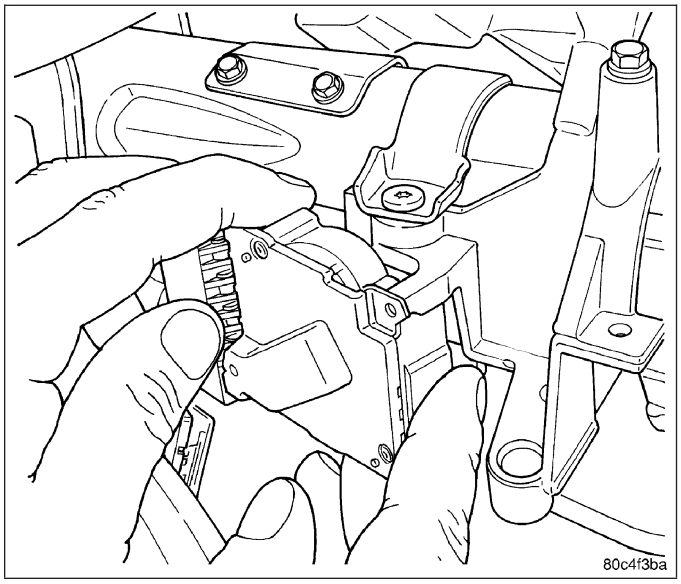

INSTALLATION - SRT10

1. Ensure the ignition switch is in the RUN position and the actuator shaft (2) in the lock housing (1) is in the RUN position.
2. Carefully install the ignition switch. The switch will snap over the retaining tabs. Install mounting screw.
3. Install electrical connectors to ignition switch.
4. Install the multi-function switch and tighten the 2 screws.

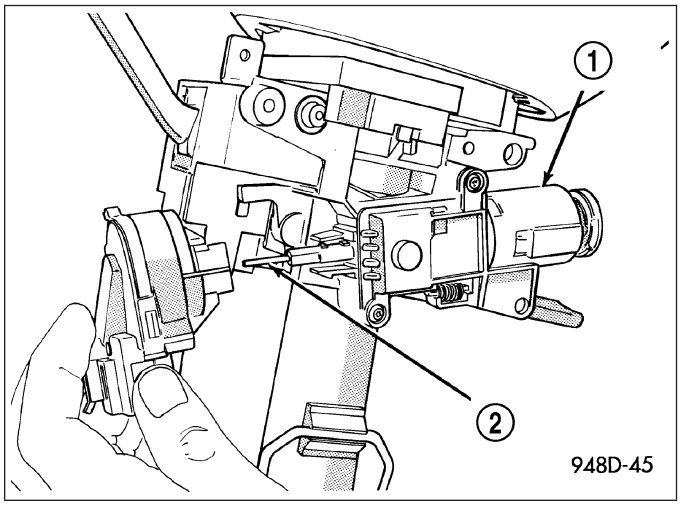

5. Install upper and lower shrouds.
6. Install key cylinder (cylinder retaining tab will depress only in the RUN position).
7. Connect negative cable to battery.
8. Check for proper operation of ignition switch and key-in warning switch.

KEY-IN IGNITION SWITCH

DESCRIPTION

The key-in ignition switch is integral to the ignition switch, which is mounted on the left side of the steering column. It closes a path to ground for the Central Timer Module (CTM) when the ignition key is inserted in the ignition key cylinder and the driver door ajar switch is closed (driver door is open). The key-in ignition switch opens the ground path when the key is removed from the ignition key cylinder. The ground path is also opened when the driver door ajar switch is open (driver door is closed).

The key-in ignition switch cannot be repaired and, if faulty or damaged, the entire ignition switch must be replaced, (Refer to 19 - STEERING/COLUMN/IGNITION SWITCH - REMOVAL).

DIAGNOSIS AND TESTING

IGNITION SWITCH AND KEY LOCK CYLINDER

ELECTRICAL DIAGNOSIS

For ignition switch electrical schematics, refer to Ignition Switch in the appropriate section of Electrical Wiring Diagrams.

MECHANICAL DIAGNOSIS (KEY DIFFICULT TO ROTATE)

(Refer to 19 - STEERING/COLUMN/IGNITION SWITCH - DIAGNOSIS AND TESTING).

KEY CYLINDER

REMOVAL

The ignition key must be in the key cylinder (1) for cylinder removal.

1. Disconnect negative cable from battery.
2. Remove upper and lower covers (shrouds) from steering column.
3. Place shifter in PARK position.
4. A retaining pin is located at the underside of the key cylinder assembly.
   a. Rotate key to RUN position.
   b. Press in on retaining pin while pulling key cylinder (1) from ignition switch.

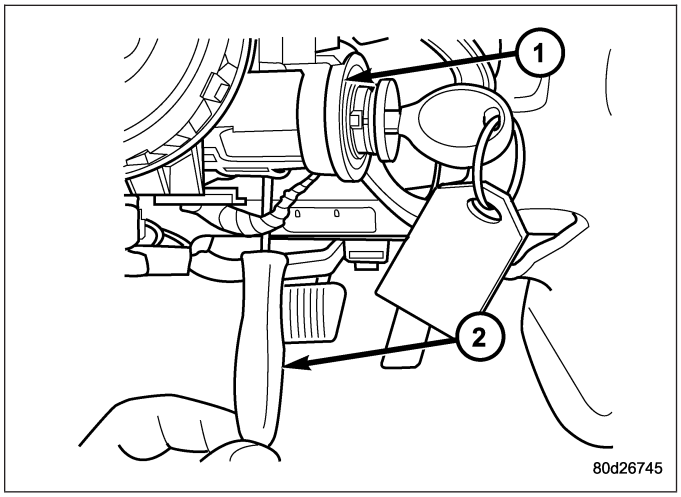

INSTALLATION

The ignition key must be in the key cylinder (3) for cylinder installation.

1. Install the key cylinder into the housing using care to align the end of the key cylinder (3) with the ignition switch (1).
2. Push the key cylinder (3) in until it clicks.
3. Replace the upper and lower shrouds.
4. Reconnect the battery.

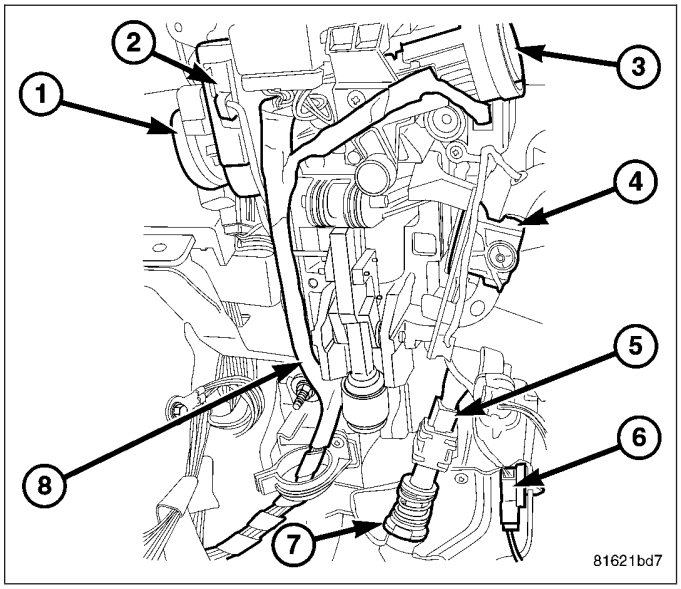

STEERING WHEEL

REMOVAL

1. Disable and remove the driver's side airbag. (Refer to 8 - ELECTRICAL/RESTRAINTS/DRIVER AIRBAG - REMOVAL).
2. Partially remove the steering wheel bolt and leave the bolt in the column.
3. Install puller CJ98-1 (2) or equivalent using the top of the bolt to push on.
4. Remove and discard the steering wheel bolt.
5. Remove the steering wheel (1).

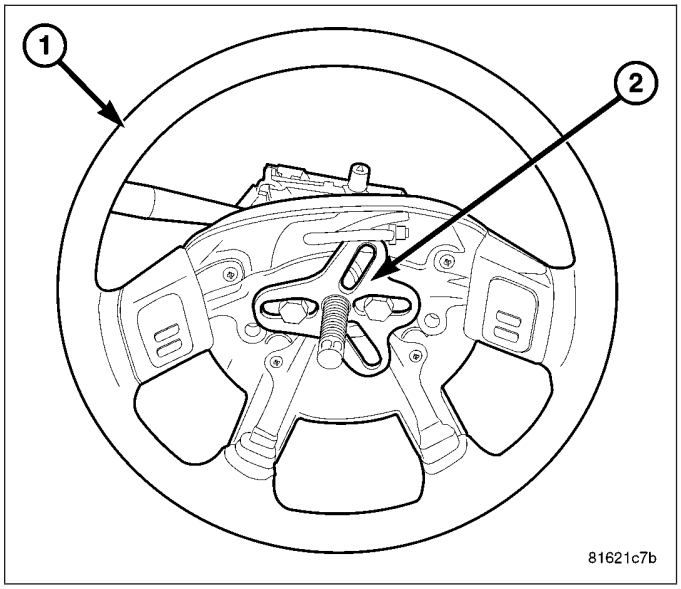

INSTALLATION

NOTE: Do not reuse the old steering wheel bolt (a new bolt must be used)

1. Install steering wheel to the column

NOTE: Be certain that the steering wheel mounting bolt is tightened to the proper torque specification to ensure proper clockspring operation.

2. Install the new steering wheel bolt. Tighten the bolt to 61 N·m (45 ft. lbs.).
3. Install the driver's side air bag. (Refer to 8 - ELECTRICAL/RESTRAINTS/DRIVER AIRBAG - INSTALLATION).

TILT LEVER KNOB RELEASE

REMOVAL

1. Remove the screw (1) securing the tilt lever knob (2).

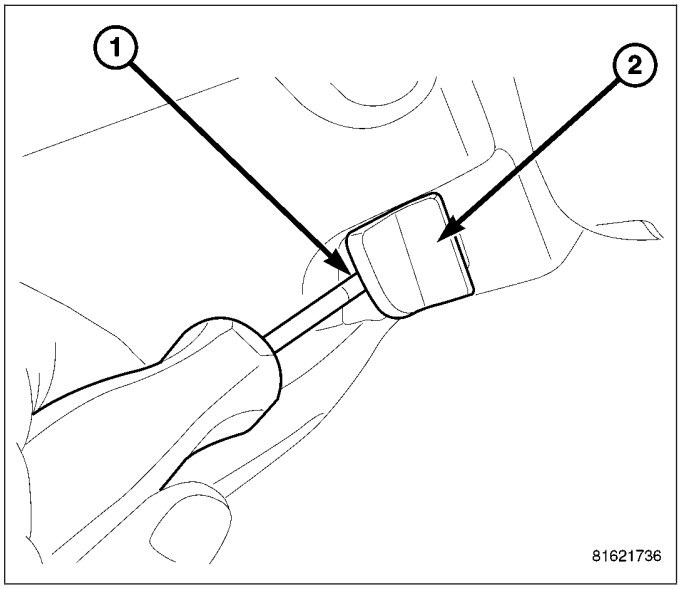

2. Remove the steering column opening cover (Refer to 23 - BODY/INSTRUMENT PANEL/STEERING COLUMN OPENING COVER - REMOVAL).
3. Remove the lower shroud.

NOTE: Use special care not to pry on the clockspring electrical connector when removing or installing the mounting screw located next to the clockspring.

4. Remove the two mounting screws (1) from the tilt lever knob release bracket (3).

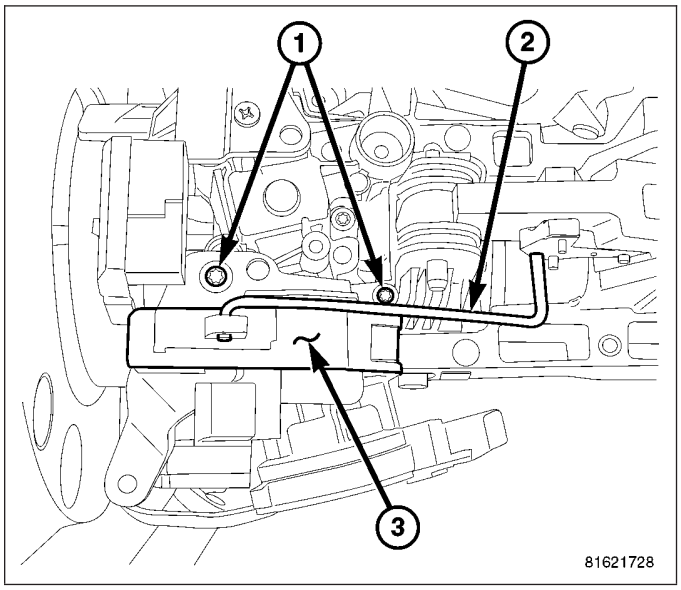

5. Unseat the rod (2) from the release lever assembly (1).

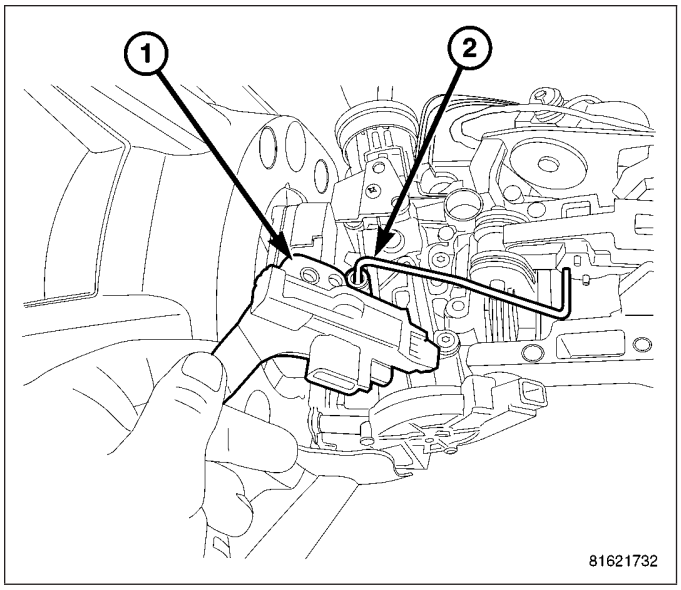

INSTALLATION

1. Route the rod (2) into the tilt lever release knob bracket (1).

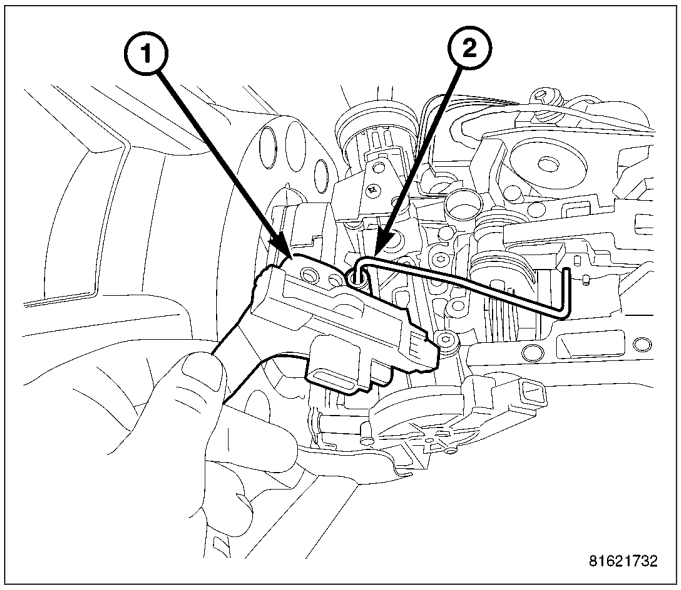

2. Install the tilt lever release knob bracket (3) to the column and install the two new mounting screws (1). Tighten the two screws to 4.5 N·m (40 in. lbs.).

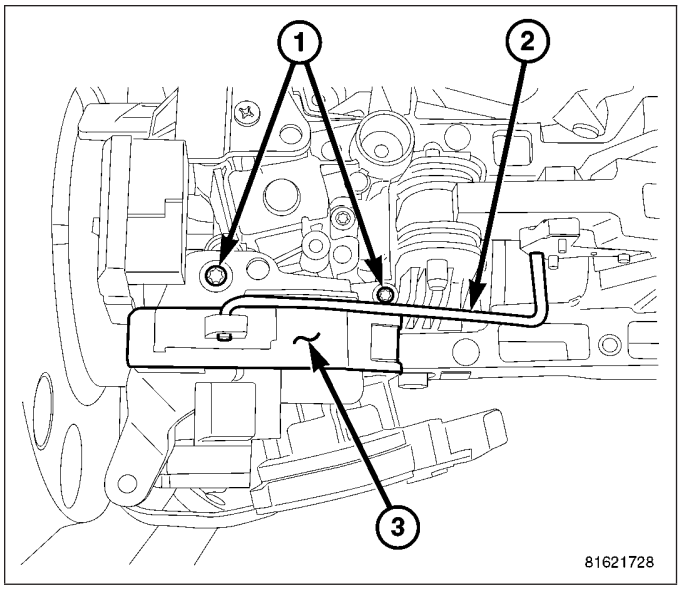

3. Install the lower shroud.
4. Install the steering column opening cover (Refer to 23 - BODY/INSTRUMENT PANEL/STEERING COLUMN OPENING COVER - INSTALLATION).
5. Install the tilt lever knob (2) and screw (1). Tighten the screw to 4.5 N·m (40 in. lbs.).

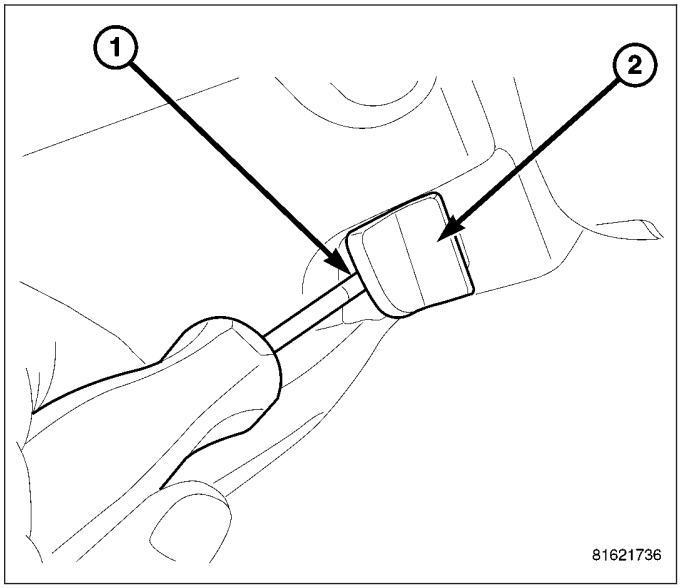

GEAR SHIFT LEVER

REMOVAL

1. Remove the kneeblocker (2) and steering column opening reinforcement (1). (Refer to 23 - BODY/INSTRUMENT PANEL/KNEE BLOCKER - REMOVAL).

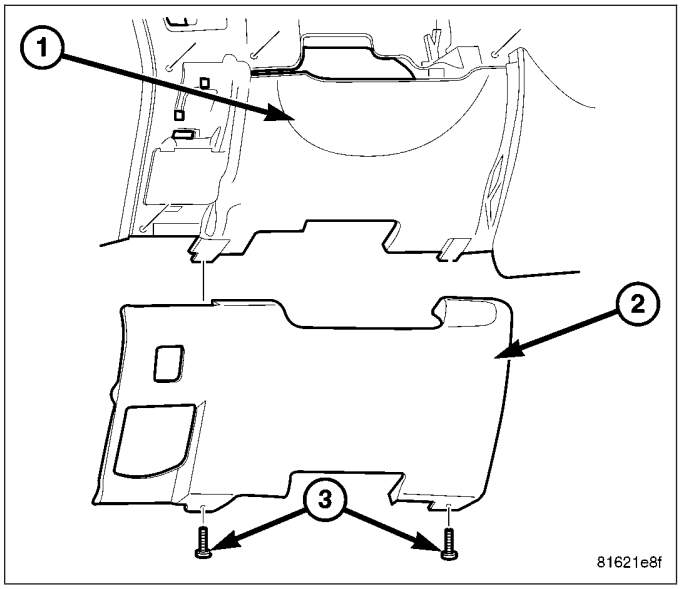

2. Remove the upper and lower column shrouds (1&2).
3. Loosen the column bolts and lower the column enough to allow clearance for the gear shift lever removal.

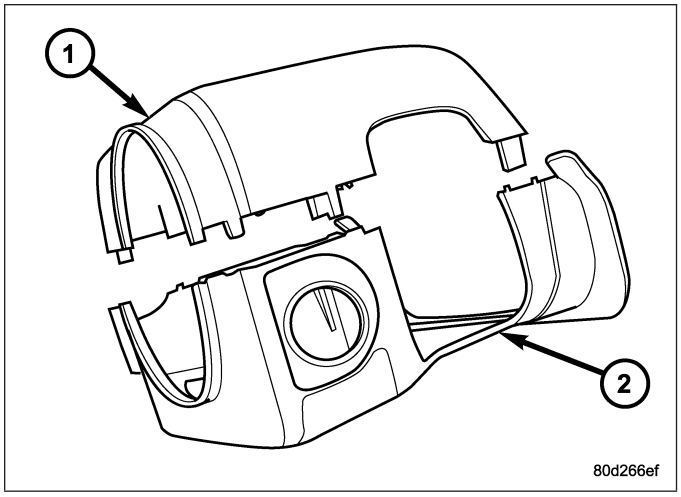

4. Disconnect the overdrive switch harness (3) (if equipped).
5. Disconnect the shift cable (2) from the shift lever.
6. Remove the gear shift lever mounting screws (1).

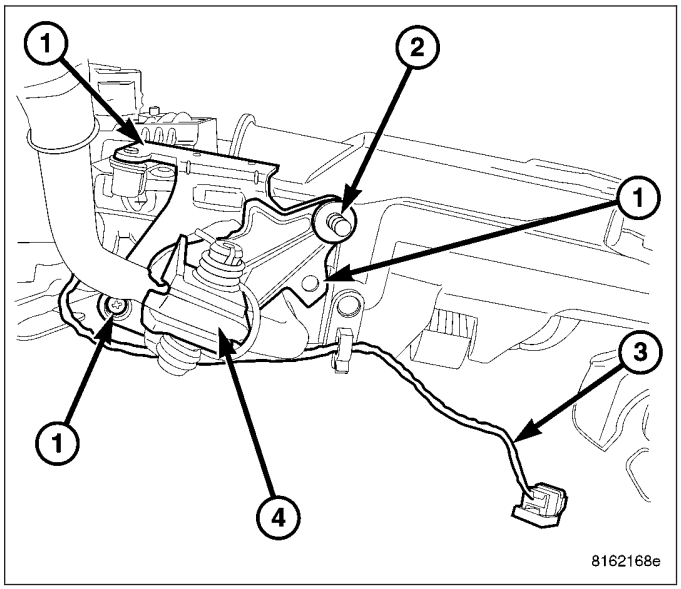

7. Remove the blocker pin (1) from the inhibit link slot (2) and remove the lever (3) by pulling forward toward the steering wheel and to the left then down.

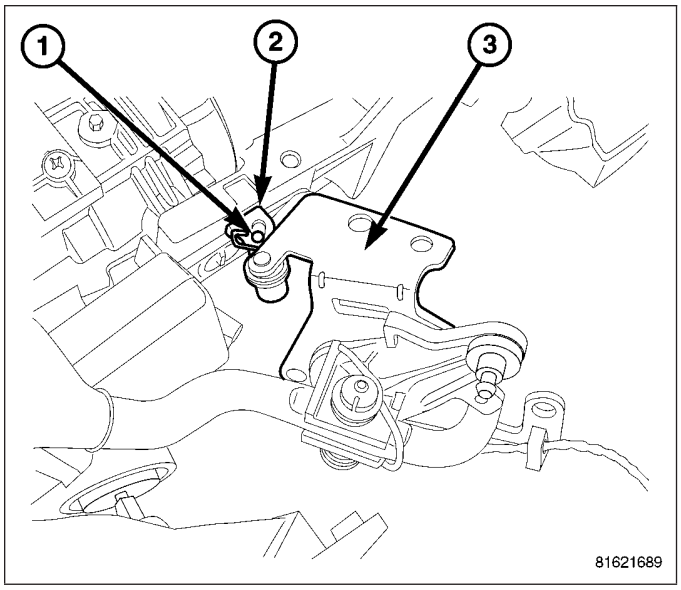

INSTALLATION

1. Install the lever assembly (3) reversing the way it came out using care to install the pin (2) in the blocker to slider slot (1).

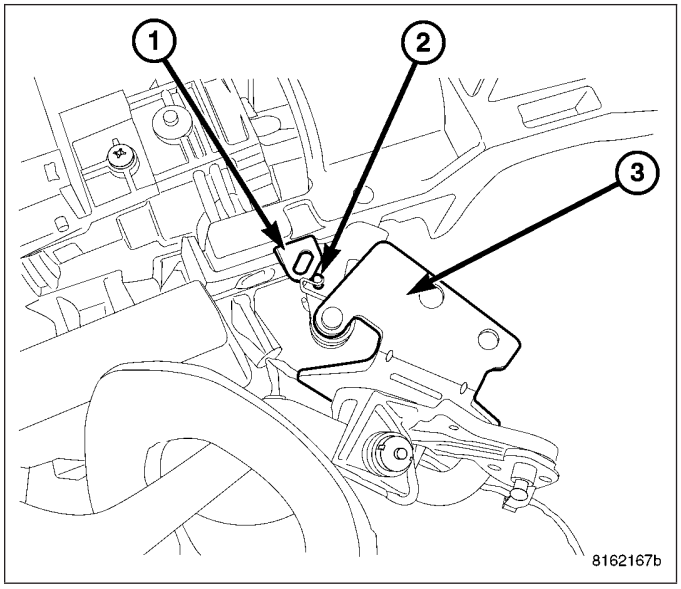

2. The block inhibitor pin and spring (1) should seat into the slider slot (2).

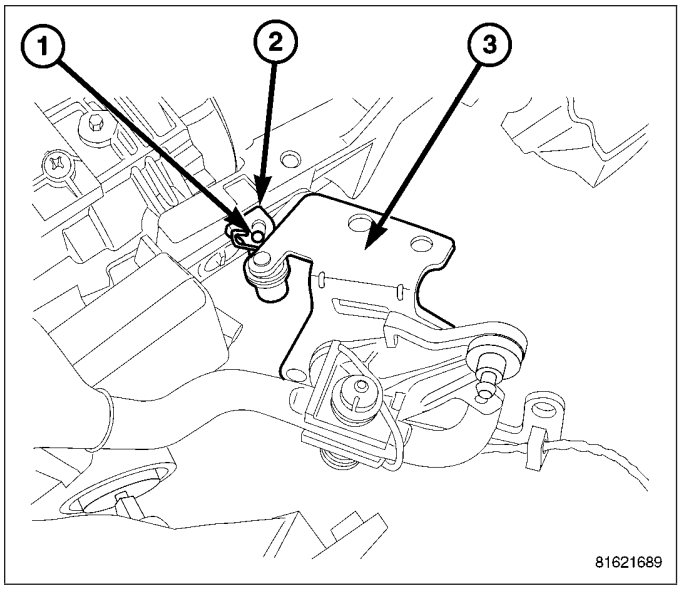

3. Install the mounting screws (1) and tighten to 12 N·m (105 in. lbs.).
4. Cycle the key from ACC to RUN and ensure that the blocker does not stick or bind.
5. Turn the key to the OFF position and ensure that the shifter will not pull from the PARK position.
6. Connect the over drive switch harness (if equipped) (3).

NOTE: Route and tie off harness to original location.

7. Connect the shift cable to the lever (2).

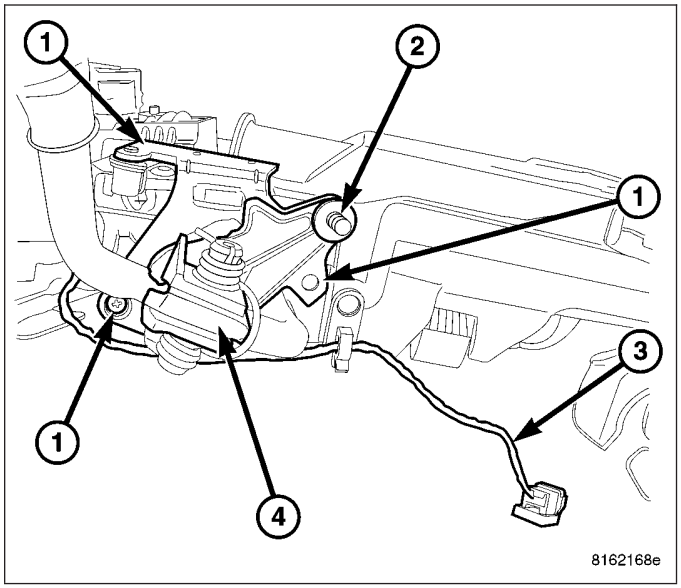

8. Ensure the gear shift lever and transmission are in the PARK position and snap the cable adjust clip in place.
9. Install the upper and lower column shrouds (1&2).

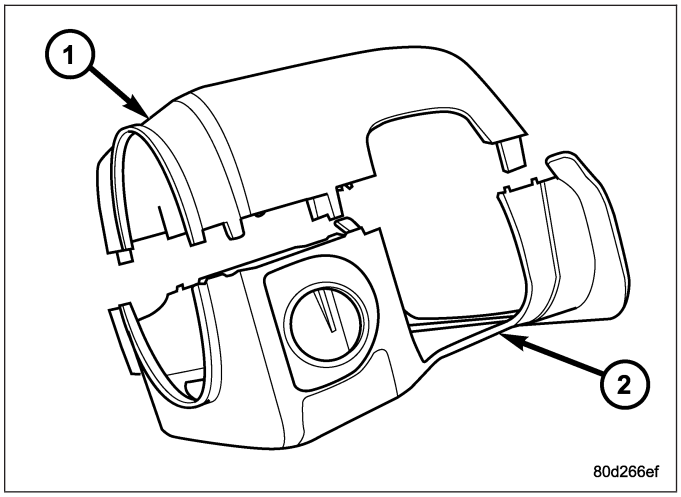

10. Install the column back into place and tighten.
11. Install the kneeblocker (2) and steering column reinforcement cover (1). (Refer to 23 - BODY/INSTRUMENT PANEL/KNEE BLOCKER - INSTALLATION).

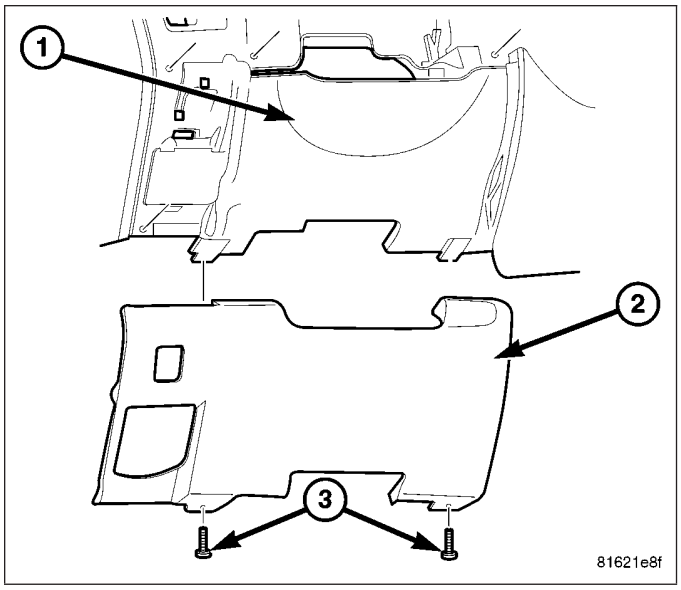

UPPER STEERING COUPLING

REMOVAL

1. Disconnect the negative battery cable.

NOTE: The steering column on vehicles with an automatic transmission may not be equipped with an internal locking shaft that allows the ignition key cylinder to be locked with the key. Alternative methods of locking the steering wheel for service will have to be used.

2. Lock the steering wheel with the tire in the straight position.
3. Remove and discard the lower pinch bolt.
4. Lower the steering coupler shaft from the column.
5. Remove the upper steering coupling shaft (2) seal by pushing in the four tags (1) securing it to the panel.

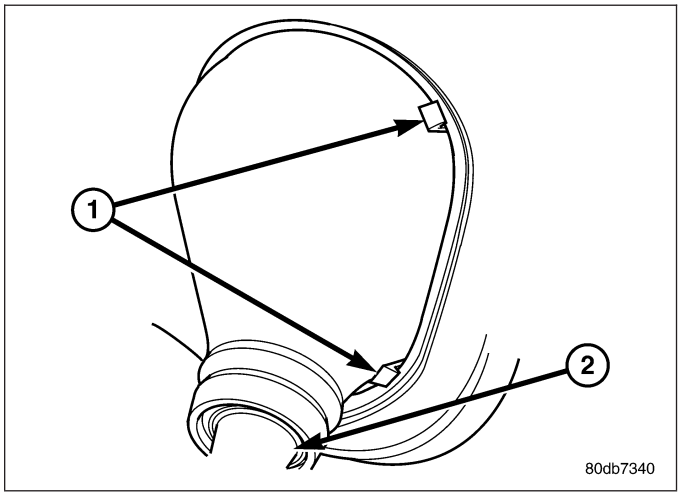

6. Remove and discard the lower coupler pinch bolt (1) from the lower steering coupling shaft (1).
7. Remove the upper steering coupling shaft (3) from the vehicle.

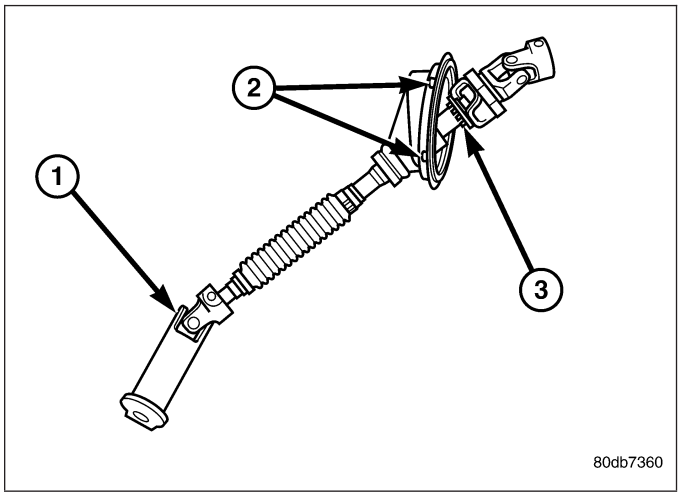

INSTALLATION

1. Install the upper steering coupling shaft (3) to the vehicle.

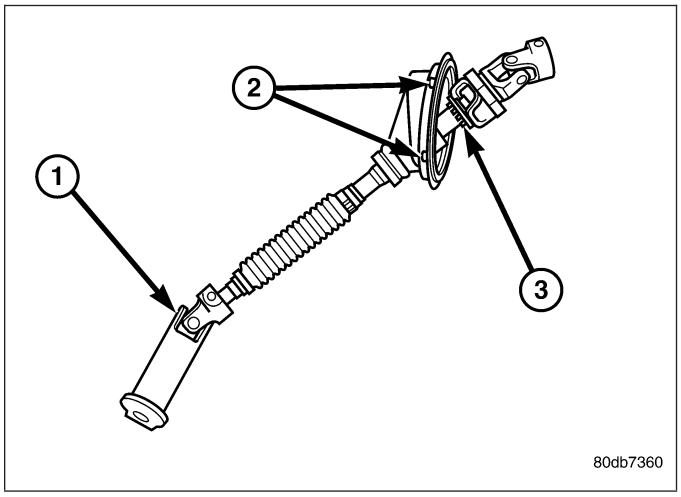

2. Install the upper steering coupling shaft seal (2) by pushing it in securing the four tangs (1) to the panel.

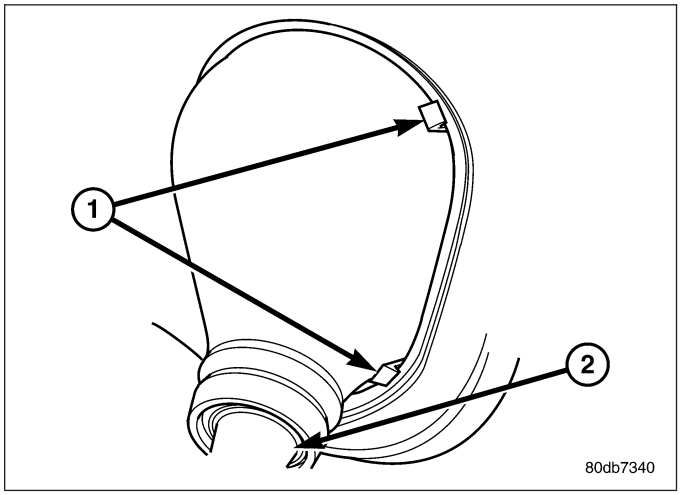

NOTE: A new steering coupling shaft pinch bolt for the upper and lower shafts must be used.

3. Install the steering coupler shaft (1) to the column.
4. Install the upper pinch bolt (3) use new bolt and tighten to 57 N.m (42 ft.lbs).
5. Install the shaft to the lower coupler (1).
6. Install the lower pinch bolt (1) use new bolt and tighten to 57 N.m (42 ft.lbs).
7. Unlock the steering wheel.
8. Reconnect the negative battery cable.

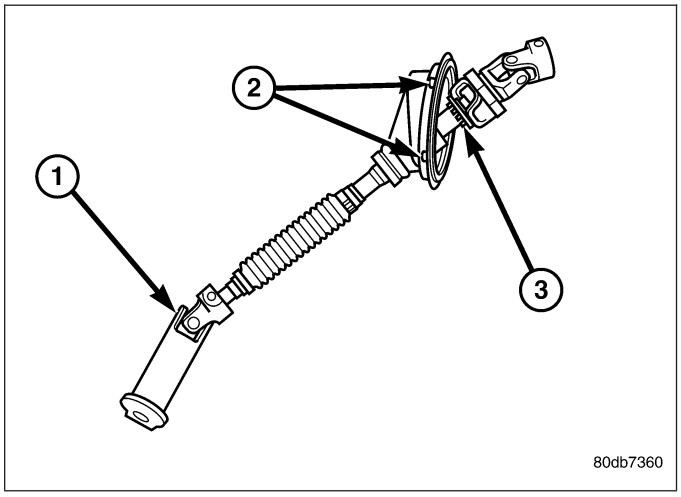

LOWER STEERING COUPLING

REMOVAL

ALL LD & HD EXCEPT 4X4 HD

1. Disconnect the negative battery cable.
2. Raise and support the vehicle.

NOTE: The steering column on vehicles with an automatic transmission may not be equipped with an internal locking shaft that allows the ignition key cylinder to be locked with the key. Alternative methods of locking the steering wheel for service will have to be used.

3. Lock the steering wheel with the tire in the straight position.
4. Remove the left front tire and wheel assembly.
5. Mark both coupler connections for proper installation.
6. Remove and discard the upper coupler pinch bolt.
7. Remove and discard the lower coupler pinch bolt.
8. Remove the lower steering shaft coupler.

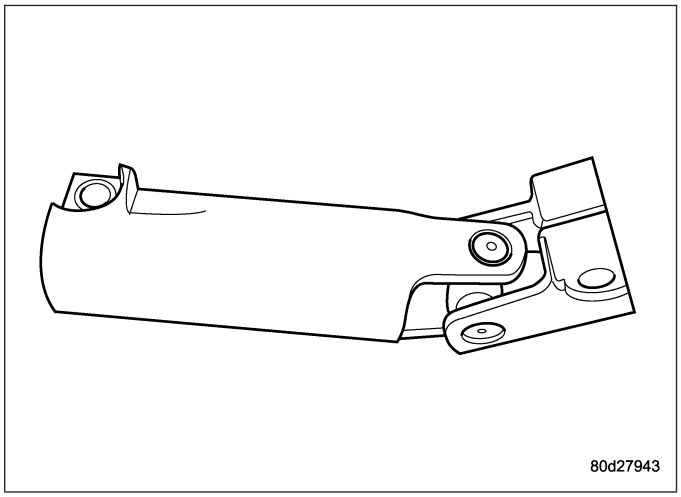

4X4 HD

1. Disconnect the negative battery cable.
2. Raise and support the vehicle.

NOTE: The steering column on vehicles with an automatic transmission may not be equipped with an internal locking shaft that allows the ignition key cylinder to be locked with the key. Alternative methods of locking the steering wheel for service will have to be used.

3. Lock the steering wheel with the tire in the straight position.
4. Remove the left front tire and wheel assembly.

5. Remove and discard the upper coupler pinch bolt (1).

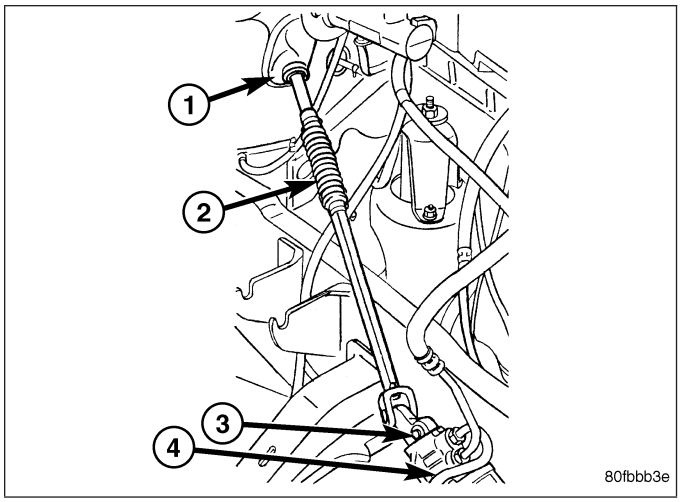

6. Remove and discard the lower coupler pinch bolt (2).

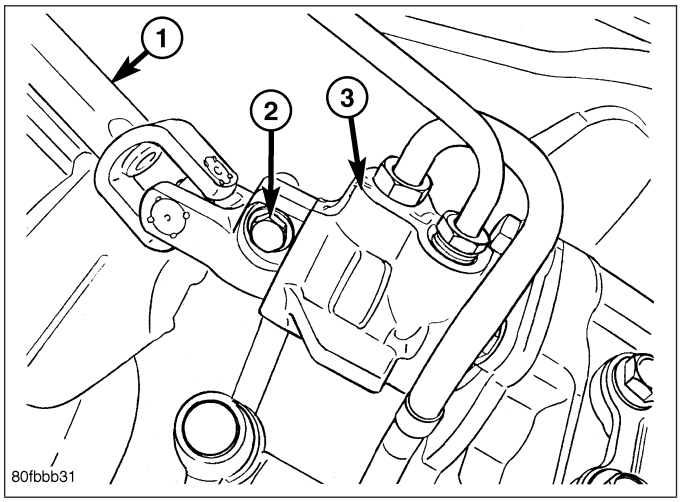

7. Remove the lower steering shaft coupler (3).

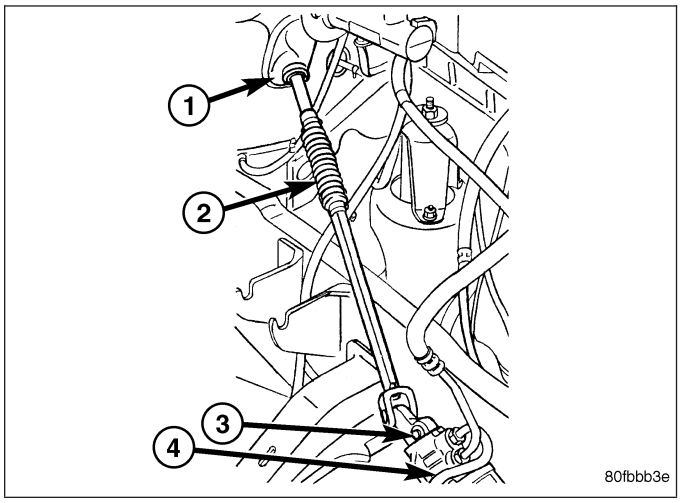

INSTALLATION

ALL LD & HD EXCEPT 4X4 HD

1. Install the coupler to the steering rack & pinion using the marks made in the removal process.
2. Install the coupler to the intermediate shaft using the marks made in the removal process.

NOTE: New pinch bolts must be used for reinstallation.

3. Install the lower pinch bolt and tighten to 57 N·m (42 ft. lbs.). **SRT10. Tighten to 38 N·m (28 ft. lbs.).**
4. Install the upper pinch bolt and tighten to 57 N·m (42 ft. lbs.).

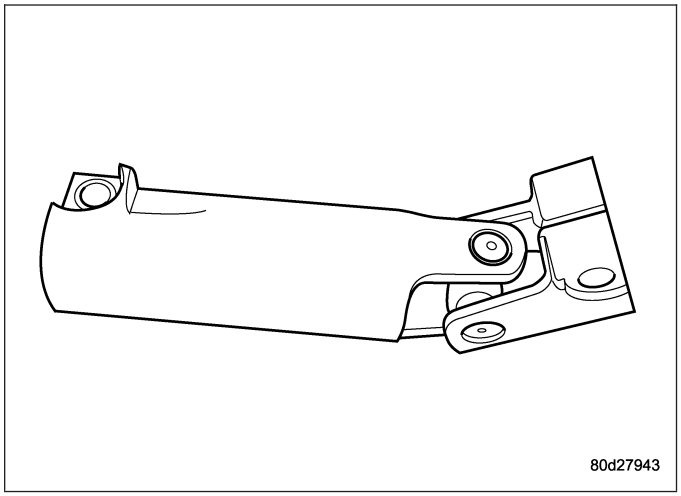

5. Install the left front tire and wheel assembly (Refer to 22 - TIRES/WHEELS/WHEELS - STANDARD PROCEDURE).
6. Lower the vehicle.
7. Reconnect the negative battery cable.
8. Unlock the steering wheel.

4X4 HD

1. Install the coupler (2) to the steering gear (3).

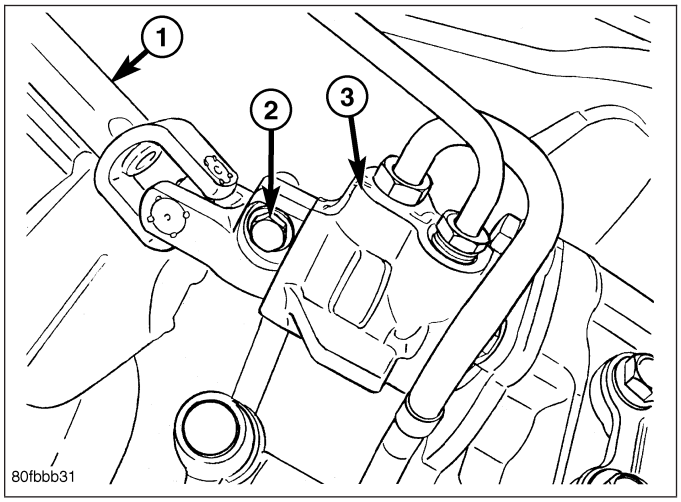

2. Install the coupler (3) to the intermediate shaft (2).

NOTE: New pinch bolts must be used for reinstallation.

3. Install the lower pinch bolt (3) and tighten to 28 N·m (250 in. lbs.).
4. Install the upper pinch bolt (1) and tighten to 57 N·m (42 ft. lbs.).

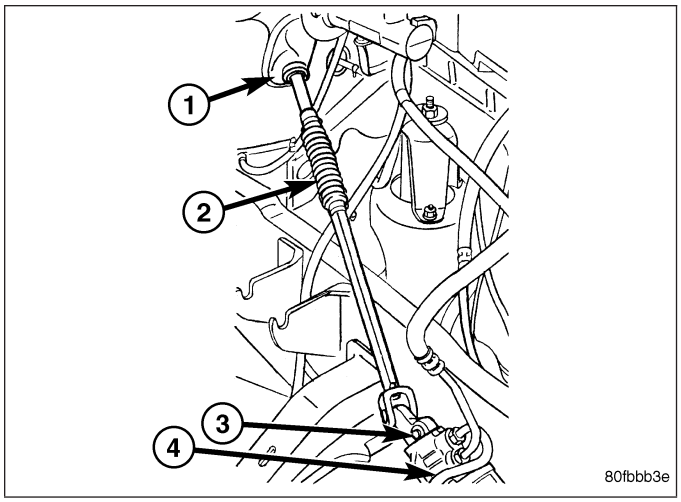

5. Install the left front tire and wheel assembly (Refer to 22 - TIRES/WHEELS/WHEELS - STANDARD PROCEDURE).
6. Lower the vehicle.
7. Reconnect the negative battery cable.
8. Unlock the steering wheel.

GEAR - INDEPENDENT FRONT SUSPENSION

TABLE OF CONTENTS

page

GEAR - INDEPENDENT FRONT SUSPENSION
DESCRIPTION 39
REMOVAL 39
INSTALLATION 40
SPECIFICATIONS
TORQUE 41

page

BUSHING
REMOVAL 42
INSTALLATION 42

GEAR - INDEPENDENT FRONT SUSPENSION

DESCRIPTION

A rack and pinion steering gear is made up of two main components, the pinon shaft and the rack. The gear cannot be adjusted or internally serviced. If a malfunction or a fluid leak occurs, the gear must be replaced as an assembly.

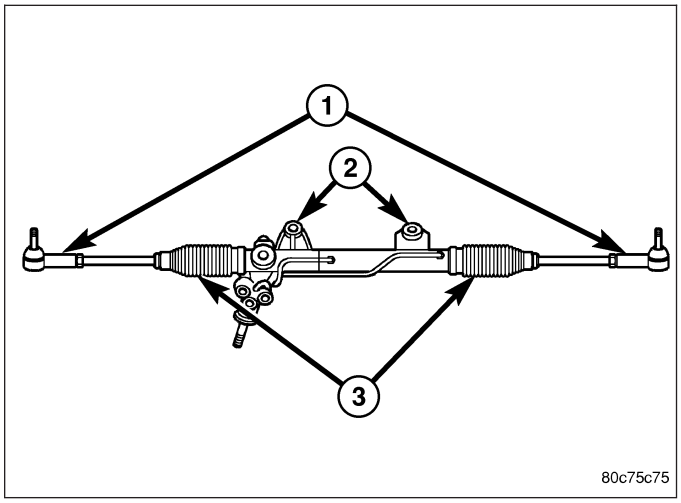

REMOVAL

NOTE: The steering column on vehicles with an automatic transmission may not be equipped with an internal locking shaft that allows the ignition key cylinder to be locked with the key. Alternative methods of locking the steering wheel for service will have to be used.

1. Lock the steering wheel.
2. Drain and siphon the power steering fluid from the reservoir.
3. Raise the vehicle.
4. Remove and discard the steering coupler pinch bolt.
5. Remove the power steering hoses from the rack & pinion.
6. Remove the tire and wheel assembly.
7. Remove the tie rod end nuts and separate tie rod ends from the knuckles with puller 8677 (Refer to 19 - STEERING/LINKAGE/TIE ROD END - REMOVAL).
8. Remove the skid plate (Refer to 13 - FRAME & BUMPERS/FRAME/FRONT SKID PLATE - REMOVAL).
9. Remove the rack & pinion mounting bolts (1).

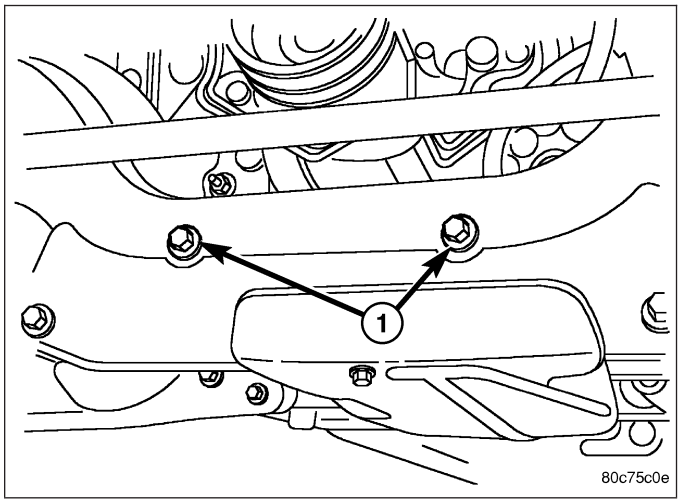

10. Remove the rack & pinion (2) from the vehicle.

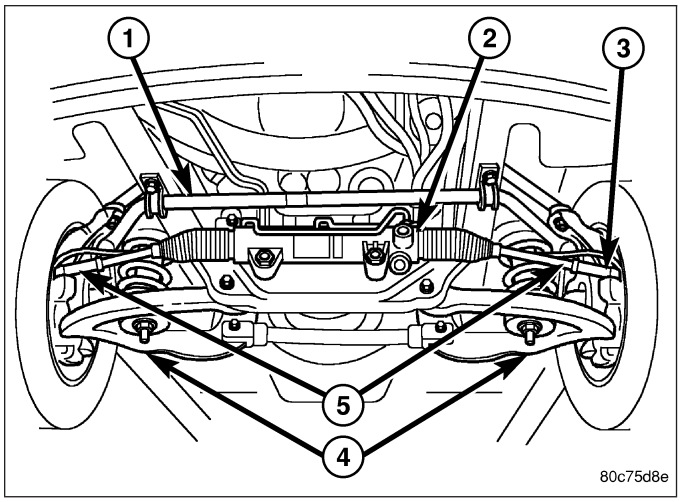

INSTALLATION

NOTE: Before installing gear inspect bushings and replace if worn or damaged.

NOTE: In the frame there are two holes for the mounting of the steering gear, one is slotted and one is round. When tightening the gear to specifications make sure to tighten the mounting bolt with the hole first to avoid movement of the steering gear.

1. Install the gear on the front crossmember and tighten the mounting bolts (2) to 319 N·m (235 ft. lbs.) **LD torque specification**. Or tighten the mounting bolts to 251 N·m (185 ft. lbs.) **4X2 HD torque specification**.

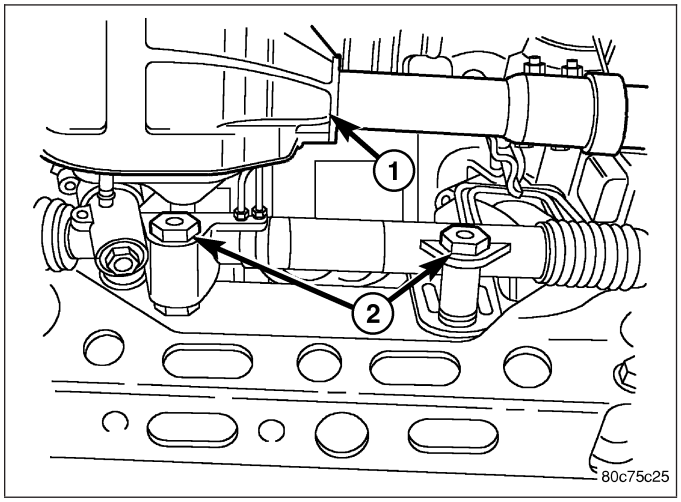

2. Slide the shaft coupler onto the gear. Install **new** pinch bolt and tighten to 49 N·m (36 ft. lbs.).
3. Clean and dry the tie rod end studs and the knuckle tapers.
4. Install the tie rod ends into the steering knuckles and tighten the nuts to 61 N·m (45 ft. lbs.) then an additional 90°. (Refer to 19 - STEERING/LINKAGE/TIE ROD END - INSTALLATION).
5. Install the pressure power steering hose to the steering gear and tighten to 32 N·m (23 ft. lbs.). (Refer to 19 - STEERING/PUMP/HOSES - INSTALLATION).
6. Install the return power steering hose to the steering gear and tighten to 50 N·m (37 ft. lbs.) **LD torque specification**. Or tighten the mounting bolts to 54 N·m (40 ft. lbs.) **4X2 HD torque specification**. (Refer to 19 - STEERING/PUMP/HOSES - INSTALLATION).
7. Install the front skid plate (Refer to 13 - FRAME & BUMPERS/FRAME/FRONT SKID PLATE - INSTALLATION).
8. Install the tire and wheel assembly (Refer to 22 - TIRES/WHEELS/WHEELS - STANDARD PROCEDURE).
9. Remove the support and lower the vehicle.
10. Fill the system with fluid, (Refer to 19 - STEERING/PUMP - STANDARD PROCEDURE).
11. Adjust the toe position. (Refer to 2 - SUSPENSION/WHEEL ALIGNMENT - STANDARD PROCEDURE).

SPECIFICATIONS

TORQUE

DESCRIPTION	N·m	Ft. Lbs.	In. Lbs.
Rack and Pinion Steering Gear Gear to Frame Bolts LD	319	235	—
Rack and Pinion Steering Gear Gear to Frame Bolts 2WD HD	251	185	—
Rack and Pinion Steering Gear Coupler Bolt	49	36	—
Tie Rod End Knuckle Nut	61 Then tighten an additional 90°	45 Then tighten an additional 90°	—
Tie Rod End Jam Nut	127	94	—
Power Steering Line Pressure Line	32	23	—
Power Steering Line Pressure Line To Pump	37	27	—
Power Steering Line Return Line LD	50	37	—
Power Steering Line Return Line HD	54	40	—

BUSHING

REMOVAL

1. Remove the steering gear (Refer to 19 - STEERING/GEAR - REMOVAL).

CAUTION: Do not overtighten the vise on the gear case.

2. Mount the steering gear in a soft jawed vise.

NOTE: If the bushings are seized a brass punch can be used to remove the bushings from the gear using care not to strike the gear.

3. Remove the front mounting bushings.
4. Remove the rear mounting bushings.
5. Remove the steering gear from the vise and place it on the bench.

INSTALLATION

NOTE: Coat all bushings with a thin rubber lubricate oil prior to installation.

NOTE: A rubber mallet can be used to assist in the installation of the bushings once lubricated.

1. Coat the rear bushings with a thin rubber lubricate oil then install the rear bushings using a rubber mallet to seat the bushings in the gear.
2. Coat the front bushings with a thin rubber lubricate oil then install the front bushings using a rubber mallet to seat the bushings in the gear.
3. Install the steering gear (Refer to 19 - STEERING/GEAR - INSTALLATION).
4. Adjust the toe position (if necessary) (Refer to 2 - SUSPENSION/WHEEL ALIGNMENT - STANDARD PROCEDURE).

GEAR - LINK/COIL

TABLE OF CONTENTS

page

GEAR - LINK/COIL
DESCRIPTION 44
OPERATION 44
REMOVAL 44
INSTALLATION 46
ADJUSTMENTS
ADJUSTMENT 47
SPECIFICATIONS
POWER STEERING GEAR 47
TORQUE 48
SPECIAL TOOLS
POWER STEERING GEAR 49
PITMAN SHAFT SEAL
REMOVAL
GAS 51
DIESEL 51
INSTALLATION
GAS 52
DIESEL 53
STEERING GEAR INPUT SHAFT SEAL
REMOVAL 54
INSTALLATION 57
PITMAN SHAFT
REMOVAL
GAS 59
DIESEL 59
INSTALLATION
GAS 60
DIESEL 61

GEAR - LINK/COIL

DESCRIPTION

The power steering gear is a recirculating ball type gear (6). The gear ratio's used are 12.5:1.

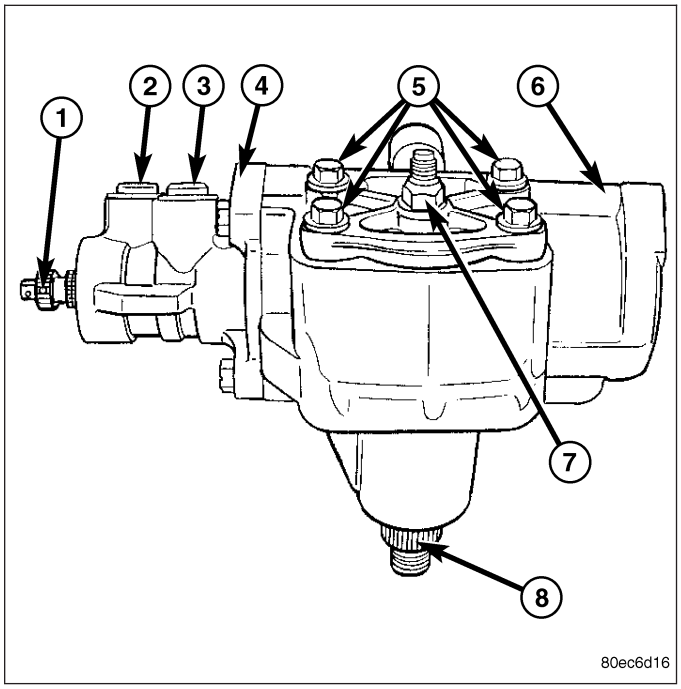

OPERATION

The gear acts as a rolling thread between the worm shaft and rack piston. The worm shaft is supported by a thrust bearing at the lower end and a bearing assembly at the upper end. When the worm shaft is turned from input from the steering column the rack piston moves. The rack piston teeth mesh with the pitman shaft. Turning the worm shaft, turns the pitman shaft, which turns the steering linkage.

REMOVAL

1. Place the front wheels in a straight-ahead position.

NOTE: The steering column on vehicles with an automatic transmission may not be equipped with an internal locking shaft that allows the ignition key cylinder to be locked with the key. Alternative methods of locking the steering wheel for service will have to be used.

2. Lock the steering wheel.
3. Siphon out as much power steering fluid as possible.
4. Disconnect and cap the fluid hoses from steering gear (Refer to 19 - STEERING/PUMP/HOSES - REMOVAL).

5. Remove coupler pinch bolt (1) at the steering gear and slide shaft off gear (2).

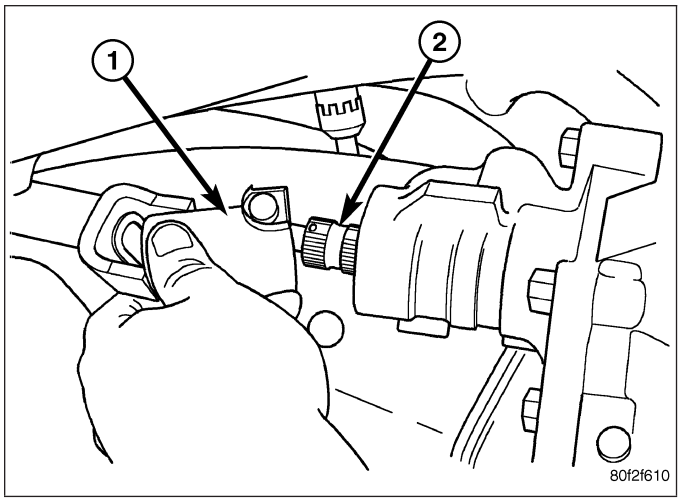

6. Mark the pitman shaft and pitman arm (4) for installation reference. Remove the pitman arm from the shaft with pitman arm remover 9615 (2) (Refer to 19 - STEERING/LINKAGE/PITMAN ARM - REMOVAL).

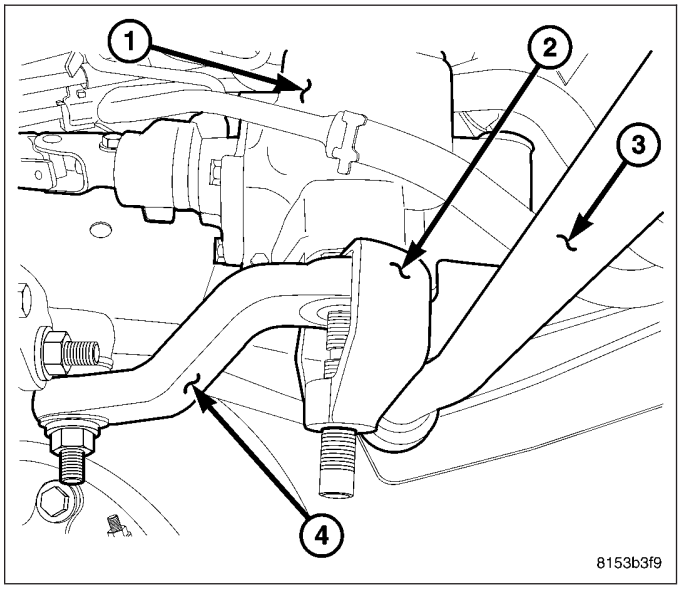

7. Remove steering gear (1) three mounting bolts (2). Remove the steering gear (1) from the vehicle.

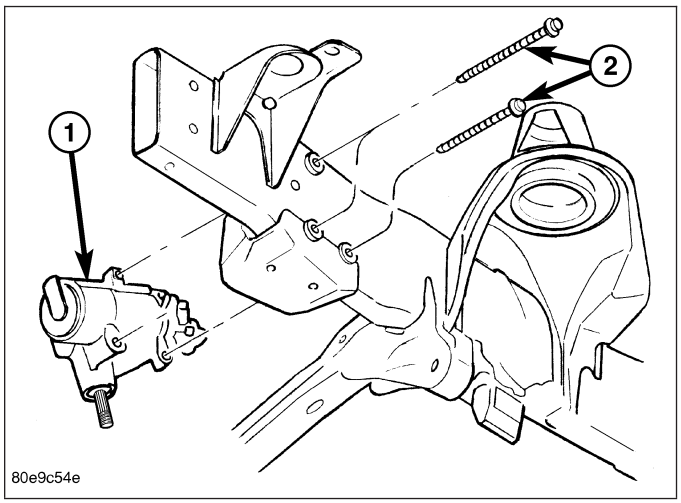

INSTALLATION

1. Position the steering gear (1) the frame rail and install the three mounting bolts (2). Tighten the mounting bolts to 196 N·m (145 ft. lbs.).

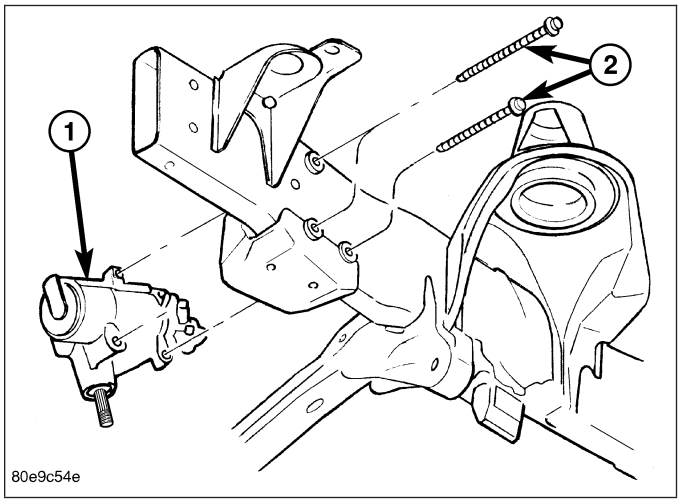

2. Align steering coupler (1) on gear shaft (2). Install pinch bolt and tighten to 49 N·m (36 ft. lbs.) torque.

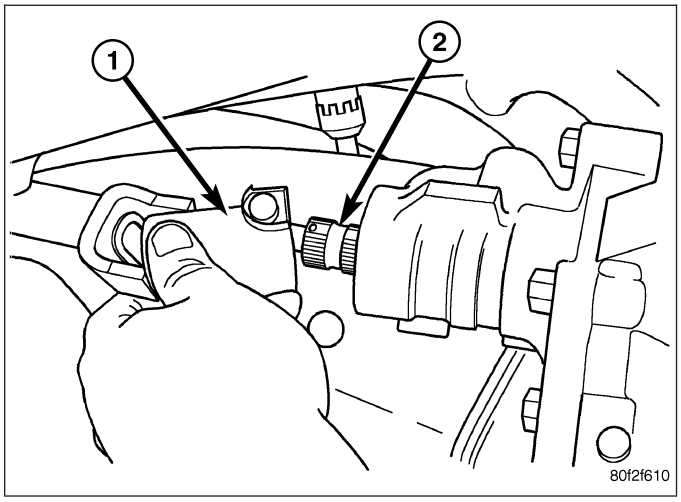

3. Align and install the pitman arm (5) (Refer to 19 - STEERING/LINKAGE/PITMAN ARM - INSTALLATION).
4. Install the washer and retaining nut (4) on the pitman shaft. Tighten the nut to 305 N·m (225 ft. lbs.).

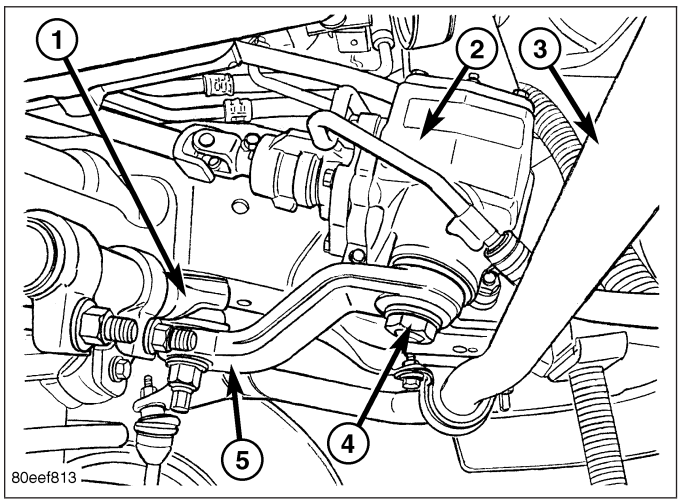

5. Connect fluid hoses to steering gear (Refer to 19 - STEERING/PUMP/HOSES - INSTALLATION), tighten to 32 N·m (23 ft. lbs.).
6. Add fluid, (Refer to 19 - STEERING/PUMP - STANDARD PROCEDURE).
7. Reset the toe and center the steering wheel (Refer to 2 - SUSPENSION/WHEEL ALIGNMENT - STANDARD PROCEDURE).

ADJUSTMENTS

ADJUSTMENT

CAUTION: Steering gear must be adjusted in the proper order. If adjustments are not performed in order, gear damage and improper steering response may result.

NOTE: Adjusting the steering gear in the vehicle is not recommended. Remove gear from the vehicle and drain the fluid. Then mount gear in a vise to perform adjustments.

1. Remove the steering gear from the vehicle (Refer to 19 - STEERING/GEAR - REMOVAL).
2. Mount the gear carefully into a soft-jawed vise.

CAUTION: Do not overtighten the vise on the gear case. This may affect the adjustment

3. Hold the steering gear upside down over a drain pan and rotate the input shaft back and forth several times lock-to-lock to discharge the fluid from the steering gear
4. Rotate the input shaft to the left stop and then back-off approximately 45 degrees. Using an inch-pound torque wrench on the input shaft, record the peak torque required to slowly and evenly rotate the input shaft clockwise ½ turn (180 degrees) starting from the 45 degree position. This peak torque reading is the preload torque. The preload torque must be within 2 - 10 in-lbs.
5. Rotate the input shaft to its center of travel (approximately 1.5 turns from either stop). Place the torque wrench on the input shaft with the handle in the vertical position. Rotate the torque wrench slowly and evenly ¼ turn (90 degrees) each side of center and record the peak torque measure on or near center. This total on-center torque reading must be 5 - 9 in-lbs higher than the previously measured preload torque without exceeding a total of 17 in-lbs. The value of the total on-center minus the preload torque is defined as the meshload torque
6. If required, adjust the on-center torque by loosening the adjuster screw lock nut and turning the adjuster screw until the total on-center and meshload torque readings fall within the specified values. Turn the adjuster screw clockwise to increase and counterclockwise to decrease the torque reading. While holding the adjuster screw in place, tighten the lock nut to 34 N·m (25 ft. lbs.).
7. Re-check the preload and on-center torque readings.
8. Install pitman arm on the steering gear (Refer to 19 - STEERING/LINKAGE/PITMAN ARM - INSTALLATION).
9. Reinstall steering gear to the vehicle (Refer to 19 - STEERING/GEAR - INSTALLATION).

SPECIFICATIONS

POWER STEERING GEAR

SPECIFICATIONS

DESCRIPTION	SPECIFICATION
Steering Gear Type	Recirculating Ball
Gear Code & Ratio	12.5:1

TORQUE

DESCRIPTION	N·m	Ft. Lbs.	In. Lbs.
Preload Torque	0.23-1.13	—	2-10
Meshload Torque	0.56-1.02	—	5-9 + Preload (17 Max)

TORQUE

DESCRIPTION	N·m	Ft. Lbs.	In. Lbs.
Steering Gear Mounting Frame Bolts	196	145	—
Steering Coupler to Gear Shaft	49	36	—
Power Steering Line Pressure	32	23	—
Power Steering Line Return	54	40	—
Power Steering Line Pressure Line To Pump	37	27	—
Steering Gear Adjustment Screw Locknut	34	25	—
Steering Gear Pitman Shaft Nut	305	225	—
Steering Gear Pitman Shaft Cover Bolts	68	50	—
Steering Gear Valve Housing to Gear Bolts	54	40	—
Steering Gear Retainer Ring Screw	2.26	—	20
Steering Gear Retainer Ring	97	72	—

SPECIAL TOOLS

POWER STEERING GEAR

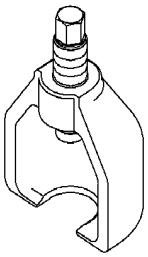

PITMAN ARM REMOVAL TOOL - 9615

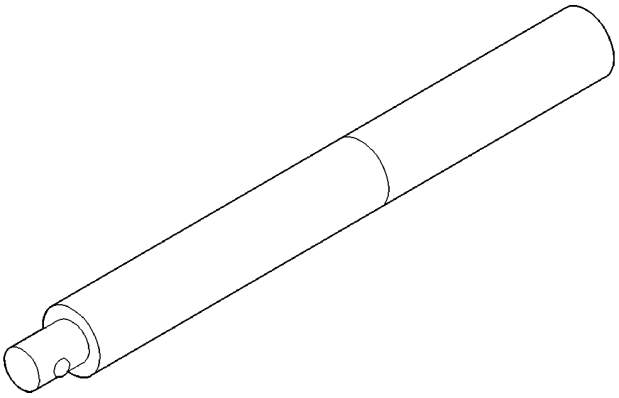

HANDLE C-4171

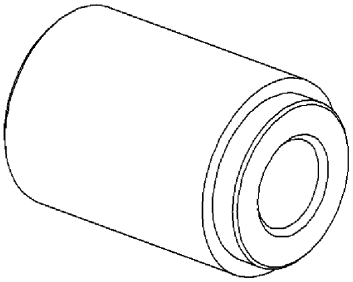

INPUT SHAFT SEAL INSTALLER - 8987

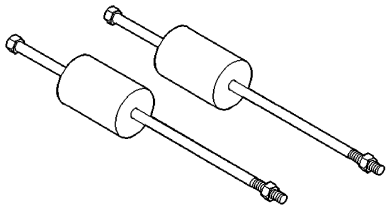

PULLER, SLIDE HAMMER - C-3752

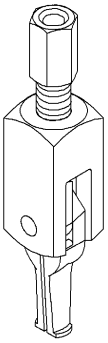

SEAL REMOVER ADAPTER - 8990

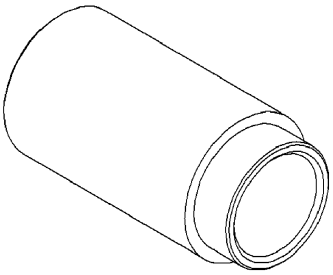

PITMAN SHAFT SEAL INSTALLER - 8989

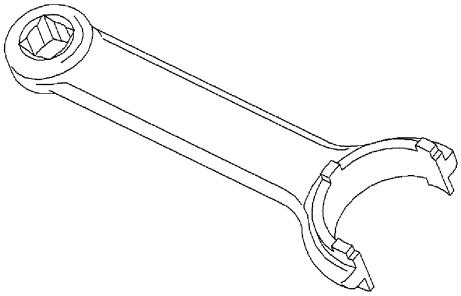

RETAINER RING WRENCH - 8988

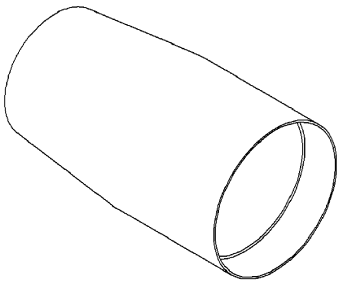

PITMAN SHAFT SEAL PROTECTOR - 8993

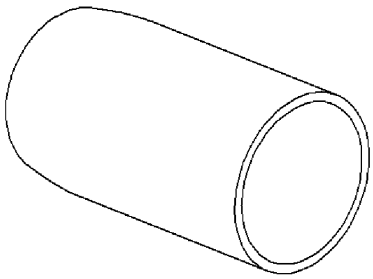

INPUT SHAFT SEAL PROTECTOR - 8986

PITMAN SHAFT SEAL

REMOVAL

GAS

1. Separate the pitman arm from the gear box (Refer to 19 - STEERING/LINKAGE/PITMAN ARM - REMOVAL).
2. Clean exposed end of pitman shaft and housing with a wire brush.
3. Rotate the steering wheel from stop to stop and count the number of turns.
4. Center the steering wheel by rotating it from the stop back 1 1/2 turns to achieve center position.
5. Remove the pitman shaft cover bolts.

NOTE: The pitman shaft will not clear the housing if it is not centered.

6. Remove the pitman shaft from the gear.
7. Remove dust seal from the housing with the seal remover adapter tool 8990 (2).

CAUTION: Use care not to score the housing bore when prying out seals and washer.

8. Remove retaining ring with snap ring pliers.
9. Remove washer from the housing.

NOTE: Tighten the slide hammer seal remover adapter tool 8990 into the seal using wrenches, in order to make a tight fit to pull the seal out. If this is not performed the seal may tear on the removal making it difficult to remove.

10. Remove oil seal from the housing with the seal remover adapter tool 8990 (2) along with slide hammer puller C-3752.

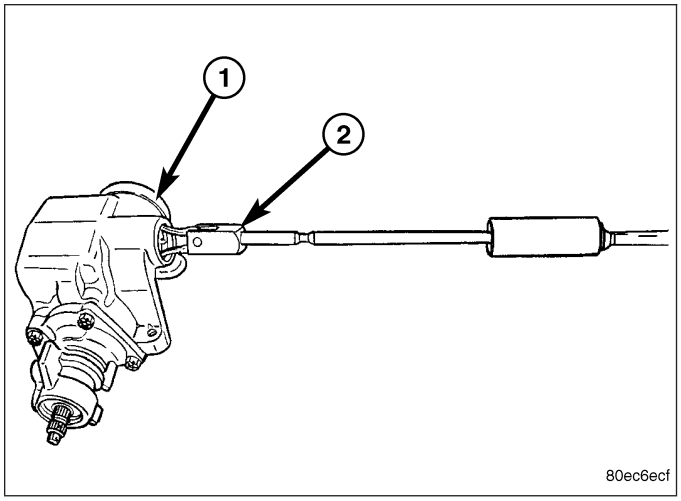

DIESEL

1. Separate the pitman arm from the gear box (Refer to 19 - STEERING/LINKAGE/PITMAN ARM - REMOVAL).
2. Remove the steering gear box (Refer to 19 - STEERING/GEAR - REMOVAL).
3. Install the steering gear in a soft jawed bench vise.
4. Clean exposed end of pitman shaft and housing with a wire brush.
5. Rotate the input shaft with a 12 point socket (2) from stop to stop and count the number of turns.
6. Center the input shaft (4) by rotating it from the stop 1/2 of the total amount of turns.

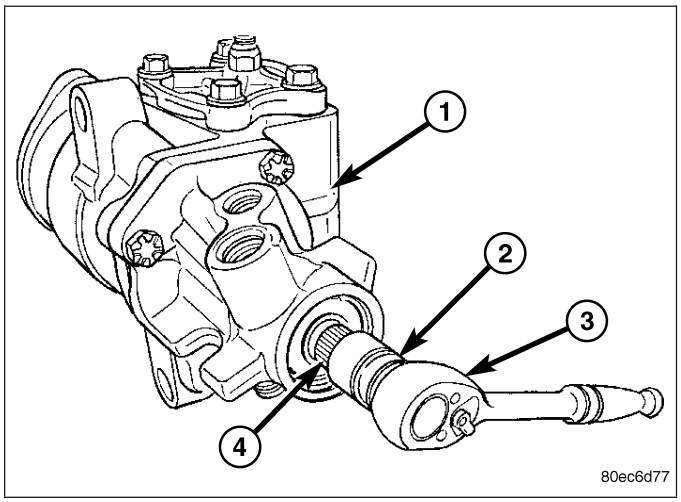

7. Remove the pitman shaft cover bolts.

NOTE: The pitman shaft will not clear the housing if it is not centered.

8. Remove the pitman shaft from the gear (1).
9. Remove dust seal from the housing with the seal remover adapter tool 8990 (2).

CAUTION: Use care not to score the housing bore when prying out seals.

10. Remove retaining ring with snap ring pliers.
11. Remove washer from the housing.

NOTE: Tighten the slide hammer seal remover adapter tool 8990 into the seal using wrenches, in order to make a tight fit to pull the seal out. If this is not performed the seal may tear on the removal making it difficult to remove.

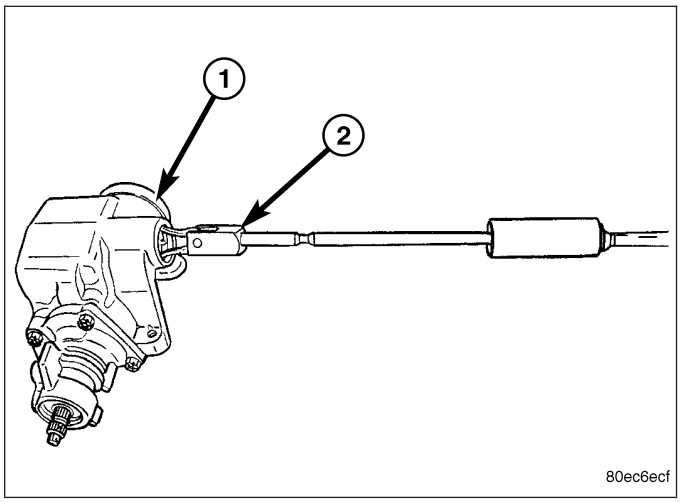

12. Remove oil seal from the housing with the seal remover adapter tool 8990 (2) along with slide hammer puller C-3752.

INSTALLATION

GAS

NOTE: Generous amounts of the high temperature grease from the seal kit should be applied to areas between the pitman shaft bearing and oil seals and also between the dust seals and snap ring.

1. Coat the oil seal and washer with **high temp grease**.

NOTE: Install the oil seal with the lip facing inward. Flat side of the oil seal should be against the washer.

2. Install the oil seal with pitman shaft seal installer tool 8989 driver (2) and C-4171 handle (1).
3. Install backup washer.
4. Install the retainer ring with snap ring pliers.
5. Coat the dust seal with **high temp grease**.
6. Install the dust seal with a driver (2) and handle (1).

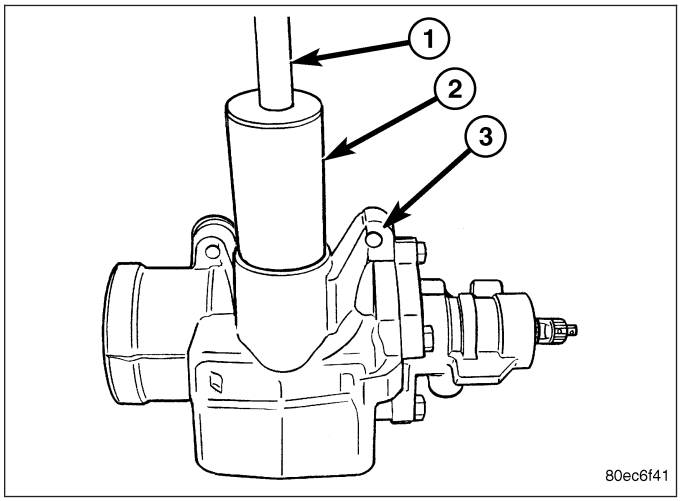

7. Install pitman shaft protective seal protector 8993 (2) over the shaft.
8. Install the pitman shaft into the steering gear until it fully seats into the bearing.
9. Install the new cover bolts and tighten to 68 N·m (50 ft. lbs.).
10. Install the pitman arm (Refer to 19 - STEERING/ LINKAGE/PITMAN ARM - INSTALLATION).

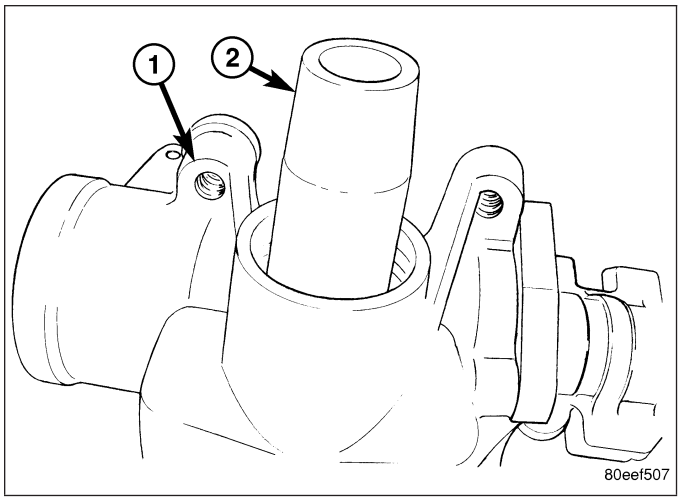

DIESEL

NOTE: Generous amounts of the high temperature grease from the seal kit should be applied to areas between the pitman shaft bearing and oil seals and also between the dust seals and snap ring.

1. Coat the oil seal and washer with **high temp grease**.

NOTE: Install the oil seal with the lip facing inward. Flat side of the oil seal should be against the washer.

2. Install the oil seal with pitman shaft seal installer 8989 driver (2) and C-4171 handle (1).
3. Install backup washer.
4. Install the retainer ring with snap ring pliers.
5. Coat the dust seal with **high temp grease**.
6. Install the dust seal with pitman shaft seal installer 8989 driver (2) and C-4171 handle (1).
7. Install pitman shaft protective seal protector 8993 (2) over the shaft (1).
8. Install the pitman shaft into the steering gear until it fully seats into the bearing.
9. Install the new cover bolts and tighten to 68 N·m (50 ft. lbs.).
10. Install the steering gear (Refer to 19 - STEERING/GEAR - INSTALLATION).
11. Install the pitman arm (Refer to 19 - STEERING/ LINKAGE/PITMAN ARM - INSTALLATION).
12. Perform a wheel alignment (Refer to 2 - SUSPENSION/WHEEL ALIGNMENT - STANDARD PROCEDURE).

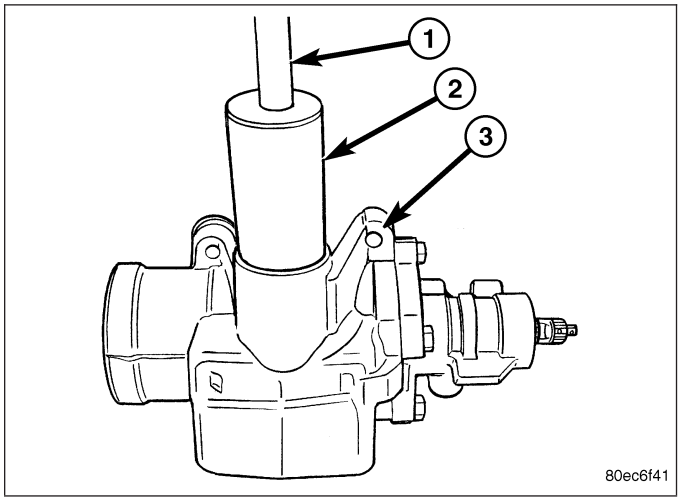

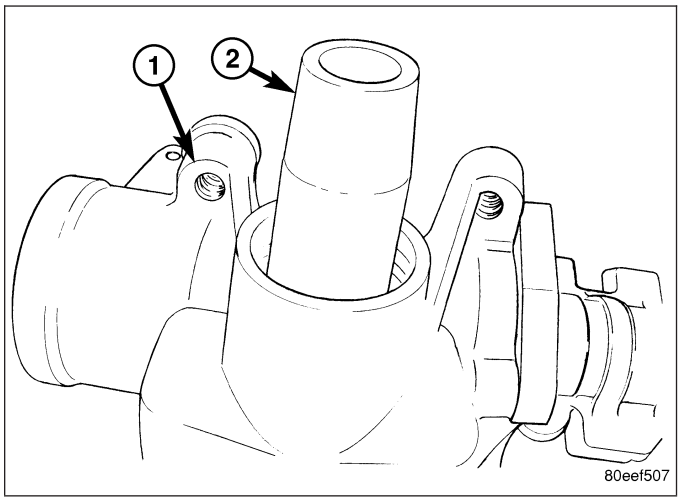

STEERING GEAR INPUT SHAFT SEAL

REMOVAL

1. Remove the steering gear from the vehicle (Refer to 19 - STEERING/GEAR - REMOVAL).

CAUTION: Do not overtighten the vise on the gear case. This may affect the adjustment

2. Mount the steering gear upside down over a drain pan in a soft jawed vise.
3. Place a drain pan under the gear and rotate the input shaft back and forth several times lock-to-lock to discharge the fluid from the steering gear
4. Drain all the remaining fluid from the gear.
5. Rotate the input shaft (4) from stop to stop and count the number of turns using a 12 point socket (2).

NOTE: The pitman shaft will not clear the housing if it is not centered.

6. Center the input shaft (4) by rotating it from the stop back 1 1/2 turns to achieve center position.

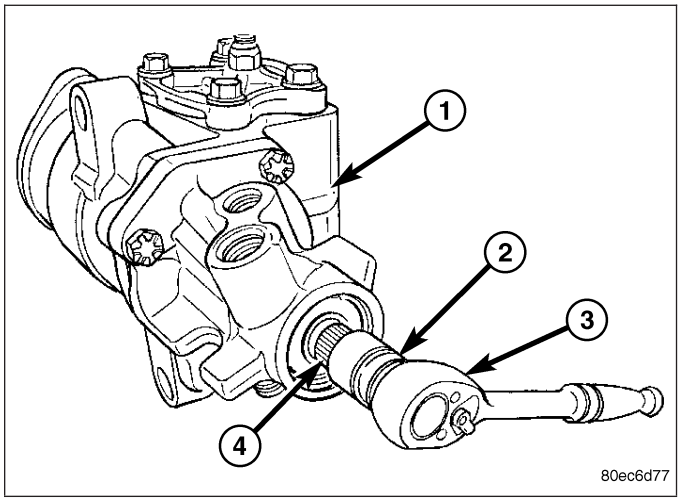

7. Remove the pitman shaft (Refer to 19 - STEERING/GEAR/PITMAN SHAFT - REMOVAL).
8. Remove the four bolts securing the valve housing (1).
9. Remove the valve housing (1) from the steering gear (3).

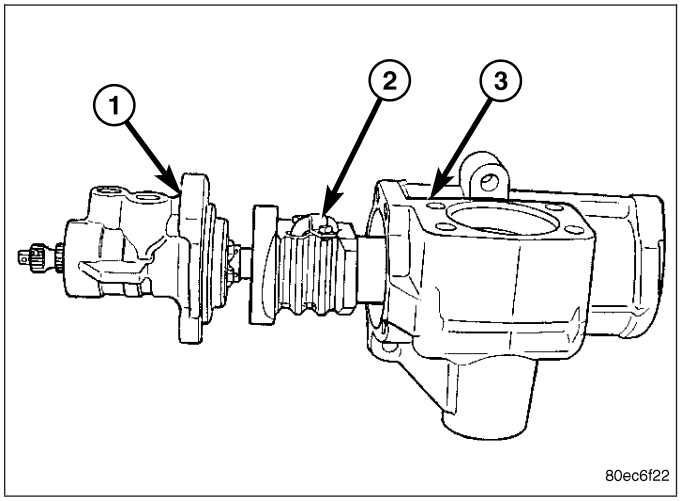

10. Remove the valve housing (1) and wormshaft assembly from the steering gear housing and place the valve housing in a soft jawed vise.

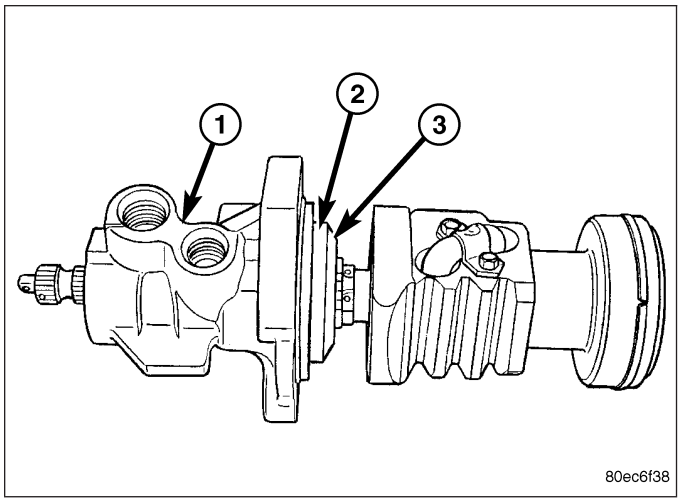

11. Remove the retainer ring (3) set screw (1) from the valve housing.

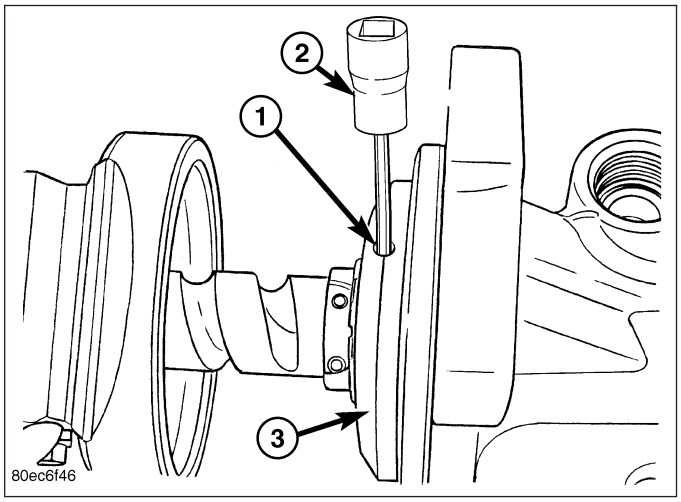

12. Using special tool retainer ring wrench 8988 (1) to remove the steering gear worm thrust bearing retainer ring.

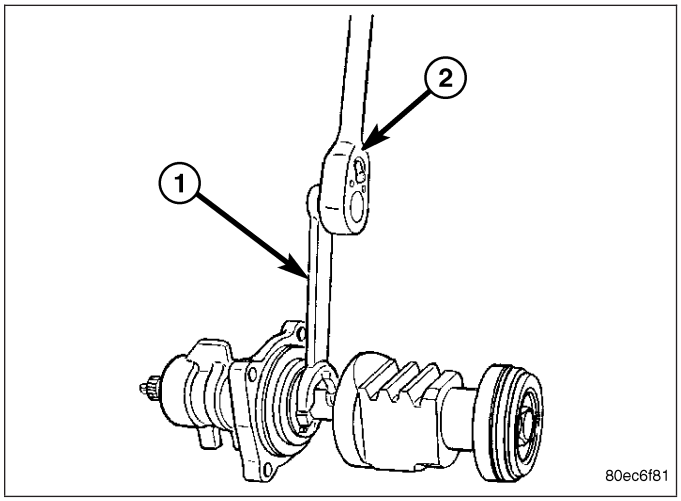

13. Separate the wormshaft assembly from the valve housing, Then remove the wormshaft assembly from the vise.

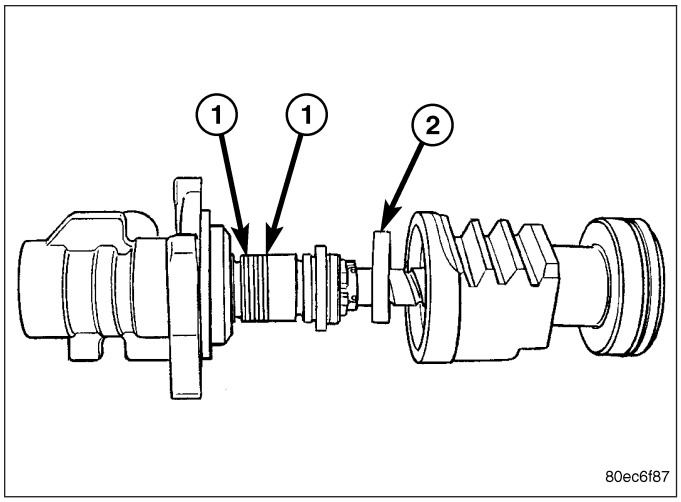

14. Remove the dust seal (3) with a pick (1).

CAUTION: Use care not to score the housing bore when removing seals.

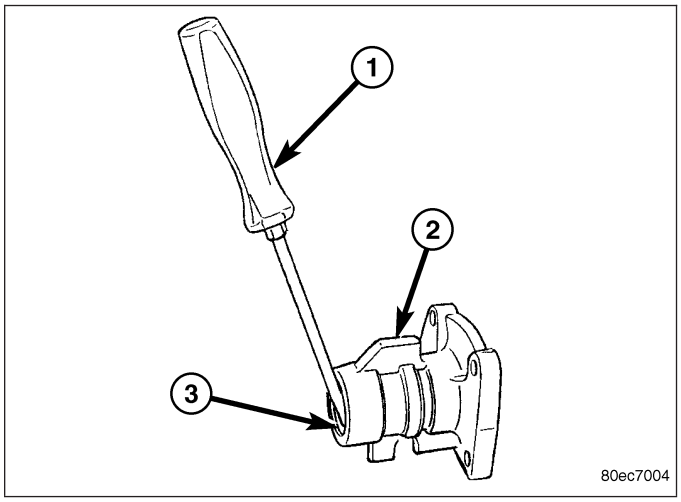

15. Remove the snap ring (2) with snap ring pliers (1).

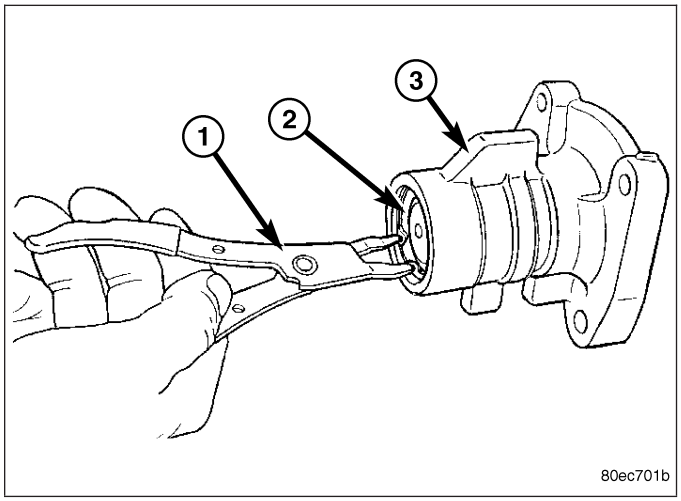

16. Using slide hammer puller C-3752 (1) with seal remover adapter 8990 (1) remove the oil seal.

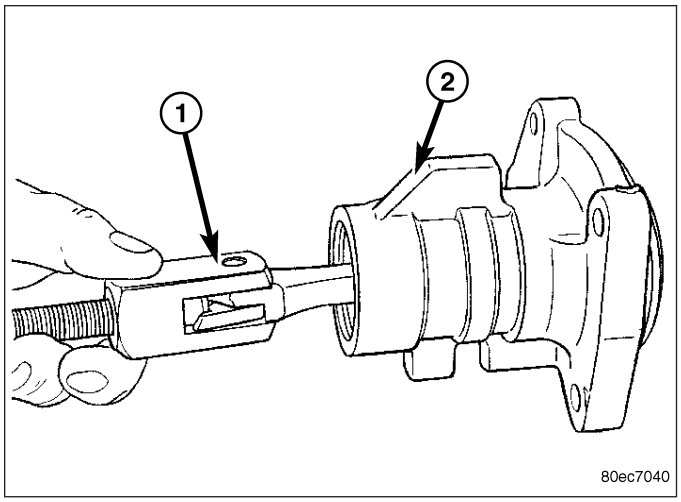

INSTALLATION

1. Inspect the piston teflon seals for damage. Replace if needed.

NOTE: To replace the teflon seals, use a pick to remove the teflon o-ring and the rubber o-ring underneath. Install a new rubber o-ring in the piston seal grove and a new teflon o-ring over the top of it.

2. Install the valve into the valve housing (1).
3. Thread the retainer ring into the valve housing (1). Tighten to 97 N·m (72 ft. lbs.).

NOTE: It is very important to make sure to compensate for the added length of the torque wrench when torquing to proper specifications.

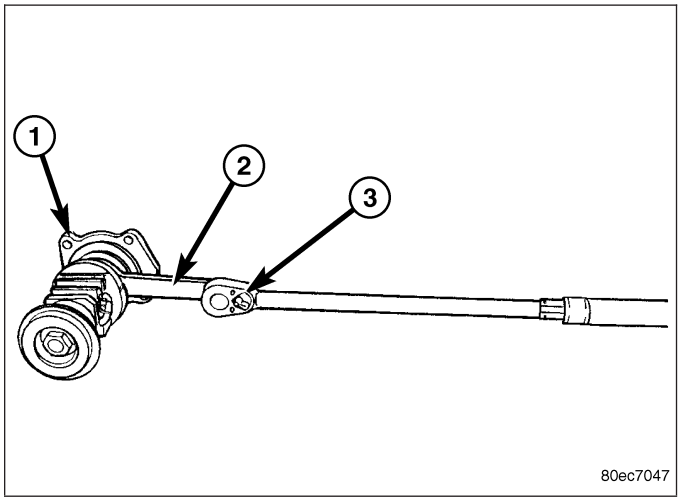

4. Install the retainer ring set screw. Tighten to 2.26 N·m (20 in. lbs.)
5. Clean the steering gear housing.

CAUTION: Valve assembly must be centered to the housing (1).

6. Install the valve assembly (2) into the steering gear. Tighten the new bolts to 54 N·m (40 ft. lbs.)

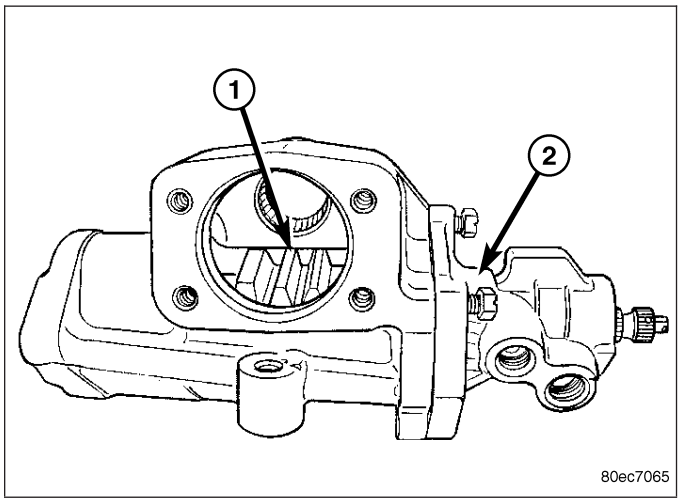

7. Install the input shaft seal protector 8986 (2).

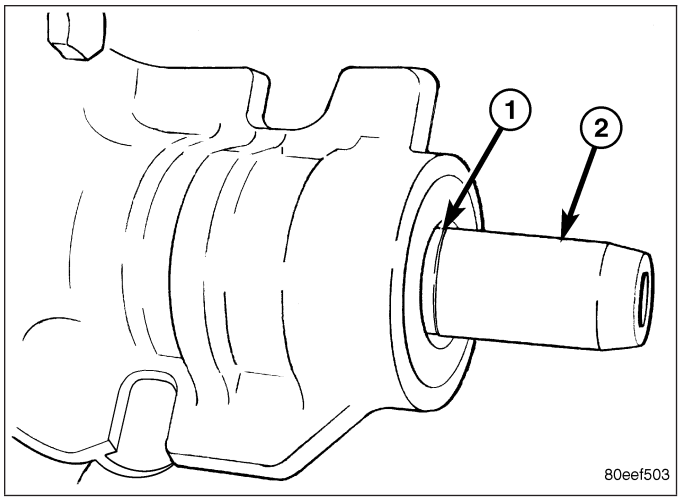

8. Coat the new seal in **high temp grease** and Install the new oil seal using the input shaft seal installer tool 8987 driver (2) and C-4171 handle (3).

NOTE: Drive the oil seal into the housing until the outer edge does not quite clear the snap ring groove.

9. Insert the snap ring into the housing. Using the input shaft seal installer 8987 driver (2) and C-4171 handle (3) push the snap ring and oil seal together until the snap ring seats in the groove.

NOTE: Generous amounts of the high temperature grease from the seal kit should be applied to areas between the pitman shaft bearing and oil seals and also between the dust seals and snap ring.

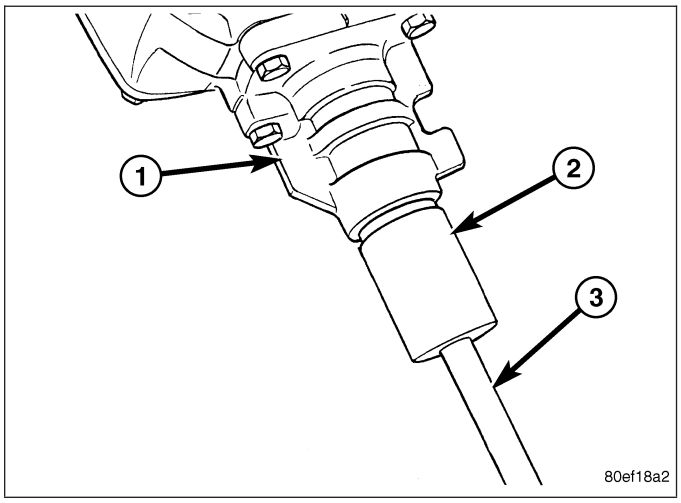

10. Install the new dust seal using **high temp grease**, special tool C-4171 (handle) (3) and 8987 (driver) (2).
11. Check to make sure the gear is centered in the middle tooth (1) before installing the pitman shaft.

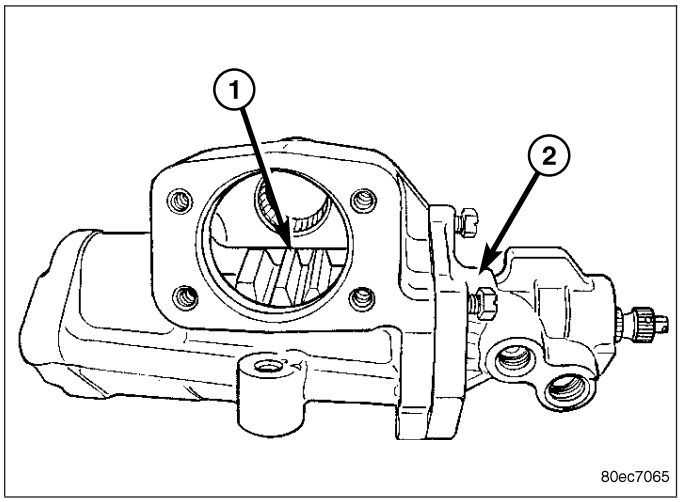

12. Install the pitman shaft into the steering gear (Refer to 19 - STEERING/GEAR/PITMAN SHAFT - INSTALLATION).
13. Perform over-center meshload adjustment (Refer to 19 - STEERING/GEAR - ADJUSTMENTS).
14. Install the steering gear to the vehicle (Refer to 19 - STEERING/GEAR - INSTALLATION).
15. Perform a wheel alignment (Refer to 2 - SUSPENSION/WHEEL ALIGNMENT - STANDARD PROCEDURE).

PITMAN SHAFT

REMOVAL

GAS

1. Separate the pitman arm from the gear box (Refer to 19 - STEERING/LINKAGE/PITMAN ARM - REMOVAL).
2. Clean exposed end of pitman shaft (1) and housing with a wire brush.
3. Rotate the steering wheel from stop to stop and count the number of turns.
4. Center the steering wheel by rotating it from the stop back 1 1/2 turns to achieve center position.
5. Remove the pitman shaft cover bolts.

NOTE: The pitman shaft will not clear the housing if it is not centered.

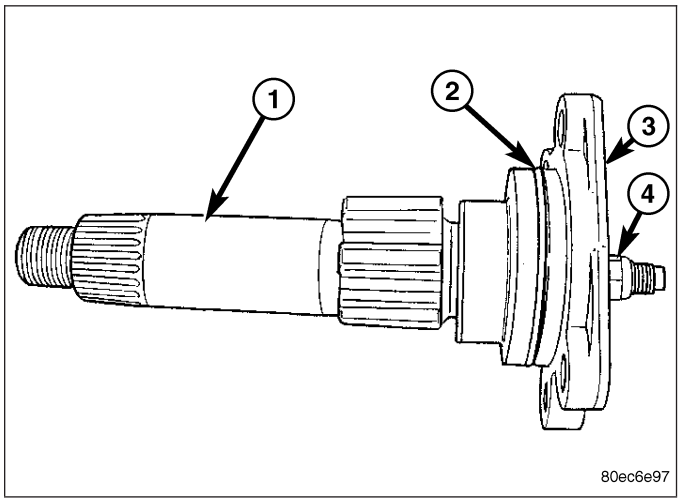

6. Remove the pitman shaft (1) from the gear.
7. Remove the cover if needed by loosing the adjuster nut (4), Then removing the cover (3) from the pitman shaft.

DIESEL

1. Separate the pitman arm from the gear box (Refer to 19 - STEERING/LINKAGE/PITMAN ARM - REMOVAL).
2. Remove the steering gear box (Refer to 19 - STEERING/GEAR - REMOVAL).
3. Install the steering gear in a soft jawed bench vise.
4. Clean exposed end of pitman shaft and housing with a wire brush.
5. Rotate the stub shaft with a 12 point socket (2) from stop to stop and count the number of turns.
6. Center the stub shaft (4) by rotating it from the stop 1/2 of the total amount of turns.

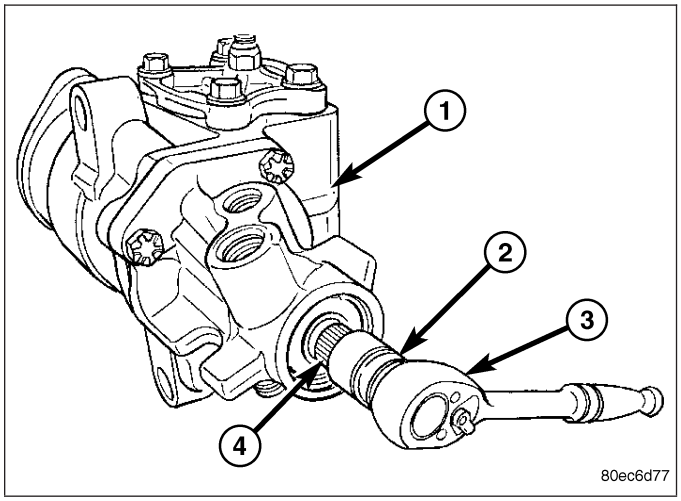

7. Remove the pitman shaft cover (3) bolts.

NOTE: The pitman shaft will not clear the housing if it is not centered.

8. Remove the pitman shaft (1) from the gear.
9. Remove the cover (3) if needed by loosing the adjuster nut (4). Then removing the cover from the pitman shaft.

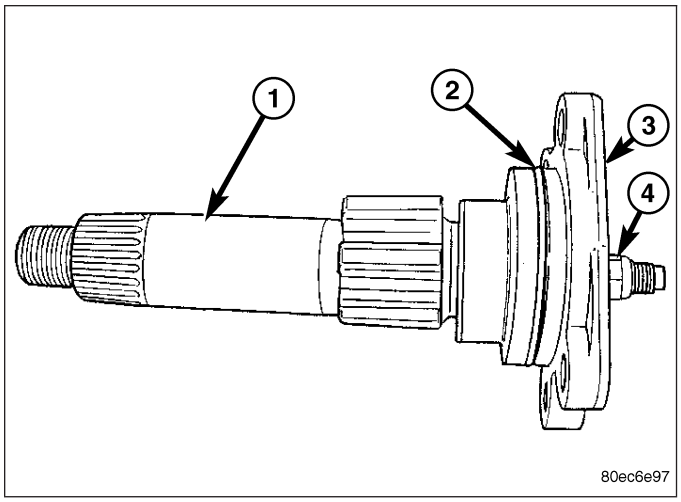

INSTALLATION

GAS

1. Coat the seal with **power steering fluid**.
2. Install pitman shaft (1) into the steering gear until it fully seats into the bearing.
3. Install the new cover bolts and tighten to 68 N·m (50 ft. lbs.).

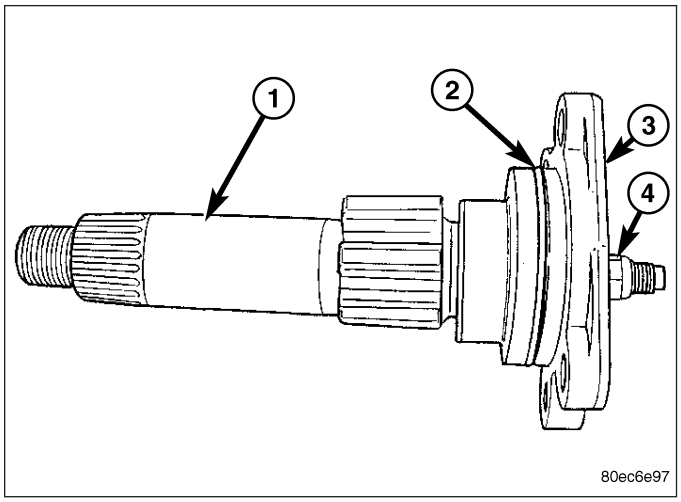

4. Perform over-center meshload adjustment, (Refer to 19 - STEERING/GEAR - ADJUSTMENTS).

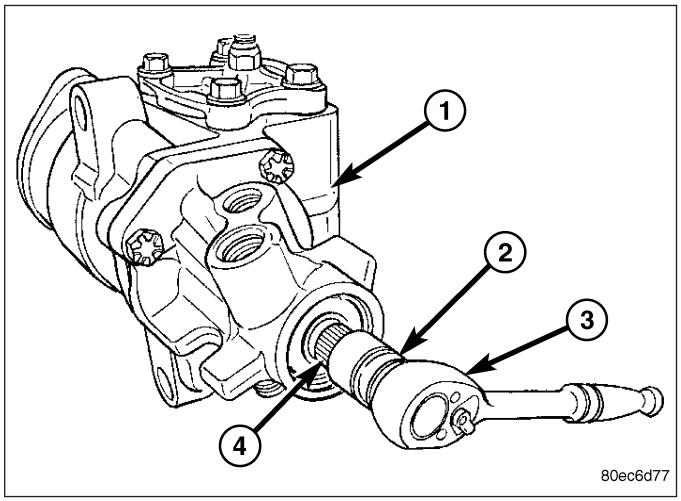

5. Install the pitman arm (Refer to 19 - STEERING/LINKAGE/PITMAN ARM - INSTALLATION).
6. Perform a wheel alignment (Refer to 2 - SUSPENSION/WHEEL ALIGNMENT - STANDARD PROCEDURE).

DIESEL

1. Coat the seal with **power steering fluid**.
2. Install the pitman shaft (1) into the steering gear until it fully seats into the bearing.
3. Install the new cover bolts and tighten to 68 N·m (50 ft. lbs.).

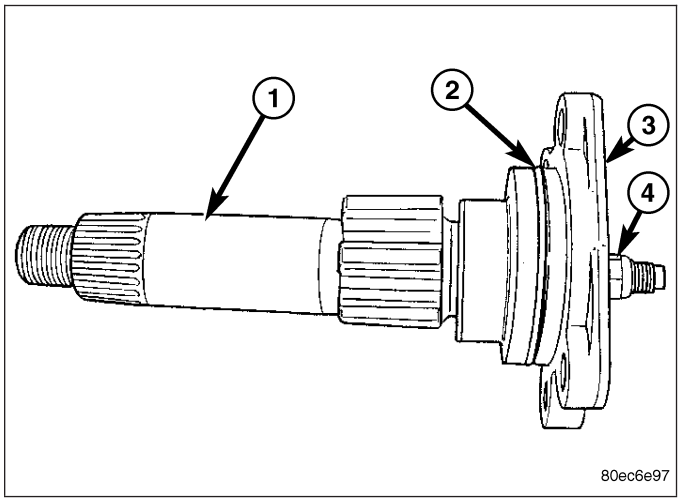

4. Perform over-center meshload adjustment (Refer to 19 - STEERING/GEAR - ADJUSTMENTS).

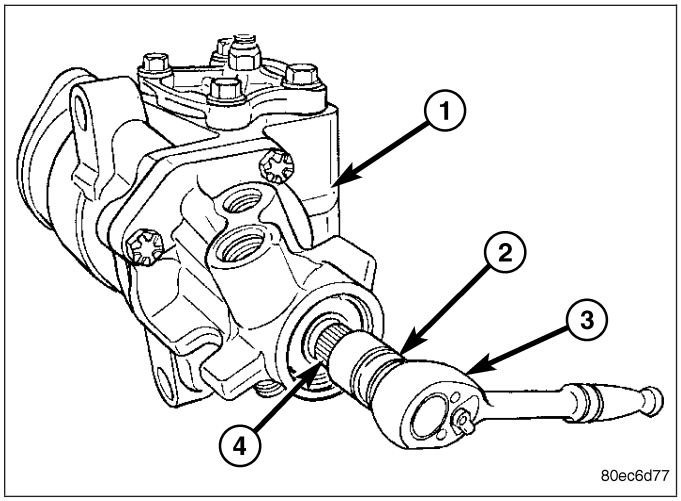

5. Install the steering gear (Refer to 19 - STEERING/GEAR - INSTALLATION).
6. Install the pitman arm (Refer to 19 - STEERING/LINKAGE/PITMAN ARM - INSTALLATION).
7. Perform a wheel alignment (Refer to 2 - SUSPENSION/WHEEL ALIGNMENT - STANDARD PROCEDURE).

LINKAGE - INDEPENDENT FRONT SUSPENSION

TABLE OF CONTENTS

page

LINKAGE - INDEPENDENT FRONT SUSPENSION
SPECIAL TOOLS 63
TIE ROD END
DIAGNOSIS AND TESTING
OUTER TIE ROD END 64
REMOVAL - OUTER TIE ROD END 64
INSTALLATION - OUTER TIE ROD END 65

LINKAGE - INDEPENDENT FRONT SUSPENSION

SPECIAL TOOLS

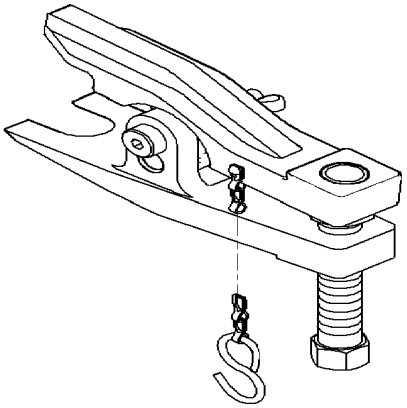

Remover, Ball Stud 9360

TIE ROD END

DIAGNOSIS AND TESTING

OUTER TIE ROD END

NOTE: If the outer tie rod end is equipped with a lubrication fitting, grease the joint then road test the vehicle before performing test.

1. Raise the front of the vehicle. Place safety floor stands under both lower control arms as far outboard as possible. Lower the vehicle to allow the stands to support some or all of the vehicle weight.
2. Remove the front tires.
3. Mount a dial indicator solidly to the vehicle steering knuckle and then zero the dial indicator.
4. Position indicator plunger on the topside of the outer tie rod end.

NOTE: The dial indicator plunger must be perpendicular to the machined surface of the outer tie rod end.

5. Position a pry bar in order to pry downwards on the outer tie rod end.
6. If the travel exceeds 0.5 mm (0.020 in.), replace the outer tie rod end (Refer to 19 - STEERING/LINKAGE/TIE ROD END - REMOVAL).
7. If the outer tie rod end is within specs reinstall the front tires (Refer to 22 - TIRES/WHEELS/WHEELS - STANDARD PROCEDURE).

REMOVAL - OUTER TIE ROD END

NOTE: Do not twist the boot anytime during removal or installation.

1. Loosen the jam nut (3).
2. Remove the outer tie rod end nut from the ball stud.
3. Separate the tie rod ball stud (1) from the knuckle with Remover 9360 (2).
4. Unthread the outer tie rod end (1) from the inner tie rod.

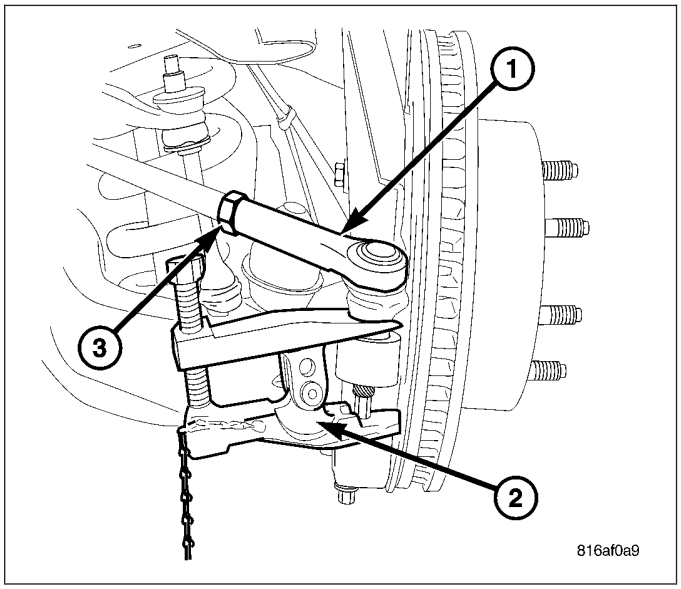

INSTALLATION - OUTER TIE ROD END

NOTE: Do not twist the boot at anytime during removal or installation.

1. Thread the outer tie rod end (3) onto the inner tie rod (2), to it's original position.
2. Install the outer tie rod end (3) into the steering knuckle.
3. Tighten the ball stud nut on the ball stud to 61 N·m (45 ft. lbs.) then an additional 90°.
4. Set wheel toe pattern, (Refer to 2 - SUSPENSION/ WHEEL ALIGNMENT - STANDARD PROCEDURE).
5. Tighten jam nut (1) to 127 N·m (94 ft. lbs.).

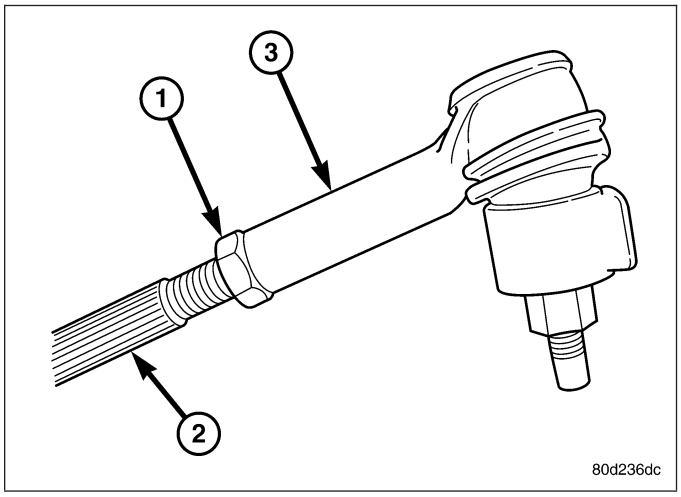

LINKAGE - LINK/COIL

TABLE OF CONTENTS

page

LINKAGE - LINK/COIL
DESCRIPTION 67
STANDARD PROCEDURE
LUBRICATION 67
SPECIFICATIONS
TORQUE 68
SPECIAL TOOLS
STEERING LINKAGE 69
DAMPER
REMOVAL 70
INSTALLATION 70
DRAG LINK
REMOVAL 71
INSTALLATION 71
PITMAN ARM
REMOVAL 72
INSTALLATION 73
TIE ROD END
REMOVAL 74
INSTALLATION 74
TRACK BAR
REMOVAL 75
INSTALLATION 75

LINKAGE - LINK/COIL

DESCRIPTION

The steering linkage is comprised of a tie rod end (5), tie rod, drag link (7), steering damper (9) and pitman arm (2).

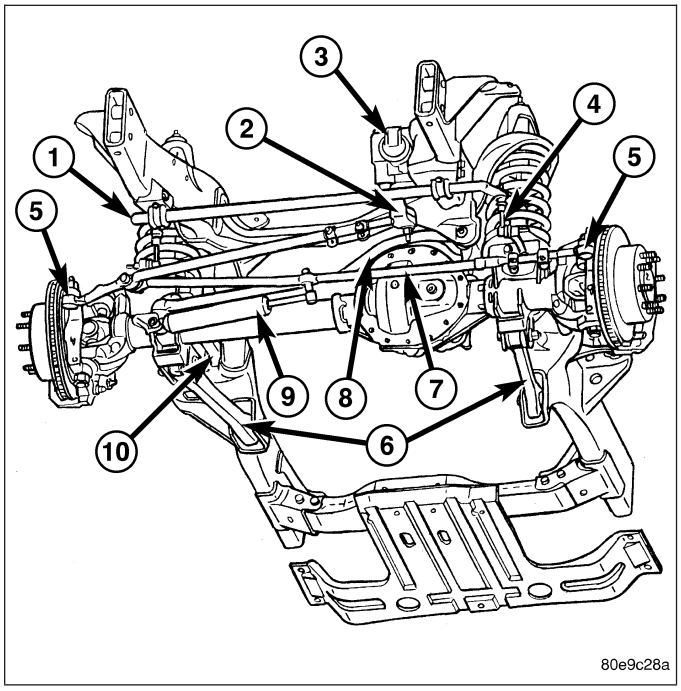

CAUTION: If any steering components are replaced or serviced an alignment must be performed.

NOTE: To avoid damaging ball stud seals, use Puller C-3894–A (3) or an appropriate puller to remove tie rod ends (5).

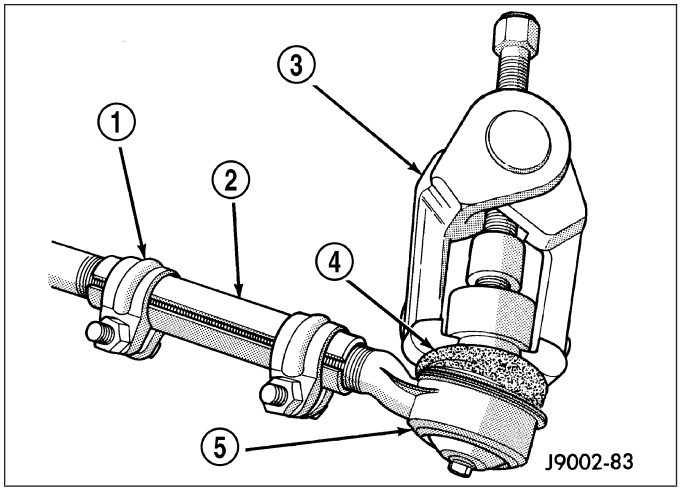

STANDARD PROCEDURE

LUBRICATION

Periodic lubrication of the steering system components is required. Refer to Lubrication And Maintenance for the recommended maintenance schedule.

The following components must be lubricated:

- Tie rod
- Tie rod end
- Drag link

SPECIFICATIONS

TORQUE

DESCRIPTION	N·m	Ft. Lbs.	In. Lbs.
Pitman Arm Gear Shaft Nut	300	225	—
Drag Link Pitman Arm	88	65	—
Drag Link Tie Rod	54 Then an additional 90°	40 Then an additional 90°	—
Drag Link Adjuster Clamp	61	45	—
Tie Rod End Knuckle	54 Then an additional 90°	40 Then an additional 90°	—
Tie Rod End Adjuster Clamp	61	45	—
Stabilizer Bar Link to Axle	68	50	—
Steering Damper Axle	95	70	—
Steering Damper Tie Rod	81	60	—

SPECIAL TOOLS

STEERING LINKAGE

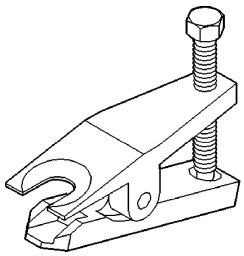

Remover Ball Stud MB-991113

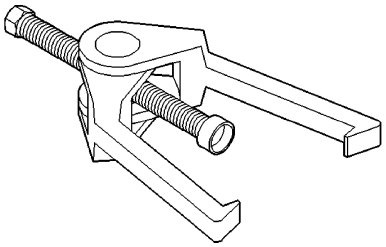

Puller Tie Rod C-3894-A

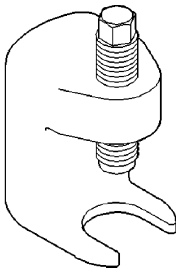

Remover Ball Joint C-4150A

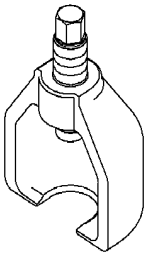

PITMAN ARM REMOVAL TOOL - 9615

DAMPER

REMOVAL

1. Remove the steering damper mounting nuts and bolts.
2. Slide the damper from the isolation bushing.
3. Remove the damper.

INSTALLATION

1. Install the steering damper on the axle and isolation bushing. Tighten nut to 95 N·m (75 ft. lbs.).
2. Install the steering damper on the tie rod. Tighten nut to 81 N·m (60 ft. lbs.).

DRAG LINK

REMOVAL

1. Remove the drag link nut (2) from the pitman arm side (1).
2. Remove the drag link nut from the knuckle side.
3. Remove the drag link (2) from the right knuckle and pitman arm (1) with Puller C-3894A (3).

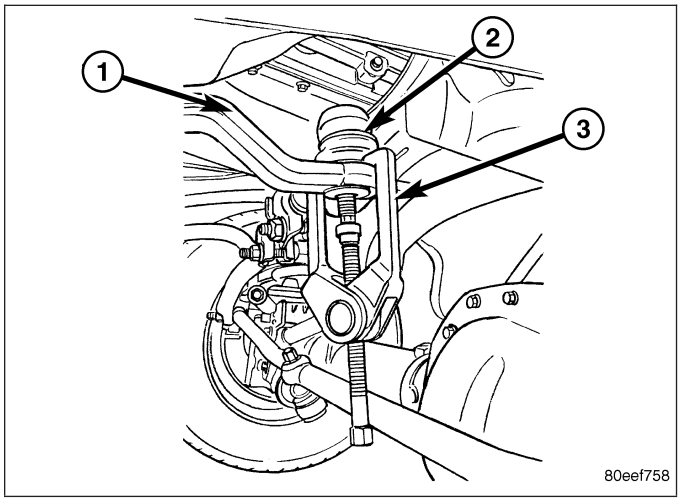

INSTALLATION

1. Install the drag link (2) to the pitman arm (1). Install the nut and tighten to 88 N·m (65 ft. lbs.).
2. Install the drag link to the right steering knuckle. Install the nut and tighten to 54 N·m (40 ft. lbs.). Then an additional 90°.
3. Install tie rod to the left steering knuckle and drag link. Install the nuts and tighten to 54 N·m (40 ft. lbs.). Then an additional 90°.
4. Remove the supports and lower the vehicle to the surface. Center steering wheel and adjust toe, (Refer to 2 - SUSPENSION/WHEEL ALIGNMENT - STANDARD PROCEDURE).
5. After adjustment tighten tie rod adjustment sleeve clamp bolts to 61 N·m (45 ft. lbs.).

NOTE: Position the clamp on the sleeve so retaining bolt is located on the bottom side of the sleeve.

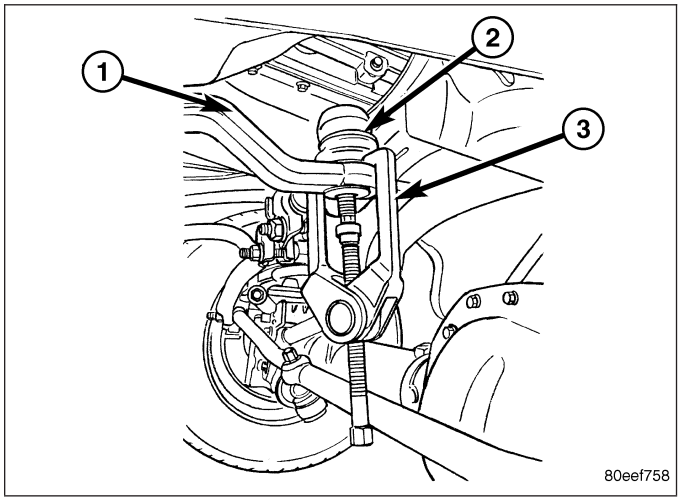

PITMAN ARM

REMOVAL

1. Remove the drag link nut (2) from the pitman arm (1).
2. Install puller C-3894-A (3) and separate the drag link (2) from the pitman arm (1).

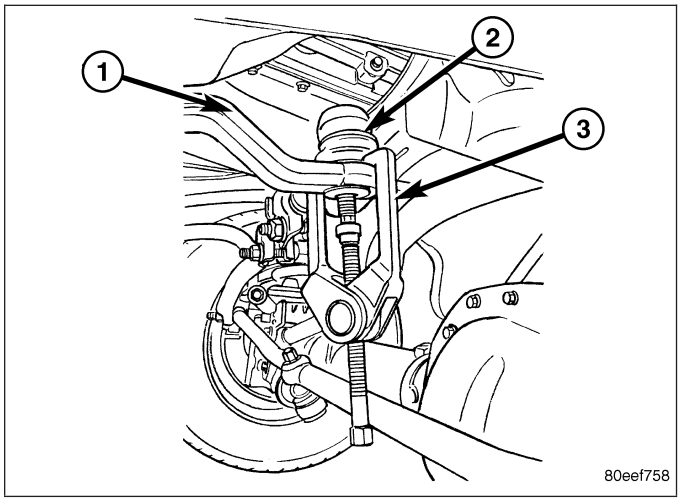

3. Mark the pitman arm (2) and shaft positions for installation reference. Remove the nut (3) and washer (4) from the pitman arm (2).

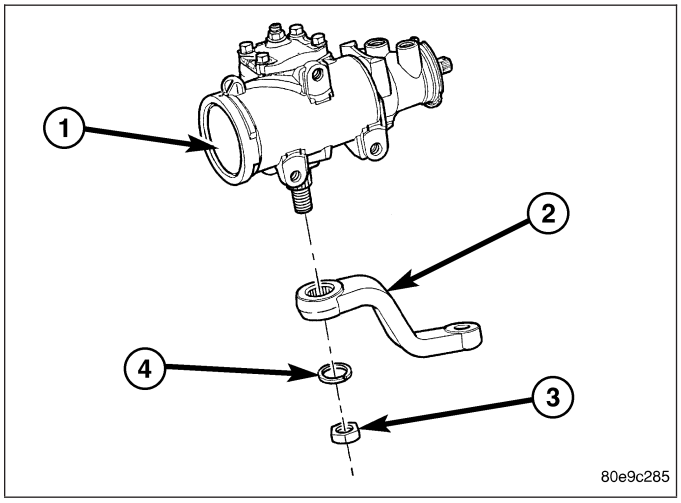

4. Remove the pitman arm (4) with Puller 9615 (2) or an equivalent pitman arm puller tool.

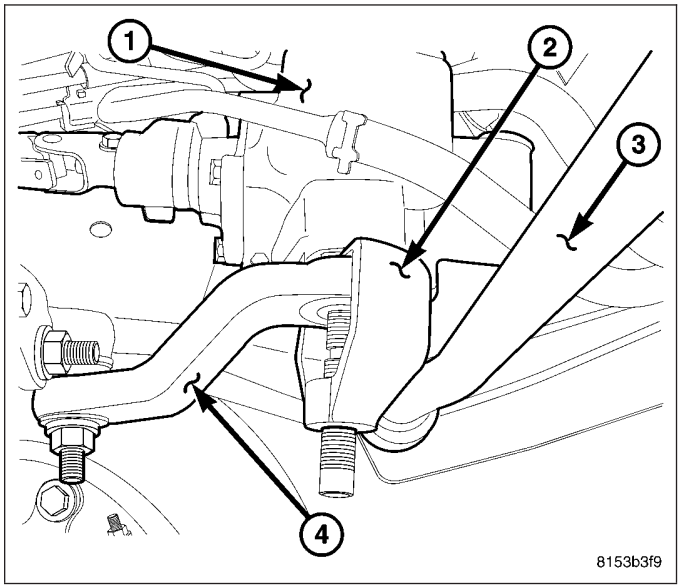

INSTALLATION

1. Align reference marks and install pitman arm.
2. Install the lock washer and retaining nut on the pitman shaft and tighten nut to 251 N·m (185 ft. lbs.).
3. Install the drag link (1) to the pitman arm (5). Install the nut (4) and tighten to 54 N·m (40 ft. lbs.). Then an additional 90°.
4. Remove the supports and lower the vehicle to the surface. Center steering wheel and adjust toe, (Refer to 2 - SUSPENSION/WHEEL ALIGNMENT - STANDARD PROCEDURE).
5. After adjustment tighten tie rod adjustment sleeve clamp bolts to 61 N·m (45 ft. lbs.).

NOTE: Position the clamp on the sleeve so retaining bolt is located on the bottom side of the sleeve.

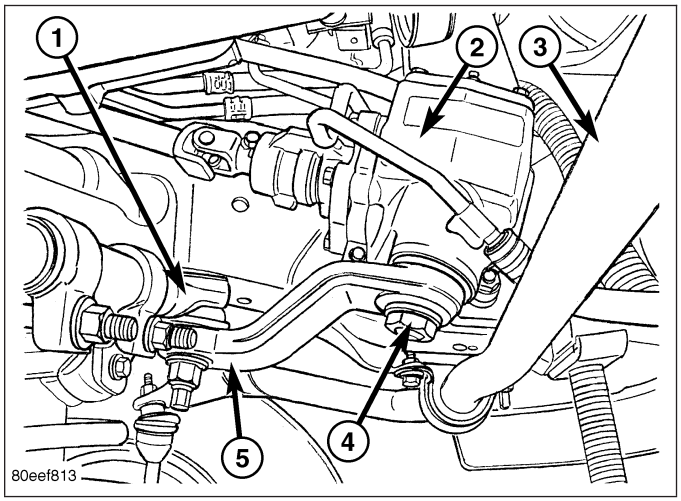

TIE ROD END

REMOVAL

1. Remove tie rod nuts (1).
2. Remove tie rod from drag link and left knuckle with remover C-4150A.

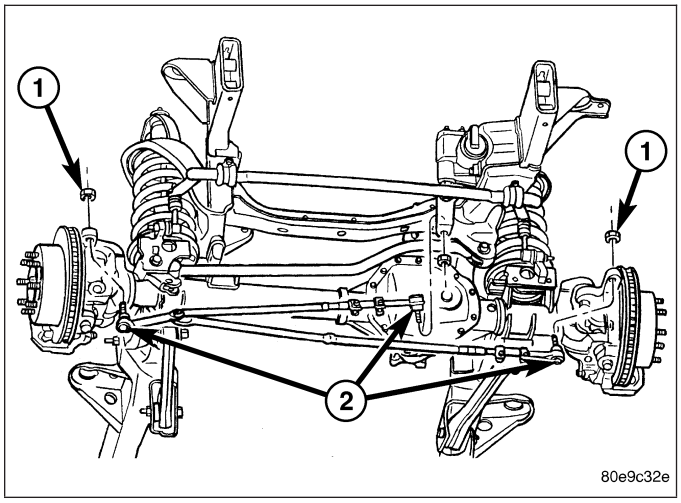

INSTALLATION

1. Install tie rod (2) to the left steering knuckle and drag link. Install the nuts (1) and tighten to 54 N·m (40 ft. lbs.) Then an additional 90°.
2. Remove the supports and lower the vehicle to the surface. Center steering wheel and adjust toe, (Refer to 2 - SUSPENSION/WHEEL ALIGNMENT - STANDARD PROCEDURE).
3. After adjustment tighten tie rod adjustment sleeve clamp bolts to 61 N·m (45 ft. lbs.).

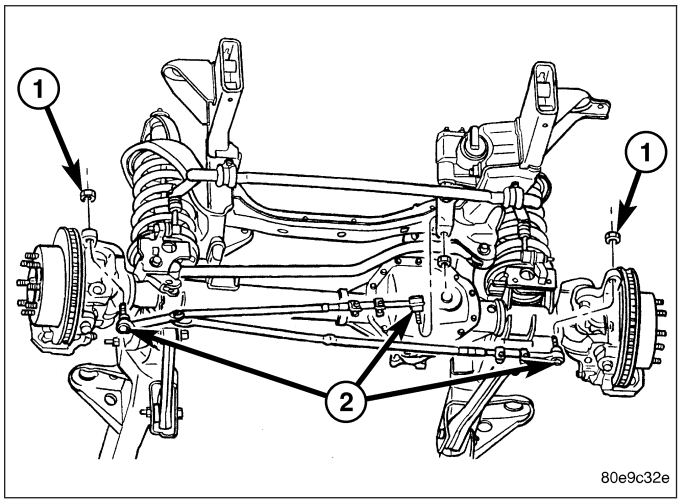

NOTE: Position the clamp on the sleeve so retaining bolt is located on the bottom side of the sleeve.

TRACK BAR

REMOVAL

1. Raise and support the axle.
2. Remove the track bar bolts (2) and nuts (3).
3. Remove the track bar (1).

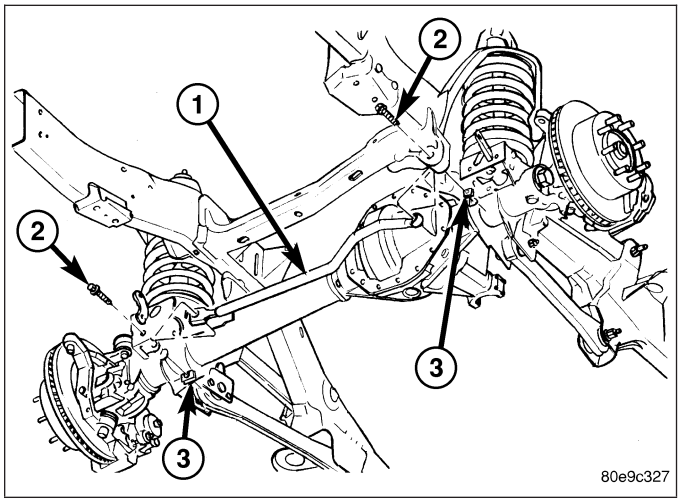

INSTALLATION

1. Install the track bar (1).
2. Install the new bolts (2) and nuts (3). Tighten to 203 N·m (150 ft lbs.).
3. Remove the supports under the axle and lower the vehicle to the ground.

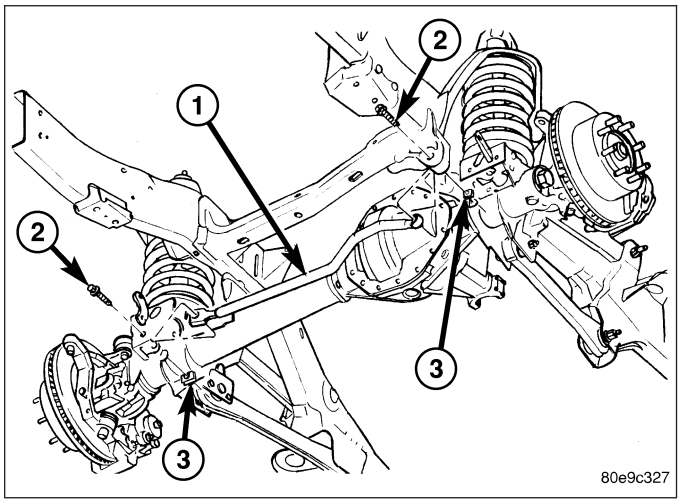

PUMP

TABLE OF CONTENTS

page

PUMP
DESCRIPTION 77
OPERATION 77
DIAGNOSIS AND TESTING
PUMP LEAKAGE 77
STANDARD PROCEDURE
FLUSHING POWER STEERING SYSTEM 77
POWER STEERING PUMP - INITIAL OPERATION 78
REMOVAL
GAS ENGINE 79
DIESEL ENGINE 79
INSTALLATION
GAS ENGINE 80
DIESEL ENGINE 80
SPECIFICATIONS
TORQUE 81
FLUID
DESCRIPTION 82
STANDARD PROCEDURE
POWER STEERING FLUID LEVEL CHECKING 82
FLUID COOLER
REMOVAL 83
INSTALLATION 83
HOSES - I.F.S.
REMOVAL
RETURN HOSE - GEAR TO COOLER 85
PRESSURE HOSE 85
RETURN HOSE - RESERVOIR TO COOLER . . 85
INSTALLATION
RETURN HOSE - GEAR TO COOLER 86
PRESSURE HOSE 86
RETURN HOSE - RESERVOIR TO COOLER . . 86
HOSES - LINK/COIL
REMOVAL
RETURN HOSE - GEAR TO COOLER 87
PRESSURE HOSE 87
RETURN HOSE - RESERVOIR TO COOLER . . 87
INSTALLATION
RETURN HOSE - GEAR TO COOLER 88
PRESSURE HOSE 88
RETURN HOSE - RESERVOIR TO COOLER . . 88
SWITCH-POWER STEERING PRESSURE
DESCRIPTION 89
OPERATION 89
REMOVAL - 5.7L - HD VEHICLES ONLY 89
INSTALLATION - 5.7L - HD VEHICLES ONLY 89
PULLEY
REMOVAL 90
INSTALLATION 90
RESERVOIR
REMOVAL 91
INSTALLATION 91

PUMP

DESCRIPTION

CAUTION: MOPAR® ATF+4 is to be used in the power steering system. No other power steering or automatic transmission fluid is to be used in the system. Damage may result to the power steering pump and system if any other fluid is used, and do not overfill.

The pump is connected to the steering gear via the pressure hose and the return hose. The pump shaft has a pressed-on pulley that is belt driven by the crankshaft pulley.

All vehicles are equipped with a power steering fluid cooler.

NOTE: Power steering pumps are not interchangeable with pumps installed on other vehicles.

OPERATION

Hydraulic pressure is provided for the power steering gear by the belt driven power steering pump (2). The power steering pumps are constant flow rate and displacement, vane-type pumps.

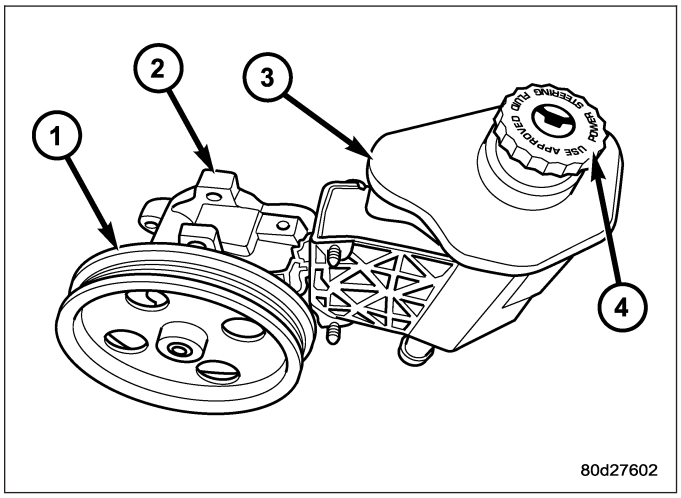

DIAGNOSIS AND TESTING

PUMP LEAKAGE

The pump is serviced as an assembly and should not be disassembled. The plastic pump reservoir and the reservoir o-rings can be replaced.

Check for leaks in the following areas:

- Pump shaft seal behind the pulley
- Pump to reservoir O-ring
- Reservoir cap
- Pressure and return lines
- Flow control valve fitting

STANDARD PROCEDURE

FLUSHING POWER STEERING SYSTEM

Flushing is required when the power steering/hydraulic booster system fluid has become contaminated. Contaminated fluid in the steering/booster system can cause seal deterioration and affect steering gear/booster spool valve operation.

NOTE: The engine should not be run so that all of the fluid is drained from the system. The pump should never be run without fluid.

1. Raise the front end of the vehicle off the ground until the wheels are free to turn.
2. Remove the return line from the pump.

NOTE: If vehicle is equipped with a hydraulic booster remove both return lines from the pump.

3. Plug the return line port/ports at the pump.
4. Position the return line/lines into a large container to catch the fluid.
5. While an assistant is filling the pump reservoir start the engine.
6. With the engine running at idle turn the wheel back and forth.

NOTE: Do not contact or hold the wheel against the steering stops.

7. Run a quart of fluid through the system then stop the engine and install the return line/lines.
8. Fill the system with fluid and perform Steering Pump Initial Operation, (Refer to 19 - STEERING/PUMP - STANDARD PROCEDURE).
9. Start the engine and run it for fifteen minutes then stop the engine.
10. Remove the return line/lines from the pump and plug the pump port/ports.
11. Pour fresh fluid into the reservoir and check the draining fluid for contamination. If the fluid is still contaminated, then flush the system again.
12. Install the return line/lines and perform Steering Pump Initial Operation, (Refer to 19 - STEERING/PUMP - STANDARD PROCEDURE).

POWER STEERING PUMP - INITIAL OPERATION

WARNING: THE FLUID LEVEL SHOULD BE CHECKED WITH ENGINE OFF TO PREVENT INJURY FROM MOVING COMPONENTS.

CAUTION: MOPAR® ATF+4 is to be used in the power steering system. No other power steering or automatic transmission fluid is to be used in the system. Damage may result to the power steering pump and system if any other fluid is used, and do not overfill.

Wipe filler cap clean, then check the fluid level. The dipstick should indicate **COLD** when the fluid is at normal temperature.

1. Turn steering wheel all the way to the left.
2. Fill reservoir up to FULL HOT level and crank engine until it just starts. (DO NOT TURN STEERING WHEEL). Then turn vehicle off. And recheck fluid level, to Full COLD.
3. Crank engine again until it just starts, (DO NOT MOVE STEERING WHEEL). and turn vehicle off. Recheck fluid level to Full COLD.
4. Turn engine on again, (DO NOT MOVE STEERING WHEEL) and let the vehicle idle for 5 minutes. If possible apply a 20 in-Hg vacuum to the reservoir, while engine is idling.
5. Turn engine off and recheck fluid level, to FULL COLD.
6. **If the Steering gear is replaced** ensure reservoir is at FULL HOT level, start engine and turn wheel to left. Stop Engine and recheck fluid level to FULL HOT. Start engine and turn wheel to the right. Stop engine and check fluid level is at FULL COLD.
7. Fill the pump fluid reservoir to the proper level and let the fluid settle for at least two (2) minutes.
8. Start the engine. With the engine idling maintain the fluid level.
9. Raise the front wheels off the ground.
10. Slowly turn the steering wheel lock-to-lock 20 times with the engine off while checking the fluid level.

NOTE: For vehicles with long return lines or oil coolers turn wheel 40 times.

11. Lower the front wheels and let the engine idle for two minutes.
12. Turn the steering wheel in both direction and verify power assist and quiet operation of the pump.

If the fluid is extremely foamy or milky looking, allow the vehicle to stand a few minutes and repeat the procedure.

CAUTION: Do not run a vehicle with foamy fluid for an extended period. This may cause pump damage.

REMOVAL

GAS ENGINE

1. Drain and siphon the power steering fluid from the reservoir.
2. Remove the serpentine belt.

CAUTION: Do not remove the fitting on the pump that the high pressure hose screws into. The fitting may come loose unless it is backed up using another wrench. If the fitting does come loose, it must be retightened before continuing. (57 - 67 Nm, 40 - 50 lb.ft.). If this fitting comes out of the pump body, the internal spring and valve parts will fall out of the pump and they cannot be reinstalled properly. If this occurs the pump needs to be replaced with a new pump.

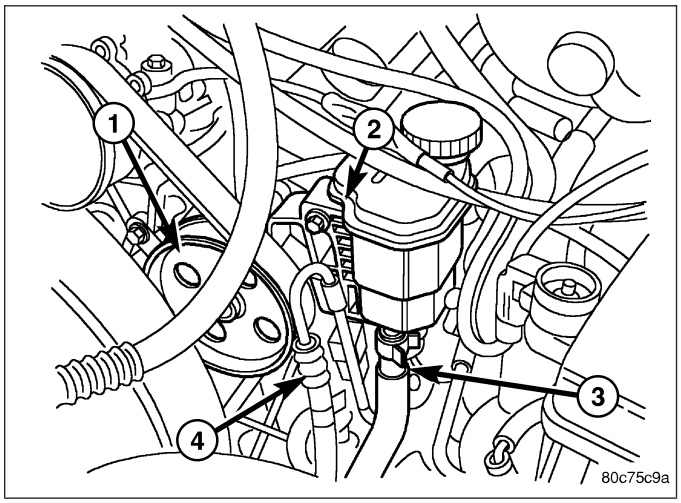

3. Disconnect the return hose (3).
4. Disconnect the pressure hose (4).
5. Access to remove the three bolts securing the pump to the cylinder head can be gained thru the pulley holes (1).

DIESEL ENGINE

1. Drain and siphon the power steering fluid from the reservoir.
2. Remove the serpentine belt.

CAUTION: Do not remove the fitting on the pump that the high pressure hose screws into. The fitting may come loose unless it is backed up using another wrench. If the fitting does come loose, it must be retightened before continuing. (57 - 67 Nm, 40 - 50 lb.ft.). If this fitting comes out of the pump body, the internal spring and valve parts will fall out of the pump and they cannot be reinstalled properly. If this occurs the pump needs to be replaced with a new pump.

3. Disconnect the return hose.
4. Disconnect the pressure hose.
5. Access to remove the three bolts securing the pump to the cylinder head can be gained thru the pulley holes.
6. Loosen the pump bracket to the block.
7. Remove the 6 intake plenum bolts (1).
8. loosen the inner cooler tube clamp at the intake plenum and remove the intake plenum.
9. Loosen the inner cooler tube clamp at the radiator support side and remove the tube from the vehicle.
10. Remove the power steering pump (2) from the top of the engine compartment where the intake plenum was.

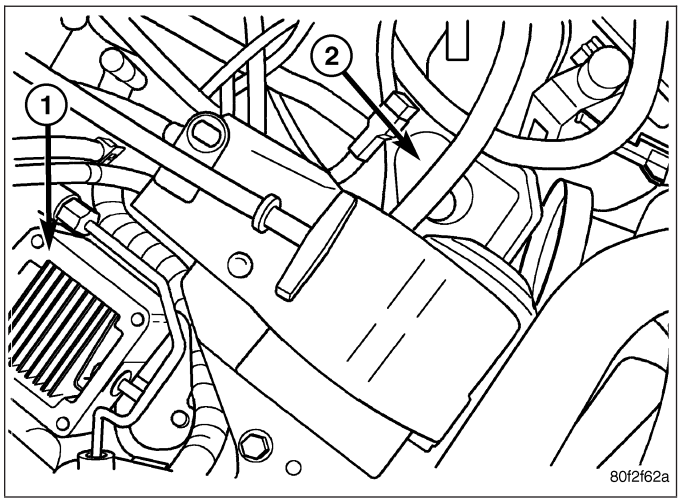

INSTALLATION

GAS ENGINE

1. Align the pump with the mounting holes in the left cylinder head.
2. Install 3 pump mounting bolts through the pulley access holes (1). Tighten the bolts to 28 N·m (21 ft. lbs.).
3. Reconnect the pressure line (4) and return hose (3) to the pump and reservoir (2). Tighten the pressure line to 31 N·m (23 ft. lbs.).
4. Install the serpentine drive belt, (Refer to 7 - COOLING/ACCESSORY DRIVE/DRIVE BELTS - INSTALLATION).
5. Fill the power steering pump, (Refer to 19 - STEERING/PUMP - STANDARD PROCEDURE).

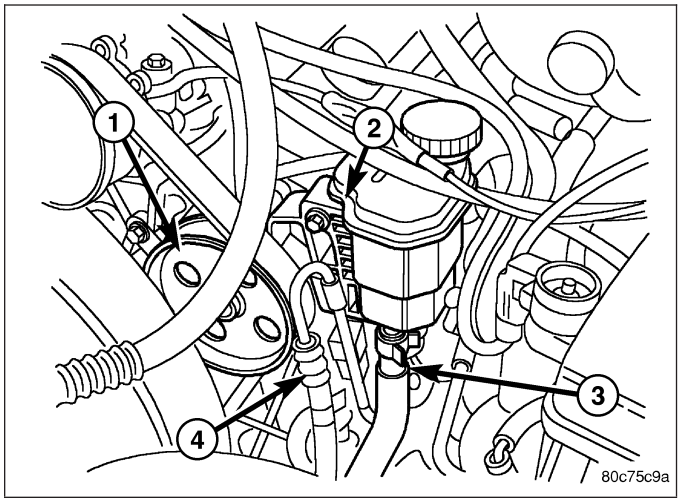

DIESEL ENGINE

1. Set the power steering pump (2) in place in the engine compartment from the top.
2. Install the inner cooler tube.
3. Tighten the inner cooler tube clamp at the radiator support side.
4. Install the 6 intake plenum bolts (2).
5. Tighten the inner cooler tube clamp at the intake plenum.

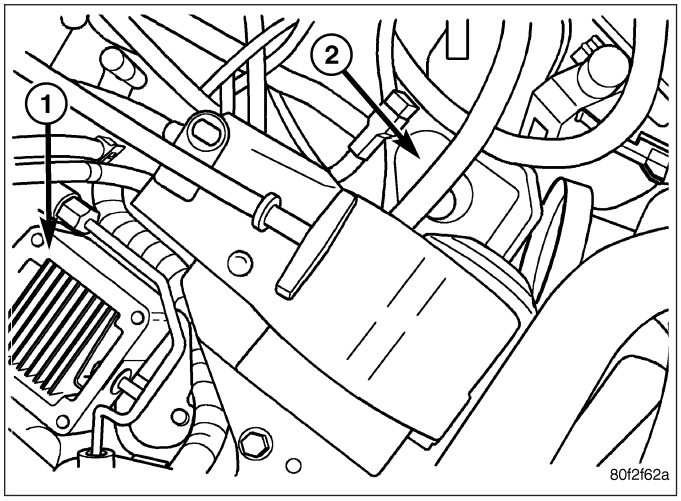

6. Install 3 pump mounting bolts through the pulley access holes. Tighten the bolts to 28 N·m (21 ft. lbs.).
7. Tighten the pump bracket to the block.
8. Reconnect the pressure line and return hose to the pump and reservoir. Tighten the pressure line to 37 N·m (27 ft. lbs.).
9. Install the serpentine drive belt, (Refer to 7 - COOLING/ACCESSORY DRIVE/DRIVE BELTS - INSTALLATION).
10. Fill the power steering pump, (Refer to 19 - STEERING/PUMP - STANDARD PROCEDURE).

SPECIFICATIONS

TORQUE

DESCRIPTION	N·m	Ft. Lbs.	In. Lbs.
Power Steering Pressure Switch	10	—	80
Power Steering Line Pressure Line	32	23	—
Power Steering Line Return Line HD	51	38	—
Power Steering Line Return Line LD	50	37	—
Power Steering Line Pressure Line To Pump	31	23	—
Power Steering Pump Mounting Bolts	28	21	—
Power Steering Pump Reservoir Bolts	13	10	120
Power Steering Pump Bracket Bolts	5	5	62

FLUID

DESCRIPTION

NOTE: It is normal that some pressure will build up inside the reservoir, especially, with a warm vehicle. A slight popping noise upon removal of the cap is normal. The fluid level should read between the ADD and the FULL COLD marks. When the fluid is hot it should read between ADD and FULL HOT marks. Only add fluid when the vehicle is cold.

The recommended fluid for the power steering system is Mopar® ATF +4.

Mopar® ATF+4, when new is red in color. The ATF+4 is dyed red so it can be identified from other fluids used in the vehicle such as engine oil or antifreeze. The red color is not permanent and is not an indicator of fluid condition, As the vehicle is driven, the ATF+4 will begin to look darker in color and may eventually become brown. **THIS IS NORMAL.** ATF+4 also has a unique odor that may change with age. Consequently, odor and color cannot be used to indicate the fluid condition or the need for a fluid change.

STANDARD PROCEDURE

POWER STEERING FLUID LEVEL CHECKING

WARNING: FLUID LEVEL SHOULD BE CHECKED WITH THE ENGINE OFF TO PREVENT PERSONAL INJURY FROM MOVING PARTS.

CAUTION: MOPAR® ATF+4 is to be used in the power steering system. No other power steering or automatic transmission fluid is to be used in the system. Damage may result to the power steering pump and system if any other fluid is used, and do not overfill.

The power steering fluid level can be viewed on the dipstick attached to the filler cap. There are two ranges listed on the dipstick, COLD and HOT. Before opening power steering system, wipe the reservoir filler cap free of dirt and debris. Remove the cap and check the fluid level on its dipstick. When the fluid is at normal ambient temperature, approximately 21°C to 27°C (70°F to 80°F), the fluid level should read between the minimum and maximum area of the cold range. When the fluid is hot, fluid level is allowed to read up to the highest end of the HOT range. Only add fluid when the vehicle is cold.

Use only Mopar® ATF+4. Do not overfill the power steering system.

FLUID COOLER

REMOVAL

1. Drain and siphon the power steering fluid.
2. Disconnect the return and supply hoses connected to the power steering fluid cooler.
3. Remove the mounting bracket bolts (2) securing the fluid cooler (1) to the brace. (V6&V8)

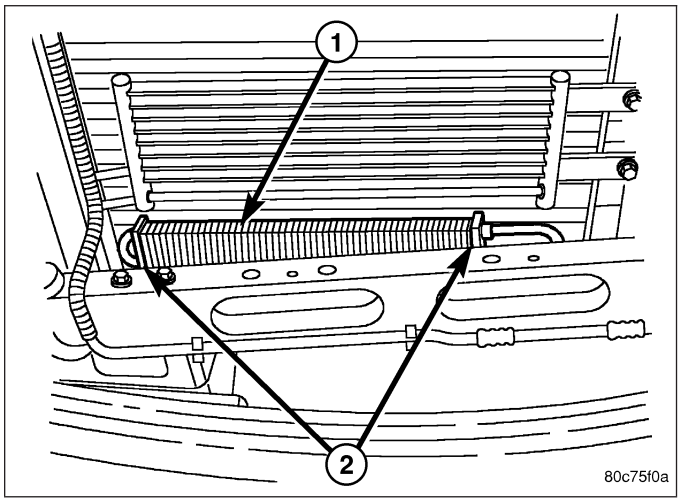

4. Remove the mounting bracket bolts (3) securing the fluid cooler (1) to the brace. (Diesel engine)
5. Remove the fluid cooler from the vehicle.

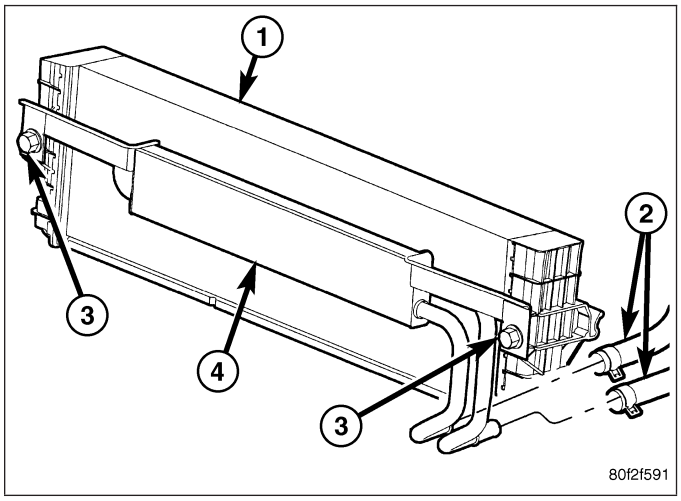

INSTALLATION

1. Install the fluid cooler (1) to the vehicle.
2. Install the mounting bracket bolts (2) securing the fluid cooler (1) to the brace (V6&V8).

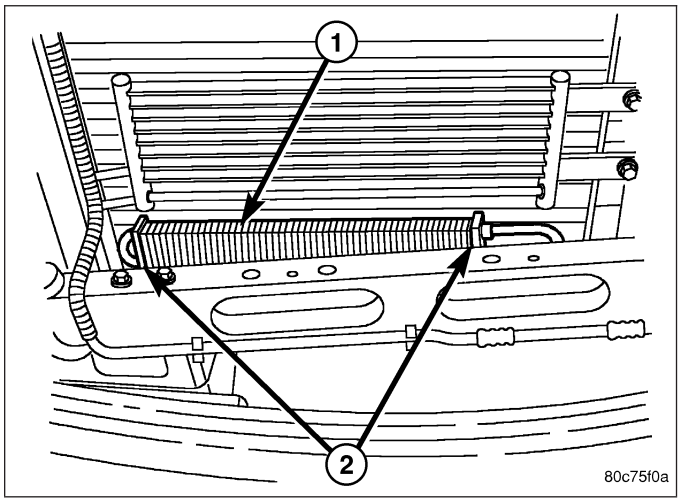

3. Install the mounting bracket bolts (3) securing the fluid cooler (1) to the brace (Diesel Engine).
4. Reclamp the return and supply hoses to the power steering fluid cooler (4).
5. Refill the power steering fluid (Refer to 19 - STEERING/PUMP - STANDARD PROCEDURE).

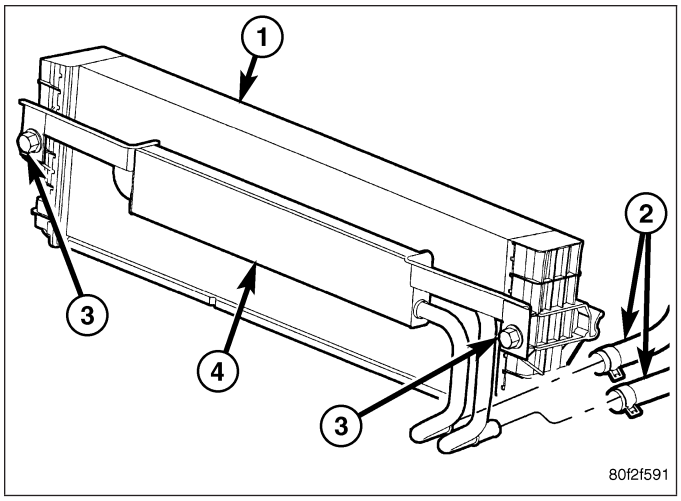

HOSES - I.F.S.

REMOVAL

RETURN HOSE - GEAR TO COOLER

1. Drain and siphon the power steering system.
2. Raise and support the vehicle.
3. Disconnect the return hose at the cooler.
4. Disconnect the return hose (1) at the gear.
5. Remove the return hose from the routing clamp at the fan shroud and then remove from the vehicle.

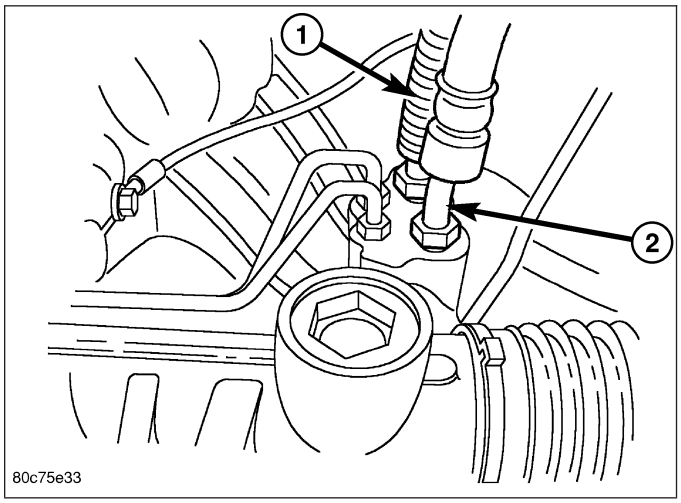

PRESSURE HOSE

1. Drain and siphon the power steering system.
2. Raise and support the vehicle.
3. Disconnect the pressure hose at the pump.
4. Disconnect the pressure hose (2) at the gear.
5. Remove the pressure hose from the vehicle.

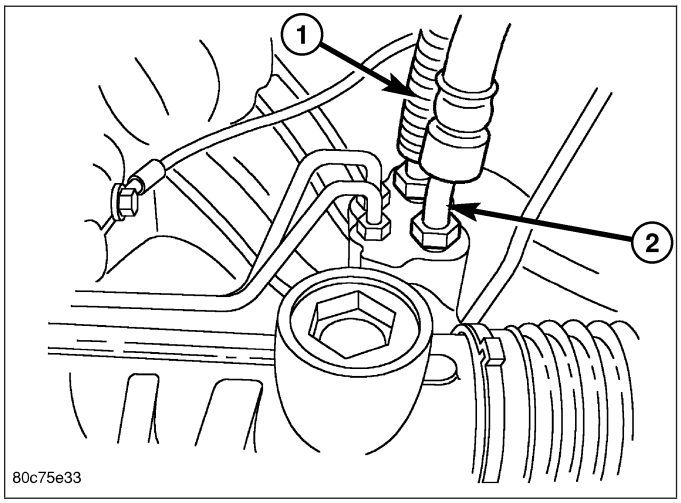

RETURN HOSE - RESERVOIR TO COOLER

1. Drain and siphon the power steering system.
2. Disconnect the return hose at the reservoir.
3. Raise and support the vehicle.
4. Remove the return hose from the routing clamp at the fan shroud.
5. Disconnect the return hose at the cooler.
6. Remove the hose from the vehicle.

INSTALLATION

RETURN HOSE - GEAR TO COOLER

1. Install the return hose to the vehicle.
2. Reconnect the return hose at the cooler.
3. Reconnect the return hose (1) at the gear. Tighten the hose to 50 N·m (37 ft. lbs.).
4. Reattach the hose to the routing clip at the fan shroud.
5. Remove the support and lower the vehicle.
6. Refill the power steering system, (Refer to 19 - STEERING/PUMP - STANDARD PROCEDURE).

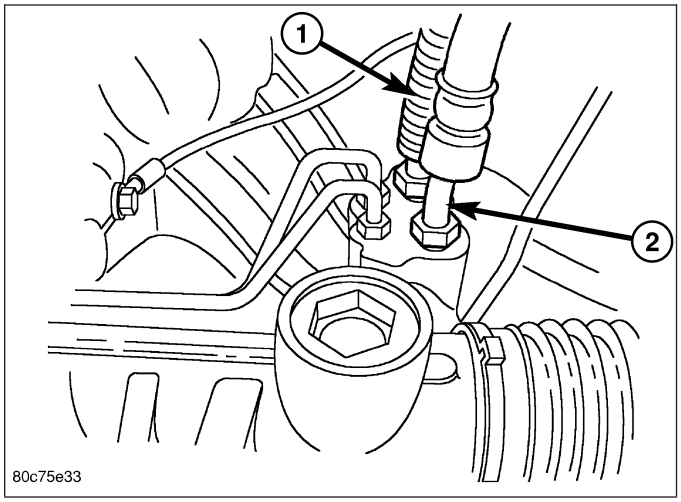

PRESSURE HOSE

NOTE: Be sure to align the pressure hose so it does not contact the fan shroud or the frame rail.

1. Install the pressure hose to the vehicle.
2. Reconnect the pressure hose (2) at the gear. Tighten the hose to 32 N·m (23 ft. lbs.).
3. Reconnect the pressure hose at the pump. Tighten the hose to 31 N·m (23 ft. lbs.).
4. Remove the support and lower the vehicle.
5. Refill the power steering system, (Refer to 19 - STEERING/PUMP - STANDARD PROCEDURE).

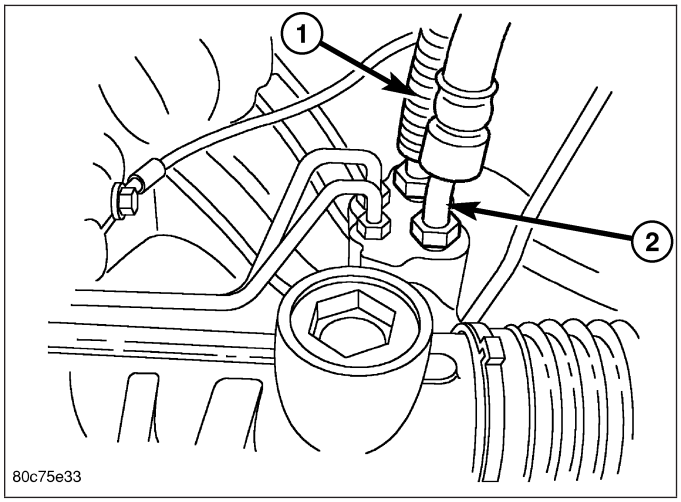

RETURN HOSE - RESERVOIR TO COOLER

1. Install the return hose to the vehicle.
2. Reconnect the return hose at the cooler.
3. Reattach the hose to the routing clip at the fan shroud.
4. Remove the support and lower the vehicle.
5. Reconnect the return hose at the reservoir.
6. Refill the power steering system, (Refer to 19 - STEERING/PUMP - STANDARD PROCEDURE).

HOSES - LINK/COIL

REMOVAL

RETURN HOSE - GEAR TO COOLER

1. Drain and siphon the power steering system.
2. Raise and support the vehicle.
3. Disconnect the return hose at the cooler.
4. Disconnect the return hose (2) at the gear.
5. Remove the return hose from the routing clamp at the fan shroud and then remove from the vehicle.

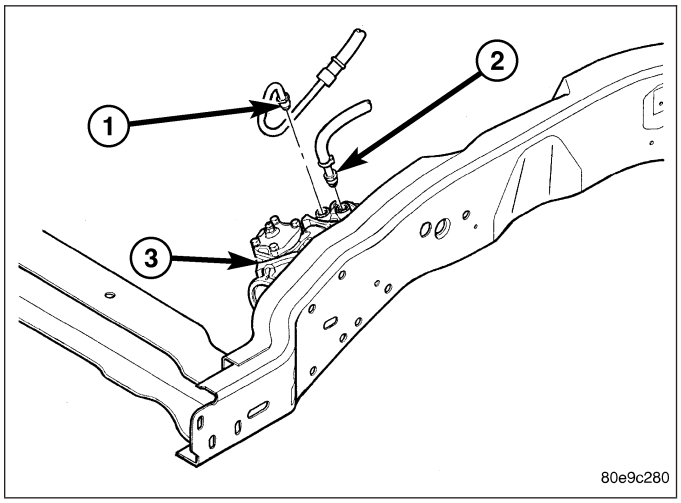

PRESSURE HOSE

1. Drain and siphon the power steering system.
2. Raise and support the vehicle.
3. Disconnect the pressure hose at the pump.
4. Disconnect the pressure hose (2) at the gear (4).
5. Remove the pressure hose from the vehicle.

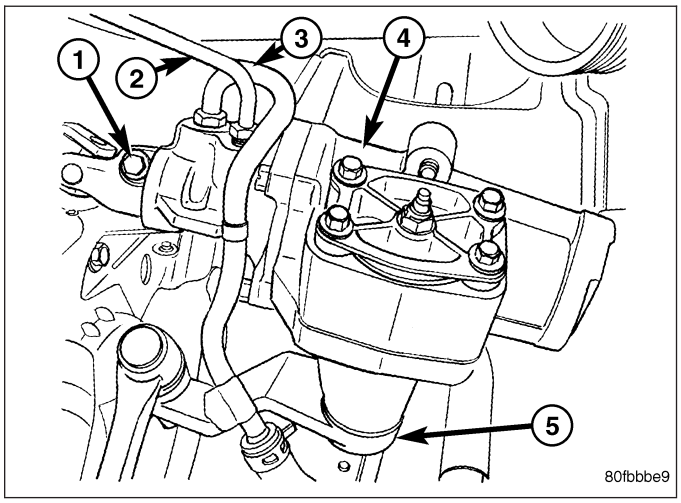

RETURN HOSE - RESERVOIR TO COOLER

1. Drain and siphon the power steering system.
2. Disconnect the return hose at the reservoir.
3. Raise and support the vehicle.
4. Remove the return hose from the routing clamp at the fan shroud.
5. Disconnect the return hose at the cooler.
6. Remove the hose from the vehicle.

INSTALLATION

RETURN HOSE - GEAR TO COOLER

1. Install the return hose to the vehicle.
2. Reconnect the return hose at the cooler.
3. Reconnect the return hose (2) at the gear. Tighten the hose to 51 N·m (38 ft. lbs.).
4. Reattach the hose to the routing clip at the fan shroud.
5. Remove the support and lower the vehicle.
6. Refill the power steering system, (Refer to 19 - STEERING/PUMP - STANDARD PROCEDURE).

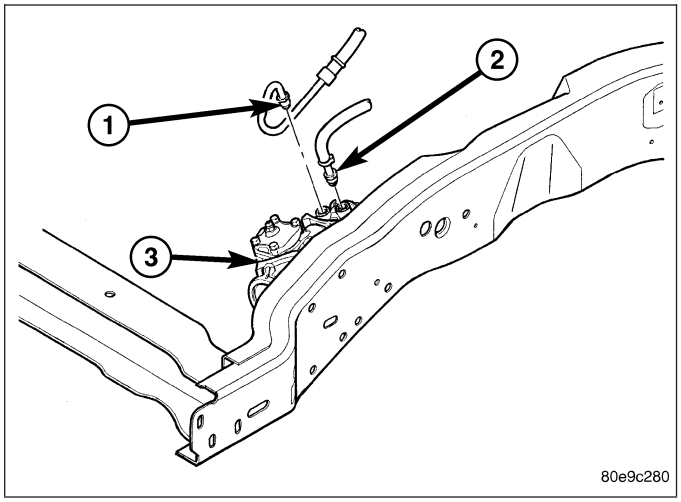

PRESSURE HOSE

NOTE: Be sure to align the pressure hose so it does not contact the fan shroud or the frame rail.

1. Install the pressure hose to the vehicle.
2. Reconnect the pressure hose (2) at the gear (4). Tighten the hose to 32 N·m (23 ft. lbs.).
3. Reconnect the pressure hose at the pump. Tighten the hose to 36 N·m (27 ft. lbs.).
4. Remove the support and lower the vehicle.
5. Refill the power steering system, (Refer to 19 - STEERING/PUMP - STANDARD PROCEDURE).

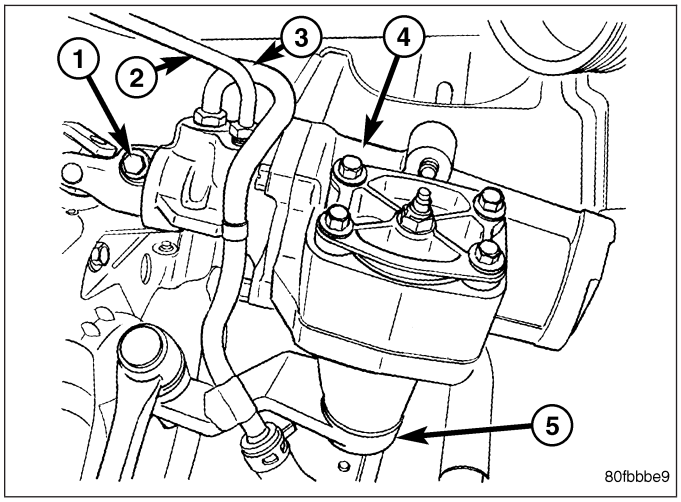

RETURN HOSE - RESERVOIR TO COOLER

1. Install the return hose to the vehicle.
2. Reconnect the return hose at the cooler.
3. Reattach the hose to the routing clip at the fan shroud.
4. Remove the support and lower the vehicle.
5. Reconnect the return hose at the reservoir.
6. Refill the power steering system, (Refer to 19 - STEERING/PUMP - STANDARD PROCEDURE).

SWITCH-POWER STEERING PRESSURE

DESCRIPTION

A pressure sensing switch is used in the power steering system. It is mounted on the high-pressure steering hose. This switch will only be used on **HD vehicles** with the 5.7L engines. There is no pressure switch used for the 3.7L, 4.7L, 5.9LDiesel engine or the **5.7L LD vehicle** pump.

OPERATION

The switch is used on the 5.7L V-8 engines **HD vehicles only**.

The power steering pressure switch provides an input to the Powertrain Control Module (PCM). This input is provided during periods of high steering pump load and low engine rpm; such as during parking maneuvers. The PCM increases the idle speed through the Idle Air Control (IAC) motor. This is done to prevent the engine from stalling under the increased load.

When steering pump pressure exceeds 3275 kPa ± 690 kPa (475 psi ± 100 psi), the Normally Closed (NC) switch will open and the PCM will increase the engine idle speed. This will prevent the engine from stalling.

When pump pressure drops to approximately 1379 kPa (200 psi), the switch circuit will re-close and engine idle speed will return to its previous setting.

REMOVAL - 5.7L - HD VEHICLES ONLY

The power steering pressure switch (5) is installed in the power steering high-pressure hose (5).

1. Disconnect electrical connector from power steering pressure switch.
2. Place a small container or shop towel beneath switch to collect any excess fluid.
3. Remove switch. Use back-up wrench on power steering line to prevent line bending.

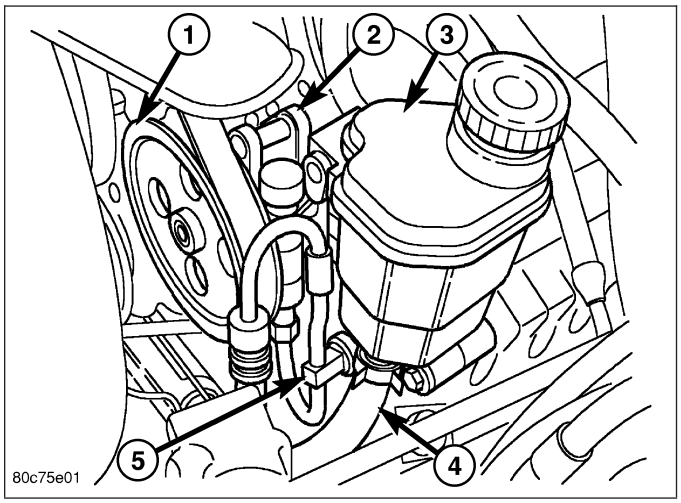

INSTALLATION - 5.7L - HD VEHICLES ONLY

This switch is used only with the 5.7L V-8 engines **HD vehicles only**.

1. Install power steering switch (5) into power steering line (5).
2. Tighten to 8–11 N·m (70–100 in. lbs.) torque.
3. Connect electrical connector to switch.
4. Check power steering fluid and add as necessary.
5. Start engine and again check power steering fluid. Add fluid if necessary.

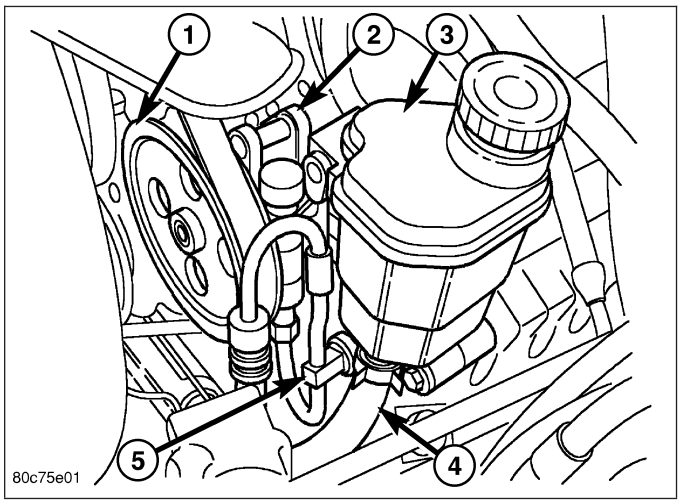

PULLEY

REMOVAL

CAUTION: Do not reuse the old power steering pump pulley it is not intended for reuse. A new pulley must be installed if removed.

1. Remove the power steering pump assembly (1), (Refer to 19 - STEERING/PUMP - REMOVAL).
2. Remove the pulley (2) from the pump using (OTC® 7185) power steering pulley removal tool or equivalent (3).

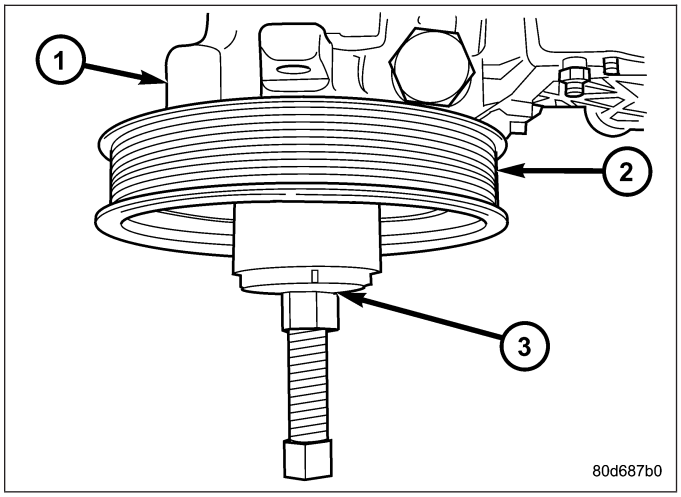

INSTALLATION

CAUTION: Do not reuse the old power steering pump pulley it is not intended for reuse. A new pulley must be installed if removed.

1. Replace the pulley (2) if it's bent, cracked, or loose.
2. Install the pulley (2) on the pump (1) using (OTC® 7771) power steering pulley installation tool or equivalent (3) making sure it is flush with the end of the shaft. Ensure the tool and pulley remain aligned with the pump shaft.
3. Install the power steering pump assembly, (Refer to 19 - STEERING/PUMP - INSTALLATION).

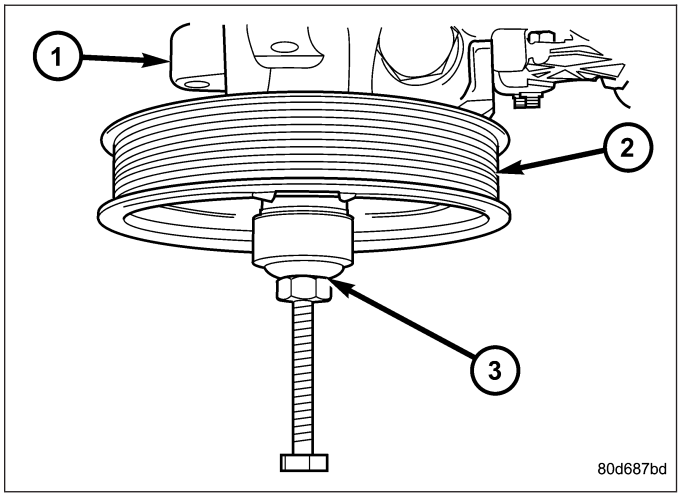

4. Run engine until warm (5 min.) and note any belt chirp. If chirp exists, move pulley outward approximately 0.5 mm (0.020 in.). If noise increases, press on 1.0 mm (0.040 in.). **Be careful that pulley does not contact mounting bolts.**

RESERVOIR

REMOVAL

1. Drain and siphon the power steering fluid from the reservoir.
2. Remove the serpentine belt.
3. Remove the power steering pump (Refer to 19 - STEERING/PUMP - REMOVAL).
4. Remove the reservoir mounting bolts.
5. Remove the reservoir.
6. Remove the rear bracket to the pump mounting bolts.

INSTALLATION

1. Install the reservoir bracket to the pump housing. **Do not reuse the o-rings (install new o-rings).** Tighten bolts to 7 N·m (62 in. lbs.).

NOTE: Ensure the reservoir is fully seated onto the pump.

2. Install the reservoir to the bracket/pump body.
3. Install the reservoir mounting bolts. Tighten bolts to 13 N·m (120 in. lbs.).
4. Install the power steering pump (Refer to 19 - STEERING/PUMP - INSTALLATION).
5. Install the serpentine drive belt, (Refer to 7 - COOLING/ACCESSORY DRIVE/DRIVE BELTS - INSTALLATION).
6. Fill the power steering pump, (Refer to 19 - STEERING/PUMP - STANDARD PROCEDURE).

PUMP - SRT10

TABLE OF CONTENTS

page

PUMP - SRT10
DIAGNOSIS AND TESTING - HYDRAULIC FLOW AND PRESSURE 93
STANDARD PROCEDURE
INITIAL OPERATION 95
STANDARD PROCEDURE - FLUID COOLER LINE QUICK CONNECT FITTING DISASSEMBLY/ASSEMBLY. 96
REMOVAL 97
INSTALLATION 99
SPECIFICATIONS
TORQUE 100
SPECIAL TOOLS
POWER STEERING 101
HOSES
REMOVAL
PRESSURE HOSE - PUMP TO FAN 102
PRESSURE HOSE - FAN TO GEAR 102
RETURN HOSE - FAN TO PUMP 103
RETURN HOSE - GEAR TO COOLER 103
RETURN HOSE - COOLER TO PUMP 105
INSTALLATION
PRESSURE HOSE - PUMP TO FAN 105
PRESSURE HOSE - FAN TO GEAR 106
RETURN HOSE - FAN TO PUMP 107
RETURN HOSE - GEAR TO COOLER 108
RETURN HOSE - COOLER TO PUMP 108
RESERVOIR
REMOVAL 109
INSTALLATION 109
PULLEY
REMOVAL 110
INSTALLATION 110
FLUID COOLER TUBE
REMOVAL 111
INSTALLATION 112
FLUID COOLER
REMOVAL 113
INSTALLATION 115

PUMP - SRT10

DIAGNOSIS AND TESTING - HYDRAULIC FLOW AND PRESSURE

The following procedures are used to test the operation of the power steering and hydraulic fan systems on this vehicle. These tests will provide the gallons per minute (GPM) or flow rate of the power steering pump along with the maximum relief pressure at given points in the system. Perform the first test anytime a power steering system problem is present and the second as necessary once the first test is completed. These tests will determine if the power steering pump, hydraulic fan, or power steering gear is not functioning properly. They will also determine if the flow coming out of the hydraulic fan motor is sufficient for the power steering gear. The following pressure and flow tests are performed using the Power Steering Analyzer kit 6815 (with appropriate hoses) and Adapter kit 9091. (Refer to 19 - STEERING - SPECIAL TOOLS)

FLOW AND PRESSURE TEST - AT POWER STEERING PUMP

1. Check power steering belt to ensure it is in good condition and adjusted properly.
2. Assemble Power Steering Analyzer as follows :
   a. Gauge end (inlet) of Flow Meter And Gauge 6800 – Hose 6905, Hose 6713, Adapter Tube 9091-1
   b. Valve end (outlet) of Flow Meter And Gauge 6800 – Hose 6959, Adapter Fitting 9091-3
3. Unthread pressure hose quick-connect fitting from power steering pump.
4. Connect Adapter Tube 9091-1 to pressure fitting on power steering pump.
5. Connect power steering pressure hose to Adapter Fitting 9091-3.

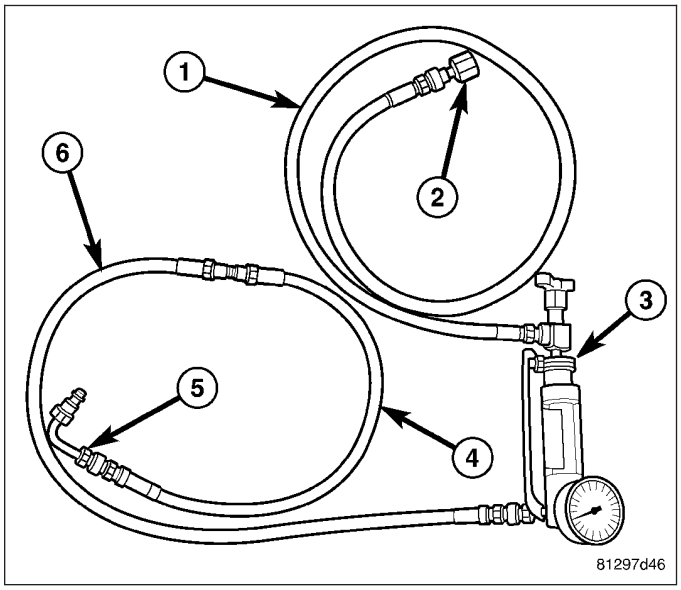

6. Open Analyzer test valve completely.
7. Start engine and allow to idle long enough to circulate power steering fluid through Analyzer flow meter and hoses.
8. Shut off engine and check fluid level; add fluid as necessary. Repeat Step 7 and Step 8 until air is bled from system.
9. Start engine and allow to idle.
10. Check Analyzer gauge pressure. Initial pressure reading should be 483-690 kPa (70-100 psi). If pressure is higher, inspect hoses for restrictions and repair as necessary.
11. Increase engine speed to 1100 rpm and read Analyzer Flow Meter. The reading should be 2.6 GPM minimum. If flow reading is below specification, replace power steering pump.

FLOW AND PRESSURE TEST - AT POWER STEERING GEAR

NOTE: This test should only be done if necessary after completing the Pump Flow And Pressure Test

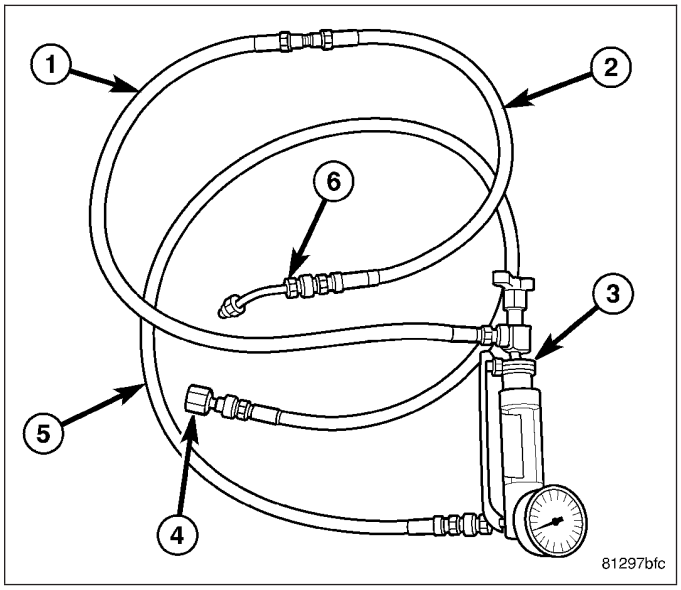

1. Remove Analyzer from pump and pressure hose to fan. Reattach pressure hose to pump.
2. Assemble Power Steering Analyzer as follows :
   a. Gauge end (inlet) of Flow Meter And Gauge 6800 – Hose 6959, Adapter Fitting 9091-4
   b. Valve end (outlet) of Flow Meter And Gauge 6800 – Hose 6905, Hose 6713, Adapter Tube 9091-2
3. Unthread pressure hose tube nut from power steering gear.
4. Connect power steering pressure hose to Adapter Fitting 9091-4.
5. Connect Adapter Tube 9091-2 to power steering gear.
6. Open Analyzer test valve completely.
7. Start engine and allow to idle long enough to circulate power steering fluid through Analyzer flow meter and hoses.
8. Shut off engine and check fluid level; add fluid as necessary. Repeat Step 7 and Step 8 until air is bled from system.
9. Start engine and allow to idle.
10. Check Analyzer gauge pressure. Initial pressure reading should be 345-552 kPa (50-80 psi). If pressure is higher, inspect hoses for restrictions and repair as necessary.
11. Increase engine speed to 1500 RPM and read Analyzer Flow Meter. The reading should be 2.4 - 2.8 GPM. If flow reading is below specification, replace hydraulic fan.

CAUTION: This next step involves testing maximum fan motor steering relief pressure. Do not leave the valve closed for more than three seconds.

12. Close Analyzer valve fully three times for three seconds each time and record highest pressure indicated on Analyzer gauge each time. All three readings must be within fan motor steering relief pressure specifications.
13. Completely open test valve and turn steering wheel to the extreme left and right positions against stops. Record the highest pressure readings at each position. If pressure readings are not within 50 psi from each other, the gear is leaking internally and must be replaced.

PUMP OUTLET SPECIFICATIONS

ENGINE	RELIEF PRESSURE	FLOW RATE (GPM) @ 1100 RPM
ALL	9653 kPa ± 345 kPa (1400 psi ± 50 psi)	2.4-2.8 GPM Minimum @ 1379 kPa (200 psi)

GEAR INLET SPECIFICATIONS

ENGINE	RELIEF PRESSURE	FLOW RATE (GPM) @ 1500 RPM
ALL	9653 kPa ± 345 kPa (1400 psi ± 50 psi)	2.4-2.8 GPM Minimum @ 1379 kPa (200 psi)

STANDARD PROCEDURE

INITIAL OPERATION

WARNING: The fluid level should be checked with engine off to prevent injury from moving components.

NOTE: Remove as much of the old fluid out of the system as possible with a suction tool or by removing a hose, when a component has failed. Then refill it with fresh fluid until it is clean. This may have to be done more than once.

CAUTION: MOPAR® ATF+4 is to be used in the power steering system. No other power steering or automatic transmission fluid is to be used in the system. Damage may result to the power steering pump and system if any other fluid is used, and do not overfill.

Wipe filler cap clean, then check the fluid level. The dipstick should indicate **COLD** when the fluid is at normal ambient temperature.

1. Fill the pump fluid reservoir to the proper level and let the fluid settle for at least two minutes.
2. Start the engine and let run for a few seconds then turn engine off.
3. Add fluid if necessary. Repeat the above procedure until the fluid level remains constant after running the engine.
4. Raise the front wheels off the ground.
5. Slowly turn the steering wheel right and left, lightly contacting the wheel stops at least 20 times.
6. Check the fluid level add if necessary.
7. Lower the vehicle, start the engine, and use the DRB III to activate the hydraulic fan on full fan operation.
8. Turn the steering wheel slowly from lock to lock.
9. Stop the engine, check the fluid level and refill as required and repeat the process

CAUTION: Do not run a vehicle with foamy fluid for an extended period. This may cause pump damage.

10. If the fluid is extremely foamy or milky looking, allow the vehicle to stand a few minutes and repeat the procedure.
11. While the vehicle is in park, use the DRB III to activate the hydraulic fan to full fan operation and briefly rev the engine up to 3000 rpm to fully engage the hydraulic fan.
12. Check the fluid level add if necessary.

STANDARD PROCEDURE - FLUID COOLER LINE QUICK CONNECT FITTING DISASSEMBLY/ASSEMBLY

DISASSEMBLY

1. Remove dust cap (2) by pulling it straight back off of quick connect fitting (1).
2. Place disconnect tool (Special Tool 8875) (4) onto fluid cooler line with the fingers of the tool facing the quick connect fitting (1).
3. Slide disconnect tool down the line (3) and engage the fingers of the tool into the retaining clip. When properly engaged in the clip, the tool will fit flush against the quick connect fitting (1).
4. Rotate the disconnect tool 60° to expand the retaining clip.
5. While holding the disconnect tool (4) against the quick connect fitting (1), pull back on the oil cooler line to remove.

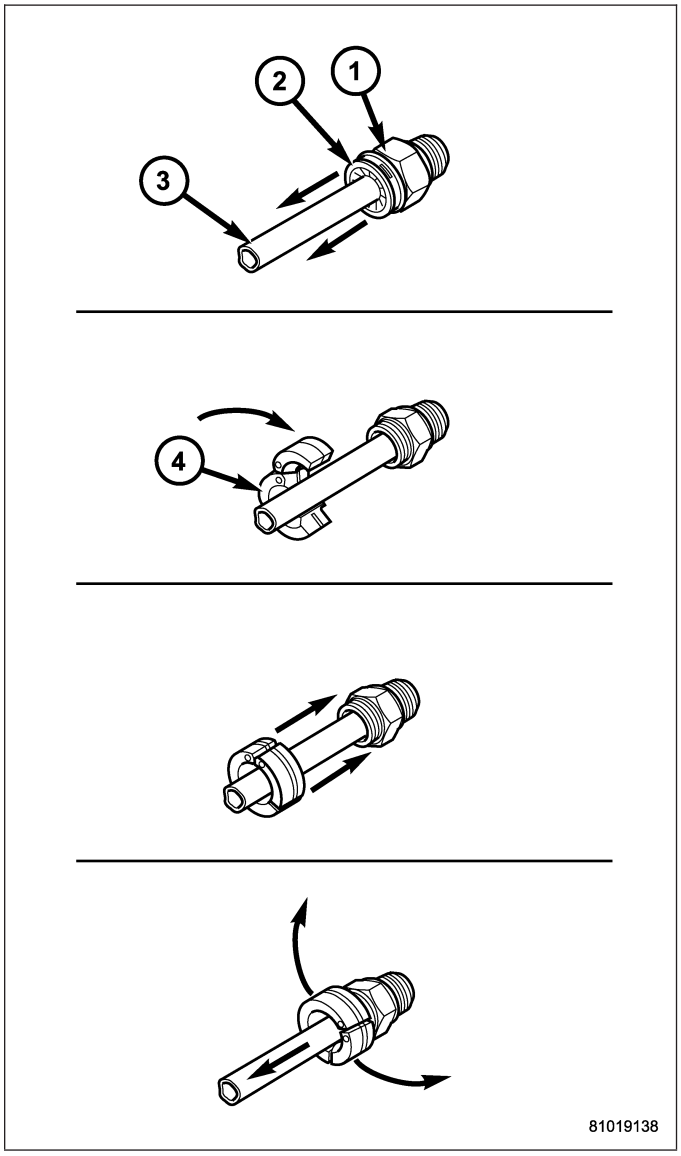

ASSEMBLY

1. Align fluid cooler line (3) with quick connect fitting (1) while pushing straight into the fitting.
2. Push in on oil cooler line until a “click” is heard or felt.
3. Slide dust cap (4) down the oil cooler line and snap it over the quick connect fitting until it is fully seated and rotates freely. Dust cap (4) will only snap over quick connect fitting when the cooler line is properly installed.

NOTE: If dust cap will not snap into place, repeat assembly step #2.

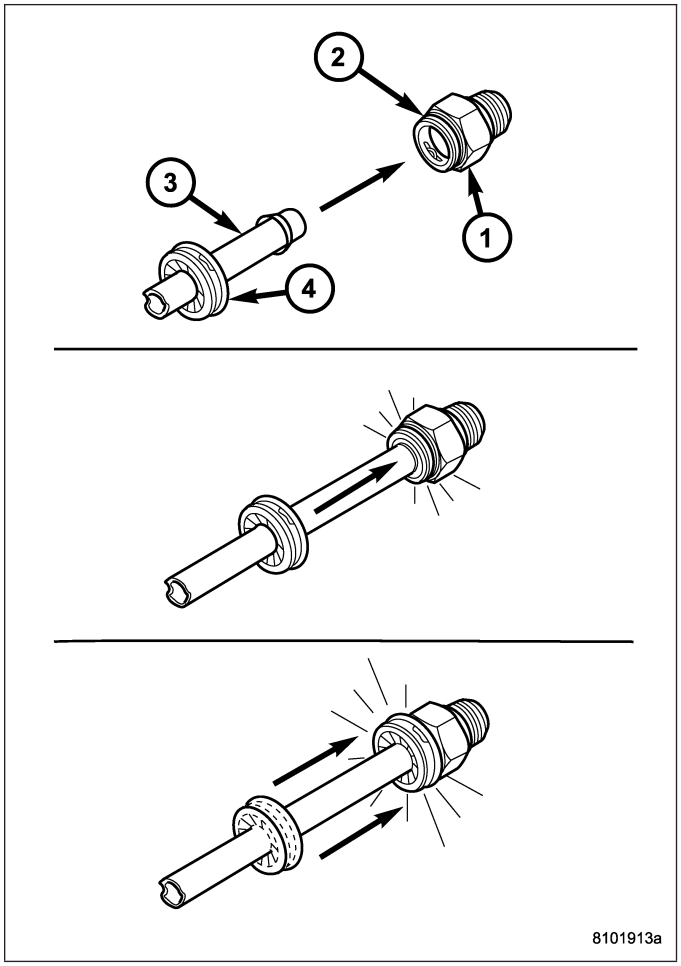

REMOVAL

NOTE: Review all Warnings and Cautions. (Refer to 19 - STEERING - WARNING).

CAUTION: Cap all open ends of power steering hoses, power steering pump fittings and steering gear ports when disconnected. This will prevent the entry of foreign material into the components during servicing.

1. Disconnect negative (-) cable from battery and isolate cable.
2. Siphon power steering fluid from fluid reservoir.
3. Remove the coolant recovery container (Refer to 7 - COOLING/ENGINE/COOLANT RECOVERY CONTAINER - REMOVAL).
4. Remove the air cleaner housing lid and tube assembly (Refer to 9 - ENGINE/AIR INTAKE SYSTEM/AIR CLEANER HOUSING - REMOVAL).
5. Remove accessory drive belt from tensioner pulley and power steering pump drive pulley. (Refer to 7 - COOLING/ACCESSORY DRIVE/DRIVE BELTS - REMOVAL)
6. Unthread quick-connect fitting and remove power steering pressure hose from power steering pump pressure fitting. Drain excess power steering fluid from line.

7. Disconnect A/C clutch coil wire connector (2).

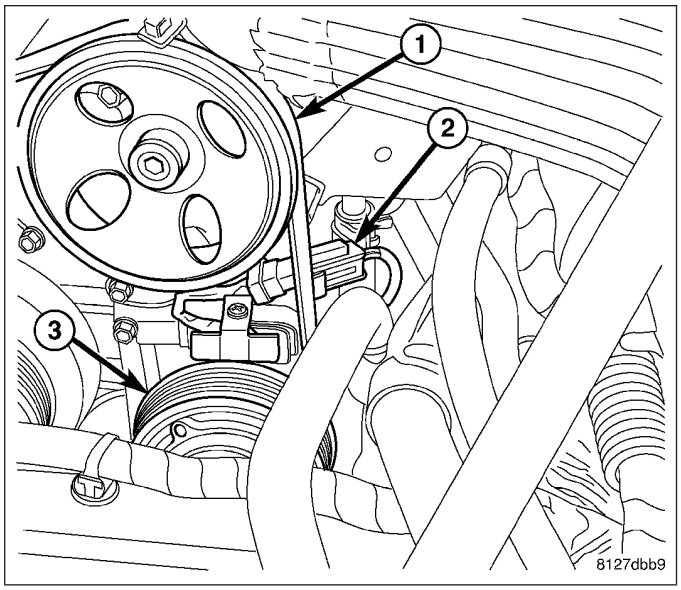

8. Remove return hose from radiator fan at power steering pump reservoir.
9. Remove return hose from fluid cooler at power steering pump reservoir.
10. Remove three bolts mounting power steering pump (5) to engine.
11. Remove power steering pump.
12. If required, transfer necessary parts from removed power steering pump to replacement power steering pump. (Refer to 19 - STEERING/PUMP - DISASSEMBLY).

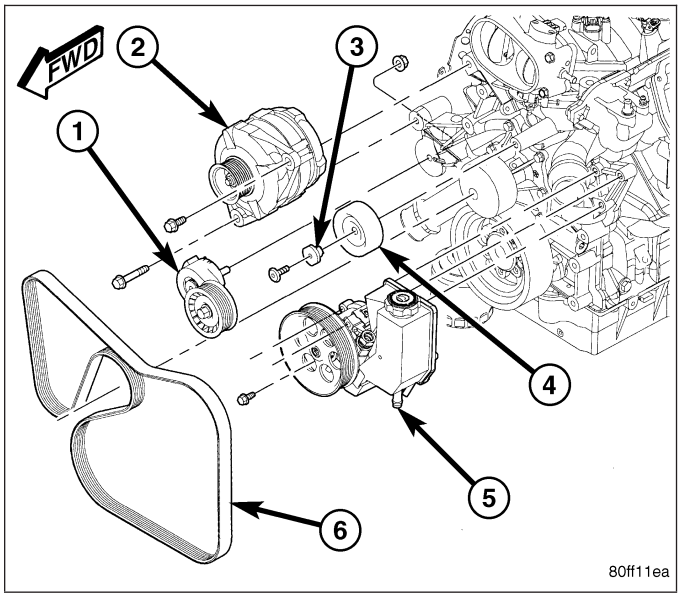

INSTALLATION

1. Install power steering pump (5).
2. Install three power steering pump mounting bolts. Tighten mounting bolts to 23 N·m (200 in. lbs.) torque.

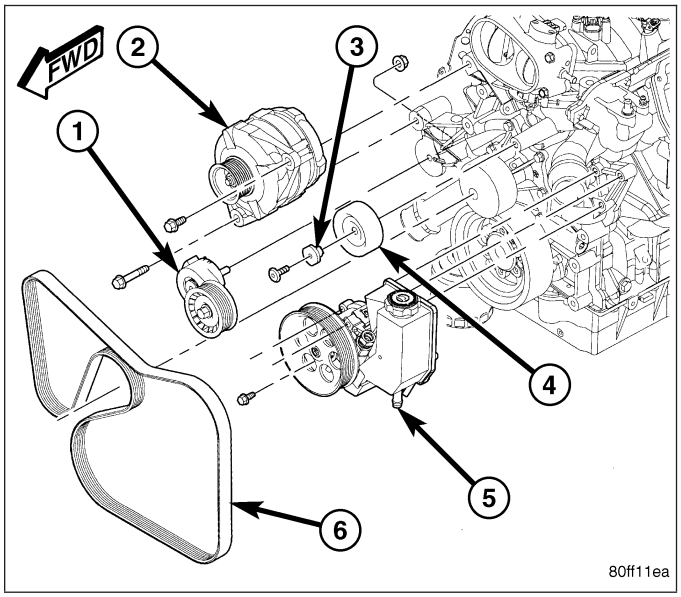

3. Install return hose from fluid cooler on fitting of power steering pump reservoir. Install hose clamp on return hose past upset bead on power steering reservoir fitting.
4. Install return hose from radiator fan on fitting of power steering pump reservoir. Install hose clamp on return hose past upset bead on power steering reservoir fitting.
5. Install power steering pressure hose in power steering pump pressure fitting. Tighten pressure hose quick-connect fitting to 28 N·m (21 ft. lbs.) torque.
6. Connect A/C clutch coil wire connector (2).

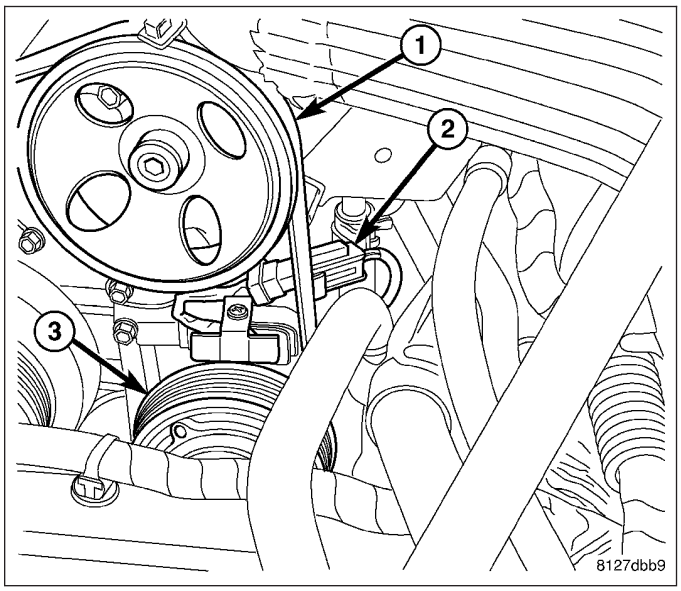

7. Install accessory drive belt. (Refer to 7 - COOLING/ACCESSORY DRIVE/DRIVE BELTS - INSTALLATION).
8. Install the air cleaner housing lid and tube assembly (Refer to 9 - ENGINE/AIR INTAKE SYSTEM/AIR CLEANER HOUSING - INSTALLATION).
9. Install the coolant recovery container (Refer to 7 - COOLING/ENGINE/COOLANT RECOVERY CONTAINER - INSTALLATION).
10. Connect the battery negative (-) cable to battery negative battery terminal.
11. Fill power steering pump reservoir to correct fluid level. (Refer to 19 - STEERING/PUMP/FLUID - STANDARD PROCEDURE)
12. Perform Power Steering Pump Initial Operation procedure. (Refer to 19 - STEERING/PUMP - STANDARD PROCEDURE).

13. Check for leaks at all hose connections.

SPECIFICATIONS

TORQUE

DESCRIPTION	N·m	Ft. Lbs.	In. Lbs.
Power Steering Line nuts	28	21	—
Power Steering Pump Mounting Bolts	23	17	200

SPECIAL TOOLS

POWER STEERING

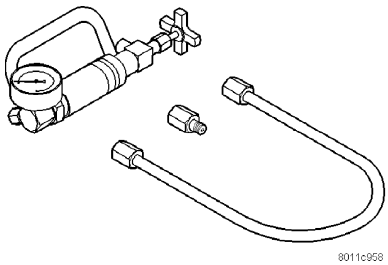

ANALYZER SET, POWER STEERING FLOW/ PRESSURE 6815

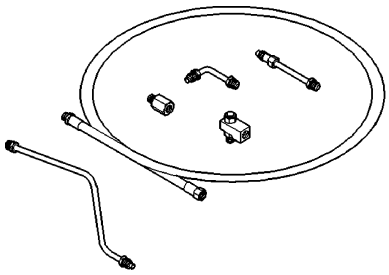

ADAPTERS, POWER STEERING FLOW/PRESSURE TESTER - 6893

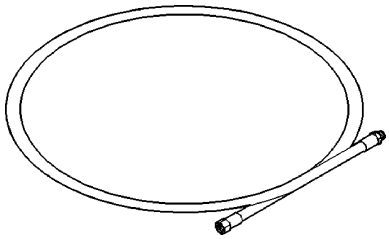

HOSE, POWER STEERING-6959

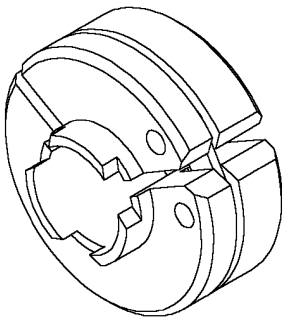

Transmission Cooler Line Disconnect Tool - 8875

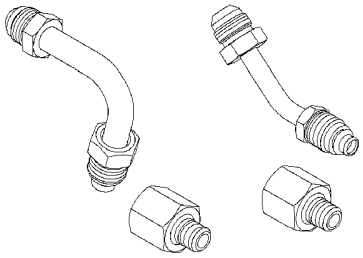

ADAPTERS, POWER STEERING 9091

HOSES

REMOVAL

PRESSURE HOSE - PUMP TO FAN

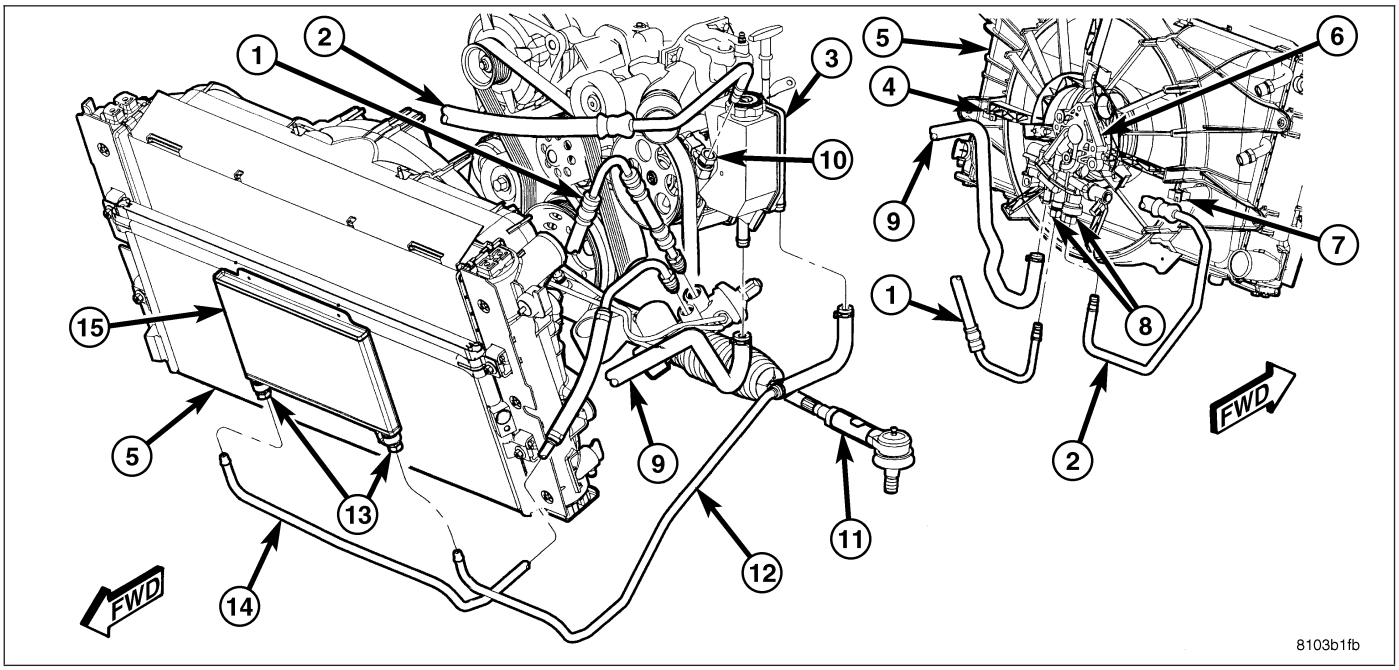

NOTE: Review all Warnings and Cautions. (Refer to 19 - STEERING - WARNING).

CAUTION: Cap all open ends of power steering hoses, power steering pump fittings and steering gear ports when disconnected. This will prevent the entry of foreign material into the components during servicing.

1. Siphon power steering fluid from fluid reservoir.
2. Unthread power steering pressure hose quick-connect (10) from power steering pump pressure fitting. Drain excess power steering fluid from line.
3. Unthread power steering pressure hose quick-connect (8) from hydraulic fan (6). Drain excess power steering fluid from line.
4. Remove power steering pressure hose (7) from routing clip on cooling module (5). Remove hose.

PRESSURE HOSE - FAN TO GEAR

NOTE: Review all Warnings and Cautions. (Refer to 19 - STEERING - WARNING).

CAUTION: Cap all open ends of power steering hoses, power steering pump fittings and steering gear ports when disconnected. This will prevent the entry of foreign material into the components during servicing.

1. Siphon power steering fluid from fluid reservoir.

2. Unthread power steering pressure hose quick-connect (6) from hydraulic fan (1). Drain excess power steering fluid from line.
3. Unthread power steering pressure hose tube nut from power steering gear port. Drain excess power steering fluid from line.
4. Remove power steering pressure hose.

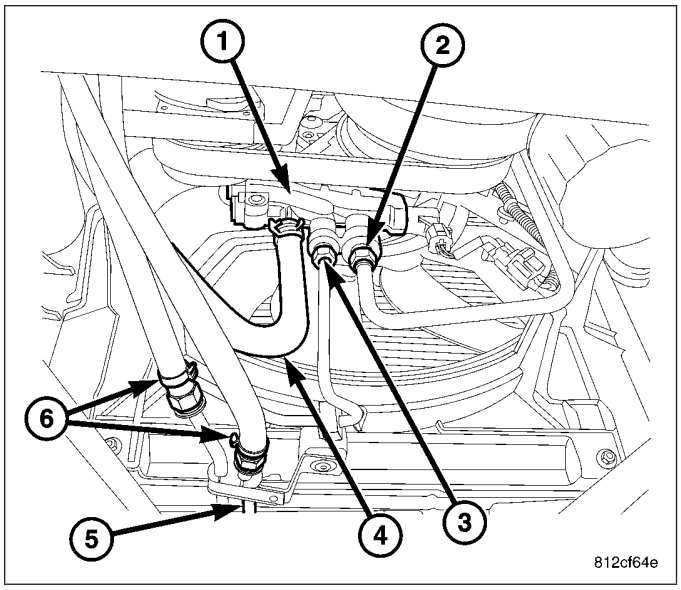

RETURN HOSE - FAN TO PUMP

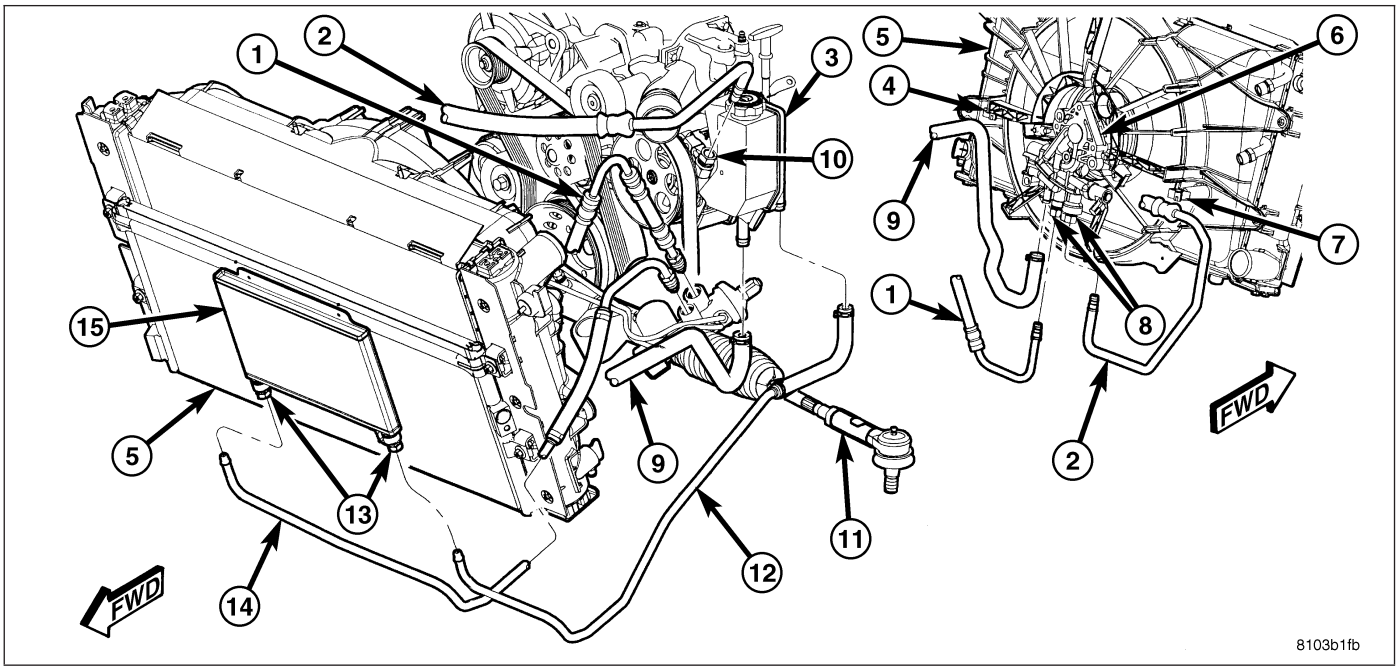

NOTE: Review all Warnings and Cautions. (Refer to 19 - STEERING - WARNING).

CAUTION: Cap all open ends of power steering hoses, power steering pump fittings and steering gear ports when disconnected. This will prevent the entry of foreign material into the components during servicing.

1. Siphon power steering fluid from fluid reservoir.
2. Remove clamp, then return hose at reservoir (9).
3. Remove clamp, then return hose at fan (9).
4. Remove hose.

RETURN HOSE - GEAR TO COOLER

NOTE: Review all Warnings and Cautions. (Refer to 19 - STEERING - WARNING).

CAUTION: Cap all open ends of power steering hoses, power steering pump fittings and steering gear ports when disconnected. This will prevent the entry of foreign material into the components during servicing.

1. Siphon power steering fluid from fluid reservoir.
2. Unthread power steering return hose tube nut from power steering gear port. Pull tube out of gear port and drain excess power steering fluid from line.

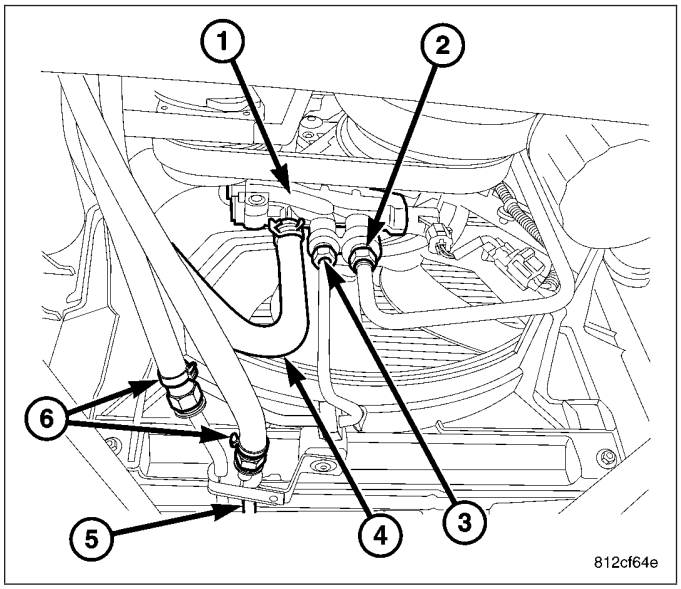

3. Raise vehicle. (Refer to LUBRICATION & MAINTENANCE/HOISTING - STANDARD PROCEDURE)
4. Remove front splash shield
5. Disconnect the quick connect fittings (1) on the cooler hose going to the cooler using special tool 8875.

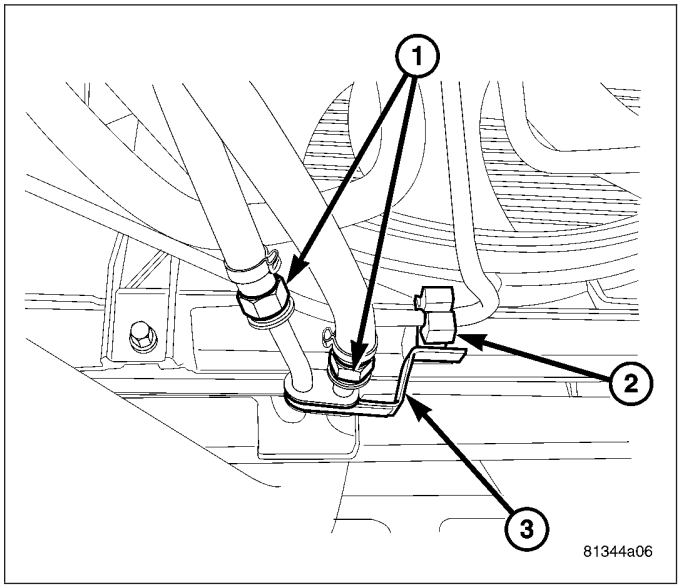

RETURN HOSE - COOLER TO PUMP

NOTE: Review all Warnings and Cautions. (Refer to 19 - STEERING - WARNING).

CAUTION: Cap all open ends of power steering hoses, power steering pump fittings and steering gear ports when disconnected. This will prevent the entry of foreign material into the components during servicing.

1. Siphon power steering fluid from fluid reservoir.
2. Remove clamp, then return hose at reservoir.
3. Raise vehicle. (Refer to LUBRICATION & MAINTENANCE/HOISTING - STANDARD PROCEDURE)
4. Remove front air deflector.
5. Disconnect the quick connect fitiing (6) at the return hose from the metal line at the cooler using special tool 8875.

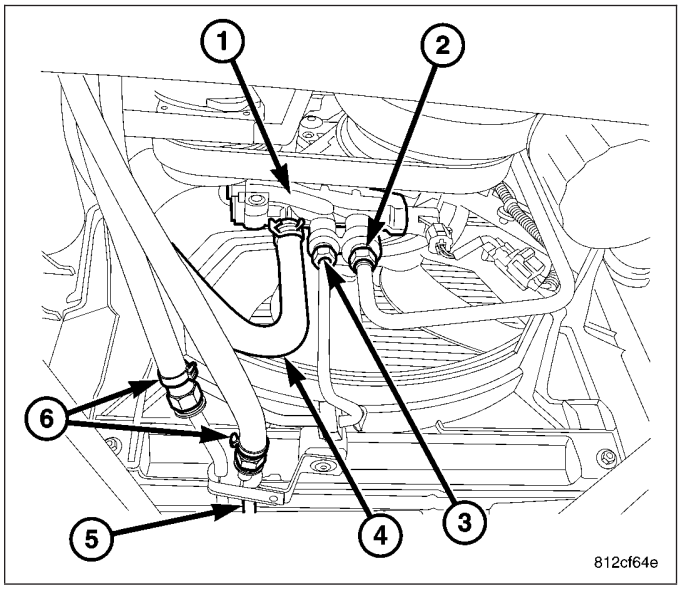

INSTALLATION

PRESSURE HOSE - PUMP TO FAN

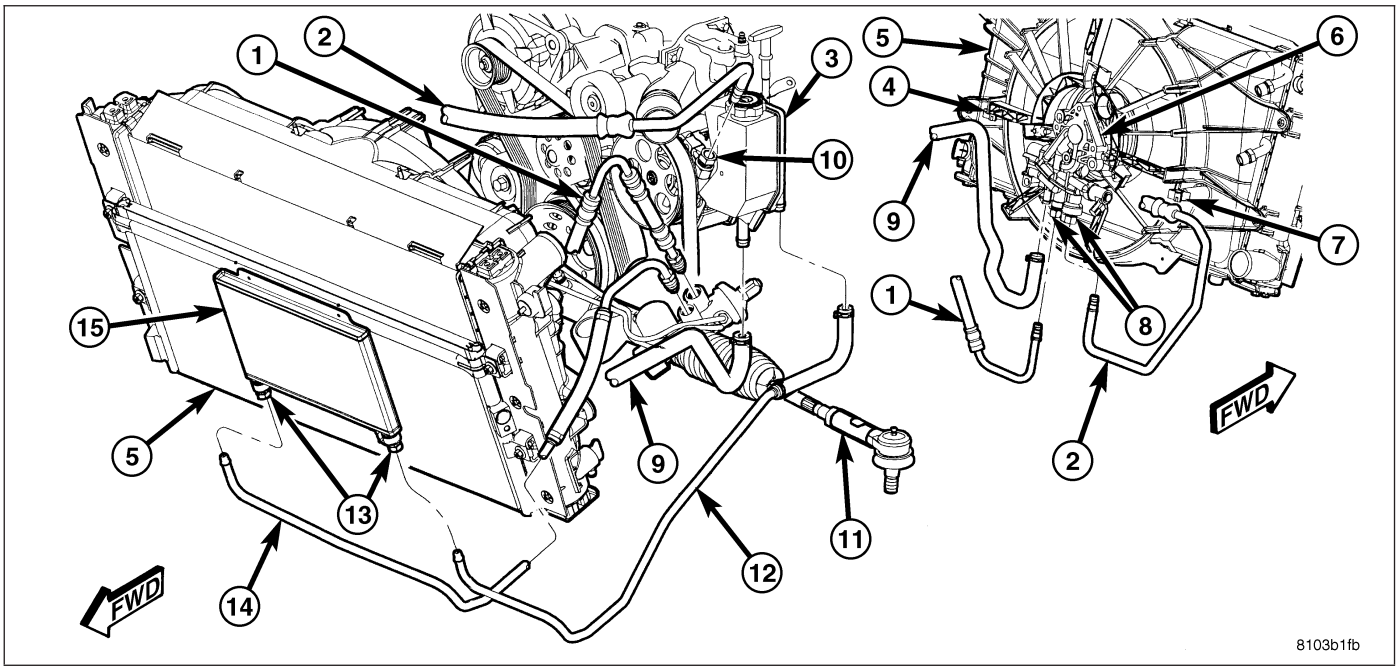

NOTE: Before installing power steering hose, replace used O-rings as necessary. Clean hose ends and open ports with a lint-free cloth. Lubricate O-rings with clean power steering fluid.

1. If pressure hose is separate from quick-connect fittings:
   a. Thread quick-connect fitting (8) into cooling fan port. Tighten fitting to 28 N·m (21 ft. lbs.) torque.
   b. Slide fan end of pressure hose tube into quick-connect fitting until it locks into place.
2. If pressure hose has quick-connect fittings installed on ends, thread fan end quick-connect fitting into fan port. Tighten hose fitting to 28 N·m (21 ft. lbs.) torque.
3. Install power steering pressure hose into routing clip (7) on cooling module (5).

4. If pressure hose is separate from quick-connect fittings:
   a. Thread quick-connect fitting into power steering pump pressure fitting (10). Tighten hose fitting to 28 N·m (21 ft. lbs.) torque.
   b. Slide pump end of pressure hose tube into quick-connect fitting until it locks into place.
5. If pressure hose has quick-connect fittings installed on ends, thread pump end quick-connect fitting into power steering pump pressure fitting. Tighten fitting to 28 N·m (21 ft. lbs.) torque.
6. Fill power steering pump reservoir to correct fluid level. (Refer to 19 - STEERING/PUMP/FLUID - STANDARD PROCEDURE)
7. Perform Power Steering Pump Initial Operation procedure. (Refer to 19 - STEERING/PUMP - STANDARD PROCEDURE).
8. Check for leaks at all hose connections.

PRESSURE HOSE - FAN TO GEAR

NOTE: Before installing power steering hose, replace used O-rings as necessary. Clean hose ends and open ports with a lint-free cloth. Lubricate O-rings with clean power steering fluid.

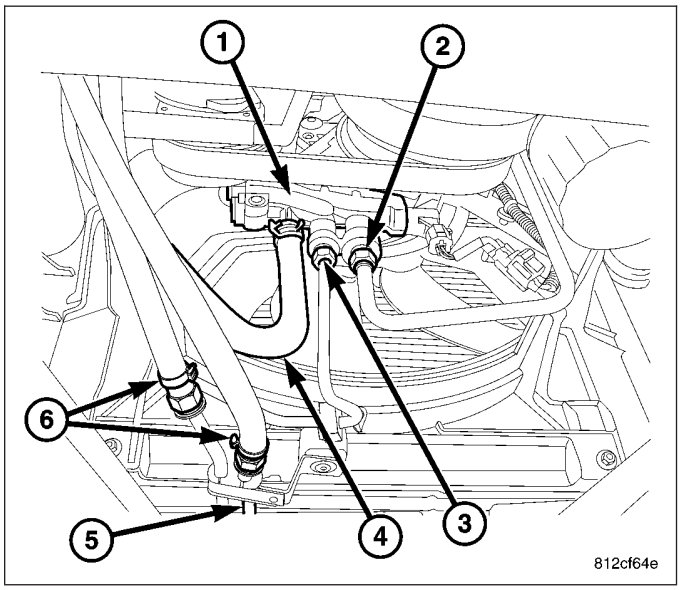

1. Thread power steering pressure hose tube nut on end of hose into power steering gear port. Tighten tube nut to 28 N·m (21 ft. lbs.) torque.
2. If fan end of pressure hose is separate from quick-connect fitting:
   a. Thread quick-connect fitting (6) into cooling fan port (1). Tighten fitting to 28 N·m (21 ft. lbs.) torque.
   b. Slide fan end of pressure hose tube into quick-connect fitting until it locks into place.
3. If fan end of pressure hose has quick-connect fitting installed, thread fan end quick-connect fitting into fan port. Tighten fitting to 28 N·m (21 ft. lbs.) torque.
4. Fill power steering pump reservoir to correct fluid level. (Refer to 19 - STEERING/PUMP/FLUID - STANDARD PROCEDURE)
5. Perform Power Steering Pump Initial Operation procedure. (Refer to 19 - STEERING/PUMP - STANDARD PROCEDURE).
6. Check for leaks at all hose connections.

RETURN HOSE - FAN TO PUMP

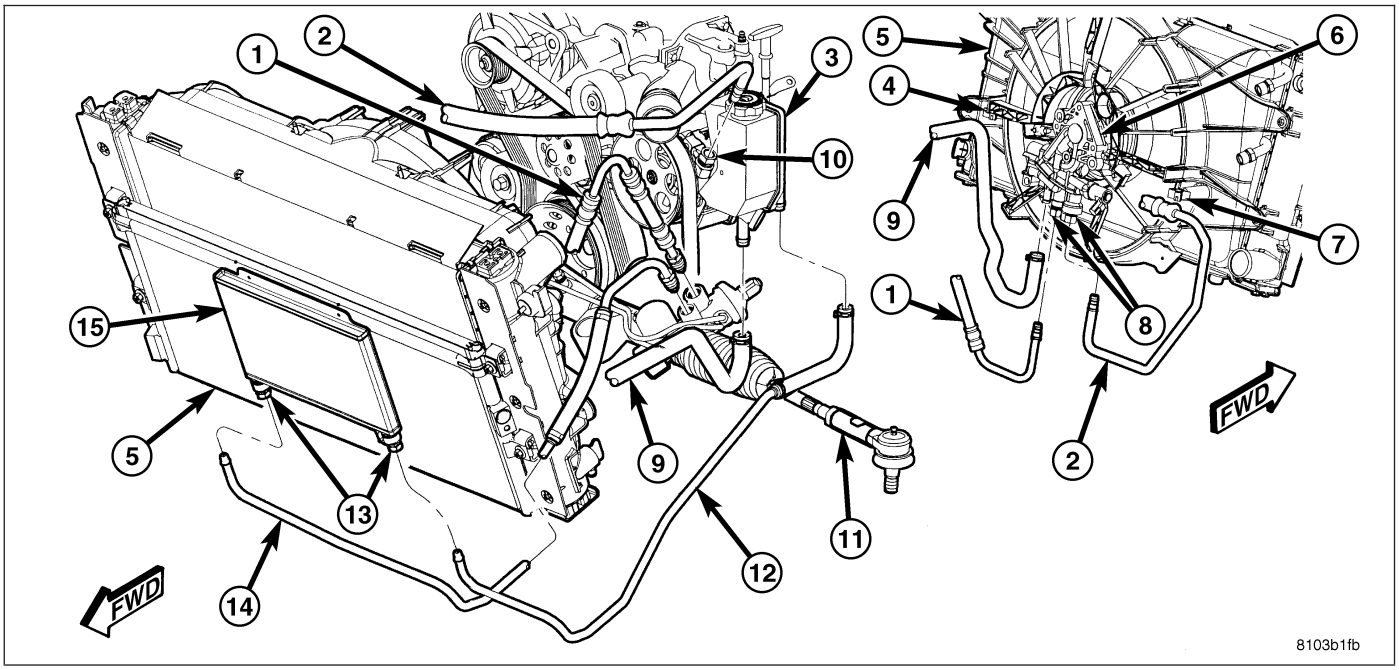

NOTE: Before installing power steering hose, clean open power steering hose ends and fittings with a lint-free towel.

1. Slide hose clamps onto ends of return hose far enough to clear molded fitting on pump reservoir and fan fitting once hose is installed.
2. Slide fan end of return hose (9) onto fan fluid fitting. Expand hose clamp and slide it into position on hose past bead formed into fitting.
3. Install power steering pressure hose into routing clip (7) on cooling module (5).
4. Slide pump end of return hose (9) onto molded fitting on pump reservoir (3). Expand hose clamp and slide it into position on hose past bead formed into reservoir fitting.
5. Fill power steering pump reservoir to correct fluid level. (Refer to 19 - STEERING/PUMP/FLUID - STANDARD PROCEDURE)
6. Perform Power Steering Pump Initial Operation procedure. (Refer to 19 - STEERING/PUMP - STANDARD PROCEDURE).
7. Check for leaks at all hose connections.

RETURN HOSE - GEAR TO COOLER

NOTE: Before installing power steering hose, replace used O-rings as necessary. Clean hose ends, fittings and open ports with a lint-free cloth. Lubricate O-rings with clean power steering fluid.

1. Install return hose into engine compartment using reverse of how it was removed.
2. Install hose at fluid cooler to the quick connect (1).
3. Install front air deflector.
4. Lower vehicle.
5. Thread return hose tube nut on gear end of hose into power steering gear port. Tighten tube nut to 28 N·m (21 ft. lbs.) torque.

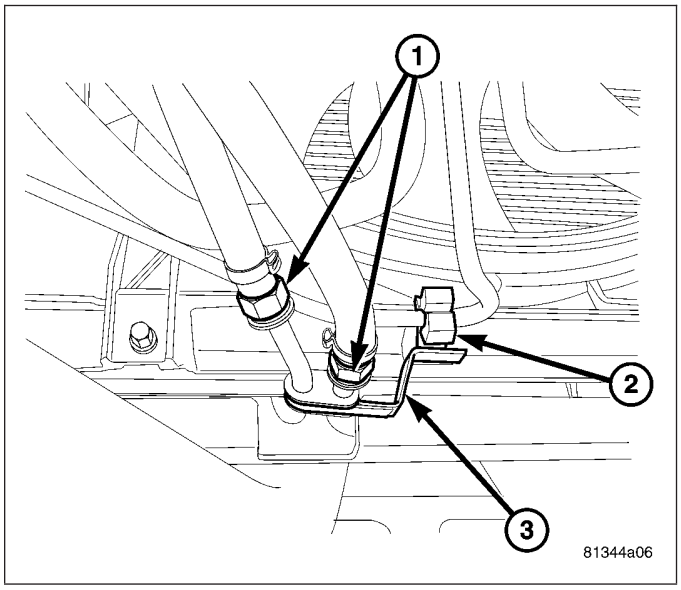

6. Fill power steering pump reservoir to correct fluid level. (Refer to 19 - STEERING/PUMP/FLUID - STANDARD PROCEDURE)
7. Perform Power Steering Pump Initial Operation procedure. (Refer to 19 - STEERING/PUMP - STANDARD PROCEDURE).
8. Check for leaks at all hose connections.

RETURN HOSE - COOLER TO PUMP

NOTE: Before installing power steering hose, replace used O-rings as necessary. Clean hose ends, fittings and open ports with a lint-free cloth. Lubricate O-rings with clean power steering fluid.

1. Install hose into engine compartment using reverse of how it was removed.
2. Reconnect the quick connect fitting (6) of the hose at fluid cooler (5).
3. Install front air deflector.
4. Lower vehicle.
5. Slide pump end of return hose onto molded fitting of pump reservoir. Expand hose clamp and slide it into position on hose past bead formed into reservoir fitting.

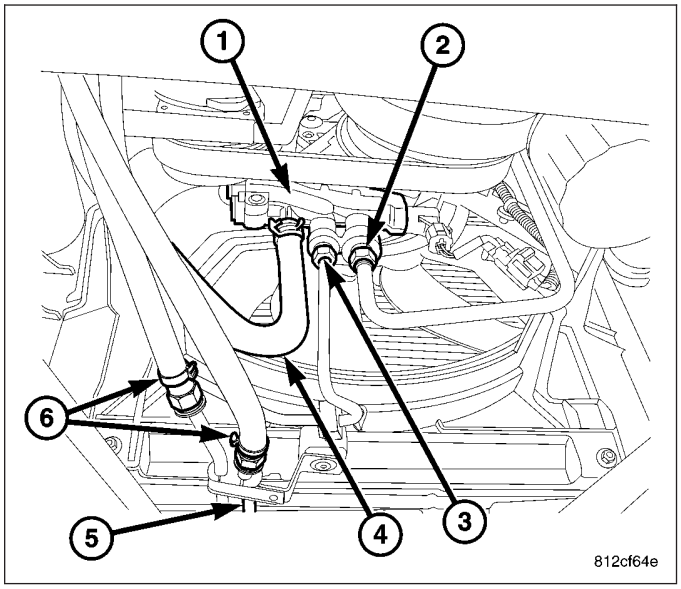

6. Fill power steering pump reservoir to correct fluid level. (Refer to 19 - STEERING/PUMP/FLUID - STANDARD PROCEDURE)
7. Perform Power Steering Pump Initial Operation procedure. (Refer to 19 - STEERING/PUMP - STANDARD PROCEDURE).
8. Check for leaks at all hose connections.

RESERVOIR

REMOVAL

1. Remove power steering pump from vehicle. (Refer to 19 - STEERING/PUMP - REMOVAL)
2. Clean exterior of pump.
3. Clamp pump body in a soft jaw vice.

NOTE: Use new retaining clips for installation.

4. Pry up tab and slide each retaining clip (2) off pump (1). Discard clips (2).
5. Remove fluid reservoir (1) from pump housing. Remove and discard O-ring seal.

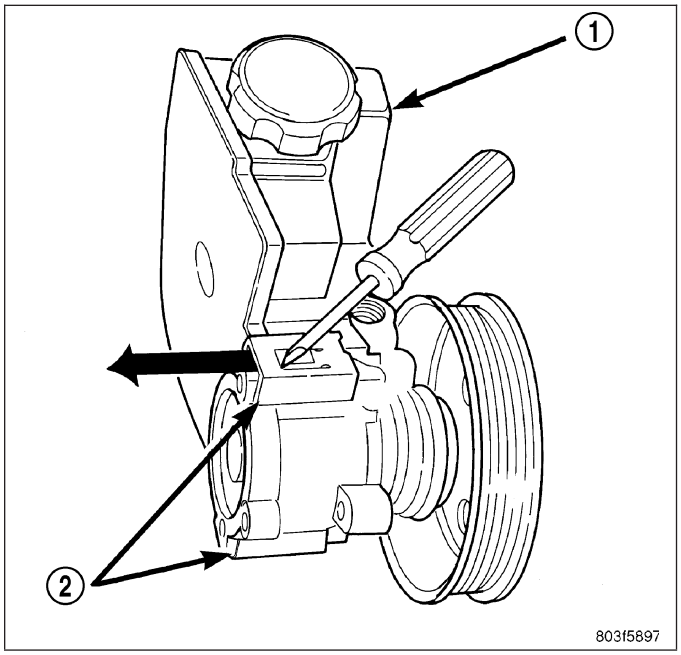

INSTALLATION

1. Lubricate new O-ring Seal with clean ATF+4 fluid or equivalent.
2. Install O-ring seal in housing.
3. Install reservoir (1) onto housing.
4. Slide and tap in NEW reservoir retainer clips (2) making sure each tab locks into place on housing.

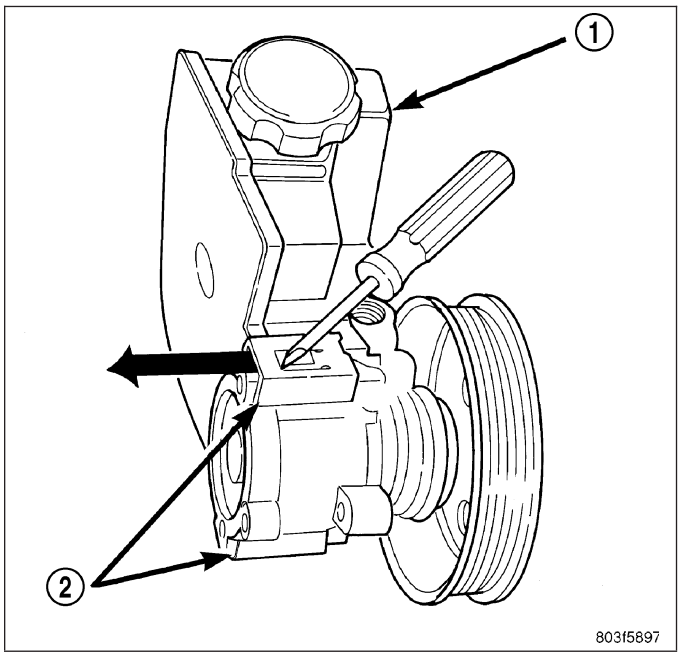

5. Install power steering pump on vehicle. (Refer to 19 - STEERING/PUMP - INSTALLATION)
6. Fill power steering pump reservoir to correct fluid level. (Refer to 19 - STEERING/PUMP/FLUID - STANDARD PROCEDURE)

PULLEY

REMOVAL

1. Remove the power steering pump assembly (1), (Refer to 19 - STEERING/PUMP - REMOVAL).
2. Remove the pulley (2) from the pump using (OTC® 7185) power steering pulley removal tool or equivalent (3).

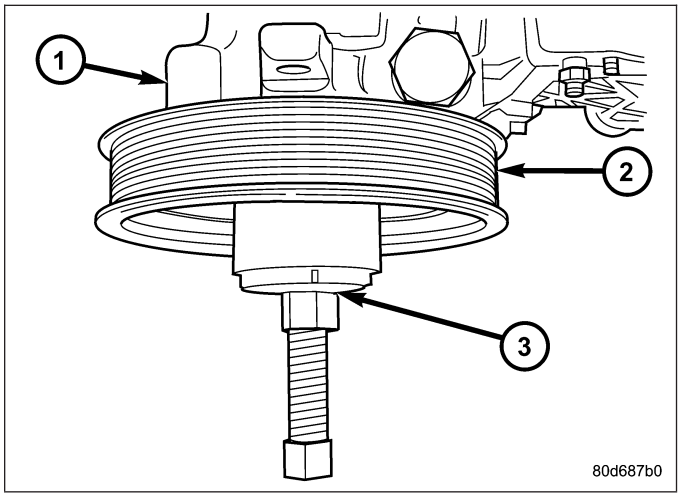

INSTALLATION

1. Replace pulley (1) if bent, cracked, or loose.
2. Install pulley (1) on pump with Installer C-4063-B (2) flush with the end of the shaft. Ensure the tool and pulley remain aligned with the pump shaft.
3. Install pump assembly.
4. With Serpentine Belts; Run engine until warm (5 min.) and note any belt chirp. If chirp exists, move pulley outward approximately 0.5 mm (0.020 in.). If noise increases, press on 1.0 mm (0.040 in.). **Be careful that pulley does not contact mounting bolts.**

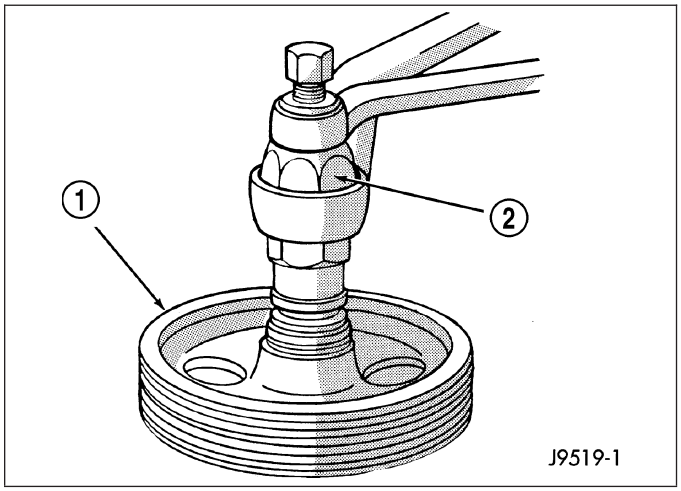

FLUID COOLER TUBE

REMOVAL

1. Drain and siphon the power steering fluid.
2. Remove the underneath splash shield.
3. Disconnect the quick connect power steering fluid cooler tubes (3) from the fluid cooler (1) using the line disconnect tool 8875 (2).

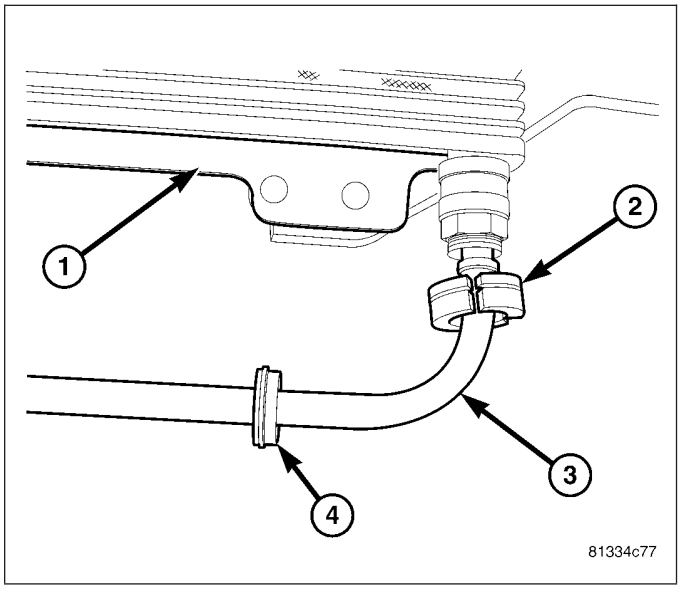

4. Disconnect the quick connect (1) return and supply tubes connected to the power steering fluid cooler using the line disconnect tool 8875.

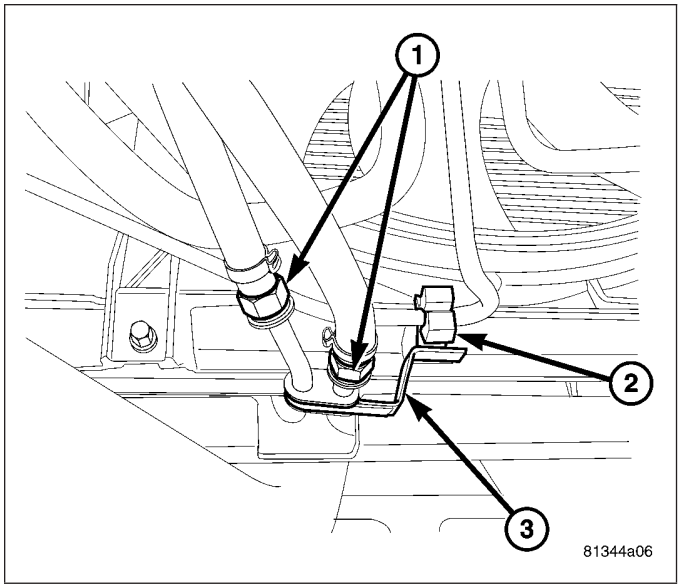

5. Remove the tube retaining bracket (4) and then the fluid cooler tubes (2).

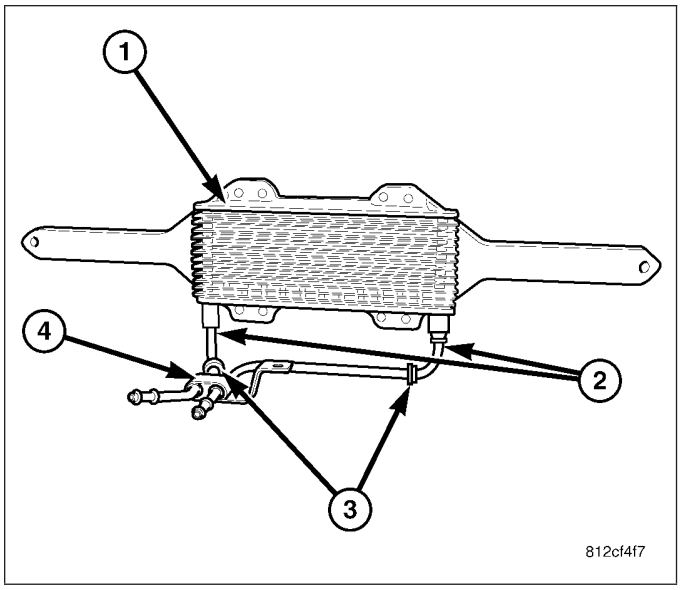

INSTALLATION

1. Reconnect the quick connect fittings (2) to the return and supply tubes (3) to the power steering fluid cooler (1).
2. Reconnect the quick connect fittings (2) to the return and supply tubes to the power steering fluid hoses.
3. Install the tube retaining bracket (4).
4. Install the lower front air deflector.
5. Refill the power steering fluid (Refer to 19 - STEERING/PUMP - STANDARD PROCEDURE).

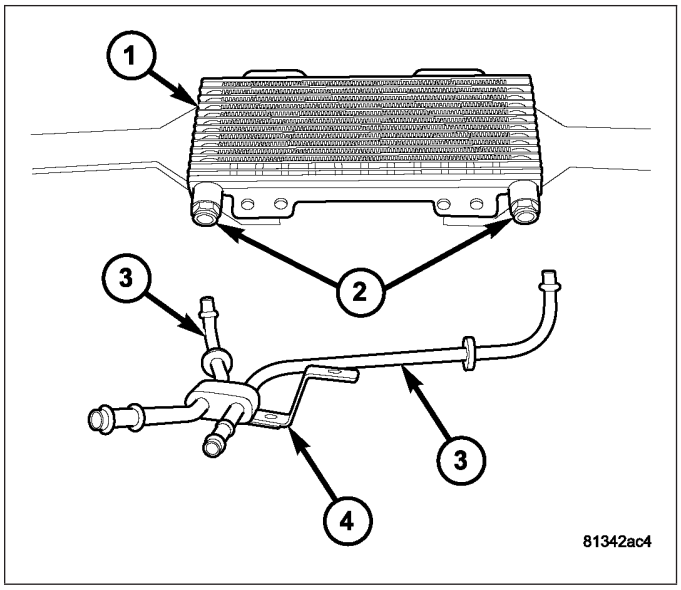

FLUID COOLER

REMOVAL

1. Drain and siphon the power steering fluid.
2. Remove the underneath splash shield.
3. Remove the two bolts (2) from the air deflector (4) between the bumper (3) and A/C condensor (1).

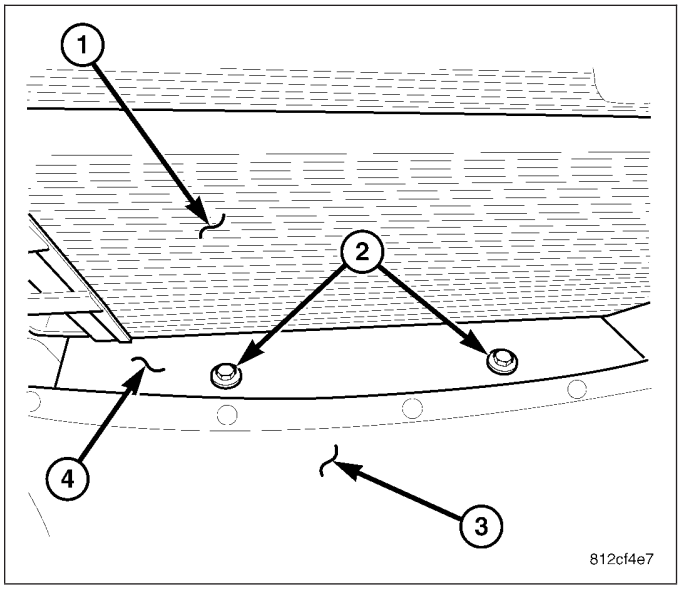

4. Disconnect the return and supply hoses connected to the power steering fluid cooler using the line disconnect tool 8875.
5. Disconnect the hose mounting bracket (3).

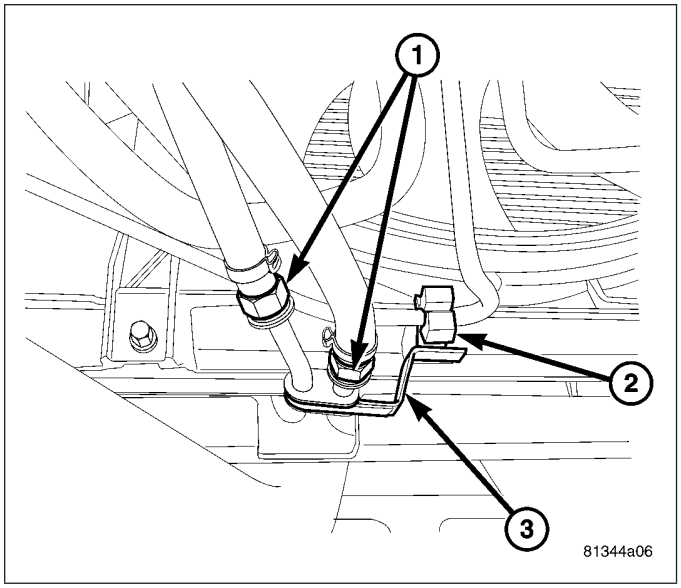

6. Remove the mounting bracket bolts (1) securing the fluid cooler (3) to the brace.

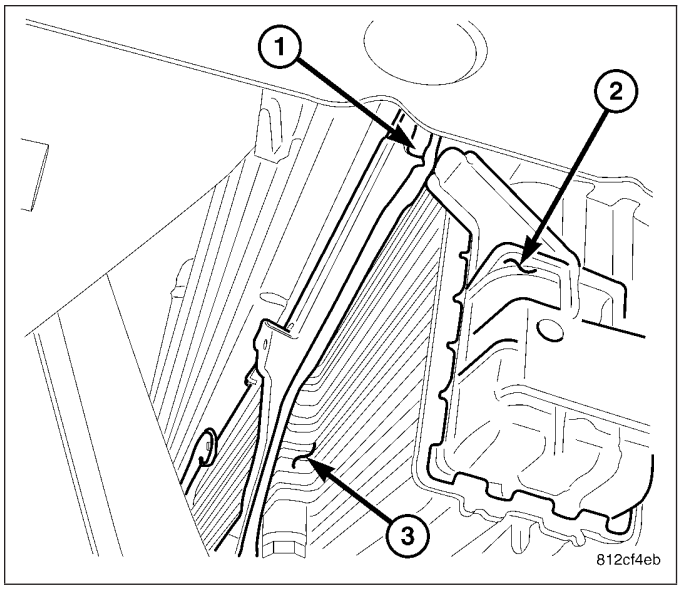

7. Remove the fluid cooler (1) from the vehicle.

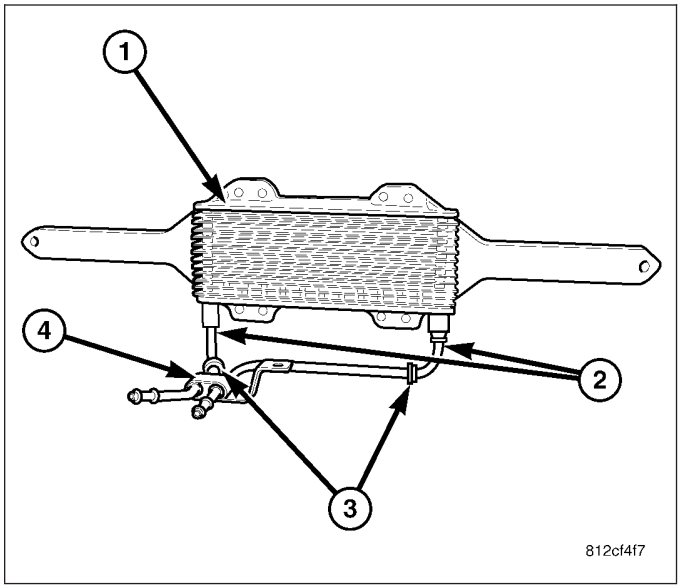

NOTE: If needed disconnect the power steering fluid cooler hoses (3) from the fluid cooler (1) using special tool 8875 (2).

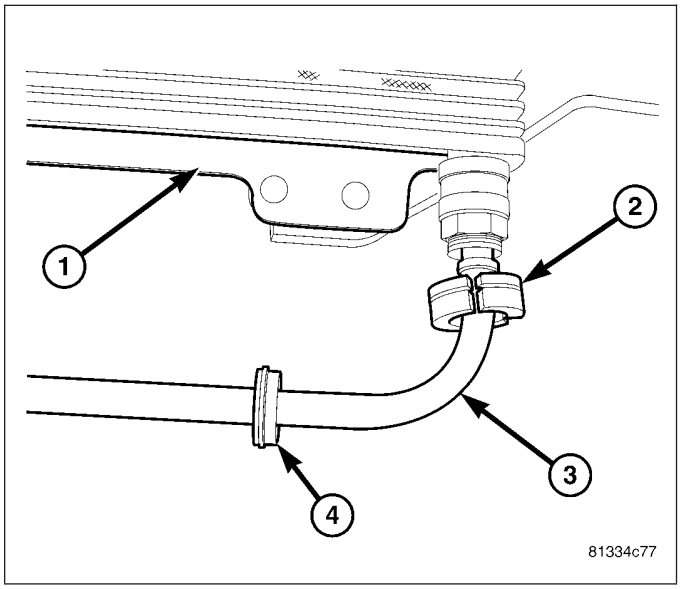

INSTALLATION

1. Install the fluid cooler (1) to the vehicle.

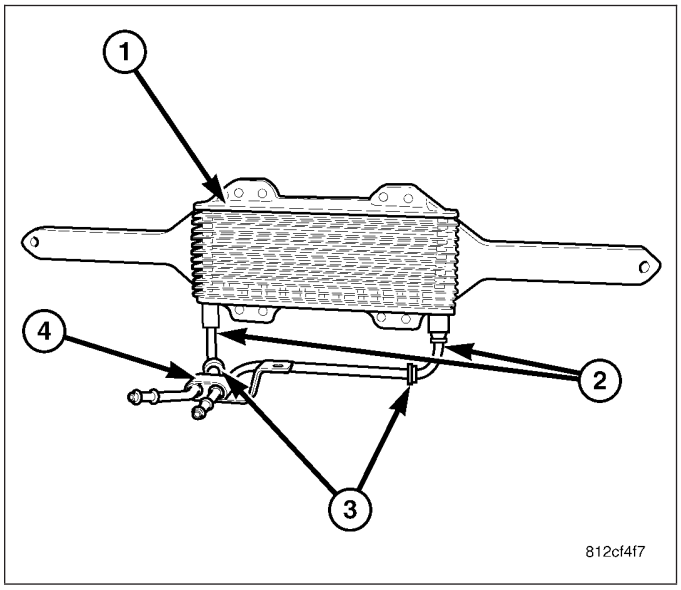

2. Install the mounting bracket bolts (1) securing the fluid cooler (3) to the brace.

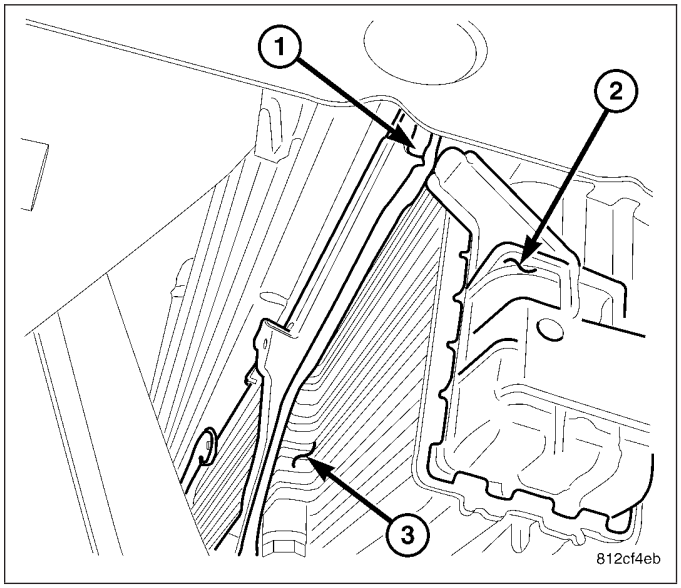

3. Reconnect the quick connect fitting (1) to the return and supply hoses to the power steering fluid cooler.
4. Install the hose retaining bracket (3).

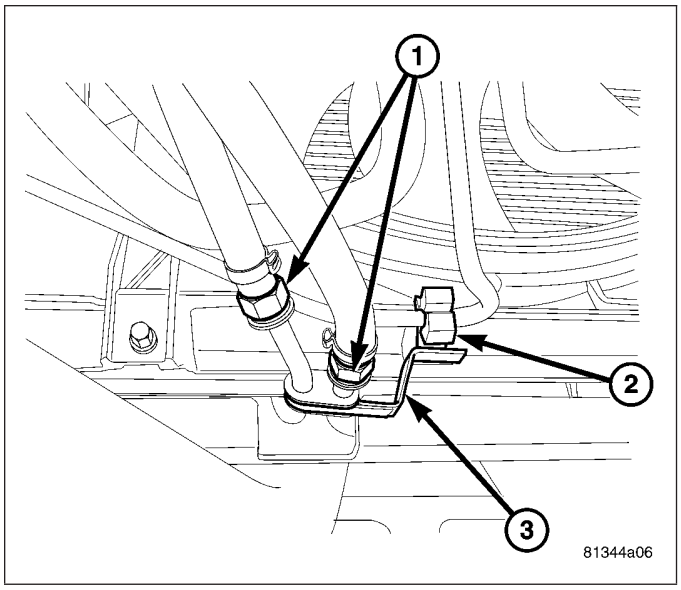
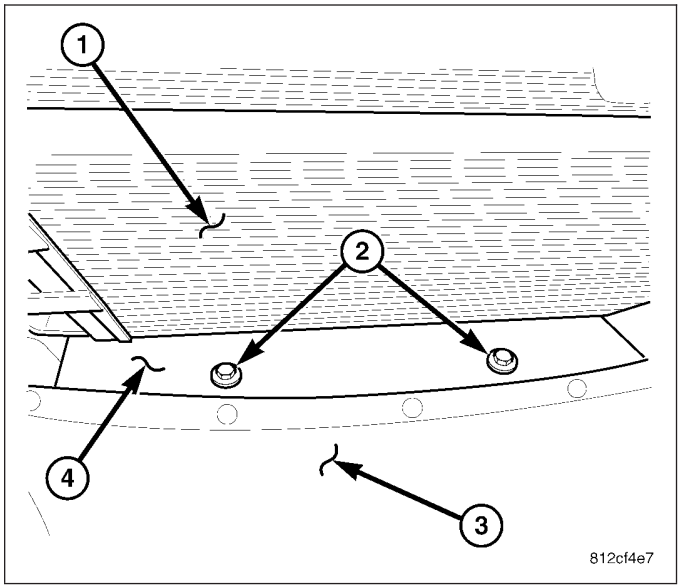
5. Install the air deflector shield (4).
6. Install the lower front air deflector.
7. Refill the power steering fluid (Refer to 19 - STEERING/PUMP - STANDARD PROCEDURE).