https://truckmanualshub.com/

Workshop manual
ZTH

English

https://truckmanualshub.com/

https://truckmanualshub.com/

WORKSHOP MANUAL

RIDE-ON LAWN MOWER

ZTH

Contents

Contents 1
Safety Instructions 3
General Instructions 3
Special Instructions 3
Explanation of Symbols 5
Tools 6
Technical Data 7
Delivery and Dealer Service 11
Pre-delivery Service 11
After the First 8 Hours 12
25 Hour Service 12
50 Hour Service 12
100 Hour Service 13
300 Hour Service 13
At Least Once a Year 14
Maintenance Schedule 15
Delivery Servicing 19
To our Dealers 19
Removing the Mower from its Packaging 19
Delivery Service 20
Test Running 24
Administration 24
Design and Function 25
General 25
Mower Identification 25
Engine 27
Drive and Control 27
Brakes 27
Mower Deck 28
Repairs 29
Engine 29
Adjusting the Throttle Wire 31
Checking and Adjusting the Choke Wire 32
Fuel tank 33
Adjusting Motion Control Lever Linkages 34
Adjusting Motion Control Lever Spring-back 34
Adjusting the Park Brake 34
Mower Deck 35
Spindle Blade Bearings 36
Sharpening and Balancing Blades 37
Setting the Mower Deck 38
Deck Belt 38
Hydraulic Pump Belt 40
Front Wheel Bearings 41
Electrical System 43
Troubleshooting 43
Wiring Assembly 43
Battery 46
Fuses 46
Relays 47
Starter Motor Contactor 47
Ignition and Start Switch 48
Hour Meter 48
Blade Switch 49
Mower Deck Clutch 49
Motion Control Switches 50
Park Brake Interlock Switch 51
Welding 52
Hydraulic System 53
Hydraulics Hygiene 53
Hydraulic Oils 54
Correct Oil Leaks 54
Keep Hydraulic Oil Clean 54
Work Methods 54
ZTH Hydraulic System 55
Hydraulic Tank 56
The Cooler for the Hydraulic System 57
Hydraulic Filter 57
Hydraulic Lines 57
Hydraulic Pump 58
Hydraulic Motors 60
Troubleshooting 61
Engine 61
Wiring Harness 61
Clutch 63
Hydraulic Pump 66

https://truckmanualshub.com/

https://truckmanualshub.com/

Safety Instructions

General Instructions

This workshop manual has been written for users who have a good understanding of the repair and servicing of ride-on mowers.

The workshop where the ride-on mower is repaired must have have all the safety systems demanded by local regulations.

No one is to attempt to repair the ride-on mower without having first read and understood the contents of this manual.

The ride-on mower has been safety tested. Safety approval applies only when the ride on-mower uses parts or equipment supplied or recommended by Husqvarna Turf Care.

Special Instructions

The fuel used in the ride-on mower is hazardous if used incorrectly. Pay particular attention to the following:

- The fuel and the fumes it gives off are toxic.
- Eye and skin complaints can result from incorrect exposure.
- Breathing difficulties can result from incorrect exposure.
- The fuel and fumes are highly flammable.

When using compressed air, users must not direct the air stream towards themselves or any other person. Air may penetrate the blood stream and cause life-threatening damage.

Use hearing protectors when test driving.

After test driving, do not touch the muffler before it has cooled down (danger of burns). This especially applies if the ride-on mower has a catalytic converter. If consumed, the lining on and in the catalytic converter element can damage health. Wear protective gloves whenever working on the catalytic converter or the silencer.

With the engine running, many engine and drive system components become hot and may cause burns if touched. Do not touch such components before they have cooled down.

When draining oil from a hot engine or hot hydraulic system, be aware that the oil can be hot enough to cause burns. Wear protective glasses whenever there is a risk of splashing.

The mower blades are sharp. To avoid cuts, always wear protective gloves when handling the blades.

Wear protective glasses when working with springs. Springs can detach from their mounts and fly with great force into unprotected eyes.

Use the right tools for each job. Check all tools before using them and repair or replace as necessary.

https://truckmanualshub.com/

SAFETY REGULATIONS

Keep the workplace clean and tidy. Ensure that illumination is good, that tools which are not being used are stored appropriately and that all waste (scrap, swarf, etc.) is immediately placed in the appropriate container. Pay particular attention to keeping the floor clean so that there is no risk of slipping or tripping.

Be extremely careful when handling battery acid. Severe burns may result if the acid touches the skin. If acid is spilt on the skin, drench immediately with running water.

Always wear protective glasses when handling battery acid. Blindness may result if acid gets into the eyes. If there is an accident, take immediate action and contact a doctor as soon as possible.

Be careful when working on the battery. Explosive gas is formed in the battery. Never handle the battery when smoking or in the vicinity of naked flames or sparks (the battery may explode and cause severe injuries).

During certain maintenance and service operations, it is required that the mower be rendered incapable of starting. This is to prevent injury to those working on or standing near the mower.

Hydrostatic braking may be lost if there is a failure in the hydrostatic drive.

Certain solvents and cleaning agents are flammable. Do not use them whenever there is a less dangerous alternative. Never use flammable solvents in areas where there is a risk of ignition. Dispose of used cleaning agents in sealed containers.

Respect the environment. Ensure that all solvents, waste oil and used oil filters are handled in an environment-friendly way. Observe all local regulations on the environment. A Husqvarna workshop must look clean at all times!

In this workshop manual, “warning boxes” containing further safety instructions will be found next to certain work instructions. Observe these safety instructions, they are there for your protection.

In this workshop manual, all locators (“right”, “left”, etc.) are judged as viewed from behind the forward-facing mower (i.e. as if standing directly behind the mower when it is ready to drive forwards).

https://truckmanualshub.com/

EXPLANATION OF SYMBOLS

Explanation of Symbols

The symbols below are used on the mower and in this manual. Study them carefully and be aware of what they mean.

WARNING!
Xxxxxxx xxxx xxxxxxxx xxx x.
xxxx xxxxxx xx.

Is used in this manual to make the user aware that there is a danger of **personal injury**, especially if the special instructions are not followed.

IMPORTANT INFORMATION
Xxxxxxx xxxx xxxxxxxx xxx x
xxxx xxxxxx xx.

Is used in this manual to make the user aware that there is a danger of **material damage**, especially if the special instructions are not followed. It is also used where it is judged that there is a danger of incorrect handling or incorrect assembly/fitting.

Reverse

Neutral

Fast

Slow

Choke

Fuel

Warning!

Park brake

CE conformity marking

Warning! Rotating blades, stand clear of the chute.

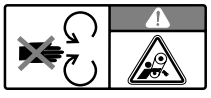
Do not touch rotating parts.

Battery acid is corrosive, explosive and flammable.

Do not stand here.

Max. sound emission.
Use ear protectors.

https://truckmanualshub.com/

Tools

The mower's special design means that most repair and maintenance work can be carried out using standard tools.

Servicing of engines and hydraulic pumps requires special tools. These are listed in the service manuals of the individual manufacturers.

The mower (engine excluded) has mainly UNC or UNF screw/bolt/nut threads. Certain nuts have special stiffy threads for securing. It is vital that exactly the right size tools (i.e. imperial measurement) are used on these.

Those working on the mower must have ready access to socket wrench sets and open end wrenches of the following sizes:

- 3/8"
- 7/16"
- 1/2"
- 9/16"
- 5/8"
- 11/16"
- 3/4"

The following are also required:

- Torque wrenches, 12 Nm - 110 Nm.
- 15/16" socket for torque tightening of blade bolts.
- 7/8" open end wrench or combination wrench for torque tightening of hydraulic lines.
- A set of small, imperial measurement, Allen keys.

WARNING!
If metric or other unsuitable tools are used, there is a danger that they will slip and cause personal injury. They may also damage the surfaces of the nut or bolt in such a way that tools can no longer get a firm grip.

https://truckmanualshub.com/

Technical Data

Model	ZTH5223	ZTH6125
Model part number	968 99 91 60	
Engine (spec. number)	Kawasaki (FH680V-AS15)	Kawasaki (FH721V-AS04)
Cylinder diameter	75.2 mm (2.96 in.)	75.2 mm (2.96 in.)
Cylinder stroke	76 mm (2.99 in.)	76 mm (2.99 in.)
Cylinder volume	675 cc (41.19 cu.in.)	675 cc (41.19 cu.in.)
Power	23 hp	25 hp
Engine RPM	2,950 RPM	2,950 RPM
Idle RPM	1,550 RPM	1,550 RPM
Spark plugs (2)	NGK BPR4ES	NGK BRR1550
Oil capacity, engine (total)	1.8 litres (3.8 US pints)	1.8 litres (3.8 US pints)
Engine weight	40.5 kg (89.3 lbs)	41.2 kg (90.8 lbs)
Cutting width	1321 mm (52 in.)	1549 mm (61 in.)
Blade length	457.2 mm (18 in.)	533.4 mm (21 in.)
Tightening torque, blade bolt	122 Nm (90 ft/lb)	122 Nm (90 ft/lb)
Cutting height	Adjustable 38 mm (1.5") to 152 mm (6") in 64 mm (0.25") increments	Adjustable 38 mm (1.5") to 152 mm (6") in 64 mm (0.25") increments
Blade engagement	Warner Mag-Stop Electromagnetic clutch	Warner Mag-Stop Electromagnetic clutch
Slip torque, clutch	271 Nm (200 ft/lb)	271 Nm (200 ft/lb)
Clutch coil resistance	1.74 - 1.93 ohms at 23°C (68°F)	1.74 - 1.93 ohms at 23°C (68°F)
Supply voltage clutch	12 - 14 V	12 - 14 V
Tightening torque, clutch bolt	67 Nm (50 ft/lb)	67 Nm (50 ft/lb)
Blade tip speed	4,704 m/min.	4,541 m/min
Anti-scalp rollers	6, adjustable	6, adjustable
Tightening torque, bolt for mower deck pulley	61 Nm (45 ft/lb)	61 Nm (45 ft/lb)
Hydrostatic drive	Dual Hydro-gear pumps and Parker/Ross Wheel drive motors	Dual Hydro-gear pumps and Parker/Ross Wheel drive motors
Tightening torque, pipe couplings	41 Nm (30 ft/lb)	41 Nm (30 ft/lb)
Hydraulic pumps (2)	Hydro Gear BDP 10A 404	Hydro Gear BDP 10A 404

https://truckmanualshub.com/

TECHNICAL DATA

Model	ZTH5223	ZTH6125
Displacement	10.2 cc/r (0.623 cu. in./rev)	10.2 cc/r (0.623 cu. in./rev)
Nominal working pressure	70 bars (1000 PSI)	70 bars (1000 PSI)
Max. hydraulic pressure	145 bars (2,100 PSI)	145 bars (2,100 PSI)
Max. hydraulic oil temp	110°C (230°F)	110°C (230°F)
Weight, hydraulic pump	3.6 kg (8 lbs)	3.6 kg (8 lbs)
Hydraulic motors (2)	Parker Ross	Parker Ross
Tightening torque, wheel motor hub nut	122 Nm (90 ft/lb)	122 Nm (90 ft/lb)
Hydraulic oil	1.9 litres (2 qt.), 15W-50 Synthetic	1.9 litres (2 qt.), 15W-50 Synthetic
Hydraulic oil cooler	Yes	Yes
Speed forward	Variable, max. 12.9 km/h (8 mph)	Variable, max. 12.9 km/h (8 mph)
Speed reverse	Variable, max. 3.23 km/h (2 mph)	Variable, max. 3.23 km/h (2 mph)
Rear tires	Carlisle 24" X 12.00 - 12 Tubeless Turf Master	Carlisle 24" X 12.00 - 12 Tubless Turf Master
Tightening torque, lug nuts	100 Nm (75 ft/lb)	100 Nm (75 ft/lb)
Front tires	Carlisle 13" X 5.00 - 6 Tubeless	Carlisle 13" X 5.00 - 6 Tubeless
Electrical system	12 V with 15 A charging system	12 V with 15 A charging system
Fuel capacity	44 litres (11.4 US Gal.), 22 litres/ tank	44 litres (11.4 US Gal.), 22 litres/ tank
Seat	Adjustable, high-back seat with armrests	Adjustable, high-back seat with armrests
Overall length	2057 mm (81 in.)	2057 mm (81 in.)
Overall width (chute up)	1346 mm (53 in.)	1575 mm (62 in.)
Overall width (chute down)	1600 mm (63 in.)	1829 mm (72 in.)
Overall height	1073 mm (42.25 in.)	1073 mm (42.25 in.)
Weight	464.5 kg (1024 lbs.)	464.5 kg (1024 lbs.)
Tightening torque, standard bolts		
1/4"	12 Nm (9 ft/lb)	12 Nm (9 ft/lb)
5/16"	25 Nm (18 ft/lb)	25 Nm (18 ft/lb)
3/8"	44 Nm (33 ft/lb)	44 Nm (33 ft/lb)

https://truckmanualshub.com/

TECHNICAL DATA

Model	ZTH5223	ZTH6125
7/16"	70 Nm (52 ft/lb)	70 Nm (52 ft/lb)
1/2"	110 Nm (80 ft/lb)	110 Nm (80 ft/lb)
Accessories		
BioClip adapter	Optional	Optional
Foot controlled mower deck lift	Optional	Optional
Deluxe seat	Optional	Optional

https://truckmanualshub.com/

TECHNICAL DATA

https://truckmanualshub.com/

Delivery and Dealer Service

Pre-delivery Service

1. Charge the battery.
2. Mount the rear tires.
3. Check and adjust the tire pressure in all tires. All tires should be1 bar (15 PSI).
4. Fit the motion control levers in the normal position.
5. Connect the rod to the seat stop.
6. Connect the contactor to the cable for the seat's safety switch.
7. Fit the armrests to the seat's back support.
8. Check that the engine has the right quantity of oil.
9. Check that the hydraulic tank has the right quantity of oil.
10. Adjust the position of the motion control levers.
11. Fuel the mower and open the gas valve.
12. Connect exhaust fume extraction.
13. Start the engine.
14. Vent the hydraulic system.
15. .Check that there is drive to both wheels
16. Check mower deck settings.
17. Check:

    The park brake safety switch.

    The seat safety switch.

    The motion control lever safety switches.

    Correct park brake operation.

    Forward drive.

    Reverse drive.

    Blade engagement.
18. Check the idling speed (1,550 ±50 rpm).
19. Check max. engine speed (2,800 ±75 rpm).

https://truckmanualshub.com/

20. Inform the customer of the:

    Necessity and advantages of following the maintenance schedules.

    Necessity and advantages of having the mower inspected every 300 hours.

    The effect on resale value of regular servicing and a fully stamped service book.

    The use of BioClip.
21. Complete the sales certificate, etc.

After the First 8 Hours

Change the motor oil.

25 Hour Service

1. Check the fuel pump air filter.
2. Check the oil level in the hydraulic system.
3. Check tire pressure.
4. Lubricate the mower deck's belt tensioner.
5. Lubricate the hydraulic pump's belt tensioner.
6. Check/clean the engine's cold air intake.
7. Clean the air cleaner's pre-filter (Oil-foam).

50 Hour Service

1. Carry out a 25 hour service.
2. Clean/change the air cleaner's filter cartridge (paper filter). Perfom more requlary in dusty operating conditions.
3. Lubricate the bearings of the front wheels.
4. Lubricate the shafts of the motion control levers.
5. Lubricate the mower deck struts.
6. Lubricate the cutting height regulator.
7. Check/adjust the park brake.

https://truckmanualshub.com/

100 Hour Service

1. Carry out a 25 hour service.
2. Carry out a 50 hour service.
3. Change the engine oil.
4. Check if the hydraulic oil needs changing (every 300 hours).
5. Check if the engine's oil filter needs changing (every 200 hours).
6. Clean/change the spark plugs.
7. Change the fuel filter in the fuel line.
8. Clean the engine and transmission cooling fins.
9. Clean and check if the air filter's paper cartridge needs changing (every 200 hours).

300 Hour Service

1. Inspect the machine. Reach agreement with the customer on what additional work is to be carried out.
2. Carry out a 25 hour service.
3. Carry out a 50 hour service.
4. Carry out a 100 hour service.
5. Change the oil and the filter in the hydraulic system.
6. Clean the combustion chamber and grind the valve seats.
7. Check the play in the engine valves.
8. Change the air cleaner's pre-filter (Oil-foam).

https://truckmanualshub.com/

At Least Once a Year

1. Clean the engine's cold air intake (25 hours).
2. Change the air cleaner's pre-filter (Oil-foam).
3. Change the paper cartridge in the air filter (200 hours).
4. Change the engine oil (100 hours).
5. Change the engine's oil filter (200 hours).
6. Change the oil and the filter in the hydraulic system.
7. Check/adjust the cutting height regulator.
8. Check/adjust the park brake (50 hours).
9. Clean/change the spark plugs (100 hours).
10. Change the fuel filter in the fuel line (100 hours).
11. Clean the cooling fins (100 tim).
12. Check the play in the engine valves (300 hours).
13. A 300 hour service to be carried out by an authorized workshop.

https://truckmanualshub.com/

Maintenance Schedule

The table below lists the maintenance required by the ride-on mower. Several of the points not covered in this workshop manual will be found in the Operating Instructions.

Maintenance	Page	Daily		Weekly	At least once a year	Maintenance intervals in hours			
		Pre-use	After use			25	50	100	300
Check for fuel and oil leaks.	-	❍							
Check the park brake.	-	●							
Check engine oil level (every fueling).	21	●							
Check the fuel pump air filter.	-					▼			
Check the safety systems.	-	▼							
Check/clean the engine's cold air intake.	-		▼						
Check the mower deck.	38		●						
Check fasteners (bolts, nuts, etc.).	-		❍						
Start engine and blades; check for abnormal noise.	-		❍						
Clean the underside of the mower deck.	-		▼						
Check hydraulic system oil level.	22					●			
Check the condition of belts, pulleys, etc.	38		●						
Check for any damage.	-		❍						
Check tire pressure.	20					●			
Clean thoroughly around the engine.	-		❍						
Clean thoroughly around the hydraulic system.	53		●						
Clean thoroughly around belts, pulleys, etc.	-		❍						
Lubricate mower deck belt tensioner.	-					▼			
Lubricate belt tensioner for hydraulic pumps.	-					▼			
Lubricate all wires.	-			▼					
Lubricate driver's seat mechanisms.	-			▼					
Lubricate the throttle control.	-			▼					
Clean the engine's cold air intake.	-				▼	▼			
Lubricate mower deck links.	-			❍					
Lubricate front wheel mounts (every 200 hours).	-							▼	
Lubricate front wheel bearings.	-						▼		
Lubricate the shafts of the motion control levers.	-						▼		
Lubricate mower deck struts.	-						▼		
Lubricate the mower deck's height regulator.	-						▼		

https://truckmanualshub.com/

DELIVERY AND DEALER SERVICE

Maintenance	Page	Daily		Weekly	At least once a year	Maintenance intervals in hours			
		Pre-use	After use			25	50	100	300
Check/adjust the cutting height regulator.	38				●				
Clean the air cleaner's pre-filter (Oil-foam).	-				▼	▼			
Clean the air cleaner's filter [2] (paper filter).	-				▼		▼		
Change the motor oil [1] .	22				●			●	
Change the hydraulic oil (every 300 hours).	56				●				●
Change the engine's oil filter (every 200 hours).	-				▼			▼	
Clean/change the spark plugs.	-				❍			❍	
Change the fuel filter in the fuel line.	-				▼			▼	
Clean the cooling fins.	-				❍			❍	
Check the play in the engine valves [4] .	-				❍				❍
Change the air cleaner's pre-filter (Oil-foam).	-				▼				▼
Change air filter (paper filter) [2] (every 200 hours).	-				▼			▼	
Carry out a 300 hour service [4] .	13				●				●
Check/adjust the park brake.	34				●		●		

[1] First change after 8 hours. With heavy operating conditions or high ambient temperature, change every 50 hours. [2] In dusty conditions, clean and change more frequently. [3] Where the mower is in daily use, lubrication must be carried out twice a week. [4] To be carried out by an authorized workshop.

● = Covered in this workshop manual.

❍ = Not coverd in this workshop manual or the Operating Instructions.

▼ = Covered in the Operating Instructions.

WARNING!

Service procedures may only be carried out on the motor or mower deck when:

- **The motor has been switched off.**
- **The ignition key has ben removed.**
- **The ignition cables have been removed from the spark plugs.**
- **The park brake has been applied.**
- **The mower deck has been disengaged.**

https://truckmanualshub.com/

DELIVERY AND DEALER SERVICE

Service Records

Remember to enter all service work in the Service Log at the back of the Operating Instructions.

Record details of any major repairs.

Enter the meter reading and date. Stamp and sign the stamp field.

In your customer register, make a note of the work that has been carried out.

https://truckmanualshub.com/

DELIVERY AND DEALER SERVICE

https://truckmanualshub.com/

Delivery Servicing

To our Dealers

The quality of delivery servicing is vital to aftersales success. It is in everyone's interest that the aftermarket operates smoothly:

- The customer will be satisfied with his/her mower and know who he/she can contact for help with any problems.
- You will gain a regular customer who recommends you and your company to others.
- Together we will strengthen our brand and take joint responsibility for our products and customers.

Complete all the paperwork meticulously.

Fill in warranty and delivery documents, etc. and ensure that the customer receives the right operating instructions for his/her mower.

Keep a register of customers and their mowers (with serial numbers, etc.). The information contained in the customer register is invaluable for marketing and when ordering spare parts.

When supplying a mower, you should also give the customer all information necessary for the safe operation and care of the machine. Pay particular attention to informing the customer about:

- Safety instructions.
- Mower controls.
- Checking oil levels and the oil to be used when topping-up.
- The first oil change after the running-in period.
- The necessity and advantages of observing the maintenance schedules and regularly returning the mower for servicing.
- What type of fuel to use.
- Ways of achieving the best results with the mower. The use of BioClip.
- The accessories available for his/her mower.
- Warranty conditions.
- Your company and the person to be contacted if there are any problems.

Removing the Mower from its Packaging

Mowers are normally delivered from the factory in special packaging - a wooden crate with a solid bottom.

WARNING!
Handle the transport crate carefully. Keep the goods as level as possible.
Use long pallet forks.

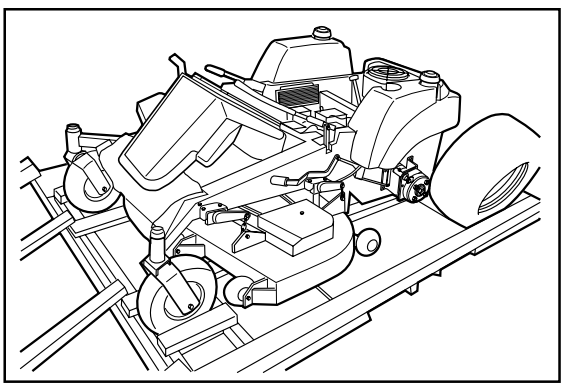

8011-549

Mower on its delivery baseplate

https://truckmanualshub.com/

DELIVERY SERVICING

The baseplate itself stands on a pallet and the whole assembly can be handled using a standard forklift truck. To keep the goods as level as possible, two people should assist the truck driver. Driving and lifting must both be performed with care.

Remove the upper part of the crate from the wooden baseplate.

The mower (rear wheels not fitted) is secured to the baseplate by plastic straps and wooden blocks. Certain components that are to be fitted to the mower, or handed to the purchaser on delivery, are wrapped separately in plastic bags.

Remove the plastic sheeting covering the mower.

When unpacking the mower, check that there is no transport damage. Any damage is to be reported to the transport company in the normal way.

The packaging is not to be returned.

Delivery Service

1. Charge the battery. The mower is normally delivered with a charged battery topped-up with electrolyte.
2. Raise the rear of the mower until it is clear of the baseplate and the rear wheels can rotate freely. Hold firmly in position using blocks or jack stands.
3. With the valves facing outwards, fit the rear wheels. Fit and tighten the wheel nuts on the wheel bolts.
4. Check and adjust the pressure in all the tires. The recommended pressure is 1 bar (15 PSI).

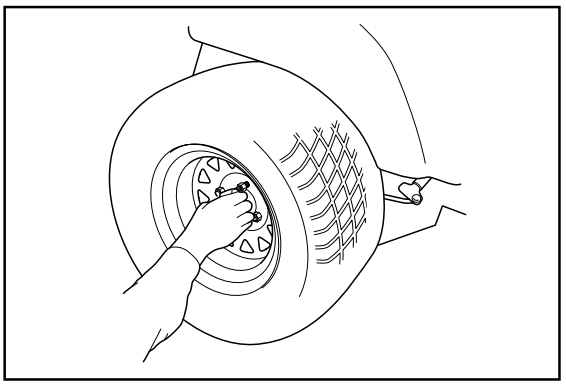

8011-503

Fitting the rear wheels

5. On both motion control levers, remove the lower bolts and loosen the upper bolts. Swing the levers to the upright position. Hand tighten the lower bolts in the rectangular holes. The levers are adjusted at a later stage.
6. Push the levers out into their neutral slots.

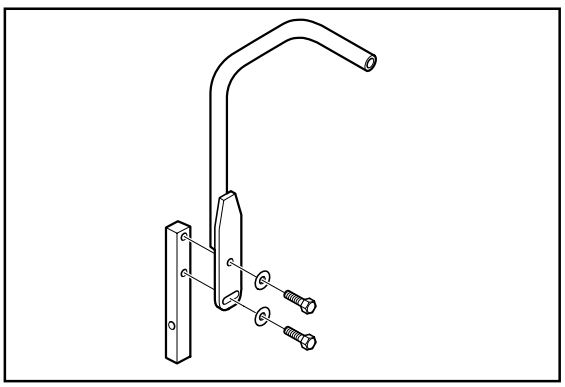

8011-502

Lever mount

https://truckmanualshub.com/

7. In the space to the left of the hydraulic tank, cut the cable tie holding the rod to the top of the seat. Remove the split cotter, swing the seat backwards and connect the rod to the seat. Replace the split cotter.

   Check that the contactor on the cable to the bottom of the seat is connected.

   Swing the seat down and check that it is held by the catch on the left.

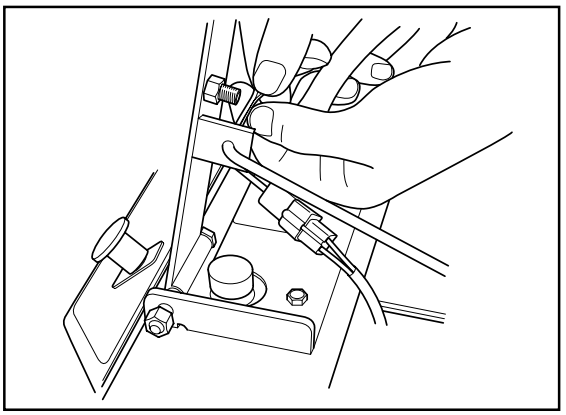

8011-504

Connnecting the rod to the seat

IMPORTANT INFORMATION
Risk of incorrect assembly/fitting

8. Fit the armrests. Position the armrests with the greatest possible distance between them. The bolt heads should be on the inside (i.e. towards the seat back) and washers and nuts on the outside. Armrests, bolts, washers and anti-slip nuts are packed in a plastic bag accompanying the mower.

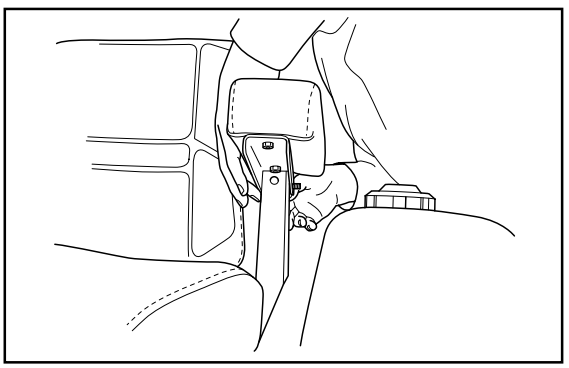

8011-505

Fitting the armrests

9. Check the engine oil level.

   With the mower standing on a flat surface, check the engine oil level.

   Unscrew the dipstick and pull it out. Wipe the dipstick dry and push it back.

   Do not screw the dispstick down.

   Pull the dipstick up again and read the oil level.

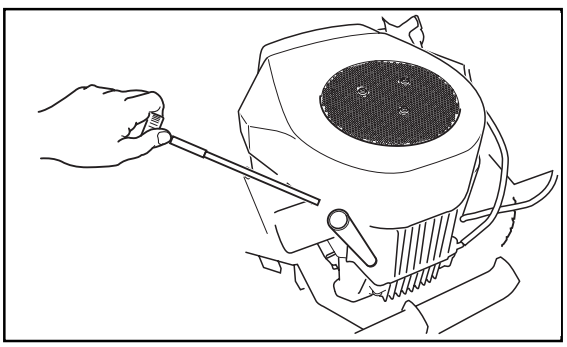

8011-501

Checking the engine oil level

https://truckmanualshub.com/

The oil level must be between the markings on the dipstick. If the level is near the “ADD” mark, top up with oil to the “FULL” mark.

Oil is topped up via the hole in which the dipstick sits.

Use grade SC-SH engine oil with a viscosity as per the chart below.

The engine (excluding oil filter) holds 1.5 litres of oil.

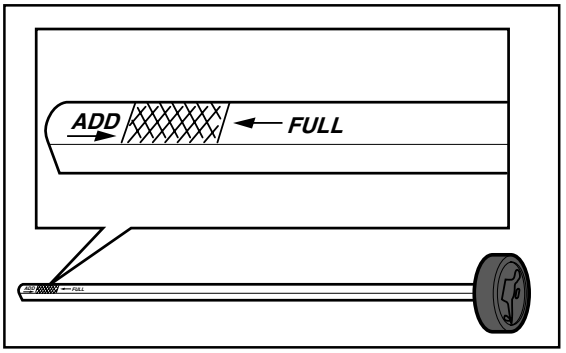

8009-159

Engine dipstick

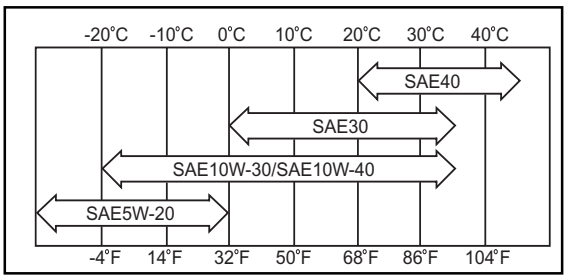

8009-140

Viscosity chart

10. Check the oil level in the hydraulic tank.

    The level must be 19 - 25 mm below the top of the tank. Top up if necessary.

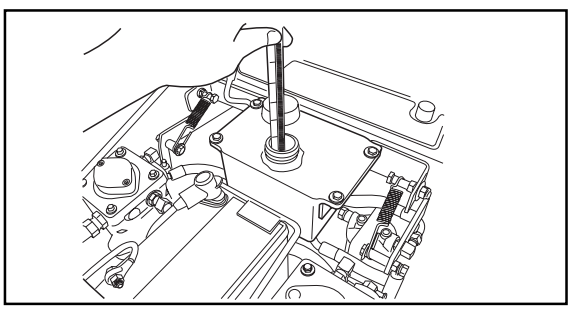

8011-565

Hydraulic tank

11. Adjust the motion control levers.

a. Set the seat longitudinally in a comfortable position and swing the levers into the drive channel.

b. Hold one of the levers at a comfortable midpoint and tighten the retaining bolts.

c. Hold the other lever as far forward as the first and tighten the bolts.

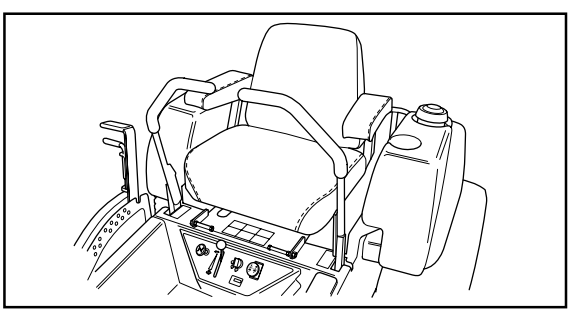

8011-522

Adjusting the motion control levers

https://truckmanualshub.com/

WARNING!
Gasoline is highly flammable.
Take great care.

12. Fill the gasoline tanks (unleaded gasoline with no oil and a minimum octane rating of 87).

    Environment-friendly, acrylate gas , e.g. Aspen, can be used to good advantage.

13. Select tank by moving the selector to the appropriate position.

8011-550

Fueling

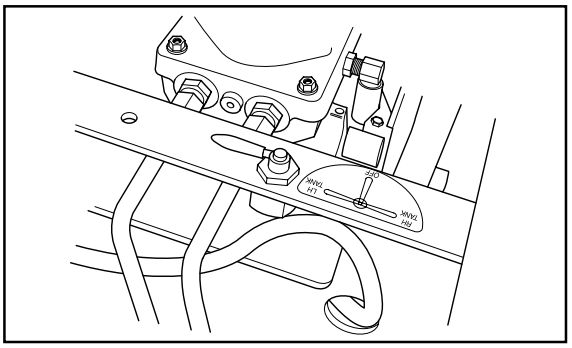

8011-506

Selecting the gasoline tank

WARNING!
Never run the engine indoors in confined or poorly ventilated areas. Exhaust fumes contain carbon monoxide (poisonous).

14. Connect exhaust fume extraction.
15. Start the engine.
16. Check that there is drive to both wheels.
17. Vent the hydraulic system.
18. Check that, with the motion control levers in the neutral position, both rear wheels are stationary.
19. Remove the blocks supporting the back end.
20. Raise the mower deck to its highest position.
21. Raise the back of the baseplate and drive the mower forwards and off.
22. Check mower deck settings as per the instructions (see ”Adjusting Motion Control Lever Linkages” on page 34).

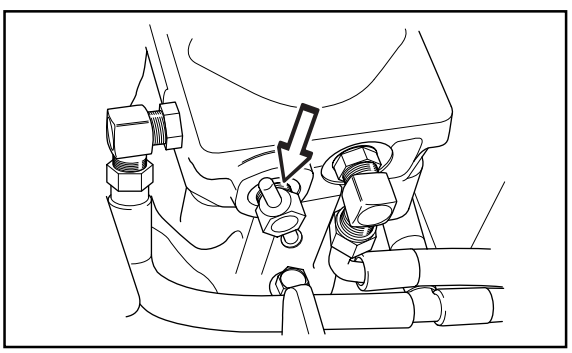

8011-507

Air relief screw for the hydraulic system

https://truckmanualshub.com/

DELIVERY SERVICING

Test Running

Check that the engine will not start with the park brake engaged.

Check that the engine will not start with the blade engagement button pulled out.

Check that the engine will not start without someone sitting on the driver's seat.

Start the engine.

Check that the engine stops if, with the park brake engaged, a motion control lever is folded inwards (i.e. across the operator). Test both the left and the right motion control levers.

Check that the engine stops if, with the park brake disengaged, the operator gets up from the driver's seat.

Check that, with the drive in neutral and the park brake disengaged, the mower does not move on flat ground. Increase the throttle setting - the mower must still remain stationary.

Check that the park brake operates correctly.

Check that the mower moves straight forwards/backwards when both motion control levers are simultaneously moved an equal distance forwards/backwards.

Check that the mower turns normally when driving forwards and backwards.

Check that the mower deck operates correctly and that there is no abnormal noise.

Check that engine idling speed is 1,550 ±50 rpm.

Check that the speed regulator gives a maximum engine speed of 2,800 ±75 rpm.

Administration

Fill in the sales certificate and customer register, etc. Remember to fill in the serial number on page 4 and to sign the delivery service in the Operating Instructions.

https://truckmanualshub.com/

Design and Function

General

The Husqvarna ZTH is a compact, ride-on mower specially designed for mowing large areas of grass. It is operated via two motion control levers and has hydrostatic drive to the rear wheels. Each rear wheel is driven by an independent hydrostatic drive system comprising a hydraulic pump and a hydraulic motor. The hydraulic pumps are driven by a belt from the engine's crankshaft.

The mower is steered by the independent adjustment of the speed and direction of each rear wheel. The front wheels are free to turn in whichever direction is most suitable.

The mower deck is mounted underneath the mower and is supplied with a side discharge chute as standard. The range of accessories includes a BioClip kit of guide plates and blades for mounting beneath the mower deck casing.

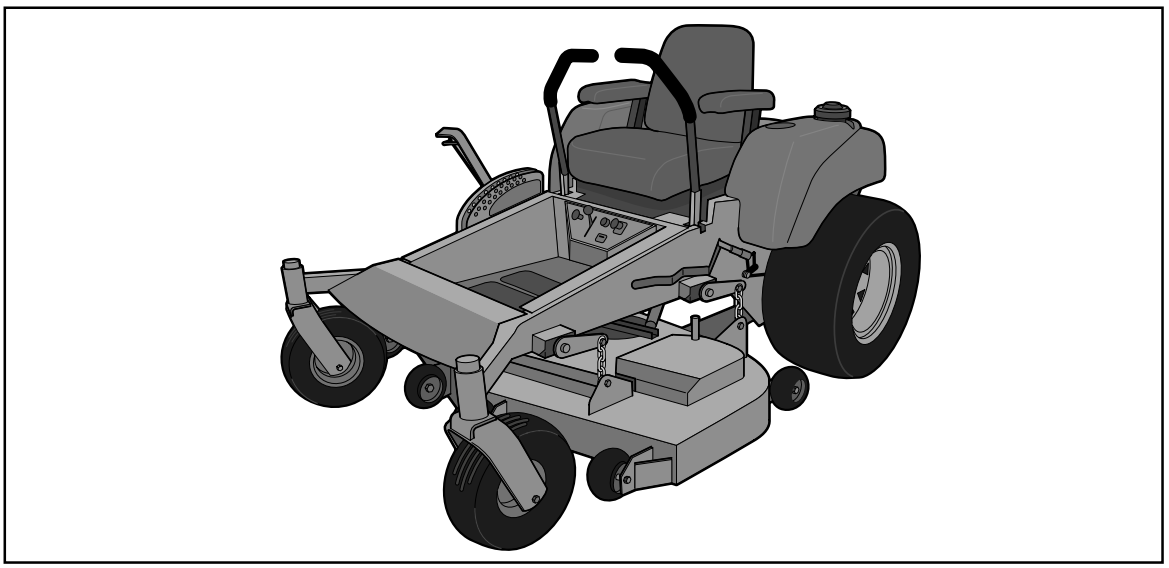

8011-591

ZTH ride-on mower

Mower Identification

Each mower is individually identified by the details given on plate sited between the battery and the engine.

Reading downwards, the plate gives:

- The model number
- The I.D. code.
- The serial number.

Quote these when ordering spare parts.

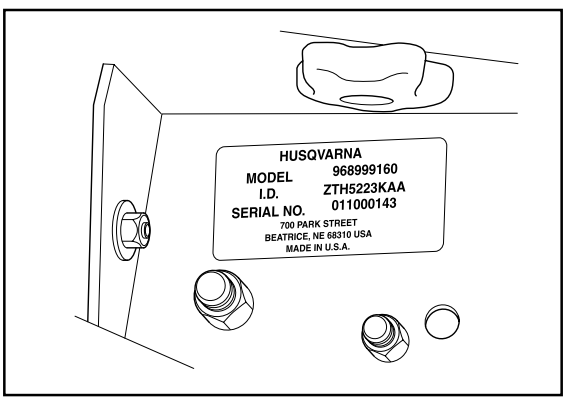

8011-593

Mower identification

https://truckmanualshub.com/

The engine identifiers are located on a barcoded decal. This is sited on the left side of the crankcase, directly opposite the starter motor. The decal gives:

- The engine code.
- The engine number.

Quote these when ordeing spare parts.

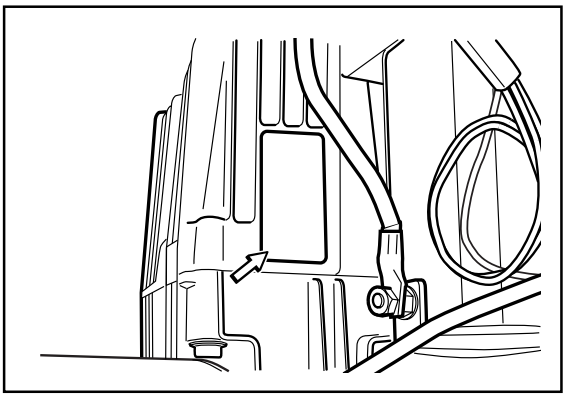

8009-205

Engine identification

The hydraulic pump identifiers are located on a bardcoded decal. This is sited on the left side of the pump housing. The decal gives:

- The pump type code (BDP-10....).
- The pump serial number.

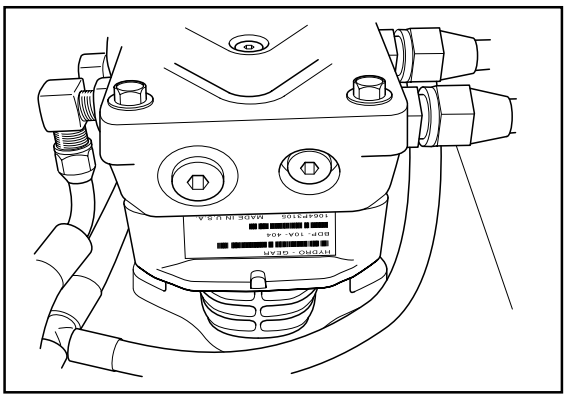

8011-594

Hydraulic pump identification

The hydraulic motor identifiers are located on a round, metal plate. This is sited on the end of the motor housing. The plate gives:

- The hydraulic motor type code and model.
- The hydraulic motor serial number.

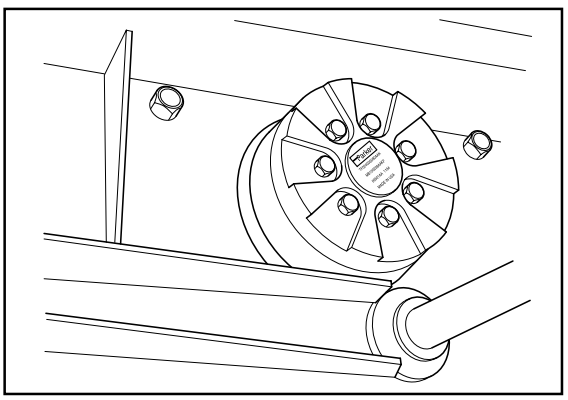

8011-595

Hydraulic motor identification

https://truckmanualshub.com/

Engine

Husqvarna's ride-on mowers for professional users have two-cylinder, air-cooled engines from Kawasaki.

Major engine repairs are not covered in this workshop manual. Users are referred to Kawasaki's own manuals. These contain detailed information on the adjustment and repair of the engines. The manuals can be ordered from authorized service workshops.

The table below shows the information to be quoted when ordering engine manuals:

Model	Kawasaki's engine type	Power	Publication Kawasaki no.
ZTH5223	FH680V-AS15	17.5 kW (23 hp)	99924-2045-03
ZTH6125	FH721V-AS04	18.6 kW (25 hp)	99924-2045-03

When repairing engines, use genuine spare parts only. The warranty will be invalidated if other parts are used.

Drive and Control

Via a belt, the engine supplies direct, clutchles, drive to two hydraulic pumps. The pumps have axial pistons.

Each pump feeds oil to a fixed (non-adjustable) hydraulic motor (one by each drive wheel). The rate and direction of oil flow is steplessly adjusted (via a mechanical linkage) by the motion control levers. Adjustment is actuated by a swash plate that regulates the stroke length of the hydraulic pistons. The swash plate is an integral part of each pump. The mower can be made to turn or reverse by controling the rate and direction of flow to the hydraulic motors. The hydraulic motors control the speed and direction of the drive wheels. To swing the mower around its center, simply drive one wheel forwards and the other backwards.

Hydrostatic braking occurs whenever there is no flow of oil from the pumps.

Instructions for the repair of the hydraulic pumps are given in the "Hydro-Gear BDP-10A/21L Service & Repair Manual".

Brakes

Hydrostatic braking (see "Drive and Control") provides brake control when the mower is being powered by its engine. Putting the motion control levers in the neutral position brakes the mower. To move the mower manually, open the air screws on the hydraulic pumps. Oil is then circulated by the hydraulic motors and the machine can be moved short distances at low speed.

The mower also has a park brake. This operates on both rear wheels. A brake band on each rear wheel is engaged by a lever on the left of the mower operator. The lever and the brake bands are mechanically linked.

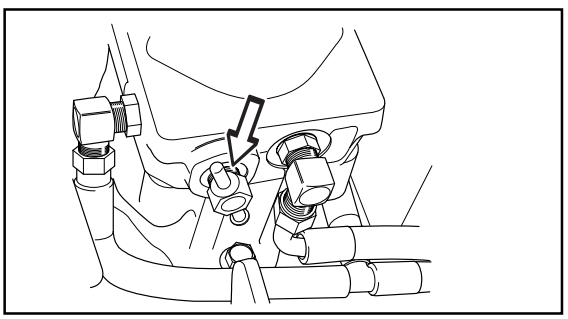

8011-507

Air screw on hydraulic pump

https://truckmanualshub.com/

Mower Deck

WARNING!

The engine must not be started if the operator's floor plate or any of the guards for the mower deck's belt is/are not securely in position.

The blades are driven by a V-belt from the engine crankshaft (1). The crankshaft has an electromagnetic clutch. This locks the deck pulley to the shaft when current is applied to the clutch (i.e. when the appropriate control panel switch is operated).

The belt is automatically adjusted by a spring (2) operating on the pulley (3) attached to the top of the mower deck casing. Via vertical shafts, three other pulleys (4,5,7) each drive a separate blade. Two idler pulleys (6,8) serve as belt guides. The outermost pulleys are shielded by removable guards attached to the top of the mower deck casing. The operator's floor plate acts as a guard preventing contact with the belt and the other pulleys.

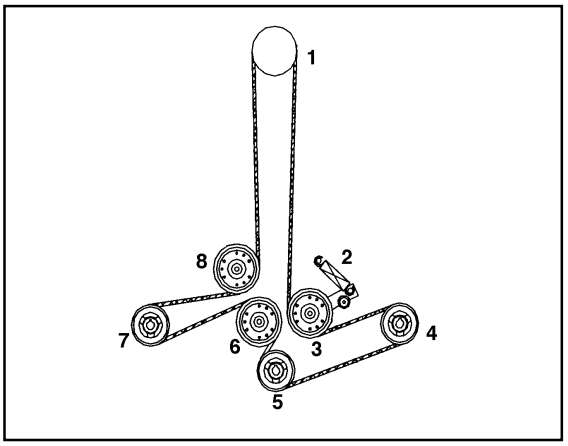

8011-580

Belt routing for the mower deck

WARNING!

The mower blades are extremely sharp. To prevent personal injury, wear protective gloves when handling the blades.

The blades do not require shear pins. Impact protection is provided by the blades skating on their shafts if they hit an immoveable object.

The discharge chute is on the right side of the mower deck. It is spring-loaded and can be raised.

For mulching, a BioClip kit is available as an accessory. The kit comprises guide plates and BioClip blades. It is fitted to the underside of the mower deck.

The mower deck is suspended to the bottom of the mower via two backward inclined struts and four adjustable chains.

Six anti-scalp rollers on the underside of the mower deck prevent the casing catching on the ground. Cutting height is set by a lever on the right of the operator. Inserting a pin through the holes in the deck height adjustment plates sets a limit to the downward movement of the lever.

https://truckmanualshub.com/

Repairs

Engine

Removing

1. Close the fuel valve.
2. Disconnect the positive cable (red) from the battery.
3. If necessary, drain the motor oil.
4. Disconnect the gas and choke wires from the carburetor.
5. Disconnect the fuel line (with its filter) from the fuel pump.
6. Disconnect the connecting cable (pigtail) from the frame harness connector at the side of the starter motor.
7. Disconnect the cable from the starter motor.
8. Disconnect the cables from the ground bolt in front of the starter motor.
9. Raise and support the back of the mower on blocks or similar.
10. Remove the clip holding the oil drain hose.
11. Remove the deck belt and clutch (see Electrical System\Mower deck clutch).
12. Loosen the bolt (2) and twist the clutch tie down (10) aside (see the “Engine mounts” diagram).
13. Using a square, 1/2" ratchet wrench, loosen the pump belt. Roll the belt off the pulley on the engine crankshaft.
14. Remove the four outer bolts in the engine mounts.

WARNING!
Heavy lift (40.5 kg).
Handle the engine with care.
Place it safely where it cannot topple over.

15. Lift the motor directly upwards and secure it in a safe place.

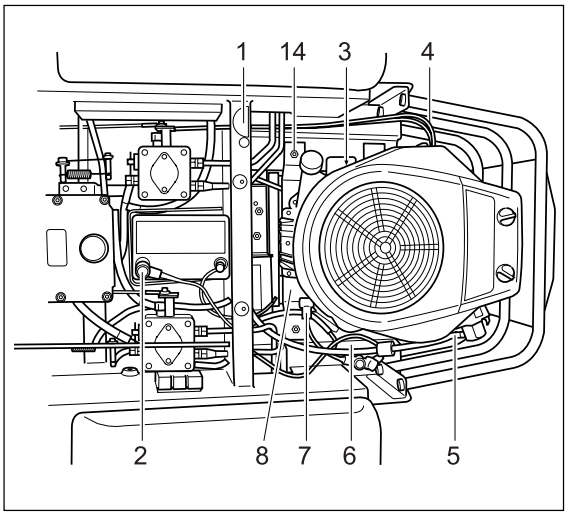

8011-621

Engine assembly

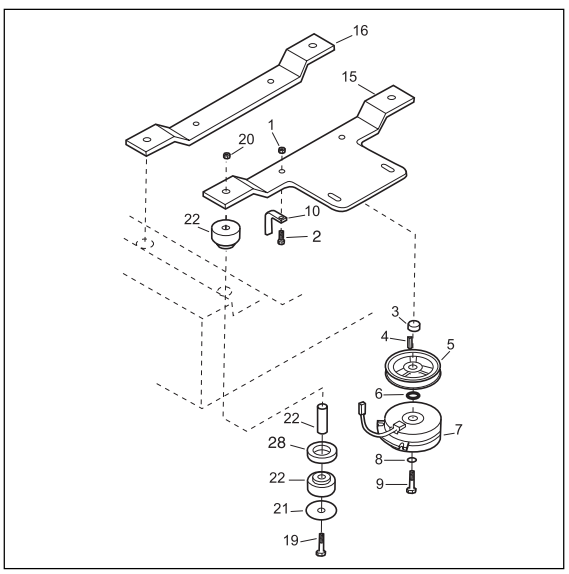

8011-606

Engine mounts

https://truckmanualshub.com/

Fitting

1. When changing engines, transfer the necessary components to the new engine.

   The chamfered side of the spacer (3) on the crankshaft above the pump pulley must face the engine.
   The hub collar of the pulley (5) must face downwards.

2. Put the four upper engine mount isolators (22) in the engine bed (small diameter end in the engine bed hole).

3. Check that the clutch tie down (10) is not deformed (straighten if necessary) and lower the engine into position. The engine weighs 40.5 kg.

4. Inserting the spacers (22), washers (28, 21) and bolts (19) from below, fit the engine mounts. The tightening torque for the retaining nuts (20) is 110 Nm (80 ft/lb).

5. Fit the pump belt on the pulley. Attach the spring and use a square, 1/2" ratchet wrench to cancel the force exerted by the belt tensioner.

6. Fit the washer (6) and mower deck clutch (7). Connect the cable to the connector.

   The tightening torque for the bolt (9) is 67 Nm (50 ft/lb).

   With the bolt (9) tightened, there should be perceptible play between the clutch and the clutch tie down (10) when the clutch flange is turned by hand. Adjust/twist the tie down and, using the nut (1), tighten the bolt (2).

   Ensure that the cable cannot be damaged and secure it with a cable tie.

7. Roll the mower belt into place on the clutch pulley. Check that the belt is routed as per the diagram and that it is not twisted.

8. Fit the operator's foot plate.

9. Fit the clip for the oil drain hose.

10. Connect the 3 cables to the ground bolt.

11. Connect the cable to the starter motor.

12. Connect the pigtail to the frame harness.

13. Connect the fuel line to the fuel pump

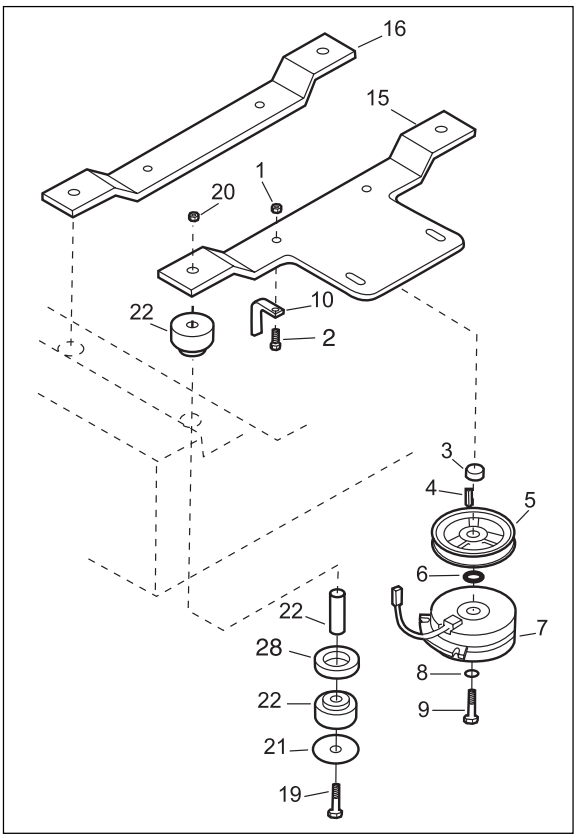

8011-606

Engine mounts

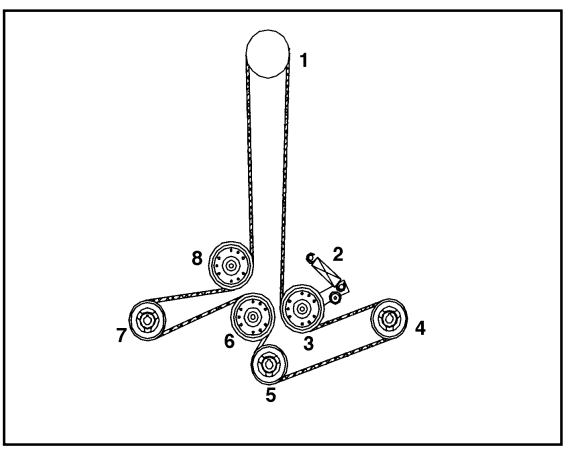

8011-580

Belt routing for the mower deck

https://truckmanualshub.com/

inlet.

14. Connect and adjust the gas and choke wires (see below).
15. Check that the oil drain valve is closed and fill the engine with oil (see Delivery Servicing\Delivery Service).
16. Connect the positive cable (red) to the battery's positive terminal.
17. Open the fuel valve.

Dismantling and Assembling Adjustments and Specific Repairs

See the Kawasaki Service Manual for the engine and auxiliary systems.

Troubleshooting

See section 8 of the Kawasaki Service Manual.

The above section contains a troubleshooting guide for the engine and auxiliary systems. It also has separate troubleshooting instructions for the starter motor.

Adjusting the Throttle Wire

Adjusting Throttle Lever Tension

If there is insufficient throttle lever friction, throttle settings can alter while the mower is being operated. This can be corrected via the lever's pivot bolt.

1. Free the control console and pull forwards.
2. Tighten the throttle lever's pivot bolt.

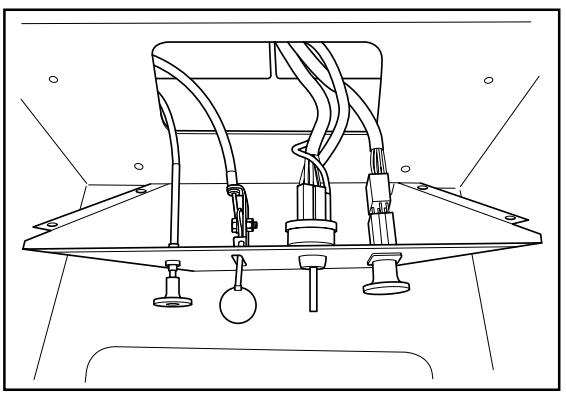

8011-599

Freeing the controle console

Checking and Adjusting the Throttle Wire

Check that the engine responds to the throttle control and that the correct engine speed is achieved at full throttle.

If adjustment is necessary, adjust the lower wire as follows:

1. Loosen the clamping screw holding the wire's outer casing and set the lever to the full throttle position.
2. Check that the throttle wire is attached to the correct hole in the lower lever, see

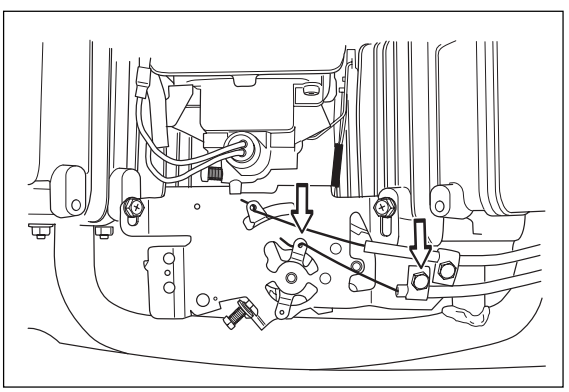

8011-554

Checking and adjusting the throttle wire

https://truckmanualshub.com/

the diagram.

3. Pull the throttle wire casing to the far right and tighten the clamping screw.

Checking and Adjusting the Choke Wire

If the engine produces black smoke or is difficult to start, the choke wire (upper wire) may be incorrectly adjusted.

To adjust the choke, proceed as follows:

1. Release the clamping screw that secures the wire casing and set the choke control to maximum choke.
2. Check that the throttle wire is attached to the upper lever, see the diagram.
3. Pull the choke wire casing to the far right and tighten the clamping screw.

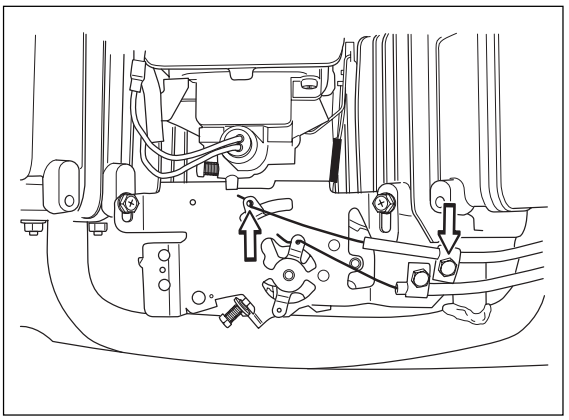

8011-555

Checking and adjusting the choke wire

https://truckmanualshub.com/

Fuel tank

Removing

Before removing the tank on the right of the mower, the rear wheel and the bolts holding the oil cooler for the hydraulics must be removed.

1. Close the fuel valve (13).

WARNING!
Fire and health hazard.
Avoid spills.
Wipe dry if necessary.

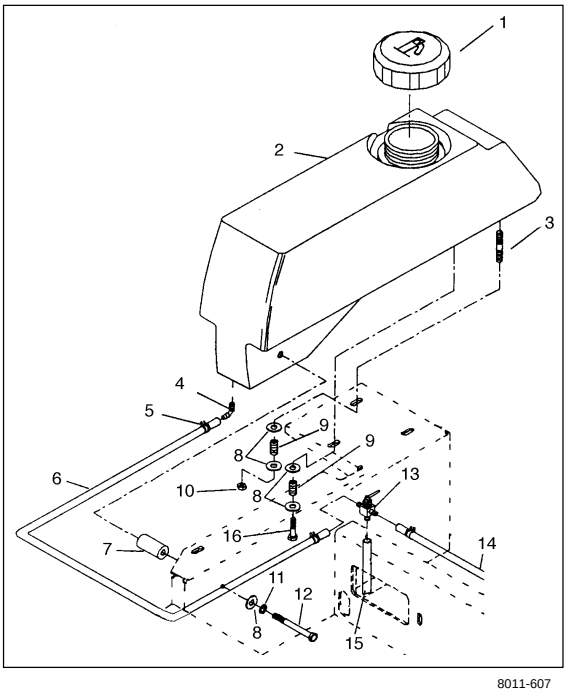

Fuel tank

2. Drain the tank that is to be removed. Keep the drained fuel in a closed container.
3. Remove the hose clamp (5) from the fuel line (6).
4. To catch any spills, position a container below the outlet from the tank to the fuel line. To ensure no damage is caused, hold the hose barb (4) with pliers and pull the fuel line away. Even when the tank is empty, a small amount of fuel may leak out.
5. The tank is fitted to the splashguard by a bolt and two studs. Remove the bolt (16) and three nuts (10) - all with washers (8) and springs (9) - located on the underside of the splashguard.
6. Remove the bolt (12) and tank spacer located on the inside of the splashguard.
7. Lift the fuel tank (2) away.

Fitting

The fitting procedure is the reverse of the removal procedure.

Working from the underside of the splashguard, tighten each washer (8) spring (9) washer (8) combination using the appropriate nut (10) or bolt (16). Tighten until the spring starts to compress and then a further 1.5 turns.

https://truckmanualshub.com/

Adjusting Motion Control Lever Linkages

See “Hydraulic system\Hydraulic pump\Adjusting the linkages”.

Adjusting Motion Control Lever Spring-back

See “Hydraulic system\Hydraulic pump\Adjusting the Reverse Detent Spring”.

Adjusting the Park Brake

1. Raise the rear of the unit and place it on stable jack stands. Engage the parking brake and remove both rear tires/wheels.
2. With the parking brake still engaged, remove all spring tension by loosening the spring locknut. Unlock the jam nut against the yoke and loosen the bolt until the head is about 1/2 inch away from the trunnion. Relock the jam nut against the yoke. Tighten the spring locknut until bolt head/trunnion gap closes to 1/8 to 1/4 inch.
3. Disengage the parking brake hand lever and check that the spring is still under tension. This is important in order to hold the linkage from going over-center.
4. Repeat steps 2 and 3 on the opposite brake band.
5. If the brake band is making noise while in operation, rattling, squealing, etc, it may be necessary to readjust the parking brake band.

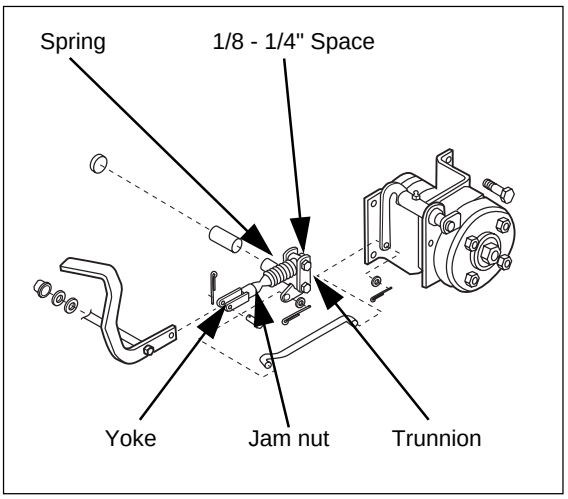

8011-581

Adjusting the park brake

IMPORTANT INFORMATION

This brake system has been designed as a parking brake and is intended to hold the unit in place when it is not being operated. It must not be used as an emergency stopping brake, or brake and linkage damage may occur.

This brake system is not designed to be the only means of holding the unit in place while transporting in a truck or on a trailer. The unit must be tied down at all times while it is being transported, or brake and linkage damage may occur

https://truckmanualshub.com/

Mower Deck

WARNING!
No work is to be done on the mower deck or belts until the engine has been rendered incapable of starting. Remove the ignition key or both spark plug cables.

Removing

1. Drop the deck as far as it will go and lock the control lever in position with a pin.
2. Remove the operator's foot plate.
3. Remove the deck belt outer guards.
4. Using a 9/16" socket on the bolt of the idler pulley, loosen the deck belt. Roll the belt off the deck pulleys.
5. Remove the deck's rear anti-scalp rollers.

WARNING!
Danger of personal injury (crushed fingers or limbs, etc.).
If the deck height control lever is not secured by a locking pin, the deck will spring upwards when the chains are released.

6. Release the four chains from their mounts on the lift arms (top of chain).
7. On both sides of the deck, remove the bolts (17) and pivot pins (50) of the rear bearings (see the "ZTH mower deck" diagram).
8. Pull the deck out.

Fitting

1. Slide the deck into position under the mower.
2. Using two lengths of 2" x 4" (one towards the edge of each of the deck's short sides) support the deck 4" off the ground.
3. Grease the pivot pins (50) of the rear bearings with copious amounts of corrosion preventing grease. Line up the shaft bearings and slide the pivot pins into place. Fit the bolts and nuts (17, 5) holding the pivot pins in place (see the "ZTH mower deck" diagram).

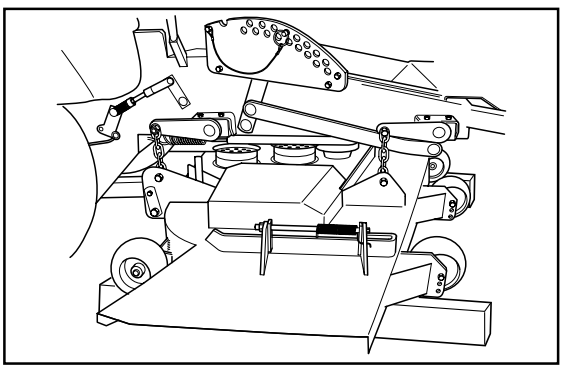

8011-601

Supporting the deck on lengths of 2" x 4"

https://truckmanualshub.com/

4. Fit the deck's rear anti-scalp rollers.
5. Attach the chains to the lift arms.
6. Fit the belt as per the routing diagram.
7. Check that the belt is not twisted and that it runs correctly around all the pulleys.
8. Check deck height and horizontality as per "Setting the mower deck".
9. Fit the operator's foot plate.
10. Fit the deck belt outer guards.

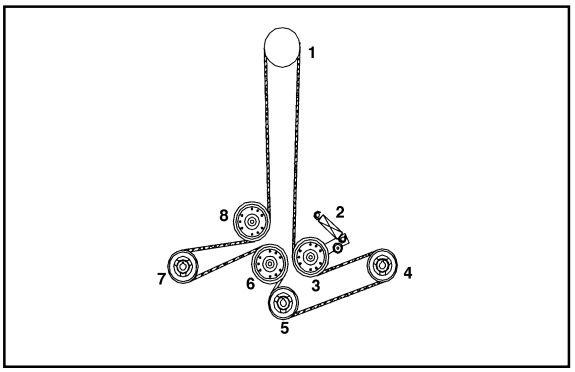

8011-580

Belt routing of the mower deck

Spindle Blade Bearings

WARNING!
Wear protective gloves when working on or with blades.

To remove a blade, undo the retaining bolt (25).
When fitting a blade, tighten the bolt to 122 Nm (90 ft/lb).

Removing Bearings

1. Roll the belt off (see "Changing Belts").
2. Remove the bolt (28) and the pulley (3). Lock the pulley using a bolt through the hole in the pulley and a holding tool.
3. Raise the mower deck to its highest position. Lift the front end of the mower and support it on blocks or similar.
4. Remove the bolts (12) and nuts (5) and pull downwards to remove the bearing and blade.
5. Separate the blade from its bearing.

Repairing Bearings

If there is too much play, the bearing (44) can be replaced if the bearing surfaces of the housing (46) have not been damaged.

Pressing downwards, remove the spindle (41).

If there is extensive damage, replacement of the complete bearing assembly (2) is recommended.
To ensure safe transport, the bearing

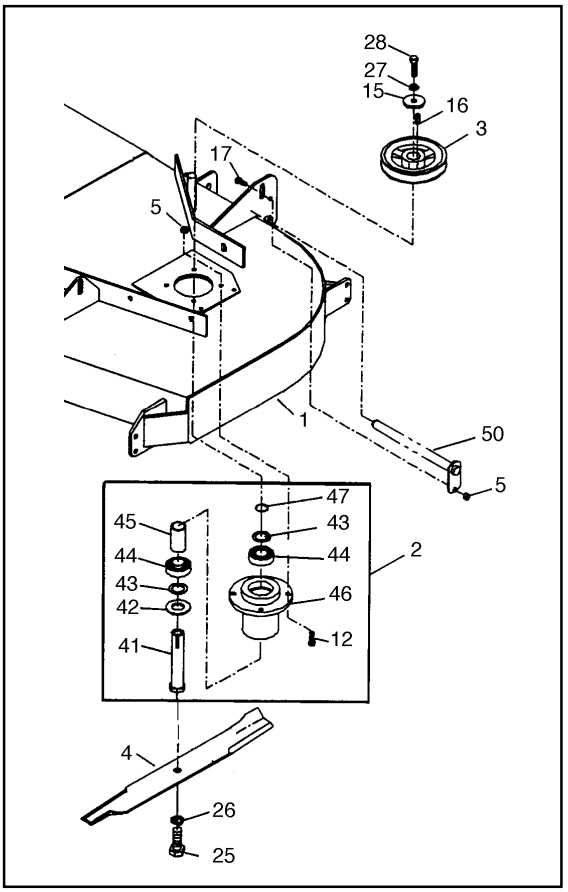

8011-618

ZTH mower deck

https://truckmanualshub.com/

assembly is supplied with an “O” ring (47) . The “O” ring must be removed before the pulley is fitted.

Replacing Bearings

The fitting procedure is the reverse of the removal procedure.

Tightening torques:

- Blade bolts 122 Nm (90 lb/ft).
- Pulley bolts 61 Nm (45 lb/ft).

Sharpening and Balancing Blades

WARNING!
Blades with any cracking must not be used. Do not straighten a damaged blade if there is any danger of crack formation.

- Remove the blades.
- Check that the blades do not have cracks or any other damage. If they do, scrap them.
- Clamp in a screw vice (see diagram) and file until sharp.

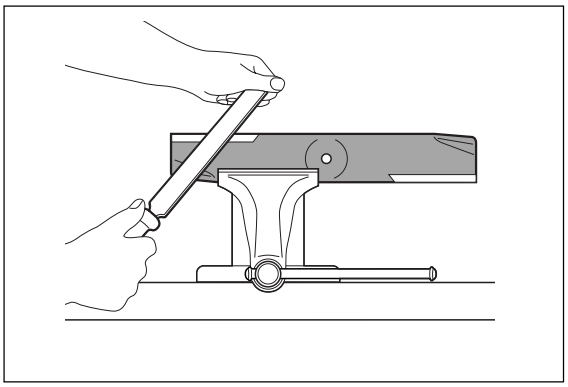

6012-088

Grinding a blade

Balancing is as follows:

- Fix a mandrel (for example) horizontally in a screw vice (see diagram).
- Push a blade onto the mandrel and check that it is evenly balanced. The diagram shows a blade which needs adjusting. This blade should be ground at the edge indicated by the straight arrow.
- The fitting procerdure is the reverse of the removal procedure.

  The tightening torque for the blade bolts is 122 Nm (90 lb/ft).

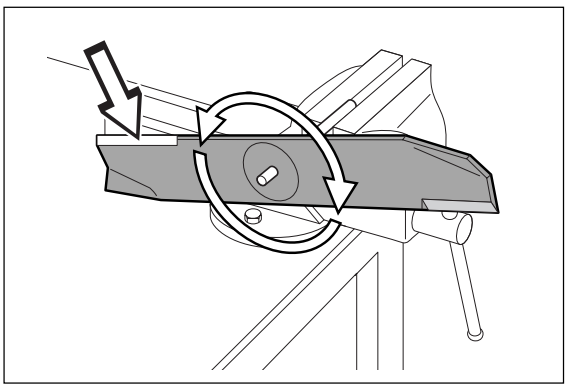

6012-089

Balancing a blade

https://truckmanualshub.com/

Setting the Mower Deck

Leveling

1. Position the mower on a level, preferably concrete, surface.
2. Check the pressure in all four tires. This should be 15 psi.
3. Raise the mower on lengths of 2" x 4" placed edgewise under the cutting deck from front to rear (see diagram).
4. Place a 0.635 cm (1/4") shim between the 2" x 4" and the rear edges of the deck. This will allow the correct down angle at the front of the deck.
5. Adjust the four lower chain bolts so that they are centered in the oblong slots.

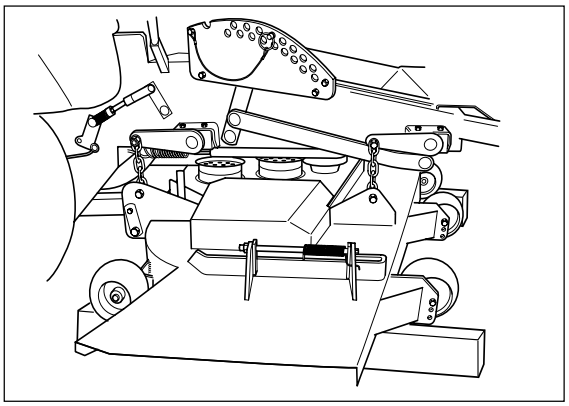

8011-601

Leveling the mower deck

IMPORTANT INFORMATION

Ensure that all four bearings suspending the deck to the mower are tightly bolted to the frame.

6. Check that all the chains are equally tensioned. If they are not, adjust the appropriate lower chain bolt in its slot.

Adjusting Cutting Height

Raise and secure the deck height lever to the transport position (6"). Measure from the cutting edge of the blades to the flat level surface. The distance should be150 mm (6").

Drop and secure the lever at (for example) the 2" cutting height. Measure as above. The distance should be 50 mm (2").

Deck Belt

Check the belt every 75 to 100 hours of operation. Inspect carefully for large cracks and significant damage. The small cracks that arise from normal use do not make it necessary to change the belt.

Changing Belts

1. Drop the deck to its lowest position.
2. Remove the operator's foot plate.
3. Remove the outer deck belt guards.

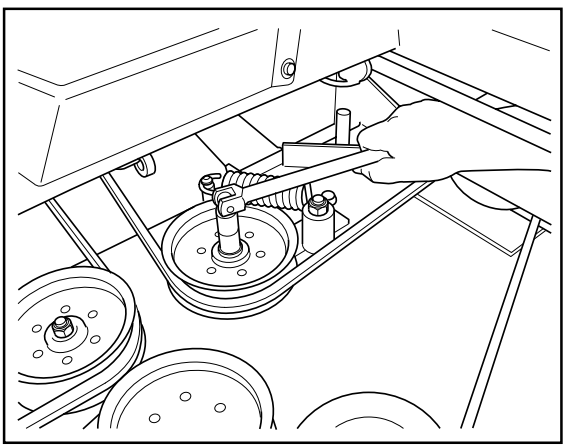

8011-622

Slackening the belt tensioner

https://truckmanualshub.com/

4. Using a 9/16" socket on the bolt of the idler pulley, loosen the deck belt. Roll the belt off the deck pulleys.
5. Roll the belt off the clutch pulley on the crankshaft.
6. Remove the old belt.
7. Fitting the new belt is the reverse of the procedure given above. Ensure that belt routing is as per the accompanying diagram.
8. Check that the belt is not twisted and that it runs correctly around all the pulleys.

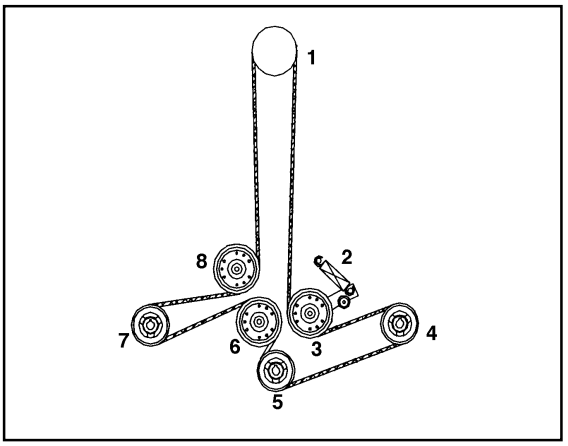

8011-580

Belt routing for the mower deck

Belt Tensioning Assembly

The belt is automatically tensioned by a spring (18). To cancel the force of the spring , use a 9/16" socket on the bolt (33) when removing or fitting the belt.

Check that there is no abnormal noise indicating that the idler pulley is loose on its shaft. If it is loose, tighten the bolt (33) or change the idler pulley.

Check that the idler arm is not loose on its bearing. If it is, tighten the nut (34) or change the bushing (38).

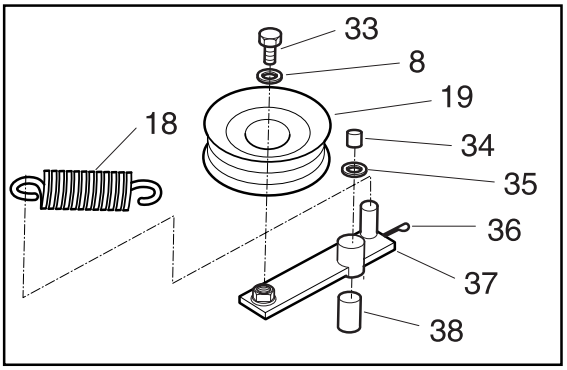

8011-617

Belt tensioning assembly

https://truckmanualshub.com/

Hydraulic Pump Belt

Check the belt every 75 to 100 hours of operation. Inspect carefully for large cracks and significant damage. The small cracks that arise from normal use do not make it necessary to change the belt.

Changing Pump and Deck Belts

1. Drop the deck to its lowest position.
2. Remove the operator's foot plate.
3. Remove the outer deck belt guards.
4. Using a 9/16" socket on the bolt of the idler pulley, loosen the deck belt. Roll the belt off the deck pulleys.
5. Roll the belt off the clutch pulley on the crankshaft.
6. Loosen the bolt (2) and twist the clutch tie down (10) aside (see the "Engine mounts" diagram).
7. Using a square, 1/2" ratchet wrench, slacken the pump belt and roll it off the pulley for one of the hydraulic pumps.
8. Remove the old belt.
9. Fit the new belt on the crankshaft pulley.
10. Swing the idler pulley towards the engine and fit the belt.
11. Fit the belt around the pulley on the right (looking upwards from below the mower).
12. Attach the spring and use a square, 1/2" ratchet wrench to cancel the force exerted by the belt tensioner.
13. Fit the belt around the left pulley (looking upwards from below the mower).
14. Check that the belt is not twisted and that it runs correctly around all the pulleys.
15. Check that there is perceptible play between the clutch and the clutch tie down (10) when the clutch flange is turned by hand (see the "Engine mounts" diagram). Adjust/twist the tie down and, using the nut (1), tighten the bolt (2).
16. Fit the deck belt. Check that the belt is not twisted and that it runs correctly around all the pulleys.
17. Fit the operator's foot plate.
18. Fit the outer deck belt guards.

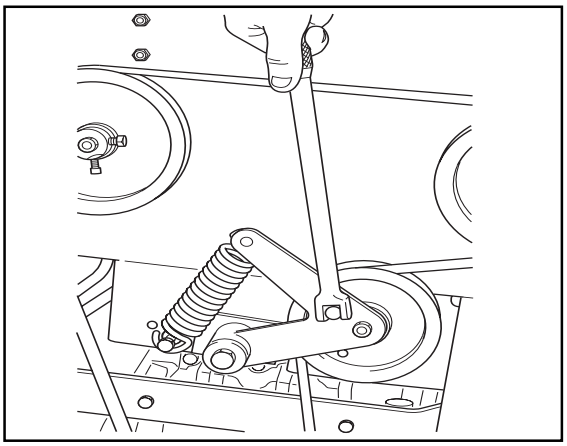

8011-623

Slackening belt tension

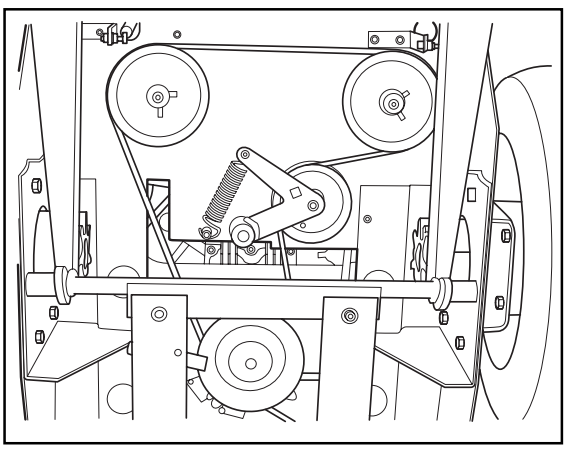

8011-624

Belt routing for the hydraulic pumps

https://truckmanualshub.com/

Pump Belt Tensioning Assembly

The belt is automatically tensioned by a spring (37). To cancel the force of the spring when removing or fitting the belt, use a 1/2" ratchet wrench in the square hole in the idler arm (45).

Check that there is no abnormal noise indicating that the idler pulley is loose on its shaft. If it is loose, tighten the bolt (42) and the set screws (41), or change the bushing (44).

Check that the idler arm is not loose on its bearing. If it is, tighten the bolt (49) or change the bushing (47).

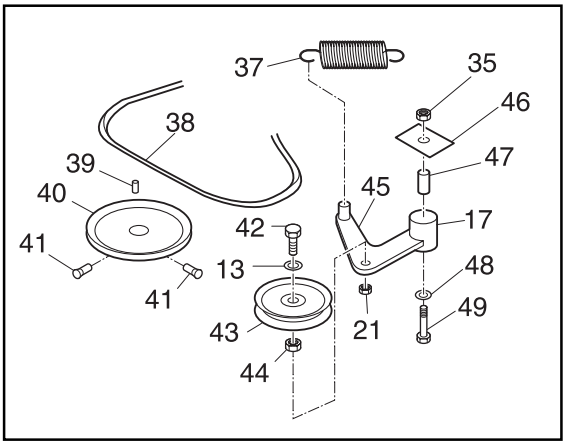

8011-616

Pump belt tensioning assembly

Front Wheel Bearings

Dismantling

1. Remove the grease cap (26).
2. Raise and support the front of the mower on blocks or similar.
3. Remove the cotter pin (30).
4. Remove the castle nut (27) and, pulling downwards, remove the front fork.
5. Remove the upper bearing (28).
6. Taking great care not to damage the seal (31), use a hammer and a suitable rod (or similar) to knock the lower bearing out in a downwards direction.

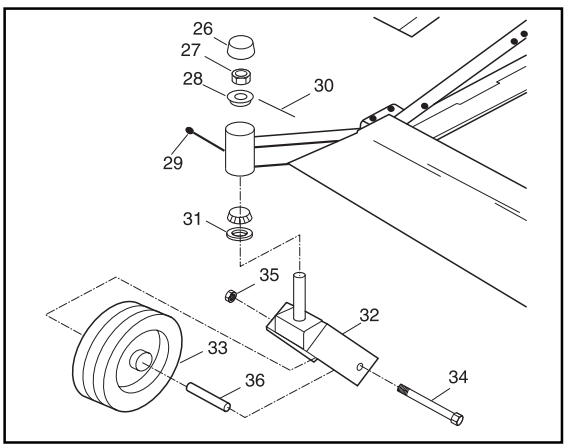

8011-619

Front wheel bearing

Assembling

The assembly procedure is the reverse of the dismantling procedure.

Lubricate the bearings with ball bearing grease.

Taking great care not to damage it, tap the seal into position.

Adjust the castle nut (27) until there is zero play in the bearings. Loosen the castle nut to the nearest hole and fit the cotter pin.

https://truckmanualshub.com/

REPAIRS

https://truckmanualshub.com/

Electrical System

Troubleshooting

See the “Troubleshooting” section towards the back of this manual.

Wiring Assembly

The diagram below shows the structure of the electrical system.

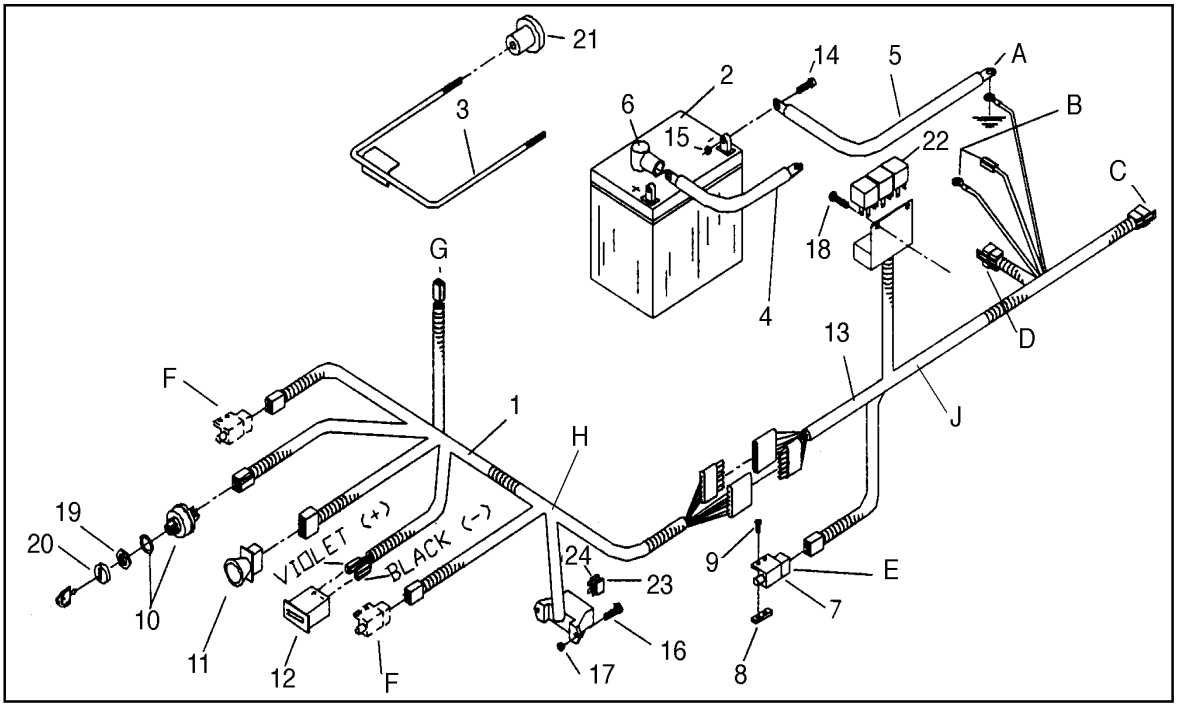

A. To the engine ground bolt
B. To the solenoid
C. To the electric clutch
D. To the pigtail
E. To the park brake
F. To motion control lever
G. To the seat
H. Console harness
J. Frame harness

8011-584

ZTH electrical system

To connect the engine to the frame harness (13), there is a pigtail. This plugs into connector “D” (see diagram above). The Kawasaki pigtail is illustrated below.

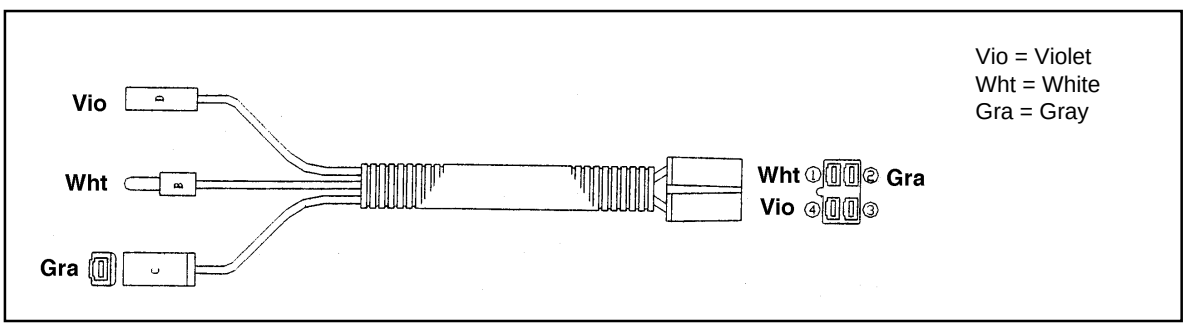

8011-587

Kawasaki pigtail

https://truckmanualshub.com/

The console harness (1) connects the console controls to the frame harness.

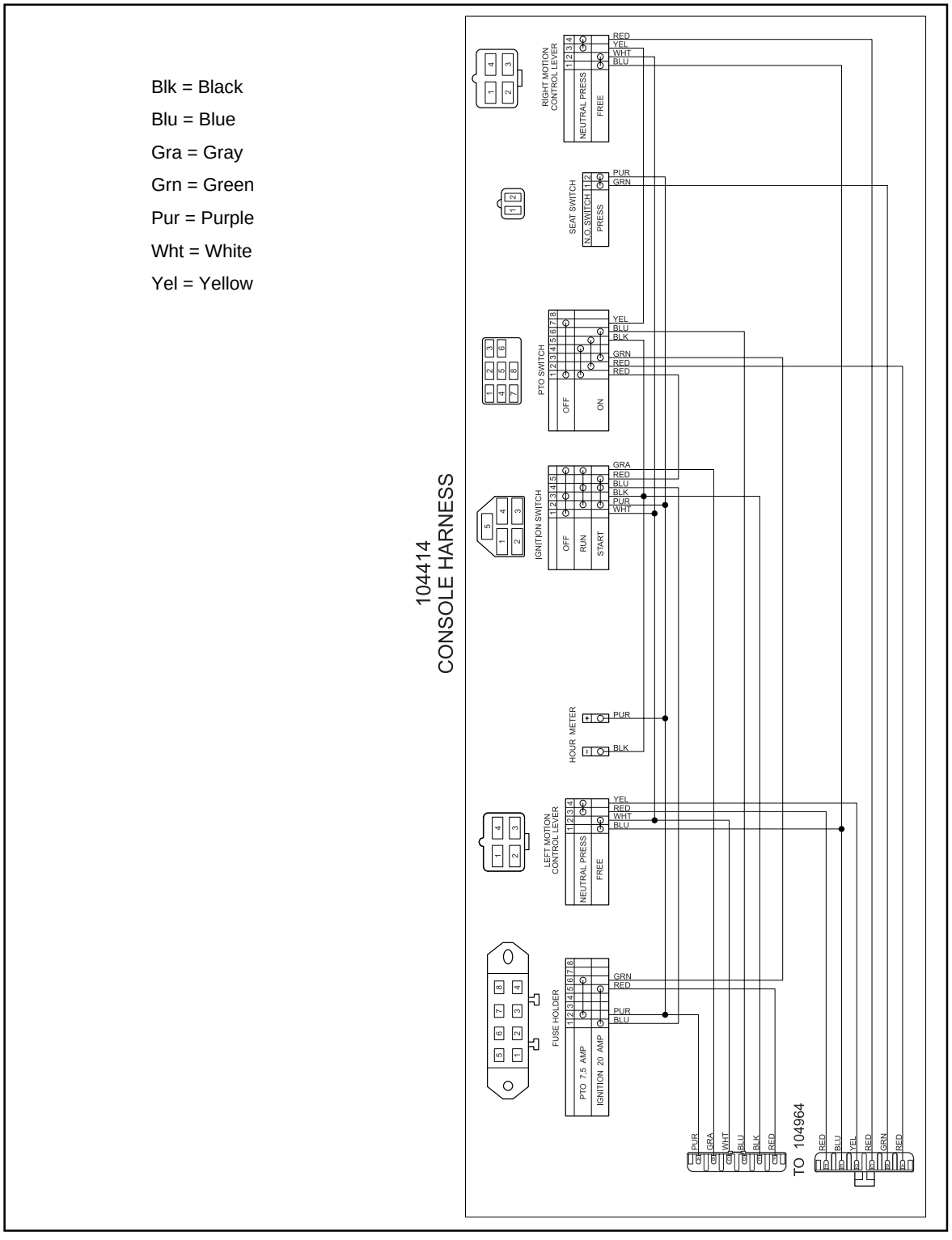

ZTH console harness

https://truckmanualshub.com/

There are two connectors connecting the frame harness (13) to the console harness (1).

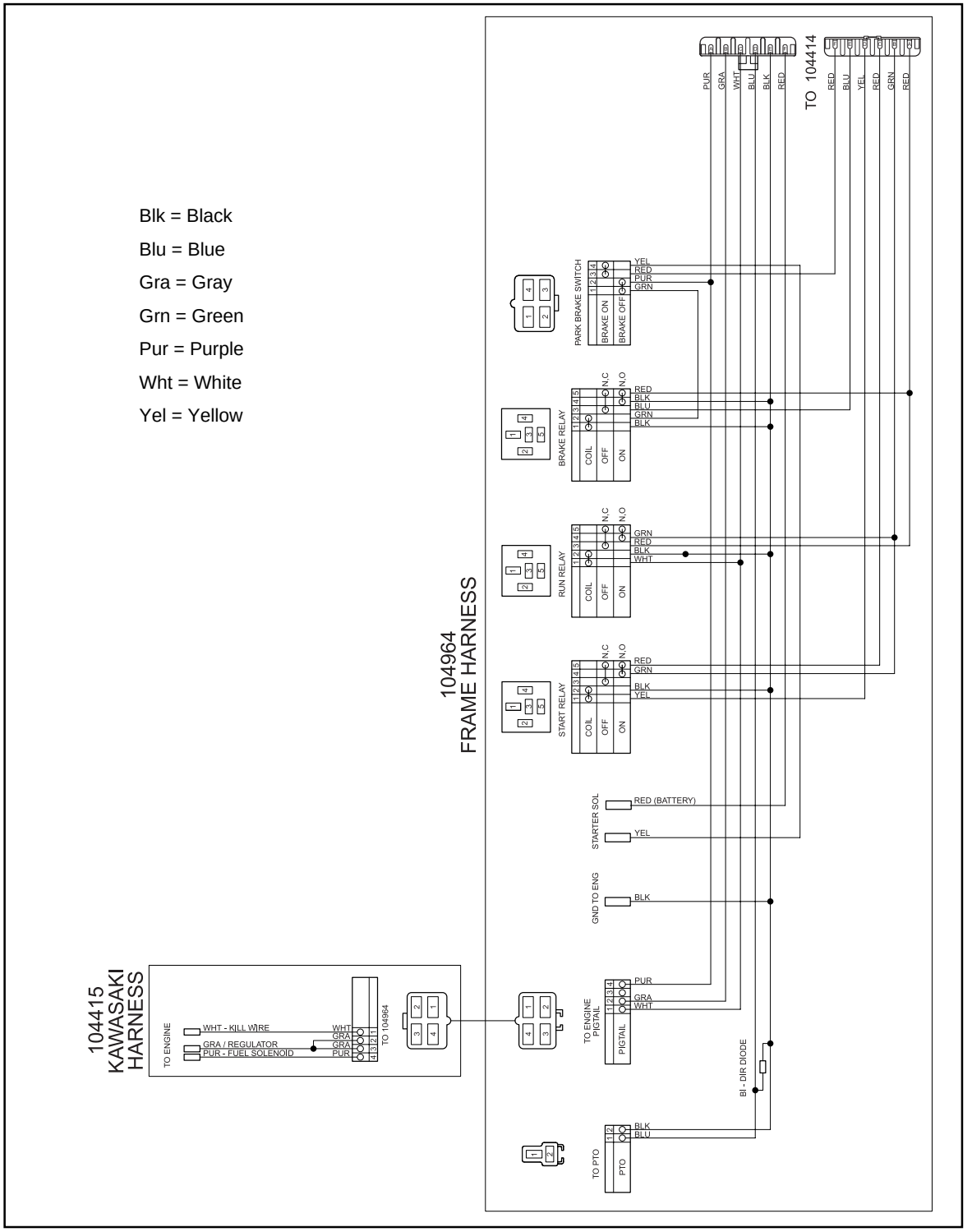

8011-628

ZTH frame harness

The engine pigtail (page 43) plugs into the “Engine Pigtail” socket of the frame harness.

https://truckmanualshub.com/

ELECTRICAL SYSTEM

Battery

The battery is maintenance-free and the cells are sealed. Breaking the seal invalidates the warranty. To avoid exposing the battery terminals to dangerous stress, use two wrenches when connecting or disconnecting the battery cables.

WARNING!

The battery contains corrosive acid. Wear goggles. Do not tip the battery over.

The battery gives off explosive fumes. Keep it away from all naked sparks and flames. Never smoke in the vicinity of the battery.

Never let children or untrained staff handle or work on the battery.

Procedures in the Event of Acid Contact

External: Drench with running water.

Internal: Drink copious quantities of water or milk. See a doctor as soon as possible.

Eyes: Drench with running water. See a doctor as soon as possible.

Fuses

Refer to the “ZTH electrical system” diagram.

The fuses (23, 24) plug into a holder on the left of the hydraulic tank. They are of the flat pin type commonly used in automobiles.

There are two active fuses and sockets for two spares.

Fuse rating and function (working along the holder from right to left) is:

- 20 A, main fuse.
- 7.5 A, deck clutch.
- Socket for spare fuse.
- Socket for spare fuse.

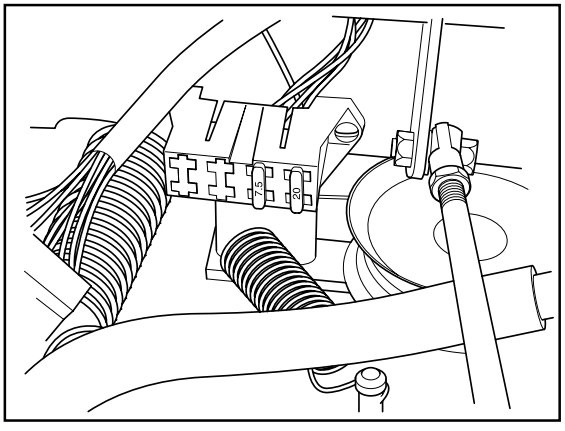

8011-596

Fuses

https://truckmanualshub.com/

Relays

Refer to the “ZTH electrical system” diagram.

The relays (22) plug into a holder under the seat (on the left). The three relays are identical and can be plugged into any of the sockets in the holder.

Relay function (working along the holder from right to left) is:

- Brake relay
- Run relay
- Start relay

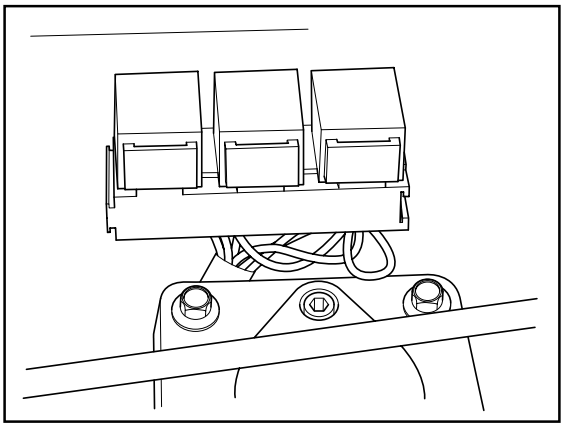

8011-597

Relays

Removing

Pull relays directly upwards. If necessary, carefully work a screwdriver under the relay and lever upwards.

Fitting

The relays have an asymetric pin pattern and will fit into the sockets in one way only. Press each relay down until the body contacts the holder.

Starter Motor Contactor

Changing

1. Disconnect the cable connecting the battery to the chassis. To avoid damaging the battery terminals, use two wrenches.
2. Pull the cables off the contactor.
3. Remove the contactor (the nuts are under the frame plate).
4. Position the new contactor so that the pin for the control cable is towards the chassis wall. The black cable connects to the front binding screw.
5. Connect the control cable (yellow) to its pin.
6. Connect the wires to to the battery and starter motor as shown in the diagram. Replace the connector guards.
7. Connect the cable between the battery and the chassis.

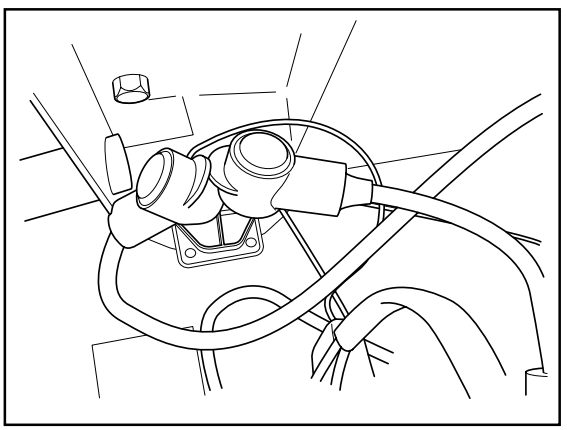

8011-598

Starter motor contactor

https://truckmanualshub.com/

Ignition and Start Switch

Refer to the “ZTH electrical system” diagram.

Changing

1. Free the control console and pull forwards.
2. Disconnect the wires at the back of the ignition switch (10).
3. Remove the ignition key and the rubber cap (20).
4. Remove the nut (19) and the ignition switch (10).
5. Thread the toothed plate connector onto the throat of the new ignition switch. Feed the switch into the console from the rear. Turn the switch so that the single pin faces towards the blade switch.
6. Start the nut (19) off on its thread and twist the switch to the correct position in the console panel. Try the key in the switch and then tighten the nut.
7. Remove the key and fit the rubber cap (20). Reinsert the key.
8. Reconnect the wires at the back of the ignition switch.
9. Refit the control console.

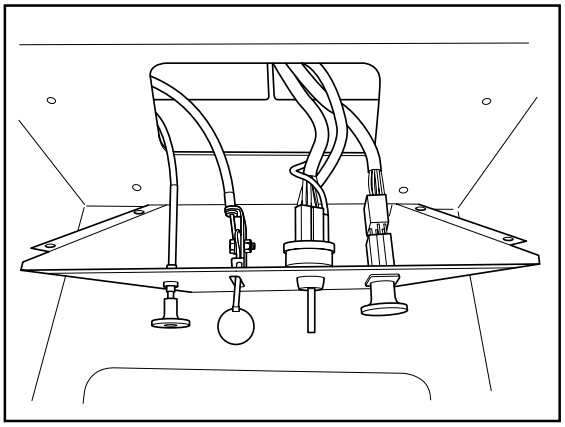

8011-599

Freeing the control console

Hour Meter

Refer to the “ZTH electrical system” diagram.

Changing

1. Free the control console and pull forwards.
2. Disconnect the wires at the back of the hour meter (12).
3. Prise the catches apart and remove the hour meter’s locking plate.
4. Pull the hour meter out of the console panel.
5. Ensuring that the numbers are turned to the correct position to be seen by the operator, insert the new hour meter in the console panel.
6. Fit the locking frame (push in manually and check that the catches have fastened).
7. Connect the two violet wires to the right pin and the black to the left.
8. Refit the control console.

https://truckmanualshub.com/

Blade Switch

Refer to the “ZTH electrical system” diagram.

Changing

1. Free the control console and pull forwards.
2. Disconnect the wires at the back of the switch (11).
3. Push in the plastic catch on the switch’s short side and draw the switch out through the console panel.
4. With the plastic catch and two contact pins facing upwards, push the new switch into the console panel unitl it is correctly seated.
5. Reconnect the wires at the back of the switch.
6. Refit the control console.

Mower Deck Clutch

Measuring the Supply Voltage

See the “Troubleshooting” section towards the back of this manual.

Measuring Coil Resistance

See the “Troubleshooting” section towards the back of this manual.

Troubleshooting Guide

See the “Troubleshooting” section towards the back of this manual.

Removing

1. Drop the deck to its lowest position.
2. Remove the operator’s foot plate.
3. Using a 9/16" socket on the bolt of the idler pulley, loosen the deck belt. Roll the belt off the deck pulleys.
4. Roll the belt off the clutch pulley on the crankshaft.
5. Disconnect the cable feeding the clutch. The connector is located next to the left engine mount.
6. Remove the bolt (9) and the lock washer (8).
7. Remove the clutch (7) and the spacer (6).

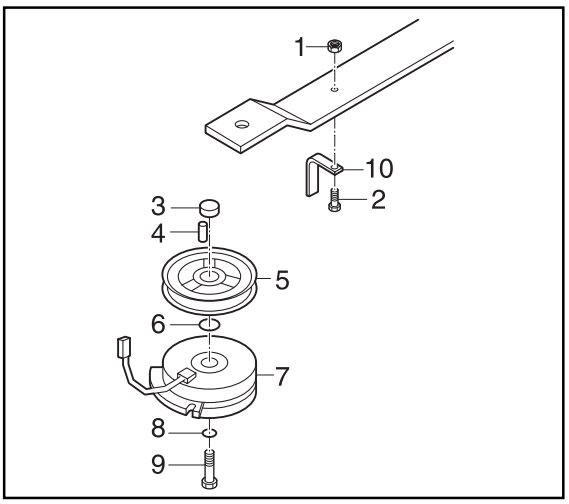

8011-592

Deck clutch

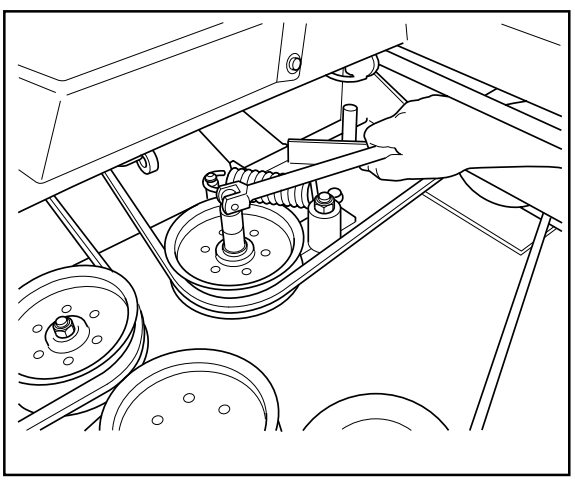

8011-6022

Loosen the deck belt

https://truckmanualshub.com/

Fitting

The fitting procerdure is the reverse of the removal procedure.

Pay particular attention to the following:

- The tightening torque for the bolt (9) is 67 Nm (50 ft/lb).
- With the bolt (9) tightened, there should be perceptible play between the clutch and the clutch tie down (10) when the clutch flange is turned by hand. If necessary, adjust/twist the tie down.
- Ensure that the cable cannot be damaged and secure it with a cable tie.

Motion Control Switches

These micro switches are difficult to access. By pulling the control console forwards, it is possible to change the right switch without any other major dismantling. However, this does require two people. When changing the left switch, the tubular shafts (31, 33) of the motion control levers must be lowered or removed. The procedure for doing this is detailed below and may also be used for the right switch.

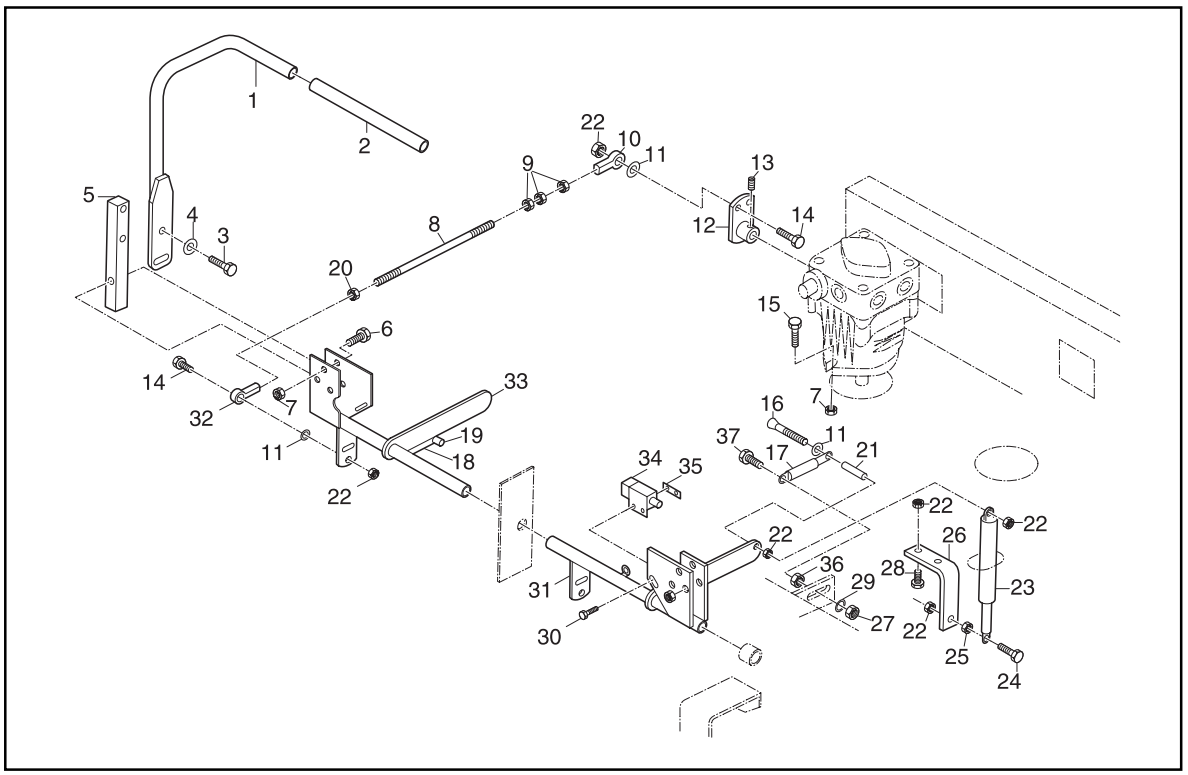

8011-589

Hydraulic pump linkages

https://truckmanualshub.com/

Removing

1. Swing the seat completely out of the way.
2. Release the mechanical link between the left park brake and the brake lever.
3. Release the dampeners (23) and springs (17) from the tubular shafts (31, 33) by removing the bolts (16) - each with two nuts (22) - spacers (21) and washers (11).
4. Release the front end of the ball joints (32) from the tubular shafts (31, 33) by removing the bolts (14), nuts (22) and washers (11).
5. Remove the control lever by removing the bolts (3) and spring washers (4).
6. Remove the bolt to the park brake arm (on the right side of the park brake shaft). Remove the arm and the released washers from the park brake shaft.
7. Pull out the park brake shaft and lever to the left. When the shaft is pulled out, the tubular shafts, first (33) and then (31), will be freed.
8. Disconnect the cable connection to the switch and remove the tubular shaft.
9. Remove the switch from the tubular shaft.

Fitting

The fitting procedure is the reverse of the removal procedure.

Pay particular attention to the following:

- Check and position the switches before fitting the tubular shaft.
- Position the switches so that there is a click when the inner flat surface of the arm continuation shaft (5) passes over the outside corner of the tubular shaft's lever mount.
- Check the setting of the linkages (see Hydraulic System\Hydraulic Pump\Linkage Adjustment).
- Check the setting of the reverse detent spring (see Hydraulic System\Hydraulic Pump\Reverse Spring Detent Adjustment).

Park Brake Interlock Switch

Refer to the "ZTH electrical system" diagram.

Changing

1. Disengage the park brake.
2. Drop the deck to its lowest position.
3. Remove the bolts (9). The tapped plate (8) is freed when the switch is loosened.
4. Separate the connector from the switch (7). Pull it directly upwards.
5. Push the connector onto the new switch (there is only one way for the parts to mate).
6. Using the bolts (9) and tapped plate (8), fasten the switch securely to its bracket.
7. Check that the start interlock functions correctly.

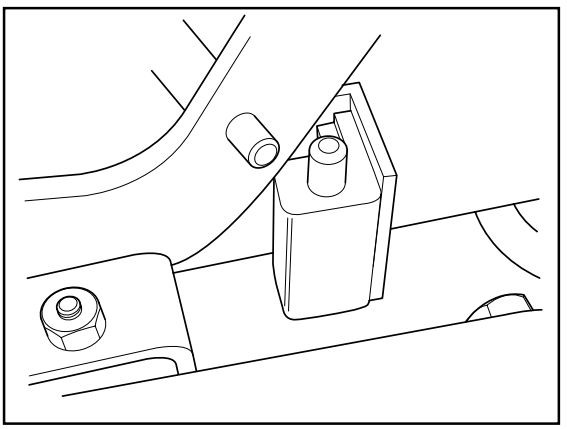

8011-600

Park brake interlock switch

https://truckmanualshub.com/

Welding

The following applies to arc, MIG, TIG and all other electrical welding methods.

IMPORTANT INFORMATION

When performing electric welding on the mower, take all necessary precautions to prevent damage to the electrical system.

The engine's ignition system has sensitive electrical components. Electrical welding must not, therefore, be carried out on the engine. Remove the component to be welded (e.g. the muffler) or the ignition system. Before carrying out welding on any other part of the mower:

1. Remove the battery cables.
2. Disconnect the connector between the engine pigtail and the frame harness.
3. Connect the welding earth lead as near as possible to the point of welding.

https://truckmanualshub.com/

Hydraulic System

Hydraulics Hygiene

If they are to operate well, hydraulic systems must be kept free from all impurities. During operation, particles that can cause both wear and malfunction are generated inside hydraulic systems. To separate these particles from the hydraulic fluid, filters are used. Filters are dimensioned to cope with particles developed within the system. If impurities enter from outside, filters tend to clog quickly and become ineffective. Any dirt entering a hydraulic system accelerates the production of further impurities. A vicious circle arises; there is much disruption and a lot of time is lost in cleaning.

The particles causing most damage are those which are of roughly the same size as the play between the moving parts in system components. Normal play in pumps and valves is from 3 - 5 µm and upwards (1 µm = 0.001 mm). It should be noted that a particle measuring 40 µm can only just be seen by the naked eye.

The main impurities generated in system operation are:

- Wear particles (mainly from components with moving parts, e.g. pumps and hydraulic motors).
- Dust entering the hydraulic oil tank via air vents.
- Water formed by condensation (water vapor enters with air from outside).
- Particles of dirt entering the system via moving piston rods, etc.
- Sediments, etc. produced by the breaking down of the hydraulic oil.
- Corrosive matter produced in the system as a result of oil not being changed in time. Old oil tends to be rich in water and other aggressive substances.
- Dirt entering the system during service or repair work, e.g.:
  - Contamination during the changing or topping-up of oil.
  - Dust in the workshop.
  - Sealing agents and similar.
  - Dirt from storage and handling prior to fitting.
  - Fibers from rags, filters, etc.
  - Dirt from parts not cleaned prior to dismantling.
  - Dirt and dust entering the system from contaminated protective plugs.

Especially if the system is not regularly used, even microscopic quantities of water will accelerate the rusting of ground and polished surfaces. This hastens the formation of sediments that can clog filters and give rise to circulation and cavitation problems in hydraulic pumps.

Minute fibers and threads from cleaning rags or clothing can form fluff which will obstruct nozzles and other narrow apertures. The fibers themselve do not cause significant damage, but the clogging they generate greatly accelerates component wear.

Every particle of dirt in hydraulic systems acts as a grinding agent. Abrasion is increased, more impurities are produced and permanent damage is caused. Particle quantity increases every time work is done on hydraulic systems. Although most particles will have been trapped by the filters after a few hours operation, it is obviously good practice to avoid all unnecessary opening of hydraulic systems, even if carried out by professionals.

https://truckmanualshub.com/

HYDRAULIC SYSTEM

Hydraulic Oils

The oil is as important as any other part of the hydraulic system. It has been shown that 70% of all problems with hydraulics are due either to the use of unsuitable oil grades or filling/topping-up with contaminated oil.

Contamination from outside is responsible for by far the greater part of the impurities in the oil in hydraulic systems.

Correct Oil Leaks

Cavitation from injested air can cause internal hydraulic pump and wheel motor damage. Air can enter the system anywhere there is an oil leak. Therefore it is very important that oil leaks be repaired immedately.

Keep Hydraulic Oil Clean

Dirt and other forms of contamination are the greatest enemies of hydraulic systems. Long system life and high efficiency very much depend on hydraulic oil being kept in good condition. Use only the grade of oil stated in the lubrication chart. Make sure that hydraulic oil is inspected at regular intervals and that levels are kept topped-up.

All high-quality hydraulic oils are supplied in clean containers and have been filtered as free from impurities as possible. It is when the containers are opened or stored that problems arise. Do not open a container before the area around the cap, seal or similar has been wiped clean of all dust, dirt, fibers and water. Any other container, funnel or hose used when filling the hydraulic system must be clean.

Work Methods

Cleanliness is also vital for any components being removed from or fitted to a hydraulic system. However, it must be borne in mind that used components sent to a workshop will often be specially inspected and/or tested. Such components should be dispatched in the condition they were prior to removal. Otherwise, the true reason for the fault may be difficult to ascertain and testing may give false results. Furthermore, returned components that have been cleaned may mistakenly be presumed to be free from defect and sent back without the appropriate action being taken.

The following are suggested as routine steps when working on hydraulic systems:

1. Perform general cleaning as necessary.
2. Protect the point/area where the repair is to be carried out from dust and other impurities in the air. Plastic covers and the suchlike can be used.
3. Clean thoroughly using white spirit or an equivalent. It is not sufficient to clean only those parts directly affected. Places from where dirt can fall onto the work point must also be cleaned. The same applies to any tools used at the site of the intervention. Clean with a suitable brush, wipe with a rag and repeat if necessary. Finally, spray the site, hose connections, etc. with clean white spirit.
4. Fit suitable protector plugs/caps immediately after removing a hose or pipe. Components (even those being replaced), hoses, pipes, etc. should all be suitably protected.
5. If they are not exchanged for new, all old pipe connector parts must be cleaned with fresh white spirit and then blown with compressed air before refitting.
6. Maintain strict hygiene when measuring pressures. Before joining them, spray both parts of quick couplings with white spirit. Ensure that any protective plugs/caps are clean before they are used again.

https://truckmanualshub.com/

ZTH Hydraulic System

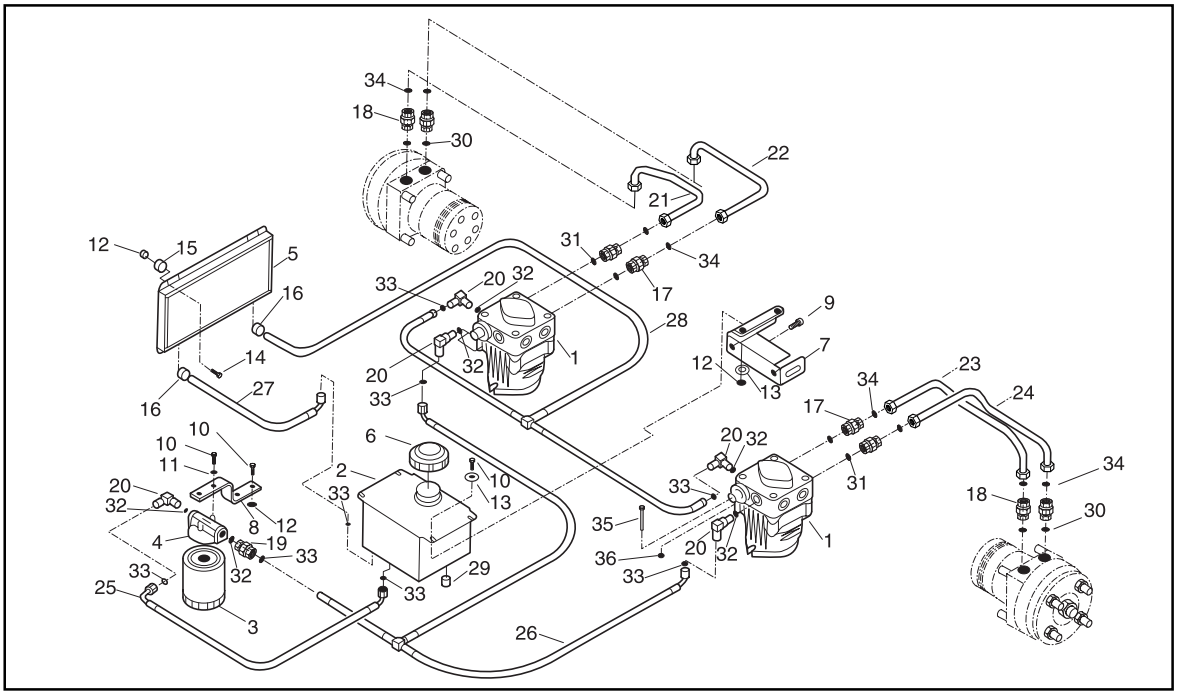

ZTH hydraulic system

The hydraulic pumps are controlled (via mechanical links) by the motion control levers.

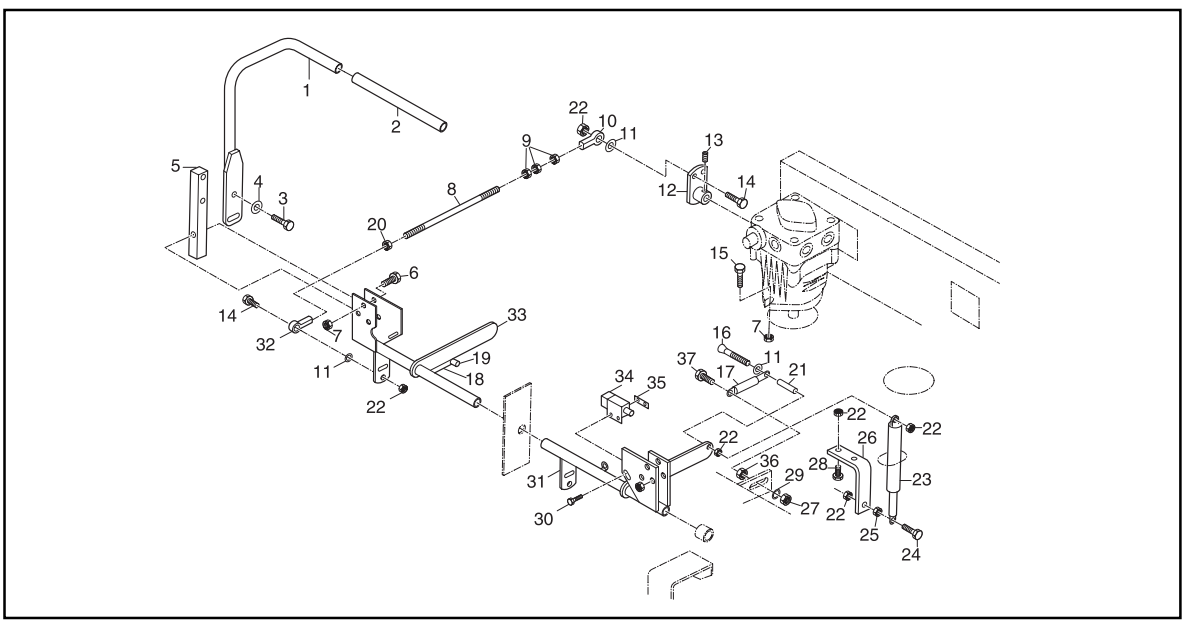

Hydraulic pump linkages

https://truckmanualshub.com/

Hydraulic Tank

Draining

1. The drain cap (29) is located on the underside of the tank in the front left corner (see the “ZTH hydraulic system” diagram). Drained hydraulic oil must be handled in accordance with the regulations governing the disposal of waste oil. Do not put drained oil back into the system.
2. It is not necessary to drain the entire hydraulic system when performing scheduled hydraulic system oil changes. Change only the oil in the tank.
3. Anytime the hydraulic oil is changed, the oil filter should also be changed.

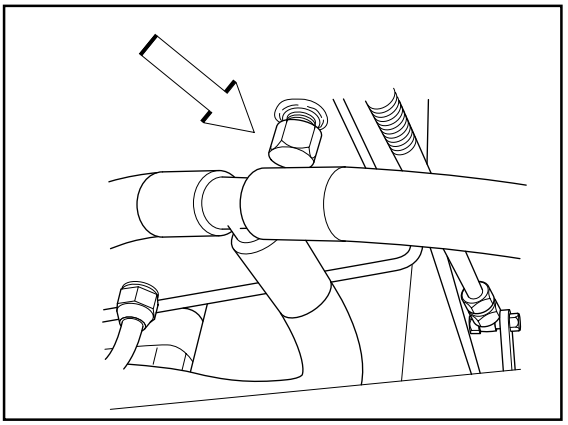

8011-590

Hydraulic tank drain cap

Filling

Fill the tank with clean oil direct from the manufacturer’s container. For oil type, refer to the hydraulic tank decal or the lubrication chart. The use of non-approved oils can invalidate the warranty.

The level must be around 19 - 25 mm (3/4" - 1") below the top of the tank. Vent the system using the air screws on the hydraulic pumps and top-up as necessary.

Removing

1. Drain the hydraulic tank as above.
2. Disconnect the 7" tube (25) and “O” ring (33) from the tank.
3. Disconnect the hose (27) and “O” ring (33) from the tank.
4. Remove the bolts (10) - nuts located beneath the bracket - and their washers (13). Lift the tank away.

Fitting

The fitting procedure is the reverse of the removal procedure.

Use new “O” ring flares.

https://truckmanualshub.com/

The Cooler for the Hydraulic System

Removing

1. Remove the right rear wheel.
2. To eliminate any excess pressure, remove then replace the hydraulic tank cap.
3. Loosen the hose clamps (16) but leave the hoses attached to the cooler.
4. Remove the bolts (14), spacers (15) and nuts (12).
5. Hold the bottom of the cooler higher than the hydraulic tank and disconnect the hoses (27, 28) from the cooler.

Fitting

The fitting procedure is the reverse of the removal procedure.

Hydraulic Filter

Use genuine Husqvarna filters only. The use of pirate parts can invalidate the warranty.

Changing Filters

When changing the oil in the hydraulic tank, change the filter also. Dispose of the used filter in accordance with the environmental regulations relating to engine oil filters.

An oil filter chain may be used for removal but not for fitting.

1. Screw the filter (3) from the filter head (4) - refer to the “ZTH hydraulic system” diagram.
2. Smear the new filter’s gasket with clean hydraulic oil.
3. Screw on the new filter until the gasket contacts the filter head.
4. Manually turn the filter a further one and a half turns.

Removing

1. Drain the hydraulic tank as per the instructions given above.
2. Disconnect the hoses (25, 26) and “O” rings (33) from the filter head (4).
3. Remove the bolts (10) and washers (11). Remove the entire filter unit.

Fitting

The fitting procedure is the reverse of the removal procedure.

Use new “O” ring flares.

Hydraulic Lines

Two types of hydraulic lines are used - high pressure hoses and pipes. For pipes (earlier mower models), the fitting instructions given below apply (they do not need to be observed for mowers with hyrdaulic hoses between pumps and motors).

https://truckmanualshub.com/

Fitting

IMPORTANT INFORMATION

Pipes between hydraulic pumps and hydraulic motors must not be subjected to bending or compression. To avoid pipe fatigue and the resultant leaks and fractures, the fitting procedures below must be observed.

1. Clean the surfaces mating pumps and motors to their mounts.
2. Bolt the hydraulic pump loosely into place - it must still be possible to move the pump.
3. Bolt the hydraulic motor loosely into place - it must still be possible to move the motor.
4. Using new “O” rings (34), and only hand tightening the fittings at either end, connect the pipe between pump and motor.
5. Tighten the hydraulic pump bolts.
6. Tighten the hydraulic motor bolts.
7. Tighten the pipe fittings to a torque of 41 Nm (30 ft/lb).

Hydraulic Pump

Removing

1. Drain the hydraulic tank as per the instructions given above.
2. Raise the mower and support on blocks or jack stands.
3. Remove the rear wheel on the side with the faulty pump.
4. Using a swivel-jointed socket handle, hold the idler pulley so that the belt can be rolled off the pulley beneath the pump (see “Changing belts”).
5. Loosen the two lock screws holding the pump pulley and remove it from its shaft.
6. Clean as set out in the instructions.
7. Remove the hydraulic lines (21, 22 or 23, 24) and “O” rings (34) from both pump and motor.
8. Be careful not to damage the cooler when working on the right hydraulic pump. Release the ball joint (10) from the pump lever (12) - refer to the “Hydraulic pump linkages” diagram.
9. Disconnect the hose (28) and “O” ring (33) from the pump.
10. Disconnect the hose (26) and “O” ring (33) from the pump.
11. Remove the pump’s retaining bolts and lift it away.

Dismantling and Assembling

Refer to Hydro-Gear Service Manual for Bantam Duty Pump models 10A and 21L.

Fitting

The fitting procedure is the reverse of the removal procedure.

Use new “O” rings.

Pay particular attention to the following:

- Fit hydraulic pipes as per the instructions under “Hydraulic Lines”.

https://truckmanualshub.com/

- Ensure that the pump pulley aligns with the crankshaft pulley and the pulley for the other pump.
- Ensure, on both sides, that the link between the motion control lever and the hydraulic pump is correctly adjusted.
- Vent the hydraulic system before operation.

Linkage Adjustment

WARNING!
Ensure the mower is securely supported on blocks or jack stands.
Keep hands, feet and clothing away from rotating tires.

This adjustment must be made with the rear wheels rotating. Raise the rear of the mower and support it securely on blocks or jack stands so that the wheels are free to rotate.

1. Remove the seat rod so that the seat can swing down onto the frame.
2. Tilt the seat forward and, to engage the seat safety switch, place a length of 2" x 4" between the foot plate and the center of the seat.
3. Loosen the jam nuts (20) directly behind each ball joint (10, 32) on the pump control links. These links can now be rotated using the other nuts (9). The jam nuts have a left-hand thread.
4. Start the engine (the park brake must be engaged and the motion control levers in the neutral slots). Run the engine at approximately half throttle.
5. Release the park brake so that the rear wheels can rotate.
6. Working on one side at a time, put the motion control lever into the neutral position in the drive channel. Adjust the motion control linkage by turning the two nuts (9) in the proper direction. Turn these nuts far enough to just stop the wheel rotating.
7. Move the motion control lever forward, then into the neutral position and then into the neutral slot. The wheel must stop completely at this point.
8. Now move the motion control lever into the reverse position and release it. The lever should return to neutral on its own. If not, the reverse spring detent must be adjusted, check below.
9. Tighten the jam nuts directly behind each ball joint (10, 32).
10. Adjust the linkage on the other side in the same way.
11. Reattach the seat rod to the seat.

Reverse Spring Detent Adjustment

1. Stop the engine and remove the key.
2. Pull the motion control lever back to the reverse position and then release it. The lever should spring back and stop centrally in line with the neutral slot (i.e. it should be possible to move the lever directly back to the locked neutral position without touching the sides of the slot).
3. If adjustment is required, move the seat to the back of its slide rails before tilting it forward and removing the rod from the seat frame. Swing the seat down onto the frame.
4. Sufficient to allow the bolt to slide in its slot, loosen the nut (27) fastening the spring (17) to its upper mount.
5. Swing the motion control lever out into the neutral slot. While it is there, pull it against the back face of the neutral slot.

https://truckmanualshub.com/

6. Holding the lever, adjust the spring by sliding the bolt (37) in the slot to remove all the slop. Retighten the bolt.
7. Check the adjustment by pulling the motion control lever back to the reverse position and releasing it.
8. If necessary, make the same adjustment on the other side.
9. Reattach the seat rod to the seat frame.

Hydraulic Motors

Removing

1. Drain the hydraulic tank as per the instructions given above.
2. Raise the mower and support on blocks or jack stands.
3. Remove the rear wheel on the side with the faulty motor.
4. Remove the cotter pin and hub nut. Using an extractor if necessary, pull the hub off the axle.
5. Remove the park brake as a single unit.
6. Clean as set out in the instructions.
7. Disconnect the hydraulic lines (21, 22 or 23, 24) and “O” rings from both the pump and the motor.
8. Remove the hydraulic motor from its bracket.

Dismantling and Assembling

Refer to Parker Hydraulics Torqlink™ Service Procedure for TE Hydraulic Motors.

Fitting

The fitting procedure is the reverse of the removal procedure.

Use new “O” rings.

Pay particular attention to the following:

- Fit hydraulic pipes as per the instructions under “Hydraulic Lines”.
- The tightening torque for the hub nut is 122 Nm (90 ft/lb). After tightening, align the nut with the cotter pin hole.
- Adjust the park brake as set out in the instructions.
- Vent the hydraulic system before operation.

https://truckmanualshub.com/

Troubleshooting

Engine

Check section 8 of the Kawasaki Service Manual.

The above section contains a troubleshooting guide for engine and auxiliary systems. It also has a special section on troubleshooting the starter motor.

Wiring Harness

- Symptom: The starter motor works but the engine does not turn over.

Suggested procedure:

1. Check the fuel level and the position of the fuel valve lever.
2. If OK, disconnect the hose, hold the end in a container and crank the engine. If no fuel comes out, the fuel pump is faulty or the line is blocked. If fuel does come out;
3. Remove the air filter cover and air filter. The fuel valve can be seen in front of the carburetor. With the seat switch depressed, hold a finger against the valve and turn the ignition switch to RUN. A sharp click will be felt if the valve opens (the carburetor will then be getting fuel). If not;
4. Disconnect the main harness from the engine. Locate the red and violet wires in the main harness connector. Attach the red (+) lead from a voltmeter to this connector, and ground the black (-) lead to the mower chassis. With an operator in the seat and the ignition turned to RUN, the voltmeter should register 12 volts. If it does, the fuel valve is faulty. If there is no voltage, the problem may be in the harness wires, the connectors or the ignition switch.

- Symptom: The starter motor does not work.

Suggested procedure:

1. Check that the brake lever is in the on position, that the blade engagement switch is pushed in, that the motion control levers are in the neutral slots and that there is someone on the driver's seat. If all correct;
2. Check the 20-amp fuse. If OK;
3. Check the battery for charge (should be 12 to 13 volts) and that the battery cables are making good contact at both ends. If OK;
4. With all levers and switches properly positioned for start and an operator on the seat, hold index finger and thumb against the start relay, and turn the ignition switch to RUN. A sharp click should be felt in the relay. If not, change the relay and try again. If a click is felt;
5. Check that all harness connections to the various switches and the engine are properly connected. If all OK;
6. Disconnect the yellow lead from the starter's contactor; attach the red (+) lead of a voltmeter to this wire, and ground the black (-) lead to the mower chassis. With all levers and switches properly positioned for start and an operator on the seat, turn the ignition to RUN. The voltmeter should read 12 to 13.5 volts. If there is no voltage, the harness may have a broken wire, a connection in a cable connector may be damaged or a switch broken/incorrectly set.

- Symptom: The ignition fuse blows with the ignition switch at RUN, but does not blow if the engine connector is disconnected.

Suggested procedure:

1. With engine connector connected, disconnect the seat and brake switches and the blue and violet lead from the hour meter. Does the 20-amp ignition fuse still blow when the ignition is now turned

https://truckmanualshub.com/

to RUN?

2. If yes, the problem is probably in the engine harness, engine components or ignition switch. Disconnect the fuel valve. If the fuse does not blow, the problem is probably in the fuel valve.
3. If, from point 1 above, the fuse does not blow, reattach the hour meter connectors. If the fuse blows, the hour meter is probably faulty.
4. If the hour meter is OK, reconnect the brake switch and pull the brake on. If the fuse holds, reconnect the seat switch and turn the ignition to RUN.
5. If the fuse holds, remove and then replace the relays one at time and try again. A blown fuse here indicates that the relay is faulty.
6. If it has been established that the problem is in one of the safety interlock circuits, that the battery is delivering 12 volts and that the main fuse is OK, but that the engine will not turn over, the brake relay can be easily tested as set out below.

IMPORTANT INFORMATION

Disconnecting the brake relay bypasses that part of the interlock system which prevents the mower moving with the brake on.

Engage the brake, disconnect the brake relay and attempt to start the engine. If the engine now turns over and the main fuse holds, the brake relay is probably faulty.

- Symptom: Clicking under the console; the engine runs poorly and surges.

Suggested procedure:

1. Disconnect the hour meter. If the symptoms disappear, replace the hour meter.

https://truckmanualshub.com/

Clutch

- Measuring clutch coil resistance.

1. Turn the engine and PTO switch off.
2. Disconnect the clutch at the clutch connector.
3. Set the meter to read ohms.
4. Connect the meter leads to the clutch.
5. Check the meter reading.
   CMS-175 (237 Nm) = 2.45 - 2.71 Ω.
   CMS-200 (271 Nm) = 1.74 - 1.93 Ω.
   The values above are at 23°C (68°F).
   If the reading falls within the acceptable range, measure the supply voltage at the clutch. If not, replace the clutch.

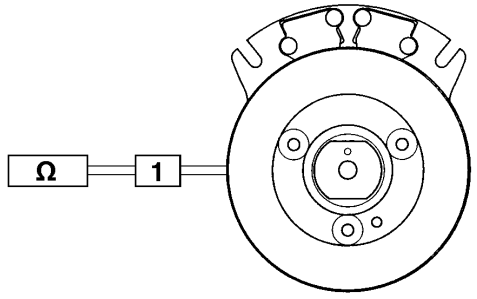

1. Connector

Ω. Ohmmeter

8011-567

Measuring resistance

- Measuring the supply voltage at the clutch.

1. Turn the engine off.
2. Connect the meter leads at the clutch connector.
3. Set the meter to read volts.
4. Ensure that the wires will not become entangled in the rotating parts of the clutch.
5. Start the engine and engage the PTO switch.
6. Measure the voltage across the leads at the connectors.
7. The voltage should be 12 - 14 volts DC. If the clutch still fails to operate, replace the clutch.
8. If voltage is not within the 12 - 14 volt range, measure input voltage and output voltage at the clutch switch. Any drop in voltage is unacceptable.

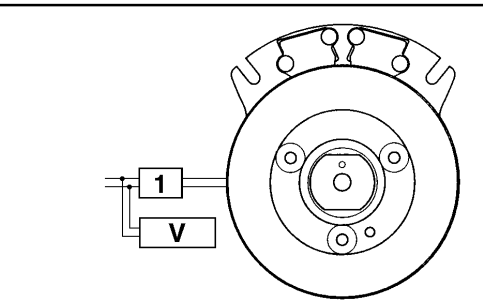

1. Connector

V. Voltmeter

8011-568

Voltage measurement

https://truckmanualshub.com/

TROUBLESHOOTING

Problem	Possible causes	Solution
Clutch will not engage		
Blown fuse.	• Low coil resistance.	Replace with new MagStop unit.
	• Defective battery.	Replace.
	• Faulty charging system.	Repair or replace.
	• Bad wiring or connections, PTO switch	Repair or replace.
Low voltage supply.	• Defective battery.	Replace.
	• Faulty charging system.	Repair or replace.
	• Bad wiring or connectors, PTO switch.	Repair or replace.
Incorrect coil resistance.	• Damaged coil.	Replace with new MagStop unit.
Inadequate current supply	• Broken clutch lead wire.	Repair.
	• Faulty electrical system.	Measure coil resistance and supply voltage at the clutch. If both are correct, electrical system is faulty. Repair or replace.
Rotor/armature air gap too large (more than 0.125"/3.18 mm)	• Rotor/armature wear. End of useful life.	Replace with new MagStop unit.
Brake will not engage		
Armature/brake poles worn out.	• End of useful life.	Replace with new MagStop unit.
Contaminated friction surfaces.	• Engine oil leak on brake.	Repair leak. Replace with new MagStop unit.
Clutch slips		
Low voltage supply.	• Defective battery.	Replace.
	• Faulty charging system.	Repair or replace.
	• Bad wiring or connectors, PTO switch	Repair.
Inadequate current supply.	• Broken clutch lead wire. • Faulty electrical system.	Repair. Measure clutch coil resistance and supply voltage at the clutch. If both are correct, electrical system is

https://truckmanualshub.com/

		faulty. Repair or replace.
Overloaded clutch.	• Clogged deck, faulty spindle, etc.	Remove excess grass. Replace spindle.
Contaminated friction surfaces.	• Engine oil leak on clutch.	Repair leak. Replace with new MagStop unit.
Noisy clutch/vibrations		
Failed bearing.	• Loose mounting (bolt not tightened to the correct torque).	Replace, tighten to specification.
	• Insufficient play at the adapter plate	Check, clean, adjust.
Adapter plate rattles against anti-rotation pin.	• Some noise is normal.	If noise is excessive, repair or replace anti-rotation pin device.
Clutch loose on shaft	• Loose mounting (bolt not tightened to the correct torque).	Tighten mounting bolt to specification.
	• Mounting bolt too long and bottoms on the crankshaft before the clutch bites.	Use correct length bolt.
	• Mounting washer too thin and deforms when bolt is tightened.	Use correct washer.
	• Shaft bottoms on the clutch.	Use proper spacer, at least1/4" thick
.		
Clutch not mounted square.	• Ground drive spacer mounting shoulder not square.	Replace.
	• Clutch integral key hitting end of keyway in engine shaft.	Space clutch away from radius in shaft keyway.
	• Incorrect or no chamfer on ground drive spacer.	Increase chamfer on ground drive spacer.
Broken spring.	• Loose mounting.	Replace clutch.

WARNING!

A clutch with broken rivets or springs may separate from the shaft and cause personal injury.

https://truckmanualshub.com/

Hydraulic Pump

In most cases, problems with the drive system are not due to a defective pump but to slipping drive belts, partially engaged bypass valves, loose or damaged control linkages, etc. Be sure to check all of these before assuming a pump is faulty.The troubleshooting checklist below is designed to help determine the cause of problems.

WARNING!

Do not attempt any servicing or adjustments with the engine running. Take great care when inspecting drive belts, pulleys and motion control lever linkages!

Troubleshooting Checklist, Hydraulic Pump

Problem	Cause	Corrective action
Vehicle does not drive/track straight.		
	• Vehicle tires improperly inflated.	Adjust to proper pressure.
	• Pump linkage bent, loose or incorrectly adjusted.	Repair, adjust or replace the linkages on both sides.
	• Bypass loose.	Tighten the bypass.
	• Inlet leak.	Check all connections and hoses for leaks.
Unit is noisy.	• Engine RPM high.	Adjust the speed regulator.
	• Oil level low or oil contaminated.	Fill to proper level or change oil.
	• Excessive loading (long grass).	Raise the cutting height, drive more slowly.
	• Air trapped in the hydraulic system.	Aerate the system.
	• Bypass loose.	Tighten bypass.
	• Inlet leak.	Check all connections and hoses for leaks.
	• Clogged/damaged hydraulic filter.	Replace filter.
Unit has no/low power.	• Engine RPM low.	Adjust the speed regulator.
	• Pump linkage bent, loose or incorrectly adjusted linkage system.	Repair or adjust the linkages on both sides.
	• Drive belt slipping or pulley damaged.	Repair/clean or replace drive belt.
	• Oil level low or oil contaminated.	Fill to proper level or change oil.
	• Excessive loading (long grass).	Raise the cutting height, drive more slowly.
	• Air trapped in the hydraulic system.	Aerate the system.

https://truckmanualshub.com/

	• Bypass loose.	Tighten the bypass.
	• Inlet leak.	Check all connections and hoses for leaks.
	• Clogged/damaged hydraulic filter.	Replace hydraulic filter.
	• Defective hydraulic pump.	Replace pump.
Unit operating hot.	• Build-up of of grass cuttings.	Clean the exterior of the mower, especially the cooler.
	• Hydraulic cooler clogged or damaged.	Replace hydraulic cooler.
	• Oil level low or oil contaminated.	Fill to proper level or change oil.
	• Excessive loading (long grass).	Raise the cutting height, drive more slowly.
	• Air trapped in the hydraulic system.	Aerate the system.
	• Inlet leak.	Check all connections and hoses for leaks.
External oil leak	• Loose connection/seal.	Tighten, clean, test run.
	• Damaged seal or gasket.	Replace seal, test run. Replace seal and gasket.
	• Hose leaking but oil reaching the pump.	Replace hose, seal and gasket.

https://truckmanualshub.com/

We hope you find the links below useful. For further gardening information visit
www.GardenResources.co.uk

Blower Vacs	Brush cutters	Brushcutters	Chainsaws	Chain saws
Cultivators	Cylinder lawn mowers	Cylinder mowers	Echo chainsaws	Echo Strimmers
Electric chainsaws	Fertiliser spreaders	Garden blowers	Garden rollers	Garden shredders
Garden tractors	Garden vacuums	Hayter lawn mowers	Hedge cutters	Hedgecutters
Hover mowers	Husqvarna chainsaws	Kawasaki brush cutters	Kawasaki strimmers	Lawn mowers
Lawn scarifiers	Lawn tractors	Leaf blowers	Leaf vacuums	Petrol chainsaws
Petrol hedge cutters	Ride on lawn mowers	Ride on mowers	Rotary mowers	Rotavators
Ryobi strimmers	Scarifiers	Strimmers	Westwood lawn tractors	Westwood ride on mowers
Westwood tractors	Brush Cutters	Brushcutters	Blower Vacs	Chain Saws
Chainsaws	Cultivators	Cylinder Lawn Mowers	Echo Chainsaws	Echo Strimmers
Electric Chainsaws	Fertiliser Spreaders	Garden Blowers	Garden Rollers	Lawn Rollers
Garden Shredders	Garden Tractors	Garden Vacuums	Hayter Lawn Mowers	Hedge Cutters
Hedgecutters	Hover Mowers	Husqvarna Chainsaws	Kawasaki Brush Cutters	Kawasaki Strimmers
Lawn Mowers	Scarifiers	Lawn Tractors	Leaf Blowers	Leaf Vacuums
Petrol Chainsaws	Petrol Hedge Cutters	Ride on Lawn Mowers	Ride on Mowers	Rotary Mowers
Rotovators	Ryobi Strimmers	Garden Patio Heaters	Outdoor Patio Heaters	Gas Patio Heaters
Patio Heaters	Patio Heater Covers	Garden Heaters	Greenhouse Heaters	Green House Heaters
Gas Greenhouse Heaters	Stainless Steel Patio Heaters	Table Top Patio Heaters	Patio Heaters UK	Patio Heaters with Covers
Christmas Gardening Gifts	Garden Tractors	Ride on Lawn Mowers	Ride on Mowers	

Also See

Gardening Tools Direct, for lawn mowers, brush cutters, chainsaws
Gardening Supply for patio heaters, lawn mowers, chainsaws
Garden Tractor, for lawn tractors and ride on mowers