https://truckmanualshub.com/

Sno-Tek™

Parts Manual

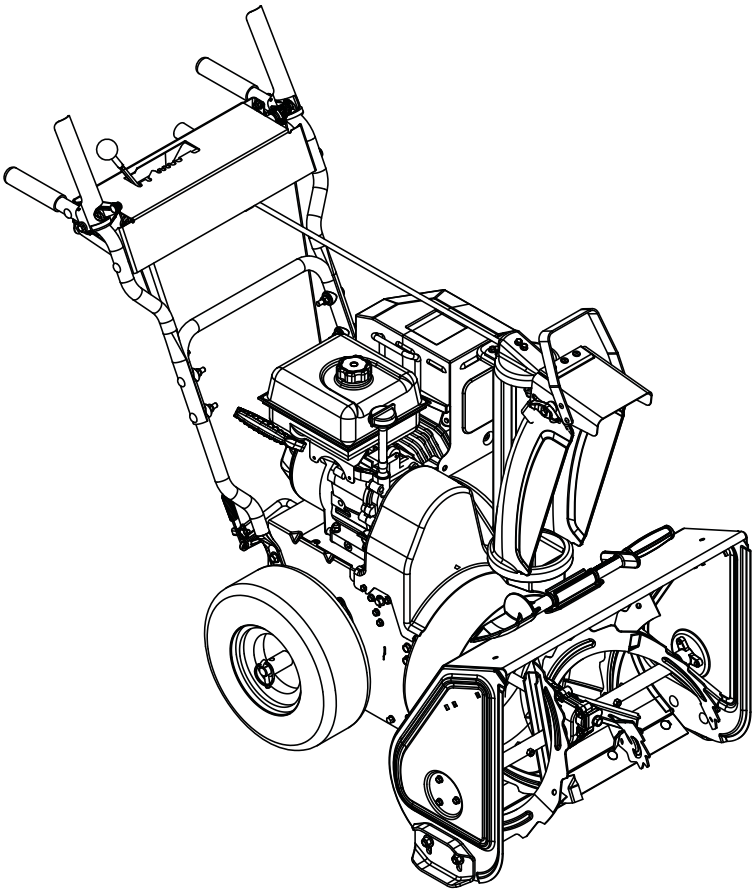

Models

920304 – Sno-Tek 22
(Serial No. 101 and up)
920305 – Sno-Tek 24
(Serial No. 101 and up)
920306 – Sno-Tek 26
(Serial No. 101 and up)
920309 – Sno-Tek 24
(Serial No. 101 and up)
920310 – Sno-Tek 22
(Serial No. 101 and up)
920402 – Sno-Tek 24
(Serial No. 101 – 34,999)
920403 – Sno-Tek 28
(Serial No. 101 – 34,999)

04135400B 9/11
Printed in USA

https://truckmanualshub.com/

The Manual

Before you operate your unit, carefully and completely read manuals supplied with the unit. The contents will provide you with an understanding of safety instructions and controls during normal operation and maintenance.

For your safety and the safety of others always read, understand, and follow all DANGER, WARNING, and CAUTION messages found in manuals and on safety decals.

Hardware descriptions are given in decimals.

Decimals to Fractions			
.063	1/16	.563	9/16
.125	1/8	.625	5/8
.188	3/16	.688	11/16
.250	1/4	.750	3/4
.313	5/16	.813	13/16
.375	3/8	.875	7/8
.438	7/16	.938	15/16
.500	1/2	1.00	1

Service and Replacement Parts

When ordering replacement parts or making service inquiries, know the Model and Serial numbers of your unit and engine.

Numbers are located on the product registration card in the unit literature package. They are printed on a serial number label, located on the frame of your unit.

• Record Unit Model and Serial numbers here:

• Record Engine Model and Serial numbers here:

UNAUTHORIZED REPLACEMENT PARTS

Use only Sno-Tek replacement parts. The replacement of any part on this vehicle with anything other than a Sno-Tek authorized replacement part may adversely affect the performance, durability, or safety of this unit and may void the warranty. Ariens disclaims liability for any claims or damages, whether warranty, property damage, personal injury or death arising out of the use of unauthorized replacement parts.

Product Registration

The Sno-Tek dealer must register the product at the time of purchase. Registering the product will help the company process warranty claims or contact you with the latest service information. All claims meeting requirements during the limited warranty period will be honored, whether or not the product registration card is returned. Keep a proof of purchase if you do not register your unit.

Customer Note: If Dealer does not register your product, please fill out, sign and return the product registration card to Ariens or go to www.ariens.com.

Your Satisfaction Is Important

Questions? Please follow these helpful steps:

1. Refer to the manuals supplied with your unit.

   They will guide you through safe and proper operation and maintenance.

   They contain specifications on your unit.

   If your questions are not answered in these manuals, go to step number two.
2. Contact Your Dealer.

   Our dealers will be happy to supply any service or advice required to keep your unit operating at peak efficiency.

   A factory trained staff is available to support your equipment needs. They stock genuine Ariens parts and lubricants manufactured with the same precision and skill as the original.

   If your questions are not resolved by the support staff, ask for the manager or owner.

   When contacting your Dealer supply your model and serial numbers.

TO SPEED PARTS ORDERING:

1. Know the model and serial numbers of your unit.
2. Know the part number required.
3. Know the quantity required.
4. Know the part description.

https://truckmanualshub.com/

Models

Domestic

Model 920402 (Sno-Tek 24)
24" Snow Thrower, Electric Start
Serial No. 000101 – 034999

Model 920403 (Sno-Tek 28)
28" Snow Thrower, Electric Start
Serial No. 000101 – 034999

International

Model 920304 (Sno-Tek 22)
22" Snow Thrower
Serial No. 000101 and up

Model 920305 (Sno-Tek 24)
24" Snow Thrower, Electric Start
Serial No. 000101 and up

Model 920306 (Sno-Tek 26)
26" Snow Thrower, Electric Start
Serial No. 000101 and up

Model 920309 (Sno-Tek 24)
24" Snow Thrower
Serial No. 000101 and up

Model 920310 (Sno-Tek 22)
22" Snow Thrower, Electric Start
Serial No. 000101 and up

Table Of Contents

Decals

Decals 4

Engine and Drive

Engine and Belt Drive 6
Friction Drive 8
Gearcase and Impeller. 9

Frame and Housing

Handlebars and Controls 10
Auger and Chute 12
Discharge Chute Crank 14

https://truckmanualshub.com/

Decals

Model 920304, 305, 306, 309, 310, 402, 403

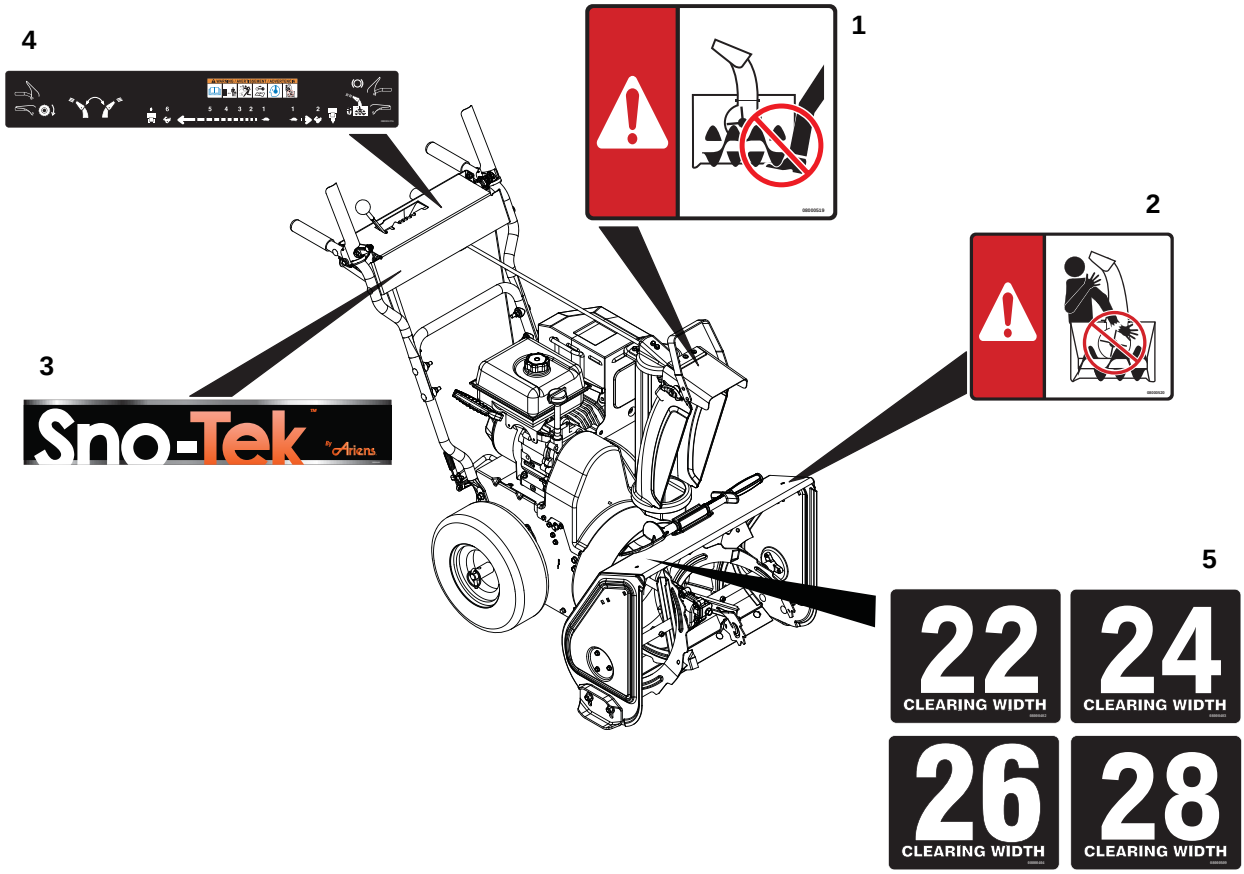

PS0322

Item	Part No.	Qty.	Description
1	08000519	1	Decal, Danger – Rotating Parts
2	08000520	1	Decal, Danger
3	08000519	1	Decal, Front Dash Sno-Tek
4	08000127	1	Decal, Control
5	08000402	1	Decal, Housing – Sno-Tek 22 (920304, 310)
	08000403	1	Decal, Housing – Sno-Tek 24 (920305, 309, 402)
	08000404	1	Decal, Housing – Sno-Tek 26 (920306)
	08000509	1	Decal, Housing – Sno-Tek 28 (920403)

https://truckmanualshub.com/

NOTES

https://truckmanualshub.com/

Engine and Belt Drive

Model 920304, 305, 306, 309, 310, 402, 403

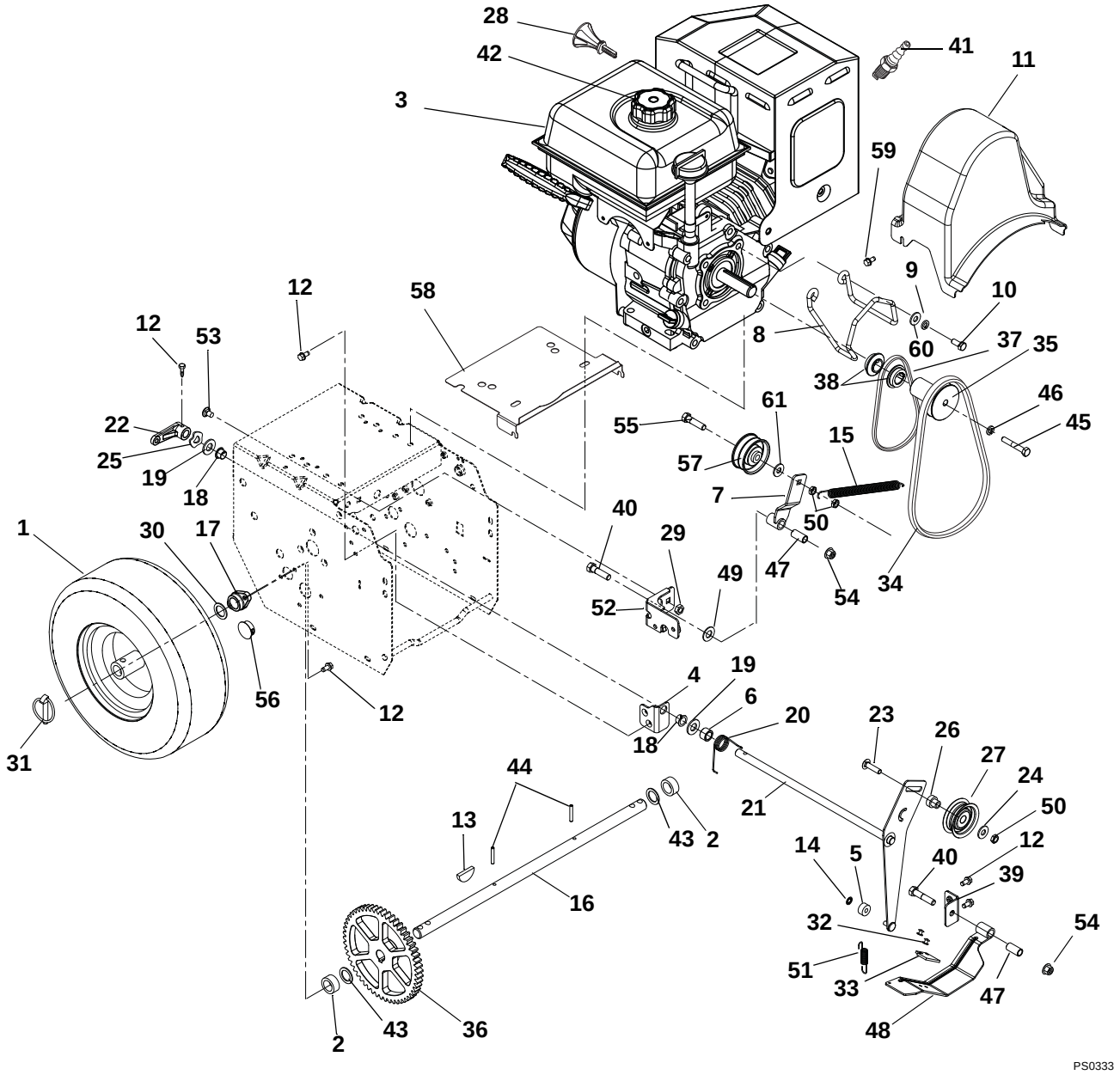

PS0333

Item	Part No.	Qty.	Description
1	07100811	2	Tire/Wheel, 13 x 4.10-6 K398A (920304, 305, 309, 310, 402)
	07100812	2	Tire/Wheel, 15 x 5.00-6 K398A (920306, 403)
	07100814	AR	Tire, 13" K398A (920304, 305, 309, 310, 402)
	07100815	AR	Tire, 15" K398A (920306, 403)
2	05500140	2	Bushing, Sleeve
3	08200425	1	Engine, LCT Storm Force 208 (920304, 309)
	08200424	1	Engine, LCT Storm Force 208 240V (920305, 306, 310)
	08200605	1	Engine, LCT Storm Force 208 120V (920402, 403)
4	00495051	1	Bracket, Mount
5	05500037	1	Bushing, Sleeve
6	05500107	1	Bushing, Sleeve

https://truckmanualshub.com/

Model 920304, 305, 306, 309, 310, 402, 403

Item	Part No.	Qty.	Description
7	00493600	1	Traction Idler Arm
8	03881600	1	Belt Finger
9	06307400	2	Washer, Locking .312 x .097 Heavy
10	05947300	2	Bolt, Hex .31-24 x .75 Grade 5
11	03881000	1	Belt Cover
12	07400034	9	Screw, Tapping Hex Washer Head .25-20 x .50
13	06601200	1	Key, Woodruff .25 x .750 x .313 SAE91
14	05717600	1	Ring, Retaining-External .250 x .010
15	08316400	1	Spring, Extension
16	00494200	1	Shaft, Axle (920304, 305, 309, 310, 402)
	03881800	1	Shaft, Axle (920306, 403)
17	05500101	2	Bushing
18	05500026	2	Bushing, Polyliner
19	06441900	2	Washer, Flat Steel .531 x 1.06 x .095
20	08300326	1	Spring, Torsion
21	00495167	1	Attachment Idler Arm
22	01987100	1	Arm, Clutch - Attachment
23	06200124	1	Bolt, Round Head Square Short Neck .31-18 x 1.13 Grade 5
24	06435700	1	Washer, Flat Steel .38 x .875 x .083
25	06400005	1	Washer, Wave .50 x .75 x .015, .13 Free Height
26	01213100	1	Spacer, Bearing
27	02457400	1	Idler
28	07500111	AR	Key, Push/Pull LCT
29	06543100	1	Nut, Locking-Top-Flange .31-18
30	06441400	2	Washer, Flat Steel .754 x 1.125 x .062 (920304, 305, 309, 310, 402)
	05500917	2	Bushing, Sleeve (920306, 403)
31	07053700	2	Pin, Lok
32	06800028	2	Rivet, Pop .187 (included with item 48)
33	00180500	1	Brake Pad (included with item 48)
34	07200513	1	V-Belt HA
35	04209700	1	Sheave, Attachment Drive
36	00657800	1	Spur Gear
37	07200101	1	V-Belt 3L
38	09735700	2	Traction Sheave Half
39	00495251	1	Bracket, Mount
40	05958500	2	Bolt, Hex .38-16 x 1.75 Grade 5
41	21547400	1	Spark Plug
42	07500112	AR	Cap, Fuel
43	06441400	2	Washer, Flat Steel .754 x 1.125 x .062
44	05800300	2	Pin, Roll .188 x 1.25
45	05958600	1	Bolt, Hex .38-24 x 2.0 Grade 5
46	06308800	1	Washer, Locking .38 x .094
47	05500106	2	Bushing, Sleeve
48	52000500	1	Brake Arm w/Pad (includes items 32 and 33)
49	06436200	1	Washer, Flat-Steel .406 x .812 x .065
50	06500011	3	Nut, Locking Center Jam .31-18
51	08300104	1	Spring, Extension
52	00657051	1	Frame Bracket
53	06212200	1	Bolt, Round Head Square Short Neck .31-18 x .62
54	06542000	2	Nut, Locking Top Flange .38-16
55	05957400	1	Bolt, Hex .31-18 x 1.75 Grade 5
56	07500102	2	Hole Plug
57	07300525	1	Idler
58	03880851	1	Baffle, Engine
59	07400104	2	Screw, Tapping Hex Large Washer Head .25-20 x .50
60	06437200	2	Washer, Flat Steel .344 x .688 x .065
61	06446300	1	Washer, Flat-Steel .344 x 1.125 x .135

https://truckmanualshub.com/

Model 920304, 305, 306, 309, 310, 402, 403

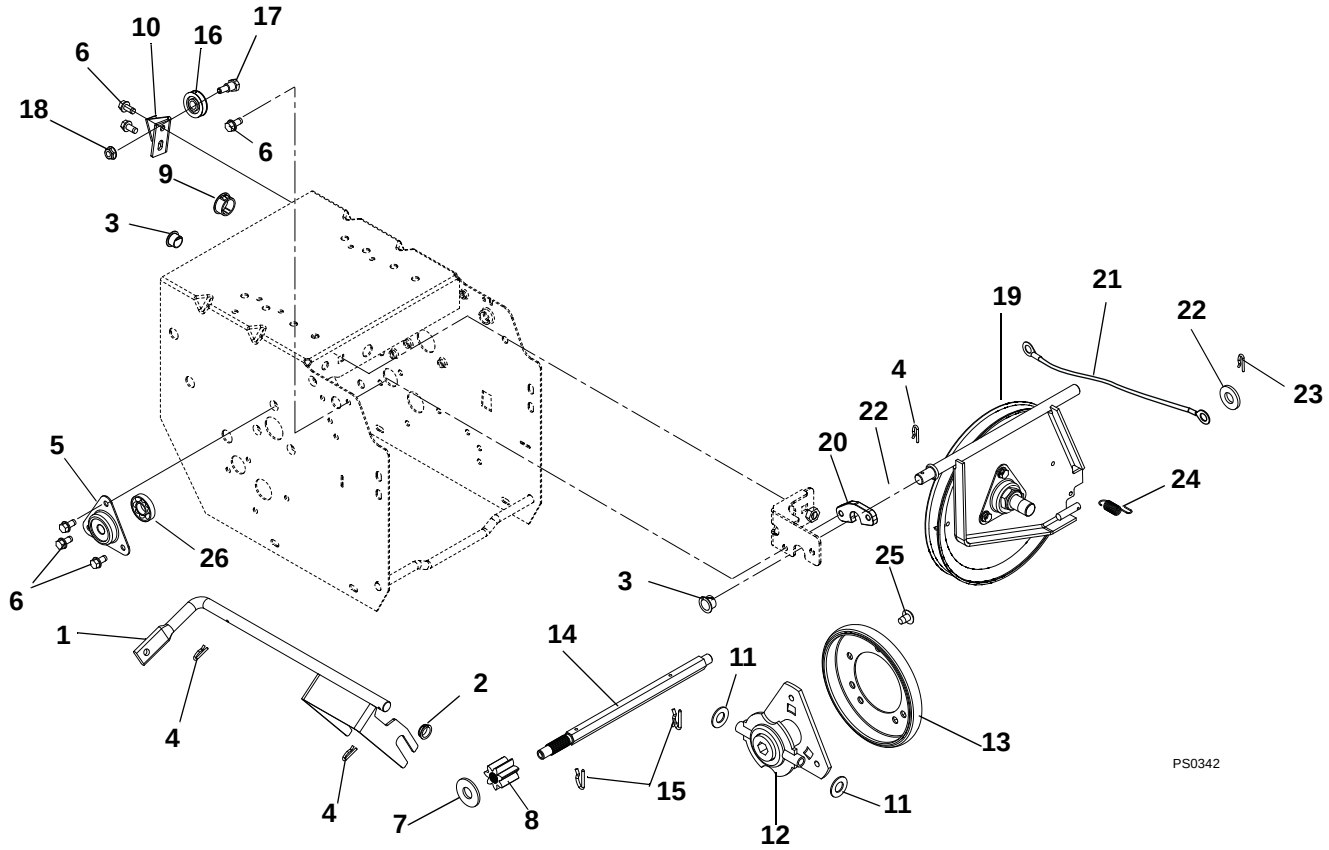

Item	Part No.	Qty.	Description
1	00656951	1	Shift Fork
2	05500028	1	Bushing, Polyliner
3	05500026	2	Bushing, Polyliner
4	06944800	3	Clip, Spring
5	00383000	2	Flange, Bearing
6	07400034	10	Screw, Tapping Hex Washer Head .25-20 x .50
7	06442000	1	Washer, Flat-Steel .563 x 1.38 x .109
8	00493900	1	Gear, Pinion w/Spline
9	07500023	1	Hole Plug
10	00373051	1	Bracket, Cable Pulley
11	06439200	2	Washer, Flat-Steel .505 x 1.00 x .062
12	04225900	1	Carrier, Drive Disc
13	00383100	1	Friction Disc
14	04149500	1	Hex Shaft w/spline
15	06714500	2	Pin, Spring Clip
16	07300012	1	Pulley, Cable
17	07000021	1	Bolt, Shoulder .375 x .375 x .25-20
18	06543500	1	Nut, Locking Top Flange .25-20
19	52100200	1	Swing Plate Assembly
20	05500113	1	Spacer, Swing Plate
21	06900313	1	Cable, Traction – Tractor
22	06437200	1	Washer, Flat-Steel .344 x .688 x .065
23	06713500	1	Pin, Hair Internal .08 x .18 x 1.18
24	08300036	1	Spring, Extension
25	07400009	3	Screw, Tapping Serrated Round Head Torx .31-18 x .50
26	05435200	2	Bearing, Ball

https://truckmanualshub.com/

Gear Case and Impeller

Model 920304, 305, 306, 309, 310, 402, 403

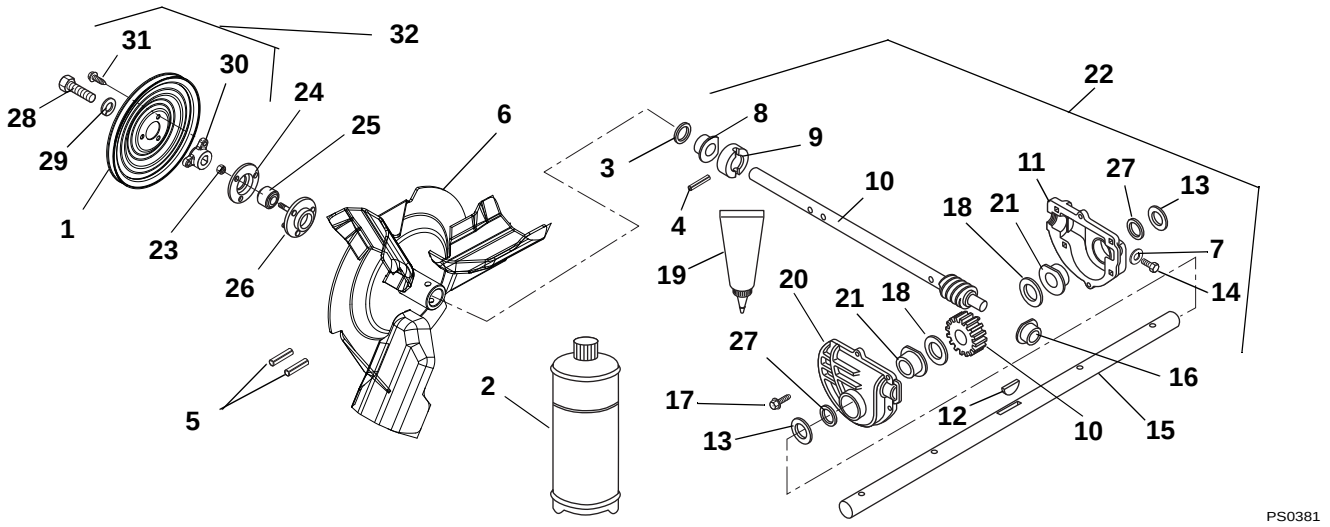

Item	Part No.	Qty.	Description
1	00268951	1	Pulley, 4L
2	00068000	1	Ariens 8 oz. Bottle of L3 Lube (Gear Case Capacity = 2.5 oz.)
3	05600004	1	Seal, Oil
4	05804900	1	Pin, Groove .188 x 1.25 Type E
5	05803700	2	Pin, Roll .25 x 1.75
6	03835551	1	Impeller 12" 3 Blade
7	06442500	1	Washer, Fiber .437 x .656 x .032
8	05511200	1	Bushing, Flange
9	00272100	1	Thrust Collar
10	53212500	1	Shaft & Worm Gear Set
11	00291100	1	Gear Case Casting, Machined Left Hand
12	06609300	1	Key, Woodruff .19 x .63 Hardened #61
13	06439000	2	Washer, Flat-Steel .812 x 1.50 x .135 (920305, 402, 403)
14	07417000	1	Screw, Tapping Rolok .38-16 x .75
15	03885800	1	Shaft, Rake 22" (920304, 310)
	00263000	1	Shaft, Rake 24" (920305, 309, 402)
	03885300	1	Shaft, Rake 26" (920306)
	04143400	1	Shaft, Rake 28" (920403)
16	05520600	1	Bushing, Flange
17	07412400	6	Screw, Tapping Hex Washer Head .25-20 x 1.00
18	06441500	2	Washer, Flat-Steel .755 x 1.375 x .062
19	00031700	1	Loctite Gasket 518
20	00291200	1	Gear Case Casting, Machined Right Hand
21	05531100	2	Bushing, Flange
22	53900500	1	Gear Case Assembly – 22" (contains 3 – 4, 7 – 12, 14 – 21, 27) (920304, 310)
	53212700	1	Gear Case Assembly – 24" (contains 3 – 4, 7 – 12, 14 – 21, 27) (920305, 309, 402)
	52001700	1	Gear Case Assembly – 26" (contains 3 – 4, 7 – 12, 14 – 21, 27) (920306)
	04143400	1	Gear Case Assembly – 28" (contains 3 – 4, 7 – 12, 14 – 21, 27) (920403)
23	06529700	3	Nut, Locking Center .25-20
24	01014200	1	Bearing Flange
25	05406300	1	Bearing, Ball
26	00428700	1	Bearing, Flange
27	05618900	2	Seal, Oil
28	05947300	1	Bolt, Hex .31-24 x .75 Grade 5
29	06307400	1	Washer, Locking .312 x .097 Heavy
30	00268901	1	Pulley Hub
31	07411500	3	Screw, Tapping Hex Washer Head .31-18 x .50
32	52001800	1	Pulley w/Hub (contains 1, 30, 31)

https://truckmanualshub.com/

Handlebars and Controls

Model 920304, 305, 306, 309, 310, 402, 403

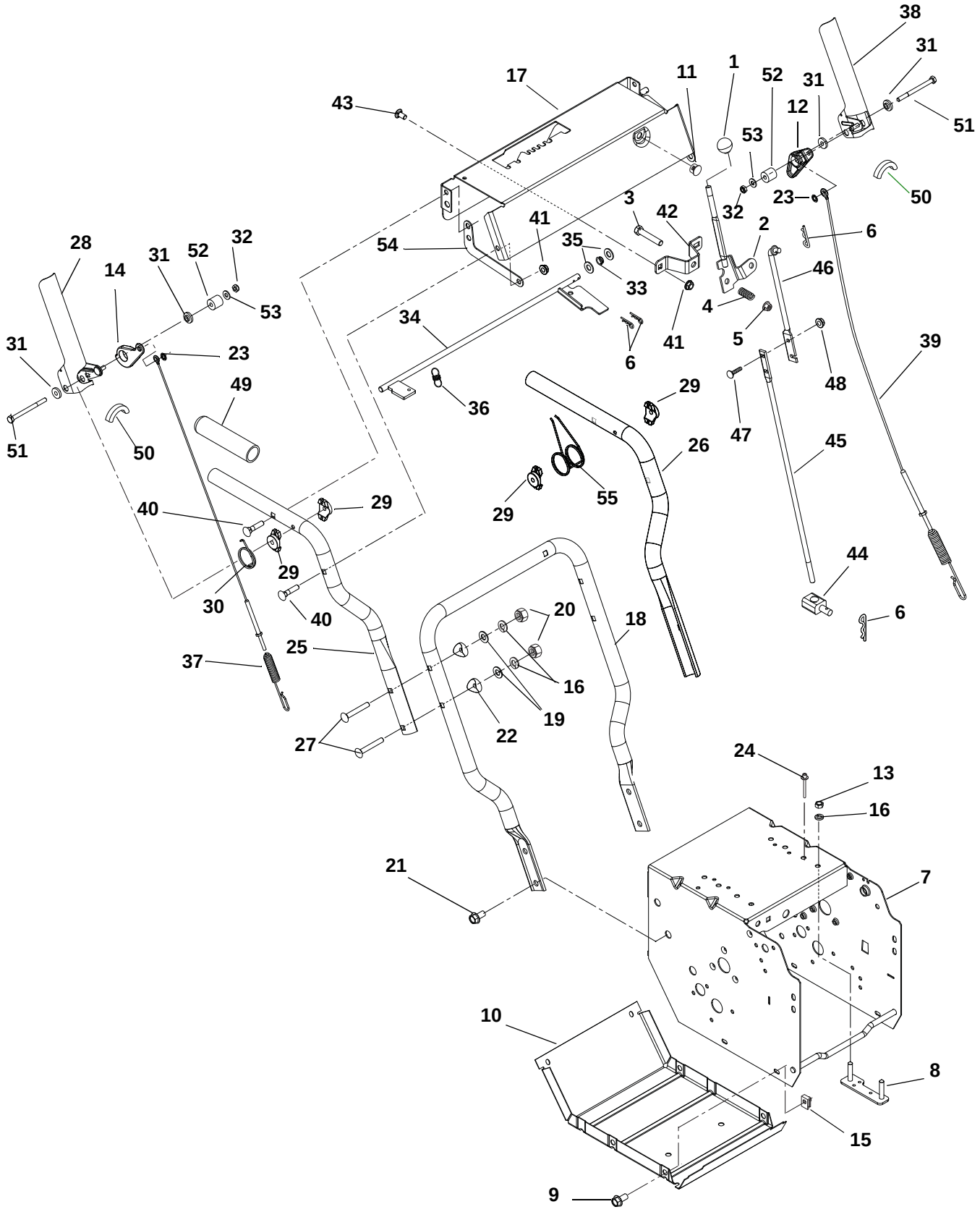

https://truckmanualshub.com/

Model 920304, 305, 306, 309, 310, 402, 403

Item	Part No.	Qty.	Description
1	07533500	1	Knob, Ball – Black
2	04149000	1	Shift Lever
3	05963300	1	Bolt, Hex .38-16 x 2.00 Grade 5
4	08335700	1	Spring, Compression
5	06542000	1	Nut, Locking Top Flange .38-16
6	06713500	4	Pin, Hair Internal .08 x .18 x 1.18
7	03884251	1	Frame
8	00188400	2	Strap, Engine Bolt
9	05900019	6	Bolt, Hex Washer Head .25-20 x .75 Grade 5
10	00492351	1	Bottom Cover
11	00529900	1	Hole Plug
12	03386500	1	Left Hand Cam, Interlock
13	06529200	4	Nut, Hex .31-18
14	03386600	1	Right Hand Cam, Interlock
15	07009000	6	Nut, Retainer .25-20
16	06307400	8	Washer, Locking .312 x .097 Heavy
17	52001300	1	Control Panel with Decal
18	00597451	1	Handlebar, Lower
19	06435700	4	Washer, Flat Steel .38 x .875 x .083
20	06530200	4	Nut, Locking Nylon .312-18
21	07028500	4	Bolt Serrated Hex Flange Washer Head .38-16 x .75 Grade 5
22	07500005	4	Spacer, Handlebar
23	05717600	2	Ring, Retaining, External .25 x .010
24	06800028	2	Rivet, Pop, .187
25	00656251	1	Handlebar, Upper RH
26	00656351	1	Handlebar, Upper LH
27	06221600	4	Bolt, Round Head Square Neck .31-18 x 2.25
28	00398351	1	Paddle, Clutch – RH
29	05500040	4	Spacer, Handlebar
30	08300026	1	Spring, Torsion
31	00399300	4	Bushing, Flange
32	06530900	2	Nut, Jam Nylon .25-20
33	05500020	1	Bushing, Polyliner
34	03387000	1	Weldment, Interlock Shaft
35	06436200	2	Washer, Flat-Steel .406 x .812 x .065
36	08300432	1	Spring, Extension
37	06900303	1	Cable, Attachment
38	00398151	1	Paddle, Clutch – LH
39	06900304	1	Cable, Traction
40	06200009	4	Bolt, Round Head Square Extra Long Neck .31-18 x 1.50 Grade 5
41	06543100	6	Nut, Locking Top Flange .31-18
42	03886951	1	Bracket, Shift Mount
43	06212200	2	Bolt, Round Head Square Short Neck .31-18 x .62
44	00386700	1	Pivot, Shift Rod
45	00656667	1	Rod, Shift Lower
46	04149767	1	Rod, Shift Upper
47	06219900	2	Bolt, Round Head Square Neck .25-20 x .75 Grade 5
48	06543500	2	Nut, Locking Top Flange .25-20
49	07518700	2	Handle Grip
50	07500103	2	Edging, Clutch Paddle
51	05965300	2	Bolt, Hex .25-20 x 3.25
52	00589800	2	Bushing, Sleeve
53	06437300	2	Washer, Flat, Steel .281 x .62 x.065
54	03387151	1	Strap, Support
55	08300431	1	Spring, Torsion

https://truckmanualshub.com/

Model 920304, 305, 306, 309, 310, 402, 403

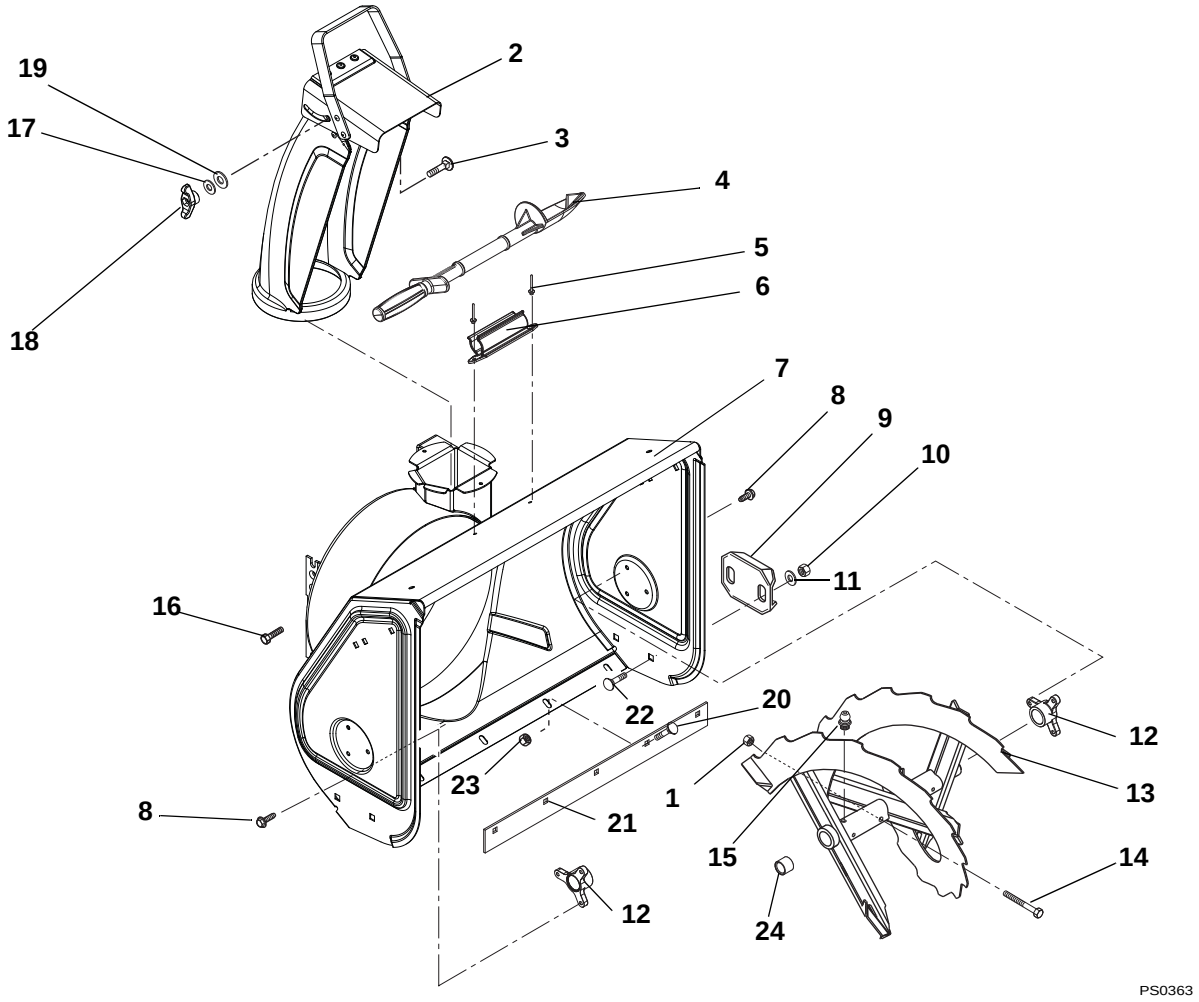

https://truckmanualshub.com/

Auger and Chute

Model 920304, 305, 306, 309, 310, 402, 403

Item	Part No.	Qty.	Description
1	06529700	2	Nut, Locking Center .25-20
2	52000900	1	Chute, Discharge w/Cap and Decal
3	06200007	1	Bolt, Round Head Square Short Neck .31-18 x 1.00 Grade 5
4	00170200	1	Device, Snow Cleanout
5	06800028	2	Rivet, Pop .187
6	00170300	1	Mount, Snow Cleanout
7	52002600	1	Housing, 22" Sno-Tek w/Decal (920304, 310)
	52001100	1	Housing, 24" Sno Tek w/Decal (920305, 309, 402)
	52002200	1	Housing, 26" Sno Tek w/Decal (920306)
	52002400	1	Housing, 28" Sno-Tek w/Decal (492003)
8	07400034	6	Screw, Tapping Hex Washer Head .25-20 x .50
9	02483851	2	Runner, Double Flange
10	06529600	4	Nut, Locking Center .38-16
11	06435700	4	Washer, Flat Steel .38 x .875 x .083
12	05500918	2	Bushing, Rake Shaft
13	53212300	1	Rake, Right Hand 20” with Zerk (Includes Item 15) (920304, 310)
	53213100	1	Rake, Right Hand 24” with Zerk (Includes Item 15) (920305, 306, 309, 402)
	52003100	1	Rake, Right Hand 28" with Zerk (Includes item 15) (920403)
	53212400	1	Rake, Left Hand 20" with Zerk (includes item 15) (920304)
	53213200	1	Rake, Left Hand 24” with Zerk (Includes Item 15) (920305, 306, 309, 402)
	52003200	1	Rake, Left Hand 28" with Zerk (Includes item 15) (920403)
14	53200500	2	Shear Bolt with Nut (Includes Items 1)
15	07061300	2	Zerk, Fitting .25 x .125 Drive-In
16	07411500	4	Screw, Tapping Hex Washer Head .31-18 x .50
17	06437200	1	Washer, Flat Steel .344 x .688 x .065
18	07500105	1	Wing Knob .31-18
19	06433600	1	Washer, Flat Nylon .375 x .75 x .060
20	06200120	5	Bolt, Round Short Head Square Short Neck .31-18 x .62
21	03884351	1	Scraper Blade 22” (920304, 310)
	03884451	1	Scraper Blade 24" (920305, 309, 402)
	03884551	1	Scraper Blade 26” (920306)
	04145451	1	Scraper Blade 28" (920403)
22	06200004	4	Bolt, Round Head Square Short Neck .38-16 x .75
23	06543100	5	Nut, Locking Top Flange .31-18
24	05500917	2	Bushing, Sleeve (920304, 306, 310)

https://truckmanualshub.com/

Discharge Chute Crank

Model 920304, 305, 306, 309, 310, 402, 403

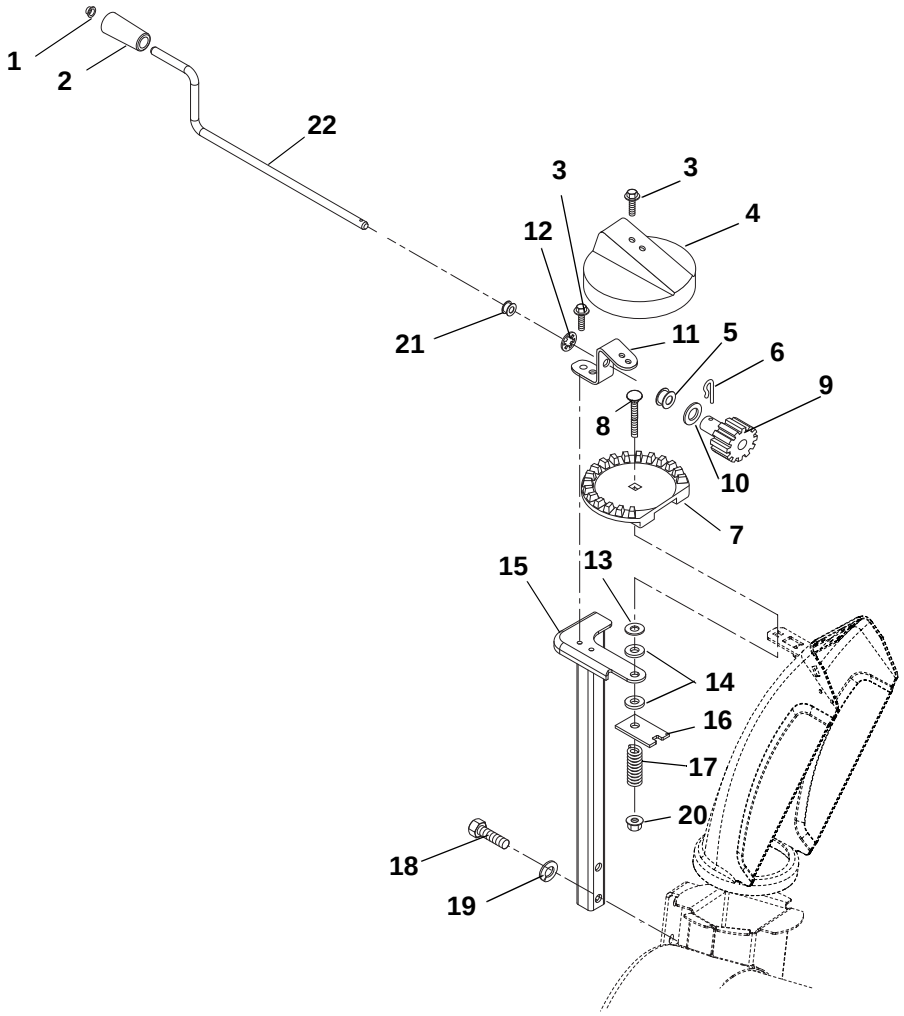

https://truckmanualshub.com/

Discharge Chute Crank

Model 920304, 305, 306, 309, 310, 402, 403

Item	Part No.	Qty.	Description
1	01019800	1	Cap, .38 Rod
2	07500001	1	Knob, Chute Crank
3	07400034	4	Screw, Tapping, Hex Washer Head .25-20 x .50
4	03223000	1	Cover, Gear
5	05500021	1	Bushing, Polyliner
6	06714500	1	Pin, Spring Clip
7	03222900	1	Gear, Chute
8	06224400	1	Bolt, Round Head Square Neck .38-16 x 2.50 Grade 5
9	52000100	1	Bracket with Pinion Gear (Contains Items 5, 10, 11, 12)
10	06400009	1	Washer, Thrust .625 x 1.0 x .03
11	01972451	1	Bracket, Pinion Gear
12	03224300	1	Push Nut
13	06439300	1	Washer, Flat Steel .38 x 1.50 x .062
14	01123800	2	Friction Washer
15	03883751	1	Chute Pedestal
16	00398000	1	Friction Plate
17	08320900	1	Spring, Compression
18	05958500	2	Bolt, Hex .38-16 x 1.75 Grade 5
19	06308800	2	Washer, Locking .38 x .094
20	06542000	1	Nut, Locking Top Flange .38-16
21	05500020	1	Bushing, Polyliner
22	03887100	1	Rod, Chute Crank

https://truckmanualshub.com/

Sno-Tek™ By Ariens

Ariens Company
655 West Ryan Street
Brillion, WI 54110-0157
920-756-2141
Fax 920-756-4688
www.ariens.com