https://truckmanualshub.com/

GAP POWER
The Ultimate Toolbox

Click Here To View Item at www.GapPower.com

Sales • Rentals
Parts & Service

https://truckmanualshub.com/

PARTS AND SERVICE
MANUAL

Haulotte GROUP

3522A / HTA 13 P

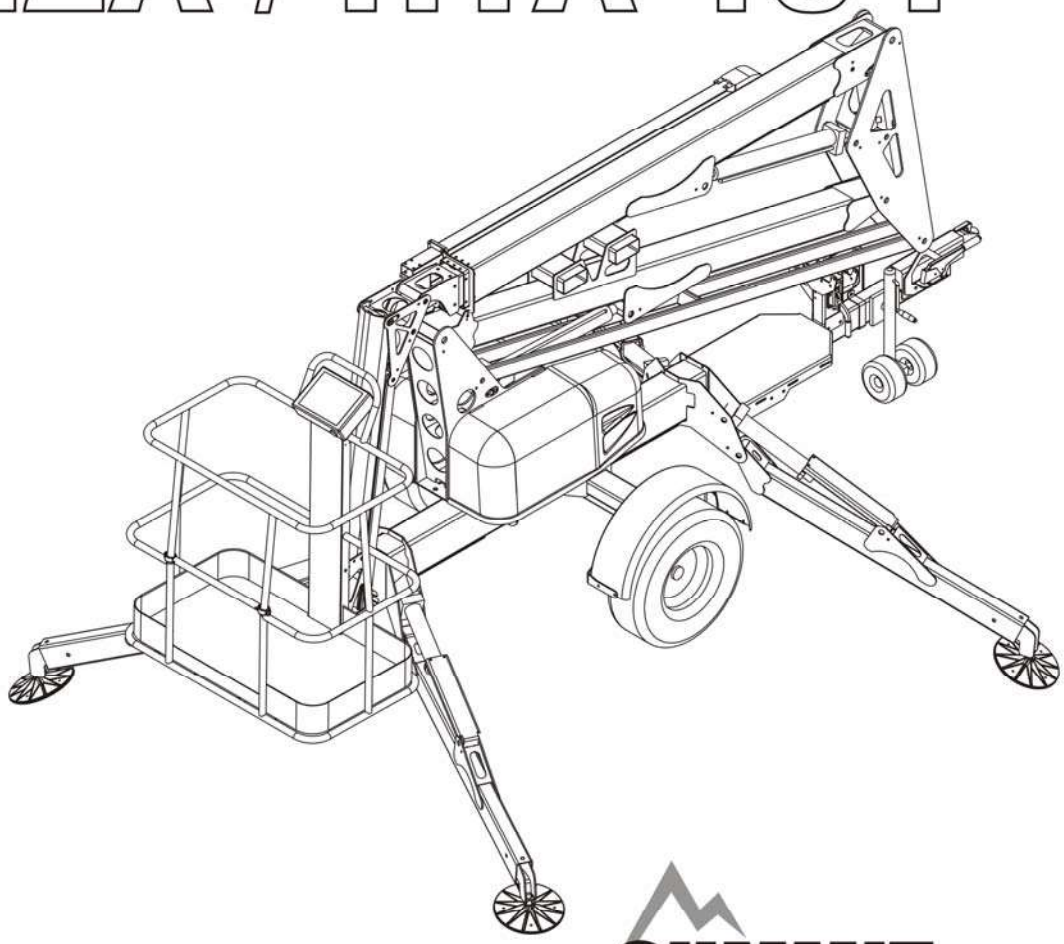

SUMMIT SERIES
TRAILER-MOUNTED BOOMS™

B33-01-0094-03

https://truckmanualshub.com/

BOOM PERSONNEL LIFT

This equipment is designed and manufactured in compliance with the duties, responsibilities and standards set forth in the ANSI, CSA, AS and/or CE standards in effect at the time of manufacture.

This equipment will meet or exceed applicable ANSI, CSA, AS and/or CE codes and standards when operated in accordance with manufacturer's recommendations.

It is the responsibility of the user to follow all regional codes and regulations that govern the safe operation of this equipment.

Obtain, read and obey all safety precautions before performing maintenance or repairs or attempting to operate this equipment. This includes all manufacturer recommendations as well as those directives set forth by government and local authorities.

To ensure proper and safe use of this equipment, it is strongly recommended that only trained and authorized personnel attempt to operate and maintain the boom lift.

This manual shall be considered a permanent and necessary component of the machine and shall be kept with the boom lift at all times.

Owners and Lessors should complete a full inspection of all components and perform a test of all functions, including brake functions, before commissioning or reselling the machine. Repair or replace all damaged or malfunctioning components.

Haulotte Group | BilJax, Inc. is dedicated to the continuous improvement of this and all Haulotte Group | BilJax products. Therefore, equipment information is subject to change without notice. Direct any questions or concerns regarding errors or discrepancies in this manual to the Haulotte Group | BilJax Service Department.

Copyright © Haulotte Group | BilJax, Inc. 2009. All Rights Reserved.

"Haulotte Group | BilJax" is a registered trademark and "A Step Above" and "Summit Series" are trademarks of Haulotte Group | BilJax, Inc. Contact Haulotte Group | BilJax for replacement manuals.

125 Taylor Parkway
Archbold, Ohio 43502

Phone (800) 537-0540
(419) 445-8915
Fax (419) 445-0367

P/N: B33-01-0094-03

https://truckmanualshub.com/

TABLE OF CONTENTS

Table of Contents 1

Illustrations 2

Tables 2

1 Safety 3

Legend: Safety Advisories 4
Before Operation 5
During Operation 5
Maintenance Safety 7
Damaged Equipment Policy 8

2 Specifications 9

Range of Motion 10
Specifications 11
Warranty 12

3 Equipment Maintenance 13

Daily Service Checks 14
Weekly Service Checks 16
Monthly Service Checks 17
Annual Service Checks 18
Structural Inspection 19
Battery Recharge 20
Troubleshooting 21
Error Code Definitions 22

4 Cylinder Replacement 25

Lift Cylinder Replacement 26
Outrigger Cylinder Replacement 27

5 Replacement Decals 29

6 ANSI Reprint 33

Appendix: Replacement Parts 39

Ordering Replacement Parts 88

Appendix: Error Codes 89

https://truckmanualshub.com/

LIST OF ILLUSTRATIONS

Figure 2-1	Range of Motion	10
Figure 3-1	Outrigger Position Switch	14
Figure 3-2	Hydraulic Reservoir	15
Figure 3-3	Wheel Nut Tightening Sequence	17
Figure 3-4	Slew Ring Position Measurement	18
Figure 3-5	Battery Charger Faceplate	20
Figure 4-1	Lift Cylinder Replacement	26
Figure 4-2	Outrigger Cylinder Replacement	27
Figure 5-1	Decal Locations	31
Figure 6-1	Minimum Safe Approach Distances	37

LIST OF TABLES

Table 1-1	Minimum Safe Approach Distances	5
Table 3-1	Charger Fault Codes	20
Table 3-2	Troubleshooting Steps	21
Table 3-3	Error Code Definitions	22
Table 5-1	Replacement Decal Descriptions	30

https://truckmanualshub.com/

1 SAFETY

Proper training is required for the safe operation of any mechanical device. Failure to follow all instructions and safety precautions in this manual and attached to the lift will result in death or personal injury.

Prior to Operation:

- Read, understand and obey all instructions and safety precautions in this manual and attached to the lift.
- Read, understand and obey all applicable government regulations.
- Become familiar with the proper use of all controls.
- Inexperienced users should receive instruction before attempting to operate or maintain the machine.

The use of intelligence and common sense is the best practice when following any safety policy.

https://truckmanualshub.com/

LEGEND: SAFETY ADVISORIES

The following safety advisories are used throughout this manual to indicate specific hazards when operating or maintaining the machine. Read, understand and obey all safety advisories to prevent improper service, damage to equipment, personal injury or death.

DANGER

Warns of operation near electrical power sources that could lead to personal injury or death.

WARNING

Describes conditions or practices that could lead to personal injury or death.

CAUTION

Contains information important in the prevention of errors that could damage machine or components.

NOTE: Contains additional information important for performing a procedure.

https://truckmanualshub.com/

BEFORE OPERATION

Ensure the following general safety precautions are followed before operating the articulating boom lift:

ALWAYS inspect the usage area for potential hazards, such as unstable or unlevel surfaces, overhead obstructions and electrically charged wires or conductors. ALWAYS watch for moving vehicles in the operating area.

ALWAYS conduct a thorough inspection of the machine before operation. Check for damaged or worn parts, hydraulic leaks, damaged wiring, loose wiring conductors, damaged outriggers, low tire pressure, uneven tire wear or tire damage. Check for any improperly operating components. NEVER operate equipment if any damage is observed or suspected. Repair damaged or malfunctioning equipment before operation.

ALWAYS wear proper clothing. Wear protective equipment as required by government regulations. Keep loose clothing, jewelry, gloves and hair away from moving parts.

ALWAYS wear a safety harness and energy-absorbing lanyard, such as the safety harness and lanyard provided by Haulotte Group | BilJax.

ALWAYS inspect platform floor and outrigger footpads for mud, grease, debris or other foreign material. ALWAYS remove any such material from the equipment before operation.

ALWAYS tag any part of the equipment known or suspected to be damaged or malfunctioning. ALWAYS remove a malfunctioning, damaged or defective machine from service. NEVER operate a machine that has any known or suspected defect.

ALWAYS comply with the instructions found in Safety and/or Service Bulletins distributed by the manufacturer. Bulletins may contain critical procedures that supersede the information contained in manuals.

NEVER operate this equipment while under the influence of drugs or alcohol, while taking prescription medications that may leave the operator drowsy or prone to dizziness, or while feeling ill.

NEVER modify, alter or change the equipment in any way that would affect its original design or operation.

NEVER deface, modify or obscure any decals or markings on equipment.

NEVER operate the equipment in any way for which it is not intended.

DURING OPERATION

Ensure the following general safety precautions are followed while operating the articulating boom lift:

ALWAYS position lift away from power lines to ensure that no part of the lift can accidentally reach into an unsafe area. This includes full extension of the boom through 700º rotation.

⚠ DANGER

This machine is NOT insulated for use near electrical power lines and DOES NOT provide protection from contact with or close proximity to any electrically charged conductor. Operator must maintain safe clearances at all times (3.05 meters minimum) and must always allow for platform movement due to gusty winds. Always contact power company before working near power lines. Assume every power line is live. Power lines can be blown by the wind. Refer to Table 1-1 for minimum safe approach distances between the machine and electrical power lines.

Voltage Range (Phase to Phase)	Minimum Safe Approach Distance (Feet)	(Meters)
0 to 300V	Avoid Contact	
Over 300V to 50KV	10	3.05
Over 50KV to 200KV	15	4.60
Over 200KV to 350KV	20	6.10
Over 350KV to 500KV	25	7.62
Over 500KV to 750KV	35	10.67
Over 750KV to 1000KV	45	13.72

Table 1-1. Minimum Safe Approach Distances

ALWAYS keep away from a machine that is exposed to energized power lines. If the machine contacts energized power lines, NEVER touch or operate the machine until power lines are shut off.

ALWAYS operate only on a firm and level surface. NEVER operate on surfaces that do not support the equipment with its rated load capacity or on surfaces that do not support force exerted by the outriggers during boom operation. Operate only on surfaces that can support a pressure of 1.8 kg/cm^2 (25 psi) to ensure safe operation.

ALWAYS keep personnel away from potential pinch and shear points and from potential crush hazards as indicated by decals attached to the machine.

ALWAYS maintain sure footing on the work platform.

ALWAYS keep the safety bar lowered unless personnel are entering or exiting the work platform.

https://truckmanualshub.com/

ALWAYS wear proper footgear. ALWAYS keep the platform free of debris.

ALWAYS keep personnel and obstructions clear of the machine when repositioning boom or basket.

ALWAYS cordon the area surrounding the outriggers to keep personnel, vehicles and moving equipment away from the machine while in use.

ALWAYS stay clear of overhead obstructions, including wires and cables.

ALWAYS unhitch trailer from tow vehicle before lowering outriggers.

CAUTION

Failure to unhitch trailer from tow vehicle prior to outrigger deployment could cause damage to trailer tongue and/or tow vehicle.

ALWAYS disengage boom travel latches before raising boom sections and reengage boom travel latches before towing trailer.

ALWAYS exercise caution when rotating the boom (slew) from the ground control station. ALWAYS watch for personnel inside the radius of the turntable and boom arm when rotating the boom lift from the ground or platform controls.

ALWAYS remove personnel from the boom lift before attempting to free an elevated platform that has become caught or snagged on an adjacent structure or obstacle.

NEVER operate the machine on any surface other than firm and level ground. NEVER operate the machine from a position on truckbeds, trailers, floating vessels or scaffolding without written approval from the manufacturer.

NEVER operate lift on slopes exceeding 12.5º.

NEVER allow electrode contact with any part of the machine while welding from the platform. NEVER use the machine as a ground for welding.

NEVER operate without the outriggers fully extended or when the machine is not level.

NEVER position an elevated platform against another object to steady the platform

NEVER override or bypass the manufacturer’s safety devices.

NEVER attach a safety harness to an adjacent structure, pole, or to nearby equipment while working from the boom platform.

NEVER raise the outriggers or move the trailer with materials or personnel on board, or while boom is raised or extended.

NEVER sit, stand or climb on cage bars. ALWAYS keep both feet firmly on the work cage floor when working from an elevated platform.

NEVER attempt to increase the working height with boxes, ladders, stools or any other materials.

NEVER operate this equipment when exposed to high winds, thunderstorms, ice or any weather conditions that would compromise operator safety.

NEVER operate boom lift in conditions where wind speeds exceed 12.5 m/sec (45 km/h or 28 mph). Steady or gusty winds that exceed 12.5 m/sec (45 km/h) may affect stability and boom operation.

NEVER allow ropes, electric cords, hoses or other equipment to become entangled in the machine while raising or lowering platform.

NEVER exceed the load limits set by the manufacturer. Use only the Material Lifting Hook, supplied as an option and manufactured by Haulotte Group | BilJax, when lifting materials. Safely stow all tools and equipment.

NEVER exceed load ratings by transferring loads to the lift at elevated heights.

NEVER use the platform to lift a load that exceeds the platform dimensions. NEVER lift a load in such a way that the center of gravity is higher than the top guardrail of the platform.

NEVER modify the platform or carry materials that would increase the surface area of the platform. Increasing the area exposed to the wind may decrease machine stability. NEVER attach overhanging loads when raising or lowering the platform.

NEVER use the boom or platform to push or pull or to lift any part of the trailer.

NEVER use the boom or platform to place a load against any structure, materials or equipment.

NEVER climb on the boom. Refer to Section 3 for the instructions for manual operation.

NEVER leave an elevated platform unattended.

NEVER leave the keys in the boom lift while unattended or not in use.

https://truckmanualshub.com/

MAINTENANCE SAFETY

Ensure the following general safety precautions are followed while performing maintenance on the articulating boom lift:

General Maintenance

ALWAYS perform maintenance procedures according to manufacturer's guidelines. NEVER disregard or bypass proper maintenance procedures.

ALWAYS inspect hydraulic system to ensure that all lines, connectors and fittings are properly fastened and in good condition.

ALWAYS turn the key switch OFF and remove key before performing maintenance.

Whenever possible, ALWAYS perform maintenance with the boom and platform in a fully lowered, stowed position. ALWAYS secure the boom before performing maintenance on hydraulic cylinders.

ALWAYS disconnect power to the hydraulic pump drive motor before making electrical checks to the hydraulic valves.

ALWAYS keep all mechanical parts properly adjusted and lubricated according to maintenance schedule and manufacturer's specifications.

ALWAYS perform a function check of operating controls before each use and after repairs have been made.

ALWAYS locate and protect against possible pinch points before performing any maintenance or repairs.

ALWAYS use only manufacturer-approved parts to repair or maintain equipment. If any portion of this equipment is rebuilt or repaired, retesting is required in accordance with factory instructions.

ALWAYS maintain a safe distance while testing the hydraulic components. ALWAYS relieve hydraulic pressure before loosening or removing hydraulic components. NEVER test or operate the hydraulic components while personnel are near the equipment.

NEVER allow water or foreign particles into the DC electric motor housing. Inclusion of water or foreign particles may cause serious damage to the motor. If the motor becomes wet, consult an authorized Haulotte Group | BilJax service technician for proper drying instructions.

NEVER add unauthorized fluids to the hydraulic system or battery. NEVER mix hydraulic oils. Consult manufacturer specifications. Refer to Section 4 for hydraulic system maintenance procedures.

NEVER exceed the manufacturer's recommended relief valve settings.

NEVER touch or allow metal tools to contact any components that are sensitive to static discharge. ALWAYS use static discharge prevention mats and grounding devices when handling electronic components.

NEVER adjust, repair, replace or bypass any hydraulic or electrical control or safety device. These include, but are not limited to, hydraulic load control and flow control valves, solenoid valves and limit switches. ALWAYS consult an authorized Haulotte Group | BilJax technician if repairs are necessary.

NEVER modify, alter or change the equipment without first consulting an authorized Haulotte Group | BilJax technician, and NEVER in any way that would affect its original design or operation.

Battery Maintenance

Ensure the following general safety precautions are followed when performing battery maintenance on the telescoping boom lift.

ALWAYS check the battery fluid level daily.

ALWAYS wear safety glasses when working with or near batteries.

ALWAYS avoid contact with battery acid. Battery acid causes serious burns and should be kept away from skin or eyes. If contact occurs, flush with water and consult a physician immediately.

ALWAYS disconnect ground cable first when removing battery.

ALWAYS connect ground cable last when installing battery.

ALWAYS charge batteries in open, well-ventilated areas.

ALWAYS replace batteries using only parts recommended by manufacturer. ALWAYS use only batteries with sealed caps over cells.

NEVER smoke while servicing batteries.

NEVER charge batteries near flammable materials.

NEVER allow batteries to overcharge and boil.

NEVER short across battery posts to check for current. NEVER break a live circuit at the battery.

NEVER disconnect battery from charger while charger is connected to a live power source.

https://truckmanualshub.com/

NEVER jumpstart other vehicles using the boom lift batteries.

DAMAGED EQUIPMENT POLICY

Safety Statement

At Haulotte Group | BilJax, we are dedicated to the safety of all users of our products. All Haulotte Group | BilJax lifts are designed, manufactured and tested to comply with current applicable federal OSHA and ANSI codes and regulations.

Damage Policy

There may be occasions when a Haulotte Group | BilJax lift is involved in an incident that results in structural damage to the lift. Such damage can seriously compromise the ability of the lift to perform in a safe manner. Therefore, whenever a Haulotte Group | BilJax lift is damaged structurally or when there is suspected internal damage to the structure, Haulotte Group | BilJax may require that the lift be returned to our facility for reconditioning. For any questions concerning structural damage or the Damaged Equipment Policy, please contact the Haulotte Group | BilJax Service Department at 800-537-0540.

Damage Repair Notice

There may be occasions when a Haulotte Group | BilJax lift is involved in an accident resulting in damage to non-structural components. When such damage occurs and repairs are made by the owner or area distributor, please notify Haulotte Group | BilJax of these non-maintenance repairs and request a repair form to be filled out and returned to Haulotte Group | BilJax.

https://truckmanualshub.com/

2 SPECIFICATIONS

Haulotte Group | BilJax, Inc. is dedicated to the continuous improvement of this and all Haulotte Group | BilJax products. Therefore, equipment information is subject to change without notice.

The following information is based on ideal working conditions. Machine performance may vary based on work environment and on machine options.

Direct any questions or concerns regarding equipment specifications to your regional Haulotte Group | BilJax representative or to the Haulotte Group | BilJax Service Department.

https://truckmanualshub.com/

RANGE OF MOTION

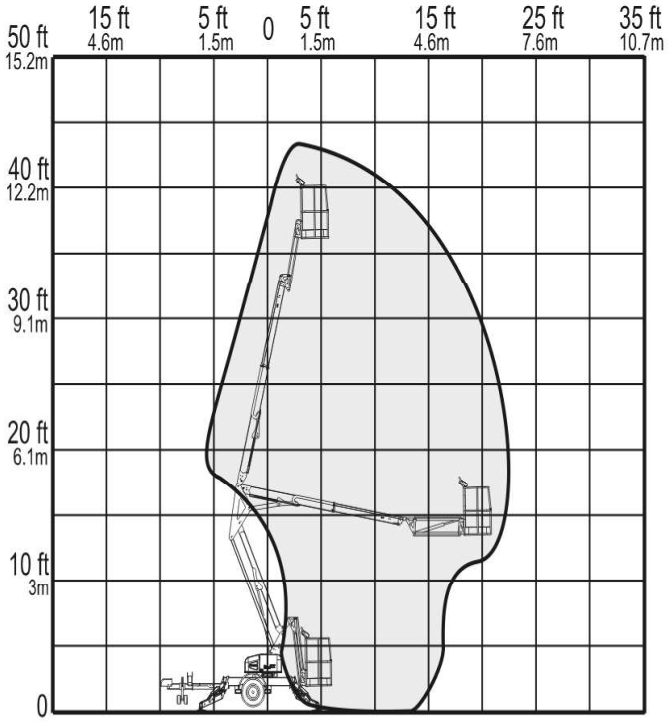

Figure 2-1. Range of Motion

https://truckmanualshub.com/

SPECIFICATIONS

SERIAL NUMBER_____

Working Height	41 ft 9 in *12.9 m*
Maximum Platform Height	35 ft 9 in *10.9 m*
Maximum Horizontal Outreach	
From Centerline	22 ft 6 in *6.9 m*
From Outrigger Footpad Edge	17 ft 6 in *5.3 m*
Rated Platform Capacity	
Without Platform Rotation	500 lbs *227 kg*
With Platform Rotation	440 lbs *200 kg*
Maximum Occupants	2
Tongue Weight	190 lbs *86 kg*
Total Weight (Without Options)	3,400 lbs *1542 kg*
Turntable Rotation	700º Non-Continuous
Leveling Capability	12.5º
Platform Dimensions	
Height	3 ft 7 in *1.1 m*
Length	2 ft 6 in *0.8 m*
Width	4 ft *1.2 m*
Stowed Dimensions	
Height	6 ft 5 in *2.0 m*
Length	16 ft 3 in *5.0 m*
Width	5 ft 6 in *1.7 m*
Outrigger Footprint	
Length	11 ft 1 in *3.4 m*
Width	9 ft 11 in *3.0 m*
Footpad Diameter	10 in *0.3 m*
Parking Brake	Standard, Mechanical

Towing Brake	Hydraulic Surge
Rated Towing Speed	65 mph *105 km/h*
Tire Size	ST 205/75 R14C
Control System	24V DC
Battery	4 x 6V 245 amp-hr
Charger	
Standard	110/120 Volt
CE	220 Volt
Hydraulic Pressure	3,000 psi *206 bar*
Reservoir Capacity	3.1 Gallons *11.7 L*
Hydraulic System Capacity	5.1 Gallons *19.3 L*
Hydraulic Oil (Standard)	AW32
Platform Rotation/Type (Optional)	90º/Manual
Maximum Decibel Level	
Standard DC Mode – Ground	60 dB
Standard DC Mode – Platform	55 dB
DC/Gas Option – Ground	70 dB
DC/Gas Option - Platform	65 dB
Function Speeds	
Boom Raise (Fast)	30-35 Seconds
Boom Raise (Slow)	50-55 Seconds
Boom Lower (Fast)	45-50 Seconds
Boom Lower (Slow)	120-150 Seconds
Boom Extend (Fast)	30-35 Seconds
Boom Extend (Slow)	75-90 Seconds
Boom Retract (Fast)	40-45 Seconds
Boom Retract (Slow)	100-110 Seconds
Turntable Rotation (Fast)	82-90 Seconds
Turntable Rotation (Slow)	240-270 Seconds
Platform Level (Fast)	8-10 Seconds
Platform Level (Slow)	12-16 Seconds
Outrigger Extend	15-20 Seconds
Outrigger Retract	25-30 Seconds
Localized Pressure per Outrigger	25 psi *1.8 kg/cm^2* *176.5 kPa*
Operation Temperature Range	-20º to 110º Fahrenheit *-29º to 43º Celsius*

https://truckmanualshub.com/

WARRANTY

Haulotte Group | BilJax, Inc. warrants this product for one year, beginning on the date of delivery, to be free from defects of material and workmanship provided the unit is operated and maintained in compliance with the guidelines established in the Operations and Maintenance Manuals. Major structural components, including trailer tongue and boom weldments, are warranted for five years against defects due to material or workmanship. Haulotte Group | BilJax will, at its option, repair or replace any unit or component part that fails to function properly during normal use.

The warranty does not apply if the lift and/or its components have been altered, changed, or repaired without the consent of Haulotte Group | BilJax. Repairs, damage, or defects resulting from the following are not covered under the terms of the warranty: negligence, misuse, accidental damage, inadequate or improper maintenance, acts of nature, damage caused by chemicals or abrasive materials, and normal wear and tear, such as rust or corrosion. Components not covered under this warranty include tires, filters, covers, and routine maintenance items. Components not manufactured by Haulotte Group | BilJax are covered be their respective manufacturer's warranties. A list of those components and their warranties is available upon written request to Haulotte Group | BilJax.

Haulotte Group | BilJax shall not in any event be liable for the cost of any special, indirect, or consequential damages to any person, product, or thing. Haulotte Group | BilJax's maximum liability under this warranty is limited to the amount paid to Haulotte Group | BilJax for the product. This warranty is in lieu of all other warranties expressed or implied. Haulotte Group | BilJax neither assumes nor authorizes any or other entity to assume on its behalf any other liability in connection with the sale, rental, or use of this product.

Warranty Claims Process

In order to qualify for warranty coverage, the following conditions must be met:

1) Return of completed "Warranty Registration" form to Haulotte Group | BilJax within 15 days of receipt of product;
2) Notification to Haulotte Group | BilJax within 72 hours of any claimed defect, injury, or damage resulting from the claimed the defect; and
3) Warranty is limited to parts that are determined to be defective. This does not include parts worn out due to normal use.

Haulotte Group | BilJax authorized dealers or distributors are responsible for filing claims under warranty. Listed below is the warranty claims procedure.

1) Contact Haulotte Group | BilJax Service Department at 800-537-0540 to report the claim and verify warranty coverage. Machine serial number must be provided.
2) Identify the components to be claimed under warranty along with description of failure. A Returned Merchandise Authorization (RMA) number will be issued by Haulotte Group | BilJax.
3) Replacement parts will then be sent by Haulotte Group | BilJax to the dealer or distributor. All parts are invoiced at dealer/distributor list price. Credits will be issued when defective parts are returned to Haulotte Group | BilJax and found to be defective under warranty.
4) After completing repairs, submit warranty claim form and defective parts to Haulotte Group | BilJax. Warranty claim form and parts must be received within 30 days of claim in order to be eligible for credit. RMA number must be referenced on warranty claim form. Returned parts are to be sent prepaid and will be credited when part is received and verified. Warranty labor rate will be paid at current rate set by Haulotte Group | BilJax. The amount of labor hours reimbursed will be determined by Haulotte Group | BilJax and will be limited to 4 hours unless approved by Haulotte Group | BilJax.

Failure to follow the warranty claims process may result in delay in processing claim or denial of the claim. Haulotte Group | BilJax reserves the right to limit or adjust warranty claims with regard to parts, labor and travel time. Components purchased from suppliers other than Haulotte Group | BilJax are not covered under the terms of this warranty.

https://truckmanualshub.com/

3 EQUIPMENT MAINTENANCE

Performing the appropriate maintenance procedures will extend the life of the boom lift and will help ensure the safety of personnel operating the equipment.

Repair, replacement or adjustment of any hydraulic or electrical control device should be performed only by fully trained and authorized personnel. These include, but are not limited to, hydraulic load valves, hydraulic flow control valves, solenoid valves and limit switches. These are safety related controls. Improper adjustment or tampering with these devices may impair boom lift function and result in safety or damage hazards.

Persons performing maintenance or repairs on the machine, including weld repairs, should be trained in accordance with the manufacturer's recommendations. Contact your regional Haulotte Group | BilJax representative if additional information is needed.

Critical or suspect areas identified during any scheduled inspection of the machine shall be examined by qualified personnel in accordance with applicable government regulations.

Never operate the machine if a defect or malfunction is identified or suspected. All defects and malfunctions must be repaired, and all maintenance performed, before returning a machine to service.

This manual contains a list of recommended maintenance procedures to be performed daily, weekly, monthly and annually.

It is the practice of Haulotte Group | BilJax, Inc. to issue Service and/or Safety Bulletins, which may include updates to the information contained in this manual. In such instances, procedures contained in Haulotte Group | BilJax Service Bulletins or Safety Bulletins supersede the information contained in manuals.

Always follow maintenance schedule, regardless of use.

https://truckmanualshub.com/

DAILY SERVICE CHECKS

The following Maintenance Procedures should be performed daily or before each operation.

Verify that all decals are correctly applied and in plain view.

- ❑ Refer to Section 5 for decal locations.

Verify that all controls and indicators at ground and platform control stations operate properly.

- ❑ Lower outriggers to level the boom lift.
- ❑ Raise and extend all booms.
- ❑ Press emergency STOP button.
- ❑ Verify that booms remain elevated and do not drift.
- ❑ Pull out STOP button and lower the booms.
- ❑ If either control station is unresponsive, refer to Table 4-1 for troubleshooting procedures.
- ❑ If display panel displays an error code, refer to Table 4-2 for error code definitions.

Verify operation of running and brake lights.

Verify correct tire inflation.

- ❑ In cold climates, inflate tires to 55 psi.

Inspect tires for damage or loose or missing lug nuts.

- ❑ Repair or replace as necessary.

Inspect structural components and platform for obvious damage or debris.

- ❑ Repair or replace as necessary.

Inspect machine for missing, loose or damaged fasteners, including pins and bolts.

Verify that boom down limit switches operate correctly.

- ❑ Down limit switches are actuated when the boom is in a fully lowered, stowed position. Limit switches must be operational to raise or lower outriggers.
- ❑ If outrigger controls are unresponsive when boom is fully lowered and stowed, inspect down limit switches for loose mounting or visible damage.
- ❑ Repair or replace as needed.

Verify that outrigger safety interlocks operate correctly.

- ❑ Begin with the outriggers fully extended and the boom lift level. Raise one outrigger until the footpad is not in contact with the ground.
- ❑ Verify that boom functions are unresponsive when one outrigger is raised.
- ❑ Repeat this procedure for each outrigger.
- ❑ Raise all outriggers until the footpads are not in contact with the ground. Verify that all outrigger status LEDs on the ground control panel are unlit.
- ❑ Lower one outrigger until the footpad makes contact with the ground and the outrigger begins lifting the trailer.
- ❑ If the LED is lit before the footpad makes contact with the ground or if the LED remains unlit after the weight is transferred to the outrigger, the position switch or wiring is faulty.
- ❑ Repeat this procedure for each outrigger.
- ❑ Repair or replace as needed. Refer to Figure 3-1.

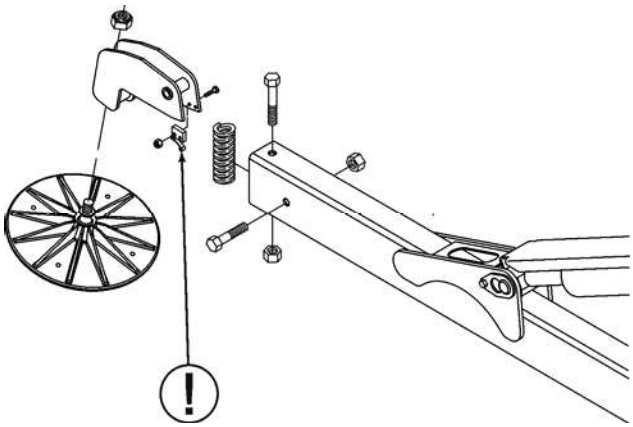

Figure 3-1. Outrigger Position Switches

https://truckmanualshub.com/

Inspect hydraulic system and fluid levels.

- Check all hydraulic hoses and fittings for leaks and damage. Tighten or replace as necessary to prevent hydraulic oil or pressure loss.
- The hydraulic oil level should be checked with the booms down, all outriggers raised and the trailer wheels on a level surface.
- Hydraulic oil level should be visible in, but not above, the sight gauge.
- If the hydraulic oil level is not visible to at least half way up the sight gauge (Figure 3-2), add clean hydraulic fluid as necessary while all booms and outriggers are fully retracted and stowed. Pour slowly to avoid creating air pockets in the reservoir. Do not fill above sight gauge. Overfilling the hydraulic reservoir may cause damage to hydraulic lines and may result in equipment malfunction.

⚠ CAUTION

Do not mix hydraulic oils. Do not add any fluid to the hydraulic system that is not expressly recommended by the manufacturer. Adding unauthorized fluids to the hydraulic system may cause damage to equipment

- The hydraulic reservoir is originally filled with AW32 hydraulic oil.
- Manufacturer recommends a higher viscosity hydraulic oil when operating equipment routinely in extreme climates.

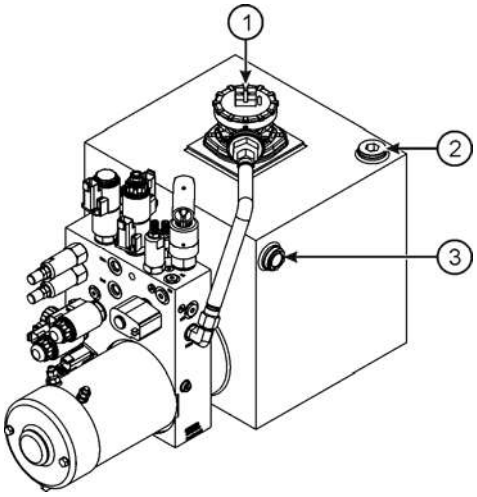

1. Filter Element
2. Fill Port
3. Sight Gauge

Figure 3-2. Hydraulic Reservoir

https://truckmanualshub.com/

WEEKLY SERVICE CHECKS

Perform the following service checks at least once each week in addition to all recommended Daily Service Checks:

Check Battery electrolyte level.

- ❑ If battery charge is low, add enough water to bring the electrolyte level to the top of the plates.
- ❑ If batteries are fully charged, raise electrolyte level to full mark in each cell.

Inspect all electrical wiring.

- ❑ Check for cuts, loose terminals, broken wires, chaffing and corrosion.
- ❑ Repair all damage, remove corrosion and seal exposed connections.

Inspect transport hitch components for damage.

Inspect boom lift for missing, loose or damaged hardware.

- ❑ Repair or replace as necessary.

Inspect all hydraulic system components including pump and motor and cylinders for damage, leaks, loss of pressure or speed, and unusual noise or vibration.

- ❑ Repair or replace as necessary.

https://truckmanualshub.com/

MONTHLY SERVICE CHECKS

Perform the following service checks at least once each month:

Clean all battery terminals.

Check battery for loose connections or damaged wires.

Verify proper operation of manual lowering valves and hand pump

- ❑ Refer to Section 3 for manual boom operating procedures.

Lubricate all compartment hinges and latches, slew ring and mating gear.

- ❑ Use NLGI Grade 2 multi-purpose grease.

Check wheel nut torque.

- ❑ Refer to Figure 4-3 for correct wheel nut tightening sequence.
- ❑ Evenly tighten wheel nuts to 34 N*m in the tightening sequence shown.
- ❑ Repeat sequence, tightening wheel nuts to 81 N*m and to 136 N*m.

NOTE: When wheels are newly installed or replaced, verify wheel nut torque after 75 and 150 km of travel and monthly thereafter. Follow this procedure each time the wheel is removed and reinstalled.

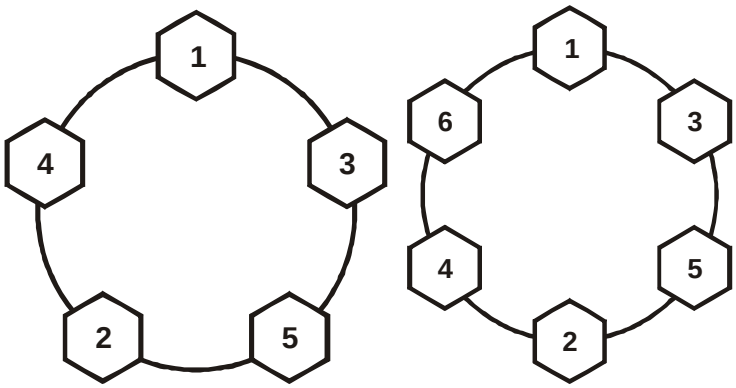

Figure 3-3. Wheel Nut Tightening Sequence

https://truckmanualshub.com/

ANNUAL SERVICE CHECKS

Perform the following service checks at least once each year:

Replace Hydraulic Oil and Oil Filter.

- ❑ Drain hydraulic reservoir, clean and replace oil.
- ❑ Wipe away dirt and excess oil from around filter using cleaning cloths and alcohol solvent.
- ❑ Loosen and remove filter. Use absorbent cloths to keep excess oil from leaking onto the machine. Discard used filter.
- ❑ Wipe away dirt and excess oil from around filter housing.
- ❑ Install new filter. Do not over-tighten.
- ❑ With the fill port cap on but not tightened, completely raise and lower all booms to bleed trapped air from the lift cylinders. Repeat as necessary.
- ❑ Replace yearly, or whenever filter or oil contamination has a noticeable effect on boom functions.

Inspect pivot pins and cylinders, including rod ends, for wear or damage. Replace as necessary.

Visually inspect welds and structural components for wear, damage and corrosion.

- ❑ Follow all manufacturer's recommendations when making repairs to critical components.
- ❑ Personnel making repairs to welds should be certified in accordance with applicable government regulations.

Inspect outriggers for wear or damage. Repair or replace as necessary.

Verify that Level Sensor is operating correctly.

- ❑ Fully deploy outriggers until all Outrigger LEDs and AUTO LEVEL LED are lit, and buzzer sounds.
- ❑ Verify that machine is level, and that level sensor is giving an accurate reading.
- ❑ Repair or replace as necessary.

Inspect and adjust axle and parking brakes.

Load test boom lift operations with 500 lb (187 kg) load.

Check slew bearing for wear or damage.

- ❑ Check bolts for wear or damage.
- ❑ With the boom lift fully retracted, measure the distance between the slew ring gear and the horizontal plate above. Use a 2-inch (50 mm) caliper or bore micrometer. Record the measurement (Figure 3-4).
- ❑ Place a 175 lb (65 kg) load on the boom lift platform.
- ❑ Measure the distance between the slew ring and the horizontal plate above. Record the measurement.
- ❑ If the difference in measurements is greater than .25 in (6.35 mm) the slew ring bearing should be replaced. Contact manufacturer for replacement instructions and assistance.

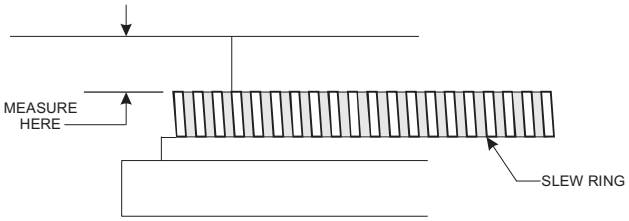

Figure 3-4. Slew Ring Position Measurement

https://truckmanualshub.com/

STRUCTURAL INSPECTION

A comprehensive structural inspection of the unit shall be performed under any of the following conditions.

- Ten years from the date of manufacture and every five years thereafter.
- After any actual, suspected or potential damage is sustained that could affect the structural integrity or stability of the aerial platform.
- After a change in ownership. Owners should provide a complete service history when reselling the unit.

The structural inspection shall include the following considerations.

- The service history of the unit, including hours of service, work performed and environmental conditions.
- The inspection and maintenance record of the unit.
- The effectiveness of all controls and components.
- A visual inspection of the unit for wear or damage.
- Manufacturer recommendations.
- A visual weld inspection, to be performed by qualified personnel in accordance with applicable government regulations.

ADDITIONAL SERVICE INFORMATION

Seals on hydraulic cylinders should be replaced every five years or as indicated by machine performance.

All service checks should be performed on a machine that has been stored without use for a period exceeding thirty days.

Check for air in the hydraulic system if the machine has been stored without use for a period exceeding thirty days, or if the machine was stored without use during a seasonal climate change. Air trapped in the hydraulic system will affect machine performance. Follow procedures for bleeding air from the hydraulic system, found in Section 4.

Owners and lessors should complete a full inspection of all components and perform a test of all functions, including brake functions, before commissioning or reselling machine. Always repair or replace all damaged or malfunctioning components before commissioning or reselling machine.

When a change in ownership occurs, it is the responsibility of the seller to provide the new owner with all manuals for the machine. It is the responsibility of the buyer to notify the manufacturer of the unit model and serial number and the name and address of the new owner within 60 days.

Use the Service Checklists found at the back of the Operator’s Manual to record all Service Checks as well as any maintenance, repairs or alterations performed on the machine.

Records of frequent safety checks need not be made. However, where a safety hazard is found, it shall be reported in writing to the owner of the machine, and a record of any corrective action shall be maintained for five years or as required b y the authority having jurisdiction.

Testing Machine Stability

The Summit Series aerial work platform has been tested for stability using a load equal to 150% of the rated capacity of the machine and placed at the center of the platform with the boom fully extended. Stability tests should be conducted only by trained personnel and only when the machine is properly anchored to safeguard against tipping.

https://truckmanualshub.com/

BATTERY RECHARGE

Recharge boom lift batteries after each 8-hour work shift or as needed. When boom lift is not in use, batteries should be recharged at least once per week. Under normal circumstances, battery recharge should take approximately 10-12 hours. However, a full recharge may take up to 24 hours, if the battery charge is extremely low.

WARNING

Recharge batteries in a well-ventilated area only. Do no charge batteries near fire, spark or other potential ignition sources. Batteries may emit highly explosive hydrogen gas while charging. Failure to properly ventilate the charge gases may result in serious injury or death. Always charge boom lift batteries away from flammable materials.

To recharge the boom lift batteries:

- ❑ Move the boom lift to a well-ventilated area with direct access to 120 VAC electrical outlet. Keep the boom lift and batteries away from open flame or other potential ignition sources.
- ❑ Attach a 12 AWG multi-strand, grounded extension cord with a maximum length of 50 feet (15 meters) to the receptacle located on the cargo plate in front of the turntable.

NOTE: Using an underrated or long power cord will reduce the output of the battery charger and may extend charge time.

- ❑ Plug the extension cord into a grounded 120 VAC outlet. Verify that the green CHARGING indicator LED is lit on the battery charger faceplate (Figure 3-5).

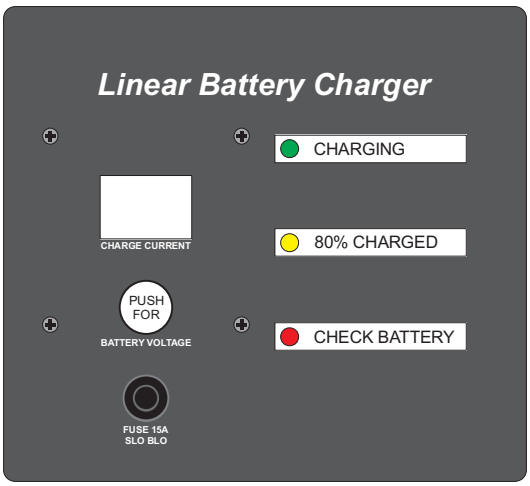

Figure 3-5. Battery Charger Faceplate

- ❑ The CHARGING indicator LED remains lit continuously during the first stage of the charge cycle. The bulk mode CHARGE CURRENT will be displayed on the battery charger faceplate.
- ❑ Press and hold the BATTERY VOLTAGE button to display the detected battery voltage.
- ❑ If a battery fault is detected, the appropriate fault code will appear on the CHARGE CURRENT display. The red CHECK BATTERY indicator LED will become lit. See Table 3-1 for battery charger fault codes.

WARNING

Do not disconnect any output leads or connectors between the batteries and the charger when the charger is on. To stop a charge in progress, always unplug the extension cord from the AC power source.

- ❑ When the battery charge reaches 80% of capacity, the yellow 80% CHARGED indicator LED will become lit and the green CHARGING indicator LED will begin to flash.
- ❑ When the batteries have reached a full charge, the green and yellow indicator LEDs will turn themselves off. CC (Charge Complete) will appear on the CHARGE CURRENT display. After two hours, this display will fade and the CHARGE CURRENT will read 00.
- ❑ Unplug the extension cord from the 120 VAC outlet and the charger receptacle on the boom lift. Store the extension cord for next use.

CAUTION

Always unplug the battery charger power cord before moving the boom lift. Failure to disconnect power cord will cause damage to the equipment.

Table 3-1. Charger Fault Codes

Code	Description	Limits	Cause
F1	Over Voltage	>112% charge voltage	Loose battery or charger connection
F2	Over Current	>60 amperes	Battery Fault
F3	Bulk Mode Timeout	14 hrs Max.	Battery Fault
F4	ARD Mode Timeout	6 hrs Max.	Battery Fault
F5	FCT Mode Timeout	2.5 hrs Max.	Battery Fault
F6	Self-Test Error		Charger Fault

https://truckmanualshub.com/

TROUBLESHOOTING

Refer to Table 3-2 for basic troubleshooting operations. Additional information can be found in the Haulotte Group | BilJax Model 3522A Operator's Manual. Contact the Haulotte Group | BilJax Service Department with any questions or before attempting any advanced troubleshooting operations.

Table 3-2. Troubleshooting Steps

PROBLEM	CAUSE	SOLUTION
No lights on panel when key switch is turned to the on position.	a. Emergency STOP engaged. b. Battery charge is low. c. Battery ground or in-series cable is loose. d. Battery main disconnect unplugged. e. Blown fuse.	a. Disengage Emergency STOP buttons. b. Recharge as needed. c. Inspect and repair battery connections. d. Plug in main disconnect. e. Replace fuse as necessary.
Hydraulic function does not work and display window shows an error message	a. Fault detected by safety interlock microprocessor. b. Boom Lift electric or electronic failure	a. Refer to Table 4-2 for error code definition and correction. b. Refer to Table 4-2 for error code definition and correction.
Outrigger indicator LED lights do not function.	a. Key switch turned to the OFF or platform controls position. b. Emergency STOP engaged. c. Outriggers not deployed.	a. Turn key switch to ground controls position. b. Disengage emergency STOP buttons. c. Deploy all outriggers.
One or more boom controls do not function **OR** One or more boom controls function improperly **OR** One or more boom controls function intermittently.	a. Key switch is turned to the OFF or incorrect control position. b. Battery charge is low. c. Emergency STOP engaged. d. Battery ground or in-series cable loose. e. All outriggers not properly deployed. f. Hydraulic pump inoperative. g. Loose wiring connector. h. Valve solenoid not operating properly. i. Fault detected by system interlock. j. Broken or loose wire.	a. Turn key switch to ground or platform controls position. b. Recharge battery. c. Disengage Emergency STOP buttons. d. Inspect and repair battery connections. e. Deploy all outriggers and level boom lift. f. Inspect pump; replace or repair as needed. g. Check wiring terminals in control box and at valve manifold; replace or repair as needed. h. Clean valve solenoid and recheck function(s); replace or repair as needed. i. Check display for system status. Refer to Table 4-2 for error code definitions and correction. j. Inspect wiring in control box and at valve manifold and valve coil; repair or replace as needed.

https://truckmanualshub.com/

ERROR CODE DEFINITIONS

The DISPLAY PANEL located on the ground control panel indicates the present operating status of the boom lift. If an error condition is detected by the control processor during start-up or operation, the appropriate error code will be displayed on this panel.

Refer to Table 3-3 for a list of common error codes and their definitions. A comprehensive list of Error Codes can be found in the Appendix.

Table 3-3. Error Code Definitions

ERROR MESSAGE	DEFINITION OF ERROR	COMMENTS
001 MACHINE IS IN DOWN ONLY MODE	Machine was either never leveled, outriggers not lowered, or machine went out of level with use.	Retract boom to travel position and extend outriggers using AUTO LEVEL button.
002 LOSS OF PLATFORM COMMUNICATION	Ground control lost communication with platform control.	Check for unplugged or damaged platform control cable.
005 PLATFORM CONTROL HAS STUCK KEY	Platform control detected a stuck or pressed key on power up.	Turn key switch off and on again without pressing any buttons.
008 GROUND CONTROL HAS STUCK KEY	Ground control detected a stuck or pressed key on power up.	Turn key switch off and on again without pressing any buttons.
009 BOOM UP WITHOUT OUTRIGGERS ON GROUND	Ground control detected the boom is up and all outriggers are not on the ground	Retract boom to travel position and extend outriggers using AUTO LEVEL button.
010 LEVEL SENSOR HAS ERRATIC OUTPUT	The ground control detected an erratic output from the level sensor.	Retract and extend outriggers using AUTO LEVEL button.
015 MACHINE IS NOT LEVEL	Machine has gone out of level with use.	Retract and extend outriggers using AUTO LEVEL.
016 LIFT BOOM	A boom rotate, extend, or retract function requested with boom down.	Raise boom from travel position.
017 STOW BOOM	An outrigger function requested with boom up.	Retract and lower boom to travel position.
021 OPEN CIRCUIT PRIMARY UP	A load of less than 70mA detected in primary up circuit on power-up.	Check for faulty boom up solenoid coil and wiring.
022 SHORTED CIRCUIT PRIMARY UP	Excessive load detected in primary up circuit on power-up.	Check for faulty boom up solenoid coil and wiring.
023 OPEN CIRCUIT PRIMARY DOWN	A load of less than 70mA was detected when primary down circuit was energized	Check for faulty boom down solenoid coil and wiring.
024 SHORTED CIRCUIT PRIMARY DOWN	Excessive load detected when primary down circuit was energized.	Check for faulty boom down solenoid coil and wiring.
025 OPEN CIRCUIT SECONDARY UP	A load of less than 70mA detected in secondary up circuit on power-up.	Check for faulty boom up solenoid coil and wiring.
026 SHORTED CIRCUIT SECONDARY UP	Excessive load detected in secondary up circuit on power-up.	Check for faulty boom up solenoid coil and wiring.
027 OPEN CIRCUIT SECONDARY DOWN	A load of less than 70mA detected when secondary down circuit was energized	Check for faulty boom down solenoid coil and wiring.
028 SHORTED CIRCUIT SECONDARY DOWN	Excessive load detected when secondary down circuit was energized.	Check for faulty boom down solenoid coil and wiring.
029 OPEN CIRCUIT JIB UP	A load of less than 70mA detected in jib up circuit on power-up.	Check for faulty jib up solenoid coil and wiring.
030 SHORTED CIRCUIT JIB UP	Excessive load detected in jib up circuit on power-up.	Check for faulty jib up solenoid coil and wiring.

https://truckmanualshub.com/

ERROR MESSAGE	DEFINITION OF ERROR	COMMENTS
031 OPEN CIRCUIT JIB DOWN	A load of less than 70mA detected when jib down circuit was energized	Check for faulty jib down solenoid coil and wiring.
032 SHORTED CIRCUIT JIB DOWN	Excessive load detected when jib down circuit was energized.	Check for faulty jib down solenoid coil and wiring.
033 OPEN CIRCUIT EXTEND	A load of less than 70mA detected in extend circuit on power-up.	Check for faulty boom extend solenoid coil/wiring.
034 SHORTED CIRCUIT EXTEND	Excessive load detected in extend circuit on power-up.	Check for faulty boom extend solenoid coil/wiring.
035 OPEN CIRCUIT RETRACT	A load of less than 70mA detected in retract circuit on power-up.	Check for faulty boom retract solenoid coil/wiring.
036 SHORTED CIRCUIT RETRACT	Excessive load detected in retract circuit on power-up.	Check for faulty boom retract solenoid coil/wiring.
037 OPEN CIRCUIT PLATFORM LEVEL UP	A load of less than 70mA detected in platform level up circuit on power-up.	Check for faulty level up solenoid coil/wiring.
038 SHORTED CIRCUIT PLATFORM LEVEL UP	Excessive load detected in platform level up circuit on power-up.	Check for faulty level up solenoid coil/wiring.
039 OPEN CIRCUIT PLATFORM LEVEL DOWN	A load of less than 70mA detected in platform level down circuit on power-up.	Check for faulty level down solenoid coil/wiring.
040 SHORTED CIRCUIT PLATFORM LEVEL DOWN	Excessive load detected in platform level down circuit on power-up.	Check for faulty level down solenoid coil/wiring.
041 OPEN CIRCUIT PLATFORM CW	A load of less than 70mA detected in platform CW circuit on power-up.	Check for faulty boom rotate solenoid coil/wiring.
042 SHORTED CIRCUIT PLATFORM CW	Excessive load detected in platform CW circuit on power-up.	Check for faulty boom rotate solenoid coil/wiring.
043 OPEN CIRCUIT PLATFORM CCW	A load of less than 70mA detected in platform CCW circuit on power-up.	Check for faulty boom rotate solenoid coil/wiring.
044 SHORTED CIRCUIT PLATFORM CCW	Excessive load detected in platform CCW circuit on power-up.	Check for faulty boom rotate solenoid coil/wiring.
045 OPEN CIRCUIT TURNTABLE CW	A load of less than 70mA detected in rotate CW circuit on power-up.	Check for faulty rotate CW solenoid coil/wiring.
046 SHORTED CIRCUIT TURNTABLE CW	Excessive load detected in rotate CW circuit on power-up.	Check for faulty rotate CW solenoid coil/wiring.
047 OPEN CIRCUIT TURNTABLE CCW	A load of less than 70mA detected in rotate CCW circuit on power-up.	Check for faulty rotate CCW solenoid coil/wiring.
048 SHORTED CIRCUIT TURNTABLE CCW	Excessive load detected in rotate CCW circuit on power-up.	Check for faulty rotate CCW solenoid coil/wiring.
049 OPEN CIRCUIT OUTRIGGER RETRACT	A load of less than 70mA detected in outrigger retract circuit on power-up.	Check for faulty outrigger retract solenoid coil/wiring.
050 SHORTED CIRCUIT OUTRIGGER RETRACT	Excessive load was detected when Outrigger Retract circuit was energized.	Check for faulty outrigger retract solenoid coil/wiring.
051 OPEN CIRCUIT OUTRIGGER EXTEND	A load of less than 70mA detected in outrigger retract circuit on power-up.	Check for faulty outrigger extend solenoid coil/wiring.
052 SHORTED CIRCUIT OUTRIGGER EXTEND	Excessive load was detected in outrigger extend circuit on power-up.	Check for faulty outrigger extend solenoid coil/wiring.
053 OPEN CIRCUIT LF OUTRIGGER	A load of less than 70mA detected in left front outrigger circuit on power-up.	Check for faulty solenoid coil/wiring at outrigger.
054 SHORTED CIRCUIT LF OUTRIGGER	Excessive load was detected in left front outrigger circuit on power-up.	Check for faulty solenoid coil/wiring at outrigger.
055 OPEN CIRCUIT RF OUTRIGGER	A load of less than 70mA detected in right front outrigger circuit on power-up.	Check for faulty solenoid coil/wiring at outrigger.

https://truckmanualshub.com/

ERROR MESSAGE	DEFINITION OF ERROR	COMMENTS
056 SHORTED CIRCUIT RF OUTRIGGER	Excessive load detected in right front outrigger circuit on power-up.	Check for faulty solenoid coil/wiring at outrigger.
057 OPEN CIRCUIT LR OUTRIGGER	A load of less than 70mA detected in left rear outrigger circuit on power-up.	Check for faulty solenoid coil/wiring at outrigger.
058 SHORTED CIRCUIT LR OUTRIGGER	Excessive load detected in left rear outrigger circuit on power-up.	Check for faulty solenoid coil/wiring at outrigger.
059 OPEN CIRCUIT RR OUTRIGGER	A load of less than 70mA detected in right rear outrigger circuit on power-up.	Check for faulty solenoid coil/wiring at outrigger.
060 SHORTED CIRCUIT RR OUTRIGGER	Excessive load detected in right rear outrigger circuit on power-up.	Check for faulty solenoid coil/wiring at outrigger.
069 OPEN CIRCUIT PROPORTIONAL	A load of less than 70mA detected in proportional valve circuit on power-up.	Check for faulty solenoid coil/wiring at proportional valve.
070 SHORTED CIRCUIT PROPORTIONAL	Excessive load detected in proportional valve circuit on power-up.	Check for faulty solenoid coil/wiring at proportional valve.

https://truckmanualshub.com/

4 CYLINDER REPLACEMENT

If repair or replacement of a boom lift or outrigger hydraulic cylinder or its component parts becomes necessary, observe the following procedures in accordance with the safety precautions established in Section 1 of this manual.

Removing the hydraulic cylinder from the boom lift may require the use of specialized tools and lifting equipment. NEVER attempt to operate overhead hoists or cranes or related equipment without proper training, authorization and supervision. Perform all maintenance procedures only in an area that is well-lit and well-ventilated. Haulotte Group | BilJax, Inc. is not responsible for personal injury or property damage resulting from the improper use of equipment or failure to follow all procedures and related safety precautions.

Direct all questions regarding cylinder removal and replacement to the Haulotte Group | BilJax Service Department at 800-537-0540.

https://truckmanualshub.com/

LIFT CYLINDER REPLACEMENT

Use the following procedure to remove and replace faulty or damaged hydraulic cylinders on the boom lift:

WARNING

Repair and removal of the hydraulic cylinders requires the use of lifting straps and an overhead crane or lifting gear to support the boom lift and hydraulic cylinders. Personnel should be thoroughly trained in the operation of these devices before attempting installation or removal. Hydraulic cylinders are heavy and may have hydraulic oil on their surface. Failure to use proper equipment or to securely support boom and boom cylinders can result in damage to lift components, serious injury or death.

- ❑ Lower the boom until it is resting in a stowed position. When removing the slave cylinder, extend the telescoping boom section until all pivot pins are exposed (approximately two feet).
- ❑ Press and hold the emergency lowering valve on the back of the jib boom section to relieve all hydraulic pressure to the cylinder. Repeat this process for the upper and lower boom sections. Refer to the 3522A Operator's Manual for emergency lowering valve locations and operating procedures.
- ❑ Turn key switch to the OFF position and remove the key.
- ❑ Locate the piston rod end of the cylinder to be removed (Figure 4-1). Unbolt and remove the retainer plate from each side of the pivot pin.
- ❑ Verify that the cylinder is supported by lifting straps and an overhead hoist.
- ❑ Remove the pivot pin using a hammer and a brass or hardwood drift.
- ❑ Use an overhead crane or lifting gear to raise the boom section. Adequate clearance is necessary to reach the cylinder valve block and hydraulic hose ports.
- ❑ Unplug the appropriate emergency lowering valve solenoid.
- ❑ Tag and number all hydraulic hoses that attach to the cylinder valve block. Use a marker to label the valve block ports with the appropriate hose numbers.
- ❑ Place absorbent cloths below the cylinder ports and detach hydraulic hoses from the cylinder. Elevate hoses to prevent leakage. Plug or cap exposed hose fittings and cylinder ports.
- ❑ At the base of the cylinder, unbolt and remove retainer plate from each side of the pivot pin.
- ❑ Remove the pivot pin using a hammer and a brass or hardwood drift.
- ❑ Lift and remove the cylinder using an overhead hoist and lifting straps.
- ❑ Replace or reinstall the cylinder by following the above instructions in the reverse order of removal.
- ❑ Actuate the hydraulic system and check for leakage. Tighten hydraulic fittings as needed.
- ❑ Bleed trapped air from the hydraulic system by raising and lowering the boom with the reservoir fill port cap on but not tightened. Allow several minutes for trapped air to escape. Repeat as needed.

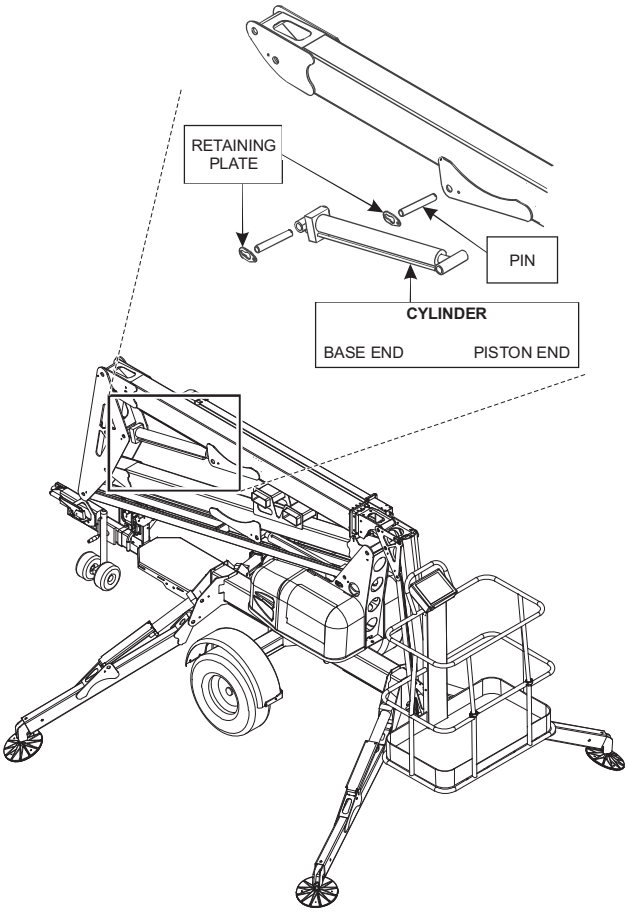

Figure 4-1. Lift Cylinder Replacement

https://truckmanualshub.com/

OUTRIGGER CYLINDER REPLACEMENT

Use the following procedure to remove and replace faulty or damaged hydraulic cylinders on the outriggers:

- ❑ Lower the outrigger until the footpad is touching the ground. Do not transfer the weight of the boom lift onto the outrigger. Leave the weight of the boom on the trailer wheels.
- ❑ Remove the bolts securing the outrigger cylinder rod guard (Figure 4-2). Remove the guard.
- ❑ At the piston rod end of the cylinder, unbolt and remove the retainer plate from each side of the pivot pin.
- ❑ Place a block of wood shoring between the outrigger beam and cylinder.
- ❑ Remove the pivot pin using a hammer and a brass or hardwood drift.
- ❑ Fully retract the cylinder.
- ❑ Turn key to the off position and remove the key.
- ❑ Tag and number all hydraulic hoses that attach to the cylinder valve block. Use a marker to label the valve block ports with the appropriate hose numbers.
- ❑ Unplug the cylinder valve solenoid.
- ❑ Place absorbent cloths below the cylinder ports and detach hydraulic hoses from the cylinder. Elevate hoses to prevent leakage. Plug or cap exposed hose fittings and cylinder ports.
- ❑ At the base of the cylinder, unbolt and remove retainer plate from each side of the pivot pin.
- ❑ Remove the pivot pin using a hammer and a brass or hardwood drift.
- ❑ Lift and remove the cylinder using an overhead hoist and lifting straps.
- ❑ Replace or reinstall the cylinder by following the above instructions in the reverse order of removal.
- ❑ Actuate the hydraulic system and check for leakage. Tighten hydraulic fittings as needed.
- ❑ Bleed trapped air from the hydraulic system by raising and lowering the boom with the reservoir fill port cap on but not tightened. Allow several minutes for trapped air to escape. Repeat as needed.

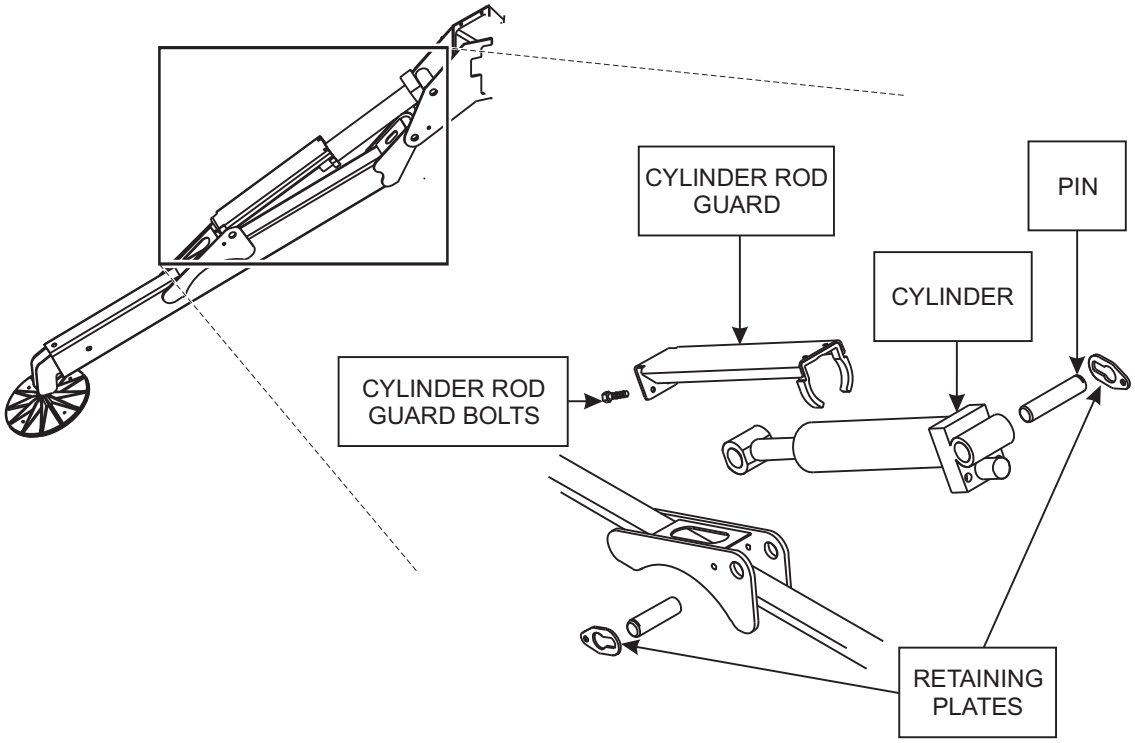

Figure 4-2. Outrigger Cylinder Replacement

https://truckmanualshub.com/

https://truckmanualshub.com/

5 REPLACEMENT DECALS

WARNING

Decals contain information that is required for the safe and proper use of the aerial work platform.

Decals should be considered necessary components of the machine and should be checked before each use to verify that they are correctly attached and legible.

Promptly replace all decals that are no longer legible.

https://truckmanualshub.com/

Table 5-1. Replacement Decal Descriptions

Decal No.	Decal Description	Qty
0202-0523	Made in USA	1
B06-00-0034	DANGER: Electric Shock	1
B06-00-0037	Lubricate Semi-Annually	1
B06-00-0062	NOTICE: AC Power	2
B06-00-0068	NOTICE: Hydraulic System Oil	1
B06-00-0161B	Haulotte Group | BilJax Logo, 6” Black Transfer	2
B06-00-0173	NOTICE: Fall Protection Attachment Point	2
B06-00-0403	NOTICE: Emergency Lowering	4
B06-00-0404	WARNING: Outrigger Crush Toe	8
B06-00-0405	WARNING: Pinch Point	17
B06-00-0471	DANGER: Before Use/Main Instruction/Hazards (Platform)	1
B06-00-0473	NOTICE: Operator’s Manual Missing	1
B06-00-0474	NOTICE: Max. Load	1
B06-00-0475	WARNING: Read/Understand Operator’s Manual	1
B06-00-0477	WARNING: Forklift Pockets	2
B06-00-0478	NOTICE: Platform Charger/Power Plug Here	1
B06-00-0481	CAUTION: Transport Safety Latch	3
B06-00-0482	DANGER: Electrocution Hazard	2
B06-00-0484	DANGER: Battery/Charger Safety	1

Decal No.	Decal Description	Qty
B06-00-0494	NOTICE: Hazardous Materials	1
B06-00-0495	CAUTION: Compartment Access Restricted	2
B06-00-0496	CAUTION: Generator Plate Capacity 200 lbs.	1
B06-00-0503	NOTICE: Handle Applications	1
B06-00-0504	NOTICE: Emergency Hand Pump	1
B06-00-0505	DANGER: Before Use/Main Instruction/Hazards (ground)	1
B06-00-0521	DANGER: Tip Over Hazard	7
B06-00-0533	WARNING: Operating Instructions (Ground)	2
B06-00-0534	WARNING: Operating Instructions (Platform)	1
B06-00-0535	NOTICE: Range of Motion	2
B06-00-0538	3522A, 6” Black Transfer	2
B06-00-0541	CAUTION: Manual Boom Functions	1
B06-00-0542	WARNING: Max. Towing Speed	2
B06-00-0543	WARNING: Wheel Crush Toe	2
B06-00-0544	WARNING: Towing Hazards	2
B06-00-0545	Haulotte Group | BilJax Website Transfer	2
B06-00-0550	WARNING: Unhitch Lift Before Use	2
B06-00-0551	CAUTION: Prior to Towing	1

Identification Plates

B06-00-0490	VIN Plate	1
B06-00-0499	ANSI ID Plate	1
B06-00-0524	Annual Inspection Plate	1
B06-00-0526	Key Tag	1

CE/CAN/AUS Machines

B06-00-0167	Black/Yellow Hazard - 2” Wide	4
B06-00-0568	WARNING: Tip Over Hazard	4

https://truckmanualshub.com/

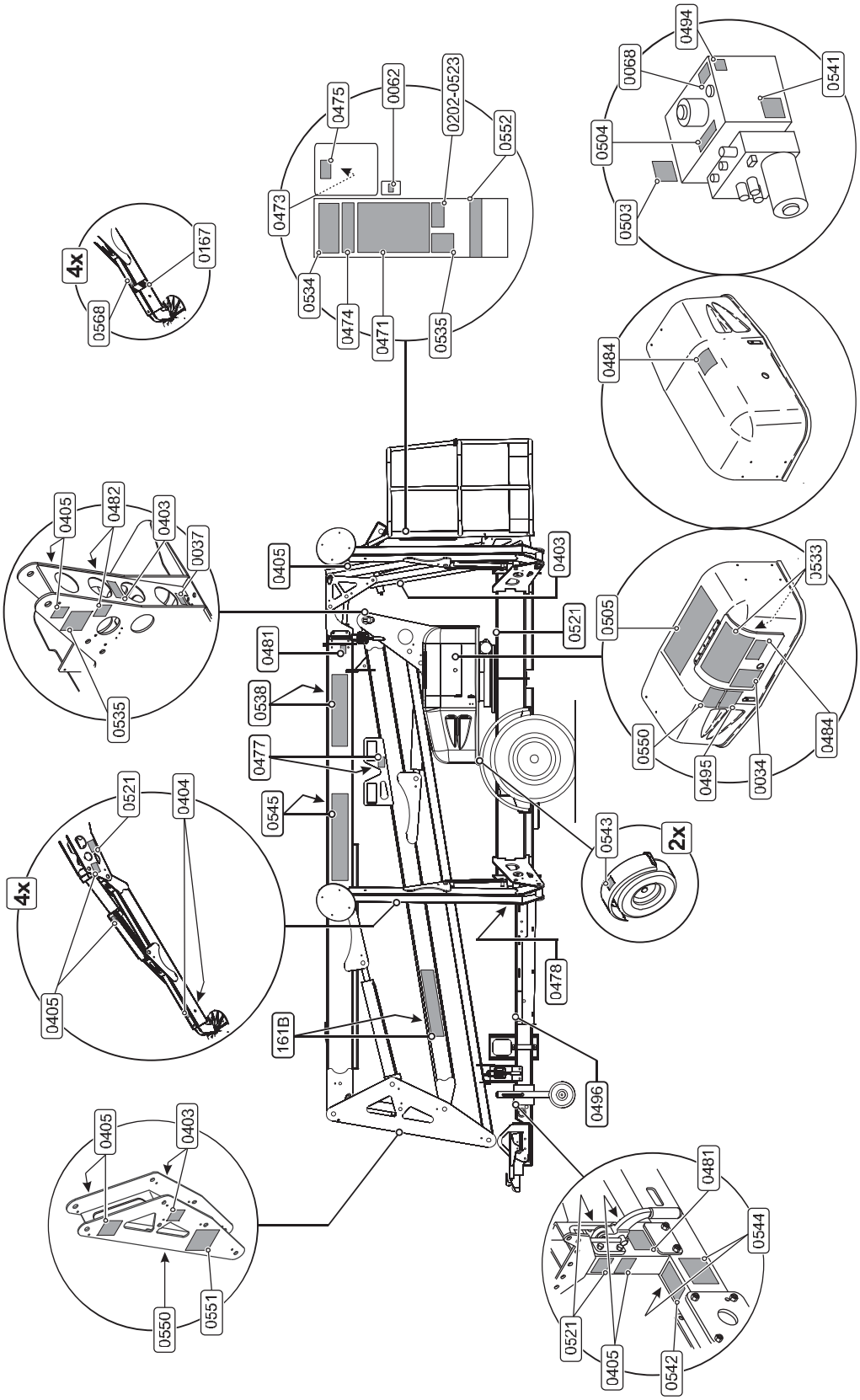

Figure 5-1. Decal Locations

https://truckmanualshub.com/

https://truckmanualshub.com/

6 ANSI REPRINT

The following sections are reprinted from the ANSI A92.2-2009 code in effect at the time of manufacture and govern the safe use of the Haulotte Group | BilJax Model 3522A Articulating Boom Lift.

Permission to reprint this material has been granted by the Scaffold Industry Association

7. Responsibilities of Dealers and Installers

7.1 **General Responsibilities**. Each dealer or installer as applicable shall comply with the requirements of this section.

7.2 **Vehicle Specifications**. Each dealer or installer, or both, who sells an aerial device shall inform the owner or user, or both, of the manufacturer's minimum vehicle specifications.

7.3 **Vehicle Weight Distribution**. The installer shall be responsible for the weight distribution of the completed mobile unit in accordance with the requirements of the aerial device and the applicable regulations. Allowance shall be made for the weight of readily removable tools and material specified by the user.

7.4 **Manuals.** Upon delivery of the equipment to the owner or user, the dealer or installer shall provide the manuals as required by Paragraph 6.4 of this standard and manuals for auxiliary equipment added by the installer.

7.5 **Installations.** The installer shall comply with Sections 5 and 6 of this standard relating to proper installation and shall follow the instructions of the manufacturer. In the event the original manufacturer no longer exists, an equivalent entity may provide these instructions. The installer shall maintain access to the lower controls as described in section 4.3.3. The installer of an aerial device shall, before the mobile unit is placed in operation, perform stability tests in accordance with the requirements of 4.5.1 and 4.5.2, the operational and visual tests in accordance with the requirements of 6.6.1 and 6.6.2, and the appropriate electrical tests required in 5.4 of this standard. For insulating aerial devices, the installer shall assure conformance to the Qualification test requirements of 5.3.2 by either obtaining a certification of the test and performing a periodic test after installation, or by performing the Qualification test. The installer shall, when installing an aerial device on a chassis which is a highway vehicle, comply with all requirements of the applicable Federal Motor Vehicle Safety Standards in effect at the time of installation. Certification as a manufacturer (alteration, intermediate or final) of a motor vehicle under the Federal Motor Vehicle Safety Standards is required. The travel height of the mobile unit shall be posted in a location that is readily visible to the vehicle operator.

7.6 **Quality Assurance.** The installer shall have a documented quality assurance program which will ensure compliance with this standard.

7.7 **Weldings.** All welds made by the installer, whose failure could result in motion of the platform(s) shall meet the Structural Welding Code AWS D1.1-2006 or AWS Dl.2-2003. The installer shall establish applicable welding quality assurance procedures for all weldments.

7.8 **Training.** The dealer or installer shall offer training or training materials that aid owners, users, operators, lessors and lessees in the operation, inspection, testing and maintenance of the aerial device. This training shall be offered initially and subsequently on request.

7.8.1 **Dealer or Installer as User**. Whenever a dealer or installer directs personnel to operate an aerial device (inspecting, sales demonstrations, or any form of use), the dealer or installer shall assume the responsibilities of users as specified in Section 9 of this standard. All personnel authorized to operate the aerial device shall have been trained in a program that meets the requirements of this standard.

7.9 **Maintenance Training**. Dealer maintenance personnel shall be trained in inspection, testing and maintenance of the aerial device in accordance with the manufacturer's recommendations.

8. Responsibilities of Owners

8.1 **General Responsibilities**. Each owner shall comply with the requirements of this section. The following responsibilities pertain to the owner's inspection, testing, maintenance, modification, training, and transfer of ownership. These activities shall be performed by qualified person(s).

8.2 **Inspection and Testing Classifications.**

8.2.1 **Initial Inspection and Test.** Prior to initial use, all new or modified mobile units shall be inspected and tested to ensure compliance with the provisions of this standard. Certification by the manufacturer, dealer, final installer or an equivalent entity(s) meets this requirement.

8.2.2 **Regular Inspection and Tests**. The inspection procedure for mobile units is divided into two classifications based upon the intervals at which inspections and tests shall be performed. Intervals shall be set by the owner in accordance with the manufacturer's recommendations. Such intervals are dependent upon component function and exposure to wear, deterioration and other agents which adversely affect component life. Two classifications are designated:

(1) Frequent Inspection and Test: Daily to monthly intervals.

(2) Periodic Inspection and Test: One to twelve month intervals.

8.2.3 **Frequent Inspection and Test.** Items determined by the owner in accordance with the manufacturer's recommendations for each specific aerial device shall be inspected for defects. The following inspections and tests shall be performed by the operator immediately prior to first use at the beginning of each shift:

(1) Conduct walk around visual inspection looking for damaged components, cracks or corrosion, excessive wear and any loose, deformed or missing bolts, pins, fasteners, locking devices and covers.

(2) Check all controls and associated mechanisms for proper operation to include, but not limited to, the following:

a) Proper operation of interlocks.

b) Controls return to neutral when released and not sticking.

https://truckmanualshub.com/

c) Control functions and operation clearly marked.

(3) Check visual and audible safety devices for proper operation.

(4) Visually inspect fiberglass and insulating components for visible damage and contamination.

(5) Check for missing or illegible operational and instructional markings.

(6) Check hydraulic and pneumatic systems for observable deterioration and excessive leakage.

(7) Check electrical systems related to the aerial device for malfunctions, signs of excessive deterioration, dirt and moisture accumulation.

(8) Perform functional test to include, but not limited to, the following:

(a) Set-up the aerial device for operation, including outriggers.

(b) Cycle the aerial device functions through the complete range of motion from the lower controls, except where operation through the complete range of motion would create a hazard.

(c) Check functionality of emergency controls.

Any suspected items shall be carefully examined or tested and a determination made by a qualified person as to whether they constitute a safety hazard. All unsafe items shall be replaced or repaired before use.

8.2.4 Periodic Inspection or Test. An inspection of the mobile unit shall be performed at the intervals defined in 8.2.2 depending upon its activity, severity of service, and environment, or as specifically indicated below. (These inspections shall include the requirements of 8.2.3):

(1) Structural members for deformation, cracks or corrosion.

(2) Parts, such as pins, bearings, shafts, gears, rollers, locking devices, chains, chain sprockets, wire and synthetic ropes, and sheaves for wear, cracks or distortion.

(3) Hydraulic and pneumatic relief valve settings.

(4) Hydraulic system for proper oil level.

(5) Hydraulic and pneumatic fittings, hoses, and tubing for evidence of leakage, abnormal deformation or excessive abrasion.

(6) Compressors, pumps, motors, and generators for loose fasteners, leaks, unusual noises or vibrations, loss of operating speed and excessive heating.

(7) Hydraulic and pneumatic valves for malfunction and visible cracks in the external valve housing, leaks, and sticking spools.

(8) Visually inspect any vacuum prevention systems and verify function of such systems.

(9) Hydraulic and pneumatic cylinders and holding valves for malfunction and visible damage.

(10) Hydraulic and pneumatic filters for cleanliness and the presence of foreign material in the system indicating other component deterioration.

(11) Electrical systems and components for deterioration or wear including those not readily visible on a frequent inspection.

(12) Performance test of all boom movements.

(13) Condition and tightness of bolts and other fasteners in accordance with the manufacturer’s recommendation.

(14) Welds, as specified by the manufacturer.

(15) Legible and proper identification, operational, and instructional markings.

(16) If the aerial device is rated as an insulating device, the electrical insulating components and system(s) shall be thoroughly inspected for lack of cleanliness and other conditions that compromise insulation. Then these components and system(s) shall be tested for compliance with the rating of the aerial device in accordance with one of the applicable methods and procedures as outlined in section 5.4.3 of this standard:

(a) If the aerial device is used for ac bare-hand work, the ‘in the field’ tests outlined in 5.4.3.1 (10) (c) may be relied upon when performed frequently, however the unit shall undergo an ac voltage test at least every three years in accordance with Table 2 criteria;

(b) If the aerial device is used for dc bare-hand work, the ‘in the field’ tests outlined in 5.4.3.1 (10) (c) may be relied upon when performed frequently, however the unit shall undergo an appropriate dc over voltage test at least every three years;

(c) After repair or replacement of any component that crosses the insulating system(s), or the repair or replacement of an insulating component(s) (e.g., hoses, leveling rods, boom coating, etc.), the unit shall be dielectrically tested in accordance with section 5.4.3;

(d) An insulating replacement boom shall be tested to ensure conformance to 5.3.3 by the supplier;

(e) Bare-hand work units shall be tested for the applicable unit rating in accordance with Table I (or appropriate dc test for units used on direct current lines, see Appendix B) after any major repair to the insulating boom or any insulating boom replacement. Major repair to the insulating boom shall include resurfacing or repainting of the exterior or interior boom surfaces. The removal and subsequent reinstallation of a gradient control device is not considered a 'major repair' provided proper reinstallation of the gradient control device is performed by a qualified person in accordance with the manufacturer's instructions.

(17) If the aerial device has upper controls equipped with high electrical resistance components and the manufacturer so indicates, they shall be maintained as high electrical resistance components and should be electrically tested per 5.4.3.6. Any suspected items shall be carefully examined or tested and a determination made by a qualified person as to whether they constitute a safety hazard. All unsafe items shall be replaced or repaired before use.

8.2.5 Post Event Inspection or Test. After any reported event during which structural members of an aerial device or mobile unit are suspected of being subjected to loading or stresses in excess of design stress such as after an accident involving overturning of the mobile unit or application of unintended external mechanical or electrical forces to the aerial device, the aerial device shall be removed from service and subjected to the applicable periodic inspection requirements in 8.2.4. In addition to the periodic inspection, supplemental non-destructive examination procedures or other tests to assist in detecting possible structural damage to the aerial device may be required. All damaged items shall be replaced or repaired before the unit is returned to service. Return to service shall be approved by a qualified person.

8.3 Inspection and Test Records.

8.3.1 Frequent. Items to be inspected shall be designated to the operator or other authorized person making frequent inspections. Records of frequent inspections need not be made. However, where a safety hazard is found, it shall be reported in writing to a person responsible for the corrective action and that report and a record of the correction shall be maintained for five years, or as required by applicable regulations.

8.3.2 Periodic. Written, or appropriately archived electronic, dated and signed reports and records shall be made of periodic inspections and tests and retained for a period of five years or as required by applicable regulations.

8.4 Maintenance. Maintenance and frequency of maintenance shall be determined by the owner in accordance with the manufacturer’s recommendations.

https://truckmanualshub.com/

8.4.1 Maintenance Training. The owner shall train their maintenance personnel in inspection and maintenance of the aerial device in accordance with the manufacturer's recommendations and Section 8 of this standard.

8.4.2 Weldings. Welding repairs of components or welds, designated as critical in the manufacturer's manual shall be made in accordance with the manufacturer's recommendations and shall meet the Structural Welding Code AWS D1.1-2006 or AWS D1.2-2003. Should the original manufacturer no longer exist, an equivalent entity may determine the required procedure.

8.5 Modifications. No modifications or additions which affect the stability, mechanical, hydraulic, or electrical integrity or the safe operation of the aerial device shall be made without the written approval of the manufacturer. If such modifications or changes are made, the capacity, operation, and maintenance instruction markings shall be changed accordingly. In no case shall the safety factors be reduced below those specified in this standard or below the manufacturer's design safety factors, whichever are greater. Should the original manufacturer no longer exist, an equivalent entity may approve required modification.

8.5.1 Alterations. Altering or disabling the function of safety devices, guards, or interlocks, if so equipped, is prohibited.

8.6 Weight Distribution. Changes in loading or additions made to the mobile unit after the final acceptance that affect weight distribution shall meet applicable regulations by governmental agencies. In no case shall axle loads of the fully loaded vehicle exceed the Gross Axle Weight Ratings (GAWR) assigned by the manufacturer. Note: Any change in weight distribution may adversely affect stability.

8.7 Transfer of Ownership. When a change in ownership of an aerial device occurs, it shall be the responsibility of the seller to provide the manufacturer's manual(s) for that aerial device to the purchaser. It is the responsibility of the purchaser to notify the manufacturer of the unit model and serial number and the name and address of the new owner within 60 days. If the owner uses other entities as agents (e.g., Brokers) for the sale or the arrangement of a sale of an aerial device(s) their responsibilities under this section continue.

8.8 Markings. The markings on the aerial device shall not be removed, defaced, or altered. All missing or illegible markings shall be promptly replaced.

8.9 Parts. When parts or components are replaced they shall be identical in specification and function to the original aerial device parts or components or shall provide an equal or greater factor of safety.

8.10 Safety Bulletins. Owners shall comply with safety related bulletins as received from the manufacturer, dealer or installer.

8.11 Manuals. The owner shall insure that the operating manual(s) is stored on the mobile unit.

8.12 Training, Retraining, and Familiarization of Operators.

8.12.1 General Training. Only personnel who have received general instructions regarding the inspection, application and operation of aerial devices, including recognition and avoidance of hazards associated with their operation, shall operate an aerial device. Such items covered shall include, but not necessarily be limited to, the following issues and requirements:

(1) The purpose and use of manuals.
(2) That operating manuals are an integral part of the aerial device and must be properly stored on the vehicle when not in use.
(3) A pre-start inspection.
(4) Responsibilities associated with problems or malfunctions affecting the operation of the aerial device.
(5) Factors affecting stability.
(6) The purpose of placards and decals.
(7) Workplace inspection.
(8) Applicable safety rules and regulations, such as Part 4, ANSI C2-2007, National Electrical Safety Code (applies to utility workers as defined in ANSI C2). The above standard is an example; other industries using aerial devices have safety rules pertinent to that industry.
(9) Authorization to operate.
(10) Operator warnings and instructions.
(11) Actual operation of the aerial device. Under the direction of a qualified person, the trainee shall operate the aerial device for a sufficient period of time to demonstrate proficiency in the actual operation of the aerial device.
(12) Proper use of personal fall protection equipment. Fall protection systems criteria and practices are covered in 29 CFR 1926.502.

8.12.2 Retraining. The operator shall be retrained, when so directed by the user, based on the user's observation and evaluation of the operator.

8.12.3 Familiarization. When an operator is directed to operate an aerial device they are not familiar with, the operator, prior to operating, shall be instructed regarding the following items:

(1) The location of the manuals.
(2) The purpose and function of all controls.
(3) Safety devices and operating characteristics specific to the aerial device.
(4) Under the direction of a qualified person, the trainee shall operate the aerial device for a sufficient period of time to demonstrate proficiency in the actual operation of the aerial device.

8.13 Owner as a Lessor. When owners function as lessors, they shall have the same responsibilities as specified under Section 11 of this standard.

9. Responsibilities of Users.

9.1 General Responsibilities. Each User shall comply with the requirements of this section.

9.2 Personnel. Only trained and authorized personnel shall be permitted to operate the aerial device.

9.3 Training, Retraining, and Familiarization of Operators.

9.3.1 General Training. Only personnel who have received general instructions regarding the inspection, application and operation of aerial devices, including recognition and avoidance of hazards associated with their operation, shall operate an aerial device. Such items covered shall include, but not necessarily be limited to, the following issues and requirements:

(1) The purpose and use of manuals.
(2) That operating manuals are an integral part of the aerial device and must be properly stored on the vehicle when not in use.
(3) A pre-start inspection.
(4) Responsibilities associated with problems or malfunctions affecting the operation of the aerial device.
(5) Factors affecting stability.
(6) The purpose of placards and decals.
(7) Workplace inspection.
(8) Applicable safety rules and regulations, such as Part 4, ANSI C2-2007, National Electrical Safety Code. (applies to utility workers as defined in ANSI C2). The above standard is an example; other industries using aerial devices have safety rules pertinent to that industry.
(9) Authorization to operate.
(10) Operator warnings and instructions.
(11) Actual operation of the aerial device. Under the direction of a qualified person, the trainee shall operate the aerial device for a sufficient period of time to demonstrate proficiency in the actual operation of the aerial device.

https://truckmanualshub.com/

(12) Proper use of personal fall protection equipment. Fall protection systems criteria and practices are covered in 29 CFR 1926.502.

9.3.2 **Retraining**. The operator shall be retrained, when so directed by the user, based on the user's observation and evaluation of the operator.

9.3.3 **Familiarization**. When operators are directed to operate an aerial device with which they are not familiar, they shall receive prior instruction regarding the following items:
(1) The location of the manuals.
(2) The purpose and function of all controls.
(3) Safety devices and operating characteristics specific to the aerial device.
(4) Under the direction of a qualified person, the trainee shall operate the aerial device for a sufficient period of time to demonstrate proficiency in the actual operation of the aerial device.

9.3.4 **Proof of Training.** Users providing training should provide successful trainees a means to evidence their training and should provide such proof if requested by the trainee. The document evidencing training shall include the following information:
(1) Name of trainee
(2) Name of entity providing training or retraining
(3) Name of trainer(s)
(4) Clear identification of the make(s) and model(s) of the mobile unit(s) on which the operator has been trained.

9.4 **Application**. The employer and authorized operator(s) shall insure that the aerial device is used only for intended applications as defined in the operating manual and that all recognized safety practices are observed.

Note: The User is directed to Appendix C for guidance as to appropriate applications.

9.5 **Electrical Hazard**. All applicable safety related work practices intended to protect from electrical hazards shall be defined and explained to the operator by a qualified person. The operator shall maintain the appropriate Minimum Approach Distance (MAD) from energized conductors and apparatus, commensurate with the operator's qualifications. See Appendix F for the information on the Minimum Approach Distances and other precautions.

9.6 **Bare-Hand Work.** For bare-hand work, a Category A aerial device shall be used.

9.7 **Lower Controls**. The lower controls of aerial devices shall not be used for continuous operation with personnel in the platform.

9.8 **Manufacturer's Safety Bulletins**. The user shall comply with the applicable safety-related bulletins as received from the manufacturer, installer, dealer or owner.

10. Responsibilities of Operators

10.1 **General Responsibilities.** Each operator shall comply with the requirements of this section.

10.2 **Personnel**. Only trained and authorized personnel shall be permitted to operate the aerial device.

10.3 **Operation**. During operation of the aerial device all platform occupants shall use appropriate fall protection connected to the aerial device anchorage(s).

10.4 **Work Platform**. The operator shall not use railings, planks, ladders or any other device in or on the work platform for achieving additional working height or reach.

10.5 **Brakes**. The vehicle parking brake(s) shall be set at all times that the boom is elevated except when the aerial device is being used in accordance with 10.11.

10.6 **Loading**. Any loading which includes a horizontal load shall be avoided unless the mobile unit is designed for that application.

10.7 **Alterations**. Altering or disabling the function of safety devices, guards or interlocks, if so equipped, is prohibited.

10.8 **Observations**. Observations during operation for any defects shall be conducted on an ongoing basis.

10.8.1 **Pre-start Inspection**. Items determined by the owner in accordance with the manufacturer's recommendations for each specific aerial device shall be inspected for defects prior to each day's operation. The following tests and inspections shall be performed by the operator once daily, prior to first use:
(1) Conduct walk around visual inspection, looking for damaged components, cracks or corrosion, excessive wear and any loose, deformed or missing bolts, pins, fasteners, locking devices and covers.
(2) Check all controls and associated mechanisms for proper operation to include, but not limited to, the following:
  (a) Proper operation of interlocks.
  (b) Controls return to neutral when released and not sticking.
  (c) Control functions and operation clearly marked.
(3) Check visual and audible safety devices for proper operation.
(4) Visually inspect fiberglass and insulating components for visible damage and contamination.
(5) Check for missing or illegible operational and instructional markings.
(6) Check hydraulic and pneumatic systems for observable deterioration and excessive leakage.
(7) Check electrical systems related to the aerial device for malfunction, signs of excessive deterioration, dirt, and moisture accumulation.
(8) Perform functional test to include, but not limited, to the following:
  (a) Set-up aerial device for operation, including outriggers.
  (b) Cycle each aerial device boom function through its complete range of motion from the lower controls, except where operation through the complete range of motion would create a hazard.
  (c) Check functionality of emergency controls.

Any suspected items shall be carefully examined or tested and a determination made by a qualified person as to whether they constitute a safety hazard. All unsafe items shall be replaced or repaired before use.

10.9 **Worksite.** Before the aerial device is used the worksite shall be surveyed for hazards such as:
(1) Insufficient supporting surfaces such as soft ground or tamped earth fills.
(2) Ditches.
(3) Excessive slopes, drop-offs, curbs, and floor obstructions.
(4) Debris.
(5) Overhead obstructions and electrical conductors.
(6) Weather conditions.
(7) Presence of unauthorized persons.
(8) Road or worksite traffic.
(9) Subsurface chambers such as underground utility components or septic systems.

10.10 **Precautions**. Before and during each use the operator shall:
(1) Check for overhead obstructions and electrical conductors.
(2) Insure that the load on the platform and/or load lifting device is in accordance with the manufacturer's rated capacity.
(3) Insure that outriggers and stabilizers are used if the manufacturer's instructions require their use.
(4) Insure that guardrails are properly installed, and the gates are closed.
(5) Use outrigger pads when necessary to provide firm footing.

https://truckmanualshub.com/

10.11 **Mobile Operation**. Before engaging in mobile operation the operator shall determine that the aerial device is specifically designed for mobile operation.

10.11.1 **Driver Precautions**. Before and during driving, the driver shall:
(1) Avoid traveling on any surface that adversely affects vehicle stability.
(2) Maintain a safe distance from obstacles and overhead lines.
(3) Maintain communications between driver and operator.
(4) Responsibilities associated with problems or malfunctions affecting the operation of the aerial device.

10.12 **Training, Retraining, and Familiarization of Operators**.

10.12.1 **General Training**. Only personnel who have received general instructions regarding the inspection, application and operation of aerial devices, including recognition and avoidance of hazards associated with their operation, shall operate an aerial device. Such items covered shall include, but not necessarily be limited to, the following issues and requirements:
(1) The purpose and use of manuals.
(2) That operating manuals are an integral part of the aerial device and must be properly stored on the vehicle when not in use.
(3) A pre-start inspection.
(4) Responsibilities associated with problems or malfunctions affecting the operation of the aerial device.
(5) Factors affecting stability.
(6) The purpose of placards and decals.
(7) Workplace inspection.
(8) Applicable safety rules and regulations, such as Part 4, ANSI C2-2007, National Electrical Safety Code (applies to utility workers as defined in ANSI C2). The above standard is an example; other industries using aerial devices have safety rules pertinent to that industry.
(9) Authorization to operate.
(10) Operator warnings and instructions.
(11) Proper use of personal fall protection equipment. Fall protection systems criteria and practices are covered in 29 CFR 1926.502.

10.12.2 **Retraining**. The operator shall be retrained, when so directed by the user, based on the user's observation and evaluation of the operator.

10.12.3 **Familiarization.** When operators are directed to operate an aerial device with which they are not familiar, they shall be instructed, prior to operating the aerial device, regarding the following items:
(1) The location of the manuals.
(2) The purpose and function of all controls.
(3) Safety devices and operating characteristics specific to the aerial device.
(4) Under the direction of a qualified person, the trainee shall operate the aerial device for a sufficient period of time to demonstrate proficiency in the actual operation of the aerial device.

10.13 **Electrical Hazard**. All applicable safety related work practices intended to protect personnel from electrical hazards shall be defined and explained to the operator by a qualified person. The operator shall maintain the appropriate Minimum Approach Distance (MAD) from energized conductors and apparatus, commensurate with the operator's qualifications. See Appendix F for information on the Minimum Approach Distance and other precautions.

11. Responsibilities of Lessors or Lessees

11.1 **General Responsibilities.** Each lessor or lessee shall comply with the requirements of the applicable section or sections below.

11.1.1 **Lessor or Lessee as Dealer or Installer.** When a lessor or lessee uses the aerial device as a dealer or installer they shall have the same responsibilities as specified under Section 7 of this standard.

11.1.2 **Lessor or Lessee as Owner**. When a lessor or lessee uses the aerial device as an owner they shall have the same responsibilities as specified under Section 8 of this standard.

11.1.3 **Lessor or Lessee as User**. When a lessor or lessee uses the aerial device as a user they shall have the same responsibilities as specified under Section 9 of this standard.

11.1.4 **Lessor or Lessee as Operator.** When a lessor or lessee uses the aerial device as an operator they shall have the same responsibilities as specified under Section 10 of this standard.

11.2 **Ownership Responsibilities**. The lessor shall carry out the responsibilities of ownership specified in this standard which are not assigned to the lessee as the user.

11.3 **Obligations.** Upon delivery each lessor of an aerial device shall provide the operators manual and the ANSI/SIA A92.2-2009 Manual of Responsibilities for dealers, owners, users, operators, lessors, lessees and brokers of Vehicle Mounted Elevating and Rotating Aerial Devices. These manuals shall be stored on the mobile unit.

11.3.1 **Inspection and Test.** Prior to delivery, the lessor of an aerial device shall perform a frequent inspection as specified in Section 8.2.3 of this standard.

11.3.2 **Responsibilities**. Upon delivery, each lessor of an aerial device shall inform the lessee of their responsibilities in accordance with Section 8 as to inspection, testing and maintenance requirements; Section 9 as to user's responsibilities; and Section 10 as to operator's responsibilities.

11.4 **Training.** The lessor shall offer training or training materials that aid the lessee in the operation, inspection, testing and maintenance of the aerial device. This training shall be offered initially and subsequently on request.

11.4.1 **General training**. Only personnel who have received general instructions regarding the inspection, application and operation of aerial devices, including recognition and avoidance of hazards associated with their operation, shall operate an aerial device. Such items covered shall include, but not necessarily be limited to, the following issues and requirements:
(1) The purpose and use of manuals.
(2) That operating manuals are an integral part of the aerial device and must be properly stored on the vehicle when not in use.
(3) A pre-start inspection.
(4) Responsibilities associated with problems or malfunctions affecting the operation of the aerial device.
(5) Factors affecting stability.
(6) The purpose of placards and decals.
(7) Workplace inspection.
(8) Applicable safety rules and regulations, such as Part 4, ANSI C2-2007, National Electrical Safety Code (applies to utility workers as defined in ANSI C2). The above standard is an example; other industries using aerial devices have safety rules pertinent to that industry.
(9) Authorization to operate.
(10) Operator warnings and instructions.
(11) Proper use of personal fall protection equipment. Fall protection systems criteria and practices are covered in 29 CFR 1926.502.

https://truckmanualshub.com/

(12) Electrical hazards and Minimum Approach Distance to energized conductors and apparatus. See Appendix F.

11.4.2 Familiarization. When operators are directed to operate an aerial device with which they are not familiar, they shall be instructed, prior to operating the aerial device, regarding the following items:

(1) The location of the manuals.
(2) The purpose and function of all controls.
(3) Safety devices and operating characteristics specific to the aerial device.
(4) Under the direction of a qualified person, the trainee shall operate the aerial device for a sufficient period of time to demonstrate proficiency in the actual operation of the aerial device.

11.5 Communications. In the event the manufacturer or installer provides the lessor manuals, bulletins, or other materials for the information of the user of an aerial device, the lessor shall pass them on to the user without delay.

11.6 Use of Brokers. If Brokers are employed in leasing, the responsibility of lessors and lessees as specified in this Section continue even though a Broker may be involved in the transaction.

12. Responsibilities of Brokers

12.1 Broker Involved In a Sale. A broker involved in a sale shall:

(1) Assure that the entity actually transferring ownership knows the proper location and identification of proper personnel of the purchasing entity.
(2) Confirm that operations and maintenance manuals are provided to the new owner.
(3) Confirm that all parties are aware of their responsibilities under Section 8.7 of this standard.

12.2 Broker Involved In a Lease. A broker involved in a lease shall:

(1) Assure that the entity actually transferring possession knows the proper location and identification of the proper personnel of the lessee or user of the aerial device.
(2) Confirm that the operators' manual, maintenance manual, and a Manual of Responsibilities are provided to the lessee.
(3) Confirm that all parties are aware of their responsibilities under Section 11.4 of this standard.

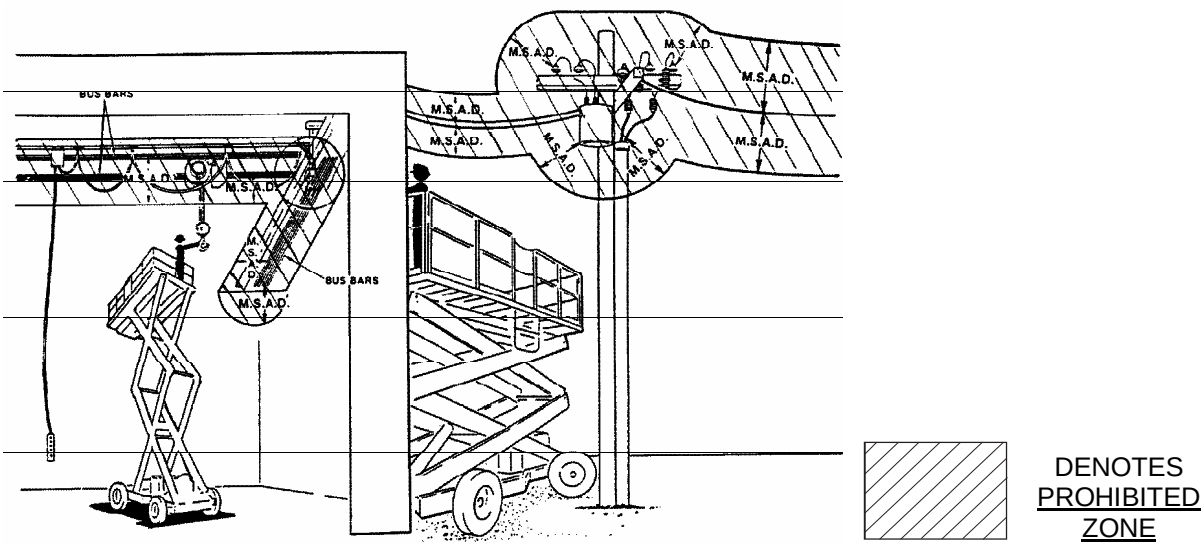

Figure 6-1. Minimum Safe Approach Distances

DANGER

Do not allow machine, personnel, or conductive materials inside prohibited zone. Maintain M.S.A.D. from all energized lines and parts as well as those shown. Assume all electrical parts and wires are energized unless known otherwise.

CAUTION

Diagrams shown are only for purposes of illustrating M.S.A.D. work positions, not all work positions.

Minimum Safe Approach Distances

Voltage Range (Phase to Phase)	Minimum Safe Approach Distance (Feet)	(Meters)
0 to 300V	Avoid Contact	
Over 300V to 50KV	10	3.05
Over 50KV to 200KV	15	4.60
Over 200KV to 350KV	20	6.10
Over 350KV to 500KV	25	7.62
Over 500KV to 750KV	35	10.67
Over 750KV to 1000KV	45	13.72

https://truckmanualshub.com/

APPENDIX: REPLACEMENT PARTS

Use only parts manufactured and/or authorized by Haulotte Group | BilJax, Inc. when replacing damaged components. See page 88 for replacement part ordering information.

Only personnel properly trained and authorized to operate all equipment and familiar with all boom functions should attempt to repair or replace any part of the boom lift.

Always read, understand and obey all safety precautions included in this manual, as well as those precautions attached to the lift and dictated by federal, state and local regulations.

Assembly Description	Page
Outrigger	40
Towing	42
Front Rest	44
Brake And Axle	46
Slew Ring	48
Limit Switch	50
Control Compartment	52
Pump Compartment	54
Battery Compartment	56
Cover Assembly	58
Lower Boom	60
Triangle Weldment	62
Upper Boom	64
Jib Boom	66
Platform	68
Hydraulic Pump	70
Boom and Rotation Hydraulic Lines	74
Outrigger Hydraulic Lines	76
Water Line to Platform	77
Air Line to Platform	77
Wire Harnesses	78
Manual Platform Rotate	80
Material Lift Hook	82
Battery Layout	85
Drive & Set	86

https://truckmanualshub.com/

OUTRIGGER ASSEMBLY

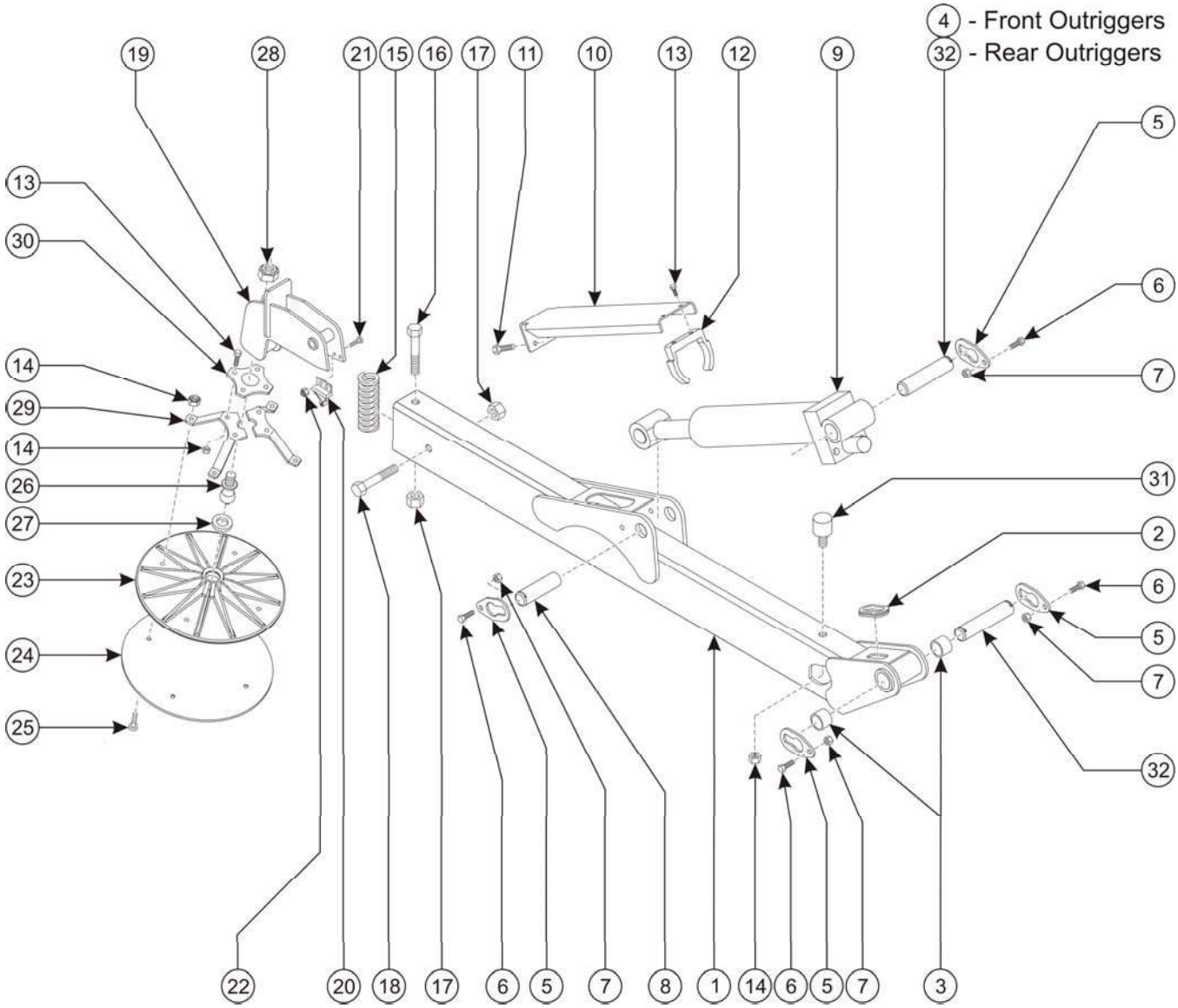

https://truckmanualshub.com/

Item No.	Part No.	Description	Qty.
1	A-01120	Outrigger Weldment	1
2	A-00046	Grommet, 1.5 x 1.25 x 1.75	1
3	A-00031	Bearing	2
4	A-00058	Pin, 1.0 x 5.25 (Front Outriggers Only)	1
5	A-00018	Pin Retainer (Front Outriggers) Pin Retainer (Rear Outriggers)	4 5
6	0096-0016	Cap Screw, M10 x 25 (Front Outriggers) Cap Screw, M10 x 25 (Rear Outriggers)	4 5
7	0096-0041	Hex Nut, Self-Locking, M10 (Front Outriggers) Hex Nut, Self-Locking, M10 (Rear Outriggers)	4 5
8	A-00060	Pin, 1.0 x 4.0	1
9	A-01138	Outrigger Hydraulic Cylinder	1
	B02-04-0118	Valve, Cylinder	1
	B01-08-0022A	Coil, Cylinder	1
10	A-00141	Outrigger Cylinder Guard	1
11	0096-0009	Cap Screw, M8 x 10	2
12	A-00142	Guard Slide	1
13	0096-0011	Cap Screw, M8 x 25	2
14	0096-0040	Hex Nut, Self-Locking, M8	9
15	A-00154	Spring, Outrigger Sensor	1
16	0096-0036	Cap Screw, M16 x 150	1
17	0096-0044	Hex Nut, Self-Locking, M16	2
18	0096-0051	Cap Screw, M16 x 100	1
19	A-00128	Pad Mount Weldment	1
20*	B01-03-0078	Limit Switch Assembly – ANSI	1
21*	0090-0232	Slotted Machine Screw, #10-24 x 5/8	2
22*	0090-0182	Hex Nut, Self-Locking, #10-24	2
23	A-01136	Foot Pad, Aluminum, 10”	1
24	A-01137	Foot Pad Bottom, 10”	1
25	0096-0121	Flat Head Cap Screw, M8 x 30	4
26	A-00135	Foot Pad Ball	1
27	A-00195	O-Ring, Foot Pad	1
28	0096-0045	Hex Nut, Self-Locking, M20	1
29	A-01127	Foot Pad Lock	2
30	A-00139	Foot Pad Cap	1
31	B20-00-0019	Bumper	1
32	A-00086	Pin, 1.0 x 5.44 (Front Outriggers) Pin, 1.0 x 5.44 (Rear Outriggers)	1 2

CE Limit Switch Assembly Parts List*

For CE machines, Item 20 is replaced by 1 of A-03631 and 1 of A-03632; Item 21 is replaced by 2 of 0090-0692; Item 22 is replaced by 2 of 0090-0181.

NOTE: All quantities specified above are per outrigger.

https://truckmanualshub.com/

TOWING ASSEMBLY

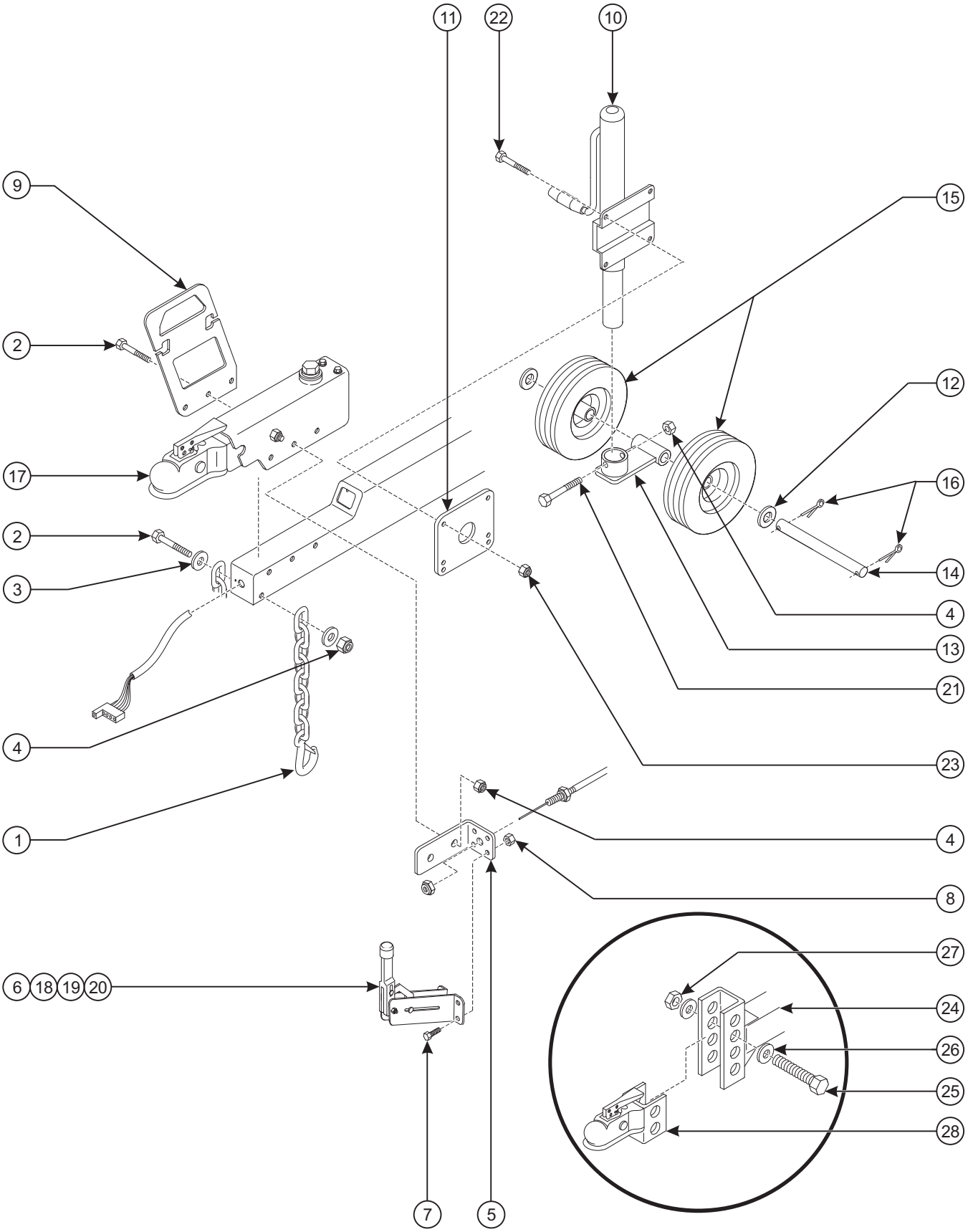

https://truckmanualshub.com/

Item No.	Part No.	Description	Qty.
1	B03-00-0017	Safety Chain Assembly	2
2	0096-0025	Cap Screw, M12 x 120	4
3	0096-0046	Washer, Flat, M12	2
4	0096-0042	Hex Nut, Self-Locking, M12	5
5	A-02177	Brake Bracket	1
6	A-00192	Brake Lever	1
7	0096-0010	Cap Screw, M8 x 20	4
8	0096-0040	Hex Nut, Self-Locking, M8	4
9	A-01154	Tongue Handle	1
9	A-03662	Tongue Handle – CE	1
10	A-00144	Jack Assembly	1
11	A-02166	Attach Plate	1
12	0096-0087	Washer, Flat, M20	2
13	A-02160	Jack Weldment	1
14	A-02164	Axle	1
15	A-02165	Tire and Wheel Assembly	2
16	0090-0147	Cotter Pin, 1/8 – 1 1/4	2
17	B12-00-0211	Hitch Coupler	1
17	A-03616	Bradley Coupler – CE	1
18	B04-06-0033	Washer, Flat, Brake Lever	1
19	B04-00-0088	Clevis Pin, Brake Lever	1
20	B04-00-0089	Cotter Pin, Brake Lever	1
21	0096-0022	Cap Screw, M12 x 75	1
22	0096-0075	Cap Screw, M10 x 120	4
23	0096-0041	Hex Nut, Self-Locking, M10	4
24	B12-00-0211	Combination Hitch Coupler (Optional; Inset)	1
25	0090-0878	Cap Screw, #5/8-11 x 4 3/4	2
26	0090-0425	Washer, 5/8	4
27	0090-0194	Hex Nut, Self-Locking, 5/8-11	2
28	B12-00-0066	Adjustable Coupler – 2” Ball	1

https://truckmanualshub.com/

FRONT REST ASSEMBLY

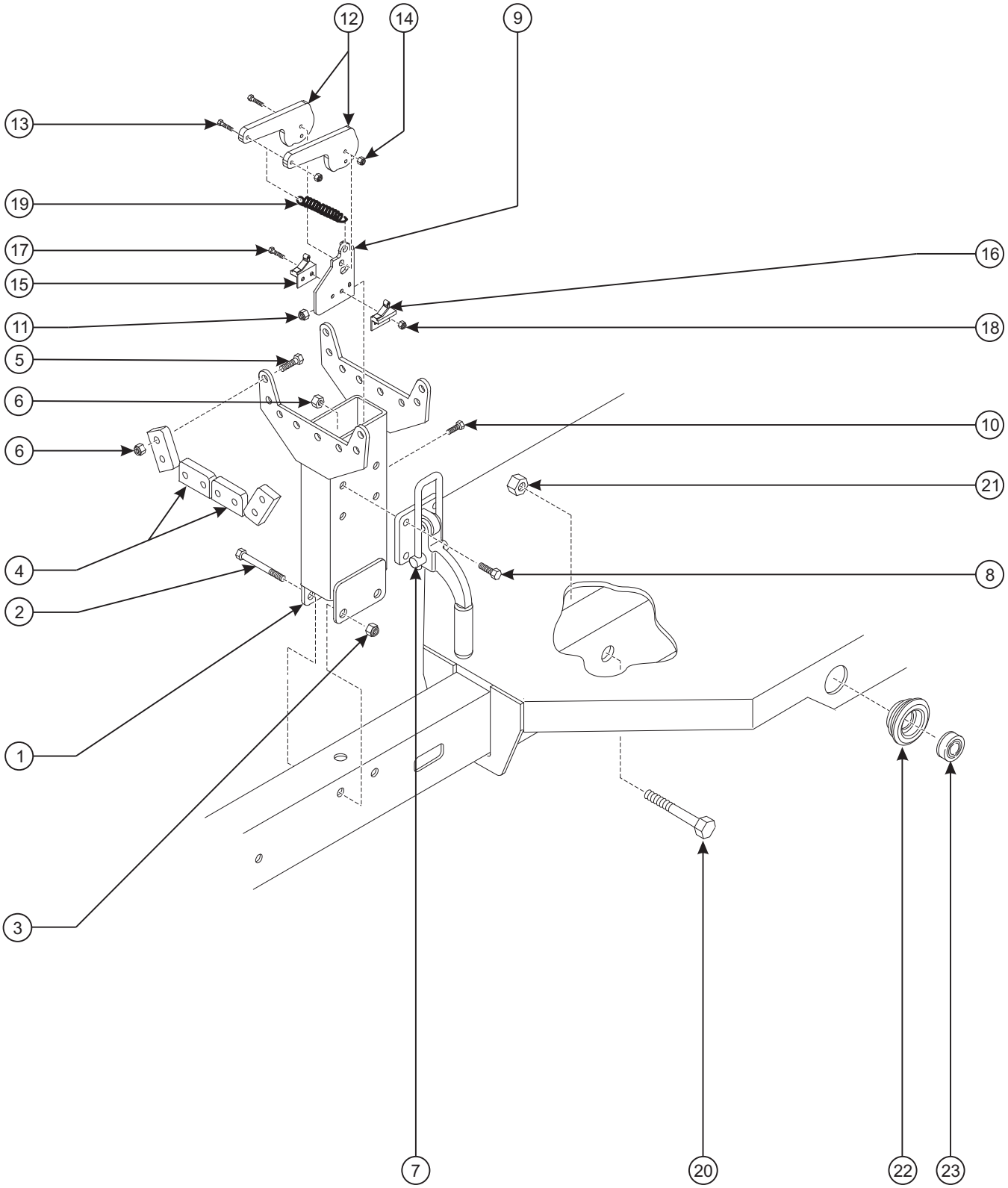

https://truckmanualshub.com/

Item No.	Part No.	Description	Qty.
1	A-01145	Front Rest Weldment	1
2	0096-0024	Cap Screw, M12 x 100	2
3	0096-0042	Hex Nut, Self-Locking, M12	2
4	A-00157	Front Rest Pad	8
5	0096-0017	Cap Screw, M10 x 30	16
6	0096-0041	Hex Nut, Self-Locking, M10	20
7	A-00159	Boom Latch	1
8	0096-0016	Cap Screw, M10 x 25	4
9	A-00169	Switch Bracket	1
10	0096-0002	Cap Screw, M6 x 20	2
11	0096-0039	Hex Nut, Self-Locking, M6	2
12	A-00188	Switch Cam	2
13	0096-0106	Cap Screw, M4 x 40	3
14	0096-0073	Hex Nut, Self-Locking, M4	3
15	B01-03-0078	Limit Switch Assembly, NO (Female)	1
16	B01-03-0079	Limit Switch Assembly, NC (Male)	1
17	0090-0709	Machine Screw, #6-32 x 1 1/4	2
18	0090-0180	Hex Nut, Self-Locking, #6-32	2
19	A-00158	Tension Spring	1
20	0096-0038	Cap Screw, M20 x 120	2
21	0096-0045	Hex Nut, Self-Locking, M20	2
22	B01-10-0239	Grommet, Marker Light	2
23	B01-10-0297	Marker Light, Amber	2
23	A-03633	Marker Light, White – CE	2
24	A-00190	Switch Cam Spacer	3

	A-05660	Tongue Tube Weldment – CE	1
	A-05655	Bike Catcher Weldment – CE	2
	0096-0025	Cap Screw, M12 x 120	2
	0096-00	Cap Screw, M12 x	4
	0096-0042	Hex Nut, Self-Locking, M12	6

https://truckmanualshub.com/

BRAKE AND AXLE ASSEMBLY

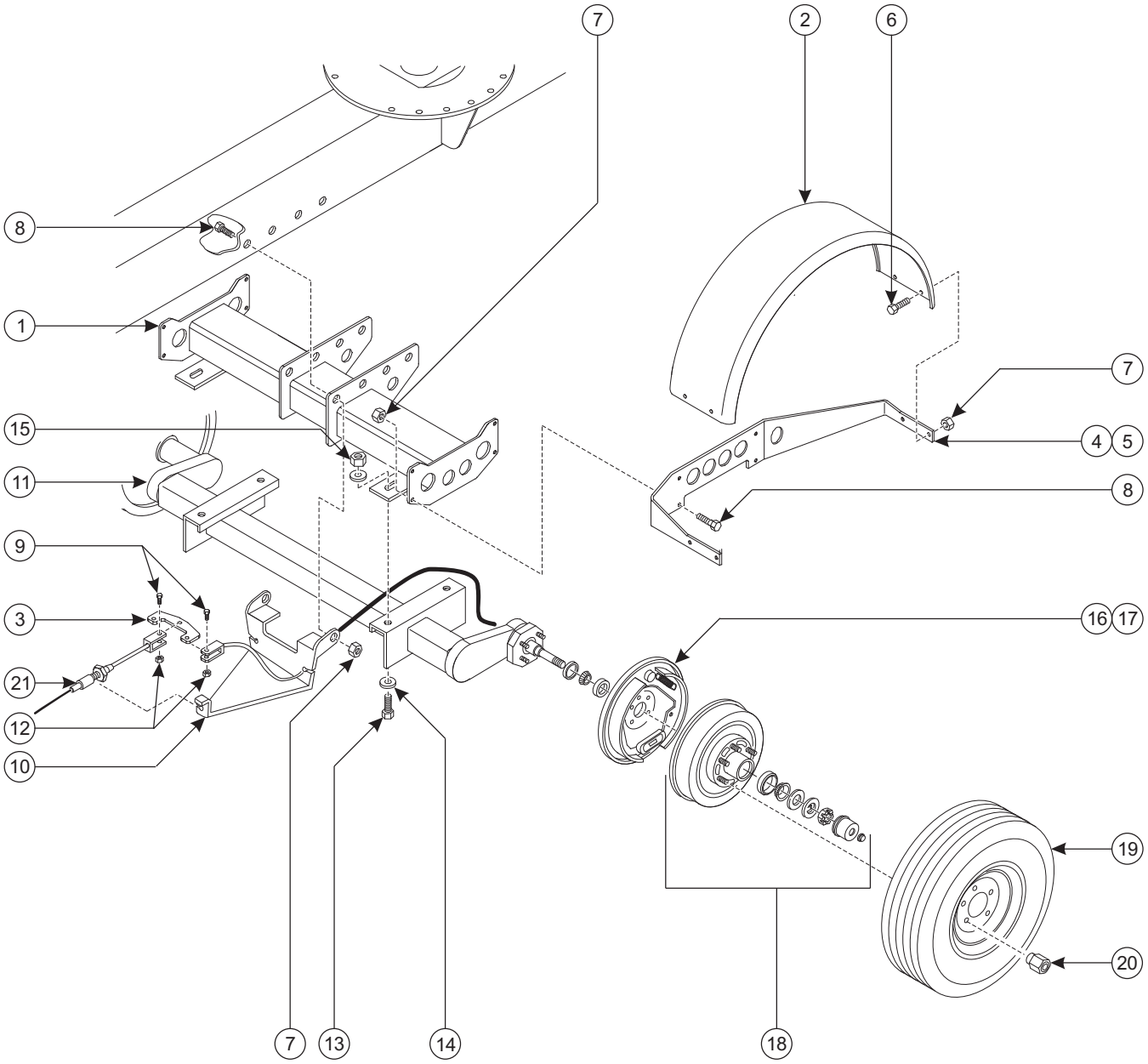

https://truckmanualshub.com/

BRAKE AND AXLE ASSEMBLY PARTS LIST

Item No.	Part No.	Description	Qty.
1	A-01171	Axle Mount Weldment	1
2	A-00143	Fender	2
3	A-00184	Equalizer Bracket	1
4	A-00151-1	Fender Mount – Left	1
5	A-00151-2	Fender Mount – Right	1
6	0096-0014	Cap Screw, M10 x 20	8
7	0096-0041	Hex Nut, Self-Locking, M10	32
8	0096-0016	Cap Screw, M10 x 25	24
9	0096-0010	Cap Screw, M8 x 20	3
10	A-01179	Brake Cable Mount	1
11	A-01175	Axle – US/CAN	1
11	A-04618	Axle – CE	1
12	0096-0039	Hex Nut, Self-Locking, M8	3
13	0096-0034	Cap Screw, M16 x 40	4
14	0096-0050	Washer, M16	8
15	0096-0044	Hex Nut, Self-Locking, M16	4
16	A-00489L	Brake Assembly – Left	1
17	A-00489R	Brake Assembly – Right	1
18	B21-00-0031	Brake Drum Assembly	2
19	B08-02-0024	Wheel Assembly – 75 R14C	2
19	A-04617	Tires – ST205 70 R15 – CE	2
20	0090-1075	Lug Nut, 1/2-20, Chrome	10
21	A-01187	Cable Assembly – Parking Brake	1

MECHANICAL BRAKE ASSEMBLY – CE

	A-03658	Brake Link Weldment – CE	1
	A-03626	Brake Link Coupler – CE	1
	A-03628	Brake Link Rod – CE	2
	A-03665	Brake Cable Guide	1
	A-03669	Bolt, M10 x 50	1
	A-05670	Brake Cable	1
	A-03630	Brake Slide	2

https://truckmanualshub.com/

SLEW RING ASSEMBLY

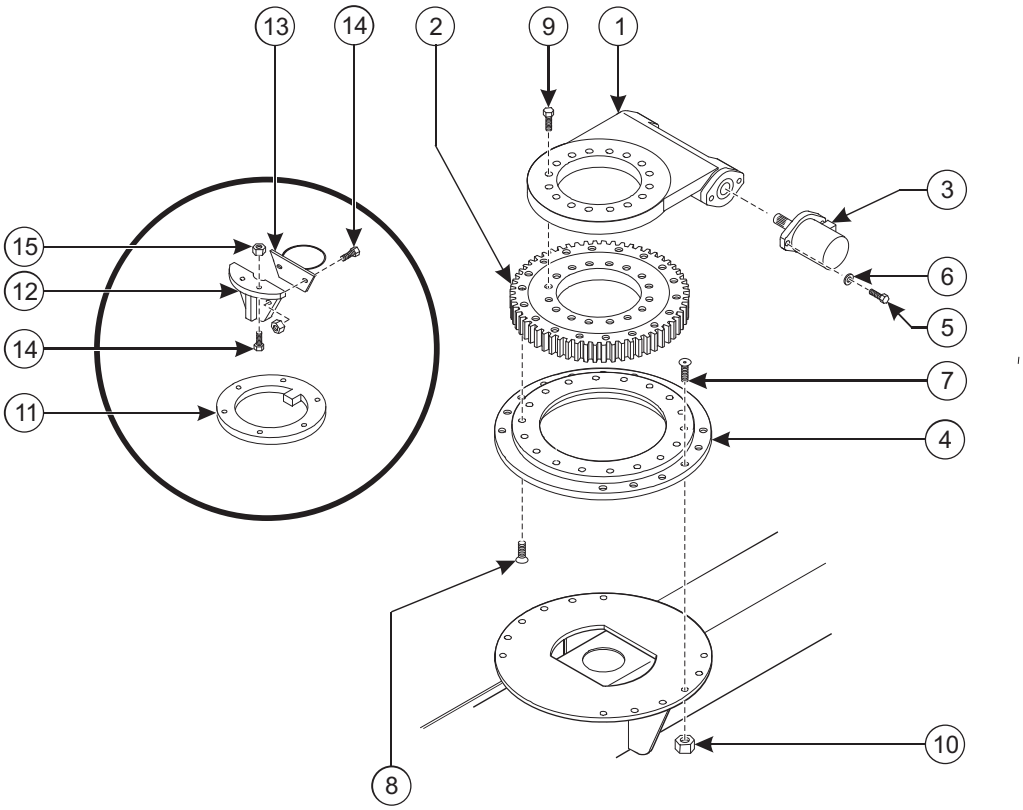

https://truckmanualshub.com/

Item No.	Part No.	Description	Qty.
1	A-01189	Slew Assembly and Adapter	1
2		Slew Ring	1
3		Slew Ring Drive	1
4	A-01149	Base Ring Adapter	1
5	0090-0461	Cap Screw, 1/2-13 x 2	2
6	0090-0212	Lock Washer, 1/2	2
7	0096-0033	Flat Head Cap Screw, M16 x 35	12
8	0096-0054	Flat Head Cap Screw, M16 x 50	16
9	0090-0643	Cap Screw, 5/8-11 x 2-3/4, Grade 8	12
10	0096-0044	Hex Nut, Self-Locking, M16	16
11	A-01352	Rotation Ring	1
12	A-01356	Ring Stop Weldment	1
13	A-01365	Wire Ring Weldment	1
14	0096-0008	Cap Screw, M6 x 30	4
15	0096-0039	Hex Nut, Self-Locking, M6	4

https://truckmanualshub.com/

LIMIT SWITCH ASSEMBLY

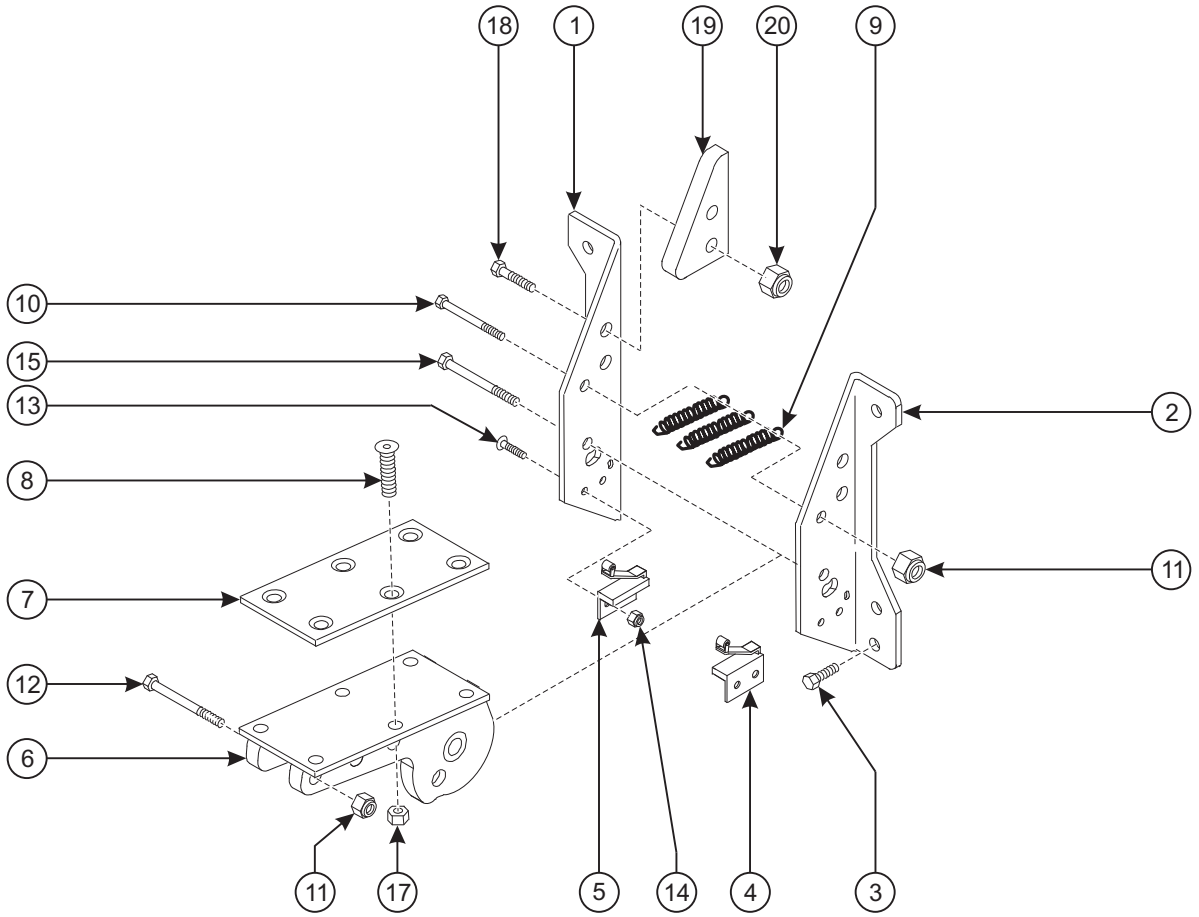

https://truckmanualshub.com/

Item No.	Part No.	Description	Qty.
1	A-01190L	Switch Plate – Left	1
2	A-01190R	Switch Plate – Right	1
3	0096-0016	Cap Screw, M10 x 25	4
4	B01-03-0078	Limit Switch NO	1
5	B01-03-0079	Limit Switch NC	1
6	A-01191	Switch Cam Weldment	1
7	A-01195	Switch Cam Top Slide	1
8	0096-0012	Flat Head Cap Screw, M8 x 25	6
9	A-01196	Tension Spring	3
10	0096-0078	Cap Screw, M6 x 80	1
11	0096-0039	Hex Nut, Self-Locking, M6	2
12	0096-0085	Cap Screw, M6 x 60	1
13	0090-0232	Machine Screw, #10-24 x 5/8	4
14	0090-0182	Hex Nut, Self-Locking, #10-24	4
15	0096-0081	Cap Screw, M8 x 80	2
16	A-01157	Switch Slide (Not Pictured)	2
17	0096-0040	Hex Nut, Self-Locking, M8	8
18	0096-0017	Cap Screw, M10 x 30	4
19	A-01197	Jib Slide Pad	2
20	0096-0041	Hex Nut, Self-Locking, M10	8

https://truckmanualshub.com/

CONTROL COMPARTMENT ASSEMBLY

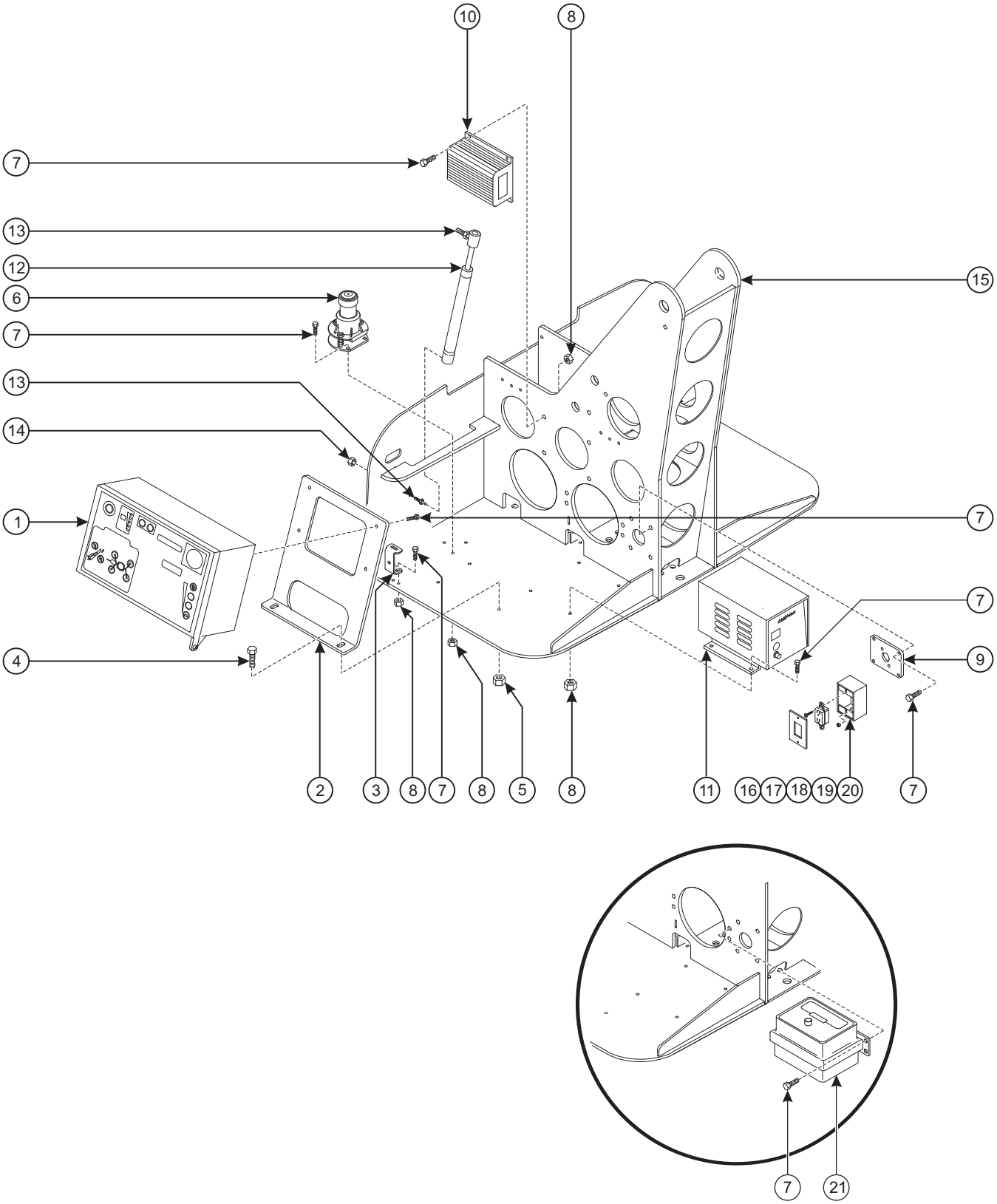

https://truckmanualshub.com/

Item No.	Part No.	Description	Qty.
1	A-00712	Lower Control Box	1
2	A-00233	Lower Control Mount	1
3	A-00290	Cover Stop Bracket	1
4	0096-0016	Cap Screw, M10 x 25	2
5	0096-0041	Hex Nut, Self-Locking, M10	2
6	A-00259	Level Sensor	1
7	0096-0002	Cap Screw, M6 x 20	21
8	0096-0039	Hex Nut, Self-Locking, M6	17
9	A-00287	Mount Plate – GFI Outlet	1
10	A-00255	Motor Controller	1
11	A-01232	Battery Charger	1
12	A-00251	Gas Spring	1
13	0090-0920	Stud Ball, 10mm	2
14	0090-0185	Hex Nut, Self-Locking, 5/16-18	2
15	A-01200	Turntable Weldment	1
16	B01-10-0046	Outlet Box	1
17	B01-10-0034	GFI Outlet	1
18	B01-10-0035	Outlet Box Cover	1
19	0096-0001	Cap Screw, M6 x 16	2
20	A-00288	Plastic Cover	1
21	A-01232	Battery Charger (Alternate)	1

https://truckmanualshub.com/

PUMP COMPARTMENT ASSEMBLY

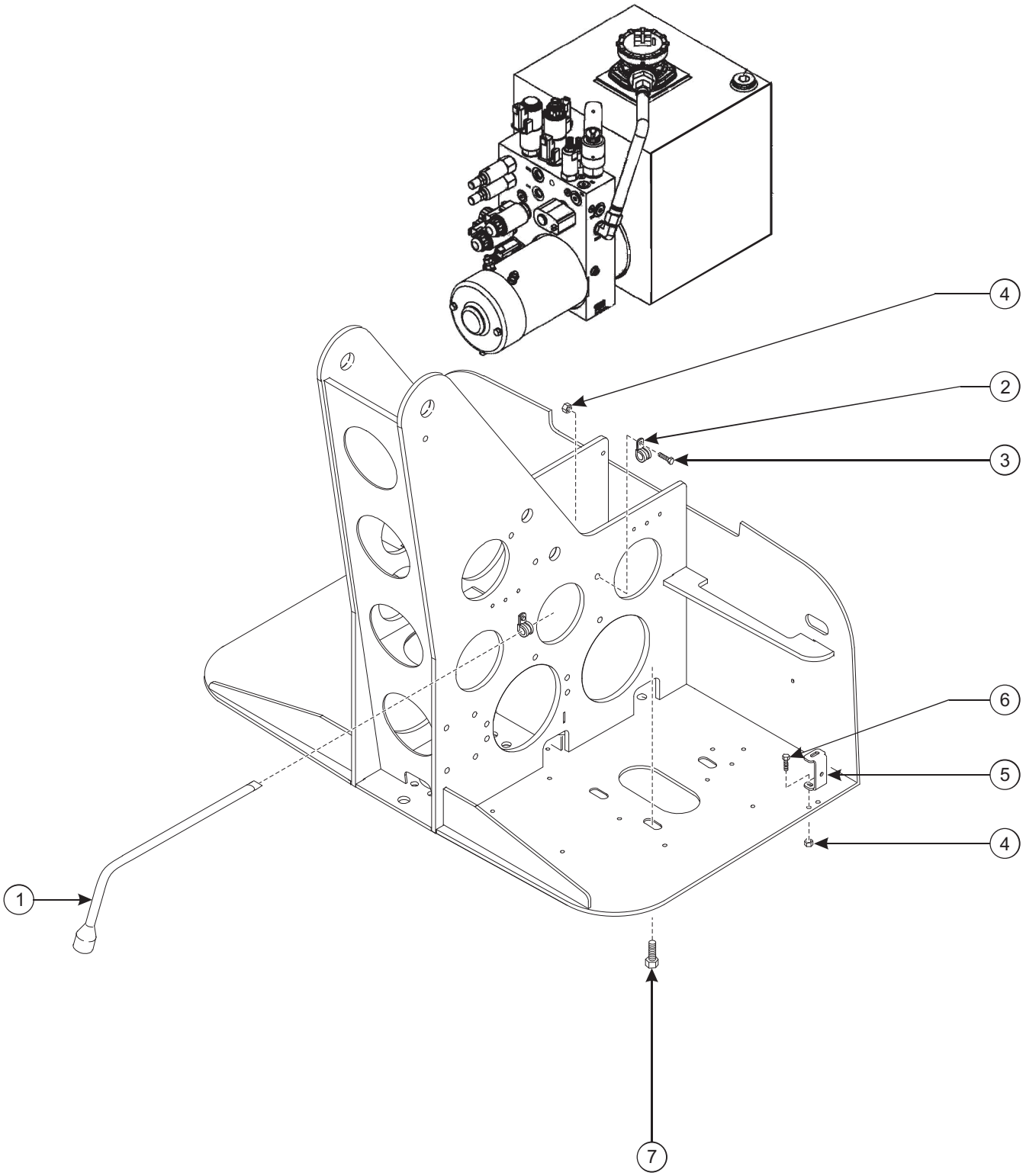

https://truckmanualshub.com/

Item No.	Part No.	Description	Qty.
1	A-00268	Tire Iron/Jack Handle	1
2	B04-07-0033	Clamp	2
3	0096-0001	Cap Screw, M6 x 16	2
4	0096-0039	Hex Nut, Self-Locking, M6	4
5	A-00290	Cover Stop Bracket	1
6	0096-0002	Cap Screw, M6 x 20	2
7	0096-0014	Cap Screw, M10 x 20	3

https://truckmanualshub.com/

BATTERY COMPARTMENT ASSEMBLY

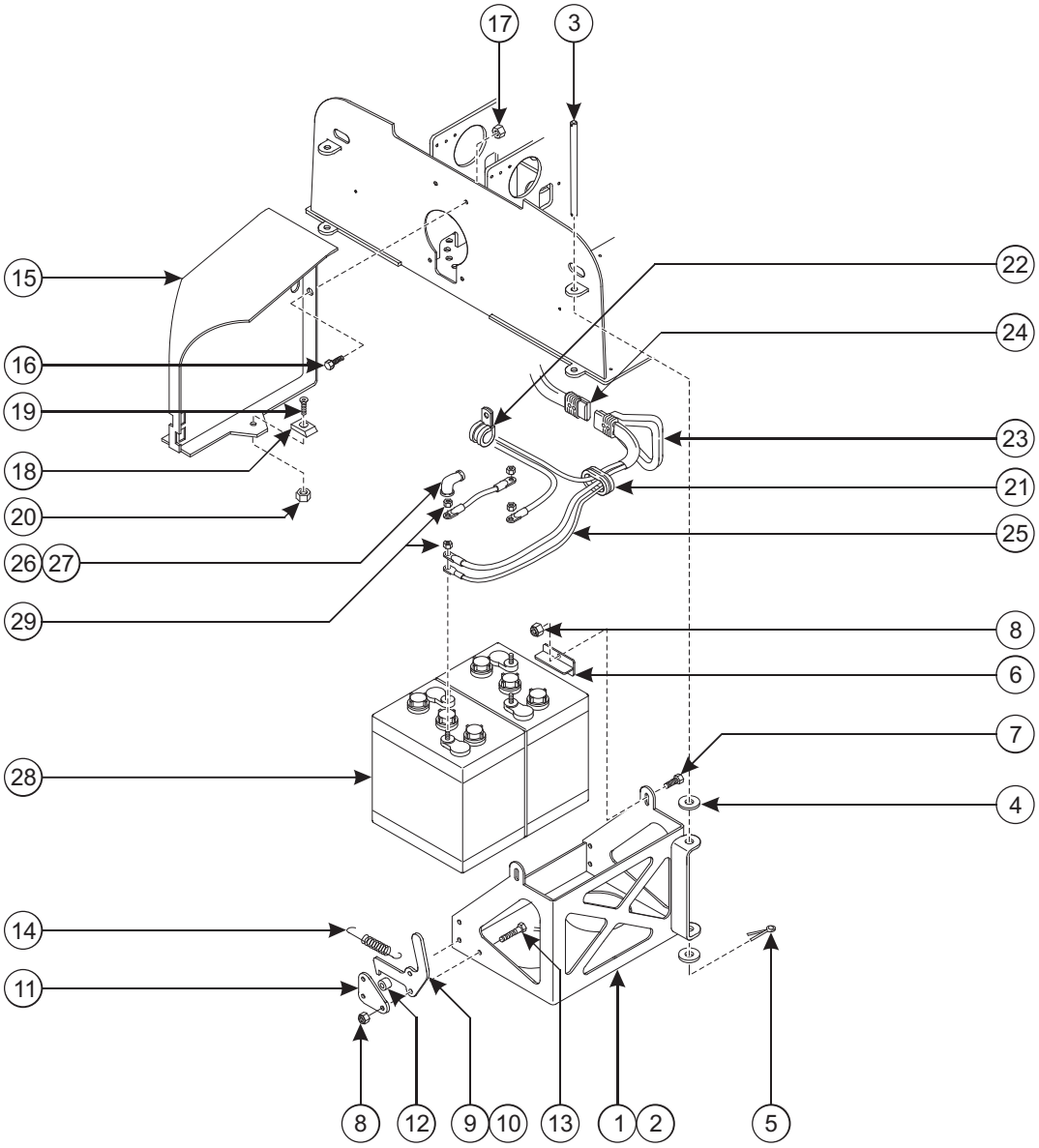

https://truckmanualshub.com/

Item No.	Part No.	Description	Qty.
1	A-00215	Battery Box Weldment – Left	1
2	A-00220	Battery Box Weldment – Right	1
3	A-00278	Battery Hinge Pin	2
4	0096-0050	Washer, Flat, M16	8
5	0090-0147	Cotter Pin	4
6	A-00271	Battery Clamp	4
7	0096-0010	Cap Screw, M8 x 20	4
8	0096-0040	Hex Nut, Self-Locking, M8	8
9	A-01219	Battery Box Latch – Left	1
10	A-01220	Battery Box Latch – Right	1
11	A-00229	Latch Plate	2
12	A-00234	Spacer	2
13	0096-0011	Cap Screw, M8 x 25	4
14	A-00244	Tension Spring	2
15	A-01225	Nose Weldment	1
16	0096-0014	Cap Screw, M10 x 20	4
17	0096-0041	Hex Nut, Self-Locking, M10	4
18	A-00037	Ramp, Short	2
19	0096-0002	Flat Head Cap Screw, M6 x 20	2
20	0096-0039	Hex Nut, Self-Locking, M6	2
21	A-00253	Grommet	3
22	B04-07-0036	Clamp	2
23	B01-09-0132	A-Frame Handle, Connector	1
24	B01-09-0131	Plug, Connector	1
25	A-01272	Battery Cable Kit	1
26	B01-09-0133	Terminal Boot – Black	4
27	B01-09-0134	Terminal Boot – Red	4
28	A-00242	Battery	4
29	0090-0162	Hex Nut, 3/8-16	8

https://truckmanualshub.com/

COVER ASSEMBLY

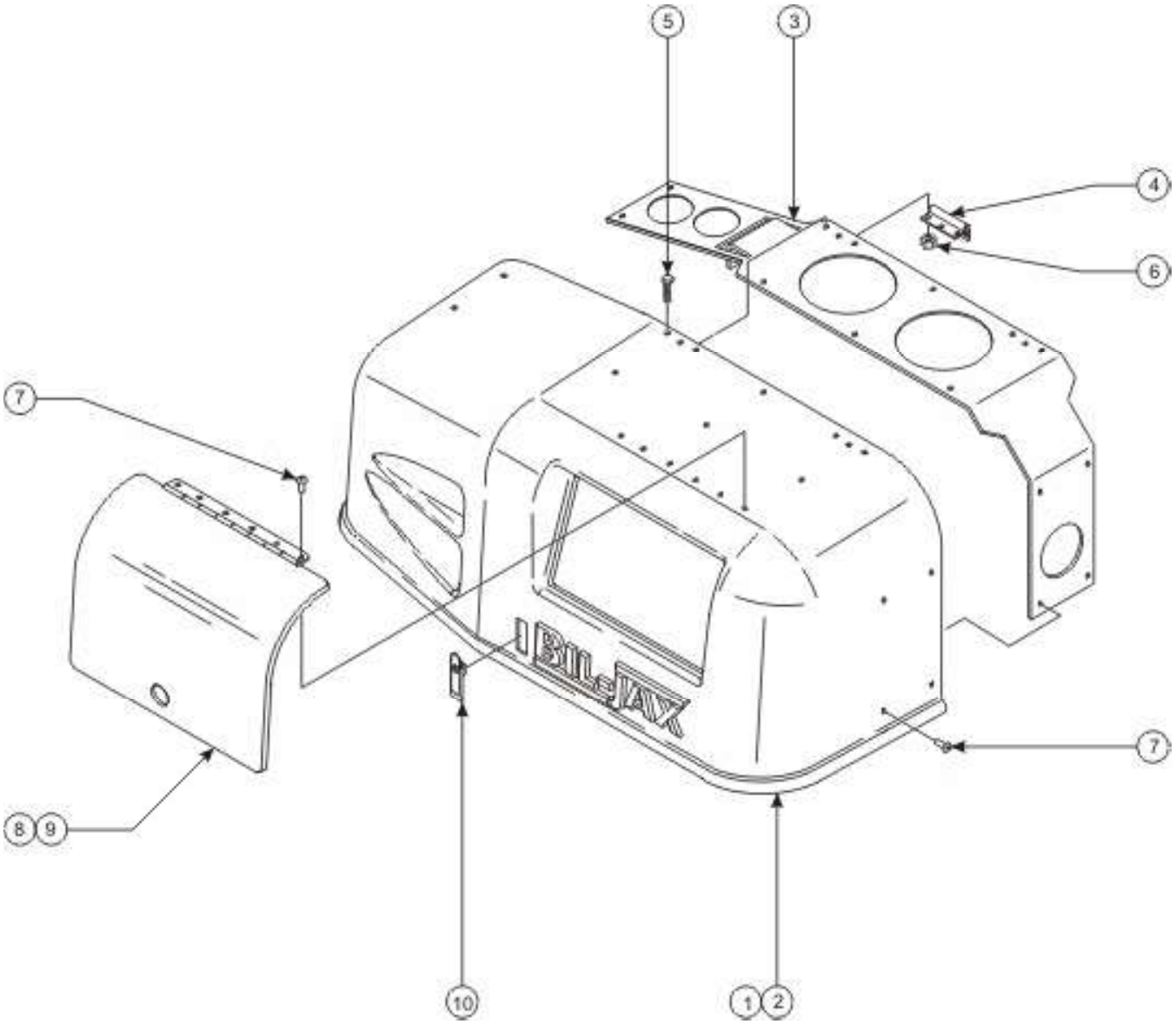

https://truckmanualshub.com/

Item No.	Part No.	Description	Qty.
1	A-01240	Cover – Left	1
2	A-01239	Cover – Right	1
3	A-01230	Cover Brace	2
4	A-00252	Hinge	4
5	0096-0002	Cap Screw, M6 x 20	12
6	0096-0039	Hex Nut, Self-Locking, M6	12
7	0090-1080	Pop Rivet	22
8	A-00284	Controls Cover – Left Side w/Hinge	1
9	A-00292	Cover Latch Assembly	2

https://truckmanualshub.com/

LOWER BOOM ASSEMBLY

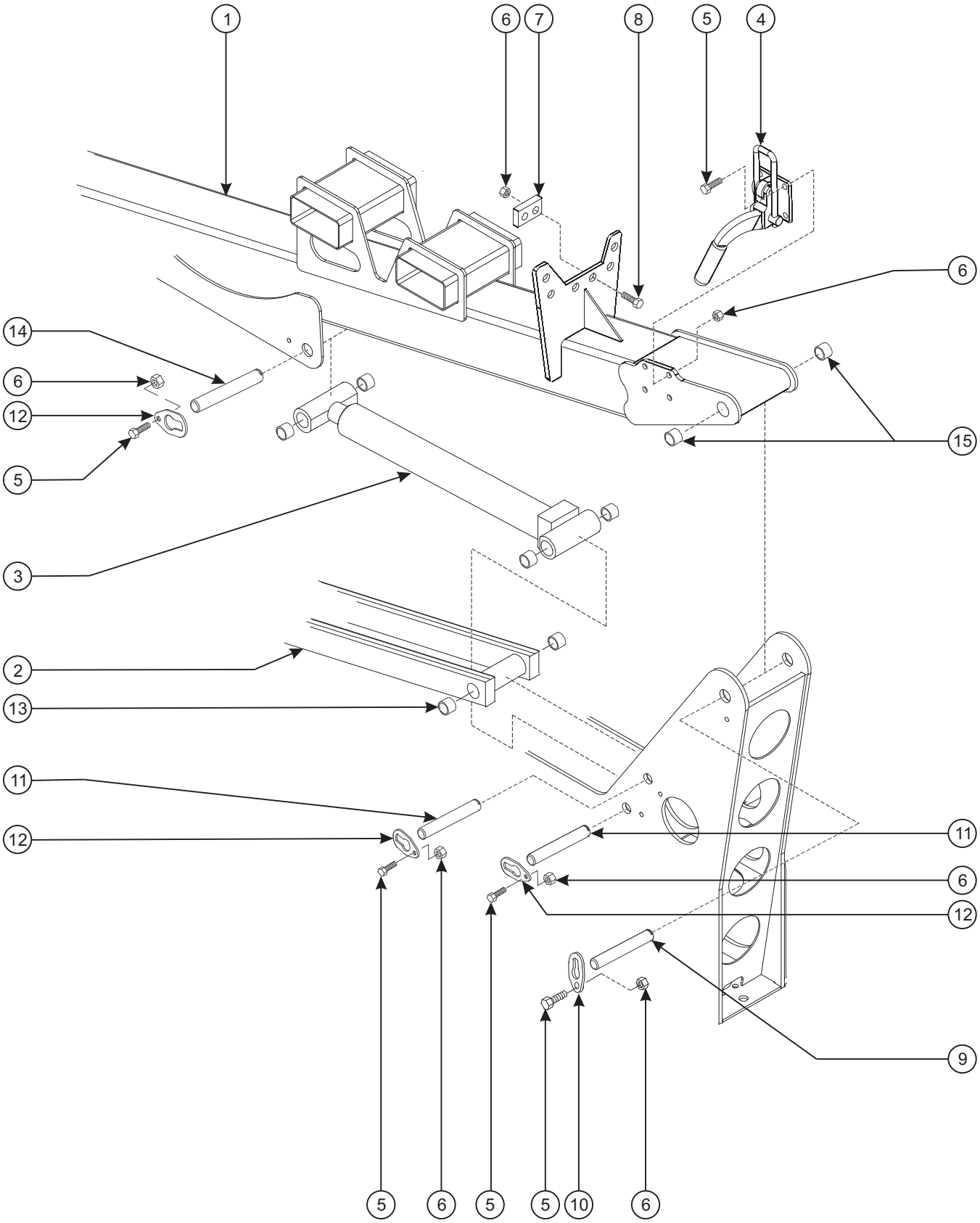

https://truckmanualshub.com/

Item No.	Part No.	Description	Qty.
1	A-01300	Lower Boom Weldment	1
2	A-01314	Lower Link Weldment	1
3	A-01551	Lift Cylinder	1
4	A-00159	Boom Latch	1
5	0096-0016	Cap Screw, M10 x 25	8
6	0096-0041	Hex Nut, Self-Locking, M10	14
7	A-00157	Rest Pad	3
8	0096-0017	Cap Screw, M10 x 30	6
9	A-00021	Pin, 1.25 x 8.5	1
10	A-00019	Pin Retainer, 1.25	2
11	A-00049	Pin, 1.0 x 8.5	2
12	A-00018	Pin Retainer, 1.0	3
13	A-00031	Bearing	2
14	A-00059	Pin, 1.0 x 7.0	1
15	A-00032	Bearing	2

https://truckmanualshub.com/

TRIANGLE WELDMENT ASSEMBLY

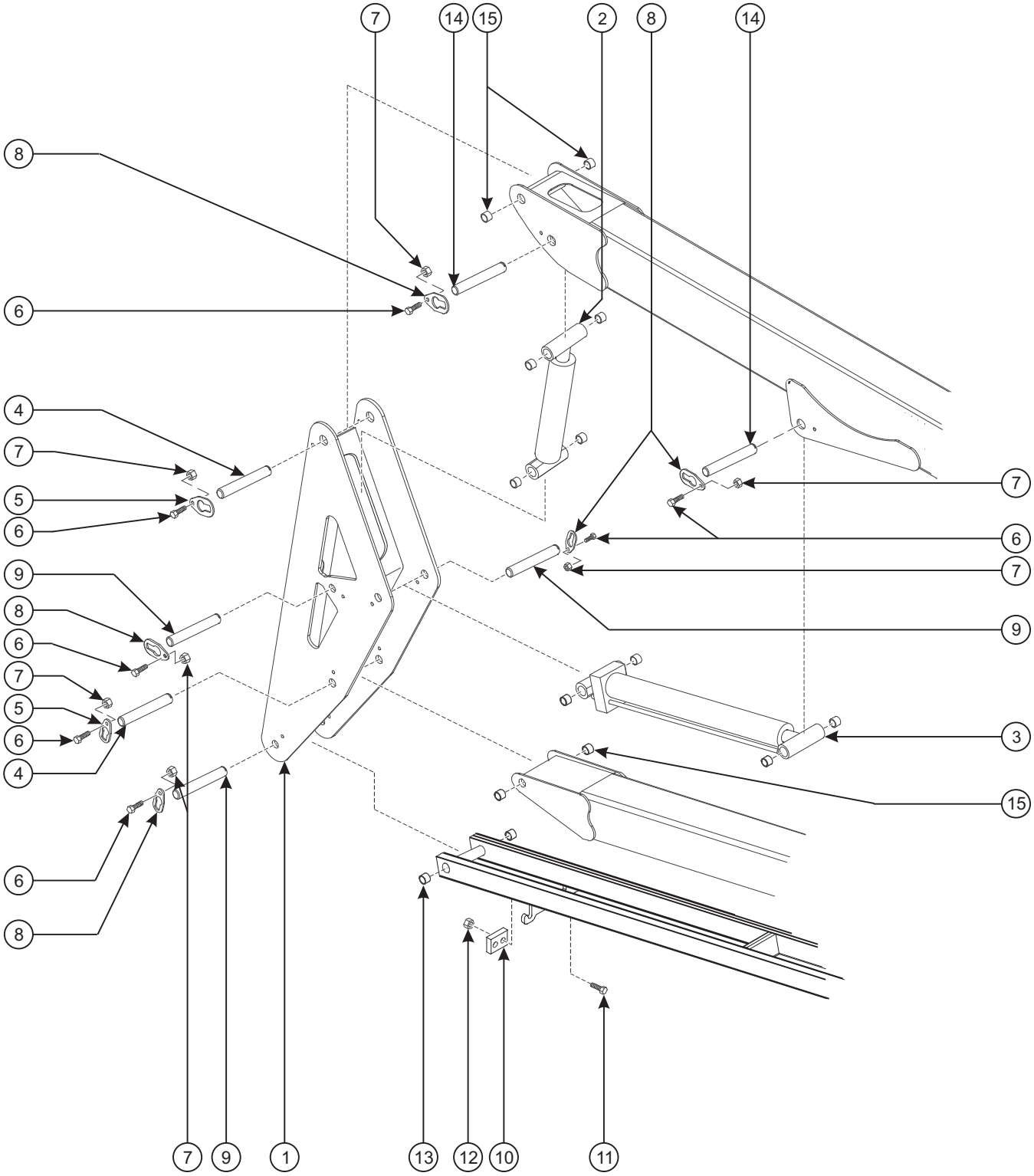

https://truckmanualshub.com/

Item No.	Part No.	Description	Qty.
1	A-01320	Triangle Weldment	1
2	A-01552	Master Cylinder	1
3	A-01555	Lift Cylinder – Upper	1
4	A-00021	Pin, 1.25 x 8.5	2
5	A-00019	Pin Retainer, 1.25	2
6	0096-0016	Cap Screw, M10 x 25	8
7	0096-0041	Hex Nut, Self-Locking, M10	8
8	A-00018	Pin Retainer, 1.0	6
9	A-00049	Pin, 1.0 x 8.5	3
10	A-00537	Switch Block	1
11	0096-0049	Cap Screw, M8 x 45	2
12	0096-0040	Hex Nut, Self-Locking, M8	2
13	A-00031	Bearing	2
14	A-00059	Pin, 1.0 x 7.0	2
15	A-00032	Bearing	4

https://truckmanualshub.com/

UPPER BOOM ASSEMBLY

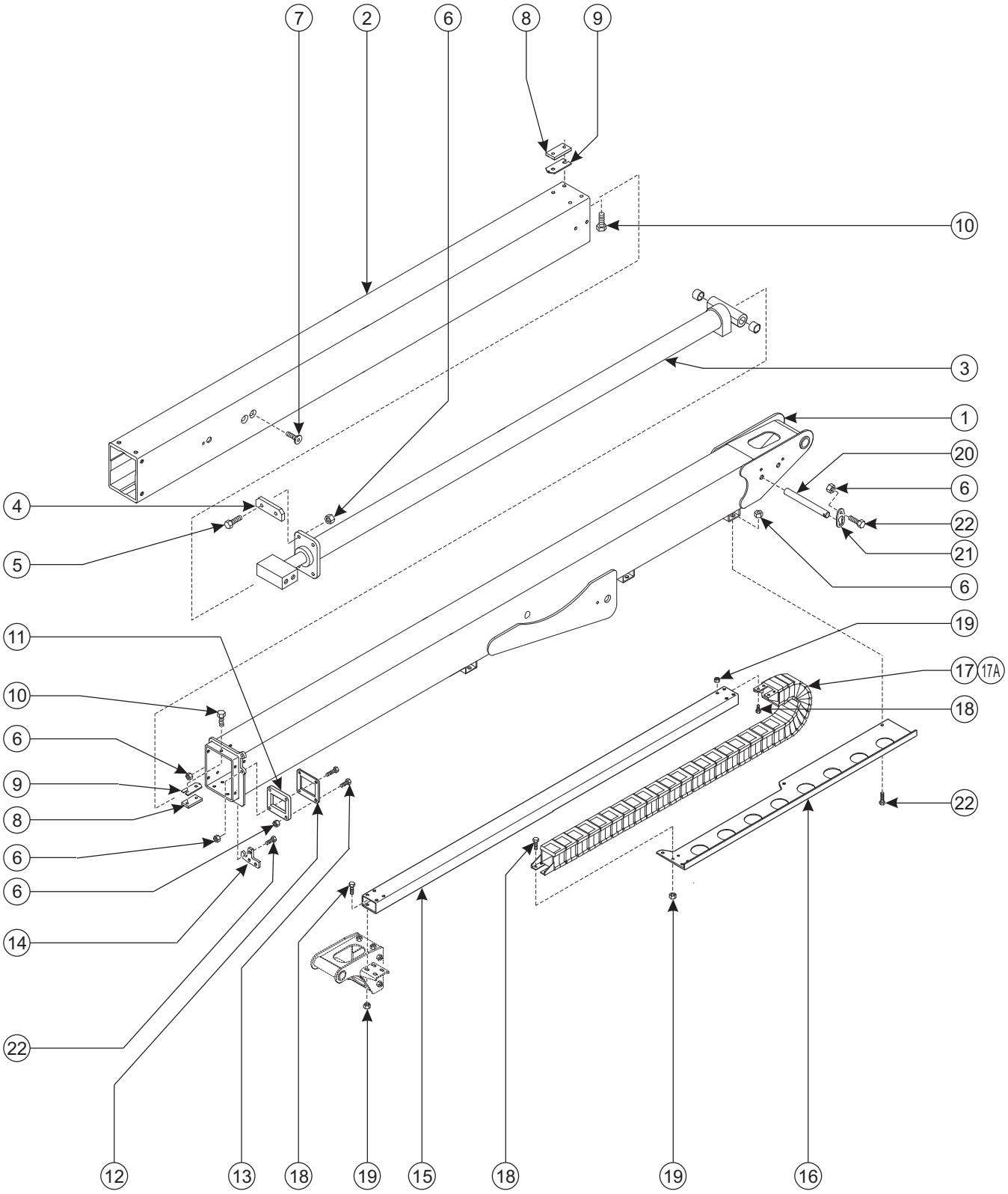

https://truckmanualshub.com/

Item No.	Part No.	Description	Qty.
1	A-01502	Upper Boom Weldment	1
2	A-01510	Telescopic Boom Tube	1
3	A-01550	Extension Cylinder	1
4	A-00535	Slider	2
5	0096-0017	Cap Screw, M10 x 30	4
6	0096-0041	Hex Nut, Self-Locking, M10	15
7	0096-0033	Flat Head Cap Screw, M16 x 35	4
8	A-00533	Wear Pad	12
9	A-00534	Wear Pad Shim	8
10	0096-0013	UHMW Bolts, M10 x 15	24
11	A-00532	Tube Slider	1
12	A-00529	Tube Slider Back	1
13	0096-0018	Cap Screw, M10 x 40	4
14	A-01554	Boom Latch Hook	1
15	A-01531	Cable Track Tube	1
16	A-01536	Cable Track Tray	1
17 17A	A-01530 A-01520	Cable Track, Dual Piece Mounting, Both Ends **(Prior to June 2010)** Cable Track, Single Piece Mounting, Both Ends **(June 2010 onwards)**. Also uses: 0096-0012 M8 x 25 Flat Head Cap Screw (Qty of 2) to attach to Item 16	1
18	0096-0010	Cap Screw, M8 x 20 (Qty used decreases by 6 when 17A is used)	12
19	0096-0040	Hex Nut, Self-Locking, M8 (Qty used decreases by 4 when 17A is used)	12
20	A-00059	Pin, 1.0 x 7.0	1
21	A-00018	Pin Retainer, 1.0	1
22	0096-0016	Cap Screw, M10 x 25	7

https://truckmanualshub.com/

JIB BOOM ASSEMBLY

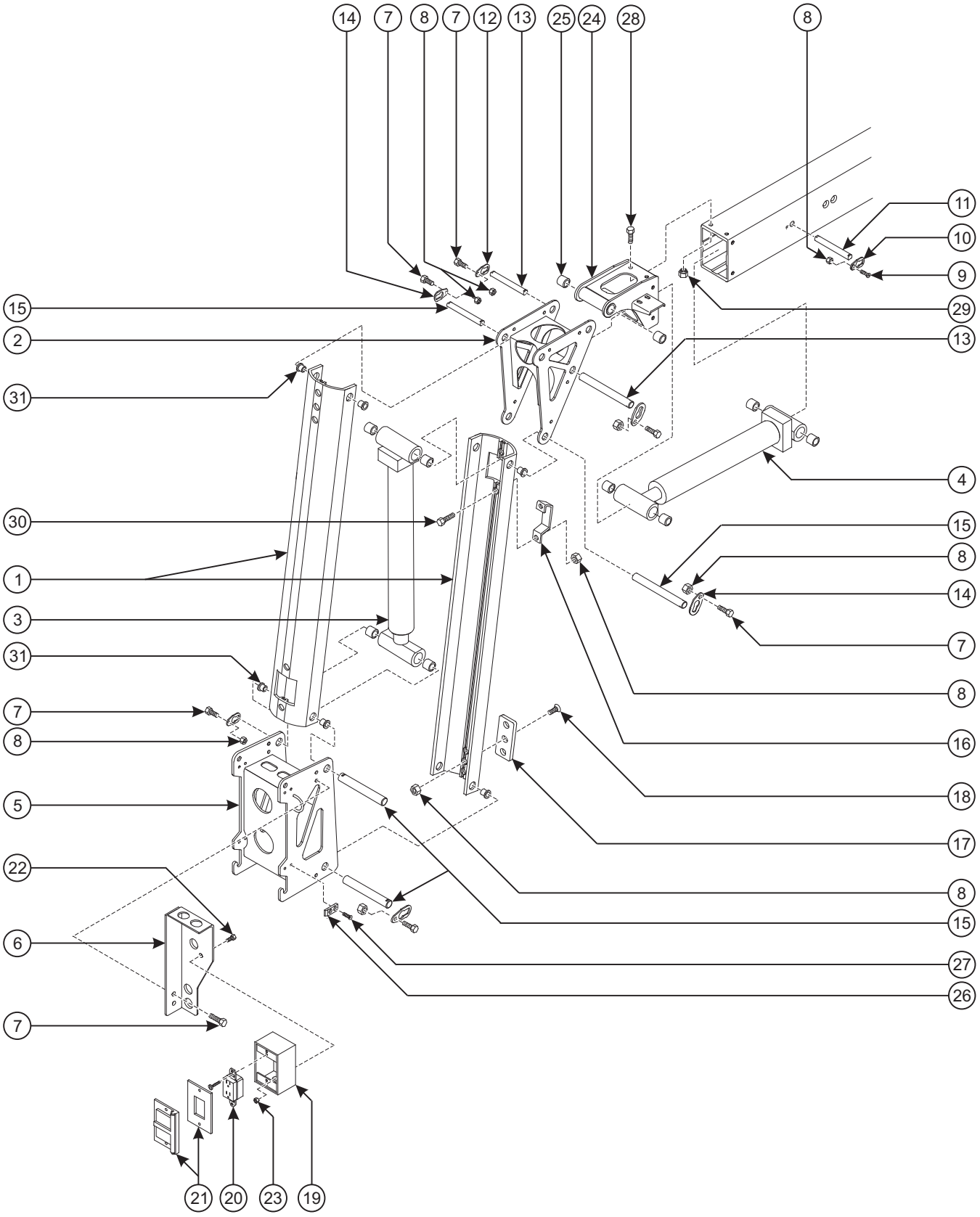

https://truckmanualshub.com/

Item No.	Part No.	Description	Qty.
1	A-00657	Jib Link Weldment	2
2	A-00651	End Pivot Weldment	1
3	A-00660	Jib Cylinder	1
4	A-01553	Slave Cylinder	1
5	A-00662	Jib End Weldment	1
6	A-01979	Bulkhead – Left	1
7	0096-0016	Cap Screw, M10 x 25	7
8	0096-0041	Hex Nut, Self-Locking, M10	12
9	0096-0091	Flat Head Cap Screw, M10 x 25	2
10	A-00054	Pin Retainer, 1.0, Flat Head	2
11	A-00052	Pin, 1.0 x 5.25	1
12	A-00018	Pin Retainer, 1.0	2
13	A-00061	Pin, 1.0 x 7.375	2
14	A-00925	Pin Retainer, 0.75	4
15	A-00050	Pin, 0.75 x 7.375	4
16	A-00674	Valve Guard	1
17	A-00667	Jib Bumper	1
18	0096-0068	Flat Head Cap Screw, M10 x 45	5
19	B01-10-0046	Outlet Box	1
20	B01-10-0034	GFI Outlet	1
21	B01-10-0035	Outlet Box Cover	1
22	0096-0001	Cap Screw, M6 x 16	2
23	0096-0039	Hex Nut, Self-Locking, M6	10
24	A-00522	Boom End Weldment	1
25	A-00031	Bearing	2
26	A-00038	Ramp, 0.25	4
27	0096-0002	Flat Head Cap Screw, M6 x 20	8
28	0096-0019	Cap Screw, M12 x 25	8
29	0096-0042	Hex Nut, Self-Locking, M12	8
30	0096-0018	Cap Screw, M10 x 40	2
31	A-00056	Bearing	8

https://truckmanualshub.com/

PLATFORM ASSEMBLY

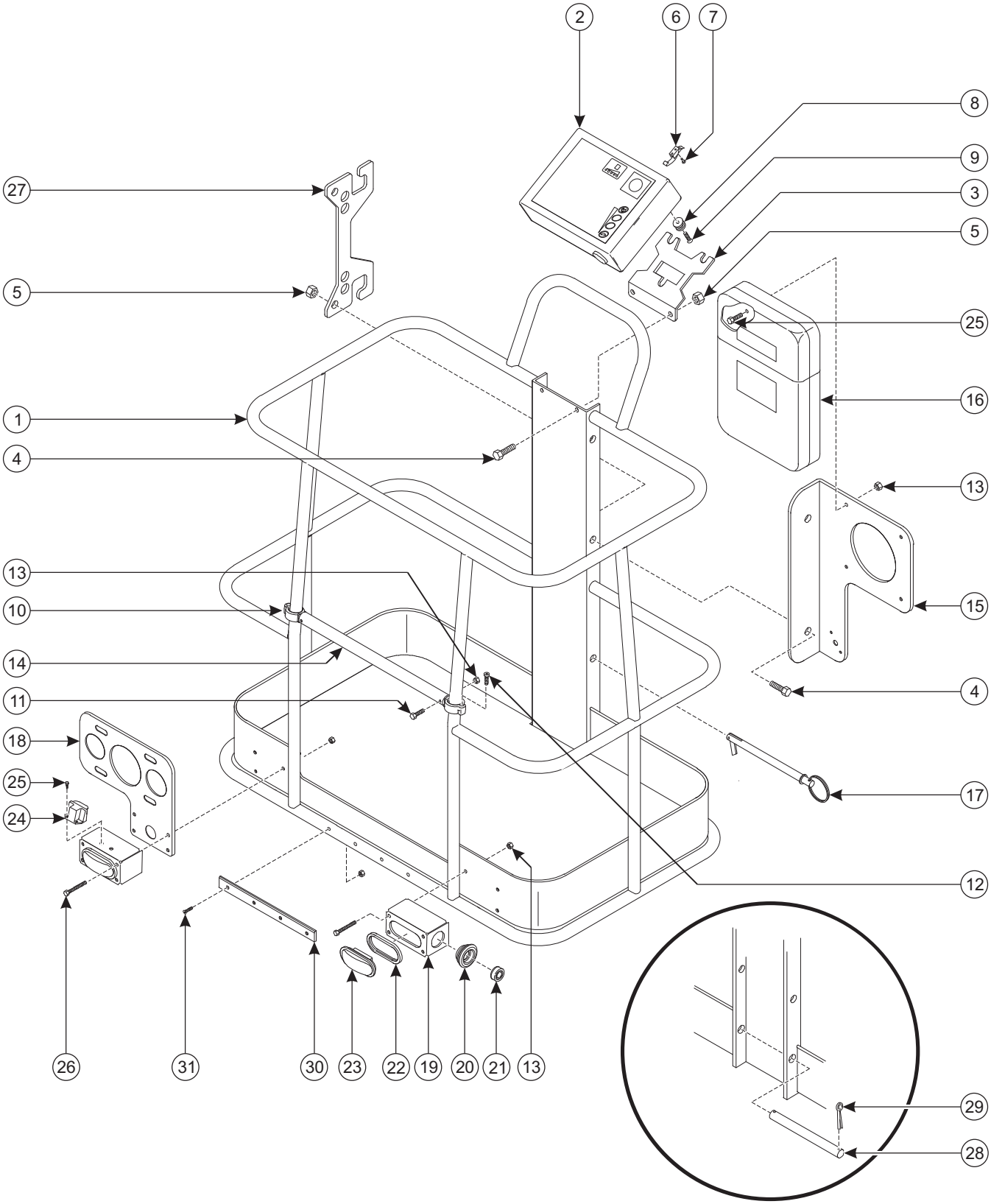

https://truckmanualshub.com/

Item No.	Part No.	Description	Qty.
1	A-00450	Platform Weldment	1
2	A-00713	Platform Control Box	1
3	A-00461	Upper Control Box Mount	1
4	0096-0016	Cap Screw, M10 x 25	4
5	0096-00041	Hex Nut, Self-Locking, M10	4
6	A-00466	Control Box Latch	1
7	0090-1088	Rivet	2
8	A-00462	Spool	3
9	0096-0003	Flat Head Cap Screw, M6 x 20	3
10	A-00463	Midrail End	4
11	0096-0052	Cap Screw, M6 x 40	2
12	0096-0115	Socket Head Cap Screw, M6 x 20	2
13	0096-0039	Hex Nut, Self-Locking, M6	10
14	A-00464	Midrail	1
15	A-00468	Manual Mounting Plate	1
16	A-00467	Manual Storage Box	1
17	A-00071	Pin	1
18	A-00486	License Bracket	1
19	A-00487	Tail Light Box	2
20	B01-10-0239	Grommet, Marker Light	2
21	B01-10-0238	Marker Light, Red	2
22	B01-10-0236	Grommet, Tail Light	2
23	B01-10-0235	Tail Light	2
24	B01-10-0240	License Plate Lamp	1
25	0096-0002	Cap Screw, M6 x 20	2
26	0096-0079	Cap Screw. M6 x 100	6
27	A-00474	Cord Wrap	1
28	A-00071	Pin, 0.5” x 8.875”	1
29	0090-0147	Cotter Pin	2
30	A-00488	Skid Pad	1
31	0096-0080	Flat Head cap Screw, M8 x 70	4
32	0096-0040	Hex Nut, Self-Locking, M8	4

https://truckmanualshub.com/

PUMP ASSEMBLY (A-01254)

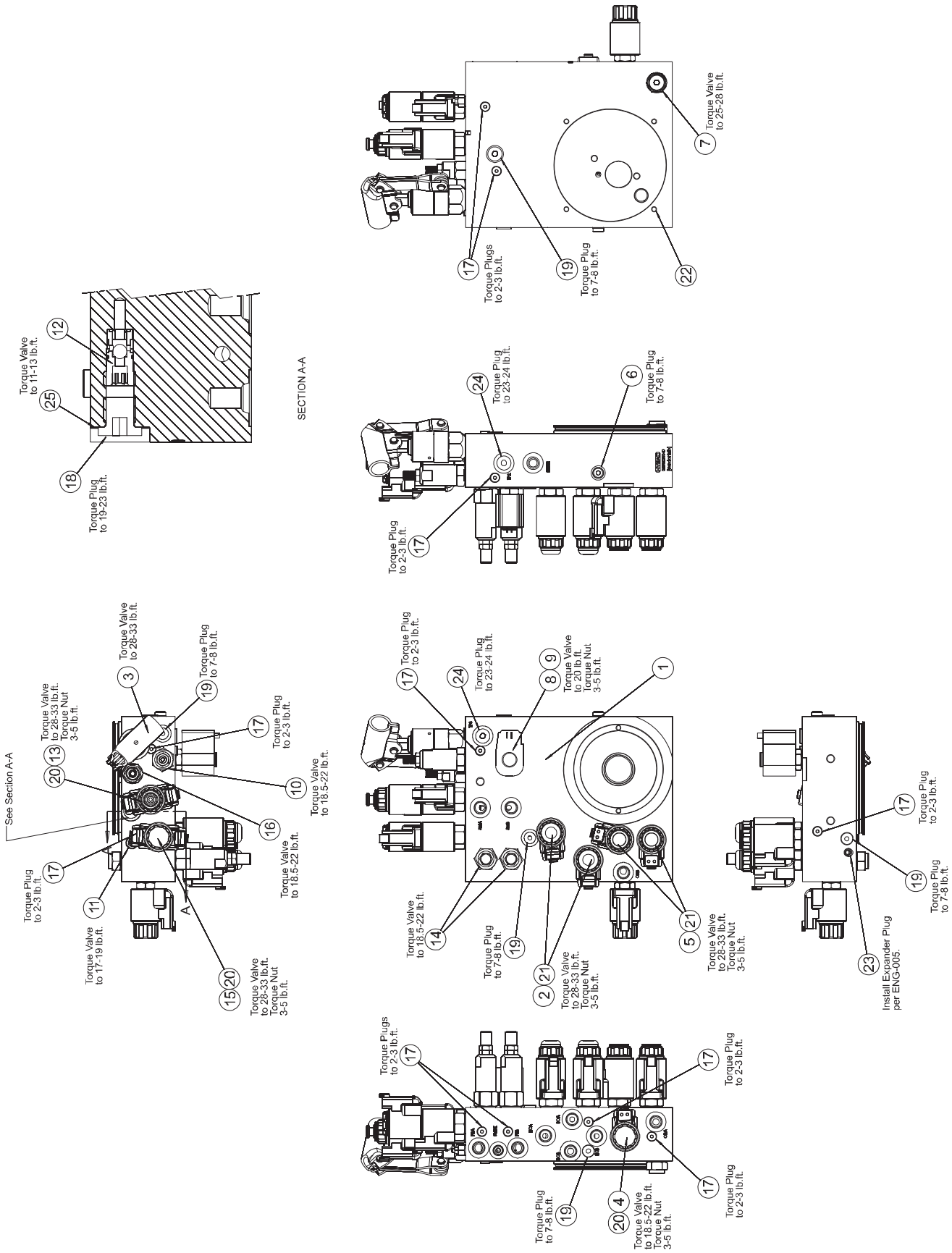

https://truckmanualshub.com/

Item No.	Part No.	Description	Qty.
1	B02-15-0496	Manifold, Valve Housing	1
2	B02-14-0108	Valve, Cartridge (Telescope)	2
3	B02-15-0472	Manual Pump, Extend/Retract/Rotate	1
4	B02-14-0089	Valve, Cartridge (Outrigger Check)	1
5	B02-14-0109	Valve, Cartridge (Outrigger)	2
6	B02-14-0091	Valve, Check	1
7	B02-14-0110	Valve, Check	1
8	B02-14-0094	Valve, Proportional	1
9	B02-14-0095	Coil Sterling, Proportional Valve	1
10	B02-14-0111	Valve, Relief	1
11	B02-14-0097	Valve, Relief	1
12	B02-14-0098	Valve, Shuttle	1
13	B02-14-0099	Valve, Cartridge (Rotator)	1
14	B02-14-0100	Valve, Counterbalance	2
15	B02-14-0101	Valve, Cartridge (Basket Compensate)	1
16	B02-14-0114	Valve, Flow Control (Rotator)	1
17	B02-02-0245	Fitting, Plug, #2 ORB	11
18	B02-02-0246	Fitting, Hex Plug	1
19	B02-02-0248	Fitting, Plug, #4 ORB	5
20	B02-14-0112	Coil, 20 VDC, #8	5
21	B02-14-0113	Coil, 20 VDC, #10	4
22	B02-15-0497	Stud, #1/4-20 x 5/8	4
23	B02-15-0498	Expansion Plug	1
24	B02-02-0235	Fitting, Plug, #6 ORB	2
25	B02-15-0478	Seal Ring	1

https://truckmanualshub.com/

PUMP ASSEMBLY, CONTINUED

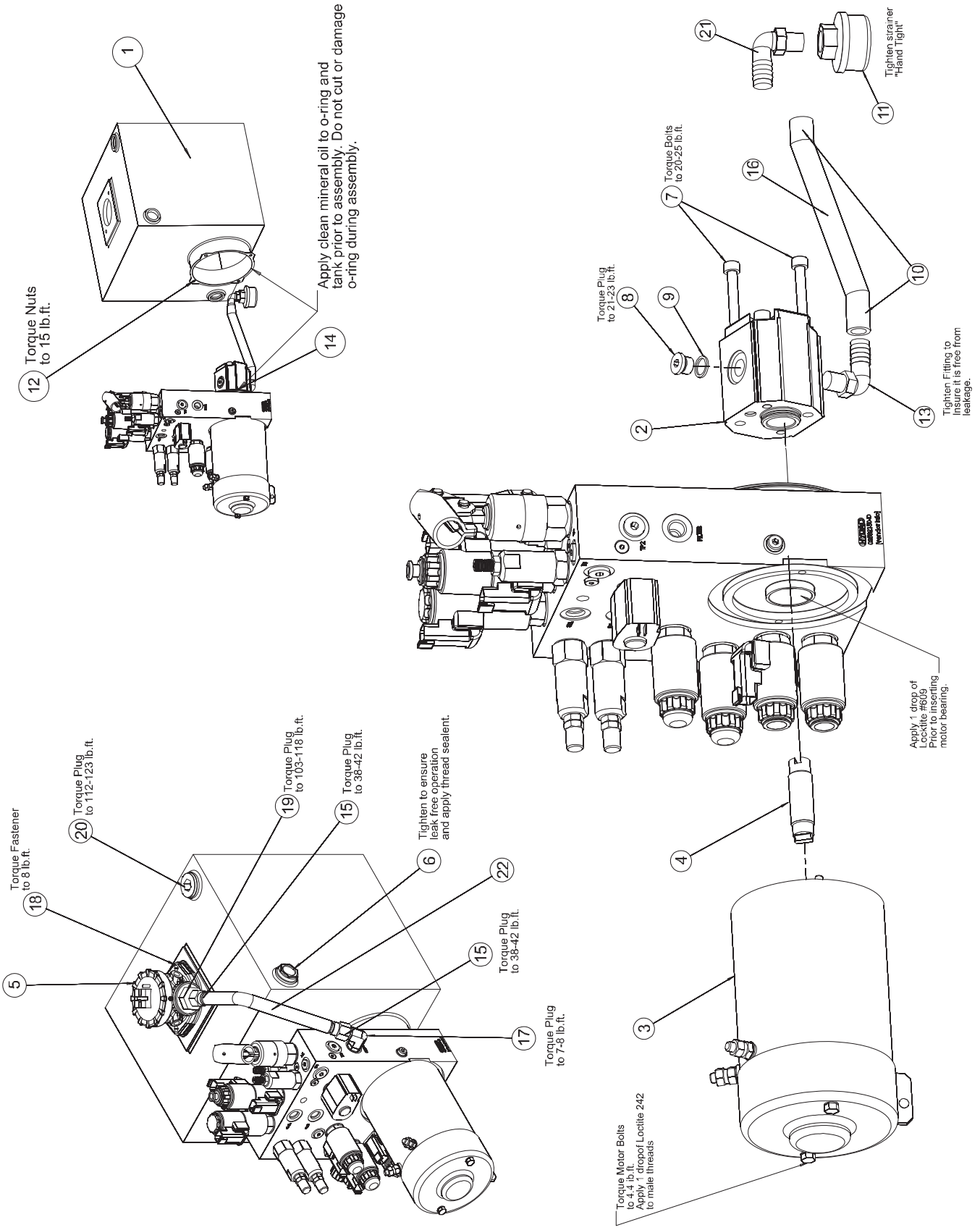

https://truckmanualshub.com/

Item No.	Part No.	Description	Qty.
1	B02-15-0499	Reservoir	1
2	B02-15-0470	Pump Assembly, 2.09CCM	1
3	B02-15-0471	Motor, Pump, 24 V DC	1
4	B02-15-0500	Coupling, .875 x 2.795	1
5	B02-15-0501	Filter, Hydraulic	1
6	B02-15-0476	Sight Glass	1
7	B02-15-0477	Socket Head Cap Screw, M8 x 85	2
8	B02-02-0247	Fitting, Plug, M14 x 1.5 x 5.8	1
9	B02-15-0478	Seal Ring	1
10	B02-15-0502	Hose Clamp, 15/32 (12mm)	4
11	B02-15-0480	Filter, Suction, Pump	1
12	B02-15-0504	Allen Nut, 1/4-20	4
13	B02-02-0255	Fitting, M18 x HB-90 MxHB-90	1
14	B02-15-0503	O-Ring, 110.72 x 3.53 NBR 70D	1
15	B02-02-0279	Fitting, JIC-8 x Push On FsxPO	2
16	B02-15-0505	Hose, Black, 1/2 x 6”	1
17	B02-02-0280	Fitting JIC-8 x #6 90 MxM	1
18	B02-15-0506	Cap Screw, #5/16-18 x 1 1/4	2
19	B02-02-0278	Fitting, JIC-8 x #12 MxM ORB	1
20	B02-02-0281	Fitting, Plug, #12 ORB	2
21	B02-02-0282	Fitting, 3/8 NPT x 1/2 MxHB	1
22	B02-15-0507	Hose, Black, 1/2 x 15”	1
	B02-02-0276	Fitting, Plug, #8 ORB (Under Reservoir)	1

https://truckmanualshub.com/

BOOM AND ROTATION HYDRAULIC LINES

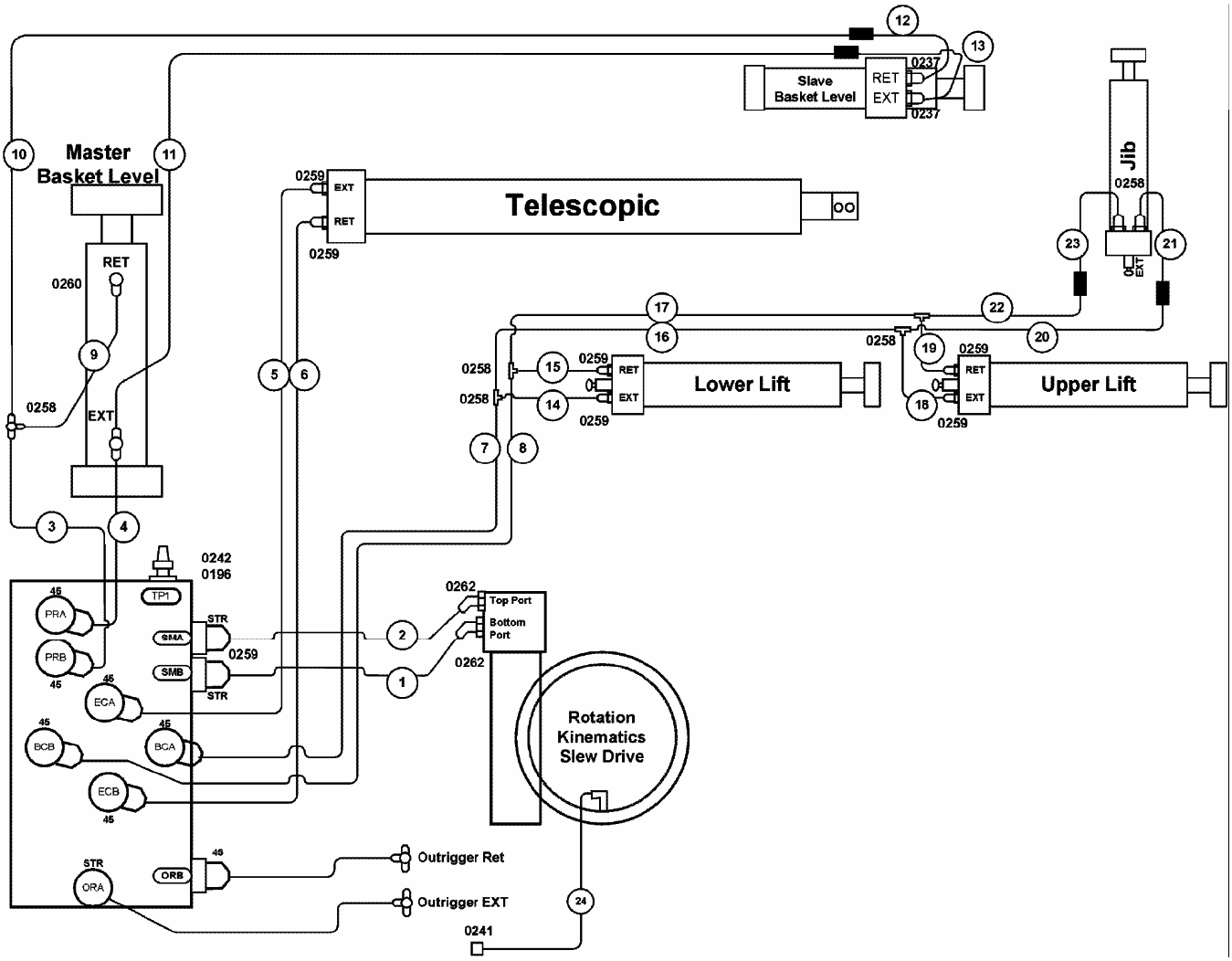

https://truckmanualshub.com/

BOOM AND ROTATION HYDRAULIC LINES PARTS LISTS

Item No.	Part No.	Description
1	B02-01-0283	#4 x 32” Hydraulic Hose
2	B02-01-0284	#4 x 32” Hydraulic Hose
3	B02-01-0285	#4 x 168” Hydraulic Hose
4	B02-01-0286	#4 x 168” Hydraulic Hose
5	B02-01-0287	#6 x 204” Hydraulic Hose
6	B02-01-0288	#6 x 204” Hydraulic Hose
7	B02-01-0289	#6 x 20” Hydraulic Hose
8	B02-01-0290	#4 x 20” Hydraulic Hose
9	B02-01-0291	#4 x 15” Hydraulic Hose
10	B02-01-0292	#4 x 234” Hydraulic Hose
11	B02-01-0293	#4 x 234” Hydraulic Hose
12	B02-01-0234	#4 x 16” Hydraulic Hose
13	B02-01-0235	#4 x 16” Hydraulic Hose
14	B02-01-0294	#6 x 20” Hydraulic Hose
15	B02-01-0295	#4 x 20” Hydraulic Hose
16	B02-01-0296	#6 x 146” Hydraulic Hose
17	B02-01-0297	#4 x 146” Hydraulic Hose
18	B02-01-0298	#6 x 20” Hydraulic Hose
19	B02-01-0299	#4 x 20” Hydraulic Hose
20	B02-01-0300	#6 x 240” Hydraulic Hose
21	B02-01-0301	#6 x 54” Hydraulic Hose
22	B02-01-0344	#4 x 240” Hydraulic Hose
23	B02-01-0343	#4 x 54” Hydraulic Hose
24	B02-01-0282	#3 x 20” Hydraulic Hose

FITTINGS

Part No.	Description	Qty.
B02-02-0259	#6 MORFS - #6 MORB, STR	11
B02-02-0264	#6 MORFS - # 6 MORB, 45º	7
B02-02-0260	#6 MORFS - #6 MORB, 90º	1
B02-02-0237	#4 MORFS - #6 MORB, STR	2
B02-02-0262	#6 MORFS - #10 MORB, 45º	2
B02-02-0258	#6 MORFS, Tee	5
B02-02-0270	#6 MORFS - #6 MORFS - #6 MORB, Tee	1
B02-02-0196	#4 MORB - #2 MNPT, STR	1
B02-02-0242	#2 QD Plug	1
B02-02-0241	#2NPTFM Coupling	1

https://truckmanualshub.com/

OUTRIGGER HYDRAULIC LINES

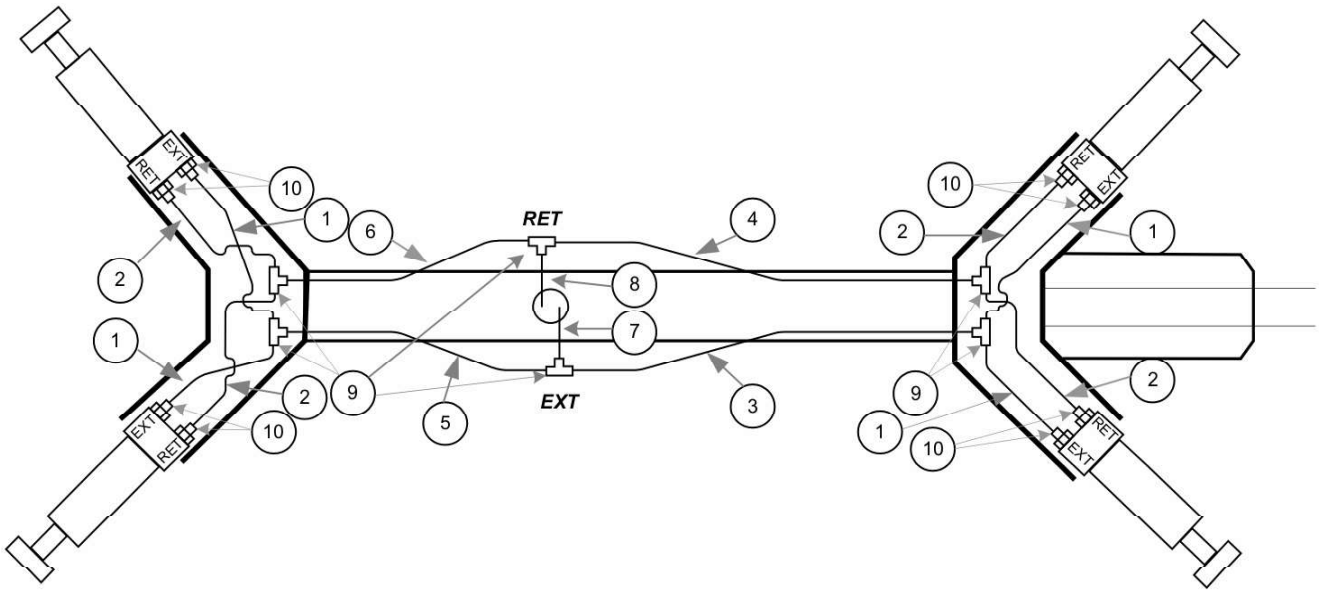

OUTRIGGER HYDRAULIC LINES PARTS LIST

Item No.	Part No.	Description	Qty.
1	B02-01-0325	#4 x 24” Hydraulic Hose	4
2	B02-01-0326	#4 x 24” Hydraulic Hose	4
3	B02-01-0327	#6 x 46” Hydraulic Hose	1
4	B02-01-0328	#6 x 46” Hydraulic Hose	1
5	B02-01-0219	#6 x 28” Hydraulic Hose	1
6	B02-01-0220	#6 x 28” Hydraulic Hose	1
7	B02-01-0329	#6 x 48” Hydraulic Hose	1
8	B02-01-0330	#6 x 48” Hydraulic Hose	1
9	B02-01-0258	Fitting, Tee, #6 MORFS	6
10	B02-01-0259	Fitting, #6 MORFS - #6 MORB	8

https://truckmanualshub.com/

WATER LINE TO PLATFORM (OPTION A-01701)

Part No.	Description
B09-00-0039	#6 x 126” W/1-6-6FMP, 1-6-6MP 3000 PSI Pressure Washer Hose
B09-00-0040	#6 x 420” W/2-6-6MPSW 3000 PSI Pressure Washer Hose
B09-00-0041	#6 x 78” W/1-6-6FMP, 1-6-6MP 3000 PSI Pressure Washer Hose
B09-00-0032	Fitting, QD E Series FM-#6FMNPT
B09-00-0033	Fitting, QD E Series M-#6FMNPT

AIR LINE TO PLATFORM (OPTION A-01700)

Part No.	Description
B09-00-0034	#6 x 126” W/1-6-6FMPSW, 1-6-6MP 300 PSI Air Hose
B09-00-0035	#6 x 420” W/2-6-6MP 300 PSI Air Hose
B09-00-0046	#6 x 78” W/1-6-6FMPSW, 1-6-6MP 300 PSI Air Hose
B02-02-0108	Fitting, #6FMNPT-#4FMNPT STR
B09-00-0025	Fitting, Univ QD FM-#4MNPT
B09-00-0026	Fitting, QD IND Series M-#4MNPT
B09-00-0027	Fitting,QD ARO Series M-#4MNPT
B09-00-0028	Fitting, Univ QD FM-#6FMNPT
B09-00-0029	Fitting, QD DF Series M-#6FMNPT
B09-00-0030	Fitting, QD J Series M-#6FMNPT

https://truckmanualshub.com/

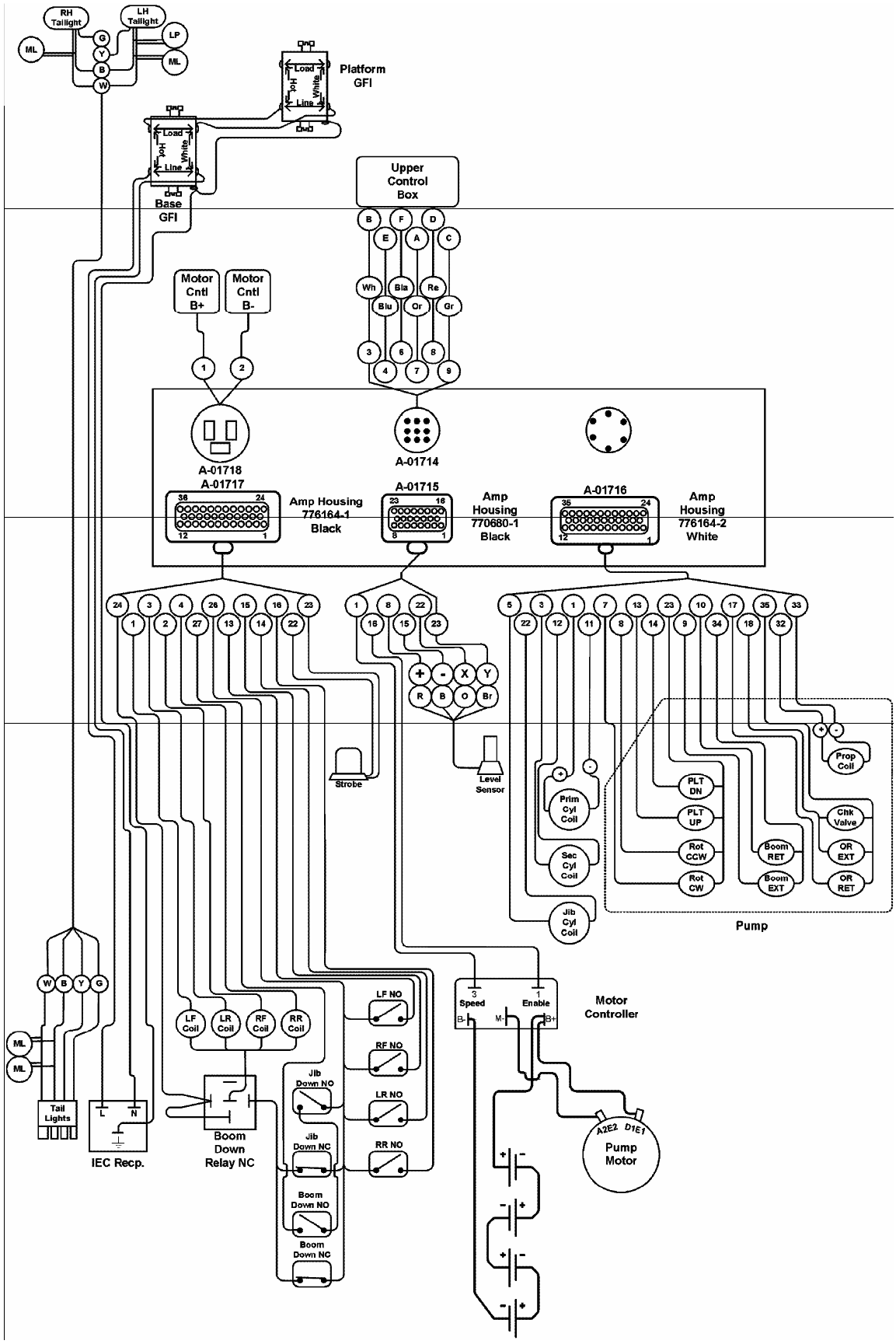

https://truckmanualshub.com/

WIRE HARNESSES AND KITS – ANSI

Part No.	Description
A-01153	Light Kit – Trailer
A-01182	Hose Kit – Trailer (See Page 76)
A-01187	Brake Cable (Hydraulic Surge)
A-01246	Tail Light Kit – Cage
A-01269	Hose Kit – Boom (See Page 74-75)
A-01272	Battery Cable Kit
A-01714	Comm Wire
A-01715	Analog Harness
A-01717	Outrigger Coil/Switch Harness
A-01718	Power Harness
A-01722	110v Tower-to-Platform Wire
A-01723	Taillight Harness – Tower-to-Platform
A-01724	Secondary Cylinder Wire
A-01725	Jib Wire
A-01726	110v Trailer-to-Tower Wire
B21-00-0028	Brake Line Kit

WIRE HARNESSES AND KITS – CE

Part No.	Description
A-05670	Brake Cable – CE
A-05673	Taillight Harness – Tower-to-Platform – CE
A-05674	Light Kit – Trailer – CE
A-05682	Tail Light Kit – Cage

https://truckmanualshub.com/

MANUAL PLATFORM ROTATE ASSEMBLY (OPTION A-00300)

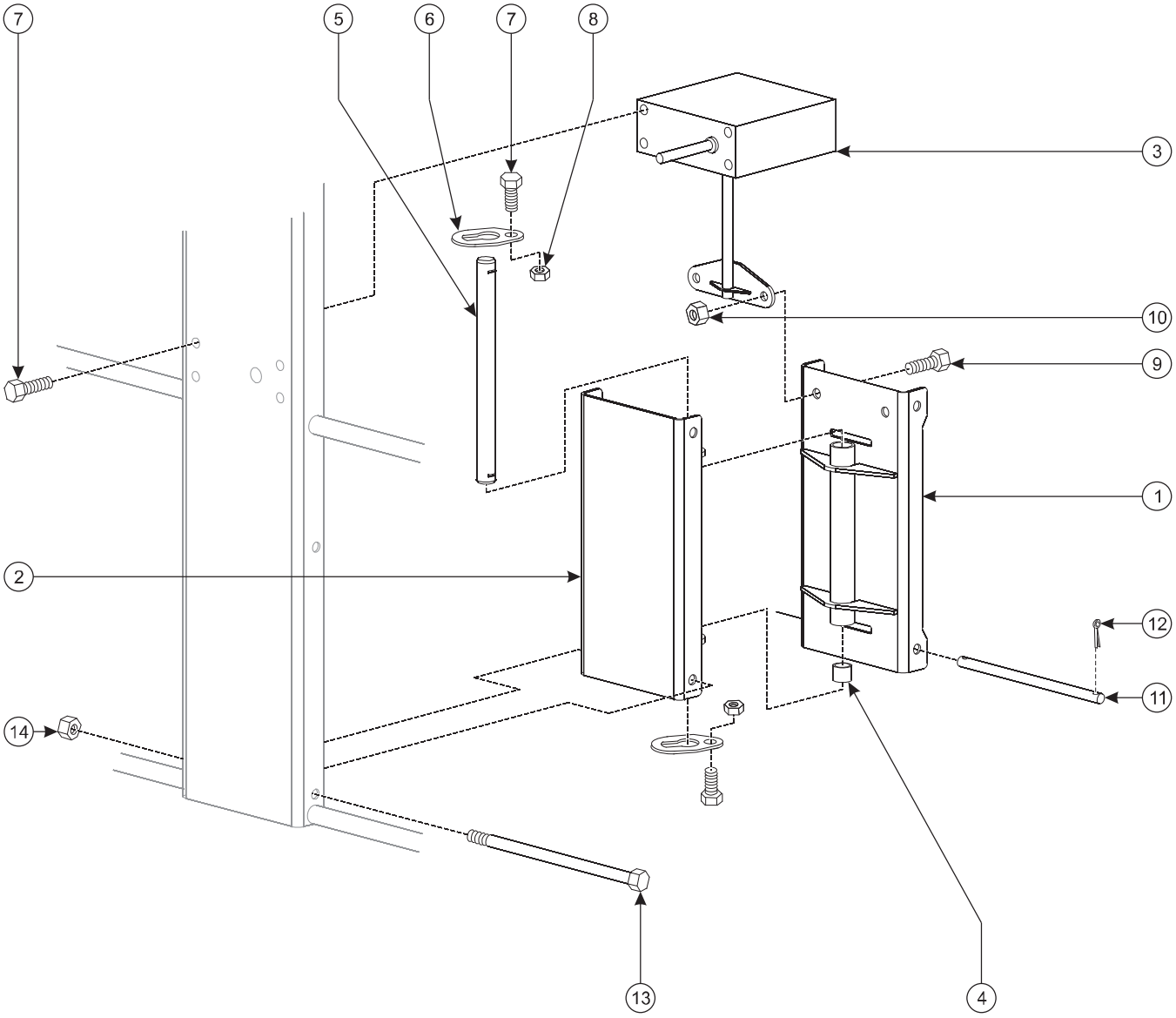

https://truckmanualshub.com/

Item No.	Part No.	Description	Qty.
1	A-00301	Platform Mount A Weldment	1
2	A-00308	Platform Mount Weldment	1
3	A-00315	Gearbox – Platform Rotate	1
4	A-00330	Bearing – .75” ID	2
5	A-00329	Pin – 0.75 x 10.25 DB	1
6	A-00017	Pin Retainer – 0.75	2
7	0096-0014	Cap Screw, M10 x 20	6
8	0096-0041	Hex Nut, Self-Locking, M10	2
9	0096-0019	Cap Screw, M12 x 25	2
10	0096-0042	Hex Nut, Self-Locking, M12	2
11	A-00071	Pin, Platform	1
12	0090-0147	Cotter Pin	2
13	0096-0103	Cap Screw, M8 x 140	2
14	0096-0040	Hex Nut, Self-Locking, M8	2

https://truckmanualshub.com/

MATERIAL LIFT HOOK ASSEMBLY (OPTION A-01846)

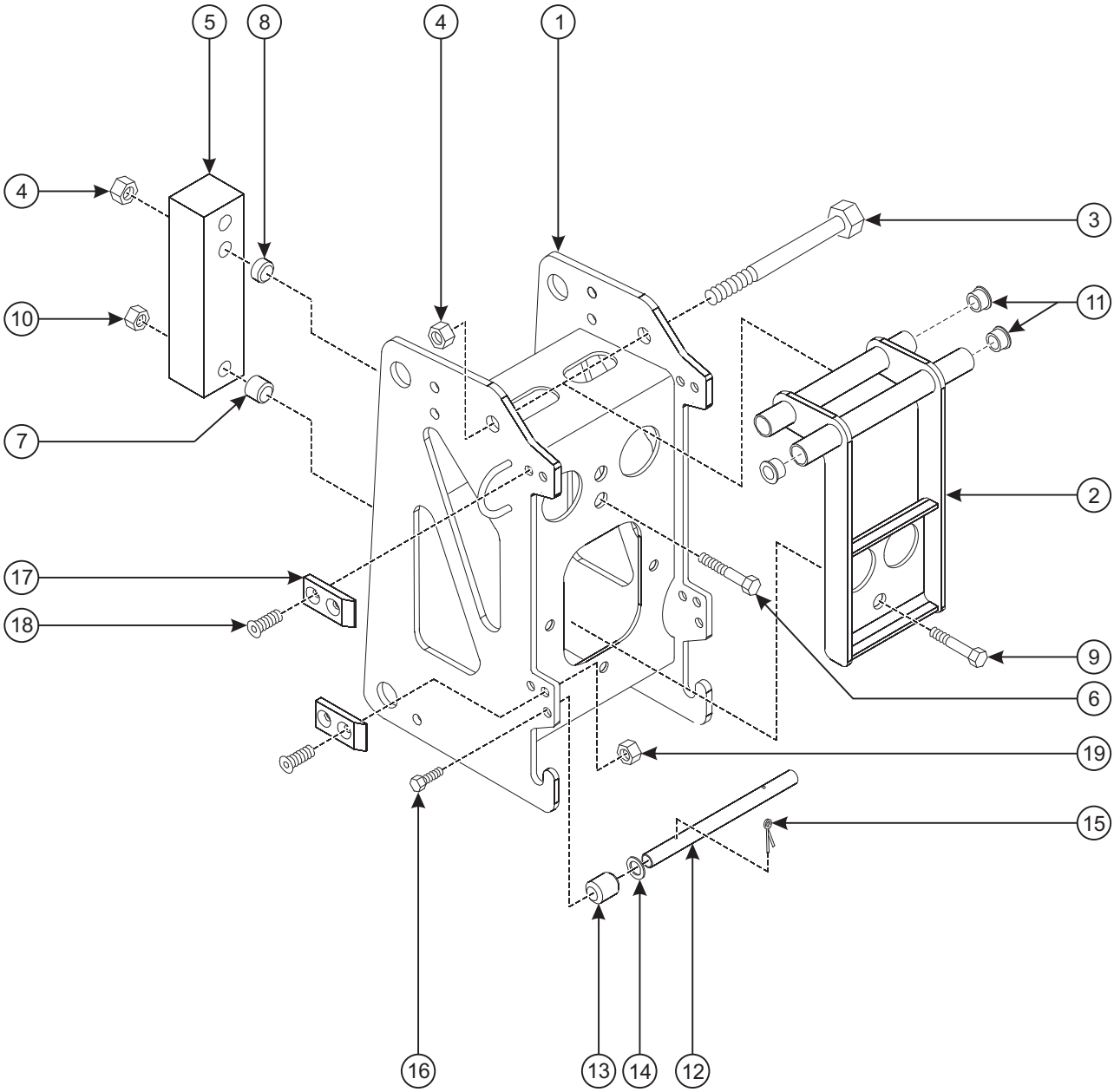

https://truckmanualshub.com/

Item No.	Part No.	Description	Qty.
1	A-01977	Platform Mount Weldment – LS	1
2	A-00982	Load Sense Weldment	1
3	0096-0055	Cap Screw, M12 x 190	1
4	0096-0042	Hex Nut, Self-Locking, M12	3
5	A-00988-1	Load Cell	1
6	0096-0089	Cap Screw, M12 x 65	2
7	A-00990A	Load Sense Spacer A	1
8	A-00990B	Load Sense Spacer B	2
9	0096-0069	Cap Screw, M10 x 75	1
10	0096-0041	Hex Nut, Self-Locking, M10	1
11	A-00033	Bearing	4
12	A-00994	LS Roller Bar	1
13	A-00995	LS Roller	2
14	0096-0046	Washer, Flat, M12	4
15	0090-0147	Cotter Pin	2
16	0096-0009	Cap Screw, M8 x 10	2
17	A-00038	Ramp	4
18	0096-0003	Flat Head Cap Screw, M6 x 20	8
19	0096-0039	Hex Nut, Self-Locking, M6	8

20	A-00992	Load Sense Interface (Not Pictured)	1
21	0096-0085	Cap Screw, M6 x 60	3
22	0096-0039	Hex Nut, Self-Locking, M6	3

https://truckmanualshub.com/

MATERIAL LIFT ASSEMBLY, CONTINUED

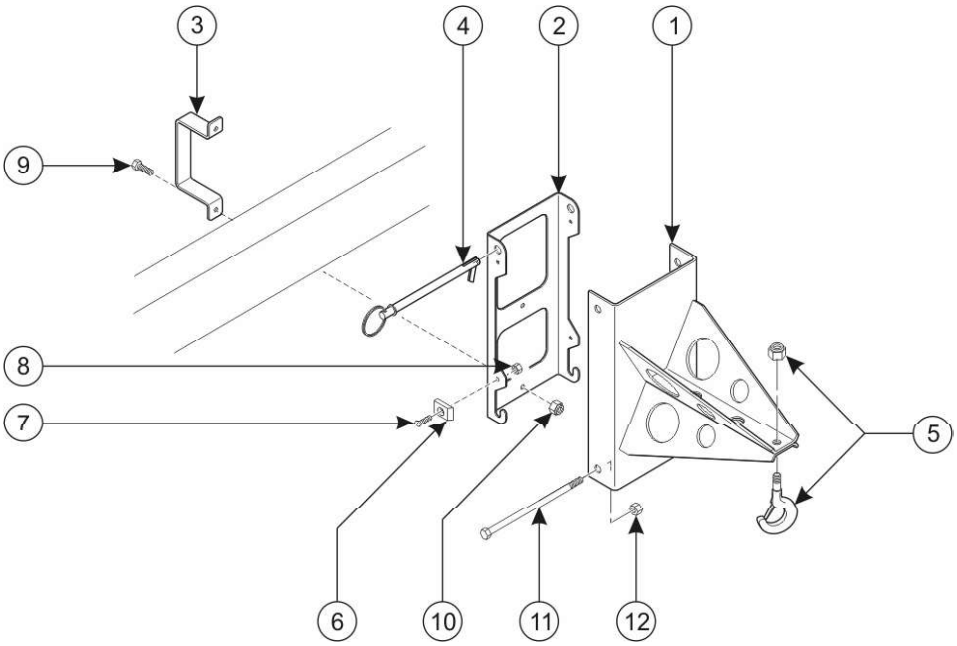

MATERIAL LIFT HOOK PARTS LIST

Item No.	Part No.	Description	Qty.
1	A-00480	Material Lift Weldment	1
2	A-00155	Lift Hook Storage Bracket	1
3	A-01156	Bracket Clamp	1
4	A-00028	Pin	1
5	A-00485	Lift Hook Assembly	1
6	A-00037	Ramp, Short	4
7	0096-0003	Flat Head Cap Screw, M6 x 20	4
8	0096-0039	Hex Nut, Self-Locking, M6	4
9	0096-0016	Cap Screw, M10 x 25	2
10	0096-0041	Hex Nut, Self-Locking, M10	2
11	0096-0029	Cap Screw, M12 x 220	1
12	0096-0042	Hex Nut, Self-Locking, M12	1
	A-01976	Load Sense Module (Not Pictured)	1

https://truckmanualshub.com/

BATTERY LAYOUT

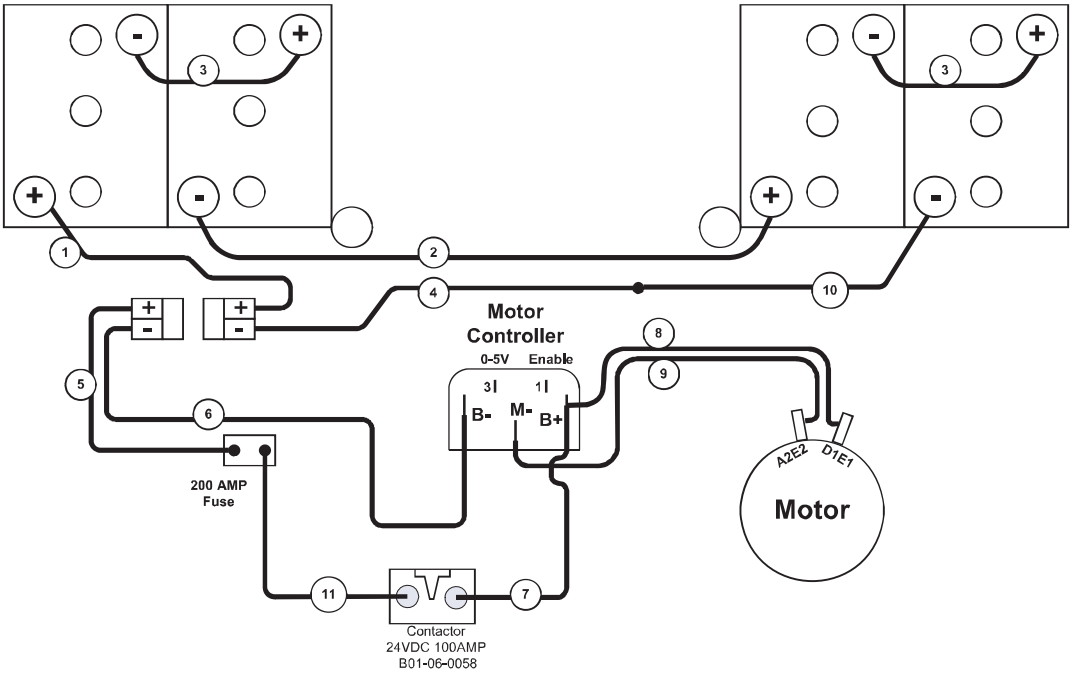

3522A BATTERY LAYOUT (Kit A-01272)

Item No.	Description
1	30” Red, 2 Gauge, 5/16” Ring – Lug
2	37” Black, 2 Gauge, 5/16” Ring – 5/16” Ring
3	8” Black, 2 Gauge, 5/16” Ring – 5/16” Ring (Qty. 2)
4	15” Black, 2 Gauge, 5/16” Ring – Lug
5	24” Red, 2 Gauge, 5/16” Ring – Lug
6	48” Black, 2 Gauge, 5/16” Ring – Lug
7	22” Red, 2 Gauge, 5/16” Ring – 5/16” Ring
8	36” Red, 2 Gauge, 5/16” Ring – 5/16” Ring
9	33” Black, 2 Gauge, 5/16” Ring – 5/16” Ring
10	16” Black, 2 Gauge, 5/16” Ring – 5/16” Ring
11	13” Black, 2 Gauge, 5/16” Ring – 5/16” Ring

Part No.	Description	Qty.
B01-10-0330	200 Amp Fuse	1
B01-10-0331	Fuse Holder	1
0096-0001	Cap Screw, M6 x 16	2
0096-0039	Hex Nut, Self-Locking, M6	2
B01-06-0058	Contactor – Sevcon 24v DC 100 amp	1

https://truckmanualshub.com/

DRIVE AND SET ASSEMBLY

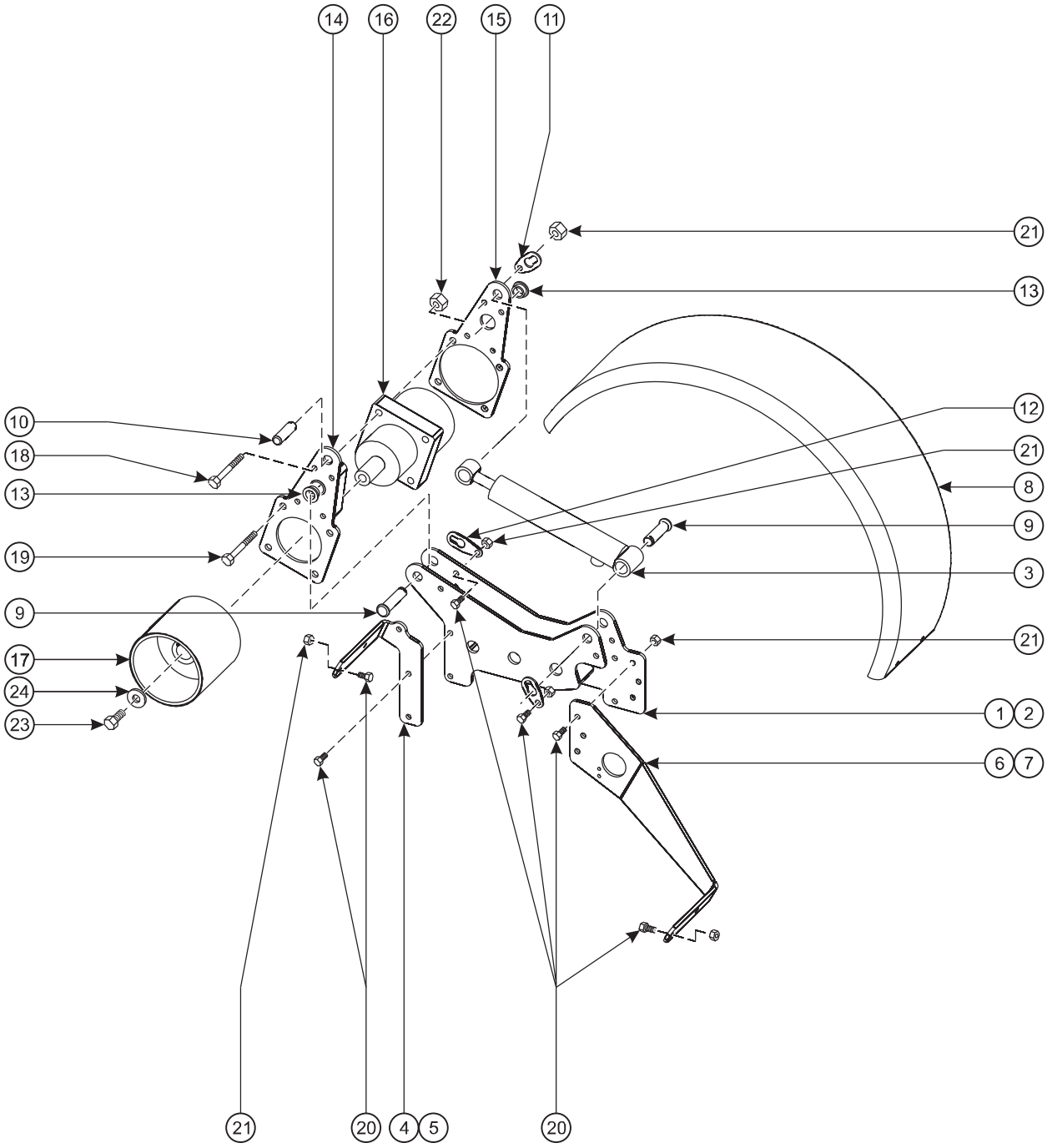

https://truckmanualshub.com/

Item No.	Part No.	Description	Qty.
1	A-00901L	Drive & Set Weldment – Left	1
2	A-00901R	Drive & Set Weldment – Right (Not Pictured)	1
3	A-00906	Drive & Set Cylinder	2
4	A-00907-1	Drive & Set Fender Mount – Left	1
5	A-00907-2	Drive & Set Fender Mount – Right (Not Pictured)	1
6	A-00908L	D & S Fender Mount Rear – Left	1
7	A-00908R	D & S Fender Mount, Rear – Right (Not Pictured)	1
8	A-00143	Fender	2
9	A-00927	Pin, 0.75” x 3.25” W/Head	4
10	A-00926	Pin, 0.75” x 2.5”	2
11	A-00017	Pin Retainer, 0.75”	4
12	A-00925	Pin Retainer, 0.75,” Long	2
13	A-00056	Bearing	4
14	A-00910	D & S Pivot Weldment	2
15	A-00912	D & S Pivot Arm B	2
16	A-00915	Motor, Hydraulic, Medium Duty – D&S	2
17	A-00920	Friction Wheel Weldment	2
18	0096-0133	Cap Screw, M10 x 65	6
19	0096-0022	Cap Screw, M12 x 75	8
20	0096-0014	Cap Screw, M10 x 20	22
21	0096-0041	Hex Nut, Self-Locking, M10	28
22	0096-0042	Hex Nut, Self-Locking, M12	8
23		Cap Screw, 5/8-18 x 1”	2
24	0090-0788	Washer, Flat, 5/8	2

Not Pictured

	A-00932	Manifold Cover	2
	A-00235	Power Unit, Drive & Set	1
	A-00928	Manifold, Drive & Set	1
	A-01937	Brake Cable Assembly – Drive & Set	1
	A-01943	Battery Cable Kit – Supplemental – Drive & Set	1
	A-01931	Control Box – Platform – Drive & Set	1

https://truckmanualshub.com/

ORDERING REPLACEMENT PARTS

To order replacement parts, contact the Haulotte Group | BilJax Service Department by phone at 800-537-0540, by fax at 419-446-8202 or by email at techsupport@biljax.com.

For swift service, always have the part number available, as well as the equipment model and serial number. When ordering parts by fax or email, always provide the above information.

See Page 12 for Equipment Warranty information.

QUICK REFERENCE

Equipment Model: Haulotte Group | BilJax 3522A Articulating Boom Lift

Serial Number: _____

NOTES

https://truckmanualshub.com/

APPENDIX: ERROR CODES

The error codes listed below may not be applicable to all machines and configurations.

Error Message Displayed	Error Explanation & Possible Causes	What To Check & Corrective Action To Clear Error
001 MACHINE IS IN DOWN ONLY MODE	The Machine has gone into DOWN ONLY mode. This is a self clearing error. When error condition is removed, error is cleared. NOTE: This error will not be displayed when boom is down or if so equipped, when the Load Sense Module has detected an overloaded condition. Possible causes include: 1. Machine went out of level during use 2. Load sense has detected an overload condition 3. Moment sense has detected an overload condition	1. Check outrigger and level LED indicators and if required re-level machine 2. Reduce boom load 3. Reduce boom load
002 LOSS OF PLATFORM COMMUNICATION	The Lower Control has lost communication with the Platform Control. This is a latched error. To clear this error, first the error condition must be removed and second the power must be cycled off then back on. NOTE: During this error condition, the Platform Control "Engine On" LED will blink a “2 blink” error code and the Lower Control “Power” LED will blink a “2 blink” error code. Possible causes include: 1. Lower control incorrectly configured 2. Faulty Boom Cable 3. Faulty Upper Control 4. Faulty Lower Control	1. Correctly configure Lower Control 2. Replace Boom Cable 3. Replace Upper Control 4. Replace Lower Control
003 LOSS OF DRIVE COMMUNICATION	The Lower Control has lost communication with the Drive Control. This is a latched error. To clear this error, first the error condition must be removed and second the power must be cycled off then back on. NOTE: During this error condition, the Platform Control "Engine On" LED will blink a “2 blink” error code and the Lower Control “Power” LED will blink a “2 blink” error code. Possible causes include: 1. Lower Control incorrectly configured 2. Faulty Boom Cable 3. Faulty Upper Control 4. Faulty Lower Control	1. Correctly configure Lower Control 2. Replace Boom Cable 3. Replace Upper Control 4. Replace Lower Control
004 LOSS OF PC COMMUNICATION	The Lower Control has lost communication with the PC. This is a self clearing error. When error condition is removed, error is cleared. NOTE: During this error condition, the Lower Control “Power” LED will blink a “4 blink” error code. Possible causes include: 1. Faulty cable between PC and Lower Control 2. PC’s program is not running 3. Faulty PC 4. Faulty Lower Control	1. Replace cable between PC and Lower Control 2. Disconnect PC or run PC’s program 3. Replace PC 4. Replace Lower Control

Error Message Displayed	Error Explanation & Possible Causes	What To Check & Corrective Action To Clear Error
005 PLATFORM CONTROL HAS STUCK KEY	The Platform Control has detected a stuck or pressed key on power up. This is a latched error. To clear this error, first the error condition must be removed and second the power must be cycled off then back on. NOTE: During this error condition, the Platform Control "Engine On" LED will blink a “1 blink” error code. Possible causes include: 1. Platform Control has a stuck key 2. Faulty Platform Control	1. Free stuck or pressed key on Platform Control 2. Replace Platform Control
006 DRIVE CONTROL HAS STUCK KEY	The Drive Control has detected a stuck or pressed key on power up. This is a latched error. To clear this error, first the error condition must be removed and second the power must be cycled off then back on. NOTE: During this error condition, the Drive Control "Engine On" LED will blink a “1 blink” error code. Possible causes include: 1. Drive Control has a stuck key 2. Faulty Drive Control	1. Free stuck or pressed key on Drive Control 2. Replace Drive Control
007 DRIVE CONTROL HAS STUCK JOYSTICK	The Drive Control has detected a stuck joystick on power up. This is a latched error. To clear this error, first the error condition must be removed and second the power must be cycled off then back on. NOTE: During this error condition, the Drive Control "Engine On" LED will blink a “2 blink” error code. Possible causes include: 1. Drive Control has a stuck joystick 2. Faulty Drive Control	1. Free or replace stuck joystick on Drive Control 2. Replace Drive Control
008 GROUND CONTROL HAS STUCK KEY	The Lower Control has detected a stuck or pressed key on power up. This is a latched error. To clear this error, first the error condition must be removed and second the power must be cycled off then back on. NOTE: During this error condition, the Lower Control "Power" LED will blink a “1 blink” error code. Possible causes include: 1. Lower Control has a stuck key 2. Faulty Lower Control	1. Free stuck or pressed key on Lower Control 2. Replace Lower Control
009 BOOM UP WITHOUT OUTRIGGERS ON GROUND	The Lower Control has detected the boom is up without all four outriggers on the ground. This is a self clearing error. When error condition is removed, error is cleared. NOTE: Alarm will sound during this error condition. Possible causes include: 1. Faulty boom down or outrigger limit switches 2. Faulty boom down or outrigger limit switch wiring 3. Faulty Lower Control	1. Check and repair boom and outrigger limit switches 2. Repair or replace boom and outrigger limit switch wiring 3. Replace Lower Control

Error Message Displayed	Error Explanation & Possible Causes	What To Check & Corrective Action To Clear Error
010 LEVEL SENSOR HAS ERRATIC OUTPUT	The Lower Control has detected a rapidly changing output from the level sensor. This is a self clearing error. When error condition is removed, error is cleared. Possible causes include: 1. Faulty Level Sensor 2. Faulty Level Sensor wiring 3. Faulty Lower Control	1. Check Level Sensor 2. Repair or replace Level Sensor wiring 3. Replace Lower Control NOTE: With machine powered and level, Level Sensor should have a steady approximately 24 volt supply voltage and a steady approximately 2.50 volt output on both X and Y outputs with respect to the Level Sensor ground connection.
011 TRYING TO DRIVE W/ TRAILER BRAKE OFF	An attempt was made to drive machine without engaging the trailer brake. This is a self clearing error. When error condition is removed, error is cleared. NOTE: This error only occurs on machines equipped with the Drive & Set option. Possible causes include: 1. Trailer brake not engaged 2. Faulty trailer brake switch 3. Faulty trailer brake switch wiring 4. Faulty Lower Control	1. Engage trailer brake 2. Check and repair trailer brake switch 3. Repair or replace trailer brake switch wiring 4. Replace Lower Control
012 ANGLE SENSOR IS DISCONNECTED OR BAD	The Lower Control has detected the angle sensor output is out of range. This is a self clearing error. When error condition is removed, error is cleared. NOTE: This error only occurs on machines equipped with the Moment Sense option. Possible causes include: 1. Faulty angle sensor 2. Faulty angle sensor wiring 3. Lower Control incorrectly configured 4. Faulty Lower Control	1. Check angle sensor 2. Repair or replace angle sensor wiring 3. Correctly configure Lower Control 4. Replace Lower Control
013 PRESSURE SENSOR IS DISCONNECTED OR BAD	The Lower Control has detected the pressure sensor output is out of range. This is a self clearing error. When error condition is removed, error is cleared. NOTE: This error only occurs on machines equipped with the Moment Sense option. Possible causes include: 1. Faulty pressure sensor 2. Faulty pressure sensor wiring 3. Lower Control incorrectly configured 4. Faulty Lower Control	1. Check pressure sensor 2. Repair or replace pressure sensor wiring 3. Correctly configure Lower Control 4. Replace Lower Control
014 CHECK ENGINE LOW OIL PRESSURE	The Lower Control has detected the engine had low oil pressure while running. This is a latched error. To clear this error, first the error condition must be removed and second the power must be cycled off then back on. NOTE: This error only occurs on machines equipped with the X-Boom option. Possible causes include: 1. Engine oil low 2. Faulty oil pressure sensor 3. Faulty oil pressure sensor wiring 4. Lower Control incorrectly configured 5. Faulty Lower Control	1. Check engine oil level 2. Check oil pressure sensor 3. Repair or replace oil pressure sensor wiring 4. Correctly configure Lower Control 5. Replace Lower Control

Error Message Displayed	Error Explanation & Possible Causes	What To Check & Corrective Action To Clear Error
015 MACHINE IS NOT LEVEL	The Lower Control has detected the machine has all four outriggers on the ground but is not level. This is a self clearing error. When error condition is removed, error is cleared. Possible causes include: 1. Machine has gone out of level with use 2. Faulty level sensor 3. Faulty level sensor wiring 4. Faulty Lower Control	1. Check outrigger and level LED indicators and if required re-level machine 2. Check level sensor 3. Repair or replace level sensor wiring 4. Replace Lower Control
016 LIFT BOOM	The Lower Control has detected the Boom must be raised before the requested function can be performed. This is a self clearing error. When error condition is removed, error is cleared. Possible causes include: 1. Trying to rotate boom while boom is down 2. Trying to extend boom while boom is down 3. Trying to retract boom while boom is down 4. Faulty boom down limit switch 5. Faulty boom down limit switch wiring 6. Faulty Lower Control	1. Check that boom is raised before trying to rotate boom 2. Check that boom is raised before trying to extend boom 3. Check that boom is raised before trying to retract boom 4. Check and repair boom down limit switch 5. Repair or replace boom down limit switch wiring 6. Replace Lower Control
017 STOW BOOM	The Lower Control has detected the boom must be lowered before the requested function can be performed. This is a self clearing error. When error condition is removed, error is cleared. Possible causes include: 1. Trying to auto level machine while boom is raised 2. Trying to extend outriggers while boom is raised 3. Trying to retract outriggers while boom is raised 4. Faulty boom down limit switch 5. Faulty boom down limit switch wiring 6. Faulty Lower Control	1. Check that boom is down before trying to auto level machine 2. Check that boom is down before trying to extend outriggers 3. Check that boom is down before trying to retract outriggers 4. Check and repair boom down limit switch 5. Repair or replace boom down limit switch wiring 6. Replace Lower Control
018 LOSS OF LOAD SENSE COMMUNICATION	The Lower Control has lost communication with the Load Sense Module. This is a latched error. To clear this error, first the error condition must be removed and second the power must be cycled off then back on. NOTE: During this error condition, the Load Sense Module “Status” LED will blink a red “2 blink” error code and the Lower Control “Power” LED will blink a “5 blink” error code. NOTE: This error only occurs on machines equipped with the Load Sense option. Possible causes include: 1. Lower control incorrectly configured 2. Faulty Boom Cable 3. Faulty Load Sense Module 4. Faulty Lower Control	1. Correctly configure Lower Control 2. Replace Boom Cable 3. Replace Load Sense Module 4. Replace Lower Control

https://truckmanualshub.com/

Error Message Displayed	Error Explanation & Possible Causes	What To Check & Corrective Action To Clear Error
019 BOOM FUNCTION DISABLED	The Load Sense Module has detected an overloaded boom condition which caused the Lower Control to disable all boom functions. This is a self clearing error. When error condition is removed, error is cleared. NOTE: This error only occurs on machines equipped with the Load Sense option. Possible causes include: 1. Too much weight in basket or on hook 2. Lower Control incorrectly configured 3. Faulty Load Cell 4. Faulty Load Cell wiring 5. Faulty Load Sense Module 6. Faulty Lower Control	1. Reduce weight in basket or on hook 2. Correctly configure Lower Control 3. Replace Load Cell 4. Repair or replace Load Cell wiring 5. Replace Load Sense Module 6. Replace Lower Control
30 LOSS OF LOAD CELL CONNECTION	The Load Sense Module has detected a loss of connection to the Load Cell. This is a self clearing error. When error condition is removed, error is cleared. NOTE: This error only occurs on machines equipped with the Load Sense option. Possible causes include: 1. Faulty Load Cell 2. Faulty Load Cell wiring 3. Faulty Load Sense Module	1. Replace Load Cell 2. Repair or replace Load Cell wiring 3. Replace Load Sense Module
021 OPEN CIRCUIT PRIMARY UP	The Lower Control has detected an open circuit on the Primary Up solenoid output when it was energized during startup self diagnostics. NOTE: A load of less than 70mA will be detected as an open circuit. The typical load is approximately 800mA. Possible causes include: 1. Faulty Primary Up solenoid wiring 2. Faulty Primary Up solenoid 3. Faulty Lower Control	1. Repair or replace Primary Up solenoid wiring 2. Replace Primary Up solenoid 3. Replace Lower Control
022 SHORTED CIRCUIT PRIMARY UP	The Lower Control has detected excessive current on the Primary Up solenoid output when it was energized during startup self diagnostics. Possible causes include: 1. Faulty Primary Up solenoid wiring 2. Faulty Primary Up solenoid 3. Faulty Lower Control	1. Repair or replace Primary Up solenoid wiring 2. Replace Primary Up solenoid 3. Replace Lower Control
023 OPEN CIRCUIT PRIMARY DOWN	The Lower Control has detected an open circuit on the Primary Down solenoid output when it was energized during startup self diagnostics. NOTE: A load of less than 70mA will be detected as an open circuit. The typical load is approximately 800mA. Possible causes include: 1. Faulty Primary Down solenoid wiring 2. Faulty Primary Down solenoid 3. Faulty Lower Control	1. Repair or replace Primary Down solenoid wiring 2. Replace Primary Down solenoid 3. Replace Lower Control

Error Message Displayed	Error Explanation & Possible Causes	What To Check & Corrective Action To Clear Error
024 SHORTED CIRCUIT PRIMARY DOWN	The Lower Control has detected excessive current on the Primary Down solenoid output when it was energized during startup self diagnostics. Possible causes include: 1. Faulty Primary Down solenoid wiring 2. Faulty Primary Down solenoid 3. Faulty Lower Control	1. Repair or replace Primary Down solenoid wiring 2. Replace Primary Down solenoid 3. Replace Lower Control
025 OPEN CIRCUIT SECONDARY UP	The Lower Control has detected an open circuit on the Secondary Up solenoid output when it was energized during startup self diagnostics. NOTE: A load of less than 70mA will be detected as an open circuit. The typical load is approximately 800mA. Possible causes include: 1. Faulty Secondary Up solenoid wiring 2. Faulty Secondary Up solenoid 3. Faulty Lower Control	1. Repair or replace Secondary Up solenoid wiring 2. Replace Secondary Up solenoid 3. Replace Lower Control
026 SHORTED CIRCUIT SECONDARY UP	The Lower Control has detected excessive current on the Secondary Up solenoid output when it was energized during startup self diagnostics. Possible causes include: 1. Faulty Secondary Up solenoid wiring 2. Faulty Secondary Up solenoid 3. Faulty Lower Control	1. Repair or replace Secondary Up solenoid wiring 2. Replace Secondary Up solenoid 3. Replace Lower Control
027 OPEN CIRCUIT SECONDARY DOWN	The Lower Control has detected an open circuit on the Secondary Down solenoid output when it was energized during startup self diagnostics. NOTE: A load of less than 70mA will be detected as an open circuit. The typical load is approximately 800mA. Possible causes include: 1. Faulty Secondary Down solenoid wiring 2. Faulty Secondary Down solenoid 3. Faulty Lower Control	1. Repair or replace Secondary Down solenoid wiring 2. Replace Secondary Down solenoid 3. Replace Lower Control
028 SHORTED CIRCUIT SECONDARY DOWN	The Lower Control has detected excessive current on the Secondary Down solenoid output when it was energized during startup self diagnostics. Possible causes include: 1. Faulty Secondary Down solenoid wiring 2. Faulty Secondary Down solenoid 3. Faulty Lower Control	1. Repair or replace Secondary Down solenoid wiring 2. Replace Secondary Down solenoid 3. Replace Lower Control
029 OPEN CIRCUIT JIB UP	The Lower Control has detected an open circuit on the Jib Up solenoid output when it was energized during startup self diagnostics. NOTE: A load of less than 70mA will be detected as an open circuit. The typical load is approximately 800mA. Possible causes include: 1. Faulty Jib Up solenoid wiring 2. Faulty Jib Up solenoid 3. Faulty Lower Control	1. Repair or replace Jib Up solenoid wiring 2. Replace Jib Up solenoid 3. Replace Lower Control
030 SHORTED CIRCUIT JIB UP	The Lower Control has detected excessive current on the Jib Up solenoid output when it was energized during startup self diagnostics. Possible causes include: 1. Faulty Jib Up solenoid wiring 2. Faulty Jib Up solenoid 3. Faulty Lower Control	1. Repair or replace Jib Up solenoid wiring 2. Replace Jib Up solenoid 3. Replace Lower Control

Error Message Displayed	Error Explanation & Possible Causes	What To Check & Corrective Action To Clear Error
031 OPEN CIRCUIT JIB DOWN	The Lower Control has detected an open circuit on the Jib Down solenoid output when it was energized during startup self diagnostics. NOTE: A load of less than 70mA will be detected as an open circuit. The typical load is approximately 800mA. Possible causes include: 1. Faulty Jib Down solenoid wiring 2. Faulty Jib Down solenoid 3. Fault Lower Control	1. Repair or replace Jib Down solenoid wiring 2. Replace Jib Down solenoid 3. Replace Lower Control
032 SHORTED CIRCUIT JIB DOWN	The Lower Control has detected excessive current on the Jib Down solenoid output when it was energized during startup self diagnostics. Possible causes include: 1. Faulty Jib Down solenoid wiring 2. Faulty Jib Down solenoid 3. Faulty Lower Control	1. Repair or replace Jib Down solenoid wiring 2. Replace Jib Down solenoid 3. Replace Lower Control
033 OPEN CIRCUIT EXTEND	The Lower Control has detected an open circuit on the Extend boom solenoid output when it was energized during startup self diagnostics. NOTE: A load of less than 70mA will be detected as an open circuit. The typical load is approximately 800mA. Possible causes include: 1. Faulty Extend boom solenoid wiring 2. Faulty Extend boom solenoid 3. Faulty Lower Control	1. Repair or replace Extend boom solenoid wiring 2. Replace Extend solenoid 3. Replace Lower Control
034 SHORTED CIRCUIT EXTEND	The Lower Control has detected excessive current on the Extend boom solenoid output when it was energized during startup self diagnostics. Possible causes include: 1. Faulty Extend boom solenoid wiring 2. Faulty Extend boom solenoid 3. Faulty Lower Control	1. Repair or replace Extend boom solenoid wiring 2. Replace Extend solenoid 3. Replace Lower Control
035 OPEN CIRCUIT RETRACT	The Lower Control has detected an open circuit on the Retract boom solenoid output when it was energized during startup self diagnostics. NOTE: A load of less than 70mA will be detected as an open circuit. The typical load is approximately 800mA. Possible causes include: 1. Faulty Retract boom solenoid wiring 2. Faulty Retract boom solenoid 3. Faulty Lower Control	1. Repair or replace Retract boom solenoid wiring 2. Replace Retract boom solenoid 3. Replace Lower Control
036 SHORTED CIRCUIT RETRACT	The Lower Control has detected excessive current on the Retract boom solenoid output when it was energized during startup self diagnostics. Possible causes include: 1. Faulty Retract boom solenoid wiring 2. Faulty Retract boom solenoid 3. Faulty Lower Control	1. Repair or replace Retract boom solenoid wiring 2. Replace Retract boom solenoid 3. Replace Lower Control

Error Message Displayed	Error Explanation & Possible Causes	What To Check & Corrective Action To Clear Error
037 OPEN CIRCUIT PLATFORM LEVEL UP	The Lower Control has detected an open circuit on the Platform Level Up solenoid output when it was energized during startup self diagnostics. NOTE: A load of less than 70mA will be detected as an open circuit. The typical load is approximately 800mA. Possible causes include: 1. Faulty Platform Level Up solenoid wiring 2. Faulty Platform Level Up solenoid 3. Faulty Lower Control	1. Repair or replace Platform Level Up solenoid wiring 2. Replace Platform Level Up solenoid 3. Replace Lower Control
038 SHORTED CIRCUIT PLATFORM LEVEL UP	The Lower Control has detected excessive current on the Platform Level Up solenoid output when it was energized during startup self diagnostics. Possible causes include: 1. Faulty Platform Level Up solenoid wiring 2. Faulty Platform Level Up solenoid 3. Faulty Lower Control	1. Repair or replace Platform Level Up solenoid wiring 2. Replace Platform Level Up solenoid 3. Replace Lower Control
039 OPEN CIRCUIT PLATFORM LEVEL DOWN	The Lower Control has detected an open circuit on the Platform Level Down solenoid output when it was energized during startup self diagnostics. NOTE: A load of less than 70mA will be detected as an open circuit. The typical load is approximately 800mA. Possible causes include: 1. Faulty Platform Level Down solenoid wiring 2. Faulty Platform Level Down solenoid 3. Faulty Lower Control	1. Repair or replace Platform Level Down solenoid wiring 2. Replace Platform Level Down solenoid 3. Replace Lower Control
040 SHORTED CIRCUIT PLATFORM LEVEL DOWN	The Lower Control has detected excessive current on the Platform Level Down solenoid output when it was energized during startup self diagnostics. Possible causes include: 1. Faulty Platform Level Down solenoid wiring 2. Faulty Platform Level Down solenoid 3. Faulty Lower Control	1. Repair or replace Platform Level Down solenoid wiring 2. Replace Platform Level Down solenoid 3. Replace Lower Control
041 OPEN CIRCUIT PLATFORM CW	The Lower Control has detected an open circuit on the Platform CW solenoid output when it was energized during startup self diagnostics. NOTE: A load of less than 70mA will be detected as an open circuit. The typical load is approximately 800mA. Possible causes include: 1. Faulty Platform CW solenoid wiring 2. Faulty Platform CW solenoid 3. Faulty Lower Control	1. Repair or replace Platform CW solenoid wiring 2. Replace Platform CW solenoid 3. Replace Lower Control
042 SHORTED CIRCUIT PLATFORM CW	The Lower Control has detected excessive current on the Platform CW solenoid output when it was energized during startup self diagnostics. Possible causes include: 1. Faulty Platform CW solenoid wiring 2. Faulty Platform CW solenoid 3. Faulty Lower Control	1. Repair or replace Platform CW solenoid wiring 2. Replace Platform CW solenoid 3. Replace Lower Control

Error Message Displayed	Error Explanation & Possible Causes	What To Check & Corrective Action To Clear Error
043 OPEN CIRCUIT PLATFORM CCW	The Lower Control has detected an open circuit on the Platform CCW solenoid output when it was energized during startup self diagnostics. NOTE: A load of less than 70mA will be detected as an open circuit. The typical load is approximately 800mA. Possible causes include: 1. Faulty Platform CCW solenoid wiring 2. Faulty Platform CCW solenoid 3. Faulty Lower Control	1. Repair or replace Platform CCW solenoid wiring 2. Replace Platform CCW solenoid 3. Replace Lower Control
044 SHORTED CIRCUIT PLATFORM CCW	The Lower Control has detected excessive current on the Platform CW solenoid output when it was energized during startup self diagnostics. Possible causes include: 1. Faulty Platform CCW solenoid wiring 2. Faulty Platform CCW solenoid 3. Faulty Lower Control	1. Repair or replace Platform CCW solenoid wiring 2. Replace Platform CCW solenoid 3. Replace Lower Control
045 OPEN CIRCUIT TURNTABLE CW	The Lower Control has detected an open circuit on the Turntable CW solenoid output when it was energized during startup self diagnostics. NOTE: A load of less than 70mA will be detected as an open circuit. The typical load is approximately 800mA. Possible causes include: 1. Faulty Turntable CW solenoid wiring 2. Faulty Turntable CW solenoid 3. Faulty Lower Control	1. Repair or replace Turntable CW solenoid wiring 2. Replace Turntable CW solenoid 3. Replace Lower Control
046 SHORTED CIRCUIT TURNTABLE CW	The Lower Control has detected excessive current on the Turntable CW solenoid output when it was energized during startup self diagnostics. Possible causes include: 1. Faulty Turntable CW solenoid wiring 2. Faulty Turntable CW solenoid 3. Faulty Lower Control	1. Repair or replace Turntable CW solenoid wiring 2. Replace Turntable CW solenoid 3. Replace Lower Control
047 OPEN CIRCUIT TURNTABLE CCW	The Lower Control has detected an open circuit on the Turntable CCW solenoid output when it was energized during startup self diagnostics. NOTE: A load of less than 70mA will be detected as an open circuit. The typical load is approximately 800mA. Possible causes include: 1. Faulty Turntable CCW solenoid wiring 2. Faulty Turntable CCW solenoid 3. Faulty Lower Control	1. Repair or replace Turntable CCW solenoid wiring 2. Replace Turntable CCW solenoid 3. Replace Lower Control
048 SHORTED CIRCUIT TURNTABLE CCW	The Lower Control has detected excessive current on the Turntable CCW solenoid output when it was energized during startup self diagnostics. Possible causes include: 1. Faulty Turntable CCW solenoid wiring 2. Faulty Turntable CCW solenoid 3. Faulty Lower Control	1. Repair or replace Turntable CCW solenoid wiring 2. Replace Turntable CCW solenoid 3. Replace Lower Control

https://truckmanualshub.com/

Error Message Displayed	Error Explanation & Possible Causes	What To Check & Corrective Action To Clear Error
049 OPEN CIRCUIT OUTRIGGER RETRACT	The Lower Control has detected an open circuit on the Outrigger Retract solenoid output when it was energized during startup self diagnostics. NOTE: A load of less than 70mA will be detected as an open circuit. The typical load is approximately 800mA. Possible causes include: 1. Faulty Outrigger Retract solenoid wiring 2. Faulty Outrigger Retract solenoid 3. Faulty Lower Control	1. Repair or replace Outrigger Retract solenoid wiring 2. Replace Outrigger Retract solenoid 3. Replace Lower Control
050 SHORTED CIRCUIT OUTRIGGER RETRACT	The Lower Control has detected excessive current on the Outrigger Retract solenoid output when it was energized during startup self diagnostics. Possible causes include: 1. Faulty Outrigger Retract solenoid wiring 2. Faulty Outrigger Retract solenoid 3. Faulty Lower Control	1. Repair or replace Outrigger Retract solenoid wiring 2. Replace Outrigger Retract solenoid 3. Replace Lower Control
051 OPEN CIRCUIT OUTRIGGER EXTEND	The Lower Control has detected an open circuit on the Outrigger Extend solenoid output when it was energized during startup self diagnostics. NOTE: A load of less than 70mA will be detected as an open circuit. The typical load is approximately 800mA. Possible causes include: 1. Faulty Outrigger Extend solenoid wiring 2. Faulty Outrigger Extend solenoid 3. Faulty Lower Control	1. Repair or replace Outrigger Extend solenoid wiring 2. Replace Outrigger Extend solenoid 3. Replace Lower Control
052 SHORTED CIRCUIT OUTRIGGER EXTEND	The Lower Control has detected excessive current on the Outrigger Extend solenoid output when it was energized during startup self diagnostics. Possible causes include: 1. Faulty Outrigger Extend solenoid wiring 2. Faulty Outrigger Extend solenoid 3. Faulty Lower Control	1. Repair or replace Outrigger Extend solenoid wiring 2. Replace Outrigger Extend solenoid 3. Replace Lower Control
053 OPEN CIRCUIT LF OUTRIGGER	The Lower Control has detected an open circuit on the LF Outrigger solenoid output when it was energized during startup self diagnostics. NOTE: A load of less than 70mA will be detected as an open circuit. The typical load is approximately 800mA. Possible causes include: 1. Faulty LF Outrigger solenoid wiring 2. Faulty LF Outrigger solenoid 3. Faulty Lower Control	1. Repair or replace LF Outrigger solenoid wiring 2. Replace LF Outrigger solenoid 3. Replace Lower Control
054 SHORTED CIRCUIT LF OUTRIGGER	The Lower Control has detected excessive current on the LF Outrigger solenoid output when it was energized during startup self diagnostics. Possible causes include: 1. Faulty LF Outrigger solenoid wiring 2. Faulty LF Outrigger solenoid 3. Faulty Lower Control	1. Repair or replace LF Outrigger solenoid wiring 2. Replace LF Outrigger solenoid 3. Replace Lower Control

Error Message Displayed	Error Explanation & Possible Causes	What To Check & Corrective Action To Clear Error
055 OPEN CIRCUIT RF OUTRIGGER	The Lower Control has detected an open circuit on the RF Outrigger solenoid output when it was energized during startup self diagnostics. NOTE: A load of less than 70mA will be detected as an open circuit. The typical load is approximately 800mA. Possible causes include: 1. Faulty RF Outrigger solenoid wiring 2. Faulty RF Outrigger solenoid 3. Faulty Lower Control	1. Repair or replace RF Outrigger solenoid wiring 2. Replace RF Outrigger solenoid 3. Replace Lower Control
056 SHORTED CIRCUIT RF OUTRIGGER	The Lower Control has detected excessive current on the RF Outrigger solenoid output when it was energized during startup self diagnostics. Possible causes include: 1. Faulty RF Outrigger solenoid wiring 2. Faulty RF Outrigger solenoid 3. Faulty Lower Control	1. Repair or replace RF Outrigger solenoid wiring 2. Replace RF Outrigger solenoid 3. Replace Lower Control
057 OPEN CIRCUIT LR OUTRIGGER	The Lower Control has detected an open circuit on the LR Outrigger solenoid output when it was energized during startup self diagnostics. NOTE: A load of less than 70mA will be detected as an open circuit. The typical load is approximately 800mA. Possible causes include: 1. Faulty LR Outrigger solenoid wiring 2. Faulty LR Outrigger solenoid 3. Faulty Lower Control	1. Repair or replace LR Outrigger solenoid wiring 2. Replace LR Outrigger solenoid 3. Replace Lower Control
058 SHORTED CIRCUIT LR OUTRIGGER	The Lower Control has detected excessive current on the LR Outrigger solenoid output when it was energized during startup self diagnostics. Possible causes include: 1. Faulty LR Outrigger solenoid wiring 2. Faulty LR Outrigger solenoid 3. Faulty Lower Control	1. Repair or replace LR Outrigger solenoid wiring 2. Replace LR Outrigger solenoid 3. Replace Lower Control
059 OPEN CIRCUIT RR OUTRIGGER	The Lower Control has detected an open circuit on the RR Outrigger solenoid output when it was energized during startup self diagnostics. NOTE: A load of less than 70mA will be detected as an open circuit. The typical load is approximately 800mA. Possible causes include: 1. Faulty RR Outrigger solenoid wiring 2. Faulty RR Outrigger solenoid 3. Faulty Lower Control	1. Repair or replace RR Outrigger solenoid wiring 2. Replace RR Outrigger solenoid 3. Replace Lower Control
060 SHORTED CIRCUIT RR OUTRIGGER	The Lower Control has detected excessive current on the RR Outrigger solenoid output when it was energized during startup self diagnostics. Possible causes include: 1. Faulty RR Outrigger solenoid wiring 2. Faulty RR Outrigger solenoid 3. Faulty Lower Control	1. Repair or replace RR Outrigger solenoid wiring 2. Replace RR Outrigger solenoid 3. Replace Lower Control

Error Message Displayed	Error Explanation & Possible Causes	What To Check & Corrective Action To Clear Error
061 OPEN CIRCUIT ENGINE THROTTLE	The Lower Control has detected an open circuit on the Engine Throttle relay output when it was energized during startup self diagnostics. NOTE: A load of less than 70mA will be detected as an open circuit. This load is less than 70mA and this error is suppressed to avoid false errors. Possible causes include: 1. Faulty Engine Throttle relay wiring 2. Faulty Engine Throttle relay 3. Faulty Lower Control	1. Repair or replace Engine Throttle relay wiring 2. Replace Engine Throttle relay 3. Replace Lower Control
062 SHORTED CIRCUIT ENGINE THROTTLE	The Lower Control has detected excessive current on the Engine Throttle relay output when it was energized during startup self diagnostics. Possible causes include: 1. Faulty Engine Throttle relay wiring 2. Faulty Engine Throttle relay 3. Faulty Lower Control	1. Repair or replace Engine Throttle relay wiring 2. Replace Engine Throttle relay 3. Replace Lower Control
063 OPEN CIRCUIT ENGINE STARTER	The Lower Control has detected an open circuit on the Engine Starter relay output when it was energized during startup self diagnostics. NOTE: A load of less than 70mA will be detected as an open circuit. This load is less than 70mA and this error is suppressed to avoid false errors. Possible causes include: 1. Faulty Engine Starter relay wiring 2. Faulty Engine Starter relay 3. Faulty Lower Control	1. Repair or replace Engine Starter relay wiring 2. Replace Engine Starter relay 3. Replace Lower Control
064 SHORTED CIRCUIT ENGINE STARTER	The Lower Control has detected excessive current on the Engine Starter relay output when it was energized during startup self diagnostics. Possible causes include: 1. Faulty Engine Starter relay wiring 2. Faulty Engine Starter relay 3. Faulty Lower Control	1. Repair or replace Engine Starter relay wiring 2. Replace Engine Starter relay 3. Replace Lower Control
065 OPEN CIRCUIT ENGINE CHOKE	The Lower Control has detected an open circuit on the Engine Choke relay output when it was energized during startup self diagnostics. NOTE: A load of less than 70mA will be detected as an open circuit. This load is less than 70mA and this error is suppressed to avoid false errors. Possible causes include: 1. Faulty Engine Choke relay wiring 2. Faulty Engine Choke relay 3. Faulty Lower Control	1. Repair or replace Engine Choke relay wiring 2. Replace Engine Choke relay 3. Replace Lower Control
066 SHORTED CIRCUIT ENGINE CHOKE	The Lower Control has detected excessive current on the Engine Choke relay output when it was energized during startup self diagnostics. Possible causes include: 1. Faulty Engine Choke relay wiring 2. Faulty Engine Choke relay 3. Faulty Lower Control	1. Repair or replace Engine Choke relay wiring 2. Replace Engine Choke relay 3. Replace Lower Control

Error Message Displayed	Error Explanation & Possible Causes	What To Check & Corrective Action To Clear Error
067 OPEN CIRCUIT ENGINE STOP	The Lower Control has detected an open circuit on the Engine Stop relay output when it was energized during startup self diagnostics. NOTE: A load of less than 70mA will be detected as an open circuit. This load is less than 70mA and this error is suppressed to avoid false errors. Possible causes include: 1. Faulty Engine Stop relay wiring 2. Faulty Engine Stop relay 3. Faulty Lower Control	1. Repair or replace Engine Stop relay wiring 2. Replace Engine Stop relay 3. Replace Lower Control
068 SHORTED CIRCUIT ENGINE STOP	The Lower Control has detected excessive current on the Engine Stop relay output when it was energized during startup self diagnostics. Possible causes include: 1. Faulty Engine Stop relay wiring 2. Faulty Engine Stop relay 3. Faulty Lower Control	1. Repair or replace Engine Stop relay wiring 2. Replace Engine Stop relay 3. Replace Lower Control
069 OPEN CIRCUIT PROPORTIONAL	The Lower Control has detected an open circuit on the Proportional valve solenoid output when it was energized during startup self diagnostics. NOTE: A load of less than 70mA will be detected as an open circuit. The typical load is approximately 800mA at 100%. Possible causes include: 1. Faulty Proportional valve solenoid wiring 2. Faulty Proportional valve solenoid 3. Faulty Lower Control	1. Repair or replace Proportional valve solenoid wiring 2. Replace Proportional valve solenoid 3. Replace Lower Control
070 SHORTED CIRCUIT PROPORTIONAL	The Lower Control has detected excessive current on the Proportional valve solenoid output when it was energized during startup self diagnostics. Possible causes include: 1. Faulty Proportional valve solenoid wiring 2. Faulty Proportional valve solenoid 3. Faulty Lower Control	1. Repair or replace Proportional valve solenoid wiring 2. Replace Proportional valve solenoid 3. Replace Lower Control
071 OPEN CIRCUIT MOTOR CONTROL ENABLE	The Lower Control has detected an open circuit on the Motor Control Enable output when it was energized during startup self diagnostics. NOTE: A load of less than 70mA will be detected as an open circuit. This load is less than 70mA and this error is suppressed to avoid false errors. Possible causes include: 1. Faulty Motor Control Enable wiring 2. Faulty Motor Control 3. Faulty Lower Control	1. Repair or replace Motor Control Enable wiring 2. Replace Motor Control 3. Replace Lower Control
072 SHORTED CIRCUIT MOTOR CONTROL ENABLE	The Lower Control has detected excessive current on the Motor Control Enable output when it was energized during startup self diagnostics. Possible causes include: 1. Faulty Motor Control Enable wiring 2. Faulty Motor Control 3. Faulty Lower Control	1. Repair or replace Motor Control Enable wiring 2. Replace Motor Control 3. Replace Lower Control

Error Message Displayed	Error Explanation & Possible Causes	What To Check & Corrective Action To Clear Error
073 OPEN CIRCUIT SPARE OUTPUT	The Lower Control has detected an open circuit on the Spare solenoid output when it was energized during startup self diagnostics. NOTE: A load of less than 70mA will be detected as an open circuit. This output is not used and this error is suppressed to avoid false errors. Possible causes include: 1. Faulty Lower Control	1. Replace Lower Control
074 SHORTED CIRCUIT SPARE OUTPUT	The Lower Control has detected excessive current on the Motor Control Enable output when it was energized during startup self diagnostics. NOTE: This output is not used and this error is suppressed to avoid false errors. Possible causes include: 1. Faulty Lower Control	1. Replace Lower Control
075 OPEN CIRCUIT AC SWITCH	The Lower Control has detected an open circuit on the AC Switch output when it was energized during startup self diagnostics. NOTE: A load of less than 70mA will be detected as an open circuit. This load is less than 70mA and this error is suppressed to avoid false errors. Possible causes include: 1. Faulty AC Switch wiring 2. Faulty AC Switch 3. Faulty Lower Control	1. Repair or replace AC Switch wiring 2. Replace AC Switch 3. Replace Lower Control
076 SHORTED CIRCUIT AC SWITCH	The Lower Control has detected excessive current on the AC Switch output when it was energized during startup self diagnostics. Possible causes include: 1. Faulty AC Switch wiring 2. Faulty AC Switch 3. Faulty Lower Control	1. Repair or replace AC Switch wiring 2. Replace AC Switch 3. Replace Lower Control
077 OPEN CIRCUIT STROBE	The Lower Control has detected an open circuit on the Strobe output when it was energized during startup self diagnostics. NOTE: A load of less than 70mA will be detected as an open circuit. This load is less than 70mA and this error is suppressed to avoid false errors. Possible causes include: 1. Faulty Strobe wiring 2. Faulty Strobe 3. Faulty Lower Control	1. Repair or replace Strobe wiring 2. Replace Strobe 3. Replace Lower Control
078 SHORTED CIRCUIT STROBE	The Lower Control has detected excessive current on the Strobe output when it was energized during startup self diagnostics. Possible causes include: 1. Faulty Strobe wiring 2. Faulty Strobe 3. Faulty Lower Control	1. Repair or replace Strobe wiring 2. Replace Strobe 3. Replace Lower Control

Error Message Displayed	Error Explanation & Possible Causes	What To Check & Corrective Action To Clear Error
079 OPEN CIRCUIT DRIVE PWM	The Lower Control has detected an open circuit on the Drive PWM valve solenoid output when it was energized during startup self diagnostics. NOTE: A load of less than 70mA will be detected as an open circuit. The typical load is approximately 800mA at 100%. Possible causes include: 1. Faulty Drive PWM valve solenoid wiring 2. Faulty Drive PWM valve solenoid 3. Faulty Lower Control	1. Repair or replace Drive PWM valve solenoid wiring 2. Replace Drive PWM valve 3. Replace Lower Control
080 SHORTED CIRCUIT DRIVE PWM	The Lower Control has detected excessive current on the Drive PWM valve solenoid output when it was energized during startup self diagnostics. Possible causes include: 1. Faulty Drive PWM valve solenoid wiring 2. Faulty Drive PWM valve solenoid 3. Faulty Lower Control	1. Repair or replace Drive PWM valve solenoid wiring 2. Replace Drive PWM valve 3. Replace Lower Control
081 OPEN CIRCUIT DRIVE ENABLE	The Lower Control has detected an open circuit on the Drive Enable solenoid output when it was energized during startup self diagnostics. NOTE: A load of less than 70mA will be detected as an open circuit. The typical load is approximately 800mA. Possible causes include: 1. Faulty Drive Enable solenoid wiring 2. Faulty Drive Enable solenoid 3. Faulty Lower Control	1. Repair or replace Drive Enable solenoid wiring 2. Replace Drive Enable solenoid 3. Replace Lower Control
082 SHORTED CIRCUIT DRIVE ENABLE	The Lower Control has detected excessive current on the Drive Enable solenoid output when it was energized during startup self diagnostics. Possible causes include: 1. Faulty Drive Enable solenoid wiring 2. Faulty Drive Enable solenoid 3. Faulty Lower Control	1. Repair or replace Drive Enable solenoid wiring 2. Replace Drive Enable solenoid 3. Replace Lower Control

Error Message Displayed	Error Explanation & Possible Causes	What To Check & Corrective Action To Clear Error
083 OPEN CIRCUIT DRIVE ENGAGE	The Lower Control has detected an open circuit on the Drive Engage solenoid output when it was energized during startup self diagnostics. NOTE: A load of less than 70mA will be detected as an open circuit. The typical load is approximately 800mA. Possible causes include: 1. Faulty Drive Engage solenoid wiring 2. Faulty Drive Engage solenoid 3. Faulty Lower Control	1. Repair or replace Drive Engage solenoid wiring 2. Replace Drive Engage solenoid 3. Replace Lower Control
084 SHORTED CIRCUIT DRIVE ENGAGE	The Lower Control has detected excessive current on the Drive Enable solenoid output when it was energized during startup self diagnostics. Possible causes include: 1. Faulty Drive Engage solenoid wiring 2. Faulty Drive Engage solenoid 3. Faulty Lower Control	1. Repair or replace Drive Engage solenoid wiring 2. Replace Drive Engage solenoid 3. Replace Lower Control
085 OPEN CIRCUIT LEFT WHEEL FORWARD	The Lower Control has detected an open circuit on the Left Wheel Forward solenoid output when it was energized during startup self diagnostics. NOTE: A load of less than 70mA will be detected as an open circuit. The typical load is approximately 800mA. Possible causes include: 1. Faulty Left Wheel Forward solenoid wiring 2. Faulty Left Wheel Forward solenoid 3. Faulty Lower Control	1. Repair or replace Left Wheel Forward solenoid wiring 2. Replace Left Wheel Forward solenoid 3. Replace Lower Control
086 SHORTED CIRCUIT LEFT WHEEL FORWARD	The Lower Control has detected excessive current on the Left Wheel Forward solenoid output when it was energized during startup self diagnostics. Possible causes include: 1. Faulty Left Wheel Forward solenoid wiring 2. Faulty Left Wheel Forward solenoid 3. Faulty Lower Control	1. Repair or replace Left Wheel Forward solenoid wiring 2. Replace Left Wheel Forward solenoid 3. Replace Lower Control
087 OPEN CIRCUIT LEFT WHEEL REVERSE	The Lower Control has detected an open circuit on the Left Wheel Reverse solenoid output when it was energized during startup self diagnostics. NOTE: A load of less than 70mA will be detected as an open circuit. The typical load is approximately 800mA. Possible causes include: 1. Faulty Left Wheel Reverse solenoid wiring 2. Faulty Left Wheel Reverse solenoid 3. Faulty Lower Control	1. Repair or replace Left Wheel Reverse solenoid wiring 2. Replace Left Wheel Reverse solenoid 3. Replace Lower Control
088 SHORTED CIRCUIT LEFT WHEEL REVERSE	The Lower Control has detected excessive current on the Left Wheel Reverse solenoid output when it was energized during startup self diagnostics. Possible causes include: 1. Faulty Left Wheel Reverse solenoid wiring 2. Faulty Left Wheel Reverse solenoid 3. Faulty Lower Control	1. Repair or replace Left Wheel Reverse solenoid wiring 2. Replace Left Wheel Reverse solenoid 3. Replace Lower Control

Error Message Displayed	Error Explanation & Possible Causes	What To Check & Corrective Action To Clear Error
089 OPEN CIRCUIT RIGHT WHEEL FORWARD	The Lower Control has detected an open circuit on the Right Wheel Forward solenoid output when it was energized during startup self diagnostics. NOTE: A load of less than 70mA will be detected as an open circuit. The typical load is approximately 800mA. Possible causes include: 1. Faulty Right Wheel Forward solenoid wiring 2. Faulty Right Wheel Forward solenoid 3. Faulty Lower Control	1. Repair or replace Right Wheel Forward solenoid wiring 2. Replace Right Wheel Forward solenoid 3. Replace Lower Control
090 SHORTED CIRCUIT RIGHT WHEEL FORWARD	The Lower Control has detected excessive current on the Right Wheel Forward solenoid output when it was energized during startup self diagnostics. Possible causes include: 1. Faulty Right Wheel Forward solenoid wiring 2. Faulty Right Wheel Forward solenoid 3. Faulty Lower Control	1. Repair or replace Right Wheel Forward solenoid wiring 2. Replace Right Wheel Forward solenoid 3. Replace Lower Control
091 OPEN CIRCUIT RIGHT WHEEL REVERSE	The Lower Control has detected an open circuit on the Right Wheel Reverse solenoid output when it was energized during startup self diagnostics. NOTE: A load of less than 70mA will be detected as an open circuit. The typical load is approximately 800mA. Possible causes include: 1. Faulty Right Wheel Reverse solenoid wiring 2. Faulty Right Wheel Reverse solenoid 3. Faulty Lower Control	1. Repair or replace Right Wheel Reverse solenoid wiring 2. Replace Right Wheel Reverse solenoid 3. Replace Lower Control
092 SHORTED CIRCUIT RIGHT WHEEL REVERSE	The Lower Control has detected excessive current on the Right Wheel Reverse solenoid output when it was energized during startup self diagnostics. Possible causes include: 1. Faulty Right Wheel Reverse solenoid wiring 2. Faulty Right Wheel Reverse solenoid 3. Faulty Lower Control	1. Repair or replace Right Wheel Reverse solenoid wiring 2. Replace Right Wheel Reverse solenoid 3. Replace Lower Control

Error Message Displayed	Error Explanation & Possible Causes	What To Check & Corrective Action To Clear Error
083 OPEN CIRCUIT DRIVE DUMP (C21)	The Lower Control has detected an open circuit on the Drive Dump (C21) solenoid output when it was energized during startup self diagnostics. NOTE: A load of less than 70mA will be detected as an open circuit. The typical load is approximately 800mA. Possible causes include: 1. Faulty Drive Dump (C21) solenoid wiring 2. Faulty Drive Dump (C21) solenoid 3. Faulty Lower Control	1. Repair or replace Drive Dump (C21) solenoid wiring 2. Replace Drive Dump (C21) solenoid 3. Replace Lower Control
084 SHORTED CIRCUIT DRIVE DUMP (C21)	The Lower Control has detected excessive current on the Drive Dump (C21) solenoid output when it was energized during startup self diagnostics. Possible causes include: 1. Faulty Drive Dump (C21) solenoid wiring 2. Faulty Drive Dump (C21) solenoid 3. Faulty Lower Control	1. Repair or replace Drive Dump (C21) solenoid wiring 2. Replace Drive Dump (C21) solenoid 3. Replace Lower Control
085 OPEN CIRCUIT TURN LEFT (C22)	The Lower Control has detected an open circuit on the Turn Left (C22) solenoid output when it was energized during startup self diagnostics. NOTE: A load of less than 70mA will be detected as an open circuit. The typical load is approximately 800mA. Possible causes include: 1. Faulty Turn Left (C22) solenoid wiring 2. Faulty Turn Left (C22) solenoid 3. Faulty Lower Control	1. Repair or replace Turn Left (C22) solenoid wiring 2. Replace Turn Left (C22) solenoid 3. Replace Lower Control
086 SHORTED CIRCUIT TURN LEFT (C22)	The Lower Control has detected excessive current on the Turn Left (C22) solenoid output when it was energized during startup self diagnostics. Possible causes include: 1. Faulty Turn Left (C22) solenoid wiring 2. Faulty Turn Left (C22) solenoid 3. Faulty Lower Control	1. Repair or replace Turn Left (C22) solenoid wiring 2. Replace Turn Left (C22) solenoid 3. Replace Lower Control
087 OPEN CIRCUIT TURN RIGHT (C23)	The Lower Control has detected an open circuit on the Turn Right (C23) solenoid output when it was energized during startup self diagnostics. NOTE: A load of less than 70mA will be detected as an open circuit. The typical load is approximately 800mA. Possible causes include: 1. Faulty Turn Right (C23) solenoid wiring 2. Faulty Turn Right (C23) solenoid 3. Faulty Lower Control	1. Repair or replace Turn Right (C23) solenoid wiring 2. Replace Turn Right (C23) solenoid 3. Replace Lower Control
088 SHORTED CIRCUIT TURN RIGHT (C23)	The Lower Control has detected excessive current on the Turn Right (C23) solenoid output when it was energized during startup self diagnostics. Possible causes include: 1. Faulty Turn Right (C23) solenoid wiring 2. Faulty Turn Right (C23) solenoid 3. Faulty Lower Control	1. Repair or replace Turn Right (C23) solenoid wiring 2. Replace Turn Right (C23) solenoid 3. Replace Lower Control

Error Message Displayed	Error Explanation & Possible Causes	What To Check & Corrective Action To Clear Error
089 OPEN CIRCUIT FORWARD 1 (C24)	The Lower Control has detected an open circuit on the Forward 1 (C24) solenoid output when it was energized during startup self diagnostics. NOTE: A load of less than 70mA will be detected as an open circuit. The typical load is approximately 800mA. Possible causes include: 1. Faulty Forward 1 (C24) solenoid wiring 2. Faulty Forward 1 (C24) solenoid 3. Faulty Lower Control	1. Repair or replace Forward 1 (C24) solenoid wiring 2. Replace Forward 1 (C24) solenoid 3. Replace Lower Control
090 SHORTED CIRCUIT FORWARD 1 (C24)	The Lower Control has detected excessive current on the Forward 1 (C24) solenoid output when it was energized during startup self diagnostics. Possible causes include: 1. Faulty Forward 1 (C24) solenoid wiring 2. Faulty Forward 1 (C24) solenoid 3. Faulty Lower Control	1. Repair or replace Forward 1 (C24) solenoid wiring 2. Replace Forward 1 (C24) solenoid 3. Replace Lower Control
091 OPEN CIRCUIT REVERSE 1 (C25)	The Lower Control has detected an open circuit on the Reverse 1 (C25) solenoid output when it was energized during startup self diagnostics. NOTE: A load of less than 70mA will be detected as an open circuit. The typical load is approximately 800mA. Possible causes include: 1. Faulty Reverse 1 (C25) solenoid wiring 2. Faulty Reverse 1 (C25) solenoid 3. Faulty Lower Control	1. Repair or replace Reverse 1 (C25) solenoid wiring 2. Replace Reverse 1 (C25) solenoid 3. Replace Lower Control
092 SHORTED CIRCUIT REVERSE 1 (C25)	The Lower Control has detected excessive current on the Reverse 1 (C24) solenoid output when it was energized during startup self diagnostics. Possible causes include: 1. Faulty Reverse 1 (C25) solenoid wiring 2. Faulty Reverse 1 (C25) solenoid 3. Faulty Lower Control	1. Repair or replace Reverse 1 (C25) solenoid wiring 2. Replace Reverse 1 (C25) solenoid 3. Replace Lower Control
093 OPEN CIRCUIT FORWARD 2 (C27)	The Lower Control has detected an open circuit on the Forward 2 (C27) solenoid output when it was energized during startup self diagnostics. NOTE: A load of less than 70mA will be detected as an open circuit. The typical load is approximately 800mA. Possible causes include: 1. Faulty Forward 2 (C27) solenoid wiring 2. Faulty Forward 2 (C27) solenoid 3. Faulty Lower Control	1. Repair or replace Forward 2 (C27) solenoid wiring 2. Replace Forward 2 (C27) solenoid 3. Replace Lower Control
094 SHORTED CIRCUIT FORWARD 2 (C27)	The Lower Control has detected excessive current on the Forward 2 (C27) solenoid output when it was energized during startup self diagnostics. Possible causes include: 1. Faulty Forward 2 (C27) solenoid wiring 2. Faulty Forward 2 (C27) solenoid 3. Faulty Lower Control	1. Repair or replace Forward 2 (C27) solenoid wiring 2. Replace Forward 2 (C27) solenoid 3. Replace Lower Control

Error Message Displayed	Error Explanation & Possible Causes	What To Check & Corrective Action To Clear Error
095 OPEN CIRCUIT REVERSE 2 (C28)	The Lower Control has detected an open circuit on the Reverse 2 (C28) solenoid output when it was energized during startup self diagnostics. NOTE: A load of less than 70mA will be detected as an open circuit. The typical load is approximately 800mA. Possible causes include: 1. Faulty Reverse 2 (C28) solenoid wiring 2. Faulty Reverse 2 (C28) solenoid 3. Faulty Lower Control	1. Repair or replace Reverse 2 (C28) solenoid wiring 2. Replace Reverse 2 (C28) solenoid 3. Replace Lower Control
096 SHORTED CIRCUIT REVERSE 2 (C28)	The Lower Control has detected excessive current on the Reverse 2 (C28) solenoid output when it was energized during startup self diagnostics. Possible causes include: 1. Faulty Reverse 2 (C28) solenoid wiring 2. Faulty Reverse 2 (C28) solenoid 3. Faulty Lower Control	1. Repair or replace Reverse 2 (C28) solenoid wiring 2. Replace Reverse 2 (C28) solenoid 3. Replace Lower Control
097 OPEN CIRCUIT TORQUE H/L (C29)	The Lower Control has detected an open circuit on the Torque H/L (C29) solenoid output when it was energized during startup self diagnostics. NOTE: A load of less than 70mA will be detected as an open circuit. The typical load is approximately 800mA. Possible causes include: 1. Faulty Torque H/L (C29) solenoid wiring 2. Faulty Torque H/L (C29) solenoid 3. Faulty Lower Control	1. Repair or replace Torque H/L (C29) solenoid wiring 2. Replace Torque H/L (C29) solenoid 3. Replace Lower Control
098 SHORTED CIRCUIT TORQUE H/L (C29)	The Lower Control has detected excessive current on the Torque H/L (C29) solenoid output when it was energized during startup self diagnostics. Possible causes include: 1. Faulty Torque H/L (C29) solenoid wiring 2. Faulty Torque H/L (C29) solenoid 3. Faulty Lower Control	1. Repair or replace Torque H/L (C29) solenoid wiring 2. Replace Torque H/L (C29) solenoid 3. Replace Lower Control
099 OPEN CIRCUIT TORQUE H/L (C30)	The Lower Control has detected an open circuit on the Torque H/L (C30) solenoid output when it was energized during startup self diagnostics. NOTE: A load of less than 70mA will be detected as an open circuit. The typical load is approximately 800mA. Possible causes include: 1. Faulty Torque H/L (C30) solenoid wiring 2. Faulty Torque H/L (C30) solenoid 3. Faulty Lower Control	1. Repair or replace Torque H/L (C30) solenoid wiring 2. Replace Torque H/L (C30) solenoid 3. Replace Lower Control
100 SHORTED CIRCUIT TORQUE H/L (C30)	The Lower Control has detected excessive current on the Torque H/L (C30) solenoid output when it was energized during startup self diagnostics. Possible causes include: 1. Faulty Torque H/L (C30) solenoid wiring 2. Faulty Torque H/L (C30) solenoid 3. Faulty Lower Control	1. Repair or replace Torque H/L (C30) solenoid wiring 2. Replace Torque H/L (C30) solenoid 3. Replace Lower Control

Error Message Displayed	Error Explanation & Possible Causes	What To Check & Corrective Action To Clear Error
101 OPEN CIRCUIT TORQUE H/L (C31)	The Lower Control has detected an open circuit on the Torque H/L (C31) solenoid output when it was energized during startup self diagnostics. NOTE: A load of less than 70mA will be detected as an open circuit. The typical load is approximately 800mA. Possible causes include: 1. Faulty Torque H/L (C31) solenoid wiring 2. Faulty Torque H/L (C31) solenoid 3. Faulty Lower Control	1. Repair or replace Torque H/L (C31) solenoid wiring 2. Replace Torque H/L (C31) solenoid 3. Replace Lower Control
102 SHORTED CIRCUIT TORQUE H/L (C31)	The Lower Control has detected excessive current on the Torque H/L (C31) solenoid output when it was energized during startup self diagnostics. Possible causes include: 1. Faulty Torque H/L (C31) solenoid wiring 2. Faulty Torque H/L (C31) solenoid 3. Faulty Lower Control	1. Repair or replace Torque H/L (C31) solenoid wiring 2. Replace Torque H/L (C31) solenoid 3. Replace Lower Control

Error Message Displayed	Error Explanation & Possible Causes	What To Check & Corrective Action To Clear Error
103 OUTREACH NEAR MAXIMUM	The Lower Control has detected the boom has reached or exceeded 95% of maximum outreach setting. NOTE: This error only occurs on machines equipped with the Moment Sense option. Possible causes include: 1. Too much weight on boom 2. Boom extended too far for weight on boom 3. Boom lowered too far for weight on boom 4. Lower Control incorrectly configured 5. Faulty Lower Control	1. Reduce weight in basket or on hook 2. Retract boom 3. Raise boom 4. Correctly configure Lower Control 5. Replace Lower Control
104 OUTREACH AT MAXIMUM	The Lower Control has detected the boom has reached the maximum outreach setting. NOTE: This error only occurs on machines equipped with the Moment Sense option. Possible causes include: 1. Too much weight on boom 2. Boom extended too far for weight on boom 3. Boom lowered too far for weight on boom 4. Lower Control incorrectly configured 5. Faulty Lower Control	1. Reduce weight in basket or on hook 2. Retract boom 3. Raise boom 4. Correctly configure Lower Control 5. Replace Lower Control
105 OVER MAXIMUM CYLINDER PRESSURE	The Lower Control has detected the primary boom cylinder has reached or exceeded the maximum pressure setting. NOTE: This error only occurs on machines equipped with the Moment Sense option. Possible causes include: 1. Too much weight on boom 2. Boom extended too far for weight on boom 3. Boom lowered too far for weight on boom 4. Lower Control incorrectly configured 5. Faulty Lower Control	1. Reduce weight in basket or on hook 2. Retract boom 3. Raise boom 4. Correctly configure Lower Control 5. Replace Lower Control
106 OUTREACH SENSING FAULT	The Primary boom cylinder pressure safety switch has detected the primary cylinder has reached or exceeded the maximum pressure setting and disabled all boom functions. If this error occurs one or more of the three sensors responsible for determining the moment are not reading correctly. The angle sensor, the pressure sensor and the pressure switch must be examined to determine which sensor or sensors have failed. NOTE: This error only occurs on machines equipped with the Moment Sense option. Possible causes include: 1. Faulty angle sensor 2. Faulty angle sensor wiring 3. Faulty pressure sensor 4. Faulty pressure sensor wiring 5. Faulty Primary cylinder pressure switch 6. Faulty Primary cylinder pressure switch wiring 7. Lower Control incorrectly configured 8. Faulty Lower Control	1. Check angle sensor 2. Repair or replace angle sensor wiring 3. Check pressure sensor 4. Repair or replace pressure wiring 5. Check and repair Primary boom cylinder pressure switch 6. Repair or replace Primary boom cylinder pressure switch wiring 7. Correctly configure Lower Control 8. Replace Lower Control

Lower Control “Blink” Error Codes

The “Power” led blinks to indicate the following error conditions:
1 Blink = Stuck key on Lower Control
2 Blinks = Loss of communication with Platform Control
3 Blinks = Loss of communication with Drive Control
4 Blinks = Loss of communication with PC
5 Blinks = Loss of communication with Load Sense Module

Upper Control “Blink” Error Codes

The “Engine” led blinks to indicate the following error conditions:
1 Blink = Stuck key on Upper Control
2 Blinks = Loss of communication with Lower Control
3 Blinks = Stuck Joystick

https://truckmanualshub.com/

https://truckmanualshub.com/

HAULOTTE GROUP | BILJAX MODEL 3522A QUICK START GUIDE

Obtain, read and obey all Safety Guidelines:

- ❑ In this manual
- ❑ Attached to the boom lift
- ❑ Indicated by federal, state and local regulations

Position the boom lift in work area

Unhitch from the tow vehicle and disengage all boom travel latches

Turn Key Switch to ground control station for outrigger extension and leveling

Extend outriggers and level the boom

- ❑ Press and hold the outrigger EXTEND and AUTO LEVEL buttons
- ❑ A buzzer will sound and all LEDs will become lit on the Outrigger Control Panel when the boom is level

Turn Key Switch to platform control station.

Enter the work platform and attach safety harness to the Fall Protection Attachment Point

Press and hold the desired SPEED and function buttons to operate boom lift

NOTES

https://truckmanualshub.com/

Haulotte GROUP | BILJAX

125 Taylor Parkway
Archbold, OH 43502
Phone (419) 445-8915
(800) 537-0540
Fax (419) 445-0367

Distributed by: