https://truckmanualshub.com/

MANITOU

YOUR DEALER

547386 EN (01 / 06 / 2007)

ACCES PLATFORM

200 ATJ

OPERATOR'S MANUAL

THIS INSTRUCTION LEAFLET MUST BE KEPT PERMANENTLY ON THE ACCESS PLATFORM AND BE READ AND UNDERSTOOD BY THE OPERATORS.

https://truckmanualshub.com/

PREAMBLE

This instructions manual is designed to explain how to operate the machine and the maintenance required periodically for the machine to continue to operate in complete safety.

The platform has been designed and produced to enable you to work at high level in complete safety.

Before its delivery, MANITOU and the concessionaire have carefully inspected the platform so that you receive it in perfect operating condition.

https://truckmanualshub.com/

1 - OPERATING AND SAFETY INSTRUCTIONS

2 - DESCRIPTION

3 - MAINTENANCE

4 - ELECTRICITY

5 - MAINTENANCE HANDBOOK

01/06/2007	1ST DATE OF ISSUE

THE TEXTS AND ILLUSTRATIONS IN THIS DOCUMENT MUST NOT BE REPRODUCED EITHER WHOLLY OR IN PART.

https://truckmanualshub.com/

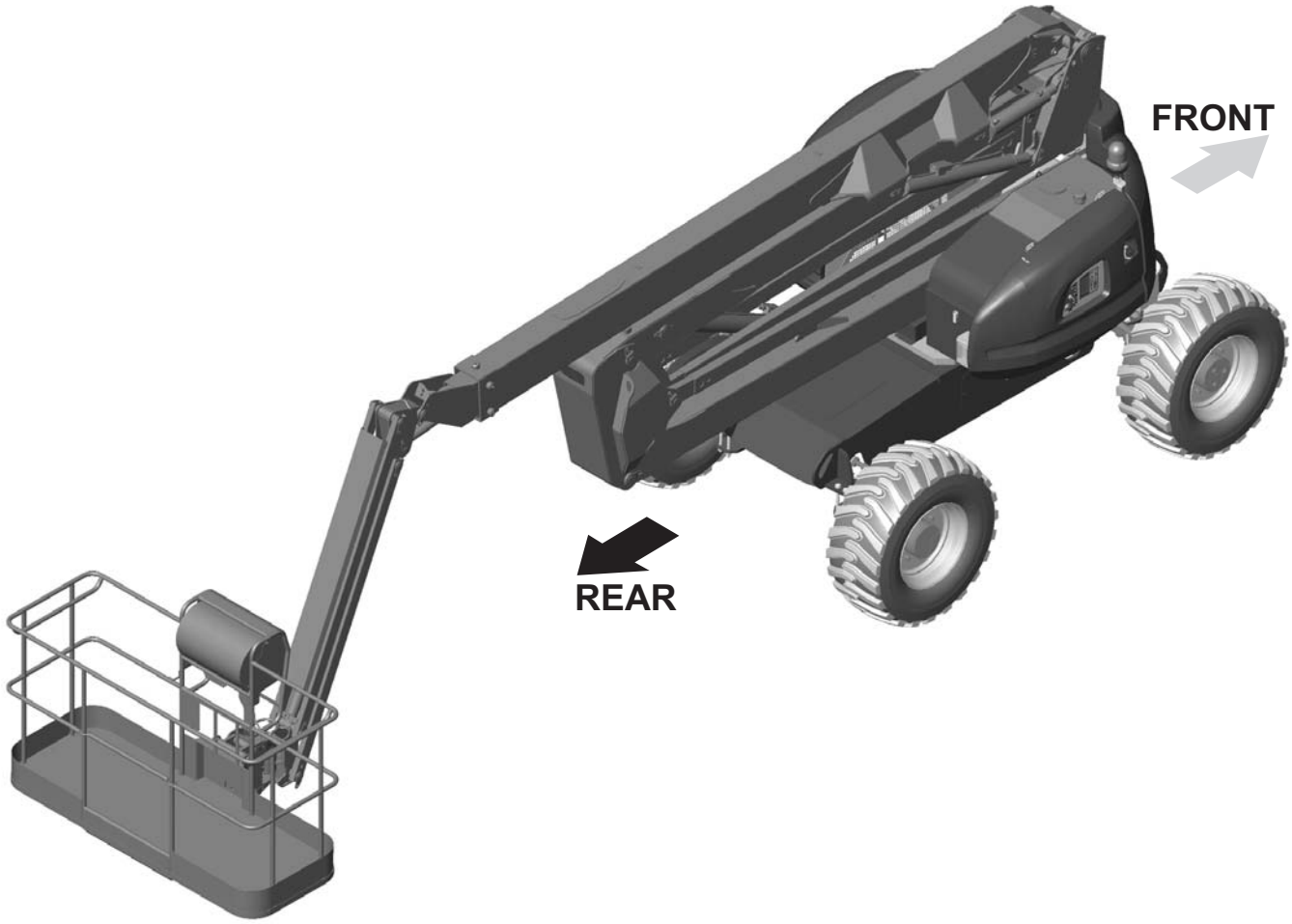

https://truckmanualshub.com/

1 - OPERATING AND SAFETY INSTRUCTIONS

https://truckmanualshub.com/

TABLE OF CONTENTS

GENUINE SPARE PARTS 1 - 5

INSTRUCTIONS TO THE COMPANY MANAGER 1 - 6

PREAMBLE **1 - 6**
THE OPERATOR **1 - 6**
THE PLATFORM **1 - 6**
A - THE PLATFORM'S SUITABILITY FOR USE 1 - 6
B - ADAPTING THE PLATFORM TO THE USUAL ENVIRONMENTAL CONDITIONS 1 - 6
C - MODIFYING THE PLATFORM 1 - 7
THE INSTRUCTIONS **1 - 7**
THE MAINTENANCE **1 - 7**

INSTRUCTIONS FOR THE OPERATOR 1 - 8

PREAMBLE **1 - 8**
GENERAL INSTRUCTIONS **1 - 8**
A - OPERATOR'S MANUAL 1 - 8
B - AUTHORIZATION FOR USE IN FRANCE (or see current legislation in other countries). 1 - 8
C - MAINTENANCE 1 - 9
D - MODIFYING THE PLATFORM 1 - 9
E - PLATFORMAXLES 1 - 9
DRIVING INSTRUCTIONS **1 - 10**
A - BEFORE STARTING THE PLATFORM 1 - 10
B - DRIVER'S OPERATING INSTRUCTIONS 1 - 10
C - ENVIRONMENT 1 - 10
D - VISIBILITY 1 - 11
E - STARTING THE PLATFORM 1 - 11
F - DRIVING THE PLATFORM 1 - 13
G - STOPPING THE PLATFORM 1 - 14
INSTRUCTIONS FOR WELDING AND BLOW TORCH WORK ON THE EXTERNAL STRUCTURE **1 - 15**
A - WITH ELECTRICAL WELDING EQUIPMENT 1 - 15
B - WITH A BLOW TORCH 1 - 15

PLATFORM MAINTENANCE INSTRUCTIONS 1 - 16

GENERAL INSTRUCTIONS **1 - 16**
MAINTENANCE **1 - 16**
LUBRICANT AND FUEL LEVELS **1 - 16**
LEVEL OF ELECTROLYTE IN THE BATTERY **1 - 16**
HYDRAULIC **1 - 16**
ELECTRICITY **1 - 17**
WELDING ON THE ACCESS PLATFORM **1 - 17**
WASHING THE PLATFORM **1 - 17**

IF THE PLATFORM IS NOT TO BE USED FOR A LONG TIME 1 - 18

INTRODUCTION **1 - 18**
PREPARING THE PLATFORM **1 - 18**
PROTECTING THE I.C. ENGINE **1 - 18**
CHARGING THE BATTERIES **1 - 19**
PROTECTING THE PLATFORM **1 - 19**
BRINGING THE PLATFORM BACK INTO SERVICE **1 - 19**

SAFETY DECALS 1 - 20

https://truckmanualshub.com/

GENUINE SPARE PARTS

ALL MAINTENANCE ON OUR ACCESS PLATFORM MUST BE CARRIED OUT USING ORIGINAL PARTS.

BY ALLOWING NON-ORIGINAL PARTS TO BE USED,

YOU RUN THE RISK

- Legally, of being liable in the event of an accident.
- Technically, of causing breakdowns to occur or of reducing your access platform's service life.

Using counterfeit parts or components not approved by the manufacturer may put an end to contract warranty and lead the maker to withdraw the machine's certificate of compliance.

BY USING ORIGINAL PARTS DURING MAINTENANCE OPERATIONS,

YOU ARE LEGALLY COVERING YOURSELF

- Any user who procures parts from another quarter does so at his own risk.
- Any user who modifies his access platform or has it modified by a service company, must consider that a new item of equipment has been brought onto the market and therefore takes liability for it.
- Any user who copies original parts or has them copied is taking a risk from the legal viewpoint.
- The certificate of compliance only binds the maker for parts chosen or produced under the maker's control.
- The practicalities of maintenance terms are set out by the maker. The maker is in no way liable in the event of the user not complying with such terms.

YOU GET THE BENEFIT OF THE MANUFACTURER'S-KNOW-HOW

THE MANUFACTURER BRINGS TO THE USER,

- His know-how and skill.
- Guaranteed quality work.
- Original replacement parts.
- Help with preventive maintenance.
- Effective help with diagnosing faults.
- Enhancements gained from feedback.
- Training for operating staff.
- Only the manufacturer knows the details of the access platform design and therefore has the best technological capability to carry out maintenance.

ORIGINAL REPLACEMENT PARTS ARE DISTRIBUTED EXCLUSIVELY BY MANITOU AND ITS DEALER NETWORK.

The list of the network of the dealers is available on the site MANITOU www.manitou.com

https://truckmanualshub.com/

INSTRUCTIONS TO THE COMPANY MANAGER

PREAMBLE

WHEN EVER YOU SEE THIS SYMBOL IT MEANS :

WARNING ! BE CAREFUL ! YOUR SAFETY OF THE PLATFOM IS AT RISK.

THE OPERATOR

- Only qualified, authorized personnel can use the platform. This authorization is given in writing by the appropriate person in the establishment with respect to the use of platform and must be carried permanently by the operator.

On the basis of experience, there are a number of possible situations in wich operating the platform is contra-indicated. Such foreseeable abnormal uses, the main ones being listed below, are strictly forbidden.

- *The foreseeable abnormal behaviour resulting from ordinary neglect, but does not result from any wish to put the machinery to any improper use.*
- *The reflex reactions of a person in the event of a malfunction, incident, fault, etc. during operation of the platform.*
- *Behaviour resulting from application of the "principe of least action" when performing a task.*
- *For certain machines, the foreseeable behaviour of such persons as : apprentices, teenagers, handicapped persons, trainees tempted to drive a platform, operator tempted to operate a truck to in a bet, in competition or for their own personal experience.*

The person in charge of the equipment must take these criteria into account when assesing whether or not a person will make a suitable driver.

***OBTAIN INFORMATION ON**:*

- *How to behave when there is a fire.*
- *The location of the nearest first aid kit and fire extinguisher.*
- *The emergency telephone numbers for calling (the doctors, ambulance, hospital and fire brigade).*

THE PLATFORM

A - THE PLATFORM'S SUITABILITY FOR USE

- MANITOU hase ensured that this platform is suitable for use under the standard operating conditions defined in this opertor's manual, with an overload test coefficient of 1.25 and an operationnal test coefficient of 1,1, as stipulated in standardised norm **EN 280** for **MPLP (Mobile Personnel Lifting Platforms)**.
- Before commissioning, the company manager must make sure that the platform is appropriate for the workto be done, and perform certain tests (in accordance with current legislation).

B - ADAPTATING THE PLATFORM TO THE USUAL ENVIRONMENTAL CONDITIONS

- In addition to series equipment mounted on your platform, any options are available, such as: flashing light, working headlight, etc.
  Contact your dealer.
- Take into account climatic and atmospheric conditions of the site of utilisation.
  . Protection against frost (see : 3 - MAINTENANCE : LUBRICANTS AND FUEL).
  . Adaptation of lubricants (ask your dealer for information).
  . I.C. engine filtration (see : 3 - MAINTENANCE : FILTERS CARTRIDGES AND BELTS).

https://truckmanualshub.com/

For operation inder average climatic conditiuons, i.e.: - 15°C and + 35°C, correct levels of lubricants in all the circuits are checked in production. For operation under more severe climatic conditions, before starting up, it is necessary to drain all the circuits, then ensure correct levels of lubricants using lubricants properly suited to the relevant ambient temperatures. It is the same for the cooling liquid..

- A platform operating in a area without fire extinguished equipement must be equipped with an individual extinguisher. There are solutions, consult your dealer.

Your platform is designed for outdoor use (see : 2 - DESCRIPTION : CHARACTERISTICS) under normal atmospheric conditions and indoor use in suitably aerated and ventilated premises. It is prohibitied to use the platform in areas where there is a risk of fire or wich are potentially explosive (e.g. Refineries, Fuel or gas depots, stores of inflammables products…). For use in these areas, specific equipment is available (ask your dealer for information).

C - MODIFYING THE PLATFORM

- For your safety and that of others, you must not change the structure and settings of the various components used in your platform (hydraulic pressure, calibrating limiters, I.C. engine speed, addition of extra equipment, addition of counterweight, unapproved attachments, alarm systems, etc.). yourself. In this event manufacter cannot be held responsible.

THE INSTRUCTIONS

- The operator's manual must always be in good condition and kept in the place provided on the platform and in the language used by the operator.
- You must necessarily replace the instructions manual, as well as any plates or stickers, il they are no longer legible or are missing or damaged.

THE MAINTENANCE

- Maintenance or repairs other than those detailed in part : 3 - MAINTENANCE must be carried out by qualified personnel (consult your dealer) and under the necessary safety conditions to maintain the health of the operator and any third party.

Your platform must be inspected periodically to ensure that it remains in compliance. The frequency of this inspection is defined by current legislation in the country in which the platform is used.

https://truckmanualshub.com/

PREAMBLE

WHENEVER YOU SEE THIS SYMBOL IT MEANS :

WARNING ! BE CAREFUL ! YOUR SAFETY OR THE SAFETY OF THE PLATFORM IS AT RISK.

the risk of accident while using, servicing or repairing your platform can be restricted if you follow the safety instructions safety measures detailed in these instruction.

- Only the operations and manoeuvres described in these operator's manual must be performed. The manufacturer cannot predict all possible risky situations. Consequently, the safety instructions given in the operator's manual and on the platform itself are not exhaustive.
- At any time, as an operator, you must envisage, within reason, the possible risk to yourself, to others or to the platform itself when you use it.

Failure to respect the safety and operating instructions, or the instructions for repairing or servicing your platform may lead to serious, even fatal accident.

GENERAL INSTRUCTIONS

A - OPERATOR'S MANUAL

- Carefully read and understand the operator's manual.
- The operator's manual must always be kept in the place provided for it on the platform and be written in the language used by the operator.
- Any operations or manoeuvres not described in the operator's manual must necessarily be forbidden right from the start.
- Follow the safety advice and the instructions on the platform.
- Ypu must necessarily replace the operator's manual, as well as any plates or stickers, If they are no longer legible or are damaged.
- A second operator must be necessarily be present on the ground as a safety measure when using the platform.
- Familiarise yourself with the platform on the terrain it has to travel over.
- The machine must also be used in accordance with good engineering practice.
- Do not use the platform it the wind speed is over 45km/h. The platform's arm must not be subjected to a lateral force of more than 40 kg (platforms for indoor use must not be used outside the building).

B - AUTHORIZATION FOR USE IN FRANCE
(Or see current legislation in other countries)

- Only qualified, authorized personnel may use the platform. This authorization is given in writing by the appropriate person in the company, in charge of using the platform, and must be permanently carried by the operator.
- The operator's is not competent to authorise the driving of the platform by another person.

https://truckmanualshub.com/

C - MAINTENANCE

- The operator must immediately advise his superior if his platform is not in good working order or does not comply with the safety notice.
- the operator is prohibited from carrying out any repairs or adjustements himself, unless he has been trained for this purpose. He must keep the platform properly cleaned if this is among his responsibilities.
- The operator must carry out daily maintenance (see : 3 - MAINTENANCE : A - DAILY OR EVERY 10 HOURS SERVICE).
- The operator must ensure tyres are adapted to the nature of the ground (see area of the contact surface of the tyres in the chapter : 2 - DESCRIPTION : CHARACTERISTICS). There are optional solutions, consult your dealer.

Do not use the platform if the tyres are damaged or excessively worn, because this could put your own safety or that of others at risk, or cause damage to the platform itself.

- In the case of electric platforms, the operator must ensure that:
. The batteries are not replaced with lighter ones (Compromising stability).
. Safety goggles are always worn when charging the batteries.
. The batteries are not charged in an explosive environment.
. There is no smoking and no naked flame directed towards the batteries whe they are being handled (during removal, re-installation and checking the levels).

D - MODIFYING THE PLATFORM

- For your safety and that of others, you must not change the structure and settings of the various components used in your platform yourself:
  . hydraulic pressure,
  . calibrating limiters,
  . I.C. engine speed,
  . addition of extra equipment,
  . addition of counterweight,
  . unapproved attachements,
  . alarm systems, etc...

  In this event, the manufacturer cannot be held reponsible.

E - PLATFORM AXLES

- Non-oscillating axles:

The chassis is rigid, so the platform can have a ground reach on only three wheels.

- At least one oscillating axle:

An oscillating axle enables the platform, when in transport position, to have a ground reach on four wheels. When moving in working position over uneven terrain, the oscillating axle is locked (the chassis is rigid) so the platform can have a ground reach on only three wheels.

https://truckmanualshub.com/

DRIVING INSTRUCTIONS

A - BEFORE STARTING THE PLATFORM

- Ensure that the intermediate rail is fully in the locked position before operating the platform from the basket.
- If the platform is new, see the Chapter : BEFORE STARTING THE PLATFORM FOR THE FIRST TIME in Section : 1 - SAFETY ADVICE AND INSTRUCTIONS.
- Carry out daily maintenance (see : 3 - MAINTENANCE : A - DAILY OR EVERY 10 HOURS SERVICE).
- Before starting the platform, check the levels :

. I.C. PLATFORMS :	I	. ELECTRIC PLATFORMS :
. I.C. engine oil	I	. Hydraulic reservoir oil.
. Hydraulic reservoir oil.	I	. Battery charge level
. Fuel.	I	
. Coolant.	I	

- Whatever his experience, the operator is advised to familiarize himself with the position and operation of all the controls and instruments before operating the platform.
- The lifting platform must be in transport position (telescope lowered and retracted) before anyone enters it.
- Make sure the horn works.

B - DRIVER'S OPERATING INSTRUCTIONS

- Wear suitable clothing for driving the platform, do not wear baggy clothes.
- Make sure you have the appropriate protective equipment for the job to be done.
- Prolonged exposure to high noise levels may cause hearing problems. It is recommended to wear ear muffs to protect against excessive noise.
- Always pay attention when using the platform. Do not listen to the radio or music using headphones or earphones.
- For increased comfort, adopt the correct position in the driver's cab.
- The operator must always be in his normal position in the driver's seat : extending arms or legs (or, in general, any part of the body), outside the basket is forbidden.
- Safety helmets must be worn.
- MANITOU recommends a safety harness in the operator's size be provided when the platform is in use (for the harness attachement in the basket , see 2 - DESCRIPTION : INSTRUMENTS AND CONTROLS).
- The control units must never in any event be used for any other than their intended purposes (e.g. climbing onto or down from the platform, portmanteau, etc.).
- In the case of scissors-type platforms, it is forbidden to use the platform without the guardrails in place.
- Suspending a load under the basket or on any part of the lifting apparatus is strictly forbidden.
- The operator must not climb into or get down from the basket unless it is at ground level (with the lifting system folded).
- The platform must not be fitted with any accessory increasing the machine's wind profile.
- Do not use a ladder or any improvised constructions in the basket to reach greater heights.
- Do not climb on the sides of the basket to reach greater heights.

C - ENVIRONMENT

- Comply with site safety regulations.
- The platform can be manoeuvred from the ground: ensure that you forbid access.
- If you have to use the platform in a dark area or at night, make sure it is equipped with working lights.
- The platforms may not be used as cranes or elevators for the permanent transport of people or materials, nor as jacks or supports.
- When operating, ensure that there is no one or anything impeding the platform's progress ans operation.
- When raising the platform, ensure that no one or anything inpedes the platform's operation and do not perform any inappropriate manœuvres.

https://truckmanualshub.com/

- Do not allow anybody to come near the working area of the platform or pass beneath an elevated load. To do this, mark your operating area with warning signs.
- Travelling on a longitudinal slope :
  - Ensure that you adapt the platform's travelling speed by controlling the speed with the travelling manipulator.
- Take into account the platform's dimensions and its load before trying to negotiate a narrow or low passageway.
- Never move onto a loading platform without having first checked :
  - That it is suitably positioned and made fast.
  - That the unit to which it is connected (wagon, lorry, etc.) will not shift.
  - That this platform is prescribed for the size and the total weight of the platform.
  - That the slope is not greater than the platform's maximum authorised slope.
- Never move onto a foot bridge, floor or freight lift, without being certain that they are prescribed for the weight and size of the platform to be loaded and without having checked that they are in sound working order.
- Be careful in the area of loading bays, trenches, scaffolding, soft land and manholes.
- Ensure that the ground under the wheels and/or stabilisers is firm and stable before raising the basket. If necessary, place suitable chocks under the stabilisers.
- Do not attempt any operations outside the plarform's capabilities.
- Ensure that the materials on the platform (pipes, cables, containers, etc ...) cannot slip off and fall. Do not heap up these materials to the pint where you have to step over them.

If the basket must remain stationary over a structure for a long period, there is a risk that the basket will rest on this structure because of the oil cooling in the cylinders or a minor leak in the cylinder locking system.
To eliminate this risk :
- Regularly check the distance between the basket and the structure and re-adjust if necessary.
- If possible use the platform at an oil temperature as close as possible to ambient temperature.

- In the case of work near aerial lines, ensure that the safety distance is sufficient between the working area of the platform and the aerial line.

You must consult your local electrical agency. You could be electrocuted or seriously injured if you operate or pack the platform too close to power cables.

If the platform comes into contact with electric wires, press the Emergency Stop button.
If you can, jump from the basket without simultaneously being in contact with the basket and the ground.
If not, call for help, wam people not to touch the basket and to switch off the power supply to the wires or have it switched off.

If the wind is in excess of 45 Km/h, do not make any movements putting the platform's stability at risk.

D - VISIBILITY

- Maintain permanently good visibility throughout the route. To increase your visibility, you can move forwards with the pendular arm slightly raised (pay attention to the risk of falls in the basket from knocking into a low doorway, overhead electric wires, travelling cranes, highway bridges, tracks or any obstacle in the area in front of the platform). In reverse, look directly behind you. In any case, avoid reversing over long distances.
- If visibility of your road is inadequate, ask someone to help, standing outside the area in which the platform will be moving, and make sure you always have a good view of this person.

https://truckmanualshub.com/

E - STARTING THE PLATFORM

PLATFORMS WITH IC ENGINES

SAFETY NOTICE

- Never try to start the platform by pushing or towing it. Such operation may cause severe damage to the transmission. In case of necessity, towing requires the platform to be set for free-wheeling (see : 3 - MAINTENANCE).
- If using an emergency battery for start-up, use a battery with the same characteristics and respect battery polarity when connecting it. Connect at first the positive terminals before the negative terminals.

Failure to respect polarity between batteries can cause serious damage to the electrical circuit. The electrolyte in the battery may produce an explosive gas. Avoid flames and generation of sparks close to the batteries. Never disconnect a battery while it is charging.

INSTRUCTIONS

- Check the closing and locking of the hood(s).
- Turn the ignition key to notch I to switch on the electrical power, which automatically starts the pre-heating system (all the bars must be displayed), the message “OK” is displayed.
- Check that everything is operating correctly by ensuring that no fault pages are displayed on the screen and no warning about the fuel level (a pump icon is present on the screen) (see : 2 - DESCRIPTION : INSTRUMENTS AND CONTROLS).
- Turn the ignition key to notch II to start.
- Release the ignition key and let the engine run at tick-over speed.

NB : In very cold weather (see: 2 - DESCRIPTION : INSTRUMENTS AND CONTROLS).

- Do not engage the starter motor for more than 15 seconds and carry out the preheating for 10 seconds between unsuccessful attempts.
- Check all control instruments when the I.C. engine is warm and at regular intervals during use, so as to quickly detect any faults and to be able to correct them without any delay.
- If any faults are displayed on the screen, stop the engine and immediately take the necessary measures.

ELECTRIC PLATFORMS

SAFETY NOTICE

- Do not use the platform if the battery is discharged to the point that movements are slowed down. In certain cases, the platform may stop (see : 3 - MAINTENANCE : EVERY DAY OR EVERY 5 HOURS FOR OPERATION, for the minimum permissible charge level).

INSTRUCTIONS

- Set the battery cut-out to the ON position.
- Check the closing and locking of the hood(s).
- Turn the ignition key to the basket position.
- Check that everything is operating correctly by ensuring that no error messages are displayed on the screen and that the machine maintenance light is not flashing (see : 2 - DESCRIPTION : INSTRUMENTS AND CONTROLS).

NB: For machines not fitted with a display or a maintenance warning light, faults can be identified from the light directly on the variable speed drive unit (to access: open the cowl on the control size, remove the casing from the variable speed drive and see whether the light is flashing).

https://truckmanualshub.com/

- If any error messages are constantly displayed or the machine maintenance light is flashing, return the key to the neutral position.
- Set the battery cut-off to the OFFposition.
- Immediately take the necessary measures.

F - DRIVING THE PLATFORM

SAFETY NOTICE

Operators should be aware of the risks connected with using the platform, notably:
- Risk of losing control.
- Risk of losing lateral and frontal stability of the platform.
The operator must remain in control of the platform.

- Do not carry out operations which exceed the capacities of your platform.
- Familiarise yourself with the platform on the terrain where it will be used.
- Ensure that the brakes work efficiently when stopping a travelling movement, taking into account the braking distances.
- Drive smoothly at an appropriate speed for the operating conditions (land configuration, load in the basket).
- take extreme care if manoeuvring the platform with the basket in the high position. Ensure you have adequate visibility.
- Take bends slowly.
- In all circumstances make sure you are in control of your speed.
- Travel slowly on damp, slippery or uneven terrain or on truck ramps.
- Always remember that the hydraulic form of steering is very sensitive to movements.
- Never leave the I.C. engine on when the platform is unattended.
- Look where you are going and always make sure you have good visibility along the route.
- Drive round obstacles.
- Never drive on the edge of a ditch or steep slope.
- Whatever your travelling speed, you must reduce the speed as much as possible before stopping.

INSTRUCTIONS

- When moving the platform a long distance, always travel with the arms folded or the scissors in the low position.
- Engage the appropriate gear (see : 2 - DESCRIPTION : INSTRUMENTS AND CONTROLS).

https://truckmanualshub.com/

G - STOPPING THE PLATFORM

SAFETY NOTICE

- Never leave the ignition key in the platform during the operator's absence.
- Make sure that the platform is not stopped in any position that will interfere with the traffic flow and at less than one meter from the track of a railway.
- In the event of prolonged parking on a site, protect the platform from bad weather, particularly from frost (check the level of antifreeze), close and lock all the platform accesses (cowls…).

INSTRUCTIONS

PLATFORMS WITH IC ENGINES

- Before stopping the platform after a long working period, leave the I.C. engine idling for a few moments, to allow the coolant liquid and oil to lower the temperature of the I.C. engine and transmission.

Do not forget this precaution, in the event of frequent stops or warm stalling of the I.C. engine, or else the temperature of certain parts will rise significantly due to the stopping of the cooling system, with the risk of badly damaging such parts.

- Stop the I.C. engine with the ignition switch.
- Remove the ignition key.
- Check that all the accesses on the platform are closed and locked (cowls…).

ELECTRIC PLATFORMS

- Remove the ground/platform control selection key.
- Check that all the accesses on the platform are closed and locked (cowls…).
- Set the battery cut-out to the OFF position (ELECTRIC PLATFORM).

https://truckmanualshub.com/

INSTRUCTIONS FOR WELDING AND BLOW TORCH WORK ON THE EXTERNAL STRUCTURE

Ensure that there are no hydraulic or electrolyte leaks on the platform.

When welding, work in the opposite direction from the control console to avoid sparks damaging it.

Any welding and cutting (blow torch) work from the basket on a building's metallic structures requires the following precautions to be taken:

A -WITH ELECTRIC WELDING EQUIPMENT

- It is essential that the machine has a discharge braid connecting the platform's chassis to the ground.
- It is also essential that the external structure to be welded is connected to the earth. If the above conditions are observed, the platform can, in this case, be in contact with the structure or the elements to be welded without damaging the electronic components.
- The power supply to the welding equipment must be via an earthed socked and any extension required just also be earthed.
- In all cases, ensure that there are no electrical arcs in the basket or on the platform (contact between the brazing rod or the torch and the welding equipment's earth). To ensure this, at any time the welding equipment's earth must not be positioned on the platform's basket but instead only as close as possible to the element to be welded.
- Switch off the welding equipment before disconnecting the earth clamp from the element or elements to be welded.

B - WITH A BLOW TORCH

- Attach the blow torch's bottles to the basket's handrails.
- instructions for welding and blow torch work on the external structure
- Do not set the blow torch down on the lip of the basket while it is still operating or point it towards the control console or its power cables.

https://truckmanualshub.com/

PLATFORM MAINTENANCE INSTRUCTIONS

GENERAL INSTRUCTIONS

- Ensure the area is sufficiently ventilated before starting the platform.
- Wear clothes suitable for the maintenance of the platform, avoid wearing jewellery and loose clothes. Tie and protect your hair, if necessary.
- Stop the engine before conducting any work on the platform, remove the ignition key and disconnect the “Minus” battery terminal.
- Set the battery cut-out to the OFF position (ELECTRIC PLATFORM).
- Read the operator's manual carefully.
- Carry out all repairs immediately, even if the repairs concerned are minor.
- Repair all leaks immediately, even if the leak concerned is minor.
- Make sure that the disposal of process materials and of spare parts is carried out in total safety and in a ecological way.
- Be careful of the risk of burning and splashing (exhaust, radiator, I.C. engine, etc.).

MAINTENANCE

- Perform the periodic service (see : 3 - MAINTENANCE) to keep your platform in good working conditions. Failure to perform the periodic service may cancel the contractual guarantee.

LUBRICANT AND FUEL LEVELS

- Use the recommended lubricants (never use contaminated lubricants).
- Do not fill the fuel tank when the I.C. engine is running.
- Only fill up the fuel tank in areas specified for this purpose.
- Do not fill the fuel tank to the maximum level.
- Do not smoke or approach the platform with a flame, when the fuel tank is open or is being filled.

LEVEL OF ELECTROLYTE IN THE BATTERY

- Check the level of the battery or batteries.

When doing this, ensure you take all the safety precautions (See : 3 - MAINTENANCE).

HYDRAULIC

- Make any repairs and fix any leaks, including minor ones, immediately.
- Do not attempt to loosen unions, hoses or any hydraulic component with the circuit under pressure.

BALANCING VALVE : It is dangerous to change the setting and remove the balancing valves or safety valves which may be fitted to your platform cylinders. These operations must only be performed by approved personnel (consult your dealer).

https://truckmanualshub.com/

Ensure that all consumables and replacement parts are disposed of safety, in an environmentally friendly mannerue.

ELECTRICITY

- Do not drop metallic items on the battery (between the “Plus” and “Minus terminals”).
- Disconnect the battery or batteries before working on the electrical circuit.
- The electrical box must only be opened by authorized personnel.

WELDING ON THE ACCESS PLATFORM

- Disconnect the battery or batteries before welding on the platform.
- When carrying out electric welding work on the platform, connect the negative cable from the equipment directly to the part being welded, so as to avoid high tension current passing through the alternator or the live ring.
- If the platform is equipped with an electronic control unit, disconnect this before starting to weld, to avoid the risk of causing irreparable damage to electronic components.

WASHING THE PLATFORM

- Clean the platform or at least the area concerned before any intervention.
- Remember to close and lock all accesses to the platform (cowls…).
- When cleaning with a pressure washer, avoid the articulation joints, and the electrical components and connections.
- If necessary, protect components likely to be damaged, and in particular the electrical components (variable speed drive, charger) and connections and the injection pump from penetration by water, steam or cleaning products.
- Dry the electrical components.
- Clean the platform of any fuel, oil or grease trace.
- Grease the shafts.

FOR ANY INTERVENTION OTHER THAN REGULAR MAINTENANCE, CONSULT YOUR DEALER.

https://truckmanualshub.com/

IF THE PLATFORM IS NOT TO BE USED FOR A LONG TIME

INTRODUCTION

The following recommendations are intended to prevent the platform from being damaged when it is withdrawn from service for an extended period.
For these operations, we recommend the use of a MANITOU protective product, reference 603726.
Instructions for using the product are given on the packaging.

Procedures to follow if the platform is not to be used a long time and for standing it up again afterwards must be performed by your dealership.

PREPARING THE PLATFORM

- Clean the platform thoroughly.
- Check and repair any leakage of fuel, oil, water or air.
- Replace or repair any worn or damaged parts.
- Wash the painted surfaces of the platform in clear and cold water and wipe them.
- Touch up the paintwork if necessary.
- Shut down the platform (see : OPERATING INSTRUCTIONS UNLADEN AND LADEN).
- Make sure the cylinder rods are all in retracted position.
- Release the pressure in the hydraulic circuits.

PROTECTING THE I.C. ENGINE

- Fill the tank with fuel (see : 3 - MAINTENANCE).
- Empty and replace the cooling liquid (see : 3 - MAINTENANCE).
- Leave the I.C. engine running at idling speed for a few minutes, then switch off.
- Replace the I.C. engine oil and oil filter (see : 3 - MAINTENANCE).
- Add the protective product to the engine oil.
- Run the I.C. engine for a short time so that the oil and cooling liquid circulate inside.
- Disconnect the battery and store it in a safe place away from the cold, after charging it to a maximum.
- Remove the injectors and spray the protective product into each cylinder for two seconds with the piston in low neutral position.
- Turn the crankshaft once slowly and refit the injectors (see I.C. engine REPAIR MANUAL).
- Remove the intake hose from the manifold or turbocharger and spray the protective product into the manifold or turbocharger.
- Cap the intake manifold hole with waterproof adhesive tape.
- Remove the exhaust pipe and spray the protective product into the exhaust manifold.
- Refit the exhaust pipe and block the outlet with waterproof adhesive tape..
  NOTE : The spray time is noted on the product packaging.
- Open the filler plug, spray the protective product around the rocker arm shaft and refit the filler plug.
- Cap the fuel tank using waterproof adhesive tape.
- Remove the drive belts and store them in a safe place.
- Disconnect the engine cut-off solenoid on the injection pump and carefully insulate the connection.

https://truckmanualshub.com/

CHARGING THE BATTERIES

- In the case of electric platforms, in order to preserve the batteries'life and their capacity, check them periodically and keep the charge level constant (see : 3 - MAINTENANCE).

PROTECTING THE PLATFORM

- Protect cylinder rods which will not be retracted, from corrosion.
- Wrap the tyres.
  NOTE : If the platform is to be stored outdoors, cover it with a waterproof tarpaulin.

BRINGING THE PLATFORM BACK INTO SERVICE

- Remove the waterproof adhesive tape from all the holes.
- Refit the intake hose.
- Reconnect the engine cut-off solenoid.
- Refit and reconnect the battery.
- Remove the protection from the cylinder rods.
- Perform the daily service (see : 3 - MAINTENANCE
- Empty and replace the fuel and replace the fuel filter (see : 3 - MAINTENANCE).
- Refit and set the tension in the drive belts (see : 3 - MAINTENANCE).
- Turn the I.C. engine using the starter, to allow the oil pressure to rise.
- Lubricate the platform completely (see : 3 - MAINTENANCE : TABLEAU D'ENTRETIEN).

Make sure the area is adequately ventiltated before starting up the platform.

- Start up the platform, following the safety instructions and regulations (see : OPERATING INSTRUCTIONS).
- Carry out all the lifting system's hydraulic movements right up to the limit switches for each cilinder.

https://truckmanualshub.com/

SAFETY STICKERS

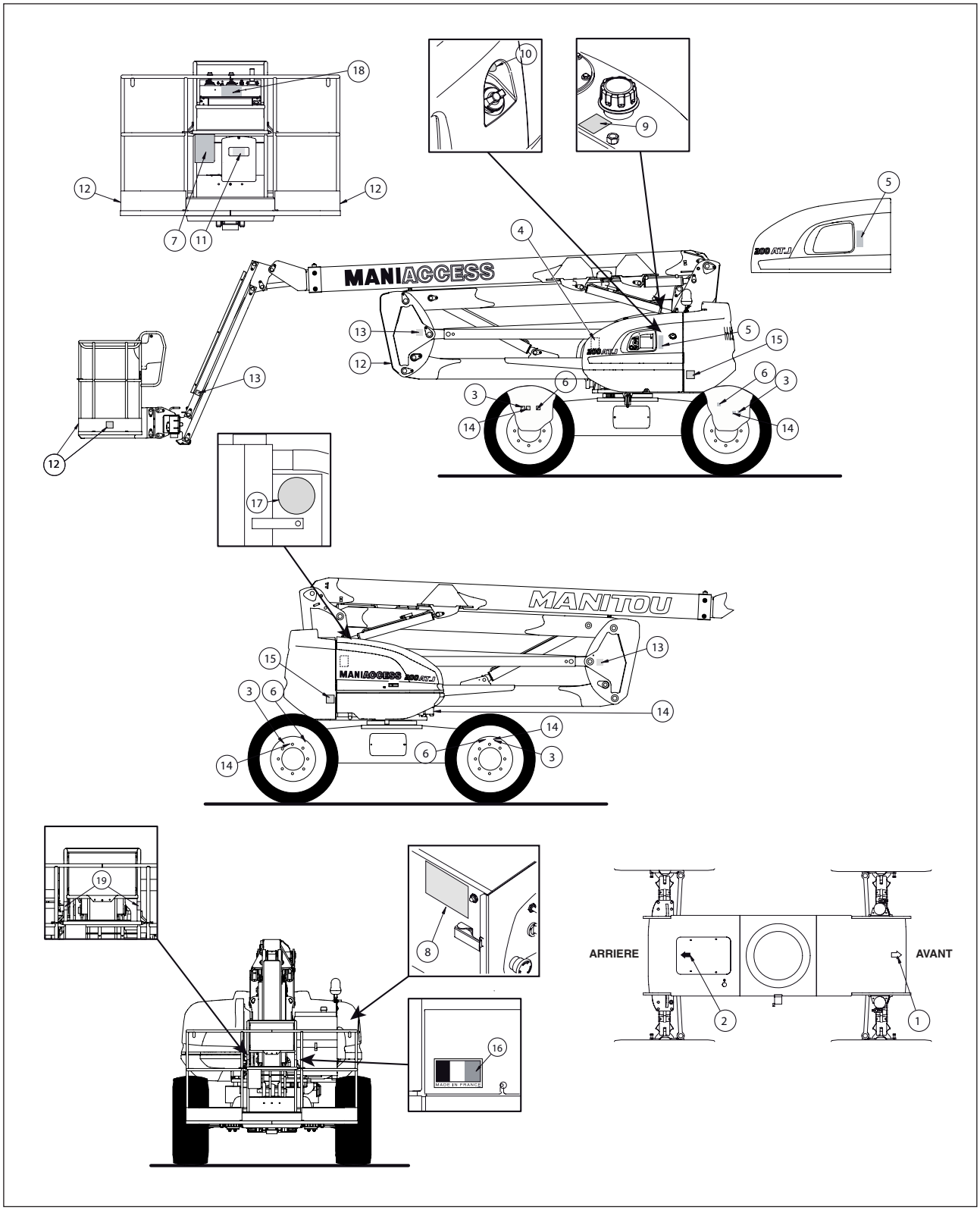

https://truckmanualshub.com/

DESCRIPTION

1 - WHITE ARROW

2 - BLACK ARROW

3 - WHEEL LOAD

4 - MANUAL CONTROL PROCEDURE

5 - SAFETY INSTRUCTIONS/ WASHING RECOMMENDATION/ TOWING

6 - ANCHORING HOOK

7 - BASKET INSTRUCTIONS / LOADING CAPACITY

8 - BACKUP PUMP

9 - HYDRAULIC OIL

10 - DIESEL

11 - PLATFORM KEY LOCATION

12 - DANGER - KEEP AWAY

13 - DANGER - RISK OF CUTS AND CRUSHING INJURIES

14 - DANGER OF CRUSHED FINGERS

15 - DANGER OF CRUSHING

16 - MADE IN FRANCE

17 - ANTIFREEZE

18 - WASHING RECOMMENDATION

19 - SAFETY ATTACHMENT

https://truckmanualshub.com/

MEANING

1. WHITE ARROW

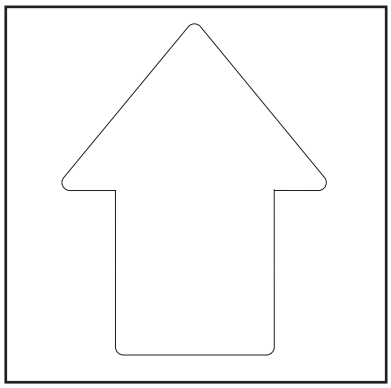

Shows the direction of travel in forward gear.

When the turret, arm structure and basket rotate by 180° relative to the frame, the travel commands are reversed. Identify the direction of movement by looking at the arrows on the frame and the basket control panel.

2. BLACK ARROW

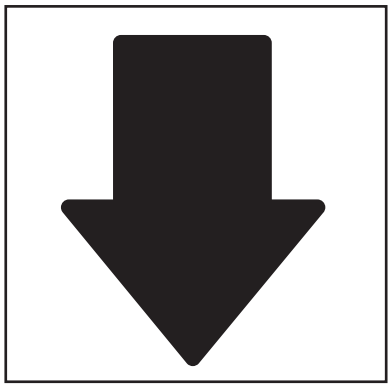

Shows the direction of travel in reverse gear.

Same as for White arrow

NOTE: As on the basket control panel or frame; white arrows show forward travel, black arrows show reverse travel.

3. WHEEL LOAD

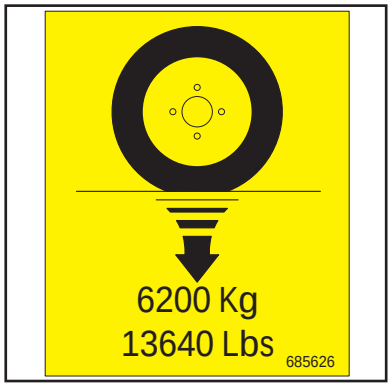

Indicates the maximum acceptable load per wheel, as well as the ground load (see 2 - DESCRIPTION: CHARACTERISTICS for the punching value).

Before using the access platform, identify the type of ground and obtain information on its punching resistance

NOTE: the weight must be checked on the platform.

4. MANUAL CONTROL PROCEDURE

Describe the procedure for: lowering or raising the articulated arms, deploying or retracting the telescope, turning the turret and raising or lowering the pendular arm with the backup pump and manual controls in the event of an accident or breakdown.

https://truckmanualshub.com/

5 A. Safety instructions

Read the safety and operating instructions before starting the platform.

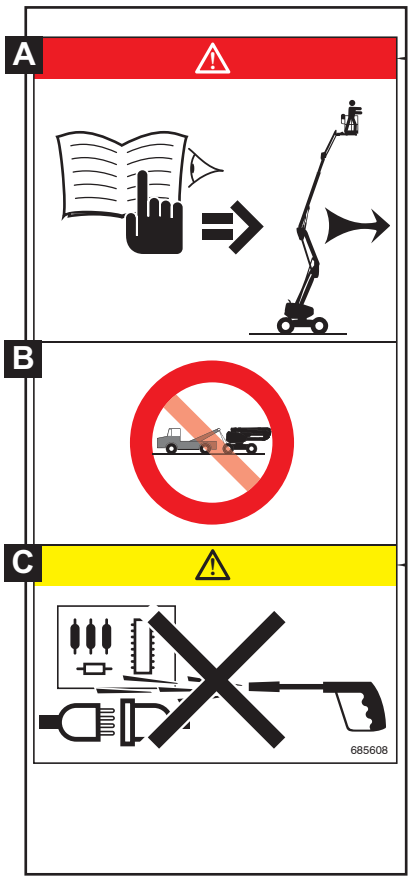

5 B. Towing

This sticker indicates that the machine must not be towed in the event of breakdown.

5 C. Washing recommendation

It is strictly forbidden to direct a high-pressure cleaning jet onto the control buttons and electrical components.

6. Anchoring hook

This sticker locates the anchoring points for attaching the platform to the bed of a truck.

7. Basket instructions / loading capacity

Describes three points:
- the platform's aptitude for use indoors and outdoors.
- the risk of electric shock.
- recommendation to read the instructions for further information on safety regulations.

NOTE: Capacities are specific to each platform; look at this sticker for your platform.

https://truckmanualshub.com/

8. Backup pump

This backup pump must be used only in the event of a problem or failure.

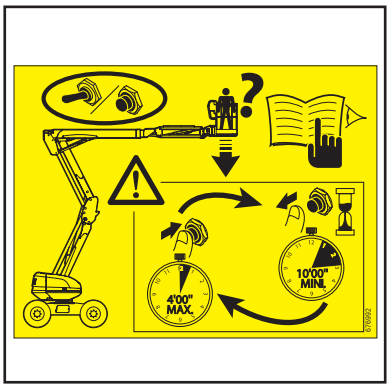

9. Hydraulic oil

Indicates that this tank is designed to hold hydraulic oil only.

NOTE: See MAINTENANCE: LUBRICANTS

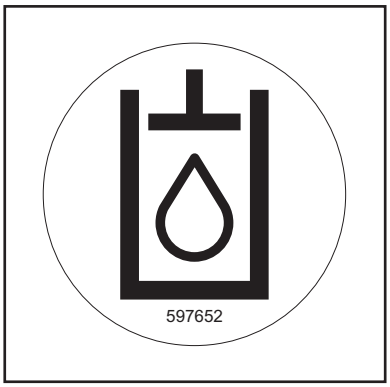

10. Diesel

Indicates that this tank is designed to hold fuel for diesel vehicles only.

11. Platform key location

The spare keys for the platform (ignition, control selector, opening housings...) are stored in the place provided for the purpose.

.

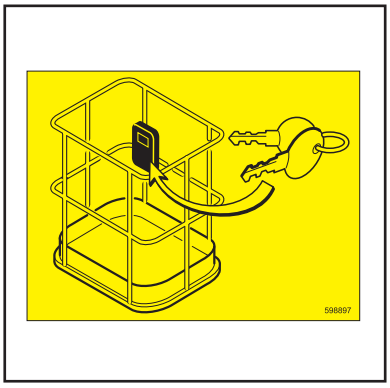

https://truckmanualshub.com/

12. Danger – keep away

It is strictly prohibited to cross or park under the structure (arms, scissor lift, pendular arm, basket...) or within the platform's radius of movement.

13. Danger - risk of cuts and crushing injuries

It is strictly prohibited to put your fingers or any other part of the body in the lifting mechanism components (arms, scissor lift, pendular arm)...) risk of cuts and crushing injuries.

14. Danger of crushed fingers

It is strictly prohibited to put your fingers in the lifting mechanism components (arms, scissor lift, pendular arm)...) risk of cuts and crushing injuries.

15. Danger of crushing

It is strictly prohibited to park in this area when the platform is moving (rotation...). The components on which the stickers are posted could hit you; risk of crushing.

https://truckmanualshub.com/

16. Made in France

This sticker indicates that the machine was manufactured in France.

17. Antifreeze

This sticker means that there is antifreeze in the IC engine.
If the antifreeze protection has different characteristics from the original product, the -30°C or -40°C box is ticked.

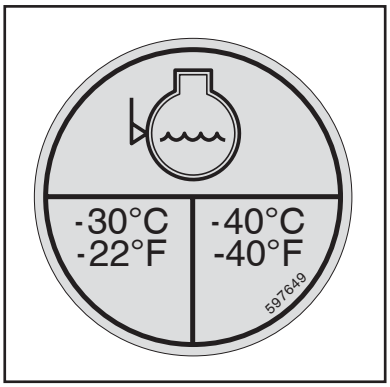

18. Washing recommendation

It is strictly forbidden to direct a high-pressure cleaning jet onto the control buttons and electrical components.

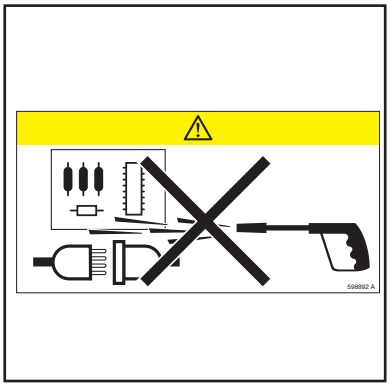

19. Safety attachment

This sticker indicates the place where the safety harness must be attached.

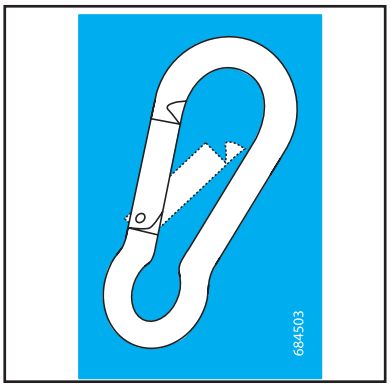

https://truckmanualshub.com/

2 - DESCRIPTION

https://truckmanualshub.com/

https://truckmanualshub.com/

TABLE OF CONTENTS

PLATFORM IDENTIFICATION	2 - 4
CHARACTERISTICS	2 - 8
DIMENSIONS 200 ATJ	2 - 12
PLATFORM OPERATION	2 - 14
CONTROL INSTRUMENTATION	2 - 16
GROUND BACKUP AND MAINTENANCE STATION	2 - 20
BASKET COMMAND AND CONTROL STATION	2 - 28
USE OF THE PLATFORM	2 - 51
RESCUE PROCEDURE	2 - 57

https://truckmanualshub.com/

IDENTIFICATION OF THE ACCESS PLATFORM

As our policy is to promote a constant improvement of our products, our range af access platforms may indergo certain modifications, without obligation for us to advise our customers.

When you order parts, or when you require any technical information, always specify :

NOTE : For the owner's convenience, it is recommended that a note of these numbers is made in the spaces provided, at the time of the delivery of the access platform.

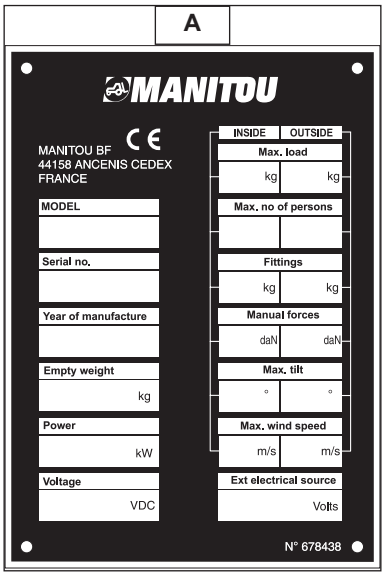

PLATE MANUFACTURER OF THE ACCESS PLATFORM (FIG. A)

- Model _____
- Serial Nr _____
- Year of manufacture _____

LOCATION OF THE MANUFACTURER'S PLATE (FIG. B)

The manufacturer's plate is fastened to the rear of the chassis on the left-hand side.

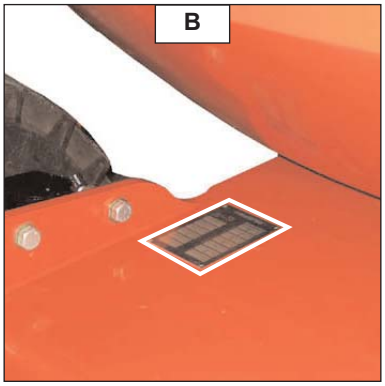

I.C. ENGINE (FIG. C)

- Engine Nr _____

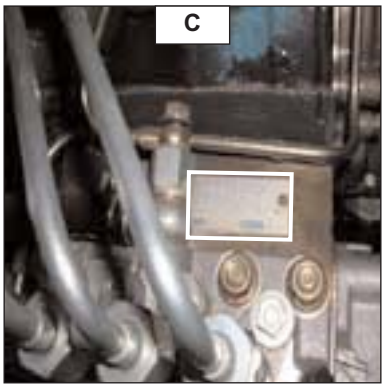

https://truckmanualshub.com/

HYDROSTATIC PUMP (FIG. D)

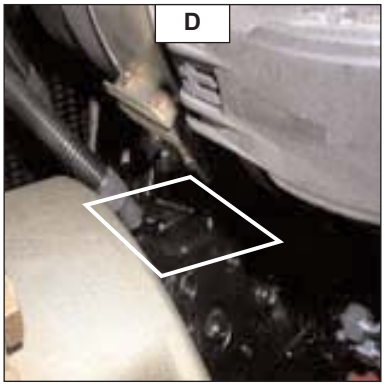

- Pump Nr _____
- Codification type _____
- Manufacturer's Nr _____
- Year of manufacture _____

FRONT AXLE ASSEMBLY (FIG. E)

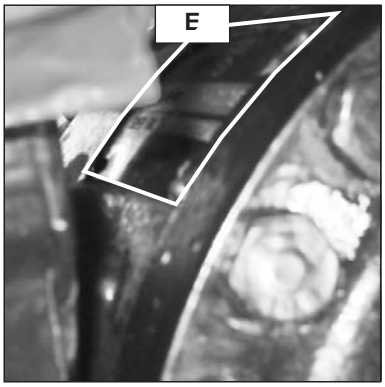

- Axle type _____
- Serial Nr _____
- Maker's Nr _____

REAR AXLE ASSEMBLY (FIG. F)

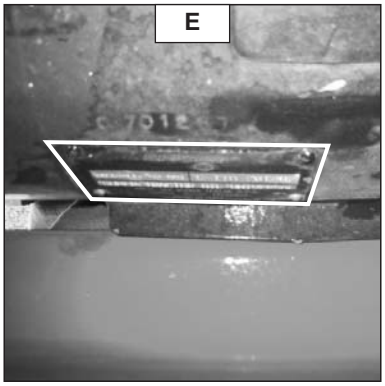

- Axle type _____
- Serial Nr _____
- Maker's Nr _____

https://truckmanualshub.com/

BEFORE STARTING UP A PLATFORM FOR THE 1ST TIME

INTRODUCTION

- Our access platforms have been designed for easy handling by the operator and maximum maintenance easiness for the mechanic.

- However, before commencing to operate the access platform, the user should carefully read and understand the various chapters of this manual which has been provided to solve driving and maintenance problems. By following these instructions the user will be able to take full advantage of the versatility of this access platform.

- The operator must familiarize himself with the positions and functions of all the controls and instruments before operating the access platform.

Do not attempt to start a new access platform before the following checks have been carried out :

LUBRICATION

- Check that all the correct grades of oils and greases that are required are available (See chapter : SERVICING SCHEDULE) and top up if necessary.

For operation under average climatic, i.e. : between : -15°C à +35°C, correct levels of lubrificants in all the circuits are ensured in works.
For operation under more severe climatic conditions, before starting up, it is necessary to drain all the circuits, then ensure corrects levels of lubricants using lubricants properly suited to the relevant ambient temperatures. It is the same for the cooling liquid (Contact your dealer for information, if necessary).

AIR FILTER

- Ensure that the air filter is undamaged and not choked.
- Tighten the fastening devices if necessary.

Never use the platform with no air filter or with a damaged air filter.

COOLING SYSTEM

- Never start up the platform without first checking the level of the cooling liquid or when the fan belt is damaged or broken.

HYDRAULIC SYSTEM

- Check by a visual examination that there are no leaks or oil oozing in the hoses, connections and unions. If necessary, tighten or control the defective connections.
- Also check that the tank oil level is correct.

https://truckmanualshub.com/

TYRES

- Make sure that the wheel nuts are correctly tightened (See chapter : SERVICING SCHEDULE - B EVERY 3 MONTHS OR EVERY 150 WORKING HOURS SERVICE)

FUEL SYSTEM

- Check that all fuel lines are secured.
- If necessary drain the fuel filter and bleed the fuel system of air.

ELECTRICAL CIRCUIT

- Check the level and the density of the electrolyte in the battery.
- Check the components of the electrical system, the connections and fastening devices.

IF NECESSARY, CONSULT YOUR DEALER.

https://truckmanualshub.com/

CHARACTERISTICS

ENGINE

- Type	**PERKINS 404C22 atmospheric diesel**
- Number of cylinders	4 in line
- Numbere of phases	4
- Injection system	Direct injection
- Firing sequence	1.3.4 2
- Cubic capacity	2216 cc
- Bore	84 mm
- Stroke	100 mm
- Volume ratio	23.3 : 1
- Nominal revs	2480 rpm
- Tick-over	1400 rpm
- Max. revs empty	2590 tr/mn
- Power ISO/TR 14396	34.1 kw
- Max. torque	143 Nm à 1800 rpm

COOLING CIRCUIT

- Type	Water
- Fan	Suction
. Number of blades	6
. Diameter	390 mm
- Thermostat	
. Start opening	82°C
. Fully open	95°C

ELECTRICAL CIRCUIT

- Earth	Negative
- Battery	12 V - 105 A
- Alternator	14 V - 55 A
- Voltage regulator	Incorporated into the alternator
- Starter	12 V - 2 kw

HYDROSTATIC TRANSMISSION

HYDROSTATIC PUMP

- Type	**A10VG45** à cylindrée variable.
- Direction reverser	Electromagnetic 12 V
- Main pump	
. Max. cubic capacity	45 cc
. Min. cubic capacity	0 cc
. Max. flow	110 L/mn
. Operating pressure	350 Bar max.
- Boost pump	
. Cubic capacity	8,4 cc
. Max. flow	20,10 L/mn
. Boost pressure at max flow	25 Bar (Transmission in neutral).
- Filtration	
. Suction	10 Microns nominal.

HYDROSTATIC MOTOR

- Type	**A2FM107** with fixed cubic capacity

https://truckmanualshub.com/

AUXILIARY HYDRAULIC CIRCUIT

- Pump type	Gear pump
. Cubic capacity	22.5 cm^3
- Lifting, tilting, telescope, steering, rotation circuit	
. Flow at max. revs empty	56 L/mn
. Pressure	200 Bar
- Filtration	
. Pressure	10 Microns

CONNECTION BOX FUSES*

- F1 (1 Fig A)	+BAT calculator UPC 30	30 A
- F2 (2 Fig A)	+BAT function tempo PVPX	1 A
- F3 (3 Fig A)	+APC Exterior	5 A
- F4 (4 Fig A)	+BAT Basket	7.5 A
- F5 (5 Fig A)	+BAT Screen CEK20	1 A
- F6 (6 Fig A)	+BAT Ignition key / relais +AP / +APC general	1 A
- F7 (7 Fig A)	EV start synchro / +start	30 A
- F8 (8 Fig A)	+BAT safety pump	5 A
- F9 (9 Fig A)	Earth BC303	30 A
- F10 (10 Fig A)	Screen earth CEK20	1 A
- F11 (11 Fig A)	Basket earth	5 A
- F12 (12 Fig A)	Calculator earth UPC30	5 A
- F13 (13 Fig A)	+APC screen CEK20	1 A
- F14 (14 Fig A)	+APC basket	1 A
- F15 (15 Fig A)	+APC UPC30	1 A
- F16 (16 Fig B)	Preheat	60 A

* *: See 4 - ELECTRICITY for their location*

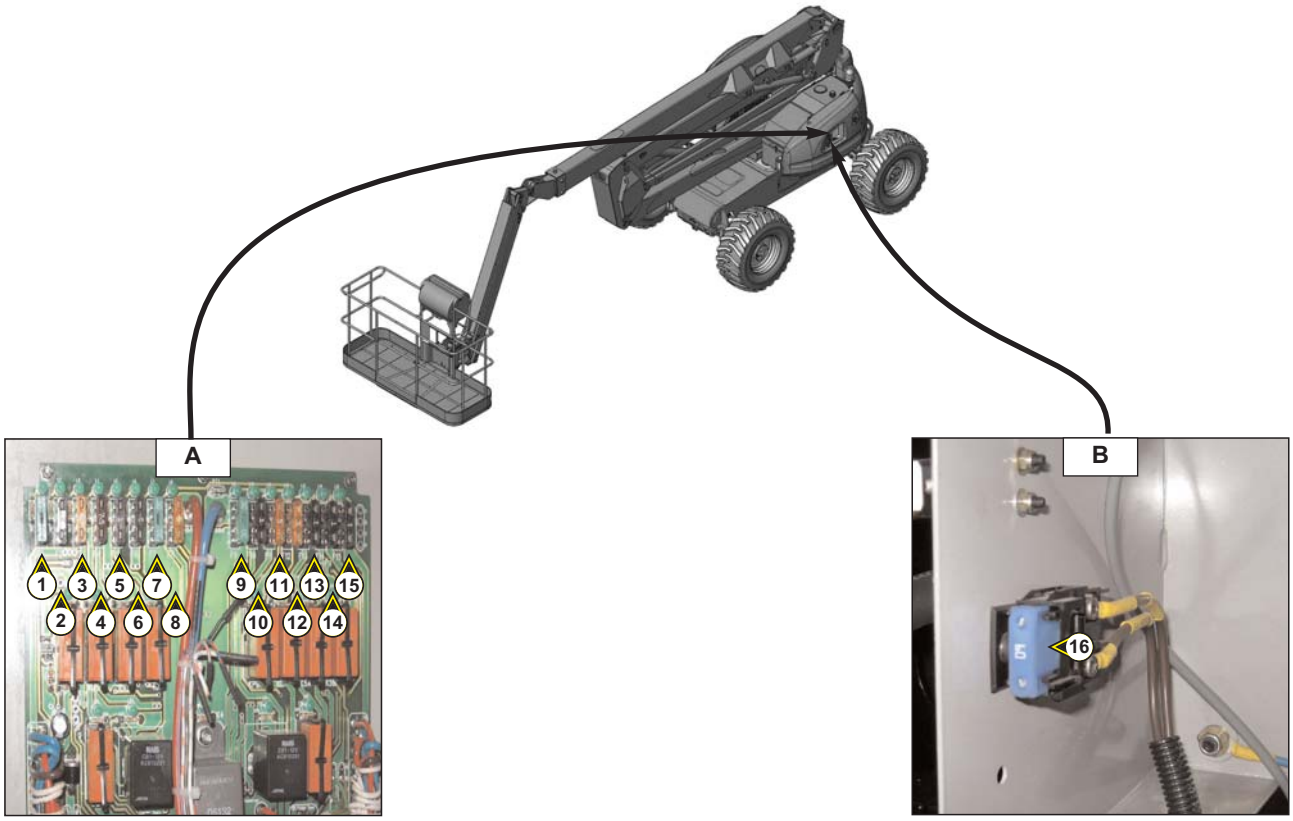

https://truckmanualshub.com/

200 ATJ

SPECIFICATIONS

- Use		Interior or exterior
- Capacit		230 kg i.e. 2 people
- Weight of the equipment that can be loaded :		
	With one person in the basket	150 kg
	With two people in the basket	70 kg
- Hydrostatic transmission		4 wheel drive 4 wheel steer
- Turret rotation:	200 ATJ standard:	350°
	200 ATJ (continuous rotation option)	continuous
- Operating speed		0.8 km/h
- Travel speed:		
	Tortoise	2.5 km/h
	Ramp	2.5 km/h
	Hare	4.7 km/h
- Operating height		20,00 m
- Floor height		18,00 m
- Max offset		12,00 m
- Overhang		8,00 m
- Weight of platform:		
	Empty	10000 Kg
	With nominal load	10230 Kg
- Number of gears		4
- Traversable slope		40 %
- Clearance under chassis		0.43 m
- Clearance inder door		0.34m
- Max permitted wind speed		45 km/h
- Max permitted tilt		5° ou 9%
- Max permitted manual horizontal force		40 daN

- 1 daN = 1kg

FRONT - REAR TYRES

DIMENSIONS	TYRES FILLING	LOAD PER TYRE EMPTY F	LOAD PER TYRE EMPTY R	UNDER MAX LOAD + OFFSET ON 1 WHEEL F / R	FLOOR AREA SUPPORTING 1 WHEEL	PRESSURE
405-70-20	FOAM	2175 KG	2825 KG	6200 KG	600 CM^2	10,33 DaN/CM^2

VIBRATION LEVEL

- Vibrations perceived by the hands-arms and body overall:
  - Mean quadratic values for the upper limbs: < 2.5 m/s^2
  - Mean quadratic values for the body: < 0.5 m/s^2

https://truckmanualshub.com/

https://truckmanualshub.com/

DIMENSIONS 200 ATJ

A	8475mm
A1	6260mm
B	2400mm
C	2700mm
C1	2840mm
D	2400mm
E	430mm
F	340mm
G	1300mm
H	3950mm
I	5000mm
J	7450mm
K	3030mm
L	420mm

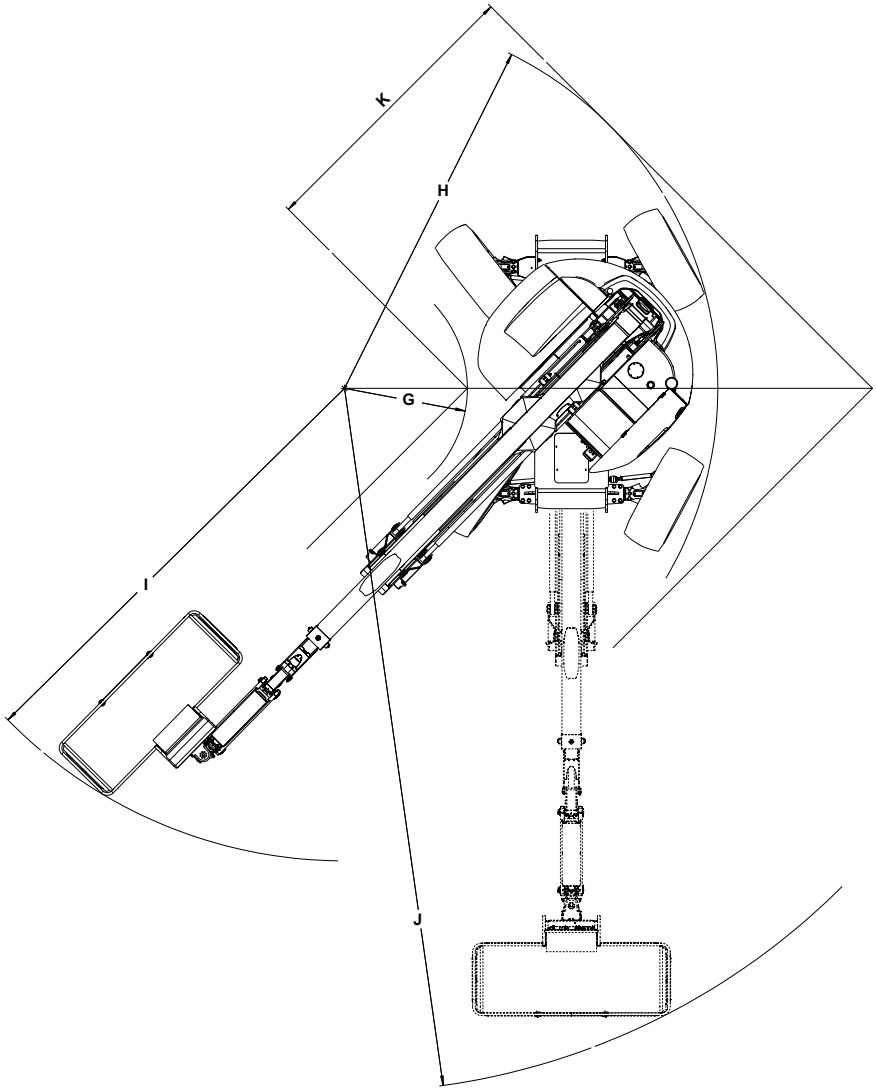

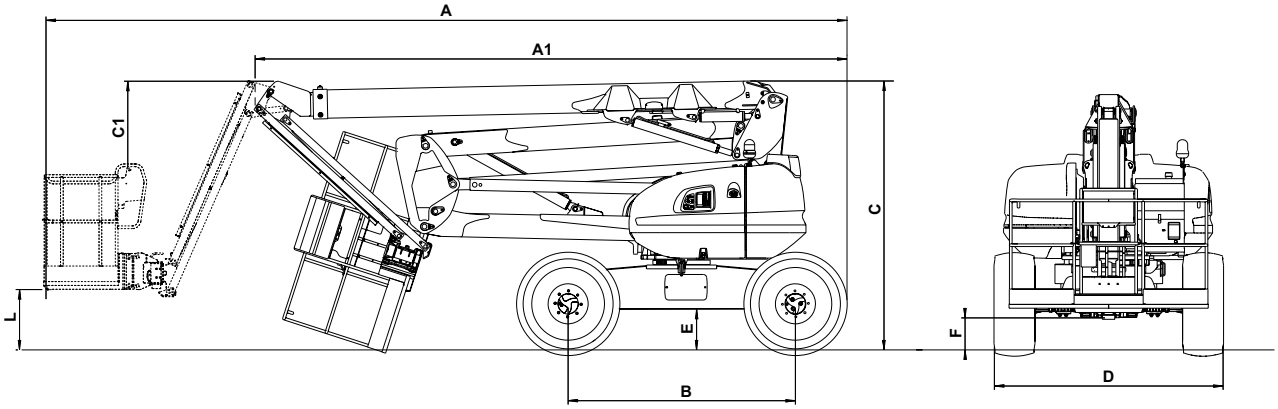

https://truckmanualshub.com/

G1	4155mm
G2	11475mm
G3	10320mm

H1	18270mm
H2	8090mm
H3	320mm

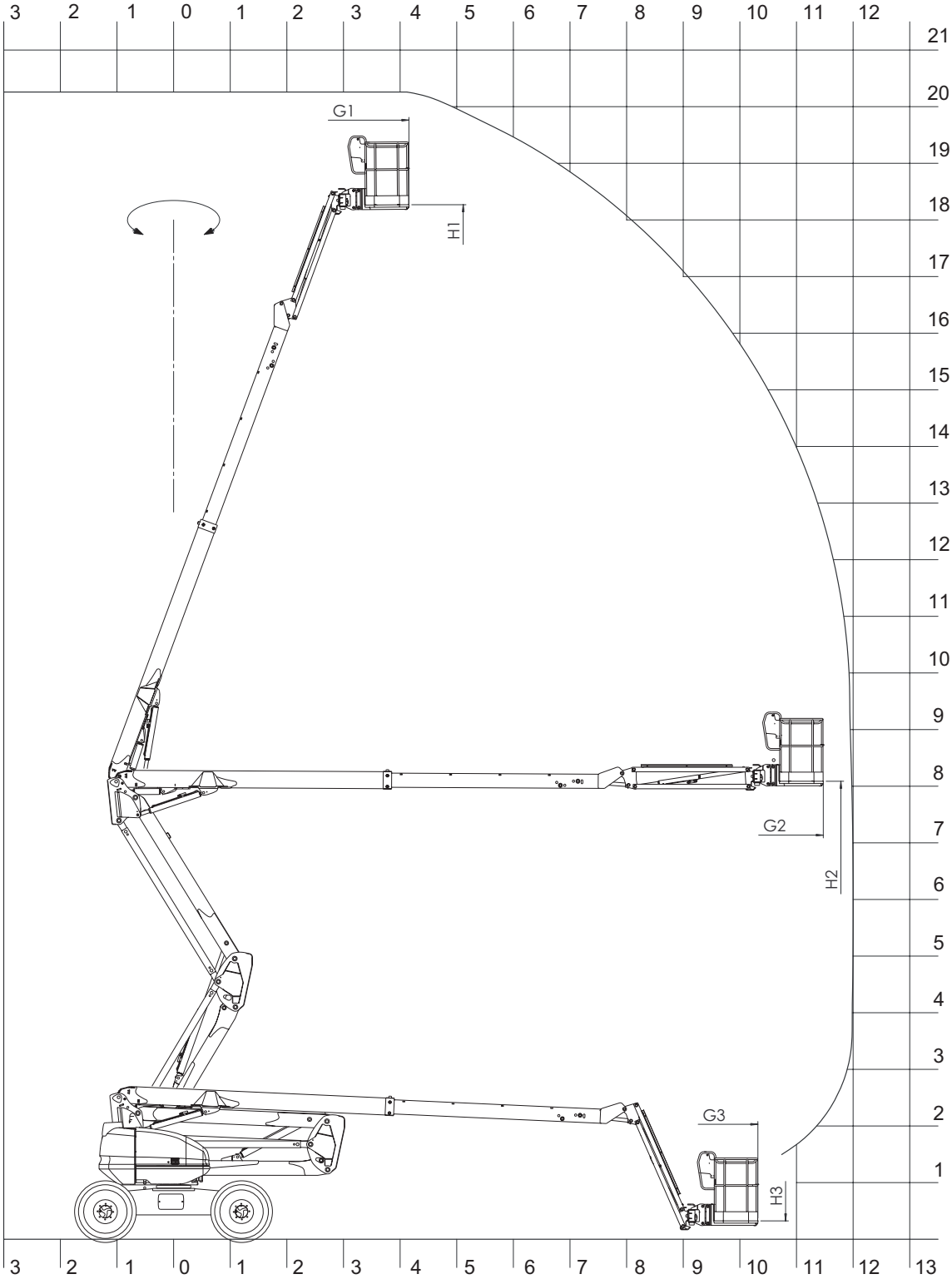

https://truckmanualshub.com/

PLATFORM OPERATION

DESCRIPTION

- This machine is a personnel lifting platform. It consists of a working platform attached to the end of a pendular arm which is itself fixed to the end of a telescopic arm, all mounted on a framework of articulated arms.
- MANITOU lifting platforms are designed to carry personnel, their tools and supplies (within the authorized weight limit, see paragraph on "SPECIFICATIONS") to the desired working height, to reach places which are difficult to access, above installations or buildings.

- The lifting platform is equipped with a control post in the basket. From this control post, the operator can drive and move his machine forwards or backwards. The operator can raise or lower the arms, extend or retract the telescopic arm, turn the turret or basket to right or left. The basket, arms and turret can be rotated to an angle of 355 degrees, non-continuously, either right or left of its folded position.

- The lifting platform is also equipped with a ground backup and maintenance post which can control all elevator functions except travel. The base controls must only be used in an emergency, to bring the operator back to ground level if he is incapable of doing so himself.
- The ground backup and maintenance post and the basket control post must be checked by the operator every day.

Stickers containing characteristics, safety and emergency procedures are affixed to the machine. The operator must read them and understand their content. To avoid any risk of misinterpreting the pictograms, see the paragraph on "SAFETY STICKERS" chapter 1-INSTRUCTIONS AND SAFETY REGULATIONS

- - Lifting platform movements are controlled by a hydraulic pump powered by the IC engine. The hydraulic components are controlled by electrovalves activated via contactors and the control manipulator.
- The controls on the base or basket control panel, activated with toggle switches, are either on or off.
- **The base control panel is equipped with a fail-safe switch. This must be activated from the base panel. Releasing it stops movement.**

- The lifting platform is a four-wheel drive machine powered by an IC engine. The drive wheels are equipped with hydraulically released spring brakes. These brakes come on automatically as soon as the travel manipulator is put back into neutral.

- The lifting platform can be raised within the limit of its capacity (see "SPECIFICATIONS" in this chapter). If the load does not exceed the maximum capacity of the basket, you can move to any position on condition that the machine is on ground with a slope not exceeding 5°.

GENERAL

- In the following pages you will find all the information needed to use the machine. It includes procedures for using, operating, parking, loading and transporting the platform.

https://truckmanualshub.com/

SLOPE

When the platform has reached the maximum authorised slope (see chapter on: CHARACTERISTICS), LED **34*** on the basket control panel flashes regularly. Furthermore, the buzzer **41*** in the basket sounds intermittently.
All "AGGRAVATING" arm elevation and telescope extension movements are prohibited for reasons of safety.

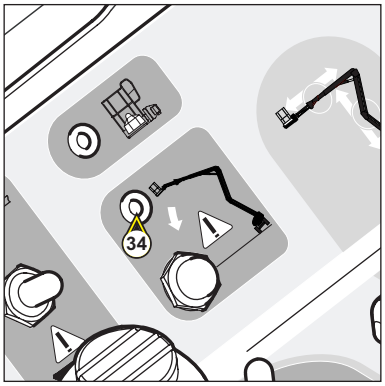

To restore these functions, perform retraction operations only:
- return to safety position by retracting the telescope and lowering the arms, then reposition the platform on more horizontal land so that you can carry out elevation or extension movements.

OVERLOAD

When the platform has reached the maximum authorised weight (see chapter on: CHARACTERISTICS) in the basket. A message is displayed on the ground backup and maintenance post screen **6*** and LED **33*** on the basket control panel flashes regularly. Buzzer **41*** in the basket sounds constantly. All movements are prohibited for reasons of safety.

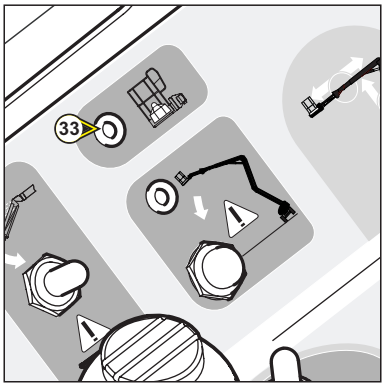

To restore these functions:
- offload the basket by removing the object(s) responsible for the overload

OR,

- ask someone on the ground to bring the platform down manually (see end of "Emergency procedure" and "Safety stickers" in chapter 1 on "Safety instructions and regulations").

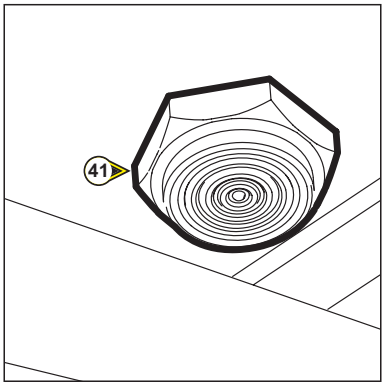

*** : the above identifiers are the same as those used in the description of these components in the following pages.**

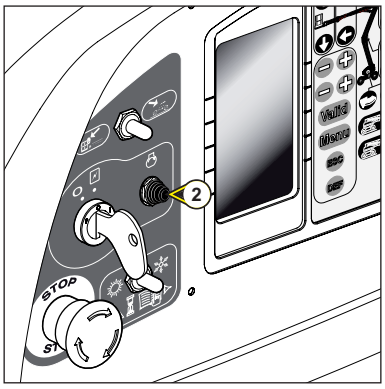

https://truckmanualshub.com/

A - GROUND BACKUP AND MAINTENANCE STATION

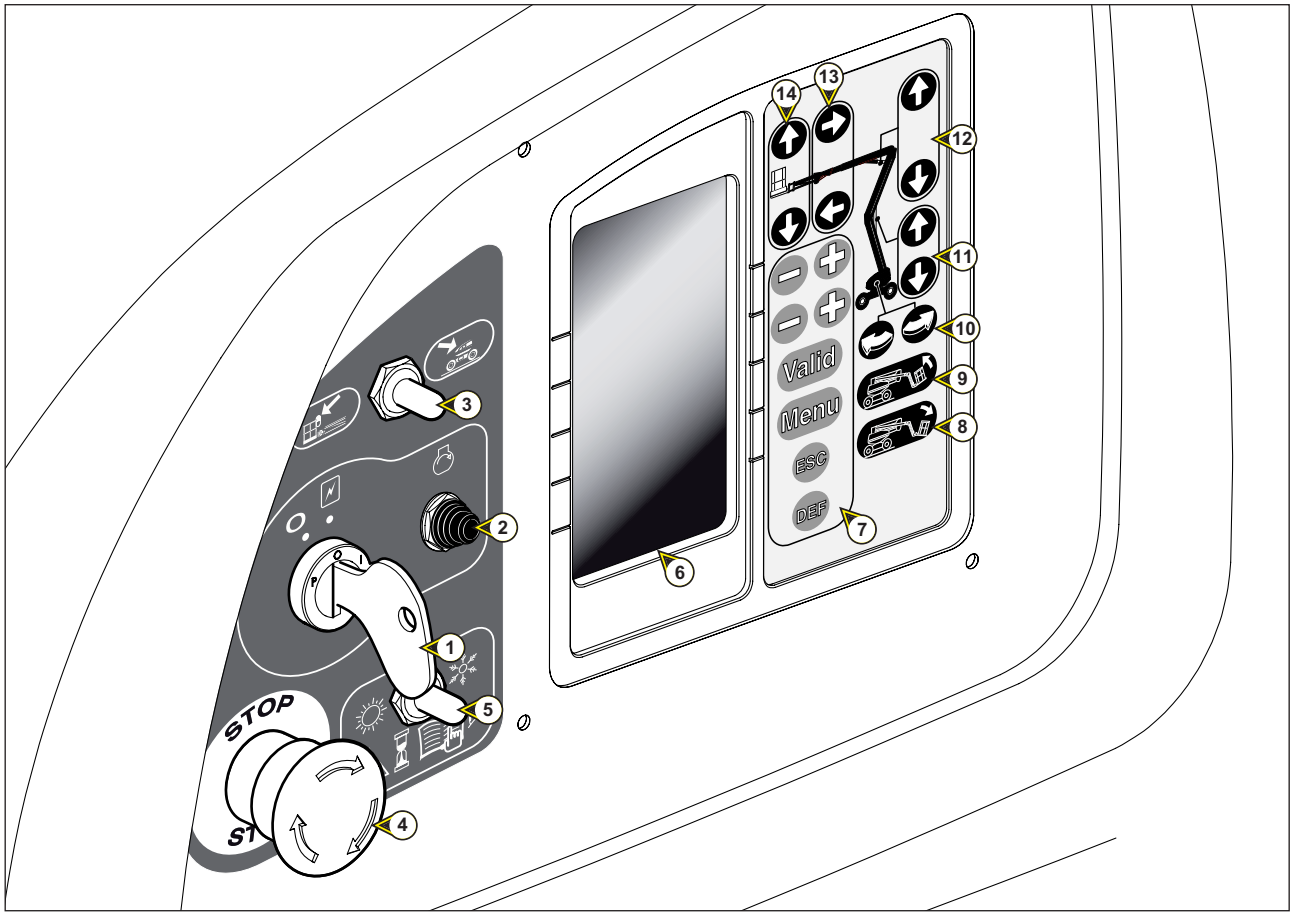

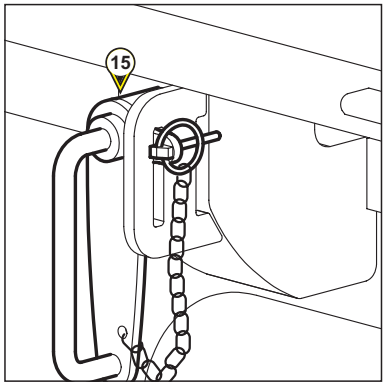

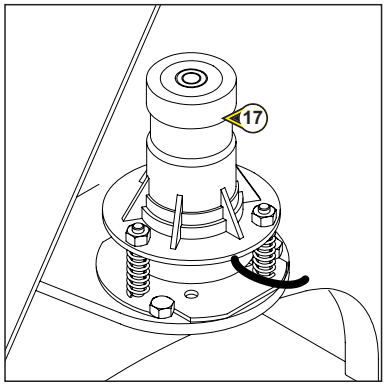

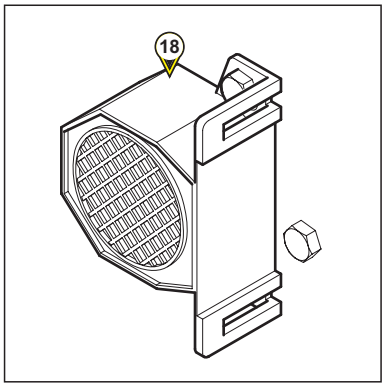

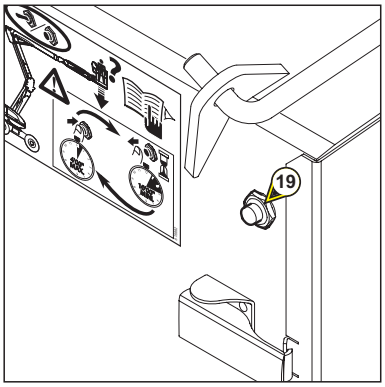

https://truckmanualshub.com/

A - GROUND BACKUP AND MAINTENANCE STATION

1 - IGNITION SWITCH

2 - START CONTROL BUTTON

3 - FLOOR / PLATFORM CONTROL SELECTOR SWITCH

4 - EMERGENCY STOP

5 - ENGINE STARTING ASSISTANCE IN THE EVENT OF COLD TEMPERATURES

6 - INTERFACE SCREEN

7 - SCREEN INFORMATION VALIDATIONS BUTTONS

8 - BASKET DOWNWARD TILT BUTTON

9 - BASKET UPWARD TILT BUTTON

10 - TURRET ROTATION BUTTONS

11 - LOWER ARM RAISING / LOWERING BUTTONS

12 - UPPER ARM RAISING / LOWERING BUTTONS

13 - TELESCOPE EXTENSION / RETRACTION BUTTONS

14 - PENDULAR ARM RAISING / LOWERING BUTTONS

15 - TURRET ROTATION LOCK

16 - REVOLVING LIGHT

17 - TILT SENSOR

18 - AUDIBLE ALARM

19 - EMERGENCY PUMP BUTTON

https://truckmanualshub.com/

B - Basket command and control station

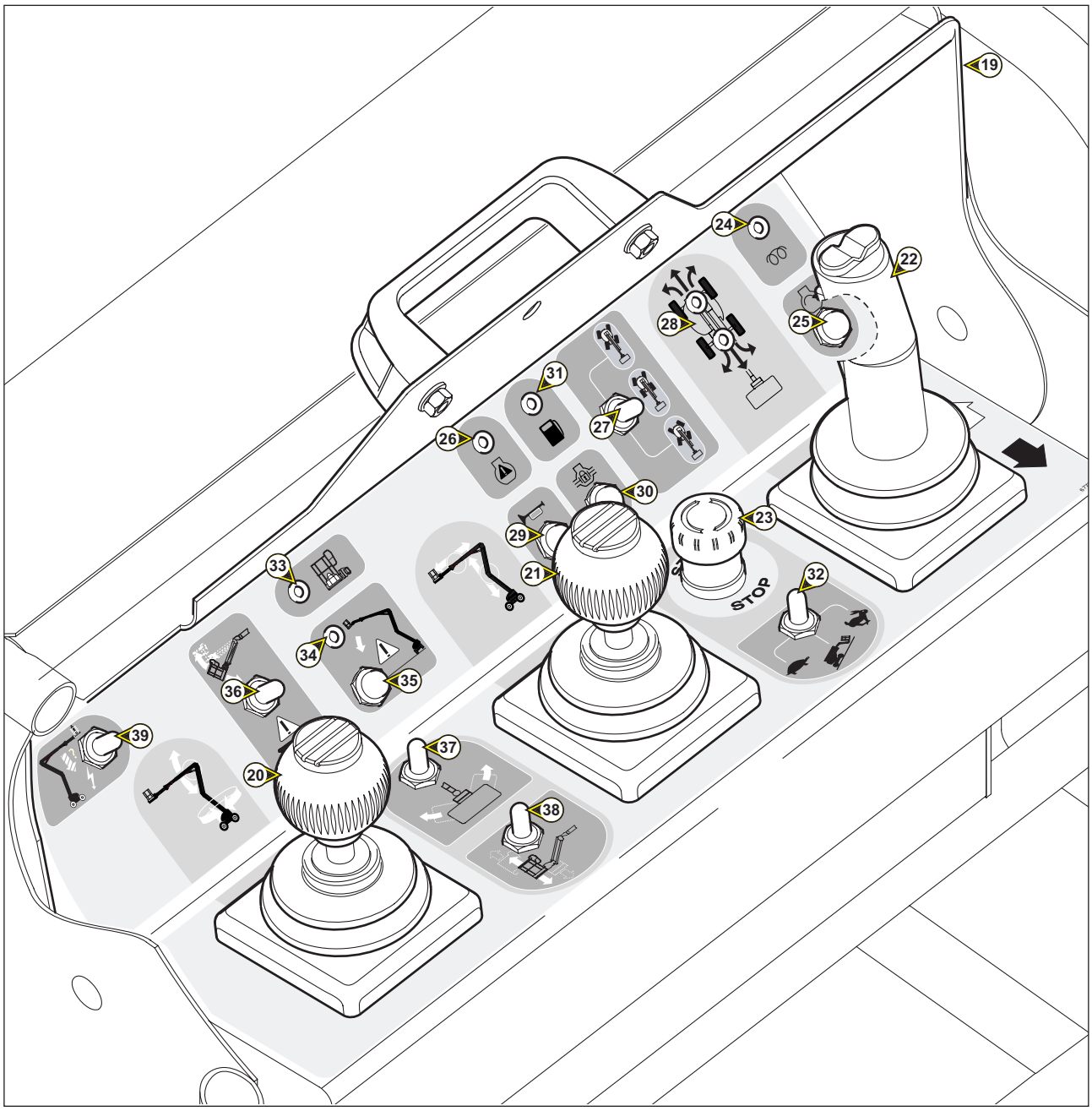

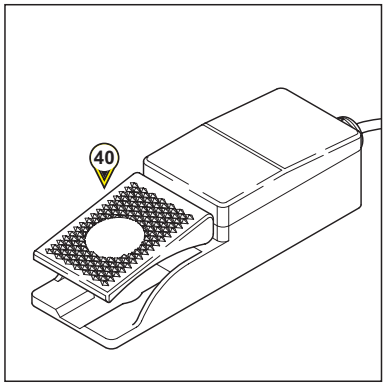

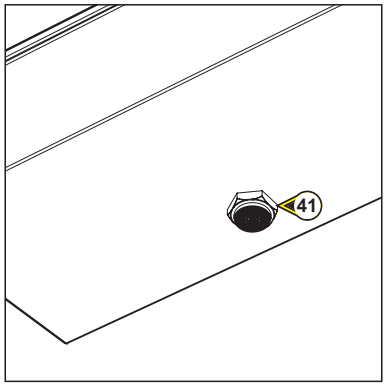

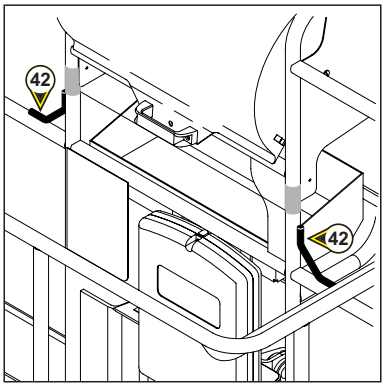

https://truckmanualshub.com/

B - BASKET COMMAND AND CONTROL STATION

19 - CONSOLE PROTECTIVE COVER

20 - UPPER ARM RAISING & LOWERING AND TURRET ROTATION CONTROL LEVER

21 - LOWER ARM RAISING & LOWERING AND TELESCOPE EXTENSION & RETRACTION CONTROL

22 - PLATFORM FORWARD / REVERSE MOVEMENT AND RIGHT / LEFT CONTROL LEVER

23 - EMERGENCY STOP

24 - "PRE-HEATING" INDICATOR LIGHT

25 - START CONTROL BUTTON

26 - "ENGINE FAULT" INDICATOR LIGHT

27 - DIRECTION MODE SELECTOR

28 - AXLE ALIGNMENT LEDS

29 - AUDIBLE ALARM CONTROL BUTTON

30 - DIFFENRENTIAL LOCKING CONTROL BUTTON

31 - LOW FUEL INDICATOR

32 - TRAVELLING SPEED SELECTOR SWITCH

33 - "OVERLOAD" INDICATOR LIGHT

34 - "TILT" INDICATOR LIGHT

35 - "USE ON SLOPE" BUTTON

36 - BASKET TILTING SWITCH

37 - BASKET ROTATION SWITCH

38 - BASKET PENDULAR ARM SWITCH

39 - "EMERGENCY PUMP" BUTTON

40 - "DEAD-MEN'S" PEDAL

41 - BUZZER UNDER THE BASKET CONTROL DESK

42 - SAFETY HARNESS ATTACHEMENT POINTS

NOTA *: The terms "RIght-Left-Front-Rear" mean with respect to an operator facing forwards when located on the platform in transport position.*

https://truckmanualshub.com/

GROUND BACKUP AND MAINTENANCE STATION

1 - IGNITION SWITCH

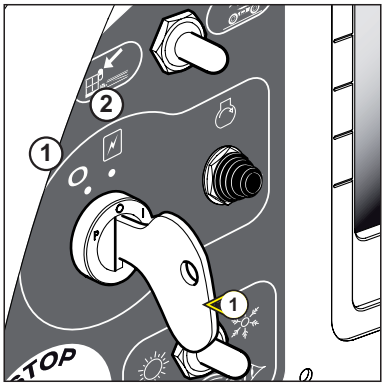

This key-operated switch has two positions.

POSITION 1

- Stop the IC engine.

POSITION 2

- Powers and automatically pre-heats the engine.

2 - START CONTROL BUTTON

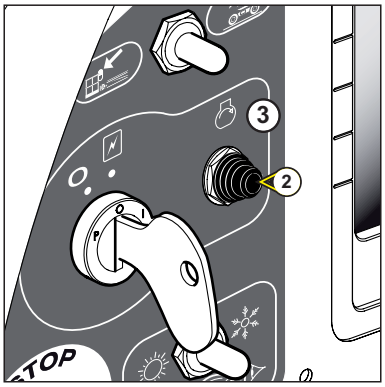

BUTTON 3

- Starting the IC engine.

This platform is equipped with an engine immobilizer system. You must wait until the buzzer sounds before starting up the IC engine.

3 - FLOOR / PLATFORM CONTROL SELECTOR SWITCH

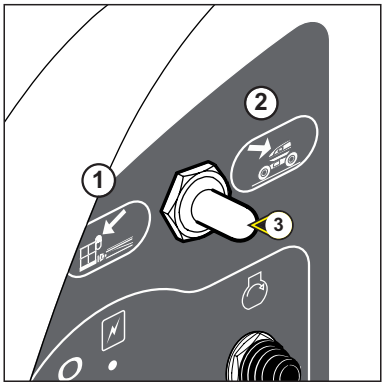

This switch has two positions.

POSITION 1

- Controls are activated from inside the platform (basket control, default position).

POSITION 2

- Controls are activated from the ground (base control). The button must be held in position (fail-safe) to power the base control.

https://truckmanualshub.com/

4- EMERGENCY STOP

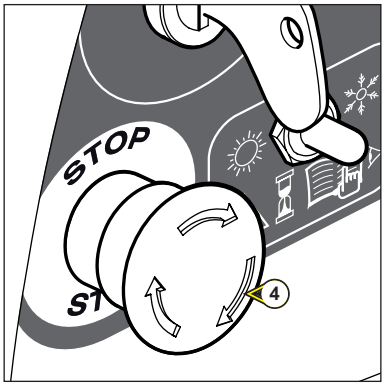

This switch cuts off all movement by the machine in the event of an anomaly or any danger arising.

- Press the knob to cut off all movement.
- Turn the knob a quarter of a turn to the right to deactivite it (the switch returns to its original position automatically).

This control button takes priority in all cases, even when movement is being controlled from the platform.

If the emergency stop is activated, movement may stop very suddenly

Do not use the emergency stop button to stop the platform under normal conditions. If it is used, reset it immediately because otherwise no ground control can be activated.

5 - ENGINE START HELP SELECTOR

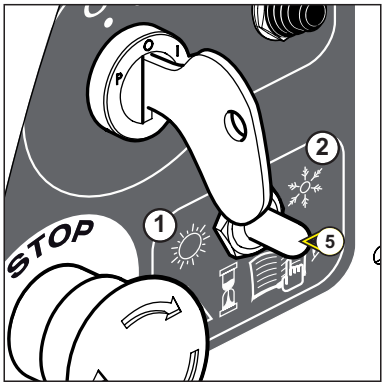

This selector has two positions to choose from depending on ambient temperature.

1 : SUN POSITION

- Temperature above +5°C engine started at idling rate.

2 : SNOW POSITION

- If the temperature is below about -10°C set the selector to this position before starting up: the engine will run at its maximum rate. (only for the first start-up of the day).
- Leave the engine running on this regime for 30 to 60 seconds, according to temperature. (During this time no movement is possible).
- Change the selector from SNOW to SUN, slow speed (normal position, hot engine).

https://truckmanualshub.com/

6 - INTERFACE SCREEN

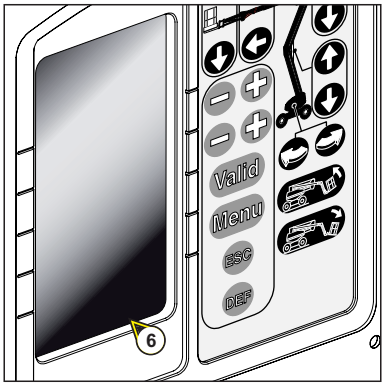

This sreen enables you to see all the start-up, parametering, maintenance and platform faults steps.

***NOTA** : The current system time is displayed at the top of each page.*

7 - SCREEN INFORMATION VALIDATION BUTTONS

- These buttons enable you to validate the various data on the screens.

FUNCTIONS OF THE KEYPAD KEYS:

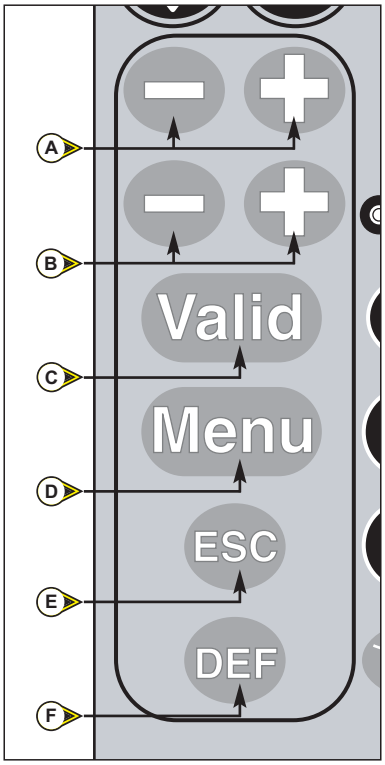

A: Keys for selecting proposals from the Menu pages.

B: Keys for selecting proposals from the Sub-menu pages.

C: This “OK” key has two functions:
- “OK” key for selections made by the plus or minus keys,
- Fault acknowledgement key: (this enables you to make the screen disappear without resolving the fault).

D: This “Menu” button has two fonctions:
- In **INACTIVE** secret code configuration, display screen settings pages
- In **ACTIVE** secret code configuration, display settings, maintenance, engine menus

.

E: The “ESC” key has two functions:
- It cancels a validation in progress.
- It enables you to return to the previous level in the menu.

F: The “DEF” key enable you to display the platform faults stored in memory.

https://truckmanualshub.com/

4 - DESCRIPTION UNDER NORMAL USE (WITH NO FAULTS DISPLAYED ON THE SCREEN)

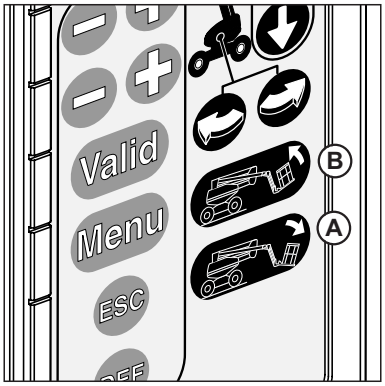

8 - BASKET DOWNWARD TILT BUTTON

9 - BASKET UPWARD TILT BUTTON

- These buttons enables you to correct the basket level or to fold the basket completely in transport position.

A : CORRECTING THE BASKET DOWNWARDS
- Hold contactor **3** in position **2** and press **A**.

B : CORRECTING THE BASKET UPWARDS
- Hold contactor **3** in position **2** and press **B**.

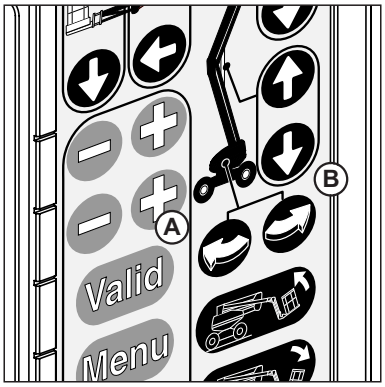

10 - TURRET ROTATION BUTTONS

- These buttons enable you to rotate the turret.

A : TURRET ROTATION TO THE LEFT
- Hold contactor **3** in position **2** and press **A**.

B : TURRET ROTATION TO THE RIGHT
- Hold contactor **3** in position **2** and press **B**.

https://truckmanualshub.com/

11 - Lower arm raising / lowering buttons

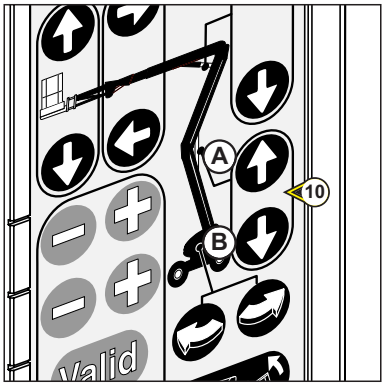

- These buttons enable you to raise and lower the lower arms.

A : RAISING THE LOWER ARMS
- Hold contactor **3** in position **2** and press **A**.

B : LOWERING THE LOWER ARMS
- Hold contactor **3** in position **2** and press **B**.

12 - Upper arm raising / lowering buttons

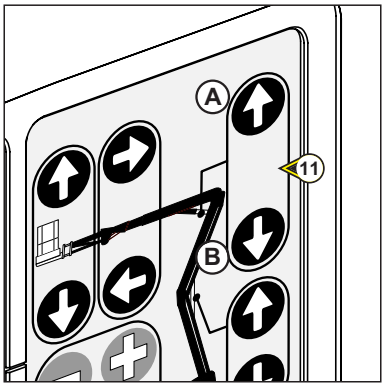

- These buttons are used for raising and lowering the upper arm.

A : RAISING THE UPPER ARM
- Hold contactor **3** in position **2** and press **A**.

B : LOWERING THE UPPER ARM
- Hold contactor **3** in position **2** and press **B**.

13 - Telescope extension / retraction buttons

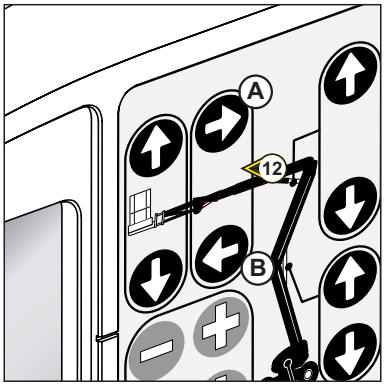

- These buttons are used to extend and retract the telescope.

A : RETRACTING THE TELESCOPE
- Hold contactor **3** in position **2** and press **A**.

B : EXTENDING THE TELESCOPE
- Hold contactor **3** in position **2** and press **B**.

14 - Pendular arm raising / lowering buttons

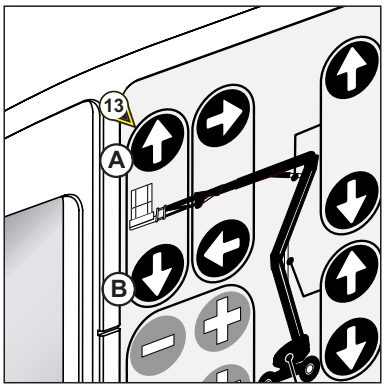

- These buttons enable you raise and lower the pendular arm.

A : RAISING THE PENDULAR ARM
- Hold contactor **3** in position **2** and press **A**.

B : LOWERING THE PENDULAR ARM
- Hold contactor **3** in position **2** and press **B**.

https://truckmanualshub.com/

15 - BLOCKING THE TURRET FROM ROTATING

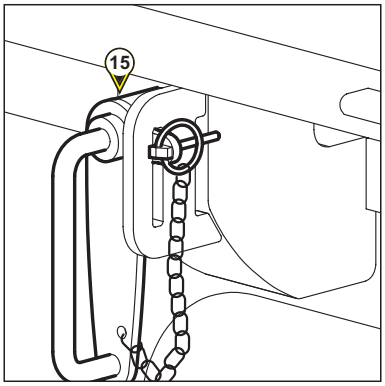

- This pin must be used when the platform is being transported by truck or some other means of transport (Train, etc...), to stop the turret from rotating.

- Remove the “clip”, and swiwel the pin to the left.
- Push the pin into the hole in the turret.
- Pivoter la broche vers la droite, engager le verrou dans l’ouverture.
- Verrouiller sa position en remettant la goupille.

Do not forget to remove it when using the platform.

16 - REVOLVING LIGHT

- The revolving light illuminates automaticelly when the platform is travelling or making a movement (raising, rotating, etc.).

17 - TILT SENSOR

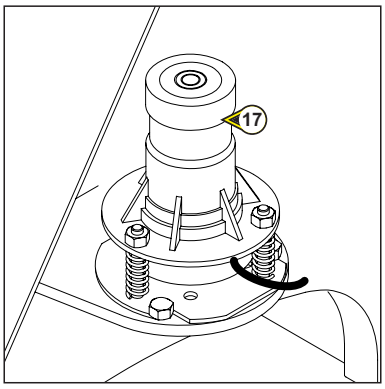

- This sensor signals the buzzer **41** when the platform is at the maximum authorised tilt. The buzzer sounds intermittently (see chapter on : “SAFETY SYSTEMS”).

https://truckmanualshub.com/

18 - AUDIBLE ALARM

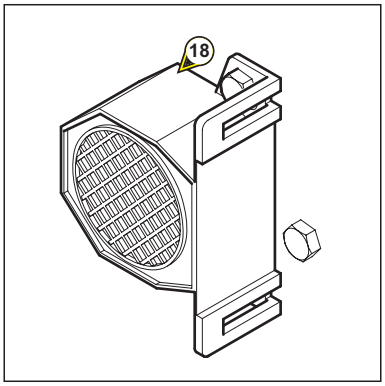

This buzzer (fixed to the outside of the hydraulic unit on the telescopic arm side) is activated by pressing button **29** on the basket command and control panel.

19 - EMERGENCY PUMP BUTTON

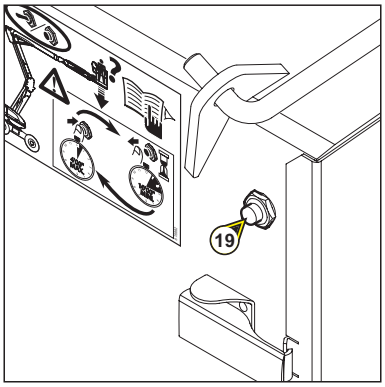

This button is used to perform all basket movements for a return to the ground in the event of breakdown (see chapter on : RESCUE PROCEDURE).

To be used only in the event of internal combustion engine or electrical system breakdown.

https://truckmanualshub.com/

https://truckmanualshub.com/

20 - UPPER ARM RAISING & LOWERING AND TURRET ROTATION CONTROL LEVEL

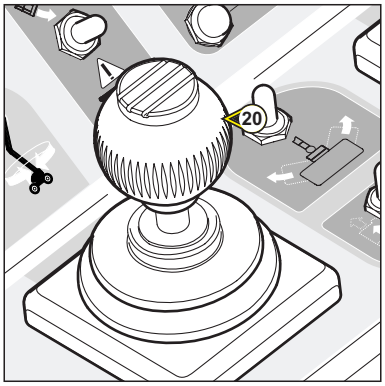

- This lever rep.20 enables you to raise the upper arm and rotate the turret.

***NOTA** : This lever operates under proportional control enabling precision when approaching. It must be handled smoothly without sudden jerks.*

RAISING THE UPPER ARM
- Push the lever upwards.

LOWERING THE UPPER ARM
- Push the lever downwards.

ROTATING RIGHT
- Push the lever to the right.

ROTATING LEFT
- Push the lever to the left.

- FOR THESE TWO FUNCTIONS, WHEN THE TELESCOPE IS FULLY RETRACTED :

- The speed with which the upper arm is lifted or lowered is accelerated.

- Turret rotation speed is accelerated.

21 - LOWER ARM RAISING & LOWERING AND TELESCOPE EXTENSION & RETRACTION CONTROL LEVER

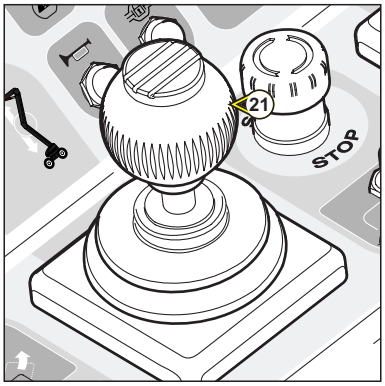

- This lever rep.21 enables you to raise the platform's lower and middle arms and extend and retract the telescope.

***NOTA** : This lever operates under proportional control enabling precision when approaching. It must be handled smoothly without sudden jerks.*

RAISING THE LOWER ARMS
- Push the lever upwards.

LOWERING THE LOWER ARMS
- Push the lever downwards.

EXTENDING THE TELESCOPE
- Push the lever to the left.

RETRACTING THE TELESCOPE
- Push the lever to the right.

https://truckmanualshub.com/

22 - PLATFORM FORWARD / REVERSE MOVEMENT CONTROL LEVER

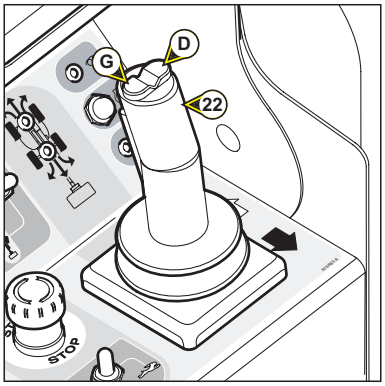

- This lever rep.22 enables you to move the platform.
- You must press trigger A and the dead man's pedal (voir Rep.40) to make any movements via the platform's control box.
- No commands are possible when the pedal or the trigger A is released.

***NB** : This lever operates under proportional control enabling precision when approaching. It must be handled smoothly without sudden jerks.*

FORWARD TRAVEL
- Push the lever forwards.

REVERSE TRAVEL
- Push the lever backwards.

STEERING RIGHT
- Press button D.

STEERING LEFT
- Press button G.

When the turret -arm assembly structure rotates more than 90° relative to the chassis, the travelling controls are reversed. Identify the direction of movement by looking at the arrows on the chassis and basket control panel.

23 - EMERGENCY STOP

This switch enables you to cut off all movement in the machine in the event of an anomaly or danger arising.

- Press the knob to cut off all movement.
- Turn the knob a quarter turn to the right to deactivate (the switch automatically returns to its initial position).

In all cases, this instruction takes priority.

- Do not use the emergency stop button to stop the platform under normal conditions, or, if it used, reset it immediately, because the base control panel cannot be used once it has been pressed.

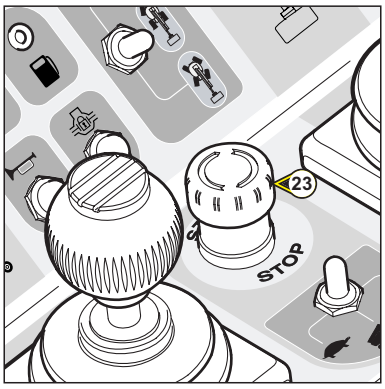

https://truckmanualshub.com/

24 - "PRE-HEATING" INDICATOR LIGHT

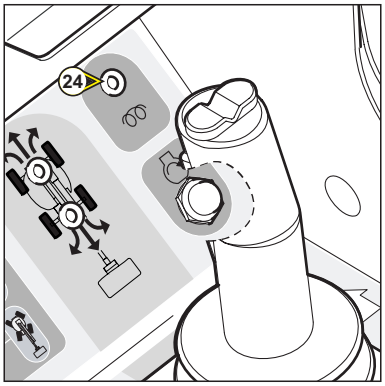

This indicator light illuminates when the machine is switched on:
- Or turn the ignition key on the base (time identical to bargraph evolution on the screen).
- Or by re-arming the Emergency Stop on the basket's console on the platform.
- Wait for the indicator light to go out before pressing the starter button.

25 - START CONTROL BUTTON

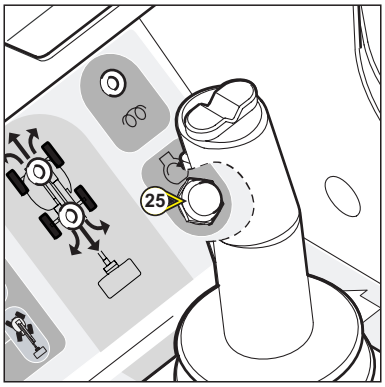

- Wait until the "preheating" indicator light goes out, then press button **25** to start the platform from the basket control panel.

26 - "ENGINE FAULT" INDICATOR LIGHT

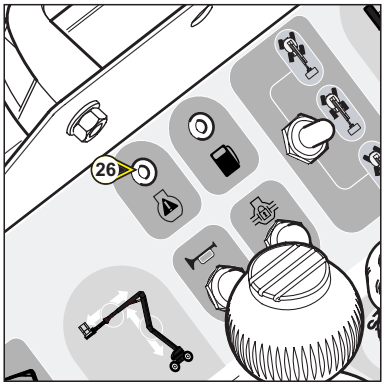

This light illuminates when the Fault screens 11 , 12 , 13 (see display diagrams P.2-20 to P.2-23) are displayed on the base and there is a short intermittent buzzer

- Stop the IC engine immediately.

https://truckmanualshub.com/

27 - 28 SELECTOR FOR STEERING MODE AND AXLE ASSEMBLY REALIGNMENT

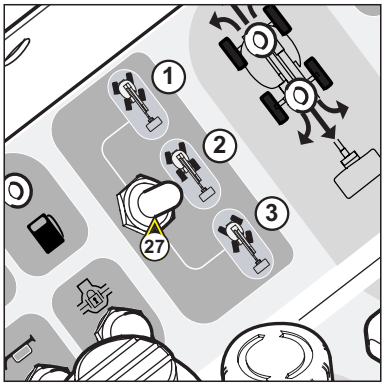

This contactor has three positions.

POSITION 1
- Selects "Crab" mode.

POSITION 2
- Selects 2-wheel drive mode.

POSITION 3
- Selects 4-wheel drive mode. In this configuration, the available travel speeds are only: Tortoise or hare.

28A FRONT WHEEL ALIGNMENT

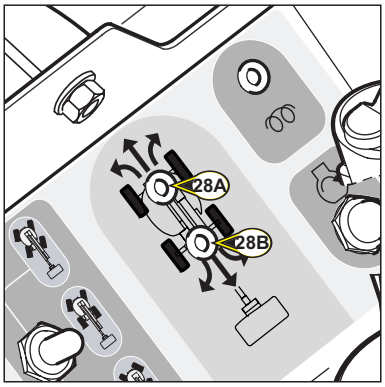

- This indicator comes on when the front wheels are correctly aligned in the axis of the machine.

28B REAR WHEEL ALIGNMENT

- This indicator comes on when the rear wheels are correctly aligned in the axis of the machine.

28C AUTOMATIC AXLE ASSEMBLY ALIGNMENT

- The platform includes a function to facilitate axle assembly realignment when changing steering mode.

- Starting from the "2-wheel drive" steering mode, select the desired steering mode: "4-wheel drive" or "crab".

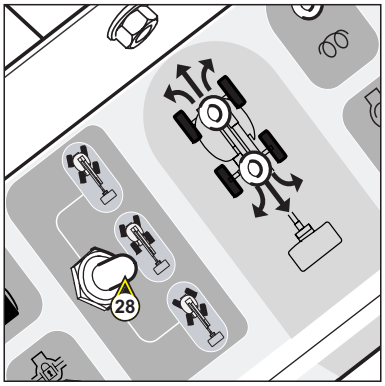

From this moment and for 5 seconds, the front axle assembly automatic alignment function is activated:
- The LED indicating front axle assembly alignment flashes,
- The previous "2-wheel drive" steering mode remains active,
- The operator must align the front axle assembly during these 5 seconds,
- As soon as the axle assembly is at the mid-point, the selected steering mode will be activated automatically.

Beyond the 5 seconds, the automatic alignment function is deactivated.

- Starting from the "4-wheel" or "crab" steering mode, select the desired steering mode: "2-wheel drive"

From this moment and for 5 seconds, the rear axle assembly automatic alignment function is activated:
- The LED indicating rear axle assembly alignment flashes,
- The previous "4-wheel drive" steering mode remains active,
- The operator must align the rear axle assembly during these 5 seconds,
- As soon as the axle assembly is at the mid-point, the selected steering mode will be activated automatically.

Beyond the 5 seconds, the automatic alignment function is deactivated.

Travel speed must be controlled throughout this operation.

https://truckmanualshub.com/

29 - Audible alarm control button

When you press button 29 , the audible alarm 41 sounds.

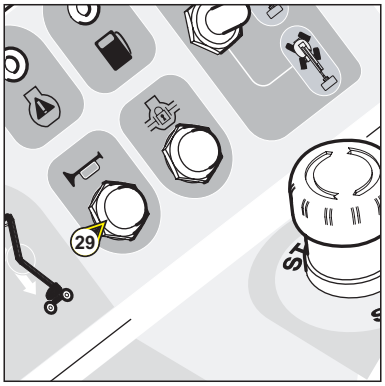

30 - Differential locking control button

***NB** : This command must only be used during travel.*

The differential lock enables the 2 driven wheels to turn at the same speed.
- To use this, press button 30, - To use this, press button

- Preferably use the differential lock when keeping the wheels in the machine's axis.

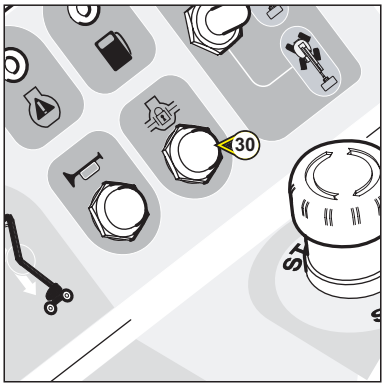

31 - Low fuel indicator

This indicator comes on when the fuel level is low and the basket buzzer is activated: 3 beeps every 10 minutes.

***NB** : When the light comes on, there is about 5 hours of autonomy remaining, i.e. about 8 litres in the tank.*

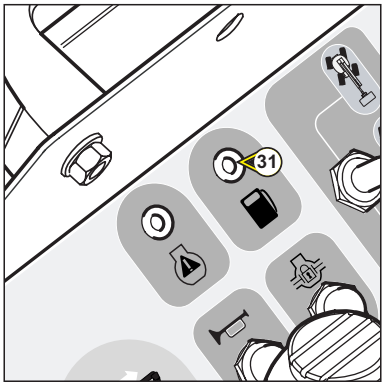

https://truckmanualshub.com/

32 - TRAVELLING SPEED SELECTOR SWITCH

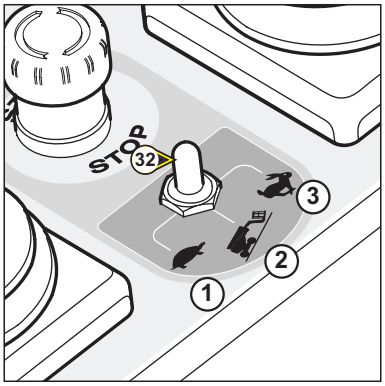

This contactor has 3 positions.

POSITION 1 : TORTOISE (SLOW SPEED)

POSITION 2 : RAMP (SLOW SPEED WITH FULL POWER) Only if crossing a very big ramp and only in reverse gear.

POSITION 3 : HARE (HIGH SPEED), only with the **direction mode selector set to 1** (rep.27: Crabwise movement) or **2** (rep.27: Movement with 2 wheel drive).

***NB** : If **position 3** (hare speed) is selected when the machine is in 4-wheel drive mode, it automatically changes to **position 2** (ramp speed).*

In Hare mode (position 3), the turret must be in the axis of the machine

33 - "OVERLOAD" INDICATOR LIGHT

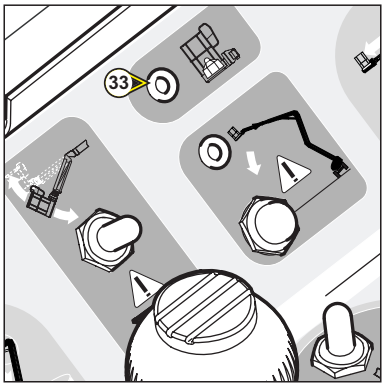

This indicator light illuminates when the basket is overload. (see the “SAFETY” section)

34 - "TILT" INDICATOR LIGHT

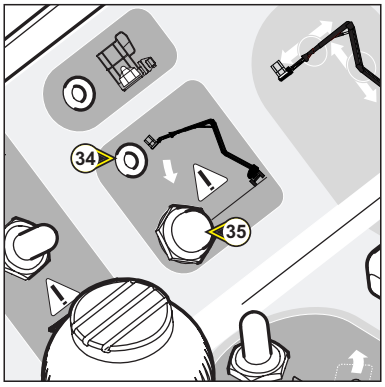

When the platform has reached the maximum authorised slope the LED is activated and arm lifting movements are blocked + a buzzer sounds intermittently and long.

35 - "USE ON SLOPE" BUTTON

This button enables you to neutralise the blocks on movement when the platform is tilted (see the "SAFETY" section).

If the machine is used on a slope there is a risk of losing stability. Nevertheless, the basket overload remains active.

36 - BASKET TILTING SWITCH

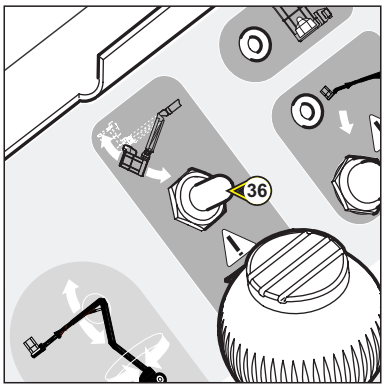

- This contactor enables you to correct the basket level or fold down the basket completely in transport position.

CORRECTING THE BASKET UPWARDS
- Push the contactor upwards.

CORRECTING THE BASKET DOWNWARDS
- Pull the contactor downwards.

https://truckmanualshub.com/

37 - Basket rotation switch

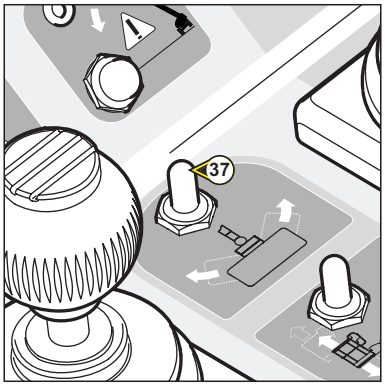

- This contactor enables you to rotate the basket right and left

RIGHT ROTATION
- Push the contactor to the right.

LEFT ROTATION
- Push the contactor to the left.

38 - Basket pendular arm switch

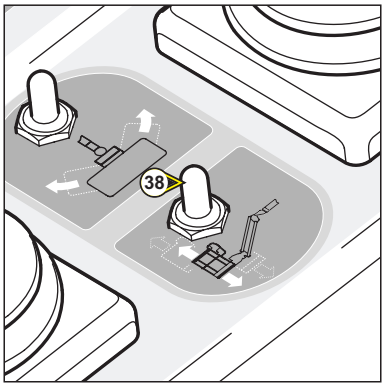

- This contactor enables you to raise and lower the pendular arm.

RAISING THE PENDULAR ARM
- Push the contactor forwards.

LOWERING THE PENDULAR ARM
- Pull the contactor backwards.

39 - “Emergency pump” Button

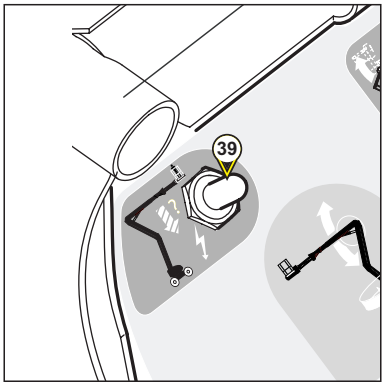

This button enables all the basket’s movements to be performed to bring it back to the ground if a breakdown occurs. (See the “RESCUE PROCEDURE” section).

To be used only in the event of internal combustion engine or electrical system breakdown.

To check the load of the battery of the I.C., the battery must be charged, if the emergency pump it cannot be actived.

40 - "Dead man’s" pedal

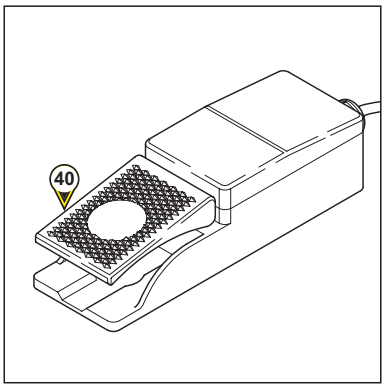

This pedal is fixed to the floor of the platform.

- You must press on this pedal to make movements from the basket console.
- When the pedal is released, no commands are possible.

https://truckmanualshub.com/

41 - BUZZER

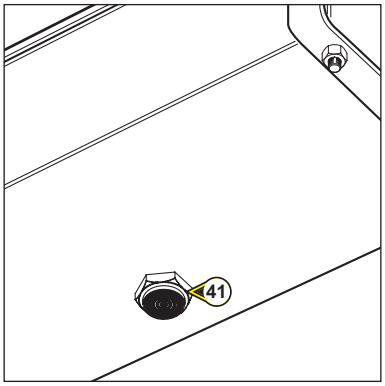

- This buzzer is actived when the machine has reached the maximum authorised tilt or is overloaded.
- If intermittent : When the maximum authorised tilt threshold is crossed all movements are blocked, except for lowering the arms, thereby enabling the machine to return to an acceptable level.
- If continuous : When the platform is overloaded, all movements are blocked. the load in the machine must be relieved before it can manoeuvre.

REMINDER : SEE PAGE 2-9

42 - SAFETY HARNESS ATTACHMENT POINTS

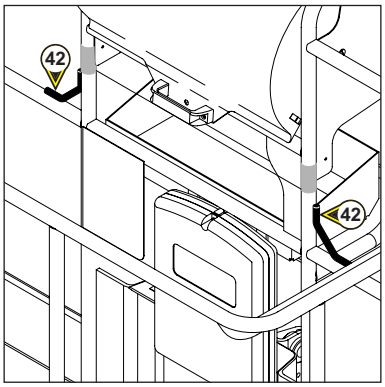

- These fixing are used for attaching the harness lanyards when the operators are in the basket.

43 - SAFETY RAIL

- You must hold the rail in order to climb into the basket, so that it doesn't fall as you go past.

Do not attach the safety rail with a clip or string.

https://truckmanualshub.com/

SCREEN DISPLAY DIAGRAM

User level

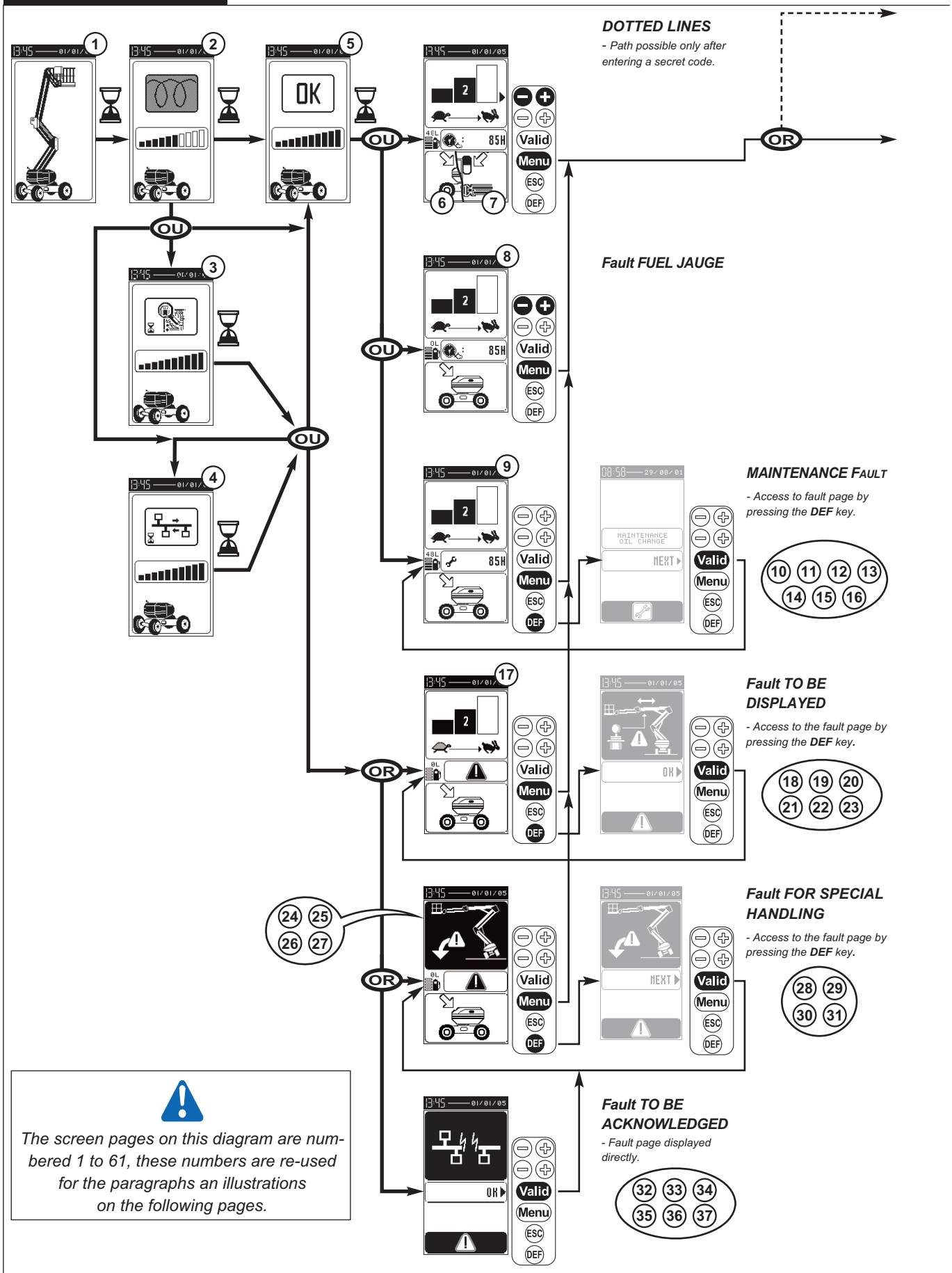

https://truckmanualshub.com/

View and Dealer / Hirer Level

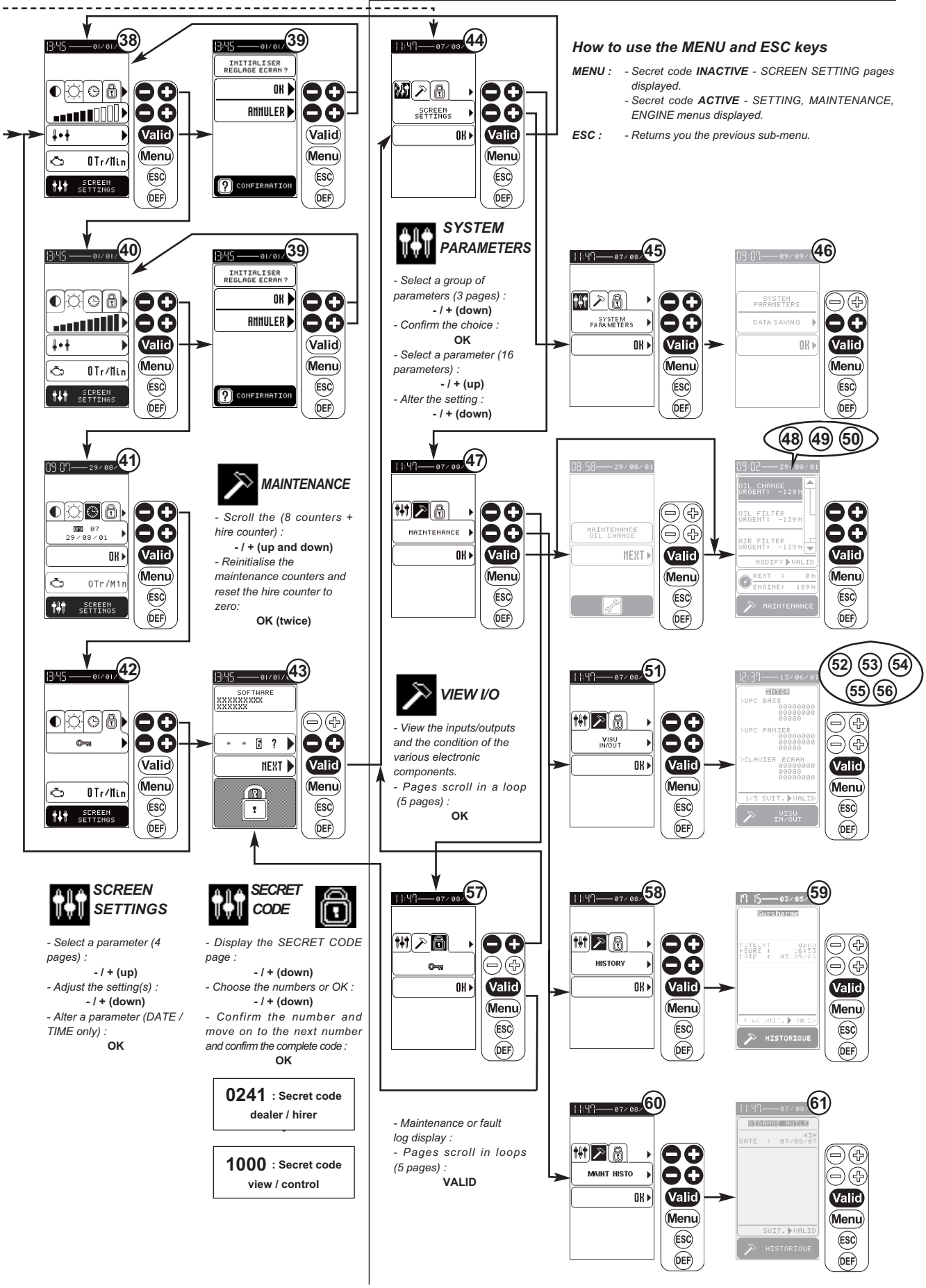

How to use the MENU and ESC keys

MENU : - Secret code **INACTIVE** - SCREEN SETTING pages displayed.
- Secret code **ACTIVE** - SETTING, MAINTENANCE, ENGINE menus displayed.

ESC : - Returns you the previous sub-menu.

https://truckmanualshub.com/

SCREEN DISPLAY - DIAGRAM

START-UP PAGES

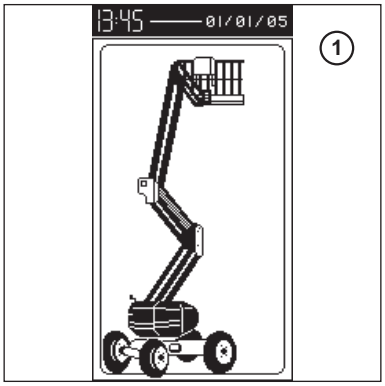

① - PRESENTATION page

When the machine is switched on, an initialisation page briefly appears on the screen and then the Pre-heating page appears.

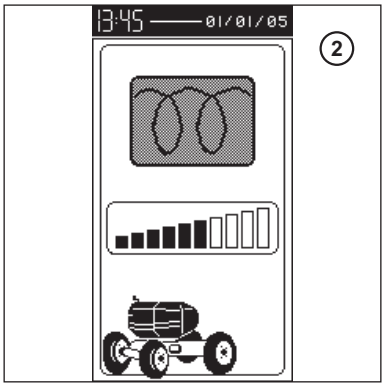

② - PRE-HEATING page

The Pre-heating page appears during the adjustable pre-heating period and the bar graph increases in proportion to the pre-heating time elapsed.

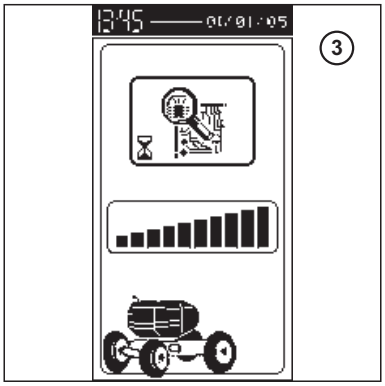

③ - CHECKING page

Checking time longer than the pre-heating time.

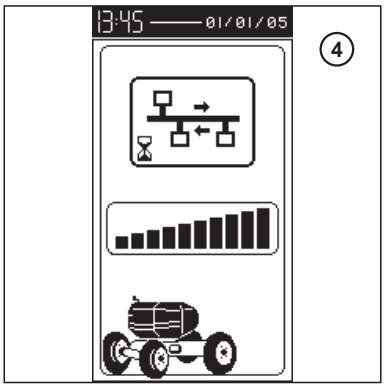

④ - CAN TRANSFER page

System update required longer than pre-heating time.

NB : This page does not appear systematically.

https://truckmanualshub.com/

(5) - PRE-HEATING COMPLETED (OK) page

When the pre-heating time has elapsed (bar graph full), an indication of “OK” is displayed if the system has not encountered any problems and then one of the Operating pages (**6**, **7**, **8** ou **9**) is displayed.

https://truckmanualshub.com/

OPERATING PAGES

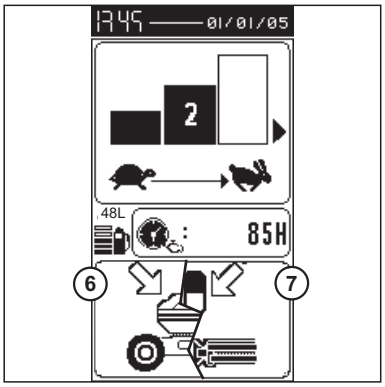

(6) - WORKING FROM THE BASE (NO FAULT PRESENT) page

(7) - WORKING FROM THE BASKET (NO FAULT PRESENT) page

Selection of speed **1**, **2** and **3** corresponding to the raising and lowering speeds for the arms from the basket:

1 - Slow speed
2 - Moderate speed
3 - High speed

NB : The speed from the base is always Speed 2. Only the engine operating hours counter is visible when there are no faults in the system or the maintenance symbol is not being displayed.

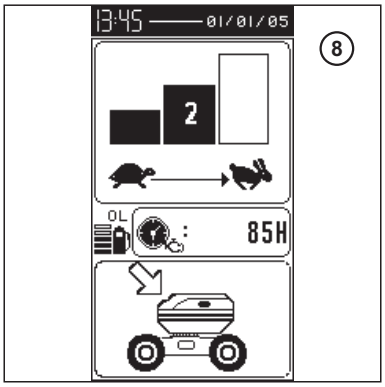

(8) - WORKING FROM THE BASE page - LOW DIESEL LEVEL

The fuel pump symbol flashes.

NB : This status does not prevent use of the machine.

When filling up, the pump symbol flashes.
When the level is stabilized, the pump stops flashing.

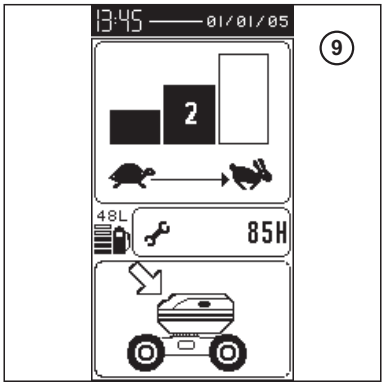

(9) - WORKING FROM THE BASE page - MAINTENANCE FAULT PRESENT

The wrench symbol flashes.

NB : These faults do not require to be displayed nor acknowledged and do not prevent use of the machine.

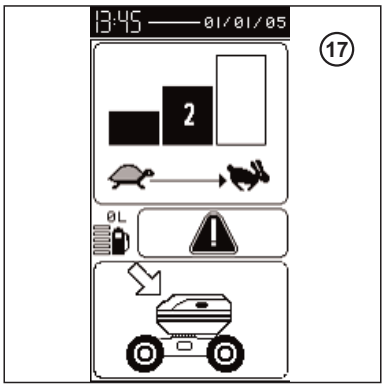

(17) - WORKING FROM THE BASE page - FAULT TO BE DISPLAYED PRESENT

The danger triangle flashes.

https://truckmanualshub.com/

WORKING FROM THE BASE - FAULT FOR SPÉCIAL HANDLING PRÉSENT

For the following pages, if several faults are detected, they appear in the operating page simultaneously and in a loop.

NB : Faults **28** and **29** do not require to be displayed nor acknowledged and do not prevent use the machine.
Faults **30** and **31** prevent use of the machine and must be resolved before any attempt to start up.

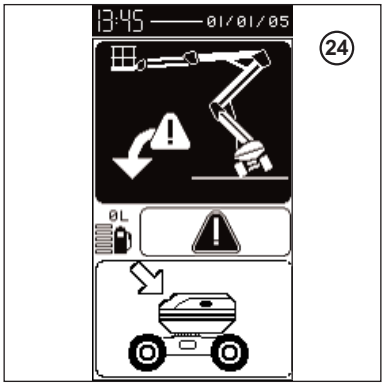

㉔ - **Pages WORKING FROM THE BASE - SLOPE FAULT PRESENT**

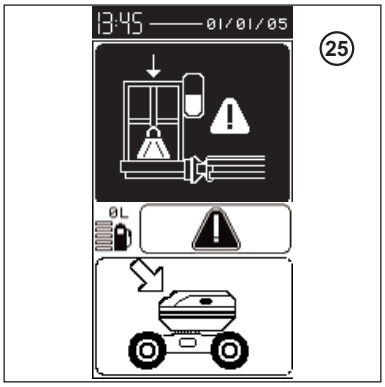

㉕ - **Pages WORKING FROM THE BASE - LIFTING PLATFORM OVERLOAD FAULT PRESENT**

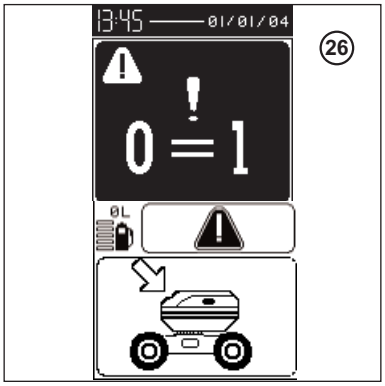

㉖ - **Pages WORKING FROM THE BASE - COHERENCE FAULT PRESENT**

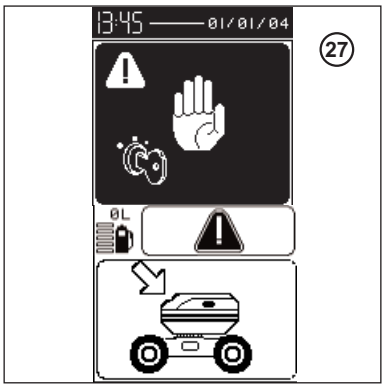

㉗ - **Pages WORKING FROM THE BASE - START- UP FAULT DE PRESENT**

https://truckmanualshub.com/

FAULT PAGES

MAINTENANCE FAULTS

These pages appear on the screen after you press the DEF button on Operating page **9** or press the OK button on page **47**.

NB : These faults are triggered 10 hours before the end of the period between two maintenance operations.

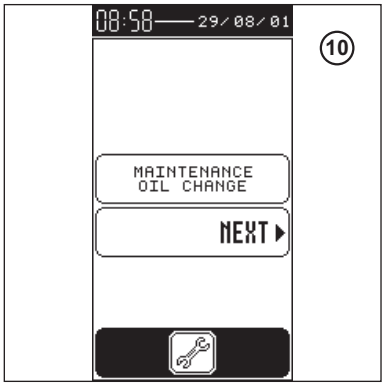

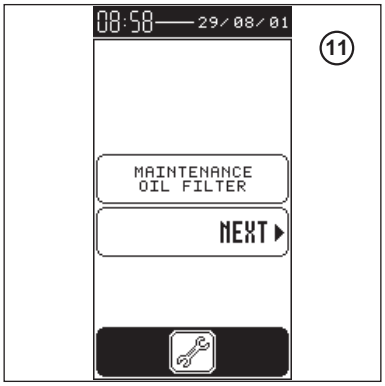

⑩ - **OIL CHANGE MAINTENANCE FAULT Page**

⑪ - **OIL FILTER MAINTENANCE FAULT Page**

⑫ - **AIR FILTER MAINTENANCE FAULT Page**

⑬ - **HYDRAULIC FILTER MAINTENANCE FAULT Page**

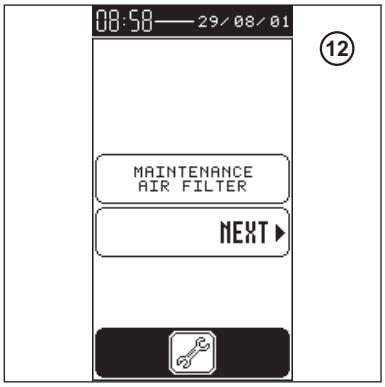

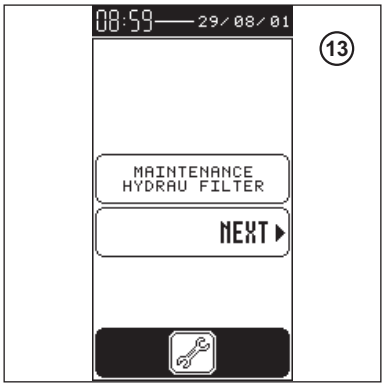

⑭ - **HYDROSTATIC FILTER MAINTENANCE FAULT Page**

⑮ - **LUBRIFICATION MAINTENANCE FAULT Page**

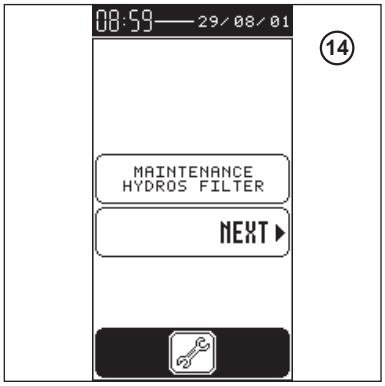

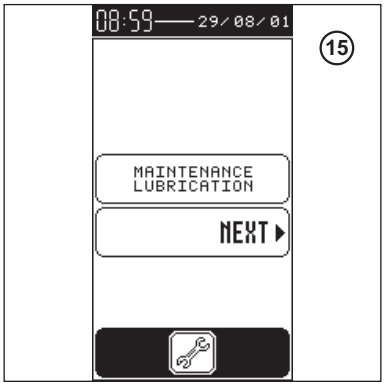

⑯ - **MECHANICAL INSPECTION MAINTENANCE FAULT Page**

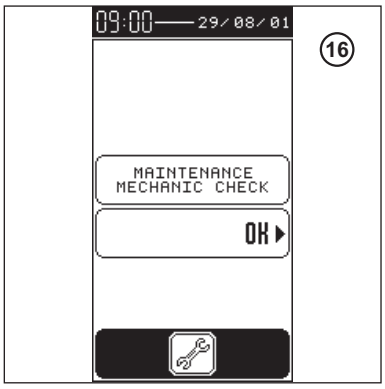

https://truckmanualshub.com/

FAULT TO BE DISPLAYED

These pages appears on the screen after your press the DEF button on Fault page **17**.

⑱ - **MANIPULATOR FORWARD FAULT Page**

⑲ - **LOWER ARMS MANIPULATOR FAULT Page**

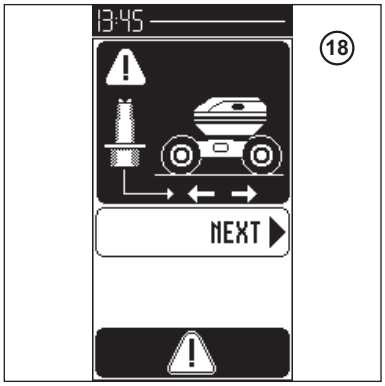

⑱

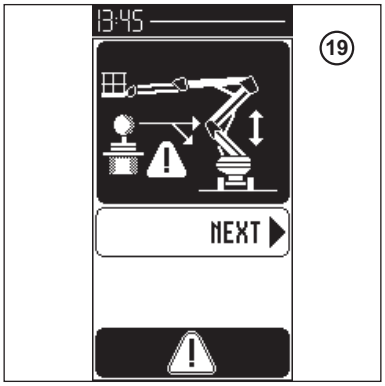

⑲

⑳ - **UPPER ARMS MANIPULATOR FAULT Page**

㉑ - **TELESCOPE MANIPULATOR FAULT Page**

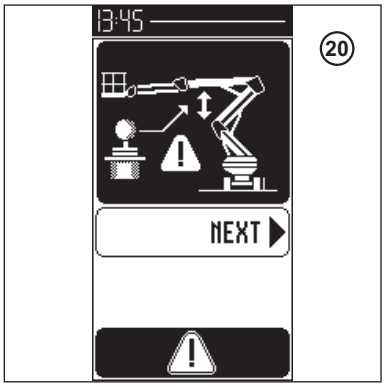

⑳

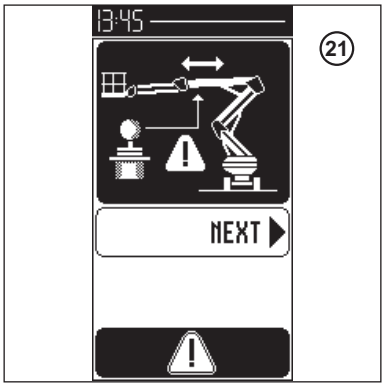

㉑

㉒ - **TURRET ROTATION MANIPULATOR FAULT Page**

㉓ - **Default page FUEL LEVEL SENSOR**

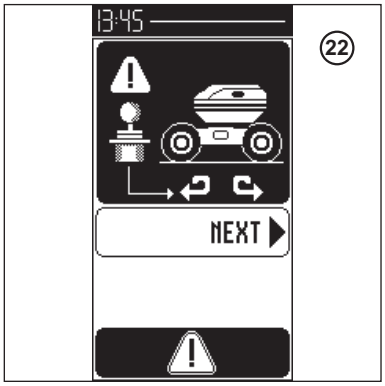

㉒

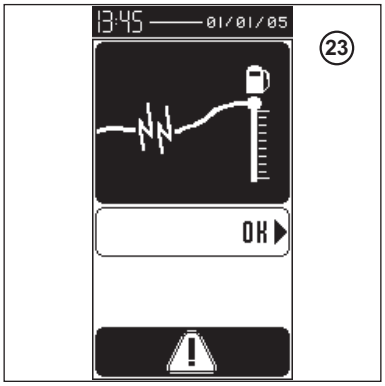

㉓

https://truckmanualshub.com/

FAULTS FOR SPÉCIAL HANDLING

These pages appear on the screen after you press the DEF button on pages **24** à **27**.

㉘ **- SLOPE FAULT Page**

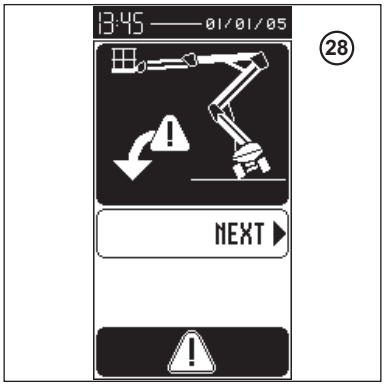

㉙ - **LIFTING PLATFORM OVERLOAD FAULT Page**

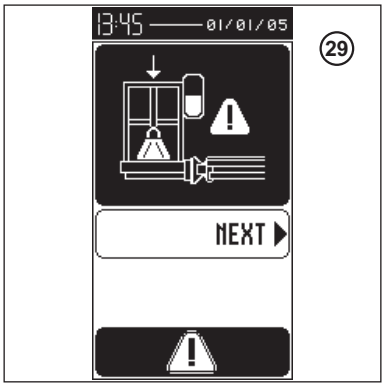

㉚ - **COHERENCE FAULT Page**

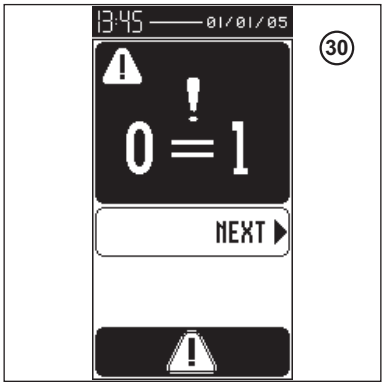

㉛ - **START-UP FAULT Page**

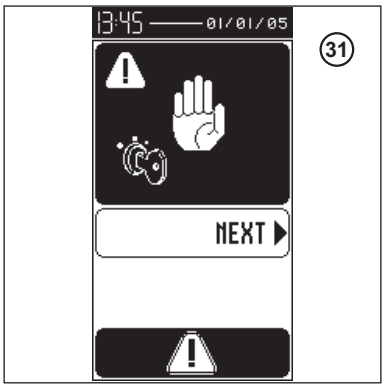

https://truckmanualshub.com/

FAULTS TO BE ACKNOWLEDGED

These pages appear directly on the screen and must be acknowledged by pressing the OK button.

(32) **- SCREEN CAN NETWORK FAULT Page**

(33) **- ENGINE WATER TEMPERATURE FAULT Page**

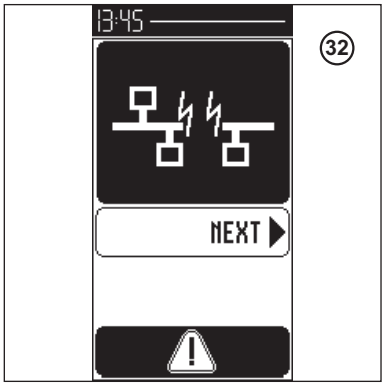

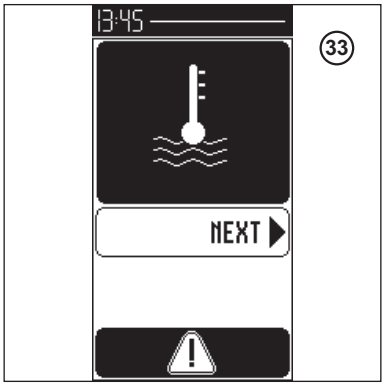

(34) **- ENGINE OIL PRESSURE FAULT Page**

(35) **- BATTERY LOAD FAULT Page**

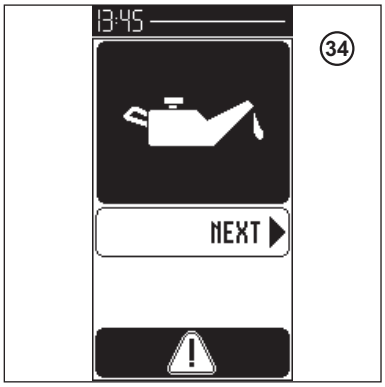

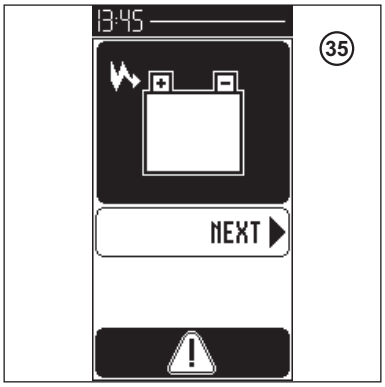

(36) **- UPPER/LOWER POWER SUPPLY FAULT Page**

(37) **- INDUCTIVE SENSOR FAULT Page**

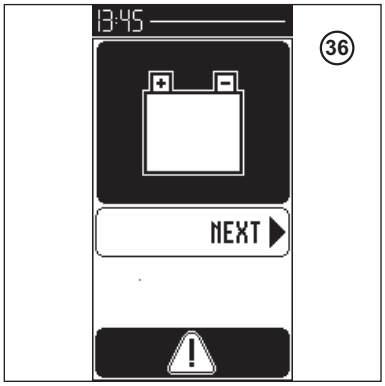

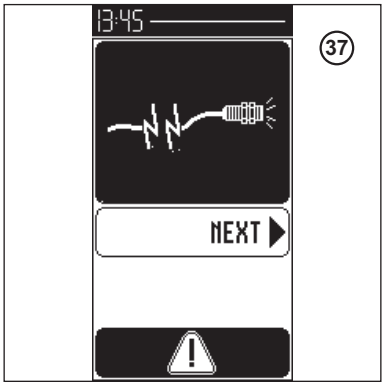

https://truckmanualshub.com/

MENU PAGE

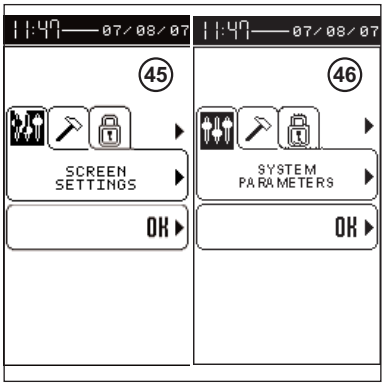

Menu page **44** provides a choice of three sub-menu group categories: *SETTING, MAINTENANCE* and *SECRET CODE*.

You can change from one sub-menu group to another by pressing the upper PLUS/MINUS keys.

You choose a sub-menu by pressing the lower PLUS/MINUS keys and conforming by pressing the OK button opposite the “OK” text.

NB : This *MENU* page can only be seen by entering the secret code.

SETTINGS MENU

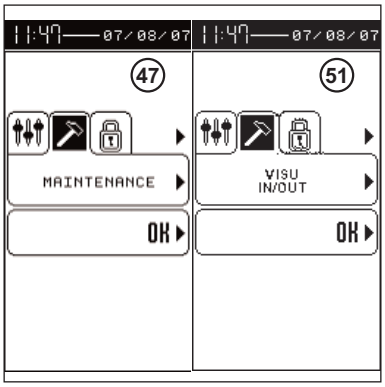

The *SETTINGS* Menu provides access to sub-menus:

(44) - SCREEN SETTINGS

NB : When the machine starts, until the secret code is entered the *SETTINGS SCREEN* is the only menu available. Once the secret code has been entered, the *SETTINGS SCREEN* becomes a sub-menu.

(45) - SYSTEM PARAMETERS

MAINTENANCE MENU

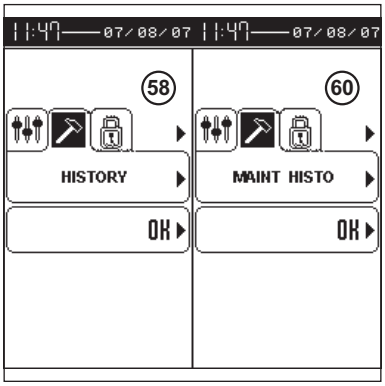

The *MAINTENANCE* menu provides access to sub-menus:

(47) - MAINTENANCE

(51) - VIEW I/O (view of the inputs/outputs)

(58) - MAINTENANCE (historique)

(60) - HISTO MAINTENANCE (visualisation dernières maintenances)

SECRET CODE MENU

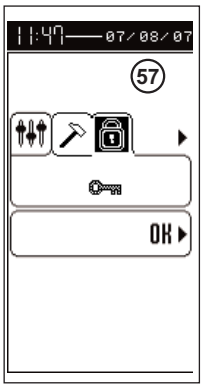

The *SECRET CODE* menu provides access to sub-menus:

(57) - SECRET CODE

https://truckmanualshub.com/

SETTINGS SUB-MENU

SCREEN SETINGS SUB-MENU

(38) - CONTRAST Page

(39) - SCREEN PARAMETERS REINITALISATION Page

The page **39** appears when the OK button is pressed on **38** and **40**.

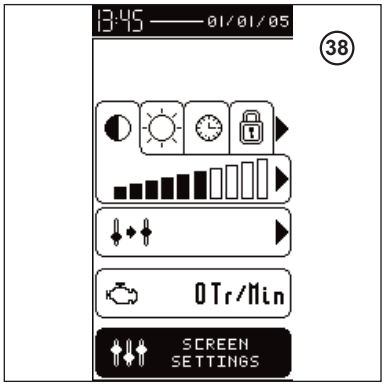

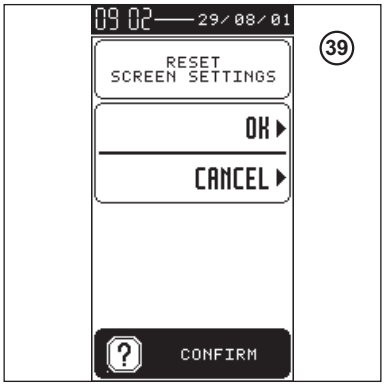

(40) - BRIGHTNESS Page

(41) - TIME/DATE Page

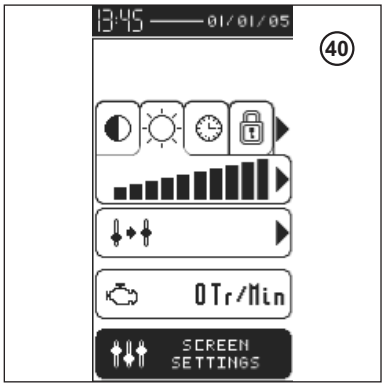

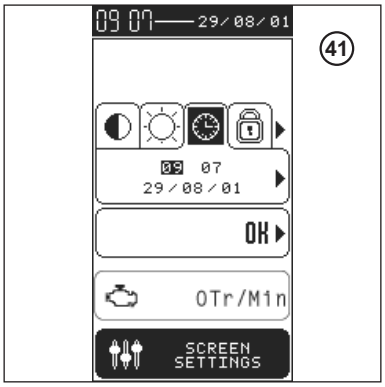

(42) - SECRET CODE Page

(43) - SECRET CODE ENTRY Page

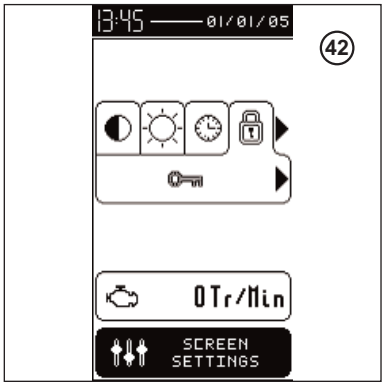

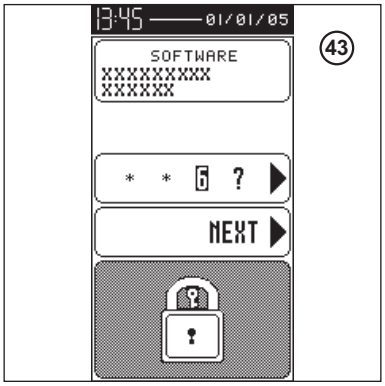

https://truckmanualshub.com/

SYSTEMS PARAMETERS SUB-MENU

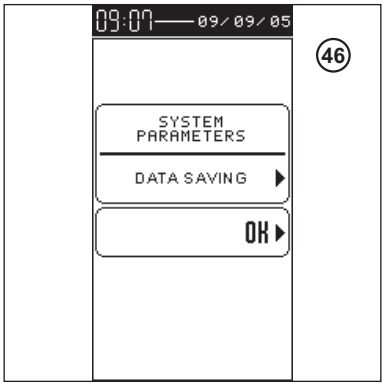

You can choose between groups (**8** or **33** selon code) by using the lower PLUS/MINUS keys and then pressing OK.
The parameters are set by using the lower PLUS/MINUS keys.

(46) - DATA BACKUP Page

Page **46** appears; depending on the secret code there are eight or thirty three pages displayed on the screen :

Code 0241 - 8 Pages : Display and change parameters

Max speed settings
Options
Parameters settings
Pump type
Input settings
Preheat
Language
Maintenances period.

Code 1000 - 33 Pages : Display parameters

Max speed settings
Options
Parameters setting
Rexth driving ctrl
Pump type
Saeur driving ctrl
Input setting
Output settings
Logic in config
Defaults
Secu control
Motor control
Preheat
Driving control
Anti stall control
Fuel jauge
Speed control
Flow settings
Steering control
Arm 1-2 control
Telescope control
Arm 3 control
Inclin control
Pendul control
Turret rot control
Basket rot control
Language
Hours setting
Internal data
Maintenances settings
Maintenances period
Screen engine hours
Screen data.

https://truckmanualshub.com/

MAINTENANCE SUB-MENUS

MAINTENANCE COUNTERS SUB-MENU

NB : When requesting pages **48**, **49** and **50**, a maintenance fault page may appear (pages **10** to **16**) see the MAINTENANCE FAULTS paragraph.

Code 1000 : Display counters

Code 0241 : Visualisation et modification des compteurs

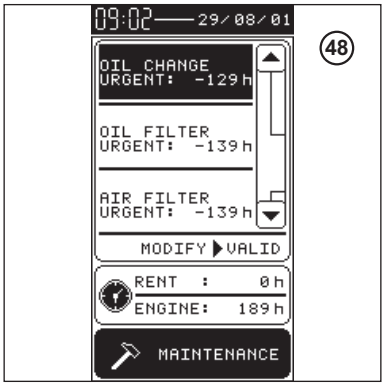

(48) - MAINTENANCE COUNTERS Page 1/3

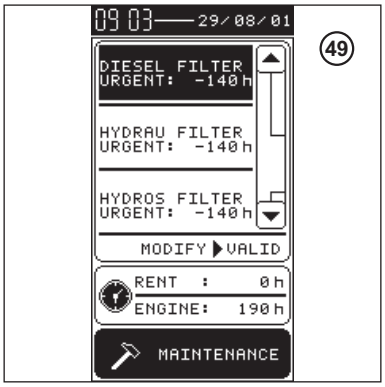

(49) - MAINTENANCE COUNTERS Page 2/3

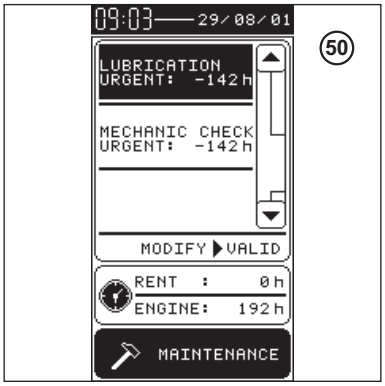

(50) - MAINTENANCE COUNTERS Page 3/3

https://truckmanualshub.com/

VIEW I/O SUB-MENU

(52) - VIEW INTOR Page

Base, Basket, Screen

(53) - VIEW OUTTOR Page

Base, Basket, Screen

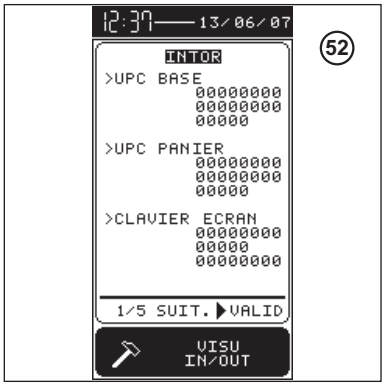

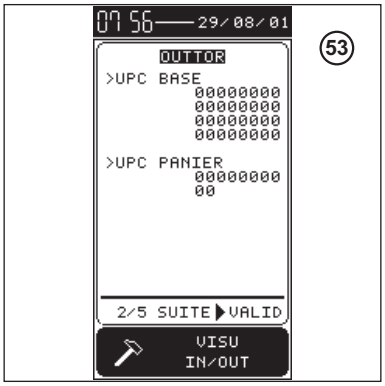

(54) - VIEW INANA Page

Manipulators, UPC Base, Fuel

(55) - VIEW INHSCE Page

Base, Basket, UPC101 1, UPC101 2

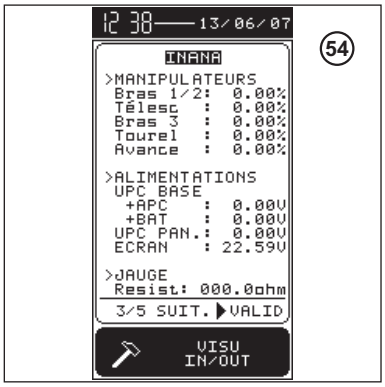

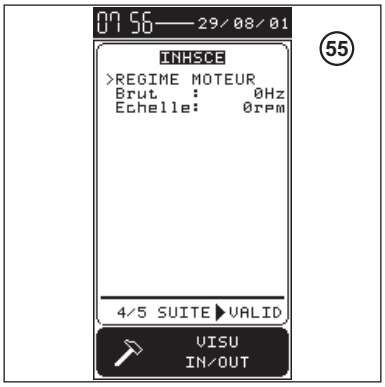

(56) - VIEW OUTANA, OUT PWM Page

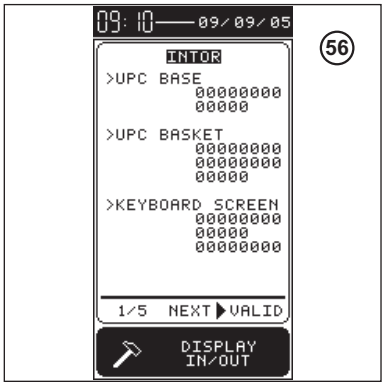

https://truckmanualshub.com/

HISTORIC SUB-MENU

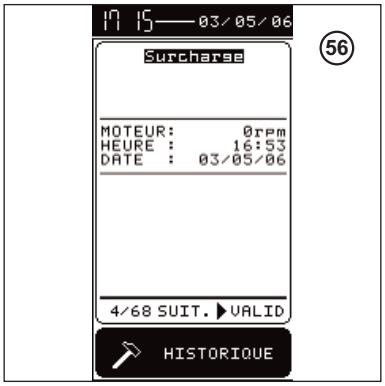

58 - HISTORIC Page

34 faults classified by category over **25** pages.

HISTORIC MAINTENANCE SUB-MENU

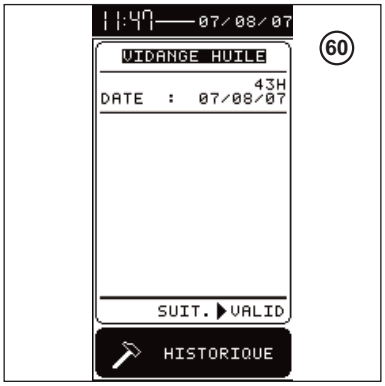

60 - HISTORIC MAINTENANCE Page

8 maintenance categories with logs of the last **9** maintenance operations on **16** pages.

https://truckmanualshub.com/

USE OF THE PLATFORM

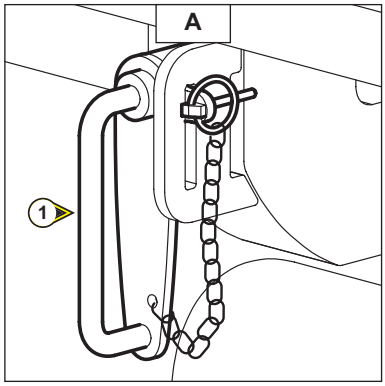

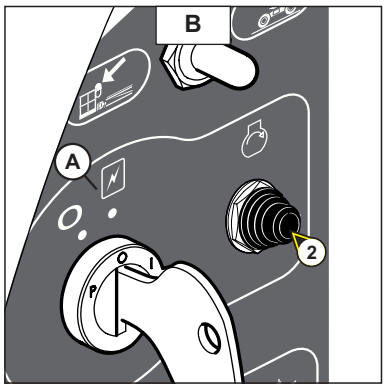

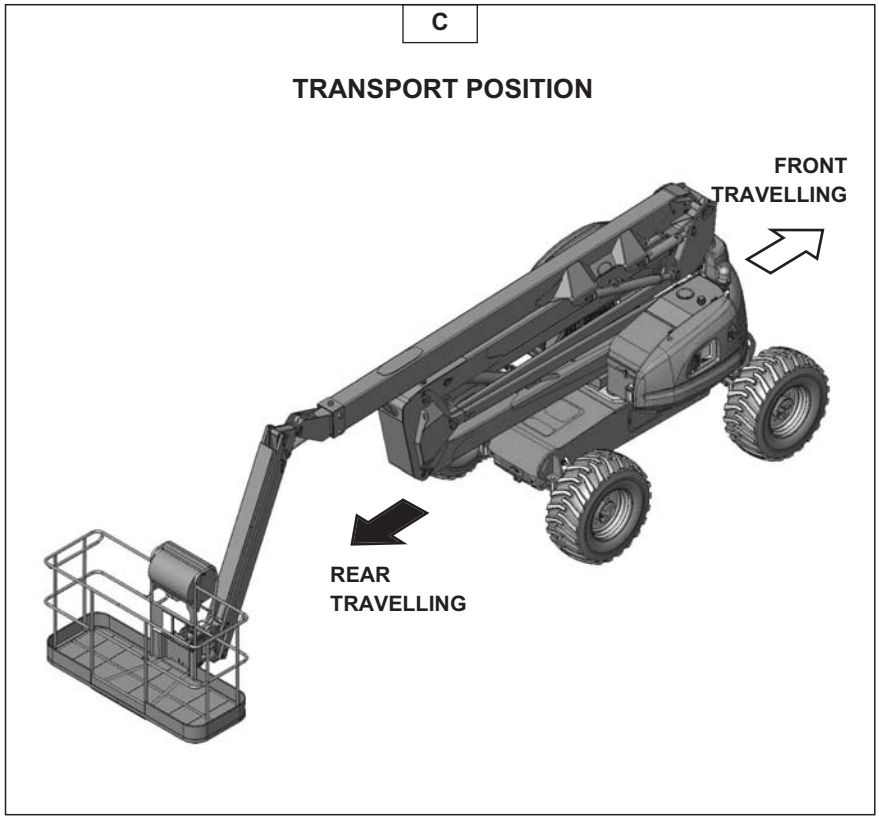

BEFORE STARTING THE PLATFORM

- Check the following levels :
  - . The IC motor's oil.
  - . The hydraulic oil reservoir.
  - . The coolant.

STARTING THE PLATFORM

- Turn the ignition switch to position 2 to switch on the electrical systems.

When the machine is switched on, a beep sounds in the basket. This beep indicates that the machine is ready to use. Otherwise repeat the starting procedure

- Press button 2 to start the IC engine.

Do not press the starter for more than 30 seconds, and run the preheating between each unsuccessful attempt

- Release the button as soon as the engine starts and let it run on idling.

Never try to push or pull the platform to start it. This type of manoeuvre would cause severe damage to the transmission.

https://truckmanualshub.com/

MOVEMENT IN TRANSPORT MODE / WORK MODE

Before moving and using the machine, release lock 1 on the turret (see Fig. A).

The platform has two separate movement modes: transport mode (Fig. D) and work mode (Fig. E) (direction of movement (Fig. C)).

- **Transport mode:** The platform arms are in low position, the pendular arm can be raised to a maximum. This mode is used to move at high speed and go beyond the slope (See chapter on: CHARACTERISTICS) of the machine (Fig. D).
- **Work mode travail:** One or more of the platform arms are raised and / or the telescope is extended. In this mode, movement takes place at slow speed, with the slope and overload safety devices activated (Fig. E).

D

MODE TRANSPORT

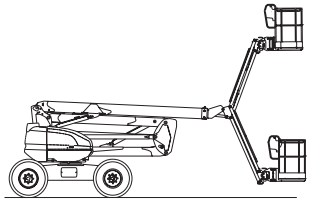

NB : *You must use ramp speed (full power with speed limited to 2 km/h) to cross a steep slope or move over very bumpy ground. This may be very practical when, for example, you have to use an access ramp to drive the platform onto the bed of a truck.*

In work mode, all movement on bumpy ground, unstable land, slopes steeper than the authorized limit (See chapter on: CHARACTERISTICS), liable to tip or unbalance the platform are PROHIBITED

During travel in Hare mode, the turret must be in the axis of the platform

Before operating the platform, make sure that the turret is facing the right way relative to the chassis, i.e. in the direction of travel (black arrow and white arrow).

On a steep slope:- no load in the basket.

E

MODE TRAVAIL

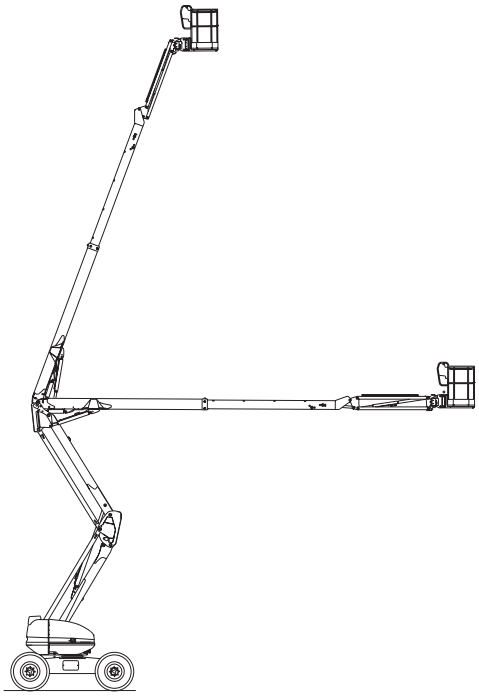

https://truckmanualshub.com/

LIMIT OPERATING MODE, TRANSPORT SPEED / WORKING SPEED MODE

The pendular arm can be raised or lowered in transport speed mode with the telescope retracted.

Details on changing from transport speed to working speed:
Extending the telescope less than 2 cm and lower arms against their stops (< 5 cm elevation); outside one or other of these values, the platform goes into working speed mode.

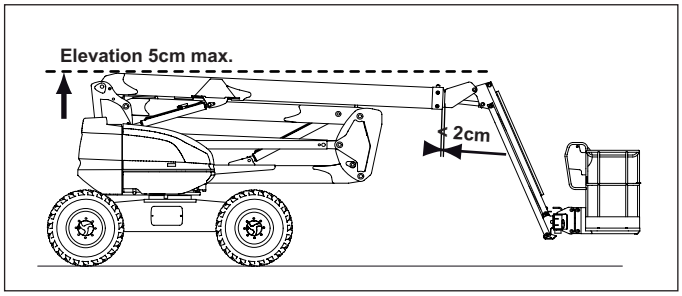

INSTALLATION ON THE OPERATING SITE AND LIFTING

The platform has been designed for work on flat, horizontal ground; it is important to clear the area in which the platform must work.

- Transport the platform to the work site.
- If necessary, load the equipment to be carried (Store it so that it does not disturb the user and will not fall).
- get into the platform.

You must wear a safety helmet and harness.

- Press the "Fail-safe" pedal and start movement to position the platform in the working zone.

***NOTA** : When the platform is detached from the chassis, travel is automatically at slow speed.*
- Only the pendular arm can be removed totally while preserving transport speed.

During maneuvres of the access platform (raise, rotate...), keep looking above and about you. Watch out in particular for electric cables and any other objetcs that may be locatein the volume in which the access platform moving.

Make sure you are familiar with the instrumentation at the ground backup and maintenance post and the basket control post, described in the previous pages , particularly the warnings indicating the risks linked to performing certain movements.

SAFETY SYSTEMS

When the platform is overloaded, the buzzer is activated and sounds continuously. All movement is blocked except for retracting the telescope.
- Solution : remove the load.

https://truckmanualshub.com/

LOWERING

When the work is complete: Retract the telescope and then lower the arms to bring the platform to transport position.

Be careful of any people present on the ground when lowering the arms

STOPPING THE PLATFORM

When the platform is not in use, switch off the electrical power by turning the ignition key to neutral (see 2- IGNITION KEY).

https://truckmanualshub.com/

LOADING AND UNLOADING OF THE ACCESS PLATFORM

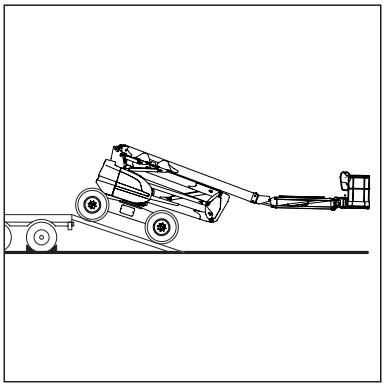

Check that the safety instructions associated with the flatbed are being observed before loading the access platform, and make sure that the truck driver is informed about about the dimensional characteristics and the weight of the access platform. (See the CHARACTERISTICS paragraph).

When loading on a loading platform, the lifting platform must be in transport position: - Counterweight opposite the ramp (counterweight above the platform's steerable wheels) (See 1 - Safety instructions and regulations; chapter on SAFETY STICKERS, references 1 and 2).

- Upper arm against its stop
- Lower and intermediate arms in low position
- Telescope retracted
- The pendular arm can be raised to avoid touching the ground, but it is not recommended to perform movements with the basket excessively high; keep it as low as possible during movement (danger of falling or impact, see 1- Safety instructions and regulations, chapter on operating instructions).
- Lock the turret.
- Use "Ramp" speed

Make sure that the dimensions and load capacity of the flatbed are adequate for transporting the access platform. Also check the persmissible ground contact pressure of the flatbed in relation to the access platform.

Risk of the platform slipping or skidding when ascending or descending loading ramps, if they are wet, muddy or even damp. For this work you need a winch attached to the machine anchorage points.

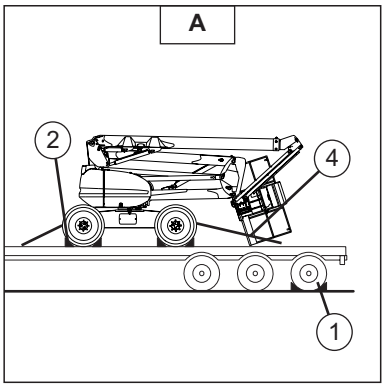

LOADING

- Lock the transport platform wheels Ref. 1 (Fig A).
- Fasten the ramps to the loading platform to obtain the lowest slope possible for the passage of the lifting platform.

NOTA: The machine is shown with reduced dimensions (basket completely folded) (Fig A).

PROCEDURE FOR FOLDING THE LIFTING PLATFORM

- Rotate the basket to the left until it reaches its stop.
- Raise the upper arm.
- Switch on the basket tilt movement to fold the basket under the upper arm.
- Lower the upper arm, taking care not to bump the basket on the ground.
- Switch on the basket tilt movement again to fold the basket as far as possible under the upper arm.
- Switch on turret rotation to the right so that the overall width does not exceed the chassis width.

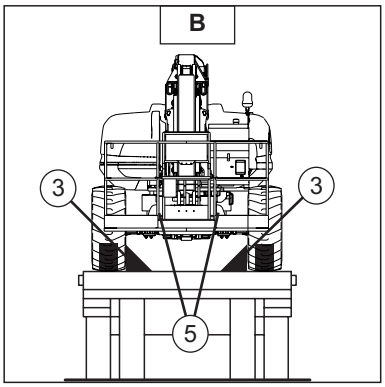

ANCHOR THE PLATFORM

- Fix chocks to the platform at the front and back of each tyre, Ref. 2 (Fig A).
- Also fix chocks to the platform on the inner or outer side of each tyre, Ref. 3 (Fig A).
- Anchor the lifting platform to the truck bed with adequately strong rope, Ref. 4 (Fig A), at front and back, passing ropes through the sling rings, Ref. 5 (Fig B).

https://truckmanualshub.com/

Please adapt the speed of translation of the nacelle by controlling this speed with the manipulator of translation.

https://truckmanualshub.com/

RESCUE PROCEDURE

This paragraph describes the procedures to be followed and the controls to be used if a problem arises (the platform breaks down or someone is trapped in the basket) while the platform is operating.
When taking charge of the machine and at regular intervals afterwards, the operator (and anyone else whose duties are centred on activities in contact with the machine) should read and fully understand this procedure.

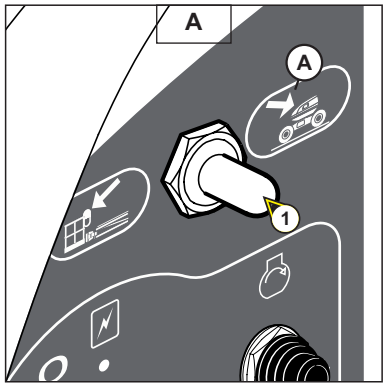

INDISPOSITION OF THE USER

If the operator should become ill or find himself incapable of manoeuvring, the person on the ground can take back control of the platform.
Proceed as follows.
- Turn the key switch to position A (Fig. A) to take back control of the platform's movements.
- Proceed to lower the platform.

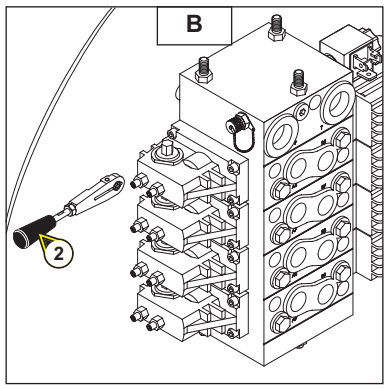

Pay attention to any structure or obstacle located below the access platform.

IN THE EVENT OF AN ACCIDENT OR BREAKDOWN

ELECTRICAL FAILURE

When an accident or a breakdown occurs making the electrical control boxes unusable, the machine has manual systems for performing all the platform's movements.

- Lift the turret's right-hand cover.

- Grasp control level 2 (Fig.B) and set it on one the elements to produce the desired movement (Fig.D-E-F-G).

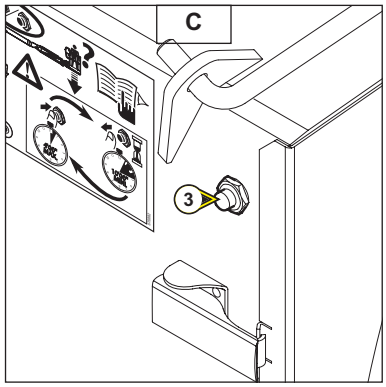

During these operations the system no longer controls :
- Slope safety
- Basket overload.

To raise and lower the lowers arms (position the lever on I).

- Press button rep.3 (Fig.C) to provide power to the distributor and simultaneously push the lever (Fig.D) to :

A - Lower the lower arms
B - Raise the lower arms

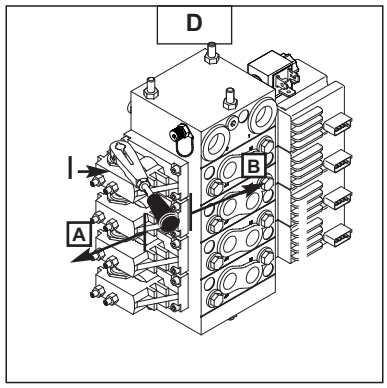

https://truckmanualshub.com/

To extend and retract the telescope (set the lever to II).

- Press button rep.3 (Fig.C) to provide power to the safety pump and simultaneously pull the lever (Fig.E) to :

  A - Retract the telescope
  B - Extend the telescope

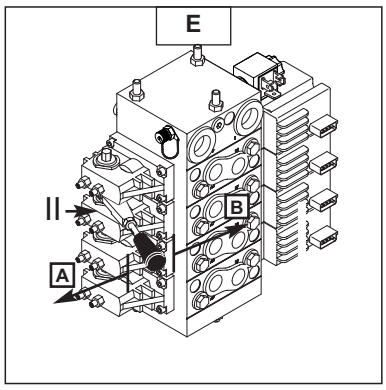

To raise and lower the upper arm (set the lever to III).

- Press button rep.3 (Fig.C) o provide power to the safety pump and simultaneously pull the lever (Fig.F) to :

  A - Lower the upper arm
  B - Raise the telescope

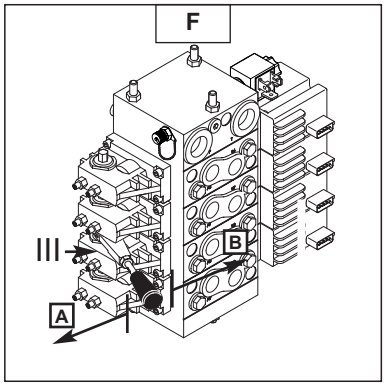

To rotate the turret or to raise or to lower the pendular arm (set the lever to IV).

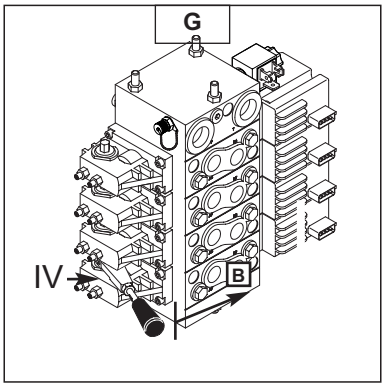

https://truckmanualshub.com/

To rotate the turret left (set the lever to IV).

- Tighten valve 4 (Fig.H).
- Press button rep.3 (Fig.C) to provide power to the distributor and simultaneously push the lever (Fig.G) towards B.
- Then unscrew valve 4 to its stop without forcing it (Fig.H).

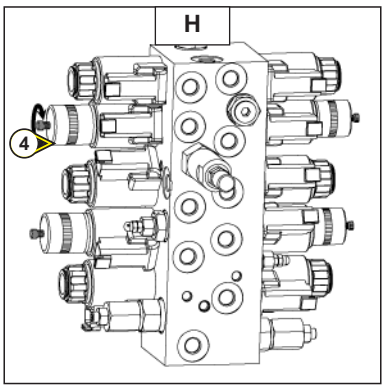

To rotate the turret right (set the lever to IV).

- Tighten valve 5 (Fig.I).
- Press button rep.3 (Fig.C) to provide power to the distributor and simultaneously push the lever (Fig.G) towards B.
- Then unscrew valve 5 to its stop without forcing it (Fig.I).

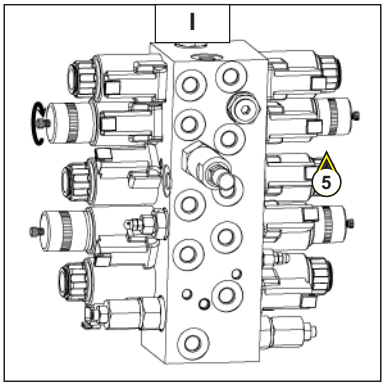

To raise the pendular arm (set the lever to IV).

- Tighten valve 6 (Fig.J).
- Press button rep.3 (Fig.C) to provide power to the distributor and simultaneously push the lever (Fig.G) towards B.
- Then unscrew valve 6 to its stop without forcing it (Fig.J).

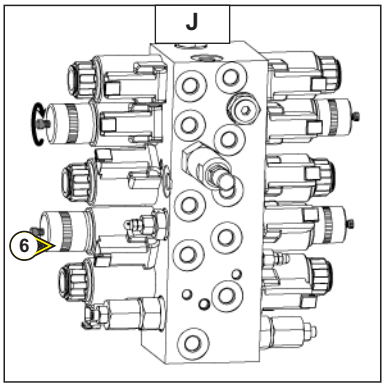

To lower the pendular arm (set the lever to IV).

- Tighten valve 7 (Fig.K).
- Press button rep.3 (Fig.C) to provide power to the distributor and simultaneously push the lever (Fig.G) towards B.
- Then unscrew valve 7 jusqu'en butée sans forcer (Fig.K).

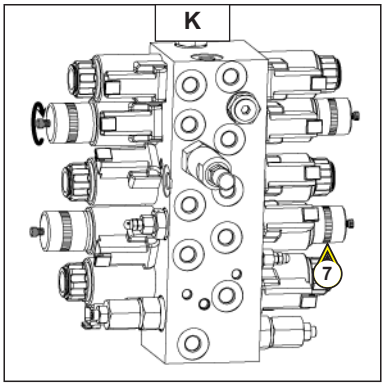

https://truckmanualshub.com/

TROUBLESHOOTING FROM THE BASKET

- Press button rep.6 (Fig.L) to supply the safety pump and simultaneously ***operate the basket controls.***

(See the “CONTROL INTRUMENTS B - CONTROL STATION ON THE PLATFORM” section)

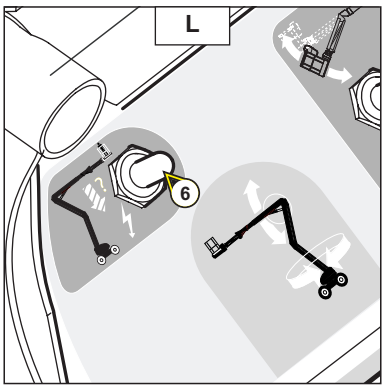

Only to be used to enable return to the ground if the IC engine breaks down.

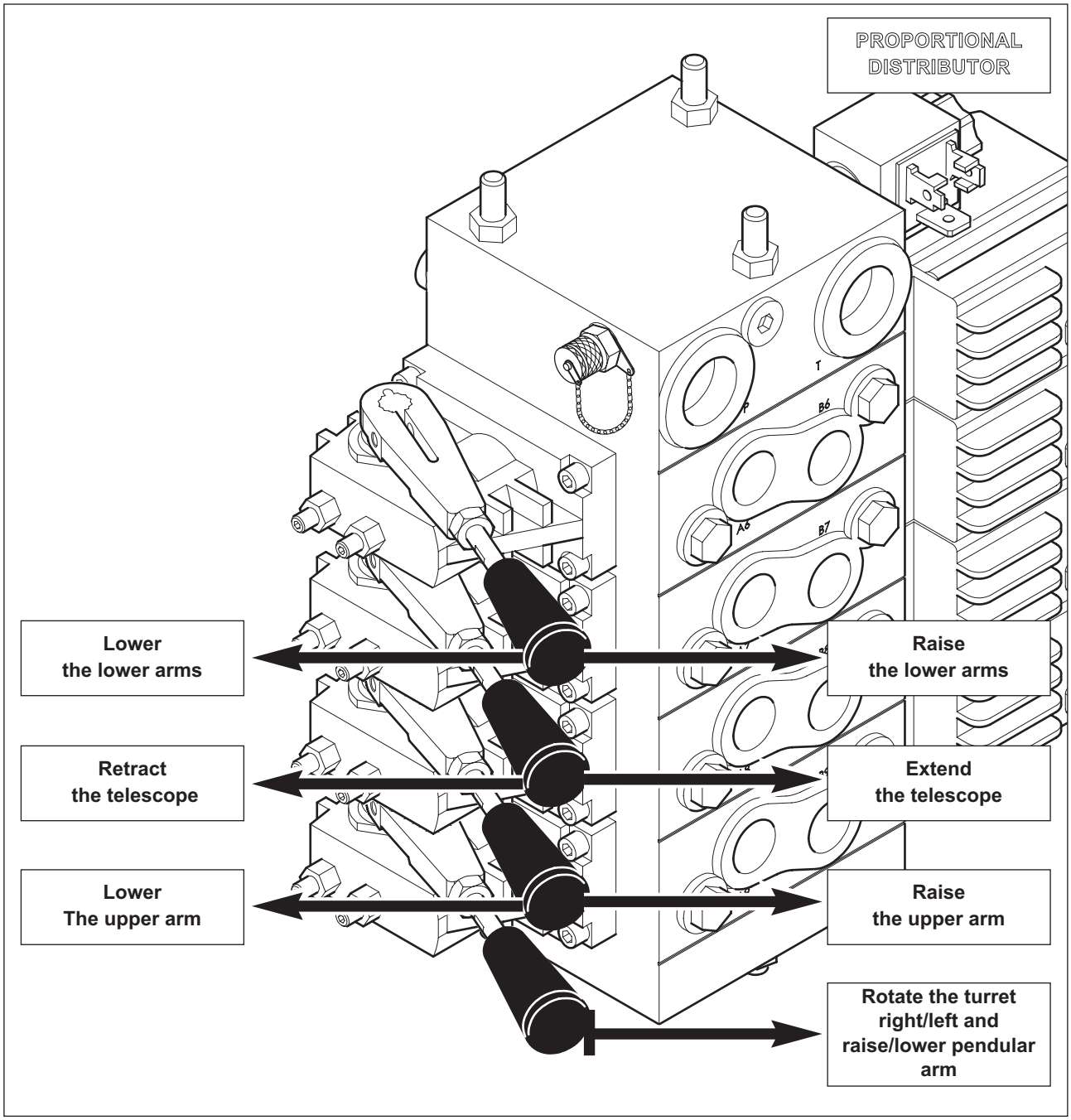

https://truckmanualshub.com/

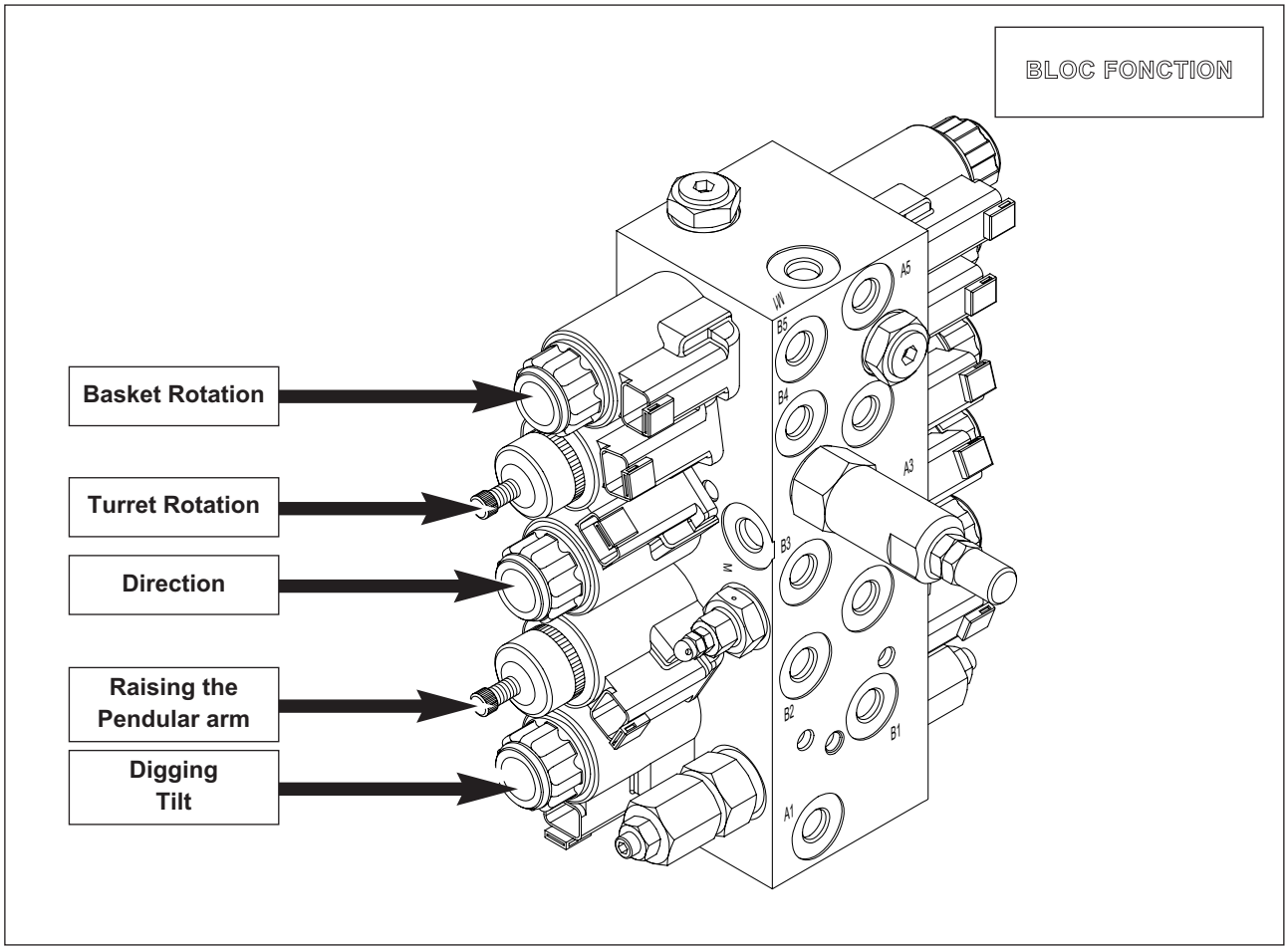

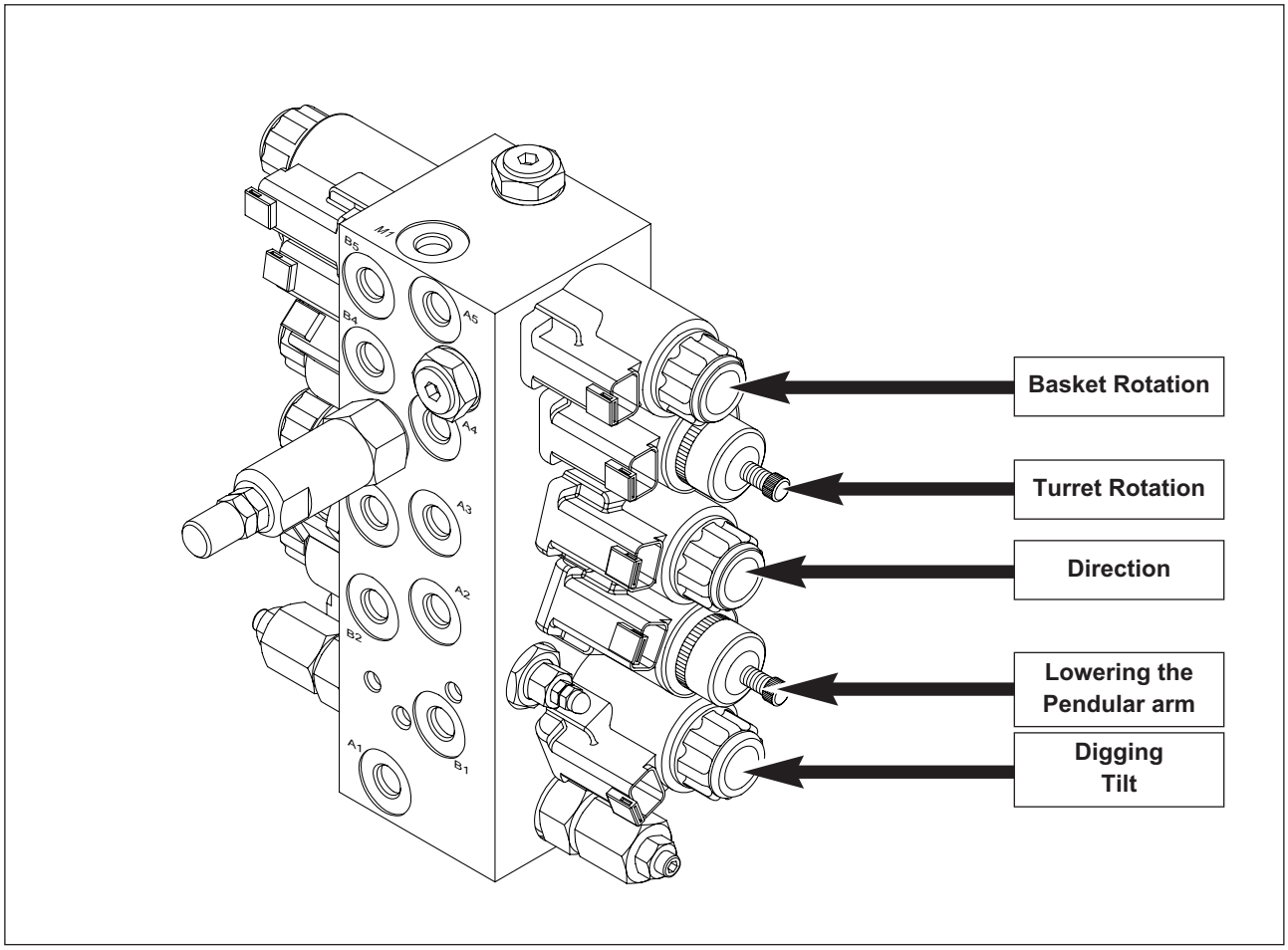

https://truckmanualshub.com/

3 - MAINTENANCE

https://truckmanualshub.com/

https://truckmanualshub.com/

FILTER CARTRIDGES AND BELTS

INTERNAL COMBUSTION ENGINE

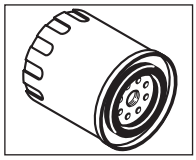

INTERNAL COMBUSTION ENGINE OIL FILTER
Reference: 702577
Replace: 500 H

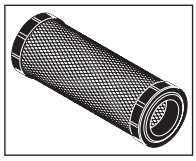

DRY AIR FILTER CARTRIDGE
Reference: 227959
Clean: 250 H
Replace: 500 H

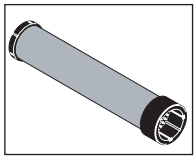

DRY AIR FILTER SAFETY CARTRIDGE
Reference: 227960
Replace: 1000 H

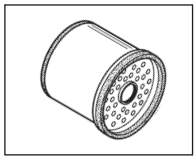

FUEL FILTER CARTRIDGE
Reference: 109401
Replace: 500 H

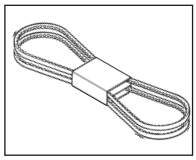

FAN BELT
Reference: 702738

TRANSMISSION

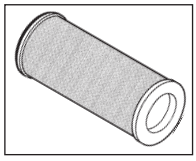

HYDROSTATIC TRANSMISSION OIL FILTER CARTRIDGE
Reference: 518250
Replace: 500 H

HYDRAULIC

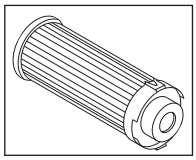

AUXILIARY HYDRAULIC OIL FILTER CARTRIDGE
Reference: 518251
Replace: 500 H

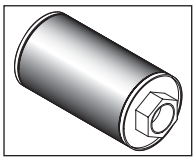

HYDRAULIC RESERVOIR SUCTION STRAINER
Reference: 19910
Clean: 100 H

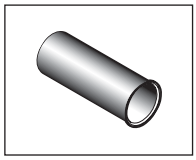

HYDRAULIC RESERVOIR FILLING STRAINER
Reference: 599523

https://truckmanualshub.com/

https://truckmanualshub.com/

LUBRICANTS

COMPONENTS TO BE LUBRICATED	CAPACITY	RECOMMENDATION	PACKAGING	REFERENCE
INTERNAL COMBUSTION ENGINE	7.3 L.	MANITOU engine oil SAE 15W/40	5 L. 25 L. 56 L. 215 L.	485 297 161 584 490 013 485 165
FRONT AXLE DIFFERENTIAL	7.8 L.	TRACTELF axle oil SF3	5 L. 20 L. 209 L.	545 976 582 391 546 222
REAR AXLE DIFFERENTIAL	6.5 L.	TRACTELF axle oil SF3	5 L. 20 L. 209 L.	545 976 582 391 546 222
TRANSFER BOX	1.10 L.	TRACTELF axle oil SF3	5 L. 20 L. 209 L.	545 976 582 391 546 222
FRONT AND REAR WHEEL REDUCER	0.85 L.	SHELL SPIRAX A 90 oil	20 L. 209 L.	661 950 662 000
TURRET GEAR MOTOR REDUCTION BRAKE	1,5 L.	MANITOU Mechanical transmission oil for axles and boxes SAE 80W90	2 L. 25 L. 56 L. 215 L.	499 237 161 585 466 238 490 208
HYDRAULIC OIL RESERVOIR	80 L.	MANITOU ISO 46 Hydraulic oil	25 L. 56 L. 215 L.	161 588 453 265 485 227
GENERAL LUBRICATION TURRET BEARING RING LUBRICATION		MANITOU Grease	Cartridge 400 Gr.	479 330
TURRET GEAR WHEEL LUBRICATION		SHELL MALLEUS GL 205 oil	Aerosol	545 834
COOLING CIRCUIT	8 L.	Coolant (Protection level - 30°C) Coolant (Protection level -25°C)	2 L. 5 L. 20 L. 210 L. 2 L. 5 L. 20 L. 210 L.	473 076 470 077 470 078 470 079 554 002 554 003 554 004 554 005
FUEL TANK	80 L.	Gasoil		

OIL DIAGNOSTIC ANALYSIS

If a servicing and maintenance contract has been taken out with the dealer, an engine and transmission oil diagnostic analysis may be requested depending on the level of use.

https://truckmanualshub.com/

MAINTENANCE TABLE

A = ADJUST	N = CLEAN
C = CHECK	P = PURGE
D = DESCALE	R = REPLACE
G = LUBRICATE	V = DRAIN

	After the first 50 hours	Daily	50 Hours or Monthly*	250 Hours or 6 Monthly*	500 Hours or Annually*	1000 Hours or every 2 years*	3000 Hours or every 4 years*	PAGE
INTERNAL COMBUSTION ENGINE								
Engine oil level	V/R	C	◀◀	◀◀	V/R	◀◀	◀◀	3-8 / 3-18
Engine oil filter	R				R	◀◀	◀◀	3-18
Coolant level		C	◀◀	◀◀	◀◀	V/R	◀◀	3-8 / 3-24
Fuel level		C	◀◀	◀◀	◀◀	◀◀	◀◀	3-8
Dry air filter cartridge				N	R	◀◀	◀◀	3-12 / 3-19
Radiator core				N	◀◀	◀◀	◀◀	3-12
Alternator / fan / crankshaft belt tension	A			A	◀◀	◀◀	◀◀	3-13
Fuel filter cartridge	R				R	◀◀	◀◀	3-19
Fuel tank						V/N	◀◀	3-25
Dry air filter safety cartridge						R	◀◀	3-25
Engine silent blocks						C**	◀◀	3-27
Engine rpm levels						C**	◀◀	3-27
Valve sets							C/A**	3-28
Injectors					C**	◀◀	◀◀	3-19
Radiator						C/D**	◀◀	3-27
Water pump and thermostat							C**	3-28
Alternator and starter							C**	3-28
Drain the fuel filter				V	◀◀	◀◀	◀◀	3-12
TRANSMISSION								
Hydrostatic transmission oil filter cartridge	R				R	◀◀	◀◀	3-20
Axles	G		G	◀◀	◀◀	◀◀	◀◀	3-11
Cardan shaft bolt tightness				C	◀◀	◀◀	◀◀	3-22
Braking system		C	◀◀	◀◀	C	◀◀	◀◀	3-9 / 3-23
Front and rear axle differential oil level	C			C	◀◀	V/R	◀◀	3-13 / 3-26
Front and rear wheel reducer oil level	C			C	◀◀	V/R	◀◀	3-14 / 3-26
Hydrostatic transmission circuit pressure						C**	◀◀	3-27
Start of hydrostatic transmission regulation						C/A**	◀◀	3-27
TYRES								
Tightness of the wheel nuts				C	◀◀	◀◀	◀◀	3-14
Condition of the wheels and tyres		C**	◀◀	◀◀	◀◀	◀◀	◀◀	3-9
Changing a wheel								3-30
HYDRAULIC SYSTEM								
Auxiliary hydraulic oil filter cartridge	R				R	◀◀	◀◀	3-20
Hydraulic oil level		C	◀◀	◀◀	◀◀	◀◀	◀◀	3-9
Hydraulic oil					V/R	◀◀	◀◀	3-21
Hydraulic circuit strainer						N	◀◀	3-27
Back-up pump	C			C	◀◀	◀◀	◀◀	3-14
Turret reduction gear brake reducer				C	V/R	◀◀	◀◀	3-15 / 3-22
Hydraulic oil reservoir							N**	3-28
Hose condition					C	◀◀	◀◀	3-21
ELECTRICITY								
Battery electrolyte density	C			C	◀◀	◀◀	◀◀	3-23
Battery electrolyte level	C		C	◀◀	◀◀	◀◀	◀◀	3-10
Condition of the manipulator gusset		C	◀◀	◀◀	◀◀	◀◀	◀◀	3-9
CHASSIS								
Turret orientation crown	G			G	◀◀	◀◀	◀◀	3-15
Tightness of the turret orientation crown bolts	C				C	◀◀	◀◀	3-23
Axles				G	◀◀	◀◀	◀◀	3-16
Tightness of the screws fixing the axles on the chassis				C	◀◀	◀◀	◀◀	3-17
LIFTING STRUCTURE								
Telescope chocking				C	◀◀	◀◀	◀◀	3-14
Basket overload and rotation								
Tightness of the turret rotation motor bolts					C	◀◀	◀◀	3-22

https://truckmanualshub.com/

A = ADJUST	N = CLEAN
C = CHECK	P = PURGE
D = DESCALE	R = REPLACE
G = LUBRICATE	V = DRAIN

	After the first 50 hours	Daily	50 Hours or Monthly*	250 Hours or 6 Monthly*	500 Hours or Annually*	1000 Hours or every 2 years*	3000 Hours or every 4 years*	PAGE
SAFETY COMPONENTS								
Arm position sensors	C			C	◀◀	◀◀	◀◀	3-17
Slope sensor	C			C	◀◀	◀◀	◀◀	3-17
Overload sensor	C			C	◀◀	◀◀	◀◀	3-17
Machine stickers	C**			C	◀◀	◀◀	◀◀	3-17
ACCESS PLATFORM								
Purge the fuel supply circuit								3-29
Attach a sling to the platform								3-32
Transport the platform on a skid								3-34
Set to free wheel								3-35
Maintenance stay								3-36

*: First time reached.
**: Contact your dealer

https://truckmanualshub.com/

A - EVERY DAY OR EVERY 10 HOURS OF OPERATION

A1 - I.C. ENGINE OIL LEVEL

CHECK

Set the platform on a horizontal surface, with the IC engine stopped, and let the oil gather in the casing.

- Open the left-hand cover.
- Remove gauge 1 (Fig. A1/1)
- Wipe the gauge and check the level is between the two upper marks.
- Add oil if necessary (see the LUBRICANTS section) via the filling hole 2 (Fig. A1/2).

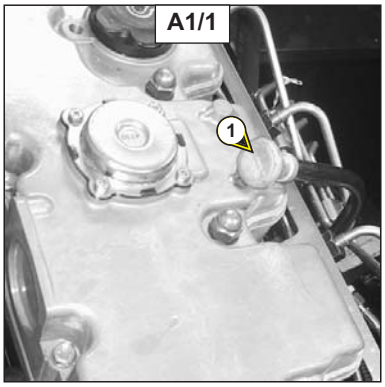

A2 - COOLING LIQUID OIL LEVEL

CHECK

Set the platform on a horizontal surface, with the IC engine stopped, and let the engine cool down.

- Open the left-hand cover.
- Slowly turn the radiator cap 4 (Fig A2) up to the safety stop.
- Let the pressure and the steam escape.
- Press the cap down and turn it to remove it.
- Add coolant via the filling hole 5 (Fig. A2).
- Lightly grease the filling hole to assist in removing and replacing the radiator cap.

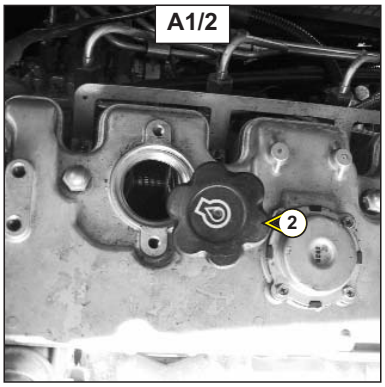

To avoid any risk of spraying or burning, wait untill the I.C. engine has cooled down before removing the cooling circuit filler plug. If the cooling liquid is very hot, add only hot cooling liquid (80°C). In an emergency, you can use wateras a cooling liquid, then change the cooling circuit liquid as soon as possible (see: 3 - MAINTENANCE : E1 - COOLING LIQUID).

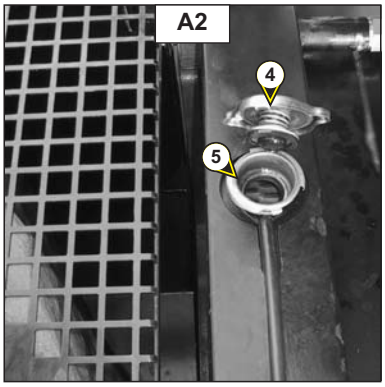

A3 - FUEL LEVEL

CHECK

Keep the fuel tank full as much as possible in order to reduce condensation due to atmospheric conditions to a minimum.

- Remove the cap 1 (Fig. A3)
- Fill the tank with clean diesel fuel, via the filling hole.

Never smoke or approach with a naked flame when filling or when the tank is open. Never fill up while the engine is running.

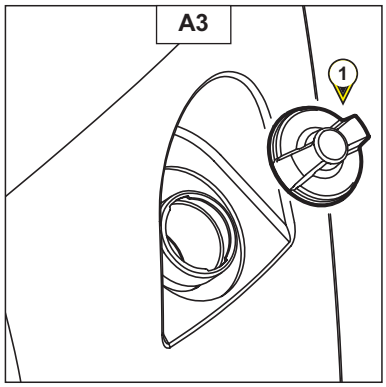

https://truckmanualshub.com/

The fuel tank is degassed via the filler plug. When changing it, always use an original part, with degassing hole.

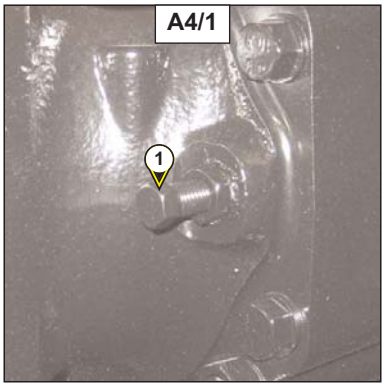

A4 - Braking

CHECK

Make sure there are 4 screws 1 (Fig. A4/1) and 2 (Fig. A4/2) on the rear axle assembly.

Check their position regularly. If the screws are not tight enough
THE MACHINE WILL HAVE NO BRAKES.

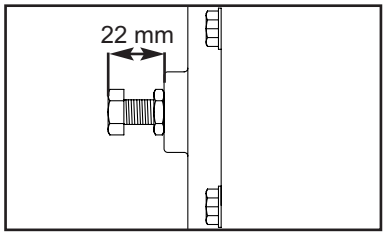

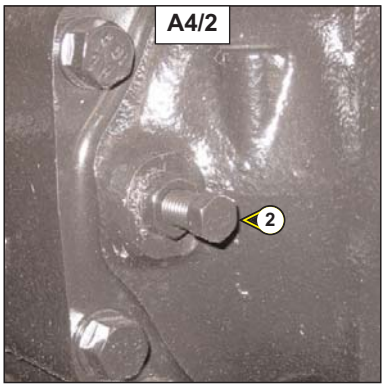

A5 - Hydraulic oil level

CHECK

Set the platform in transport position on a horizontal surface with the engine stopped.
- The oil level must be checked at ambient temperature between 10°C and 20°C; it must reach the middle of indicator 1 with a tolerance of ±1 cm (Fig. A5)
- If necessary, add oil (See chapter on "LUBRICANT") through filler hole 2 (Fig. A5).

The hydraulic oil level must be checked with the pendular arm in low position

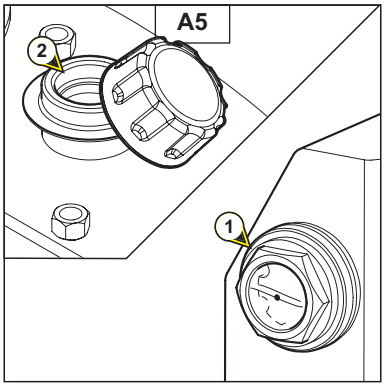

A6 - Condition of manipulator boots

CHECK

For this operation, get into the basket with the internal combustion engine off.

- Check the condition of the manipulator rubber boots 1 (Fig. A6) by moving them as if during a normal movement.

The boots must not be split or cracked ; risk of water infiltrating which would prevent the machine from working properly.

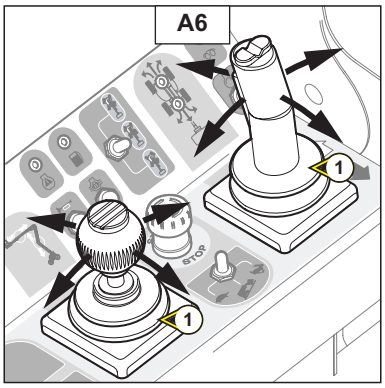

A7 - Condition of wheels and tyres

CHECK

Check the tyres for any cuts, tears, protuberances,.. wear, etc

https://truckmanualshub.com/

B - EVERY 50 HOURS OF OPERATION

Perform the operations described previously as well as the following operations.

B1 - BATTERY ELECTROLYTE LEVEL

CHECK

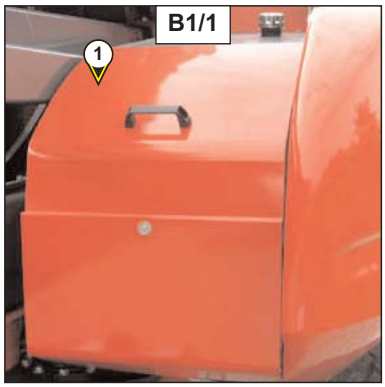

Check the level of the electrolyte in each battery element.
If the ambient temperature is high, check the level more frequently than every 50 hours of operation.

- Unscrew the two nuts holding the battery casing in place.
- Remove battery casing 1 (Fig. B1/1).
- Release the six caps 2 (Fig. B1/2) from the components.
- The level must be 1 cm above the battery plates.
- If necessary, top up with clean distilled water, stored in a glass container.
- Clean and dry the six caps 2 (Fig. B1/2) and put them back in place.
- Check the lugs and apply Vaseline to prevent oxidation.
- Reposition the battery casing.
- Tighten the two battery casing nuts.

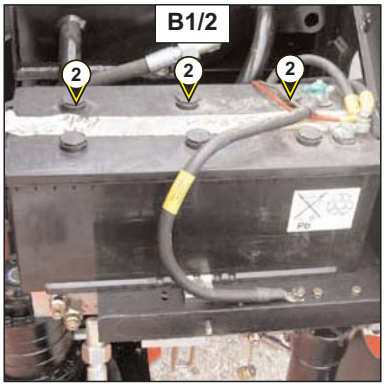

Handling and servicing a battery can be dangerous, take the following:
- *Wear protective goggles.*
- *Handle batteries horizontally.*
- *Never smoke or work near a naked flame.*
- *Work in a well-ventalited area.*
- *In the event of electrolyte being spilled onto the skin or splashed in the eyes, rinse thoroughly with cold water for 15 minutes and call a doctor.*

https://truckmanualshub.com/

B2 - AXLE ASSEMBLIES

GREASE

- **GREASE POINT FOR THE PIVOTS ON THE FRONTS AND REAR WHEEL REDUCER 1 (FIG. B2/1) AND 2 (FIG. B2/2)** (8 grease points)

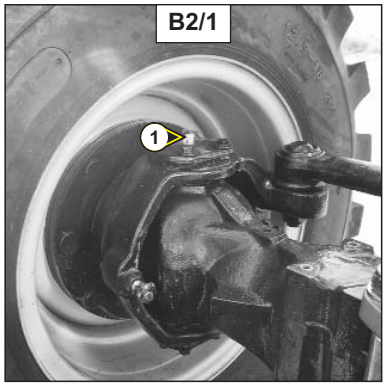

B2/1

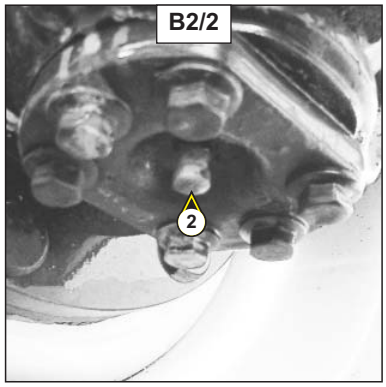

B2/2

- **GREASE POINTS FOR THE FRONT AXLE OSCILLATING SHAFT 3 (FIG. B2/3) AND 4 (FIG. B2/4)**(2 grease points).

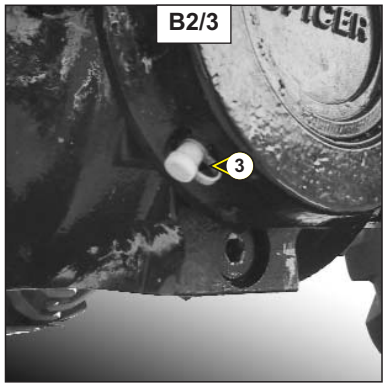

B2/3

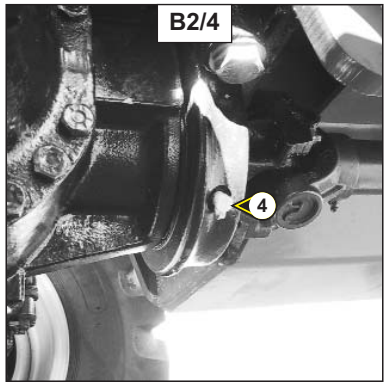

B2/4

- **CARDAN TRANSMISSION GREASE NIPPLES : FRONT AXLE 5-6 (FIG. B2/5) AND TRANSFER GEARBOX/REAR AXLE 7 (FIG. B2/6).**

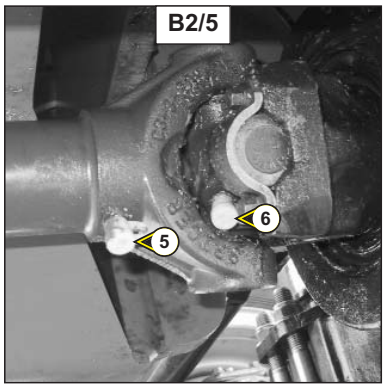

B2/5

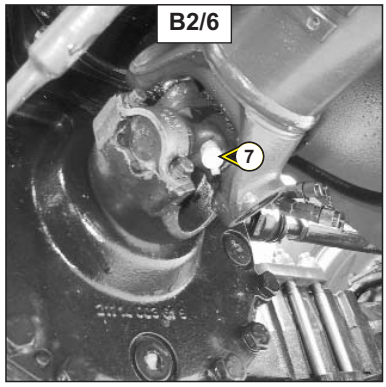

B2/6

https://truckmanualshub.com/

C - EVERY 250 HOURS OF OPERATION

Perform the operations described previously as well as the following operations

C1 - DRY AIR FILTER CARTRIDGE

CLEAN

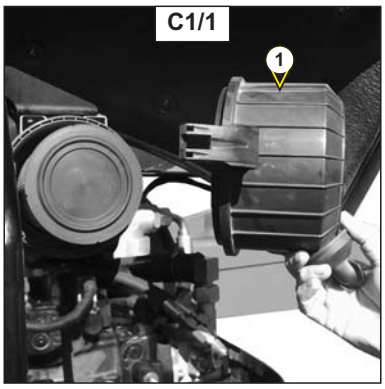

If the atmosphere is very dusty, reduce this interval and refer to the FILTER ELEMENTS AND BELTS section.
- Open the left-hand cover.
- Unclip the lid 1 (Fig. C1/1)
- Pull out the filter cartridge 2 (Fig C1/2).
- Leave the safety cartridge 3 (Fig. C1/2) in place.
- Use a jet of compresses air to clean the filter cartridge, working only from the inside outwards.

Respect the safety distance of 30 mm between the air jet and the cartridge to avoid tearing or making a hole in the cartridge must not be blown anywhere near the air filter box. Never clean the cartridge by tapping it against a hard surface. Your eyes must be protected during this intervention.

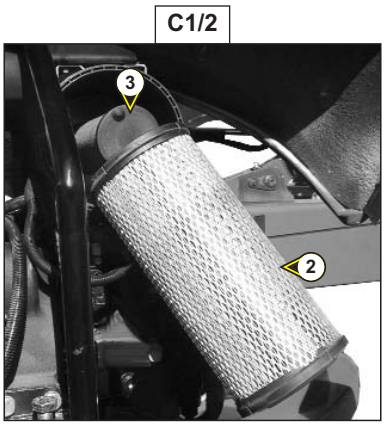

- Clean the inside of the filter with a clean, damp, non-fluffy cloth
- Check the cartridge's condition and change it if necessary
- Then refit the cartridge and the lid.

Never wash a dry air filter cartridge. Under no circumstances, clean the safety cartridge situated inside the filter cartridge: replace it with a new one if it is clogged or damaged.

C2 - FUEL FILTER

EMPTY

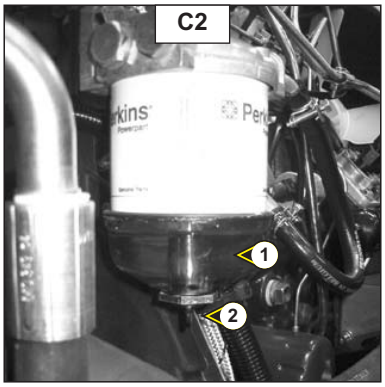

- Open the bonnet.
- Check visually to make sure there is water in bowl 1 (Fig. C2) and empty it if necessary.
- Place a container under the bowl and release drain plug 2 (Fig. C2) by two or three turns
- Let the diesel flow out free of impurities and water.
- Tighten the drain plug while the diesel is flowing.

C3 - RADIATOR HARNESS

CLEAN

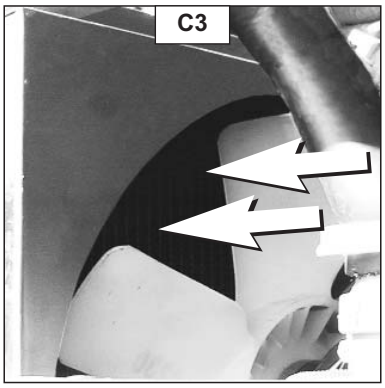

- Open the bonnet.

To avoid the radiator core becoming clogged, clean it with a jet of compressed air from front to back (Fig. B8). This is the only effective method of removing any impurities.

Clean the radiator core every week when the platform is being used in a very dusty area.

https://truckmanualshub.com/

C4 - Alternator / Fan / Crankshaft belt tension

ADJUST

- Open the left-hand cover.
- Check the tension of the belt between the fan and alternator pulleys.
- When pressed normally with your thumb (45N), the tension should be around 10mm.
- Adjust the belt if necessary.
- Loosen the screws 1 (Fig. C4) two or three turns.
- Pivot the alternator assembly to achieve the required belt tension.
- Retighten the screws 1 (Fig. C4) (tightening torque 22Nm).
- Check the belt's condition for signs of wear or cracking and replace it if necessary.

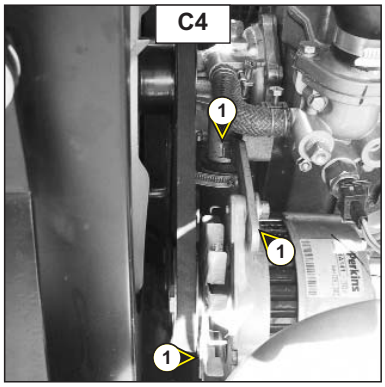

C4

If the alternator belt has to be changed, check the tension again after the first 20 hours of operation.

C5 - Oil level in front and rear wheel reducers

CHECK

Set the platform on a horizontal surface with the engine stopped.

DIFFERENTIAL :

- Remove the plug 1 (Fig C5/1). The oil level must be flush with the hole.
- Add oil if necessary (see the LUBRICANTS section) through the same hole.
- Re-insert and tighten the plug 1 (Fig. C5/1) (tightening torque 6 daNm).

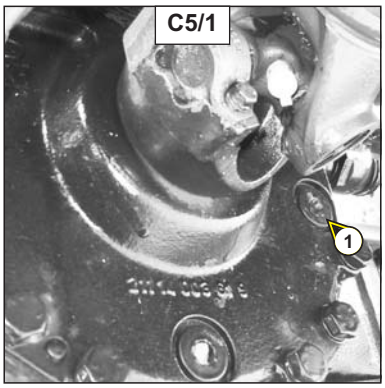

C5/1

AXLES :

- Remove the plug 2 (Fig C5/2: front axle) (Fig. C5/3: rear axle). The oil level must be flush with the hole.
- Add oil if necessary (see the LUBRICANTS section) through the same hole
- Re-insert and tighten the plug 2 (Fig C5/2: front axle) (Fig. C5/3: rear axle) (tightening torque 6 daNm).

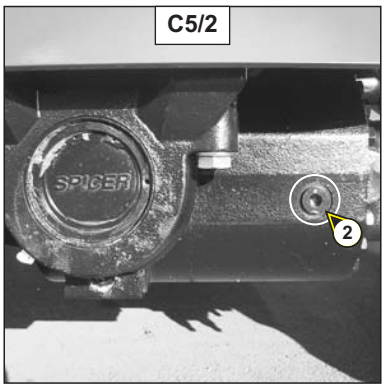

C5/2

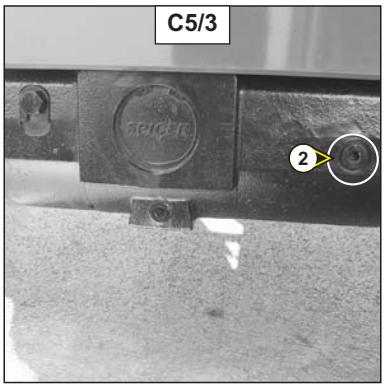

C5/3

https://truckmanualshub.com/

C6 - OIL LEVEL IN FRONT AND REAR WHEEL REDUCERS

CHECK

Set the platform on a horizontal surface with the engine stopped.

- Check the level on each of the front wheel reducers.
- Set the plug 1 (Fig. C6) horizontal.
- Remove the plug. The oil should be flush with the hole.
- Add oil if necessary (see the LUBRICANTS section) through the same hole.
- Re-insert and tighten the plug 1 (Fig. C6) (tightening torque 8 daNm).
- Repeat the operation for each rear wheel reducer.

C6

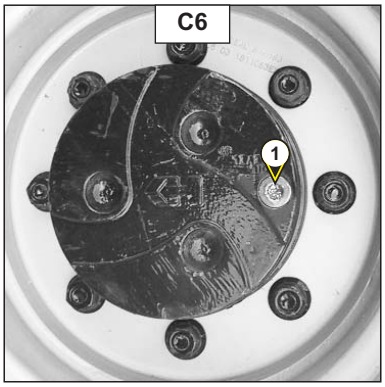

C7 - TIGHTENING WHEELNUTS

CHECK

- Check the tightness of the wheel nuts (Fig. C7).

Failure to do this can cause the wheel pins to deteriorate and break and the wheels to deform.

C7

COUPLE DE SERRAGE DES ECROUS DE ROUES	
ROUES AVANT	37 daN.m ± 15 %
ROUES ARRIERE	37 daN.m ± 15 %

C8 - BACKUP PUMP

CHECK

- Stop the I.C. engine

Make sure the backup pump is working properly by pressing the switch beside the base control box or the basket control box.
- Perform an arm lowering movement (example…)

You must not use the platform if the pump is not working.

C9/1

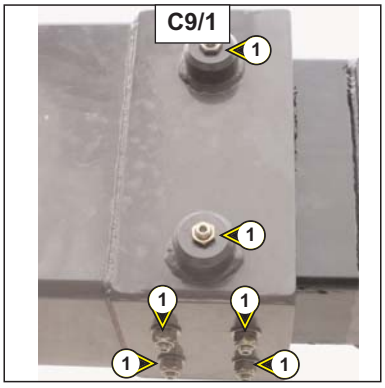

C9 - LOCKING THE TELESCOPE

CHECK

- Make sure the 9 nuts on telescope 1 wear pads are tight (Fig. C9/1, Fig. C9/2 and Fig. C9/3).
- Maintain functional play of 1 to 2 mm between the telescope tube and pads

Failure to follow this instruction may lead to the pads being lost and the telescope could be damaged.

C9/2

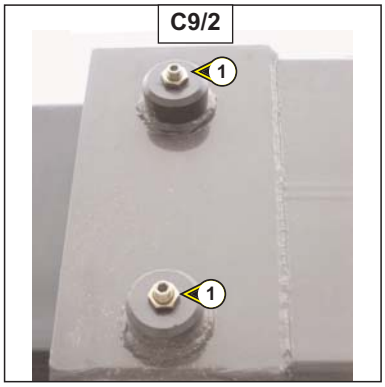

C9/3

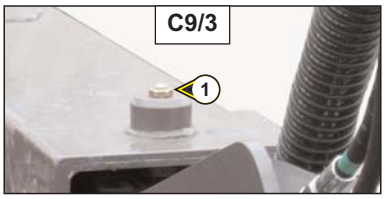

https://truckmanualshub.com/

C10 - TURRET REDUCING GEAR BRAKE REDUCER LEVEL

CHECK

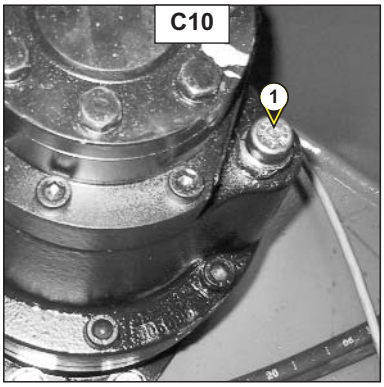

Set the platform on a horizontal surface with the engine stopped.

- Remove the turret's interior cover.

- The gear motor is revealed with the valve block facing to the back.

- Remove the filling-breather cap 1 (Fig. C10).

- The level is correct when the breather is full of oil.

- If necessary, restore the level with a syringe by filling the reducer via the filling-breather cap.

- Re-insert the filling-breather cap 1 (Fig. C10).

C11 - ACCESS PLATFORM SLEW RING

GREASE

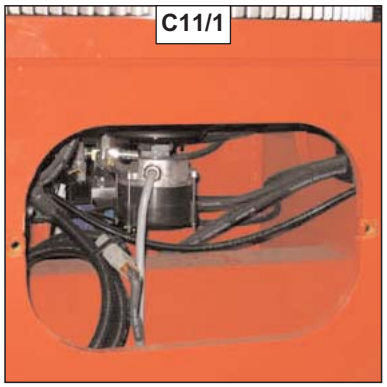

- The bearings and the gears must be greased every 250 hours of operation and before and after a long standstill period.

- Grease to use: see the LUBRICANTS section.

- Remove the left-hand casing on the chassis (See Fig. C11/1).

- Find the 2 grease points 1 (Fig C11/2) and grease the ring thoroughly while turning the turret.

- Put back the left-hand casing on the chassis (See Fig. C11/1).

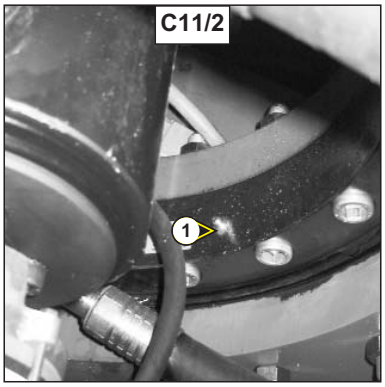

- Apply lubricant to the crown and pinion gears using a paintbrush. (Fig. C11/3).

- Lubricant to use: see the LUBRICANTS section.

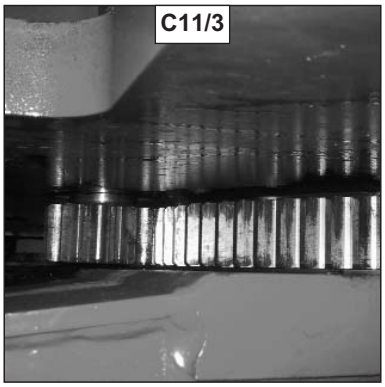

https://truckmanualshub.com/

C12 - SHAFTS

GREASE

- Clean and then grease the following points (see the “LUBRICANTS” section) and remove any surplus grease.

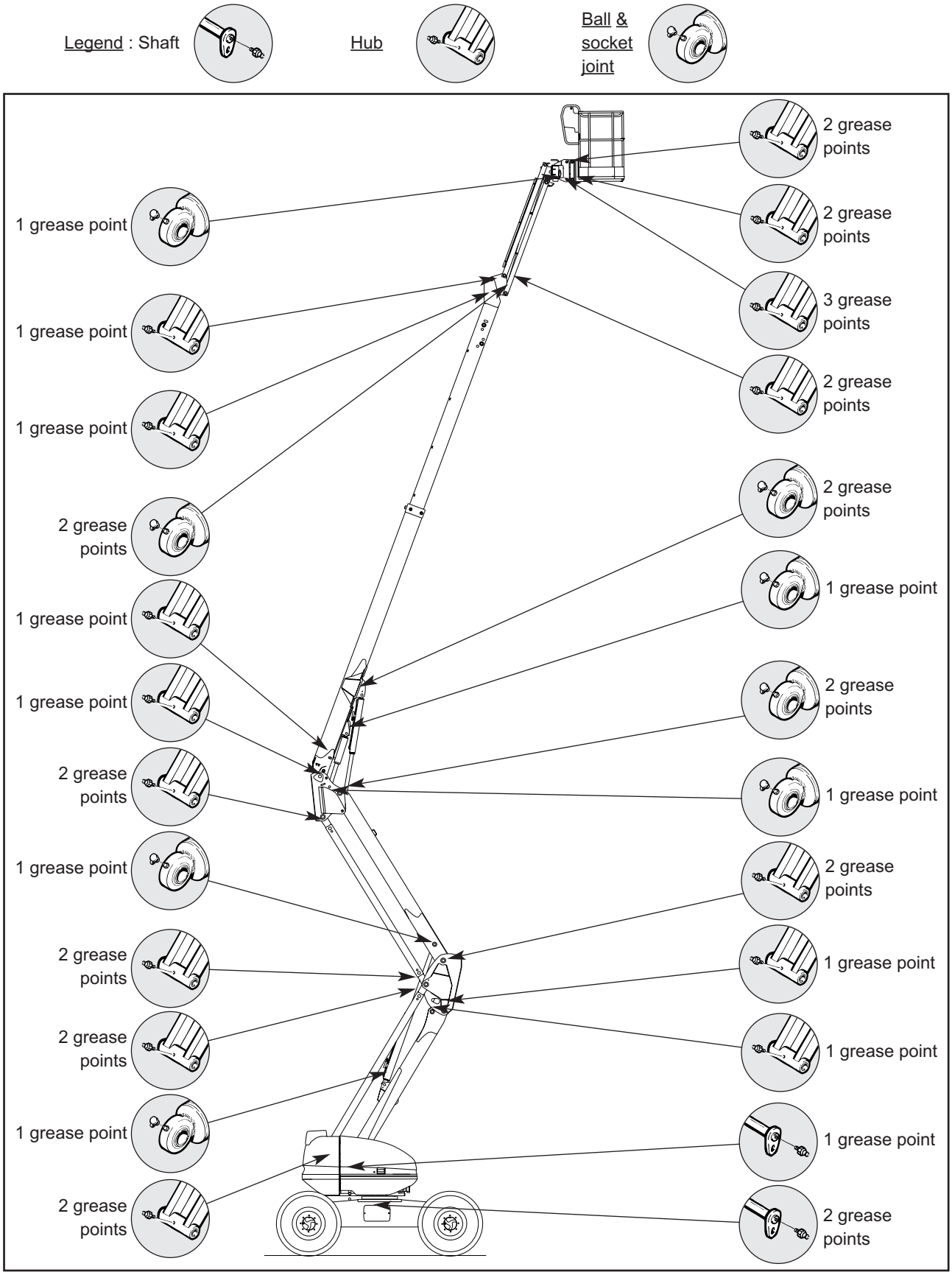

https://truckmanualshub.com/

C13 - Tightening axle assembly mounting screws on the frame

CHECK

- The bolts must be checked for tightness at the latest after 50 hours of operation. You must then repeat this check after every 250 hours of operation.
- The tightening torque is 28.5 daN.m ± 10%
- 1 daN = 1 Kg.

C14 - Arm position sensors

CHECK

- For this operation, fold the arms into transport position

The 4 safety sensors must be switched on :

- 2 sensors on the arms
- 2 sensors on the telescope.

- Perform one travel operation at transport speed
- Raise the arms or extend the telescope
- Move forwards
- The platform must change to working speed.

In the event of dysfunction, forbid use the platform. Consult your dealer.

C15 - Slope sensor

CHECK

Pour cette opération, déplier les bras.

- Incliner manuellement le dévers (voir : 2 - DESCRIPTION : SPECIFICATIONS).
- Les mouvements de sortie télescope, élévation des bras doivent être bloqués (le voyant de dévers est allumé dans le panier, le vibreur sonore est activé par intermittence dans le panier).

In the event of dysfunction, forbid use the platform. Consult your dealer.

C16 - Overload sensor

CHECK

For this operation, extend the arms.

- Position the platform on a steeper slope than is authorised (see : 2 - DESCRIPTION : SPECIFICATIONS).
- Movements to extend the telescope and raise the arms must be locked (the slope signal light is on in the basket, the buzzer sounding intermittently in the basket).

In the event of dysfunction, forbid use the platform. Consult your dealer.

C17 - Machine stickers

CHECK

(Consult your dealer)

https://truckmanualshub.com/

D - EVERY 500 HOURS OF OPERATION

Perform the operations described previously as well as the following operations

D1 - I.C. ENGINE OIL

EMPTY - REPLACE

D2 - I.C. ENGINE OIL FILTER

REMPLACER

- Set the platform on a horizontal surface and let the engine run for a few minutes, then stop it.

DRAINING THE OIL

- Open the left-hand cover.
- Place a receptacle on the ground.
- Loosen the drain plug 1 (Fig. D1/1).
- Remove the filling plug 2 (Fig. D1/2) to ensure good drainage.
- When drainage is complete, re-tighten the drain plug.

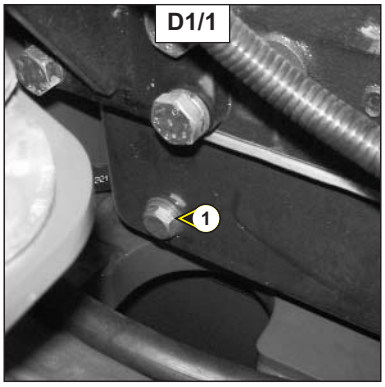

D1/1

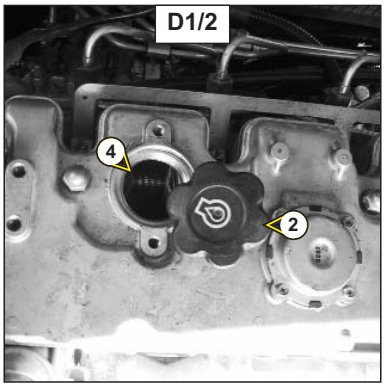

D1/2

Dispose of the oil an environmentally friendly manner.

REPLACING THE FILTER

- Open the steerable engine support.
- Remove the engine's oil filter 3 (Fig. D1/3) and dispose of it, together with its seal.
- Clean the filter support with a clean, non-fluffy cloth
- Lightly oil the new seal
- Refit the oil filter in its support.
- Close the steerable engine support.

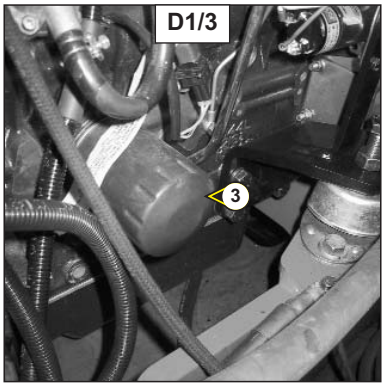

D1/3

Only tighten the oil filter by hand and then use the filter spanner to lock it with a quarter turn.

FILLING WITH OIL

- Ensure that the drain plug 1 (Fig. D1/1) is in place and tight.
- Fill full of oil (see the LUBRICANTS section) through the filling hole 4 (Fig. D1/2).
- Wait a few minutes to allow the oil to flow into the casing.
- Check the level with the gauge 5 (Fig. D1/4).
- Start the engine and let it run for a few minutes.
- Check for any leaks around the drain plug and the engine oil filter.
- Stop the engine, wait a few minutes and then check the level is between the two upper marks on the gauge 5 (Fig. D1/4).
- Fine tune the oil level if necessary.

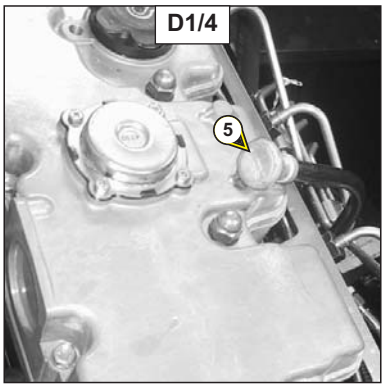

D1/4

https://truckmanualshub.com/

D3 - DRY AIR FILTER CARTRIDGE

REPLACE

The air used for combustion is purified via a dry air filter. It is therefore forbidden to use the platform with a damaged cartridge or if it has been removed.

- Open the left-hand cover.
- Release the clips 1 (Fig. D3/1) and remove the cover 2 (Fig. D3/1).
- Pull the filter cartridge 3 (Fig. D3/2) to release it and dispose of it.
- Leave the safety cartridge 4 (Fig. D3/2) in place.
- Clean the inside of the filter support with a clean, damp, non-fluffy cloth.
- Then fit the new filter and the cover.

If using the machine in a very dusty atmosphere, see the FILTER ELEMENTS AND BELTS section.

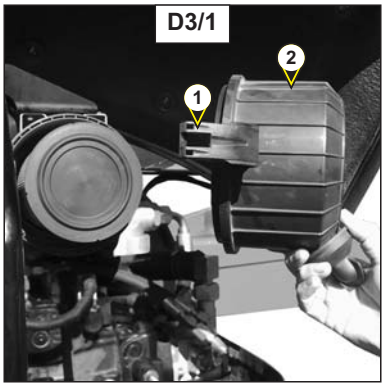

D3/1

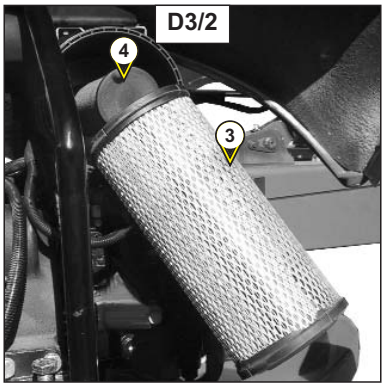

D3/2

D4 - FUEL FILTER CARTRIDGE

REPLACE

- Open the left-hand cover.
- Carefully clean the exterior of the filter and its support to prevent any dust from penetrating into the system.
- Loosen the retaining screw 1 (Fig. D4/1).
- Remove the tank 2 (Fig. D4/2) (beware of any diesel leaks) and dispose of the cartridge 3 (Fig. D4/2) and its seals.
- Clean the inside of the filter head and the tank using a paintbrush impregnated with clean diesel fuel.
- Refit the assembly with a new filter and new seals.

If necessary, purge the fuel supply circuit (see section G1).

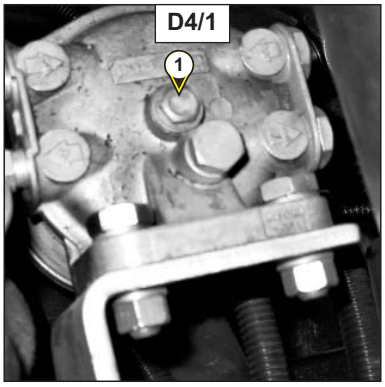

D4/1

D5 - INJECTORS

(CONSULT YOUR DEALER)

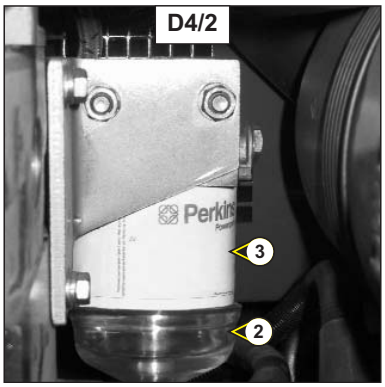

D4/2

https://truckmanualshub.com/

D6 - HYDROSTATIC TRANSMISSION OIL FILTER CARTRIDGE

REPLACE

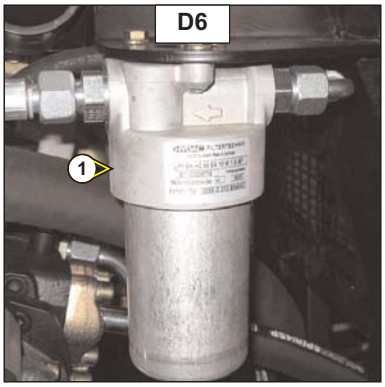

REPLACING THE HYDROSTATIC TRANSMISSION OIL FILTER CARTRIDGE

- Stop the engine.

- Remove the engine cover.

- Unscrew the filter body 1 (Fig. D6).

- Remove the hydrostatic transmission oil filter cartridge and replace it with a new one.

- Ensure that the cartridge is correctly positioned and refit the cover.

Do not operate the platform without a cartridge. This can immediately cause damage to the transmission's hydraulic circuit and the hydrostatic pump.

CLEANING THE HYDRAULIC CIRCUIT

- Let the engine run for 5 minutes without using the platform.

D7 - AUXILIARY HYDRAULIC OIL FILTER CARTRIDGE

REPLACE

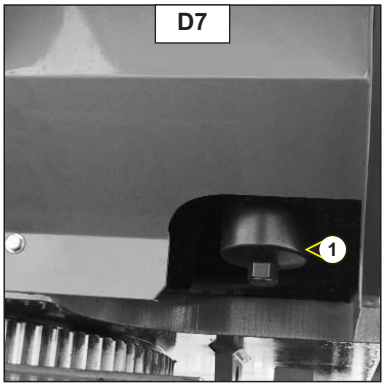

- Machine stopped; battery cut-out in the OFF position.

- Loosen the filter body 1 (Fig. D7).

- Remove the filter cartridge and replace it with a new one (see the FILTER ELEMENTS section).

***NB** : Pay attention to the direction in which you fit the filter.*

- Refit the filter body 1 (Fig. D7).

Thoroughly clean the outside of the filter and its surroundings before any intervention in order to prevent any risk of polluting the hydraulic circuit.

https://truckmanualshub.com/

D8 - HYDRAULIC OIL

EMPTY - REPLACE

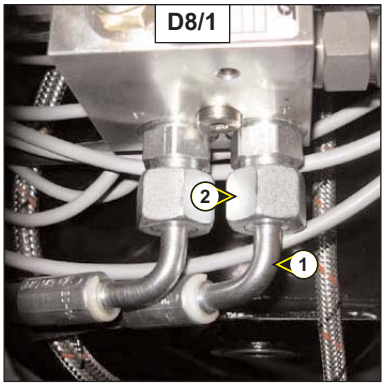

- Set the platform on a horizontal surface with the engine stopped.

EMPTYING THE OIL

- Remove a tank under hydraulic hose 1 (Fig. D8/1) and loosen nut 2 (Fig. D8/1)
- Remove the filling cap 3 (Fig D8/2) to assist drainage.

CLEANING THE SIEVE

- Remove the sieve 5 (Fig. D8/2) by pulling it upwards and clean it with a jet of compressed air.
- Re-insert the sieve.

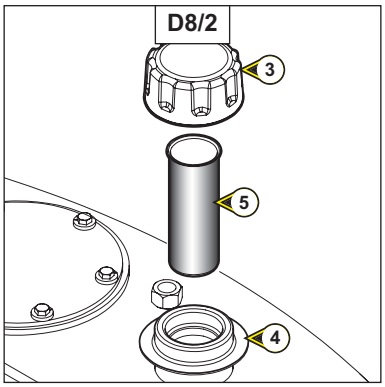

FILLING WITH OIL

Use a receptable and a very clean funnel and clean the top of the oil can before filling.

- Re-insert and tighten the drain plug 1 (Fig. D8/1).
- Fill the reservoir completely with hydraulic oil (see the LUBRICANTS section) through the filling hole 4 (Fig. D8/2).
- The oil level should be above the red mark on the gauge 6 (Fig. D8/3) ±1cm.
- The hydraulic oil level must be checked with the pendular arm in low position at ambient temperature between 10°C and 20°C

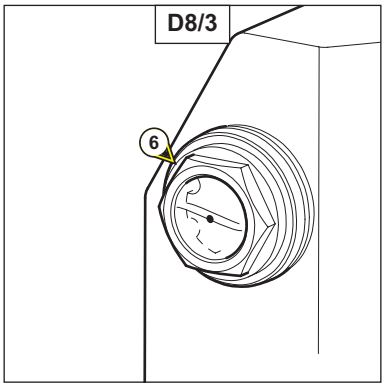

Dispose of the drained oil in an environmentally friendly manner.

D9 - CONDITION OF HOSES

CHECK

- Check the visible condition (splitting) of the hoses, subject to thermal stress and UV. Their technical characteristics may be altered (porosity).

BE CAREFUL OF LEAKS
Hydraulic oil escaping at high pressure can penetrate the skin and cause serious lesions. In the event of injury caused by a jet of pressurized oil, consult a doctor immediately.

If in doubt as to the presence of a leak, do not search for it with your hand, but use a piece of cardboard and protect your hands and body.

For your own safety, replace worn hoses.

https://truckmanualshub.com/

D10 - TIGHTENING TURRET ROTATION MOTOR BOLTS

CHECK

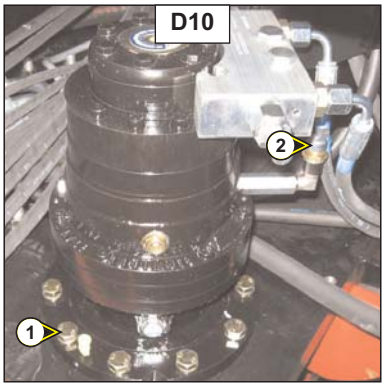

Set the platform on a horizontal surface with the engine stopped.

- Check the tightness of the nine bolts 1 (Fig. D10).

- The tightening torque for the bolts is 8 daN.m ± 10%.
- 1 daN = 1 Kg

D11 - TURRET MOTOR BRAKE REDUCER

EMPTY - REPLACE

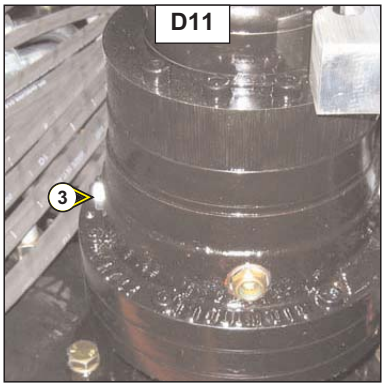

Set the platform on a horizontal surface with the engine stopped.

- Remove the turret's interior cover.

- The gear motor is revealed with the valve block facing to the back.

- Remove the filling-breather cap 2 (Fig. D10) to ensure good drainage.

- Mark the drain plug 3 located on the bottom of the reducer unit on the right-hand side (Fig. D11).

- Place a small receptacle to catch the oil.

- Loosen the drain plug.

Dispose of the oil in an envirinmentaly friendly manner.

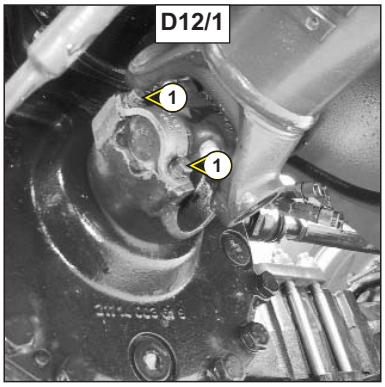

- Use a syringe to fill the reducer via the filling-breather cap 2 (Fig. D10). The level is correct when the breather is full of oil.

- Re-insert the filling-breather cap 2 (Fig. D10)

D12 - TIGHTENING CARDAN BOLTS

CHECK

Set the platform on a horizontal surface with the engine stopped.

- Check the tightness of the eight bolts (four on each end) 1 (Fig. D12/1) and 2 (Fig. D12/2).

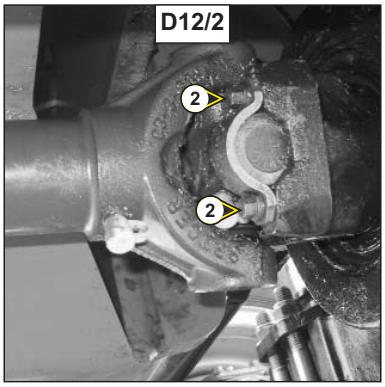

- The tightening torque for the bolts is 8 daN.m ± 10%.
- 1 daN = 1 Kg

https://truckmanualshub.com/

D13 - DENSITY OF BATTERY ELECTROLYTE

CHECK

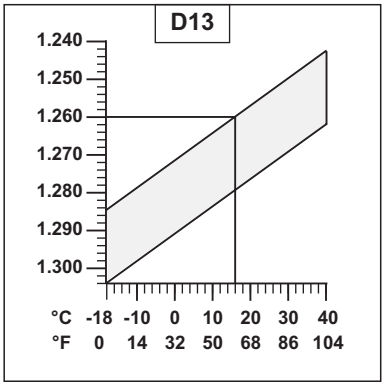

The electrolyte's density varies according to the temperature but a minimum density of 1260 at 16°c must be maintained.

In the hatched area (Fig. D13), the battery is normally charged.
Above this area, the battery must be recharged.
The density must not vary by 0.025 of a unit between one battery element and another.

- Open the battery cover.

- Check the density of the electrolyte in each battery element using an acid densimeter.

- Do not carry out this check immediately after topping up with distilled water. Recharge the battery for at least an hour before checking the battery electrolyte density.

Handling and servicing a battery can be dangerous, take the following precautions:
- *Wear protective goggles.*
- *Handle batteries horizontally.*
- *Never smoke or work near a naked flame.*
- *Work in a well ventilated area.*
- *In the event of electrolyte being spilled onto the skin or splashed in the eyes, rinse thoroughly with cold water for 15 minutes and call a doctor.*

D14 - TIGHTENING SCREWS ON THE TURRET SLEW RING

CHECK

- The screws must be checked for tightness at the latest after 50 hours of operation. You must then repeat this check after every 500 hours of operation.
- The tightening torque is 27 daN.m ± 10%.
- 1 daN = 1 Kg.

D15 - BRAKING

CHECK

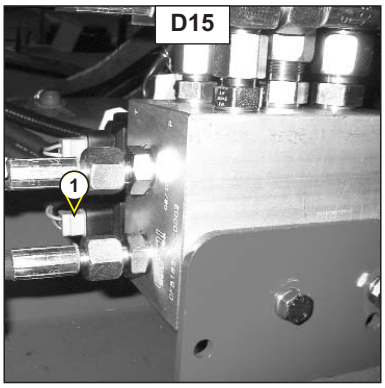

- Check the braking system by disconnecting the coil 1 (Fig. D15) from the hydraulic unit on the chassis (to access the unit, remove the left-hand casing from the chassis) and make a travel movement.

THE PLATFORM MUST NOT GO FORWARDS.

- Reconnect the coil after the test.

https://truckmanualshub.com/

E - EVERY 1000 HOURS OF OPERATION

Perform the operations described previously as well as the following operations.

E1 - COOLING LIQUID

EMPTY - REPLACE

This series of operations is performed as required and once a year as winter approaches.
Set the platform on a horizontal surface with the engine stopped and cold.

DRAINING THE COOLANT

- Open the left-hand cover.
- Loosen the radiator purge screw 1 (Fig. E1/1).
- Loosen the drain plug 2 (Fig. E1/2) on the engine block.
- Remove the radiator filling cap 3 (Fig. E1/3).
- Let the cooling circuit drain completely, ensuring that the holes are not obstructed.
- Check the condition of the hoses and the fixings and replace the hoses if necessary.
- Rinse out the circuit with clean water and use a cleaning product if necessary.

FILLING WITH COOLANT

- Retighten the purge screw 1 (Fig. E1/1).
- Retighten the drain plug 2 (Fig. E1/2) (tightening torque 0.8 to 1.2 daN.m).
- Prepare the coolant (Fig. E1/4).
- Slowly fill the cooling circuit completely via the filing hole 4 (Fig. E1/3).
- Let the engine tick over for a few minutes.
- Check for any leaks.
- Check the level and fine tune it if necessary.
- Refit the filling cap 3 (Fig. E1/3).

the I.C. engine contains no anti-corrosion elements and must be filled every yaer with a minimum mixture of 25% ethylene glycol-based anti-freeze.

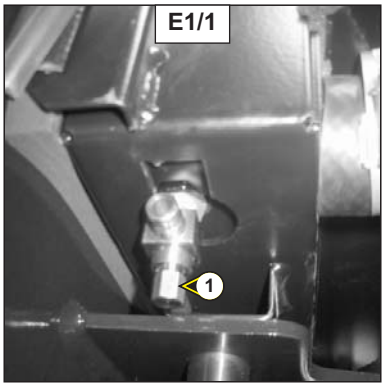

E1/1

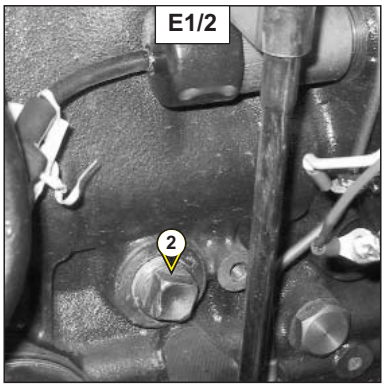

E1/2

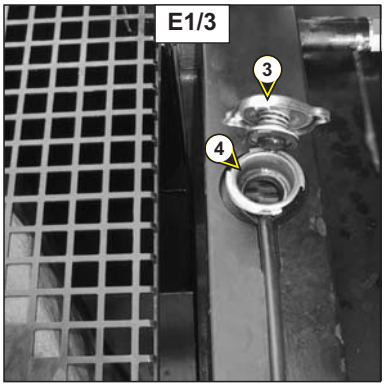

E1/3

E1/4

FREEZING POINT IN FUNCTION OF THE ANTI-FREEZE %	
ANTI-FREEZE 5110 NF	TEMPERATURE
30 %	-16° C
33 %	-18° C
40 %	-25° C
50 %	-37° C

https://truckmanualshub.com/

E2 - FUEL TANK

EMPTY - CLEAN

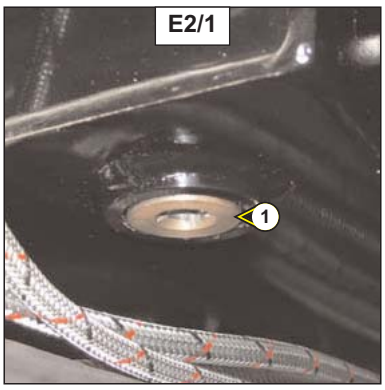

Never smoke or approach the tank with a naked flame during this operation

Set the platform on a horizontal surface, stop the engine, open the right side of the bonnet and locate the filler cap.

- Inspect visually and by touch the parts liable to have leaks on the fuel circuit and the tank.
- **In the event of a leak, contact your dealer.**

Never attempt to weld or carry out any other operation yourself. This can cause an explosion or a fire.

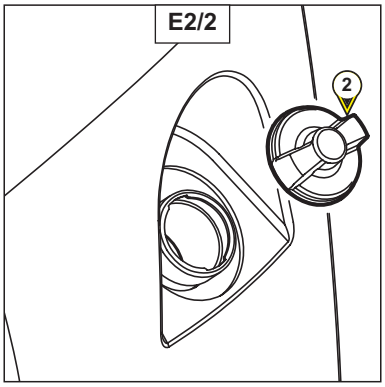

- Place a receptacle under the drain plug 1 (Fig. E2/1) and unscrew the drain plug.
- Let the diesel flow out and rinse with ten litres of clean diesel via the filling hole 2 (Fig. E2/2).
- Refit the drain plug 1 (Fig. E2/1) and tighten it down (tightening torque 3 to 4 daN.m).
- Fill the fuel tank with clean diesel filtered through a strainer or a clean, non-fluffy cloth and refit the filling cap (Fig. E2/2).

E3 - DRY AIR FILTER SAFETY CARTRIDGE

REPLACE

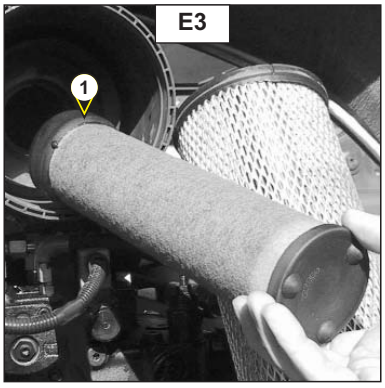

- Open the left-hand cover.
- Remove the dry air filter cartridge (see section C1).
- Remove the dry air filter's safety cartridge 1 (Fig. E3) and replace it with a new one.
- Refit everything (see section C1).

https://truckmanualshub.com/

E4 - Front and rear axle differential oil

EMPTY - REPLACE

Set the platform on a horizontal surface with the engine stopped and the differential's oil already warm.

- Place a receptacle under the drain plugs 1 (Fig. E4/1: front axle) (Fig. E4/2: rear axle).
- Remove the filling cap 2 (Fig. E4/1: font axle) (Fig. E4/2: rear axle) to ensure good drainage.
- Place a receptacle under drain plug 4 (Fig. E4/3: differential).

Dispose of the drained oil in an environmentally friendly manner.

- Re-insert the drain plugs 1 (Fig. E4/1: front axle) (Fig. E4/2: rear axle) and tighten them (tightening torque 8 daN.m) and (Fig. E4/3: differential (tightening torque 8 daN.m)).
- Fill completely with oil (see the LUBRICANTS section) through the filling hole 2 (Fig. E4/1: front axle) (Fig. E4/2: rear axle) and 4 (Fig. E4/3: differential).
- The level is correct when the oil is flush with the hole.
- Check for any leaks around the drain plugs.
- Reinsert and tighten the filling cap 2 (Fig. E4/3: front axle) (Fig. E4/2: rear axle) and 4 (Fig. E4/3: differential) (tightening torque 6 daN.m)

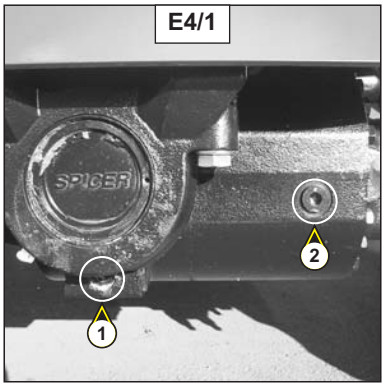

E4/1

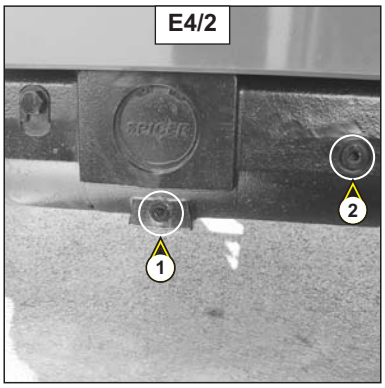

E4/2

E5 - Front and rear wheel reducer oil

EMPTY - REPLACE

Set the platform on a horizontal surface with the engine stopped and the oil in the reducers warm.

- Drain and replace the oil in each reducer on the front wheels.
- Set the drain plug 1 (Fig. E5) in position A.
- Place a receptacle under the drain plug and unscrew it.
- Let the oil drain completely.

Dispose of the drained oil in an environmentally friendly manner.

- Set the drain hole in position B, i.e. to level-checking hole.
- Fill completely with oil (see the LUBRICANTS section) through the filling hole 1 (Fig. E5).
- The level is correct when the oil is flush with the hole.
- Reinsert and tighten the drain plug 1 (Fig. E5) (tightening torque 8 daN.m).
- Repeat the same operation for each reducer on the rear wheels.

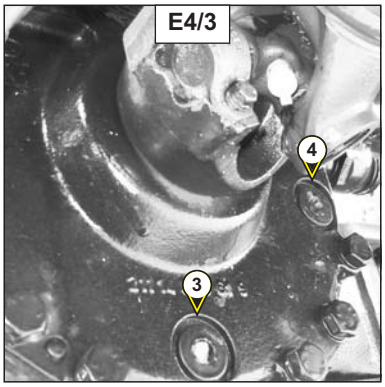

E4/3

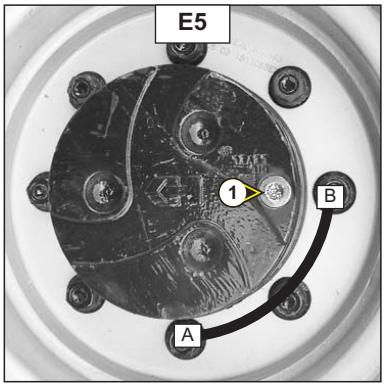

E5

https://truckmanualshub.com/

E6 - Hydraulic circuit strainer

CLEAN

- Oil change (see chapter D8)
- Loosen the six fixing screws 1 (Fig. E6/1) on the locking plate 2 (Fig. E6/1).
- Unscrew the strainer 3 (Fig. E6/2) from the tank and clean it with a jet of compressed air.
- Re-insert the strainer in the tank and refit the locking plate 2 (Fig. E6/1).
- Fill up with hydraulic oil (see chapter D7)(See "LUBRICANTS" chapter).

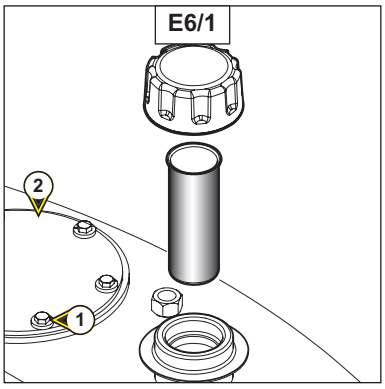

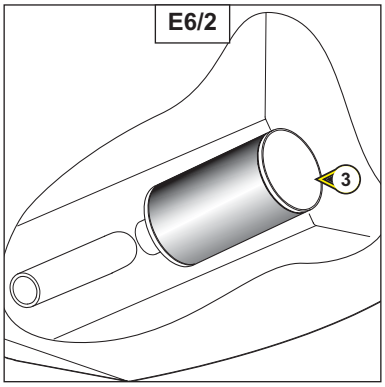

E7 - I.C. engine silent blocks (*)

CHECK

E8 - I.C. engine running speeds (*)

CHECK

E9 - Radiator (*)

CHECK - DESCALE

E10 - Hydrostatic transmission circuit pressure (*)

CHECK

E11 - Start of hydrostatic transmission regulations (*)

CHECK - ADJUST

(Consult your dealer)

https://truckmanualshub.com/

F - EVERY 3000 HOURS OF OPERATION

Perform the operations described previously as well as the following operations.

F1 - VALVE CLEARANCE (*)

CHECK - ADJUST

F2 - WATER PUMP AND THERMOSTAT (*)

CHECK

F3 - ALTERNATOR AND STARTER (*)

CHECK

F4 - HYDRAULIC OIL TANK (*)

CLEAN

***(CONSULT YOUR DEALER)**

https://truckmanualshub.com/

G - OCCASIONAL MAINTENANCE

G1 - FUEL SUPPLY CIRCUIT

PURGE

This series of operations should only be performed in the following case:

- A component in the supply circuit has been replaced or drained.

Ensure that there is enough fuel in the tank and turn the ignition key to position 2 to switch on the electrical systems.

- Open the left-hand cover.

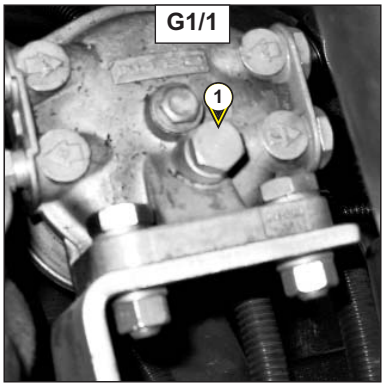

G1/1

PURGING THE FUEL FILTER

- Loosen the purge screw 1 (Fig. G1/1).
- Operate the priming bulb 2 (Fig. G1/2) until the fuel flows air-free from the purge scre
- Tighten the purge screw 1 (Fig. G1/1) while the fuel is still flowing.

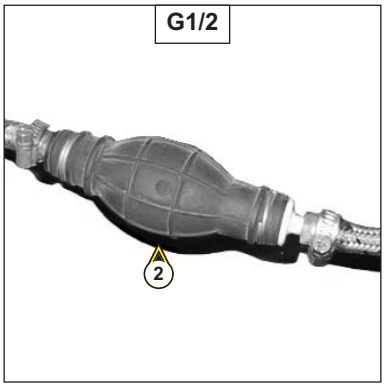

G1/2

PURGING THE INJECTORS

- Loosen the hose connections 3 (Fig. G1/3) on one of the injectors.
- Press the starter until the diesel flows air-free from the hose connections 3 (Fig. G1/3).
- Tighten the hose connections while the fuel is still flowing.

Do not engage the starter motor on a continued basis for more than 30 seconds and let it cool between unsuccessful attempts.

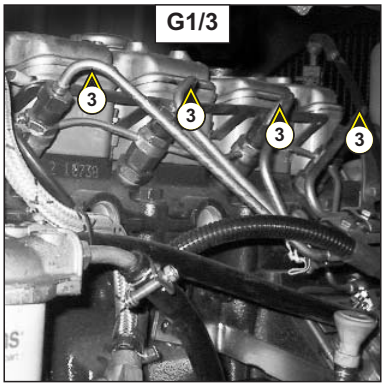

G1/3

- The engine is now ready to be started.
- Turn the I.C. engine over slowly for 5 minutes immediately after bleeding the fuel feed circuit, in order to ensure that the injection pump has been bled thoroughly.

NB : *If the I.C. engine functions correctly for a short time then stops or functions irregularly, check for possible leaks in the low pressure circuit. If in doubt, contact your dealer.*

https://truckmanualshub.com/

G2 - WHEEL

CHANGE

For this operation, we recommend you to use the MANITOU hydraulic jack Reference 505507 and the MANITOU safety axle stand Reference 554772.

- If possible, stop the platform on firm, horizontal ground.
- Stop the platform (see : 1 - INSTRUCTIONS AND SAFETY REGULATIONS : OPERATING INSTRUCTIONS EMPTY AND LOADED).
- Lock the platform in both directions on the axle opposite the wheel to be changed.
- Loosen the nuts on the wheel to be changed until they can be easily removed.
- Place the jack under the axle housing, as close to the wheel as possible and adjust the jack (fig. G2/1).
- Lift the wheel slightly until it leaves the ground and set the safety axle stand under the axle (fig. G2/2).

G2/1

G2/2

A wheel weights 300 Kg.

- Loosen the wheelnuts fully and remove them.
- Remove the wheel using a to and fro movement and roll it to the side.
- Slide the new wheel onto the hub.
- Tighten the nuts by hand, lubricating them if necessary.
- Remove the safety axle stand and lower the platform using the jack.
- Tighten the wheelnuts using a torque wrench (see: 3. MAINTENANCE: B - EVERY 250 HOURS OF OPERATION for the torque to apply).

https://truckmanualshub.com/

https://truckmanualshub.com/

G3 - NACELLE

For the 200 ATJ platform, Fig. G3

- Take into account the platform's centre of gravity when lifting it.

- Insert the hooks or shackles into the anchoring points A provided for this purpose.

- Encircle the ends of the front axle housings with soft slings.

G3

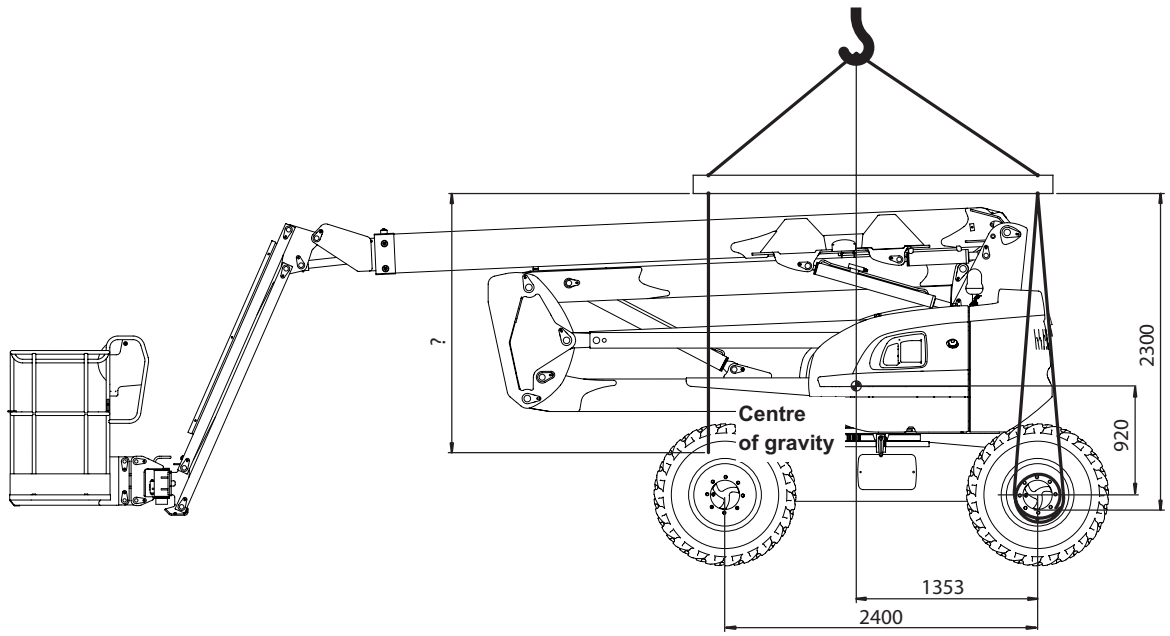

Platform's total weight: 10035 Kg

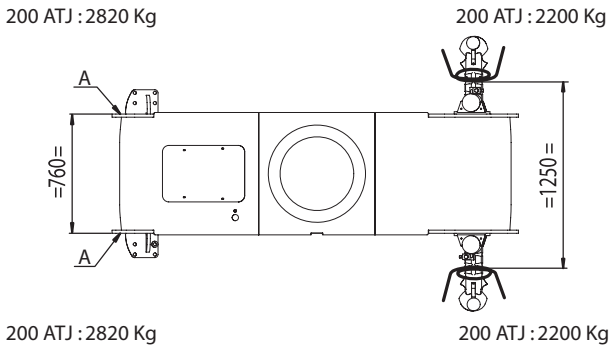

https://truckmanualshub.com/

G4 - PLATFORM ON A SKID

TRANSPORT

Check that the safety instructions regarding the flat bed are being correctly followed before loading the platform and ensure that the vehicle's driver has been informed of the platform's dimensional characteristics and it's weight. (see : DESCRIPTION : CHARACTERISTICS).

G4/1

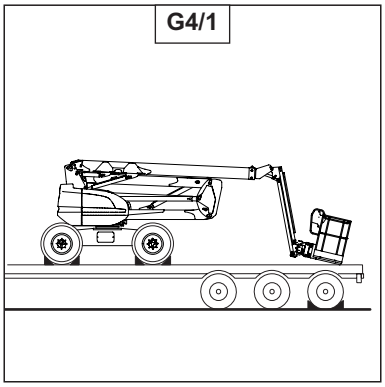

Ensure that the flat bed is large enough and has a sufficient load-bearing capability to transport the platform. Also check the flat bed's permissible ground contact pressure with relation to the platform.

G4/2

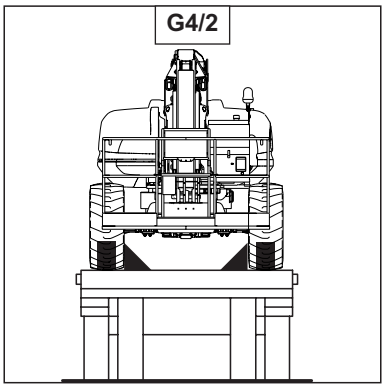

LOADING THE PLATFORM

- Lock the flat bed's wheels (Fig. G4/1).
- Fix loading ramps to the flat bed so as to achieve the lowest angle possible for loading the platform.
- Use ramp speed.

Do not try to cross steep inclines with a heavy load in the basket. In this case, attack the incline in reverse gear.

G4/3

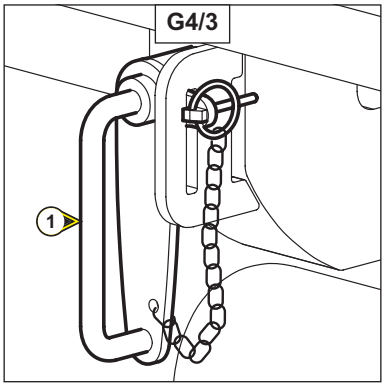

- Load the platform in the flat bed's axis.
- Stop the platform (see the CONTROL INSTRUMENTATION section, IGNITION SWITCH sub-section).
- Lock the platform's turret rotation using the pin 1 (Fig. G4/3) (see the CONTROL INSTRUMENTATION section, TURRET ROTATION LOCK sub-section).

TYING DOWN THE PLATFORM

G4/4

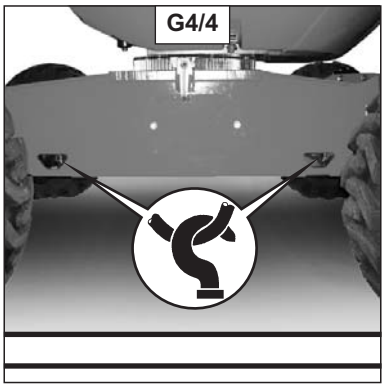

- Fit wedges on the flat bed under each front and rear wheel (Fig. G4/1).
- Also fit wedges on the flat bed on the inside of each tyre (Fig. G4/2).
- Tie the platform onto the flat bed with sufficiently strong ropes (see Fig. G4/4).
- Tension the ropes.

https://truckmanualshub.com/

G5 - FREE WHEELS

SWITCH ON

If the platform must be towed, follow the instructions below.

The platform may only be towed a short distance and compulsorily by a vehicle with adequate braking and towing capacity. A rigid link bar must be used bewteen the two vehicles.

1 - Wedge the platform.

2 - Hydrostatic release.

Warning: before performing this operation, take the necessary precautions because the machine will have no brakes.

- Remove the engine cover.

- Tighten the HP limiters ref.1 (Fig. G5/1) on the hydrostatic pump as far as the hard point + 1 and a half turns.

3 - Mechanical disengagement of the rear axle assembly

To set the free wheel, tighten the 4 screws on the rear axle assembly as follows :

- Identify the 4 screws on the front and back of the rear axle assembly ref. 1 (Fig. G5/2).

- Proceed on each side (left and right), tighten one screw ref. 2 (Fig. G5/3) by one turn

- Tighten the other screw ref. 3 (Fig. G5/4) by one turn, and so on, on both screws until they are both completely locked.

- Proceed in the same way on the other side.

- To stop this application, loosen the screws and check their shims (see page 3-71).

- Loosen the HP limiter valves.

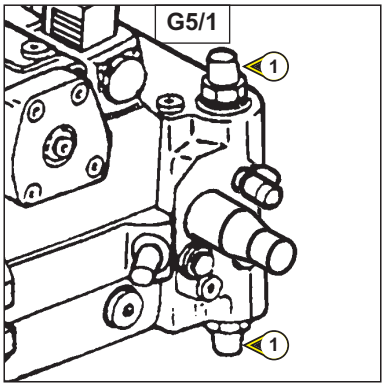

G5/1

G5/2

G5/3

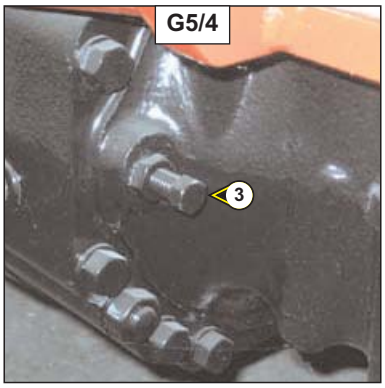

G5/4

https://truckmanualshub.com/

4 - ELECTRICITY

https://truckmanualshub.com/

https://truckmanualshub.com/

FUSES

DESCRIPTION AND REMPLACEMENT OF THE FUSES

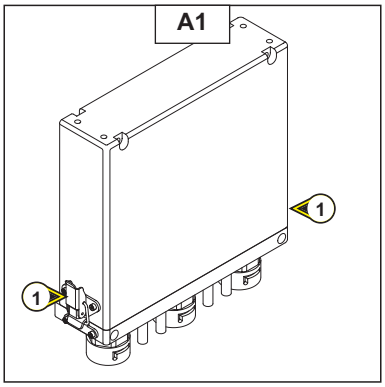

The fuses are located in the connection box (Fig. A1) fastened to the turret inside the base control box.

To access the fuses, open the door 1 (Fig. A2) to the box and remove the panel 2 (Fig. A2).

Unlock the two catches 1 (Fig. A1).

Remove the casing 3 (Fig. A2) sliding it upwards.

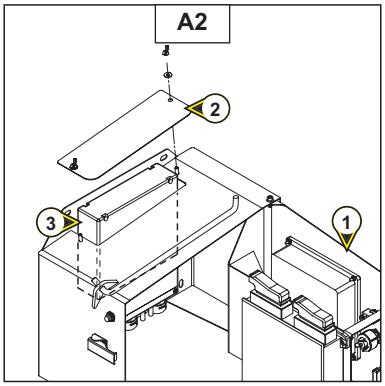

Inspect the defective fuses (Fig. A3 - A4):

F1: . . . . . 30 Amps
F2: . . . . . 1 Amps
F3: . . . . . 5 Amps
F4: . . . . . 7.5 Amps
F5: . . . . . 1 Amp
F6: . . . . . 1 Amp
F7: . . . . . 30 Amps
F8: . . . . . 3 Amps
F9: . . . . . 30 Amps
F10: . . . . . 1 Amp
F11: . . . . . 5 Amps
F12: . . . . . 5 Amps
F13: . . . . . 1 Amp
F14: . . . . . 1 Amp
F15: . . . . . 1 Amp
F16: . . . . . 60 Amps

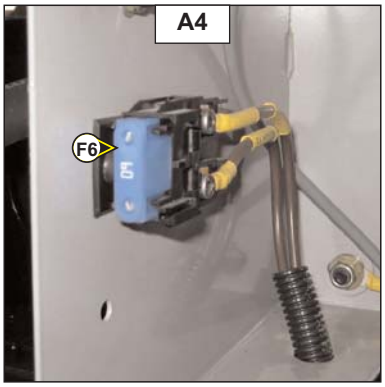

During operation all the LEDs are on, they go out if the fuse burns out (Fig. A3):

- Statut fuse F1, +BAT calculator UPC30
- Statut fuse F2, +BAT function tempoPVPX
- Statut fuse F3, +APC exterior
- Statut fuse F4, +BAT basket
- Statut fuse F5, +BAT screen CEK20
- Statut fuse F6, +BAT ignition key / +APC general
- Statut fuse F7, EV start synchro / +start
- Statut fuse F8, +BAT safety pump
- Statut fuse F9, Earth BC303
- Statut fuse F10, Screen earth CEK20
- Statut fuse F11, Basket earth
- Statut fuse F12, Calculator earth UPC30
- Statut fuse F13, +APC screen CEK20
- Statut fuse F14, +APC basket
- Statut fuse F15, +APC UPC30
- Statut fuse F16, Preheat

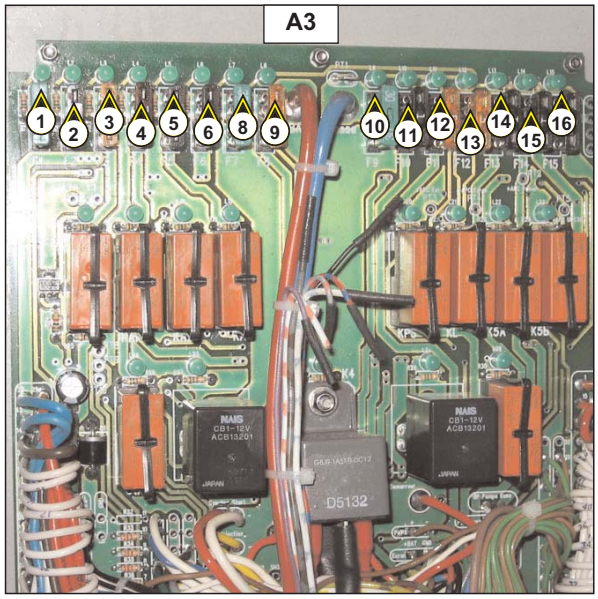

https://truckmanualshub.com/

https://truckmanualshub.com/

5 - MAINTENANCE HANDBOOK

https://truckmanualshub.com/

https://truckmanualshub.com/

MAINTENANCE HANDBOOK

- This maintenance handbook is supplied by your MANITOU dealer at the time of commissioning the machine.

- It will accompagny the machine troughout the contractual warranty period and thereafter will enable regular monitoring of maintenance operations in accordance with MANITOU recommendations.

- Maintenance of the equipment will ensure it remains available and profitable.

- For this purpose, your MANITOU dealer can offer you a variety of maintenance contracts to suit your various needs so as to guarantee maximum efficiency trough his skill and use of original MANITOU parts.

- We recommend that this MAINTENANCE HANDBOOK be kept throughout the lifetime of your machine and in particular passed on to the new owner in the event of its being resold.

50 HOURS	DATE	ACTUAL No. OF HOURS	MECHANIC'S SIGNATURE
			DEALER'S STAMP
COMMENTS:			

100 HOURS	DATE	ACTUAL No. OF HOURS	MECHANIC'S SIGNATURE
			DEALER'S STAMP
COMMENTS:			

150 HOURS	DATE	ACTUAL No. OF HOURS	MECHANIC'S SIGNATURE
			DEALER'S STAMP
COMMENTS:			

200 HOURS	DATE	ACTUAL No. OF HOURS	MECHANIC'S SIGNATURE
			DEALER'S STAMP
COMMENTS:			

https://truckmanualshub.com/

250 HOURS	DATE	ACTUAL No. OF HOURS	MECHANIC'S SIGNATURE
			DEALER'S STAMP
COMMENTS:			

300 HOURS	DATE	ACTUAL No. OF HOURS	MECHANIC'S SIGNATURE
			DEALER'S STAMP
COMMENTS:			

350 HOURS	DATE	ACTUAL No. OF HOURS	MECHANIC'S SIGNATURE
			DEALER'S STAMP
COMMENTS:			

400 HOURS	DATE	ACTUAL No. OF HOURS	MECHANIC'S SIGNATURE
			DEALER'S STAMP
COMMENTS:			

450 HOURS	DATE	ACTUAL No. OF HOURS	MECHANIC'S SIGNATURE
			DEALER'S STAMP
COMMENTS:			

500 HOURS	DATE	ACTUAL No. OF HOURS	MECHANIC'S SIGNATURE
			DEALER'S STAMP
COMMENTS:			

https://truckmanualshub.com/

550 HOURS	DATE	ACTUAL No. OF HOURS	MECHANIC'S SIGNATURE
			DEALER'S STAMP
COMMENTS:			

600 HOURS	DATE	ACTUAL No. OF HOURS	MECHANIC'S SIGNATURE
			DEALER'S STAMP
COMMENTS:			

650 HOURS	DATE	ACTUAL No. OF HOURS	MECHANIC'S SIGNATURE
			DEALER'S STAMP
COMMENTS:			

700 HOURS	DATE	ACTUAL No. OF HOURS	MECHANIC'S SIGNATURE
			DEALER'S STAMP
COMMENTS:			

750 HOURS	DATE	ACTUAL No. OF HOURS	MECHANIC'S SIGNATURE
			DEALER'S STAMP
COMMENTS:			

800 HOURS	DATE	ACTUAL No. OF HOURS	MECHANIC'S SIGNATURE
			DEALER'S STAMP
COMMENTS:			

https://truckmanualshub.com/

850 HOURS	DATE	ACTUAL No. OF HOURS	MECHANIC'S SIGNATURE
			DEALER'S STAMP
COMMENTS:			

900 HOURS	DATE	ACTUAL No. OF HOURS	MECHANIC'S SIGNATURE
			DEALER'S STAMP
COMMENTS:			

950 HOURS	DATE	ACTUAL No. OF HOURS	MECHANIC'S SIGNATURE
			DEALER'S STAMP
COMMENTS:			

1000 HOURS	DATE	ACTUAL No. OF HOURS	MECHANIC'S SIGNATURE
			DEALER'S STAMP
COMMENTS:			

1050 HOURS	DATE	ACTUAL No. OF HOURS	MECHANIC'S SIGNATURE
			DEALER'S STAMP
COMMENTS:			

1100 HOURS	DATE	ACTUAL No. OF HOURS	MECHANIC'S SIGNATURE
			DEALER'S STAMP
COMMENTS:			

https://truckmanualshub.com/

.... HOURS	DATE	ACTUAL No. OF HOURS	MECHANIC'S SIGNATURE
			DEALER'S STAMP
COMMENTS:			

.... HOURS	DATE	ACTUAL No. OF HOURS	MECHANIC'S SIGNATURE
			DEALER'S STAMP
COMMENTS:			

.... HOURS	DATE	ACTUAL No. OF HOURS	MECHANIC'S SIGNATURE
			DEALER'S STAMP
COMMENTS:			

.... HOURS	DATE	ACTUAL No. OF HOURS	MECHANIC'S SIGNATURE
			DEALER'S STAMP
COMMENTS:			

.... HOURS	DATE	ACTUAL No. OF HOURS	MECHANIC'S SIGNATURE
			DEALER'S STAMP
COMMENTS:			

.... HOURS	DATE	ACTUAL No. OF HOURS	MECHANIC'S SIGNATURE
			DEALER'S STAMP
COMMENTS:			

https://truckmanualshub.com/

.... HOURS	DATE	ACTUAL No. OF HOURS	MECHANIC'S SIGNATURE
			DEALER'S STAMP
COMMENTS:			

.... HOURS	DATE	ACTUAL No. OF HOURS	MECHANIC'S SIGNATURE
			DEALER'S STAMP
COMMENTS:			

.... HOURS	DATE	ACTUAL No. OF HOURS	MECHANIC'S SIGNATURE
			DEALER'S STAMP
COMMENTS:			

.... HOURS	DATE	ACTUAL No. OF HOURS	MECHANIC'S SIGNATURE
			DEALER'S STAMP
COMMENTS:			

.... HOURS	DATE	ACTUAL No. OF HOURS	MECHANIC'S SIGNATURE
			DEALER'S STAMP
COMMENTS:			

.... HOURS	DATE	ACTUAL No. OF HOURS	MECHANIC'S SIGNATURE
			DEALER'S STAMP
COMMENTS:			

https://truckmanualshub.com/

.... HOURS	DATE	ACTUAL No. OF HOURS	MECHANIC'S SIGNATURE
			DEALER'S STAMP
COMMENTS:			

.... HOURS	DATE	ACTUAL No. OF HOURS	MECHANIC'S SIGNATURE
			DEALER'S STAMP
COMMENTS:			

.... HOURS	DATE	ACTUAL No. OF HOURS	MECHANIC'S SIGNATURE
			DEALER'S STAMP
COMMENTS:			

.... HOURS	DATE	ACTUAL No. OF HOURS	MECHANIC'S SIGNATURE
			DEALER'S STAMP
COMMENTS:			

.... HOURS	DATE	ACTUAL No. OF HOURS	MECHANIC'S SIGNATURE
			DEALER'S STAMP
COMMENTS:			

.... HOURS	DATE	ACTUAL No. OF HOURS	MECHANIC'S SIGNATURE
			DEALER'S STAMP
COMMENTS:			

https://truckmanualshub.com/