https://truckmanualshub.com/

Lindner

LINTRAC 90

https://truckmanualshub.com/

It all starts with a vision

When our grandfather, Hermann Lindner, began building tractors 65 years ago, his technical innovations helped to preserve the livelihoods of those who worked the land. Today, we are still living according to his pioneering spirit and have combined the experience of our 40,000 customers in the mountain, cultural and farming economy, and in municipal operations, in a single vehicle. As the first continuously variable tractor with steering rear axle, the Lintrac is a model of innovative strength and efficiency. In this way, we help our customers to maintain productivity and ensure satisfaction with a job well done.

v. l. Ing. Stefan Lindner, Rudolf Lindner, KR Mag. Hermann Lindner

https://truckmanualshub.com/

LINTRAC 90

https://truckmanualshub.com/

https://truckmanualshub.com/

The Lintrac in the mountains and on the meadows

Here, the Lintrac displays all its strengths. Sure-footed work on a steep slope guaranteed.

The Lintrac combines the features of a tractor, slope mower and farm loader in one vehicle. Great manoeuvrability with 4-wheel steering, outstanding performance on slopes up to a 60% grade because of a centre of gravity lower than 850 mm, front-loader capability, full traction for trailer transport and field work, an economical and powerful engine, and foolproof Ldrive operation. Combined with the TMT09 transmission, productive work is guaranteed.

Lindner

https://truckmanualshub.com/

Continuously variable ZF transmission

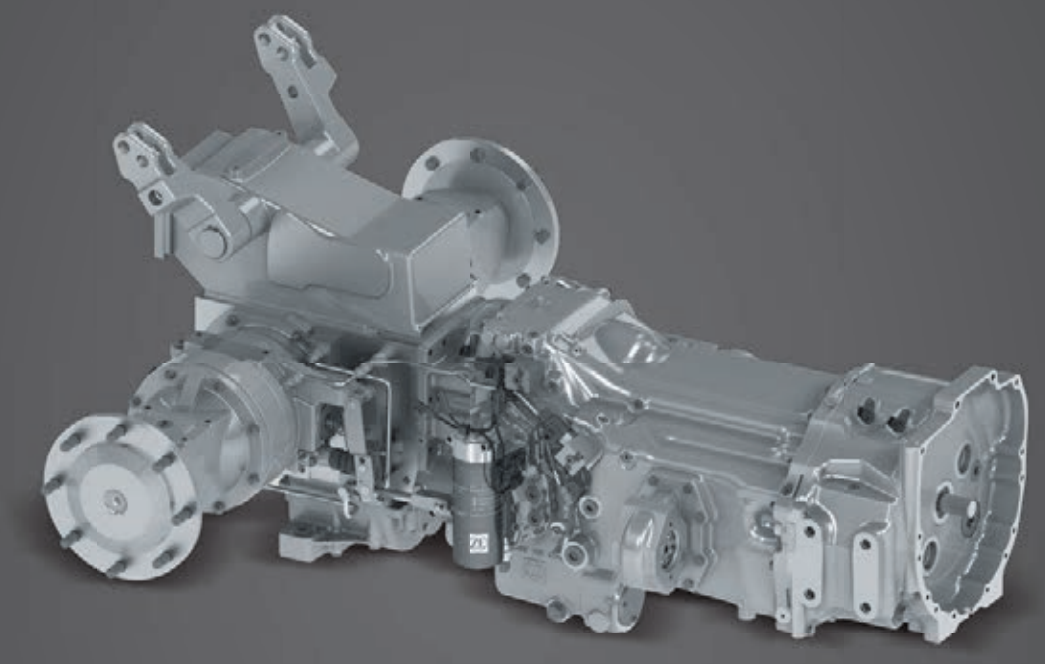

Light, dynamic and particularly efficient: continuously variable driving with the TMT09 from ZF

The TMT09 is the first continuously variable transmission specially developed for a take-off power of about 90 HP. Compact lightweight design was particularly important here. The transmission is particularly efficient due to the power transmission that is mechanical for the most part with a small hydrostatic proportion. Driving is infinitely variable from -20 to +43 km/h at a reduced engine speed. The 4-point rear power take-off with start control operates at 430/540/750/1000 rpm as desired.

https://truckmanualshub.com/

Hydrostat with power-split principle
The secret of the efficiency of the continuously variable TMT09 lies in the power transmission, which is mainly mechanical. The powershift transmission with multiple power splitting is supported by a compact, economical 45cm³ hydrostat.

PTO shaft mode in pastureland
In foot throttle mode, the speed of the PTO shaft can be linked directly to the engine speed, regardless of travel speed.

The discharge radius can be set precisely for turning hay, for example - without changing the engine or travel speeds.

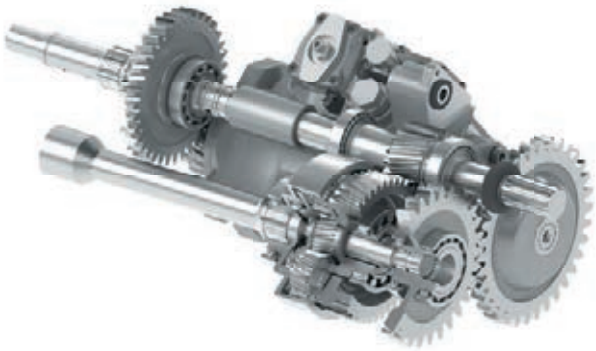

Foot throttle mode for front-mounted attachments
In Foot throttle mode, which is familiar from tractors with power transmission, engine speed is controlled directly with the accelerator pedal. But travel speed can still be kept constant - most importantly during roadsweeping or snowploughing operations.

Exact metering and metre-precise crawling
At the press of a button in Crawler mode, the foot throttle and Ldrive spread can be set to 15 km/h. This makes it possible to adjust the travel speed with extreme precision when loading or in plantations.

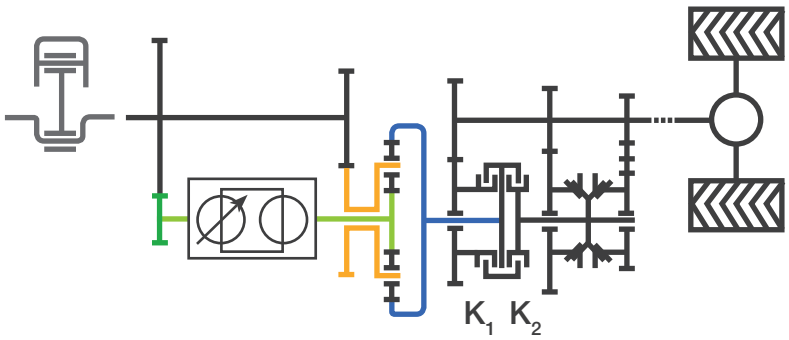

Work hard, transport economically
The TMT09 is designed for travel speeds between 20 km/h and + 43km/h. It full tractive power is available in the working range -/+20 km/h. In the transporting range above this, the transmission is designed for particularly low-consumption travel at low engine speeds. The vehicle switches between these two ranges completely automatically depending on the Driving mode.

For particularly rugged tasks requiring high tractive forces, switching to the Transport range can be disabled.

https://truckmanualshub.com/

Space-saving cabin

The spring-mounted cabin is a comfortable workspace with a clear 360° view.

The panorama comfort cabin provides the best view on all sides. Fatigue-free work comes about through a pleasant working climate, comfort seat with air suspension and logically placed controls. It is particularly important in dangerous situations to be able to find the switches and levers quickly so as to react correctly. The I.B.C. monitor is the central display. The comfortable I.B.C. remote control on the armrest puts the driver in the best seating position.

https://truckmanualshub.com/

Rear windscreen with double hinges
The rear windscreen opens to an angle of 90° for total visibility to the rear. This is made possible with a double hinge arrangement.

Opening windows - front-end loader with clear vision
The front, rear and side windows are openable. The clear vision window on the front-end loader allows complete visibility, from the ground up to the highest extension of the jib.

Three clearly organised control areas
The operating elements have been reduced to the essentials and are fitted in the instrument panel, the armrest and the side control console.

Comfort for driver and co-driver
Besides the cab suspension, the driver‘s seat with low-frequency air suspension and the padded passenger‘s seat ensure comfort when driving.

Stowage room and perfect air conditioning
The side storage compartment is cooled by the air conditioning system as well. With cup holders, a cradle for a mobile phone and the compartment on the seat, there is a place for everything.

https://truckmanualshub.com/

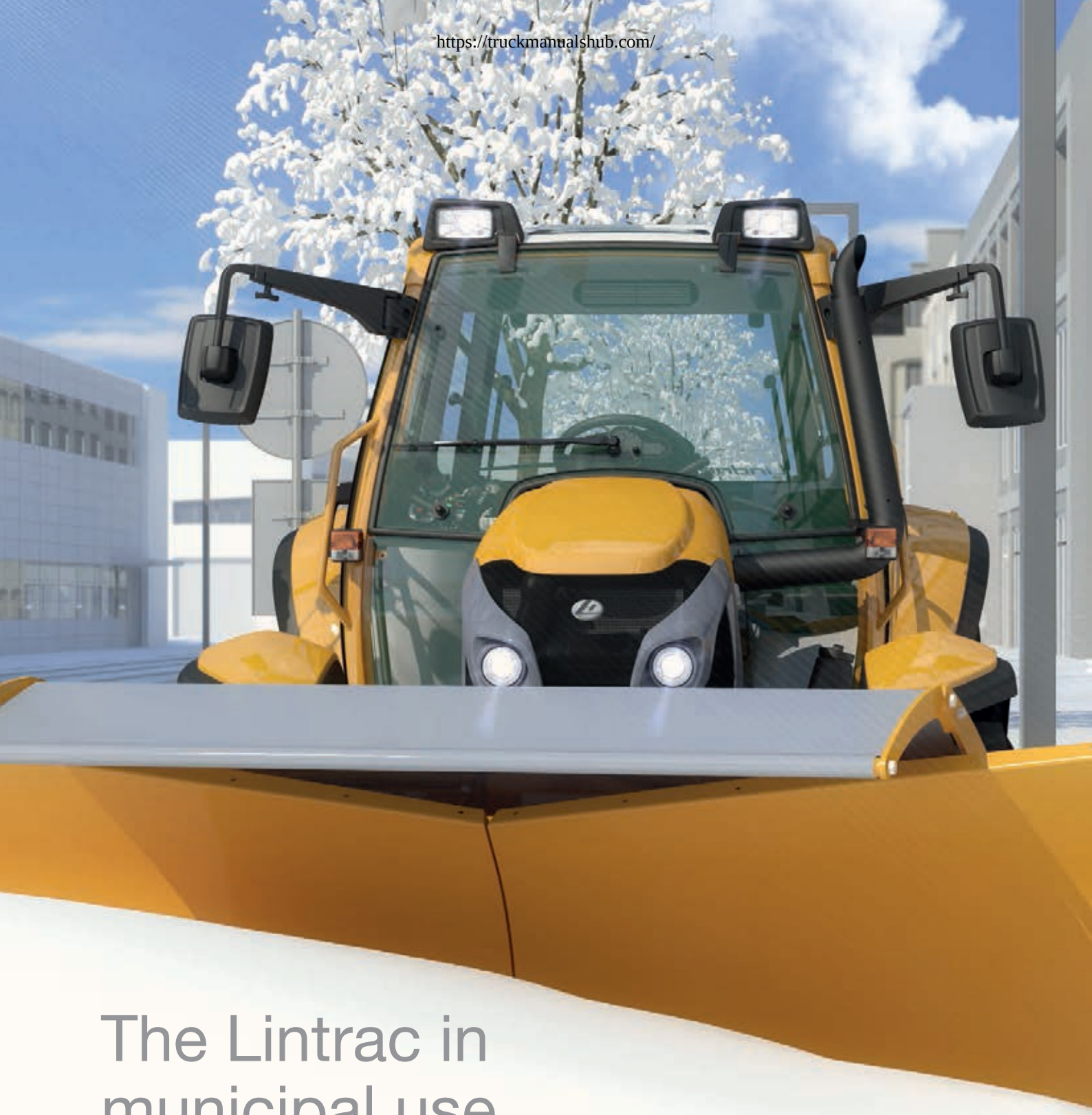

The Lintrac in municipal use

Simple operation, manoeuvrability and traction combine into the perfect equipment carrier.

Rear, front and power hydraulics with a variable displacement pump make the Lintrac an ideal equipment carrier. With the continuously variable traction drive system together with the rear and front power take-off, the Lintrac is perfectly equipped for summer and winter service: Spreading and sweeping tasks as well as snow removal with the fixed or rotary snow plough are easy even in narrow alleys using the steering rear axle. The front loader and good traction handle difficult transport tasks.

https://truckmanualshub.com/

LINTRAC 90

https://truckmanualshub.com/

Ldrive operation

Get in and drive: Every driver is a professional with the simple control dial.

It is easy to drive the Lintrac: Start the engine, pick the direction, step on the gas and steer. Using the Ldrive control dial on the armrest makes for very efficient work. If the Ldrive is activated, rotating the dial sets the speed of travel in a dynamic and infinitely variable manner. Rapid selection buttons are provided for all-wheel, differential, cruise-control memory, creep function, hand & foot accelerator mode and the various driving modes.

https://truckmanualshub.com/

Overview on the Lindner I.B.C. monitor
The main view on the I.B.C. monitor shows all important vehicle information. The operator can choose from several different views: The hydraulics page, instructions, vehicle settings, service schedule, camera or operating data. The camera image is displayed automatically when reversing.

Remote control for fine tuning
Fine adjustments can be made to the undercarriage or hydraulics system with a rotary knob and confirmation button on the monitor or the armrest.

LDRIVE

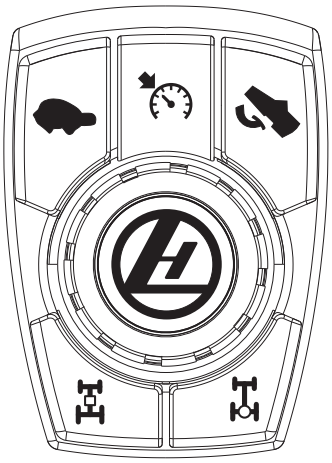

All driving functions within easy reach
The most important driving functions are grouped together on the Ldrive controller: Function keys for Crawler mode, cruise control and foot throttle mode are at the front. The keys behind them activate all-wheel drive and the differential.

Ldrive is started by pressing the rotary knob. With this, the travel speed of the Lintrac can be increased or reduced steplessly simply by turning the knob.

Always the right driving mode
Lintrac always starts in normal „Drive“ mode, with generally appropriate values for acceleration and engine power-drop. If the Ldrive controller is pulled forward or pushed back, it switches to the next driving mode.

Eco mode is the thriftiest driving mode. Power mode is optimised for particularly rugged conditions. All values in Pro mode can be adjusted individually to suit the driver‘s particular working requirements.

https://truckmanualshub.com/

Perkins engine

102 HP with 420 Nm of torque, unbelievably economical and free of particles

The Perkins 3.4 l Turbo-Diesel puts out 75 kW/102 HP. It develops an enormous torque of 420 Nm at 1400 rpm with a very steep torque slope of greater than 40%. These characteristics provide powerful starting on a slope and for traction tasks. Together with the TMT09 transmission, the engine can run at a reduced speed providing very low consumption figures. Emission level 3b is achieved with the particle filter.

https://truckmanualshub.com/

Care-free particle filter
The filter automatically regenerates itself for a few seconds at regular intervals. Even then, the operator can continue working with no loss of power. The filter will function without maintenance for 3,000 hours.

Perfect for cleaning
Gas springs open the one-piece engine bonnet unaided when the catch is released. Ample space between the radiators makes them very easy to clean.

Intelligent engine cooling
Engine cooling is effected as needed and assured by the viscostatic fan. Consequently, the engine reaches its consumption-optimised operating temperature sooner.

Consumption-optimised peak power output
The injection mixture can be controlled with complete precision by carefully monitoring the intake air and engine temperatures. This high-performance unit impresses by combining optimum power delivery with low consumption.

Its 4-valve technology with maintenance-free hydraulic tappets and the closed crankcase ventilation make the engine exceptionally easy to service.

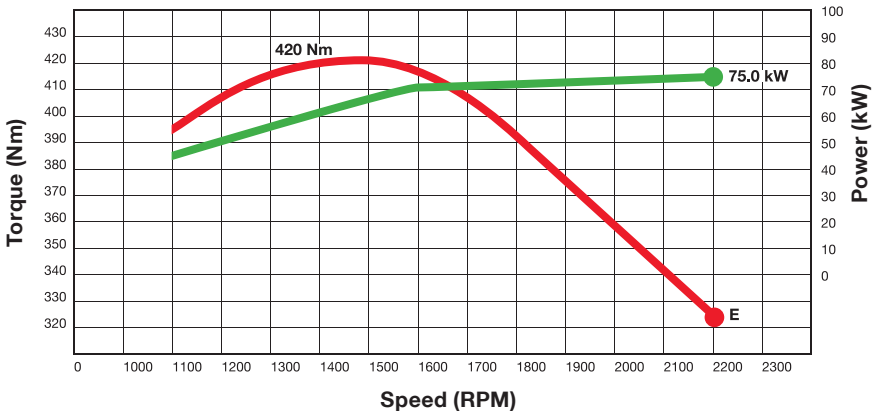

https://truckmanualshub.com/

The Lintrac in cultivated farmland

Here, the Lintrac earns points with its efficient hydraulics and manoeuvrable, infinitely variable driving.

With a minimum external width of 160 cm, the Lintrac is very well suited for plantations and cultivated farmland. Primarily with the 1.5 m gauge, it achieves incredible manoeuvrability with its steering rear axle. The simple Ldrive operation makes driving almost an afterthought and the user can fully concentrate on the attachments. The powerful hydraulics with the continuously variable displacement pump operate at high efficiency.

https://truckmanualshub.com/

https://truckmanualshub.com/

4-wheel steering

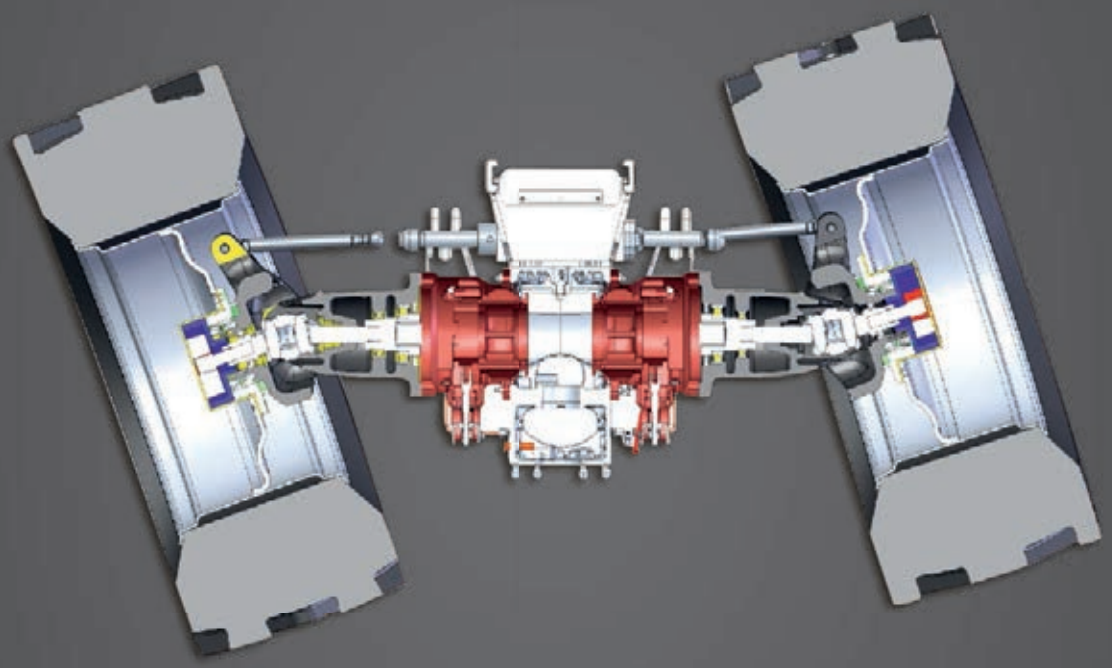

The first tractor with a steering rear axle provides previously unachieved manoeuvrability.

The Lintrac is the first standard tractor with a steering rear axle. During development, Lindner was able to build on decades of experience with 4-wheel steering systems in highland agriculture and municipal use with the Unitrac Transporter. Extremely stable steering heads made of a special alloy are used in this system. Upon request, the rear axle can rotate up to 20° and this provides the Lintrac with manoeuvrability previously unheard of for tractors.

https://truckmanualshub.com/

Incredibly agile
The Lintrac is extremely agile even without the track-following rear axle. With its compact wheelbase and 52° front steering lock, it has a turning circle diameter of just 9,5 m.

With 4-wheel steering, its turning circle diameter is less than 7 m. The rear wheels can be steered through up to 20°. „Crab steering“ is also possible.

*Measured with 480/70-R28 rear tyres and 420/65-R20 front tyres

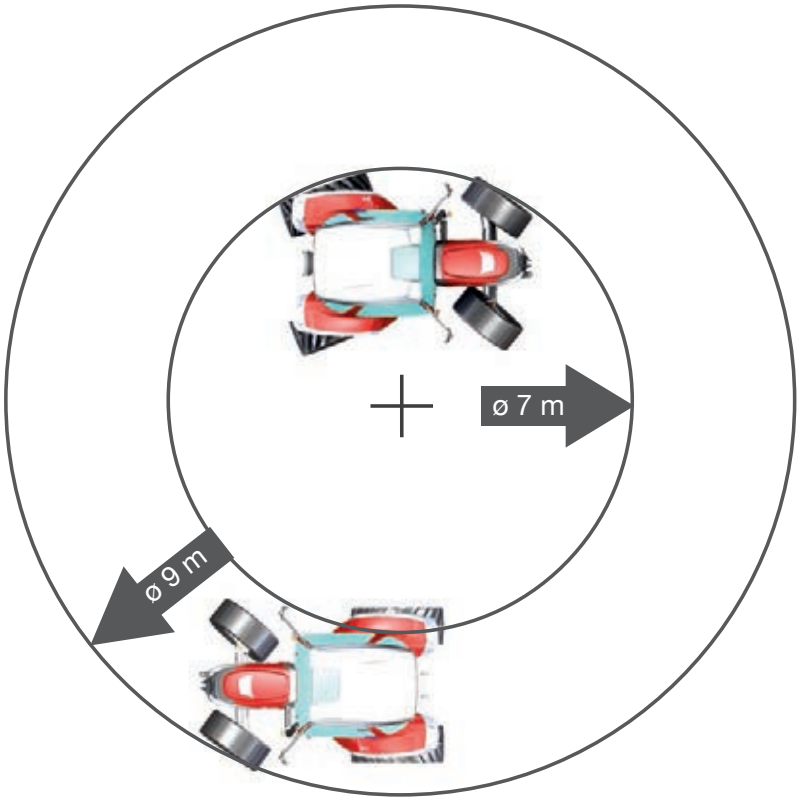

Steep meadows, narrow lanes and plantation rows
Turning manoeuvres on hillsides, front-end loader work in the farmyard, moving from row to row in the fields, in villages or on cycle paths - the steered rear axle ensures directional stability, prevents ground damage and simply makes work enjoyable.

https://truckmanualshub.com/

Intelligent hydraulics

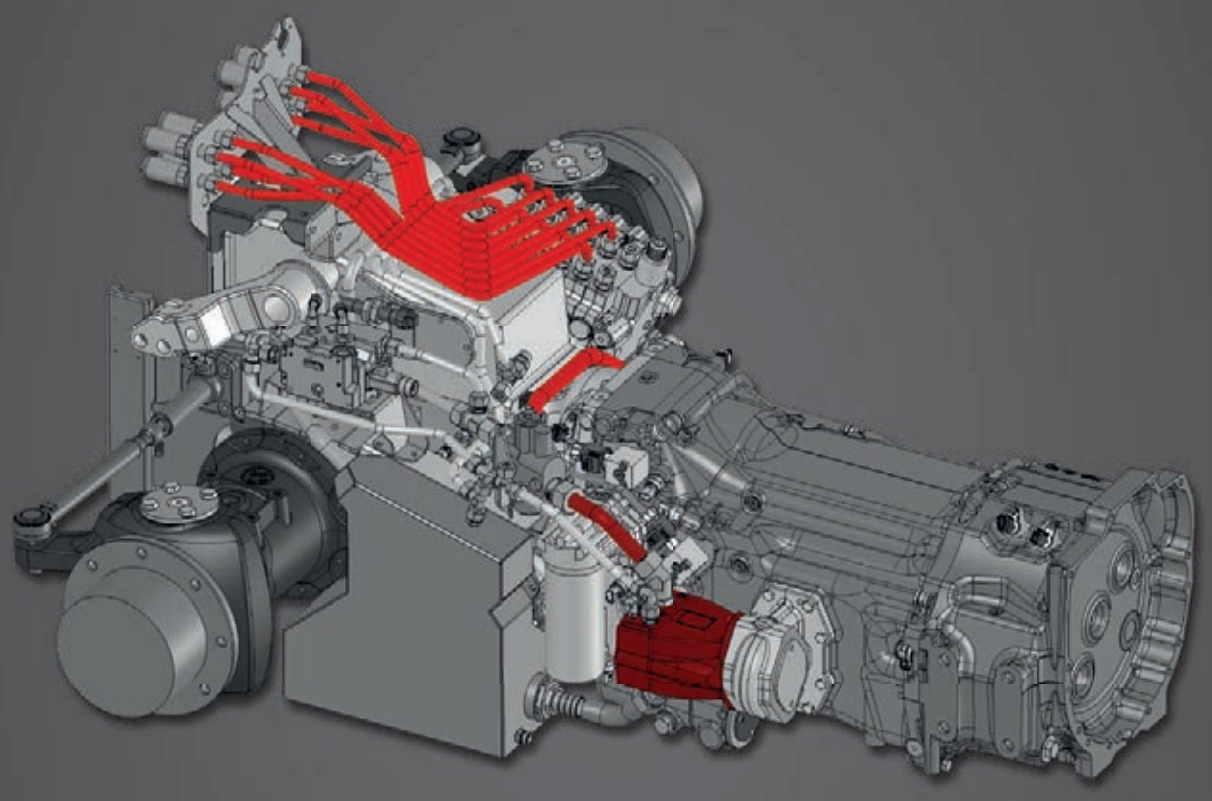

The high-performance power hydraulics from BOSCH supplies 88 l/min with the variable displacement pump.

The Lintrac operates with an axial piston pump that regulates the hydraulic power from 4 to 88 l/min on an infinitely variable basis. The exact oil volume needed is just what is provided. This eliminates power losses. Up to 5 EHS control units with volume setting are possible. These operate on a proportional basis and are particularly sensitive. As with all Lindner vehicles, the Lintrac has a separate oil supply for the power hydraulics/ steering and the transmission.

https://truckmanualshub.com/

Proportional rocker switches with multiple functions
Two more double-acting EHS control devices are operated using convenient rocker switches. In this way, the floating position and oil engine function can also be activated by pressing the switches to the second limit stop.

Ergonomic joystick
The joystick on the armrest is specially optimised for operating a mower, a snowplough and a front-end loader. Not only can two EHS controllers be operated from here, the floating position can be activated and travel direction can be changed without releasing the controls.

efficient power program

Dripless coupling and remote control
The easy-to-access hydraulic couplings in the rear are equipped with separate oil sumps. Upon request, up to two controllers can be operated on the mudguard - for fine adjustment of the top bar, for example.

https://truckmanualshub.com/

Mounting points & Light

Equipped with: Rear lifting unit with 4-point power take-off, front hydraulics with EFH and front PTO.

The Lintrac is available with body-guided or axle-driven front hydraulics. With EFH equipment relief, a uniform mowing result is achieved even in difficult terrain at speeds up to 17 km/h. The reinforced frame block allows the use of a front loader or a side attachment plate. The rear lifting unit with a lifting force of up to 3500 kp is available with EHR and vibration damping. The PTO and the lifting unit are operated on the mud guard.

https://truckmanualshub.com/

*2.800 kp with rear axle steering

Stationary half PTO shaft
Upon request, the rear linkage be supplied with an additional half PTO shaft, with reversible direction of rotation.

Optimum front-end loader
The POM-L 70 front-end loader can be supplied ex works. This machine is perfectly adapted for use on the Lintrac and is equipped with parallel guidance, synchro-lock, 3 hydraulic functions and vibration damping.

Upon request, many other front-end loaders from other manufacturers can also be adapted.

2,000 kg loading capacity
With a dead weight of 3,750 kg* and a maximum permissible total weight of 5,800 kg, the vehicle offers a loading capacity of 2 tons.

* in basic configuration

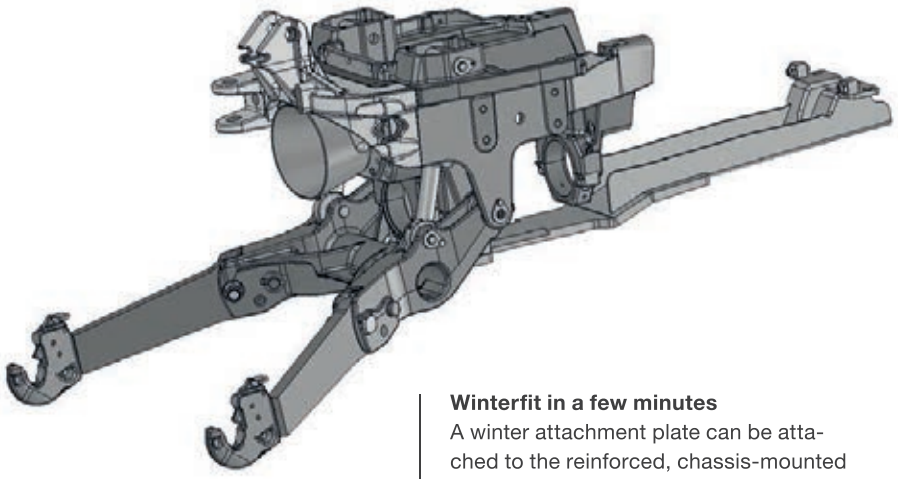

Winterfit in a few minutes
A winter attachment plate can be attached to the reinforced, chassis-mounted front-end hydraulic system instead of lifting arms in no time.

Intelligent light
The Lintrac is equipped with LED reversing and daytime running lights. The LEDs are very economical, and with a service life of more than 20,000 hours will last as long as the tractor.

In addition, the Lintrac is equipped with extremely bright bi-halogen headlights for main and dipped beams. They are switched on and off automatically according to daylight conditions. The “coming-home function” continues to light the street for a few seconds after the engine has been switched off.

Upon request, the vehicle may be equipped with very bright H7-halogen, xenon, or LED working lights. For municipal operations, extremely high visibility LED warning beacons and flashing light strips are used.

https://truckmanualshub.com/

Technical details

COMFORT CAB

Panoramic-comfort cab with level platform, safety cell with ROPS and FOPS test, green panoramic glazing, front-end loader clear vision screen, exhibition front, side, and rear window,central information board with IBC-Monitor, passenger seat, door locks, interior, Grammer comfort seat (airsprung), radio kit interior lighting with door automatic, heating and ventilation system with 2-band high-performance blower, signal socket, tank lock-off, starting lock, continuous current socket (3-prong),intermittent windscreen wiper, automatic reset indicator, 12 volt plug cellphone, utility tray rear, adjustable air jets, sun protection screen and visor, one-piece engine bonnet with comfort opening; Optional: Cabine suspension (+2cm height)

ENGINE

102 hp (75 kW) 4-cylinder PERKINS 854E-E34TA turbo diesel engine with common rail injection and Particle filter, 3.400cm³ engine capacity, 420 Nm at 1400U/min, LEVEL 3B, water cooled, dry air filter with visual maintenance indicator, 12 volt electrical system, AC Alternator , hydrostatic steering, Tank capacity: 80 l

TRANSMISSION AND CHASSIS

TMT09-ZF-Continous variable Transmission, Lindner Ldrive, 40 km/h, pressure-circulation lubricated, all-wheel Power-shift - sharing the touch of a button, Lindner high performance front axle with integrated steering (52°), rear differential lock - sharing the touch of a button, Power-shift rear PTO 430 / 540 / 750 / 1000 U / min with PTO-management, Lindner steering rear axle (up to 20°)

BRAKES

Transmission-braking function; Hydraulically actuated wet multi-disc rear brake with automatic four-wheel-sharing at every braking process (Opti-Stop), steering brake

HYDRAULIC

BOSCH-Rexroth-Hydraulic-System with variable volume pump 4-88l/min, separate oil-household, 2 x proportional EHS steering valves with priority and volume adjustment; Multifunctional joystick on Ldrive-armrest; 3.500 kp lifting capacity (2.800 with steering rear axle); Optional: EHR with AHC and oscillation-reduction;

LIGHT

2 H7 bi-halogen headlamps (lower high and low beam), 4 x H7 ellipsoid headlights front (up high and low beam), 2 x H3-working lights rear, 2 x rear and brake lights in LED technology with integrated indicator rear, 2 x lateral indicators with integrated side-marker light, 2 x LED-daylights; automatic light with daylight detection, „Coming-Home-Function“

ADDITIONAL STANDARD EQUIPMENT

Front weight carrier attachments sled, quick couplers below and above, additional lift cylinders, interval wipers, digital display, valve protection, adjustable trailer coupling, rear sliding window, fresh air blower with rear-mounted filter on cab roof, b-pillar trim and comfort interiour, top link - snap coupling, additional lift cylinders, fuel consumption display, electronic manual accelerator with 2 programmable buttons; Battery master switch electrical

SERIAL TYRES

375/70 R 20 front and 420/85 R 30 rear

DIMENSIONS

Back tyres:	Front tyres:	Max. lenght (A):	Max. width (B):	Max. width with rear axle steering:	Height (C):
420/85 – R28	375/70 – R20	3442 mm	2015 mm	2115 mm	2385 mm
540/65 – R28	420/65 – R20	3433 mm	2083 mm	2183 mm	2375 mm
420/85 – R30	375/70 – R20	3464 mm	2024 mm		2410 mm
480/70 – R30	420/65 – R20	3457 mm	2071 mm		2399 mm
540/65 – R30	420/65 – R20	3469 mm	2102 mm		2410 mm

Wheelbase (D): 2264 mm
Segment height (E): 1702mm

WEIGHTS

Deadweight:	3.750 kg
Max. permissible gross weight:	5.800 kg
Max. axle weight rear:	3.000 kg
Max. axle weight front:	3.800 kg

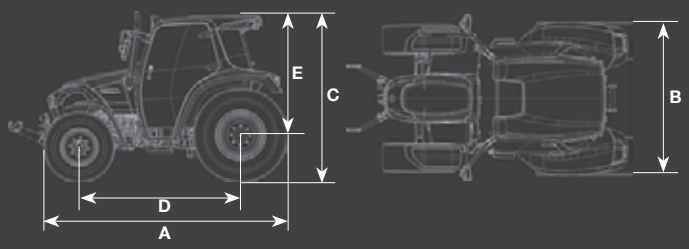

efficient power program

Photos are for illustration only. Subject to technical modification as the result of further development. Sentence and printing errors excepted.

Lintrac-10-13-ENG

TRAKTORENWERK LINDNER GMBH
Ing.-Hermann-Lindner-Str. 4, 6250 Kundl/Tirol
Tel. +43 (0) 5338 74 20-0, Fax-DW 333
www.lindner-traktoren.at

TRAKTOREN INNOVATIONSZENTRUM TIROL
Weinberg 25, 6250 Kundl/Tirol
Tel. +43 (0) 5338 74 20-120, Fax-DW 133
innovation@lindner-traktoren.at

Lindner