https://operatorsmanual.com/

Haulotte

45XA - HLA16PX - 55XA - HLA19PX

Operator's manual

45XA - HLA16PX - 55XA - HLA19PX

4000637120 E 06.19 USA / GB

https://truckmanualshub.com/

CONTENTS

A

FOREWORD

1 - User responsibility 8

1.1 - Owner's responsibility 8
1.2 - Employer's responsibility 8
1.3 - Trainer's responsibility 8
1.4 - Operator's responsibility 9

2 - Safety 10

2.1 - Safety instructions 10
2.1.1 - Misuse Hazards 10
2.1.2 - Falling Hazards 11
2.1.3 - Overturning / Tip-over Hazards 12
2.1.4 - Electrocution Hazards 14
2.1.5 - Explosion / Fire Hazards 15
2.1.6 - Crushing / Collision Hazards 15
2.1.7 - Uncontrolled movement Hazards 16

3 - Safety inquiries 17

4 - Incident notification 17

5 - Compliance 18

5.1 - Product modification 18
5.1.1 - Implementing manufacturer safety campaigns 18
5.2 - Product specifications 19
5.3 - Change of Ownership Notification 19

B

FAMILIARIZATION

1 - General safety 21

1.1 - Intended use 21
1.2 - Decal content 22
1.3 - Symbols and colors 23
1.4 - Level of severity 23
1.5 - Symbols legend and definitions 24

2 - Models description 25

3 - Primary machine components 26

3.1 - Layout 26
3.2 - Ground control box 28
3.2.1 - Layout 28
3.3 - Platform control box 31
3.3.1 - Layout 31

4 - Performance Specifications 34

4.1 - Technical characteristics 34
4.2 - Working area / Range of motion 38

5 - Decals and markings locations 41

C

PRE-OPERATION INSPECTION

1 - Recommendations 55

2 - Working area assessment 56

3 - Inspection and Functional test 57

3.1 - Daily inspection 57
3.2 - Inspection Form. 61

4 - Safety functional checks 63

4.1 - E-Stop button check. 63
4.2 - Activation of controls 64
4.3 - Fault detector 64
4.3.1 - Indicators/LED's test 64
4.4 - Automatic engine cut-out. 65
4.5 - Overload sensing system (If equipped) 65
4.6 - Outriggers 66

D

OPERATION INSTRUCTIONS

1 - Operation. 67

1.1 - Introduction 67
1.2 - Operation from the ground control box. 69
1.3 - Operation from the platform control box. 70

2 - Ground control box 71

2.1 - Boom and arm controls 71

3 - Platform control box 73

3.1 - To start and stop the machine 73
3.2 - Drive and steer control 74
3.3 - Boom and arm controls 75
3.3.1 - Joystick toggle switch. 75
3.3.2 - Joystick enable lever 76
3.4 - Additional controls 77

4 - Outriggers extension 78

5 - Rescue and emergency procedures. 80

5.1 - In case of power loss 80
5.1.1 - Manual Boom Operation 81
5.1.1.1 - Manual retraction 82
5.1.1.2 - Manual rotation. 82
5.1.1.3 - Manual Boom Lowering Procedure 83
5.2 - To rescue operator in platform 84
5.3 - No power available 84
5.4 - Manual brake release. 85

CONTENTS

6 - Transportation 86
6.1 - Putting in transport position 86
6.1.1 - Machine layout 86
6.1.2 - Transporting on to a truck bed 87
6.1.3 - Unloading 87
6.2 - Storage 88
6.3 - Lifting operation 89
7 - Cold Weather Recommendations 90
7.1 - Engine oil 90
7.2 - Hydraulic oil 90

E

GENERAL SPECIFICATIONS

1 - Machine dimensions 92
2 - Major component masses 94
3 - Acoustics and vibrations 94
4 - Wheel/Tire assembly 95
4.1 - Technical specifications 95
4.2 - Inspection and maintenance 96
5 - Options 98
5.1 - Important 98
5.2 - Platform rotator 98

F

MAINTENANCE

1 - General 99
2 - Maintenance Schedule 100
3 - Inspection program 101
3.1 - General program 101
3.2 - Daily inspection 101
3.3 - Periodic inspection 102
3.4 - Reinforced inspection 102
3.5 - Major inspection 102
4 - Repairs and adjustments 103

G

OTHER INFORMATION

1 - HAULOTTE® new product warranty North America 105

1.1 - Warranty claims procedure. 107

1.2 - Warranty registration. 108

2 - Subsidiary contact information. 109

2.1 - California warning 110

https://truckmanualshub.com/

A- Foreword

You have just purchased a HAULOTTE® product and we would like to thank you for your business.

The Aerial Work Platform is a mechanical device primarily designed and manufactured with the intent to position people with the necessary tools and material to overhead elevated temporary workplaces. All other uses or alterations/ modifications to the aerial work platform must be approved by HAULOTTE®.

This equipment is designed and manufactured in compliance with the duties, responsiblities and standards set forth for manufacturers in the ANSI, CSA and AS standards in effect at the time of manufacture.

This equipment meets or exceeds applicable ANSI and CSA standards when operated in accordance with manufacturer's recommendations.

This manual shall be considered a permanent component of the machine and shall be kept with the aerial work platform in the designated Manual Holder, at all times.

Safe operation of this product can only be assured if you follow the operating instructions contained in this manual. To ensure proper and safe use of this equipment, only trained and authorized personnel must operate and maintain the aerial work platform.

We would particularly like to draw your attention to 2 essential points :

- Comply with safety instructions.
- Use the equipment within the specified/published performance limits.

With regard to the designation of our equipment, we stress that this is purely for commercial purposes and not to be confused with the technical specifications. Only the specifications in this manual should be used to study the suitability of the equipment for the intended use.

This operator's manual is specific to the HAULOTTE® products listed on the cover page of this manual.

Original language and version :

Manuals in English and French are the original instructions. Manuals in other languages are translations of the original instructions.

The operator's manual does not replace the basic training required for equipment operators. HAULOTTE® has compiled this manual to assist in safe and efficient operation of the products covered in the manual.

The manual must be available to all operators and must be kept in a legible condition. Additional copies can be ordered from HAULOTTE Services®.

Stay Safe and keep working with HAULOTTE® !

https://truckmanualshub.com/

1 - User responsibility

1.1 - OWNER'S RESPONSIBILITY

The owner (or hirer) has the obligation :

- To inform operators of the instructions contained in the Operator's Manual.
- For applying the local regulations regarding operation of the machine.
- To replace all manuals or decals that are either missing or not legible. Additional copies can be ordered from HAULOTTE Services®.
- To establish a preventive maintenance program in accordance with the manufacturer's recommendations, taking into account the environment and severity of use of the machine.
- To perform periodic inspections in accordance with HAULOTTE® recommendations and local regulations.

All malfunctions and problems identified during the inspection shall be corrected before the aerial work platform is returned to service.

1.2 - EMPLOYER'S RESPONSIBILITY

The employer has the obligation :

- To authorize the operator to use the machine.
- To inform and familiarize the operator with the local regulations.

Forbid anyone from operating the machine if :

- Under the influence of drugs, alcohol, etc.
- Subject to fits, loss of motor skills, dizziness, etc.

1.3 - TRAINER'S RESPONSIBILITY

The trainer must be qualified to provide training to operators in accordance with applicable local regulations. The training must be given in an obstacle-free area until the trainee is considered competent as defined by the training program undertaken.

https://truckmanualshub.com/

1.4 - OPERATOR'S RESPONSIBILITY

The operator has the obligation to :

- Read and understand the contents of this manual and familiarize himself with the decals affixed on the machine.
- To inspect the machine before use according to HAULOTTE®'s recommendations..
- Inform the owner (or hirer) if the manual or any decals are missing or are not legible.
- To inform of any malfunctioning of the machine.

The operator shall ensure that frequent inspections were conducted by the owners and the operator may only operate the machine for the purpose intended by the manufacturer.

Only authorized and qualified operators may operate HAULOTTE® machines.

All operators must become familiar with and fully understand the emergency controls and be able to operate the machine in an emergency.

The operator has the obligation to stop using the machine in the event of malfunction or safety problems on the machine or in the work area and report the problem immediately to his/her supervisor.

https://truckmanualshub.com/

2 - Safety

2.1 - Safety instructions

2.1.1 - Misuse Hazards

- Do not use the machine for any other purpose than to position people, their tools and material to the overhead/elevated temporary work places.
- Do not use the machine as a crane, material lift or elevator. Only use the machine as it was intended.
- Do not attach overhanging loads when raising or lowering the platform.
- Do not tie the boom or platform to an adjacent fixed or mobile structure.
- Do not use/operate the machine when alone. A survey person or immediate Supervisor must be present on the ground in case of emergency.
- Do not use a faulty or poorly maintained machine. Remove defective/damaged machine from service.
- Do not climb onto the compartment covers of the machine.
- Do not replace items critical to machine stability with items of different weight or specification.
- Do not replace factory-installed tires with tires of different specifications or ply rating.
- Do not alter or disable machine components that in any way affect safety and stability.
- Do not disable the safety devices.
- Do not deface, modify or obscure any decals or markings on the aerial work platform.

https://truckmanualshub.com/

2.1.2 - Falling Hazards

To enter or exit from the platform :

- The machine must be completely stowed.
- Face the machine to access the entry opening to the platform.
- Keep 3 points of contact (both hands and a foot) on the steps and the guardrail.

Before commencing operation :

- Ensure that guard rails are correctly installed and secured.
- Ensure that gate or sliding bar is in it's proper closed position.
- Remove oil or grease from the steps, floor, handrail and the guardrails.
- Clear the platform floor free of debris.

When in the platform :

- Occupants must wear a fall arrest harness with energy absorber, in accordance with applicable governmental regulations. Attach the lanyard to the designated fall arrest anchor provided in the platform.
- The correct use of the harness requires the lanyard to be connected to an anchorage point designated by the decals. Refer to this decal located on the platform.
- Hold on securely to the guardrails.

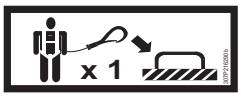

- Always keep your feet firmly on the floor of the platform.
- Do not sit, stand, or climb on the platform guard rails.
- Work only within the platform guardrails area and do not lean over guardrails to perform work.
- Do not exit the platform until it is in the completely stowed position.
- Do not use the guardrail as a means of access to climb in or out of the platform.

https://truckmanualshub.com/

2.1.3 - Overturning / Tip-over Hazards

Before positioning and operating the machine :

- Ensure that the surface is capable of supporting the machine weight including the rated capacity. Check the load bearing capacity of the supporting ground.
- Do not operate on surfaces that do not support force exerted by the outriggers during aerial work platform operation.

- Do not exceed the maximum rated capacity that includes the weight of both material and allowed number of occupants. Do not exceed the allowable number of occupants.
- Place the loads uniformly distributed on the platform floor.
- Do not increase the working height (using extensions, ladder, etc.).

- Do not place ladders or scaffolds in the platform or against any part of this machine.
- Do not use the machine in winds exceeding the permissible limit.
- Do not increase the surface area of the platform exposed to wind. This includes adding panels, mesh, banners. Be aware when working with materials with a large surface area. This will add to the wind load on the machine.

- Do not replace components critical to stability with components of different weight or specification.
- Do not use the machine with material or objects hanging from the guardrail or the boom.
- Do not pull or push towards any object outside of the platform. Do not exceed the maximum allowable side force stated in the performance specifications.

- Do not use boom or platform to push or pull or to lift any part of the trailer.
- Do not use the machine to support any external structure.
- Do not use the machine to drag materials.
- Do not operate aerial work platform without outriggers fully extended or when platform is not level.

- Do not raise the outriggers or move the trailer with materials or personnel on board, or while boom is raised or extended.

https://truckmanualshub.com/

A- Foreword

WIND : The aerial work platform can operate up to a maximum wind speed as indicated in the specifications. To identify the local wind speed, use the Beaufort scale below, use a wind gauge or an anemometer.

N.B.-:-THE BEAUFORT SCALE OF WIND FORCE IS ACCEPTED INTERNATIONALLY AND IS USED WHEN COMMUNICATING WEATHER CONDITIONS. A WIND SPEED RANGE AT 10 M (32 FT 9 IN) ABOVE FLAT, CLEAR LAND IS ASSOCIATED WITH EACH DEGREE.

Beaufort scale

Force	Meteorological description	Observed effects	m/s	km/h	mph
0	Calm	Smoke rises vertically.	0 - 0,3	0 - 1	1
1	Very light breeze	Smoke indicates the wind direction.	0,3 - 1,5	1 - 5	1 - 3
2	Light breeze	Wind felt on the face. Leaves rustle. Weather vanes turn.	1,6 - 3,3	6 - 11	4 - 7
3	Slight breeze	Leaves and small twigs in constant motion. Flags move slightly.	3,4 - 5,4	12 - 19	8 - 12
4	Nice breeze	Raised dust and loose papers. Small branches are moved.	5,5 - 7,9	20 - 28	13 - 17
5	Nice breeze	Small trees in leaf to sway. Crested wavelets form on inland waterways.	8,0 - 10,7	29 - 38	18 - 24
6	Cool wind	Large branches in motion. Power lines and chimneys 'sing'. Umbrellas used with difficulty.	10,8 - 13,8	39 - 49	25 - 30
7	Near gale	Whole trees in motion. Inconvenience felt when walking against wind.	13,9 - 17,1	50 - 61	31 - 38
8	Gale	Some branches break. Generally we cannot walk against the wind.	17,2 - 20,7	62 - 74	39 - 46
9	Strong gale	The wind causes slight damage to buildings. Tiles and chimney stacks are blown off.	20,8 - 24,4	75 - 88	47 - 54
10	Storm, Violent Storm, Hurricane	Trees uprooted, widespread damage to structures, widespread devastation.	More than 24,5	More than 89	More than 55

https://truckmanualshub.com/

2.1.4 - Electrocution Hazards

The machine is not electrically insulated and does not provide protection from contact or proximity to electrically charged conductors.

Always position the lift at a safe distance from electrically charged conductors to ensure that no part of the machine is within an unsafe area.

Respect the local rules and the minimum safety distance from power lines.

Minimum safe approach distances

Electric voltage	Minimum safety distance	
	Mètre	Feet
0 - 300 V	Avoid contact	
300 V - 50 kV	3	10
50 - 200 kV	5	15
200 - 350 kV	6	20
350 - 500 kV	8	25
500 - 750 kV	11	35
750 - 1000 kV	14	45

N.B.-:-USE THIS TABLE EXCEPT WHERE LOCAL REGULATIONS INDICATE OTHERWISE.

- Do not operate the machine when close to live power lines, consider the movement of the machine and the sway of the electric power lines particularly in windy conditions.
- Do not operate the machine during lightning, thunderstorms, snow/ice or any weather condition that could compromise operator safety.
- Do not use the machine as a ground for welding.
- Do not weld on the machine without first disconnecting the battery terminals.
- Always disconnect ground cable first.
- The machine must not be used while charging the batteries.
- When using the AC power supply, ensure it is protected with a circuit breaker and residual current device.

Keep away from the machine if it contacts energized power lines. Personnel on the ground or in the platform must not touch or operate the machine until energized power lines are shut off.

https://truckmanualshub.com/

2.1.5 - Explosion / Fire Hazards

Always wear protective clothing and eye wear when working with batteries and power sources/systems.

N.B.-:-ACID IS NEUTRALIZED WITH SODIUM BICARBONATE AND WATER.

- Do not start the engine if you smell or detect liquid propane gas (LPG), gasoline, diesel fuel or other explosive substances.
- Do not work on or operate a machine in an explosive or flammable atmosphere / environment.
- Do not touch hot components.
- Do not bridge the battery terminals with metallic objects.
- Do not service the battery in proximity of spark, open flame, lit cigarettes.
- Do not fill up the fuel tank, when the engine is running and/or near a flame.
- Avoid contact with battery acid. Battery acid causes serious burns and should be kept away from skin or eyes. If contact occurs, flush with water and consult a physician immediately.

2.1.6 - Crushing / Collision Hazards

When in the platform :

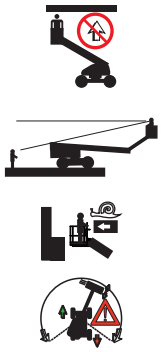

- Check the work area for clearance overhead, beside and below the platform when lifting and lowering the platform.
- During movement, keep all the parts of the body inside the platform. Hold onto the guardrails on the opposite side to any surrounding structures. Take care to avoid trapping hands whilst holding the guardrails.
- Ensure there are no obstacles (structure) in the work area.
- Always cordon off the area around the base of the machine to keep personnel and other equipment away from the machine while in use.
- Warn personnel not to work, stand, or walk under a raised boom/platform.
- Do not drive in reverse direction (opposite the field of vision).
- Be aware of the boom position and tail swing when rotating the turret (turntable).
- Always ensure that the chassis is never driven any closer than 1 m (3 ft 3 in) to holes, bumps, slopes, obstructions, debris and ground coverings that may hide holes and other dangers.

https://truckmanualshub.com/

- Keep non-operating personnel at least 5 m (16 ft 5 in) away from the machine when driving and slewing.
- Be aware of driving direction.
  - When changing the driving direction (Forward <> Reverse) the joysticks or switches must return to the neutral position before reversing the drive direction and for movement to occur.
- When driving, position the platform so as to provide the best possible visibility and to avoid any blind spots.
- Hold on securely to the guardrails.
- Occupants must wear a fall arrest harness with energy absorber, in accordance with applicable governmental regulations. Attach the lanyard to the designated fall arrest anchor provided in the platform.
- Avoid contact with fixed or mobile obstacles (other machines).
- Other machines (crane, aerial work platform, etc.) operating in the work area increase the risk of crushing or collision. Restrict the operation of machines moving within the aerial work platform work area.
- Take into consideration the stopping distance, reduced visibility and blind spots of the machine.
- Limit travel speed to suit the ground surface condition, slope (incline), and people in the vicinity.

2.1.7 - Uncontrolled movement Hazards

Never use a damaged or malfunctioning machine.

Always respect the following rules :

- Maintain clearance from high voltage lines.
- Maintain clearance from generators, radar, electromagnetic fields.
- Never expose the batteries or electrical components to water (high pressure washer, rain).

https://truckmanualshub.com/

3 - Safety inquiries

Inquiries relating to design criteria/specifications of a product, standards compliance, or overall machine safety should be sent to the HAULOTTE® PRODUCT SAFETY department.

Each inquiry or request should include all relevant information; including contact name, telephone number, mailing address, email address, plus the machine model and serial number.

The HAULOTTE® Product Safety department will evaluate each request/inquiry and will provide a written response.

4 - Incident notification

Notify HAULOTTE® immediately when a HAULOTTE® product has been involved in an incident/ accident leading to personal injury or death, or when there is a major property damage.

Connect to our website :

https://truckmanualshub.com/

5 - Compliance

5.1 - PRODUCT MODIFICATION

It is strictly forbidden to modify a HAULOTTE® product. Any modification may violate Haulotte design parameters, local regulations and industry standards.

All modifications must be submitted in writing (form) and approved by the manufacturer.

Do not hesitate to contact HAULOTTE Services®, should you have any questions relating to the issued bulletin(s) or with questions on the policy itself.

5.1.1 - Implementing manufacturer safety campaigns

It is essential to implement the safety campaigns issued by the manufacturer. All of these campaigns are accessible on our website.

Connect to our website :

Never place a machine on the market without having applied the Safety Bulletins.

https://truckmanualshub.com/

5.2 - PRODUCT SPECIFICATIONS

HAULOTTE® cannot be held liable for any changes to the technical characteristics/ specifications contained in this manual. HAULOTTE® has a continuous improvement policy in place for its product range. Given this policy, the Company reserves the right to modify products technical characteristics / specifications without notice.

Certain options/accessories can modify the machine's operating characteristics and its' associated safety. If your machine was originally delivered with options fitted, replacing a safety component associated with a particular option does not require any particular precaution other than those associated with the installation itself (static test).

Otherwise, it is essential to follow the manufacturer's recommendations as stated below :

- Installation by authorised HAULOTTE® personnel only.
- Update the manufacturer's identification plate.
- Have stability tests carried out by a certified agency/competent person.
- Ensure decals are updated.

5.3 - CHANGE OF OWNERSHIP NOTIFICATION

It is important and necessary to keep HAULOTTE Services® updated with current ownership of the machine. This way, HAULOTTE® will be able to provide the necessary support for the product. If you have sold or transferred this machine(s); it is your responsibility to notify HAULOTTE Services®. It is not required to include Lessees/Renters of Leased/Rented machines on this form.

Connect to our website. :

https://truckmanualshub.com/

Notes

https://truckmanualshub.com/

1 - General safety

1.1 - INTENDED USE

Do not operate the product in the following situations :

- On soft, unstable or cluttered ground.
- With wind blowing faster than the permissible limit.
  - Check the allowable wind speed specified in the performace specifications tabulation.
  - Consult the Beaufort scale.
- Close to power lines. Keep a safe distance.
- If the machine is stored at a temperature out of range - 20°C / + 50°C (- 4°F / + 122°F).
- In an explosive atmosphere / environment.
- During storms.
- In the presence of strong electromagnetic fields.

N.B.-:-USE THE MACHINE UNDER "NORMAL" CLIMATIC CONDITIONS. IF YOU NEED TO USE THE MACHINE IN CLIMATIC CONDITIONS LIKELY TO CAUSE DETERIORATION (EXTREME : HUMIDITY, TEMPERATURES, SALINITY, CORROSIVENESS, ATMOSPHERIC PRESSURE), CONTACT HAULOTTE SERVICES®. REDUCE INTERVALS BETWEEN SERVICING.

N.B.-:-WHILE THE MACHINE IS NOT IN USE, CARE MUST BE TAKEN TO BRING THE MACHINE TO THE FULLY STOWED POSITION. ENSURE THAT THE MACHINE IS LOCKED IN A SECURE LOCATION, AND THE CONTROL KEY IS REMOVED TO PREVENT UNAUTHORISED USE OF THE MACHINE.

https://truckmanualshub.com/

1.2 - DECAL CONTENT

Decals are provided to alert the user of hazards inherent with the Aerial Work Platforms.

Decals provide the following information :

- The level of severity.
- The specific hazard.
- A method to avoid, suppress or reduce the hazard.
- Descriptive text (where required).

Familiarize yourself with the decals and the hazard severity levels.

Decals must be kept in good legible condition.

Familiarize yourself with the decals and their respective color codes.

Additional decals can be ordered from HAULOTTE Services®.

AS standard

ANSI and CSA standards

Marking	Description
1	Hazard symbol
2	Level of severity
3	Avoidance symbol pictorial
4	Avoidance text

https://truckmanualshub.com/

1.3 - SYMBOLS AND COLORS

Symbols and colors are used to alert the operator of safety precautions and/or to highlight important safety information.

The following safety symbols are used throughout this manual to indicate specific hazards and the hazard severity level when operating or maintaining the Aerial Work Platform.

Symbol	Description
	Danger : Risk of injury or death
	Caution : Risk of material damage
	Prohibited action
	Reminder to use good practice or follow pre-operation checks
	Cross-reference to another part of the manual
	Cross-reference to another manual
	Cross-reference to repair (contact HAULOTTE Services®)
N.B. :	Additional technical information

1.4 - LEVEL OF SEVERITY

Color	Title	Description
	DANGER	Danger : Indicates a hazardous situation which if not avoided, WILL result in death or serious injury.
	WARNING	Warning : Indicates a hazardous situation which if not avoided, COULD result in death or serious injury.
	CAUTION	Caution : Failure to comply could result in minor or moderate injury.
	NOTICE	Notice : Indicates recommended practices if not followed, may result in a malfunction or damage the machine or its components.
	PROCEDURE	Procedure : Indicates a maintenance operation.

https://truckmanualshub.com/

1.5 - SYMBOLS LEGEND AND DEFINITIONS

Symbols are used throughout this manual to depict hazards, avoidance measures and indicate when information is required.

Refer to the following table to familiarize yourself with these symbols.

Symbol	Description	Symbol	Description	Symbol	Description
	Body crushing hazard		Foot crushing hazard		High pressure fluid ejection hazard
			Hand crushing hazard		Entanglement hazard
			Health/safety hazards related to chemicals		Health-damaging effects from hot work environment
	Electrical contact or lightning strike		Burns and scalds from contact with flames, explosion or radiation from heat sources		Injury from Electric arcs - Energy supply disconnecting devices - Batteries fire, emissions, etc
	Risk of operator(s) falling		Tip over due to excessive loading / wind load and excessive ground slope		Relate and coordinate directional arrows on the chassis with those on the control box
	Do not put foot in this area		Do not put your hand in this area		Keep away from product working area
	Never expose batteries and electrical component to high pressure washer		Ensure entry drop rail is down		
	Flames prohibited		Maintain safe clearance from high voltage electrically charged conductors as described in manual - Do not use in thunderstorms		Overload
	Refer to operator manual		Safety belt		Use appropriate lanyard attached to dedicated anchor point.
	Wheel pressure		Enable switch		Use safety prop before attempting any maintenance work
	Tow point		Tie down point		Lift point
	Keep away from hot surfaces		Wear protective equipment		

https://truckmanualshub.com/

2 - Models description

Regulations	Models
ANSI and CSA standards	45XA
	55XA
AS standard	HLA16PX
	HLA19PX

https://truckmanualshub.com/

3 - Primary machine components

3.1 - LAYOUT

45XA - HLA16PX - 55XA - HLA19PX

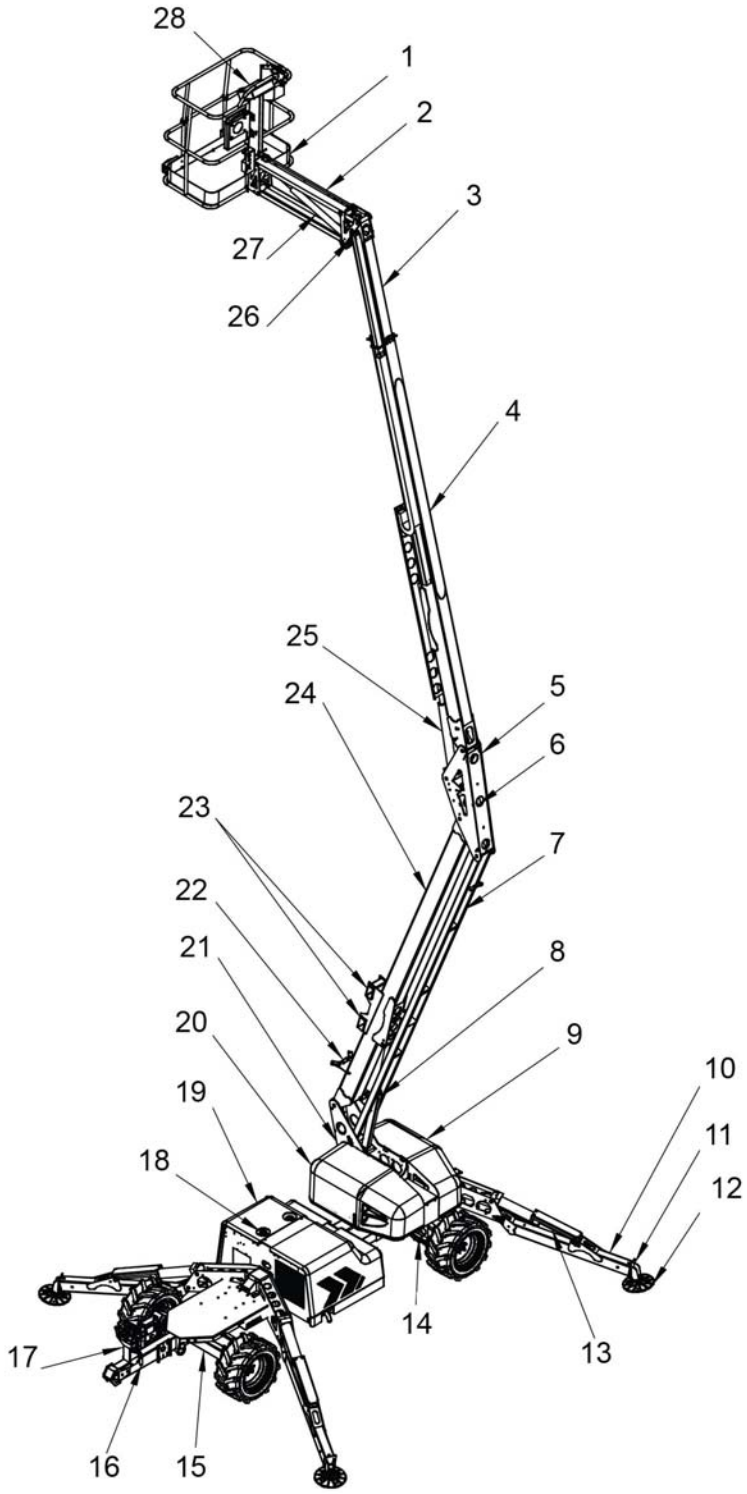

https://truckmanualshub.com/

Marking	Description	Marking	Description
C1	Platform	C15	Front axle
C2	Jib boom	C16	Boom latch
C3	Extension boom	C17	Primary boom rest
C4	Secondary boom	C18	Fuel tank
C5	Knuckle	C19	Engine compartment
C6	Master cylinder	C20	Power unit compartment
C7	Lower link	C21	Turntable
C8	Primary lift cylinder	C22	Secondary boom rest
C9	Ground control box	C23	Forklift pocket
C10	Outrigger leg	C24	Primary boom
C11	Outrigger foot	C25	Secondary lift cylinder
C12	Outrigger pad	C26	Slave cylinder
C13	Outrigger cylinder	C27	Jib lift cylinder
C14	Rear axle	C28	Platform control box

https://truckmanualshub.com/

3.2 - GROUND CONTROL BOX

3.2.1 - Layout

General view

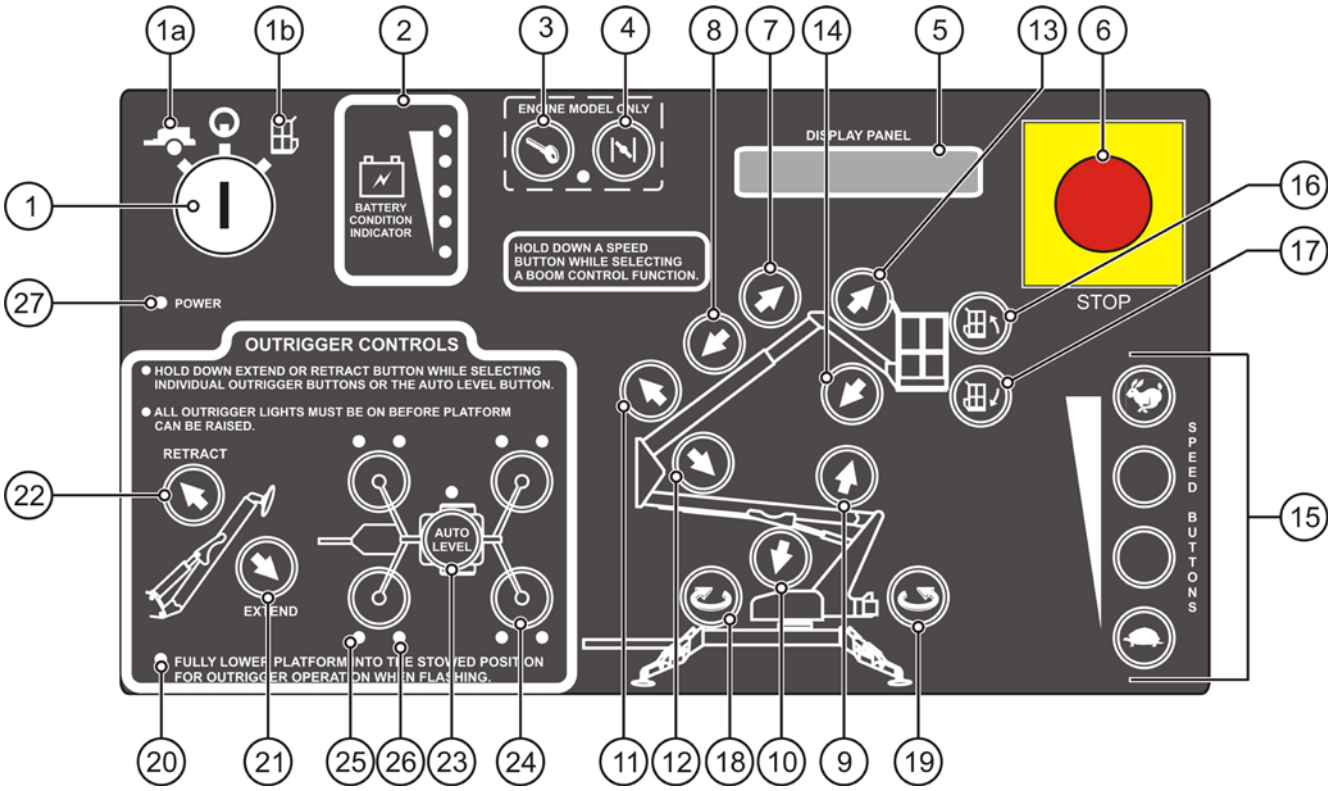

Controls and indicators

Marking	Description	Function
1	Key Switch	• Turn the KEY SWITCH (1) to the GROUND (1a) to select operation from the ground control box. • Turn the KEY SWITCH (1) to the PLATFORM (1b) to select operation from the platform control box. • Turn the KEY SWITCH (1) to the off position . Power supply is now switched off. • Remove the key to protect against unauthorized operation.
2	Battery Condition Indicator	Indicator LEDs light up to indicate the level of charge in the batteries : • A lighted green LED indicates an adequate charge level. • A lighted yellow LED indicates the need for charging soon. • A lighted red LED warns that the battery charge level is low; all functional operations become non-functional until the batteries are recharged.
3 - 4	Engine Start and Choke / Glow Plug[1]	• Start a cold engine : Press and hold the CHOKE (4), then press the ENGINE START (3). To start/restart a warm engine, press the ENGINE START (3). • Press and hold the GLOW PLUG (4) for 30 - 60 seconds then press the ENGINE START (3).
5	Display panel	The DISPLAY PANEL is a lighted text window that displays the current operating status or an existing error condition when the KEY SWITCH (1) is positioned at either (1a) or (1b).

https://truckmanualshub.com/

Marking	Description	Function
6	Emergency stop button	• When pushed in, the EMERGENCY STOP (6) button disconnects electrical power to the ground (lower) and platform (upper) control boxes • The EMERGENCY STOP button should only be pressed (pushed) in to immediately stop all aerial work platform motion. • To resume control, “pull out” the EMERGENCY STOP (6).
7 - 8	Secondary Boom Extend / Retract Buttons	• Pressing (pushing) in and holding a desired SPEED (15) button, and the BOOM EXTEND (7) button at the same time extends the secondary boom. • Pressing (pushing) in and holding a desired SPEED (15) button, and the BOOM RETRACT (8) button at the same time retracts the secondary boom. • Telescopic boom motion continues until the buttons are released, or until the boom reaches a hard stop, or a safe travel limit.
9 - 14	Primary Boom Raise / Lower Buttons and Jib Raise / Lower Buttons	• Pressing (pushing) and holding a desired SPEED (15) button, and the PRIMARY BOOM RAISE (9) button at the same time will raise the primary boom. Pressing (pushing) and holding a desired SPEED (15) button, and the PRIMARY BOOM LOWER (10) button at the same time will retract the primary boom. • Pressing (pushing) and holding a desired SPEED (15) button, and the SECONDARY BOOM RAISE (11) button at the same time will raise the secondary boom. Pressing (pushing) and holding a desired SPEED (15) button, and the SECONDARY BOOM LOWER (12) button at the same time will retract the secondary boom. • Pressing (pushing) and holding a desired SPEED (15) button, and the JIB BOOM RAISE (13) button at the same time will raise the JIB BOOM, pressing (pushing) and holding a desired SPEED (15) button, and the JIB BOOM LOWER (14) button at the same time will retract the JIB BOOM. • The selected Boom motion continues until the buttons are released or until the selected boom reaches a hard stop or a safe travel limit.
15	Speed buttons	• The SPEED (15) buttons are located along the lower right side of the control panel, one of the speed buttons must be pressed (pushed) in and held while selecting any boom function. • There are four speeds that range from fast (RABBIT), to slow (TURTLE), available to help control the positioning of the Boom and the Jib.
16 - 17	Platform Leveling Buttons	• Press (push) and hold any SPEED (15) button, and the desired PLATFORM LEVELING UP (16) or PLATFORM LEVELING DOWN (17) button at the same time to level the work platform. • This levels the platform only, NOT the aerial work platform.
18 - 19	Turret Rotation Buttons	• Pressing (pushing) and holding a desired SPEED (15) button, and the TURRET ROTATION (18) button at the same time enables the turret to rotate in the CLOCKWISE direction. • Pressing (pushing) and holding a desired SPEED (15) button, and the TURRET ROTATION (19) button at the same time enables the turret to rotate in the COUNTER CLOCKWISE direction. • The turret will rotate through 360° of Non-Continuous rotation until the buttons are released or the stop is reached.
20	Auto Level LED	• When this LED is "FLASHING" it indicates that the booms are not in the "stowed" position, and the outriggers cannot be operated (non-functional). • When this LED is "ON SOLID" it indicates that the booms are in the "stowed" position, and the outriggers can be operated (functional).

https://truckmanualshub.com/

Marking	Description	Function
21 - 26	Outrigger controls	For simultaneous automatic outrigger extension / retraction of all four (4) outriggers : • Select the EXTEND (21) button or RETRACT (22) button and the AUTO LEVEL (23) button at the same time. To individually extend or retract the outriggers : • Select the EXTEND (21) button or RETRACT (22) button, and one of the four OUTRIGGER (24) buttons at the same time. • The outrigger indicator LEDs (20) lights up when the outriggers are properly deployed and the aerial work platform weight is on the outrigger foot pads. • Each of the outer outrigger LEDs (25) indicates load is on the outrigger foot pad. • Each of the inner outrigger LEDs (26), when flashing, indicate that side is low, and needs to be further raised for leveling.
27	Power	• The LED (27) lights up when power is On.

1. For machines with engines only

https://truckmanualshub.com/

3.3 - PLATFORM CONTROL BOX

3.3.1 - Layout

General view

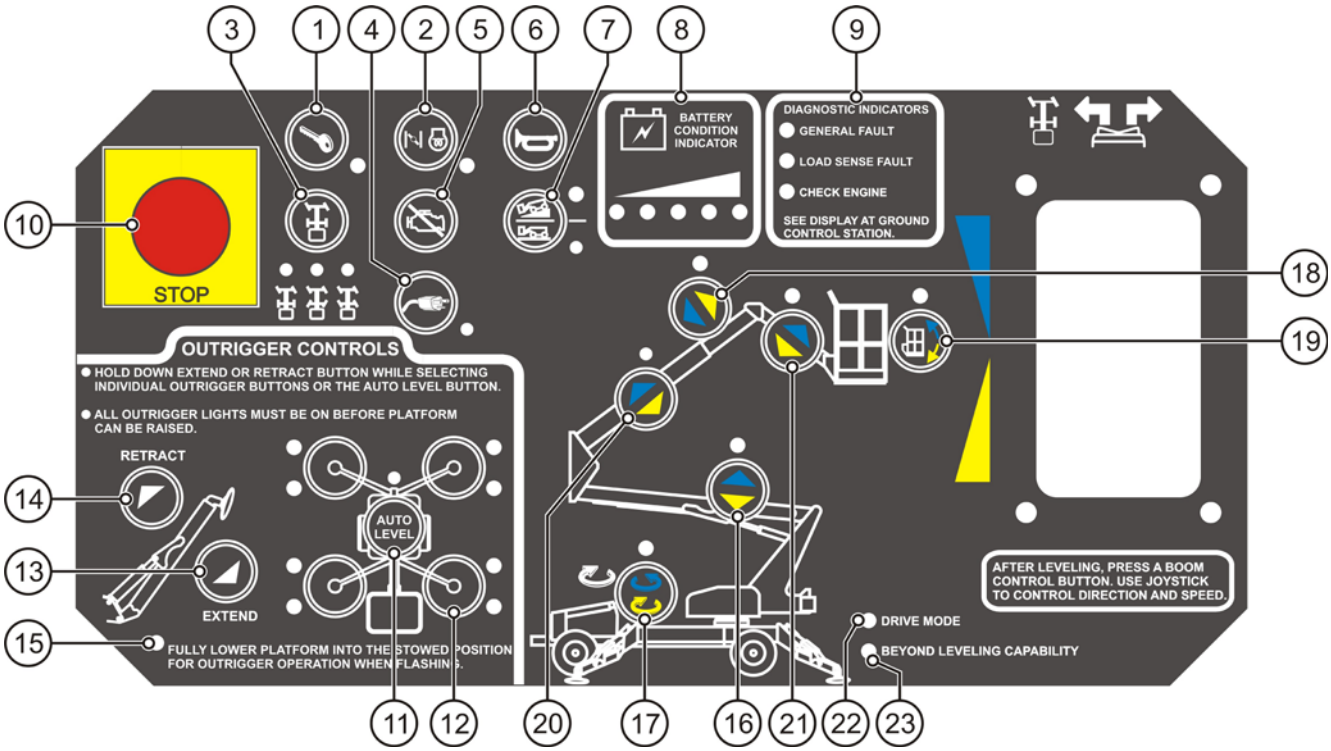

Controls and indicators

Marking	Description	Function
1 - 2	Engine Start and Choke / Glow Plug	• Start a cold engine by pressing (pushing) in and holding the CHOKE (2) button then press (push) the ENGINE START (1) button. • To start / restart a warm engine, press (push) the ENGINE START (1) button only. • Press (push) the GLOW PLUG (2) button and hold for 30-60 seconds then press (push) the ENGINE START (1) button.
3	Steering Selector (Four-Wheel Steering and Crab Steering if equipped)	• The STEERING SELECTOR (3) button controls the type of steering available. • Each time the button is pressed (pushed) it moves to the next steering mode in sequential order. • Standard : For two-wheel steering, press (push) the STEERING SELECTOR (3) button until the LED above the left image is lit. • Optional : For four-wheel steering, press (push) the STEERING SELECTOR (3) button until the LED above the center image is lit. • Optional : For crab steering, press (push) the STEERING SELECTOR (3) button until the LED above the right image is lit.
4	Generator On / Off	• To activate and / or deactivate the generator, press (push) the GENERATOR ON / OFF (4) button. • When the generator is "ON" the LED will be lit. • The generator provides power to the battery charger as well as both GFI outlets (one on the wall of the turntable, and the other on the platform mount).
5	Engine stop	• Press (push) the ENGINE STOP (5) button to shut the engine "OFF".
6	Horn Button	• Pressing (pushing) the HORN (6) button will sound the HORN. • Use the HORN (6) button to warn personnel in the area of a falling object hazard, impending boom motions, or the need for assistance.

https://truckmanualshub.com/

B- Familiarization

Marking	Description	Function
7	Drive Speed Selector	• Press (push) the DRIVE SPEED SELECTOR (7) button to switch between low speed / high torque and high speed / low torque. • The Low speed / high torque setting is the machines' default setting, and is recommended when operating on inclines.
8	Battery Condition Indicator	• Indicator LEDs light up to indicate the level of charge in the batteries : • A lighted green LED indicates an adequate charge level. • A lighted yellow LED indicates the need for charging soon. • A lighted red LED warns that the battery charge level is low; all functional operations become non-functional until the batteries are recharged.
9	Diagnostic indicators	• Indicator LED's warn of machine or engine issues : • 9A: General Fault. • When lit, refer to the DISPLAY PANEL on the ground (lower) control box for an error code. • Refer to Table "Error Code Definitions", located in the "Equipment Maintenance" section of the maintenance manual. • 9B: Load Sense Fault. • When lit, this is an indication of too much weight in the work platform; all functional operations become non-functional until the weight is below the Maximum Allowable Capacity (227kg (500 lbs) or 200 kg (440 lbs) if equipped with platform rotator option) rating. • 9C: Check Engine. • When lit, turn the engine "OFF" by using the ENGINE STOP (5) button; refer to the DISPLAY PANEL on the ground (lower) control box for an error code. • Refer to Table "Error Code Definitions", located in the "Equipment Maintenance" section of the maintenance manual.
10	Emergency stop button	• When pushed in, the EMERGENCY STOP (10) button disconnects electrical power to the ground (lower) and platform (upper) control boxes. • The EMERGENCY STOP (10) button should only be pressed (pushed) to immediately stop all aerial work platform motion. • To resume control, pull the EMERGENCY STOP (10) button out.
11-15	Outrigger controls	• The Outrigger controls on the platform (upper) control box are identical to the controls on the ground (lower) control box. • Refer to the previous section for details. Note : For all Boom Raising and Lowering, Extending and Retracting functions : Boom motion continues until the JOYSTICK is released, or until the boom reaches a hard stop or a safe travel limit is reached. When referencing moving the JOYSTICK forward or backwards, forward is away from the operator, backwards is towards the operator.
16	Primary Boom Raise / Boom Lower Button	• Press (push) the PRIMARY BOOM RAISE / BOOM LOWER (16) button until the LED is lit. • Pressing (squeezing) the ENABLE LEVER on the JOYSTICK, enables the function. • Using the color-coded direction arrows, move the JOYSTICK slightly off center; move the JOYSTICK forward to raise the primary boom, move the JOYSTICK backwards to lower the boom. • Refer to the next section JOYSTICK – PLATFORM (UPPER) CONTROL BOX for a visual of the JOYSTICK.
17	Boom Rotation Buttons	• Press (push) the BOOM ROTATION (17) button until the LED is lit. • To rotate the turntable, press (squeeze) the ENABLE LEVER on the JOYSTICK and move the JOYSTICK slightly off center in the desired direction. • To rotate CLOCKWISE move the JOYSTICK backwards, to rotate COUNTER CLOCKWISE move the JOYSTICK forward. • The boom will rotate through 360° of Non-Continuous rotation until the JOYSTICK is released, or a hard stop is reached.

https://truckmanualshub.com/

Marking	Description	Function
18	Boom Extend / Retract Buttons	• Press (push) the BOOM EXTEND / RETRACT (18) button until the LED is lit. • Pressing (squeezing) the ENABLE LEVER on the JOYSTICK, enables the function. • Using the color-coded direction arrows, move the JOYSTICK slightly off center; move the JOYSTICK backwards to extend the secondary boom, move the JOYSTICK forward to retract the secondary boom.
19	Platform Leveling Buttons	• Press (push) the PLATFORM LEVELING (19) button until the LED is lit. • Pressing (squeezing) the ENABLE LEVER on the JOYSTICK, enables the function. • Using the color-coded direction arrows move the JOYSTICK slightly off center; move the JOYSTICK forward to raise the platform, move the JOYSTICK backwards to lower the platform. • This levels the platform only, NOT the aerial work platform.
20	Secondary Boom Raise / Boom Lower Button	• Press (push) the SECONDARY BOOM RAISE / BOOM LOWER (20) button until the LED is lit. • Pressing (squeezing) the ENABLE LEVER on the JOYSTICK, enables the function. • Using the color-coded direction arrows, move the JOYSTICK slightly off center; move the JOYSTICK forward to raise the secondary boom, move the JOYSTICK backwards to lower the boom.
21	Jib Boom Raise / Boom Lower Button	• Press (push) the JIB BOOM RAISE / BOOM LOWER (21) button until the LED is lit. • Pressing (squeezing) the ENABLE LEVER on the JOYSTICK, enables the function. • Using the color-coded direction arrows, move the JOYSTICK slightly off center; move the JOYSTICK forward to raise the jib boom, move the JOYSTICK backwards to lower the boom.
22	Drive Enable LED	• Once the outriggers are retracted and in the "stowed" (upright) position, the aerial work platform defaults to the DRIVE MODE, the DRIVE MODE LED (22) will be lit, and the machine is drivable. • If the LED is not lit, check the control panel to see if there are any boom function LED's lit, if so toggle it off to enable the drive mode.
23	Beyond Leveling Capability	• When the BEYOND LEVELING CAPABILITY LED (23) is lit; it is an indication that the aerial work platform is on a level (grade) that is beyond the machines leveling capability. • The LED will stay lit until the aerial work platform has reached an area that is within the machines leveling capability.

https://truckmanualshub.com/

4 - Performance Specifications

4.1 - TECHNICAL CHARACTERISTICS

Use the table to select the right Haulotte machine for the job.

ANSI, CSA and AS standards

Machine	45XA - HLA16PX	
Characteristics - Dimensions	**SI**	**Imp.**
Maximum working height	15,7 m	51 ft 0 in
Maximum platform height	13,7 m	45 ft 0 in
Up and over height	6,3 m	20 ft 9 in
Maximum horizontal outreach :		
• From centerline of rotation	8,2 m	27 ft 0 in
• From outrigger footpad edge	6,4 m	21 ft 0 in
Rated platform capacity :		
• Without platform rotator option	227 kg	500 lb
• With platform rotator option	200 kg	440 lb
Maximum number of occupants	2	
Maximum wind speed allowed	45 km/h - 12.5 m/s - 28 mph	
Total weight :		
• 2 Wheel steering	2,395 kg	5,280 lb
• 4 Wheel steering*	2,413 kg	5,320 lb
Turntable rotation	360° non continuous	
Leveling capability	12.5°	
Manual force	400 N - 90 lbf	
Wheel base	3,1 m	10 ft 1 in
Inside turning radius :		
• (2 Wheel steering)	2,84 m	9 ft 4 in
• (4 Wheel steering*)	1,67 m	5 ft 6 in
Outside turning radius :		
• (2 Wheel steering)	4,54 m	14 ft 11 in
• (4 Wheel steering*)	3,2 m	10 ft 6 in
Platform dimensions :		
• Height	1,1 m	3 ft 7 in
• Length	0,8 m	2 ft 6 in
• Width	1,5 m	5 ft 0 in
Platform rotation / Type (Optional)	120° / Manual	
Machines stowed dimensions :		
• Height	2,1 m	6 ft 9 in
• Length	5,5 m	18 ft 2 in
• Width	1,7 m	5 ft 6 in
Jib dimensions :		
• Length	1,3 m	4 ft 3 in
• Vertical Motion	150° (+70° / -80°)	150° (+70° / -80°)
Outrigger footprint to widest point (To center of pad) :		
• Length	4,2 m	13 ft 6 in
• Width	3,9 m	12 ft 9 in
• Footpad diameter	0,3 m	12.5 in
Brake	Spring applied	
Maximum Drive Speed :		
• DC (Electric motor24VDC (3 kW))	1.6 km/h	1 mph
• IC (Gas)	7,2 km/h	4,5 mph
Gradeability	45%	

https://truckmanualshub.com/

Machine	45XA - HLA16PX	
Tire size	26 x 12 bar lug ; Non-marking or turf	
Control system	24V DC	
Battery	4 x 6V 260 Ah	
Battery amperage	260 A	
Battery voltage	4 x 6 V	
Charger	110 Volt 60 Hz 220 Volt 50 Hz	
Engine :		
• Gas (Liquid cooled Kubota)	24 kw	32.5 hp
• Diesel (Liquid cooled Kubota)	16 kw	21.6 hp
• Dual fuel - Gas / LP (Liquid cooled Kubota)	24 kw	32.5 hp
Hydraulic pressure	3,000 psi 207 bar 20,684 kPa	
Reservoir capacity	16,3 l	4.3 Gallons
Hydraulic system capacity	23,9 l	6.3 Gallons
Hydraulic oil (Standard)	HVI AW32	
Localized (Foot Plate) Pressure per Outrigger	1,8 kg/cm² / 25 psi / 176,5 kPa	
Maximum Pressure per Tire - Floor Loading	2,5 bar / 35 psi	
Outside temperature range	From -20 °C(-4 °F) to 50 °C(122 °F)	
Function speeds :		
• Boom - Primary Up	28-32 sec	
• Boom - Primary Down	60-64 sec	
• Boom - Secondary Up	24-26 sec	
• Boom - Secondary Down	52-56 sec	
• Boom - Jib Up	10-14 sec	
• Boom - Jib Down	22-26 sec	
• Extension boom - Boom extend	22-30 sec	
• Extension boom - Boom retract	22-30 sec	
• Turntable 360° Non Continuous Rotation	180-184 sec	
• Platform Leveling Up	22-26 sec	
• Platform Compensation Down	12-16 sec	
• Outriggers (Auto level) - Outrigger extend	20-24 sec	
• Outriggers (Auto level) - Outrigger retract	44-48 sec	

*Optional on 45XA - HLA16PX, standard on 55XA - HLA19PX

https://truckmanualshub.com/

ANSI, CSA and AS standards

Machine	55XA - HLA19PX	
Characteristics - Dimensions	**SI**	**Imp.**
Maximum working height	18,8 m	61 ft 3 in
Maximum platform height	16,8 m	55 ft 3 in
Up and over height	7,0 m	23 ft 1 in
Maximum horizontal outreach :		
• From centerline of rotation	10,2 m	33 ft 5 in
• From outrigger footpad edge	8,2 m	27 ft 4 in
Rated platform capacity :		
• Without platform rotator option	227 kg	500 lb
• With platform rotator option	200 kg	440 lb
Maximum number of occupants	2	
Maximum wind speed allowed	45 km/h - 12.5 m/s - 28 mph	
Total weight :		
• 4 Wheel steering	2,844 kg	6,270 lb
Turntable rotation	360° non continuous	
Leveling capability	12.5°	
Manual force	400 N - 90 lbf	
Wheel base	3,1 m	10 ft 1 in
Inside turning radius :		
• (2 Wheel steering)	3,3 m	10 ft 10 in
• (4 Wheel steering)	2,0 m	6 ft 7 in
Outside turning radius :		
• (2 Wheel steering)	5,0 m	16 ft 5 in
• (4 Wheel steering)	3,53 m	11 ft 7 in
Platform dimensions :		
• Height	1,1 m	3 ft 7 in
• Length	0,8 m	2 ft 6 in
• Width	1,5 m	5 ft 0 in
Platform rotation / Type (Optional)	120° / Manual	
Machines stowed dimensions :		
• Height	2,1 m	6 ft 9 in
• Length	6,5 m	21 ft 2 in
• Width	1,7 m	5 ft 6 in
Jib dimensions :		
• Length	1,3 m	4 ft 3 in
• Vertical Motion	150° (+70° / -80°)	150° (+70° / -80°)
Outrigger footprint to widest point (To center of pad) :		
• Length	4,2 m	13 ft 6 in
• Width	3,9 m	12 ft 9 in
• Footpad diameter	0,3 m	12.5 in
Brake	Spring applied	
Maximum Drive Speed :		
• DC (Electric motor24VDC (3 kW))	1.6 km/h	1 mph
• IC (Gas)	7,2 km/h	4,5 mph
Gradeability	45%	
Tire size	26 x 12 bar lug ; Non-marking or turf	
Control system	24V DC	
Battery	4 x 6V 260 Ah	
Battery amperage	260 A	
Battery voltage	4 x 6 V	
Charger	110 Volt 60 Hz 220 Volt 50 Hz	

https://truckmanualshub.com/

Machine	55XA - HLA19PX	
Engine :		
• Gas (Liquid cooled Kubota)	23 kw	31 hp
• Diesel (Liquid cooled Kubota)	18 kw	24 hp
• Dual fuel - Gas / LP (Liquid cooled Kubota)	23 kw	31 hp
Hydraulic pressure	3,000 psi 207 bar 20,684 kPa	
Reservoir capacity	21,2l	5.6 Gallons
Hydraulic system capacity	32,2l	8.5 Gallons
Hydraulic oil (Standard)	HVI AW32	
Localized (Foot Plate) Pressure per Outrigger	1,8 kg/cm² / 25 psi / 176,5 kPa	
Maximum Pressure per Tire - Floor Loading	2,5 bar / 35 psi	
Outside temperature range	From -20 °C(-4 °F) to 50 °C(122 °F)	
Function speeds :		
• Boom - Primary Up	34-38 sec	
• Boom - Primary Down	60-64 sec	
• Boom - Secondary Up	22-26 sec	
• Boom - Secondary Down	52-56 sec	
• Boom - Jib Up	10-14 sec	
• Boom - Jib Down	22-26 sec	
• Extension boom - Boom extend	26-30 sec	
• Extension boom - Boom retract	26-30 sec	
• Turntable 360° Non Continuous Rotation	180-184 sec	
• Platform Leveling Up	22-26 sec	
• Platform Compensation Down	12-16 sec	
• Outriggers (Auto level) - Outrigger extend	20-24 sec	
• Outriggers (Auto level) - Outrigger retract	44-48 sec	

https://truckmanualshub.com/

4.2 - WORKING AREA / RANGE OF MOTION

The following information is based on ideal working conditions. Machine performance may vary based on work environment and on machine options. Only one boom function is permitted at a time, this function is only operable as long as the boom is within the safe operating zone. Once a boom motion exceeds its safe operating limit, that function ceases, another boom function within the safe operating zone must be selected.

45XA - HLA16PX

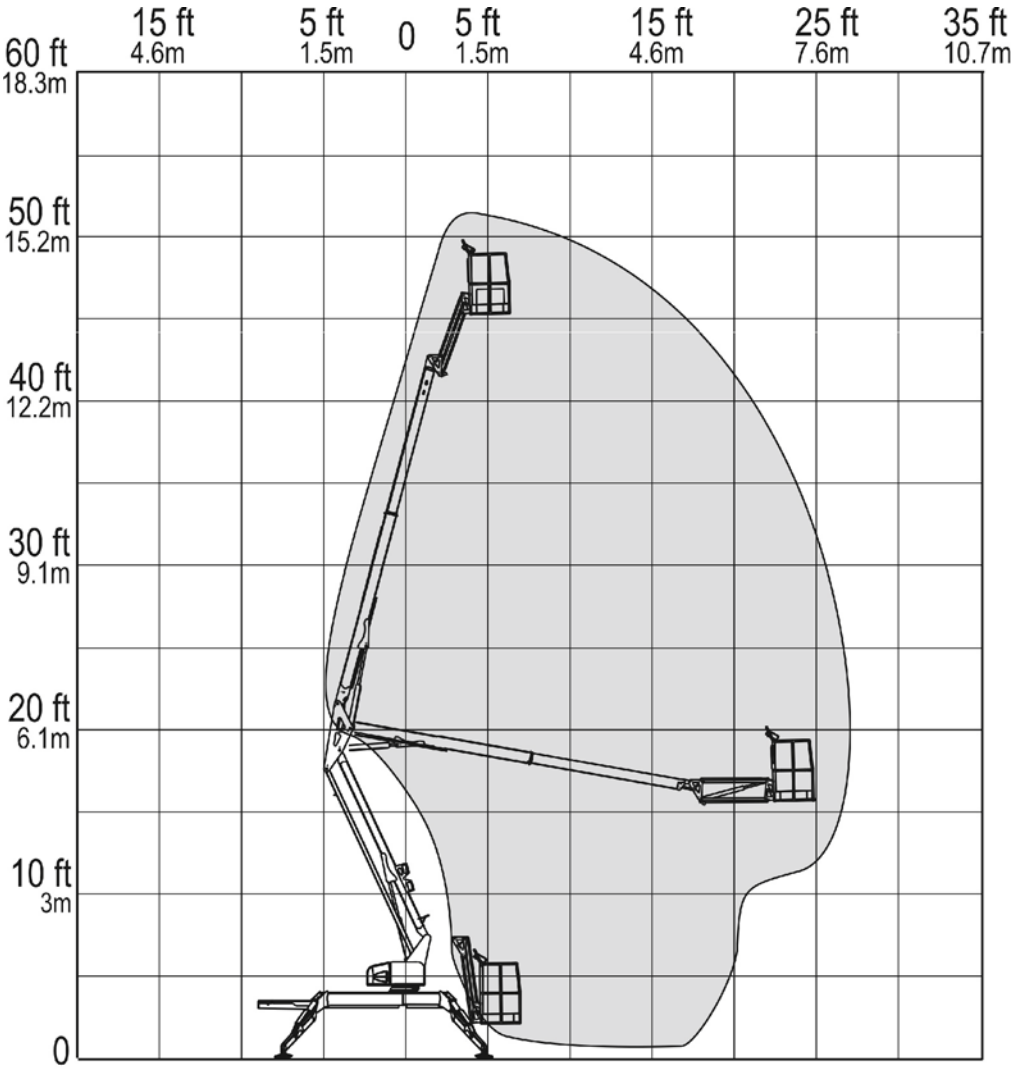

https://truckmanualshub.com/

55XA - HLA19PX

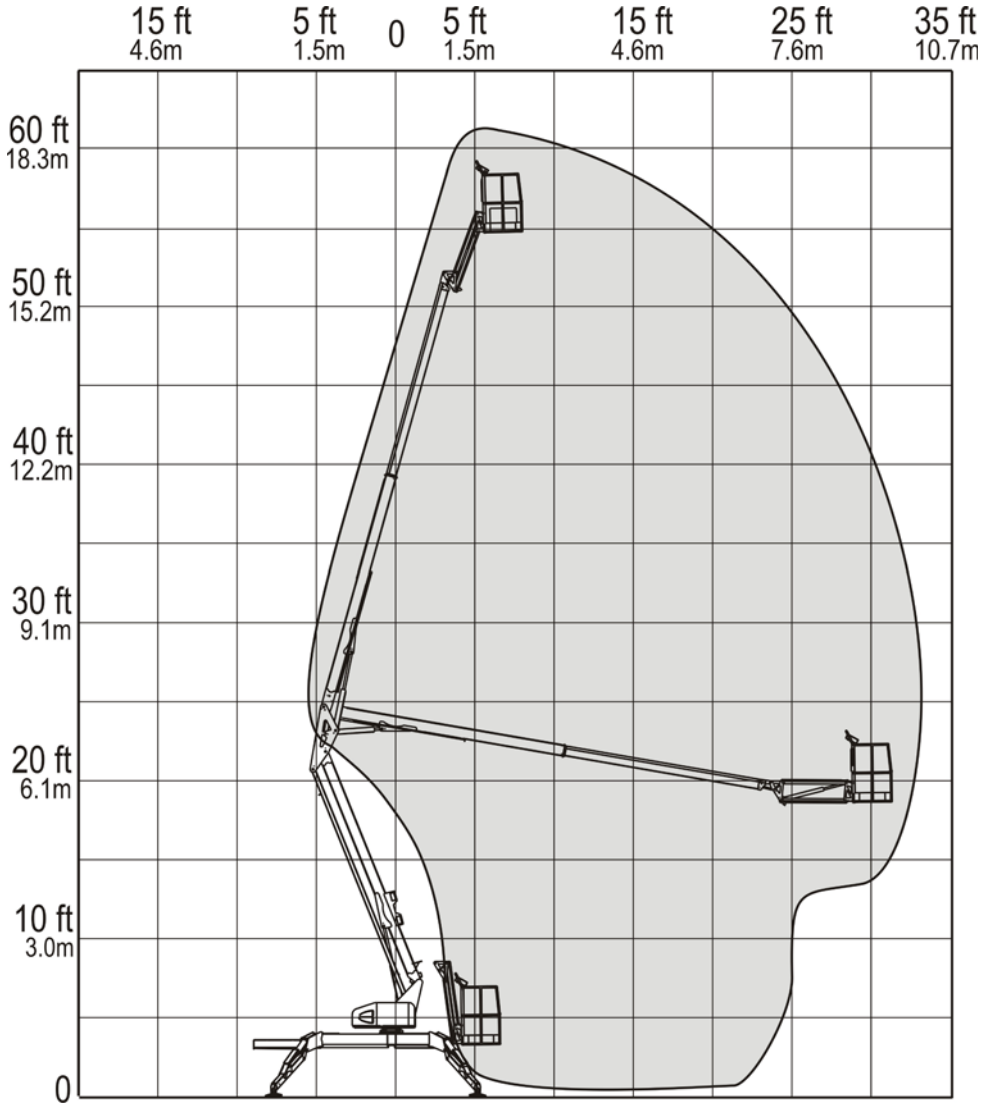

https://truckmanualshub.com/

Notes

https://truckmanualshub.com/

5 - Decals and markings locations

- Decals contain information that is required for the safe and proper use of the aerial work platform.
- Decals should be considered necessary components of the machine and should be checked before each use to verify that they are correctly attached and legible.
- Promptly replace all decals that are no longer legible.
- Do not deface, modify or obscure any decals or markings on the aerial work platform.

https://truckmanualshub.com/

Decal placement - Decal kit - ANSI/CSA/AS - 45XA - HLA16PX

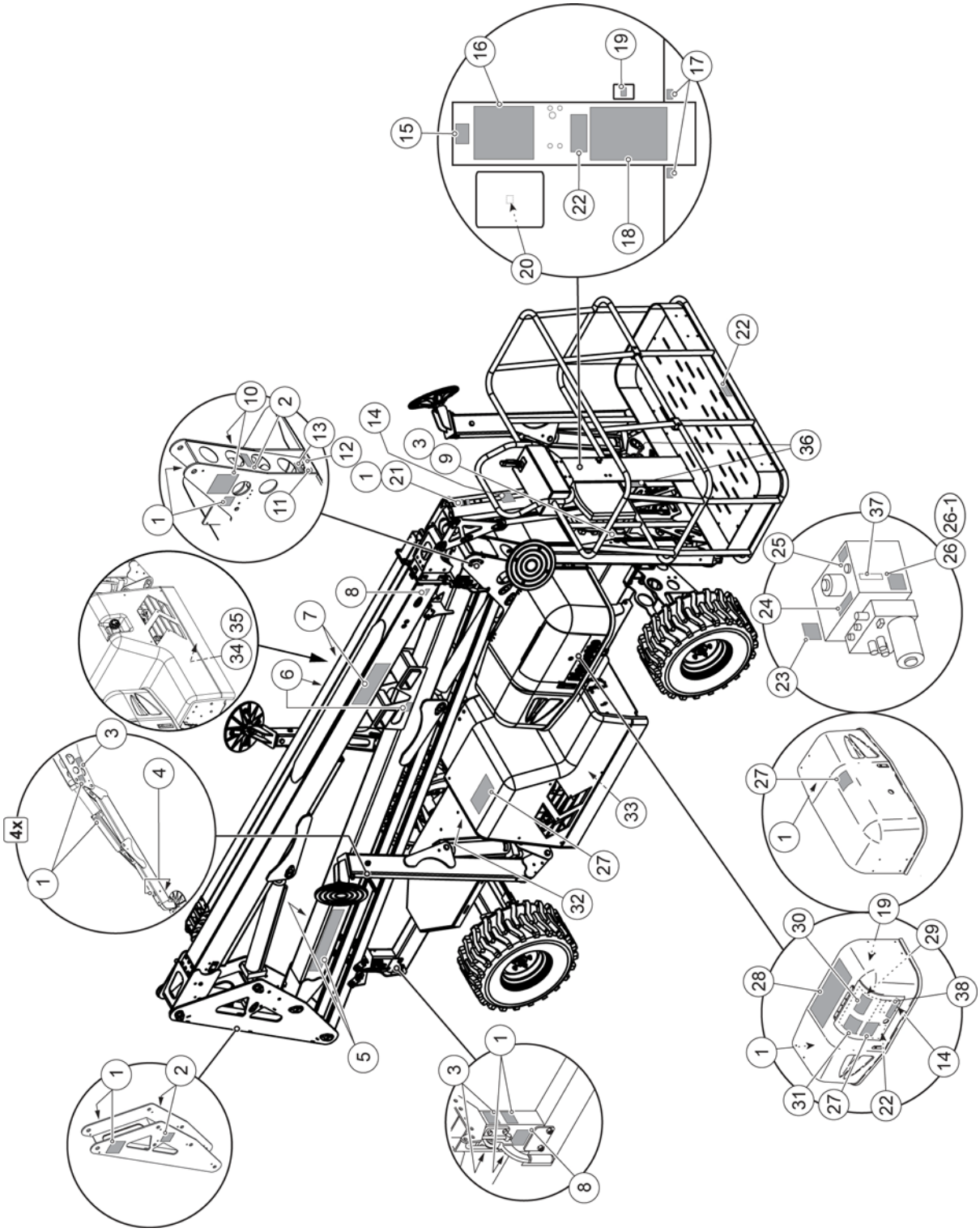

https://truckmanualshub.com/

Decal placement - Decal kit - ANSI/CSA/AS - 45XA - HLA16PX

Marking	Color	Description	Quantity	45XA - HLA16PX
1	Orange	Decal - Warning - Hand Pinch Point	17	B06-00-0405
2	Blue	Decal - Emergency Lower Valve	4	B06-00-0403
3	Red	Decal - Danger - Tip-over Hazards	7	B06-00-0521
4	Orange	Decal - Warning - Outrigger Crush Foot	8	B06-00-0404
5	Other	Decal - HAULOTTE®	2	B06-00-0161B
6	Orange	Decal - Warning - Fork Lift Use	2	B06-00-0477
7	Other	Decal - 45XA - HLA16 PX Transfer-Black	2	B06-00-0564
8	Yellow	Decal - Caution - Transport latch	2	B06-00-0481
9	Other	Decal - Drive direction arrows	1	B06-00-0608
10	Red	Decal - Danger - Electrocution Hazard	2	B06-00-0482
11	Other	Decal - Air - 120 PSI	1	B06-00-0530
12	Other	Decal - Water - 3000 PSI	1	B06-00-0531
13	Other	Decal - Lubricate Semi - Annually	1	B06-00-0037
14	Blue	Decal - Notice - Range of Motion - 45XA - HLA16PX	2	B06-00-0536
15	Other	Decal - Flag, Made In USA	1	B06-00-0660
16	Orange	Decal - Warning - Platform controls	1	B06-00-0562
17	Other	Decal - Lanyard Attachment	2	307P216290
18	Red	Decal - Danger - Main Instruction / Hazard - Platform	1	B06-00-0471
19	Blue	Decal - Notice - AC Power	2	B06-00-0062
20	Blue	Decal - Notice - Operator Manual Missing	1	B06-00-0473
21	Orange	Decal - Warning - Read / Understand Manual	1	B06-00-0475
22	Red	Decal - Danger - Platform maximum load	3	B06-00-0474
23	Blue	Decal - Notice - Handle applications	1	B06-00-0503
24	Blue	Decal - Notice - Emergency hand pump	1	B06-00-0504
25	Blue	Decal - Notice - Low Foam hydraulic oil	1	B06-00-0068
26	Yellow	Decal - Caution - Manual Rotate / Retract*	1	B06-00-0541
26-1	Yellow	Decal-Caution-Manual Rotate / Retract**	1	B06-00-0670
27	Yellow	Decal - Caution - Compartment access	3	B06-00-0495
28	Red	Decal - Danger - Main Instruction / Hazard - Base	1	B06-00-0505
29	Orange	Decal - Warning - Ground Control	1	B06-00-0561
30	Red	Decal - Danger - Battery / Charger Instruction	1	B06-00-0484
31	Red	Decal - Danger - Battery / Charger Safety	1	B06-00-0034
32	Blue	Decal - Notice - AC Power Connection	1	B06-00-0478
33	Blue	Decal - Notice - Engine maintenance	1	B06-00-0663
34	Blue	Decal - Notice - Brake release	1	B06-00-0662
35	Blue	Decal - Notice - Fuel Shut-Off	1	B06-00-0656
36	Red	Decal - Danger - Cage pin	2	B06-00-0669
37	Other	Decal - Oil level***	1	B06-00-0671
38	Orange	Decal - Warning - P6 - California warning	1	4001026850

** Retract for A0025HA pump.*

*** For 4000109360 and 4000110000 : Hydraulic pumps.*

**** Fluid Level for 4000109360 and 4000110000 Hydraulic pumps only - No fuel level decal for A0025HA pump.*

https://truckmanualshub.com/

Identification plates and optional equipment - ANSI/CSA/AS - 45XA - HLA16PX

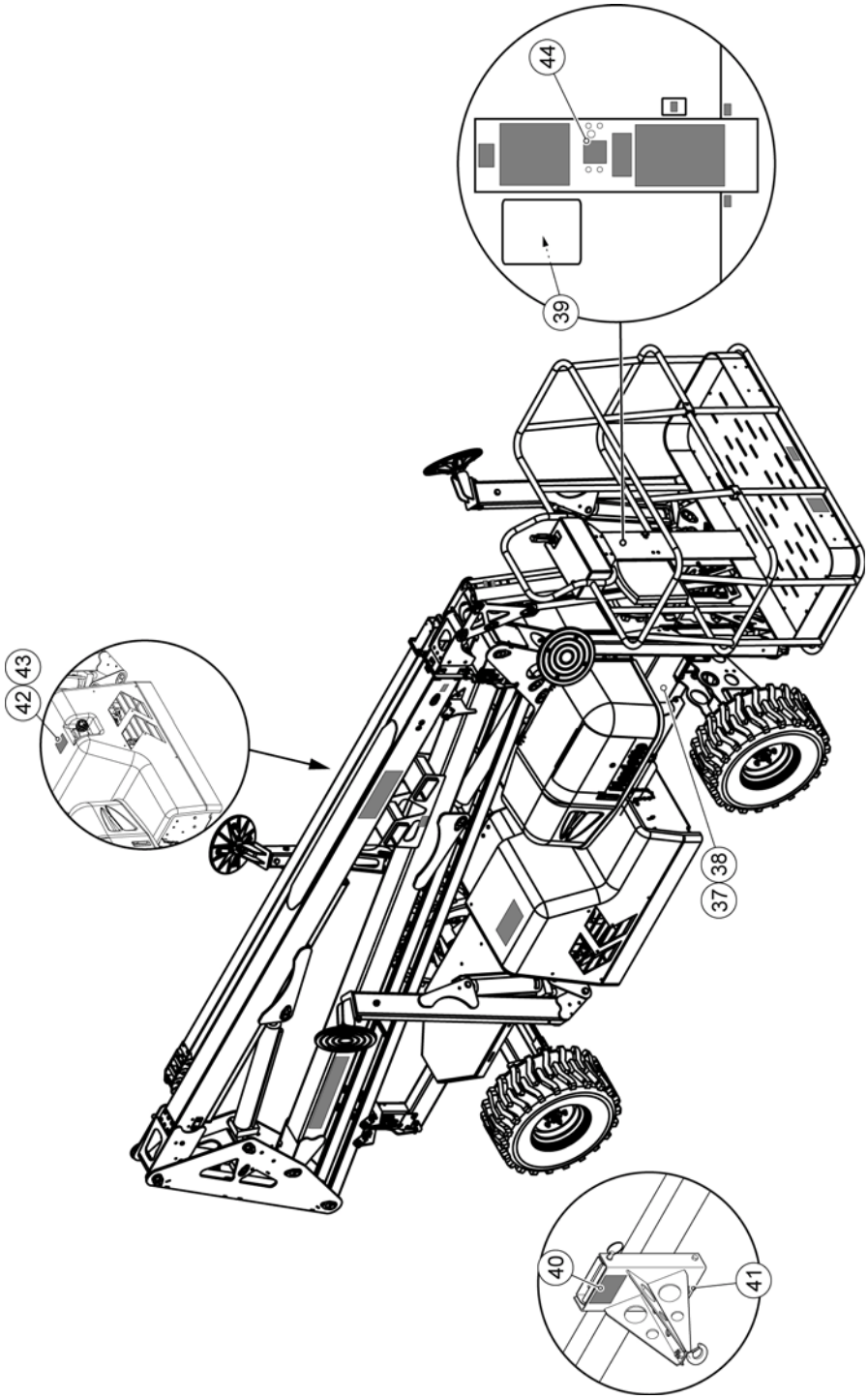

https://truckmanualshub.com/

Identification plates and optional equipment - ANSI/CSA/AS - 45XA - HLA16PX

Identification plate - Used on all standard equipment				
Marking	Color	Description	Quantity	45XA - HLA16PX
37	Orange	Annual Inspection Plate	1	B06-00-0524
38	Other	Serial plate	1	B06-00-0648
39	Other	Key ring tag	1	B06-00-0526

Replacement decals for optional equipment - ANSI/CSA/AS - 45XA - HLA16PX

Marking	Color	Description	Quantity	45XA - HLA16PX
40	Blue	Decal - Notice - Material Lift Set-Up (Material lift option)	1	B06-00-0485
41	Blue	Decal - Notice - Material lift max 500 (Material lift option)	1	B06-00-0497
42	Blue	Decal - Notice - Unleaded fuel only	1	B06-00-0487
43	Blue	Decal - Notice - Diesel Fuel Only	1	B06-00-0498
44	Blue	Decal - Notice - Platform rotate (Manual rotation option)	1	B06-00-0529-CE

https://truckmanualshub.com/

Decal placement - Decal kit - ANSI/CSA/AS - 55XA - HLA19PX-
Used on machines with serial numbers prior to 55X18-00006 only

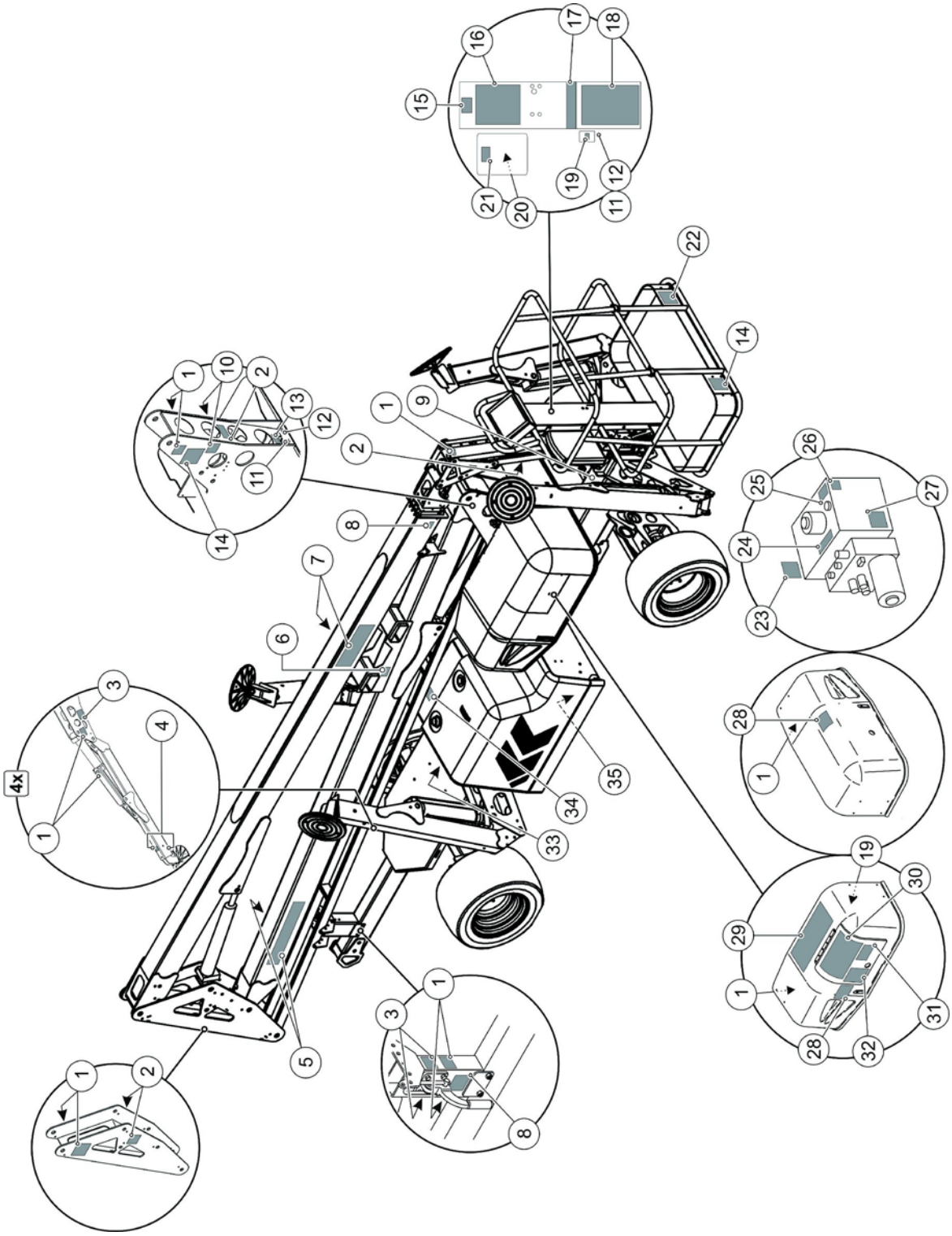

https://truckmanualshub.com/

Decal placement - Decal kit - ANSI/CSA/AS - 55XA - HLA19PX-
Used on machines with serial numbers prior to 55X18-00006 only

Marking	Color	Description	Quantity	55XA - HLA19PX
1	Orange	Decal - Warning - Hand Pinch Point	17	For ANSI : B06-00-0405 For AS : B06-00-0405-CE
2	Blue	Decal - Emergency Lower Valve	4	For ANSI : B06-00-0403 For AS : B06-00-0403-CE
3	Red	Decal - Danger - Tip-over Hazards	7	B06-00-0521
4	Orange	Decal - Warning - Outrigger Crush Foot	8	For ANSI : B06-00-0404 For AS : B06-00-0404-CE
5	Other	Decal - HAULOTTE®-13 cm (5 in) Black / Red on clear	2	B06-00-0161B
6	Orange	Decal - Warning - Fork Lift Use	2	B06-00-0477
7	Other	Decal - 55XA transfert - Black	2	For ANSI : B06-00-0565 For AS : B06-00-0565-CE
8	Yellow	Decal - Caution - Transport latch	2	B06-00-0481
9	Other	Decal - Drive direction arrows	1	B06-00-0608
10	Red	Decal - Danger - Electrocution Hazard	2	B06-00-0482
11	Other	Decal - Air - 120 PSI	2	B06-00-0530
12	Other	Decal - Water - 3000 PSI	2	B06-00-0531
13	Other	Decal - Lubricate Semi - Annually	1	B06-00-0037
14	Blue	Decal - Notice - Range of Motion - 55XA - HLA19PX	2	For ANSI : B06-00-0537 For AS : B06-00-0537CE
15	Other	Decal - Flag, Made In USA	1	0202-0523
16	Orange	Decal - Warning - Platform control box	1	B06-00-0562
17	Other	Decal - Lanyard Attachment	1	B06-00-0552
18	Red	Decal - Danger - Main Instruction / Hazard - Platform	1	B06-00-0471
19	Blue	Decal - Notice - AC Power	2	For ANSI : B06-00-0062 For AS : B06-00-0062-CE
20	Blue	Decal - Notice - Operator Manual Missing	1	B06-00-0473
21	Orange	Decal - Warning - Read / Understand Manual	1	For ANSI : B06-00-0475 For AS : B06-00-0475-CE
22	Red	Decal - Danger - Platform maximum load	1	For ANSI : B06-00-0474 For AS : B06-00-0474-CE
23	Blue	Decal - Notice - Handle applications	1	B06-00-0503
24	Blue	Decal - Notice - Emergency hand pump	1	B06-00-0504
25	Blue	Decal - Notice - Low Foam hydraulic oil	1	For ANSI : B06-00-0068 For AS : B06-00-0068-CE
26	Blue	Decal - Notice - Contains hazardous material	1	B06-00-0494
27	Yellow	Decal - Caution - Manual rotate / retract	1	B06-00-0541
28	Yellow	Decal - Caution - Compartment Access	2	For ANSI : B06-00-0495 For AS : B06-00-0495-CE
29	Red	Decal - Danger - Main instruction / Hazard - Base	1	B06-00-0505
30	Orange	Decal - Warning - Turntable controls	2	B06-00-0561
31	Red	Decal - Danger - Battery / Charger instruction	1	B06-00-0484
32	Red	Decal - Danger - Battery / Charger Safety	1	For ANSI : B06-00-0034 For AS : B06-00-0034-CE
33	Blue	Decal - Notice - AC Power Connection	1	B06-00-0478
34	Blue	Decal - Notice - Unleaded fuel only	1	B06-00-0487
35	Blue	Decal - Notice - Brake release	2	B06-00-0609

https://truckmanualshub.com/

Identification plates and optional equipment - ANSI/CSA/AS - 55XA - HLA19PX-
Used on machines with serial numbers prior to 55X18-00006 only

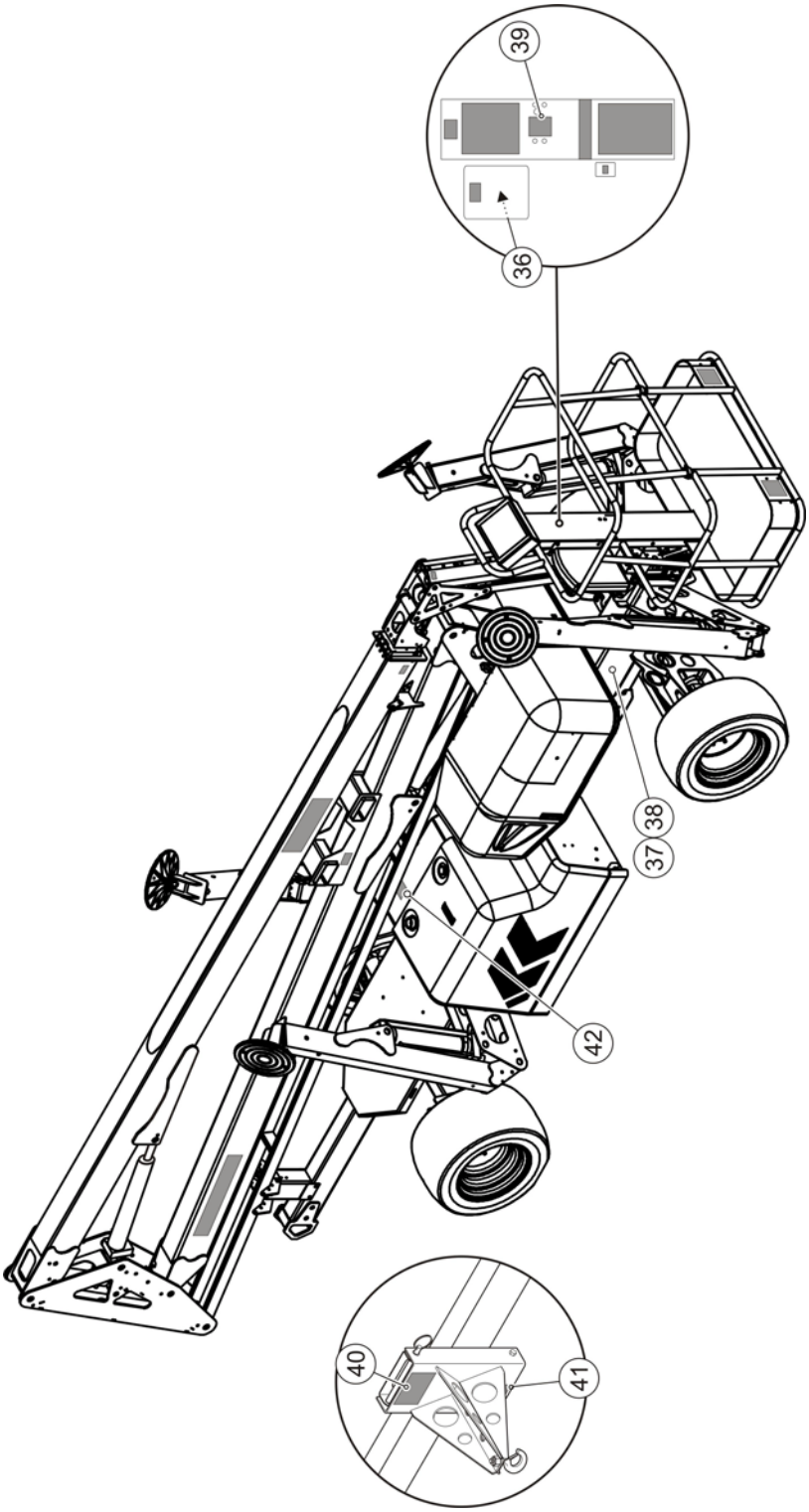

https://truckmanualshub.com/

Identification plates and optional equipment - ANSI/CSA/AS - 55XA - HLA19PX- Used on machines with serial numbers prior to 55X18-00006 only

Identification plate - Used on all standard equipment				
Marking	Color	Description	Quantity	55XA - HLA19PX
36	Orange	Key ring tag	1	B06-00-0526
37	Other	Annual Inspection Plate	1	B06-00-0524
38	Other	ANSI ID plate	1	B06-00-0499

Replacement decals for optional equipment - ANSI/CSA/AS - 55XA - HLA19PX- Used on machines with serial numbers prior to 55X18-00006 only

Marking	Color	Description	Quantity	55XA - HLA19PX
39	Blue	Decal - Notice - Platform rotate (Manual rotation option)	1	B06-00-0529
40	Blue	Decal - Notice - Material Lift Set-Up (Material lift option)	1	B06-00-0485
41	Blue	Decal - Notice - Material lift max 500 (Material lift option)	1	B06-00-0497
42	Blue	Decal - Notice - Diesel Fuel Only	1	B06-00-0498

https://truckmanualshub.com/

Decal placement - Decal kit - ANSI/CSA/AS - 55XA - HLA19PX-
Used on machines with serial numbers after 55X18-00006 only

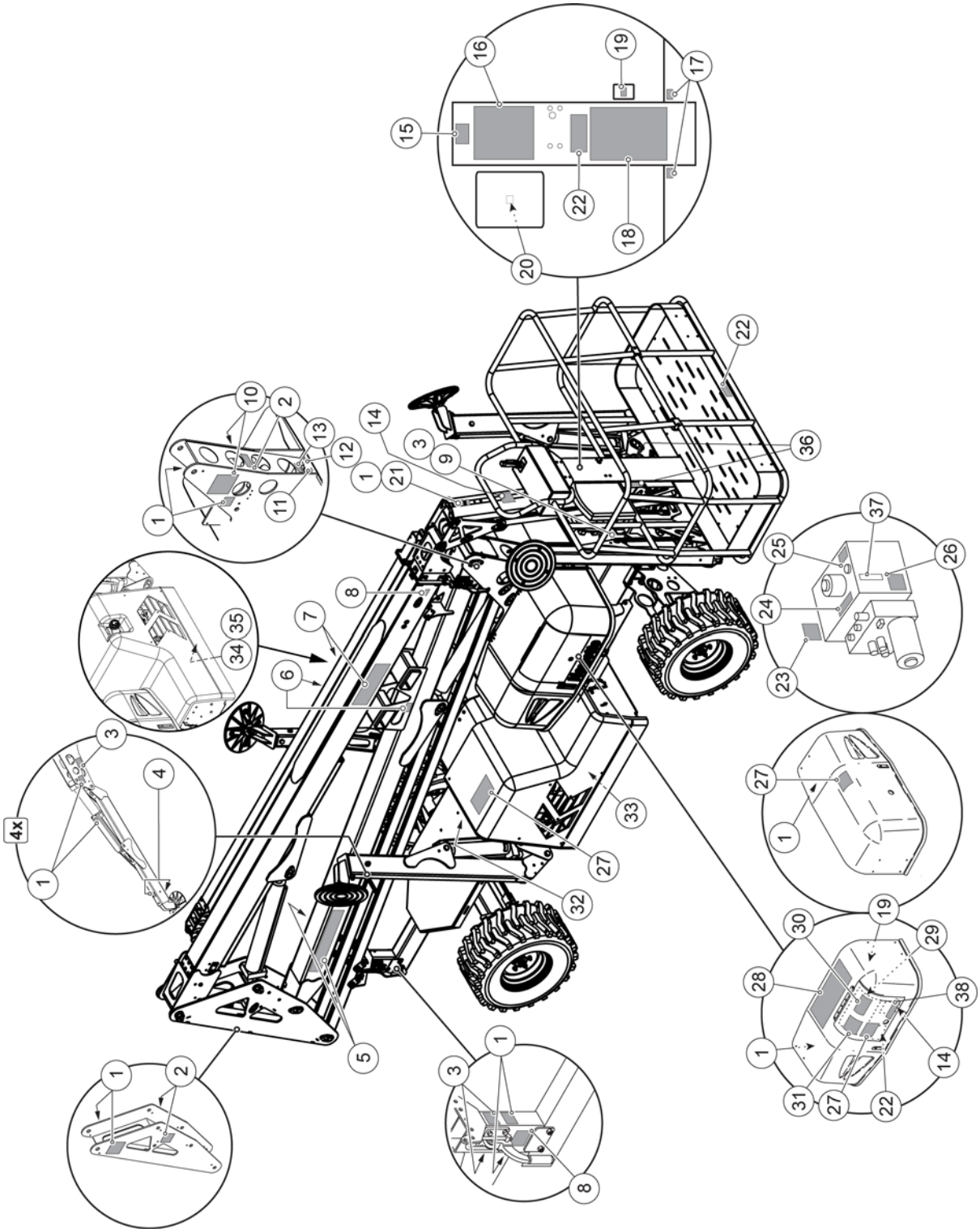

https://truckmanualshub.com/

Decal placement - Decal kit - ANSI/CSA/AS - 55XA - HLA19PX-
Used on machines with serial numbers after 55X18-00006 only

Marking	Color	Description	Quantity	55XA - HLA19PX
1	Orange	Decal - Warning - Hand Pinch Point	17	B06-00-0405
2	Blue	Decal - Emergency Lower Valve	4	B06-00-0403
3	Red	Decal - Danger - Tip-over Hazards	7	B06-00-0521
4	Orange	Decal - Warning - Outrigger Crush Foot	8	B06-00-0404
5	Other	Decal - HAULOTTE®-13 cm (5 in) Black / Red on clear	2	B06-00-0161B
6	Orange	Decal - Warning - Fork Lift Use	2	B06-00-0477
7	Other	Decal - 55XA - HLA19PX transfert - Black	2	B06-00-0565
8	Yellow	Decal - Caution - Transport latch	2	B06-00-0481
9	Other	Decal - Drive direction arrows	1	B06-00-0608
10	Red	Decal - Danger - Electrocution Hazard	2	B06-00-0482
11	Other	Decal - Air - 120 PSI	1	B06-00-0530
12	Other	Decal - Water - 3000 PSI	1	B06-00-0531
13	Other	Decal - Lubricate Semi - Annually	1	B06-00-0037
14	Blue	Decal - Notice - Range of Motion - 55XA - HLA19PX	2	B06-00-0537
15	Other	Decal - Flag, Made In USA	1	B06-00-0660
16	Orange	Decal - Warning - Platform control box	1	B06-00-0562
17	Other	Decal - Lanyard Attachment	2	307P216290
18	Red	Decal - Danger - Main Instruction / Hazard - Platform	1	B06-00-0471
19	Blue	Decal - Notice - AC Power	2	B06-00-0062
20	Blue	Decal - Notice - Operator Manual Missing	1	B06-00-0473
21	Orange	Decal - Warning - Read / Understand Manual	1	B06-00-0475
22	Red	Decal - Danger - Platform maximum load	3	B06-00-0474
23	Blue	Decal - Notice - Handle applications	1	B06-00-0503
24	Blue	Decal - Notice - Emergency hand pump	1	B06-00-0504
25	Blue	Decal - Notice - Low Foam hydraulic oil	1	B06-00-0068
26	Yellow	Decal-Caution-Manual Rotate / Retract*	1	B06-00-0670
27	Yellow	Decal - Caution - Compartment Access	3	B06-00-0495
28	Red	Decal - Danger - Main instruction / Hazard - Base	1	B06-00-0505
29	Orange	Decal - Warning - Ground Control Xbooms	1	B06-00-0561
30	Red	Decal - Danger - Battery / Charger instruction	1	B06-00-0484
31	Red	Decal - Danger - Battery / Charger Safety	1	B06-00-0034
32	Blue	Decal - Notice - AC Power Connection	1	B06-00-0478
33	Blue	Decal - Notice - Engine maintenance	1	B06-00-0663
34	Blue	Decal - Notice - Brake release	1	B06-00-0662
35	Blue	Decal - Notice - Fuel Shut-Off	1	B06-00-0656
36	Red	Decal - Danger - Cage pin	2	B06-00-0669
37	Other	Decal - Oil level**	1	B06-00-0671
38	Orange	Decal - Warning - P6 - California warning	1	4001026850

** For 4000109380 and 4000110020 : Hydraulic pumps.*

*** Fluid Level for 4000109380 and 4000110020 Hydraulic pumps only.*

https://truckmanualshub.com/

Identification plates and optional equipment - ANSI/CSA/AS - 55XA - HLA19PX-
Used on machines with serial numbers after 55X18-00006 only

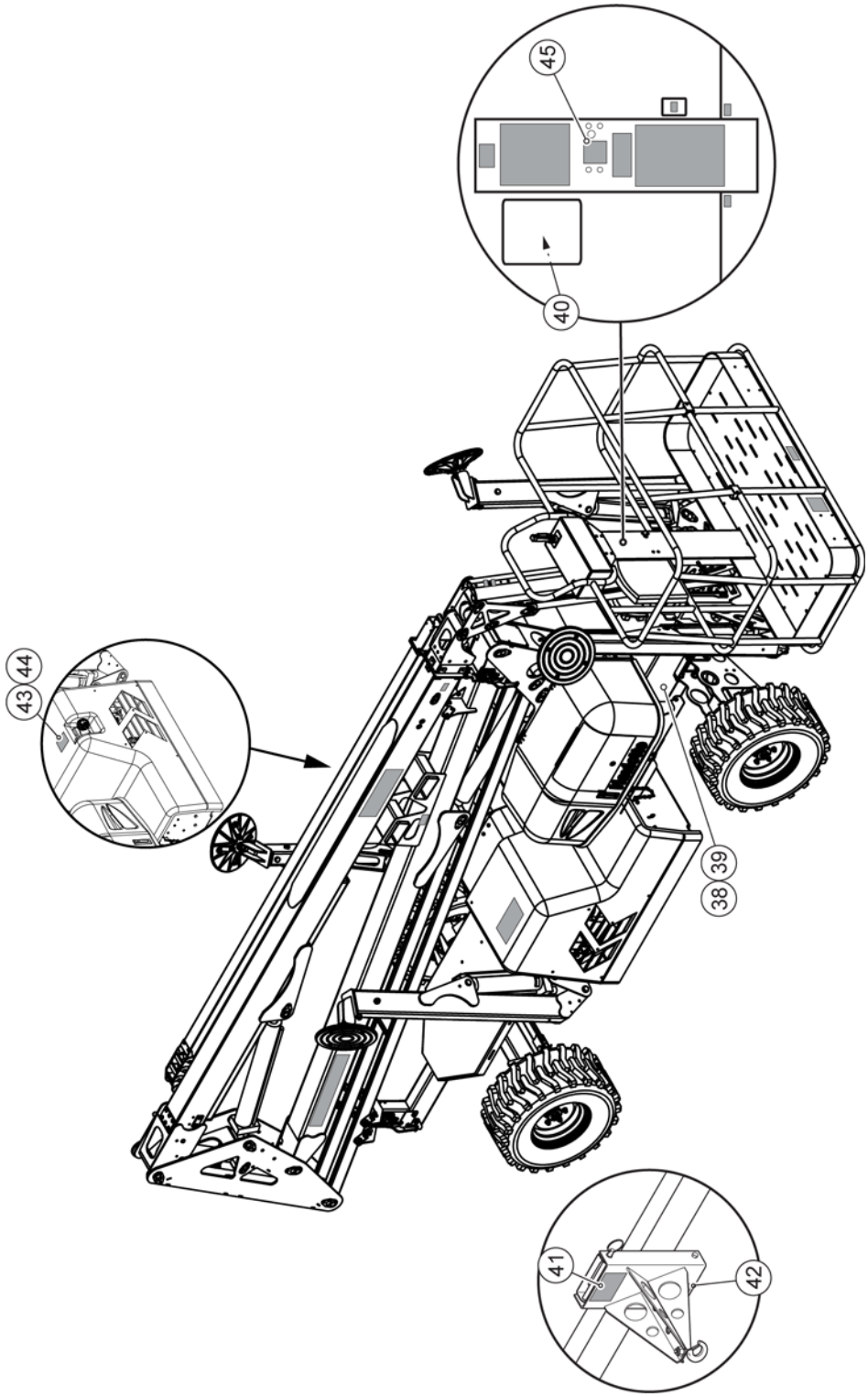

https://truckmanualshub.com/

Identification plates and optional equipment - ANSI/CSA/AS - 55XA - HLA19PX- Used on machines with serial numbers after 55X18-00006 only

Identification plate - Used on all standard equipment				
Marking	Color	Description	Quantity	55XA - HLA19PX
38	Orange	Annual Inspection Plate	1	B06-00-0524
39	Blue	ANSI ID plate	1	B06-00-0648
40	Red	Key ring tag	1	B06-00-0526

Replacement decals for optional equipment - ANSI/CSA/AS - 55XA - HLA19PX- Used on machines with serial numbers after 55X18-00006 only

Marking	Color	Description	Quantity	55XA - HLA19PX
41	Blue	Decal - Notice - Material Lift Set-Up (Material lift option)	1	B06-00-0485
42	Blue	Decal - Notice - Material lift max 227 kg (500 lbs) (Material lift option)	1	B06-00-0497
43	Blue	Decal - Notice - Unleaded fuel only	1	B06-00-0487
44	Blue	Decal - Notice - Diesel Fuel Only	1	B06-00-0498
45	Blue	Decal - Notice - Platform rotate (Manual rotation option)	1	B06-00-0529-CE

https://truckmanualshub.com/

Notes

https://truckmanualshub.com/

1 - Recommendations

The owner, the site manager, the supervisor and the operator are all responsible to ensure the machine is fit for the work it is to perform; i.e. that the machine is suitable to carry out the work in complete safety and in compliance with this Operator's Manual. All managers who are responsible for persons operating the machine must be familiar with the local regulations currently applicable in the country of use and ensure that they are adhered to.

Before using the machine, read the previous chapters in this manual. Ensure that you have understood the following points :

- Safety precautions.
- Operator's responsibilities.
- Conditions and the operating principles of the machine.

https://truckmanualshub.com/

2 - Working area assessment

Before carrying out any operations, ensure that the machine corresponds to the work to be done and the working environment :

- Carry out a thorough inspection of the site to identify any potential risks within the work zone.
- Take the necessary precautions to avoid collisions with other machinery within the work zone.

Ensure that :

- The weather conditions (wind, rain, etc.) allowing the machine to be used.
- The ground withstands the weight of the machine and has not been affected by the poor weather conditions.

- Check that the authorisations to work with the machine on the site in question have been obtained (.g. chemical product factories).
- Define a rescue plan for all the risks, including the risk of falls and crushing.
- ALWAYS position away from power lines, this ensures that no part of the aerial work platform accidentally reaches into an unsafe area. This includes full extension of the telescoping boom through 350 ° Non-Continuous rotation.

https://truckmanualshub.com/

3 - Inspection and Functional test

3.1 - DAILY INSPECTION

Each day before the beginning of a new work session and with each change of operator, the machine must be subjected to a visual inspection and a complete functional test.

- **Never use a defective or a malfunctioning aerial work platform.**
- **If any item on the check list is marked "No" during the inspection; machine must be tagged and placed out of service.**
- **Do not operate the machine until all identified items are corrected and it has been declared safe for operation.**

In case of loose fasteners, refer to torque table value in maintenance book.

In case of leaks, replace the damaged part before use.

In case of structural part deformation, cracks, broken weld, paint chips, replace the part before use.

Sample of broken welds

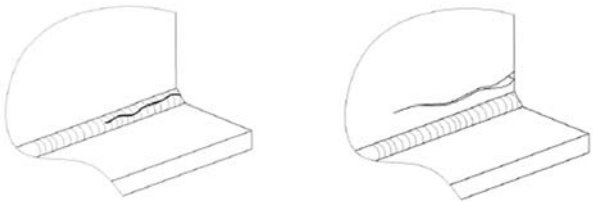

Inspection Forms are provided to assist your inspection process.

We recommend these forms to be completed daily and stored to assist with your maintenance schedule.

Each action is depicted in the daily inspection sheet using the following symbols.

	Visual inspection without disassembly		Lubrication-Grease		Functional adjustments
	Drain		Test and validate		Tighten
	Check levels		Systematic replacement		
	Visual inspection with small disassembly or movement needed to reach the part. Replacement if necessary.		Proof tests : Need HAULOTTE Services® authorization. For countries where machines are not subject to controlled periodic maintenance.		

https://truckmanualshub.com/

C- Pre-operation inspection

Haulotte	Daily inspection		
	Visual inspection without disassembly		Check level
			To check by test

		Yes	No	Corrected	Not applicable
Manuals and displays. Clean or replace if necessary.					
Presence, cleanliness and legibility of the manufacturer's plate					
Presence, cleanliness and legibility of operator's and maintenance manuals					
Presence and cleanliness of load chart of the machine					
Control box (Ground and Platform)					
Presence and cleanliness of the control box					
No visible damage					
All decals at the control boxes are clean and legible					
Operation of start / stop device					
Operation of E-stop button device					
Operation of enable switch					
Operation of horn from platform control box					
Operation of movement from platform control box					
Test warning alarm lights and buzzer					
No abnormal noise and jerky movements from platform control box					
Joysticks and movement switches return to neutral					
Work Platform. Floor, guardrails, access and extensions					
Absence of cracks, broken parts, damaged paint					
No deterioration and visible damage					
Harness anchor points are not cracked or damaged, with the decal attached and legible					
No screws missing / loose parts					
Entry bar/gate closes automatically and is not prevented from closing.					
Folding guard-rail (if fitted) is fixed securely in position					
Lift assembly (jib, boom, mast, arm, turret)					
Absence of cracks, broken parts, damaged paint					
No deterioration and visible damage					
No screws missing / loose parts					
No foreign body in joints or slides					

https://truckmanualshub.com/

C- Pre-operation inspection

Presence of securely fitted maintenance devices (safety stand)					
All compartments covers open and lock properly					
Frame, axle, steering system, stabilizers arms ...					
Absence of cracks, broken parts, damaged paint					
No deterioration and visible damage					
No screws missing / loose parts					
No foreign body in joints or slides					
Condition of tires/tyres (wear, cutting, damage ...)					
Wheel reducer is undamaged and operates smoothly					
All compartments covers open and lock properly					
Rotation system : orientation turret, basket and jib					
Absence of cracks, broken parts, damaged paint					
No deterioration and visible damage					
No screws missing / loose parts					
No foreign body in joints or slides					
Exterior gear wheel greasing					
Pin, pin stop, bearing ...					
Presence of the turret pin and its locking device					
No bent, cracked or broken pins, pin stops, bushes or bearings					
Pulleys, chains and wire rope					
No cracked or broken chains, links and fittings					
Pulleys and clamps are not worn, rusted or damaged					
Cylinder and hydraulic component : pumps, filters, manifold					
No leaks on the pump, tank or fittings					
No deformation, visible damage, broken weld or leaks on hydraulic cylinder					
No screws missing / loose parts					
Presence and operation of hydraulic filter (no clogged)					
Check hydraulic oil level is above the minimum level (Machine folded)					
Energy storage and motorisation: tanks, batteries and engine					
Engine oil level (add in stowed position)					
Fuel level (add in stowed position)					
No screws missing / loose parts					
Presence and good condition of hydraulic hose					
Presence and good condition of engine components					
Presence and good condition of the batteries: terminations and clamps, electrolyte level ...					

https://truckmanualshub.com/

C- Pre-operation inspection

Electric cables					
No torn or split wire sheaths					
No evidence of chemical damage or corrosion on all cables					
No oxidation or corrosion on terminals					
Sensors and safety device					

Serial number : Hours of operation : HAULOTTE Services® contract reference : Intervention record number : Date : Name :	Model : Signature :

https://truckmanualshub.com/

3.2 - INSPECTION FORM

Inspection Form for Haulotte Aerial Work Platforms

Machine Model No.		Serial No.	
Date of Manufacture :		Inspection Performed by :	
Date of inspection :		Inspection Location :	
Inspection and Maintenance of the above listed machine shall be performed only by fully trained, authorized and, where applicable, certified personnel. All service checks shall be performed in accordance with manufacturer's recommendations (Refer to the Maintenance section of this manual). Copy this form as needed. Direct any questions to the HAULOTTE® Customer Service Department at 1-800-537-0540 or visit HAULOTTE® online at www.haulotte-usa.com.			
Inspector : Initial in the space provided beside each service check as it is completed. Sign and date form after Inspection. Owner : Keep this form for your records.			
Frequency key :			
D = Daily (or before each use); W = Weekly; M = Monthly; A = Annually; SA = Semi-Annually			
Service check descriptions		Frequency	Initials
Verify that all decals are legible, correctly applied, and in plain view.		D	
Verify that all controls and indicators at the ground (lower) and platform (upper) control stations operate properly.		D	
Verify operation of running and brake lights.		D	
Verify proper tire inflation. See the side wall of the tire for proper inflation.		D	
Inspect tires for damage or loose or missing lug nuts.		D	
Inspect structural components for obvious damage or debris.		D	
Inspect machine for loose, damaged or missing fasteners, including pins and bolts.		D	
Verify that the boom down limit switches operate correctly.		D	
Verify that outrigger safety interlocks operate correctly.		D	
Inspect hydraulic system and fluid levels.		D	
Check Battery electrolyte level.		W	
Inspect electrical wiring for damaged, broken or frayed wires.		W	
Inspect transport hitch for damage ; if fitted.		W	

https://truckmanualshub.com/

C- Pre-operation inspection

Machine Model No.		Serial No.	
Inspect boom for missing, loose or damaged hardware.		W	
Inspect all hydraulic system components including power unit, hoses and cylinders, for damage, leaks, loss of pressure or speed, and unusual noise or vibration.		W	
Check engine oil. Applicable for machines equipped with engines.		W	
Clean all battery terminals.		M	
Check battery connections.		M	
Verify proper operation of manual lowering valves and hand pump.		M	
Lubricate all compartment hinges and latches, slew ring and mating gear using NLGI Grade 2 multi-purpose grease.		M	
Check wheel nut torque.		M	
Check coolant level. Applicable for machines equipped with engines.		M	
Inspect the air filter. Applicable for machines equipped with engines.		M	
Verify proper level sensor operation(Use outriggers to tilt machine, try to operate boom functions.).		M	
Check drive belt tension.		SA	
Verify engine rpm. Applicable for machines equipped with engines.		SA	
Add or replace hydraulic oil and hydraulic filter annualy, replace more frequently in dirty conditions.		A	
Inspect pivot pins and cylinders, including rod ends for wear or damage.		A	
Visually inspect all welds for wear, damage or corrosion.		A	
Inspect outriggers for wear or damage.		A	
Inspect axle and parking brake, adjust as necessary.		A	
Load test all boom functions with a 227 Kg (500 lb) load (200 Kg (440 lb) load if machine is equipped with jib/ platform rotate).		A	
Check slew ring for wear or damage.		A	
Replace Jib Bushings.		A	
** Refer to engine operators manual for recommended engine maintenance.			
Inspector signature		Date	

https://truckmanualshub.com/

4 - Safety functional checks

To protect the user and the machine, safety systems prevent the movement of the machine beyond its operating limits. These safety systems when activated immobilize the machine and prevent further movement.

The operator must be familiar with this technology and understand that is not a malfunction but an indication that the machine has reached an operation limit.

Aerial Work platforms are equipped with two control boxes which allow operators to safely use the machine. An auxiliary device (T-handle) is available on the chassis to assist with the emergency lowering of the machine. Each control box is equipped with an E-Stop button, which cuts all movements when pushed in.

The following checks describe the operation of the machine and the specific controls required.

The speed selector buttons at the ground control box and the platform control box act as the enable switch.

For the location and description of these controls : refer to section B 3.2 and D 2 Ground control box and B 3.3 and D 3 Platform control box.

4.1 - E-STOP BUTTON CHECK

Ground control box E-stop button

Step	Action
1	Pull both E-Stop buttons (6) at ground box and (10) at platform box.
2	Turning the KEY SWITCH (1) counter clockwise to the GROUND (1a) icon selects operation from the ground (lower) control box.
3	Start a cold engine by pressing (pushing) in and holding the CHOKE (4) button then press (push) the ENGINE START (3) button. To start / restart a warm engine, press (push) the ENGINE START (3) button only.
4	Push the E-stop button (6).
5	Check that the engine stops running.
6	No movements are functional.

Platform control box E-stop button

Step	Action
1	Pull out the E-Stop button (6) at ground box.
2	Turning the KEY SWITCH (1), clockwise to the PLATFORM (1b) icon selects operation from the platform (upper) control box.
3	Pull out the E-Stop button (5) at platform box.
4	Start a cold engine by pressing (pushing) in and holding the CHOKE (2) button then press (push) the ENGINE START (1) button. To start / restart a warm engine, press (push) the ENGINE START (1) button only.
5	Push in E-Stop button (10) at platform.
6	Check that the engine stops running.
7	No movements are functional.

https://truckmanualshub.com/

4.2 - ACTIVATION OF CONTROLS

The speed/enable (15) button at ground or speed/enable (6) button at platform must be actived to allow any movement.

Trigger on joystick (if fitted) on platform control box is the Enable switch.

4.3 - FAULT DETECTOR

The machine is equipped with an on-board fault detection system, which indicates the type of fault to the operator.

The fault is identified by a default code.

The default code is displayed at the ground control box.

According to the type of fault, the machine MAY switch into DOWNONLY mode and certain movements are prevented to maintain Operator's safety.

Do not use the machine until the fault has been corrected.

4.3.1 - Indicators/LED's test

From the ground control box

Step	Action
1	Pull both the E-Stop buttons (10) at platform box and (6) at ground box.
2	Set the key switch (1) at ground box to the (1a) position.
3	Check that all indicators and the display are lit.
4	Check that the indicators turn off in few seconds, except the (2), (20), (27) and the display (5).

From the platform control box

Step	Action
1	Pull both the E-Stop buttons (10) at platform box and (6) at ground box.
2	Set the key switch (1) at ground box to the (1b) position.
3	Check that all indicators and the display are lit.
4	Check that the indicators turn off in few seconds, except the (1), (7), (8), (15) and (22).

https://truckmanualshub.com/

4.4 - AUTOMATIC ENGINE CUT-OUT

The engine automatically cuts out in the following conditions :

- The alternator is not functioning.
- Engine temperature is too high.
- Oil pressure is too low.
- The E-stop(s) is (are) pushed in.
- The machine is switched off.

4.5 - OVERLOAD SENSING SYSTEM (IF EQUIPPED)

If the platform load exceeds the maximum allowed load, no movement is possible from the 2 control boxes.

At ground and platform control boxes a buzzer sounds and an indicator light warns the operator

To return the machine to normal operation remove weight from the platform until the load is below the maximum allowed load.

Daily check that the LED's illuminate when the machine is switched on :

- Verify that the Overload system is active : Refer to Indicators (6) at ground and (30) at platform.
- Verify that the buzzers are functioning : Refer to Buzzers test

A periodic inspection of this device must be performed according to the recommendation in Maintenance Schedule.

https://truckmanualshub.com/

4.6 - OUTRIGGERS

Verify that outrigger safety interlocks operate correctly :

- Begin with the outriggers fully extended and the aerial work platform leveled. Raise one outrigger until the footpad is not in contact with the ground.
- Verify that boom functions are unresponsive when one outrigger is raised.
- Repeat this procedure for each outrigger.
- Raise all outriggers until the footpads are not in contact with the ground. Verify that all outriggers status LEDs on the ground (lower) control box are unlit.
- Lower one outrigger until the footpad makes contact with the ground and the outrigger begins lifting the trailer.
- If the LED is lit before the footpad makes contact with the ground or if the LED remains unlit after the weight is transferred to the outrigger, the position switch or wiring is faulty.
- Repeat this procedure for each outrigger.
- Repair or replace as necessary.

https://truckmanualshub.com/

1 - Operation

1.1 - INTRODUCTION

- The HAULOTTE® Model 45XA - HLA16PX - 55XA - HLA19PX is a Self-Propelled aerial work platform, designed and manufactured to position personnel with their tools and equipment at overhead work locations. The platform load capacity is rated at 227 kg (500 lb). During all aerial work platform operations, four extended outriggers support the unit.
- The aerial work platform drive function has the option to be operated on battery (DC) or fuel (IC) powered. The boom functions are battery (DC) operated only. This machine is operated with electronic pushbutton controls, a hydraulic power unit, a hydraulic gear motor and hydraulic cylinders. The hydraulic power unit includes a reservoir, pump and control valves. Hydraulic cylinders elevate and extend the telescoping boom and maintain the platform leveling during operation. The hydraulic motor and mating worm gear allow the telescoping boom to rotate 360° Non-Continuous around a vertical axis.
- The hydraulic power unit uses a 24-Volt DC, one horsepower DC motor to drive the hydraulic pump.
- The DC motor is powered by four 6-Volt DC, 260 Ah deep charge batteries connected in series.
- An automatic onboard battery charger is provided for recharging the batteries at the end of each work period.
- The liquid cooled Kubota (IC) engine can be fueled by: Gas (32HP (24kW)), Dual Fuel (Gas / LP 32HP (24kW)), or Diesel (24HP (18kW)).
- The ground (lower) control box controls the power, outriggers, boom lift elevation, and rotation functions.
- The platform (upper) control panel also controls the power, outriggers, boom lift elevation, rotation functions, and drive functions.

N.B.-:-THE ELEVATION AND ROTATION CONTROLS ARE OPERATIONAL ONLY WHEN THE OUTRIGGERS ARE CORRECTLY EXTENDED AND THE EXTENSION BOOM IS WITHIN A PROGRAMMED SAFE OPERATING ZONE.

https://truckmanualshub.com/

D- Operation instructions

- The ground (lower) control box includes a lighted text window that displays the current operating status or an existing error condition.
- Safety devices prevent the boom from retracting suddenly in the event of a hydraulic hose or system failure. It is strongly recommended that no one adjust or tamper with these safety devices. If service is required, contact the Customer Service Department: at 1-800-537-0540 or visit HAULOTTE® online at www.haulotte-usa.com.
- In the event of power loss, control system failure or other malfunction, boom lowering functions may be accomplished manually.
- To manually operate boom retraction, and turntable rotation functions, use the hand pump, and "motion selection" valve on the hydraulic pump unit that can be accessed inside the pump compartment.
- Manual lowering of the boom and platform may also be performed by actuating the valve plunger found on the base of each boom lift cylinder. Pushing in and holding the valve "button" on the appropriate cylinder retracts that cylinder, thereby retracting that part of the boom. The boom may need to be rotated to a clear area before lowering.

Prior to operation :

- Read, understand and obey all instructions and safety precautions in this manual and attached to the aerial work platform.
- Read, understand and obey all local regulations.
- Become familiar with the proper use of all controls and emergency systems.
- Release both travel latches (1) the primary latch on the boom rest, and (2) the secondary latch on the Primary Boom, by raising the latch handle and swinging the clasp down.

Boom Travel Latches

1

2

https://truckmanualshub.com/

1.2 - OPERATION FROM THE GROUND CONTROL BOX

Refer to Section B 3.2 - Ground control box.

- Activation of a desired control box is achieved by turning the Control box activation key switch (1) to the deisred position (1a) or (1b).
- The ground control box is energized and is active ONLY when :
  - The E-stop buttons on both ground and platform control boxes are not pressed in (Deactivated).
  - To switch ON the machine, turn the Control box activation key switch (1) at the ground control box to ground control box position (1a) and press Engine Start button (3).
- An E-Stop button at each control box stops all movements when pressed in; including shutting off an engine (if equipped).

N.B.-:-DO NOT TURN OFF THE POWER SUPPLY OF THE MACHINE USING THE E-STOP BUTTON(USE ONLY IN CASE OF EMERGENCY). TURN OFF THE POWER SUPPLY OF THE MACHINE USING THE CONTROL BOX ACTIVATION KEY SWITCH (1) TO POSITION.

- All controls and joystick operating a movement, return automatically to neutral when released.
- At power up, all switches and joysticks must be in their neutral position.
- The status of the controls is tested automatically when the machine is switched on. A control will be active only after it has been detected to be in neutral position :
- A control (3) provides the start and stop of the engine.
- A buzzer beeps in the following conditions :
  - When power is switched on.
  - Overload (if fitted).
- Indicators (2), (20), and (27) are checked when the machine is powered on.
- Display panel : All indicators (5) are checked when the machine is powered on.

https://truckmanualshub.com/

1.3 - OPERATION FROM THE PLATFORM CONTROL BOX

Refer to Section B 3.3 - Platform control box.

- The platform control box is energized only when :
  - The E-stop buttons on both ground and platform control boxes are not pressed in.
  - To switch ON the machine, turn the Control box activation key switch (1) at the ground control box to platform control box position (1b) and press Engine Start button (1).
- A faulty joystick is not taken into account to control a movement. If this fault disappears, the movement is authorised again.
- An E-Stop button at each control box stops all movements when pressed in; including shutting off an engine (if equipped).

N.B.-:-DO NOT TURN OFF THE POWER SUPPLY OF THE MACHINE USING THE E-STOP BUTTON(USE ONLY IN CASE OF EMERGENCY). TURN OFF THE POWER SUPPLY OF THE MACHINE USING THE CONTROL BOX ACTIVATION KEY SWITCH (1) TO POSITION.

- The platform (upper) control panel includes a JOYSTICK that operates the drive and boom functions when the ENABLE LEVER is pressed (squeezed). .
- All switches and joystick operating a movement, return automatically to neutral when released.
- At power up, all switches and joysticks must be in their neutral position.
- The status of the switches is tested automatically when the machine is switched on and checked at every starting. A switch will be activated only after it has been detected in neutral position.
- A buzzer beeps in the following conditions :
  - When power is switched on.
  - When platform is overloaded (if fitted).
  - When machine is on a slope greater than the rated slope.
- Emergency pump. (Section D 5.1 - In case of engine power failure)
- Indicators - All indicators are checked after powering on the machine.

https://truckmanualshub.com/

2 - Ground control box

2.1 - BOOM AND ARM CONTROLS

Refer to Section B 3.2 - Ground control box.

Ground box controls (emergency station) :

- Must press (push) in and hold a desired SPEED/ ENABLE button (15) simultaneously with desired control button

Command		Action
Raising / lowering of boom (Secondary boom)		Press the boom raising control (11) to raise the boom.
		Press the boom lowering control (12) to lower the boom.
Raising / lowering of arm (Primary boom)		Press the arm raising control (9) upwards to raise the arm
		Press the arm lowering control (10) downwards to lower the arm
Boom telescoping extend / retract (Secondary boom)		Press the boom telescoping control (7) to extend the boom.
		Press the boom retracting control (8) to retract the boom.
Jib raising / lowering		Press the jib raising control (13) to raise the jib.
		Press the jib lowering control (14) to lower the jib.

https://truckmanualshub.com/

D- Operation instructions

Command		Action
Turntable rotation		Press the turntable rotation control (18) for a clockwise rotation .
		Press the turntable rotation control (19) for an counterclockwise rotation .
Platform leveling		Press the platform leveling control (16) to raise the platform .
		Press the platform leveling control (17) to lower the platform .

https://truckmanualshub.com/

3 - Platform control box

3.1 - TO START AND STOP THE MACHINE

Refer to Section B 3.3 - Platform control box.

To start the machine :

At the ground control box :

- Check that the E-stop button (6) is not pressed in.
- Turn the control box key selector (1) on position (1b) to energize the machine and activate the platform control box.

At the platform control box :

- Check that the E-stop button (10) is not pressed in.
- Start a cold engine by pressing (pushing) in and holding the CHOKE (2) button then press (push) the ENGINE START (1) button.
- To start / restart a warm engine, press (push) the ENGINE START (1) button only.
- Allow the engine to heat up and initialize.

To stop the engine :

- Turn off the power supply of the machine using the Control box activation key switch (1) to position.

https://truckmanualshub.com/

3.2 - DRIVE AND STEER CONTROL

The TOGGLE SWITCH on top of the JOYSTICK is used to steer the machine.

To drive the aerial work platform, grasp the JOYSTICK and press (squeeze) the ENABLE LEVER, move the JOYSTICK slightly off of the neutral position and in the direction of travel desired.

To turn / steer the aerial work platform either right or left, press (squeeze) the ENABLE LEVER and press the desired TOGGLE SWITCH on top of the JOYSTICK.

The platform (upper) control panel is used to control all functions.

Drive function allows :

- Fully lower all booms into the stowed position.
- Raise all outriggers into the stowed (upright) position.
- Press (push) the DRIVE SPEED SELECTOR (1) button on the platform (upper) control panel

Drive Speed Selector

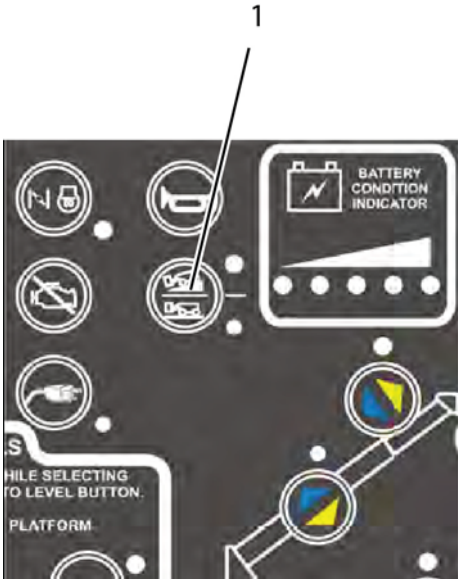

- Use the JOYSTICK to determine the direction to be driven, use the TOGGLE SWITCH to steer the machine in the desired direction. The aerial work platform will continue to move until the joystick is released, or the joystick is returned to center (neutral) position.
- Once the work location is reached, lower the outriggers, and level the aerial work platform using either the ground (lower) or platform (upper) control box.

N.B.-:-BOOM FUNCTIONS ARE NOT AVAILABLE UNTIL ALL OUTRIGGERS ARE FULLY DEPLOYED AND THE AERIAL WORK PLATFORM IS LEVELED.

https://truckmanualshub.com/

3.3 - BOOM AND ARM CONTROLS

Refer to Section B 3.3 - Platform control box.

The platform (upper) control box includes a JOYSTICK that operates the drive and boom functions when the ENABLE LEVER is pressed (squeezed).

3.3.1 - Joystick toggle switch

The toggle switch (1) is used with steering while driving the aerial work platform.

Platform control box joystick-Back view

1. Toggle switch
2. Left toggle
3. Enable lever
4. Right toggle

https://truckmanualshub.com/

3.3.2 - Joystick enable lever

To activate a function, press (push) the desired function button until the LED is lit, pressing (squeezing) the ENABLE LEVER (3)on the JOYSTICK enables the function. Using the color-coded direction arrows move the JOYSTICK slightly off of the neutral position, and in the desired direction.

Moving the JOYSTICK away from the neutral position increases the function speed. Boom motion continues until :

- The JOYSTICK is released.
- The JOYSTICK is returned to center.
- The boom reaches a hard stop or a safe travel limit.

Command		Action
Boom telescoping extend / retract (Secondary boom)		Press (push) the SECONDARY BOOM EXTEND / RETRACT (18) button until the LED is lit. Pressing (squeezing) the ENABLE LEVER on the JOYSTICK, enables the function. Using the color-coded direction arrows, move the JOYSTICK slightly off center; move the JOYSTICK backwards to extend the secondary boom, move the JOYSTICK forward to retract the secondary boom.
Boom raising / lowering (Secondary boom)		Press (push) the SECONDARY BOOM RAISE / BOOM LOWER (20) button until the LED is lit. Pressing (squeezing) the ENABLE LEVER on the JOYSTICK, enables the function. Using the color-coded direction arrows, move the JOYSTICK slightly off center; move the JOYSTICK forward to raise the secondary boom, move the JOYSTICK backwards to lower the boom.
Arm raising / lowering (Primary boom)		Press (push) the PRIMARY BOOM RAISE / BOOM LOWER (16) button until the LED is lit. Pressing (squeezing) the ENABLE LEVER on the JOYSTICK, enables the function. Using the color-coded direction arrows, move the JOYSTICK slightly off center; move the JOYSTICK forward to raise the primary boom, move the JOYSTICK backwards to lower the boom.
Jib raising / lowering		Press (push) the JIB RAISE / LOWER (21) button until the LED is lit. Pressing (squeezing) the ENABLE LEVER on the JOYSTICK, enables the function. Using the color-coded direction arrows, move the JOYSTICK slightly off center; move the JOYSTICK forward to raise the jib boom, move the JOYSTICK backwards to lower the boom.

https://truckmanualshub.com/

Command		Action
Turntable rotation		Press (push) the TURNTABLE ROTATION (17) button until the LED is lit. To rotate the turntable, press (squeeze) the ENABLE LEVER on the JOYSTICK and move the JOYSTICK slightly off center in the desired direction. To rotate CLOCKWISE move the JOYSTICK backwards, to rotate COUNTER CLOCKWISE move the JOYSTICK forward. The turntable will rotate through 360° of Non-Continuous rotation until the JOYSTICK is released, or a hard stop is reached.
Platform leveling		Press (push) the PLATFORM LEVELING (19) button until the LED is lit. Pressing (squeezing) the ENABLE LEVER on the JOYSTICK, enables the function. Using the color-coded direction arrows move the JOYSTICK slightly off center; move the JOYSTICK forward to raise the platform, move the JOYSTICK backwards to lower the platform. This levels the platform only, NOT the aerial work platform.

3.4 - ADDITIONAL CONTROLS

- Horn : Press (push) the horn button (6) to sound the horn. The horn stops when the selector switch is released.
- Use the horn button to warn personnel in the area of a falling object hazard, impending boom motions or the need for assistance.

https://truckmanualshub.com/

4 - Outriggers extension

Become familiar with the location and function of all controls. Learn to smoothly START and STOP all boom motions.

- At the ground (lower) control box, turn the KEY SWITCH (1) counter clockwise to the GROUND CONTROLS (1a) icon. If power does not come on, make sure that both of the EMERGENCY STOP buttons; GROUND (6), and PLATFORM (5), are pulled out and the main power disconnect plug is plugged in.
- The control microprocessor will perform self-diagnostics to test the operating system. After several seconds, the DISPLAY PANEL window will read : HAULOTTE GROUP - ACCESS SOLUTIONS.
- Monitor the battery condition indicator during operation and charge the batteries as necessary.
- Extend the 4 outriggers individually, or for simultaneous extension use the AUTO LEVEL (23) button and the EXTEND (21) botton on the ground (lower) control box.
- LED (25) - Outrigger switch indicator :
  - ON - No outrigger contact with the ground.
  - OFF - Outrigger contact with the ground.
- LED (26) - Machine state of level :
  - Each of the inner outrigger LEDs (26), when flashing, indicate that side is low, and needs to be further raised for leveling.
- When the aerial work platform is leveled properly, a buzzer will sound, the 2 LEDs at each OUTRIGGER (25) and (26) button, and the LED at the AUTO LEVEL (23) button will be lit.

Auto level :

- Press (push) and hold the EXTEND (21) and AUTO LEVEL (23) buttons at the same time.

Manual Level :

- Extend the two outriggers closest to the trailer coupler first. Lower the front pair of outriggers by pressing (pushing) the EXTEND (21) button and the two front OUTRIGGER buttons at the same time. Lower the back pair of outriggers by pressing (pushing) the EXTEND (21) button and the two back OUTRIGGER buttons at the same time.

Outrigger Control Panel

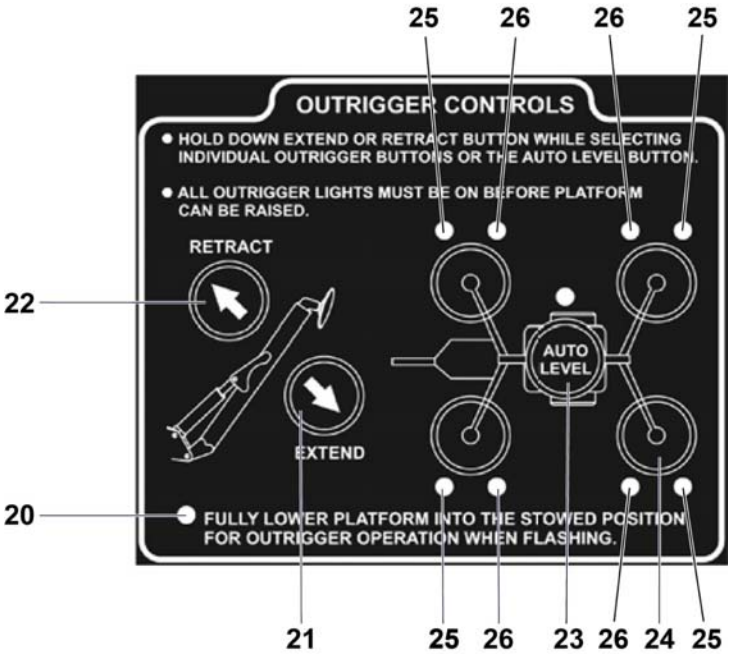

https://truckmanualshub.com/

- Verify that the AUTO LEVEL (3) indicator LED is lit. If the AUTO LEVEL (23) indicator is not lit, the aerial work platform may not be level, and the weight of the machine may not be on the outrigger foot pad.

N.B.-:-If the boom is not level or if one or more outriggers are not supporting the machines load the safety interlock system prevents all boom operations.

N.B.-:-The Range of Motion Diagrams at the ground (lower) and platform (upper) control stations displays the range of platform motion (safe operating zone). Verify that the operating zone is clear of obstructions through 350° of Non-Continuous rotation.

- Use the ground (lower) control box to operate the boom lift functions. Raise, lower, extend and rotate the booms by pressing (pushing) and holding the desired SPEED (6) and function buttons at the same time.
- Fully lower the boom onto the boom rest to enter the platform.
- Raise the safety bar and enter the work platform by using a 3 point contact (both hands and one foot). Put on a safety harness and attach the lanyard to the ANCHORAGE (attachment point) on the side of the platform support beam.
- Use the platform (upper) control box to operate the boom lift functions. Press (push) the desired function button until the LED is lit. Pressing (squeezing) the enable lever on the joystick enables the function. Using the color-coded direction arrows move the joystick slightly off center in the desired direction
- Moving the joystick further off center increases the function speed, moving the joystick back toward the center decreases the function speed. Boom motion continues until: the joystick released, the joystick is returned to center, or until the boom reaches a hard stop or a safe travel limit.
- When all aerial work platform operations are complete, fully retract all boom extension(s). Center the boom over the boom rest and fully lower the boom until seated in the "stowed" position for transport.

N.B.-:-Always fully retract, rotate and lower the boom to the "stowed" position before exiting the platform.

- Unfasten the safety harness and exit the platform by using a 3 point contact (both hands and one foot).
- Turn the key switch to the GROUND CONTROL (1a) position.
- Engage both travel latches.

N.B.-:-Refer back to earlier in this section to the image of Boom Travel Latches for a visual of these latches.

- Inspect the area beneath the aerial work platform and trailer for obstructions before retracting outriggers. Press (push) and hold the outrigger RETRACT (22) button and the AUTO LEVEL (23) button until all outriggers are fully retracted to their "stowed" (upright) positions.

N.B.-:-Safety switches prevent outrigger retraction until the boom is completely lowered and in the "stowed" position.

- At the ground (lower) control box turn the KEY SWITCH (1) to the vertical (power "OFF") position, and remove the key.

https://truckmanualshub.com/

5 - Rescue and emergency procedures

5.1 - IN CASE OF POWER LOSS

In the event of power loss, control system failure or other malfunction, boom lowering functions may be accomplished manually.

To manually operate boom retraction, and turntable rotation functions, use the hand pump, and "motion selection" valve on the hydraulic pump unit that can be accessed inside the pump compartment.

Manual lowering of the boom and platform may also be performed by actuating the valve plunger found on the base of each boom lift cylinder. Pushing in and holding the valve "button" on the appropriate cylinder retracts that cylinder, thereby retracting that part of the boom. The boom may need to be rotated to a clear area before lowering.

In an emergency, if the operator has to exit the platform while it is elevated, the transfer of the operator must respect the following recommendations :

- Exit onto a sturdy and safe structure.
- Allowance must be made for the possibility of boom deflection when egressing from the platform.
- The occupant(s) must ensure that 2 lanyards are used for security/safety. One must be attached to the designated anchorage point on platform the occupant(s) is in and the other attached to the structure intended to get on.
- Do not leave platform without taking into account the allowance for possibility of boom deflection when exiting platform.
- Occupant(s) must exit the current platform through the normal access.

N.B.-:-DO NOT DETACH THE LANYARD FROM THE CURRENT PLATFORM IF THE TRANSFER TO THE NEW STRUCTURE POSES ANY DANGER OR UNTIL THE TRANSFER IS SAFELY COMPLETED. DO NOT ATTEMPT TO CLIMB DOWN THE BOOM. INSTEAD WAIT FOR ASSISTANCE FOR A SAFE EXIT.

https://truckmanualshub.com/

5.1.1 - Manual Boom Operation

Manual retraction, rotation and lowering functions allow the booms to be moved and lowered during hydraulic power interruption or failure.

The following procedures for manual retraction, rotation and lowering require a person on the ground to operate the manual controls and hand pump.

The hydraulic hand pump is located in the pump compartment. In case of a power failure, the hand pump and selected hydraulic valve can be used to manually retract the booms or rotate the boom turntable.

To begin manual retraction or rotation follow the steps :

- Identify pump on machine - Pump A or Pump B.
- Turn the proportional valve (4) clockwise (CW) on pump A or counterclockwise (CCW) on Pump B, until it stops.
- Insert the pump handle into the hand pump (2).

Pump A	Pump B
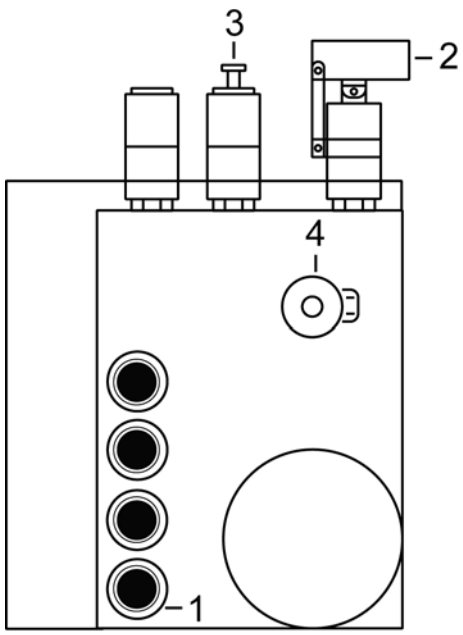	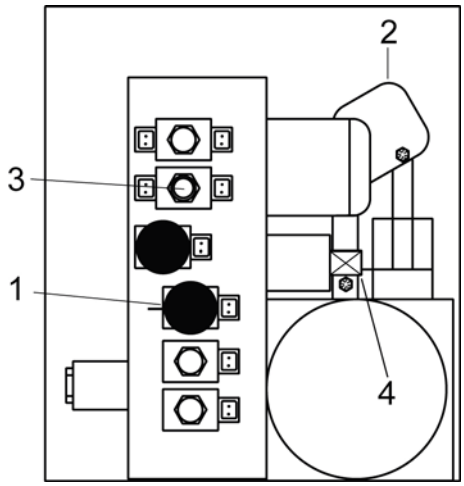

https://truckmanualshub.com/

5.1.1.1 - Manual retraction

Pushing and holding the RETRACT button (1) while simultaneously actuating the HAND PUMP (2) will retract the secondary boom.

5.1.1.2 - Manual rotation

To rotate the TURNTABLE counterclockwise (CCW) :

- Push and hold the ROTATION button (3) IN.
- Simultaneously actuate the HAND PUMP (2).

To rotate the TURNTABLE clockwise (CW) :

- Pull the ROTATION button (3) OUT.
- Simultaneously actuate the HAND PUMP (2).

N.B.-:-TURN THE PROPORTIONAL VALVE (4) CLOCKWISE TO RETURN IT TO ITS ORIGINAL POSITION BEFORE LOWERING THE BOOMS OR RESUMING NORMAL OPERATION.

Hand Pump Controls for Manual Operation

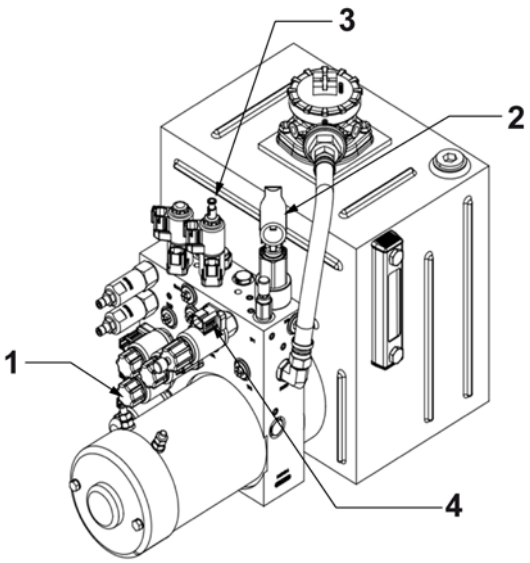

https://truckmanualshub.com/

5.1.1.3 - Manual Boom Lowering Procedure

Each lift cylinder is equipped with a MANUAL LOWERING VALVE (1) , found at the base of each lift cylinder. Use the VALVE (1) to lower the platform in case of a complete electrical power failure, a load shift, or any other emergency.

It is recommended that the booms be lowered in the following sequence :

- The PRIMARY boom (A) first.
- The SECONDARY boom (B) next.
- The JIB boom (C) last.

To lower the boom, push in on the MANUAL LOWERING VALVE button (1) on the cylinder that controls the boom that is to be lowered.

Location of Lift Cylinders for Manual Boom Lowering

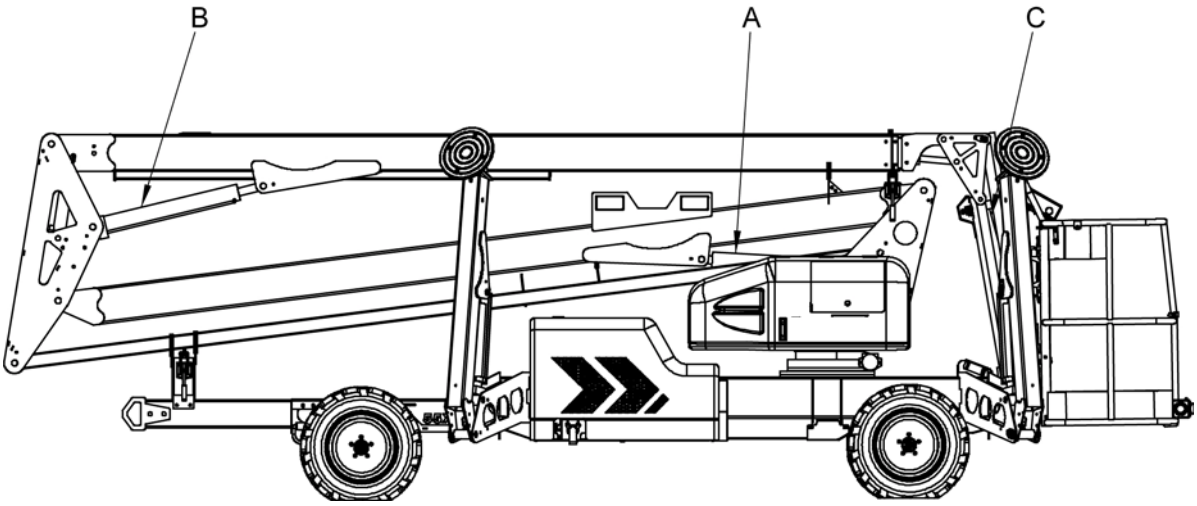

Location of manual lowering valves

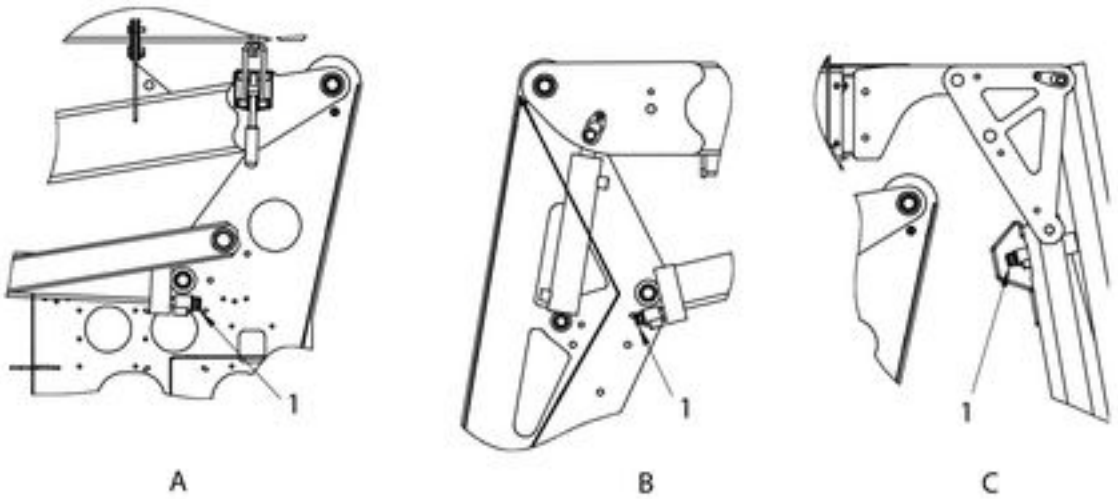

https://truckmanualshub.com/

5.2 - TO RESCUE OPERATOR IN PLATFORM

In a situation where an operator located in the platform needs to be rescued (for example in case of illness, injury or trapped against a structure making the control box inaccessible), the rescue personel at ground level needs to obtain rapid and direct access to operating functions.

HAULOTTE® has implemented a control system for safely lowering the operator to the ground in the event of an emergency to enable him to receive the neccessary treatment.

The system allows occupant(s) to be lowered to the ground level, even if an E-Stop is engaged or if an overload is detected.

In this situation, supervisor(s) at ground level must turn the control box key selector (1) to the ground control box (1a) position to take control.

Procedure :

- Turning the KEY SWITCH (1), counter clockwise to the TURRET (1a) icon selects operation from the lower control box.
- The platform box controls are now de-energized.
- Check that the E-Stop button (6) at ground is not pressed in.
- To lower the platform, push and hold the push buttons corresponding to the desired movements.

5.3 - NO POWER AVAILABLE

- In the event of power loss, control system failure or other malfunction, boom lowering functions may be accomplished manually.
- To manually operate boom retraction, and turntable rotation functions, use the hand pump, and "motion selection" valve on the hydraulic pump unit that can be accessed inside the pump compartment.
- Manual lowering of the boom and platform may also be performed by actuating the valve plunger found on the base of each boom lift cylinder. Pushing in and holding the valve "button" on the appropriate cylinder retracts that cylinder, thereby retracting that part of the boom. The boom may need to be rotated to a clear area before lowering.

Prior to operation :

- Read, understand and obey all instructions and safety precautions in this manual and attached to the aerial work platform.
- Read, understand and obey all local regulations.
- Become familiar with the proper use of all controls and emergency systems.

https://truckmanualshub.com/

5.4 - MANUAL BRAKE RELEASE

When the aerial work platform is shut down, or is inoperable, the brakes are automatically locked. The brakes need to be released to allow the wheels to roll in order to winch / tow the machine on to a truck bed or trailer.

For 45XA - HLA16PX and 55XA - HLA19PX :

To manually release the brakes, follow this procedure :

Free Wheel Valve

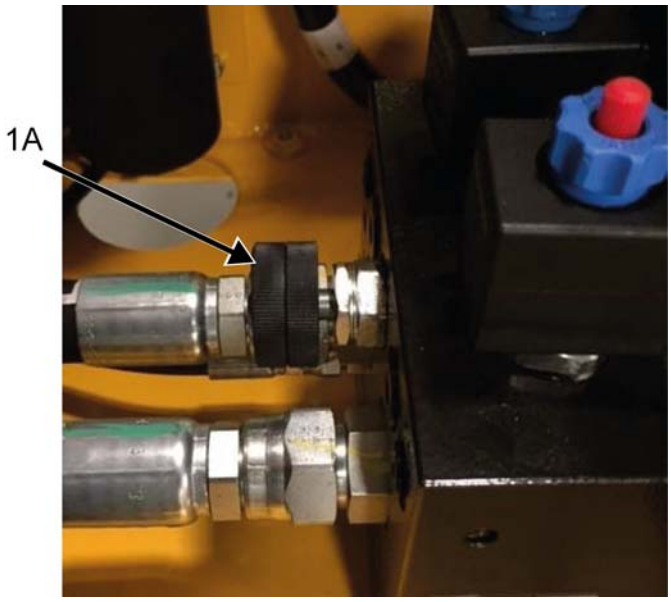

- Open the cover of the Hydraulic Compartment to access the FREE WHEEL VALVE (1A) and the MANUAL BRAKE RELEASE .
- Turn the FREE WHEEL VALVE (1A) counterclockwise (CCW) to open the valve

- Depress the small BLACK knob (2).
- Pump the larger RED knob (1) 60 - 80 times until there is resistance, or until the brakes release.

To re-activate the brakes, turn the FREE WHEEL VALVE (1A) clockwise (CW) until it stops. Then activate the drive function at the platform (upper) control station.

https://truckmanualshub.com/

6 - Transportation

6.1 - Putting in transport position

- Completely retract and lower all booms into the stowed position.
- Secure both boom travel latches (A).
- Remove all loose materials from machine.
- All on-board equipment is secured.
- Retract all outriggers cylinders to fully stowed (upright) position.
- The key switch is in the OFF position. Remove the key.
- The trailer tires are adequately and evenly inflated. See the side wall of the tire for proper inflation.

6.1.1 - Machine layout

Machine layout

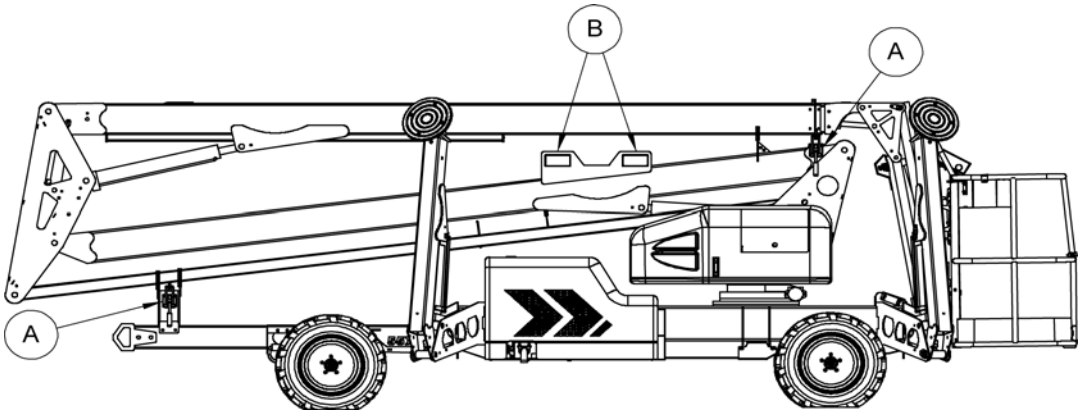

https://truckmanualshub.com/

6.1.2 - Transporting on to a truck bed

- Verify that the truck or trailer is parked on a firm and level surface.
- Completely retract and lower all booms into the stowed position.
- Secure both BOOM TRAVEL LATCHES (A).
- Retract all OUTRIGGER CYLINDERS to the fully stowed (upright) position.
- Winch / tow the boom onto a truck bed or trailer
- Secure the aerial work platform to the truck bed or trailer using straps or chains. Use the two designated attachment points (B) shown below.
- Adjust the tightening of the strap / chain as necessary to prevent damage to rigging equipment or machine.

Transport the Aerial Work Platform

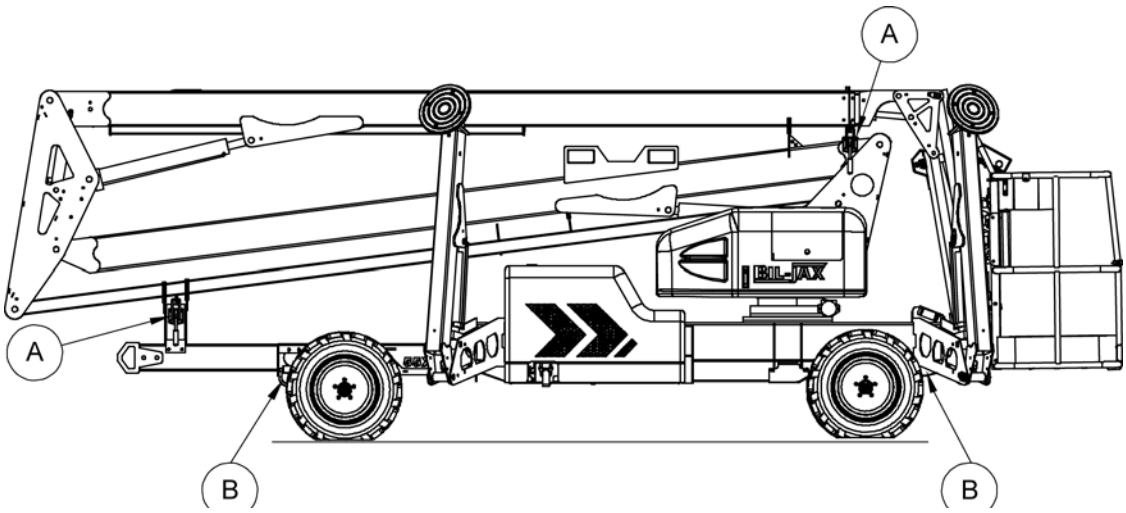

6.1.3 - Unloading

- Before unloading, check that the machine is in good condition.
- Remove the ties or chains.
- Release the both BOOM TRAVEL LATCHES (A).

https://truckmanualshub.com/

6.2 - STORAGE

Machine must be parked in a protected/designated area with the boom in a stowed configuration, however the boom can be raised but must not be extended. Make sure there is no load in the platform.

It is recommended that the machine is not stored or immobilized unfolded.

Storage preparation :

If the aerial work platform has to been stored for an extended period of time or over the winter, it is important that the aerial work platform be prepared properly.

Ensure all access panels, doors and side compartment covers are shut and secured.

Turn OFF the power supply of the machine using the control box key switch (1) at ground control to position..

Remove the activation key switch to prevent unauthorized operation of the machine.

Remove the emergency breakaway battery and store inside, out of the weather. Charge the battery at lease every 90 days.

Jack up the trailer and place jack stands under the trailer frame so that the weight will be off the tires.

DO NOT lift or support the trailer on any part of the axle or suspension system. NEVER go under any trailer unless it is properly supported on jack stands which have been rated for the load. Improperly supported vehicles can fall unexpectedly and can cause serious injury or death.

Lubricate mechanical moving parts that are exposed to the weather.

The machine can be stored in a designated area when not in use.

Storing of the machine with an obstacle under the boom structure is forbidden.

To avoid any risk of corrosion on rods of cylinders during a storage period of more than 1 month :

- **In a normal atmospheric environment : perform a complete cycle for the cylinders every 2 months while they are in storage.**
- **In harsh environments (high levels of salinity in the atmosphere: close to the sea, industrial environment with chloride emissions and/or humidity > 70%), we recommend applying the following protection process :**
- **Wash and rinse the entire machine with plenty of clean water.**
- **Dry all the cylinder rods using an air gun.**
- **Apply a solvent-based oil leaving an oily film after evaporation of the solvent directly to all rods left exposed when the machine is in storage position.**
- **Re-apply the product every month.**

After washing the machine, make sure it is fully air-dry and does not contain moisture on corrosive parts (cylinders rods for example).

Machine that has been out of service for more than 3 months must undergo a periodic inspection before the machine is put back into service.

Maintenance must be carried out by a competent company or person familiar with mechanical procedures.

Maintenance operations performed must be recorded in a register / log book of the machine.

https://truckmanualshub.com/

6.3 - LIFTING OPERATION

- Completely retract and lower all booms into the stowed position.
- Secure both boom travel latches (A).
- Remove all loose materials from machine.
- Retract all outriggers cylinders to fully stowed (upright) position.
- When using a crane, use only the designated crane (fork lift) pockets (B). Follow all crane operating instructions as indicated by the crane manufacturer.
- When using a crane :
  - Use only the designated crane (fork lift) pockets (B).
  - Follow all crane operating instructions as indicated by the crane manufacturer.
  - Adjust rigging to keep the machine level and to minimize the risk of damage to machine.
- When using a forklift :
  - Use only the designated forklift pockets (B).
  - Follow all forklift operating instructions as indicated by the forklift manufacturer.
- Adjust rigging to keep the machine level and to minimize the risk of damage to machine.

N.B.-:-ONLY TRAINED AND AUTHORIZED PERSONNEL SHOULD ATTEMPT TO LIFT THE AERIAL WORK PLATFORM.

Lifting the Aerial Work Platform

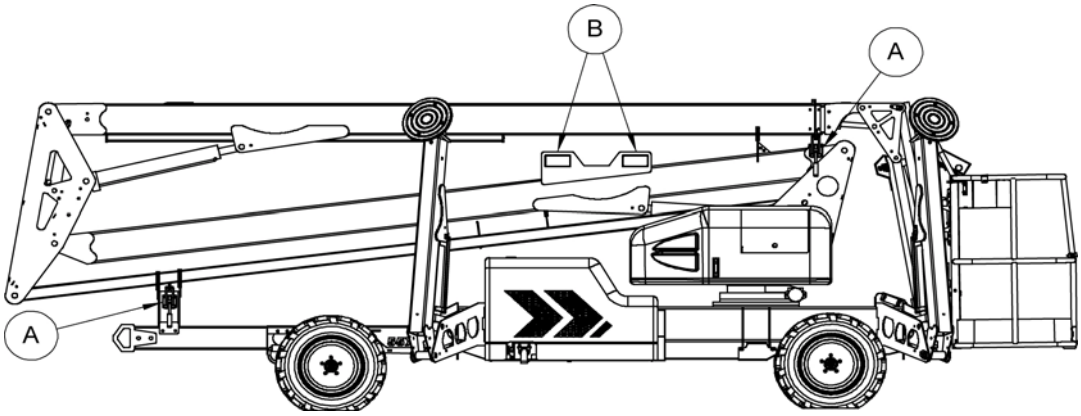

https://truckmanualshub.com/

7 - Cold Weather Recommendations

In cold weather conditions, allow engine to run for at least 5 min to warm up ; before operating any function thereby preventing any damage to the hydraulic system.

In extreme cold conditions, machines should be equipped with optional cold start kits.

Attempting to start engine when temperature is in the negative range, may require the use of a booster battery.

If engine fails to start, do not crank for an extended time. Allow starter to "cool off" for a few minutes before attempting again. If engine fails after several attempts, refer to the engine maintenance manual.

N.B.-:-INITIAL STARTING SHOULD ALWAYS BE PERFORMED FROM THE GROUND CONTROL BOX.

7.1 - ENGINE OIL

The correct SAE viscosity grade of oil is determined by the minimum ambient temperature during cold engine start-up, and the maximum ambient temperature during engine operation.

Generally, use the highest viscosity oil that is available to meet the requirement for the temperature at start-up.

Engine oil viscosity		
EMA LGR-1 / API CH-4 Viscosity grade	Ambient temperature	
	Minimum	Maximum
SAE 5W30	-40°C (-40°F)	30°C (86°F)
SAE 15W40	-20°C (-4°F)	40°C (104°F)

N.B.-:-FOR ADDITIONAL ENGINE RECOMMENDATION, REFER TO THE ENGINE MANUAL PROVIDED WITH THE MACHINE.

7.2 - HYDRAULIC OIL

External environmental conditions can reduce performance of the machine if the hydraulic oil temperature does not reach its optimum range.

It is recommended to use the hydraulic oil according to weather condition. Refer to the table below.

Environmental conditions	ISO (Viscosity Index)
Ambient temperature between - 15°C (5°F) and + 40°C (104°F)	32 (175)
Ambient temperature between - 35°C (- 31°F) and - 15°C (5°F)	15 (380)

N.B.-:-IT IS RECOMMENDED TO REPLACE LOW TEMPERATURE OIL AS THE AMBIENT TEMPERATURE REACHES + 15°C (59°F). IT IS NOT ADVISABLE TO MIX OILS OF DIFFERENT BRANDS OR TYPES.

https://truckmanualshub.com/

Notes

https://truckmanualshub.com/

1 - Machine dimensions

Stowed / Transport position : Configuration that takes the minimum floor space necessary for storage and / or delivery of the machine - Access position. 45XA - HLA16PX - 55XA - HLA19PX

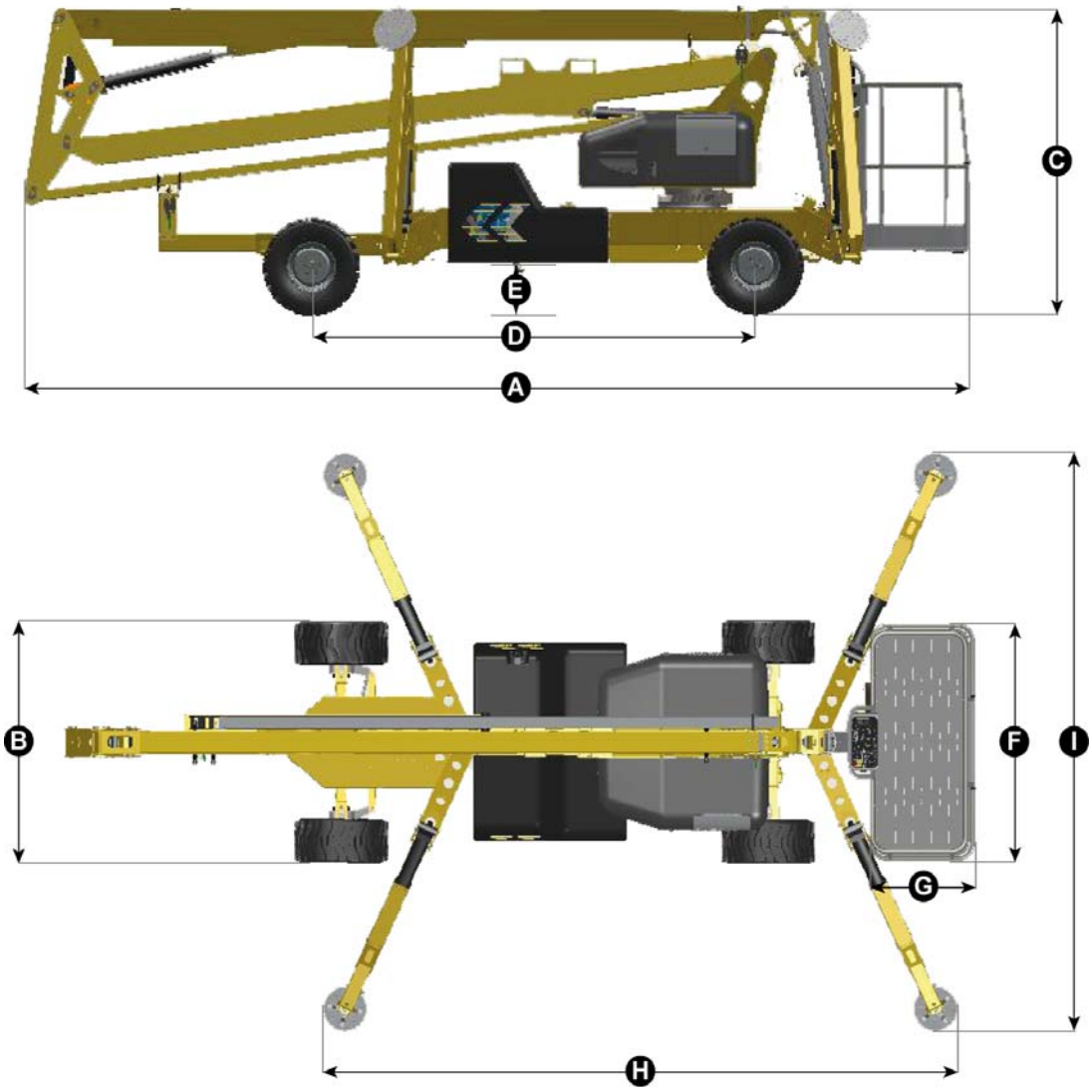

https://truckmanualshub.com/

E- General Specifications

Machine		45XA - HLA16PX	
Marking	**Specifications - Dimensions**	**SI**	**Imp.**
A	Length - stowed	5,53 m	18 ft 2 in
B	Width stowed	1,67 m	5 ft 6 in
C	Height stowed	2 m	6 ft 7 in
D	Wheel base	2,66 m	8 ft 9 in
E	Ground clearance	0,15 m	6 in
F X G	Platform dimensions	1,52 m x 0,76 m	5 ft x 2 ft 6 in
H X I	Outrigger footprint	3,75 m x 3,45 m	12 ft 4 in x 11 ft 4 in

Machine		55XA - HLA19PX	
Marking	**Specifications - Dimensions**	**SI**	**Imp.**
A	Length - stowed	6,45 m	21 ft 2 in
B	Width stowed	1,72 m	5 ft 8 in
C	Height stowed	2,05 m	6 ft 9 in
D	Wheel base	3,07 m	10 ft 1 in
E	Ground clearance	0,25 m	10 in
F X G	Platform dimensions	1,52 m x 0,76 m	5 ft x 2 ft 6 in
H X I	Outrigger footprint	4,24 m x 3,88 m	13 ft 11 in x 12 ft 9 in

https://truckmanualshub.com/

2 - Major component masses

N.B.-:-Masses measured with empty tanks (Standard machine-No options).

Component	45XA - HLA16PX	
Characteristics-Dimensions	SI	Imp.
Boom assembly	603 kg	1330 lbs
Turntable assembly	478 kg	1054 lbs
Trailer assembly	1141 kg	2516 lbs
Total weight	2222 kg	4900 lbs

Component	55XA - HLA19PX	
Characteristics-Dimensions	SI	Imp.
Boom assembly	805 kg	1774 lbs
Turntable assembly	463 kg	1020 lbs
Trailer assembly	1455 kg	3207 lbs
Total weight	2722 kg	6001 lbs

Note :

- **Basket rotate option adds 40 kg (90 lbs) to weight.**

3 - Acoustics and vibrations

The acoustics and vibrations specifications are based upon the following conditions :

Specifications	
DC mode - Ground (Lower)	60 dBA
DC mode - Platform (Upper)	55 dBA
Engine mode - Ground (Ground)	70 dBA
Engine mode - Platform (Upper)	65 dBA

https://truckmanualshub.com/

4 - Wheel/Tire assembly

4.1 - TECHNICAL SPECIFICATIONS

Component	Standard wheel
Size	26 x 12 Bar Lug
Torque	34 Nm (25 ft lbs) 81 Nm (60 ft lbs) 136 Nm (100 ft lbs)

- Check wheel nut torque.
- Evenly tighten wheel nuts to 34 Nm (25 ft lbs) in the tightening sequence shown.
- Repeat tightening sequence, tighten wheel nuts to 81 Nm (60 ft lbs) and then to 136 Nm (100 ft lbs).

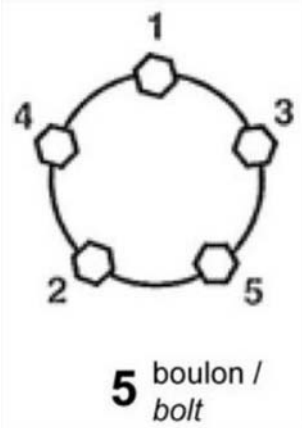

https://truckmanualshub.com/

4.2 - INSPECTION AND MAINTENANCE

The tire and rim are bonded together, both must be replaced if either is damaged.

Before mounting tires onto the wheels, make certain that the rim size and contour is approved for the tire as shown in the Tire and Rim Association Yearbook or the tire manufacturers catalog. Also make sure the tire will carry the rated load. If the load is not equal on all tires due to trailer weight distribution, use the tire rated for the heaviest wheel position.

N.B.-:-THE CAPACITY RATING MOLDED INTO THE SIDEWALL OF THE TIRE IS NOT ALWAYS THE PROPER RATING FOR THE TIRE IF USED IN A TRAILER APPLICATION.

Use the following guidelines :

- LT and ST tires. Use the capacity rating molded into the tire.

Use tire mounting procedures as outlined by the Rubber Manufacturer's Association or the tire manufacturers.

Tire inflation pressure is the most important factor in tire life. Inflation pressure should be as recommended by the manufacturer for the load. Pressure should be checked cold before operation. DO NOT bleed air from tires when they are hot. Check inflation pressure weekly during use to insure the maximum tire life and tread wear. The following tire wear diagnostic chart will help you pinpoint the causes and solutions of tire wear problems.

Tire wear should be checked frequently because once a wear pattern becomes firmly established in a tire it is difficult to stop, even if the underlying cause is corrected.

Wheels replacement must be made in the following cases :

- Deformation or cracks on the rim.
- De-bonding between the interface of the steel and the rubber.
- Uniform wear to the wearing line.

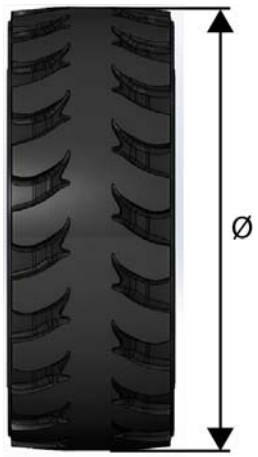

https://truckmanualshub.com/

- Non-linear wearing of the tread profile (> 10%)

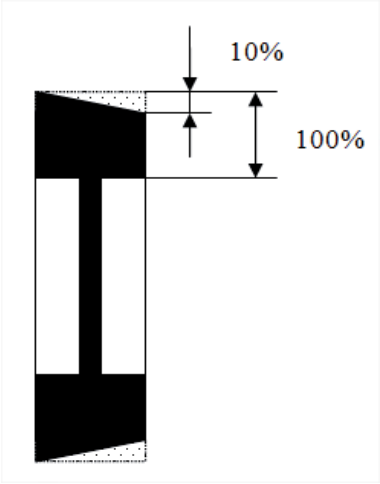

- 1 wheel stud is completely torn.
- 2 successive wheel studs are partially torn.

Tires and rims are critical components for the stability of the machine. For safety reasons :

- **Use only HAULOTTE® spare parts according to the technical characteristics of the machine. Refer to the spare parts catalog.**
- **Do not replace factory-installed tires with tires of different specifications or ply rating.**
- **Never replace a solid (rigid) (Solid Tyre) tire with a foam-filled or a pneumatic (air-filled) tire.**

Procedure of replacement :

- Loosen the wheel nuts on the wheel to be removed.
- Raise the machine using a jack or a hoist.
- Remove the wheel nuts.
- Remove the wheel.
- Install the new wheel.
- Check for correct wheel nut tightening sequence.
- Lower the machine to the ground.
- Tighten the wheel nuts to the recommended torque. Refer to maintenance and repair manuals.

N.B.-:-IF A WHEEL HAS BEEN REPLACED, WHILE OBSERVING THE AXLE TRACK PATTERN CHECK FOR CORRECT INSTALLATION.

https://truckmanualshub.com/

5 - Options

5.1 - IMPORTANT

The HAULOTTE® Model 45XA - HLA16PX - 55XA - HLA19PX is a Self-Propelled aerial work platform that may be may be equipped with one or more optional components designed for the convenience and safety of operators when using the equipment to accomplish specific tasks.

Always use only those components manufactured and / or authorized by HAULOTTE®. Never make any adjustments or modifications or otherwise alter the equipment in any way that is not expressly recommended by the manufacturer.

When operating an aerial work platform equipped with optional components, observe all safety precautions set forth by the manufacturer, as well as local regulations regarding this equipment and its components.

Consult rental agency or manufacturer regarding which optional components may be installed on the aerial work platform. For questions regarding safe use, contact HAULOTTE® Customer Service Department: at 1-800-537-0540 or visit HAULOTTE® online at www.haulotte-usa.com.

5.2 - PLATFORM ROTATOR

The optional platform rotator allows the operator to rotate the basket 90 ° around a vertical axis by actuating a rotator handle found below the platform control box.

To operate manual platform rotator, turn the rotator handle in the direction of desired rotation (clockwise (CW) or counterclockwise (CCW)). Motion continues in the desired direction until rotator handle is released or the platform reaches a safe travel limit.

Installation of a manual platform rotator may reduce the rated load limit of the work platform. Follow all manufacturer's recommendations and safety precautions when operating an aerial work platform equipped for platform rotation.

Manual platform rotator

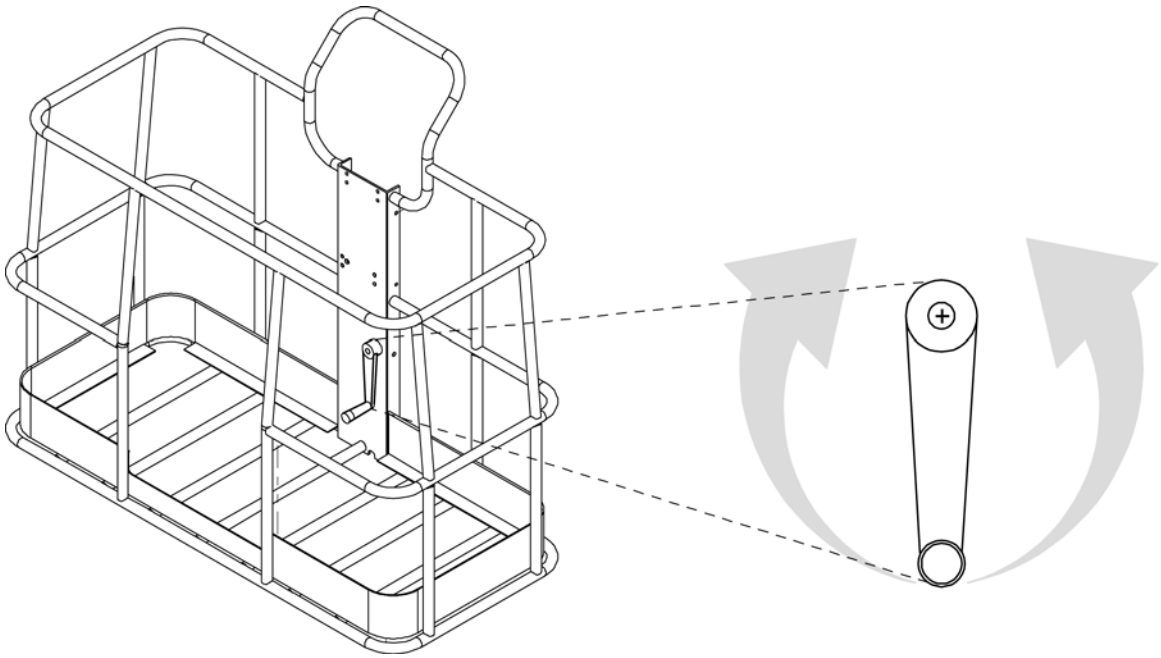

https://truckmanualshub.com/

1 - General

As an owner and/or operator of Haulotte equipment, your Safety is of utmost importance to HAULOTTE® , which is why HAULOTTE® places such a high priority on product safety.

INSPECTIONS are not only required by HAULOTTE®, but may also be required by industry standards and/or local regulations.

To ensure that your equipment continues to perform to the factory set performance levels, it is important that you regularly maintain your equipment and avoid making any modifications that are not approved by HAULOTTE®. Regular and timely inspections will reduce equipment down time as well as prevent possible injury.

N.B.-:-DO NOT OPERATE UNLESS YOU ARE FAMILIAR AND TRAINED IN THE PRINCIPLES OF SAFE MACHINE OPERATION.

Overview :

- Walk-around inspections take only a few minutes at the beginning and end of each shift – one of the best ways to prevent mechanical problems and safety hazards.

What to Do :

- Use your senses: sight, smell, hearing and touch.

Frequency :

- Check your machine periodically during your entire workday.
- Make sure to do your inspection the same way every time.
- Complete one of these inspections at the start and end of each shift.

N.B.-:-IF DAMAGE OR UNAUTHORIZED MODIFICATIONS ARE DISCOVERED, THE MACHINE MUST BE REMOVED FROM SERVICE UNTIL REPAIRS ARE MADE BY A QUALIFIED SERVICE TECHNICIAN.

It is the owner's responsibility to ensure the required maintenance as recommended by Haulotte is completed prior to the operation of the machine.

If regular maintenance is not carried out, this may :

- Void the warranty.
- Cause machine malfunction.
- Reduce machine reliability and shorten its service life.
- Jeopardize operator safety.

HAULOTTE Services® technicians are specially trained to carry out extensive repairs, interventions or adjustments on the safety systems or elements of HAULOTTE® machines. They carry genuine HAULOTTE spare parts and tools as required, and also provide fully documented reports on all work completed.

The inspection and maintenance table, identifies the role and the responsibilities of each party in periodical machine maintenance. Section C 3 - Inspection and Functional test.

https://truckmanualshub.com/

2 - Maintenance Schedule

This section provides the necessary information needed to place the machine in safe operation. In accordance with the regulations that are currently applicable, this machine is deisgned to have a 10 year life span in normal usage conditions. The life may be extended or reduced dependent on the severity of operating conditions, the machine condition itself and by conducting effective inspections and maintenance in addition to other external factors. There are a number of factors which can affect the design life including but not limited to, severity of operating conditions/routine maintenance which should be carried out in accordance with this manual.

Severity of operating conditions may require a reduction in time between maintenance periods. Machines that have been out of service or have not been in use for more than 3 months must undergo a periodic inspection before the machine is put back into service.

Maintenance must be carried out by a competent company or person familiar with mechanicalprocedures.

Maintenance operations performed must be recorded in a register / log book of the machine.

https://truckmanualshub.com/

3 - Inspection program

3.1 - General program

The machine must be inspected on a regular basis at intervals of no less than once 1 per year. The purpose of the inspection is to detect any defect which could lead to an accident during routine use of the machine. Local standards and regulations may require more frequent inspections.

HAULOTTE® requires Reinforced and Major Inspections to be carried out on the product to extend its service life.

Inspections must be carried out by a competent company or person.

The inspection results must be recorded in the safety register or machine log book controlled and overseen by the company manager. This register or machine log book and the list of competent repair persons must be made available to the government work inspector and HAULOTTE Services®.

When	Responsible	Stakeholder	What
Before sale	Owner (or renter)	Competent technician or qualified technician HAULOTTE Services®	Periodic inspection
Before rent	Owner (or renter)	Competent technician or qualified technician HAULOTTE Services®	Daily inspection
Before use or every change of user	User	User	
Annually (1 year)	Owner (or renter)	Competent technician or qualified technician HAULOTTE Services®	Periodic inspection
5 years	Owner (or renter)	Qualified technician HAULOTTE Services®	Reinforced inspection
10 years	Owner (or renter)	Qualified technician HAULOTTE Services®	Major inspection

3.2 - Daily inspection

The Daily inspection includes a visual inspection, operational checks and testing of the safety systems. This must be conducted by the operator before using the machine.

This inspection is the responsibility of the user. Refer to Section C 3.1 - Daily inspection.

https://truckmanualshub.com/

3.3 - PERIODIC INSPECTION

The Periodic inspection is a thorough evaluation of the operation and safety features of the machine.

It must be conducted before the sale / resale of the machine and/or at least once every year.

Local regulations may have specific requirements on frequency, and content of inspections.

The severity of operating conditions may require frequent inspections.

This inspection is the responsibility of the owner, and inspections must be carried out by a competent company or person.

This inspection is in addition to the daily inspection.

This inspection should also be conducted after :

- Extensive dismantling and reassembly of major components.
- Repairs involving the machine's essential components.
- Any accident causing stress to the machine.

3.4 - REINFORCED INSPECTION

The Reinforced inspection is a thorough evaluation of the machine's structural components, to ensure proper functionality of the machine.

This evaluation must occur at a frequency of 5000 hours or every 5 years.

This inspection is the responsibility of the owner, and it must be conducted by a HAULOTTE Services® technician or by a competent company or person.

This inspection includes :

- Daily inspection
- Periodic inspection

N.B.-:-REFER TO THE MAINTENANCE MANUAL FOR DETAILS.

3.5 - MAJOR INSPECTION

The Major inspection is a thorough evaluation of the machine's integrity and proper functioning; after a normal service life of 10 years.

This evaluation must take place after 10 years of operation and then repeated every 5 years thereafter.

The severity of operating conditions may require frequent inspections.

This inspection is the responsibility of the owner, and it must be conducted by a HAULOTTE Services® technician.

This inspection includes :

- Daily inspection
- Periodic inspection
- Reinforced inspection

N.B.-:-REFER TO THE MAINTENANCE MANUAL FOR DETAILS.

https://truckmanualshub.com/

4 - Repairs and adjustments

Extensive repairs, interventions or adjustments on the safety systems or components must be performed by a HAULOTTE Services® technician. Use original spare parts and components only.

N.B.-:-HAULOTTE SERVICES® TECHNICIANS ARE TRAINED PROFESSIONALS TO PERFORM EXTENSIVE REPAIRS, INTERVENTIONS AND ADJUSTMENTS ON THE SAFETY SYSTEMS OR COMPONENTS OF HAULOTTE® MACHINES. THE TECHNICIAN CARRIES GENUINE HAULOTTE® SPARE PARTS AND TOOLS AS REQUIRED, AND ALSO PROVIDES FULLY DOCUMENTED REPORTS ON ALL WORK COMPLETED.

HAULOTTE Services® will not take responsibility for any outcomes resulting from inferior services or repairs performed by other unauthorised personnel.

HAULOTTE® reminds that NO modifications SHALL be carried out without the written permission of HAULOTTE®.

Any unauthorised repairs/modifications will void HAULOTTE® warranty.

To check for safety campaigns, consult our website :

N.B.-:-WHEN DISPOSING OR SCRAPPING THIS MACHINE, PLEASE CONSIDER APPROPRIATE METHODS OF RECYCLING. ANY ITEMS THAT REQUIRE SPECIFIC DISPOSAL ARE LISTED WITH INSTRUCTIONS IN THE MAINTENANCE MANUAL.

https://truckmanualshub.com/

Notes

https://truckmanualshub.com/

1 - HAULOTTE® new product warranty North America

There is no express warranty except that HAULOTTE® provides the following limited warranty :

Haulotte US Inc (HAULOTTE®) warrants its new products made by it to be free from defects in material or workmanship for 24 months under normal operational conditions from the warranty start date (delivery date).

In addition, HAULOTTE® further warrants the structural elements of each new product made by it, as defined in its then current warranty policies and procedures, to be free from defects in material or workmanship for 5 years from the warranty start date (delivery date).

HAULOTTE® agrees to repair or replace at its own expense; at its facility in Va Beach Virginia, or by an authorized repair service provider designated by HAULOTTE®, any part or parts of the product found to be defective in material or workmanship, provided HAULOTTE® is notified of such defect or defects within the applicable warranty period and given a reasonable time to correct the defect. In no case shall any warranty extend to defects in materials, components, or services furnished by third parties. Defects caused by chemical action or the presence of abrasive materials and defects arising following the operation beyond rated capacity or the improper use or application of any products shall not be considered defects within the scope of this warranty. If any repairs or alterations are made or any parts are replaced during the applicable warranty periods by anyone other than HAULOTTE® or an entity authorized by HAULOTTE® for use in its products, customer shall pay for such repairs or parts without recourse against HAULOTTE®, and HAULOTTE® should be relieved of responsibility for fulfillment of this warranty with respect to such repairs, alterations, or replacement so made. HAULOTTE® obligations under this warranty shall at all times be subject to its current warranty policies and procedures. The above mentioned warranty shall not apply to replacement or service parts made and sold by HAULOTTE®. Periodic maintenance, periodic maintenance items (including paint and decals), and minor adjustments are excluded from this warranty. Certain components, including, but not limited to, engines, tires/tyres and batteries, which may be part of the product are not manufactured or warranted by HAULOTTE®. Any applicable warranty for such component is provided through the original manufacturer of the component or its distributor organization. HAULOTTE® warranty does not apply to defects caused by negligence, misuse, accidental damage, inadequate or improper use or maintenance, acts of nature and normal wear and tear of the products.

https://truckmanualshub.com/

G- Other information

Under no circumstances shall HAULOTTE® be liable for any consequential or special damages which any person or entity may incur or claim to incur as a result of any defect in the product or in any correction or alteration thereof made or furnished by HAULOTTE® or others. Consequential or special damage includes, but not limited to cost of transportation, lost sales, lost orders, lost profits, lost income, increased over head, labor and material costs, and cost of manufacturing variances and operational inefficiencies. HAULOTTE® maximum liability under this warranty shall be the purchase price paid to HAULOTTE® with respect to the product to which such warranty is claimed. This warranty constitutes HAULOTTE® entire and exclusive warranty as to the product and is the sole and exclusive remedy for the product defects in material and workmanship. HAULOTTE® does not assume (and has not authorized any other person to assume on its behalf) any other warranty or liability in connection with any product covered by this warranty. HAULOTTE® expressly disclaims any and all other warranties of any kind whatsoever as to the product.

There is no implied warranty of merchantability and no implied warranty of fitness for a purpose. There is no implied warranty of any kind whatsoever.

This warranty shall be void, if, upon the occurrence of any incident involving any product made by HAULOTTE® and resulting in any personal injury or property damage, customer shall fail to notify HAULOTTE® within 48 hours of such occurrence or permit HAULOTTE® and its representatives to have immediate access to such product and all records of or within the control of the customer relating to the product and occurrence. For the procedure to apply for warranty please refer to the warranty procedure (North America Warranty 2015/3).

https://truckmanualshub.com/

1.1 - WARRANTY CLAIMS PROCEDURE

In order to qualify for warranty coverage, the following conditions must be met :

1. Return of completed "Warranty Registration" form to Haulotte Group / BilJax within 15 days of receipt of product.
2. Notification to Haulotte Group / BilJax Service within 48 hours of any claimed defect, or damage resulting from the claimed defect.
3. Warranty is limited to parts that are determined to be defective by an authorized service dealership in conjunction with Haulotte Group / BilJax Service. This does not include parts worn out due to normal wear and tear.

Haulotte Group / BilJax authorized dealers or distributors are responsible for filing claims under warranty. Listed below is the warranty claims procedure.

4. Contact Haulotte Group / BilJax Customer Service Department at 1-800-537-0540 or visit HAULOTTE® online at www.haulotte-usa.com to report the claim and verify warranty coverage. Machine serial number and machine hours must be provided when call is placed. A call ID number will be created when the call is placed. The service representative will issue the call ID number to you at the end of the call.
5. Identify the components to be claimed under warranty along with description of failure. An RMA number will be issued from Haulotte Group / BilJax to return warranty parts at the time the parts order is placed.
6. Replacement parts will then be sent by Haulotte Group / BilJax to the dealer or distributor. All parts are invoiced at dealer/distributor list price. Credits will be issued when defective parts are returned to Haulotte Group / BilJax under the proper RMA number and found to be defective under warranty.
7. After completing repairs, submit warranty application form and return the defective parts to Haulotte Group / BilJax. Warranty application form and parts must be received within 30 days of claim in order to be eligible for credit. Returned parts are to be sent prepaid and will be credited when part is received and verified. Warranty labor rate will be paid at current rate set by Haulotte Group / BilJax. The amount of labor hours reimbursed will be determined by Haulotte Group / BilJax and will be limited to 4 hours unless approved by Haulotte Group / BilJax Service.
8. The warranty application must include: the issued RMA number, the invoice number for the associated parts, the machine serial number, the machine hours on the date of failure, the issued call ID number, failure and repair description, and requested customer information.

Failure to follow the warranty claims procedure may result in delay in processing claim or denial of the claim. Haulotte Group / BilJax reserves the right to limit or adjust warranty claims with regard to parts, labor, and travel time. Replacement components purchased from suppliers other than Haulotte Group / BilJax are not covered under the terms of this warranty

https://truckmanualshub.com/

1.2 - WARRANTY REGISTRATION

<table>
<tr><th colspan="2">Owner name :</th><th colspan="2">Purchased from :</th><th colspan="2">Machine Model :</th></tr>
<tr><td colspan="2" rowspan="2">Address :</td><td colspan="2" rowspan="2">Address :</td><td colspan="2">Machine Serial :</td></tr>
<tr><td colspan="2">Date machine delivered :</td></tr>
<tr><td colspan="2">City :</td><td colspan="2">City :</td><td colspan="2">Machine used for :</td></tr>
<tr><td colspan="2">State :</td><td colspan="2">State :</td><td colspan="2" rowspan="2">Optional equipment :</td></tr>
<tr><td colspan="2">Zip code :</td><td colspan="2">Zip code :</td></tr>
<tr><td colspan="2">Phone :</td><td colspan="2">Phone :</td><td colspan="2">Resale :</td></tr>
<tr><td colspan="6">I have received and understand the following :</td></tr>
<tr><td colspan="2"></td><td colspan="4">Operator’s Manual</td></tr>
<tr><td colspan="2"></td><td colspan="4">Operator instructions as given in the Operator’s Manual and by decals</td></tr>
<tr><td colspan="2"></td><td colspan="4">All load capacity decals</td></tr>
<tr><td colspan="2"></td><td colspan="4">Maintenance schedule as given in the Operator’s Manual</td></tr>
<tr><td colspan="2"></td><td colspan="4">Hydraulic system care and use as given in the Operator’s Manual</td></tr>
<tr><td colspan="2"></td><td colspan="4">Warranty in Operator’s Manual with its obligation for owner and dealer</td></tr>
<tr><td colspan="6">Remarks :</td></tr>
<tr><td colspan="6">How was the sale initiated ? (check one)</td></tr>
<tr><td colspan="2">1. Lead</td><td colspan="2">2. Cold call</td><td colspan="2">3. Trade show</td><td>4. Existing customer</td></tr>
<tr><td colspan="6">Type of business? (check one)</td></tr>
<tr><td colspan="2">1. School</td><td colspan="2">2. Government</td><td colspan="2">3. Hotel/Convention Ctr.</td><td>4. Industrial/ Manufacturing</td></tr>
<tr><td colspan="2">5. Construction</td><td colspan="2">6. Rental Yard</td><td colspan="2">7. Service Ctr.</td><td>8. Other</td></tr>
<tr><td colspan="6">I thoroughly understand the Operation and Maintenance of this machine. I also acknowledge the warranty conditions and limitations as outlined in the Operator’s Manual.</td></tr>
<tr><td colspan="2">Owner or Operator’s Signature</td><td colspan="2"></td><td colspan="2">Date</td><td></td></tr>
</table>

https://truckmanualshub.com/

2 - Subsidiary contact information

	HAULOTTE FRANCE PARC DES LUMIERES 601 RUE NICEPHORE NIEPCE 69800 SAINT-PRIEST **TECHNICAL Department:** **+33 (0)820 200 089** **SPARE PARTS : +33 (0)820 205 344** FAX : +33 (0)4 72 88 01 43 E-mail : haulottefrance@haulotte.com www.haulotte.fr		HAULOTTE ITALIA VIA LOMBARDIA 15 20098 SAN GIULIANO MILANESE (MI) **TEL: +39 02 98 97 01** FAX: +39 02 9897 01 25 E-mail : haulotteitalia@haulotte.com www.haulotte.it		HAULOTTE INDIA Unit No. 1205, 12th foor,Bhumiraj Costarica, Plot No. 1&2, Sector 18, Palm Beach Road, Sanpada, Navi Mumbai- 400 705 Maharashtra, INDIA Tel. : +91 22 66739531 to 35 E-mail : sray@haulotte.com www.haulotte.in
	HAULOTTE HUBARBEITSBÜHNEN GmbH Ehrenkirchener Strasse 2 D-79427 ESCHBACH **TEL : +49 (0) 7634 50 67 - 0** FAX : +49 (0) 7634 50 67 - 119 E.mail : haulotte@de.haulotte.com www.haulotte.de		HAULOTTE VOSTOK 61A, RYABINOVAYA STREET Bldg. 3 121471 MOSCOW RUSSIA **TEL/FAX : +7 495 221 53 02 / 03** E.mail : info@haulottevostok.ru www.haulotte-international.com		HAULOTTE DO BRASIL AV. Tucunaré, 790 CEP: 06460-020 – TAMBORE BARUERI – SAO PAULO – BRASIL **TEL : +55 11 4196 4300** FAX : +55 11 4196 4316 E.mail : haulotte@haulotte.com.br www.haulotte.com.br
	HAULOTTE IBERICA C/ARGENTINA N° 13 - P.I. LA GARENA 28806 ALCALA DE HENARES MADRID **TEL : +34 902 886 455** TEL SAT : +34 902 886 444 FAX : +34 911 341 844 E.mail : iberica@haulotte.com www.haulotte.es		HAULOTTE POLSKA Sp. Z.o.o. UL. GRANICZNA 22 05-090 RASZYN - JANKI **TEL : +48 22 720 08 80** FAX : +48 22 720 35 06 E-mail : haulottepolska@haulotte.com www.haulotte.pl		HAULOTTE MÉXICO, Sa de Cv Calle 9 Este, Lote 18, Civac, Jiutepec, Morelos CP 62500 Cuernavaca México **TEL : +52 77 7321 7923** FAX : +52 77 7516 8234 E-mail : haulotte.mexico@haulotte.com www.haulotte-international.com
	HAULOTTE PORTUGAL ESTRADA NACIONAL NUM. 10 KM. 140 - LETRA K 2695 - 066 BOBADELA LRS **TEL : + 351 21 995 98 10** FAX : + 351 21 995 98 19 E.mail : haulotteportugal@haulotte.com www.haulotte.es		HAULOTTE SINGAPORE Pte Ltd. No.26 CHANGI NORTH WAY, SINGAPORE 498812 **Parts and service Hotline:** **+65 6546 6150** FAX : +65 6536 3969 E-mail: haulotteasia@haulotte.com www.haulotte.sg		HAULOTTE MIDDLE EAST FZE PO BOX 293881 Dubaï Airport Free Zone DUBAÏ United Arab Emirates **TEL : +971 (0)4 299 77 35** FAX : +971 (0) 4 299 60 28 E-mail : haulottemiddle- east@haulotte.com www.haulotte-international.com
	HAULOTTE SCANDINAVIA AB Taljegårdsgatan 12 431 53 Mölndal SWEDEN **TEL : +46 31 744 32 90** **FAX : +46 31 744 32 99** E-mail : info@se.haulotte.com spares@se.haulotte.com www.haulotte.se		HAULOTTE TRADING (SHANGHAI) Co. Ltd. #7 WORKSHOP No 191 HUA JIN ROAD MIN HANG DISTRICT SHANGHAI 201108 CHINA **TEL : +86 21 6442 6610** FAX : +86 21 6442 6619 E-mail : haulotteshanghai@haulotte.com www.haulotte.cn		HAULOTTE ARGENTINA Ruta Panamericana Km. 34,300 (Ramal A Escobar) 1615 Gran Bourg (Provincia de Buenos Aires) Argentina **TEL.: +54 33 27 445991** FAX. +54 33 27 452191 E-mail : haulotteargentina@haulotte.com www.haulotte-international.com
	HAULOTTE UK Ltd STAFFORD PARK 6 TELFORD - SHROPSHIRE TF3 3AT **TEL : +44 (0)1952 292753** FAX : + 44 (0)1952 292758 E.mail : salesuk@haulotte.com www.haulotte.co.uk		HAULOTTE GROUP / BILJAX 125 TAYLOR PARKWAY ARCHBOLD, OH 43502 – USA **TEL : +1 419 445 8915** FAX :+1 419 445 0367 Toll free : +1 800 537 0540 E.mail : sales@us.haulotte.com www.haulotte-usa.com		HAULOTTE NORTH AMERICA 3409 Chandler Creek Rd. VIRGINIA BEACH, VA 23453 – USA **TEL : +1 757 689 2146** FAX :+1 757 689 2175 Toll free : +1 800 537 0540 E.mail : sales@us.haulotte.com www.haulotte-usa.com
	HAULOTTE NETHERLANDS BV Koopvaardijweg 26 4906 CV OOSTERHOUT - Nederland **TEL : +31 (0) 162 670 707** FAX : +31 (0) 162 670 710 E.mail info@haulotte.nl		HAULOTTE AUSTRALIA PTY Ltd 46 GREENS ROAD DANDENONG – VIC – 3175 **TEL : 1 300 207 683** FAX : +61 (0)3 9792 1011 E.mail : sales@haulotte.com.au		HAULOTTE CHILE El Arroyo 840 Lampa (9380000) Santiago (RM) **TEL : + 562 2 3727630** E.mail : haulotte-chile@haulotte.com www.haulotte-chile.com

https://truckmanualshub.com/

2.1 - CALIFORNIA WARNING

For the engine powered machines destined to the US market (Standards ANSI and CSA)

CALIFORNIA

Proposition 65 Warning

Operating, servicing and maintaining a passenger vehicle or off-road vehicle can expose you to chemicals including engine exhaust, carbon monoxide, phthalates, and lead, which are known to the State of California to cause cancer and birth defects or other reproductive harm. To minimize exposure, avoid breathing exhaust, do not idle the engine except as necessary, service your vehicle in a well-ventilated area and wear gloves or wash your hands frequently when servicing your vehicle.

For more information go to www.P65Warnings.ca.gov/passenger-vehicle

CALIFORNIA

Proposition 65 Warning

Breathing diesel engine exhaust exposes you to chemicals known to the State of California to cause cancer and birth defects or other reproductive harm.

- Always start and operate the engine in a well-ventilated area
- If in an enclosed area, vent the exhaust to the outside
- Do not modify or tamper with the exhaust system
- Do not idle the engine except as necessary

For more information go to www.P65Warnings.ca.gov/diesel

https://truckmanualshub.com/

For electric (battery operated) machines

CALIFORNIA

Proposition 65 Warning

Battery posts, terminals and related accessories contain lead and lead compounds, chemicals known to the State of California to cause cancer and reproductive harm. Batteries also contain other chemicals known to the State of California to cause cancer.
WASH HANDS AFTER HANDLING.

For more information go to www.P65Warnings.ca.gov

https://truckmanualshub.com/

Notes