https://truckmanualshub.com/

Snorkel

Operating, Maintenance and Parts Manual

EPV9.5T

Vehicle Mounted Articulating Boom Aerial Work Platform

P/N 12743
EPV9.5T Hydraulic Controls
June 2006 (V5)

https://truckmanualshub.com/

LIMITED WARRANTY

Snorkel warrants each new machine manufactured and sold by it to be free from defects in material and workmanship for a period of one (1) year from date of delivery to a Customer or for one year after the machine has been placed in first service in a Dealer rental fleet, whichever comes first. Any part or parts which, upon examination by the Snorkel Service Department, are found to be defective, will be replaced or repaired, at the sole discretion of Snorkel, through its local Authorized Dealer at no charge.

Snorkel further warrants the structural components; specifically, the mainframe chassis, turntable, booms and scissor arms, of each new machine manufactured by it to be free from defects in material and workmanship for an additional period of four (4) years. Any such part or parts which, upon examination by the Snorkel Service Department, are found to be defective will be replaced or repaired by Snorkel through its local Authorized Dealer at no charge; however, any labor charges incurred as a result of such replacement or repair will be the responsibility of the Customer or Dealer.

The Snorkel Service Department must be notified within forty-eight (48) hours of any possible warranty situation during the applicable warranty period. Personnel performing warranty repair or replacement must obtain specific approval by Snorkel Service Department prior to performing any warranty repair or replacement.

Customer and Dealer shall not be entitled to the benefits of this warranty and Snorkel shall have no obligations hereunder unless the "Pre-Delivery and Inspection Report" has been properly completed and returned to the Snorkel Service Department within ten (10) days after delivery of the Snorkel product to Customer or Dealer's rental fleet. Snorkel must be notified, in writing, within ten (10) days, of any machine sold to a Customer from a Dealer's rental fleet during the warranty period.

At the direction of the Snorkel Service Department, any component part(s) of Snorkel products to be replaced or repaired under this warranty program must be returned freight prepaid to the Snorkel Service Department for inspection. All warranty replacement parts will be shipped freight prepaid (standard ground) from the Snorkel Service Department or from Snorkel's Vendor to Dealer or Customer.

REPLACEMENT PARTS WARRANTY

Any replacement or service part made or sold by Snorkel is not subject to the preceding **Limited Warranty** beyond the normal warranty period of the machine upon which the part was installed.

THIS WARRANTY EXCLUDES AND SNORKEL DOES NOT WARRANT:

1. Engines, motors, tires and batteries which are manufactured by suppliers to Snorkel, who furnish their own warranty. Snorkel will, however, to the extent permitted, pass through any such warranty protection to the Customer or Dealer.
2. Any Snorkel product which has been modified or altered outside Snorkel's factory without Snorkel's written approval, if such modification or alteration, in the sole judgment of Snorkel's Engineering and/or Service Departments, adversely affects the stability, reliability or service life of the Snorkel product or any component thereof.
3. Any Snorkel product which has been subject to misuse, improper maintenance or accident. "Misuse" includes but is not limited to operation beyond the factory-rated load capacity and speeds. "Improper maintenance" includes but is not limited to failure to follow the recommendations contained in the Snorkel Operation, Maintenance, Repair Parts Manuals. Snorkel is not responsible for normal maintenance, service adjustments and replacements, including but not limited to hydraulic fluid, filters and lubrication.
4. Normal wear of any Snorkel component part(s). Normal wear of component parts may vary with the type application or type of environment in which the machine may be used; such as, but not limited to sandblasting applications.
5. Any Snorkel product that has come in direct contact with any chemical or abrasive material.
6. Incidental or consequential expenses, losses, or damages related to any part or equipment failure, including but not limited to freight cost to transport the machine to a repair facility, downtime of the machine, lost time for workers, lost orders, lost rental revenue, lost profits or increased cost.

This warranty is expressly in lieu of all other warranties, representations or liabilities of Snorkel, either expressed or implied, unless otherwise amended in writing by Snorkel's President, Vice President-Engineering, Vice President-Sales or Vice President-Marketing.

SNORKEL MAKES NO WARRANTIES WHICH EXTEND BEYOND THE DESCRIPTION OF THIS LIMITED WARRANTY. SNORKEL MAKES NO IMPLIED WARRANTY OF MERCHANTABILITY OR FITNESS FOR A PARTICULAR PURPOSE AND DISCLAIMS ALL LIABILITY FOR INCIDENTAL OR CONSEQUENTIAL DAMAGES, INCLUDING BUT NOT LIMITED TO INJURY TO PERSONS OR PROPERTY.

The Customer shall make all warranty claims through its local Authorized Dealer and should contact the Dealer from whom the Snorkel product was purchased for warranty service. Or, if unable to contact the Dealer, contact the Snorkel Service Department for further assistance.

Effective July 1995

© Snorkel – all rights reserved

Printed in New Zealand

https://truckmanualshub.com/

Table of Contents

Section A. - Introduction & Specifications

Safety Alerts i
Operation i
Maintenance i
Responsibilities of parties i
In summary ii
Additional information ii
Specification variances ii
General Specifications ii

Section B. - Maintenance Information

About this Manual: iii
Maintenance information iii
Maintenance schedules iv
Maintenance Chart v
Lubrication vi
Hydraulic Hose Age vi
Service Data vi
Lubrication Chart vi
Lubrication vii
Pressure gun application vii
Rotation bearing vii
Rotation gear teeth and pinion vii
Engines vii
Hydraulic oil reservoir vii
Filling hydraulic system vii
Boom Cylinders vii
Hydraulic Hoses viii
Slew Motor viii
Slew Brake (If fitted) viii
Control Valves viii
Basket Levelling viii
Battery viii
Fault Finding ix
Fault Finding Chart ix
Fault Finding Chart x
Torque chart xi
To order service or repair parts xii
ANSI and OSHA compliance xii
Manuals xii

Section C. - Operation

Controls 1
Stabiliser control valves 1
Mode selector switch 1
Base controls 1
Column controls 1
Column controls (valve levers) 1
Column controls (switches) 2
Control select switch 2
Platform controls 2
Platform controls (valve levers) 2
Platform controls (switches) 2
Pre-Operation inspection 3
Battery condition 3
Battery fluid level 3
Hydraulic oil level 3
Hydraulic oil filler cap 3
Brake fluid level 3
Tyre pressure 3
Hand brake adjustment 3
Operation of truck lights 3
Engine oil level 4
Hydraulic oil leaks 4
Fuel level and tank cap 4
Fuel leaks 4
Bolts and fasteners 4
Wiring harnesses 4
Welds and structure 4
Insulation covers (if applicable) 4
Lanyard anchor points 5
Operation 5
Parking of Unit 5
Preparation of the Unit 5
Gradients and Cambers 6
Access to Basket 6
Boom Operation 6
To slew (swing) the booms 6
Stowing for travel 6
Emergency Lowering 6

https://truckmanualshub.com/

Table of Contents

Section D. - Safety

Electrocution Hazards 1
Pre-operation Inspection 1
Operation 2
Hydraulic System Precautions 3
Fire Prevention 3
Engine and Fuel Handling Precautions 3
Batteries 4
Safety Decals and Placards 4

Section 1. - Repair Parts

Base boom assembly 1-2
Base boom assembly drawing 1-3
Tip boom assembly 1-4
Tip boom assembly drawing 1-5
Base boom cable track 1-6
Base boom cable track drawing 1-7
Tip boom cable track drawing 1-8
Tip boom cable track 1-9
Extension cylinder assembly 1-10
Column assembly 1-11
Slew box assembly 1-12
Slew box assembly drawing 1-13
Fibreglass basket assembly 1-14

Section 2. - Hydraulics

Hydraulic schematic drawing 2-3
Extension Cylinder 2-5
Slave level cylinder 2-6
Cylinder assembly, lift 2-7
Master level cylinder assembly 2-8
Cylinder assembly, stabiliser leg 2-9

Section 3. - Electrical

Electrical schematic 3-3
Upper control box assembly 3-5
Column control box assembly 3-6
Base control box assembly 3-7

https://truckmanualshub.com/

The most important section in this manual is the safety section - Section D. Take time, now, to study it closely. The information in Section D, might save your life, prevent serious injury, or damage to property or the EPV9.5T.

■ Safety Alerts

A safety alert symbol is used throughout this manual to indicate danger, warning and caution instructions. Follow these instructions to reduce the likelihood of personal injury, property damage or damage to the machine.

The terms danger, warning, and caution indicate varying degrees of personal injury or property damage that can result if the instruction is not followed.

⚠DANGER

Denotes an imminently hazardous situation which, if not avoided, will result in death or serious injury.

⚠WARNING

Denotes a potentially hazardous situation which, if not avoided, could result in death or serious injury.

⚠CAUTION

Denotes a potentially hazardous situation which, if not avoided, may result in minor or moderate injury.

It may also be used to alert against unsafe practices or action which may result in damage to the EPV.

Notes:
Notes are used to provide special information or helpful hints to assist in aerial platform operation, but do not indicate a hazardous situation.

■ Operation

The EPV9.5T aerial platform has built in safety features and has been factory tested for compliance with Snorkel specifications and industry standards. However, any personnel lifting device can be potentially dangerous in the hands of untrained or careless operators.

Training is vitally important and must be performed under the direction of a QUALIFIED person. You must display proficiency in knowledge and actual operation of the EPV9.5T before using it on a job site.

Before operation of the EPV9.5T you must read and understand the operating instructions in this manual as well as the decals, warnings, and instructions on the machine itself.

Before operating the EPV9.5T you must be AUTHORIZED by the person in charge to do so and the operation of the EPV9.5T must be within the scope of the machine specifications.

⚠WARNING

The potential for an accident increases when the aerial platform is operated by personnel who are not trained and authorised. Death or serious injury can result from such accidents. read and understand the information in this manual and on the placards and decals on the machine before operating the EPV9.5T on the job site.

■ Maintenance

Every person who maintains, inspects, tests, or repairs these machines, and every person supervising any of these functions, must be properly trained and qualified to do so.

This Manual provides a daily inspection procedure that will help you keep your EPV9.5T in good operating condition.

Do not perform other maintenance unless you are a trained mechanic, qualified to work on the EPV9.5T. Call qualified maintenance personnel if you find problems or malfunctions.

Do not modify this machine without written approval from the Engineering Department of Snorkel. Modification may void the warranty, adversely affect stability, or affect the operational characteristics of the EPV9.5T.

■ Responsibilities of parties

It is imperative that all owners and users of the EPV9.5T read, understand, and conform to all applicable regulations. Ultimate compliance to OSHA regulations is the responsibility of the user and their employer.

ANSI Standard A92.2-2001clearly identifies requirements of all parties who might be involved with Boom-Supported Elevating Work Platforms.

AUSTRALIAN / NZ STANDARD 2550-10 1994 Also identifies the requirements of all parties who might be involved with Boom-Supported Elevating Work Platforms.

https://truckmanualshub.com/

A reprint of the “Manual of Responsibilities for Dealers, Owners, Users, Operators, Lessors and Lessees of ANSI/SIA A92.5-1992 Boom Supported Elevating Work Platforms” is available from Snorkel dealers or from the factory upon request.

Copies are also available from:

Scaffold Industry Association, Inc.,
P.O. Box 1160
Phoenix, AZ 85036-0574 USA

■ In summary

- Only trained and authorised operators should be permitted to operate the equipment.
- All manufacturer’s operating instructions and safety rules and all employers’ safety rules and all OSHA and other government safety rules should be strictly adhered to.
- Repairs and adjustments should be made only by qualified and trained maintenance personnel.
- No modification should be made to the equipment without prior written consent of the Snorkel Engineering Department.
- Make a pre-start inspection of the EPV at the beginning of each shift. A malfunctioning machine must not be used.
- Make an inspection of the work place to locate possible hazards before operating the EPV.

■ Additional information

For additional information, contact your local dealer or Snorkel at:

Snorkel International
2/26 Redfern Street
Wetherill Park NSW 2164
Australia

Snorkel International
PO Box 1041
Levin 5500
New Zealand

■ General Specifications

SPECIFICATIONS	EPV9.5T
Working height	9.5m
Platform height	8.1m
Maximum outreach	5.5m
Safe working load	One man basket 135kg / Two man basket 200kg
Basket size (one man basket)	762mm wide x 610mm deep x 1118mm high
Basket size (two man basket)	1070mm wide x 610mm deep x 1000mm high
Outrigger width	2.4m
Travelling height	3.1m (typical)
Overall length	5m (typical)
Overall width	2.4m
Power source	PTO or Honda G160 5.5HP
Gradeability	Unit can be levelled on a 5° slope
Slew	400°
Turntable rotation	400° non-continuous
Power in basket	Optional 220V outlet
Boom control	Variable speed electric

❑ Specification variances

There are some differences in the design of individual machines and these may not necessarily be reflected in this manual.
The insulation rating on the EPV9.5T is **typically nil** but there are some machines built as insulated units.

Please contact your supplier if you have any issues that require clarification.

https://truckmanualshub.com/

■ About this Manual:

This Operation, Maintenance and Parts manual covers current production machines only.

While Snorkel has attempted in every way to confirm that all information in this manual is correct, improvements are being constantly made to the machine that may not be reflected in this manual.

NOTE:

It is recommended that you record the serial and model number of your machine (see page 12 of this chapter). This information is found on the serial number placard.

■ Maintenance information

The parts drawings located in the repair parts sections, are designed for use as a guide for proper disassembly of the machine and components as well as for parts replacement. Always refer to the hydraulic system installation drawings and the electrical wiring diagram before removing or disassembling associated parts.

⚠WARNING

Do not attempt to disconnect or remove any hydraulic line before reading and understanding all text concerning the system hydraulics. In most cases, disassembly of the machine will be obvious from the illustration.

⚠DANGER

DO NOT modify this ariel platform without prior written consent of Snorkel Engineering Department.

Modification may void the warranty, adversely affect stability, or affect the operational characteristics of the ariel platform.

When disassembling or reassembling components, complete the procedural steps in sequence. Do not partially disassemble or assemble one part, then start on another. Always check your work to assure that nothing has been overlooked.

The following list is a gentle reminder when disassembling or assembling the machine.

- ✓ Always be conscious of weight.
- ✓ Never attempt to lift heavy objects without the aid of a mechanical device.
- ✓ Do not allow heavy objects to rest in an unstable condition.
- ✓ Always make sure work platform is in stowed position - blocked or the weight removed by a suitable lifting device before disconnecting the hydraulic hose from the motor/pump unit to the lift cylinder.
- ✓ When raising a portion of the machine, be sure that adequate blocking is properly positioned - Do not depend on lifting device to hold and secure weight.
- ✓ If a part resists removal, check to see if all fasteners, electrical wiring, hydraulic lines, etc., have been removed or that other parts are not interfering.

Parts should be thoroughly inspected before restoring to service at the time of reassembly. Burrs, nicks or scratches may be removed from machined surfaces by honing or polishing with #600 crocus cloth, followed by a thorough cleaning in an approved cleaning solvent, and blown dry with compressed air. Do not alter the contour of any part. If this operation does not restore the part to a serviceable condition, replace the part.

Replace all O-rings, seals, and gaskets at reassembly. Use new roll pins or cotter pins. Dip all packing rings and seals in hydraulic oil before reassembling in cylinder and manifold installations. Replace any part having imperfect threads. In general, units that have been disassembled can be reassembled by reversing the order of disassembly.

Remember that the service life of a machine can be increased by keeping dirt and foreign materials out of the vital components. Precautions have been taken to safeguard against this; shields, covers, seals and filters are provided to keep air and oil supplies clean; however, these items must be maintained on a scheduled basis in order to function properly.

At any time air or oil lines are disconnected, clean surrounding areas as well as the opening and fittings themselves. As soon as a line or component is disconnected, cap or cover all openings to prevent the entry of dirt or foreign materials.

New parts should remain in their container until they are ready to be used.

Clearly mark or tag hydraulic lines and electrical wiring connections when disconnecting or removing them from unit. This will assure that they are correctly reinstalled.

Proper assembly is critical to the successful rebuilding of any unit. Carefully inspect any parts which are to be reused. If in doubt, replace.

https://truckmanualshub.com/

"SAFETY FIRST" is a good slogan.

Replace any guards and protective devices that have been removed to carry out maintenance and repair work.

■ Maintenance schedules

Snorkel has established a Preventive Maintenance Schedule that includes:

✓ Daily Maintenance (Operator's Inspection)

✓ Monthly (frequent) Maintenance

✓ 6 monthly

✓ Yearly or (annual) Maintenance,

These schedules should ensure the detection of any defective, damaged or improperly secured parts and provide information regarding lubrication and other minor maintenance items.

All maintenance and inspections must be performed by a trained service technician only.

All placards and decals must be in place and legible.

⚠ DANGER

Failure to perform the Preventive Maintenance at the intervals outlined in the Maintenance Schedule may result in a unit being operated with a defect that could result in INJURY or DEATH of the units operator. DO NOT allow a unit to be operated that has been found to be defective.

Repair all defects before returning the unit to service.

Maintenance and inspection should be performed in compliance with the following practices:

1. A scheduled planned maintenance, lubrication and inspection system should be followed
2. Only qualified and authorised personnel shall be permitted to maintain, repair, adjust and inspect the unit.
3. Before leaving the unit:
   Apply handbrake
   Block wheels if unit is on an incline
   Move booms to stowed position
   Raise stabilisers
   Place all controls in neutral
   Remove key
4. Before working on the unit:
   Ensure the unit is positioned as in 3 above
   Block operating mechanisms, interbooms or chassis before working under them
   Operation to check performance of the unit shall be conducted in an authorised safe clearance area
5. Before starting to operate the unit:
   Ensure stabilisers are in position
   Place all controls in neutral
   Check functions of lift systems, directional controls, safety devices and slew brake
6. Avoid hazards and have fire protection equipment present.

⚠ WARNING

Do not smoke or permit open flames near the unit while checking fuel or oil levels.

7. Keep shop well ventilated, clean and dry.
8. Do not adjust or reset a pressure relief valve or interlock switch to any setting other than that approved by the manufacturer.
9. Brakes, stabilisers, control mechanisms, lift over load devices, guards, and safety devices shall be inspected regularly and maintained in a safe operating condition.
10. Capacity, operation and maintenance instruction plates or decals shall be maintained in legible condition.
11. All parts of lift mechanisms shall be inspected to maintain them in safe operating condition,
12. The hydraulic system shall be regularly inspected and maintained in conformance with good practice. Cylinders, valves and other similar parts shall be checked to ensure that 'drift' has not developed to the extent that it would create a hazard.
13. The unit shall be kept in a clean condition to minimize fire hazards and facilitate detection of loose or defective parts.
14. Modifications and additions which affect capacity and safe operation shall not be performed by the customer or user without the manufacturers prior written approval. Capacity, operation and main tenance plates or decals shall be changed accordingly.
15. Care shall be taken to ensure that all replacement parts are inter-changeable with the original parts and of equal quality to that provided in the original equipment.

https://truckmanualshub.com/

■ Maintenance Chart

DAILY	A visual inspection of the unit should be carried out before use. Pay special attention to levelling rods, hydraulic cylinders and hoses.
MONTHLY Inspect and Service	Condition of battery terminals
	Battery acid level
	Hydraulic oil level
	Brake fluid level
	Tyre pressures
	Handbrake adjustment
	Engine oil level
	Fuel filter
	Spark plug and gap
	Air filter
	Insulation covers (if applicable)
Lubrication	(See section on Lubrication)
6 MONTHLY Inspect and Service	Wiring for damage or loose connections
	Operation of tail lights
	Hydraulic hoses, for leaks or damage
	Slew brake adjustment
	Slew pinion wear and adjustment
	Slew bolts tightening torque
	Change engine oil
Lubrication	(See section on Lubrication)
12 MONTHLY	Include 6 monthly servicing
	Replace return line filter
	Change hydraulic oil
Inspect and Service	Wear in all pivot pin and cylinder boss bushes
	Pivot retaining bolt tightness
	Motor/pump coupling rubber (Honda only)
	Coupling set screw tightness
	Basket, booms, column, and trailer for damage, cracking or rust
Lubrication	(See section on lubrication)

https://truckmanualshub.com/

■ Service Data

Engine fuel 4 stroke	Regular gasoline 83 octane (min.) Honda only
Relief valve pressures	As shown on hydraulic schematic
Slew bearing bolt torque	80ft.lb

■ Hydraulic Hose Age

EN982 Clause 7.3.1 requires the manufacturing date of each hydraulic hose to be clearly visible on the hose. Hoses used in early production of this unit (up to April 2006) are manufactured by Parker while units made after this date use hoses manufactured by Hydraulink.
The key to decode the date for both Parker and Hydraulink hoses is as follows:

Parker Sample Hose Code **11- 4Q 99**

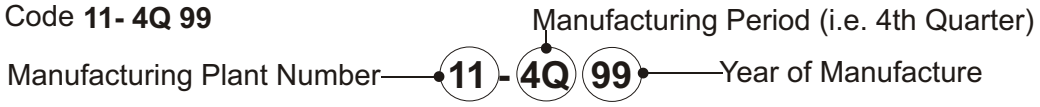

Hydraulink Sample Hose Code **2-2005 lot 050519/10**

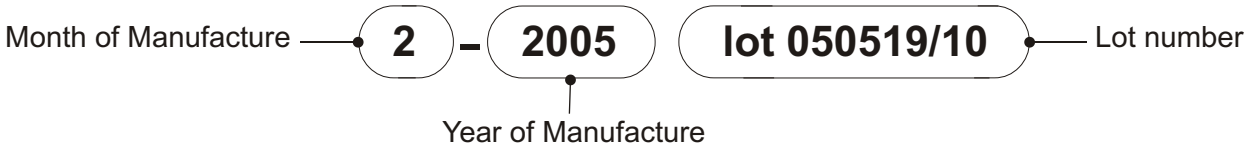

■ Lubrication

To obtain maximum life of any industrial equipment, a well planned maintenance programme should be followed. The following information is intended to provide guidelines for proper lubrication, however, some operating conditions will require more frequent checks and lubrication than listed - for example applications with much dust or moisture will require modification of the schedule to fit that particular application.

■ Lubrication Chart

ITEM	DESCRIPTION	LUBE	COMMENT	FREQUENCY
1.	Slew pinion	O.G.	Coat	Monthly
2.	Hydraulic reservoir	H.O.	Check level	Monthly
		H.O.	Drain and change	Yearly
3.	Slew bearing	G.P.	1 Nipple	Monthly

LUBRICANT TYPE	EXAMPLE
G.P. - General purpose grease	B.P. Energreaser L2 Lithium
H.O. - Hydraulic oil	Castrol Hyspin 32
O.G. - Open gear lubricant	Castrol S60 Chain Lube

https://truckmanualshub.com/

■ Lubrication

Specific lubricants as recommended by Snorkel, should be used in maintaining your unit. If in doubt regarding the use of lubricants other than those listed, contact Snorkel.

❑ Pressure gun application

Service all fittings as indicated in the Maintenance Schedule. Wipe away all excess lubricant from exposed surfaces. Over lubrication can collect dirt and foreign matter which acts as an abrasive. Lubrication of accessory equipment should be in accordance with the manufacturer's recommendations.

❑ Rotation bearing

Rotation bearing. Pressure gun lubricate bearing at recommended interval using lubricant as outlined in the maintenance schedule. Rotate while lubricating. Lubrication fitting is located on the font plate of the turntable.

❑ Rotation gear teeth and pinion

Rotation gear teeth and pinion. Gear teeth and gear box pinion should be lubricated with a multi purpose grease.

❑ Engines

Engine. Refer to the engine manufacturer's instruction manual or consult your local engine service representative if engine adjustments or repairs are needed. The engine MUST be operated in accordance with manufacturer's instructions and serviced at recommended intervals.

❑ Hydraulic oil reservoir

Hydraulic oil reservoir. The fluid level should be kept between the low and full marks on the sight gauge indicator and should be checked with all cylinders fully retracted and the platform in stowed position.

The interior of the reservoir should be wiped out and cleaned each time the hydraulic oil is changed.

It is absolutely necessary that only new, clean hydraulic oil is added.

⚠CAUTION

If it becomes necessary to add or use an oil other than the recommended fluid, it is important that it be compatible and equivalent to the factory fill. Local oil suppliers can generally furnish this information.

❑ Filling hydraulic system

This procedure must be followed when starting up a new machine or after any major service affecting the hydraulic system when a considerable volume of oil may have been drained from the system. It is also advisable to follow this procedure if there is any doubt about the condition of the machine, i.e. if it has been standing idle for more than a week, or as a safeguard, when a new operator is taking charge of the machine.

- Fill the reservoir with the recommended hydraulic oil. Leave the filler cap off so that any drop in the oil can be seen.
- Raise the lower boom fully then raise the upper boom fully.
- Rotate the turntable through 60° and back.
- Lower all booms.
- Check oil level again

The machines hydraulic system is now correctly filled.

NOTE - Oil Seals:

It is best to leave oil seals undisturbed if the machine is operating satisfactorily. If replacement of seals is necessary, extreme care must be taken not to damage the surface of the seals, cylinder bore or the chrome plated piston shaft.

Absolute cleanliness is essential.

⚠CAUTION

At all times when a cylinder is stripped down make sure that the cylinder bore and the piston rod are not damaged in any way. Particular care is necessary that the cylinder head nut is not allowed to drop off the head and damage the chromium plated shaft.

If questions still remain, contact Snorkel for further information.

■ Boom Cylinders

These comprise of a cylinder assembly and a piston rod assembly. The cylinder is a honed bore steel tube to which is welded the cylinder base. A holding and lowering valve is bolted to the bottom side of the cylinder. This must be removed before the cylinder may be dismantled.

⚠CAUTION

Care should be taken when removing these valves as pressure may be locked in the cylinder.

https://truckmanualshub.com/

To remove the piston rod assembly the procedure is as follows:

1. While the cylinder base is still connected to the column, use a 'C' spanner to release the cylinder head nut half a turn.
2. After removing the cylinder from the machine, fully extend the cylinder.
3. Unscrew the cylinder head nut and lift out the piston rod assembly.

The cylinder head is fitted with a wiper seal at the outer end, with the wiping edge outward to prevent dirt being drawn in as the piston rod is retracted.

Oil sealing between the piston rod and head is effected by a single acting seal.

The piston is bolted on to the shaft.

An 'O' ring is fitted to the piston bore and a double acting fluid seal with nylon wear rings seals between the piston and cylinder tube.

On assembly the piston must be locked on the shaft with a locking pin.

When re-assembling a cylinder it should be held vertically. Check that there are no sharp edges in the mouth of the cylinder which will cut the 'O' rings and lower the piston rod. As soon as the piston enters follow it up with the cylinder head to prevent crossing.

■ Hydraulic Hoses

Hydraulic hoses should be inspected frequently for damage, bulging under pressure, twisting or severe chafing.

⚠ DANGER

Hydraulic fluid escaping under pressure can have enough force to inject fluid into the flesh. Serious infection or reaction can result if medical treatment is not given immediately. In case of injury by escaping hydraulic fluid, seek medical attention at once.

After a hose is changed, it is essential to check the circuit and to ensure that all controls on both sets of valves move the platform in the correct direction. If not, stop the machine immediately and remedy the fault.

Care must be taken to ensure that the hoses are not twisted when tightening end fittings.

■ Slew Motor

The hydraulic motor and worm may be removed by using the following procedure.

1. Undo the bolts holding it to the base plate.
2. Disconnect the hoses from the valve block.

Assemble in reverse procedure, lubricating the worm with grease and ensuring the worm is in full mesh with the slewing gear.
Servicing of the hydraulic motor itself should only be attempted by authorised service agents.

■ Slew Brake (If fitted)

This should only be attempted by authorised service agents.

■ Control Valves

The control valves consist of a bank of three valves. The lower controls are connected to the upper controls by 'live hydraulic' systems.

If leakage occurs from the end caps, replacement of seals in the ends of the valve body is necessary. It is necessary to replace both seals since, in removing the valve spool from the body, the seals will be cut by the sharp edges of the ports drilled through the spool. (These sharp edges are essential to the operation of the valves.)

■ Basket Levelling

The basket levelling system is factory set and should never need altering. If the basket levelling is not correct, damage or creep may have occurred in part of the system. In this case a factory service agent should be consulted.

■ Battery

Battery. The battery will have longer life if the water level is maintained and it is kept charged. The unit will have better starting characteristics with a fully charged battery.

In cold weather the battery should be maintained at full charge to keep from freezing. An extremely low or dead battery can freeze in cold weather. Make sure connections are clean and tight.

Make sure charging equipment is operating properly.

⚠ DANGER

Lead-acid batteries contain sulfuric acid which will damage eyes or skin on contact. When working around batteries, ALWAYS wear a face shield to avoid acid in eyes.

If acid contacts eyes, flush immediately with clear water and get medical attention.

Wear rubber gloves and protective clothing to keep acid off skin, if acid contacts skin, wash off immediately with clear water.

https://truckmanualshub.com/

Lead-acid batteries produce flammable and explosive gases. NEVER allow smoking, flames or sparks around batteries.

■ Fault Finding

If any fault in the operation of the platform is experienced:

- First check the level and condition of the hydraulic oil.
- Check the power supply - Honda engine battery, PTO, clutch and coil.
- Check the position of the selector switch
- Check the emergency stop button.

NOTE:

If these checks fail to resolve the problem the fault finding chart below may provide some additional information as to the probable cause and remedy for the problem.

■ Fault Finding Chart

PROBLEM	CAUSE	SOLUTION
Lower Control Station Is Not Operational	Selector switch in wrong position	Check position of selector switch
	Emergency stop switch is on in platform	Check emergency stop switch in platform
	Failure of fuel/power supply	Check fuel level/power supply
	Battery faulty	Check condition of battery and terminals
Stabiliser Control Station	Selector switch in wrong position	Set selector switch to ground control
	Boom not stowed correctly	Ensure that the boom is correctly stowed
Motor Starts But Functions Are Inoperable	Stabilisers not completely down	Check that Blue line is visible (appears when stabiliser interlocks are complete)
	Faulty stabiliser limit switch	Replace faulty stabiliser limit switch
	Damage to interlock loom	Repair/replace interlock loom
Upper Control Station Is Not Operational	Selector switch in wrong position	Set selector switch to platform
	Stabilisers not completely down	Check that Blue line is visible (appears when stabiliser interlocks are complete)
Boom Will Not Lift	Speed control set to slowest speed	Set speed control to higher speed
	Safe working load exceeded	Remove excess weight from platform
	Faulty solenoid	Replace faulty solenoid
	Main relief set too low	Adjust setting on main relief
Upper Boom Creeping Down	Manual lowering valve not closed properly	Fully close manual lowering valve
	Lowering solenoid jammed open or leaking	Clean/service or replace lowering solenoid
	Worn or damaged seals on main lift cylinder	Replace worn/damaged seals on main lift cylinder
Telescope Out Not Working	Boom speed set to lowest speed	Increase boom speed setting
	Faulty electrical switch or solenoid	Replace faulty switch/solenoid
	Relief valve set too low	Adjust setting on relief valve

https://truckmanualshub.com/

■ Fault Finding Chart

PROBLEM	CAUSE	SOLUTION
Telescope In Not Working	Faulty switch or solenoid	Replace faulty switch/solenoid
Boom Down Inoperative	Faulty switch or solenoid	Replace faulty switch/solenoid
Hydraulic Oil Overheating	Low hydraulic oil level	Check hydraulic oil level
Platform Levelling Inoperative or Creeping	Air in cylinder	Bleed air from cylinder
	Leak in level system	Locate leak and repair

https://truckmanualshub.com/

■ Torque chart

NOM SIZE X PITCH	TENSILE STRESS AREA A_s (mm^2)	PROPERTY CLASS 8.8			PROPERTY CLASS 10.9		
		CLAMP LOAD W (N)	TORQUE (N.m)		CLAMP LOAD W (N)	TORQUE (N.m)	
			DRY k=0.20	LUBED k=0.15		DRY k=0.20	LUBED k=0.15
M3 x 0.5	5.03	2 200	1.32	0.99	2 990	1.79	1.34
M3.5 x 0.6	6.78	2 960	2.07	1.55	4 030	2.82	2.11
M4 x 0.7	8.78	3 830	3.07	2.30	5 220	4.17	3.13
M5 x 0.8	14.2	6 200	6.20	4.65	8 430	8.43	6.33
M6 x 1	20.1	8 770	10.5	7.90	11 950	14.3	10.8
M8 x 1.25	36.6	15 975	25.6	19.2	21 750	34.8	26.1
M8 x 1	39.2	17 100	27.4	20.5	23 275	37.3	27.9
M10 x 1.5	58.0	25 325	51	38.0	34 450	69	52
M10 x 1.25	61.2	26 725	53	40.1	36 350	73	55
M12 x 1.75	84.3	36 800	88	66	50 075	120	90
M12 x 1.25	92.1	40 200	96	72	54 700	130	98
M14 x 2	115	50 200	140	105	68 300	190	145
M14 x 1.5	125	54 550	155	115	74 250	210	155
M16 x 2	157	68 525	220	165	93 250	300	225
M16 x 1.5	167	72 900	235	175	99 200	320	240
M20 x 2.5	245	106 950	430	320	145 550	580	435
M20 x 1.5	272	118 750	475	355	161 550	650	485
M24 x 3	353	154 100	740	555	209 700	1 010	755
M24 x 2	384	167 600	805	605	228 100	1 100	820
M27 x 3	459	200 350	1 080	810	272 650	1 470	1 100
M27 x 2	496	216 500	1 170	875	294 600	1 590	1 150
M30 x 3.5	561	244 900	1 470	1 100	333 250	2 000	1 500
M30 x 3	580	253 150	1 520	1 140	344 500	2 070	1 550
M30 x 2	621	271 050	1 630	1 220	368 850	2 210	1 660
M33 x 3.5	694	302 950	2 000	1 500	412 250	2 720	2 040
M33 x 2	761	332 200	2 200	1 640	452 050	2 980	2 240
M36 x 4	817	356 600	2 570	1 930	485 300	3 490	2 620
M36 x 3	865	377 600	2 720	2 040	513 800	3 700	2 780
M39 x 4	976	426 000	3 320	2 490	579 750	4 520	3 390
M39 x 3	1 028	448 700	3 500	2 630	610 650	4 760	3 570
M42 x 4.5	1 121	489 300	4 110	3 080	665 850	5 590	4 200
M42 x 3	1 206	526 400	4 420	3 320	716 350	6 020	4 510
M45 x 4.5	1 306	570 050	5 130	3 850	775 750	6 980	5 240
M45 x 3	1 398	610 250	5 490	4 120	830 400	7 470	5 610
M48 x 5	1 473	642 950	6 170	4 630	874 950	8 400	6 300
M48 x 3	1 604	700 150	6 720	5 040	952 800	9 150	6 860

Grade marking

https://truckmanualshub.com/

■ To order service or repair parts

When placing an order for service or repair parts, please have the following information available for your machine.

✓ Machine model number

✓ Machine serial number

✓ Snorkel part number

✓ Description of part

✓ Quantity of parts required

✓ Your purchase order number

✓ Address for order to “Ship To”

✓ Your desired shipment method

All correspondence relative to this unit, such as field reports, discrepancy reports, requests for service information, etc., should be directed to:

Snorkel
36 Bruce Road
P.O. Box 1041
Levin 5500
New Zealand

Phone: +64 06 368-9168
Fax: +64 06 368-9164

Attention: Parts Department

❑ ANSI and OSHA compliance

All owners and users of the aerial platform must read, understand, and comply with all applicable regulations. Ultimate compliance to OSHA regulations is the responsibility of the user and their employer.

ANSI publications clearly identify the responsibilities of all personnel who may be involved with the aerial platform. A reprint of the “Manual of Responsibilities for Dealers, Owners, Users, Operators, Lessors and Lessees of ANSI/SIA A92.5-1992 Boom-Supported Elevating Work Platforms” is available from Snorkel dealers or from the factory upon request.

Copies are also available from:

Scaffold Industry Association
20335 Ventura Blvd. Suite 310
Woodland Hills, CA 91364-2471 USA

❑ Manuals

Manuals are available from Snorkel to support any of the machines that we produce.

The specific manual for EPV9.5T is as follows:

✓ EPV9.5T
Operating-Maintenance-Parts Manual
Snorkel Part Number 12743

Record machine information here:

Model number*

_____

Serial number*

_____

Date of purchase

_____

Purchased from

_____

Snorkel dealer or distributor

_____

* This information is found on the serial number placard attached to your machine.

https://truckmanualshub.com/

■ Controls

There are four 'sets' of controls on the EPV9.5T.

- Stabiliser controls mounted on the rear side of the the sub-frame.
- Base controls mounted adjacent to the stabiliser controls.
- Column controls mounted on the column.
- Platform controls.

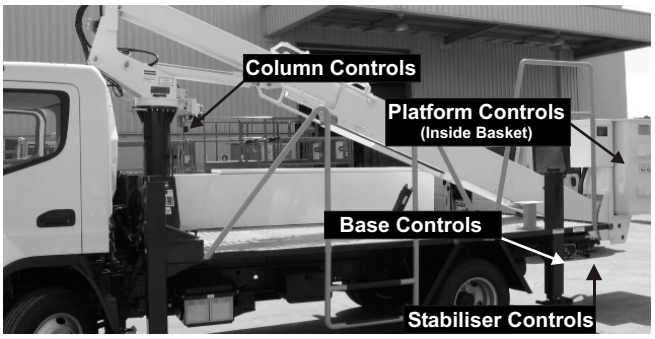

❑ Stabiliser control valves

Use these controls ❶ to set the stabilisers.

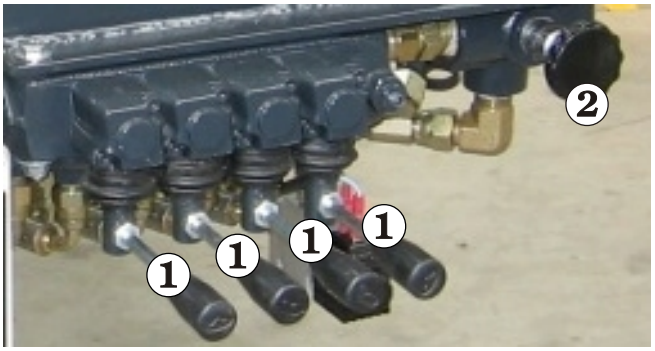

❑ Mode selector switch

Push this switch in to select boom operation ❷ and pull it out to select stabiliser operation.

❑ Base controls

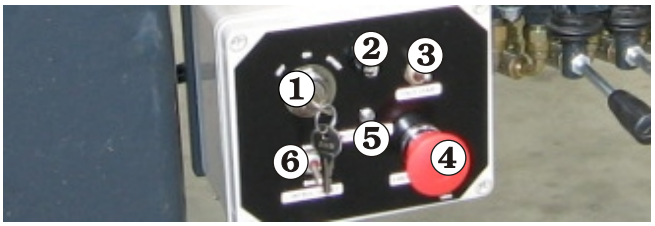

Base controls comprise the following

❶ Master key switch off/on/start.

❷ Fuse.

❸ Choke switch.

❹ Emergency stop switch.

❺ Lift enable light.

❻ Control station select

❑ Column controls

Column controls consist of ❶ a bank of switches and below that ❷ a bank of valve levers.

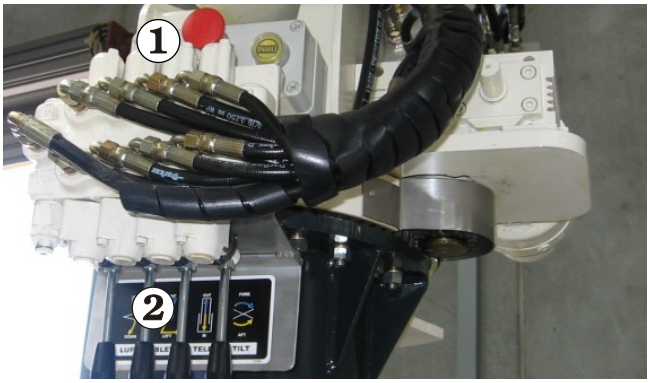

❑ Column controls (valve levers)

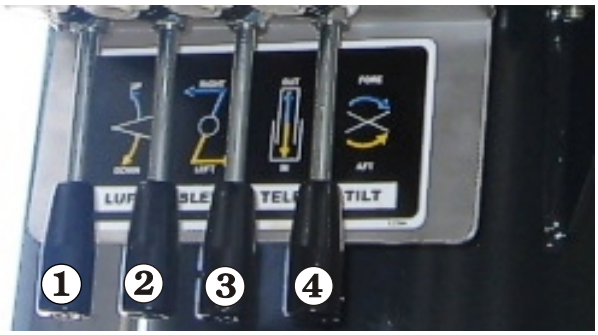

The control functions of the column valve levers are as follows:

❶ LUFF - move the boom up or down

❷ SLEW - move the boom right or left

❸ TELE - move the boom in or out

❹ TILT - move the basket up or down

All lever movement is horizontal.

NOTE - Operator in Platform

With an operator in the platform these lower control levers should be considered as being for emergency use only.

https://truckmanualshub.com/

❑ Column controls (switches)

The control functions of the column switches are as follows:

❶ Emergency stop switch

❷ Boom enable switches

Note - Boom Enable Switchs

Either of the enable switches must be held in while operating the boom control levers - it is not necessary to hold in both switches.

❸ Emergency lower switch

❑ Control select switch

This switch (located on the base control box and labelled boom/base) controls whether the platform (booms) or the column (base) is the operational control station.

❑ Platform controls

Platform controls consist of ❶ a bank of valve levers and below that ❷ a bank of switches.

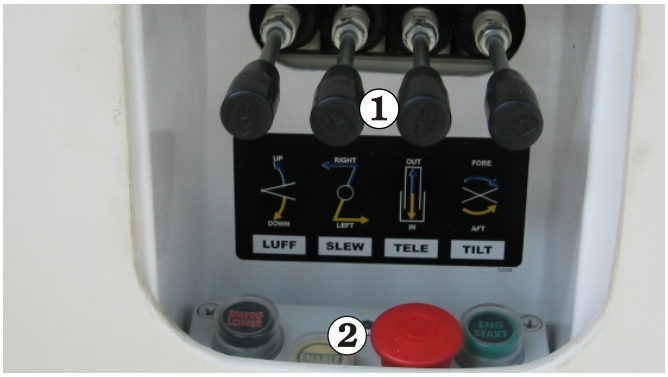

❑ Platform controls (valve levers)

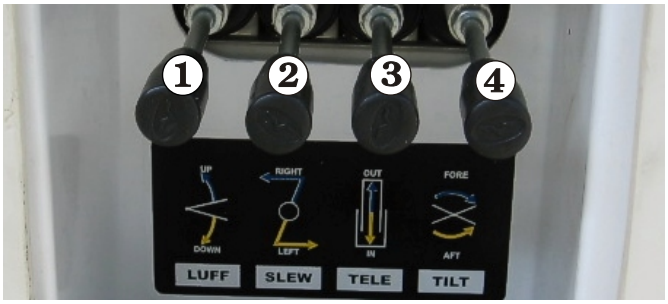

The control functions of the platform valve levers are as follows:

❶ LUFF - move the boom up or down

❷ SLEW - move the boom right or left

❸ TELE - move the boom in or out

❹ TILT - move the basket up or down

All lever movement is vertical.

❑ Platform controls (switches)

The control functions of the platform switches are as follows:

❶ Emergency lower switch

❷ Boom enable switch

❸ Emergency stop switch

❹ Engine start switch

❺ Lift enable light

https://truckmanualshub.com/

■ Pre-Operation inspection

At the start of each work day (or 8 hour shift), an EPV9.5T qualified operator must perform the daily inspection and maintenance (Pre-Operational Inspection) as listed below.

The purpose of the Pre-Operational Inspection is to keep the EPV9.5T in proper working condition and to detect signs of malfunction at the earliest possible time.

The EPV9.5T should be in the STOWED POSITION and the **Master Key Switch** set to OFF before you begin this inspection.

Defective parts and/or equipment malfunctions jeopardize the safety of the operator and other personnel, and can cause damage to the machine.

⚠DANGER

DO NOT operate an EPV9.5T that is known to be damaged or malfunctioning.

Repair all equipment damage or malfunctions, before placing the EPV9.5T into service.

❑ Battery condition

Check the condition of the battery terminals to ensure that they are clean and free from corrosion and that the battery cables are firmly attached.

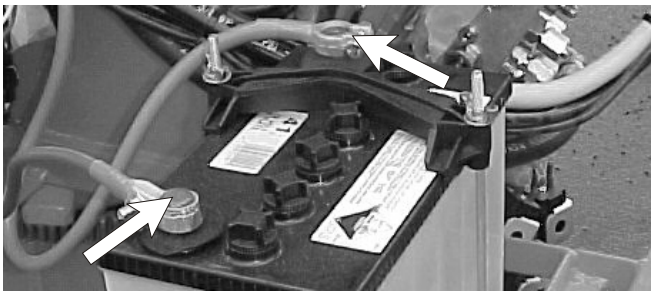

■ Battery fluid level

⚠DANGER

Batteries emit hydrogen and oxygen, elements that can combine explosively.

DO NOT smoke or permit open flames or sparks when checking batteries.

Remove the caps from the battery and visually check to see that the battery fluid is 1/4” (6 mm) below the bottom of the filler neck inside each hole.

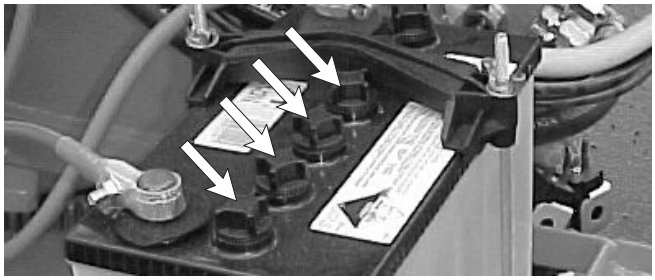

❑ Hydraulic oil level

To check the hydraulic oil level:

Completely lower the booms and ensure the stabilizers are in the stowed position. Check the fluid level against the gauge.

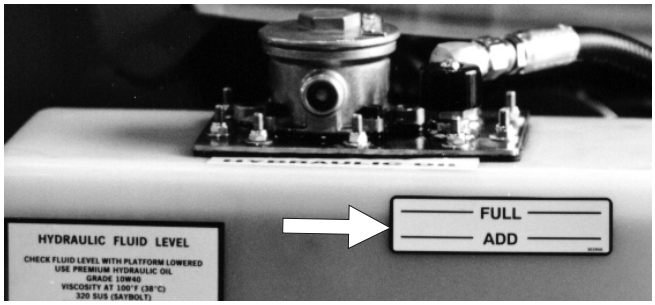

❑ Hydraulic oil filler cap

If necessary, add hydraulic oil at the filler cap.

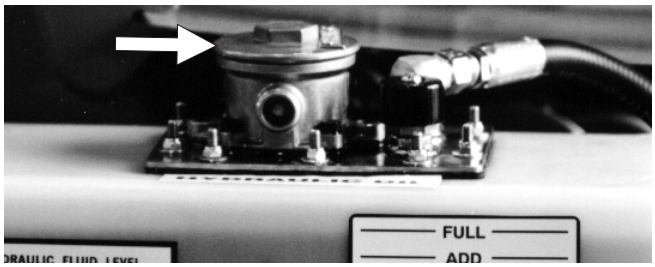

❑ Brake fluid level

Check the fluid level in the reservoir for the trucks brakes. Add brake fluid as necessary.

❑ Tyre pressure

Check the pressure of the truck tyres.

❑ Hand brake adjustment

Ensure that the handbrake is correctly adjusted and operating efficiently.

❑ Operation of truck lights

Ensure that all the trucks lights are operating correctly.

https://truckmanualshub.com/

❑ Engine oil level

Remove the oil filler cap and wipe the dipstick clean. Insert the dipstick into the oil filler neck, but do not screw it in.

If the level is low, fill to the top of the oil filler neck with the recommended oil.

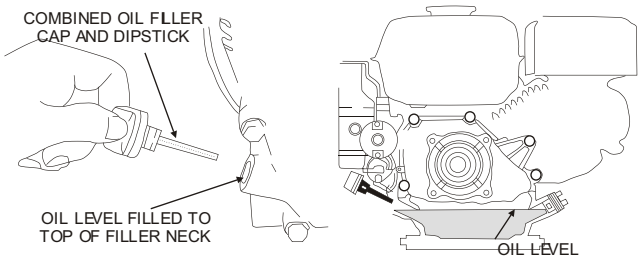

❑ Hydraulic oil leaks

⚠DANGER

Leaking hydraulic oil can cause burns, fires, falls (slipping), cuts, and puncture wounds (if under high pressure).Do not search for leaks with your hand. Have a qualified trained maintenance person repair all hydraulic fluid leaks before you operate an EPV9.5T.

Hydraulic oil leaks are easily visible and can show up anyplace.

Visually inspect the entire machine for hydraulic oil. Check the ground under the machine for leaked oil.

Carefully inspect the ends of the booms. Oil can run down inside of the booms and drip out the end.

❑ Fuel level and tank cap

Visually check to see that the gasoline tank is full with the correct grade of fuel. Ensure that the tank cap is in palce and fully tight.

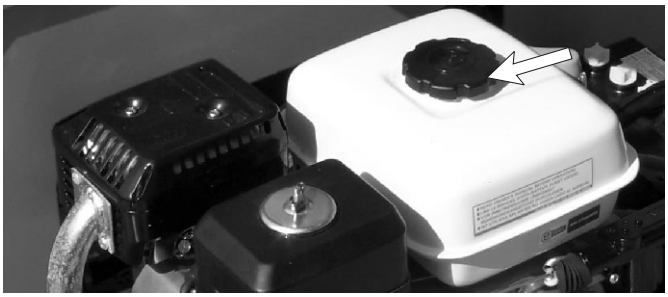

❑ Fuel leaks

Visually inspect the Honda fuel tank and the entire length of the fuel line, from the engine to the fuel tank, for leaks.

❑ Bolts and fasteners

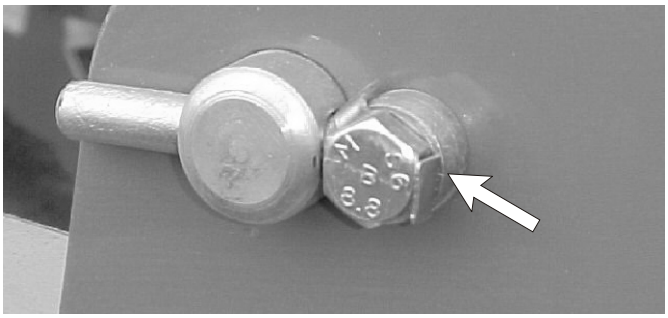

Visually inspect all fasteners to see that none is missing or obviously loose.

Critical pin retainer bolts have lock tab washers fitted, they should all be present and not damaged in any way.

Check that pivot pins are secure.

❑ Wiring harnesses

Inspect all the wiring harnesses, on the machine, for loose connections, broken wires, and frayed insulation.

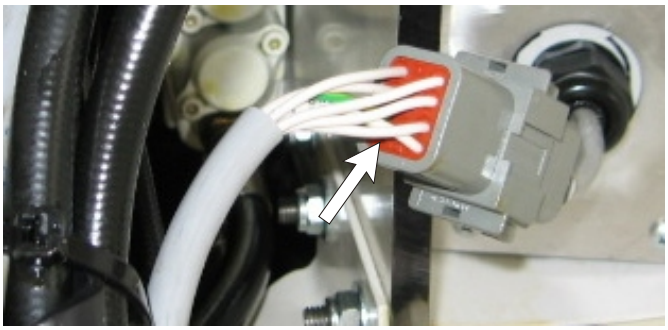

❑ Welds and structure

Visually inspect all welds for cracks, all structural members for deformity.

❑ Insulation covers (if applicable)

If your machine is an insulated unit then you should check that all insulated covers are clean, free from damage and correctly in place.

NOTE:

***DO NOT** operate an insulated EPV9.5T if any covers are missing, damaged or dirty.*

https://truckmanualshub.com/

❑ Lanyard anchor points

Visually check the lanyard anchor points to see that they are not deformed or cut off.

■ Operation

⚠CAUTION

Although the control features of this unit have been built as simply as possible, it should not be used by in-experienced operators.

■ Parking of Unit

1. Park the unit in the best position enabling easy access to the object being worked on.
2. Make sure the ground on which the vehicle is parked is FIRM - otherwise wheels and stabilisers may sink causing the unit to overturn.
3. If parking on a hill, the unit must face directly up and down the gradient.
4. Lock the parking brake on the truck and use wheel blocks if necessary.

■ Preparation of the Unit

1. Ensure that the platform, column and base emergency stop buttons are disengaged (out).
2. Insert the key at the lower control box and turn it on.
3. Start the engine (or engage the P.T.O). The engine can be started from either the base or the platform.
4. If necessary activate the choke control on the lower control box.
5. Select BASE on the lower control box with the boom/base selector switch.
6. Activate the leg/booms selector button on the chassis sub-frame. Pull out the button to activate the stabiliser legs.
7. Select the order in which the stabilisers are to be lowered using the selector valve mounted on the sub-frame.
   Fully extend all stabilisers until firmly on the ground.
   If the ground is uneven, level up the unit on the stabilisers using the levelling bubble as a guide.

NOTE - Interlocks

This unit is fitted with interlocks and the stabilisers must be extended until the 'blue stripe' is visible.

If the stabilisers are not properly extended and fully down and the blue stripe is not visible the unit will not operate.

⚠DANGER

If the basket is up and the ground compresses unevenly under different jacks the unit might fall over causing serious injury or death. Check the level bubble frequently during operation. If any movement of the bubble occurs, immediately lower the basket and readjust the jacks to re-center the bubble.

8. Ensure the jack foot plates are in full contact with the ground and that they are clear of manhole covers, drains, etc., which may collapse.
   If the ground is at all soft, steel plates at least 300mm x 300mm x 6mm should be placed under the feet to spread the weight.

⚠WARNING

When lowering the stabiliser legs take care not to trap feet beneath the stabiliser foot pad.

When the stabilisers are set correctly the lift enable light on the base control box will be illuminated.

9. The boom cradle lock pin must be removed before operating the boom. remove the pin keeper ❶ from the pin and then remove the pin ❷ from the cradle.

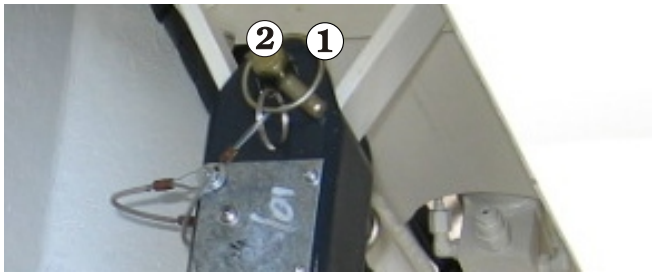

https://truckmanualshub.com/

■ Gradients and Cambers

This unit is intended for use on hard, level ground and has a very adequate safety factor under these conditions.

Caution must be used when operating on gradients, cambers and uneven ground.

1. The unit should be positioned so that it is possible to work on the 'up-hill' side of the unit, with the truck facing 'down-hill'.
   The platform can then be used safely at maximum height and at full horizontal extension with full pay-load in the basket.
2. If it is necessary to work on the 'down-hill' side, the basket load and/or horizontal extension must be reduced accordingly.

The unit is now ready for operation.

■ Access to Basket

Access to the basket is gained from the side and by climbing steps.

The operator may now enter the basket noting the machine will only lift the safe maximum working load from this position.

Safety harnesses, and any other safety device, which is required by law must be worn when using the machine.

■ Boom Operation

- Raise the boom taking care not to slew or extend the inner boom until clear of the boom rest.
- To extend the inner boom operate the tele function control lever.
- When lowering push the lever to the lower position until the boom begins to lower.
- Take care when lowering the boom to the boom rest that the inner boom is fully telescoped in
- With a little practice extremely accurate control of all movements can be achieved.

❑ To slew (swing) the booms

The booms can be slewed 400° but they must be raised clear of the forward boom restraining point. When slewing be aware of the position of the knuckle at all times. To slew booms push the control lever in the direction required.

❑ Stowing for travel

When finishing the work ensure the boom is slewed to the travel position, completely lowered and locked into place with the boom lock pin.

Before travelling ensure all leg jacks are fully raised.

Ensure no tools are left in the basket or on the machine.

⚠WARNING

Do not drive the truck with the boom unstowed or not properly locked down as damage will occur to the boom and slew mechanism.

■ Emergency Lowering

In the event of a power failure or operator incapacity, press the emergency lower switch at either the platform or the column control station.

Note - Boom retraction

The booms will not retract during an emergency lower procedure.

https://truckmanualshub.com/

Knowledge of the information in this manual, and proper training, provide a basis for safely operating the EPV9.5T. Know the location of all the controls and how they operate to act quickly and responsibly in an emergency.

Safety devices reduce the likelihood of an accident. Never disable, modify, or ignore any safety device. Safety alerts in this manual indicate situations where accidents may occur.

If any malfunction, hazard or potentially unsafe condition relating to capacity, intended use, or safe operation is suspected, stop the operation of the EPV and seek assistance.

The operator bears ultimate responsibility for following all manufacturers instructions and warnings, regulations and safety rules of their employer and/or any country or regional law.

■ Electrocution Hazards

The EPV is an all metal boom aerial work platform and is not electrically insulated. Do not operate it near electrical conductors. Regard all conductors as being energized. Do not operate outside during a thunderstorm.

❑ Minimum safe approach distance

Minimum safe approach distances to energised power lines and their associated parts must be observed wile operating the EPV.

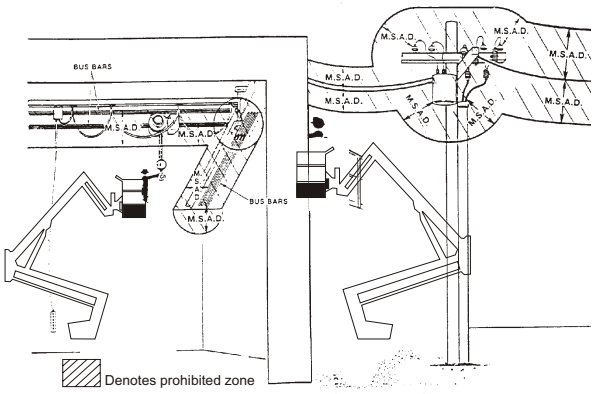

Caution: - Diagrams shown are only for purposes of illustrating M.S.A.D. Work positions, not all work positions.

Figure1. - Minimum Safe Approach Distance

⚠DANGER

The EPV is not electrically insulated. Death or serious injury can result from contact with, or inadequate clearance from, an energised conductor. Do not go closer than the minimum safe approach distance as defined by ANSI.

ANSI publications define minimum distances that must be observed when working near bus bars and energised power lines. Figure 1 and Table 1 are reprinted courtesy of the Scaffold industry Association, ANSI/SIA A92.5

Voltage Range (Phase to Phase	Minimum Safe Approach Distance	
	Feet	Metres
0 to 300V	Avoid Contact	
Over 300V to 50kV	10	3.05
Over 50kV to 200kV	15	4.60
Over 200kV to 350kV	20	6.10
Over 350kV to 500kV	25	7.62
Over 500kV to 750kV	35	10.7

Table 1. - Minimum Safe Approach Distance

■ Pre-operation Inspection

At the start of each work shift, the EPV9.5T shall be given a visual inspection and function test. See the “Operation” chapter, in this manual for a list of items to inspect and test

⚠WARNING

DO NOT operate the EPV9.5T unless you are trained and authorized, understand the operation characteristics of the EPV9.5T, and have inspected and tested all functions to be sure they are in proper working order

■ Work Place Inspection and Practices

Do not use the EPV9.5T as a ground for welding. Ground to the work piece.

Before the EPV9.5T is used, and during use, check the area in which the EPV9.5T is to be used for possible hazards such as, but not limited to:

- Drop-offs or holes.
- Side slopes.
- Bumps and floor obstructions.
- Debris.
- Overhead obstructions and electrical conductors.
- Hazardous locations.
- Inadequate surface and support to withstand all load forces imposed by the aerial platform in all operating configurations.
- Wind and weather conditions.

https://truckmanualshub.com/

- Presence of unauthorized persons.
- Other possible unsafe conditions.

Before the EPV9.5T is used, determine the hazard classification of any particular atmosphere or location according to ANSI/NFPA 505-1987.

Any EPV9.5T operated in a hazardous location must be approved and of the type required by ANSI/NFPA 505-1987.

While operating the EPV a recommended safety practice is to have trained and qualified personnel in the immediate work area of the EPV9.5T to:

- Help in case of an emergency.
- Operate emergency controls as required.
- Watch for loss of control by platform operator.
- Warn the operator of any obstructions or hazards that may not be obvious to them.
- Watch for soft terrain, sloping surfaces, drop-offs, etc., where stability could be jeopardized.
- Watch for bystanders and never allow anyone to be under, or to reach through the booms while operating the aerial platform.

⚠DANGER

Pinch points may exist between moving components. Death or serious injury can result from becoming trapped between components, buildings, structures, or other obstacles. Make sure there is sufficient clearance around the machine before moving the chassis, booms, or platform. Allow sufficient room and time to stop movement to avoid contact with structures or other hazards.

Keep ground personnel from under the platform when the platform is raised.

Secure all accessories, containers, tools, and other materials in the platform to prevent them from accidentally falling or being kicked off the platform.

Always look in the direction of travel. Drive with care and at speeds compatible with the work-place conditions. Use caution when driving over rough ground, on slopes, and when turning.

Do not engage in any form of “horseplay” or “stunt driving” while operating the EPV9.5T.

Do not permit riders on the machine anyplace other than on the platform.

Remove all loose objects stored in or on the machine, particularly in the platform. Remove all objects which do not belong in or on the machine.

Never steady the platform by positioning it against another platform.

Do not operate an EPV9.5T that is damaged or not functioning properly. Do not use the EPV until the machine has been repaired by a qualified maintenance person.

Do not operate a EPV9.5T that does not have all its decals and placards attached and legible.

Watch for bystanders and never allow anyone to be under, or to reach through, the machine and its equipment while operating.

■ Operation

If you encounter any suspected malfunction of the aerial platform, or any hazard or potentially unsafe condition relating to capacity, intended use, or safe operation, cease operation immediately and seek assistance from management.

Use three points of support when getting on or off the platform (two hands and one foot or a similar set of points). Keep the platform clean.

Maintain a firm footing on the platform floor. Operate the controls slowly and deliberately to avoid jerky and erratic operation. Always stop the controls in neutral before going in the opposite direction.

Do not dismount while the platform is in motion or jump off the machine.

Do not start until all personnel are clearly away from the machine.

Never cover the floor grating or otherwise obstruct your view below. Make sure the area below the platform is free of personnel before lowering.

■ Tipover and Falling Hazards

Operate the EPV only on a firm, flat, level surface capable of withstanding all load forces imposed by the EPV9.5T in all operating conditions.

⚠DANGER

The EPV can tip over if it becomes unstable. Death or serious injury can result from a tip-over accident. Do not drive or position the EPV platform for elevated use near any drop-ff, hole, slope, soft or uneven ground, or other tip-over hazard.

Care shall be taken to prevent rope, electric cords, and hoses, etc., from becoming entangled in the aerial platform. If the platform or elevating assembly becomes caught, snagged, or otherwise prevented from normal motion by an adjacent structure or other obstacle such that control reversal does not free the platform, remove all personnel from the platform

https://truckmanualshub.com/

before attempts are made to free the platform using ground controls.

Under normal working conditions it is best not to transfer from the platform to another structure or vice versa, unless that is the safest way to do the job. Each situation must be judged separately taking the work environment into account. The following guidelines apply:

1. Where possible, place the work platform over a roof or walking structure to do the transfer.
2. Transfer your anchorage from one structure to another before you step across.
3. Remember, you might be departing the work platform to a structure where fall arrest is required.
4. Do not climb over or through the guardrails. Use the platform entrance.

All platform occupants MUST wear and use fall restraint. Attach fall restraints to the platform lanyard anchor points.

Do not exceed the unrestricted platform capacity as indicated on the capacity placard at the entrance to the platform. Do not carry loads from any point outside of the platform.

Make sure that all protective guards, cowlings, and doors are in place and secure. Be sure the guardrail system, including the gate, is in place and secure.

Do not climb on the guardrails or use ladders, planks, or other devices to extend or increase your work position from the platform.

Do not use the EPV as a crane, hoist, or jack,or for any other purpose other than to position personnel, their tools, and materials.

Do not operate the EPV9.5T in winds, or wind gusts, of 28 mph, 45kph 12.5 m/s) or more and do not add anything to the EPV9.5T that will increase the wind loading (banners, flags, etc.).

■ General Safety Precautions

Do not modify the EPV9.5T in any way.

When parts or components are replaced, they shall be identical or equivalent to original Snorkel parts or components.

Do not override any of the safety features of the EPV9.5T

■ Hydraulic System Precautions

The hydraulic system contains hoses with hydraulic fluid under pressure.

⚠ DANGER

Hydraulic fluid escaping under pressure can have enough force to inject fluid into the flesh. Serious infection or reaction can result if medical treatment is not given immediately. In case of injury by escaping hydraulic fluid, seek medical attention at once.

DO NOT place your hand or any part of your body in front of escaping hydraulic fluid. Use a piece of cardboard or wood to search for hydraulic leaks.

Do not attempt repairs to hydraulic systems unless you are trained. Refer to experienced repair personnel for help.

■ Fire Prevention

Never operate your EPV near a flame or spark. Hydraulic oil and gasoline are flammable and can explode.

NOTE:

This machine is equipped with an internal combustion engine (in it's standard configuration) and should not be used on or near any unimproved forest-covered, brush-covered or grass covered land unless the engine's exhaust system is equipped with a spark arrester meeting applicable laws. If a spark arrester is used, it should be maintained in effective working order by the operator.

■ Engine and Fuel Handling Precautions

⚠ DANGER

Engine exhaust contains carbon monoxide, a poisonous gas that is invisible and odorless. Breathing engine exhaust fumes can cause death or serious illness. Do not run the engine in an enclosed area or indoors without adequate ventilation.

Only refuel your EPV outdoors in a clear area void of gas fumes or spilled gas.

Never remove the fuel cap or refuel a gasoline engine while the engine is running or hot. ALWAYS allow the engine to cool before refueling. Never allow fuel to spill on hot machine components.

⚠ CAUTION

Do not smoke or permit open flames while fueling or near fueling operations.

Maintain control of the fuel filler nozzle when filling the tank.

https://truckmanualshub.com/

⚠WARNING

ENSURE you use an approved fuel container with appropriate fuel filler nozzle (see picture below)

Do not fill the fuel tank to capacity. Allow room for expansion.

If gasoline is spilled, clean up spilled fuel immediately, push/tow the EPV away from the area of the spill and avoid creating any source of ignition until the spilled fuel has evaporated.

Tighten the fuel tank cap securely. If the fuel cap is lost, replace it with an approved cap from Snorkel. Use of a non-approved cap without proper venting may result in pressurization of the tank.

Never use fuel for cleaning purposes.

For diesel engines, use the correct fuel grade for the operating season.

■ Batteries

Charge batteries in a well ventilated area free of flame, sparks, or other hazards that might cause fire or explosion.

⚠WARNING

Batteries give off hydrogen and oxygen that can combine explosively. Death or serious injury can result from a chemical explosion. Do not smoke or permit open flames or sparks when checking batteries.

Battery acid can damage the skin and eyes. Serious infection or reaction can result if medical treatment is not given immediately. Wear face and eye protection when working near batteries.

Batteries contain sulfuric acid that can damage your eyes or skin on contact. Wear a face shield, rubber gloves, and protective clothing when working around batteries. If acid contacts your eyes, flush immediately with clear water and get medical attention. If acid contacts your skin, wash off immediately with clear water.

■ Safety Decals and Placards

There are several safety decals and placards on the EPV9.5T. Their locations and descriptions are shown in this manual. Take time to study them.

⚠CAUTION

Be sure that all the safety decals and placards on the EPV9.5T are legible. Clean or replace them if you cannot read the words or see the pictures. Clean with soap & water and a soft cloth. Do not use solvents.

You MUST replace a decal or placard if it is damaged, missing, or cannot be read. If it is on a part that is replaced, make sure a new decal or placard is installed on the replaced part. See your Snorkel dealer for new decals and placards.

https://truckmanualshub.com/

Section 1. - Repair Parts

Base boom assembly 1-2
Base boom assembly drawing 1-3
Tip boom assembly 1-4
Tip boom assembly drawing 1-5
Base boom cable track 1-6
Base boom cable track drawing 1-7
Tip boom cable track drawing 1-8
Tip boom cable track 1-9
Extension cylinder assembly 1-10
Column assembly 1-11
Slew box assembly 1-12
Slew box assembly drawing 1-13
Fibreglass basket assembly 1-14

Base boom assembly

https://truckmanualshub.com/

Item	Part No	Qty	Description
1.	12572	1	Base boom weldment
2.	3624-1	2	Bearing, boom pivot
3.	3624-9	1	Bearing, Level master cylinder pivot
4.	3624-18	1	Bearing, luff cylinder pivot
5.	11018	1	Tele cylinder
6.	015-0170	1	Pin
7.	3636-4	2	Split pin
8.	12611	1	Ramp, hose protector
10.	11046	2	Pad stop bar
11.	3610-10016	4	Set screw
12.	3605-10	4	Spring washer
13.	11050	1	Slide pad, lower (rectangular)
14.	015-0115	4	Slide pad, side
15.	015-0117	4	Shim, (0.8thk), as required)
	015-0118	4	Shim, (1.6thk), as required
16.	60017-006	8	Set screw
17.	3605-10	8	Spring washer
18.	007-2682	1	Slide pad, upper (circular)
19.	007-3111	1	Spacer, (3.2thk), as required
	007-283	1	Spacer, (6.3thk), as required
20.	3663-10045	4	Set screw
21.	3611-10	4	Nyloc nut
22.	007-2681	1	Mount plate, upper wear pad
23.	3610-10020	4	Set screw

Base boom assembly drawing

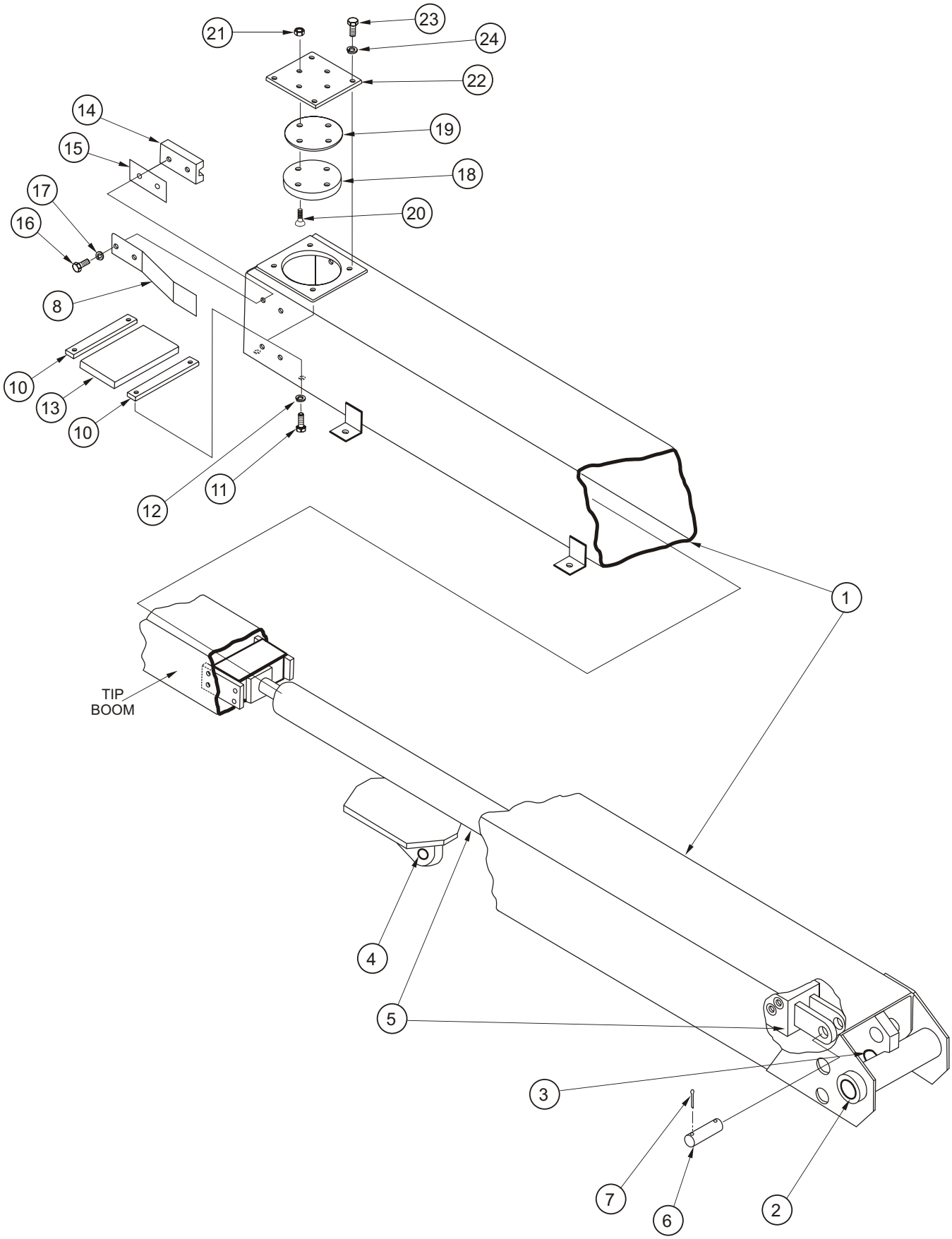

Tip boom assembly

https://truckmanualshub.com/

Item	Part No.	Qty	Description
1.	11031	1	Tip boom weldment
2.	11018	1	Tele cylinder assembly
3.	3610-10025	8	Set screw
4.	11031-3	4	Locking tab
5.	015-0121	3	Slide pad, (12.7thk)
6.	015-0122	2	Slide pad, (15.9thk)
7.	3663-10035	10	Set screw
8.	11049-1	5	Shim, (0.8thk), as required
	11049	11	Shim, (1.6thk), as required
9.	3603-10	10	Flat washer
10.	3611-10	10	Nyloc nut
11.	015-0939	1	Slave level cylinder
12.	11044	1	Mount bracket, inner, (slave level cylinder)
13.	11062	1	Pin
14.	3610-10025	4	Set screw
15.	3605-10	4	Spring washer
16.	12578	1	Mount bracket, outer
17.	8628	1	Pin keeper
18.	3610-06012	1	Set screw
19.	11492-1	1	Locking tab
20.	11188	1	Pin

https://truckmanualshub.com/

Tip boom assembly drawing

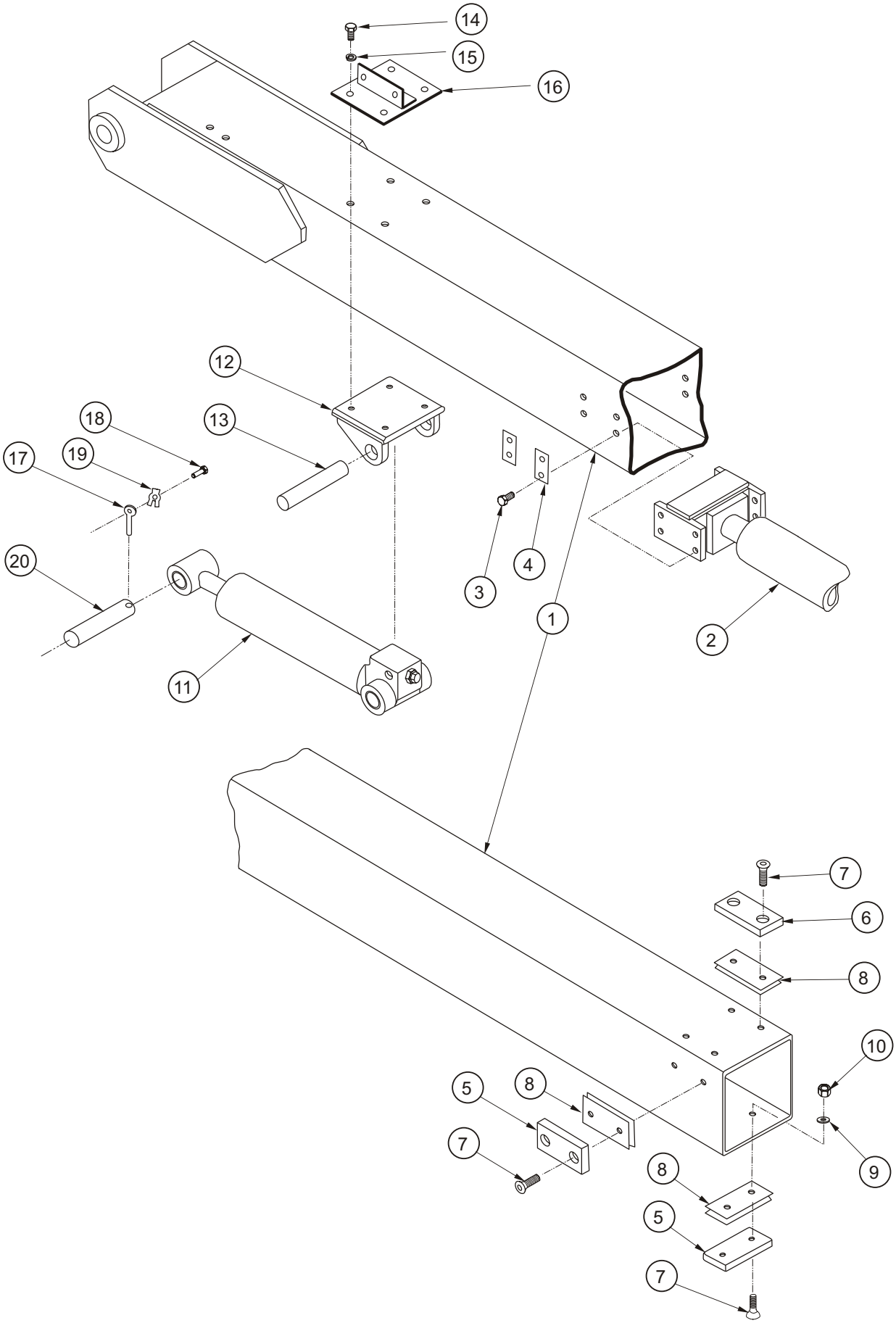

Base boom cable track

https://truckmanualshub.com/

Item	Part No.	Qty	Description
1.	12572	1	Base boom weldment
2.	12573	1	Tube, hose conduit
3.	3668-08012	6	Screw
4.	3603-08	6	Spacer washer
5.	12611	1	Ramp, hose protector
6.	12572-1	1	Hose, clamp half
7.	12572-2	2	Hose, clamp cushion
8.	3610-08060	1	Bolt
9.	3603-08	1	Flat washer
10.	3611-08	1	Nyloc nut
11.	12575	1	Lower tray weld
12.	3610-08025	2	Bolt
13.	3603-08	2	Flat washer
14.	3611-08	2	Nyloc nut
15.	12146-3	2	Tiewrap plate (for Igus 350.050)
16.	12146-2	1	Mounting bracket set (Igus 3050.34PZ)
17.	3606-06016	4	Screw
18.	3603-06	4	Flat washer
19.	3611-06	4	Nyloc nut
20.	12146-1	24	Chain link (Igus 350.050.075)

https://truckmanualshub.com/

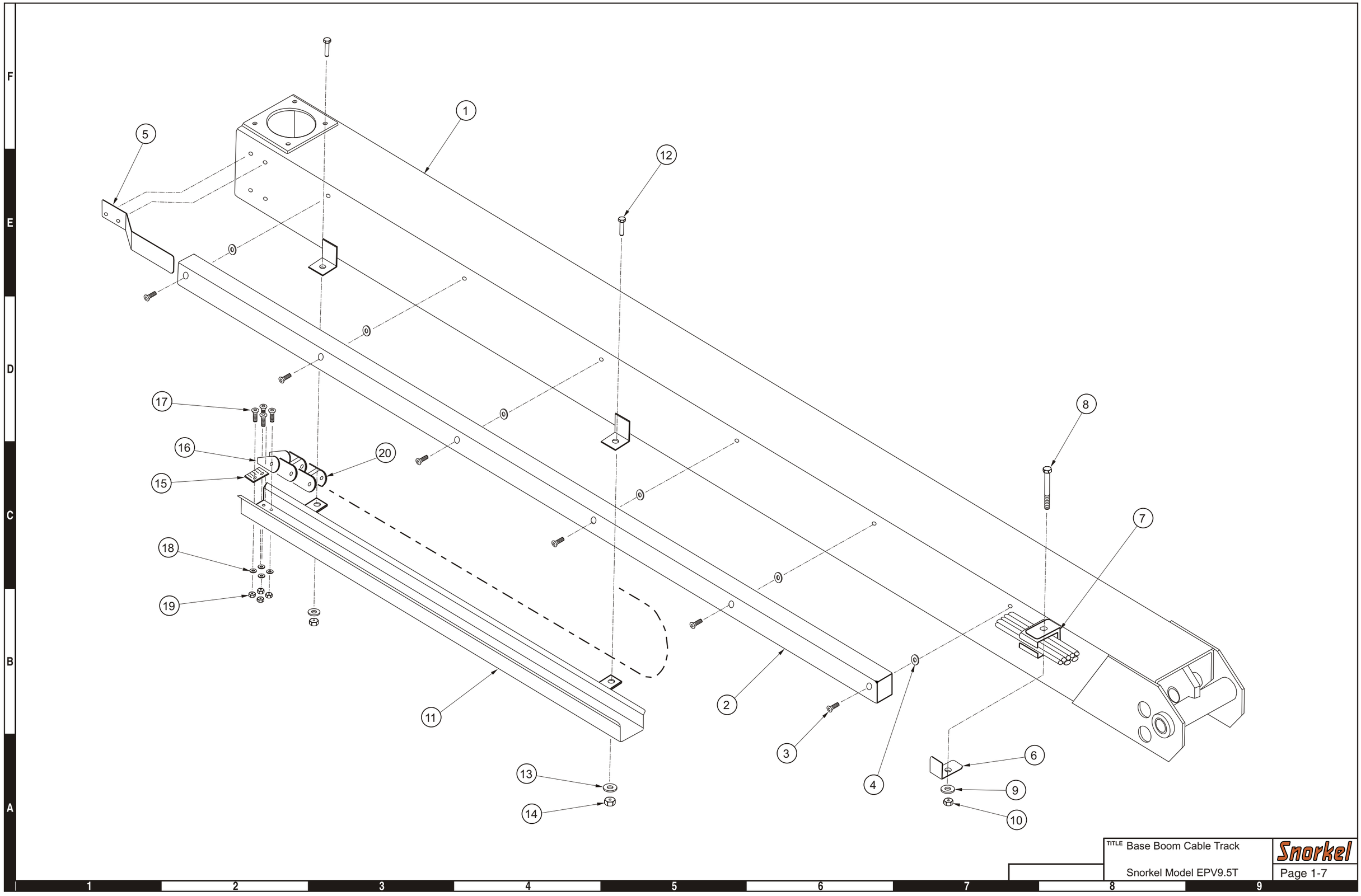

TITLE Base Boom Cable Track

Snorkel Model EPV9.5T

Snorkel

https://truckmanualshub.com/

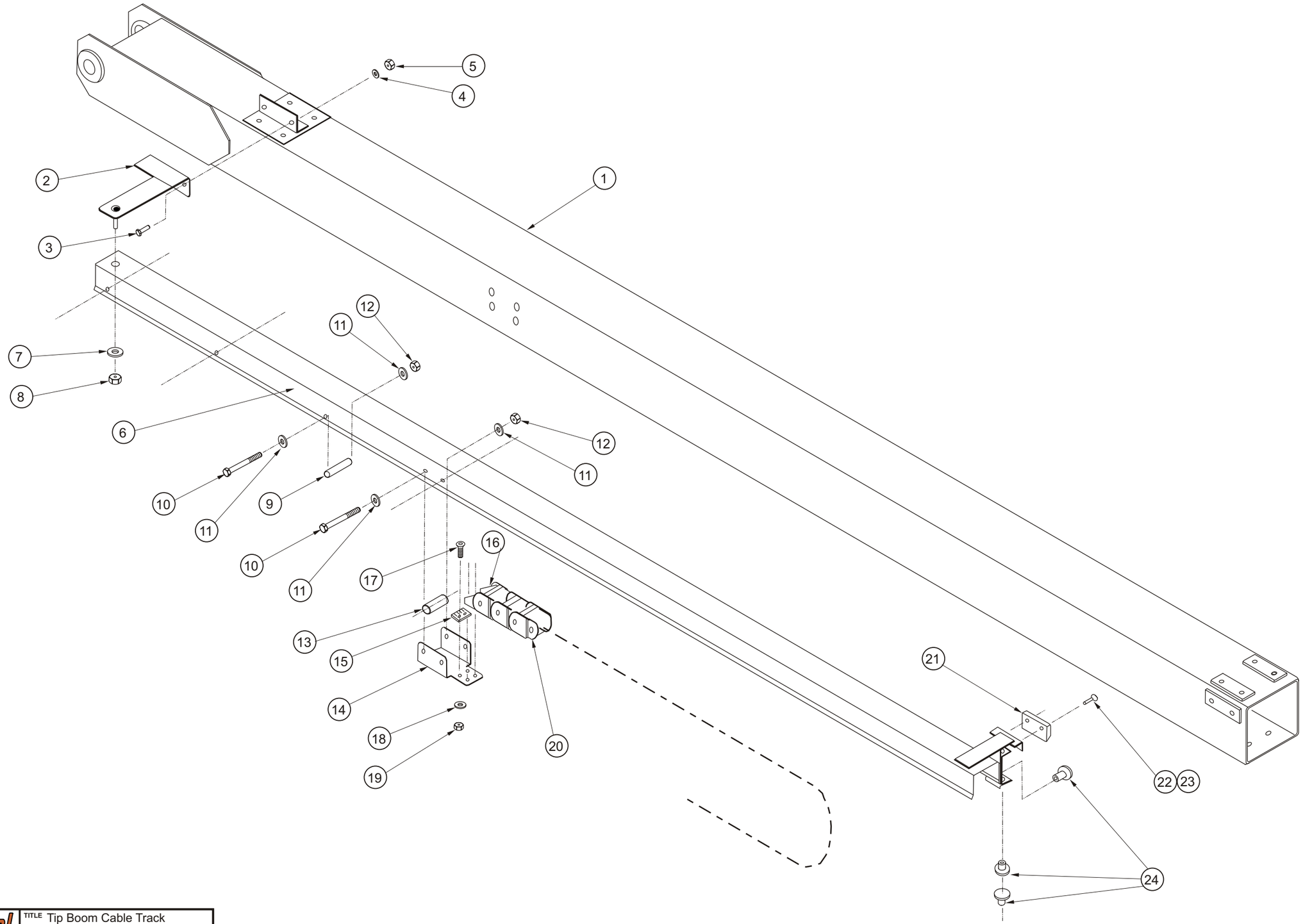

Snorkel

TITLE Tip Boom Cable Track

Snorkel Model EPV9.5T

https://truckmanualshub.com/

Item	Part No.	Qty	Description
1.	11031	1	Tip boom weldment
2.	12577	1	Drag arm
3.	3610-08025	2	Bolt
4.	3603-08	2	Flat washer
5.	3611-08	2	Nyloc nut
6.	12582	1	Upper tray weldment
7.	3603-10	1	Flat washer
8.	3608-10C	1	Nut
9.	12583	3	Spacer tube
10.	3610-06090	5	Bolt
11.	3603-06	10	Flat washer
12.	3611-06	5	Nyloc nut
13.	12583-1	2	Spacer tube
14.	12581	1	Anchor bracket
15.	12146-3	2	Tiewrap plate (for Igus 350.50)
16.	12146-2	1	Mounting bracket set (Igus 3050.34PZ)
17.	3606-06016	4	Screw
18.	3603-06	4	Flat washer
19.	3611-06	4	Nyloc nut
20.	12146-1	24	Chain link (Igus 350.050.075)
21.	11143-2	1	Wear pad, upper tray slide bracket
22.	3606-06016	2	Screw
23.	3611-06	2	Nyloc nut
24.	11658-20	3	Wear button, snap-in, round

Extension cylinder assembly

https://truckmanualshub.com/

Item	Part No.	Qty	Description
1.	015-0053	1	Extension cylinder
	601-0294		replacement cartridge holding valve
2.	11018-1	1	Hydraulic tube assembly
3.	3618-80	1	Clamp
4.	60015-053	4	Cap screw
5.	006-0089	2	Slide pad
6.	11045	1	Cylinder mount weldment
7.	556-0164	1	Self locking nut
8.	3636-1	1	Cotter pin

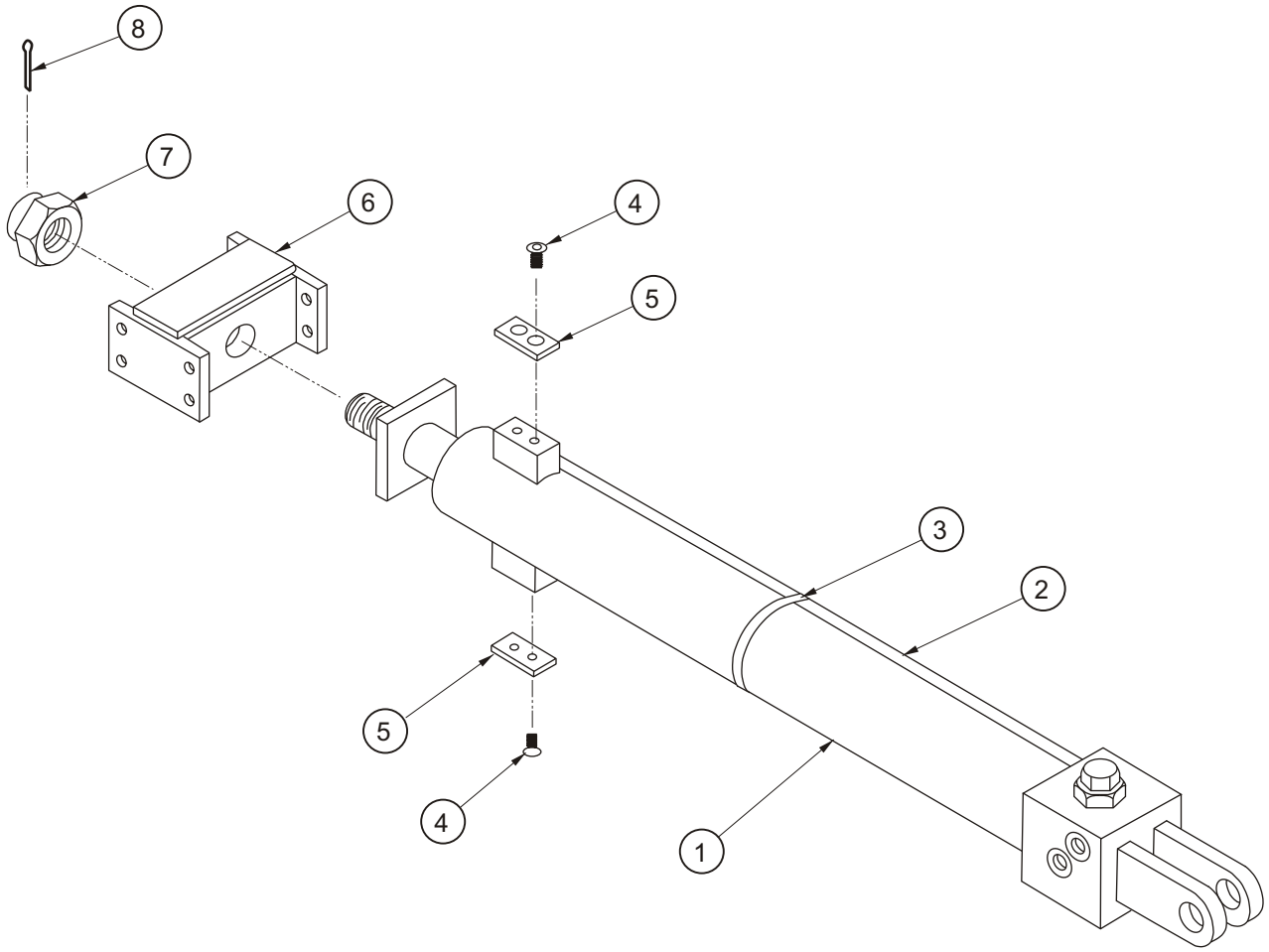

N11018

https://truckmanualshub.com/

Item	Part No.	Qty	Description
1.	11021	1	Column weld
2.	10179	1	Cover, slew pinion
3.	10149A	1	Slew drive assembly (refer to slew box assembly drawing)
4.	11036	1	Slew bearing
5.	3610-12080	37	Bolt
	3610-12090	2	Bolt
6.	3602-12	39	Nut
7.	3631-12	39	Disc lock washer
8.	8626	2	Pin keeper
9.	11156	1	Pin, lift cylinder - column
10.	11063	1	Pin, boom - column
11.	8626	1	Pin keeper
12.	11064	1	Pin, level - column

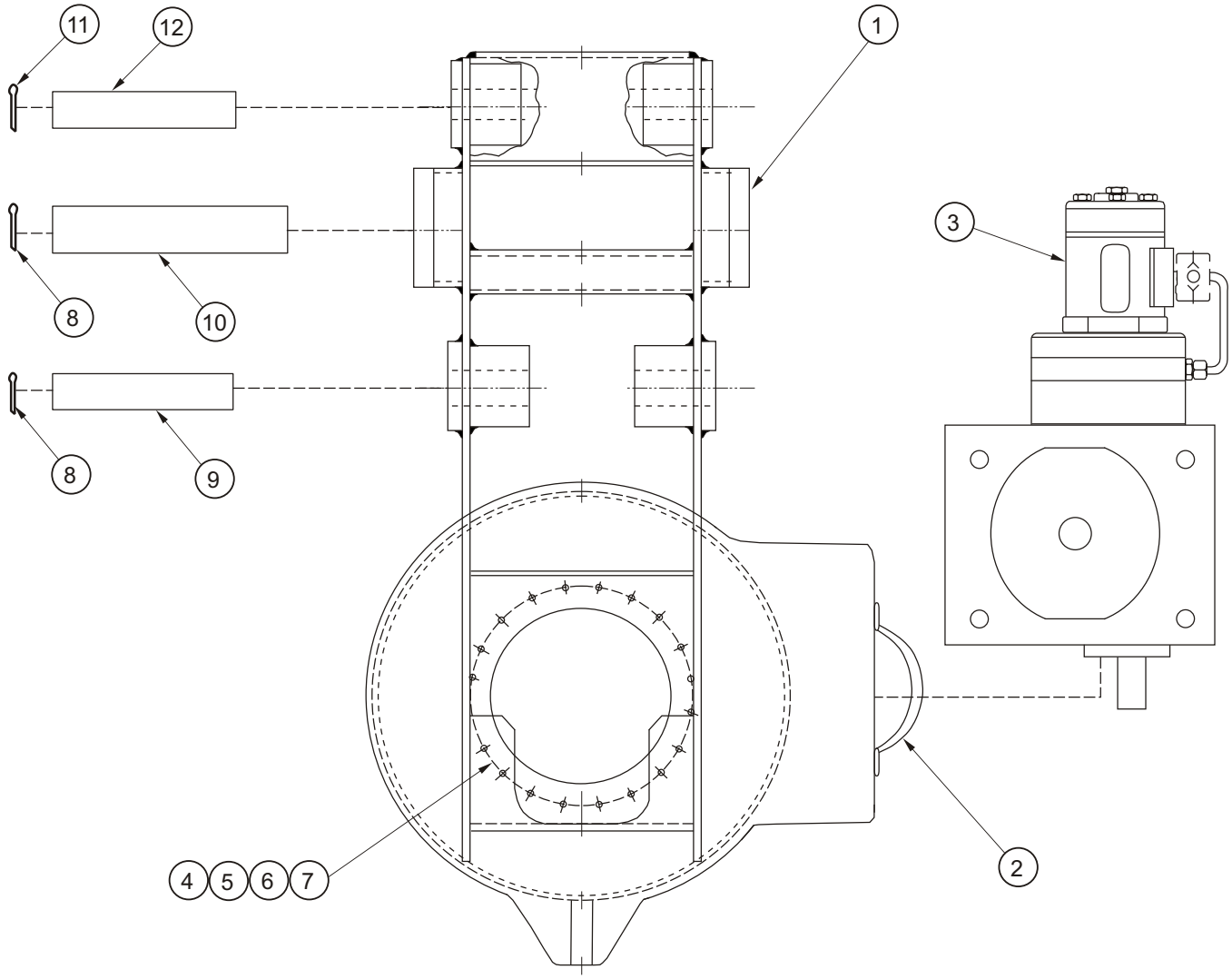

12626

Slew box assembly

https://truckmanualshub.com/

Item	Part No.	Qty	Description
1.	10149	1	Slew gearbox, metric input
	10149-10	1	Slew gearbox, imperial input
2.	10244	1	Slew pinion shaft
3.	1670	1	Slew pinion
4.	10031-3	1	Brake
	11066	1	Brake
5.	10031-2	1	Slew motor
	11068	1	Slew motor
6.	10032	1	Valve
	11067	1	Valve
7.	3606-06016	1	Flat head socket screw
8.	1656-002	1	Slew pinion retainer
9.	11214-1	2	Circlip
10.	3602-20	1	Nut
11.	3612-05008	1	Grub screw
12.	3610-12045	2	Bolt

https://truckmanualshub.com/

Slew box assembly drawing

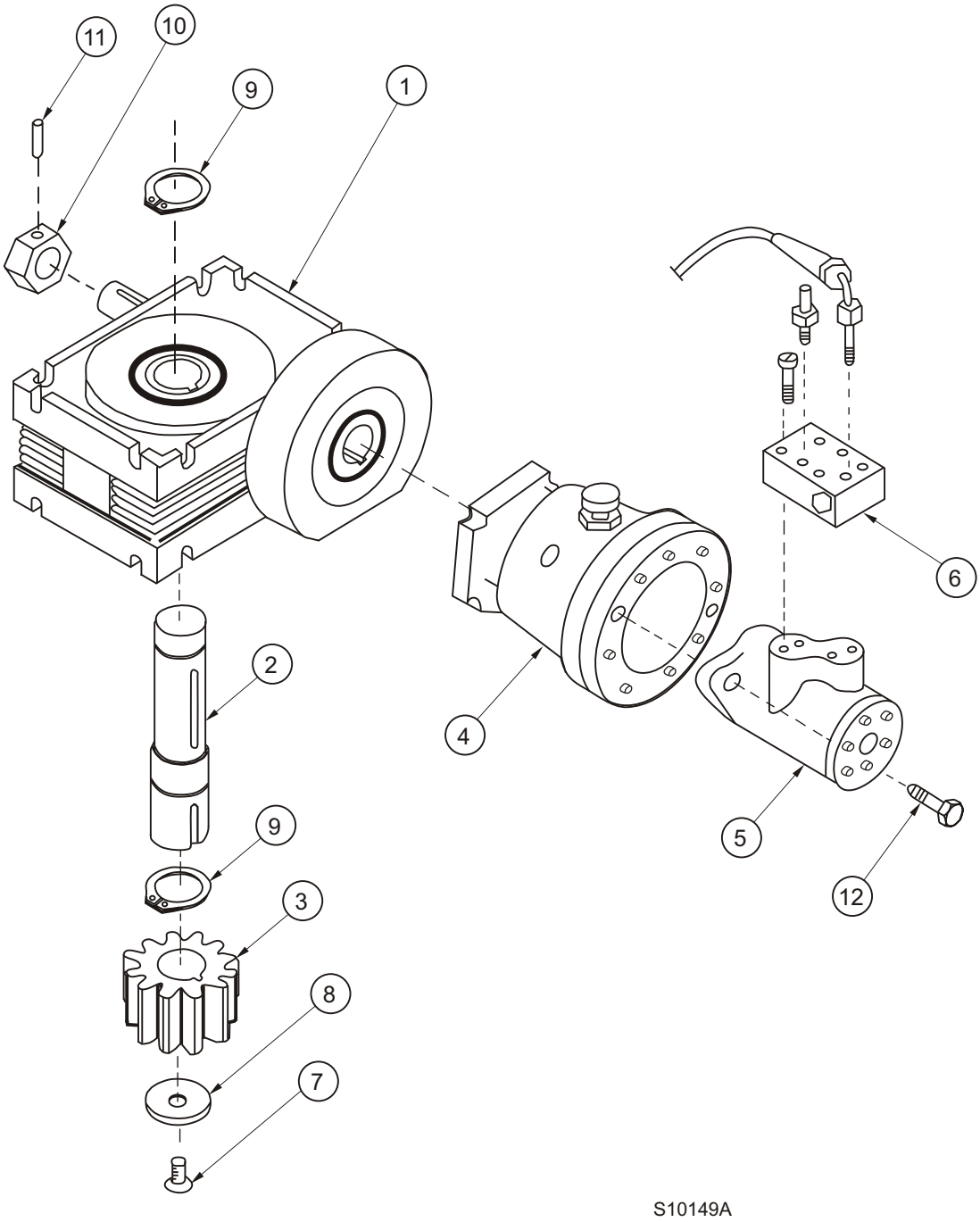

Fibreglass basket assembly

https://truckmanualshub.com/

Item	Part No.	Qty	description
1.	11118	1	One man basket
	11118-1	1	One man basket, hydraulic controls
	1705T	1	Two man basket
2.	12625	1	Basket frame, one man basket, hydraulic controls
	11550	1	Basket frame, one man basket, electric controls
	12733	1	Basket frame, two man
3.	11025-2	1	Fibreglass cover
4.	11025-3	1	Console cover
5.	8906	1m	Automotive trim
6.	11065	1	Pin
7.	8626	1	Pin keeper
8.	10154	1	Pin
9.	8628	1	Pin keeper

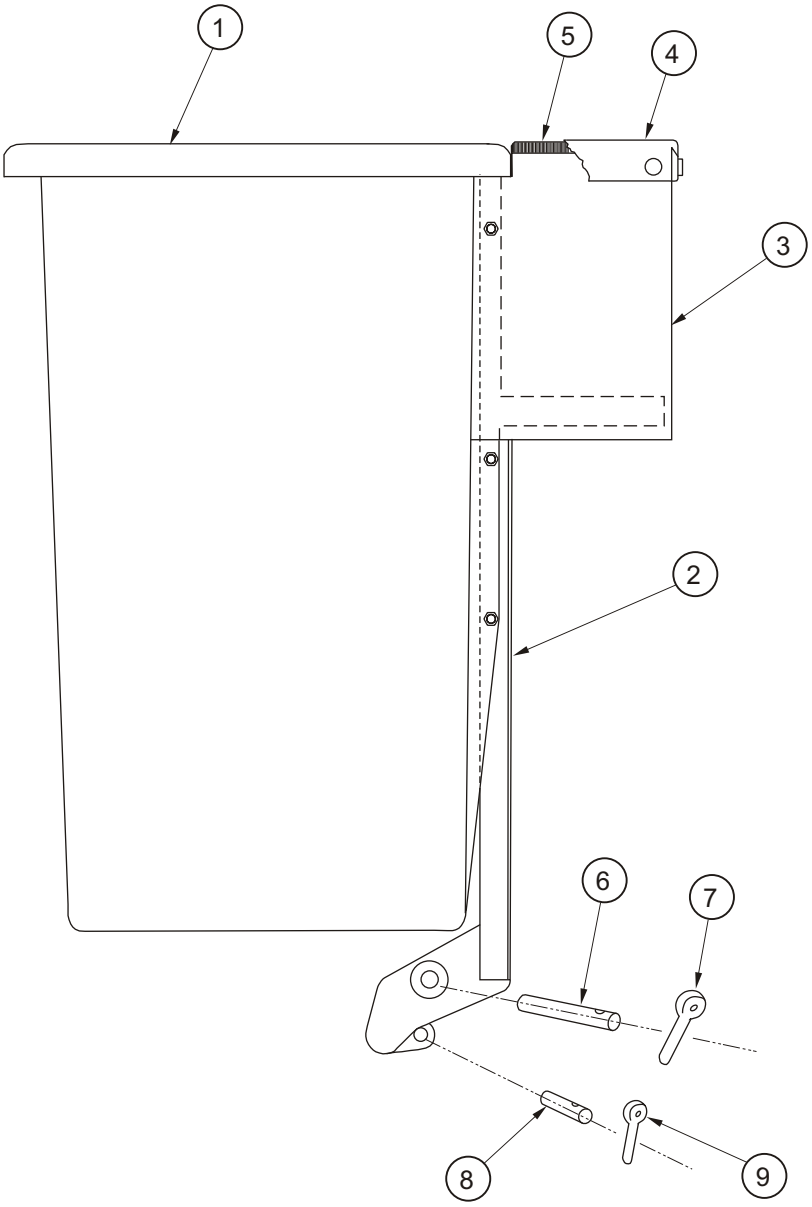

https://truckmanualshub.com/

Section 2. - Hydraulics

Hydraulic schematic drawing. 2-3
Extension Cylinder. 2-5
Slave level cylinder 2-6
Cylinder assembly, lift 2-7
Master level cylinder assembly 2-8
Cylinder assembly, stabiliser leg. 2-9

https://truckmanualshub.com/

https://truckmanualshub.com/

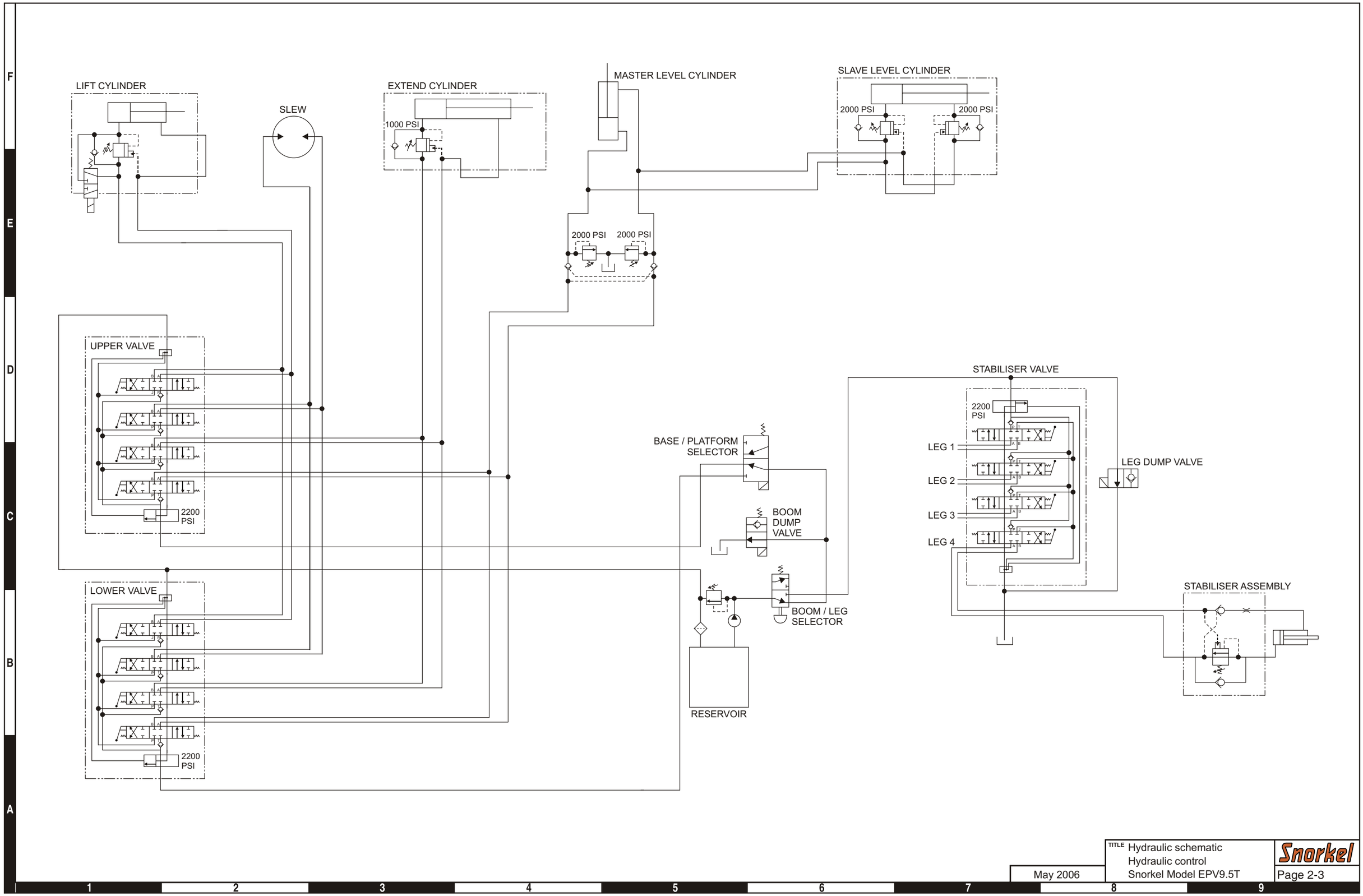

TITLE Hydraulic schematic
Hydraulic control
Snorkel Model EPV9.5T

May 2006

Snorkel

https://truckmanualshub.com/

https://truckmanualshub.com/

Item	Part No.	Qty	Description
0.	015-0053	1	Cylinder assembly extension
	015-0554	Ref	Cylinder assembly repair kit (Items 11 - 18)
1.		Ref	Tube assembly
2.		Ref	Rod assembly
3.		Ref	Retainer
4.		1	Bearing
5.		1	Spacer
6.		Ref	Piston
7.		1	Cap screw
8.		1	Spring washer
9.		1	Nut
10.		1	Pipe plug
11.		1	Cotter pin
12.		1	T-Ring
13.		1	O-Ring
14.		1	O-Ring
15.		1	Backup
16.	556-0024	1	Nulon plug
17.		1	U-Ring
18.	763-0067	1	Wiper
19.	6010294	1	Holding valve cartridge

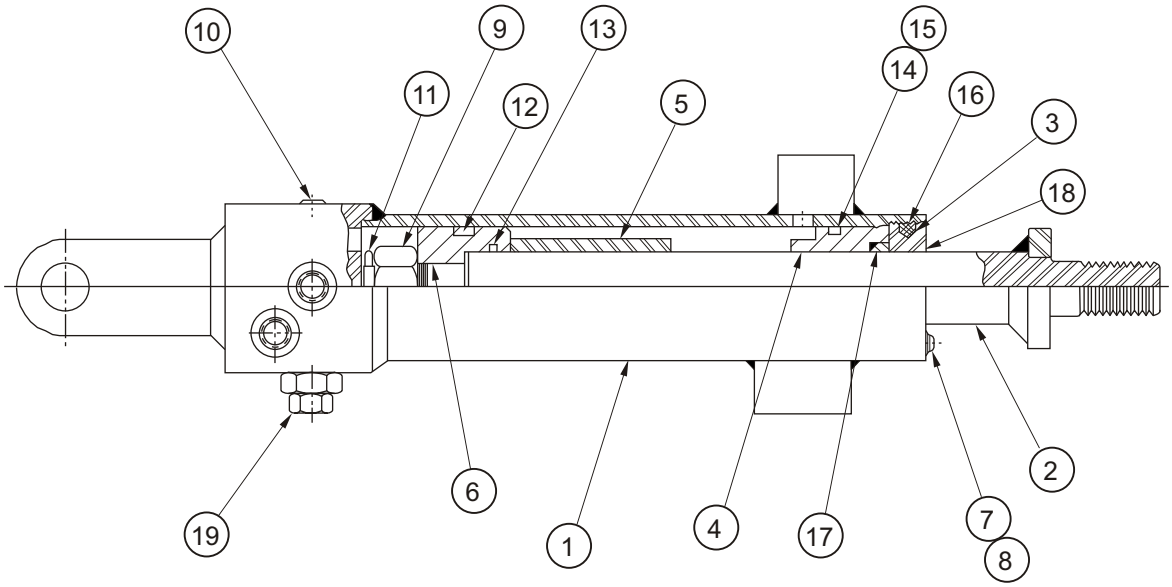

N015-0053

Slave level cylinder

Item	Part No.	Qty	Description
0.	015-0939	1	Cylinder assembly, slave level
	015-0555	Ref	Cylinder assembly, repair kit (Items 14 - 21)
1.		Ref	Tube assembly
2.		Ref	Rod assembly
3.		Ref	Retainer
4.		Ref	Bearing
5.		Ref	Piston
6.		1	Bearing
7.		2	Bearing
8.		1	Spacer
9.		1	Spacer
10.		1	Cap screw
11.		1	Spring washer
12.		1	Pipe plug
13.		1	Nut
14.		1	Cotter pin
15.	711-0214	1	O-Ring
16.	714-0446	1	T-Ring
17.	711-0228	1	O-Ring
18.	714-0228	1	Backup
19.	556-0024	1	Nylon plug
20.	714-0448	1	Wiper
21.	714-1810	1	U-Ring
22.	6010794		Counter-balance valve

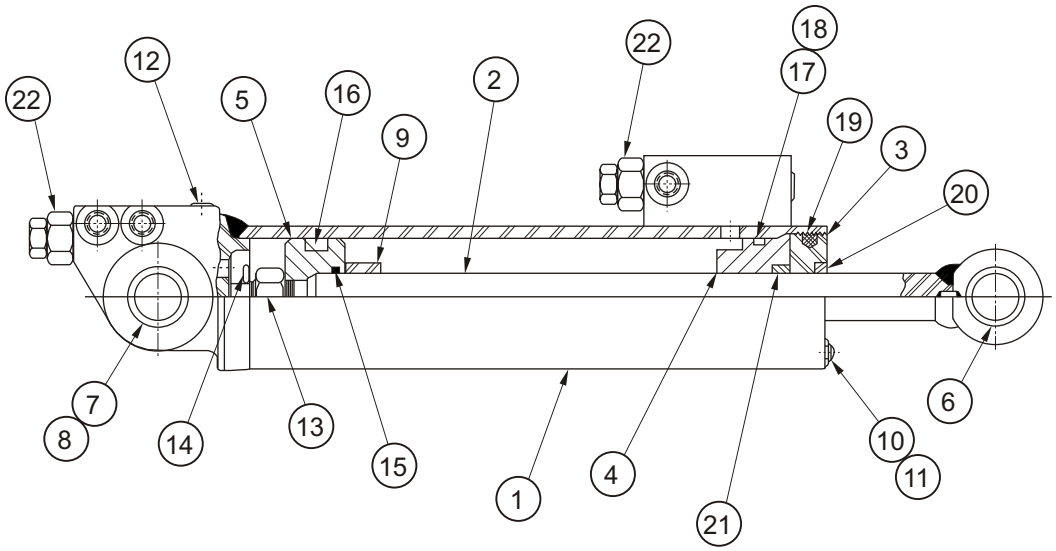

N015-0939

https://truckmanualshub.com/

Item	Part No.	Qty	Description
0.	015-1413	1	Cylinder assembly, lift
	015-0553	Ref	Cylinder assembly repair kit (Items 15 - 23)
1.		Ref	Tube assembly
2.		Ref	Rod assembly
3.		Ref	Retainer
4.		Ref	Bearing
5.		Ref	Spacer
6.		Ref	Piston
7.	250-0026	2	Bearing
8.		Ref	Spacer
9.		1	Poppet
10.		1	Spring
11.		1	Port plug
12.		1	Cap screw
13.		1	Spring washer
14.		1	Nut
15.		1	Cotter pin
16.	714-0447	1	T-Ring
17.	609-0043	1	C.I. piston ring
18.	711-0222	1	O-Ring
19.	711-0232	1	O-Ring
20.	714-0232	1	Backup ring
21.	556-0024	1	Plastic plug
22.	714-0025	1	Wiper
23.	714-1815	1	U-Ring
24.	601-0794	1	Counter-balance valve cartridge
25.	10701-1	1	Solenoid valve (specify system voltage)

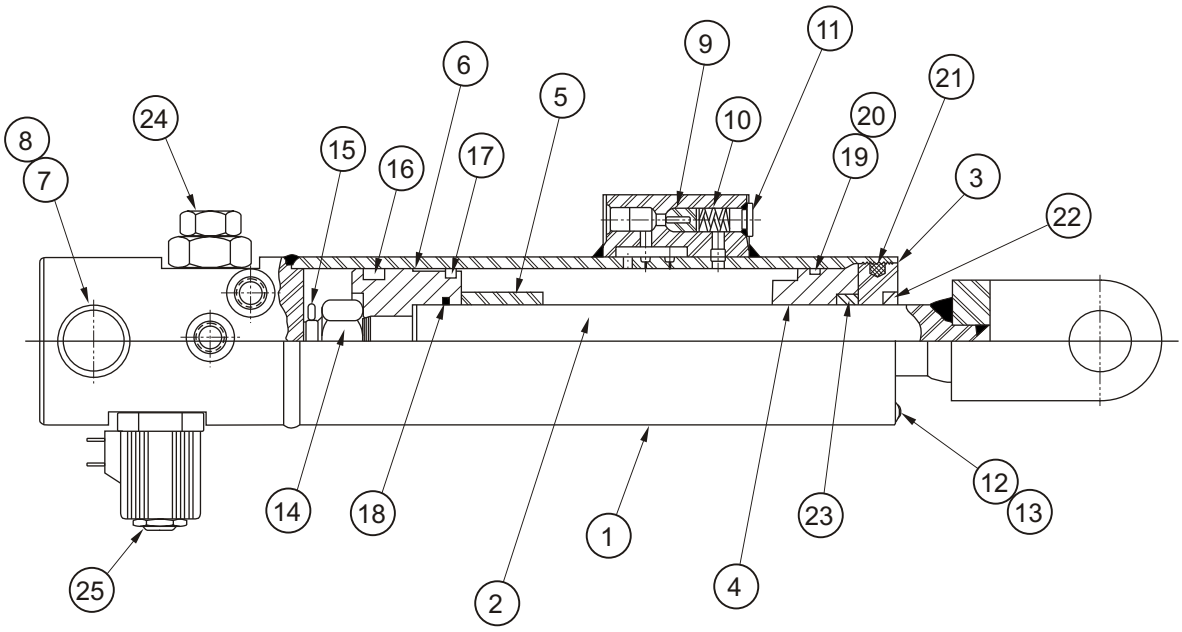

N11015

Master level cylinder assembly

https://truckmanualshub.com/

Item	Part No.	Qty	Description
0.	11017	1	Cylinder assembly, master level
			Cylinder seal repair kit (Items 10 - 15)
1.		1	Barrel assembly
2.		1	Rod assembly
3.		1	Full lock nut
4.		1	Piston
5.		1	Gland
6.		2	Set screw
7.		2	Nylon lock
8.		1	Cap
9.	250-0034	2	Bearing
10.		1	Cotter pin
11.	714-0446	1	Piston seal
12.	711-0113	1	O-Ring
13.	711-0228	1	O-Ring with backup
14.	714-1810	1	Ros seal
15.	715-0006	1	Dust seal
16.	7025-005	2	Fitting

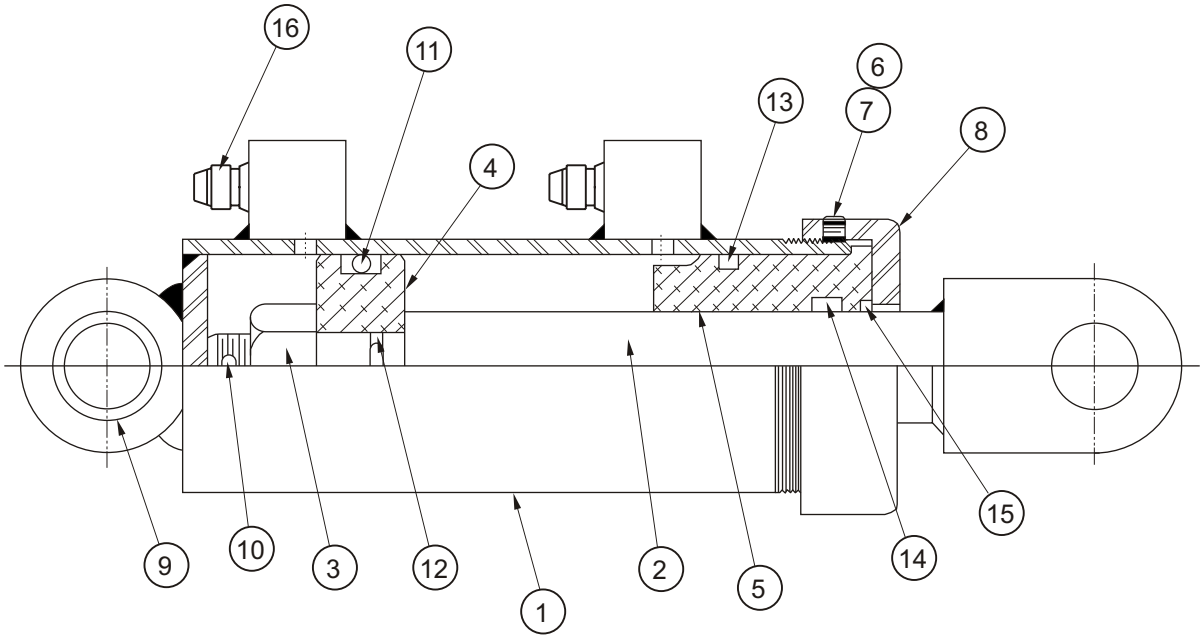

N11017

https://truckmanualshub.com/

Cylinder assembly, stabiliser leg

Item	Part No.	Qty	Description
1.	10484	1	Leg cylinder, vertical stabiliser
2.	11116	1	leg valve
3.	7062-001	1	Hydraulic fitting
4.	3613-08045	2	Cap screw
5.	7025-001	3	Hydraulic fitting
6.	11367-2	1	Check valve
7.	1594-006	1	Leg retaining collet
8.	3610-08050	1	Bolt
9.	3611-08	1	Nylock nut

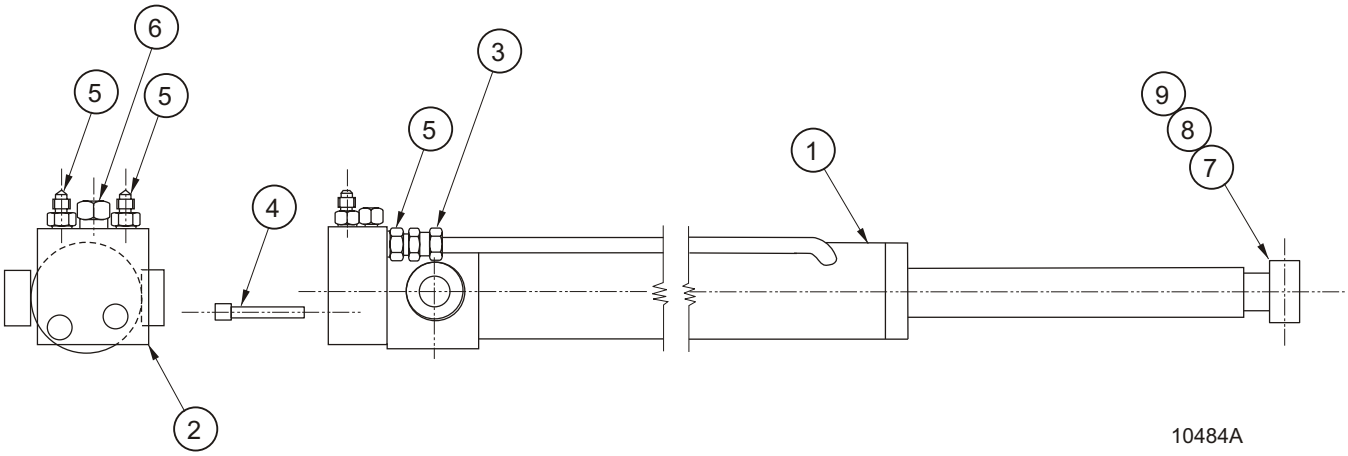

https://truckmanualshub.com/

https://truckmanualshub.com/

Section 3. - Electrical

Electrical schematic 3-3
Upper control box assembly 3-5
Column control box assembly 3-6
Base control box assembly 3-7

https://truckmanualshub.com/

https://truckmanualshub.com/

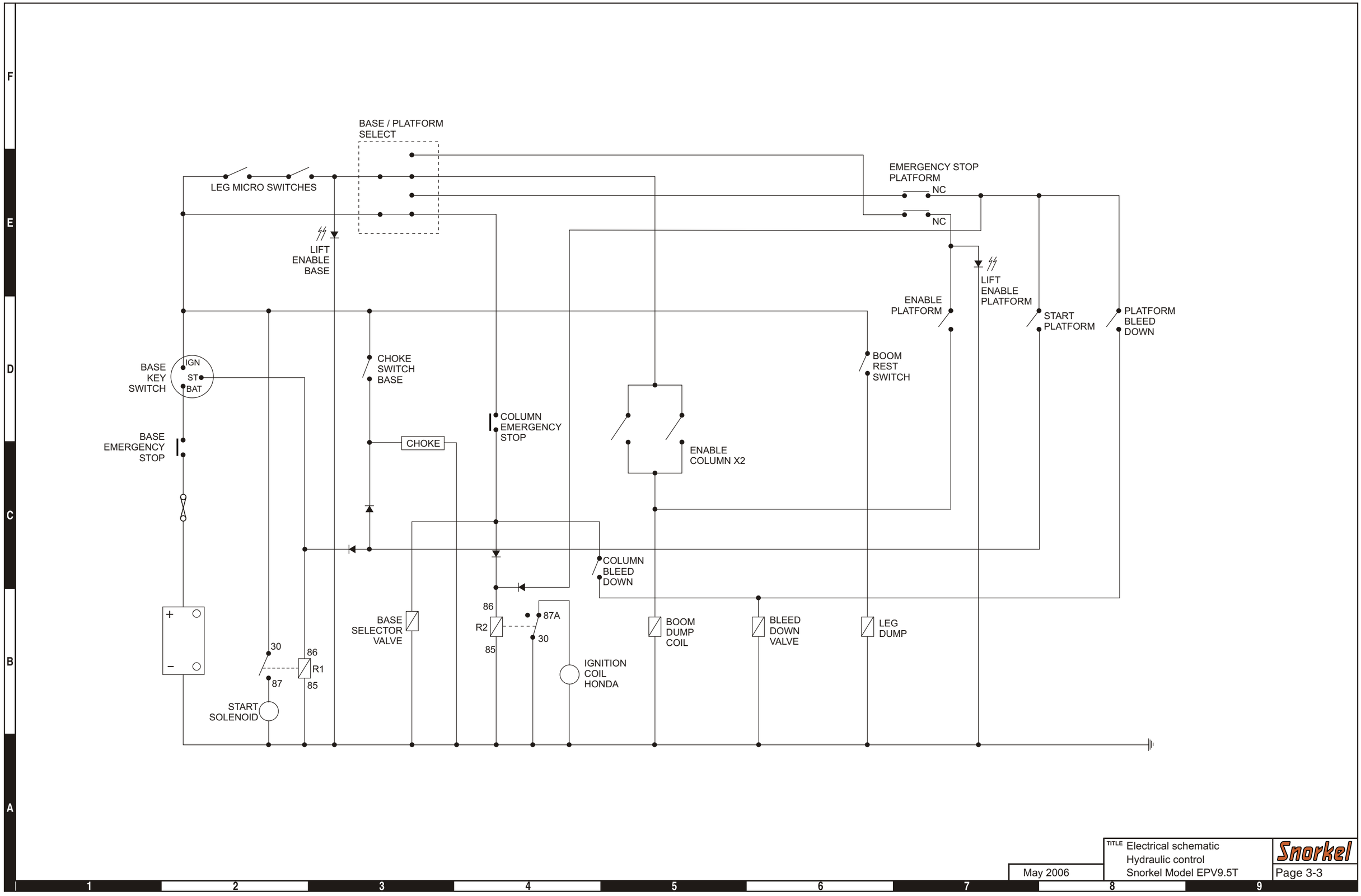

May 2006	TITLE Electrical schematic Hydraulic control Snorkel Model EPV9.5T	Snorkel Page 3-3

https://truckmanualshub.com/

https://truckmanualshub.com/

Upper control box assembly

Item	Part No.	Qty	Description
1.	12632	1	Enclosure
2.	10116	1	Push button (booted black) switch
3.	12631	1	Push button (booted yellow) switch
4.	12536-2	1	LED green indicator lamp, 12V
5.	9775	1	Stop switch head
6.	10115	1	Push button (booted green) switch
7.	1814	1	Nylon cable gland, not shown
8.	8978-2	4	Self tapping screw
9.		1	Enclosure lid

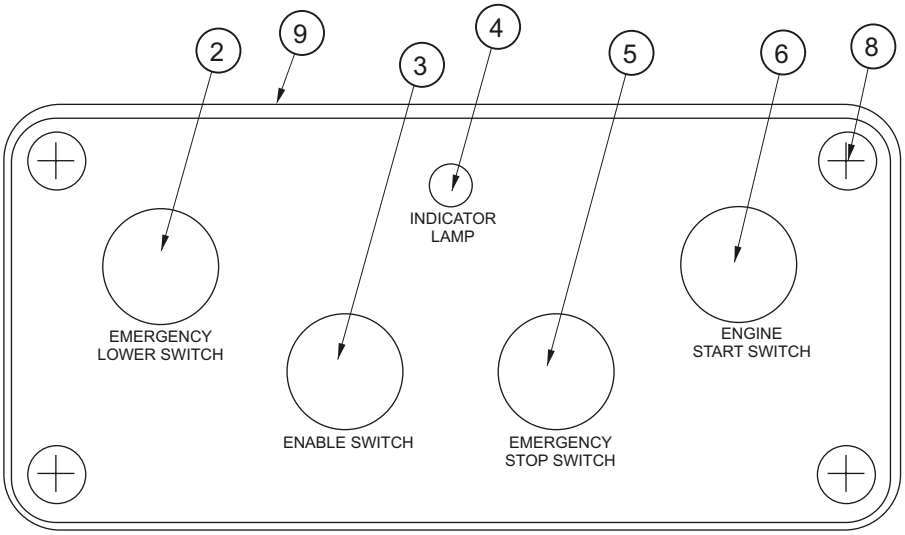

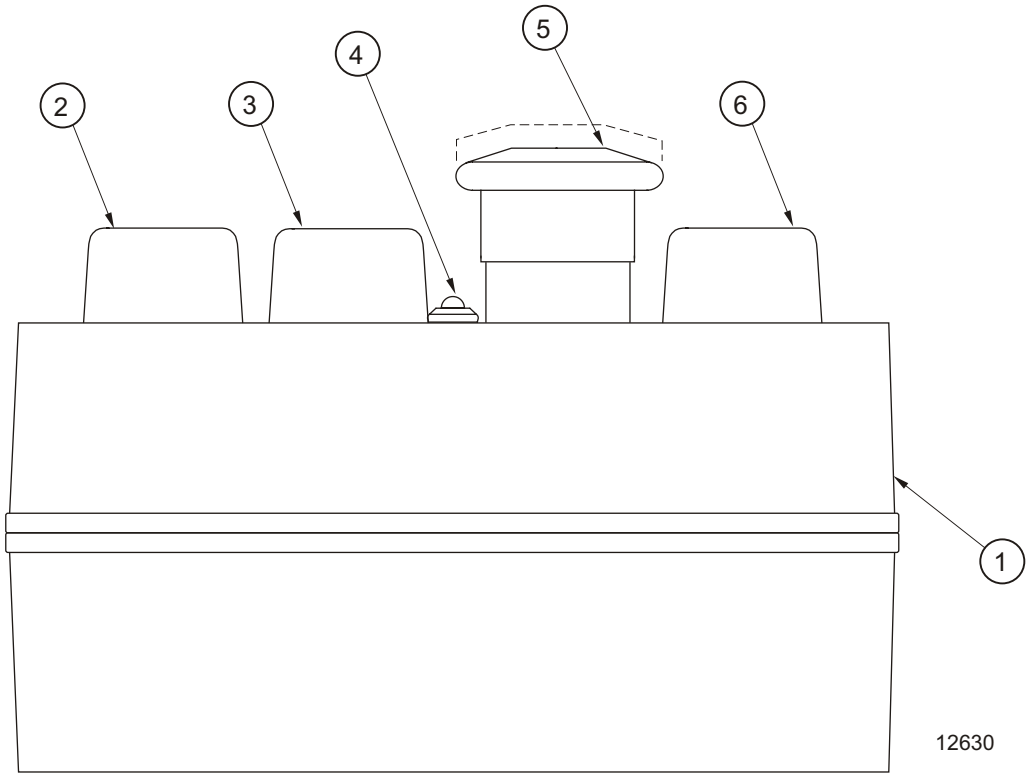

Column control box assembly

https://truckmanualshub.com/

Item	Part No.	Qty	Description
1.	12632	1	Enclosure
2.	12631	2	Push button (booted yellow) switch
3.	9775	1	Stop switch head
4.	10116	1	Push button (booted black) switch
5.	1814	1	Nylon cable gland, not shown
6.		1	Enclosure lid
7.	8978-2	4	Self tapping screw

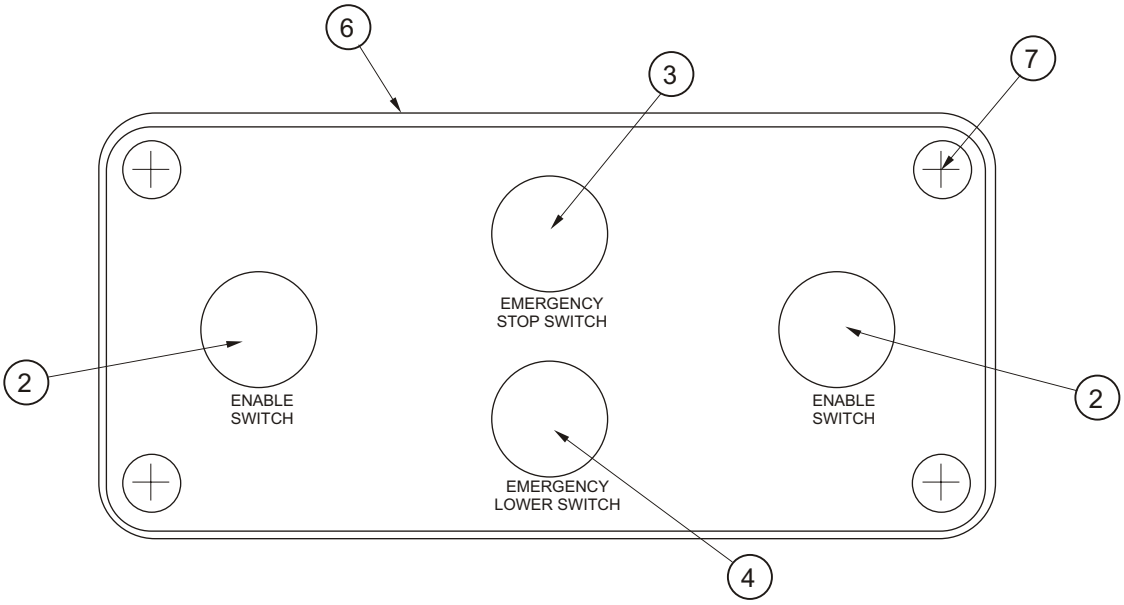

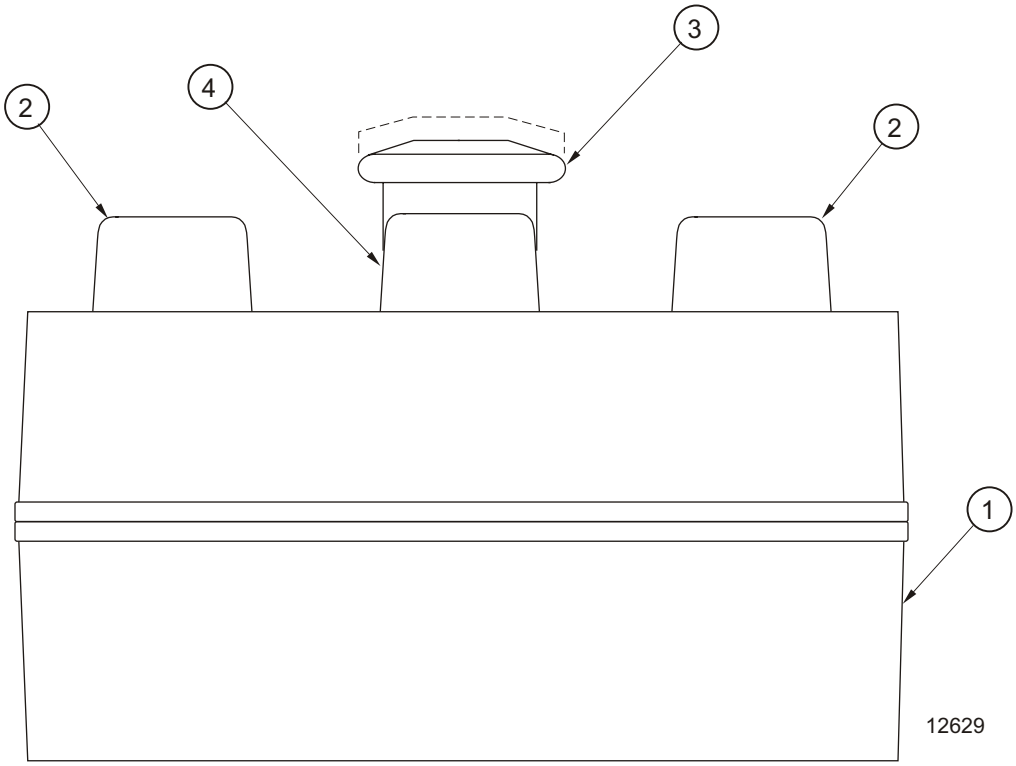

https://truckmanualshub.com/

Base control box assembly

Item	Part No.	Qty	Description
1.	9467	1	Enclosure
2.	12602	1	Decal, base control box assembly
3.	302-0097	1	Switch, toggle, DPDT (ON/ON)
4.	9775	1	Stop switch head
5.	12536-3	1	LED, green 12V
6.	302-0015	1	Switch, toggle, SPST (MOM/OFF)
7.	1650-012	1	Fuse holder
8.	3020087	1	Key switch

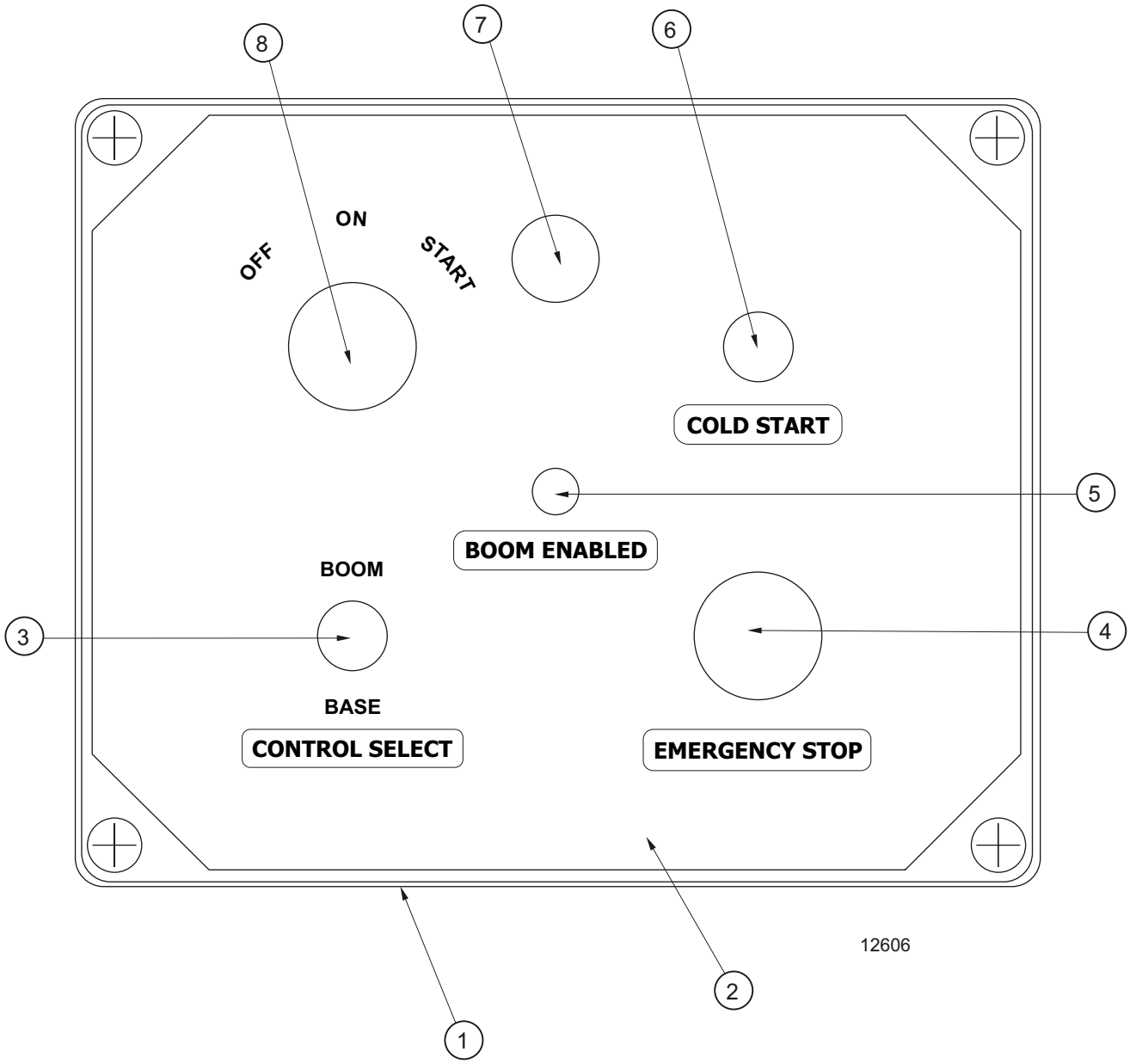

https://truckmanualshub.com/

https://truckmanualshub.com/

A

Additional information
See Introduction - page iv

C

Controls
Control switches
Master Key Switch, 1-3

F

Falling hazards, 1-2

H

Hydraulic oil
Filler cap, 1-3

I

Inspection
Operators daily inspection, 1-3

M

Maintenance personnel
See Introduction - page iii
Maintenance schedules, B-iv
Manual Organization, B-iii

O

Operators
Qualified, 1-3

R

Repairs or service, B-xii
Responsibilities of owners and users
See Introduction - page iv

S

Safety Alerts, Caution, Danger, Warning
See Introduction - page iii

T

Tipover hazard, 1-2

W

Warranty - Limited
See inside front cover
Wiring harnesses
Loose connections, 1-4

https://truckmanualshub.com/