https://truckmanualshub.com/

HYUNDAI
CONSTRUCTION EQUIPMENT

HX140 LT3

CRAWLER EXCAVATOR

SERVICE MANUAL

Table of Content

https://truckmanualshub.com/

FOREWORD **4**
1. Structure 4
2. How To Read The Service Manual 5
3. Conversion Table 6
SECTION 1 GENERAL **12**
Group 1 Safety 13
Group 2 Specifications 22
SECTION 2 STRUCTURE AND FUNCTION **51**
Group 1 Pump Device 52
Group 2 Main Control Valve 71
Group 3 Swing Device 102
Group 4 Travel Device (std, Type 1) 114
Travel Device (high Walker, Type 2) 127
Group 5 Rcv Lever 135
Group 6 Rcv Pedal 142
SECTION 3 HYDRAULIC SYSTEM **148**
Group 1 Hydraulic Circuit 149
Group 2 Main Circuit 151
Group 3 Pilot Circuit 154
Group 4 Single Operation 163
Group 5 Combined Operation 175
SECTION 4 ELECTRICAL SYSTEM **184**
Group 1 Component Location 185
Group 2 Electrical Circuit (1/2) 187
Memorandum 189
Group 3 Electrical Component Specification 206
Group 4 Connectors 217
SECTION 5 MECHATRONICS SYSTEM **241**
Group 1 Outline 242
Group 2 Mode Selection System 244
Group 3 Automatic Deceleration System 247
Group 4 Power Boost System 248
Group 5 Travel Speed Control System 249
Group 6 Automatic Warming Up System 250
Group 7 Engine Overheat Prevention System 251
Group 8 New Variable Power Control System 252
Group 9 Attachment Flow Control System 253

Find manuals at https://best-manuals.com

https://truckmanualshub.com/
Group 10 Intelligent Power Control System . . . 254
Group 11 Anti-restart System . . . 256
Group 12 Self-diagnostic System . . . 257
Group 14 Engine Control System . . . 291
Group 15 Eppr Valve . . . 292
Group 16 Monitoring System . . . 297
Menu . . . 315
Group 16 Fuel Warmer System . . . 331
SECTION 6 TROUBLESHOOTING . . . 332
Group 1 Before Troubleshooting . . . 333
Group 2 Hydraulic And Mechanical System . . . 336
Group 3 Electrical System . . . 357
Group 4 Mechatronics Systegroup System . . . 375
Group 5 Air Conditioner & Heater System . . . 404
SECTION 7 MAINTENANCE STANDARD . . . 407
Group 1 Operational Performance Test . . . 408
Group 2 Major Component . . . 428
Group 3 Track And Work Equipment . . . 436
SECTION 8 DISASSEMBLY AND ASSEMBLY . . . 442
Group 1 Precautions . . . 443
Group 2 Tightening Torque . . . 446
Group 3 Pump Device . . . 449
Group 4 Main Control Valve . . . 471
Group 5 Swing Device . . . 485
Group 6 Travel Device (std, Type 1) . . . 504
Travel Device (high Walker, Type2) . . . 536
Group 7 Rcv Lever . . . 568
Group 8 Turning Joint . . . 582
Group 9 Boom, Arm And Bucket Cylinder . . . 587
Group 10 Undercarriage . . . 605
Group 11 Work Equipment . . . 617

Find manuals at https://best-manuals.com

https://truckmanualshub.com/

FOREWORD

1. STRUCTURE

This service manual has been prepared as an aid to improve the quality of repairs by giving the serviceman an accurate understanding of the product and by showing him the correct way to perform repairs and make judgements. Make sure you understand the contents of this manual and use it to full effect at every opportunity.
This service manual mainly contains the necessary technical information for operations performed in a service workshop.
For ease of understanding, the manual is divided into the following sections.

SECTION 1 GENERAL

This section explains the safety hints and gives the specification of the machine and major components.

SECTION 2 STRUCTURE AND FUNCTION

This section explains the structure and function of each component. It serves not only to give an understanding of the structure, but also serves as reference material for troubleshooting.

SECTION 3 HYDRAULIC SYSTEM

This section explains the hydraulic circuit, single and combined operation.

SECTION 4 ELECTRICAL SYSTEM

This section explains the electrical circuit, monitoring system and each component. It serves not only to give an understanding electrical system, but also serves as reference material for trouble shooting.

SECTION 5 MECHATRONICS SYSTEM

This section explains the computer aided power optimization system and each component.

SECTION 6 TROUBLESHOOTING

This section explains the troubleshooting charts correlating **problems** to **causes**.

SECTION 7 MAINTENANCE STANDARD

This section gives the judgement standards when inspecting disassembled parts.

SECTION 8 DISASSEMBLY AND ASSEMBLY

This section explains the order to be followed when removing, installing, disassembling or assembling each component, as well as precautions to be taken for these operations.

The specifications contained in this shop manual are subject to change at any time and without any advance notice. Contact your HYUNDAI distributor for the latest information.

Find manuals at https://best-manuals.com

https://truckmanualshub.com/

2. HOW TO READ THE SERVICE MANUAL

Distribution and updating

Any additions, amendments or other changes will be sent to HYUNDAI distributors.
Get the most up-to-date information before you start any work.

Filing method

1. See the page number on the bottom of the page.
   File the pages in correct order.
2. Following examples shows how to read the page number.
   Example 1
   2 - 3
   - 2: Item number (2. Structure and Function)
   - 3: Consecutive page number for each item.
3. Additional pages : Additional pages are indicated by a hyphen (-) and number after the page number. File as in the example.
   8 - 4
   8 - 4 - 1
   8 - 4 - 2
   (8 - 4 - 1 and 8 - 4 - 2: Added pages)
   8 - 5

Revised edition mark (①②③…)

When a manual is revised, an edition mark is recorded on the bottom outside corner of the pages.

Revisions

Revised pages are shown at the list of revised pages on the between the contents page and section 1 page.

Symbols

So that the shop manual can be of ample practical use, important places for safety and quality are marked with the following symbols.

Symbol	Item	Remarks
⚠	Safety	Special safety precautions are necessary when performing the work.
		Extra special safety precautions are necessary when performing the work because it is under internal pressure.
※	Caution	Special technical precautions or other precautions for preserving standards are necessary when performing the work.

Find manuals at https://best-manuals.com

https://truckmanualshub.com/

3. CONVERSION TABLE

Method of using the Conversion Table
The Conversion Table in this section is provided to enable simple conversion of figures. For details of the method of using the Conversion Table, see the example given below.

Example

1. **Method of using the Conversion Table to convert from millimeters to inches**
   Convert 55 mm into inches.
   (1) Locate the number 50 in the vertical column at the left side, take this as ⓐ, then draw a horizontal line from ⓐ.
   (2) Locate the number 5 in the row across the top, take this as ⓑ, then draw a perpendicular line down from ⓑ.
   (3) Take the point where the two lines cross as ⓒ. This point ⓒ gives the value when converting from millimeters to inches. Therefore, 55 mm = 2.165 inches.

2. Convert 550 mm into inches.
   (1) The number 550 does not appear in the table, so divide by 10 (Move the decimal point one place to the left) to convert it to 55 mm.
   (2) Carry out the same procedure as above to convert 55 mm to 2.165 inches.
   (3) The original value (550 mm) was divided by 10, so multiply 2.165 inches by 10 (Move the decimal point one place to the right) to return to the original value.
   This gives 550 mm = 21.65 inches.

Millimeters to inches

1 mm = 0.03937 in

	0	1	2	3	4	5 ⓑ	6	7	8	9
0		0.039	0.079	0.118	0.157	0.197	0.236	0.276	0.315	0.354
10	0.394	0.433	0.472	0.512	0.551	0.591	0.630	0.669	0.709	0.748
20	0.787	0.827	0.866	0.906	0.945	0.984	1.024	1.063	1.102	1.142
30	1.181	1.220	1.260	1.299	1.339	1.378	1.417	1.457	1.496	1.536
40	1.575	1.614	1.654	1.693	1.732	1.772	1.811	1.850	1.890	1.929
ⓐ 50	1.969	2.008	2.047	2.087	2.126	ⓒ 2.165	2.205	2.244	2.283	2.323
60	2.362	2.402	2.441	2.480	2.520	2.559	2.598	2.638	2.677	2.717
70	2.756	2.795	2.835	2.874	2.913	2.953	2.992	3.032	3.071	3.110
80	3.150	3.189	3.228	3.268	3.307	3.346	3.386	3.425	3.465	3.504
90	3.543	3.583	3.622	3.661	3.701	3.740	3.780	3.819	3.858	3.898

Find manuals at https://best-manuals.com

https://truckmanualshub.com/

Millimeters to inches

1mm = 0.03937in

	0	1	2	3	4	5	6	7	8	9
0		0.039	0.079	0.118	0.157	0.197	0.236	0.276	0.315	0.354
10	0.394	0.433	0.472	0.512	0.551	0.591	0.630	0.669	0.709	0.748
20	0.787	0.827	0.866	0.906	0.945	0.984	1.024	1.063	1.102	1.142
30	1.181	1.220	1.260	1.299	1.339	1.378	1.417	1.457	1.496	1.536
40	1.575	1.614	1.654	1.693	1.732	1.772	1.811	1.850	1.890	1.929
50	1.969	2.008	2.047	2.087	2.126	2.165	2.205	2.244	2.283	2.323
60	2.362	2.402	2.441	2.480	2.520	2.559	2.598	2.638	2.677	2.717
70	2.756	2.795	2.835	2.874	2.913	2.953	2.992	3.032	3.071	3.110
80	3.150	3.189	3.228	3.268	3.307	3.346	3.386	3.425	3.465	3.504
90	3.543	3.583	3.622	3.661	3.701	3.740	3.780	3.819	3.858	3.898

Kilogram to Pound

1kg = 2.2046lb

	0	1	2	3	4	5	6	7	8	9
0		2.20	4.41	6.61	8.82	11.02	13.23	15.43	17.64	19.84
10	22.05	24.25	26.46	28.66	30.86	33.07	35.27	37.48	39.68	41.89
20	44.09	46.30	48.50	50.71	51.91	55.12	57.32	59.5.	61.73	63.93
30	66.14	68.34	70.55	72.75	74.96	77.16	79.37	81.57	83.78	85.98
40	88.18	90.39	92.59	94.80	97.00	99.21	101.41	103.62	105.82	108.03
50	110.23	112.44	114.64	116.85	119.05	121.25	123.46	125.66	127.87	130.07
60	132.28	134.48	136.69	138.89	141.10	143.30	145.51	147.71	149.91	152.12
70	154.32	156.53	158.73	160.94	163.14	165.35	167.55	169.76	171.96	174.17
80	176.37	178.57	180.78	182.98	185.19	187.39	189.60	191.80	194.01	196.21
90	198.42	200.62	202.83	205.03	207.24	209.44	211.64	213.85	216.05	218.26

Find manuals at https://best-manuals.com

https://truckmanualshub.com/

Liter to U.S. Gallon

1 ℓ = 0.2642 U.S.Gal

	0	1	2	3	4	5	6	7	8	9
0		0.264	0.528	0.793	1.057	1.321	1.585	1.849	2.113	2.378
10	2.642	2.906	3.170	3.434	3.698	3.963	4.227	4.491	4.755	5.019
20	5.283	5.548	5.812	6.6076	6.340	6.604	6.869	7.133	7.397	7.661
30	7.925	8.189	8.454	8.718	8.982	9.246	9.510	9.774	10.039	10.303
40	10.567	10.831	11.095	11.359	11.624	11.888	12.152	12.416	12.680	12.944
50	13.209	13.473	13.737	14.001	14.265	14.529	14.795	15.058	15.322	15.586
60	15.850	16.115	16.379	16.643	16.907	17.171	17.435	17.700	17.964	18.228
70	18.492	18.756	19.020	19.285	19.549	19.813	20.077	20.341	20.605	20.870
80	21.134	21.398	21.662	21.926	22.190	22.455	22.719	22.983	23.247	23.511
90	23.775	24.040	24.304	24.568	24.832	25.096	25.631	25.625	25.889	26.153

Liter to U.K. Gallon

1 ℓ = 0.21997 U.K.Gal

	0	1	2	3	4	5	6	7	8	9
0		0.220	0.440	0.660	0.880	1.100	1.320	1.540	1.760	1.980
10	2.200	2.420	2.640	2.860	3.080	3.300	3.520	3.740	3.950	4.179
20	4.399	4.619	4.839	5.059	5.279	5.499	5.719	5.939	6.159	6.379
30	6.599	6.819	7.039	7.259	7.479	7.969	7.919	8.139	8.359	8.579
40	8.799	9.019	9.239	9.459	9.679	9.899	10.119	10.339	10.559	10.778
50	10.998	11.281	11.438	11.658	11.878	12.098	12.318	12.528	12.758	12.978
60	13.198	13.418	13.638	13.858	14.078	14.298	14.518	14.738	14.958	15.178
70	15.398	15.618	15.838	16.058	16.278	16.498	16.718	16.938	17.158	17.378
80	17.598	17.818	18.037	18.257	18.477	18.697	18.917	19.137	19.357	19.577
90	19.797	20.017	20.237	20.457	20.677	20.897	21.117	21.337	21.557	21.777

Find manuals at https://best-manuals.com

https://truckmanualshub.com/

kgf · m to lbf · ft

1kgf · m = 7.233lbf · ft

	0	1	2	3	4	5	6	7	8	9
		7.2	14.5	21.7	28.9	36.2	43.4	50.6	57.9	65.1
10	72.3	79.6	86.8	94.0	101.3	108.5	115.7	123.0	130.2	137.4
20	144.7	151.9	159.1	166.4	173.6	180.8	188.1	195.3	202.5	209.8
30	217.0	224.2	231.5	238.7	245.9	253.2	260.4	267.6	274.9	282.1
40	289.3	396.6	303.8	311.0	318.3	325.5	332.7	340.0	347.2	354.4
50	361.7	368.9	376.1	383.4	390.6	397.8	405.1	412.3	419.5	426.8
60	434.0	441.2	448.5	455.7	462.9	470.2	477.4	484.6	491.8	499.1
70	506.3	513.5	520.8	528.0	535.2	542.5	549.7	556.9	564.2	571.4
80	578.6	585.9	593.1	600.3	607.6	614.8	622.0	629.3	636.5	643.7
90	651.0	658.2	665.4	672.7	679.9	687.1	694.4	701.6	708.8	716.1
100	723.3	730.5	737.8	745.0	752.2	759.5	766.7	773.9	781.2	788.4
110	795.6	802.9	810.1	817.3	824.6	831.8	839.0	846.3	853.5	860.7
120	868.0	875.2	882.4	889.7	896.9	904.1	911.4	918.6	925.8	933.1
130	940.3	947.5	954.8	962.0	969.2	976.5	983.7	990.9	998.2	10005.4
140	1012.6	1019.9	1027.1	1034.3	1041.5	1048.8	1056.0	1063.2	1070.5	1077.7
150	1084.9	1092.2	1099.4	1106.6	1113.9	1121.1	1128.3	1135.6	1142.8	1150.0
160	1157.3	1164.5	1171.7	1179.0	1186.2	1193.4	1200.7	1207.9	1215.1	1222.4
170	1129.6	1236.8	1244.1	1251.3	1258.5	1265.8	1273.0	1280.1	1287.5	1294.7
180	1301.9	1309.2	1316.4	1323.6	1330.9	1338.1	1345.3	1352.6	1359.8	1367.0
190	1374.3	1381.5	1388.7	1396.0	1403.2	1410.4	1417.7	1424.9	1432.1	1439.4

Find manuals at https://best-manuals.com

https://truckmanualshub.com/

kgf/cm² to lbf/in²

1kgf / cm² = 14.2233lbf / in²

	0	1	2	3	4	5	6	7	8	9
		14.2	28.4	42.7	56.9	71.1	85.3	99.6	113.8	128.0
10	142.2	156.5	170.7	184.9	199.1	213.4	227.6	241.8	256.0	270.2
20	284.5	298.7	312.9	327.1	341.4	355.6	369.8	384.0	398.3	412.5
30	426.7	440.9	455.1	469.4	483.6	497.8	512.0	526.3	540.5	554.7
40	568.9	583.2	597.4	611.6	625.8	640.1	654.3	668.5	682.7	696.9
50	711.2	725.4	739.6	753.8	768.1	782.3	796.5	810.7	825.0	839.2
60	853.4	867.6	881.8	896.1	910.3	924.5	938.7	953.0	967.2	981.4
70	995.6	1010	1024	1038	1053	1067	1081	1095	1109	1124
80	1138	1152	1166	1181	1195	1209	1223	1237	1252	1266
90	1280	1294	1309	1323	1337	1351	1365	1380	1394	1408
100	1422	1437	1451	1465	1479	1493	1508	1522	1536	1550
110	1565	1579	1593	1607	1621	1636	1650	1664	1678	1693
120	1707	1721	1735	1749	1764	1778	1792	1806	1821	1835
130	1849	2863	1877	1892	1906	1920	1934	1949	1963	1977
140	1991	2005	2020	2034	2048	2062	2077	2091	2105	2119
150	2134	2148	2162	2176	2190	2205	2219	2233	2247	2262
160	2276	2290	2304	2318	2333	2347	2361	2375	2389	2404
170	2418	2432	2446	2460	2475	2489	2503	2518	2532	2546
180	2560	2574	2589	5603	2617	2631	2646	2660	2674	2688
200	2845	2859	2873	2887	2901	2916	2930	2944	2958	2973
210	2987	3001	3015	3030	3044	3058	3072	3086	3101	3115
220	3129	3143	3158	3172	3186	3200	3214	3229	3243	3257
230	3271	3286	3300	3314	3328	3343	3357	3371	3385	3399
240	3414	3428	3442	3456	3470	3485	3499	3513	3527	3542

Find manuals at https://best-manuals.com

https://truckmanualshub.com/

TEMPERATURE

Fahrenheit-Centigrade Conversion.

A simple way to convert a fahrenheit temperature reading into a centigrade temperature reading or vice verse is to enter the accompanying table in the center or boldface column of figures.

These figures refer to the temperature in either Fahrenheit or Centigrade degrees.

If it is desired to convert from Fahrenheit to Centigrade degrees, consider the center column as a table of Fahrenheit temperatures and read the corresponding Centigrade temperature in the column at the left.

If it is desired to convert from Centigrade to Fahrenheit degrees, consider the center column as a table of Centigrade values, and read the corresponding Fahrenheit temperature on the right.

˚C		˚F	˚C		˚F	˚C		˚F	˚C		˚F
-40.4	-40	-40.0	-11.7	11	51.8	7.8	46	114.8	27.2	81	117.8
-37.2	-35	-31.0	-11.1	12	53.6	8.3	47	116.6	27.8	82	179.6
-34.4	-30	-22.0	-10.6	13	55.4	8.9	48	118.4	28.3	83	181.4
-31.7	-25	-13.0	-10.0	14	57.2	9.4	49	120.2	28.9	84	183.2
-28.9	-20	-4.0	-9.4	15	59.0	10.0	50	122.0	29.4	85	185.0
-28.3	-19	-2.2	-8.9	16	60.8	10.6	51	123.8	30.0	86	186.8
-27.8	-18	-0.4	-8.3	17	62.6	11.1	52	125.6	30.6	87	188.6
-27.2	-17	1.4	-7.8	18	64.4	11.7	53	127.4	31.1	88	190.4
-26.7	-16	3.2	-6.7	20	68.0	12.8	55	131.0	32.2	90	194.0
-26.1	-15	5.0	-6.7	20	68.0	12.8	55	131.0	32.2	90	194.0
-25.6	-14	6.8	-6.1	21	69.8	13.3	56	132.8	32.8	91	195.8
-25.0	-13	8.6	-5.6	22	71.6	13.9	57	134.6	33.3	92	197.6
-24.4	-12	10.4	-5.0	23	73.4	14.4	58	136.4	33.9	93	199.4
-23.9	-11	12.2	-4.4	24	75.2	15.0	59	138.2	34.4	94	201.2
-23.3	-10	14.0	-3.9	25	77.0	15.6	60	140.0	35.0	95	203.0
-22.8	-9	15.8	-3.3	26	78.8	16.1	61	141.8	35.6	96	204.8
-22.2	-8	17.6	-2.8	27	80.6	16.7	62	143.6	36.1	97	206.6
-21.7	-7	19.4	-2.2	28	82.4	17.2	63	145.4	36.7	98	208.4
-21.1	-6	21.2	-1.7	29	84.2	17.8	64	147.2	37.2	99	210.2
-20.6	-5	23.0	-1.1	35	95.0	21.1	70	158.0	51.7	125	257.0
-20.0	-4	24.8	-0.6	31	87.8	18.9	66	150.8	40.6	105	221.0
-19.4	-3	26.6	0	32	89.6	19.4	67	152.6	43.3	110	230.0
-18.9	-2	28.4	0.6	33	91.4	20.0	68	154.4	46.1	115	239.0
-18.3	-1	30.2	1.1	34	93.2	20.6	69	156.2	48.9	120	248.0
-17.8	0	32.0	1.7	35	95.0	21.1	70	158.0	51.7	125	257.0
-17.2	1	33.8	2.2	36	96.8	21.7	71	159.8	54.4	130	266.0
-16.7	2	35.6	2.8	37	98.6	22.2	72	161.6	57.2	135	275.0
-16.1	3	37.4	3.3	38	100.4	22.8	73	163.4	60.0	140	284.0
-15.6	4	39.2	3.9	39	102.2	23.3	74	165.2	62.7	145	293.0
-15.0	5	41.0	4.4	40	104.0	23.9	75	167.0	65.6	150	302.0
-14.4	6	42.8	5.0	41	105.8	24.4	76	168.8	68.3	155	311.0
-13.9	7	44.6	5.6	42	107.6	25.0	77	170.6	71.1	160	320.0
-13.3	8	46.4	6.1	43	109.4	25.6	78	172.4	73.9	165	329.0
-12.8	9	48.2	6.7	44	111.2	26.1	79	174.2	76.7	170	338.0
-12.2	10	50.0	7.2	45	113.0	26.7	80	176.0	79.4	172	347.0

https://truckmanualshub.com/

SECTION 1 GENERAL

Group 1 Safety Hints 1-1
Group 2 Specifications 1-10

https://truckmanualshub.com/

GROUP 1 SAFETY

FOLLOW SAFE PROCEDURE

Unsafe work practices are dangerous. Understand service procedure before doing work; Do not attempt shortcuts.

WEAR PROTECTIVE CLOTHING

Wear close fitting clothing and safety equipment appropriate to the job.

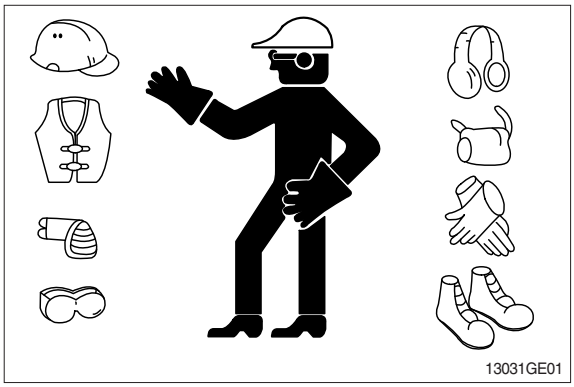

WARN OTHERS OF SERVICE WORK

Unexpected machine movement can cause serious injury.
Before performing any work on the excavator, attach a 「**Do Not Operate**」 tag on the right side control lever.

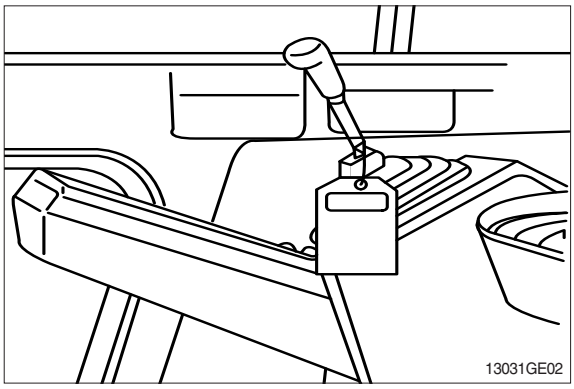

USE HANDHOLDS AND STEPS

Falling is one of the major causes of personal injury.
When you get on and off the machine, always maintain a three point contact with the steps and handrails and face the machine. Do not use any controls as handholds.
Never jump on or off the machine. Never mount or dismount a moving machine.
Be careful of slippery conditions on platforms, steps, and handrails when leaving the machine.

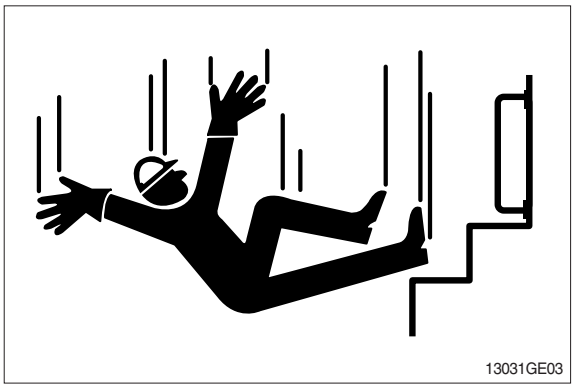

https://truckmanualshub.com/

PREPARE FOR EMERGENCIES

Be prepared if a fire starts.

Keep a first aid kit and fire extinguisher handy.

Keep emergency numbers for doctors, ambulance service, hospital, and fire department near your telephone.

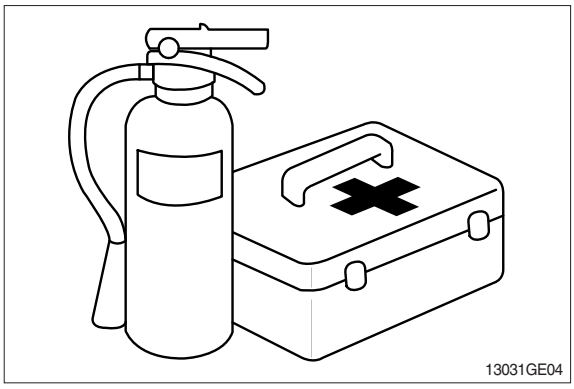

PROTECT AGAINST FLYING DEBRIS

Guard against injury from flying pieces of metal or debris; Wear goggles or safety glasses.

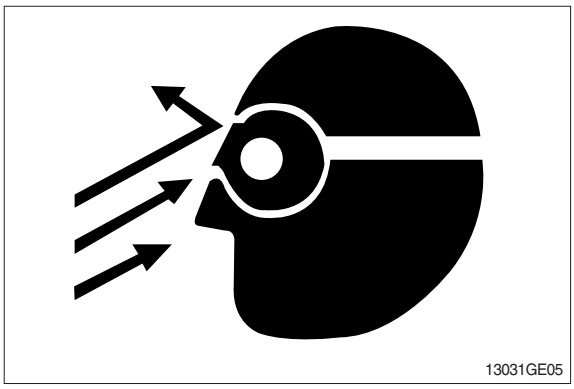

PROTECT AGAINST NOISE

Prolonged exposure to loud noise can cause impairment or loss of hearing.

Wear a suitable hearing protective device such as earmuffs or earplugs to protect against objectionable or uncomfortable loud noises.

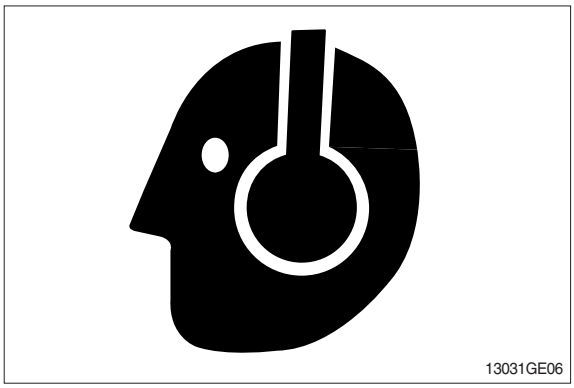

AVOID POWER LINES

Serious injury or death can result from contact with electric lines.

Never move any part of the machine or load closer to electric line than 3m(10ft) plus twice the line insulator length.

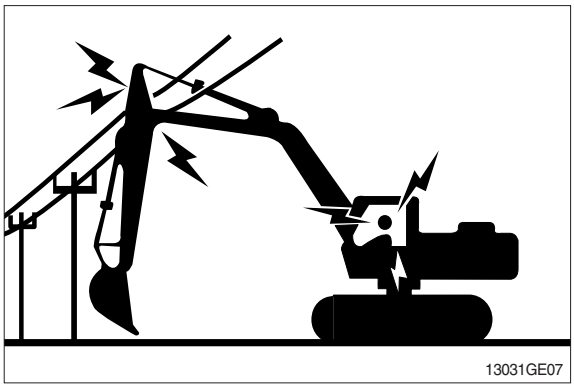

https://truckmanualshub.com/

KEEP RIDERS OFF EXCAVATOR

Only allow the operator on the excavator. Keep riders off.

Riders on excavator are subject to injury such as being struck by foreign objects and being thrown off the excavator. Riders also obstruct the operator's view resulting in the excavator being operated in an unsafe manner.

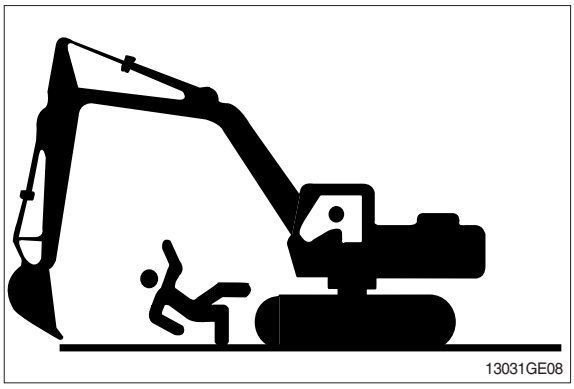

MOVE AND OPERATE MACHINE SAFELY

Bystanders can be run over. Know the location of bystanders before moving, swinging, or operating the machine.

Always keep the travel alarm in working condition. It warns people when the excavator starts to move.

Use a signal person when moving, swinging, or operating the machine in congested areas. Coordinate hand signals before starting the excavator.

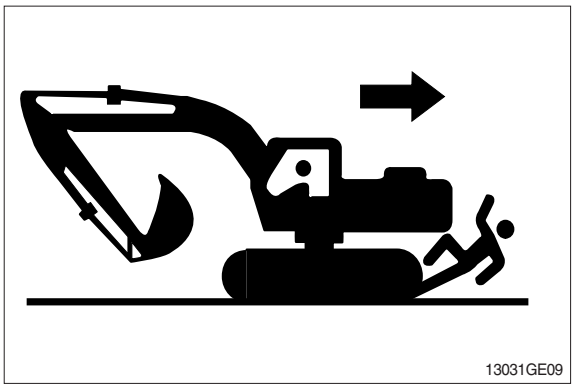

OPERATE ONLY FORM OPERATOR'S SEAT

Avoid possible injury machine damage. Do not start engine by shorting across starter terminals.

NEVER start engine while standing on ground. Start engine only from operator's seat.

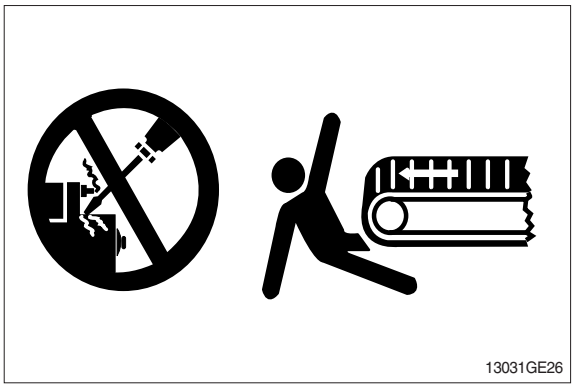

PARK MACHINE SAFELY

Before working on the machine:

- Park machine on a level surface.
- Lower bucket to the ground.
- Turn auto idle switch off.
- Run engine at low idle speed without load for 5 minutes.
- Turn key switch to OFF to stop engine. Remove key from switch.
- Place safety lever to locked position.
- Allow engine to cool.

https://truckmanualshub.com/

SUPPORT MACHINE PROPERLY

Always lower the attachment or implement to the ground before you work on the machine. If you must work on a lifted machine or attachment, securely support the machine or attachment.

Do not support the machine on cinder blocks, hollow tiles, or props that may crumble under continuous load.
Do not work under a machine that is supported solely by a jack. Follow recommended procedures in this manual.

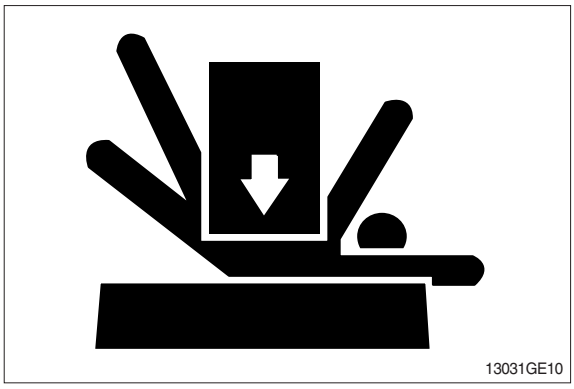
13031GE10

SERVICE COOLING SYSTEM SAFELY

Explosive release of fluids from pressurized cooling system can cause serious burns.

Shut off engine. Only remove filler cap when cool enough to touch with bare hands.

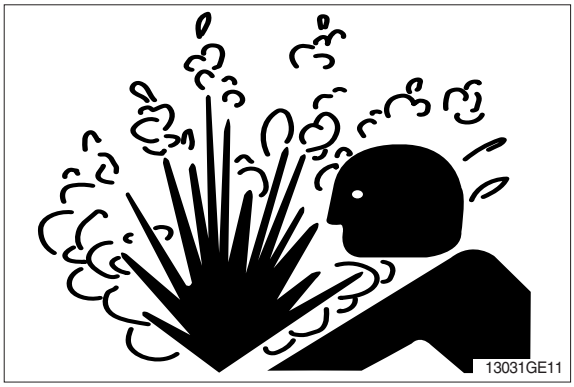
13031GE11

HANDLE FLUIDS SAFELY-AVOID FIRES

Handle fuel with care; It is highly flammable. Do not refuel the machine while smoking or when near open flame or sparks. Always stop engine before refueling machine.
Fill fuel tank outdoors.

13031GE12

Store flammable fluids away from fire hazards. Do not incinerate or puncture pressurized containers.

Make sure machine is clean of trash, grease, and debris.

Do not store oily rags; They can ignite and burn spontaneously.

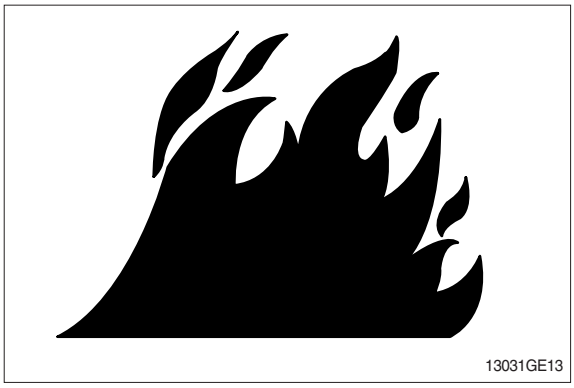
13031GE13

https://truckmanualshub.com/

BEWARE OF EXHAUST FUMES

Prevent asphyxiation. Engine exhaust fumes can cause sickness or death.

If you must operate in a building, be positive there is adequate ventilation. Either use an exhaust pipe extension to remove the exhaust fumes or open doors and windows to bring enough outside air into the area.

REMOVE PAINT BEFORE WELDING OR HEATING

Avoid potentially toxic fumes and dust.

Hazardous fumes can be generated when paint is heated by welding, soldering, or using a torch.

Do all work outside or in a well ventilated area. Dispose of paint and solvent properly.

Remove paint before welding or heating:

- If you sand or grind paint, avoid breathing the dust.
  Wear an approved respirator.
- If you use solvent or paint stripper, remove stripper with soap and water before welding. Remove solvent or paint stripper containers and other flammable material from area. Allow fumes to disperse at least 15 minutes before welding or heating.

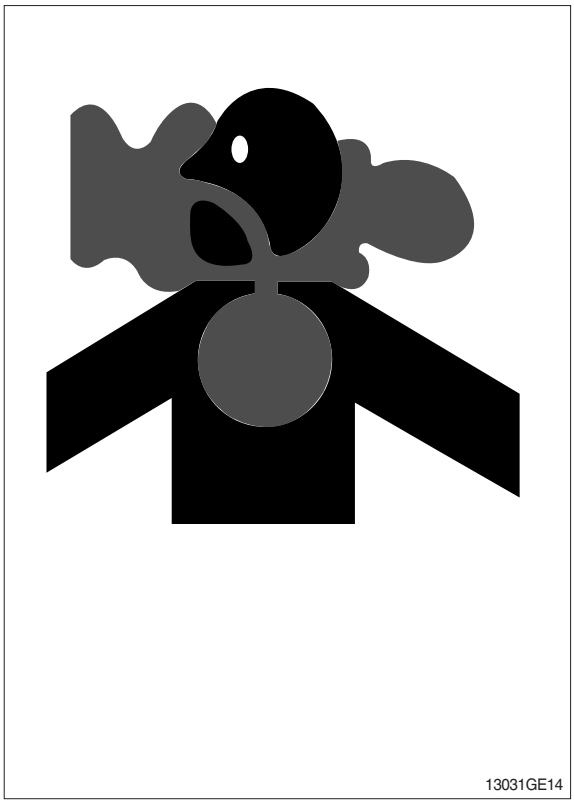
13031GE14

ILLUMINATE WORK AREA SAFELY

Illuminate your work area adequately but safely. Use a portable safety light for working inside or under the machine. Make sure the bulb is enclosed by a wire cage. The hot filament of an accidentally broken bulb can ignite spilled fuel or oil.

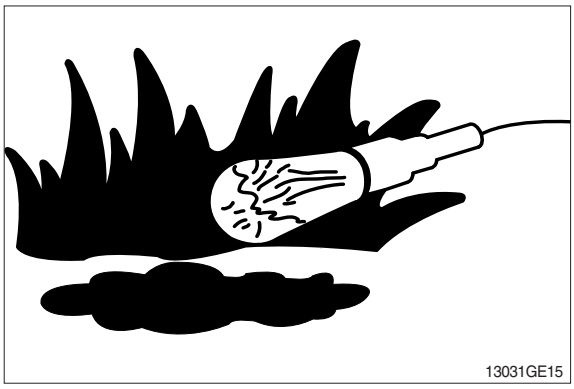
13031GE15

https://truckmanualshub.com/

SERVICE MACHINE SAFELY

Tie long hair behind your head. Do not wear a necktie, scarf, loose clothing or necklace when you work near machine tools or moving parts. If these items were to get caught, severe injury could result.

Remove rings and other jewelry to prevent electrical shorts and entanglement in moving parts.

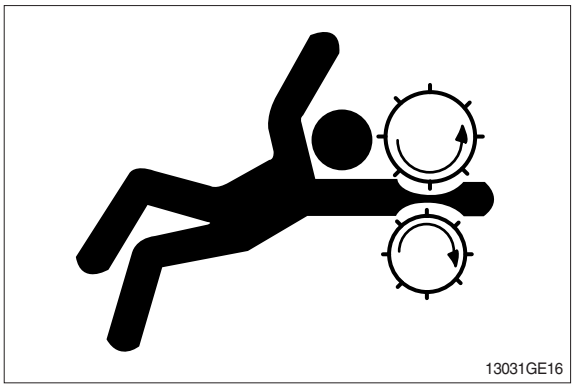
13031GE16

STAY CLEAR OF MOVING PARTS

Entanglements in moving parts can cause serious injury.

To prevent accidents, use care when working around rotating parts.

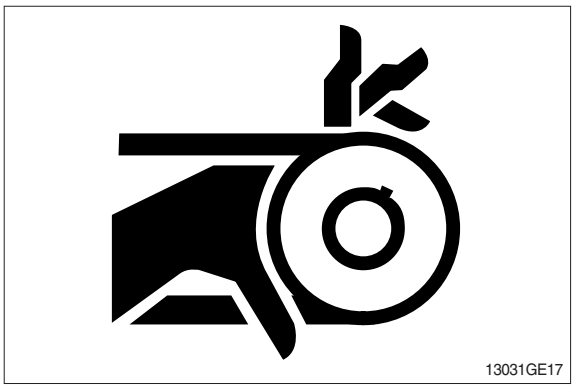
13031GE17

AVOID HIGH PRESSURE FLUIDS

Escaping fluid under pressure can penetrate the skin causing serious injury.

Avoid the hazard by relieving pressure before disconnecting hydraulic or other lines. Tighten all connections before applying pressure.

Search for leaks with a piece of cardboard. Protect hands and body from high pressure fluids.

If an accident occurs, see a doctor immediately. Any fluid injected into the skin must be surgically removed within a few hours or gangrene may result.

13031GE18

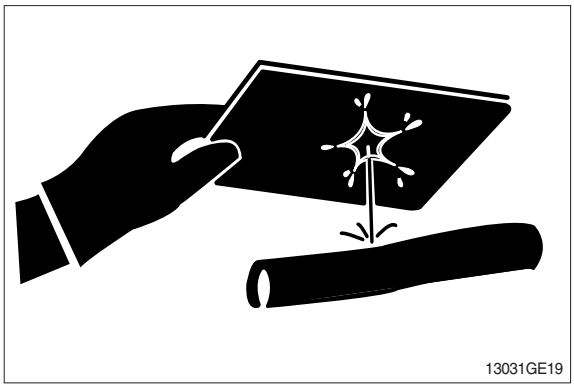
13031GE19

https://truckmanualshub.com/

AVOID HEATING NEAR PRESSURIZED FLUID LINES

Flammable spray can be generated by heating near pressurized fluid lines, resulting in severe burns to yourself and bystanders. Do not heat by welding, soldering, or using a torch near pressurized fluid lines or other flammable materials.

Pressurized lines can be accidentally cut when heat goes beyond the immediate flame area. Install fire resisting guards to protect hoses or other materials.

13031GE20

PREVENT BATTERY EXPLOSIONS

Keep sparks, lighted matches, and flame away from the top of battery. Battery gas can explode.

Never check battery charge by placing a metal object across the posts. Use a volt-meter or hydrometer.

Do not charge a frozen battery; It may explode. Warm battery to 16 ℃ (60 ℉).

13031GE21

https://truckmanualshub.com/

PREVENT ACID BURNS

Sulfuric acid in battery electrolyte is poisonous. It is strong enough to burn skin, eat holes in clothing, and cause blindness if splashed into eyes.

Avoid the hazard by:

1. Filling batteries in a well-ventilated area.
2. Wearing eye protection and rubber gloves.
3. Avoiding breathing fumes when electrolyte is added.
4. Avoiding spilling of dripping electrolyte.
5. Use proper jump start procedure.

If you spill acid on yourself:

1. Flush your skin with water.
2. Apply baking soda or lime to help neutralize the acid.
3. Flush your eyes with water for 10-15 minutes. Get medical attention immediately.

If acid is swallowed:

1. Drink large amounts of water or milk.
2. Then drink milk of magnesia, beaten eggs, or vegetable oil.
3. Get medical attention immediately.

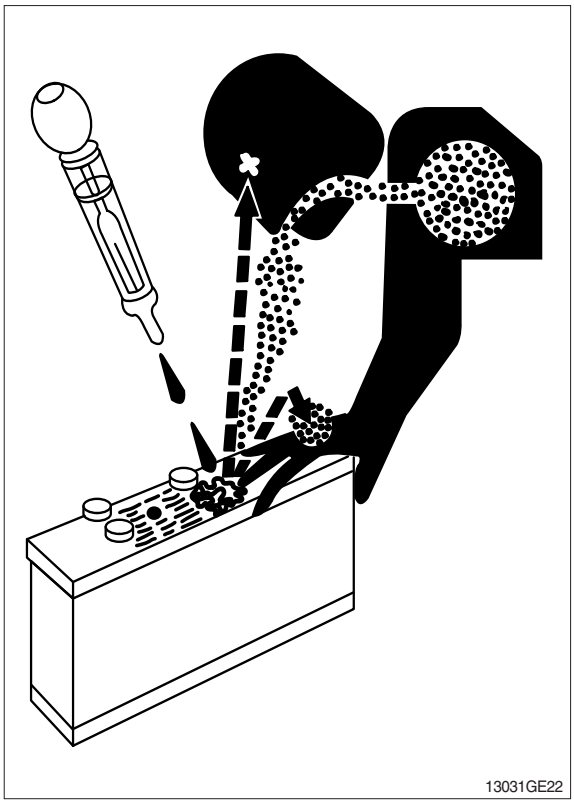

USE TOOLS PROPERLY

Use tools appropriate to the work. Makeshift tools, parts, and procedures can create safety hazards.

Use power tools only to loosen threaded tools and fasteners.

For loosening and tightening hardware, use the correct size tools. DO NOT use U.S. measurement tools on metric fasteners. Avoid bodily injury caused by slipping wrenches.

Use only recommended replacement parts. (See Parts manual.)

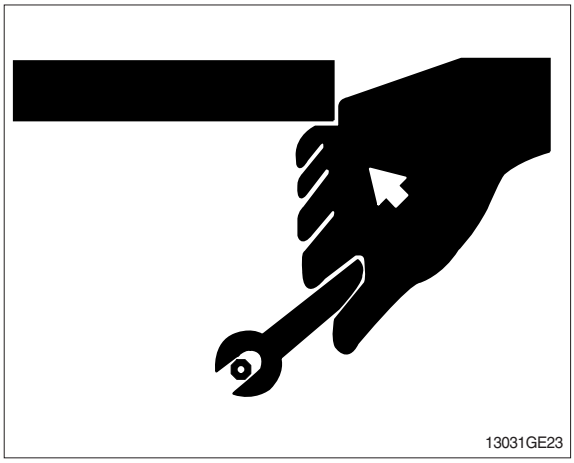

https://truckmanualshub.com/

DISPOSE OF FLUIDS PROPERLY

Improperly disposing of fluids can harm the environment and ecology. Before draining any fluids, find out the proper way to dispose of waste from your local environmental agency.

Use proper containers when draining fluids. Do not use food or beverage containers that may mislead someone into drinking from them.

DO NOT pour oil into the ground, down a drain, or into a stream, pond, or lake. Observe relevant environmental protection regulations when disposing of oil, fuel, coolant, brake fluid, filters, batteries, and other harmful waste.

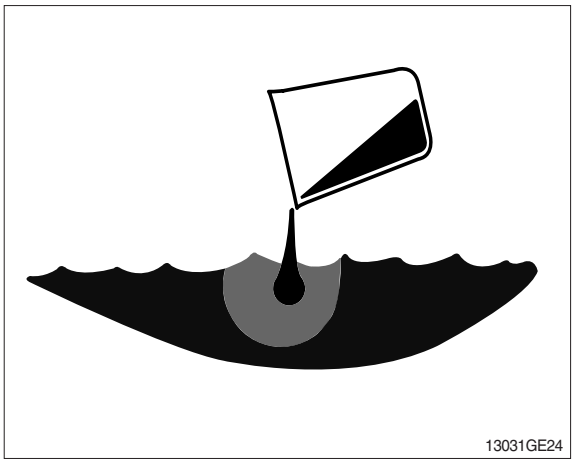
13031GE24

REPLACE SAFETY LABELS

Replace missing or damaged safety labels. See the machine operator's manual for correct safety label placement.

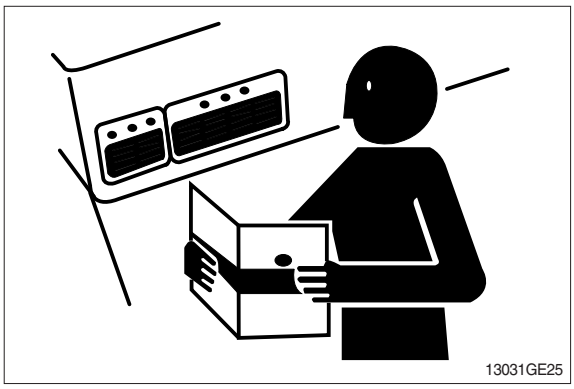
13031GE25

LIVE WITH SAFETY

Before returning machine to customer, make sure machine is functioning properly, especially the safety systems. Install all guards and shields.

https://truckmanualshub.com/

GROUP 2 SPECIFICATIONS

1. MAJOR COMPONENT

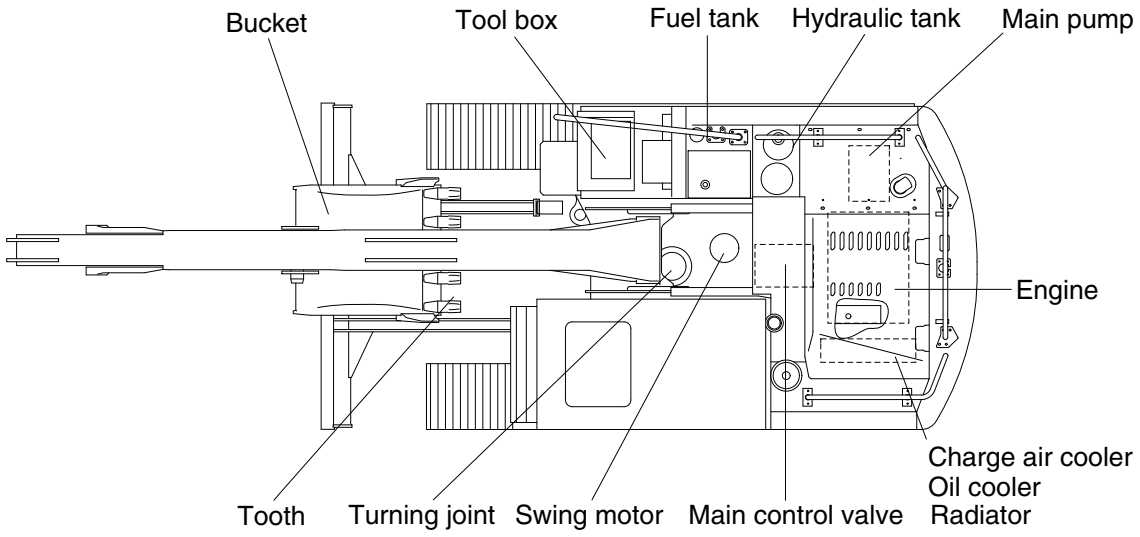

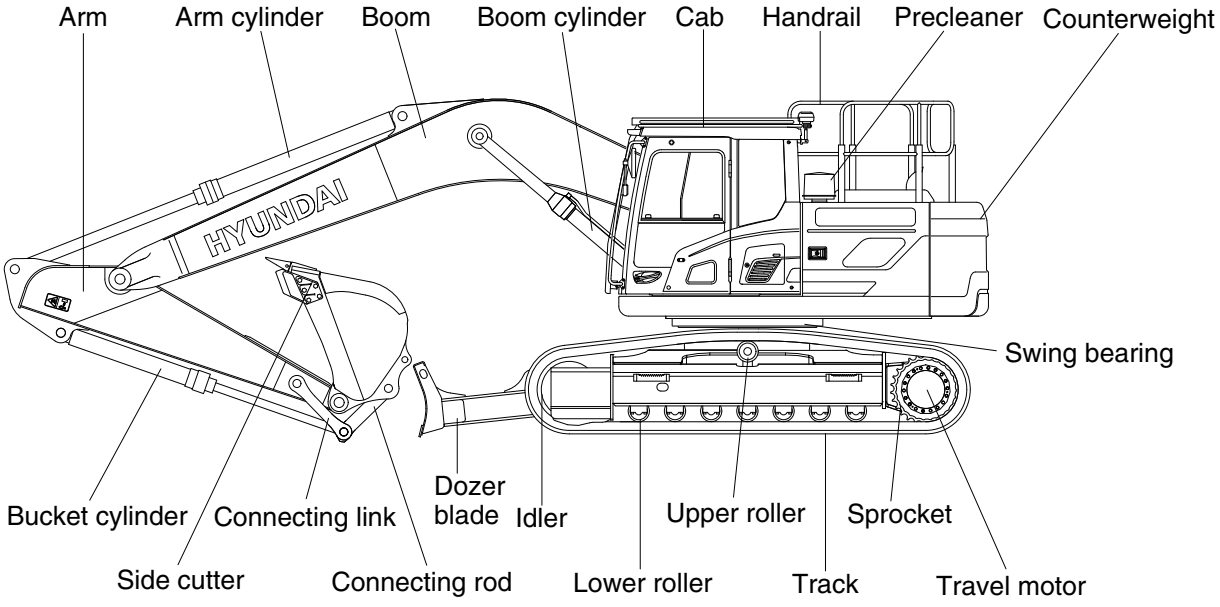

140SA2SP01

https://truckmanualshub.com/

2. SPECIFICATIONS

1) HX140 LT3, MONO BOOM

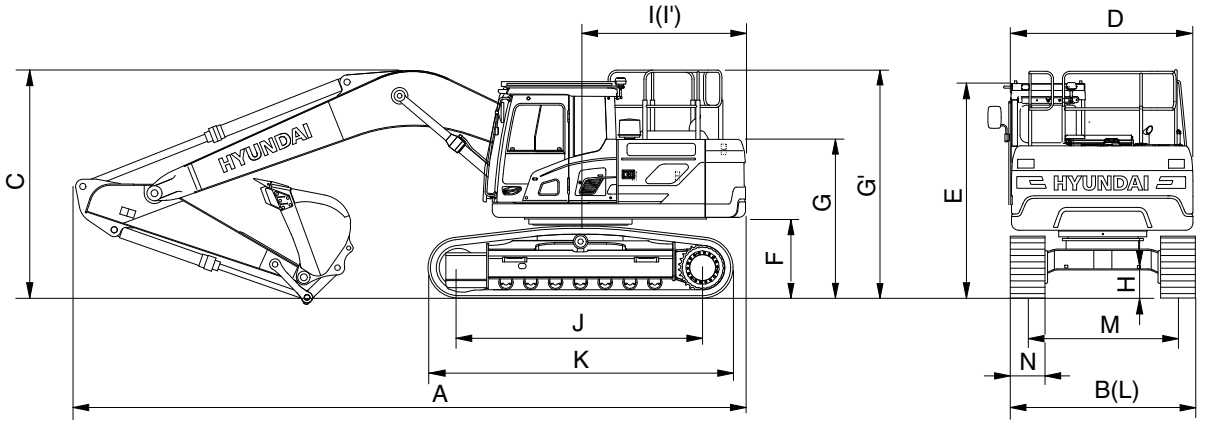

Description		Unit		Specification	
		m (ft-in)	Boom	4.6 (15' 1")	
			Arm	2.50 (8' 2")	3.00 (9' 10")
		mm (in)	Shoe	600 (24)	
Operating weight		m^3 (yd^3)		14325 (31580)	14355 (31650)
Bucket capacity (SAE heaped), standard		kg (lb)		0.52 (0.68)	0.52 (0.68)
Overall length	A	mm (ft-in)		7830 (25' 8")	7780 (25' 6")
Overall width	B			2590 (8' 6")	2590 (8' 6")
Overall width with add footboard	B'			2590 (8' 6")	2590 (8' 6")
Overall height of boom	C			2730 (8' 11")	3060 (10' 0")
Overall width of upper structure	D			2475 (8' 1")	2475 (8' 1")
Overall height of cab	E			2860 (9' 5")	2860 (9' 5")
Ground clearance of counterweight	F			930 (3' 1")	930 (3' 1")
Overall height of engine hood	G			2220 (7' 3")	2220 (7' 3")
Overall height of handrail	G'			2950 (9' 8")	2950 (9' 8")
Minimum ground clearance	H			430 (1' 5")	430 600
Rear-end distance	I			2335 (7' 8")	2335 (7' 8")
Rear-end swing radius	I'			2345 (7' 8")	2345 (7' 8")
Distance between tumblers	J			3000 (9' 10")	3000 (9' 10")
Undercarriage length (without grouser)	K			3696 (12' 2")	3696 (12' 2")
Undercarriage length (with grouser)	K'			3746 (12' 3")	3746 (12' 3")
Undercarriage width	L			2590 (8' 6")	2590 (8' 6")
Undercarriage width with add footboard	L'			2590 (8' 6")	2590 (8' 6")
Track gauge	M			1990 (6' 6")	1990 (6' 6")
Track shoe width, standard	N			600 (2' 0")	600 (2' 0")
Track shoe link quantity		EA		46	46
Travel speed (low/high)		km/hr (mph)		3.4/5.8 (2.1/3.6)	3.4/5.8 (2.1/3.6)
Swing speed		rpm		12.4	12.4
Gradeability		Degree (%)		35 (70)	35 (70)
Ground pressure		kgf/cm^2 (psi)		0.37 (5.23)	0.37 (5.25)
Max traction force		kg (lb)		12670 (27930)	12670 (27930)

2) HX140 HWT3, MONO BOOM

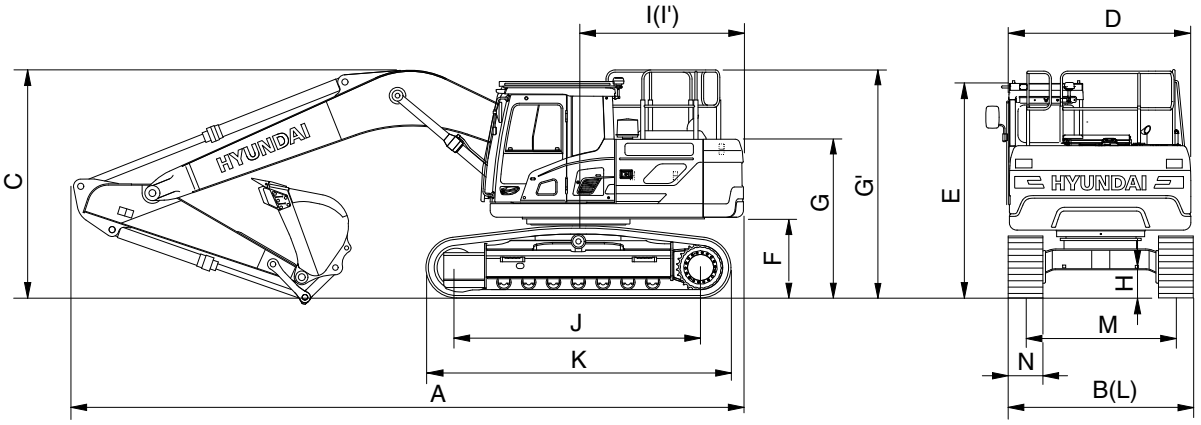

Description		Unit		Specification	
		m (ft-in)	Boom	4.6 (15' 1")	
			Arm	2.50 (8' 2")	3.00 (9' 10")
		mm (in)	Shoe	800 (32)	
Operating weight		m^3 (yd^3)		17320 (38180)	17355 (38260)
Bucket capacity (SAE heaped), standard		kg (lb)		0.52 (0.68)	0.52 (0.68)
Overall length	A	mm (ft-in)		7830 (25' 8")	7780 (25' 6")
Overall width	B			2840 (9' 4")	2840 (9' 4")
Overall width with add footboard	B'			2840 (9' 4")	2840 (9' 4")
Overall height of boom	C			2730 (8' 11")	3060 (10' 0")
Overall width of upper structure	D			2475 (8' 1")	2475 (8' 1")
Overall height of cab	E			3110 (10' 2")	3110 (10' 2")
Ground clearance of counterweight	F			1205 (3' 11")	1205 (3' 11")
Overall height of engine hood	G			2470 (8' 1")	2470 (8' 1")
Overall height of handrail	G'			3200 (10' 6")	3200 (10' 6")
Minimum ground clearance	H			600 (2' 0")	600 (2' 0")
Rear-end distance	I			2335 (7' 8")	2335 (7' 8")
Rear-end swing radius	I'			2345 (7' 8")	2345 (7' 8")
Distance between tumblers	J			3030 (9' 11")	3030 (9' 11")
Undercarriage length (without grouser)	K			3770 (12' 4")	3770 (12' 4")
Undercarriage length (with grouser)	K'			3820 (12' 6")	3820 (12' 6")
Undercarriage width	L			2840 (9' 4")	2840 (9' 4")
Undercarriage width with add footboard	L'			2840 (9' 4")	2840 (9' 4")
Track gauge	M			2040 (6' 8")	2040 (6' 8")
Track shoe width, standard	N			800 (2' 7")	800 (2' 7")
Track shoe link quantity		EA		47	47
Travel speed (low/high)		km/hr (mph)		3.4/5.8 (2.1/3.6)	3.4/5.8 (2.1/3.6)
Swing speed		rpm		12.4	12.4
Gradeability		Degree (%)		35 (70)	35 (70)
Ground pressure		kgf/cm^2 (psi)		0.33 (4.68)	0.33 (4.69)
Max traction force		kg (lb)		12670 (27930)	12670 (27930)

https://truckmanualshub.com/

3) HX140 LDT3, MONO BOOM

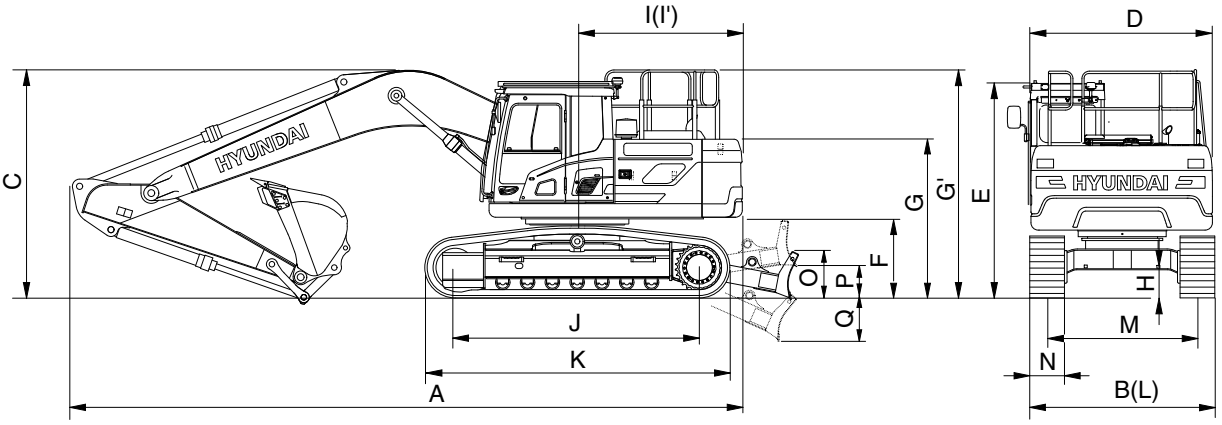

Description		Unit		Specification	
		m (ft-in)	Boom	4.6 (15' 1")	
			Arm	2.50 (8' 2")	3.00 (9' 10")
		mm (in)	Shoe	600 (24)	
Operating weight		m^3 (yd^3)		15230 (33580)	15260 (33640)
Bucket capacity (SAE heaped), standard		kg (lb)		0.52 (0.68)	0.52 (0.68)
Overall length	A	mm (ft-in)		7830 (25' 8")	7780 (25' 6")
Overall width	B			2590 (8' 6")	2590 (8' 6")
Overall width with add footboard	B'			2590 (8' 6")	2590 (8' 6")
Overall height of boom	C			2730 (8' 11")	3060 (10' 0")
Overall width of upper structure	D			2475 (8' 1")	2475 (8' 1")
Overall height of cab	E			2860 (9' 5")	2860 (9' 5")
Ground clearance of counterweight	F			930 (3' 1")	930 (3' 1")
Overall height of engine hood	G			2220 (7' 3")	2220 (7' 3")
Overall height of handrail	G'			2950 (9' 8")	2950 (9' 8")
Minimum ground clearance	H			280 (0' 11")	280 (0' 11")
Rear-end distance	I			2335 (7' 8")	2335 (7' 8")
Rear-end swing radius	I'			2345 (7' 8")	2345 (7' 8")
Distance between tumblers	J			3000 (9' 10")	3000 (9' 10")
Undercarriage length (without grouser)	K			3696 (12' 2")	3696 (12' 2")
Undercarriage length (with grouser)	K'			3746 (12' 3")	3746 (12' 3")
Undercarriage width	L			2590 (8' 6")	2590 (8' 6")
Undercarriage width with add footboard	L'			2590 (8' 6")	2590 (8' 6")
Track gauge	M			1990 (6' 6")	1990 (6' 6")
Track shoe width, standard	N			600 (2' 0")	600 (2' 0")
Height of blade	O			575 (1' 11")	575 (1' 11")
Ground clearance of blade up	P			580 (1' 11")	580 (1' 11")
Depth of blade down	Q			475 (1' 7")	475 (1' 7")
Track shoe link quantity		EA		46	46
Travel speed (low/high)		km/hr (mph)		3.4/5.8 (2.1/3.6)	3.4/5.8 (2.1/3.6)
Swing speed		rpm		12.4	12.4
Gradeability		Degree (%)		35 (70)	35 (70)
Ground pressure		kgf/cm^2 (psi)		0.42 (5.93)	0.39 (5.58)
Max traction force		kg (lb)		12670 (27930)	12670 (27930)

https://truckmanualshub.com/

3. WORKING RANGE AND DIGGING FORCE

1) HX140 LT3/HWT3/LDT3

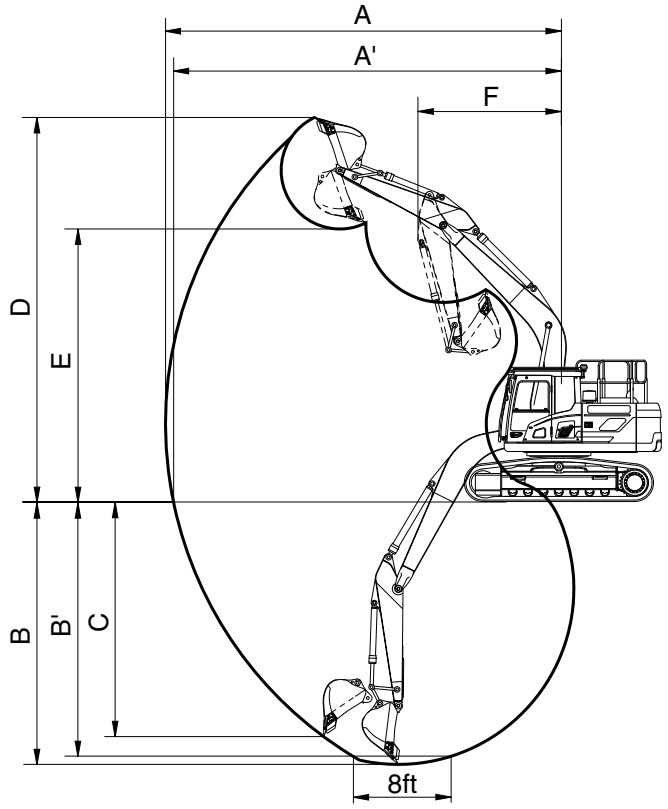

140SA2SP10

Description	m (ft-in)	Boom	4.6 (15' 1")	
		Arm	2.50 (8' 2")	3.00 (9' 10")
Max digging reach	mm (ft-in)	A	8330 (27' 4")	8790 (28' 10")
Max digging reach on ground		A'	8190 (26' 10")	8660 (28' 5")
Max digging depth		B	5530 (18' 2")	6030 (19' 9")
Max digging depth (8 ft level)		B'	5330 (17' 6")	5850 (19' 2")
Max vertical wall digging depth		C	5080 (16' 8")	5580 (18' 4")
Max digging height		D	8550 (28' 1")	8830 (29' 0")
Max dumping height		E	6105 (20' 0")	6380 (20' 11")
Min swing radius		F	2655 (8' 9")	2690 (8' 10")
Bucket digging force	kN	SAE	87.9 [95.4]	87.8 [95.3]
	kgf		8960 [9730]	8956 [9720]
	lbf		19754 [21451]	19745 [21429]
	kN	ISO	102.9 [111.7]	102.9 [111.7]
	kgf		10494 [11390]	10489 [11390]
	lbf		23134 [25111]	23123 [25111]
Arm digging force	kN	SAE	62.7 [68.1]	56 [60.8]
	kgf		6396 [6940]	5711 [6200]
	lbf		14100 [15300]	12591 [13669]
	kN	ISO	65.4 [71]	58.1 [63.1]
	kgf		6666 [7240]	5925 [6430]
	lbf		14696 [15961]	13062 [14176]

[ ] : Power boost

https://truckmanualshub.com/

4. WEIGHT

Item	Qty	HX140 LT3		HX140 LDT3		HX140 HWT3	
	EA	kg	lb	kg	lb	kg	lb
Upperstructure assembly							
· Main frame weld assembly	1	1140	2513	1140	2513	1140	2513
· Engine assembly	1	371	818	371	818	371	818
· Main pump assembly	1	92	203	92	203	92	203
· Main control valve assembly	1	140	309	140	309	140	309
· Swing motor assembly	1	130	287	130	287	130	287
· Hydraulic oil tank WA	1	133	294	133	294	133	294
· Fuel tank WA	1	150	331	150	331	150	331
· Counterweight	1	1900	4189	1900	4189	1900	4189
· Cab assembly	1	495	1091	495	1091	495	1091
Lower chassis assembly							
· Track frame weld assembly	1	1497	3300	1667	3675	2199	4848
· Dozer blade assembly	1	-	-	503	1109	-	-
· Swing bearing	1	214	472	214	472	214	472
· Travel motor assembly	2	278	613	278	613	278	613
· Turning joint	1	56	123	63	139	56	123
· Sprocket	2	40	87	40	87	49	109
· Track recoil spring	2	93	204	93	204	132	291
· Idler	2	104	229	104	229	151	332
· Upper roller	4	19	42	19	42	40	88
· Lower roller	18	35	77	35	77	40	88
· Track Guard	2	36	79	36	79	-	-
· Track Guard	4	-	-	-	-	592	1305
· Track-chain assembly (500 mm, 46 link)	2	922	2033	922	2033	-	-
· Track-chain assembly (600 mm, 46 link)	2	1027	2263	1027	2263	-	-
· Track-chain assembly (700 mm, 46 link)	2	1131	2494	1131	2494	-	-
· Track-chain assembly (700 mm, 47 link)	2	-	-	-	-	1250	2755
· Track-chain assembly (800 mm, 47 link)	2	-	-	-	-	1367	3013
Front attachment assembly							
· 4.6 m mono boom assembly	1	812	1790	812	1790	812	1790
· 2.50 m arm assembly	1	445	981	445	981	445	981
· 3.00 m arm assembly	1	482	1063	482	1063	482	1063
· 0.58 m^3 bucket assembly	1	484	1067	484	1067	484	1067
· 0.52 m^3 bucket assembly	1	461	1016	461	1016	461	1016
· 0.65 m^3 bucket assembly	1	513	1131	513	1131	513	1131
· 0.71 m^3 bucket assembly	1	536	1182	536	1182	536	1182
· Boom cylinder assembly	2	119	262	119	262	119	262
· Arm cylinder assembly	1	145	320	145	320	145	320
· Bucket cylinder assembly	1	104	229	104	229	104	229
· Dozer cylinder assembly	2	55	120	55	120	55	120
· Bucket control linkage total	1	114	251	114	251	114	251

※ This information is different with operating and transportation weight because it is not including harness, pipe, oil, fuel so on.

※ Refer to Transportation for actual weight information and Specifications for operating weight.

https://truckmanualshub.com/

5. LIFTING CAPACITIES

1) HX140 LT3

Model	Type	Boom	Arm	Counterweight	Shoe	Wheel	Dozer		Outrigger	
HX140 LT3	MONO BOOM	Length [mm]	Length [mm]	weight [kg]	width [mm]	width [mm]	Front	Rear	Front	Rear
		4600	2500	1900	600	-	-	-	-	-

· : Rating over-front · : Rating over-side or 360 degree

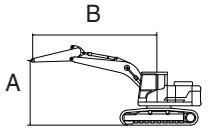

Lift-point height (A)		Lift-point radius (B)								At max. reach		
		1.5 m (4.9 ft)		3.0 m (9.8 ft)		4.5 m (14.8 ft)		6.0 m (19.7 ft)		Capacity		Reach
												m (ft)
6.0 m (19.7 ft)	kg					*3400	*3400			*2420	*2420	5.42
	lb					*7500	*7500			*5340	*5340	(17.8)
4.5 m (14.8 ft)	kg					*3650	*3650	*3410	2450	*2220	2190	6.39
	lb					*8050	*8050	*7520	5400	*4890	4830	(21.0)
3.0 m (9.8 ft)	kg			*6150	*6150	*4540	3710	3630	2380	*2200	1890	6.91
	lb			*13560	*13560	*10010	8180	8000	5250	*4850	4170	(22.7)
1.5 m (4.9 ft)	kg			*7480	6240	5480	3460	3510	2280	*2310	1770	7.07
	lb			*16490	13760	12080	7630	7740	5030	*5090	3900	(23.2)
0.0 m (0.0 ft)	kg			*6420	5930	5270	3270	3420	2190	*2570	1800	6.91
	lb			*14150	13070	11620	7210	7540	4830	*5670	3970	(22.7)
-1.5 m (-4.9 ft)	kg	*4660	*4660	*9760	5890	5190	3200	3390	2160	3110	2000	6.38
	lb	*10270	*10270	*21520	12990	11440	7050	7470	4760	6860	4410	(20.9)
-3.0 m (-9.8 ft)	kg	*8690	*8690	*8890	5990	5240	3250			4010	2550	5.40
	lb	*19160	*19160	*19600	13210	11550	7170			8840	5620	(17.7)

Note 1. Lifting capacity are based on ISO 10567.
2. Lifting capacity of the HX series does not exceed 75% of tipping load with the machine on firm, level ground or 87% of full hydraulic capacity.
3. The Lift-point is bucket pivot mounting pin on the arm (without bucket mass).
4. *Indicates load limited by hydraulic capacity.

※ **Lifting capacities are based upon a standard machine conditions.**
Lifting capacities will vary with different work tools, ground conditions and attachments.
The difference between the weight of a work tool attachment must be subtracted.
Consult with your local Hyundai dealer regarding the lifting capacities for specific work tools and attachments.

⚠ **Failure to comply to the rated load can cause serious injury, death, or property damage. Make adjustments to the rated load as necessory for non-standard configurations.**

https://truckmanualshub.com/

Model	Type	Boom	Arm	Counterweight	Shoe	Wheel	Dozer		Outrigger	
HX140 LT3	MONO BOOM	Length [mm]	Length [mm]	weight [kg]	width [mm]	width [mm]	Front	Rear	Front	Rear
		4600	2500	2300	600	-	-	-	-	-

· : Rating over-front · : Rating over-side or 360 degree

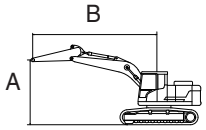

Lift-point height (A)		Lift-point radius (B)								At max. reach		
		1.5 m (4.9 ft)		3.0 m (9.8 ft)		4.5 m (14.8 ft)		6.0 m (19.7 ft)		Capacity		Reach
												m (ft)
6.0 m (19.7 ft)	kg					*3400	*3400			*2420	*2420	5.42
	lb					*7500	*7500			*5340	*5340	(17.8)
4.5 m (14.8 ft)	kg					*3650	*3650	*3410	2640	*2220	*2220	6.39
	lb					*8050	*8050	*7520	5820	*4890	*4890	(21.0)
3.0 m (9.8 ft)	kg			*6150	*6150	*4540	3990	3870	2570	*2200	2050	6.91
	lb			*13560	*13560	*10010	8800	8530	5670	*4850	4520	(22.7)
1.5 m (4.9 ft)	kg			*7480	6730	*5660	3730	3750	2470	*2310	1930	7.07
	lb			*16490	14840	*12480	8220	8270	5450	*5090	4250	(23.2)
0.0 m (0.0 ft)	kg			*6420	6410	5630	3550	3660	2380	*2570	1960	6.91
	lb			*14150	14130	12410	7830	8070	5250	*5670	4320	(22.7)
-1.5 m (-4.9 ft)	kg	*4660	*4660	*9760	6370	5550	3480	3620	2350	*3110	2170	6.38
	lb	*10270	*10270	*21520	14040	12240	7670	7980	5180	*6860	4780	(20.9)
-3.0 m (-9.8 ft)	kg	*8690	*8690	*8890	6480	5600	3520			4280	2770	5.40
	lb	*19160	*19160	*19600	14290	12350	7760			9440	6110	(17.7)

Note 1. Lifting capacity are based on ISO 10567.
2. Lifting capacity of the HX series does not exceed 75% of tipping load with the machine on firm, level ground or 87% of full hydraulic capacity.
3. The Lift-point is bucket pivot mounting pin on the arm (without bucket mass).
4. *Indicates load limited by hydraulic capacity.

※ **Lifting capacities are based upon a standard machine conditions.**
Lifting capacities will vary with different work tools, ground conditions and attachments.
The difference between the weight of a work tool attachment must be subtracted.
Consult with your local Hyundai dealer regarding the lifting capacities for specific work tools and attachments.

⚠ **Failure to comply to the rated load can cause serious injury, death, or property damage. Make adjustments to the rated load as necessory for non-standard configurations.**

https://truckmanualshub.com/

Model	Type	Boom	Arm	Counterweight	Shoe	Wheel	Dozer		Outrigger	
HX140 LT3	MONO BOOM	Length [mm]	Length [mm]	weight [kg]	width [mm]	width [mm]	Front	Rear	Front	Rear
		4600	3000	1900	600	-	-	-	-	-

· : Rating over-front · : Rating over-side or 360 degree

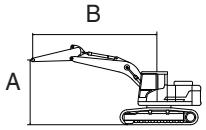

Lift-point height (A)		Lift-point radius (B)										At max. reach		
		1.5 m (4.9 ft)		3.0 m (9.8 ft)		4.5 m (14.8 ft)		6.0 m (19.7 ft)		7.5 m (24.6 ft)		Capacity		Reach
														m (ft)
7.5 m	kg											*2440	*2440	4.46
(24.6 ft)	lb											*5380	*5380	(14.6)
6.0 m	kg							*2050	*2050			*2020	*2020	6.01
(19.7 ft)	lb							*4520	*4520			*4450	*4450	(19.7)
4.5 m	kg							*3260	2500			*1890	*1890	6.90
(14.8 ft)	lb							*7190	5510			*4170	*4170	(22.6)
3.0 m	kg					*4050	3790	*3630	2420			*1880	1710	7.38
(9.8 ft)	lb					*8930	8360	*8000	5340			*4140	3770	(24.2)
1.5 m	kg			*8190	6450	*5250	3520	3540	2300	*2120	1620	*1960	1610	7.53
(4.9 ft)	lb			*18060	14220	*11570	7760	7800	5070	*4670	3570	*4320	3550	(24.7)
0.0 m	kg			*7160	5980	5300	3300	3420	2190			*2170	1620	7.38
(0.0 ft)	lb			*15790	13180	11680	7280	7540	4830			*4780	3570	(24.2)
-1.5 m	kg	*4200	*4200	*9070	5860	5180	3190	3360	2140			*2570	1770	6.89
(-4.9 ft)	lb	*9260	*9260	*20000	12920	11420	7030	7410	4720			*5670	3900	(22.6)
-3.0 m	kg	*7300	*7300	*9470	5910	5180	3190					3400	2170	5.99
(-9.8 ft)	lb	*16090	*16090	*20880	13030	11420	7030					7500	4780	(19.7)
-4.5 m	kg			*7160	6130							*4500	3430	4.43
(-14.8 ft)	lb			*15790	13510							*9920	7560	(14.5)

Note 1. Lifting capacity are based on ISO 10567.
2. Lifting capacity of the HX series does not exceed 75% of tipping load with the machine on firm, level ground or 87% of full hydraulic capacity.
3. The Lift-point is bucket pivot mounting pin on the arm (without bucket mass).
4. *Indicates load limited by hydraulic capacity.

※ **Lifting capacities are based upon a standard machine conditions.**
Lifting capacities will vary with different work tools, ground conditions and attachments.
The difference between the weight of a work tool attachment must be subtracted.
Consult with your local Hyundai dealer regarding the lifting capacities for specific work tools and attachments.

⚠ **Failure to comply to the rated load can cause serious injury, death, or property damage. Make adjustments to the rated load as necessary for non-standard configurations.**

https://truckmanualshub.com/

Model	Type	Boom	Arm	Counterweight	Shoe	Wheel	Dozer		Outrigger	
HX140 LT3	MONO BOOM	Length [mm]	Length [mm]	weight [kg]	width [mm]	width [mm]	Front	Rear	Front	Rear
		4600	3000	2300	600	-	-	-	-	-

· : Rating over-front · : Rating over-side or 360 degree

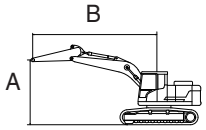

Lift-point height (A)		Lift-point radius (B)										At max. reach		
		1.5 m (4.9 ft)		3.0 m (9.8 ft)		4.5 m (14.8 ft)		6.0 m (19.7 ft)		7.5 m (24.6 ft)		Capacity		Reach
														m (ft)
7.5 m	kg											*2440	*2440	4.46
(24.6 ft)	lb											*5380	*5380	(14.6)
6.0 m	kg							*2050	*2050			*2020	*2020	6.01
(19.7 ft)	lb							*4520	*4520			*4450	*4450	(19.7)
4.5 m	kg							*3260	2690			*1890	*1890	6.90
(14.8 ft)	lb							*7190	5930			*4170	*4170	(22.6)
3.0 m	kg					*4050	*4050	*3630	2610			*1880	1860	7.38
(9.8 ft)	lb					*8930	*8930	*8000	5750			*4140	4100	(24.2)
1.5 m	kg			*8190	6930	*5250	3790	3780	2490	*2120	1770	*1960	1750	7.53
(4.9 ft)	lb			*18060	15280	*11570	8360	8330	5490	*4670	3900	*4320	3860	(24.7)
0.0 m	kg			*7160	6470	5660	3570	3660	2380			*2170	1770	7.38
(0.0 ft)	lb			*15790	14260	12480	7870	8070	5250			*4780	3900	(24.2)
-1.5 m	kg	*4200	*4200	*9070	6340	5540	3460	3600	2330			*2570	1930	6.89
(-4.9 ft)	lb	*9260	*9260	*20000	13980	12210	7630	7940	5140			*5670	4250	(22.6)
-3.0 m	kg	*7300	*7300	*9470	6400	5540	3470					*3460	2360	5.99
(-9.8 ft)	lb	*16090	*16090	*20880	14110	12210	7650					*7630	5200	(19.7)
-4.5 m	kg			*7160	6620							*4500	3710	4.43
(-14.8 ft)	lb			*15790	14590							*9920	8180	(14.5)

Note 1. Lifting capacity are based on ISO 10567.
2. Lifting capacity of the HX series does not exceed 75% of tipping load with the machine on firm, level ground or 87% of full hydraulic capacity.
3. The Lift-point is bucket pivot mounting pin on the arm (without bucket mass).
4. *Indicates load limited by hydraulic capacity.

※ **Lifting capacities are based upon a standard machine conditions.**
Lifting capacities will vary with different work tools, ground conditions and attachments.
The difference between the weight of a work tool attachment must be subtracted.
Consult with your local Hyundai dealer regarding the lifting capacities for specific work tools and attachments.

⚠ **Failure to comply to the rated load can cause serious injury, death, or property damage. Make adjustments to the rated load as necessary for non-standard configurations.**

https://truckmanualshub.com/

2) HX140 LDT3

Model	Type	Boom	Arm	Counterweight	Shoe	Wheel	Dozer		Outrigger	
		Length [mm]	Length [mm]	weight [kg]	width [mm]	width [mm]	Front	Rear	Front	Rear
HX140 LDT3	MONO BOOM	4600	2500	1900	600	-	Down	-	-	-

· : Rating over-front · : Rating over-side or 360 degree

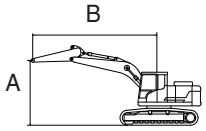

Lift-point height (A)		Lift-point radius (B)								At max. reach		
		1.5 m (4.9 ft)		3.0 m (9.8 ft)		4.5 m (14.8 ft)		6.0 m (19.7 ft)		Capacity		Reach
												m (ft)
6.0 m (19.7 ft)	kg					*3400	*3400			*2410	*2410	5.44
	lb					*7500	*7500			*5310	*5310	(17.8)
4.5 m (14.8 ft)	kg					*3660	*3660	*3430	2790	*2220	*2220	6.41
	lb					*8070	*8070	*7560	6150	*4890	*4890	(21.0)
3.0 m (9.8 ft)	kg			*6200	*6200	*4560	4220	*3960	2720	*2200	2160	6.92
	lb			*13670	*13670	*10050	9300	*8730	6000	*4850	4760	(22.7)
1.5 m (4.9 ft)	kg			*7380	7260	*5680	3960	*4440	2620	*2310	2040	7.07
	lb			*16270	16010	*12520	8730	*9790	5780	*5090	4500	(23.2)
0.0 m (0.0 ft)	kg			*6450	*6450	*6470	3780	*4810	2530	*2580	2080	6.90
	lb			*14220	*14220	*14260	8330	*10600	5580	*5690	4590	(22.6)
-1.5 m (-4.9 ft)	kg	*4710	*4710	*9830	6900	*6640	3710	*4810	2500	*3120	2310	6.37
	lb	*10380	*10380	*21670	15210	*14640	8180	*10600	5510	*6880	5090	(20.9)
-3.0 m (-9.8 ft)	kg	*8770	*8770	*8860	7010	*5960	3760			*4460	2960	5.38
	lb	*19330	*19330	*19530	15450	*13140	8290			*9830	6530	(17.6)

Note 1. Lifting capacity are based on ISO 10567.
2. Lifting capacity of the HX series does not exceed 75% of tipping load with the machine on firm, level ground or 87% of full hydraulic capacity.
3. The Lift-point is bucket pivot mounting pin on the arm (without bucket mass).
4. *Indicates load limited by hydraulic capacity.

※ **Lifting capacities are based upon a standard machine conditions.**
Lifting capacities will vary with different work tools, ground conditions and attachments.
The difference between the weight of a work tool attachment must be subtracted.
Consult with your local Hyundai dealer regarding the lifting capacities for specific work tools and attachments.

⚠ **Failure to comply to the rated load can cause serious injury, death, or property damage. Make adjustments to the rated load as necessory for non-standard configurations.**

https://truckmanualshub.com/

Model	Type	Boom	Arm	Counterweight	Shoe	Wheel	Dozer		Outrigger	
HX140 LDT3	MONO BOOM	Length [mm]	Length [mm]	weight [kg]	width [mm]	width [mm]	Front	Rear	Front	Rear
		4600	2500	1900	600	-	Up	-	-	-

· : Rating over-front · : Rating over-side or 360 degree

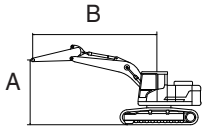

Lift-point height (A)		Lift-point radius (B)								At max. reach		
		1.5 m (4.9 ft)		3.0 m (9.8 ft)		4.5 m (14.8 ft)		6.0 m (19.7 ft)		Capacity		Reach
												m (ft)
6.0 m (19.7 ft)	kg lb					*3400 *7500	*3400 *7500			*2410 *5310	*2410 *5310	5.44 (17.8)
4.5 m (14.8 ft)	kg lb					*3660 *8070	*3660 *8070	*3430 *7560	2790 6150	*2220 *4890	*2220 *4890	6.41 (21.0)
3.0 m (9.8 ft)	kg lb			*6200 *13670	*6200 *13670	*4560 *10050	4220 9300	3650 8050	2720 6000	*2200 *4850	2160 4760	6.92 (22.7)
1.5 m (4.9 ft)	kg lb			*7380 *16270	7260 16010	5510 12150	3960 8730	3540 7800	2620 5780	*2310 *5090	2040 4500	7.07 (23.2)
0.0 m (0.0 ft)	kg lb			*6450 *14220	*6450 *14220	5310 11710	3780 8330	3440 7580	2530 5580	*2580 *5690	2080 4590	6.90 (22.6)
-1.5 m (-4.9 ft)	kg lb	*4710 *10380	*4710 *10380	*9830 *21670	6900 15210	5230 11530	3710 8180	3410 7520	2500 5510	*3120 *6880	2310 5090	6.37 (20.9)
-3.0 m (-9.8 ft)	kg lb	*8770 *19330	*8770 *19330	*8860 *19530	7010 15450	5280 11640	3760 8290			4060 8950	2960 6530	5.38 (17.6)

Note 1. Lifting capacity are based on ISO 10567.
2. Lifting capacity of the HX series does not exceed 75% of tipping load with the machine on firm, level ground or 87% of full hydraulic capacity.
3. The Lift-point is bucket pivot mounting pin on the arm (without bucket mass).
4. *Indicates load limited by hydraulic capacity.

※ **Lifting capacities are based upon a standard machine conditions.**
Lifting capacities will vary with different work tools, ground conditions and attachments.
The difference between the weight of a work tool attachment must be subtracted.
Consult with your local Hyundai dealer regarding the lifting capacities for specific work tools and attachments.

⚠ **Failure to comply to the rated load can cause serious injury, death, or property damage. Make adjustments to the rated load as necessory for non-standard configurations.**

https://truckmanualshub.com/

Model	Type	Boom	Arm	Counterweight	Shoe	Wheel	Dozer		Outrigger	
HX140 LDT3	MONO BOOM	Length [mm]	Length [mm]	weight [kg]	width [mm]	width [mm]	Front	Rear	Front	Rear
		4600	2500	2300	600	-	Down	-	-	-

· : Rating over-front · : Rating over-side or 360 degree

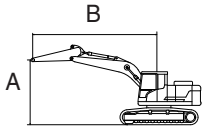

Lift-point height (A)		Lift-point radius (B)								At max. reach		
		1.5 m (4.9 ft)		3.0 m (9.8 ft)		4.5 m (14.8 ft)		6.0 m (19.7 ft)		Capacity		Reach
												m (ft)
6.0 m (19.7 ft)	kg lb					*3400 *7500	*3400 *7500			*2410 *5310	*2410 *5310	5.44 (17.8)
4.5 m (14.8 ft)	kg lb					*3660 *8070	*3660 *8070	*3430 *7560	2990 6590	*2220 *4890	*2220 *4890	6.41 (21.0)
3.0 m (9.8 ft)	kg lb			*6200 *13670	*6200 *13670	*4560 *10050	4510 9940	*3960 *8730	2920 6440	*2200 *4850	*2200 *4850	6.92 (22.7)
1.5 m (4.9 ft)	kg lb			*7380 *16270	*7380 *16270	*5680 *12520	4250 9370	*4440 *9790	2810 6190	*2310 *5090	2210 4870	7.07 (23.2)
0.0 m (0.0 ft)	kg lb			*6450 *14220	*6450 *14220	*6470 *14260	4060 8950	*4810 *10600	2730 6020	*2580 *5690	2250 4960	6.90 (22.6)
-1.5 m (-4.9 ft)	kg lb	*4710 *10380	*4710 *10380	*9830 *21670	7410 16340	*6640 *14640	4000 8820	*4810 *10600	2700 5950	*3120 *6880	2490 5490	6.37 (20.9)
-3.0 m (-9.8 ft)	kg lb	*8770 *19330	*8770 *19330	*8860 *19530	7520 16580	*5960 *13140	4040 8910			*4460 *9830	3180 7010	5.38 (17.6)

Note 1. Lifting capacity are based on ISO 10567.
2. Lifting capacity of the HX series does not exceed 75% of tipping load with the machine on firm, level ground or 87% of full hydraulic capacity.
3. The Lift-point is bucket pivot mounting pin on the arm (without bucket mass).
4. *Indicates load limited by hydraulic capacity.

※ **Lifting capacities are based upon a standard machine conditions.**
Lifting capacities will vary with different work tools, ground conditions and attachments.
The difference between the weight of a work tool attachment must be subtracted.
Consult with your local Hyundai dealer regarding the lifting capacities for specific work tools and attachments.

⚠ **Failure to comply to the rated load can cause serious injury, death, or property damage. Make adjustments to the rated load as necessory for non-standard configurations.**

https://truckmanualshub.com/

Model	Type	Boom	Arm	Counterweight	Shoe	Wheel	Dozer		Outrigger	
HX140 LDT3	MONO BOOM	Length [mm]	Length [mm]	weight [kg]	width [mm]	width [mm]	Front	Rear	Front	Rear
		4600	2500	2300	600	-	Up	-	-	-

· : Rating over-front · : Rating over-side or 360 degree

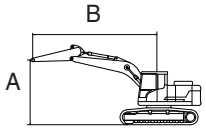

Lift-point height (A)		Lift-point radius (B)								At max. reach		
		1.5 m (4.9 ft)		3.0 m (9.8 ft)		4.5 m (14.8 ft)		6.0 m (19.7 ft)		Capacity		Reach
												m (ft)
6.0 m (19.7 ft)	kg					*3400	*3400			*2410	*2410	5.44
	lb					*7500	*7500			*5310	*5310	(17.8)
4.5 m (14.8 ft)	kg					*3660	*3660	*3430	2990	*2220	*2220	6.41
	lb					*8070	*8070	*7560	6590	*4890	*4890	(21.0)
3.0 m (9.8 ft)	kg			*6200	*6200	*4560	4510	3890	2920	*2200	*2200	6.92
	lb			*13670	*13670	*10050	9940	8580	6440	*4850	*4850	(22.7)
1.5 m (4.9 ft)	kg			*7380	*7380	*5680	4250	3780	2810	*2310	2210	7.07
	lb			*16270	*16270	*12520	9370	8330	6190	*5090	4870	(23.2)
0.0 m (0.0 ft)	kg			*6450	*6450	5660	4060	3680	2730	*2580	2250	6.90
	lb			*14220	*14220	12480	8950	8110	6020	*5690	4960	(22.6)
-1.5 m (-4.9 ft)	kg	*4710	*4710	*9830	7410	5590	4000	3650	2700	*3120	2490	6.37
	lb	*10380	*10380	*21670	16340	12320	8820	8050	5950	*6880	5490	(20.9)
-3.0 m (-9.8 ft)	kg	*8770	*8770	*8860	7520	5640	4040			4340	3180	5.38
	lb	*19330	*19330	*19530	16580	12430	8910			9570	7010	(17.6)

Note 1. Lifting capacity are based on ISO 10567.
2. Lifting capacity of the HX series does not exceed 75% of tipping load with the machine on firm, level ground or 87% of full hydraulic capacity.
3. The Lift-point is bucket pivot mounting pin on the arm (without bucket mass).
4. *Indicates load limited by hydraulic capacity.

※ **Lifting capacities are based upon a standard machine conditions.**
Lifting capacities will vary with different work tools, ground conditions and attachments.
The difference between the weight of a work tool attachment must be subtracted.
Consult with your local Hyundai dealer regarding the lifting capacities for specific work tools and attachments.

⚠ **Failure to comply to the rated load can cause serious injury, death, or property damage. Make adjustments to the rated load as necessory for non-standard configurations.**

https://truckmanualshub.com/

Model	Type	Boom	Arm	Counterweight	Shoe	Wheel	Dozer		Outrigger	
HX140 LDT3	MONO BOOM	Length [mm]	Length [mm]	weight [kg]	width [mm]	width [mm]	Front	Rear	Front	Rear
		4600	3000	1900	600	-	Down	-	-	-

· : Rating over-front · : Rating over-side or 360 degree

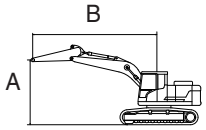

Lift-point height (A)		Lift-point radius (B)										At max. reach		
		1.5 m (4.9 ft)		3.0 m (9.8 ft)		4.5 m (14.8 ft)		6.0 m (19.7 ft)		7.5 m (24.6 ft)		Capacity		Reach
														m (ft)
7.5 m	kg											*2420	*2420	4.49
(24.6 ft)	lb											*5340	*5340	(14.7)
6.0 m	kg							*2100	*2100			*2020	*2020	6.03
(19.7 ft)	lb							*4630	*4630			*4450	*4450	(19.8)
4.5 m	kg							*3260	2840			*1890	*1890	6.91
(14.8 ft)	lb							*7190	6260			*4170	*4170	(22.7)
3.0 m	kg					*4060	*4060	*3640	2760			*1880	*1880	7.39
(9.8 ft)	lb					*8950	*8950	*8020	6080			*4140	*4140	(24.2)
1.5 m	kg			*8230	7470	*5270	4030	*4180	2640	*2120	1870	*1970	1860	7.53
(4.9 ft)	lb			*18140	16470	*11620	8880	*9220	5820	*4670	4120	*4340	4100	(24.7)
0.0 m	kg			*7170	6990	*6240	3800	*4660	2530			*2170	1880	7.37
(0.0 ft)	lb			*15810	15410	*13760	8380	*10270	5580			*4780	4140	(24.2)
-1.5 m	kg	*4240	*4240	*9110	6860	*6630	3700	*4850	2470			*2580	2060	6.88
(-4.9 ft)	lb	*9350	*9350	*20080	15120	*14620	8160	*10690	5450			*5690	4540	(22.6)
-3.0 m	kg	*7360	*7360	*9450	6920	*6290	3700					*3480	2520	5.97
(-9.8 ft)	lb	*16230	*16230	*20830	15260	*13870	8160					*7670	5560	(19.6)
-4.5 m	kg			*7110	*7110							*4500	4000	4.40
(-14.8 ft)	lb			*15670	*15670							*9920	8820	(14.4)

Note 1. Lifting capacity are based on ISO 10567.
2. Lifting capacity of the HX series does not exceed 75% of tipping load with the machine on firm, level ground or 87% of full hydraulic capacity.
3. The Lift-point is bucket pivot mounting pin on the arm (without bucket mass).
4. *Indicates load limited by hydraulic capacity.

※ **Lifting capacities are based upon a standard machine conditions.**
Lifting capacities will vary with different work tools, ground conditions and attachments.
The difference between the weight of a work tool attachment must be subtracted.
Consult with your local Hyundai dealer regarding the lifting capacities for specific work tools and attachments.

⚠ **Failure to comply to the rated load can cause serious injury, death, or property damage. Make adjustments to the rated load as necessary for non-standard configurations.**

https://truckmanualshub.com/

Model	Type	Boom	Arm	Counterweight	Shoe	Wheel	Dozer		Outrigger	
HX140 LDT3	MONO BOOM	Length [mm]	Length [mm]	weight [kg]	width [mm]	width [mm]	Front	Rear	Front	Rear
		4600	3000	1900	600	-	Up	-	-	-

· : Rating over-front · : Rating over-side or 360 degree

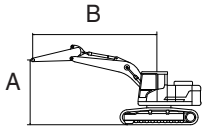

Lift-point height (A)		Lift-point radius (B)										At max. reach		
		1.5 m (4.9 ft)		3.0 m (9.8 ft)		4.5 m (14.8 ft)		6.0 m (19.7 ft)		7.5 m (24.6 ft)		Capacity		Reach
														m (ft)
7.5 m	kg											*2420	*2420	4.49
(24.6 ft)	lb											*5340	*5340	(14.7)
6.0 m	kg							*2100	*2100			*2020	*2020	6.03
(19.7 ft)	lb							*4630	*4630			*4450	*4450	(19.8)
4.5 m	kg							*3260	2840			*1890	*1890	6.91
(14.8 ft)	lb							*7190	6260			*4170	*4170	(22.7)
3.0 m	kg					*4060	*4060	*3640	2760			*1880	*1880	7.39
(9.8 ft)	lb					*8950	*8950	*8020	6080			*4140	*4140	(24.2)
1.5 m	kg			*8230	7470	*5270	4030	3560	2640	*2120	1870	*1970	1860	7.53
(4.9 ft)	lb			*18140	16470	*11620	8880	7850	5820	*4670	4120	*4340	4100	(24.7)
0.0 m	kg			*7170	6990	5340	3800	3450	2530			*2170	1880	7.37
(0.0 ft)	lb			*15810	15410	11770	8380	7610	5580			*4780	4140	(24.2)
-1.5 m	kg	*4240	*4240	*9110	6860	5220	3700	3390	2470			*2580	2060	6.88
(-4.9 ft)	lb	*9350	*9350	*20080	15120	11510	8160	7470	5450			*5690	4540	(22.6)
-3.0 m	kg	*7360	*7360	*9450	6920	5220	3700					3440	2520	5.97
(-9.8 ft)	lb	*16230	*16230	*20830	15260	11510	8160					7580	5560	(19.6)
-4.5 m	kg			*7110	*7110							*4500	4000	4.40
(-14.8 ft)	lb			*15670	*15670							*9920	8820	(14.4)

Note 1. Lifting capacity are based on ISO 10567.
2. Lifting capacity of the HX series does not exceed 75% of tipping load with the machine on firm, level ground or 87% of full hydraulic capacity.
3. The Lift-point is bucket pivot mounting pin on the arm (without bucket mass).
4. *Indicates load limited by hydraulic capacity.

※ **Lifting capacities are based upon a standard machine conditions.**
Lifting capacities will vary with different work tools, ground conditions and attachments.
The difference between the weight of a work tool attachment must be subtracted.
Consult with your local Hyundai dealer regarding the lifting capacities for specific work tools and attachments.

⚠ **Failure to comply to the rated load can cause serious injury, death, or property damage. Make adjustments to the rated load as necessary for non-standard configurations.**

Model	Type	Boom	Arm	Counterweight	Shoe	Wheel	Dozer		Outrigger	
HX140 LDT3	MONO BOOM	Length [mm]	Length [mm]	weight [kg]	width [mm]	width [mm]	Front	Rear	Front	Rear
		4600	3000	2300	600	-	Down	-	-	-

· : Rating over-front · : Rating over-side or 360 degree

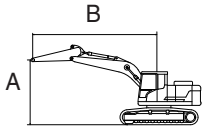

Lift-point height (A)		Lift-point radius (B)										At max. reach		
		1.5 m (4.9 ft)		3.0 m (9.8 ft)		4.5 m (14.8 ft)		6.0 m (19.7 ft)		7.5 m (24.6 ft)		Capacity		Reach
														m (ft)
7.5 m	kg											*2420	*2420	4.49
(24.6 ft)	lb											*5340	*5340	(14.7)
6.0 m	kg							*2100	*2100			*2020	*2020	6.03
(19.7 ft)	lb							*4630	*4630			*4450	*4450	(19.8)
4.5 m	kg							*3260	3040			*1890	*1890	6.91
(14.8 ft)	lb							*7190	6700			*4170	*4170	(22.7)
3.0 m	kg					*4060	*4060	*3640	2950			*1880	*1880	7.39
(9.8 ft)	lb					*8950	*8950	*8020	6500			*4140	*4140	(24.2)
1.5 m	kg			*8230	7980	*5270	4310	*4180	2830	*2120	2020	*1970	*1970	7.53
(4.9 ft)	lb			*18140	17590	*11620	9500	*9220	6240	*4670	4450	*4340	*4340	(24.7)
0.0 m	kg			*7170	*7170	*6240	4090	*4660	2730			*2170	2040	7.37
(0.0 ft)	lb			*15810	*15810	*13760	9020	*10270	6020			*4780	4500	(24.2)
-1.5 m	kg	*4240	*4240	*9110	7380	*6630	3980	*4850	2670			*2580	2220	6.88
(-4.9 ft)	lb	*9350	*9350	*20080	16270	*14620	8770	*10690	5890			*5690	4890	(22.6)
-3.0 m	kg	*7360	*7360	*9450	7440	*6290	3990					*3480	2720	5.97
(-9.8 ft)	lb	*16230	*16230	*20830	16400	*13870	8800					*7670	6000	(19.6)
-4.5 m	kg			*7110	*7110							*4500	4290	4.40
(-14.8 ft)	lb			*15670	*15670							*9920	9460	(14.4)

Note 1. Lifting capacity are based on ISO 10567.
2. Lifting capacity of the HX series does not exceed 75% of tipping load with the machine on firm, level ground or 87% of full hydraulic capacity.
3. The Lift-point is bucket pivot mounting pin on the arm (without bucket mass).
4. *Indicates load limited by hydraulic capacity.

※ **Lifting capacities are based upon a standard machine conditions.**
Lifting capacities will vary with different work tools, ground conditions and attachments.
The difference between the weight of a work tool attachment must be subtracted.
Consult with your local Hyundai dealer regarding the lifting capacities for specific work tools and attachments.

⚠ **Failure to comply to the rated load can cause serious injury, death, or property damage. Make adjustments to the rated load as necessary for non-standard configurations.**

https://truckmanualshub.com/

Model	Type	Boom	Arm	Counterweight	Shoe	Wheel	Dozer		Outrigger	
HX140 LDT3	MONO BOOM	Length [mm]	Length [mm]	weight [kg]	width [mm]	width [mm]	Front	Rear	Front	Rear
		4600	3000	2300	600	-	Up	-	-	-

· : Rating over-front · : Rating over-side or 360 degree

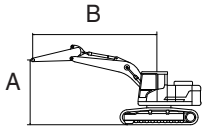

Lift-point height (A)		Lift-point radius (B)										At max. reach		
		1.5 m (4.9 ft)		3.0 m (9.8 ft)		4.5 m (14.8 ft)		6.0 m (19.7 ft)		7.5 m (24.6 ft)		Capacity		Reach
														m (ft)
7.5 m	kg											*2420	*2420	4.49
(24.6 ft)	lb											*5340	*5340	(14.7)
6.0 m	kg							*2100	*2100			*2020	*2020	6.03
(19.7 ft)	lb							*4630	*4630			*4450	*4450	(19.8)
4.5 m	kg							*3260	3040			*1890	*1890	6.91
(14.8 ft)	lb							*7190	6700			*4170	*4170	(22.7)
3.0 m	kg					*4060	*4060	*3640	2950			*1880	*1880	7.39
(9.8 ft)	lb					*8950	*8950	*8020	6500			*4140	*4140	(24.2)
1.5 m	kg			*8230	7980	*5270	4310	3800	2830	*2120	2020	*1970	*1970	7.53
(4.9 ft)	lb			*18140	17590	*11620	9500	8380	6240	*4670	4450	*4340	*4340	(24.7)
0.0 m	kg			*7170	*7170	5690	4090	3690	2730			*2170	2040	7.37
(0.0 ft)	lb			*15810	*15810	12540	9020	8140	6020			*4780	4500	(24.2)
-1.5 m	kg	*4240	*4240	*9110	7380	5570	3980	3620	2670			*2580	2220	6.88
(-4.9 ft)	lb	*9350	*9350	*20080	16270	12280	8770	7980	5890			*5690	4890	(22.6)
-3.0 m	kg	*7360	*7360	*9450	7440	5580	3990					*3480	2720	5.97
(-9.8 ft)	lb	*16230	*16230	*20830	16400	12300	8800					*7670	6000	(19.6)
-4.5 m	kg			*7110	*7110							*4500	4290	4.40
(-14.8 ft)	lb			*15670	*15670							*9920	9460	(14.4)

Note 1. Lifting capacity are based on ISO 10567.
2. Lifting capacity of the HX series does not exceed 75% of tipping load with the machine on firm, level ground or 87% of full hydraulic capacity.
3. The Lift-point is bucket pivot mounting pin on the arm (without bucket mass).
4. *Indicates load limited by hydraulic capacity.

※ **Lifting capacities are based upon a standard machine conditions.**
Lifting capacities will vary with different work tools, ground conditions and attachments.
The difference between the weight of a work tool attachment must be subtracted.
Consult with your local Hyundai dealer regarding the lifting capacities for specific work tools and attachments.

⚠ **Failure to comply to the rated load can cause serious injury, death, or property damage. Make adjustments to the rated load as necessary for non-standard configurations.**

https://truckmanualshub.com/

3) HX140 HWT3

Model	Type	Boom	Arm	Counterweight	Shoe	Wheel	Dozer		Outrigger	
		Length [mm]	Length [mm]	weight [kg]	width [mm]	width [mm]	Front	Rear	Front	Rear
HX140 HWT3	MONO BOOM	4600	2500	1900	800	-	-	-	-	-

· : Rating over-front · : Rating over-side or 360 degree

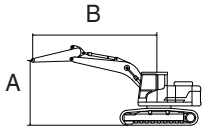

Lift-point height (A)		Lift-point radius (B)								At max. reach		
		1.5 m (4.9 ft)		3.0 m (9.8 ft)		4.5 m (14.8 ft)		6.0 m (19.7 ft)		Capacity		Reach
												m (ft)
7.5 m (24.6 ft)	kg									*2850	*2850	4.13
	lb									*6280	*6280	(13.5)
6.0 m (19.7 ft)	kg					*3380	*3380			*2350	*2350	5.68
	lb					*7450	*7450			*5180	*5180	(18.6)
4.5 m (14.8 ft)	kg					*3800	*3800	*3690	3070	*2210	*2210	6.54
	lb					*8380	*8380	*8140	6770	*4870	*4870	(21.5)
3.0 m (9.8 ft)	kg			*6850	*6850	*4790	4570	*4050	2990	*2220	*2220	6.98
	lb			*15100	*15100	*10560	10080	*8930	6590	*4890	*4890	(22.9)
1.5 m (4.9 ft)	kg			*6410	*6410	*5880	4320	4340	2880	*2350	2280	7.07
	lb			*14130	*14130	*12960	9520	9570	6350	*5180	5030	(23.2)
0.0 m (0.0 ft)	kg			*6910	*6910	6520	4160	4250	2800	*2660	2360	6.83
	lb			*15230	*15230	14370	9170	9370	6170	*5860	5200	(22.4)
-1.5 m (-4.9 ft)	kg	*5440	*5440	*9930	7590	6470	4120	4240	2790	*3300	2670	6.21
	lb	*11990	*11990	*21890	16730	14260	9080	9350	6150	*7280	5890	(20.4)
-3.0 m (-9.8 ft)	kg	*9840	*9840	*8440	7730	*5640	4190			*4650	3550	5.10
	lb	*21690	*21690	*18610	17040	*12430	9240			*10250	7830	(16.7)

Note 1. Lifting capacity are based on ISO 10567.
2. Lifting capacity of the HX series does not exceed 75% of tipping load with the machine on firm, level ground or 87% of full hydraulic capacity.
3. The Lift-point is bucket pivot mounting pin on the arm (without bucket mass).
4. *Indicates load limited by hydraulic capacity.

※ **Lifting capacities are based upon a standard machine conditions.**
Lifting capacities will vary with different work tools, ground conditions and attachments.
The difference between the weight of a work tool attachment must be subtracted.
Consult with your local Hyundai dealer regarding the lifting capacities for specific work tools and attachments.

⚠ **Failure to comply to the rated load can cause serious injury, death, or property damage. Make adjustments to the rated load as necessory for non-standard configurations.**

https://truckmanualshub.com/

This as a preview PDF file from **best-manuals.com**

Best Manuals

Download full PDF manual at **best-manuals.com**