https://truckmanualshub.com/

PREFACE

1. This parts catalog carries the parts of crawler backhoe Model B12, B17 for AMMANN YANMAR.

2. This parts catalog is organized as follows.

2 − 1. The codes of parts to be procured locally are listed with the following fixed code followed by the individual parts code as shown below.

Parts code 172159 − OOOOO
Fixed variable according to parts

2 − 2. Some parts codes in the previous parts catalog have already been replaced with the above code in the case of local procurement as outlined in 2 − 1.

2 − 3. Parts which have been subject to design changes have also been added.

(History)

1 ST Edition	Pub. No.	: 000Y00S2980
	Issued	: July, 1989.
2 ND Edition	Pub. No.	: 000Y00S2981
	Issued	: November, 1989.
3 RD Edition	Pub. No.	: 000Y00S2982
	Issued	: June, 1990.
4 TH Edition	Pub. No.	: 000Y00S2983
	Issued	: August, 1991.

Please discard the old parts catalog.

3. Paint Color

Paint Color	Munsel No.	Paint Code (16L)	Spray
YANMAR Saffron Yellow	1.0Y7.5/11	933110-91603	977620-30381
YANMAR Cream White	5.0Y9/1	981101-09614	981101-10140
YANMAR Charcoal Gray	N2	981101-09516	977620-30371

https://truckmanualshub.com/

SPECIFICATIONS

Name			YANMAR CRAWLER BACHOE		YANMAR CRAWLER BACHOE	
Model			B12-P	B12-PR	B17-P	B17-PR
Engine	Model		3TNA72L-UBA		3TNA72L-UBB	
	Type		Vertical 3-cylinder water-cooled diesel		Vertical 3-cylinder water-cooled diesel	
Dimensions	Overall length	mm	3485		3500	
	Overall width	mm	1000		1000	
	Overall height	mm	2070		2070	
Bucket capacity (St'd)		m³	0.04		0.045	
Outside width of bucket(St'd)		mm	400		450	
Max. digging depth		mm	1900		2100	
Max. cutting depth		mm	3430		3570	
Max. dumping height		mm	2420		2550	
Max. cutting radius at ground level		mm	3320		3500	
Min. turning radius			1300		1360	
Boom swing angle		—	(左) 45 (右) 90		(左) 45 (右) 90	
Max. scoop capacity		kg	1050		1050	
Traveling speeds (high·low)		km/hr	1.8		2.0	
Climbing ability		—	30		30	
Distributed weight		kg/cm²	0.235	0.218	0.254	0.237
Crawler width (St'd)		mm	230		230	
Blade	Width × height	mm	960×250		960×250	
	Capacity	m³	0.06		0.06	
Operating weight		kg	1250	1170	1350	1270

https://truckmanualshub.com/

各部の名称
PARTS NAME

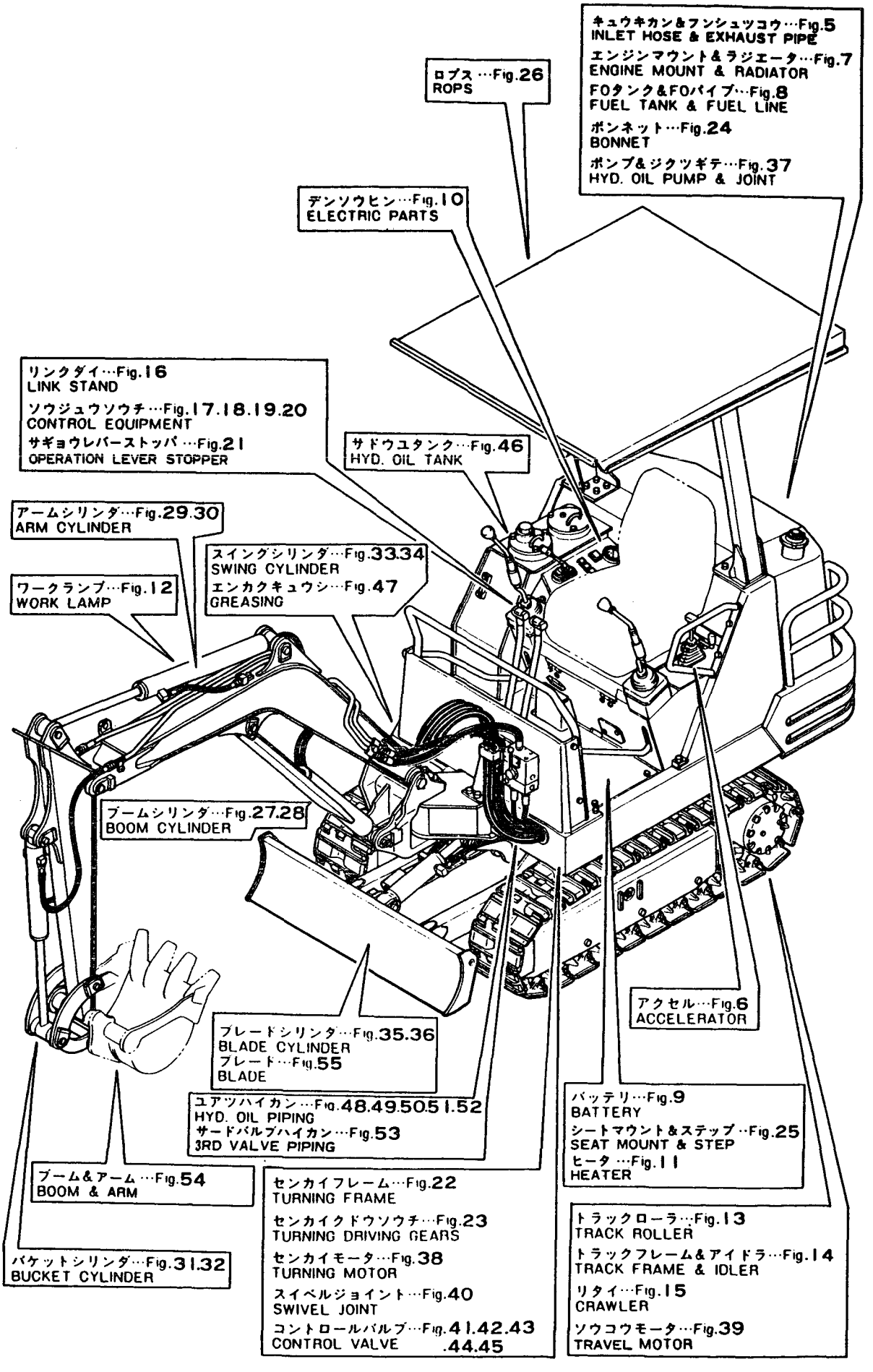

https://truckmanualshub.com/

配線図 WIRING DIAGRAM

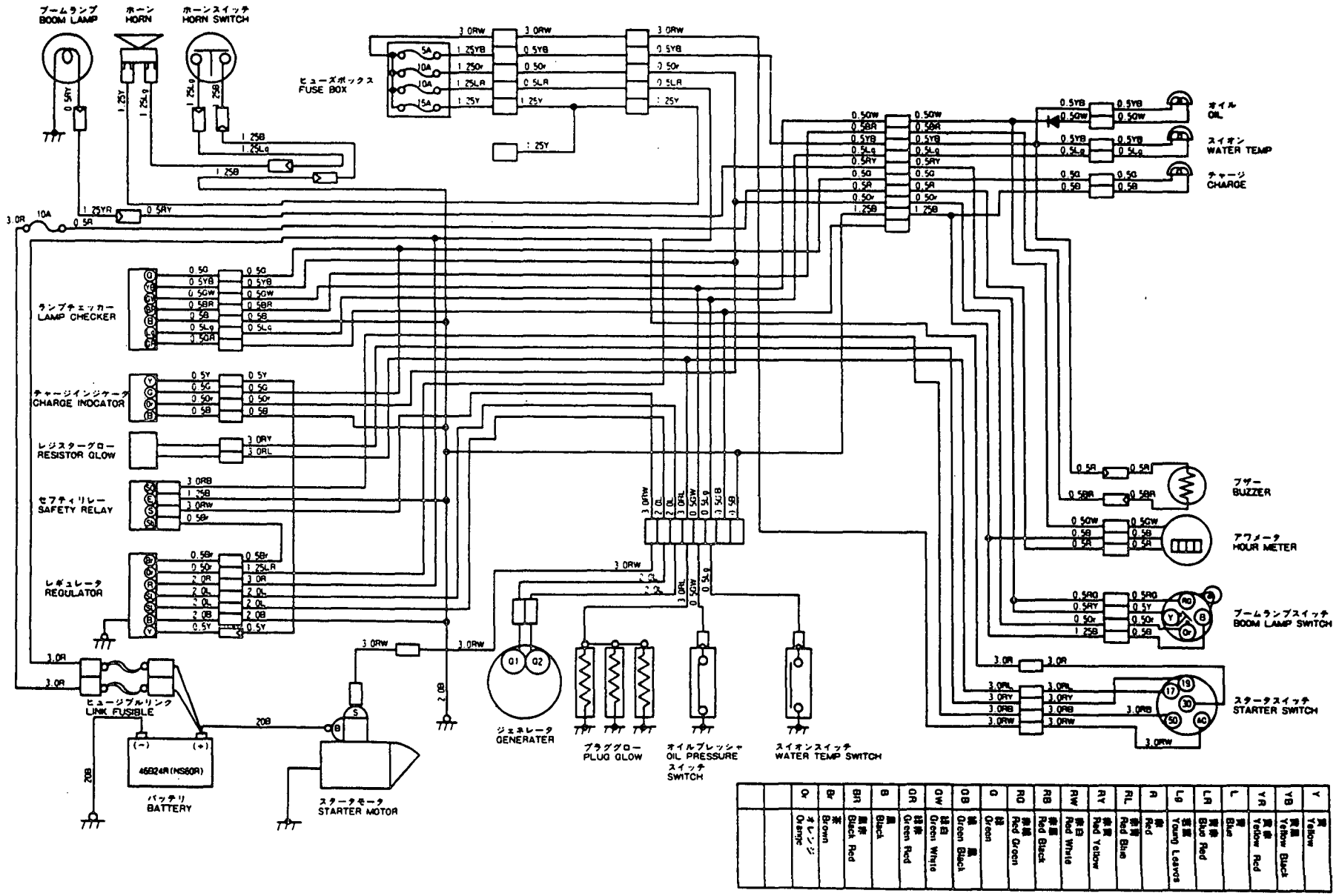

https://truckmanualshub.com/

```
1,1,,772149-03110,,"LABEL SET",1,1,,,1,,,,,,,,,,,,,,
1-1,1,,772159-03100,,"LABEL ASSY",1,1,,,1,,R,,72159AMA-1,M900001,72159AMA-
1,M900001,,,,,72159AMA-1,M900001,
2,1,,772150-03110,,"LABEL SET",,,1,1,,1,,,,,,,,,,,,,
2-1,1,,772159-03130,,"LABEL ASSY",,,1,1,,1,R,,,,,,72159AMA-1,M900001,72159AMA-
1,M900001,,,72159AMA-1,M900001
3,2,,172149-03160,,LABEL,2,2,,,2,,,,,,,,,,,,,,
3-1,2,,172159-03160,,"LABEL (B12)",2,2,,,2,,R,,72159AMA-1,M900001,72159AMA-
1,M900001,,,,,72159AMA-1,M900001,
4,2,,172150-03120,,LABEL,,,2,2,,2,,,,,,,,,,,,,
4-1,2,,172159-03470,,"LABEL (B17)",,,2,2,,2,R,,,,,,72159AMA-1,M900001,72159AMA-
1,M900001,,,72159AMA-1,M900001
5,2,,172143-03180,,LABEL,1,1,1,1,1,1,,,,,,,,,,,,,
5-1,2,,172159-03290,,LABEL,1,1,1,1,1,1,R,,72159AMA-1,M900001,72159AMA-
1,M900001,72159AMA-1,M900001,72159AMA-1,M900001,72159AMA-1,M900001,72159AMA-
1,M900001
6,3,,172143-03170,,LABEL,1,1,1,1,1,1,,,,,,,,,,,,,
6-1,2,,172159-03150,,LABEL,1,1,1,1,1,1,R,,72159AMA-1,M900001,72159AMA-
1,M900001,72159AMA-1,M900001,72159AMA-1,M900001,72159AMA-1,M900001,72159AMA-
1,M900001
7,2,,172149-03170,,"LABEL, STRIPE(F)",1,1,1,1,1,1,,,,,,,,,,,,,
7-1,2,,172159-03170,,"LABEL,STRIP(F)",1,1,1,1,1,1,R,,72159AMA-
1,M900001,72159AMA-1,M900001,72159AMA-1,M900001,72159AMA-1,M900001,72159AMA-
1,M900001,72159AMA-1,M900001
8,2,,172149-03180,,LABEL,1,1,1,1,1,1,,,,,,,,,,,,,
8-1,2,,172159-03180,,LABEL,1,1,1,1,1,1,R,,72159AMA-1,M900001,72159AMA-
1,M900001,72159AMA-1,M900001,72159AMA-1,M900001,72159AMA-1,M900001,72159AMA-
1,M900001
9,2,,172149-03190,,LABEL,1,1,1,1,1,1,,,,,,,,,,,,,
9-1,2,,172159-03190,,LABEL,1,1,1,1,1,1,R,,72159AMA-1,M900001,72159AMA-
1,M900001,72159AMA-1,M900001,72159AMA-1,M900001,72159AMA-1,M900001,72159AMA-
1,M900001
10,2,,172149-03200,,"LABEL, STRIPE(R)",1,1,1,1,1,1,,,,,,,,,,,,,
10-1,2,,172159-03200,,"LABEL,STRIP(R)",1,1,1,1,1,1,R,,72159AMA-
1,M900001,72159AMA-1,M900001,72159AMA-1,M900001,72159AMA-1,M900001,72159AMA-
1,M900001,72159AMA-1,M900001
11,2,,172143-03210,,LABEL,2,2,2,2,2,2,,,,,,,,,,,,,
11-1,2,,172159-03300,,LABEL,2,2,2,2,2,2,R,,72159AMA-1,M900001,72159AMA-
1,M900001,72159AMA-1,M900001,72159AMA-1,M900001,72159AMA-1,M900001,72159AMA-
1,M900001
12,2,,172149-03210,,LABEL,1,1,1,1,1,1,,,,,,,,,,,,,
12-1,2,,172159-03210,,LABEL,1,1,1,1,1,1,R,,72159AMA-1,M900001,72159AMA-
1,M900001,72159AMA-1,M900001,72159AMA-1,M900001,72159AMA-1,M900001,72159AMA-
1,M900001
13,2,,172143-03220,,LABEL,1,1,1,1,1,1,,,,,,,,,,,,,
13-1,2,,172159-03490,,LABEL,1,1,1,1,1,1,R,,72159AMA-1,M900001,72159AMA-
1,M900001,72159AMA-1,M900001,72159AMA-1,M900001,72159AMA-1,M900001,72159AMA-
1,M900001
14,2,,172149-03220,,LABEL,1,1,1,1,1,1,,,,,,,,,,,,,
14-1,2,,172159-03220,,LABEL,1,1,1,1,1,1,R,,72159AMA-1,M900001,72159AMA-
1,M900001,72159AMA-1,M900001,72159AMA-1,M900001,72159AMA-1,M900001,72159AMA-
1,M900001
15,2,,172149-03230,,LABEL,1,1,1,1,1,1,,,,,,,,,,,,,
15-1,2,,172159-03230,,LABEL,1,1,1,1,1,1,R,,72159AMA-1,M900001,72159AMA-
1,M900001,72159AMA-1,M900001,72159AMA-1,M900001,72159AMA-1,M900001,72159AMA-
1,M900001
16,2,,172143-03240,,LABEL,1,1,1,1,1,1,,,,,,,,,,,,,
16-1,2,,172159-03310,,LABEL,1,1,1,1,1,1,R,,72159AMA-1,M900001,72159AMA-
1,M900001,72159AMA-1,M900001,72159AMA-1,M900001,72159AMA-1,M900001,72159AMA-
1,M900001
17,2,,172149-03240,,LABEL,1,1,1,1,1,1,,,,,,,,,,,,,
```

https://truckmanualshub.com/

```
17-1,2,,172159-03240,,LABEL,1,1,1,1,1,1,R,,72159AMA-1,M900001,72159AMA-
1,M900001,72159AMA-1,M900001,72159AMA-1,M900001,72159AMA-1,M900001,72159AMA-
1,M900001
17-2,2,,172159-03241,,"LABEL,
BOOM",2,2,2,2,2,2,N,,72159012,*1990.06,72159012,*1990.06,72159012,*1990.06,72159
012,*1990.06,72159012,*1990.06,72159012,*1990.06,I
17-3,2,,172159-03242,,"LABEL,
BOOM",2,2,2,2,2,2,N,,72143022,*1990.11,72143022,*1990.11,72143022,*1990.11,72143
022,*1990.11,72143022,*1990.11,72143022,*1990.11,I
18,2,,172149-03250,,LABEL,1,1,1,1,1,1,Z,,72159AMA-1,M900001,72159AMA-
1,M900001,72159AMA-1,M900001,72159AMA-1,M900001,72159AMA-1,M900001,72159AMA-
1,M900001
19,2,,172149-03261,,LABEL,2,2,2,2,2,2,,,,,,,,,,,,,
19-1,2,,172159-03260,,LABEL,2,2,2,2,2,2,R,,72159AMA-1,M900001,72159AMA-
1,M900001,72159AMA-1,M900001,72159AMA-1,M900001,72159AMA-1,M900001,72159AMA-
1,M900001
20,2,,172149-03270,,LABEL,1,1,1,1,1,1,,,,,,,,,,,,,
20-1,2,,172159-03270,,LABEL,1,1,1,1,1,1,R,,72159AMA-1,M900001,72159AMA-
1,M900001,72159AMA-1,M900001,72159AMA-1,M900001,72159AMA-1,M900001,72159AMA-
1,M900001
21,2,,172142-03280,,LABEL,1,1,1,1,1,1,,,,,,,,,,,,,
21-1,2,,172159-03320,,LABEL,1,1,1,1,1,1,R,,72159AMA-1,M900001,72159AMA-
1,M900001,72159AMA-1,M900001,72159AMA-1,M900001,72159AMA-1,M900001,72159AMA-
1,M900001
22,2,,172149-03280,,LABEL,1,1,,,1,,,,,,,,,,,,,,
22-1,2,,172159-03280,,LABEL,1,1,,,1,,R,,72159AMA-1,M900001,72159AMA-
1,M900001,,,,,72159AMA-1,M900001,
23,2,,172137-03300,,"LABEL, TURNING LOCK",1,1,1,1,1,1,,,,,,,,,,,,,
23-1,2,,172159-03550,,LABEL,1,1,1,1,1,1,R,,72159AMA-1,M900001,72159AMA-
1,M900001,72159AMA-1,M900001,72159AMA-1,M900001,72159AMA-1,M900001,72159AMA-
1,M900001
24,2,,172149-03410,,LABEL,1,1,,,1,,,,,,,,,,,,,,
24-1,2,,172159-03410,,"LABEL, TURNING LOCK",1,1,,,1,,R,,72159AMA-
1,M900001,72159AMA-1,M900001,,,,,72159AMA-1,M900001,
25,2,,172150-03410,,LABEL,,,1,1,,1,,,,,,,,,,,,,,
25-1,2,,172159-03090,,LABEL,,,1,1,,1,,,,,,,72159AMA-1,M900001,72159AMA-
1,M900001,,,72159AMA-1,M900001
26,2,,172149-03420,,LABEL,1,1,1,1,1,1,,,,,,,,,,,,,
26-1,2,,172159-03420,,LABEL,1,1,1,1,1,1,R,,72159AMA-1,M900001,72159AMA-
1,M900001,72159AMA-1,M900001,72159AMA-1,M900001,72159AMA-1,M900001,72159AMA-
1,M900001
27,2,,172149-03430,,LABEL,1,1,1,1,1,1,,,,,,,,,,,,,
27-1,2,,172159-03430,,LABEL,1,1,1,1,1,1,R,,72159AMA-1,M900001,72159AMA-
1,M900001,72159AMA-1,M900001,72159AMA-1,M900001,72159AMA-1,M900001,72159AMA-
1,M900001
28,2,,172149-03440,,LABEL,1,1,1,1,1,1,,,,,,,,,,,,,
28-1,2,,172159-03440,,LABEL,1,1,1,1,1,1,R,,72159AMA-1,M900001,72159AMA-
1,M900001,72159AMA-1,M900001,72159AMA-1,M900001,72159AMA-1,M900001,72159AMA-
1,M900001
29,2,,172149-03450,,LABEL,1,1,1,1,1,1,,,,,,,,,,,,,
29-1,2,,172159-03450,,LABEL,1,1,1,1,1,1,R,,72159AMA-1,M900001,72159AMA-
1,M900001,72159AMA-1,M900001,72159AMA-1,M900001,72159AMA-1,M900001,72159AMA-
1,M900001
30,2,,172138-03750,,"LABEL, GREASE",1,1,1,1,1,1,,,,,,,,,,,,,
30-1,2,,172159-03140,,"LABEL, GREASE",1,1,1,1,1,1,R,,72159AMA-
1,M900001,72159AMA-1,M900001,72159AMA-1,M900001,72159AMA-1,M900001,72159AMA-
1,M900001,72159AMA-1,M900001
31,2,,172137-03780,,"LABEL, THROTTLE",1,1,1,1,1,1,,,,,,,,,,,,,
31-1,2,,172159-03540,,"LABEL,ACCEL",1,1,1,1,1,1,R,,72159AMA-1,M900001,72159AMA-
1,M900001,72159AMA-1,M900001,72159AMA-1,M900001,72159AMA-1,M900001,72159AMA-
1,M900001
```

https://truckmanualshub.com/

```
32,2,,172149-53400,,"TREE CLIP",2,2,2,2,2,2,Z,,72159AMA-1,M900001,72159AMA-
1,M900001,72159AMA-1,M900001,72159AMA-1,M900001,72159AMA-1,M900001,72159AMA-
1,M900001
32-1,2,,172149-53400,,"TREE
CLIP",2,2,,,2,,W,,72159010,*1990.03,72159010,*1990.03,,,,,72159010,*1990.03,
32-2,2,,172159-53400,,"TREE CLIP",2,2,,,2,,R,,72159AMA-2,M910001,72159AMA-
2,M910001,,,,,72159AMA-2,M910001,
33,2,,22857-300050,,"SCREW 3X 5",4,4,4,4,4,4,,,,,,,,,,,,,
34,2,,172150-03130,,"LABEL, KEY SWITCH",1,1,1,1,1,1,,,,,,,,,,,,,
34-1,2,,172159-03330,,"LABEL, KEY SWITCH",1,1,1,1,1,1,R,,72159AMA-
1,M900001,72159AMA-1,M900001,72159AMA-1,M900001,72159AMA-1,M900001,72159AMA-
1,M900001,72159AMA-1,M900001
35,2,,933112-45300,,"LABEL, DANGER (A)",1,1,1,1,1,1,,,,,,,,,,,,,
35-1,2,,172159-03480,,"LABEL, DANGER(A)",1,1,1,1,1,1,R,,72159AMA-
1,M900001,72159AMA-1,M900001,72159AMA-1,M900001,72159AMA-1,M900001,72159AMA-
1,M900001,72159AMA-1,M900001
36,2,,933112-50700,,"LABEL, OIL FEED",1,1,1,1,1,1,,,,,,,,,,,,,
36-1,2,,172159-03340,,"LABEL, OIL FEED",1,1,1,1,1,1,R,,72159AMA-
1,M900001,72159AMA-1,M900001,72159AMA-1,M900001,72159AMA-1,M900001,72159AMA-
1,M900001,72159AMA-1,M900001
37,2,,933112-52500,,"LABEL, FUEL",1,1,1,1,1,1,,,,,,,,,,,,,
37-1,2,,172159-03350,,"LABEL, FUEL",1,1,1,1,1,1,R,,72159AMA-1,M900001,72159AMA-
1,M900001,72159AMA-1,M900001,72159AMA-1,M900001,72159AMA-1,M900001,72159AMA-
1,M900001
38,2,,933112-54300,,"LABEL, AIR CLEANER",1,1,1,1,1,1,,,,,,,,,,,,,
38-1,2,,172159-03360,,"LABEL, AIR CLEANER",1,1,1,1,1,1,R,,72159AMA-
1,M900001,72159AMA-1,M900001,72159AMA-1,M900001,72159AMA-1,M900001,72159AMA-
1,M900001,72159AMA-1,M900001
39,2,,933112-55700,,"LABEL, SUB-TANK",1,1,1,1,1,1,,,,,,,,,,,,,
39-1,2,,172159-03370,,"LABEL, SUBTANK",1,1,1,1,1,1,R,,72159AMA-
1,M900001,72159AMA-1,M900001,72159AMA-1,M900001,72159AMA-1,M900001,72159AMA-
1,M900001,72159AMA-1,M900001
40,2,,933112-55800,,"LABEL, RADIATER",1,1,1,1,1,1,,,,,,,,,,,,,
40-1,2,,172159-03380,,"LABEL, RADITATER",1,1,1,1,1,1,R,,72159AMA-
1,M900001,72159AMA-1,M900001,72159AMA-1,M900001,72159AMA-1,M900001,72159AMA-
1,M900001,72159AMA-1,M900001
41,2,,933112-55900,,"LABEL, ANTI-FREEZING",1,1,1,1,1,1,,,,,,,,,,,,,
41-1,2,,172159-03390,,"LABEL, ANTI-FREEZING",1,1,1,1,1,1,R,,72159AMA-
1,M900001,72159AMA-1,M900001,72159AMA-1,M900001,72159AMA-1,M900001,72159AMA-
1,M900001,72159AMA-1,M900001
44,1,,172159-
03940,,LABEL,1,1,,,1,,W,,72142357,*1990.11,72142357,*1990.11,,,,,72142357,*1990.
11,,,I
45,1,,172159-
03950,,LABEL,1,1,1,1,1,1,W,,72142357,*1990.11,72142357,*1990.11,72142357,*1990.1
1,72142357,*1990.11,72142357,*1990.11,72142357,*1990.11,I
46,1,,172159-
03960,,LABEL,,,1,1,,1,W,,,,,,72142357,*1990.11,72142357,*1990.11,,,72142357,*199
0.11,I
47,1,,172159-
03970,,LABEL,1,1,,,1,,W,,72142357,*1990.11,72142357,*1990.11,,,,,72142357,*1990.
11,,,I
48,1,,172159-
03980,,LABEL,,,1,1,,1,W,,,,,,72142357,*1990.11,72142357,*1990.11,,,72142357,*199
0.11,I
```

Fig. 1 メイバン(スイス) LABEL(SWISS SPEC.)

https://truckmanualshub.com/

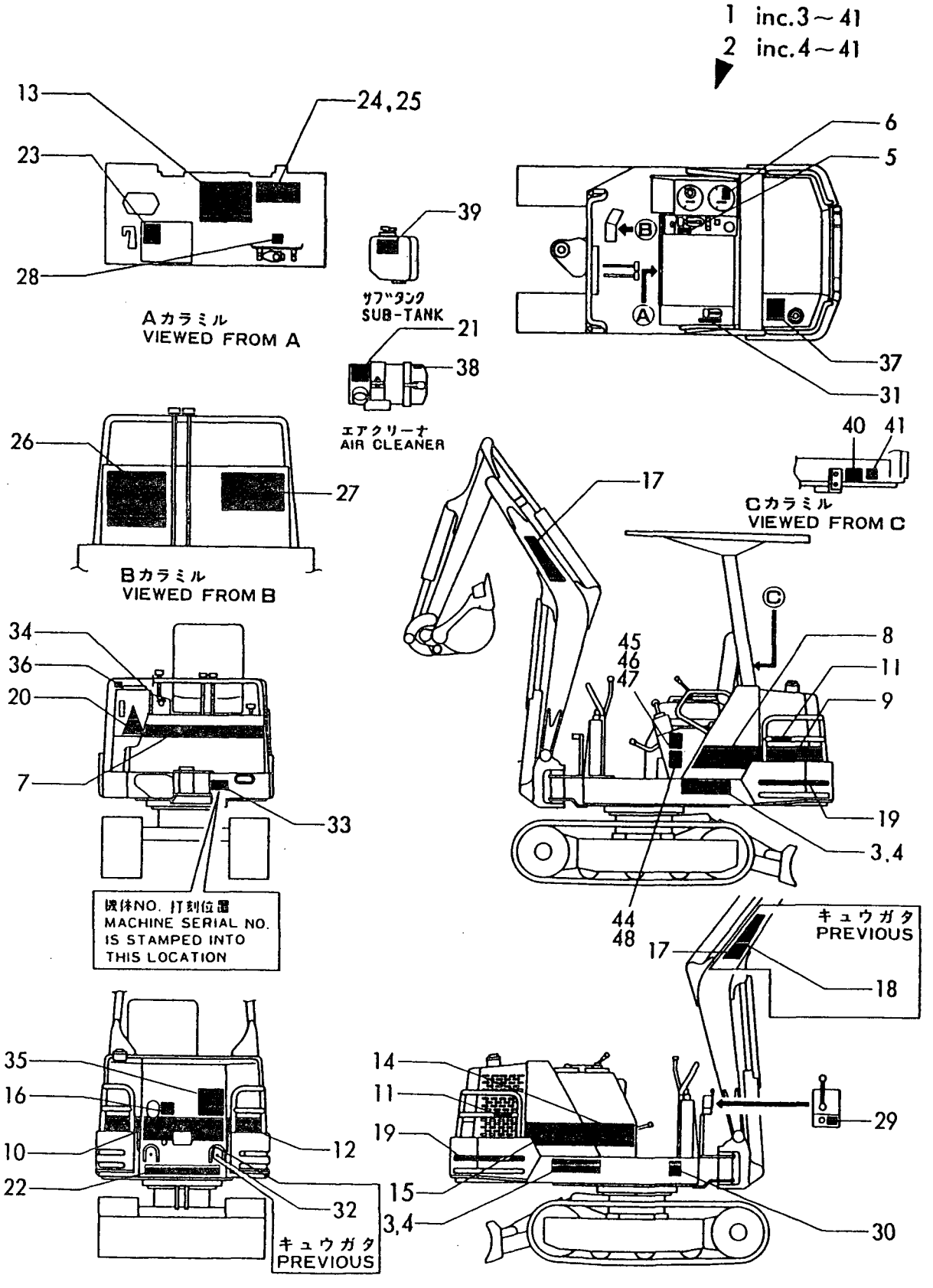

https://truckmanualshub.com/

```
1,1,,772149-03120,,"LABEL SET",1,1,,,1,,,,,,,,,,,,,,
1-1,1,,772159-03110,,"LABEL ASSY",1,1,,,1,,R,,72159AMA-1,M900001,72159AMA-
1,M900001,,,,,72159AMA-1,M900001,
2,1,,772150-03120,,"LABEL SET",,,1,1,,1,,,,,,,,,,,,,
2-1,1,,772159-03140,,"LABEL ASSY",,,1,1,,1,R,,,,,,72159AMA-1,M900001,72159AMA-
1,M900001,,,72159AMA-1,M900001
3,2,,172149-03160,,LABEL,2,2,,,2,,,,,,,,,,,,,,
3-1,2,,172159-03160,,"LABEL (B12)",2,2,,,2,,R,,72159AMA-1,M900001,72159AMA-
1,M900001,,,,,72159AMA-1,M900001,
4,2,,172150-03120,,LABEL,,,2,2,,2,,,,,,,,,,,,,
4-1,2,,172159-03470,,"LABEL (B17)",,,2,2,,2,R,,,,,,72159AMA-1,M900001,72159AMA-
1,M900001,,,72159AMA-1,M900001
5,2,,172143-03180,,LABEL,1,1,1,1,1,1,,,,,,,,,,,,,
5-1,2,,172159-03290,,LABEL,1,1,1,1,1,1,R,,72159AMA-1,M900001,72159AMA-
1,M900001,72159AMA-1,M900001,72159AMA-1,M900001,72159AMA-1,M900001,72159AMA-
1,M900001
6,2,,172143-03170,,LABEL,1,1,1,1,1,1,,,,,,,,,,,,,
6-1,2,,172159-03150,,LABEL,1,1,1,1,1,1,R,,72159AMA-1,M900001,72159AMA-
1,M900001,72159AMA-1,M900001,72159AMA-1,M900001,72159AMA-1,M900001,72159AMA-
1,M900001
7,2,,172149-03170,,"LABEL, STRIPE(F)",1,1,1,1,1,1,,,,,,,,,,,,,
7-1,2,,172159-03170,,"LABEL,STRIP(F)",1,1,1,1,1,1,R,,72159AMA-
1,M900001,72159AMA-1,M900001,72159AMA-1,M900001,72159AMA-1,M900001,72159AMA-
1,M900001,72159AMA-1,M900001
8,2,,172149-03180,,LABEL,1,1,1,1,1,1,,,,,,,,,,,,,
8-1,2,,172159-03180,,LABEL,1,1,1,1,1,1,R,,72159AMA-1,M900001,72159AMA-
1,M900001,72159AMA-1,M900001,72159AMA-1,M900001,72159AMA-1,M900001,72159AMA-
1,M900001
9,2,,172149-03190,,LABEL,1,1,1,1,1,1,,,,,,,,,,,,,
9-1,2,,172159-03190,,LABEL,1,1,1,1,1,1,R,,72159AMA-1,M900001,72159AMA-
1,M900001,72159AMA-1,M900001,72159AMA-1,M900001,72159AMA-1,M900001,72159AMA-
1,M900001
10,2,,172149-03200,,"LABEL, STRIPE(R)",1,1,1,1,1,1,,,,,,,,,,,,,
10-1,2,,172159-03200,,"LABEL,STRIP(R)",1,1,1,1,1,1,R,,72159AMA-
1,M900001,72159AMA-1,M900001,72159AMA-1,M900001,72159AMA-1,M900001,72159AMA-
1,M900001,72159AMA-1,M900001
11,2,,172143-03210,,LABEL,2,2,2,2,2,2,,,,,,,,,,,,,
11-1,2,,172159-03300,,LABEL,2,2,2,2,2,2,R,,72159AMA-1,M900001,72159AMA-
1,M900001,72159AMA-1,M900001,72159AMA-1,M900001,72159AMA-1,M900001,72159AMA-
1,M900001
12,2,,172149-03210,,LABEL,1,1,1,1,1,1,,,,,,,,,,,,,
12-1,2,,172159-03210,,LABEL,1,1,1,1,1,1,R,,72159AMA-1,M900001,72159AMA-
1,M900001,72159AMA-1,M900001,72159AMA-1,M900001,72159AMA-1,M900001,72159AMA-
1,M900001
13,2,,172143-03220,,LABEL,1,1,1,1,1,1,,,,,,,,,,,,,
13-1,2,,172159-03490,,LABEL,1,1,1,1,1,1,R,,72159AMA-1,M900001,72159AMA-
1,M900001,72159AMA-1,M900001,72159AMA-1,M900001,72159AMA-1,M900001,72159AMA-
1,M900001
14,2,,172149-03220,,LABEL,1,1,1,1,1,1,,,,,,,,,,,,,
14-1,2,,172159-03220,,LABEL,1,1,1,1,1,1,R,,72159AMA-1,M900001,72159AMA-
1,M900001,72159AMA-1,M900001,72159AMA-1,M900001,72159AMA-1,M900001,72159AMA-
1,M900001
15,2,,172149-03230,,LABEL,1,1,1,1,1,1,,,,,,,,,,,,,
15-1,2,,172159-03230,,LABEL,1,1,1,1,1,1,R,,72159AMA-1,M900001,72159AMA-
1,M900001,72159AMA-1,M900001,72159AMA-1,M900001,72159AMA-1,M900001,72159AMA-
1,M900001
16,2,,172143-03240,,LABEL,1,1,1,1,1,1,,,,,,,,,,,,,
16-1,2,,172159-03310,,LABEL,1,1,1,1,1,1,R,,72159AMA-1,M900001,72159AMA-
1,M900001,72159AMA-1,M900001,72159AMA-1,M900001,72159AMA-1,M900001,72159AMA-
1,M900001
17,2,,172149-03240,,LABEL,1,1,1,1,1,1,,,,,,,,,,,,,
```

```
17-1,2,,172159-03240,,LABEL,1,1,1,1,1,1,R,,72159AMA-1,M900001,72159AMA-
1,M900001,72159AMA-1,M900001,72159AMA-1,M900001,72159AMA-1,M900001,72159AMA-
1,M900001
17-2,2,,172159-03241,,"LABEL,
BOOM",2,2,2,2,2,2,N,,72159012,*1990.06,72159012,*1990.06,72159012,*1990.06,72159
012,*1990.06,72159012,*1990.06,72159012,*1990.06,I
17-3,2,,172159-03242,,"LABEL,
BOOM",2,2,2,2,2,2,N,,72143022,*1990.11,72143022,*1990.11,72143022,*1990.11,72143
022,*1990.11,72143022,*1990.11,72143022,*1990.11,I
18,2,,172149-03250,,LABEL,1,1,1,1,1,1,Z,,72159AMA-1,M900001,72159AMA-
1,M900001,72159AMA-1,M900001,72159AMA-1,M900001,72159AMA-1,M900001,72159AMA-
1,M900001
19,2,,172149-03261,,LABEL,2,2,2,2,2,2,,,,,,,,,,,,,
19-1,2,,172159-03260,,LABEL,2,2,2,2,2,2,R,,72159AMA-1,M900001,72159AMA-
1,M900001,72159AMA-1,M900001,72159AMA-1,M900001,72159AMA-1,M900001,72159AMA-
1,M900001
20,2,,172149-03270,,LABEL,1,1,1,1,1,1,,,,,,,,,,,,,
20-1,2,,172159-03270,,LABEL,1,1,1,1,1,1,R,,72159AMA-1,M900001,72159AMA-
1,M900001,72159AMA-1,M900001,72159AMA-1,M900001,72159AMA-1,M900001,72159AMA-
1,M900001
21,2,,172142-03280,,LABEL,1,1,1,1,1,1,,,,,,,,,,,,,
21-1,2,,172159-03320,,LABEL,1,1,1,1,1,1,R,,72159AMA-1,M900001,72159AMA-
1,M900001,72159AMA-1,M900001,72159AMA-1,M900001,72159AMA-1,M900001,72159AMA-
1,M900001
22,2,,172149-03280,,LABEL,1,1,,,1,,,,,,,,,,,,,,
22-1,2,,172159-03280,,LABEL,1,1,,,1,,R,,72159AMA-1,M900001,72159AMA-
1,M900001,,,,,72159AMA-1,M900001,
23,2,,172137-03300,,"LABEL, TURNING LOCK",1,1,1,1,1,1,,,,,,,,,,,,,
23-1,2,,172159-03550,,LABEL,1,1,1,1,1,1,R,,72159AMA-1,M900001,72159AMA-
1,M900001,72159AMA-1,M900001,72159AMA-1,M900001,72159AMA-1,M900001,72159AMA-
1,M900001
24,2,,172149-03410,,LABEL,1,1,,,1,,,,,,,,,,,,,,
24-1,2,,172159-03410,,"LABEL, TURNING LOCK",1,1,,,1,,R,,72159AMA-
1,M900001,72159AMA-1,M900001,,,,,72159AMA-1,M900001,
25,2,,172150-03410,,LABEL,,,1,1,,1,,,,,,,,,,,,,
25-1,2,,172159-03090,,LABEL,,,1,1,,1,R,,,,,,72159AMA-1,M900001,72159AMA-
1,M900001,,,72159AMA-1,M900001
26,2,,172149-03420,,LABEL,1,1,1,1,1,1,,,,,,,,,,,,,
26-1,2,,172159-03420,,LABEL,1,1,1,1,1,1,R,,72159AMA-1,M900001,72159AMA-
1,M900001,72159AMA-1,M900001,72159AMA-1,M900001,72159AMA-1,M900001,72159AMA-
1,M900001
27,2,,172149-03430,,LABEL,1,1,1,1,1,1,,,,,,,,,,,,,
27-1,2,,172159-03430,,LABEL,1,1,1,1,1,1,R,,72159AMA-1,M900001,72159AMA-
1,M900001,72159AMA-1,M900001,72159AMA-1,M900001,72159AMA-1,M900001,72159AMA-
1,M900001
28,2,,172149-03440,,LABEL,1,1,1,1,1,1,,,,,,,,,,,,,
28-1,2,,172159-03440,,LABEL,1,1,1,1,1,1,R,,72159AMA-1,M900001,72159AMA-
1,M900001,72159AMA-1,M900001,72159AMA-1,M900001,72159AMA-1,M900001,72159AMA-
1,M900001
29,2,,172149-03450,,LABEL,1,1,1,1,1,1,,,,,,,,,,,,,
29-1,2,,172159-03450,,LABEL,1,1,1,1,1,1,R,,72159AMA-1,M900001,72159AMA-
1,M900001,72159AMA-1,M900001,72159AMA-1,M900001,72159AMA-1,M900001,72159AMA-
1,M900001
30,2,,172138-03750,,"LABEL, GREASE",1,1,1,1,1,1,,,,,,,,,,,,,
30-1,2,,172159-03140,,"LABEL, GREASE",1,1,1,1,1,1,R,,72159AMA-
1,M900001,72159AMA-1,M900001,72159AMA-1,M900001,72159AMA-1,M900001,72159AMA-
1,M900001,72159AMA-1,M900001
31,2,,172137-03780,,"LABEL, THROTTLE",1,1,1,1,1,1,,,,,,,,,,,,,
31-1,2,,172159-03540,,"LABEL,ACCEL",1,1,1,1,1,1,R,,72159AMA-1,M900001,72159AMA-
1,M900001,72159AMA-1,M900001,72159AMA-1,M900001,72159AMA-1,M900001,72159AMA-
1,M900001
```

https://truckmanualshub.com/

```
32,2,,172149-53400,,"TREE CLIP",2,2,2,2,2,2,Z,,72159AMA-1,M900001,72159AMA-
1,M900001,72159AMA-1,M900001,72159AMA-1,M900001,72159AMA-1,M900001,72159AMA-
1,M900001
32-1,2,,172149-53400,,"TREE
CLIP",2,2,,,2,,W,,72159010,*1990.03,72159010,*1990.03,,,,,72159010,*1990.03,
32-2,2,,172159-53400,,"TREE CLIP",2,2,,,2,,R,,72159AMA-2,M910001,72159AMA-
2,M910001,,,,,72159AMA-2,M910001,
33,2,,22857-300050,,"SCREW 3X 5",4,4,4,4,4,4,,,,,,,,,,,,
34,2,,172150-03130,,"LABEL, KEY SWITCH",1,1,1,1,1,1,,,,,,,,,,,,
34-1,2,,172159-03330,,"LABEL, KEY SWITCH",1,1,1,1,1,1,R,,72159AMA-
1,M900001,72159AMA-1,M900001,72159AMA-1,M900001,72159AMA-1,M900001,72159AMA-
1,M900001,72159AMA-1,M900001
35,2,,933112-45300,,"LABEL, DANGER (A)",1,1,1,1,1,1,,,,,,,,,,,,
35-1,2,,172159-03480,,"LABEL, DANGER(A)",1,1,1,1,1,1,R,,72159AMA-
1,M900001,72159AMA-1,M900001,72159AMA-1,M900001,72159AMA-1,M900001,72159AMA-
1,M900001,72159AMA-1,M900001
36,2,,933112-45500,,"LABEL, CAUTION",2,2,1,1,2,1,,,,,,,,,,,,
36-1,2,,172159-03460,,"LABEL, CAUTION",2,2,1,1,2,1,R,,72159AMA-
1,M900001,72159AMA-1,M900001,72159AMA-1,M900001,72159AMA-1,M900001,72159AMA-
1,M900001,72159AMA-1,M900001
37,2,,933112-50700,,"LABEL, OIL FEED",1,1,1,1,1,1,,,,,,,,,,,,
37-1,2,,172159-03340,,"LABEL, OIL FEED",1,1,1,1,1,1,R,,72159AMA-
1,M900001,72159AMA-1,M900001,72159AMA-1,M900001,72159AMA-1,M900001,72159AMA-
1,M900001,72159AMA-1,M900001
38,2,,933112-52500,,"LABEL, FUEL",1,1,1,1,1,1,,,,,,,,,,,,
38-1,2,,172159-03350,,"LABEL, FUEL",1,1,1,1,1,1,R,,72159AMA-1,M900001,72159AMA-
1,M900001,72159AMA-1,M900001,72159AMA-1,M900001,72159AMA-1,M900001,72159AMA-
1,M900001
39,2,,933112-54300,,"LABEL, AIR CLEANER",1,1,1,1,1,1,,,,,,,,,,,,
39-1,2,,172159-03360,,"LABEL, AIR CLEANER",1,1,1,1,1,1,R,,72159AMA-
1,M900001,72159AMA-1,M900001,72159AMA-1,M900001,72159AMA-1,M900001,72159AMA-
1,M900001,72159AMA-1,M900001
40,2,,933112-55700,,"LABEL, SUB-TANK",1,1,1,1,1,1,,,,,,,,,,,,
40-1,2,,172159-03370,,"LABEL, SUBTANK",1,1,1,1,1,1,R,,72159AMA-
1,M900001,72159AMA-1,M900001,72159AMA-1,M900001,72159AMA-1,M900001,72159AMA-
1,M900001,72159AMA-1,M900001
41,2,,933112-55800,,"LABEL, RADIATER",1,1,1,1,1,1,,,,,,,,,,,,
41-1,2,,172159-03380,,"LABEL, RADITATER",1,1,1,1,1,1,R,,72159AMA-
1,M900001,72159AMA-1,M900001,72159AMA-1,M900001,72159AMA-1,M900001,72159AMA-
1,M900001,72159AMA-1,M900001
42,2,,933112-55900,,"LABEL, ANTI-FREEZING",1,1,1,1,1,1,,,,,,,,,,,,
42-1,2,,172159-03390,,"LABEL, ANTI-FREEZING",1,1,1,1,1,1,R,,72159AMA-
1,M900001,72159AMA-1,M900001,72159AMA-1,M900001,72159AMA-1,M900001,72159AMA-
1,M900001,72159AMA-1,M900001
45,1,,172159-
03940,,LABEL,1,1,,,1,,W,,72142357,*1990.11,72142357,*1990.11,,,,,72142357,*1990.
11,,,I
46,1,,172159-
03950,,LABEL,1,1,1,1,1,1,W,,72142357,*1990.11,72142357,*1990.11,72142357,*1990.1
1,72142357,*1990.11,72142357,*1990.11,72142357,*1990.11,I
47,1,,172159-
03960,,LABEL,,,1,1,,1,W,,,,,,72142357,*1990.11,72142357,*1990.11,,,72142357,*199
0.11,I
48,1,,172159-
03970,,LABEL,1,1,,,1,,W,,72142357,*1990.11,72142357,*1990.11,,,,,72142357,*1990.
11,,,I
49,1,,172159-
03980,,LABEL,,,1,1,,1,W,,,,,,72142357,*1990.11,72142357,*1990.11,,,72142357,*199
0.11,I
```

Fig. 2 メイバン(ドイツ) LABEL(GERMANY SPEC.)

https://tradsmanualshub.com/

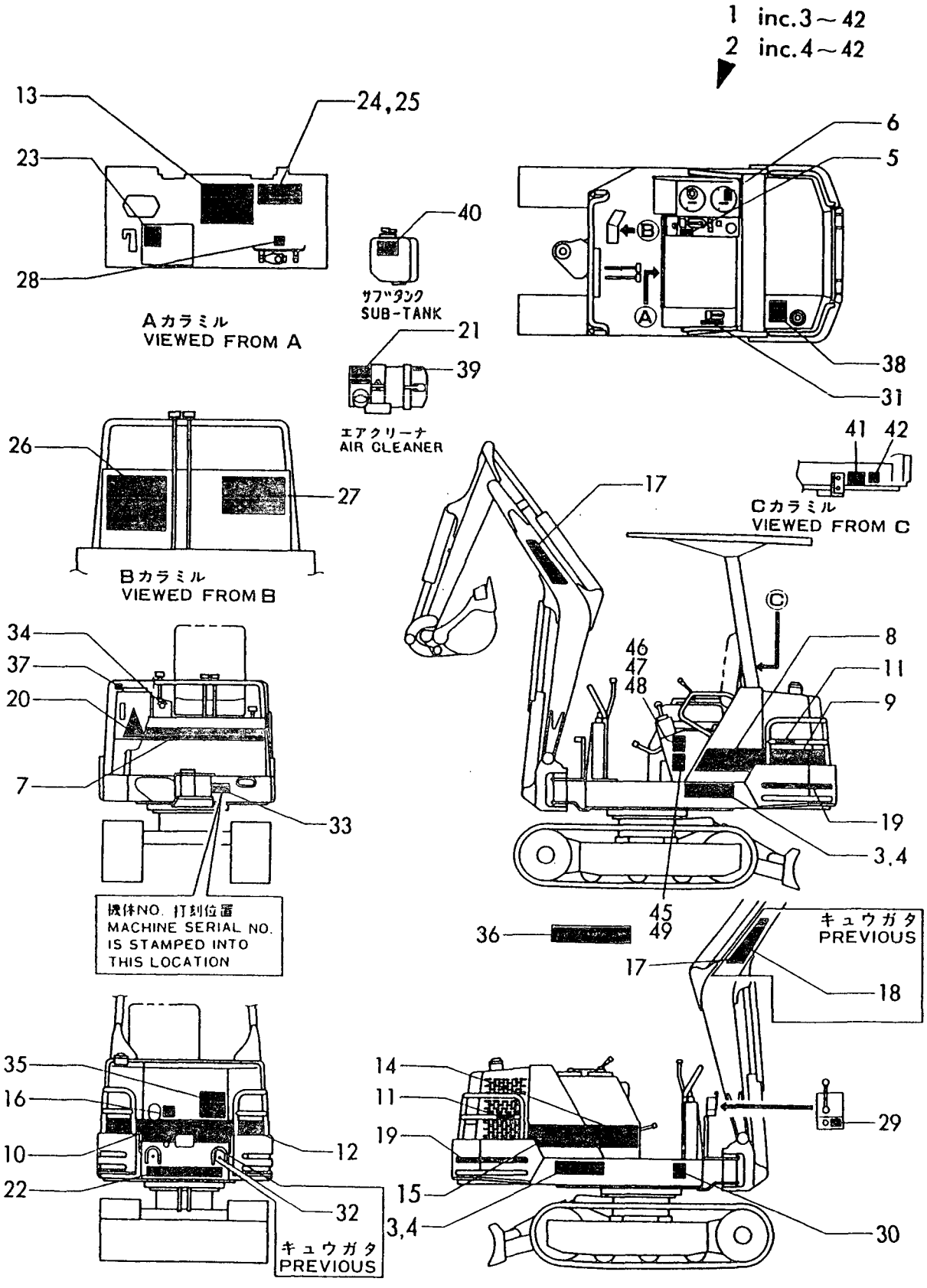

https://truckmanualshub.com/

```
1,1,,772149-03130,,"LABEL SET",1,1,,,1,,,,,,,,,,,,,,
1-1,1,,772159-03120,,"LABEL ASSY",1,1,,,1,,R,,72159AMA-1,M900001,72159AMA-
1,M900001,,,,,72159AMA-1,M900001,
2,1,,772150-03130,,"LABEL SET",,,1,1,,1,,,,,,,,,,,,,
2-1,1,,772159-03150,,"LABEL ASSY",,,1,1,,1,R,,,,,,72159AMA-1,M900001,72159AMA-
1,M900001,,,72159AMA-1,M900001
3,2,,172149-03160,,LABEL,2,2,,,2,,,,,,,,,,,,,,
3-1,2,,172159-03160,,"LABEL (B12)",2,2,,,2,,R,,72159AMA-1,M900001,72159AMA-
1,M900001,,,,,72159AMA-1,M900001,
4,2,,172150-03120,,LABEL,,,2,2,,2,,,,,,,,,,,,,
4-1,2,,172159-03470,,"LABEL (B17)",,,2,2,,2,R,,,,,,72159AMA-1,M900001,72159AMA-
1,M900001,,,72159AMA-1,M900001
5,2,,172143-03180,,LABEL,1,1,1,1,1,1,,,,,,,,,,,,,
5-1,2,,172159-03290,,LABEL,1,1,1,1,1,1,R,,72159AMA-1,M900001,72159AMA-
1,M900001,72159AMA-1,M900001,72159AMA-1,M900001,72159AMA-1,M900001,72159AMA-
1,M900001
6,2,,172143-03170,,LABEL,1,1,1,1,1,1,,,,,,,,,,,,,
6-1,2,,172159-03150,,LABEL,1,1,1,1,1,1,R,,72159AMA-1,M900001,72159AMA-
1,M900001,72159AMA-1,M900001,72159AMA-1,M900001,72159AMA-1,M900001,72159AMA-
1,M900001
7,2,,172149-03170,,"LABEL, STRIPE(F)",1,1,1,1,1,1,,,,,,,,,,,,,
7-1,2,,172159-03170,,"LABEL,STRIP(F)",1,1,1,1,1,1,R,,72159AMA-
1,M900001,72159AMA-1,M900001,72159AMA-1,M900001,72159AMA-1,M900001,72159AMA-
1,M900001,72159AMA-1,M900001
8,2,,172149-03180,,LABEL,1,1,1,1,1,1,,,,,,,,,,,,,
8-1,2,,172159-03180,,LABEL,1,1,1,1,1,1,R,,72159AMA-1,M900001,72159AMA-
1,M900001,72159AMA-1,M900001,72159AMA-1,M900001,72159AMA-1,M900001,72159AMA-
1,M900001
9,2,,172149-03190,,LABEL,1,1,1,1,1,1,,,,,,,,,,,,,
9-1,2,,172159-03190,,LABEL,1,1,1,1,1,1,R,,72159AMA-1,M900001,72159AMA-
1,M900001,72159AMA-1,M900001,72159AMA-1,M900001,72159AMA-1,M900001,72159AMA-
1,M900001
10,2,,172149-03200,,"LABEL, STRIPE(R)",1,1,1,1,1,1,,,,,,,,,,,,,
10-1,2,,172159-03200,,"LABEL,STRIP(R)",1,1,1,1,1,1,R,,72159AMA-
1,M900001,72159AMA-1,M900001,72159AMA-1,M900001,72159AMA-1,M900001,72159AMA-
1,M900001,72159AMA-1,M900001
11,2,,172143-03210,,LABEL,2,2,2,2,2,2,,,,,,,,,,,,,
11-1,2,,172159-03300,,LABEL,2,2,2,2,2,2,R,,72159AMA-1,M900001,72159AMA-
1,M900001,72159AMA-1,M900001,72159AMA-1,M900001,72159AMA-1,M900001,72159AMA-
1,M900001
12,2,,172149-03210,,LABEL,1,1,1,1,1,1,,,,,,,,,,,,,
12-1,2,,172159-03210,,LABEL,1,1,1,1,1,1,R,,72159AMA-1,M900001,72159AMA-
1,M900001,72159AMA-1,M900001,72159AMA-1,M900001,72159AMA-1,M900001,72159AMA-
1,M900001
13,2,,172143-03220,,LABEL,1,1,1,1,1,1,,,,,,,,,,,,,
13-1,2,,172159-03490,,LABEL,1,1,1,1,1,1,R,,72159AMA-1,M900001,72159AMA-
1,M900001,72159AMA-1,M900001,72159AMA-1,M900001,72159AMA-1,M900001,72159AMA-
1,M900001
14,2,,172149-03220,,LABEL,1,1,1,1,1,1,,,,,,,,,,,,,
14-1,2,,172159-03220,,LABEL,1,1,1,1,1,1,R,,72159AMA-1,M900001,72159AMA-
1,M900001,72159AMA-1,M900001,72159AMA-1,M900001,72159AMA-1,M900001,72159AMA-
1,M900001
15,2,,172149-03230,,LABEL,1,1,1,1,1,1,,,,,,,,,,,,,
15-1,2,,172159-03230,,LABEL,1,1,1,1,1,1,R,,72159AMA-1,M900001,72159AMA-
1,M900001,72159AMA-1,M900001,72159AMA-1,M900001,72159AMA-1,M900001,72159AMA-
1,M900001
16,2,,172143-03240,,LABEL,1,1,1,1,1,1,,,,,,,,,,,,,
16-1,2,,172159-03310,,LABEL,1,1,1,1,1,1,R,,72159AMA-1,M900001,72159AMA-
1,M900001,72159AMA-1,M900001,72159AMA-1,M900001,72159AMA-1,M900001,72159AMA-
1,M900001
17,2,,172149-03240,,LABEL,1,1,1,1,1,1,,,,,,,,,,,,,
```

https://truckmanualshub.com/

```
17-1,2,,172159-03240,,LABEL,1,1,1,1,1,1,R,,72159AMA-1,M900001,72159AMA-
1,M900001,72159AMA-1,M900001,72159AMA-1,M900001,72159AMA-1,M900001,72159AMA-
1,M900001
17-2,2,,172159-03241,,"LABEL,
BOOM",2,2,2,2,2,2,N,,72159012,*1990.06,72159012,*1990.06,72159012,*1990.06,72159
012,*1990.06,72159012,*1990.06,72159012,*1990.06,I
17-3,2,,172159-03242,,"LABEL,
BOOM",2,2,2,2,2,2,N,,72143022,*1990.11,72143022,*1990.11,72143022,*1990.11,72143
022,*1990.11,72143022,*1990.11,72143022,*1990.11,I
18,2,,172149-03250,,LABEL,1,1,1,1,1,1,Z,,72159AMA-1,M900001,72159AMA-
1,M900001,72159AMA-1,M900001,72159AMA-1,M900001,72159AMA-1,M900001,72159AMA-
1,M900001
19,2,,172149-03261,,LABEL,2,2,2,2,2,2,,,,,,,,,,,,,
19-1,2,,172159-03260,,LABEL,2,2,2,2,2,2,R,,72159AMA-1,M900001,72159AMA-
1,M900001,72159AMA-1,M900001,72159AMA-1,M900001,72159AMA-1,M900001,72159AMA-
1,M900001
20,2,,172149-03270,,LABEL,1,1,1,1,1,1,,,,,,,,,,,,,
20-1,2,,172159-03270,,LABEL,1,1,1,1,1,1,R,,72159AMA-1,M900001,72159AMA-
1,M900001,72159AMA-1,M900001,72159AMA-1,M900001,72159AMA-1,M900001,72159AMA-
1,M900001
21,2,,172142-03280,,LABEL,1,1,1,1,1,1,,,,,,,,,,,,,
21-1,2,,172159-03320,,LABEL,1,1,1,1,1,1,R,,72159AMA-1,M900001,72159AMA-
1,M900001,72159AMA-1,M900001,72159AMA-1,M900001,72159AMA-1,M900001,72159AMA-
1,M900001
22,2,,172149-03280,,LABEL,1,1,,,1,,,,,,,,,,,,,,
22-1,2,,172159-03280,,LABEL,1,1,,,1,,R,,72159AMA-1,M900001,72159AMA-
1,M900001,,,,,72159AMA-1,M900001,
23,2,,172137-03300,,"LABEL, TURNING LOCK",1,1,1,1,1,1,,,,,,,,,,,,,
23-1,2,,172159-03550,,LABEL,1,1,1,1,1,1,R,,72159AMA-1,M900001,72159AMA-
1,M900001,72159AMA-1,M900001,72159AMA-1,M900001,72159AMA-1,M900001,72159AMA-
1,M900001
24,2,,172149-03410,,LABEL,1,1,,,1,,,,,,,,,,,,,,
24-1,2,,172159-03410,,"LABEL, TURNING LOCK",1,1,,,1,,R,,72159AMA-
1,M900001,72159AMA-1,M900001,,,,,72159AMA-1,M900001,
25,2,,172150-03410,,LABEL,,,1,1,,1,,,,,,,,,,,,,,
25-1,2,,172159-03090,,LABEL,,,1,1,,1,,,,,,,72159AMA-1,M900001,72159AMA-
1,M900001,,,72159AMA-1,M900001
26,2,,172149-03420,,LABEL,1,1,1,1,1,1,,,,,,,,,,,,,
26-1,2,,172159-03420,,LABEL,1,1,1,1,1,1,R,,72159AMA-1,M900001,72159AMA-
1,M900001,72159AMA-1,M900001,72159AMA-1,M900001,72159AMA-1,M900001,72159AMA-
1,M900001
27,2,,172149-03430,,LABEL,1,1,1,1,1,1,,,,,,,,,,,,,
27-1,2,,172159-03430,,LABEL,1,1,1,1,1,1,R,,72159AMA-1,M900001,72159AMA-
1,M900001,72159AMA-1,M900001,72159AMA-1,M900001,72159AMA-1,M900001,72159AMA-
1,M900001
28,2,,172149-03440,,LABEL,1,1,1,1,1,1,,,,,,,,,,,,,
28-1,2,,172159-03440,,LABEL,1,1,1,1,1,1,R,,72159AMA-1,M900001,72159AMA-
1,M900001,72159AMA-1,M900001,72159AMA-1,M900001,72159AMA-1,M900001,72159AMA-
1,M900001
29,2,,172149-03450,,LABEL,1,1,1,1,1,1,,,,,,,,,,,,,
29-1,2,,172159-03450,,LABEL,1,1,1,1,1,1,R,,72159AMA-1,M900001,72159AMA-
1,M900001,72159AMA-1,M900001,72159AMA-1,M900001,72159AMA-1,M900001,72159AMA-
1,M900001
30,2,,172138-03750,,"LABEL, GREASE",1,1,1,1,1,1,,,,,,,,,,,,,
30-1,2,,172159-03140,,"LABEL, GREASE",1,1,1,1,1,1,R,,72159AMA-
1,M900001,72159AMA-1,M900001,72159AMA-1,M900001,72159AMA-1,M900001,72159AMA-
1,M900001,72159AMA-1,M900001
31,2,,172137-03780,,"LABEL, THROTTLE",1,1,1,1,1,1,,,,,,,,,,,,,
31-1,2,,172159-03540,,"LABEL,ACCEL",1,1,1,1,1,1,R,,72159AMA-1,M900001,72159AMA-
1,M900001,72159AMA-1,M900001,72159AMA-1,M900001,72159AMA-1,M900001,72159AMA-
1,M900001
```

https://truckmanualshub.com/

```
32,2,,172149-53400,,"TREE CLIP",2,2,2,2,2,2,Z,,72159AMA-1,M900001,72159AMA-
1,M900001,72159AMA-1,M900001,72159AMA-1,M900001,72159AMA-1,M900001,72159AMA-
1,M900001
32-1,2,,172149-53400,,"TREE
CLIP",2,2,,,2,,W,,72159010,*1990.03,72159010,*1990.03,,,,,72159010,*1990.03,
32-2,2,,172159-53400,,"TREE CLIP",2,2,,,2,,R,,72159AMA-2,M910001,72159AMA-
2,M910001,,,,,72159AMA-2,M910001,
33,2,,194340-65580,,LABEL,1,1,1,1,1,1,,,,,,,,,,,,,
33-1,2,,172159-03530,,LABEL,1,1,1,1,1,1,R,,72159AMA-1,M900001,72159AMA-
1,M900001,72159AMA-1,M900001,72159AMA-1,M900001,72159AMA-1,M900001,72159AMA-
1,M900001
34,2,,22857-300050,,"SCREW 3X 5",8,8,8,8,8,8,,,,,,,,,,,,
35,2,,172150-03130,,"LABEL, KEY SWITCH",1,1,1,1,1,1,,,,,,,,,,,,,
35-1,2,,172159-03330,,"LABEL, KEY SWITCH",1,1,1,1,1,1,R,,72159AMA-
1,M900001,72159AMA-1,M900001,72159AMA-1,M900001,72159AMA-1,M900001,72159AMA-
1,M900001,72159AMA-1,M900001
36,2,,933112-45300,,"LABEL, DANGER (A)",1,1,1,1,1,1,,,,,,,,,,,,,
36-1,2,,172159-03480,,"LABEL, DANGER(A)",1,1,1,1,1,1,R,,72159AMA-
1,M900001,72159AMA-1,M900001,72159AMA-1,M900001,72159AMA-1,M900001,72159AMA-
1,M900001,72159AMA-1,M900001
37,2,,933112-50700,,"LABEL, OIL FEED",1,1,1,1,1,1,,,,,,,,,,,,,
37-1,2,,172159-03340,,"LABEL, OIL FEED",1,1,1,1,1,1,R,,72159AMA-
1,M900001,72159AMA-1,M900001,72159AMA-1,M900001,72159AMA-1,M900001,72159AMA-
1,M900001,72159AMA-1,M900001
38,2,,933112-52500,,"LABEL, FUEL",1,1,1,1,1,1,,,,,,,,,,,,,
38-1,2,,172159-03350,,"LABEL, FUEL",1,1,1,1,1,1,R,,72159AMA-1,M900001,72159AMA-
1,M900001,72159AMA-1,M900001,72159AMA-1,M900001,72159AMA-1,M900001,72159AMA-
1,M900001
39,2,,933112-54300,,"LABEL, AIR CLEANER",1,1,1,1,1,1,,,,,,,,,,,,,
39-1,2,,172159-03360,,"LABEL, AIR CLEANER",1,1,1,1,1,1,R,,72159AMA-
1,M900001,72159AMA-1,M900001,72159AMA-1,M900001,72159AMA-1,M900001,72159AMA-
1,M900001,72159AMA-1,M900001
40,2,,933112-55700,,"LABEL, SUB-TANK",1,1,1,1,1,1,,,,,,,,,,,,,
40-1,2,,172159-03370,,"LABEL, SUBTANK",1,1,1,1,1,1,R,,72159AMA-
1,M900001,72159AMA-1,M900001,72159AMA-1,M900001,72159AMA-1,M900001,72159AMA-
1,M900001,72159AMA-1,M900001
41,2,,933112-55800,,"LABEL, RADIATER",1,1,1,1,1,1,,,,,,,,,,,,,
41-1,2,,172159-03380,,"LABEL, RADITATER",1,1,1,1,1,1,R,,72159AMA-
1,M900001,72159AMA-1,M900001,72159AMA-1,M900001,72159AMA-1,M900001,72159AMA-
1,M900001,72159AMA-1,M900001
42,2,,933112-55900,,"LABEL, ANTI-FREEZING",1,1,1,1,1,1,,,,,,,,,,,,,
42-1,2,,172159-03390,,"LABEL, ANTI-FREEZING",1,1,1,1,1,1,R,,72159AMA-
1,M900001,72159AMA-1,M900001,72159AMA-1,M900001,72159AMA-1,M900001,72159AMA-
1,M900001,72159AMA-1,M900001
45,1,,172159-
03940,,LABEL,1,1,,,1,,W,,72142357,*1990.11,72142357,*1990.11,,,,,72142357,*1990.
11,,,I
46,1,,172159-
03950,,LABEL,1,1,1,1,1,1,W,,72142357,*1990.11,72142357,*1990.11,72142357,*1990.1
1,72142357,*1990.11,72142357,*1990.11,72142357,*1990.11,I
47,1,,172159-
03960,,LABEL,,,1,1,,1,W,,,,,,72142357,*1990.11,72142357,*1990.11,,,72142357,*199
0.11,I
48,1,,172159-
03970,,LABEL,1,1,,,1,,W,,72142357,*1990.11,72142357,*1990.11,,,,,72142357,*1990.
11,,,I
49,1,,172159-
03980,,LABEL,,,1,1,,1,W,,,,,,72142357,*1990.11,72142357,*1990.11,,,72142357,*199
0.11,I
```

Fig. 3 メイバン(フランス) LABEL(FRANCE SPEC.)

https://parkmanualshub.com/

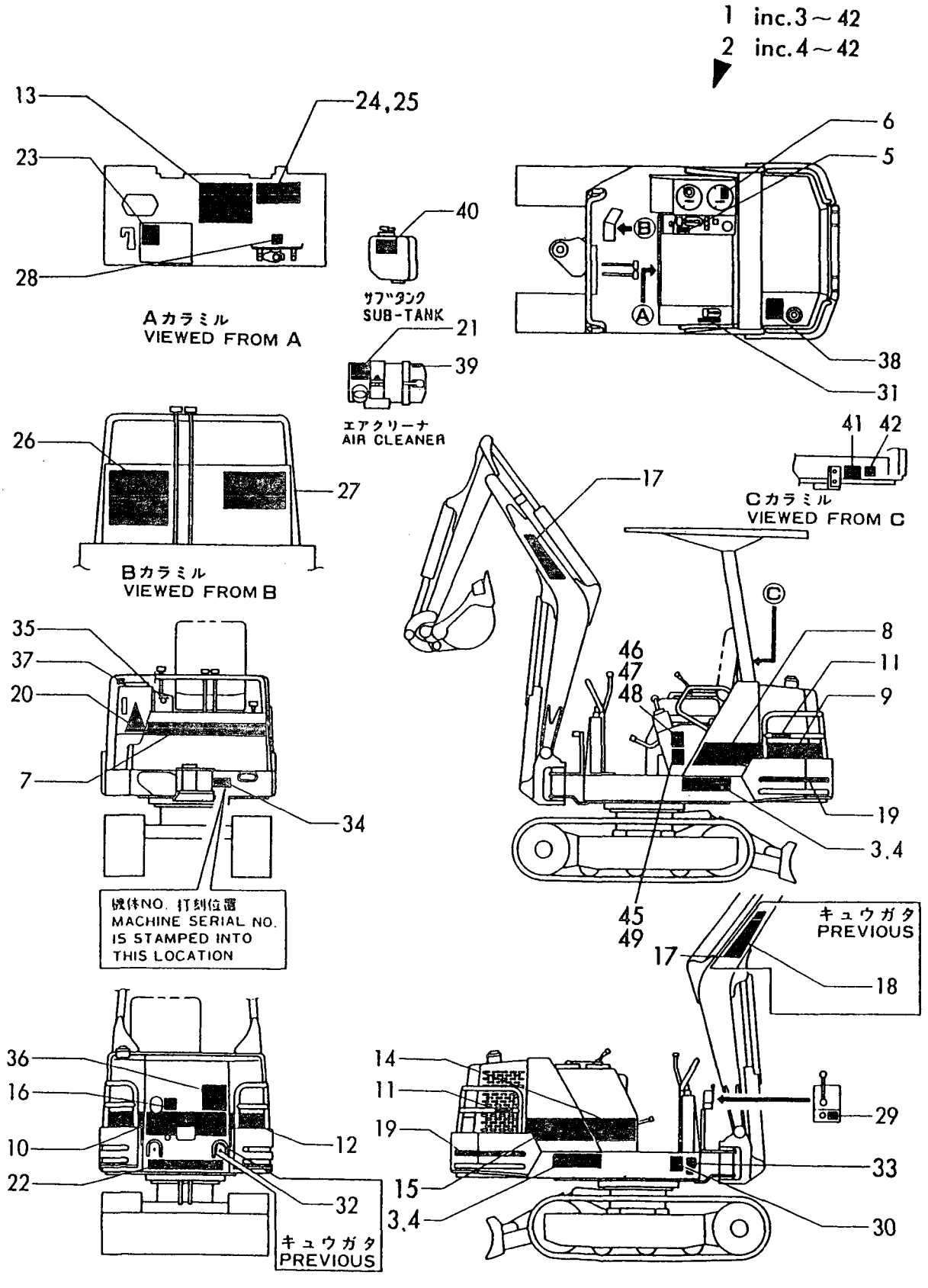

https://truckmanualshub.com/

```
1,1,,772149-05110,,"TOOL ASSY",1,1,1,1,1,1,,,,,,,,,,,,
1-1,1,,772159-05100,,"TOOL ASSY",1,1,1,1,1,1,R,,72159AMA-1,M900001,72159AMA-
1,M900001,72159AMA-1,M900001,72159AMA-1,M900001,72159AMA-1,M900001,72159AMA-
1,M900001
2,2,,172137-38131,,"COLLAR,
LINK",4,4,4,4,4,4,Z,,*,MXXX,*,MXXX,*,MXXX,*,MXXX,*,MXXX,*,MXXX
3,2,,104200-92350,,"DRIVER,
SCREW",1,1,1,1,1,1,Z,,*,MXXX,*,MXXX,*,MXXX,*,MXXX,*,MXXX,*,MXXX
4,2,,119640-92750,,"WRENCH, FILTER",1,1,1,1,1,1,,,,,,,,,,,,
4-1,2,,172159-05110,,"WRENCH, FILTER",1,1,1,1,1,1,R,,72159AMA-
1,M900001,72159AMA-1,M900001,72159AMA-1,M900001,72159AMA-1,M900001,72159AMA-
1,M900001,72159AMA-1,M900001
5,2,,22351-060020,,"SPRING PIN
6X20",4,4,4,4,4,4,Z,,*,MXXX,*,MXXX,*,MXXX,*,MXXX,*,MXXX,*,MXXX
6,2,,22417-800450,,"COTTER PIN 8.0X45",4,4,4,4,4,4,,,,,,,,,,,,
7,2,,28110-080100,,"WRENCH  8X10",1,1,1,1,1,1,,,,,,,,,,,,
8,2,,28110-120140,,"WRENCH 12X14",1,1,1,1,1,1,,,,,,,,,,,,
9,2,,28110-170190,,"WRENCH 17X19",1,1,1,1,1,1,,,,,,,,,,,,
10,2,,28110-220240,,"WRENCH 22X24",1,1,1,1,1,1,,,,,,,,,,,,
11,2,,28110-270300,,"WRENCH 27X30",1,1,1,1,1,1,,,,,,,,,,,,
12,2,,28150-080000,,"BAR WRENCH  8",1,1,1,1,1,1,,,,,,,,,,,,
13,2,,28227-271400,,"BOX WRENCH 27X140",1,1,1,1,1,1,,,,,,,,,,,,,
14,2,,28230-120250,,"TURNING HANDLE",1,1,1,1,1,1,,,,,,,,,,,,
15,2,,933110-90000,,"BAG, TOOL",1,1,1,1,1,1,,,,,,,,,,,,
15-1,2,,172159-05100,,"BAG, TOOL",1,1,1,1,1,1,R,,72159AMA-1,M900001,72159AMA-
1,M900001,72159AMA-1,M900001,72159AMA-1,M900001,72159AMA-1,M900001,72159AMA-
1,M900001
16,2,,933171-00470,,"PLIER (200)",1,1,1,1,1,1,,,,,,,,,,,,
16-1,2,,28170-
002000,,PLIERS,1,1,1,1,1,1,R,,72519020,MXXX,72519020,MXXX,72519020,MXXX,72519020
,MXXX,72519020,MXXX,72519020,MXXX
17,2,,172122-
05100,,NOZZLE,1,1,1,1,1,1,Z,,*,MXXX,*,MXXX,*,MXXX,*,MXXX,*,MXXX,*,MXXX,I
18,1,,28150-025000,,"BAR WRENCH  2.5",1,1,1,1,1,1,W,,*,"FROM 1ST",*,"FROM
1ST",*,"FROM 1ST",*,"FROM 1ST",*,"FROM 1ST",*,"FROM 1ST"
19,1,,28130-061000,,"SCREWDRIVER,BLADE",1,1,1,1,1,1,W,,*,"FROM 1ST",*,"FROM
1ST",*,"FROM 1ST",*,"FROM 1ST",*,"FROM 1ST",*,"FROM 1ST"
20,1,,28140-061000,,"SCREWDRIVER,PHILLIPS",1,1,1,1,1,1,W,,*,"FROM 1ST",*,"FROM
1ST",*,"FROM 1ST",*,"FROM 1ST",*,"FROM 1ST",*,"FROM 1ST"
```

Fig.4 コウグ TOOL

https://truckmanualshub.com/

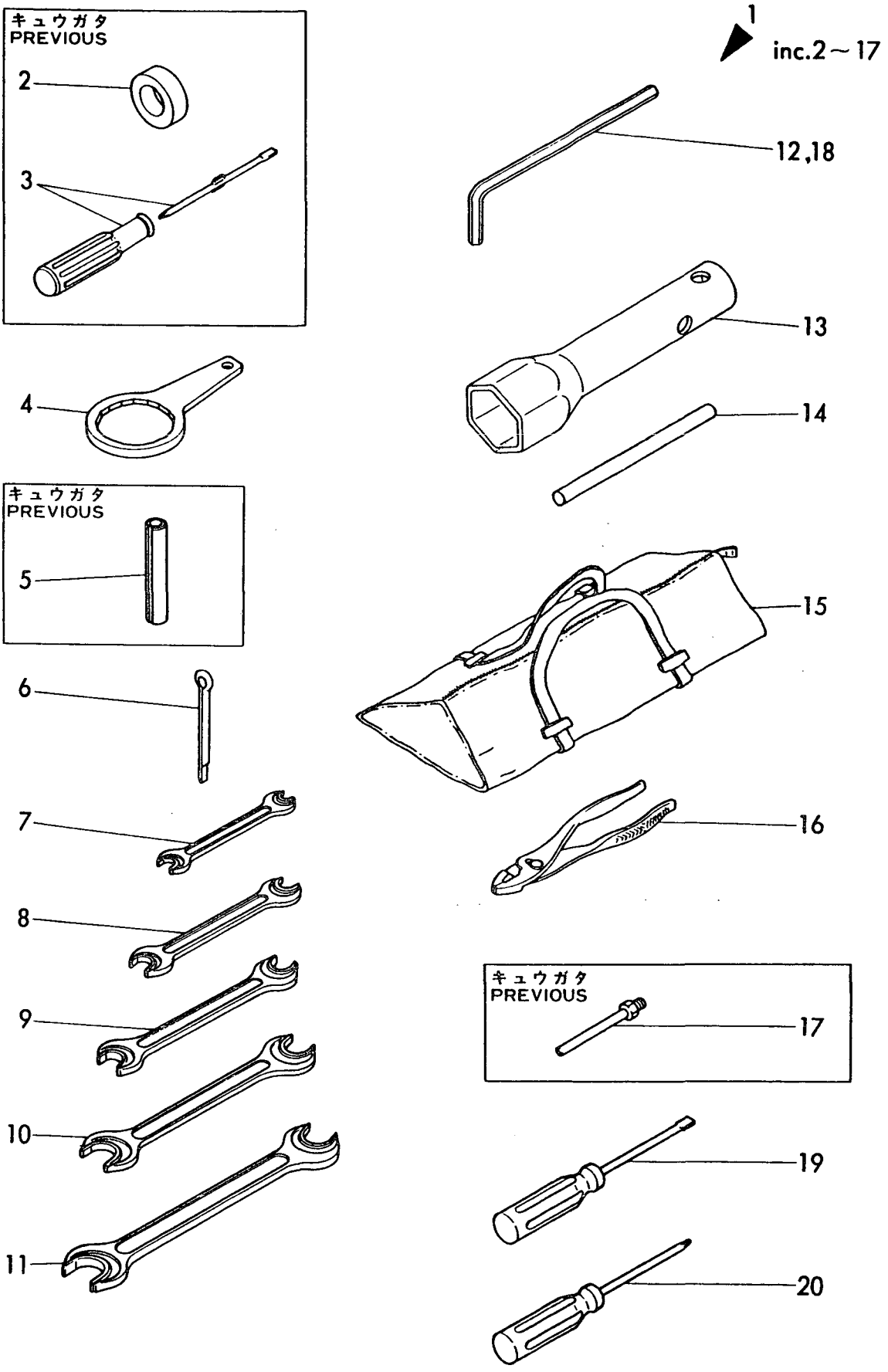

https://truckmanualshub.com/

```
1,1,,172149-11300,,"EXTENSION, SILENCER",1,1,1,1,1,1,,,,,,,,,,,,
1-1,1,,172159-11300,,"EXTENSION, SILENCER",1,1,1,1,1,1,R,,72159AMA-
3,M920001,72159AMA-3,M920001,72159AMA-3,M920001,72159AMA-3,M920001,72159AMA-
3,M920001,72159AMA-3,M920001,I
2,1,,121120-13580,,CLAMP,1,1,1,1,1,1,,,,,,,,,,,,
2-1,1,,172159-13580,,CLAMP,1,1,1,1,1,1,R,,72159AMA-3,M920001,72159AMA-
3,M920001,72159AMA-3,M920001,72159AMA-3,M920001,72159AMA-3,M920001,72159AMA-
3,M920001,I
3,1,,26106-100652,,"BOLT M10X 65 PLATED",1,1,1,1,1,1,,1,,,,,,,,,,
4,1,,26716-100002,,"NUT M10",1,1,1,1,1,1,,1,,,,,,,,,,
5,1,,172149-11500,,"PIPE, AIR",1,1,1,1,1,1,,,,,,,,,,,,
5-1,1,,172159-11500,,"PIPE, AIR",1,1,1,1,1,1,R,,72159AMA-3,M920001,72159AMA-
3,M920001,72159AMA-3,M920001,72159AMA-3,M920001,72159AMA-3,M920001,72159AMA-
3,M920001,I
6,1,,172149-11530,,HOSE,1,1,1,1,1,1,,,,,,,,,,,,
7,1,,172149-
11540,,HOSE,1,1,1,1,1,1,Z,,*,MXXX,*,MXXX,*,MXXX,*,MXXX,*,MXXX,*,MXXX,I
8,1,,23000-060000,,"CLAMP 60",4,4,4,4,4,4,,1,,,,,,,,,,
8-1,1,,23000-060000,,"CLAMP 60",2,2,2,2,2,2,K,1,72159AMA-2,M910001,72159AMA-
2,M910001,72159AMA-2,M910001,72159AMA-2,M910001,72159AMA-2,M910001,72159AMA-
2,M910001,I
```

Fig.5 キュウキカン＆フンシュツコウ INLET HOSE & EXHAUST PIPE

https://truckmanualshub.com/

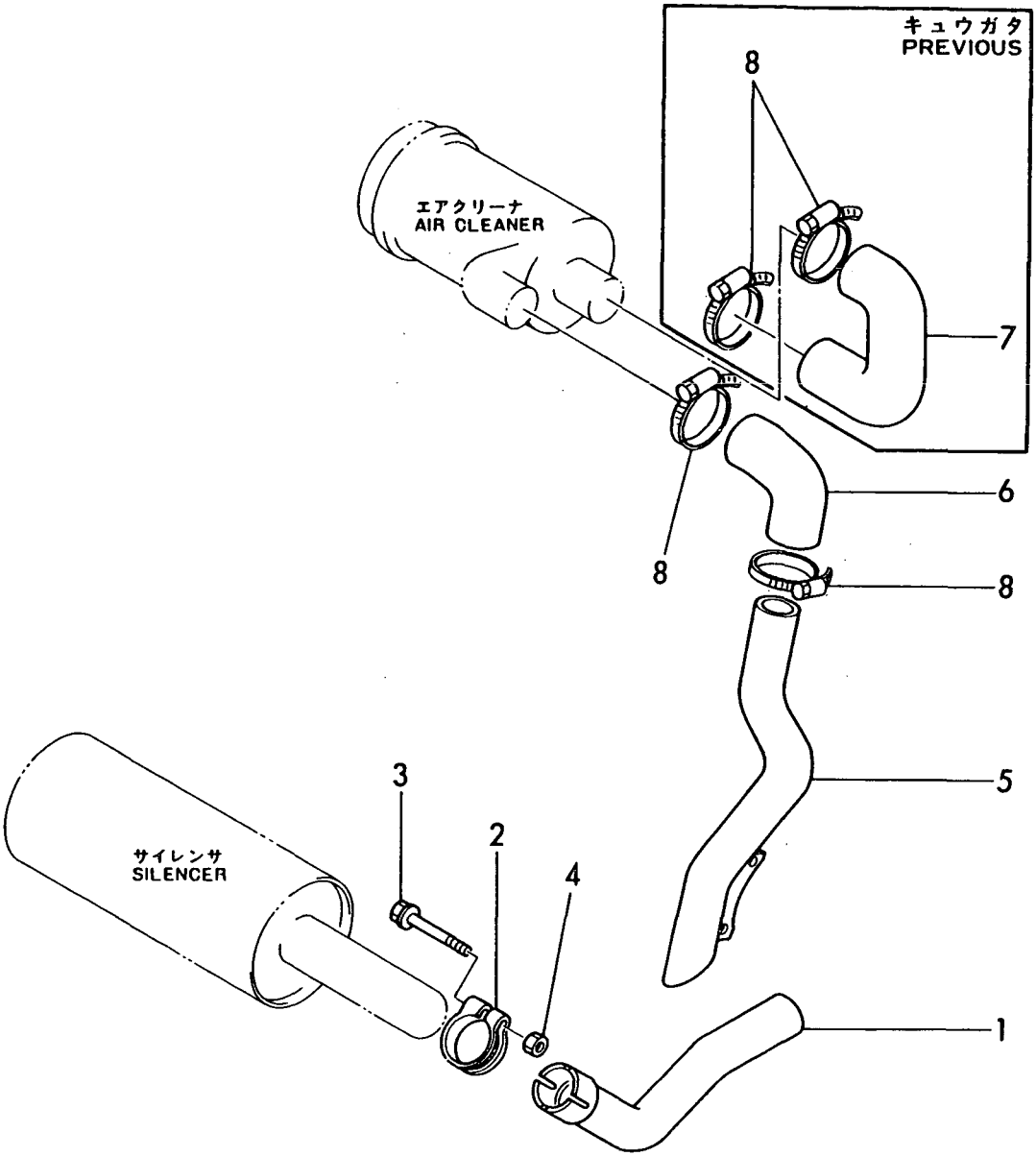

https://truckmanualshub.com/

```
1,1,,172141-12100,,"LEVER W/BUSH, ACCEL",1,1,1,1,1,1,,,,,,,,,,,,
1-1,1,,172159-12100,,"LEVER W/BUSH, ACCEL",1,1,1,1,1,1,R,,72159AMA-
2,M910001,72159AMA-2,M910001,72159AMA-2,M910001,72159AMA-2,M910001,72159AMA-
2,M910001,72159AMA-2,M910001
1-2,1,,172159-
12101,,,1,1,1,1,1,1,S,,72159028,*1995.05,72159028,*1995.05,72159028,*1995.05,721
59028,*1995.05,72159028,*1995.05,72159028,*1995.05,I
3,2,,172141-12220,,"BUSH 30X10",2,2,2,2,2,2,,,,,,,,,,,,
4,1,,172149-12100,,"SUPPORT, CABLE",1,1,1,1,1,1,,,,,,,,,,,,
4-1,1,,172159-12210,,"SUPPORT, CABLE",1,1,1,1,1,1,R,,72159AMA-
3,M920001,72159AMA-3,M920001,72159AMA-3,M920001,72159AMA-3,M920001,72159AMA-
3,M920001,72159AMA-3,M920001
5,1,,172149-12110,,"CABLE, THROTTLE",1,1,1,1,1,1,,,,,,,,,,,,
6,1,,172141-12160,,BRACKET,1,1,1,1,1,1,,,,,,,,,,,,
6-1,1,,172159-12160,,BRACKET,1,1,1,1,1,1,R,,72159AMA-2,M910001,72159AMA-
2,M910001,72159AMA-2,M910001,72159AMA-2,M910001,72159AMA-2,M910001,72159AMA-
2,M910001
7,1,,172141-12232,,SPRING,1,1,1,1,1,1,,,,,,,,,,,,
7-1,1,,172159-12230,,SPRING,1,1,1,1,1,1,R,,72159AMA-2,M910001,72159AMA-
2,M910001,72159AMA-2,M910001,72159AMA-2,M910001,72159AMA-2,M910001,72159AMA-
2,M910001
8,1,,172141-12240,,SPRING,1,1,1,1,1,1,,,,,,,,,,,,
8-1,1,,172159-12240,,SPRING,1,1,1,1,1,1,R,,72159AMA-2,M910001,72159AMA-
2,M910001,72159AMA-2,M910001,72159AMA-2,M910001,72159AMA-2,M910001,72159AMA-
2,M910001
9,1,,172141-12250,,PLATE,1,1,1,1,1,1,,,,,,,,,,,,
9-1,1,,172159-12250,,PLATE,1,1,1,1,1,1,R,,72159AMA-2,M910001,72159AMA-
2,M910001,72159AMA-2,M910001,72159AMA-2,M910001,72159AMA-2,M910001,72159AMA-
2,M910001
10,1,,172142-12420,,PLATE,1,1,1,1,1,1,,,,,,,,,,,,
10-1,1,,172159-12420,,PLATE,1,1,1,1,1,1,R,,72159AMA-2,M910001,72159AMA-
2,M910001,72159AMA-2,M910001,72159AMA-2,M910001,72159AMA-2,M910001,72159AMA-
2,M910001
11,1,,172137-12270,,"JOINT, CABLE",1,1,1,1,1,1,,,,,,,,,,,,
11-1,1,,172159-12270,,"JOINT, CABLE",1,1,1,1,1,1,R,,72159AMA-2,M910001,72159AMA-
2,M910001,72159AMA-2,M910001,72159AMA-2,M910001,72159AMA-2,M910001,72159AMA-
2,M910001
12,1,,172113-12521,,"PIN, CABLE",1,1,1,1,1,1,,,,,,,,,,,,
12-1,1,,172159-12520,,"PIN, CABLE",1,1,1,1,1,1,R,,72159AMA-2,M910001,72159AMA-
2,M910001,72159AMA-2,M910001,72159AMA-2,M910001,72159AMA-2,M910001,72159AMA-
2,M910001
13,1,,172141-41340,,BOOTS,1,1,1,1,1,1,,,,,,,,,,,,
14,1,,172122-46630,,"KNOB(D), LEVER",1,1,1,1,1,1,,,,,,,,,,,,
14-1,1,,172146-
12150,,"GRIP,ACCELERATOR",1,1,1,1,1,1,S,,72159028,*1995.05,72159028,*1995.05,721
59028,*1995.05,72159028,*1995.05,72159028,*1995.05,72159028,*1995.05,I
15,1,,1C6281-52310,,"PIN 6,COME-OFF SNAP",2,2,2,2,2,2,,,,,,,,,,,,
15-1,1,,172159-42070,,"PIN 6,COME-OFF SNAP",2,2,2,2,2,2,R,,72159AMA-
3,M920001,72159AMA-3,M920001,72159AMA-3,M920001,72159AMA-3,M920001,72159AMA-
3,M920001,72159AMA-3,M920001
16,1,,1A1040-56900,,"PIN  6X 17",1,1,1,1,1,1,,,,,,,,,,,,
16-1,1,,172159-12530,,"PIN  6X 17",1,1,1,1,1,1,R,,72159AMA-2,M910001,72159AMA-
2,M910001,72159AMA-2,M910001,72159AMA-2,M910001,72159AMA-2,M910001,72159AMA-
2,M910001
17,1,,22137-060000,,"WASHER 6, POLISHED",1,1,1,1,1,1,,,,,,,,,,,,
18,1,,22217-100000,,"SPRING WASHER 10",3,3,3,3,3,3,,,,,,,,,,,,
19,1,,24190-160001,,"BALL 1/2",1,1,1,1,1,1,,,,,,,,,,,,
20,1,,26013-080162,,"BOLT W/WASHER M8X16",2,2,2,2,2,2,,,,,,,,,,,,
21,1,,26116-100202,,"BOLT M10X 20 PLATED",2,2,2,2,2,2,,,,,,,,,,,,
22,1,,26116-100302,,"BOLT M10X 30 PLATED",1,1,1,1,1,1,,,,,,,,,,,,
23,1,,933171-15680,,"GROMMET 40X13",1,1,1,1,1,1,,,,,,,,,,,,
```

Fig. 6 アクセル ACCELERATOR

https://truckmanualshub.com/

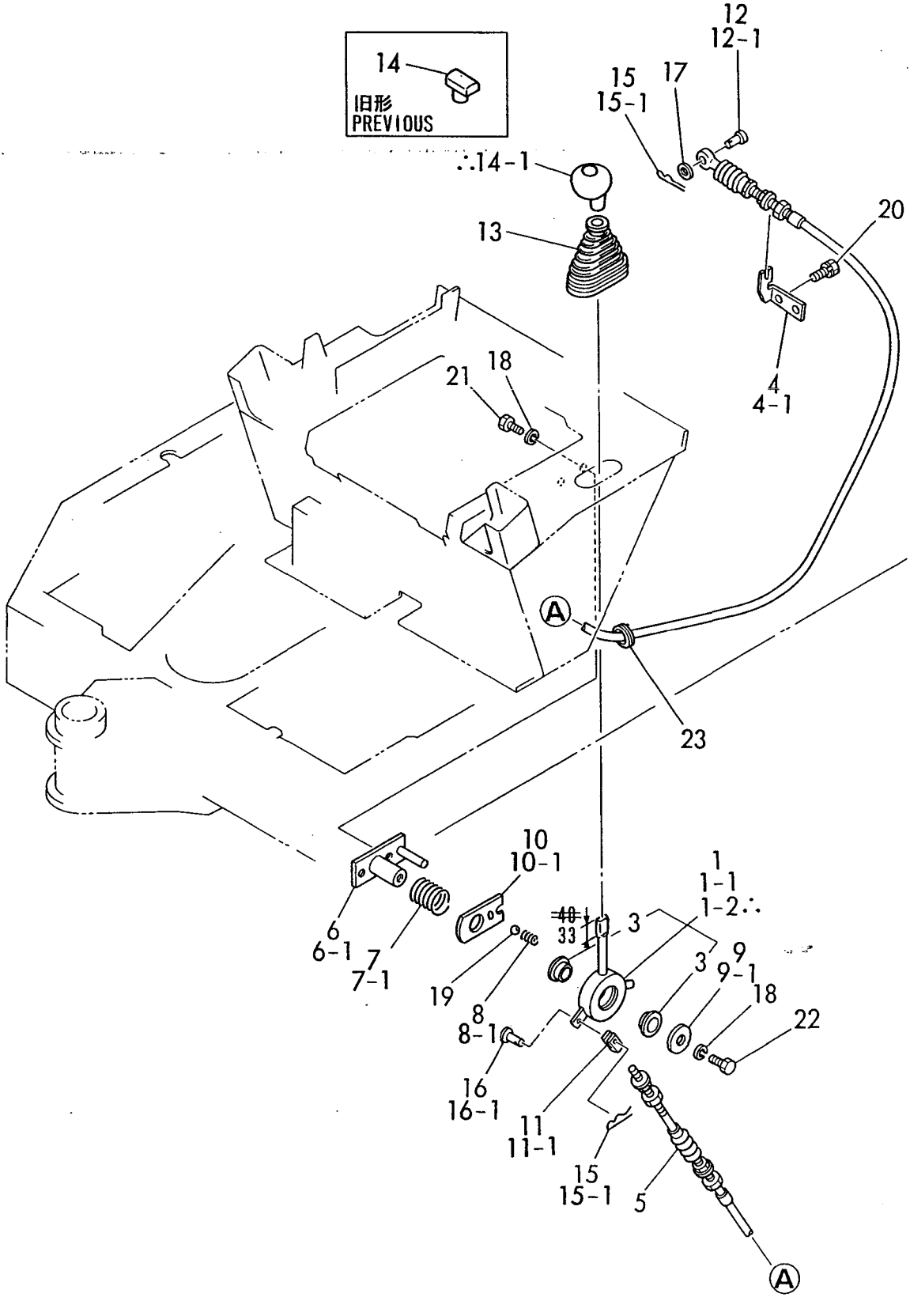

https://truckmanualshub.com/

```
1,1,,172137-13111,,"ENGINE BED(A), LEFT",1,1,1,1,1,1,,,,,,,,,,,,
1-1,1,,172159-13110,,"ENGINE BED(A), LEFT",1,1,1,1,1,1,R,,72159AMA-
2,M910001,72159AMA-2,M910001,72159AMA-2,M910001,72159AMA-2,M910001,72159AMA-
2,M910001,72159AMA-2,M910001
2,1,,172137-13141,,"ENGINE BED(A), RIGHT",1,1,1,1,1,1,,,,,,,,,,,,
2-1,1,,172159-13140,,"ENGINE BED(A), RIGHT",1,1,1,1,1,1,R,,72159AMA-
2,M910001,72159AMA-2,M910001,72159AMA-2,M910001,72159AMA-2,M910001,72159AMA-
2,M910001,72159AMA-2,M910001
3,1,,172137-13161,,"ENGINE BED(B), LEFT",1,1,1,1,1,1,,,,,,,,,,,,
3-1,1,,172159-13160,,"ENGINE BED(B), LEFT",1,1,1,1,1,1,R,,72159AMA-
2,M910001,72159AMA-2,M910001,72159AMA-2,M910001,72159AMA-2,M910001,72159AMA-
2,M910001,72159AMA-2,M910001
4,1,,172137-13171,,"ENGINE BED(B), RIGHT",1,1,1,1,1,1,,,,,,,,,,,,
4-1,1,,172159-13170,,"ENGINE BED(B), RIGHT",1,1,1,1,1,1,R,,72159AMA-
2,M910001,72159AMA-2,M910001,72159AMA-2,M910001,72159AMA-2,M910001,72159AMA-
2,M910001,72159AMA-2,M910001
5,1,,172137-13180,,"ABSORBER, SHOCK",4,4,4,4,4,4,,,,,,,,,,,,
6,1,,22217-100000,,"SPRING WASHER 10",8,8,8,8,8,8,,,,,,,,,,,,
7,1,,26013-100202,,"BOLT W/WASHER M10X20",16,16,16,16,16,16,,,,,,,,,,,,
7-1,1,,26013-100252,,"BOLT W/WASHER
M10X25",16,16,16,16,16,16,N,,72159014,*1990.08,72159014,*1990.08,72159014,*1990.
08,72159014,*1990.08,72159014,*1990.08,72159014,*1990.08,I
8,1,,26716-100002,,"NUT M10",8,8,8,8,8,8,,,,,,,,,,,,
9,1,,172149-13290,,"MOUNT, RADIATOR",1,1,1,1,1,1,,,,,,,,,,,,
9-1,1,,172159-13290,,"MOUNT, RADIATOR",1,1,1,1,1,1,R,,72159AMA-
2,M910001,72159AMA-2,M910001,72159AMA-2,M910001,72159AMA-2,M910001,72159AMA-
2,M910001,72159AMA-2,M910001
10,1,,172126-13370,,"HOSE(C), WATER DRAIN",1,1,1,1,1,1,,,,,,,,,,,,
10-1,1,,172159-13510,,"PIPE, WATER DRAIN",1,1,1,1,1,1,R,,72159AMA-
3,M920001,72159AMA-3,M920001,72159AMA-3,M920001,72159AMA-3,M920001,72159AMA-
3,M920001,72159AMA-3,M920001,I
11,1,,26013-060162,,"BOLT M 6X 16",2,2,2,2,2,2,,,,,,,,,,,,
12,1,,172149-13500,,HOSE,1,1,1,1,1,1,,,,,,,,,,,,
12-1,1,,172159-13500,,HOSE,1,1,1,1,1,1,R,,72159AMA-3,M920001,72159AMA-
3,M920001,72159AMA-3,M920001,72159AMA-3,M920001,72159AMA-3,M920001,72159AMA-
3,M920001,I
13,1,,119631-44502,,RADIATOR,1,1,1,1,1,1,,,,,,,,,,,,
14,2,,121250-44590,,CLAMP,2,2,2,2,2,2,,,,,,,,,,,,
15,2,,124450-44590,,"CAP, RADIATOR",1,1,1,1,1,1,,,,,,,,,,,,
16,2,,119631-44610,,"SHROUD,RADIATOR",1,1,1,1,1,1,,,,,,,,,,,,
18,2,,119631-44800,,"LABEL, RADIATOR",1,1,1,1,1,1,,,,,,,,,,,,
19,2,,124738-49150,,"PIPE, WATER DRAIN",1,1,1,1,1,1,,,,,,,,,,,,
20,2,,26014-080162,,"BOLT M 8X 16",4,4,4,4,4,4,,,,,,,,,,,,
21,1,,121468-44510,,"SUB-TANK ASSY",1,1,1,1,1,1,,,,,,,,,,,,
23,2,,121450-44531,,CAP,1,1,1,1,1,1,,,,,,,,,,,,
24,2,,121468-44540,,"PLUG, SUB-TANK",1,1,1,1,1,1,,,,,,,,,,,,
25,2,,124450-44560,,CLAMP,1,1,1,1,1,1,,,,,,,,,,,,
26,2,,121470-44581,,GASKET,1,1,1,1,1,1,,,,,,,,,,,,
27,2,,23065-070130,,"PIPE  7X 130",1,1,1,1,1,1,,,,,,,,,,,,
28,1,,121470-44540,,"LABEL, SUB-TANK",1,1,1,1,1,1,,,,,,,,,,,,
29,1,,119645-49010,,"PIPE (A), C. WATER",1,1,1,1,1,1,,,,,,,,,,,,
30,1,,119631-49020,,"PIPE, COOLING WATER",1,1,1,1,1,1,,,,,,,,,,,,
31,1,,121450-49110,,"COCK ASSY, 3-WAY",1,1,1,1,1,1,,,,,,,,,,,,
33,2,,121250-49121,,PLUG,1,1,1,1,1,1,,,,,,,,,,,,
34,2,,24311-000160,,"O-RING 1A P-16.0",1,1,1,1,1,1,,,,,,,,,,,,
35,1,,23010-038000,,"CLAMP 38",4,4,4,4,4,4,,,,,,,,,,,,
35-1,1,,23010-038000,,"CLAMP 38",2,2,2,2,2,2,K,,72149087,"FROM
1ST",72149087,"FROM 1ST",72149087,"FROM 1ST",72149087,"FROM 1ST",72149087,"FROM
1ST",72149087,"FROM 1ST"
36,1,,23080-011000,,"CLAMP 11",4,4,4,4,4,4,,,,,,,,,,,,
37,1,,26013-080162,,"BOLT W/WASHER M8X16",2,2,2,2,2,2,,,,,,,,,,,,
38,1,,26013-080162,,"BOLT W/WASHER M8X16",4,4,4,4,4,4,,,,,,,,,,,,
39,1,,26013-100252,,"BOLT W/WASHER M10X25",4,4,4,4,4,4,,,,,,,,,,,,
```

https://truckmanualshub.com/

40,1,,22137-060000,,"WASHER 6, POLISHED",2,2,2,2,2,2,,,,,,,,,,,,
41,1,,172734-14620,,"PIPE L=300, FUEL",1,1,1,1,1,1,W,,72149035,"FROM 1ST",72149035,"FROM 1ST",72149035,"FROM 1ST",72149035,"FROM 1ST",72149035,"FROM 1ST",72149035,"FROM 1ST"
41-1,1,,172159-14650,,"PIPE L=300, FUEL",1,1,1,1,1,1,R,,72159AMA-3,M920001,72159AMA-3,M920001,72159AMA-3,M920001,72159AMA-3,M920001,72159AMA-3,M920001,I
42,1,,23010-040000,,"CLAMP 40",2,2,2,2,2,2,W,,72149087,"FROM 1ST",72149087,"FROM 1ST",72149087,"FROM 1ST",72149087,"FROM 1ST",72149087,"FROM 1ST",72149087,"FROM 1ST"
43,1,,172122-79890,,"CLAMP 350",2,2,2,2,2,2,W,,72149070,"FROM 1ST",72149070,"FROM 1ST",72149070,"FROM 1ST",72149070,"FROM 1ST",72149070,"FROM 1ST",72149070,"FROM 1ST"
43-1,1,,172159-45160,,"CLAMP 350",2,2,2,2,2,2,R,,72159AMA-2,M910001,72159AMA-2,M910001,72159AMA-2,M910001,72159AMA-2,M910001,72159AMA-2,M910001

Fig.7 エンジンマウント＆ラジエータ
ENGINE MOUNT & RADIATOR

https://mokumanabshop.com/

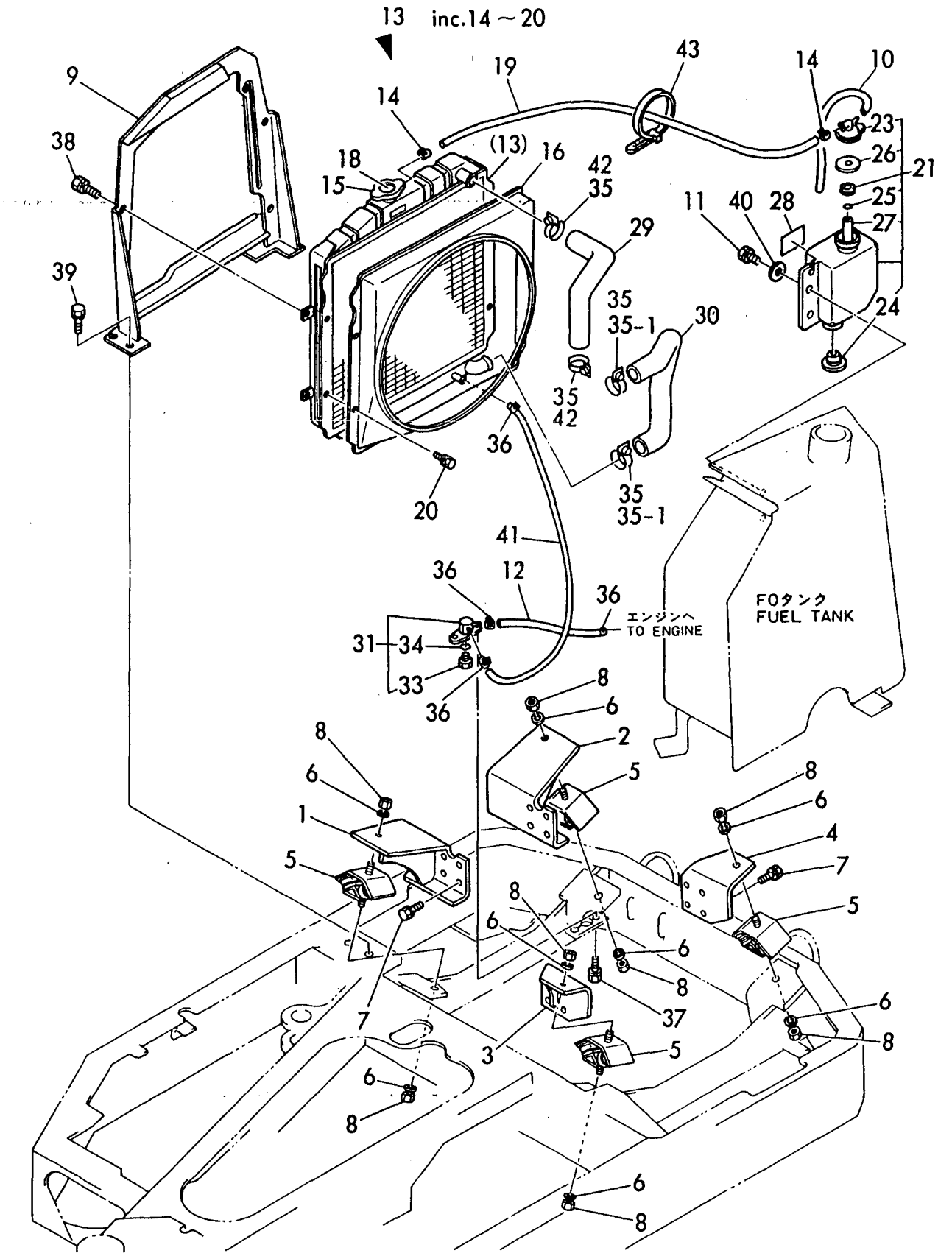

https://truckmanualshub.com/

```
1,1,,772150-14100,,"FUEL TANK ASSY",1,1,1,1,1,1,,,,,,,,,,,,
1-1,1,,772159-14100,,"FUEL TANK ASSY",1,1,1,1,1,1,R,,72159AMA-
1,M900001,72159AMA-1,M900001,72159AMA-1,M900001,72159AMA-1,M900001,72159AMA-
1,M900001,72159AMA-1,M900001
3,2,,172149-14250,,"GAUGE, FUEL",1,1,1,1,1,1,,,,,,,,,,,,
4,2,,172141-14260,,FLOAT,1,1,1,1,1,1,,,,,,,,,,,,
5,2,,172149-
14260,,"SEAL,",1,1,1,1,1,1,Z,,72159010,*1990.03,72159010,*1990.03,72159010,*1990
.03,72159010,*1990.03,72159010,*1990.03,72159010,*1990.03
6,2,,172122-14300,,"CAP, FUEL TANK",1,1,1,1,1,1,,,,,,,,,,,,
6A,3,,105430-55070,,GASKET,1,1,1,1,1,1,W,,*,"FROM 1ST",*,"FROM 1ST",*,"FROM
1ST",*,"FROM 1ST",*,"FROM 1ST",*,"FROM 1ST",I
7,2,,101504-55101,,"STRAINER,FUEL INLET",1,1,1,1,1,1,,,,,,,,,,,,
8,2,,23010-014000,,"CLAMP 14",2,2,2,2,2,2,,,,,,,,,,,,
9,2,,104200-11920,,COCK,1,1,1,1,1,1,,,,,,,,,,,,
10,1,,22137-120000,,"WASHER 12,POLISHED",3,3,3,3,3,3,,,,,,,,,,,,
11,1,,23080-013000,,"CLAMP 13,HOSE",1,1,1,1,1,1,,,,,,,,,,,,
12,1,,26013-120302,,"BOLT W/WASHER M12X30",3,3,3,3,3,3,,,,,,,,,,,,
13,1,,933169-22940,,"SPACER, RESERVOIR",1,1,1,1,1,1,,,,,,,,,,,,
13-1,1,,172159-14270,,"SPACER, RESERVOIR",1,1,1,1,1,1,R,,72159AMA-
1,M900001,72159AMA-1,M900001,72159AMA-1,M900001,72159AMA-1,M900001,72159AMA-
1,M900001,72159AMA-1,M900001
14,1,,172149-14601,,SUPPORT,1,1,1,1,1,1,,,,,,,,,,,,
14-1,1,,172159-14600,,SUPPORT,1,1,1,1,1,1,R,,72159AMA-3,M920001,72159AMA-
3,M920001,72159AMA-3,M920001,72159AMA-3,M920001,72159AMA-3,M920001,72159AMA-
3,M920001,I
15,1,,172149-14620,,HOSE,1,1,1,1,1,1,,,,,,,,,,,,
15-1,1,,172159-14620,,HOSE,1,1,1,1,1,1,R,,72159AMA-3,M920001,72159AMA-
3,M920001,72159AMA-3,M920001,72159AMA-3,M920001,72159AMA-3,M920001,72159AMA-
3,M920001,I
16,1,,172149-14630,,HOSE,2,2,2,2,2,2,,,,,,,,,,,,
16-1,1,,172159-14630,,HOSE,2,2,2,2,2,2,R,,72159AMA-3,M920001,72159AMA-
3,M920001,72159AMA-3,M920001,72159AMA-3,M920001,72159AMA-3,M920001,72159AMA-
3,M920001,I
17,1,,172126-16540,,"CLAMP 10X70",2,2,2,2,2,2,,,,,,,,,,,,
18,1,,129335-55700,,"SEPARATOR, WATER",1,1,1,1,1,1,,,,,,,,,,,,
19,2,,104200-55321,,"VALVE, TAPER",1,1,1,1,1,1,,,,,,,,,,,,
20,2,,104200-55330,,"SPRING, TAPER VALVE",1,1,1,1,1,1,,,,,,,,,,,,
21,2,,104200-55341,,"HANDLE, COCK",1,1,1,1,1,1,,,,,,,,,,,,
22,2,,124064-55510,,"BOWL, FUEL STRAINER",1,1,1,1,1,1,,,,,,,,,,,,
23,2,,102103-55520,,O-RING,1,1,1,1,1,1,,,,,,,,,,,,
24,2,,110250-55610,,"RING, RETAINING",1,1,1,1,1,1,,,,,,,,,,,,
25,2,,121257-55720,,"SPRING, SCREEN",1,1,1,1,1,1,,,,,,,,,,,,
26,2,,121257-55731,,FLOAT,1,1,1,1,1,1,,,,,,,,,,,,
28,2,,101720-55750,,"PLUG 6",2,2,2,2,2,2,,,,,,,,,,,,
29,2,,104200-55750,,"SCREW M 4",1,1,1,1,1,1,,,,,,,,,,,,
30,2,,171081-55910,,SCREEN,1,1,1,1,1,1,,,,,,,,,,,,
31,2,,23418-060000,,"GASKET 6, NYLON",2,2,2,2,2,2,,,,,,,,,,,,
32,2,,24311-240100,,"O-RING 1A P-10A",1,1,1,1,1,1,,,,,,,,,,,,
33,1,,124766-59050,,"CLAMP 12",6,6,6,6,6,6,,,,,,,,,,,,
34,1,,22217-080000,,"SPRING WASHER  8",1,1,1,1,1,1,,1,,,,,,,,,,
35,1,,26116-080652,,"BOLT M 8X 65 PLATED",1,1,1,1,1,1,,1,,,,,,,,,,
36,1,,26013-080162,,"BOLT W/WASHER M8X16",2,2,2,2,2,2,,1,,,,,,,,,,
37,1,,172149-14190,,"PLATE, GAUGE",1,1,1,1,1,1,,,,,,,,,,,,
37-1,1,,172159-14190,,"PLATE,GAUGE",1,1,1,1,1,1,R,,72159AMA-1,M900001,72159AMA-
1,M900001,72159AMA-1,M900001,72159AMA-1,M900001,72159AMA-1,M900001,72159AMA-
1,M900001
38,1,,26557-060082,,"SCREW M 6X  8",2,2,2,2,2,2,,,,,,,,,,,,
39,1,,22217-060000,,"SPRING WASHER  6",2,2,2,2,2,2,,,,,,,,,,,,
40,1,,23061-100250,,"PIPE 10X 250",1,1,1,1,1,1,,,,,,,,,,,,
41,1,,172135-14610,,"JOINT, FUEL PIPE",1,1,1,1,1,1,W,,72159003,"FROM
1ST",72159003,"FROM 1ST",72159003,"FROM 1ST",72159003,"FROM 1ST",72159003,"FROM
1ST",72159003,"FROM 1ST"
```

https://truckmanualshub.com/

```
41-1,1,,172135-14610,,"JOINT, FUEL
PIPE",1,1,1,1,1,1,Z,,72159010,*1990.03,72159010,*1990.03,72159010,*1990.03,72159
010,*1990.03,72159010,*1990.03,72159010,*1990.03
42,1,,172122-79890,,"CLAMP 350",1,1,1,1,1,1,W,,72149070,"FROM
1ST",72149070,"FROM 1ST",72149070,"FROM 1ST",72149070,"FROM 1ST",72149070,"FROM
1ST",72149070,"FROM 1ST"
42-1,1,,172159-45160,,"CLAMP 350",1,1,1,1,1,1,R,,72159AMA-2,M910001,72159AMA-
2,M910001,72159AMA-2,M910001,72159AMA-2,M910001,72159AMA-2,M910001,72159AMA-
2,M910001
```

Fig. 8 FOタンク&FOパイプ FUEL TANK & FUEL LINE

https://truckmanualshub.com/

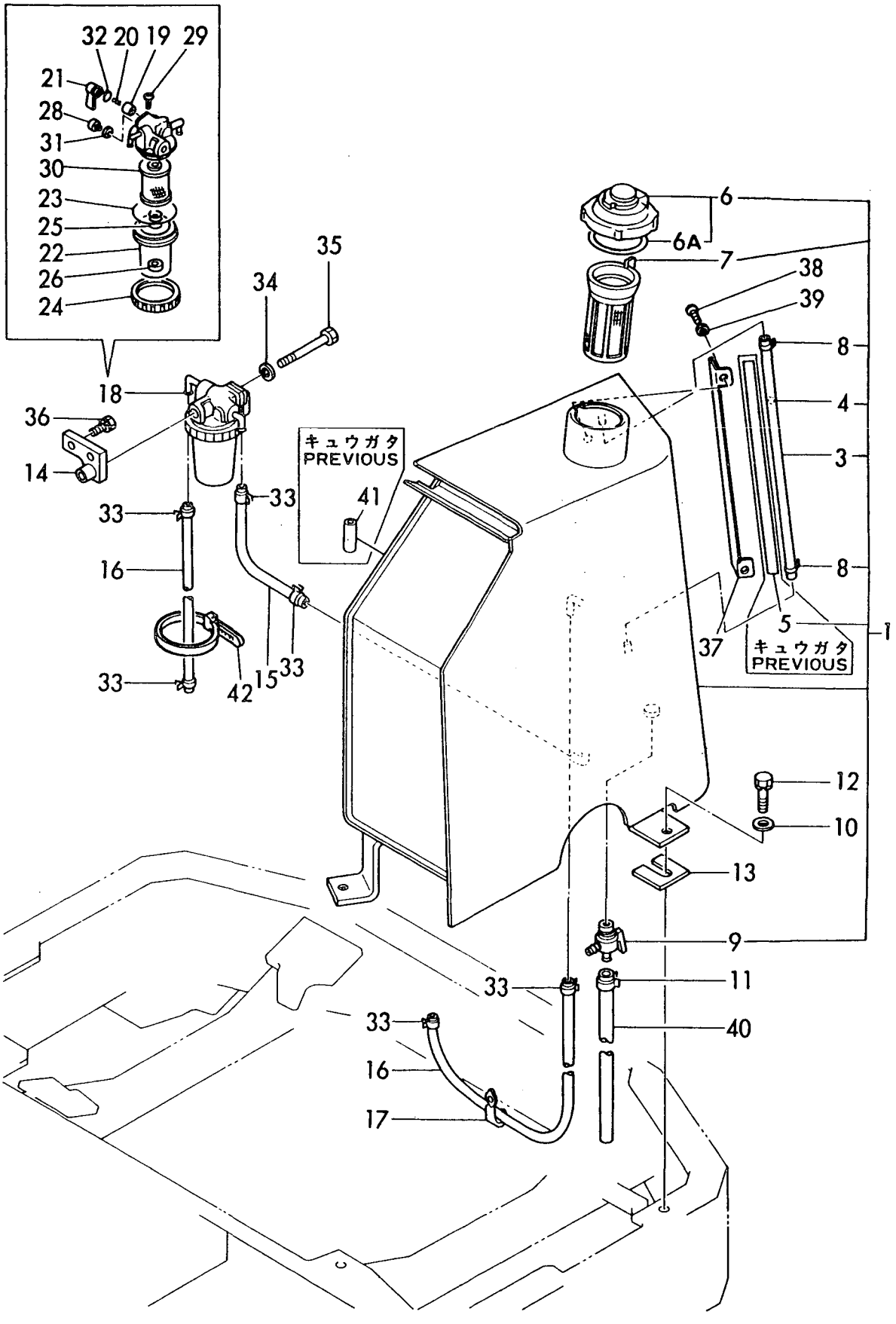

https://truckmanualshub.com/

```
1,1,,172149-16100,,"HARNESS, BATTERY",1,1,1,1,1,1,,,,,,,,,,,,
1-1,1,,172150-16100,,"HARNESS,
BATTERY(+)",1,1,1,1,1,1,N,,72159008,*1990.03,72159008,*1990.03,72159008,*1990.03
,72159008,*1990.03,72159008,*1990.03,72159008,*1990.03,I
2,1,,172149-16110,,"HARNESS, BATTERY",1,1,1,1,1,1,,,,,,,,,,,,
2-1,1,,172150-16110,,"HARNESS, BATTERY(-
)",1,1,1,1,1,1,N,,72159008,*1990.03,72159008,*1990.03,72159008,*1990.03,72159008
,*1990.03,72159008,*1990.03,72159008,*1990.03,I
3,1,,194300-51310,,"BATTERY NS60",1,1,1,1,1,1,,,,,,,,,,,,
3-1,1,,172159-16100,,"BATTERY NS60",1,1,1,1,1,1,R,,72159AMA-1,M900001,72159AMA-
1,M900001,72159AMA-1,M900001,72159AMA-1,M900001,72159AMA-1,M900001,72159AMA-
1,M900001
4,1,,22217-080000,,"SPRING WASHER  8",2,2,2,2,2,2,,,,,,,,,,,,
5,1,,22137-060000,,"WASHER 6, POLISHED",2,2,2,2,2,2,,1,,,,,,,,,,
6,1,,26716-080002,,"NUT M 8",2,2,2,2,2,2,,,,,,,,,,,,
7,1,,172149-16301,,"SUPPORT, BATTERY",1,1,1,1,1,1,,,,,,,,,,,,
7-1,1,,172159-16300,,"SUPPORT, BATTERY",1,1,1,1,1,1,R,,72159AMA-
2,M910001,72159AMA-2,M910001,72159AMA-2,M910001,72159AMA-2,M910001,72159AMA-
2,M910001,72159AMA-2,M910001
8,1,,172149-16320,,"STAY, BATTERY",1,1,1,1,1,1,,,,,,,,,,,,
8-1,1,,172159-16320,,"STAY, BATTERY",1,1,1,1,1,1,R,,72159AMA-2,M910001,72159AMA-
2,M910001,72159AMA-2,M910001,72159AMA-2,M910001,72159AMA-2,M910001,72159AMA-
2,M910001
9,1,,194940-64750,,"CLAMP,BATTERY",1,1,1,1,1,1,,,,,,,,,,,,
9-1,1,,172159-16470,,"CLAMP, BATTERY",1,1,1,1,1,1,R,,72159AMA-
2,M910001,72159AMA-2,M910001,72159AMA-2,M910001,72159AMA-2,M910001,72159AMA-
2,M910001,72159AMA-2,M910001
10,1,,194515-64760,,"ROD, BATTERY CLAMP",2,2,2,2,2,2,,,,,,,,,,,,
10-1,1,,172159-16410,,"ROD, BATTERY CLAMP",2,2,2,2,2,2,R,,72159AMA-
2,M910001,72159AMA-2,M910001,72159AMA-2,M910001,72159AMA-2,M910001,72159AMA-
2,M910001,72159AMA-2,M910001
11,1,,26013-100202,,"BOLT W/WASHER M10X20",7,7,7,7,7,7,,,,,,,,,,,,
12,1,,26716-060002,,"NUT M 6",2,2,2,2,2,2,,1,,,,,,,,,,
13,1,,172149-16381,,"STAY, BATTERY",1,1,1,1,1,1,,,,,,,,,,,,
13-1,1,,172149-16382,,"STAY,
BATTERY",1,1,1,1,1,1,N,,72149120,*1989.11,72149120,*1989.11,72149120,*1989.11,72
149120,*1989.11,72149120,*1989.11,72149120,*1989.11
13-2,1,,172159-16380,,"STAY, BATTERY",1,1,1,1,1,1,R,,72159AMA-
2,M910001,72159AMA-2,M910001,72159AMA-2,M910001,72159AMA-2,M910001,72159AMA-
2,M910001,72159AMA-2,M910001
14,1,,194440-51550,,"COVER, BATTERY",1,1,1,1,1,1,Z,,72159AMA-1,M900001,72159AMA-
1,M900001,72159AMA-1,M900001,72159AMA-1,M900001,72159AMA-1,M900001,72159AMA-
1,M900001,I
```

Fig. 9 バッテリ BATTERY

https://truckmanualshub.com/

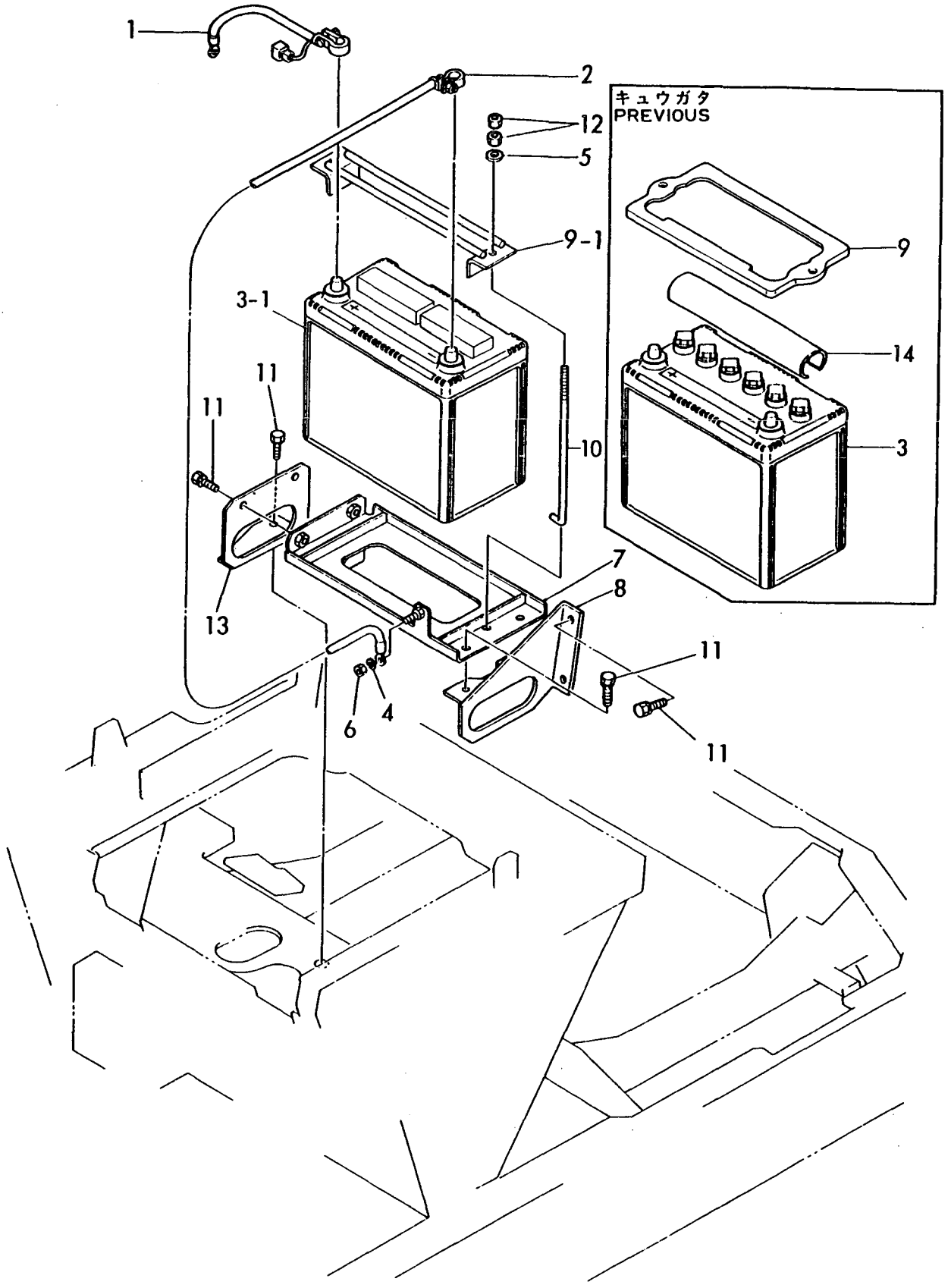

https://truckmanualshub.com/

```
1,1,,172149-16500,,"HARNESS A",1,1,1,1,1,1,,,,,,,,,,,,
2,1,,172149-16510,,HARNESS(B,1,1,1,1,1,1,,,,,,,,,,,,
3,1,,172149-16520,,"HARNESS, STARTER",1,1,1,1,1,1,,,,,,,,,,,,
4,1,,172149-16530,,HARNESS(E,1,1,1,1,1,1,,,,,,,,,,,,
5,1,,172122-16570,,"LINK, FUSIBLE",1,1,1,1,1,1,,,,,,,,,,,,
6,1,,22137-100000,,"WASHER 10,POLISHED",2,2,2,2,2,2,,,,,,,,,,,,
7,1,,26117-100162,,"BOLT M10X 16 PLATED",2,2,2,2,2,2,,,,,,,,,,,,
8,1,,933171-15801,,"WIRE, EARTH",1,1,1,1,1,1,,,,,,,,,,,,
9,1,,172149-16540,,HARNESS(F,1,1,1,1,1,1,,,,,,,,,,,,
9-1,1,,172149-16120,,"HARNESS F,
EARTH",1,1,1,1,1,1,S,,*,MXXX,*,MXXX,*,MXXX,*,MXXX,*,MXXX,*,MXXX,I
10,1,,933171-15680,,"GROMMET 40X13",1,1,1,1,1,1,,,,,,,,,,,,
11,1,,22417-200250,,"COTTER PIN 2.0X25",1,1,1,1,1,1,,,,,,,,,,,,
12,1,,933110-58400,,"GROMMET 43",1,1,1,1,1,1,,,,,,,,,,,,
13,1,,172126-16540,,"CLAMP 10X70",3,3,3,3,3,3,,,,,,,,,,,,
14,1,,194202-56460,,BAND,1,1,1,1,1,1,,,,,,,,,,,,
14-1,1,,194250-51660,,"BAND  250",1,1,1,1,1,1,,,,,,,,,,,,
14-2,1,,172112-
79890,,BAND,1,1,1,1,1,1,S,,72142304,MXXX,72142304,MXXX,72142304,MXXX,72142304,MX
XX,72142304,MXXX,72142304,MXXX
14-3,1,,172159-45160,,"CLAMP 350",1,1,1,1,1,1,R,,72159AMA-2,M910001,72159AMA-
2,M910001,72159AMA-2,M910001,72159AMA-2,M910001,72159AMA-2,M910001,72159AMA-
2,M910001
15,1,,26116-120162,,"BOLT M12X 16 PLATED",1,1,1,1,1,1,,,,,,,,,,,,
16,1,,22217-120000,,"WASHER 12,SPRING",1,1,1,1,1,1,,,,,,,,,,,,
17,1,,22217-100000,,"SPRING WASHER 10",1,1,1,1,1,1,,,,,,,,,,,,
18,1,,933168-56000,,"GROMMET 17X19",1,1,1,1,1,1,,,,,,,,,,,,
18-1,1,,933160-
09220,,GROMMET,1,1,1,1,1,1,N,,72150015,*1989.09,72150015,*1989.09,72150015,*1989
.09,72150015,*1989.09,72150015,*1989.09,72150015,*1989.09
18-2,1,,1A1140-
58060,,GROMMET,1,1,1,1,1,1,N,,72159007,*1990.01,72159007,*1990.01,72159007,*1990
.01,72159007,*1990.01,72159007,*1990.01,72159007,*1990.01
19,1,,933168-55770,,"BAND 146",2,2,2,2,2,2,Z,,*,"FROM 1ST",*,"FROM 1ST",*,"FROM
1ST",*,"FROM 1ST",*,"FROM 1ST",*,"FROM 1ST"
20,1,,172149-17100,,PLATE,1,1,1,1,1,1,,,,,,,,,,,,
20-1,1,,172159-17100,,PLATE,1,1,1,1,1,1,R,,72159AMA-2,M910001,72159AMA-
2,M910001,72159AMA-2,M910001,72159AMA-2,M910001,72159AMA-2,M910001,72159AMA-
2,M910001
21,1,,172149-17120,,LAMP,1,1,1,1,1,1,,,,,,,,,,,,
22,2,,172149-17140,,BULB(12V-3.4W,1,1,1,1,1,1,,,,,,,,,,,,
23,1,,172149-17130,,LAMP,1,1,1,1,1,1,,,,,,,,,,,,
24,2,,172149-17140,,BULB(12V-3.4W,1,1,1,1,1,1,,,,,,,,,,,,
25,1,,172141-17141,,"UNIT, CHECKER",1,1,1,1,1,1,,,,,,,,,,,,
26,1,,172141-17150,,BUZZER,1,1,1,1,1,1,,,,,,,,,,,,
27,1,,172141-17160,,"BOX, FUSE",1,1,1,1,1,1,,,,,,,,,,,,
28,2,,29411-050000,,"FUSE ( 5A),CARTRIDGE",1,1,1,1,1,1,,,,,,,,,,,,
29,2,,29411-100000,,"FUSE (10A),CARTRIDGE",2,2,2,2,2,2,,,,,,,,,,,,
30,2,,29411-150000,,"FUSE (15A),CARTRIDGE",2,2,2,2,2,2,,,,,,,,,,,,
31,1,,172141-17190,,"SWITCH, WORK LAMP",1,1,1,1,1,1,,,,,,,,,,,,
32,2,,933113-05120,,"BULB 12V 1.7W",1,1,1,1,1,1,,,,,,,,,,,,
32-1,2,,172141-17230,,"BULB 24V-
6W",1,1,1,1,1,1,N,,72141361,MXXX,72141361,MXXX,72141361,MXXX,72141361,MXXX,72141
361,MXXX,72141361,MXXX
33,1,,172147-17200,,"METER, HOUR",1,1,1,1,1,1,,,,,,,,,,,,
34,2,,172147-17210,,"CASE, HOUR METER",1,1,1,1,1,1,,,,,,,,,,,,
35,2,,172147-17220,,"CAP, HOUR METER",1,1,1,1,1,1,,,,,,,,,,,,
36,2,,172147-17230,,NUT,2,2,2,2,2,2,,,,,,,,,,,,
37,2,,172147-17240,,SLEEVE,2,2,2,2,2,2,,,,,,,,,,,,
38,2,,172147-17250,,"WIRE,LEAD",1,1,1,1,1,1,,,,,,,,,,,,
39,2,,22217-050000,,"SPRING WASHER  5",2,2,2,2,2,2,,,,,,,,,,,,
40,1,,121522-77101,,RELAY,1,1,1,1,1,1,,,,,,,,,,,,
41,1,,119640-77711,,"LIMITER,CURRENT",1,1,1,1,1,1,,,,,,,,,,,,
```

https://truckmanualshub.com/

```
42,1,,121522-77721,,"INDICATOR, CHARGING",1,1,1,1,1,1,,,,,,,,,,,,
43,1,,129155-77810,,RESISTOR,1,1,1,1,1,1,,,,,,,,,,,,
44,1,,22217-060000,,"SPRING WASHER  6",7,7,7,7,7,7,,,,,,,,,,,,
45,1,,22217-100000,,"SPRING WASHER 10",2,2,2,2,2,2,,,,,,,,,,,,
46,1,,26022-050162,,"SCREW M 5X 16",2,2,2,2,2,2,,,,,,,,,,,,
47,1,,26116-100162,,"BOLT M10X 16 PLATED",2,2,2,2,2,2,,,,,,,,,,,,
48,1,,26716-060002,,"NUT M 6",7,7,7,7,7,7,,,,,,,,,,,,
49,1,,933110-00100,,"SWITCH ASSY, STARTER",1,1,1,1,1,1,,,,,,,,,,,,
51,2,,933110-00301,,"KEY ASSY",1,1,1,1,1,1,,,,,,,,,,,,
52,1,,933110-05300,,HORN,1,1,1,1,1,1,,,,,,,,,,,,
53,1,,933113-05190,,"LAMP, OIL",1,1,1,1,1,1,,,,,,,,,,,,
54,2,,933113-05180,,"BULB 12V 3W",1,1,1,1,1,1,,,,,,,,,,,,
55,1,,933113-15900,,"COVER, SWITCH TERMI.",1,1,1,1,1,1,,,,,,,,,,,,
56,1,,172150-63200,,"PANEL ASSY",1,1,1,1,1,1,,,,,,,,,,,,
56-1,1,,172159-63200,,"PANEL ASSY",1,1,1,1,1,1,R,,72159AMA-2,M910001,72159AMA-
2,M910001,72159AMA-2,M910001,72159AMA-2,M910001,72159AMA-2,M910001,72159AMA-
2,M910001
57,1,,172141-65970,,"RUBBER, PLATE",1,1,1,1,1,1,,,,,,,,,,,,
57-1,1,,172159-63220,,"RUBBER, PLATE",1,1,1,1,1,1,R,,72159AMA-
2,M910001,72159AMA-2,M910001,72159AMA-2,M910001,72159AMA-2,M910001,72159AMA-
2,M910001,72159AMA-2,M910001
58,1,,26013-100202,,"BOLT W/WASHER M10X20",2,2,2,2,2,2,,,,,,,,,,,,
59,1,,26117-100162,,"BOLT M10X 16 PLATED",2,2,2,2,2,2,,,,,,,,,,,,
60,1,,22137-100000,,"WASHER 10,POLISHED",2,2,2,2,2,2,,,,,,,,,,,,
61,1,,26022-060122,,"SCREW M 6X 12",1,1,1,1,1,1,,,,,,,,,,,,
62,1,,26116-060122,,"BOLT M 6X 12",2,2,2,2,2,2,,,,,,,,,,,,
63,1,,22217-060000,,"SPRING WASHER  6",2,2,2,2,2,2,,,,,,,,,,,,
64,1,,172149-16570,,"HARNESS, HORN",1,1,1,1,1,1,,,,,,,,,,,,
65,1,,172149-16580,,HARNESS(C),1,,1,1,1,1,,,,,,,,,,,,
66,1,,172149-16550,,"GROMMET 40X13",1,1,1,1,1,1,W,,72159AMA-2,M910001,72159AMA-
2,M910001,72159AMA-2,M910001,72159AMA-2,M910001,72159AMA-2,M910001,72159AMA-
2,M910001,I
```

Fig. 10 デンソウヒン ELECTRIC PARTS

https://truckmanualshub.com/

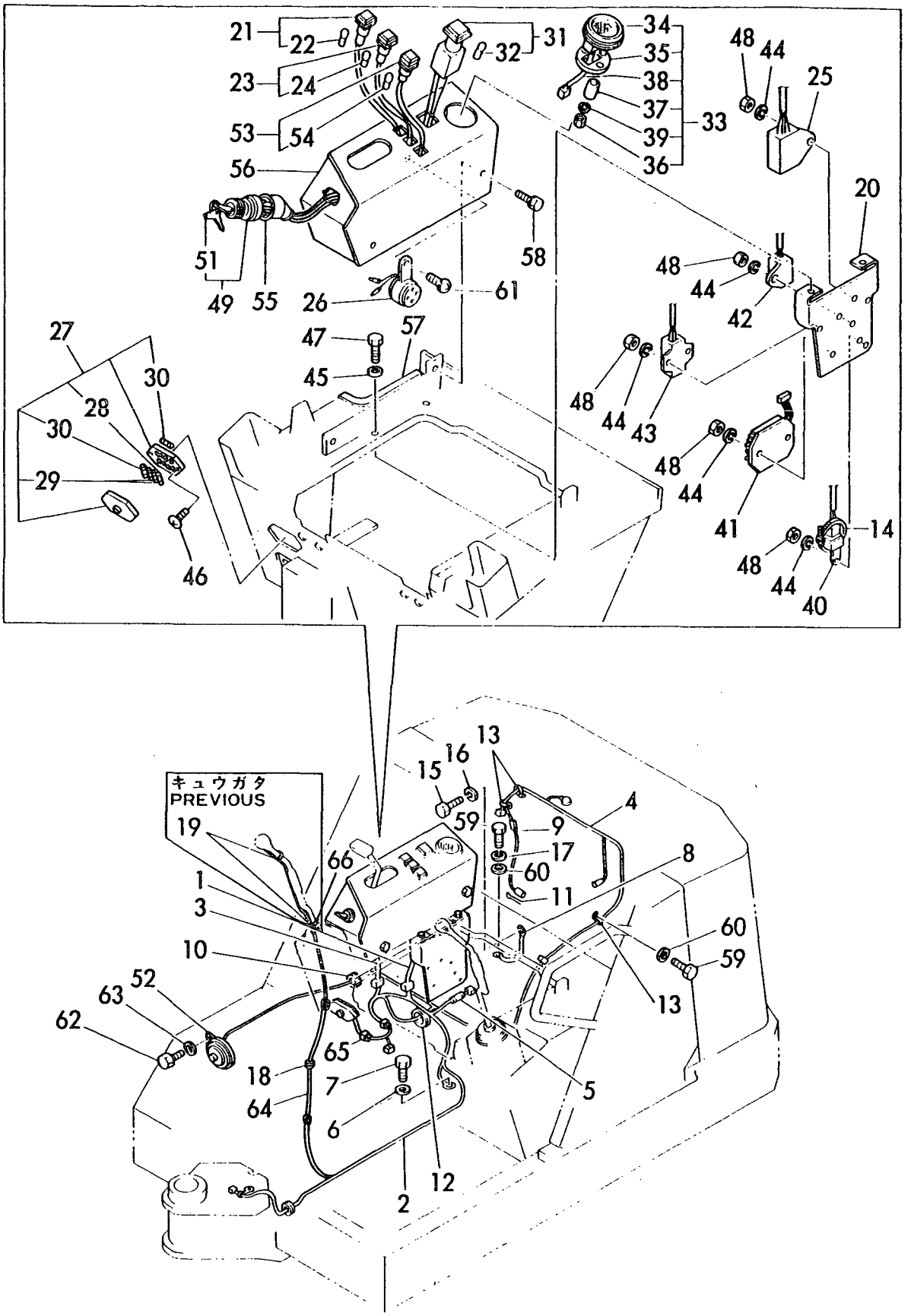

https://truckmanualshub.com/

```
1,1,,772149-17600,,"HEATER ASSY",1,,1,1,1,1,,,,,,,,,,,,
1-1,1,,772159-17600,,"HEATER ASSY",1,,1,1,1,1,R,,72159AMA-2,M910001,,,72159AMA-
2,M910001,72159AMA-2,M910001,72159AMA-2,M910001,72159AMA-2,M910001
2,2,,172124-17630,,"VALVE, MINIATURE",1,,1,1,1,1,,,,,,,,,,,,
3,2,,172137-17630,,"JOINT, HEATER",1,,1,1,1,1,,,,,,,,,,,,
4,2,,172124-17640,,"JOINT 3/8",2,,2,2,2,2,,,,,,,,,,,,
5,2,,172141-17680,,"HOSE ASSY, HEATER",2,,2,2,2,2,,,,,,,,,,,,
5-1,2,,172149-17610,,HOSE,2,,2,2,2,2,N,,72159AMA-1,M900001,,,72159AMA-
1,M900001,72159AMA-1,M900001,72159AMA-1,M900001,72159AMA-1,M900001
6,3,,172141-17690,,"HOSE, HEATER",2,,2,2,2,2,,,,,,,,,,,,
6-1,3,,172149-17620,,"HOSE, HEATER",2,,2,2,2,2,N,,72159AMA-1,M900001,,,72159AMA-
1,M900001,72159AMA-1,M900001,72159AMA-1,M900001,72159AMA-1,M900001
7,3,,172141-17700,,"TUBE, CORRUGAT",2,,2,2,2,2,,,,,,,,,,,,
7-1,3,,172149-17630,,"TUBE, CORRUGAT",2,,2,2,2,2,N,,72159AMA-
1,M900001,,,72159AMA-1,M900001,72159AMA-1,M900001,72159AMA-1,M900001,72159AMA-
1,M900001
8,2,,172119-47650,,"JOINT, HOSE",1,,1,1,1,1,,1,,,,,,,,,,
9,2,,23000-022000,,"CLAMP 22",4,,4,4,4,4,,1,,,,,,,,,,
10,2,,933152-09280,,"BAND 170",2,,2,2,2,2,,1,,,,,,,,,,
11,2,,933166-24240,,"ELBOW, SWIVEL JOINT",1,,1,1,1,1,,,,,,,,,,,,
12,2,,933171-15680,,"GROMMET 40X13",2,,2,2,2,2,,,,,,,,,,,,
13,1,,172149-17640,,CLAMP,1,,1,1,1,1,W,,*,"FROM 1ST",,,*,"FROM 1ST",*,"FROM
1ST",*,"FROM 1ST",*,"FROM 1ST"
13-1,1,,172159-17640,,CLAMP,1,,1,1,1,1,R,,72159AMA-2,M910001,,,72159AMA-
2,M910001,72159AMA-2,M910001,72159AMA-2,M910001,72159AMA-2,M910001
14,1,,172122-79890,,"CLAMP 350",2,,2,2,2,2,W,,*,"FROM 1ST",,,*,"FROM
1ST",*,"FROM 1ST",*,"FROM 1ST",*,"FROM 1ST",I
14-1,1,,172159-45160,,"CLAMP 350",2,,2,2,2,2,R,,72159AMA-2,M910001,,,72159AMA-
2,M910001,72159AMA-2,M910001,72159AMA-2,M910001,72159AMA-2,M910001,I
15,1,,26013-100202,,"BOLT W/WASHER M10X20",2,,2,2,2,2,W,,*,"FROM 1ST",,,*,"FROM
1ST",*,"FROM 1ST",*,"FROM 1ST",*,"FROM 1ST",I
```

Fig. 11 ヒータ HEATER

https://truckmanualshub.com/

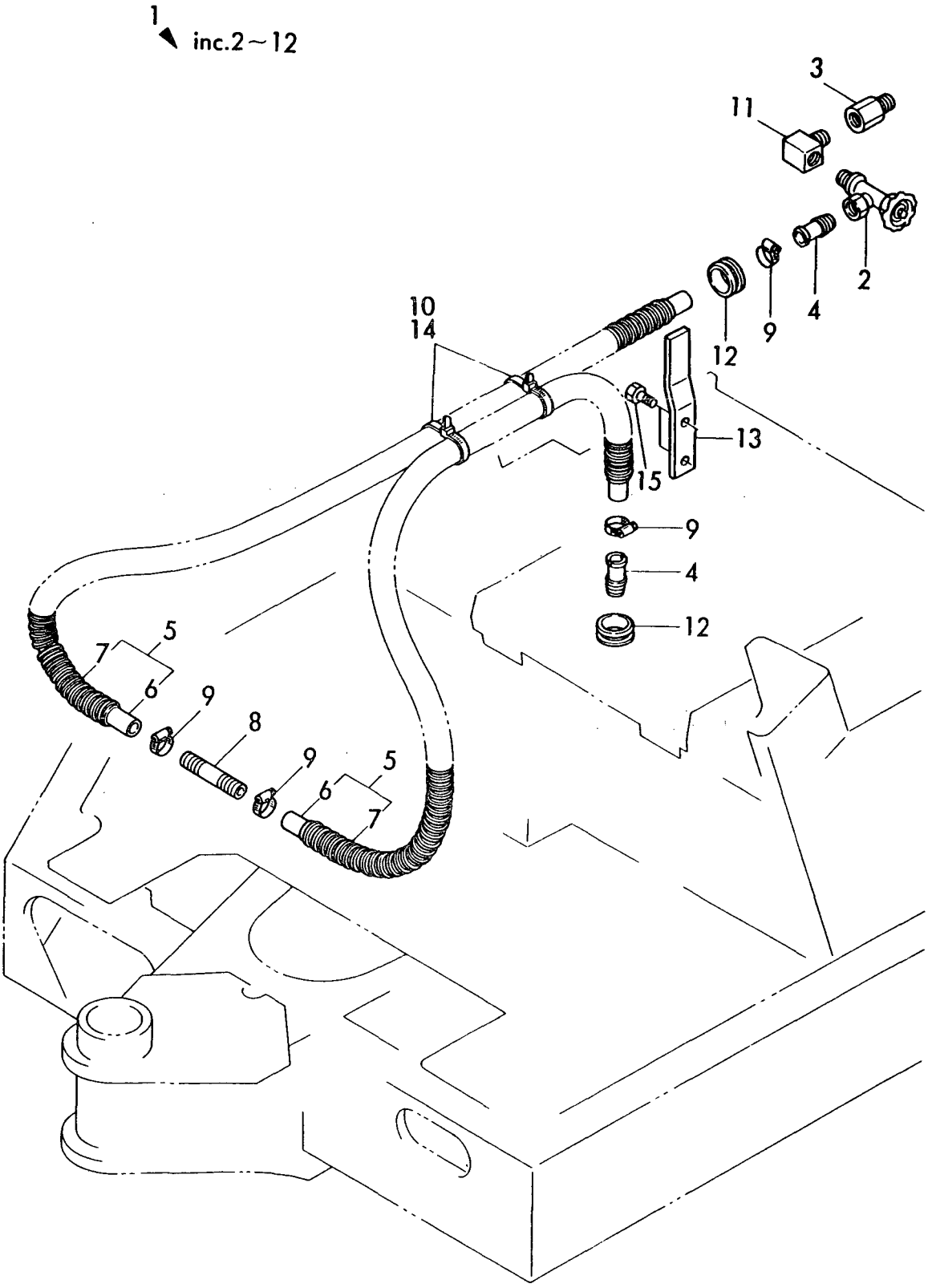

https://truckmanualshub.com/

```
1,1,,172137-16530,,"LEAD WIRE",1,1,1,1,1,1,,,,,,,,,,,,
1-1,1,,172159-17440,,"LEAD WIRE",1,1,1,1,1,1,R,,72159AMA-1,M900001,72159AMA-
1,M900001,72159AMA-1,M900001,72159AMA-1,M900001,72159AMA-1,M900001,72159AMA-
1,M900001
2,1,,172137-16560,,BAND,4,4,4,4,4,4,,,,,,,,,,,,
2-1,1,,172159-17430,,BAND,4,4,4,4,4,4,R,,72159AMA-1,M900001,72159AMA-
1,M900001,72159AMA-1,M900001,72159AMA-1,M900001,72159AMA-1,M900001,72159AMA-
1,M900001
3,1,,172137-17400,,"STAY, BOOM LIGHT",1,1,1,1,1,1,,,,,,,,,,,,
3-1,1,,172159-17420,,"STAY,BOOM LIGHT",1,1,1,1,1,1,R,,72159AMA-
1,M900001,72159AMA-1,M900001,72159AMA-1,M900001,72159AMA-1,M900001,72159AMA-
1,M900001,72159AMA-1,M900001
4,1,,26013-120252,,"BOLT M12X 25",1,1,1,1,1,1,,,,,,,,,,,,
5,1,,933113-05200,,"LAMP, WORK",1,1,1,1,1,1,,,,,,,,,,,,
5-1,1,,172159-17400,,"LAMP, WORK",1,1,1,1,1,1,R,,72159AMA-2,M910001,72159AMA-
2,M910001,72159AMA-2,M910001,72159AMA-2,M910001,72159AMA-2,M910001,72159AMA-
2,M910001
6,2,,933113-05210,,"BULB 12V 27W",1,1,1,1,1,1,,,,,,,,,,,,
6-1,2,,172159-17410,,"BULB 12V 27W",1,1,1,1,1,1,R,,72159AMA-2,M910001,72159AMA-
2,M910001,72159AMA-2,M910001,72159AMA-2,M910001,72159AMA-2,M910001,72159AMA-
2,M910001
```

Fig. 12 ワークランプ WORK LAMP

https://truckmanualshub.com/

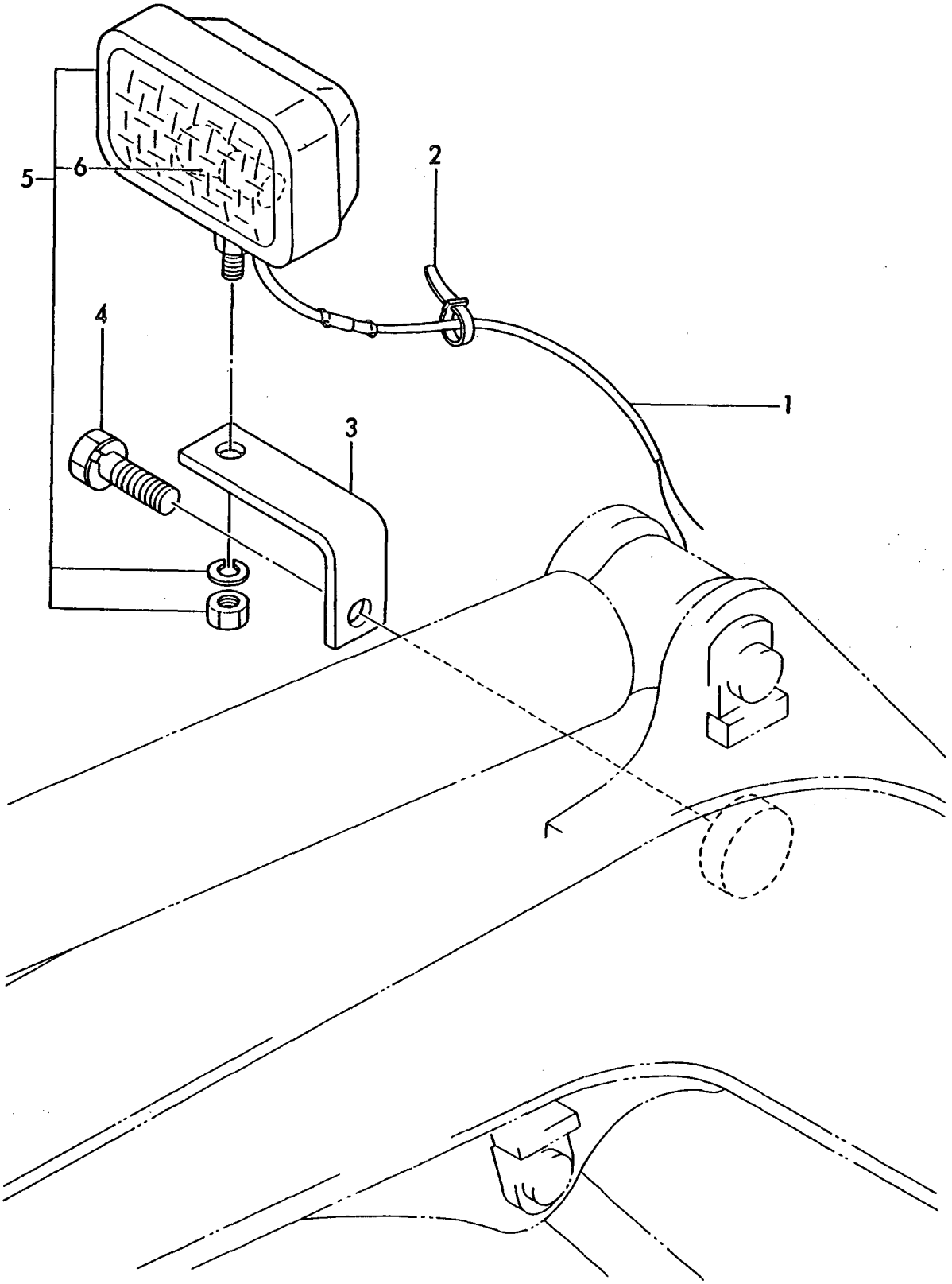

https://truckmanualshub.com/

```
1,1,,172137-29110,,"SPROCKET,RUBBER CRAW",,2,,2,2,,,,,,,,,,,,,
2,1,,172137-29120,,SPROCKET,2,,2,,2,2,,,,,,,,,,,,
3,1,,26013-100252,,"BOLT W/WASHER M10X25",18,18,18,18,18,18,,,,,,,,,,,,
4,1,,772137-37300,,"ROLLER ASSY, TRUCK",6,6,6,6,6,6,,,,,,,,,,,,
6,2,,172137-37330,,"SHAFT, TRACK ROLLER",6,6,6,6,6,6,,,,,,,,,,,,
7,2,,172137-37360,,SEAL,12,12,12,12,12,12,,,,,,,,,,,,
8,2,,22242-000250,,"CIRCLIP 25S",12,12,12,12,12,12,,,,,,,,,,,,
9,2,,22252-000470,,"CIRCLIP   47",12,12,12,12,12,12,,,,,,,,,,,,
10,2,,24101-060054,,"BALL BEARING",12,12,12,12,12,12,,,,,,,,,,,,
```

Fig. 13 トラックローラ TRACK ROLLER

https://truckmanualshub.com/

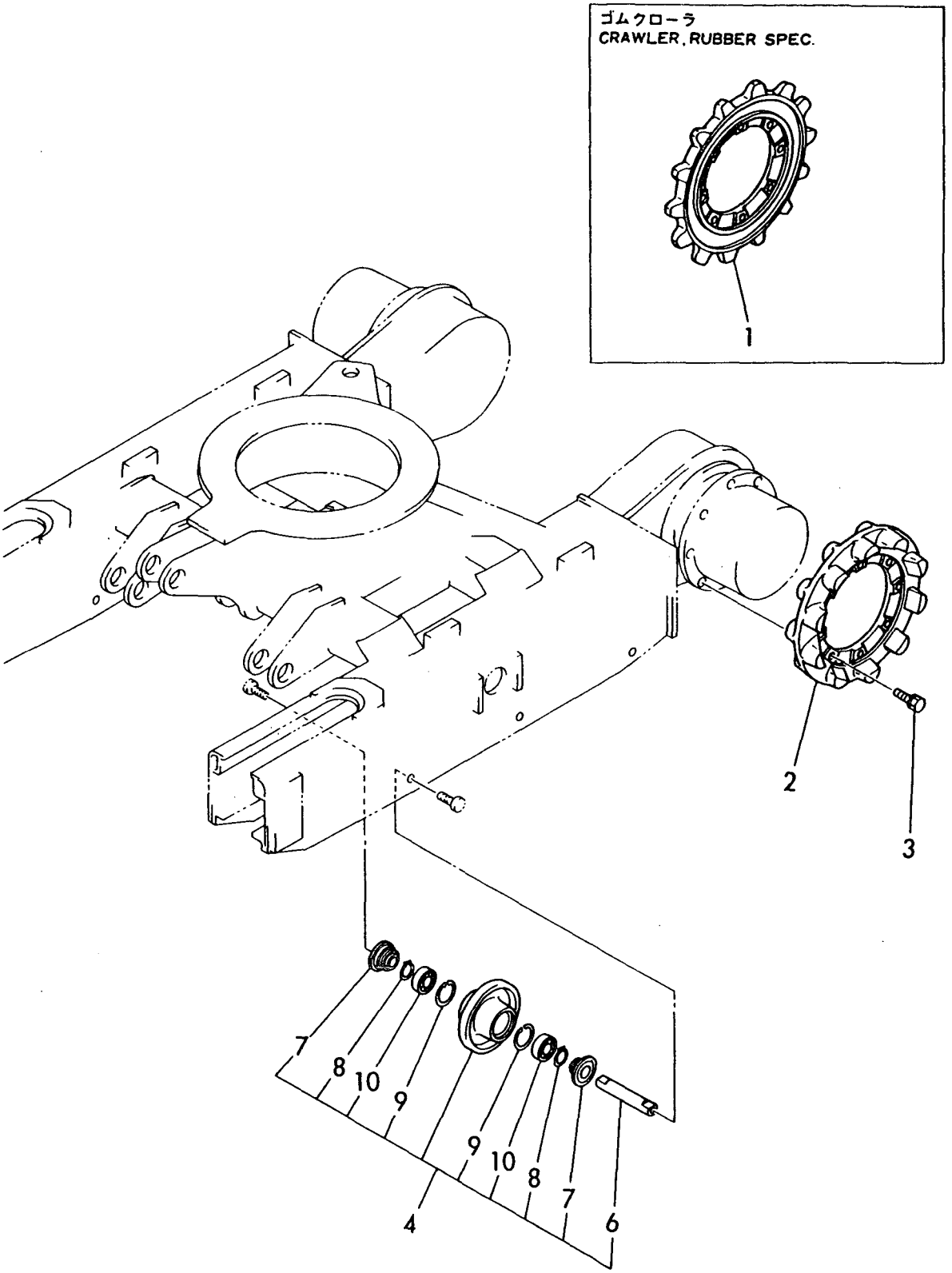

https://truckmanualshub.com/

```
1,1,,772137-37100,,"IDLER ASSY",2,2,2,2,2,2,,,,,,,,,,,,
3,2,,172137-37110,,"SHAFT, IDLER",2,2,2,2,2,2,,,,,,,,,,,,
4,2,,172137-37130,,"COVER (L), SEAL",2,2,2,2,2,2,,,,,,,,,,,,
5,2,,172137-37140,,"COVER (R), SEAL",2,2,2,2,2,2,,,,,,,,,,,,
6,2,,1A1030-48250,,"SEAL QLF30621218,OIL",4,4,4,4,4,4,,,,,,,,,,,,
7,2,,22242-000300,,"CIRCLIP   30",2,2,2,2,2,2,,,,,,,,,,,,
8,2,,22252-000620,,"CIRCLIP 62(H)",4,4,4,4,4,4,,,,,,,,,,,,
9,2,,24101-062064,,"BALL BEARING",4,4,4,4,4,4,,,,,,,,,,,,
10,2,,933168-13990,,"COLLAR(B),IDLE.SHAFT",2,2,2,2,2,2,,,,,,,,,,,,
11,1,,172137-37710,,"SPRING, ADJUSTING",2,2,2,2,2,2,,,,,,,,,,,,
12,1,,172137-37800,,"TUBE, ADJUSTER",2,2,2,2,2,2,,,,,,,,,,,,
12-1,1,,172137-37801,,"TUBE,
ADJUSTER",2,2,2,2,2,2,S,,72149113,*1989.09,72149113,*1989.09,72149113,*1989.09,7
2149113,*1989.09,72149113,*1989.09,72149113,*1989.09
13,1,,172122-37842,,"VALVE ASSY, NIPPLE",2,2,2,2,2,2,,,,,,,,,,,,
13-1,1,,172122-37843,,"VALVE ASSY,
NIPPLE",2,2,2,2,2,2,S,,72149113,*1989.09,72149113,*1989.09,72149113,*1989.09,721
49113,*1989.09,72149113,*1989.09,72149113,*1989.09
14,2,,24315-000140,,"O-RING 1B P-14.0",2,2,2,2,2,2,,,,,,,,,,,,
15,2,,24761-020000,,"NIPPLE PT1/8,GREASE",2,2,2,2,2,2,,,,,,,,,,,,
16,1,,172137-37850,,"RING, BACK UP",2,2,2,2,2,2,,,,,,,,,,,,
17,1,,24315-000300,,"O-RING 1B P-30.0",2,2,2,2,2,2,,,,,,,,,,,,
18,1,,26013-100302,,"BOLT M10X 30",8,8,8,8,8,8,,,,,,,,,,,,
19,1,,933126-38600,,"SEAL, DUST",2,2,2,2,2,2,,,,,,,,,,,,
20,1,,933171-13691,,"PLUG PT1/8",2,2,2,2,2,2,,,,,,,,,,,,
21,1,,172149-50100,,"FRAME, LOWER",1,1,1,1,1,1,,,,,,,,,,,,
21-1,1,,172159-50100,,"FRAME, LOWER",1,1,1,1,1,1,R,,72159AMA-2,M910001,72159AMA-
2,M910001,72159AMA-2,M910001,72159AMA-2,M910001,72159AMA-2,M910001,72159AMA-
2,M910001
22,1,,172131-50360,,"COVER,UNDER",1,1,1,1,1,1,,,,,,,,,,,,
22-1,1,,172159-50360,,"COVER,UNDER",1,1,1,1,1,1,R,,72159AMA-2,M910001,72159AMA-
2,M910001,72159AMA-2,M910001,72159AMA-2,M910001,72159AMA-2,M910001,72159AMA-
2,M910001
23,1,,172141-50890,,GROMMET,2,2,2,2,2,2,,,,,,,,,,,,
24,1,,172137-51700,,"COVER, MOTOR",2,2,2,2,2,2,,,,,,,,,,,,
24-1,1,,172159-51700,,"COVER, MOTOR",2,2,2,2,2,2,R,,72159AMA-2,M910001,72159AMA-
2,M910001,72159AMA-2,M910001,72159AMA-2,M910001,72159AMA-2,M910001,72159AMA-
2,M910001
25,1,,172137-51900,,PLATE,4,4,4,4,4,4,,,,,,,,,,,,
25-1,1,,172159-51900,,PLATE,4,4,4,4,4,4,R,,72159AMA-2,M910001,72159AMA-
2,M910001,72159AMA-2,M910001,72159AMA-2,M910001,72159AMA-2,M910001,72159AMA-
2,M910001
26,1,,22217-100000,,"SPRING WASHER 10",4,4,4,4,4,4,,,,,,,,,,,,
27,1,,22217-120000,,"WASHER 12,SPRING",12,12,12,12,12,12,,,,,,,,,,,,
28,1,,26013-100302,,"BOLT M10X 30",8,8,8,8,8,8,,,,,,,,,,,,
29,1,,26116-100202,,"BOLT M10X 20 PLATED",8,8,8,8,8,8,,,,,,,,,,,,
30,1,,26116-100202,,"BOLT M10X 20 PLATED",4,4,4,4,4,4,,,,,,,,,,,,
31,1,,26116-120252,,"BOLT M12X 25 PLATED",12,12,12,12,12,12,,,,,,,,,,,,
32,1,,172131-78350,,"GROMMET 13.5",2,2,2,2,2,2,,,,,,,,,,,,
32-1,1,,172159-50240,,GROMMET,2,2,2,2,2,2,R,,72159AMA-2,M910001,72159AMA-
2,M910001,72159AMA-2,M910001,72159AMA-2,M910001,72159AMA-2,M910001,72159AMA-
2,M910001
```

Fig. 14 トラックフレーム＆アイドラ TRACK FRAME & IDLER

https://truckmanualshub.com/

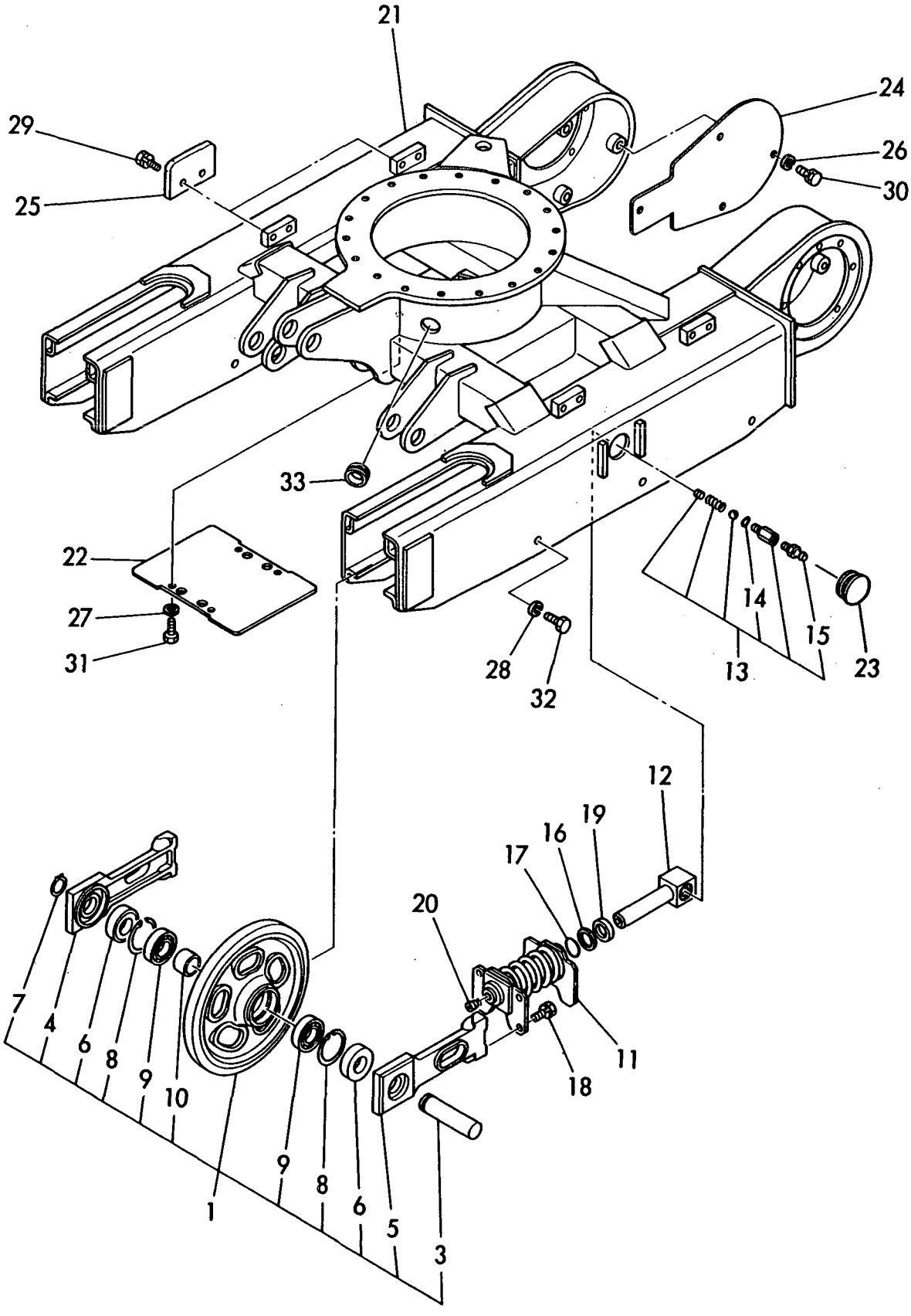

https://truckmanualshub.com/

```
1,1,,772137-38101,,"CRAWLER ASSY",2,,2,,2,2,,,,,,,,,,,,
2,2,,172137-38101,,"LINK ASSY, TRACK",2,,2,,2,2,,,,,,,,,,,,
3,3,,172137-38131,,"COLLAR, LINK",58,,58,,58,58,,,,,,,,,,,,
4,3,,172137-38161,,"PIN, TRACK",58,,58,,58,58,,,,,,,,,,,,
5,3,,22351-060020,,"SPRING PIN 6X20",58,,58,,58,58,,,,,,,,,,,,
6,3,,172137-38111,,"SHOW PLATE",60,,60,,60,60,,,,,,,,,,,,
7,2,,172137-38131,,"COLLAR, LINK",2,,2,,2,2,,,,,,,,,,,,
8,2,,172137-38161,,"PIN, TRACK",2,,2,,2,2,,,,,,,,,,,,
9,2,,22351-060020,,"SPRING PIN 6X20",2,,2,,2,2,,,,,,,,,,,,
10,1,,172137-38600,,"CRAWLER ASSY, RUBBER",,2,,2,2,2,,,,,,,,,,,,
10-1,1,,172159-38600,,"CRAWLER ASSY,RUBBER",,2,,2,2,2,R,,,,72159AMA-
1,M900001,,,72159AMA-1,M900001,72159AMA-1,M900001,72159AMA-1,M900001
```

Fig. 15 リタイ CRAWLER

https://truckmanualshub.com/

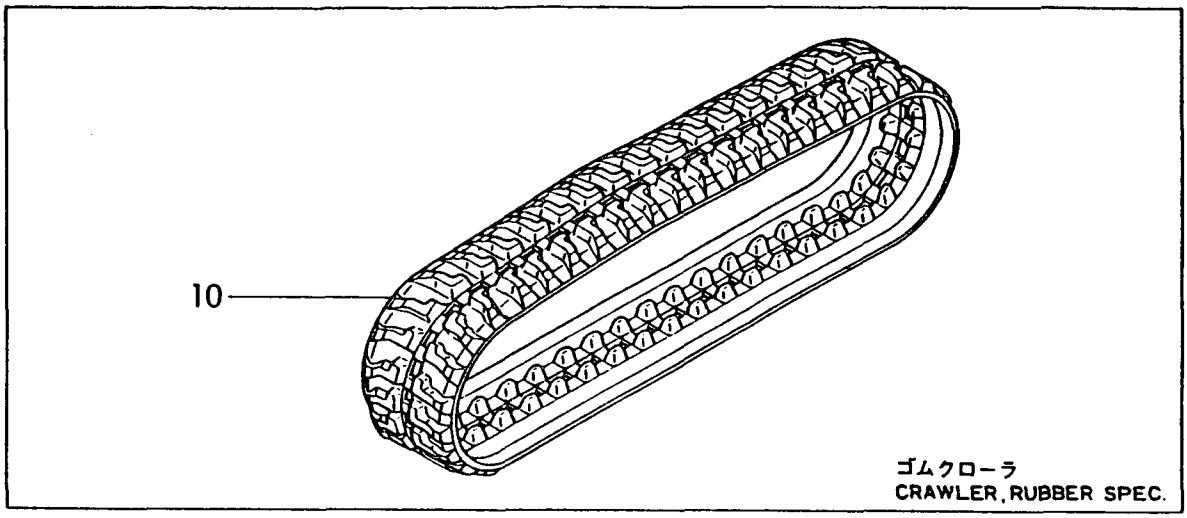

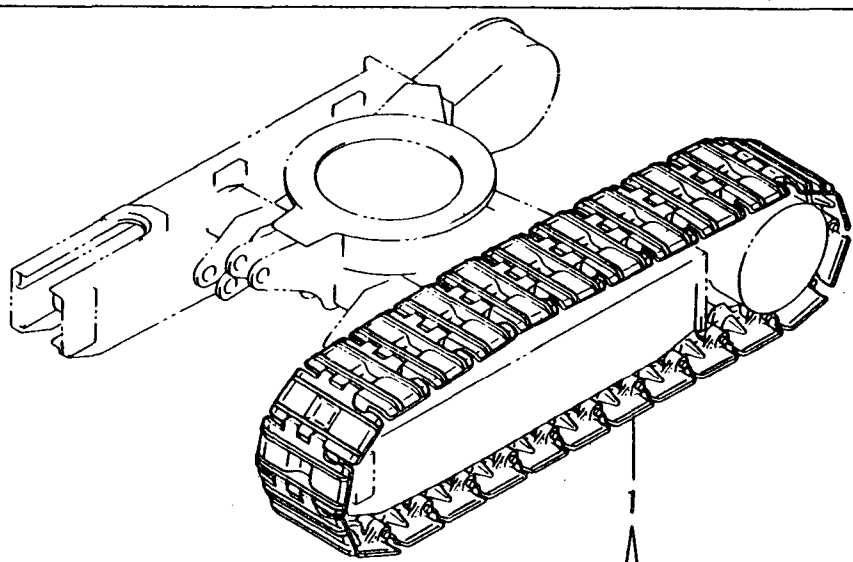

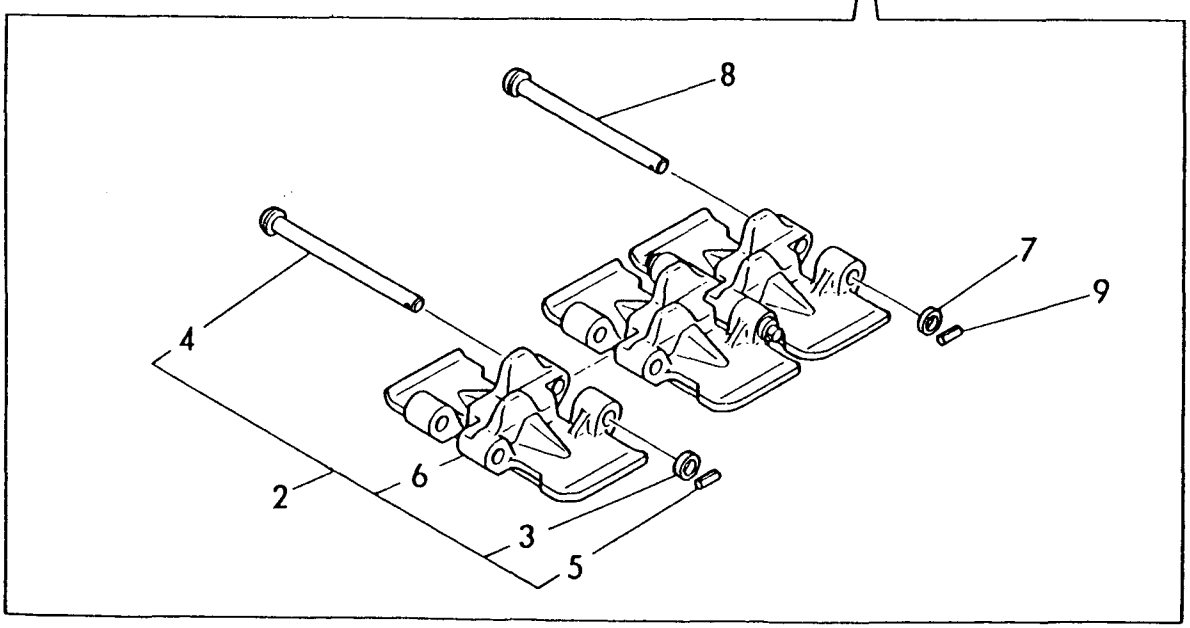

https://truckmanualshub.com/

```
1,1,,172150-41870,,"SUPPORT, LINK",1,1,1,1,1,1,,,,,,,,,,,,
1-1,1,,172159-41870,,"SUPPORT, LINK",1,1,1,1,1,1,R,,72159AMA-2,M910001,72159AMA-
2,M910001,72159AMA-2,M910001,72159AMA-2,M910001,72159AMA-2,M910001,72159AMA-
2,M910001
2,1,,172150-42350,,"BRACKET, SWING",1,1,1,1,1,1,,,,,,,,,,,,
2-1,1,,172159-42350,,"BRACKET, SWING",1,1,1,1,1,1,R,,72159AMA-
2,M910001,72159AMA-2,M910001,72159AMA-2,M910001,72159AMA-2,M910001,72159AMA-
2,M910001,72159AMA-2,M910001
3,1,,172150-42400,,"PLATE, LINK",1,1,1,1,1,1,,,,,,,,,,,,
3-1,1,,172159-42400,,"PLATE, LINK",1,1,1,1,1,1,R,,72159AMA-2,M910001,72159AMA-
2,M910001,72159AMA-2,M910001,72159AMA-2,M910001,72159AMA-2,M910001,72159AMA-
2,M910001
4,1,,26013-100202,,"BOLT W/WASHER M10X20",2,2,2,2,2,2,,,,,,,,,,,,
5,1,,26013-100202,,"BOLT W/WASHER M10X20",2,2,2,2,2,2,,,,,,,,,,,,
6,1,,26013-100252,,"BOLT W/WASHER M10X25",2,2,2,2,2,2,,,,,,,,,,,,
7,1,,26013-100252,,"BOLT W/WASHER M10X25",4,4,4,4,4,4,,,,,,,,,,,,
8,1,,172149-42010,,"BRACKET SET",1,1,1,1,1,1,,,,,,,,,,,,
8-1,1,,172159-42010,,"BRACKET SET",1,1,1,1,1,1,R,,72159AMA-2,M910001,72159AMA-
2,M910001,72159AMA-2,M910001,72159AMA-2,M910001,72159AMA-2,M910001,72159AMA-
2,M910001
9,1,,172149-41860,,"PIN, BLADE",1,1,1,1,1,1,,,,,,,,,,,,
9-1,1,,172159-42190,,"PIN, BLADE",1,1,1,1,1,1,R,,72159AMA-2,M910001,72159AMA-
2,M910001,72159AMA-2,M910001,72159AMA-2,M910001,72159AMA-2,M910001,72159AMA-
2,M910001
10,1,,26013-100202,,"BOLT W/WASHER M10X20",1,1,1,1,1,1,,,,,,,,,,,,
11,1,,26013-100202,,"BOLT W/WASHER M10X20",3,3,3,3,3,3,,,,,,,,,,,,
12,1,,194145-04810,,"WASHER
10",2,2,2,2,2,2,W,,72159014,*1990.09,72159014,*1990.09,72159014,*1990.09,7215901
4,*1990.09,72159014,*1990.09,72159014,*1990.09,I
12-1,1,,172159-65930,,"WASHER 10",2,2,2,2,2,2,R,,72159AMA-3,M920001,72159AMA-
3,M920001,72159AMA-3,M920001,72159AMA-3,M920001,72159AMA-3,M920001,72159AMA-
3,M920001,I
```

Fig. 16 リンクダイ LINK STAND

https://truckmanualshub.com/

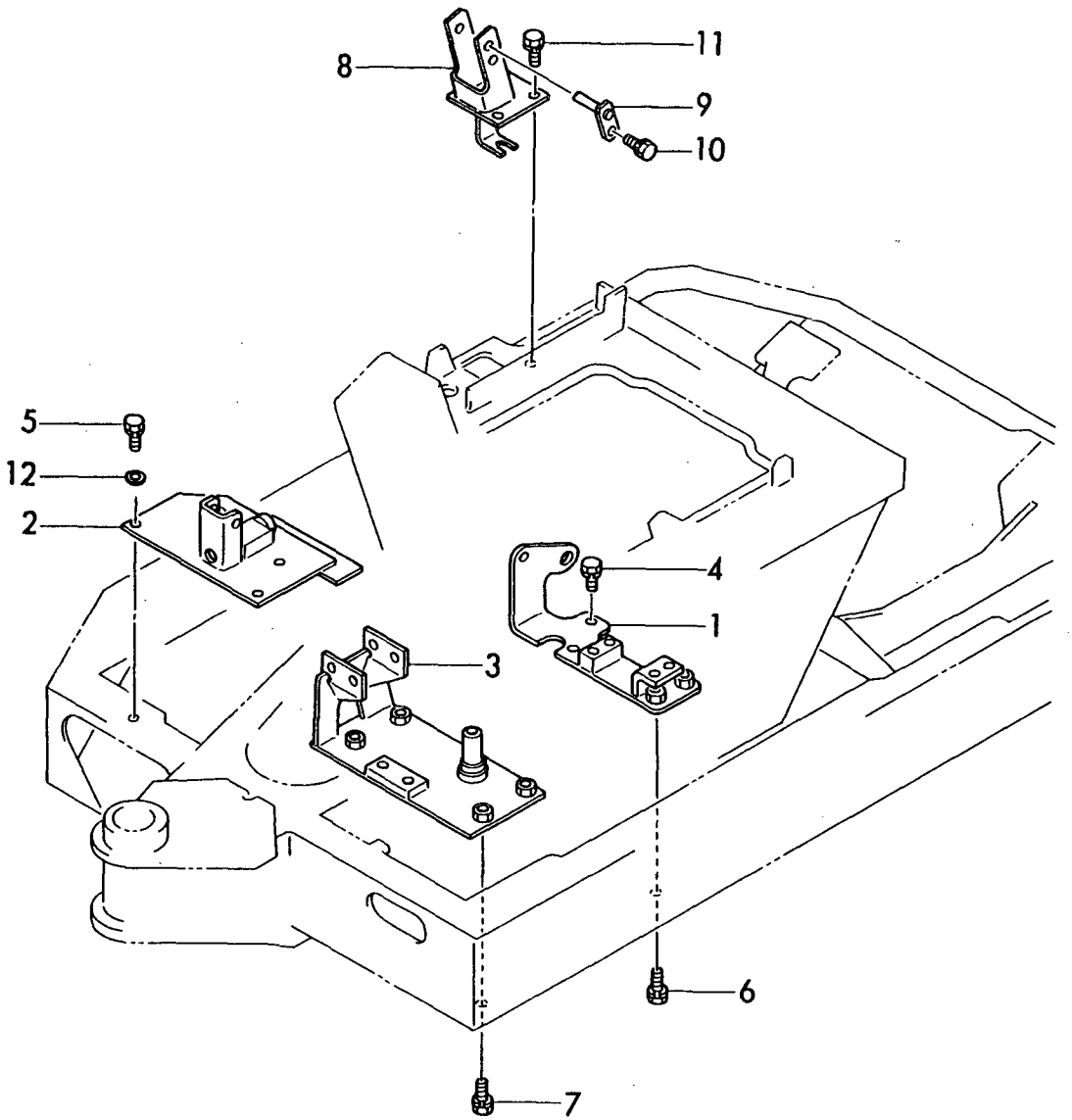

1,1,,172150-41150,,LEVER(R),1,1,1,1,1,1,,,,,,,,,,,,
1-1,1,,172159-41150,,LEVER(R),1,1,1,1,1,1,R,,72159AMA-2,M910001,72159AMA-2,M910001,72159AMA-2,M910001,72159AMA-2,M910001,72159AMA-2,M910001
2,2,,172142-44170,,"JOINT, LEVER",1,1,1,1,1,1,,,,,,,,,,,,
2-1,2,,172159-41050,,"JOINT, LEVER",1,1,1,1,1,1,R,,72159AMA-2,M910001,72159AMA-2,M910001,72159AMA-2,M910001,72159AMA-2,M910001,72159AMA-2,M910001
3,2,,22351-060018,,"SPRING PIN 6X18",1,1,1,1,1,1,,,,,,,,,,,,
4,1,,172141-41160,,JOINT,1,1,1,1,1,1,,,,,,,,,,,,
5,1,,172141-41310,,GROMMET,1,1,1,1,1,1,,,,,,,,,,,,
6,1,,172141-41330,,"BOOTS, LEVER (BLACK)",1,1,1,1,1,1,,,,,,,,,,,,
7,1,,172143-45100,,LEVER,1,1,1,1,1,1,,,,,,,,,,,,
7-1,1,,172159-45100,,LEVER,1,1,1,1,1,1,R,,72159AMA-2,M910001,72159AMA-2,M910001,72159AMA-2,M910001,72159AMA-2,M910001,72159AMA-2,M910001
8,1,,172143-45800,,KNOB(A),1,1,1,1,1,1,,,,,,,,,,,,
9,1,,22217-140000,,"SPRING WASHER 14",1,1,1,1,1,1,,,,,,,,,,,,
10,1,,26756-140002,,"LOCK NUT M14 PLATED",1,1,1,1,1,1,,,,,,,,,,,,
11,1,,26757-100002,,"LOCK NUT M10 PLATED",1,1,1,1,1,1,,,,,,,,,,,,
12,1,,933168-55770,,"BAND 146",2,2,2,2,2,2,,,,,,,,,,,,
12-1,1,,172122-79890,,"CLAMP 350",2,2,2,2,2,2,,,,,,,,,,,,
12-2,1,,172159-45160,,"CLAMP 350",2,2,2,2,2,2,R,,72159AMA-2,M910001,72159AMA-2,M910001,72159AMA-2,M910001,72159AMA-2,M910001,72159AMA-2,M910001
13,1,,172150-41350,,"LINK(A), BOOM",1,1,1,1,1,1,,,,,,,,,,,,
13-1,1,,172159-41350,,"LINK(A), BOOM",1,1,1,1,1,1,R,,72159AMA-2,M910001,72159AMA-2,M910001,72159AMA-2,M910001,72159AMA-2,M910001,72159AMA-2,M910001
14,1,,172150-41390,,"LINK(B), BOOM",1,1,1,1,1,1,,,,,,,,,,,,
14-1,1,,172159-41390,,"LINK(B), BOOM",1,1,1,1,1,1,R,,72159AMA-2,M910001,72159AMA-2,M910001,72159AMA-2,M910001,72159AMA-2,M910001
15,1,,172150-41420,,"LINK(A), BUCKET",1,1,1,1,1,1,,,,,,,,,,,,
15-1,1,,172159-41420,,"LINK(A), BUCKET",1,1,1,1,1,1,R,,72159AMA-2,M910001,72159AMA-2,M910001,72159AMA-2,M910001,72159AMA-2,M910001,72159AMA-2,M910001
16,2,,172141-41370,,"BUSH 2015",2,2,2,2,2,2,,,,,,,,,,,,
16-1,2,,172161-41370,,"BUSH 2015",2,2,2,2,2,2,R,,72159AMA-3,M920001,72159AMA-3,M920001,72159AMA-3,M920001,72159AMA-3,M920001,72159AMA-3,M920001,I
18,1,,172150-41550,,"LINK(C), BOOM",1,1,1,1,1,1,,,,,,,,,,,,
18-1,1,,172159-41550,,"LINK(C), BOOM",1,1,1,1,1,1,R,,72159AMA-2,M910001,72159AMA-2,M910001,72159AMA-2,M910001,72159AMA-2,M910001,72159AMA-2,M910001
19,2,,172141-41370,,"BUSH 2015",2,2,2,2,2,2,,,,,,,,,,,,
19-1,2,,172161-41370,,"BUSH 2015",2,2,2,2,2,2,R,,72159AMA-3,M920001,72159AMA-3,M920001,72159AMA-3,M920001,72159AMA-3,M920001,72159AMA-3,M920001,I
21,1,,172150-41620,,"LINK(C), BUCKET",1,1,1,1,1,1,,,,,,,,,,,,
21-1,1,,172159-41620,,"LINK(C), BUCKET",1,1,1,1,1,1,R,,72159AMA-2,M910001,72159AMA-2,M910001,72159AMA-2,M910001,72159AMA-2,M910001,72159AMA-2,M910001
22,2,,172141-41370,,"BUSH 2015",2,2,2,2,2,2,,,,,,,,,,,,
22-1,2,,172161-41370,,"BUSH 2015",2,2,2,2,2,2,R,,72159AMA-3,M920001,72159AMA-3,M920001,72159AMA-3,M920001,72159AMA-3,M920001,72159AMA-3,M920001,I
24,1,,172150-41730,,"SHAFT, LINK",1,1,1,1,1,1,,,,,,,,,,,,
24-1,1,,172159-41730,,"SHAFT, LINK",1,1,1,1,1,1,R,,72159AMA-2,M910001,72159AMA-2,M910001,72159AMA-2,M910001,72159AMA-2,M910001,72159AMA-2,M910001
25,1,,172150-42660,,BRACKET,1,1,1,1,1,1,,,,,,,,,,,,

25-1,1,,172159-42660,,BRACKET,1,1,1,1,1,1,R,,72159AMA-2,M910001,72159AMA-2,M910001,72159AMA-2,M910001,72159AMA-2,M910001,72159AMA-2,M910001,72159AMA-2,M910001
26,2,,172141-41370,,"BUSH 2015",2,2,2,2,2,2,,,,,,,,,,,,
26-1,2,,172161-41370,,"BUSH 2015",2,2,2,2,2,2,R,,72159AMA-3,M920001,72159AMA-3,M920001,72159AMA-3,M920001,72159AMA-3,M920001,72159AMA-3,M920001,I
28,1,,172150-42750,,"SHAFT, P.T.O",1,1,1,1,1,1,,,,,,,,,,,,
28-1,1,,172159-42750,,"SHAFT, P.T.O",1,1,1,1,1,1,R,,72159AMA-2,M910001,72159AMA-2,M910001,72159AMA-2,M910001,72159AMA-2,M910001,72159AMA-2,M910001
29,1,,172122-45720,,"ROD-END 14",2,2,2,2,2,2,,,,,,,,,,,,
30,1,,172124-46200,,"O-RING 27X5.7",4,4,4,4,4,4,,,,,,,,,,,,
30-1,1,,172161-46200,,"O-RING 27X5.7",4,4,4,4,4,4,R,,72159AMA-3,M920001,72159AMA-3,M920001,72159AMA-3,M920001,72159AMA-3,M920001,72159AMA-3,M920001,I
31,1,,22157-120000,,"WASHER 12",2,2,2,2,2,2,,,,,,,,,,,,
32,1,,22217-140000,,"SPRING WASHER 14",2,2,2,2,2,2,,,,,,,,,,,,
33,1,,24761-040000,,"NIPPLE B,GREASE",1,1,1,1,1,1,,,,,,,,,,,,
34,1,,24761-040000,,"NIPPLE B,GREASE",1,1,1,1,1,1,,,,,,,,,,,,
35,1,,24761-040000,,"NIPPLE B,GREASE",1,1,1,1,1,1,,,,,,,,,,,,
36,1,,24761-050000,,"NIPPLE C,GREASE",1,1,1,1,1,1,,,,,,,,,,,,
37,1,,26013-100202,,"BOLT W/WASHER M10X20",2,2,2,2,2,2,,,,,,,,,,,,
38,1,,26013-100202,,"BOLT W/WASHER M10X20",2,2,2,2,2,2,,,,,,,,,,,,
39,1,,26716-140002,,"NUT M14",2,2,2,2,2,2,,,,,,,,,,,,
40,1,,172150-42780,,"PEDAL, P.T.O",1,1,1,1,1,1,,,,,,,,,,,,
40-1,1,,172159-42780,,"PEDAL, P.T.O",1,1,1,1,1,1,R,,72159AMA-2,M910001,72159AMA-2,M910001,72159AMA-2,M910001,72159AMA-2,M910001,72159AMA-2,M910001
41,1,,26013-100202,,"BOLT W/WASHER M10X20",1,1,1,1,1,1,,,,,,,,,,,,
42,1,,22217-100000,,"SPRING WASHER 10",2,2,2,2,2,2,,,,,,,,,,,,
43,1,,26116-100202,,"BOLT M10X 20 PLATED",2,2,2,2,2,2,,,,,,,,,,,,
44,1,,26716-100002,,"NUT M10",2,2,2,2,2,2,,,,,,,,,,,,
45,1,,172159-42600,,ROD(RA),2,2,2,2,2,2,,,,,,,,,,,,
45-1,1,,172159-42820,,"PIPE, LOCK",2,2,2,2,2,2,R,,72159AMA-2,M910001,72159AMA-2,M910001,72159AMA-2,M910001,72159AMA-2,M910001,72159AMA-2,M910001
46,1,,172150-42620,,"ROD(B), BOOM",1,1,1,1,1,1,,,,,,,,,,,,
46-1,1,,172159-42620,,"ROD(B), BOOM",1,1,1,1,1,1,R,,72159AMA-2,M910001,72159AMA-2,M910001,72159AMA-2,M910001,72159AMA-2,M910001,72159AMA-2,M910001
47,1,,172150-42630,,"ROD(B), BUCKET",1,1,1,1,1,1,,,,,,,,,,,,
47-1,1,,172159-42630,,"ROD(B), BUCKET",1,1,1,1,1,1,R,,72159AMA-2,M910001,72159AMA-2,M910001,72159AMA-2,M910001,72159AMA-2,M910001,72159AMA-2,M910001
48,1,,172143-45670,,"ROD, END 8",1,1,1,1,1,1,,,,,,,,,,,,
49,1,,172146-45691,,"ROD(C), SPOOL",2,2,2,2,2,2,,,,,,,,,,,,
49-1,1,,172159-45950,,"ROD(C), SPOOL",2,2,2,2,2,2,R,,72159AMA-2,M910001,72159AMA-2,M910001,72159AMA-2,M910001,72159AMA-2,M910001,72159AMA-2,M910001
50,1,,172122-46512,,"ROD (D), SPOOL",1,1,1,1,1,1,,,,,,,,,,,,
50-1,1,,172159-42470,,"ROD (D), SPOOL",1,1,1,1,1,1,R,,72159AMA-2,M910001,72159AMA-2,M910001,72159AMA-2,M910001,72159AMA-2,M910001,72159AMA-2,M910001
51,1,,172122-46590,,"ELBALL 8",4,4,4,4,4,4,,,,,,,,,,,,
52,1,,172122-46590,,"ELBALL 8",2,2,2,2,2,2,,,,,,,,,,,,
53,1,,172122-46590,,"ELBALL 8",2,2,2,2,2,2,,,,,,,,,,,,
54,1,,172122-46590,,"ELBALL 8",2,2,2,2,2,2,,,,,,,,,,,,
55,1,,172122-47250,,"BALL 8, LINK",2,2,2,2,2,2,,,,,,,,,,,,
56,1,,1C6281-52310,,"PIN 6,COME-OFF SNAP",9,9,9,9,9,9,,,,,,,,,,,,
56-1,1,,172159-42070,,"PIN 6,COME-OFF SNAP",9,9,9,9,9,9,R,,72159AMA-3,M920001,72159AMA-3,M920001,72159AMA-3,M920001,72159AMA-3,M920001,72159AMA-3,M920001,I

https://truckmanualshub.com/

```
57,1,,22217-080000,,"SPRING WASHER  8",2,2,2,2,2,2,,,,,,,,,,,,
58,1,,22217-080000,,"SPRING WASHER  8",2,2,2,2,2,2,,,,,,,,,,,,
59,1,,22217-080000,,"SPRING WASHER  8",2,2,2,2,2,2,,,,,,,,,,,,
60,1,,22217-080000,,"SPRING WASHER  8",2,2,2,2,2,2,,,,,,,,,,,,
61,1,,22217-080000,,"SPRING WASHER  8",2,2,2,2,2,2,,,,,,,,,,,,
62,1,,22217-080000,,"SPRING WASHER  8",3,3,3,3,3,3,,,,,,,,,,,,
63,1,,26116-080302,,"BOLT M 8X 30 PLATED",1,1,1,1,1,1,,,,,,,,,,,,,
64,1,,26716-080002,,"NUT M 8",4,4,4,4,4,4,,,,,,,,,,,,
65,1,,26716-080002,,"NUT M 8",8,8,8,8,8,8,,,,,,,,,,,,
66,1,,26716-080002,,"NUT M 8",4,4,4,4,4,4,,,,,,,,,,,,
67,1,,26716-080002,,"NUT M 8",4,4,4,4,4,4,,,,,,,,,,,,
68,1,,26716-080002,,"NUT M 8",2,2,2,2,2,2,,,,,,,,,,,,
69,1,,933110-54100,,"PIN 4.75X14",2,2,2,2,2,2,,,,,,,,,,,,
69-1,1,,172159-42910,,"PIN 4.75X14",2,2,2,2,2,2,R,,72159AMA-2,M910001,72159AMA-
2,M910001,72159AMA-2,M910001,72159AMA-2,M910001,72159AMA-2,M910001,72159AMA-
2,M910001
```

Fig. 17 ソウジュウソウチ(ブーム & バケット)
CONTROL EQUIPMENT (BOOM & BUCKET)

https://truckmanualshub.com/

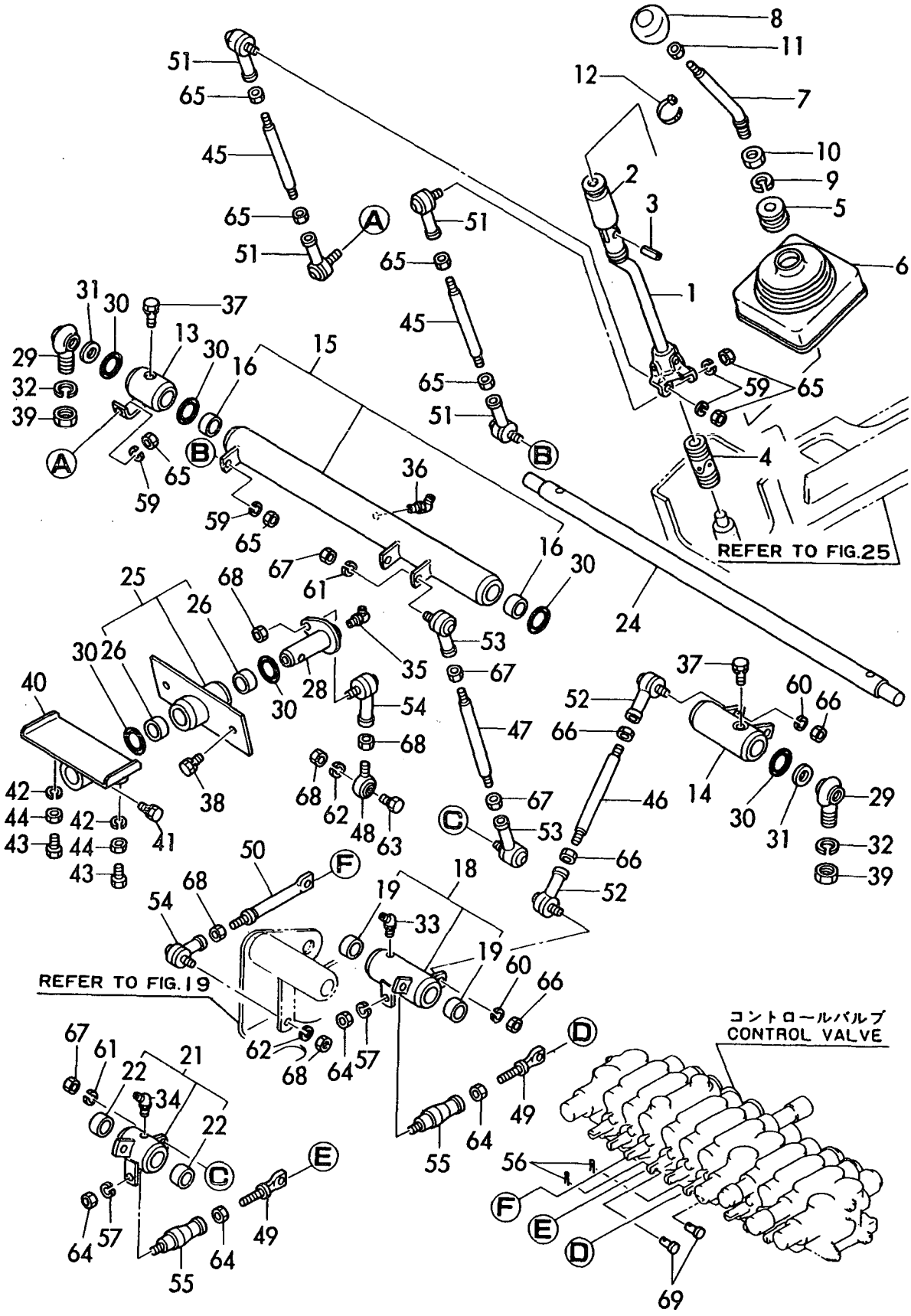

https://truckmanualshub.com/

1,1,,172150-41100,,LEVER(L),1,1,1,1,1,1,,,,,,,,,,,,
1-1,1,,172159-41100,,LEVER(L),1,1,1,1,1,1,R,,72159AMA-2,M910001,72159AMA-2,M910001,72159AMA-2,M910001,72159AMA-2,M910001,72159AMA-2,M910001
2,2,,172142-44170,,"JOINT, LEVER",1,1,1,1,1,1,,,,,,,,,,,,
2-1,2,,172159-41050,,"JOINT, LEVER",1,1,1,1,1,1,R,,72159AMA-2,M910001,72159AMA-2,M910001,72159AMA-2,M910001,72159AMA-2,M910001,72159AMA-2,M910001
3,2,,22351-060018,,"SPRING PIN 6X18",1,1,1,1,1,1,,,,,,,,,,,,
4,1,,172141-41160,,JOINT,1,1,1,1,1,1,,,,,,,,,,,,
5,1,,172141-41310,,GROMMET,1,1,1,1,1,1,,,,,,,,,,,,
6,1,,172141-41330,,"BOOTS, LEVER (BLACK)",1,1,1,1,1,1,,,,,,,,,,,,
7,1,,172143-45100,,LEVER,1,1,1,1,1,1,,,,,,,,,,,,
7-1,1,,172159-45100,,LEVER,1,1,1,1,1,1,R,,72159AMA-2,M910001,72159AMA-2,M910001,72159AMA-2,M910001,72159AMA-2,M910001,72159AMA-2,M910001
8,1,,172312-46321,,KNOB(B),1,1,1,1,1,1,,,,,,,,,,,,
9,1,,22217-140000,,"SPRING WASHER 14",1,1,1,1,1,1,,,,,,,,,,,,
10,1,,26756-140002,,"LOCK NUT M14 PLATED",1,1,1,1,1,1,,,,,,,,,,,,
11,1,,26757-100002,,"LOCK NUT M10 PLATED",1,1,1,1,1,1,,,,,,,,,,,,
12,1,,172150-41460,,"LINK(A), ARM",1,1,1,1,1,1,,,,,,,,,,,,
12-1,1,,172159-41460,,"LINK(A), ARM",1,1,1,1,1,1,R,,72159AMA-2,M910001,72159AMA-2,M910001,72159AMA-2,M910001,72159AMA-2,M910001,72159AMA-2,M910001
13,2,,172141-41370,,"BUSH 2015",2,2,2,2,2,2,,,,,,,,,,,,
13-1,2,,172161-41370,,"BUSH 2015",2,2,2,2,2,2,R,,72159AMA-3,M920001,72159AMA-3,M920001,72159AMA-3,M920001,72159AMA-3,M920001,72159AMA-3,M920001,I
15,1,,172150-41500,,"LINK(A), TURNING",1,1,1,1,1,1,,,,,,,,,,,,
15-1,1,,172159-41500,,"LINK(A), TURNING",1,1,1,1,1,1,R,,72159AMA-2,M910001,72159AMA-2,M910001,72159AMA-2,M910001,72159AMA-2,M910001,72159AMA-2,M910001
16,2,,172141-41370,,"BUSH 2015",2,2,2,2,2,2,,,,,,,,,,,,
16-1,2,,172161-41370,,"BUSH 2015",2,2,2,2,2,2,R,,72159AMA-3,M920001,72159AMA-3,M920001,72159AMA-3,M920001,72159AMA-3,M920001,72159AMA-3,M920001,I
18,1,,172150-41590,,"LINK(C), ARM",1,1,1,1,1,1,,,,,,,,,,,,
18-1,1,,172159-41590,,"LINK(C), ARM",1,1,1,1,1,1,R,,72159AMA-2,M910001,72159AMA-2,M910001,72159AMA-2,M910001,72159AMA-2,M910001,72159AMA-2,M910001
19,2,,172141-41370,,"BUSH 2015",2,2,2,2,2,2,,,,,,,,,,,,
19-1,2,,172161-41370,,"BUSH 2015",2,2,2,2,2,2,R,,72159AMA-3,M920001,72159AMA-3,M920001,72159AMA-3,M920001,72159AMA-3,M920001,72159AMA-3,M920001,I
21,1,,172150-41660,,"LINK(C), TURNING",1,1,1,1,1,1,,,,,,,,,,,,
21-1,1,,172159-41660,,"LINK(C), TURNING",1,1,1,1,1,1,R,,72159AMA-2,M910001,72159AMA-2,M910001,72159AMA-2,M910001,72159AMA-2,M910001,72159AMA-2,M910001
22,2,,172141-41370,,"BUSH 2015",2,2,2,2,2,2,,,,,,,,,,,,
22-1,2,,172161-41370,,"BUSH 2015",2,2,2,2,2,2,R,,72159AMA-3,M920001,72159AMA-3,M920001,72159AMA-3,M920001,72159AMA-3,M920001,72159AMA-3,M920001,I
24,1,,172150-41750,,SHAFT(A),1,1,1,1,1,1,,,,,,,,,,,,
24-1,1,,172159-41750,,SHAFT(A),1,1,1,1,1,1,R,,72159AMA-2,M910001,72159AMA-2,M910001,72159AMA-2,M910001,72159AMA-2,M910001,72159AMA-2,M910001
25,1,,172150-41830,,SHAFT(B),1,1,1,1,1,1,,,,,,,,,,,,
25-1,1,,172159-41830,,SHAFT(B),1,1,1,1,1,1,R,,72159AMA-2,M910001,72159AMA-2,M910001,72159AMA-2,M910001,72159AMA-2,M910001,72159AMA-2,M910001
26,1,,172124-46200,,"O-RING 27X5.7",6,6,6,6,6,6,,,,,,,,,,,,

https://truckmanualshub.com/

26-1,1,,172161-46200,,"O-RING 27X5.7",6,6,6,6,6,6,R,,72159AMA-3,M920001,72159AMA-3,M920001,72159AMA-3,M920001,72159AMA-3,M920001,72159AMA-3,M920001,I
27,1,,24761-040000,,"NIPPLE B,GREASE",1,1,1,1,1,1,,,,,,,,,,,,
28,1,,24761-040000,,"NIPPLE B,GREASE",1,1,1,1,1,1,,,,,,,,,,,,
29,1,,24761-050000,,"NIPPLE C,GREASE",1,1,1,1,1,1,,,,,,,,,,,,
30,1,,24761-050000,,"NIPPLE C,GREASE",1,1,1,1,1,1,,,,,,,,,,,,
31,1,,26013-100202,,"BOLT W/WASHER M10X20",1,1,1,1,1,1,,,,,,,,,,,,
32,1,,26013-100202,,"BOLT W/WASHER M10X20",2,2,2,2,2,2,,,,,,,,,,,,
33,1,,26013-100302,,"BOLT M10X 30",1,1,1,1,1,1,,,,,,,,,,,,
34,1,,172150-42610,,ROD(LA),2,2,2,2,2,2,,,,,,,,,,,,
34-1,1,,172159-42610,,ROD(LA),2,2,2,2,2,2,R,,72159AMA-2,M910001,72159AMA-2,M910001,72159AMA-2,M910001,72159AMA-2,M910001,72159AMA-2,M910001,72159AMA-2,M910001
35,1,,172150-42640,,"ROD(B), ARM",1,1,1,1,1,1,,,,,,,,,,,,
35-1,1,,172159-42640,,"ROD(B), ARM",1,1,1,1,1,1,R,,72159AMA-2,M910001,72159AMA-2,M910001,72159AMA-2,M910001,72159AMA-2,M910001,72159AMA-2,M910001
36,1,,172150-42650,,"ROD(B), TURNING",1,1,1,1,1,1,,,,,,,,,,,,
36-1,1,,172159-42650,,"ROD(B), TURNING",1,1,1,1,1,1,R,,72159AMA-2,M910001,72159AMA-2,M910001,72159AMA-2,M910001,72159AMA-2,M910001,72159AMA-2,M910001
37,1,,172146-45691,,"ROD(C), SPOOL",2,2,2,2,2,2,,,,,,,,,,,,
37-1,1,,172159-45950,,"ROD(C), SPOOL",2,2,2,2,2,2,R,,72159AMA-2,M910001,72159AMA-2,M910001,72159AMA-2,M910001,72159AMA-2,M910001,72159AMA-2,M910001
38,1,,172122-46590,,"ELBALL 8",4,4,4,4,4,4,,,,,,,,,,,,
39,1,,172122-46590,,"ELBALL 8",2,2,2,2,2,2,,,,,,,,,,,,
40,1,,172122-46590,,"ELBALL 8",2,2,2,2,2,2,,,,,,,,,,,,
41,1,,172122-47250,,"BALL 8, LINK",2,2,2,2,2,2,,,,,,,,,,,,
42,1,,1C6281-52310,,"PIN 6,COME-OFF SNAP",2,2,2,2,2,2,,,,,,,,,,,,
42-1,1,,172159-42070,,"PIN 6,COME-OFF SNAP",2,2,2,2,2,2,R,,72159AMA-3,M920001,72159AMA-3,M920001,72159AMA-3,M920001,72159AMA-3,M920001,72159AMA-3,M920001,I
43,1,,22217-080000,,"SPRING WASHER 8",2,2,2,2,2,2,,,,,,,,,,,,
44,1,,22217-080000,,"SPRING WASHER 8",4,4,4,4,4,4,,,,,,,,,,,,
45,1,,22217-080000,,"SPRING WASHER 8",2,2,2,2,2,2,,,,,,,,,,,,
46,1,,22217-080000,,"SPRING WASHER 8",2,2,2,2,2,2,,,,,,,,,,,,
47,1,,26716-080002,,"NUT M 8",4,4,4,4,4,4,,,,,,,,,,,,
48,1,,26716-080002,,"NUT M 8",8,8,8,8,8,8,,,,,,,,,,,,
49,1,,26716-080002,,"NUT M 8",4,4,4,4,4,4,,,,,,,,,,,,
50,1,,26716-080002,,"NUT M 8",4,4,4,4,4,4,,,,,,,,,,,,
51,1,,933110-54100,,"PIN 4.75X14",2,2,2,2,2,2,,,,,,,,,,,,
51-1,1,,172159-42910,,"PIN 4.75X14",2,2,2,2,2,2,R,,72159AMA-2,M910001,72159AMA-2,M910001,72159AMA-2,M910001,72159AMA-2,M910001,72159AMA-2,M910001

Fig. 18 ソウジュウソウチ(アーム & センカイ) CONTROL EQUIPMENT (ARM & TURNING)

https://truckmanualshub.com/

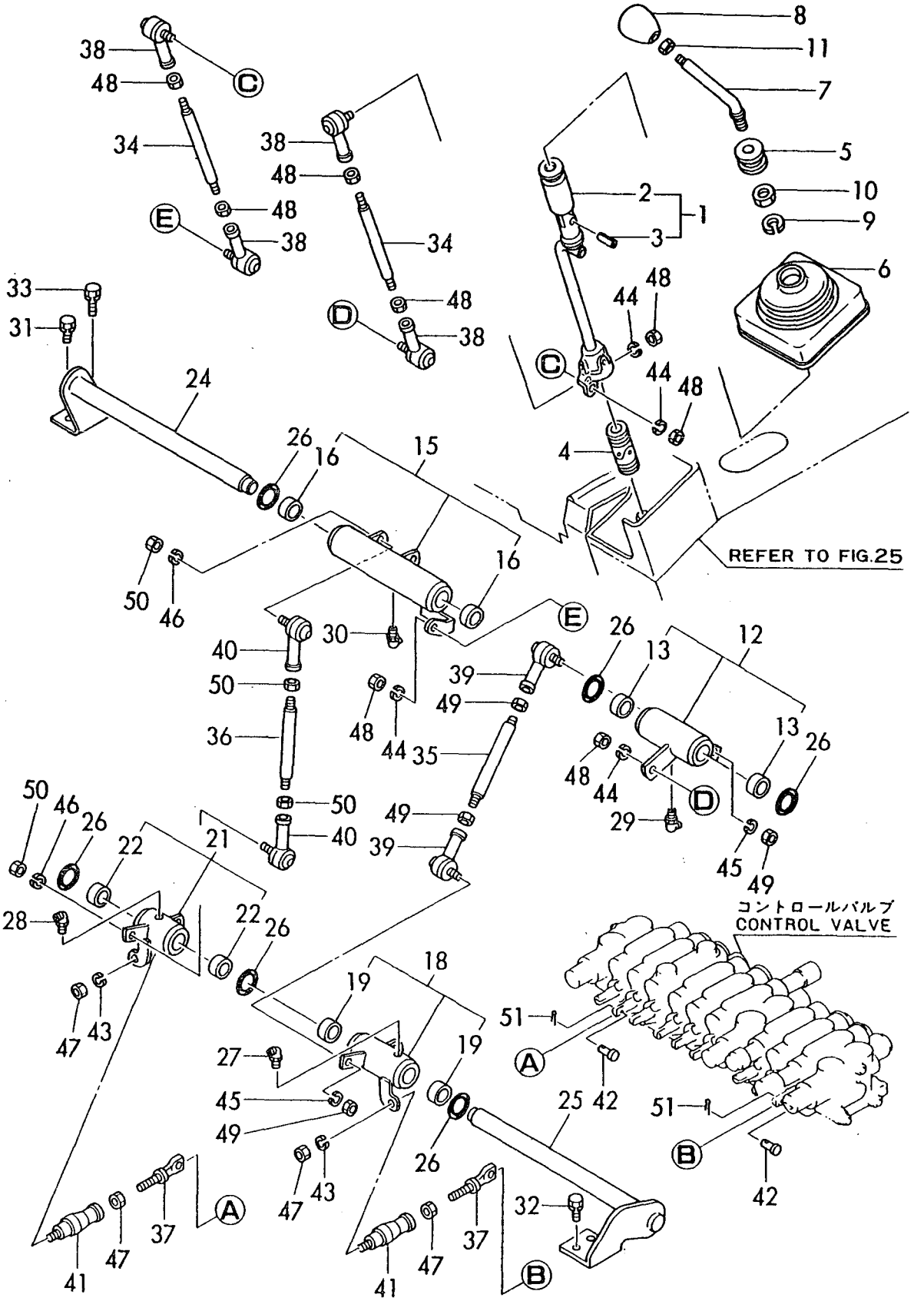

https://truckmanualshub.com/

1,1,,172150-41200,,"LEVER(L), TRACK",1,1,1,1,1,1,,,,,,,,,,,,
1-1,1,,172159-41200,,"LEVER(L), TRACK",1,1,1,1,1,1,R,,72159AMA-
2,M910001,72159AMA-2,M910001,72159AMA-2,M910001,72159AMA-2,M910001,72159AMA-
2,M910001,72159AMA-2,M910001
1-2,1,,172159-
41201,,,1,1,1,1,1,1,S,,72159028,*1995.05,72159028,*1995.05,72159028,*1995.05,721
59028,*1995.05,72159028,*1995.05,72159028,*1995.05,I
3,2,,172141-41370,,"BUSH 2015",2,2,2,2,2,2,,,,,,,,,,,,
3-1,2,,172161-41370,,"BUSH 2015",2,2,2,2,2,2,R,,72159AMA-3,M920001,72159AMA-
3,M920001,72159AMA-3,M920001,72159AMA-3,M920001,72159AMA-3,M920001,72159AMA-
3,M920001
4,1,,172150-41270,,"LEVER(R), TRACK",1,1,1,1,1,1,,,,,,,,,,,,
4-1,1,,172159-41270,,"LEVER(R), TRACK",1,1,1,1,1,1,R,,72159AMA-
2,M910001,72159AMA-2,M910001,72159AMA-2,M910001,72159AMA-2,M910001,72159AMA-
2,M910001,72159AMA-2,M910001
4-2,1,,172159-
41271,,,1,1,1,1,1,1,S,,72159028,*1995.05,72159028,*1995.05,72159028,*1995.05,721
59028,*1995.05,72159028,*1995.05,72159028,*1995.05,I
6,2,,172141-41370,,"BUSH 2015",2,2,2,2,2,2,,,,,,,,,,,,
6-1,2,,172161-41370,,"BUSH 2015",2,2,2,2,2,2,R,,72159AMA-3,M920001,72159AMA-
3,M920001,72159AMA-3,M920001,72159AMA-3,M920001,72159AMA-3,M920001,72159AMA-
3,M920001
7,1,,172141-41340,,BOOTS,2,2,2,2,2,2,,,,,,,,,,,,
8,1,,172137-45080,,"KNOB, LEVER",2,2,2,2,2,2,,,,,,,,,,,,
8-1,1,,172164-45950,,"GRIP L,
DRIV.",1,1,1,1,1,1,S,,72159028,*1995.05,72159028,*1995.05,72159028,*1995.05,7215
9028,*1995.05,72159028,*1995.05,72159028,*1995.05,I
8A,1,,172164-45960,,"GRIP R,
DRIV.",1,1,1,1,1,1,W,,72159028,*1995.05,72159028,*1995.05,72159028,*1995.05,7215
9028,*1995.05,72159028,*1995.05,72159028,*1995.05,I
9,1,,172124-46200,,"O-RING 27X5.7",3,3,3,3,3,3,,,,,,,,,,,,
9-1,1,,172161-46200,,"O-RING 27X5.7",3,3,3,3,3,3,R,,72159AMA-3,M920001,72159AMA-
3,M920001,72159AMA-3,M920001,72159AMA-3,M920001,72159AMA-3,M920001,72159AMA-
3,M920001
10,1,,24761-020000,,"NIPPLE PT1/8,GREASE",2,2,2,2,2,2,,,,,,,,,,,,
11,1,,172150-41700,,"LINK, SWING",1,1,1,1,1,1,,,,,,,,,,,,
11-1,1,,172159-41700,,"LINK, SWING",1,1,1,1,1,1,R,,72159AMA-2,M910001,72159AMA-
2,M910001,72159AMA-2,M910001,72159AMA-2,M910001,72159AMA-2,M910001,72159AMA-
2,M910001
12,2,,172141-41370,,"BUSH 2015",2,2,2,2,2,2,,,,,,,,,,,,
12-1,2,,172161-41370,,"BUSH 2015",2,2,2,2,2,2,R,,72159AMA-3,M920001,72159AMA-
3,M920001,72159AMA-3,M920001,72159AMA-3,M920001,72159AMA-3,M920001,72159AMA-
3,M920001
14,1,,172150-41790,,"SHAFT. TRACK",1,1,1,1,1,1,,,,,,,,,,,,
14-1,1,,172159-41790,,"SHAFT. TRACK",1,1,1,1,1,1,R,,72159AMA-2,M910001,72159AMA-
2,M910001,72159AMA-2,M910001,72159AMA-2,M910001,72159AMA-2,M910001,72159AMA-
2,M910001
15,1,,172150-41920,,SHAFT(C),1,1,1,1,1,1,,,,,,,,,,,,
15-1,1,,172159-41920,,SHAFT(C),1,1,1,1,1,1,R,,72159AMA-2,M910001,72159AMA-
2,M910001,72159AMA-2,M910001,72159AMA-2,M910001,72159AMA-2,M910001,72159AMA-
2,M910001
16,1,,172150-41950,,"LINK, 3RD",1,1,1,1,1,1,,,,,,,,,,,,
16-1,1,,172159-41950,,"LINK, 3RD",1,1,1,1,1,1,R,,72159AMA-2,M910001,72159AMA-
2,M910001,72159AMA-2,M910001,72159AMA-2,M910001,72159AMA-2,M910001,72159AMA-
2,M910001
17,2,,172141-41360,,"BUSH 1415",2,2,2,2,2,2,,,,,,,,,,,,
17-1,2,,172161-41360,,"BUSH 1415",2,2,2,2,2,2,R,,72159AMA-3,M920001,72159AMA-
3,M920001,72159AMA-3,M920001,72159AMA-3,M920001,72159AMA-3,M920001,72159AMA-
3,M920001
19,1,,1A1040-45890,,"WASHER 10 36 4.5",1,1,1,1,1,1,,,,,,,,,,,,
19-1,1,,172159-41860,,"WASHER 10 36 4.5",1,1,1,1,1,1,R,,72159AMA-
2,M910001,72159AMA-2,M910001,72159AMA-2,M910001,72159AMA-2,M910001,72159AMA-
2,M910001,72159AMA-2,M910001

https://truckmanualshub.com/

20,1,,172124-46200,,"O-RING 27X5.7",2,2,2,2,2,2,,,,,,,,,,,,
20-1,1,,172161-46200,,"O-RING 27X5.7",2,2,2,2,2,2,R,,72159AMA-3,M920001,72159AMA-3,M920001,72159AMA-3,M920001,72159AMA-3,M920001,72159AMA-3,M920001
21,1,,24311-000210,,"O-RING 1A P-21.0",2,2,2,2,2,2,,,,,,,,,,,,
22,1,,24761-020000,,"NIPPLE PT1/8,GREASE",1,1,1,1,1,1,,,,,,,,,,,,
23,1,,26013-100202,,"BOLT W/WASHER M10X20",2,2,2,2,2,2,,,,,,,,,,,,
24,1,,26013-100202,,"BOLT W/WASHER M10X20",2,2,2,2,2,2,,,,,,,,,,,,
25,1,,26013-100202,,"BOLT W/WASHER M10X20",1,1,1,1,1,1,,,,,,,,,,,,
26,1,,172111-16890,,"GROMMET 9",1,1,1,1,1,1,,,,,,,,,,,,
27,1,,172112-41380,,"SHAFT, BLADE LEVER",1,1,1,1,1,1,,,,,,,,,,,,
27-1,1,,172159-41380,,"SHAFT, BLADE LEVER",1,1,1,1,1,1,R,,72159AMA-2,M910001,72159AMA-2,M910001,72159AMA-2,M910001,72159AMA-2,M910001,72159AMA-2,M910001
28,1,,172150-42300,,"PEDAL, SWING",1,1,1,1,1,1,,,,,,,,,,,,
28-1,1,,172159-42300,,"PEDAL, SWING",1,1,1,1,1,1,R,,72159AMA-2,M910001,72159AMA-2,M910001,72159AMA-2,M910001,72159AMA-2,M910001,72159AMA-2,M910001
29,2,,172141-41360,,"BUSH 1415",2,2,2,2,2,2,,,,,,,,,,,,
29-1,2,,172161-41370,,"BUSH 2015",2,2,2,2,2,2,R,,72159AMA-3,M920001,72159AMA-3,M920001,72159AMA-3,M920001,72159AMA-3,M920001
31,1,,172149-42400,,"LOCK, SWING",1,1,1,1,1,1,,,,,,,,,,,,
31-1,1,,172159-42100,,"LOCK, SWING",1,1,1,1,1,1,R,,72159AMA-2,M910001,72159AMA-2,M910001,72159AMA-2,M910001,72159AMA-2,M910001,72159AMA-2,M910001
32,1,,172614-45170,,"SPRING 12",1,1,1,1,1,1,,,,,,,,,,,,
32-1,1,,172159-42170,,"SPRING 12",1,1,1,1,1,1,R,,72159AMA-2,M910001,72159AMA-2,M910001,72159AMA-2,M910001,72159AMA-2,M910001,72159AMA-2,M910001
33,1,,22417-250200,,"COTTER PIN 2.5X20",1,1,1,1,1,1,,,,,,,,,,,,
34,1,,22417-400400,,"COTTER PIN 4.0X40",1,1,1,1,1,1,,,,,,,,,,,,
35,1,,24311-000210,,"O-RING 1A P-21.0",2,2,2,2,2,2,,,,,,,,,,,,
36,1,,933171-18390,,"PIN, FOOT BAR",1,1,1,1,1,1,,,,,,,,,,,,
36-1,1,,172159-42180,,"PIN, FOOT BAR",1,1,1,1,1,1,R,,72159AMA-2,M910001,72159AMA-2,M910001,72159AMA-2,M910001,72159AMA-2,M910001
37,1,,22217-100000,,"SPRING WASHER 10",2,2,2,2,2,2,,,,,,,,,,,,
38,1,,26116-100402,,"BOLT M10X 40 PLATED",4,4,4,4,4,4,,,,,,,,,,,,
39,1,,26116-100602,,"BOLT M10X 60 PLATED",2,2,2,2,2,2,,,,,,,,,,,,
40,1,,26716-100002,,"NUT M10",4,4,4,4,4,4,,,,,,,,,,,,
41,1,,26716-100002,,"NUT M10",2,2,2,2,2,2,,,,,,,,,,,,
42,1,,172150-42490,,"LOD, SWING",1,1,1,1,1,1,,,,,,,,,,,,
42-1,1,,172159-42490,,"LOD, SWING",1,1,1,1,1,1,R,,72159AMA-2,M910001,72159AMA-2,M910001,72159AMA-2,M910001,72159AMA-2,M910001,72159AMA-2,M910001
43,1,,172150-42700,,"LOD(A), SPOOL",2,2,2,2,2,2,,,,,,,,,,,,
43-1,1,,172159-42700,,"LOD(A), SPOOL",2,2,2,2,2,2,R,,72159AMA-2,M910001,72159AMA-2,M910001,72159AMA-2,M910001,72159AMA-2,M910001
44,1,,172150-42730,,"LOD(B), SPOOL",1,1,1,1,1,1,,,,,,,,,,,,
44-1,1,,172159-42730,,"LOD(B), SPOOL",1,1,1,1,1,1,R,,72159AMA-2,M910001,72159AMA-2,M910001,72159AMA-2,M910001,72159AMA-2,M910001
45,1,,172122-46590,,"ELBALL 8",2,2,2,2,2,2,,,,,,,,,,,,
46,1,,172122-46590,,"ELBALL 8",3,3,3,3,3,3,,,,,,,,,,,,
47,1,,1C6281-52310,,"PIN 6,COME-OFF SNAP",3,3,3,3,3,3,,,,,,,,,,,,
47-1,1,,172159-42070,,"PIN 6,COME-OFF SNAP",3,3,3,3,3,3,R,,72159AMA-3,M920001,72159AMA-3,M920001,72159AMA-3,M920001,72159AMA-3,M920001
48,1,,22217-080000,,"SPRING WASHER 8",2,2,2,2,2,2,,,,,,,,,,,,
49,1,,22217-080000,,"SPRING WASHER 8",3,3,3,3,3,3,,,,,,,,,,,,
50,1,,26716-080002,,"NUT M 8",4,4,4,4,4,4,,,,,,,,,,,,

https://truckmanualshub.com/

51,1,,26716-080002,,"NUT M 8",6,6,6,6,6,6,,,,,,,,,,,,
52,1,,933110-54100,,"PIN 4.75X14",3,3,3,3,3,3,,,,,,,,,,,,
52-1,1,,172159-42910,,"PIN 4.75X14",3,3,3,3,3,3,R,,72159AMA-2,M910001,72159AMA-2,M910001,72159AMA-2,M910001,72159AMA-2,M910001,72159AMA-2,M910001
53,1,,26757-100002,,,2,2,2,2,2,2,W,,72159028,*1995.05,72159028,*1995.05,72159028,*1995.05,72159028,*1995.05,72159028,*1995.05,72159028,*1995.05,I

Fig. 19 操縦装置(走行&スイング) CONTROL EQUIPMENT(TRAVEL&SWING)

https://truckmanualshub.com/

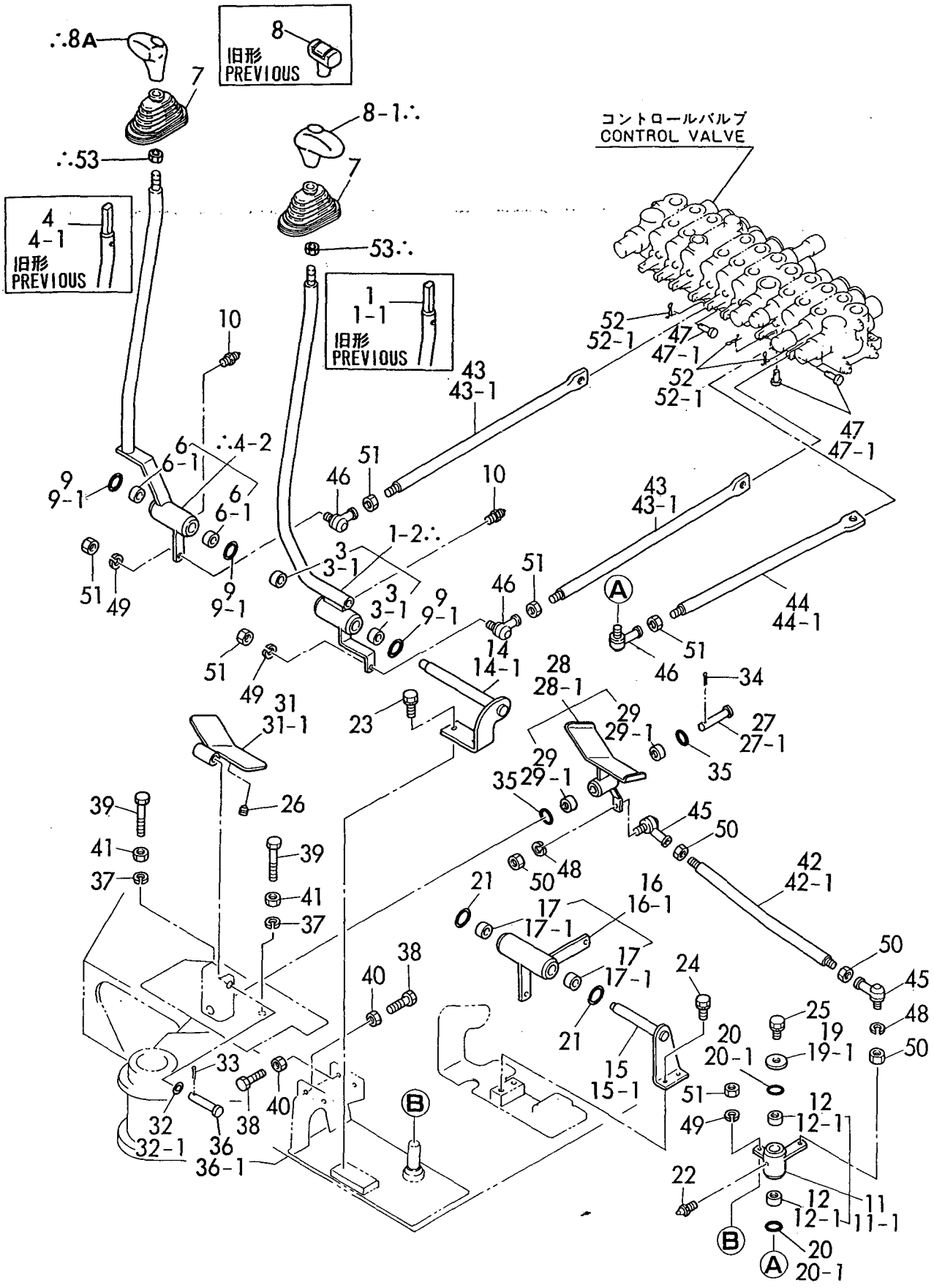

https://truckmanualshub.com/

```
1,1,,172149-41190,,"LEVER, BLADE",1,1,1,1,1,1,,,,,,,,,,,,
1-1,1,,172159-41170,,"LEVER, BLADE",1,1,1,1,1,1,R,,72159AMA-2,M910001,72159AMA-
2,M910001,72159AMA-2,M910001,72159AMA-2,M910001,72159AMA-2,M910001,72159AMA-
2,M910001
1-2,1,,172159-
41171,,,1,1,1,1,1,1,S,,72159028,*1995.05,72159028,*1995.05,72159028,*1995.05,721
59028,*1995.05,72159028,*1995.05,72159028,*1995.05,I
3,2,,172141-41360,,"BUSH 1415",2,2,2,2,2,2,,,,,,,,,,,,
3-1,2,,172161-41360,,"BUSH 1415",2,2,2,2,2,2,R,,72159AMA-3,M920001,72159AMA-
3,M920001,72159AMA-3,M920001,72159AMA-3,M920001,72159AMA-3,M920001,72159AMA-
3,M920001
4,1,,172141-41340,,BOOTS,1,1,1,1,1,1,,,,,,,,,,,,
5,1,,172116-45940,,"KNOB (C), LEVER",1,1,1,1,1,1,,,,,,,,,,,,
5-1,1,,172164-45970,,"GRIP,
BLADE",1,1,1,1,1,1,S,,72159028,*1995.05,72159028,*1995.05,72159028,*1995.05,7215
9028,*1995.05,72159028,*1995.05,72159028,*1995.05,I
6,1,,24311-000210,,"O-RING 1A P-21.0",2,2,2,2,2,2,,,,,,,,,,,,
7,1,,26013-100202,,"BOLT W/WASHER M10X20",2,2,2,2,2,2,,1,,,,,,,,,,,
8,1,,172149-42670,,"SUPPORT, CABLE",1,1,1,1,1,1,,,,,,,,,,,,
8-1,1,,172159-42920,,"PIN 4.75X14",1,1,1,1,1,1,R,,72159AMA-2,M910001,72159AMA-
2,M910001,72159AMA-2,M910001,72159AMA-2,M910001,72159AMA-2,M910001,72159AMA-
2,M910001
9,1,,172141-42960,,"JOINT, CABLE",1,1,1,1,1,1,,,,,,,,,,,,
9-1,1,,172159-42940,,"JOINT, CABLE",1,1,1,1,1,1,R,,72159AMA-2,M910001,72159AMA-
2,M910001,72159AMA-2,M910001,72159AMA-2,M910001,72159AMA-2,M910001,72159AMA-
2,M910001
10,1,,172122-46590,,"ELBALL 8",1,1,1,1,1,1,,,,,,,,,,,,
11,1,,172116-46910,,"JOINT, SPOOL",1,1,1,1,1,1,,,,,,,,,,,,
11-1,1,,172159-42980,,"JOINT, SPOOL",1,1,1,1,1,1,R,,72159AMA-2,M910001,72159AMA-
2,M910001,72159AMA-2,M910001,72159AMA-2,M910001,72159AMA-2,M910001,72159AMA-
2,M910001
12,1,,172149-42680,,"CABLE, BLADE",1,1,1,1,1,1,,,,,,,,,,,,
13,1,,1C6281-52310,,"PIN 6,COME-OFF SNAP",9,9,9,9,9,9,,,,,,,,,,,,
13-1,1,,172159-42070,,"PIN 6,COME-OFF SNAP",9,9,9,9,9,9,R,,72159AMA-
3,M920001,72159AMA-3,M920001,72159AMA-3,M920001,72159AMA-3,M920001,72159AMA-
3,M920001,72159AMA-3,M920001
14,1,,22217-080000,,"SPRING WASHER  8",2,2,2,2,2,2,,,,,,,,,,,,
15,1,,933110-54100,,"PIN 4.75X14",1,1,1,1,1,1,,,,,,,,,,,,
15-1,1,,172159-42910,,"PIN 4.75X14",1,1,1,1,1,1,R,,72159AMA-2,M910001,72159AMA-
2,M910001,72159AMA-2,M910001,72159AMA-2,M910001,72159AMA-2,M910001,72159AMA-
2,M910001
16,1,,26716-080002,,"NUT M 8",1,1,1,1,1,1,,,,,,,,,,,,
```

Fig. 20 操縦装置(ブレード) CONTROL EQUIPMENT (BLADE)

https://truckmanualshub.com/

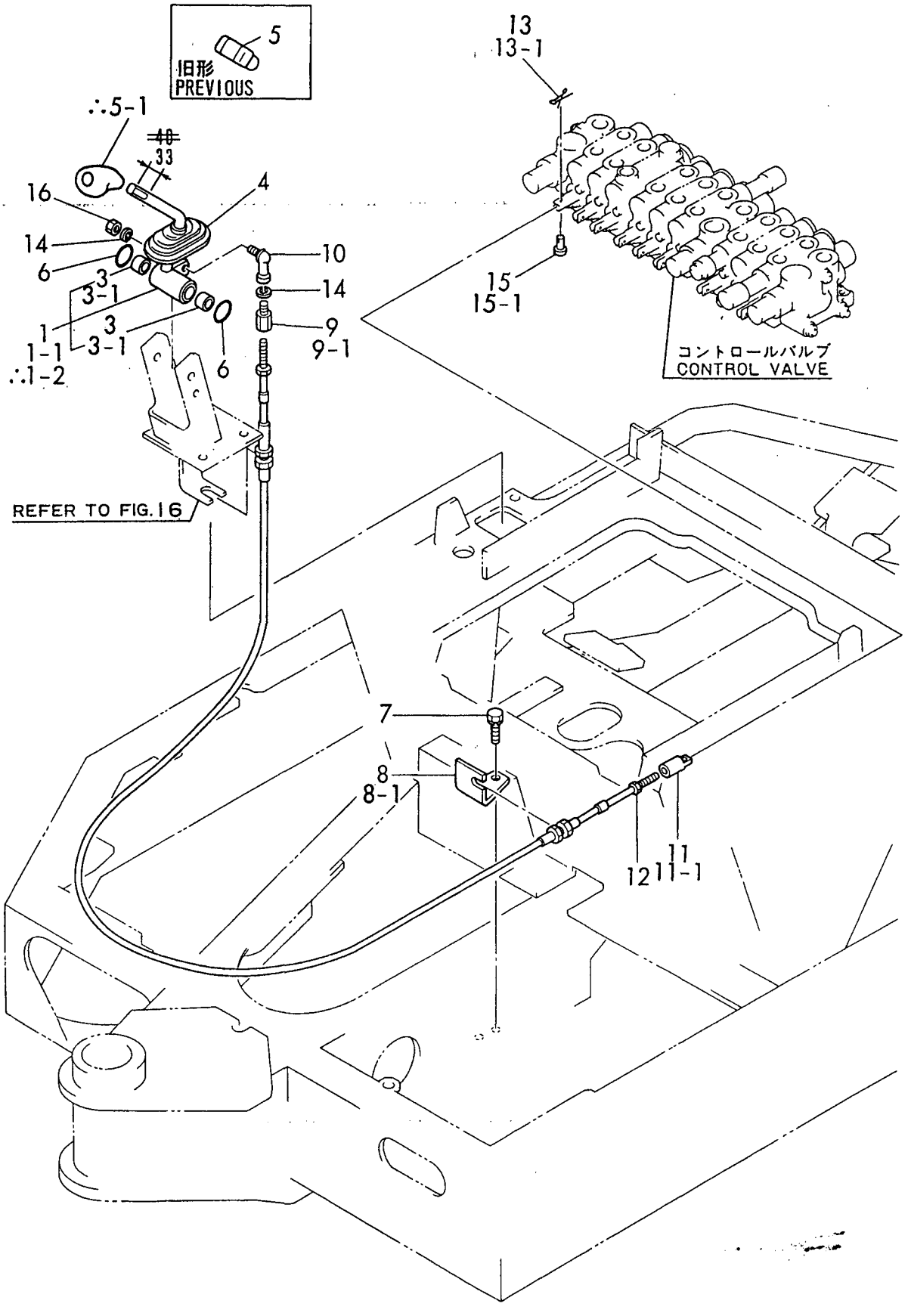

1,1,,172112-41960,,"PIN 8X25.5",1,1,1,1,1,1,,,,,,,,,,,,
1-1,1,,172159-42800,,"PIN 8X25.5",1,1,1,1,1,1,R,,72159AMA-2,M910001,72159AMA-2,M910001,72159AMA-2,M910001,72159AMA-2,M910001,72159AMA-2,M910001
2,1,,172150-42500,,"LEVER(L), LOCK",1,1,1,1,1,1,,,,,,,,,,,,
2-1,1,,172159-42500,,"LEVER(L), LOCK",1,1,1,1,1,1,R,,72159AMA-2,M910001,72159AMA-2,M910001,72159AMA-2,M910001,72159AMA-2,M910001,72159AMA-2,M910001
3,2,,172141-41360,,"BUSH 1415",2,2,2,2,2,2,,,,,,,,,,,,
3-1,2,,172161-41360,,"BUSH 1415",2,2,2,2,2,2,R,,72159AMA-3,M920001,72159AMA-3,M920001,72159AMA-3,M920001,72159AMA-3,M920001,72159AMA-3,M920001,I
5,1,,172150-42510,,"LEVER(R), LOCK",1,1,1,1,1,1,,,,,,,,,,,,
5-1,1,,172159-42510,,"LEVER(R), LOCK",1,1,1,1,1,1,R,,72159AMA-2,M910001,72159AMA-2,M910001,72159AMA-2,M910001,72159AMA-2,M910001,72159AMA-2,M910001
6,2,,172141-41360,,"BUSH 1415",2,2,2,2,2,2,,,,,,,,,,,,
6-1,2,,172161-41360,,"BUSH 1415",2,2,2,2,2,2,R,,72159AMA-3,M920001,72159AMA-3,M920001,72159AMA-3,M920001,72159AMA-3,M920001,72159AMA-3,M920001,I
8,1,,172150-42570,,PLATE,2,2,2,2,2,2,,,,,,,,,,,,
8-1,1,,172159-42570,,PLATE,2,2,2,2,2,2,R,,72159AMA-2,M910001,72159AMA-2,M910001,72159AMA-2,M910001,72159AMA-2,M910001,72159AMA-2,M910001
9,1,,172150-42580,,"COLLAR, LOCK",2,2,2,2,2,2,,,,,,,,,,,,
9-1,1,,172159-42580,,"COLLAR, LOCK",2,2,2,2,2,2,R,,72159AMA-2,M910001,72159AMA-2,M910001,72159AMA-2,M910001,72159AMA-2,M910001,72159AMA-2,M910001
10,1,,172141-42600,,"PIPE, LOCK",2,2,2,2,2,2,,,,,,,,,,,,
10-1,1,,172159-42820,,"PIPE, LOCK",2,2,2,2,2,2,R,,72159AMA-3,M920001,72159AMA-3,M920001,72159AMA-3,M920001,72159AMA-3,M920001,72159AMA-3,M920001,I
11,1,,172141-42700,,"LINK, LOCK",4,4,4,4,4,4,,,,,,,,,,,,
11-1,1,,172159-42850,,"LINK, LOCK",4,4,4,4,4,4,R,,72159AMA-2,M910001,72159AMA-2,M910001,72159AMA-2,M910001,72159AMA-2,M910001,72159AMA-2,M910001
12,1,,172141-42750,,"BOLT, STOPPER",8,8,8,8,8,8,,,,,,,,,,,,
12-1,1,,172159-42720,,"BOLT, STOPPER",8,8,8,8,8,8,R,,72159AMA-3,M920001,72159AMA-3,M920001,72159AMA-3,M920001,72159AMA-3,M920001,72159AMA-3,M920001,I
13,1,,172141-43150,,"HOOK, PEDAL",1,1,1,1,1,1,,,,,,,,,,,,
13-1,1,,172159-42870,,"HOOK, PEDAL",1,1,1,1,1,1,R,,72159AMA-2,M910001,72159AMA-2,M910001,72159AMA-2,M910001,72159AMA-2,M910001,72159AMA-2,M910001
14,1,,172141-43160,,"BLACK, PEDAL LOCK",1,1,1,1,1,1,,,,,,,,,,,,
14-1,1,,172159-42880,,BLACK,1,1,1,1,1,1,R,,72159AMA-2,M910001,72159AMA-2,M910001,72159AMA-2,M910001,72159AMA-2,M910001,72159AMA-2,M910001
15,1,,1C6281-52310,,"PIN 6,COME-OFF SNAP",6,6,6,6,6,6,,,,,,,,,,,,
15-1,1,,172159-42070,,"PIN 6,COME-OFF SNAP",6,6,6,6,6,6,R,,72159AMA-3,M920001,72159AMA-3,M920001,72159AMA-3,M920001,72159AMA-3,M920001,72159AMA-3,M920001,I
16,1,,1A1380-56650,,"SPRING,ROTARY CLUTCH",2,2,2,2,2,2,,,,,,,,,,,,
16-1,1,,172159-45130,,"SPRING,ROTARY CLUTCH",2,2,2,2,2,2,R,,72159AMA-2,M910001,72159AMA-2,M910001,72159AMA-2,M910001,72159AMA-2,M910001,72159AMA-2,M910001
17,1,,172146-68430,,SPACER,1,1,1,1,1,1,,,,,,,,,,,,
17-1,1,,172159-42900,,SPACER,1,1,1,1,1,1,R,,72159AMA-2,M910001,72159AMA-2,M910001,72159AMA-2,M910001,72159AMA-2,M910001,72159AMA-2,M910001
18,1,,22137-080000,,"WASHER 8, POLISHED",1,1,1,1,1,1,,,,,,,,,,,,
19,1,,22157-080000,,"WASHER 8",2,2,2,2,2,2,,,,,,,,,,,,
20,1,,26013-100452,,"BOLT M10X 45",1,1,1,1,1,1,,,,,,,,,,,,

https://truckmanualshub.com/

21,1,,26756-080002,,"LOCK NUT M 8 PLATED",8,8,8,8,8,8,,,,,,,,,,,,
22,1,,933110-54100,,"PIN 4.75X14",4,4,4,4,4,4,,,,,,,,,,,,
22-1,1,,172159-42910,,"PIN 4.75X14",4,4,4,4,4,4,R,,72159AMA-2,M910001,72159AMA-2,M910001,72159AMA-2,M910001,72159AMA-2,M910001,72159AMA-2,M910001,72159AMA-2,M910001
23,1,,26013-080452,,"BOLT M 8X 45",2,2,2,2,2,2,,,,,,,,,,,,
24,1,,172116-46630,,"KNOB, LOCK LEVER",2,2,2,2,2,2,,,,,,,,,,,,

Fig. 21 サギョウレバーストッパ
OPERATION LEVER STOPPER

https://truckmanualshub.com/

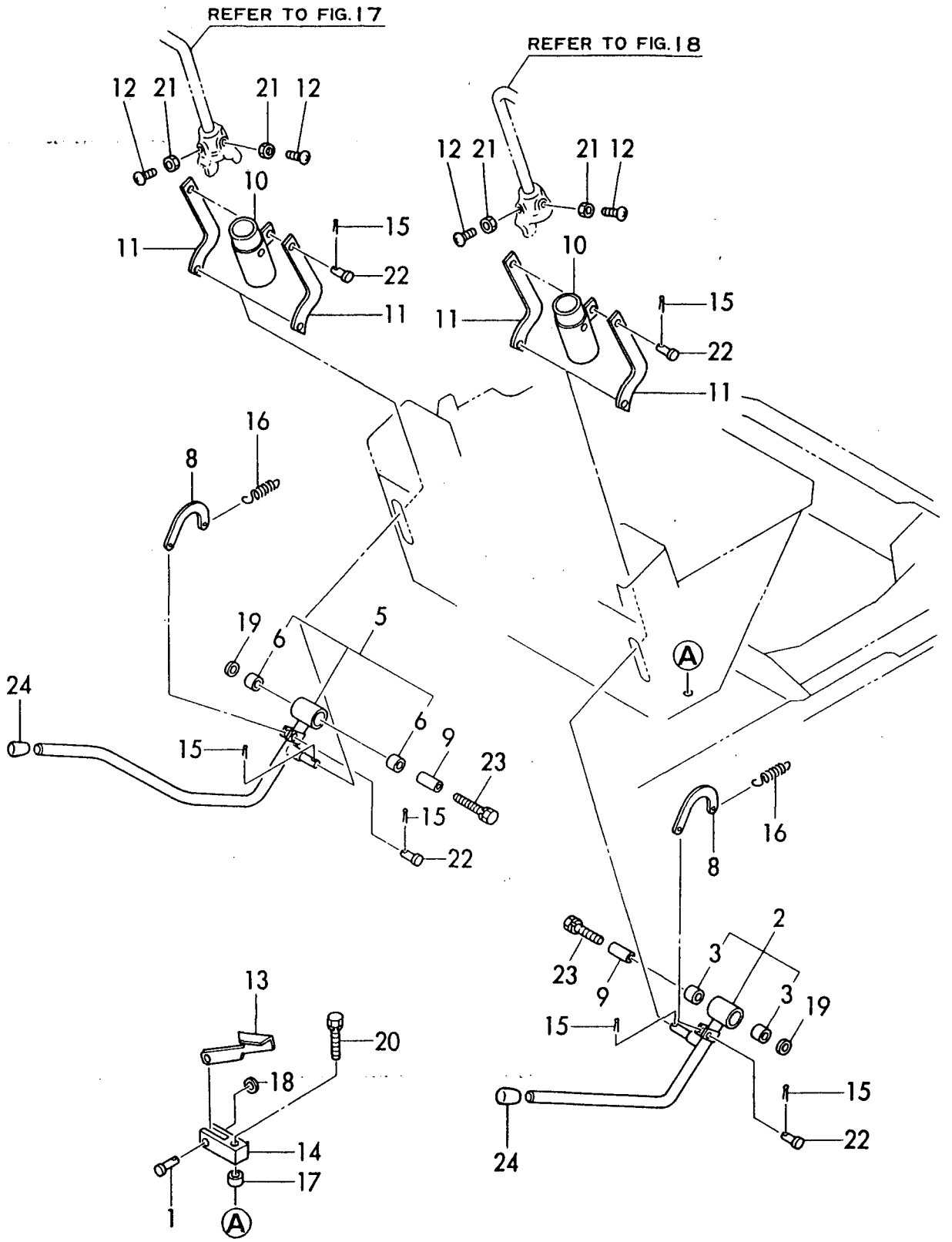

https://truckmanualshub.com/

```
1,1,,172149-53100,,PROTECTOR(L),1,1,1,1,1,1,,,,,,,,,,,,
1-1,1,,172159-53100,,PROTECTOR(L),1,1,1,1,1,1,R,,72159AMA-1,M900001,72159AMA-
1,M900001,72159AMA-1,M900001,72159AMA-1,M900001,72159AMA-1,M900001,72159AMA-
1,M900001
2,1,,172149-53190,,PROTECTOR(R),1,1,1,1,1,1,,,,,,,,,,,,
2-1,1,,172159-53190,,PROTECTOR(R),1,1,1,1,1,1,R,,72159AMA-1,M900001,72159AMA-
1,M900001,72159AMA-1,M900001,72159AMA-1,M900001,72159AMA-1,M900001,72159AMA-
1,M900001
3,1,,26013-120302,,"BOLT W/WASHER M12X30",8,8,8,8,8,8,,,,,,,,,,,,
4,1,,172111-16890,,"GROMMET  9",,,1,1,,,,,,,,,,,,,,,
5,1,,172150-53350,,"WEIGHT, COUNTER",,,1,1,,1,,,,,,,,,,,,
5-1,1,,172159-53350,,"WEIGHT,COUNTER",,,1,1,,1,R,,,,,72159AMA-
1,M900001,72159AMA-1,M900001,,,72159AMA-1,M900001
6,1,,22137-120000,,"WASHER 12,POLISHED",,,2,2,,2,,,,,,,,,,,,
7,1,,22217-120000,,"WASHER 12,SPRING",,,2,2,,2,,,,,,,,,,,,
8,1,,26116-120352,,"BOLT M12X 35 PLATED",,,2,2,,2,,,,,,,,,,,,
9,1,,172149-54100,,"FRAME, TURNING",1,1,1,1,1,1,,,,,,,,,,,,
9-1,1,,172159-54100,,"FRAME, TURNING",1,1,1,1,1,1,R,,72159AMA-
2,M910001,72159AMA-2,M910001,72159AMA-2,M910001,72159AMA-2,M910001,72159AMA-
2,M910001,72159AMA-2,M910001
10,2,,172149-54050,,BUSH,2,2,2,2,2,2,,,,,,,,,,,,
10-1,2,,172159-54050,,BUSH,2,2,2,2,2,2,R,,72159AMA-2,M910001,72159AMA-
2,M910001,72159AMA-2,M910001,72159AMA-2,M910001,72159AMA-2,M910001,72159AMA-
2,M910001
11,1,,24761-040000,,"NIPPLE B,GREASE",1,1,1,1,1,1,,,,,,,,,,,,
12,1,,172149-66550,,WASHER,8,8,8,8,8,8,W,,*,"FROM 1ST",*,"FROM 1ST",*,"FROM
1ST",*,"FROM 1ST",*,"FROM 1ST",*,"FROM 1ST"
12-1,1,,172159-53300,,WASHER,8,8,8,8,8,8,R,,72159AMA-2,M910001,72159AMA-
2,M910001,72159AMA-2,M910001,72159AMA-2,M910001,72159AMA-2,M910001,72159AMA-
2,M910001
12-2,1,,172159-66550,,WASHER,8,8,8,8,8,8,R,,72159AMA-3,M920001,72159AMA-
3,M920001,72159AMA-3,M920001,72159AMA-3,M920001,72159AMA-3,M920001,72159AMA-
3,M920001,I
```

Fig. 22 センカイフレーム TURNING FRAME

https://truckmanualshub.com/

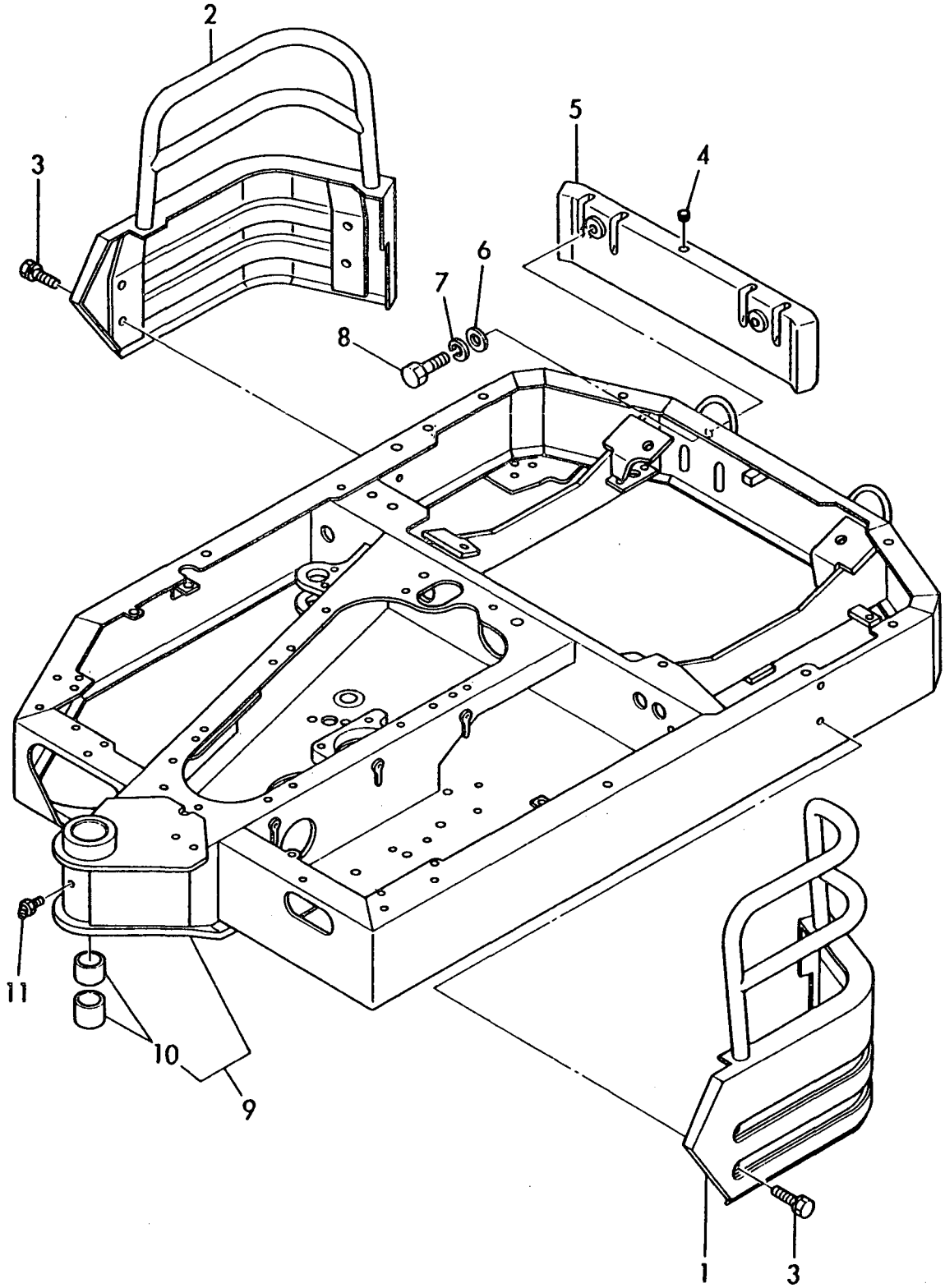

https://truckmanualshub.com/

```
1,1,,172149-57600,,"BEARING, TURNING",1,1,1,1,1,1,,,,,,,,,,,,
2,2,,172149-57610,,"SEAL SET",1,1,1,1,1,1,,,,,,,,,,,,
3,3,,172149-57620,,"SEAL, UPPER",1,1,1,1,1,1,,,,,,,,,,,,
4,3,,172149-57630,,"SEAL,LOWER",1,1,1,1,1,1,,,,,,,,,,,,
5,1,,22312-100200,,"PARALLEL PIN 10X20",4,4,4,4,4,4,,,,,,,,,,,,
5-1,1,,194940-24350,,"PIN
10X28,STRAIGHT",4,4,4,4,4,4,S,,72149117,*1989.09,72149117,*1989.09,72149117,*198
9.09,72149117,*1989.09,72149117,*1989.09,72149117,*1989.09
5-2,1,,172159-57350,,"PARALLEL PIN 10X 28",4,4,4,4,4,4,R,,72159AMA-
2,M910001,72159AMA-2,M910001,72159AMA-2,M910001,72159AMA-2,M910001,72159AMA-
2,M910001,72159AMA-2,M910001
5-4,1,,22312-100250,,"PARALLEL PIN
10X25",4,4,4,4,4,4,S,1,72159014,*1990.08,72159014,*1990.08,72159014,*1990.08,721
59014,*1990.08,72159014,*1990.08,72159014,*1990.08,I
6,1,,26116-120302,,"BOLT M12X 30 PLATED",18,18,18,18,18,18,,,,,,,,,,,,
7,1,,26116-120452,,"BOLT M12X 45 PLATED",18,18,18,18,18,18,,,,,,,,,,,,
```

Fig. 23 センカイクドウソウチ TURNING DRIVING GEARS

https://truckmanualshub.com/

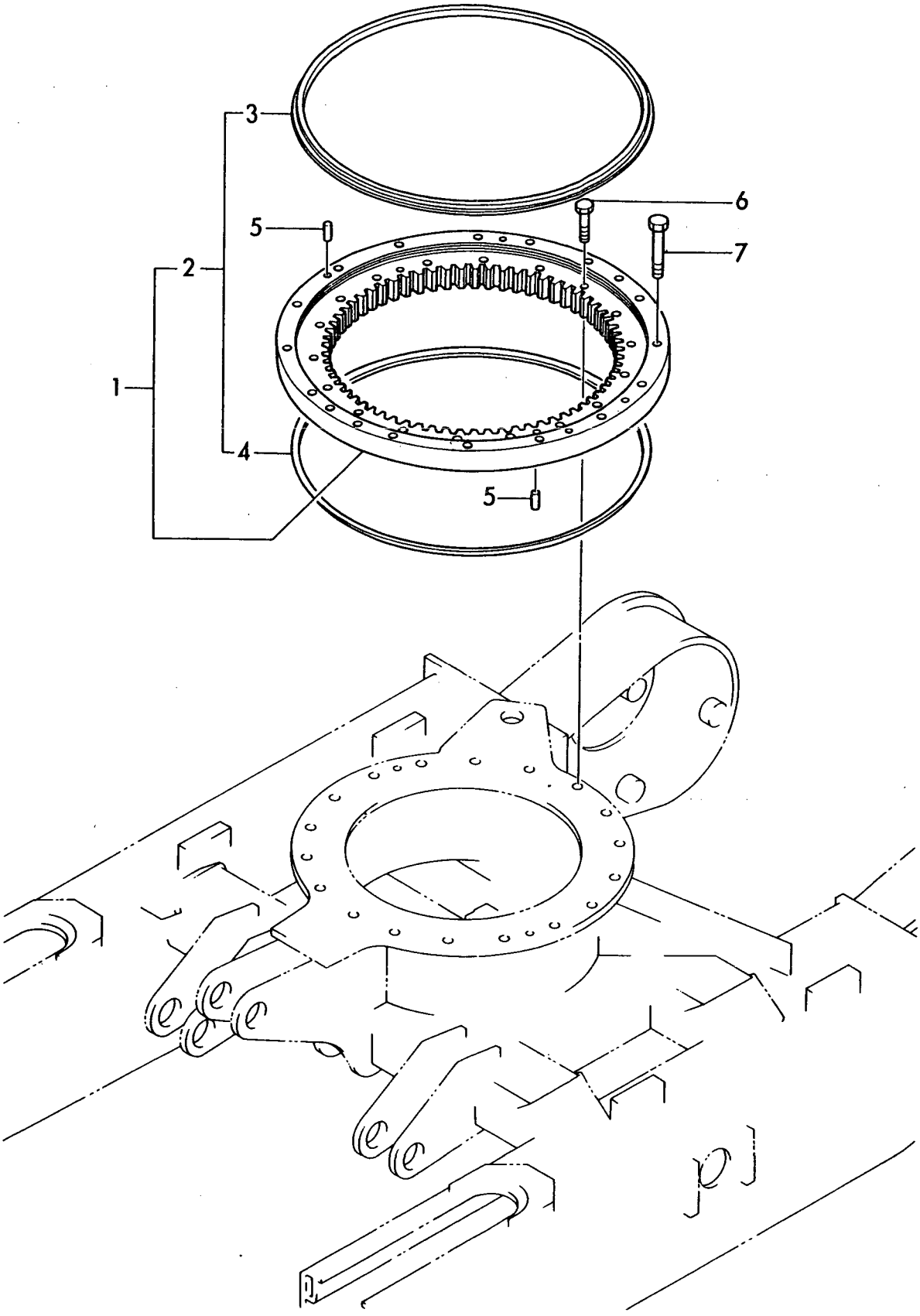

https://truckmanualshub.com/

1,1,,172150-05300,,"BOX, TOOL",1,1,1,1,1,1,,,,,,,,,,,,
1-1,1,,172159-05300,,"BOX, TOOL",1,1,1,1,1,1,R,,72159AMA-2,M910001,72159AMA-
2,M910001,72159AMA-2,M910001,72159AMA-2,M910001,72159AMA-2,M910001,72159AMA-
2,M910001
2,1,,194145-04810,,"WASHER 10",4,4,4,4,4,4,,,,,,,,,,,,
2-1,1,,172519-62150,,"WASHER 10",4,4,4,4,4,4,R,,72159AMA-2,M910001,72159AMA-
2,M910001,72159AMA-2,M910001,72159AMA-2,M910001,72159AMA-2,M910001,72159AMA-
2,M910001
2-2,1,,22137-100000,,"WASHER 10,POLISHED",4,4,4,4,4,4,R,,72159AMA-
3,M920001,72159AMA-3,M920001,72159AMA-3,M920001,72159AMA-3,M920001,72159AMA-
3,M920001,72159AMA-3,M920001,I
3,1,,26013-100202,,"BOLT W/WASHER M10X20",4,4,4,4,4,4,,,,,,,,,,,,
4,1,,172116-46630,,"KNOB, LOCK LEVER",1,1,1,1,1,1,,,,,,,,,,,,
5,1,,172149-58800,,"PIN, LOCK",1,1,1,1,1,1,,,,,,,,,,,,
5-1,1,,172159-58800,,"PIN, LOCK",1,1,1,1,1,1,R,,72159AMA-2,M910001,72159AMA-
2,M910001,72159AMA-2,M910001,72159AMA-2,M910001,72159AMA-2,M910001,72159AMA-
2,M910001
6,1,,172149-61100,,"COVER(L), UNDER",1,1,1,1,1,1,,,,,,,,,,,,
6-1,1,,172159-61100,,"COVER(L), UNDER",1,1,1,1,1,1,R,,72159AMA-
2,M910001,72159AMA-2,M910001,72159AMA-2,M910001,72159AMA-2,M910001,72159AMA-
2,M910001,72159AMA-2,M910001
7,1,,172149-61110,,"COVER, UNDER(R)",1,1,1,1,1,1,,,,,,,,,,,,
7-1,1,,172159-61110,,"COVER, UNDER(R)",1,1,1,1,1,1,R,,72159AMA-
2,M910001,72159AMA-2,M910001,72159AMA-2,M910001,72159AMA-2,M910001,72159AMA-
2,M910001,72159AMA-2,M910001
8,1,,22217-100000,,"SPRING WASHER 10",8,8,8,8,8,8,,,,,,,,,,,,
9,1,,26116-100162,,"BOLT M10X 16 PLATED",8,8,8,8,8,8,,,,,,,,,,,,
10,1,,194145-04810,,"WASHER 10",2,2,2,2,2,2,,,,,,,,,,,,
10-1,1,,172159-65930,,"WASHER 10",2,2,2,2,2,2,R,,72159AMA-1,M900001,72159AMA-
1,M900001,72159AMA-1,M900001,72159AMA-1,M900001,72159AMA-1,M900001,72159AMA-
1,M900001
11,1,,194145-04810,,"WASHER 10",4,4,4,4,4,4,,,,,,,,,,,,
11-1,1,,172159-65930,,"WASHER 10",4,4,4,4,4,4,R,,72159AMA-1,M900001,72159AMA-
1,M900001,72159AMA-1,M900001,72159AMA-1,M900001,72159AMA-1,M900001,72159AMA-
1,M900001
12,1,,194145-04810,,"WASHER 10",3,3,3,3,3,3,,,,,,,,,,,,
12-1,1,,172159-65930,,"WASHER 10",3,3,3,3,3,3,R,,72159AMA-1,M900001,72159AMA-
1,M900001,72159AMA-1,M900001,72159AMA-1,M900001,72159AMA-1,M900001,72159AMA-
1,M900001
13,1,,172149-65100,,COVER(B),1,1,1,1,1,1,,,,,,,,,,,,
13-1,1,,172159-65100,,COVER(B),1,1,1,1,1,1,R,,72159AMA-2,M910001,72159AMA-
2,M910001,72159AMA-2,M910001,72159AMA-2,M910001,72159AMA-2,M910001,72159AMA-
2,M910001
14,1,,172734-65260,,"PIN, BONNET LEVER",1,1,1,1,1,1,,,,,,,,,,,,
14-1,1,,172159-65940,,"PIN, BONNET LEVER",1,1,1,1,1,1,R,,72159AMA-
1,M900001,72159AMA-1,M900001,72159AMA-1,M900001,72159AMA-1,M900001,72159AMA-
1,M900001,72159AMA-1,M900001
15,1,,172734-65270,,"SPRING, CATCH",1,1,1,1,1,1,,,,,,,,,,,,
15-1,1,,172159-65960,,"SPRING CATCH",1,1,1,1,1,1,R,,72159AMA-1,M900001,72159AMA-
1,M900001,72159AMA-1,M900001,72159AMA-1,M900001,72159AMA-1,M900001,72159AMA-
1,M900001
16,1,,172124-65450,,"LEVER, LOCK",1,1,1,1,1,1,,,,,,,,,,,,
16-1,1,,172159-65050,,"LEVER, LOCK",1,1,1,1,1,1,R,,72159AMA-3,M920001,72159AMA-
3,M920001,72159AMA-3,M920001,72159AMA-3,M920001,72159AMA-3,M920001,72159AMA-
3,M920001,I
17,1,,172149-65450,,PLATE(R),1,1,1,1,1,1,,,,,,,,,,,,
17-1,1,,172159-65450,,PLATE(R),1,1,1,1,1,1,R,,72159AMA-2,M910001,72159AMA-
2,M910001,72159AMA-2,M910001,72159AMA-2,M910001,72159AMA-2,M910001,72159AMA-
2,M910001
18,1,,172124-65480,,CATCHER,1,1,1,1,1,1,,,,,,,,,,,,
18-1,1,,172159-65950,,CATCHER,1,1,1,1,1,1,R,,72159AMA-1,M900001,72159AMA-
1,M900001,72159AMA-1,M900001,72159AMA-1,M900001,72159AMA-1,M900001,72159AMA-
1,M900001

19,1,,172124-65490,,"PLATE,CATCH",1,1,1,1,1,1,,,,,,,,,,,,
19-1,1,,172159-65690,,"PLATE,CATCH",1,1,1,1,1,1,R,,72159AMA-2,M910001,72159AMA-2,M910001,72159AMA-2,M910001,72159AMA-2,M910001,72159AMA-2,M910001
20,1,,172126-65500,,KEY,1,1,1,1,1,1,,,,,,,,,,,,
21,1,,172149-65500,,COVER(C),1,1,1,1,1,1,,,,,,,,,,,,
21-1,1,,172159-65500,,COVER(C),1,1,1,1,1,1,R,,72159AMA-1,M900001,72159AMA-1,M900001,72159AMA-1,M900001,72159AMA-1,M900001,72159AMA-1,M900001
21-2,1,,172159-65501,,COVER(C),1,1,1,1,1,1,N,,72159AMA-3,M920001,72159AMA-3,M920001,72159AMA-3,M920001,72159AMA-3,M920001,72159AMA-3,M920001,I
22,1,,172137-65700,,"RUBBER, CUSHION",2,2,2,2,2,2,,,,,,,,,,,,
23,1,,172149-65740,,"COVER(R)   (YELLOW)",1,1,1,1,1,1,,,,,,,,,,,,
23-1,1,,172159-65740,,COVER(R),1,1,1,1,1,1,R,,72159AMA-1,M900001,72159AMA-1,M900001,72159AMA-1,M900001,72159AMA-1,M900001,72159AMA-1,M900001
23-2,1,,172159-65741,,COVER(R),1,1,1,1,1,1,S,,72159AMA-2,M910001,72159AMA-2,M910001,72159AMA-2,M910001,72159AMA-2,M910001,72159AMA-2,M910001
24,1,,172149-65840,,HOOK,1,1,1,1,1,1,,,,,,,,,,,,
24-1,1,,172159-65840,,HOOK,1,1,1,1,1,1,R,,72159AMA-2,M910001,72159AMA-2,M910001,72159AMA-2,M910001,72159AMA-2,M910001,72159AMA-2,M910001
25,1,,172149-65850,,"PLATE, ROD",1,1,1,1,1,1,,,,,,,,,,,,
25-1,1,,172159-65850,,"PLATE, ROD",1,1,1,1,1,1,R,,72159AMA-2,M910001,72159AMA-2,M910001,72159AMA-2,M910001,72159AMA-2,M910001,72159AMA-2,M910001
26,1,,22137-080000,,"WASHER 8, POLISHED",2,2,2,2,2,2,,,,,,,,,,,,
27,1,,22157-080000,,"WASHER 8",2,2,2,2,2,2,,,,,,,,,,,,
28,1,,22417-200100,,"COTTER PIN 2.0X10",2,2,2,2,2,2,,,,,,,,,,,,
29,1,,22417-200200,,"COTTER PIN 2.0X20",2,2,2,2,2,2,,,,,,,,,,,,
30,1,,26013-080162,,"BOLT W/WASHER M8X16",2,2,2,2,2,2,,,,,,,,,,,,
31,1,,26013-100162,,"BOLT M10X 16",3,3,3,3,3,3,,,,,,,,,,,,
32,1,,26013-100162,,"BOLT M10X 16",8,8,8,8,8,8,,,,,,,,,,,,
33,1,,26013-100252,,"BOLT W/WASHER M10X25",4,4,4,4,4,4,,,,,,,,,,,,
34,1,,26013-120452,,"BOLT M12X 45",4,4,4,4,4,4,,,,,,,,,,,,
35,1,,26013-100202,,"BOLT W/WASHER M10X20",2,2,2,2,2,2,,,,,,,,,,,,
36,1,,172149-64370,,"PLATE, UNDER",1,1,1,1,1,1,,,,,,,,,,,,
37,1,,172149-64360,,"PLATE, FRAME(L)",1,1,1,1,1,1,,,,,,,,,,,,
37-1,1,,172159-61130,,"PLATE, FRAME(L)",1,1,1,1,1,1,R,,72159AMA-2,M910001,72159AMA-2,M910001,72159AMA-2,M910001,72159AMA-2,M910001,72159AMA-2,M910001
38,1,,26116-100162,,"BOLT M10X 16 PLATED",4,4,4,4,4,4,,,,,,,,,,,,
39,1,,22217-100000,,"SPRING WASHER 10",4,4,4,4,4,4,,,,,,,,,,,,
40,1,,172137-69850,,SCREW,2,2,2,2,2,2,,,,,,,,,,,,
40-1,1,,172159-61120,,SCREW,2,2,2,2,2,2,R,,72159AMA-2,M910001,72159AMA-2,M910001,72159AMA-2,M910001,72159AMA-2,M910001,72159AMA-2,M910001
41,1,,172149-65430,,PLATE(L),1,1,1,1,1,1,,,,,,,,,,,,
41-1,1,,172159-65430,,PLATE(L),1,1,1,1,1,1,R,,72159AMA-2,M910001,72159AMA-2,M910001,72159AMA-2,M910001,72159AMA-2,M910001,72159AMA-2,M910001
42,1,,172141-68200,,GRIP,1,1,1,1,1,1,,,,,,,,,,,,
42-1,1,,172159-68200,,GRIP,1,1,1,1,1,1,R,,72159AMA-2,M910001,72159AMA-2,M910001,72159AMA-2,M910001,72159AMA-2,M910001,72159AMA-2,M910001
43,1,,26013-100252,,"BOLT W/WASHER M10X25",2,2,2,2,2,2,,,,,,,,,,,,

Fig. 24 ボンネット BONNET

https://truckmanualshub.com/

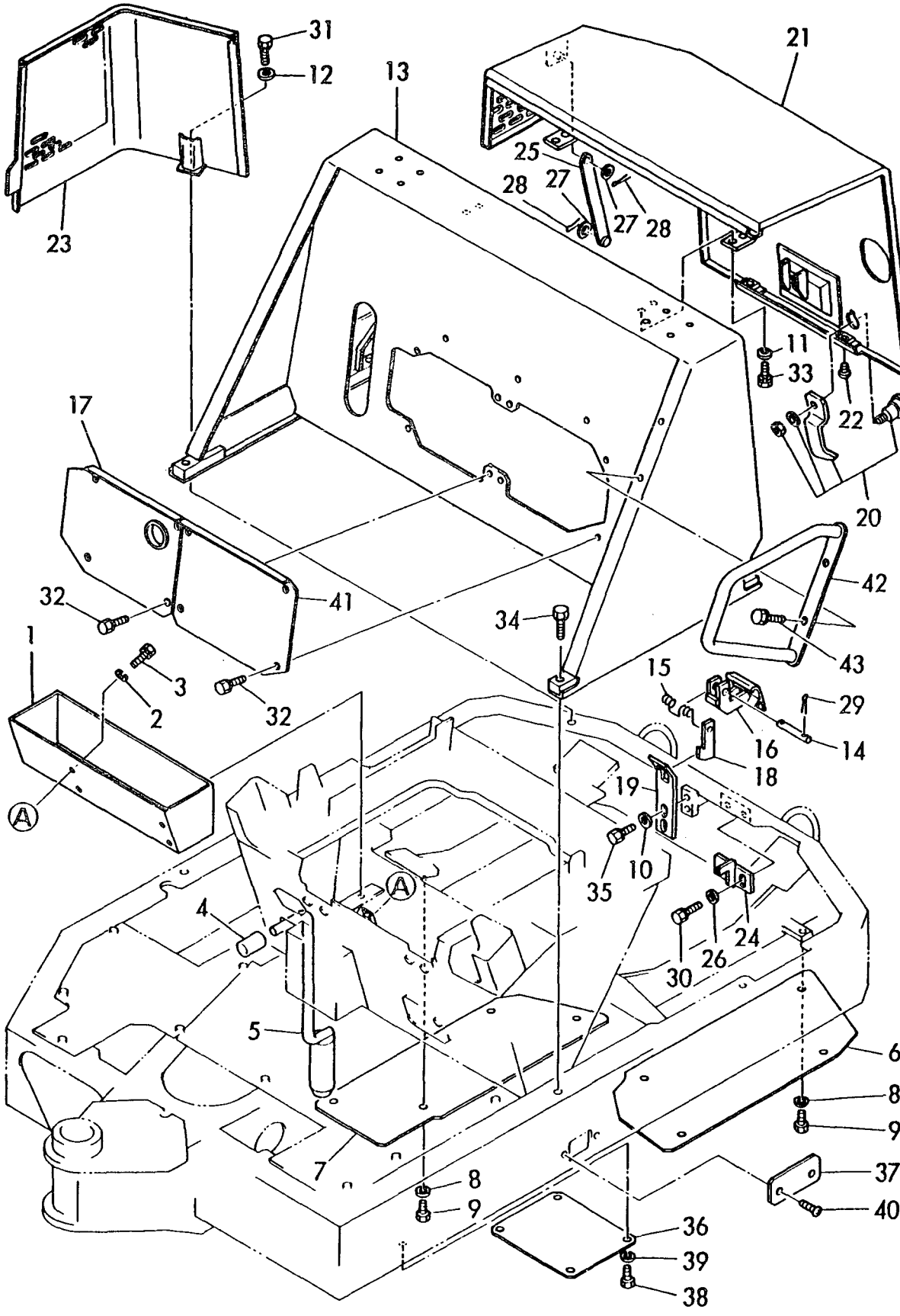

https://truckmanualshub.com/

1,1,,194145-04810,,"WASHER 10",2,2,2,2,2,2,,,,,,,,,,,,
1-1,1,,172159-65930,,"WASHER 10",2,2,2,2,2,2,R,,72159AMA-2,M910001,72159AMA-2,M910001,72159AMA-2,M910001,72159AMA-2,M910001,72159AMA-2,M910001
2,1,,172150-62100,,"STEP, FRONT",1,1,1,1,1,1,,,,,,,,,,,,
2-1,1,,172159-62100,,"STEP, FRONT",1,1,1,1,1,1,R,,72159AMA-2,M910001,72159AMA-2,M910001,72159AMA-2,M910001,72159AMA-2,M910001,72159AMA-2,M910001
3,1,,172150-62200,,"STEP, CENTER",1,1,1,1,1,1,,,,,,,,,,,,
3-1,1,,172150-62190,,"STEP, CENTER",1,1,1,1,1,1,N,,72150020,*1989.12,72150020,*1989.12,72150020,*1989.12,72150020,*1989.12,72150020,*1989.12,72150020,*1989.12
3-2,1,,172159-62190,,"STEP, CENTER",1,1,1,1,1,1,R,,72159AMA-2,M910001,72159AMA-2,M910001,72159AMA-2,M910001,72159AMA-2,M910001,72159AMA-2,M910001
4,1,,172150-62220,,"STEP, SIDE",1,1,1,1,1,1,,,,,,,,,,,,
4-1,1,,172159-62220,,"STEP, SIDE",1,1,1,1,1,1,R,,72159AMA-2,M910001,72159AMA-2,M910001,72159AMA-2,M910001,72159AMA-2,M910001,72159AMA-2,M910001
5,1,,172150-62250,,"MAT, FLOOR",1,1,1,1,1,1,,,,,,,,,,,,
5-1,1,,172150-62251,,"MAT, FLOOR",1,1,1,1,1,1,N,,72150020,*1989.12,72150020,*1989.12,72150020,*1989.12,72150020,*1989.12,72150020,*1989.12,72150020,*1989.12
5-2,1,,172159-62250,,"MAT, FLOOR",1,1,1,1,1,1,R,,72159AMA-2,M910001,72159AMA-2,M910001,72159AMA-2,M910001,72159AMA-2,M910001,72159AMA-2,M910001
6,1,,22217-100000,,"SPRING WASHER 10",12,12,12,12,12,12,,,,,,,,,,,,
7,1,,26116-100202,,"BOLT M10X 20 PLATED",12,12,12,12,12,12,,,,,,,,,,,,
8,1,,194740-00160,,"WASHER 10, CONICAL",2,2,2,2,2,2,,,,,,,,,,,,
8-1,1,,172159-64730,,"WASHER 10, CONICAL",2,2,2,2,2,2,R,,72159AMA-2,M910001,72159AMA-2,M910001,72159AMA-2,M910001,72159AMA-2,M910001,72159AMA-2,M910001
9,1,,172142-43390,,"COVER, SUPPORT",2,2,2,2,2,2,,,,,,,,,,,,
9-1,1,,172159-64370,,"COVER, SUPPORT",2,2,2,2,2,2,R,,72159AMA-2,M910001,72159AMA-2,M910001,72159AMA-2,M910001,72159AMA-2,M910001,72159AMA-2,M910001
10,1,,172116-46630,,"KNOB, LOCK LEVER",1,1,1,1,1,1,,,,,,,,,,,,
11,1,,172068-51740,,"SPRING SHOE",1,1,1,1,1,1,,,,,,,,,,,,
11-1,1,,172149-64480,,"COLLAR 11X21",1,1,1,1,1,1,N,,72149070,"FROM 1ST",72149070,"FROM 1ST",72149070,"FROM 1ST",72149070,"FROM 1ST",72149070,"FROM 1ST",72149070,"FROM 1ST"
11-2,1,,172159-64480,,"SPRING SHOE",1,1,1,1,1,1,R,,72159AMA-2,M910001,72159AMA-2,M910001,72159AMA-2,M910001,72159AMA-2,M910001,72159AMA-2,M910001
12,1,,1C6281-52320,,"PIN 8,COME-OFF SNAP",2,2,2,2,2,2,,,,,,,,,,,,
12-1,1,,22417-200160,,"COTTER PIN 2.0X16",2,2,2,2,2,2,N,,C6600141,*1988.12,C6600141,*1988.12,C6600141,*1988.12,C6600141,*1988.12,C6600141,*1988.12,C6600141,*1988.12
13,1,,194201-61330,,"WASHER 11",5,5,5,5,5,5,,,,,,,,,,,,
13-1,1,,172159-64750,,"WASHER 11",5,5,5,5,5,5,R,,72159AMA-2,M910001,72159AMA-2,M910001,72159AMA-2,M910001,72159AMA-2,M910001,72159AMA-2,M910001
14,1,,172150-64200,,"MOUNT, SEAT",1,1,1,1,1,1,,,,,,,,,,,,
14-1,1,,172159-64200,,"MOUNT, SEAT",1,1,1,1,1,1,R,,72159AMA-2,M910001,72159AMA-2,M910001,72159AMA-2,M910001,72159AMA-2,M910001,72159AMA-2,M910001
15,1,,172141-64370,,"CUSHION, SEAT",2,2,2,2,2,2,,,,,,,,,,,,
16,1,,172150-64400,,"PLATE, SEAT",1,1,1,1,1,1,,,,,,,,,,,,
16-1,1,,172159-64400,,"PLATE, SEAT",1,1,1,1,1,1,R,,72159AMA-2,M910001,72159AMA-2,M910001,72159AMA-2,M910001,72159AMA-2,M910001,72159AMA-2,M910001
17,1,,172149-64450,,"LEVER, SEAT LOCK",1,1,1,1,1,1,,,,,,,,,,,,

https://truckmanualshub.com/

```
17-1,1,,172159-64450,,"LEVER, SEAT LOCK",1,1,1,1,1,1,R,,72159AMA-
2,M910001,72159AMA-2,M910001,72159AMA-2,M910001,72159AMA-2,M910001,72159AMA-
2,M910001,72159AMA-2,M910001
18,1,,172149-64470,,"SEAL, MOUNT",1,1,1,1,1,1,,,,,,,,,,,,
19,1,,172131-65180,,CABLE,1,1,1,1,1,1,,,,,,,,,,,,
19-1,1,,172131-
65181,,CABLE,1,1,1,1,1,1,N,,72150014,*1989.07,72150014,*1989.07,72150014,*1989.0
7,72150014,*1989.07,72150014,*1989.07,72150014,*1989.07
19-2,1,,172159-64770,,CABLE,1,1,1,1,1,1,R,,72159AMA-2,M910001,72159AMA-
2,M910001,72159AMA-2,M910001,72159AMA-2,M910001,72159AMA-2,M910001,72159AMA-
2,M910001
20,1,,22137-100000,,"WASHER 10,POLISHED",1,1,1,1,1,1,,,,,,,,,,,,
21,1,,26013-080162,,"BOLT W/WASHER M8X16",6,6,6,6,6,6,,,,,,,,,,,,
22,1,,26013-100202,,"BOLT W/WASHER M10X20",6,6,6,6,6,6,,,,,,,,,,,,
23,1,,26716-100002,,"NUT M10",2,2,2,2,2,2,,,,,,,,,,,,
24,1,,22217-080000,,"SPRING WASHER  8",4,4,4,4,4,4,,,,,,,,,,,,
25,1,,26716-080002,,"NUT M 8",4,4,4,4,4,4,,,,,,,,,,,,
26,1,,22137-080000,,"WASHER 8, POLISHED",4,4,4,4,4,4,,,,,,,,,,,,
```

Fig. 25 シートマウント＆ステップ SEAT MOUNT & STEP

https://truckmanualshub.com/

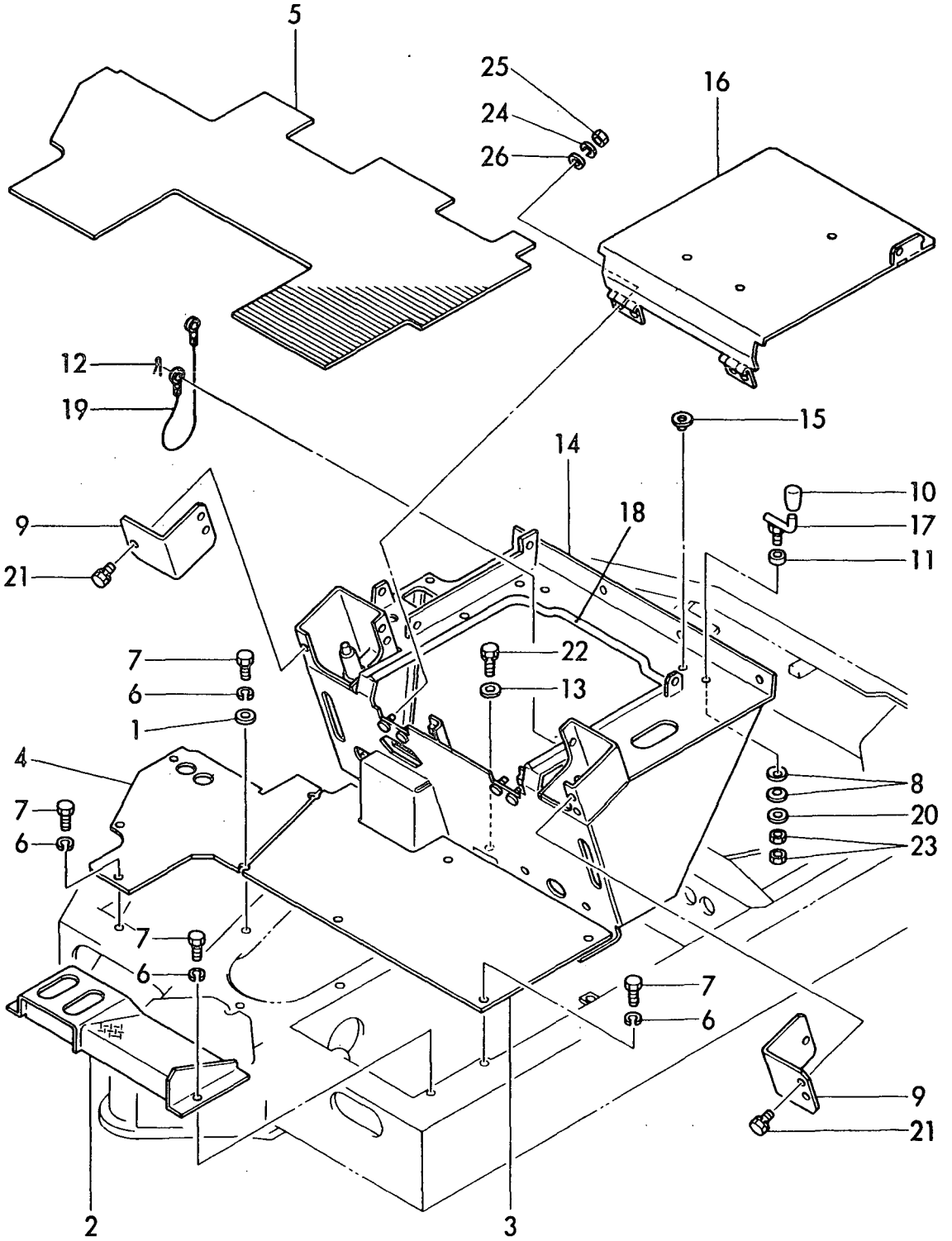

https://truckmanualshub.com/

```
1,1,,772149-66330,,"CANOPY ASSY",1,1,1,1,,,,,,,,,,,,,,
1-1,1,,772159-66300,,"CANOPY ASSY",1,1,1,1,,,R,,72159AMA-1,M900001,72159AMA-
1,M900001,72159AMA-1,M900001,72159AMA-1,M900001,,,
2,2,,172149-66300,,"COLUMN, CANOPY",1,1,1,1,,,,,,,,,,,,,,
2-1,2,,172159-66300,,"COLUMN,CANOPY",1,1,1,1,,,R,,72159AMA-1,M900001,72159AMA-
1,M900001,72159AMA-1,M900001,72159AMA-1,M900001,,,
3,2,,172149-66400,,"ROOF, CANOPY",1,1,1,1,,,,,,,,,,,,,,
3-1,2,,172149-66390,,"ROOF,
CANOPY",1,1,1,1,,,S,,72149111,*1989.08,72149111,*1989.08,72149111,*1989.08,72149
111,*1989.08,,,
3-2,2,,172159-66390,,"ROOF, CANOPY",1,1,1,1,,,R,,72159AMA-2,M910001,72159AMA-
2,M910001,72159AMA-2,M910001,72159AMA-2,M910001,,,
4,2,,172149-66550,,WASHER,8,8,8,8,,,,,,,,,,,,,,
4-1,2,,172159-66550,,WASHER,8,8,8,8,,,R,,72159AMA-1,M900001,72159AMA-
1,M900001,72159AMA-1,M900001,72159AMA-1,M900001,,,
5,2,,26013-120352,,"BOLT M12X 35",14,14,14,14,,,,,,,,,,,,,,
6,2,,172149-66520,,"TRIM(A), ROOF",2,2,2,2,,,,,,,,,,,,,,
6-1,2,,172159-66520,,"TRIM (A),ROOF",2,2,2,2,,,R,,72159AMA-1,M900001,72159AMA-
1,M900001,72159AMA-1,M900001,72159AMA-1,M900001,,,
7,2,,172149-66530,,"TRIM(B), ROOF",1,1,1,1,,,,,,,,,,,,,,
7-1,2,,172159-66530,,"TRIM (B),ROOF",1,1,1,1,,,R,,72159AMA-1,M900001,72159AMA-
1,M900001,72159AMA-1,M900001,72159AMA-1,M900001,,,
8,1,,172149-66570,,"SAFETY WALK (R)",1,1,1,1,,,,,,,,,,,,,,
8-1,1,,172159-66570,,"SAFETY WALK(R)",1,1,1,1,,,R,,72159AMA-1,M900001,72159AMA-
1,M900001,72159AMA-1,M900001,72159AMA-1,M900001,,,
9,1,,172149-66580,,"SAFETY WALK (L)",1,1,1,1,,,,,,,,,,,,,,
9-1,1,,172159-66580,,"SAFETY WALK(L)",1,1,1,1,,,R,,72159AMA-1,M900001,72159AMA-
1,M900001,72159AMA-1,M900001,72159AMA-1,M900001,,,
10,1,,172112-69790,,"PLUG 32X2",2,2,2,2,,,,,,,,,,,,,
11,1,,22137-100000,,"WASHER 10,POLISHED",6,6,6,6,,,,,,,,,,,,,
12,1,,22217-100000,,"SPRING WASHER 10",6,6,6,6,,,,,,,,,,,,,
13,1,,26013-100252,,"BOLT W/WASHER M10X25",4,4,4,4,,,,,,,,,,,,,,
14,1,,172149-68300,,"CANOPY'F(CREAM WHITE",1,1,1,1,,,,,,,,,,,,,,
14-1,1,,172159-68300,,"CANOPY (F)",1,1,1,1,,,R,,72159AMA-1,M900001,72159AMA-
1,M900001,72159AMA-1,M900001,72159AMA-1,M900001,,,
15,1,,172149-68350,,"COVER, FRONT",1,1,1,1,,,,,,,,,,,,,,
15-1,1,,172159-68350,,"COVER,FRONT",1,1,1,1,,,R,,72159AMA-1,M900001,72159AMA-
1,M900001,72159AMA-1,M900001,72159AMA-1,M900001,,,
16,1,,26116-100162,,"BOLT M10X 16 PLATED",6,6,6,6,,,,,,,,,,,,,,
```

Fig. 26 ロプス ROPS

https://truckmanualshub.com/

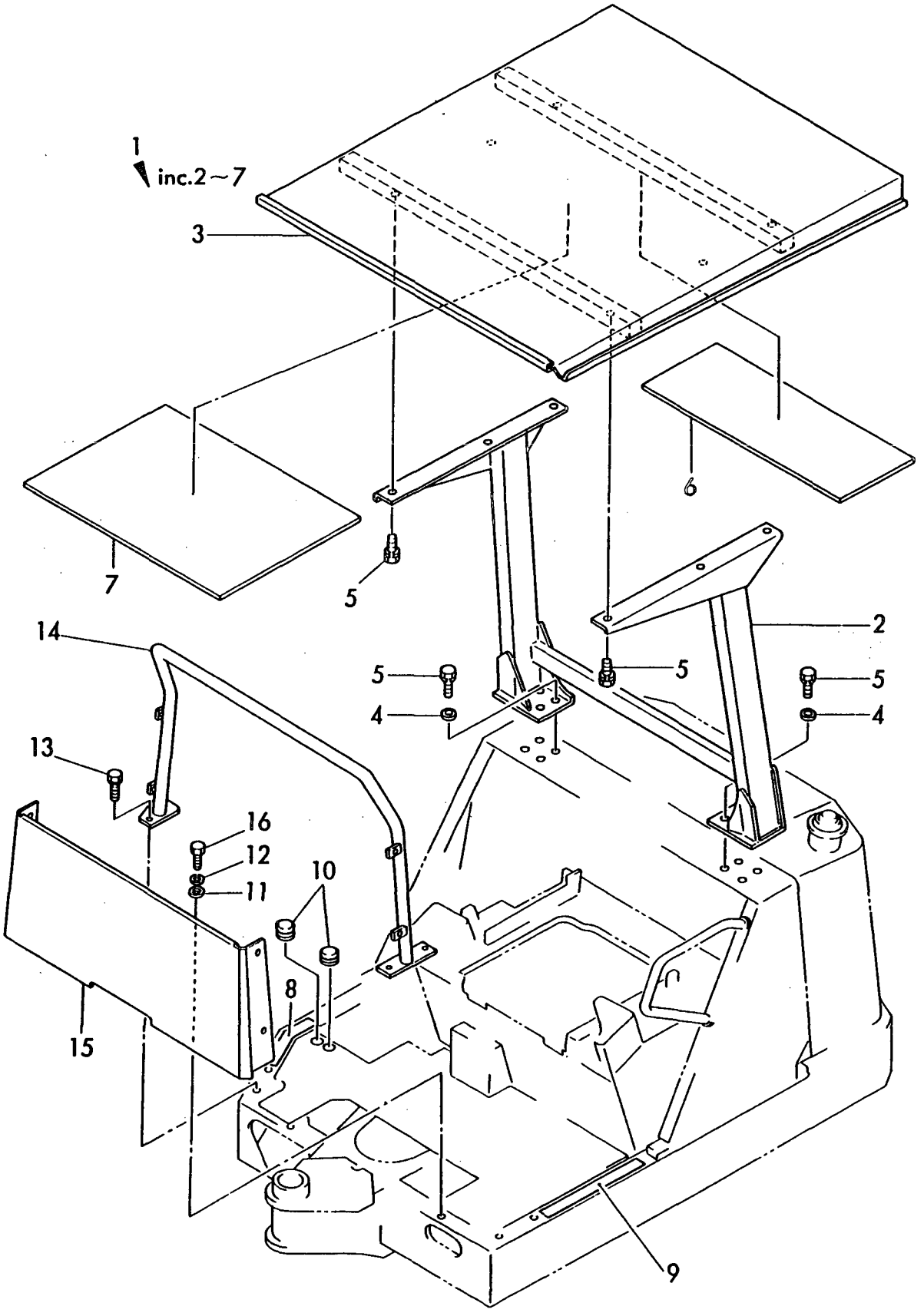

https://truckmanualshub.com/

```
1,1,,172149-72100,,"CYLINDER ASSY,BOOM",1,1,1,1,1,1,,,,,,,,,,,,
2,2,,772149-72110,,"TUBE W/BUSH, BOOM",1,1,1,1,1,1,,,,,,,,,,,,
4,3,,172141-72560,,"BUSH 35 40 A, PIN",1,1,1,1,1,1,,,,,,,,,,,,
5,2,,772149-72200,,"ROD W/BUSH, BOOM",1,1,1,1,1,1,,,,,,,,,,,,
7,3,,172141-72560,,"BUSH 35 40 A, PIN",1,1,1,1,1,1,,,,,,,,,,,,
8,2,,172149-72240,,"HEAD 6035",1,1,1,1,1,1,,,,,,,,,,,,
9,3,,933111-01600,,"BUSH 35 30, ROD",1,1,1,1,1,1,,,,,,,,,,,,
10,2,,172137-72250,,"COLLAR, CUSHION",1,1,1,1,1,1,,,,,,,,,,,,
11,2,,172137-72260,,"RING 41, CUSHION",1,1,1,1,1,1,,,,,,,,,,,,
12,2,,172137-72271,,"COLLAR 41B, CUSHION",1,1,1,1,1,1,,,,,,,,,,,,
13,2,,172137-72431,,"PISTON 60G",1,1,1,1,1,1,,,,,,,,,,,,
14,2,,172137-72462,,"SEAL SET 60B, PISTON",1,1,1,1,1,1,,,,,,,,,,,,
18,2,,172149-72010,,"SEAL SET, HEAD",1,1,1,1,1,1,,,,,,,,,,,,
24,2,,172141-72580,,"NUT M20",1,1,1,1,1,1,,,,,,,,,,,,
25,2,,172141-73090,,"RING 50, SPRING",1,1,1,1,1,1,,,,,,,,,,,,
26,2,,24761-040000,,"NIPPLE B,GREASE",1,1,1,1,1,1,,,,,,,,,,,,
27,2,,933125-59600,,"WASHER 60 B, LOCK",1,1,1,1,1,1,,,,,,,,,,,,
28,1,,172149-72280,,"COVER, BOOM",1,1,1,1,1,1,,,,,,,,,,,,
29,1,,22157-100000,,"WASHER 10",1,1,1,1,1,1,,,,,,,,,,,,
30,1,,22217-100000,,"SPRING WASHER 10",1,1,1,1,1,1,,,,,,,,,,,,
31,1,,26116-100162,,"BOLT M10X 16 PLATED",1,1,1,1,1,1,,,,,,,,,,,,
32,1,,933168-14170,,"SPRING 16",2,2,2,2,2,2,,,,,,,,,,,,
```

Fig. 27 ブームシリンダ(PREVIOUS) BOOM CYLINDER UPTO M/#910500

https://truckmanualshub.com/

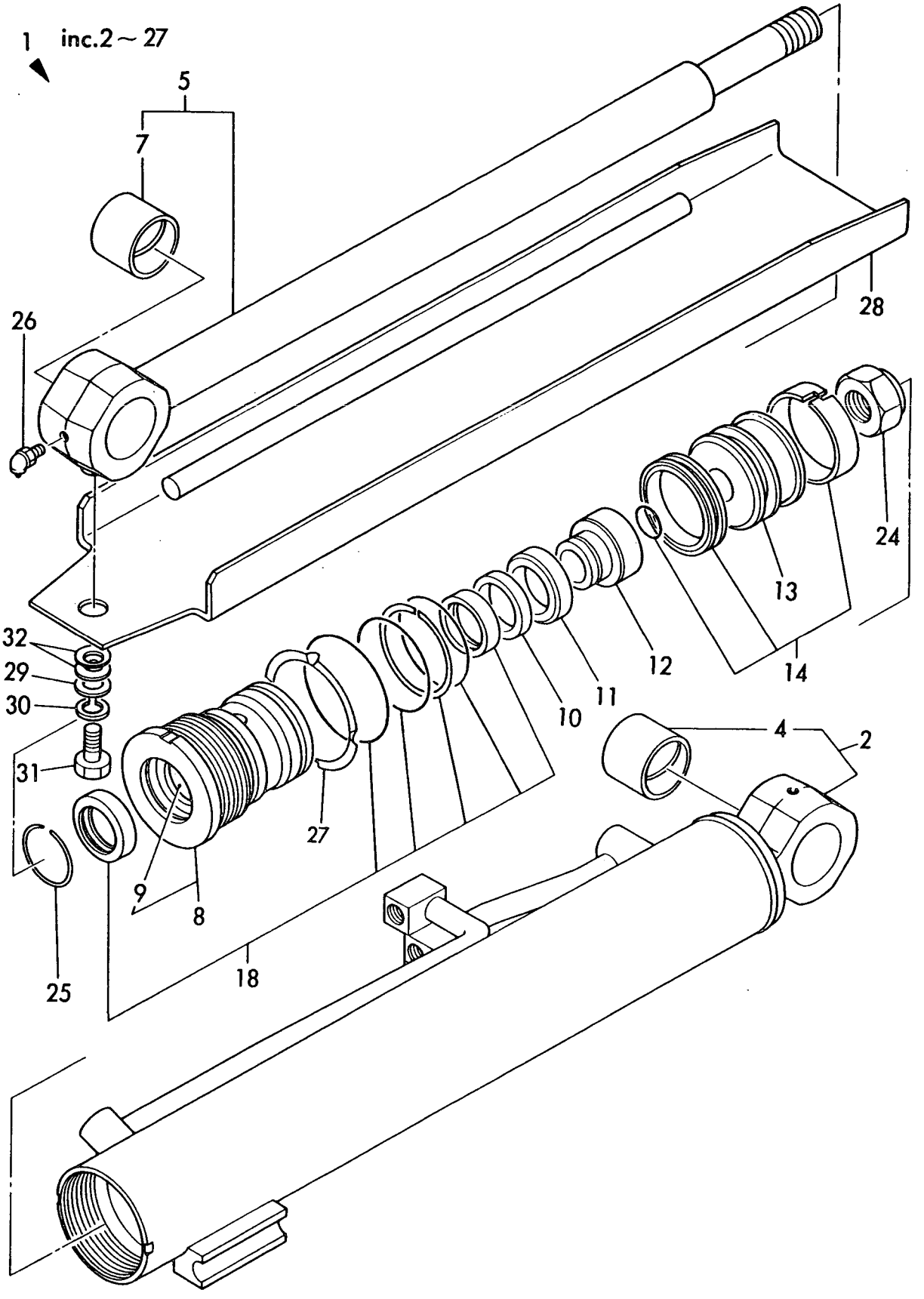

https://truckmanualshub.com/

```
1,1,,172159-72100,,"CYLINDER ASSY, BOOM",1,1,1,1,1,1,,,,,,,,,,,,
2,2,,172159-72110,,"TUBE W/BUSH, BOOM",1,1,1,1,1,1,,,,,,,,,,,,
3,2,,172159-72120,,"ROD ASSY, PISTON",1,1,1,1,1,1,,,,,,,,,,,,
4,2,,172159-72130,,"BEARING ASSY",1,1,1,1,1,1,,,,,,,,,,,,
5,2,,172159-72140,,PISTON,1,1,1,1,1,1,,,,,,,,,,,,
6,2,,172159-72150,,BEARING,1,1,1,1,1,1,,,,,,,,,,,,
7,2,,172159-72160,,"LOCK NUT",1,1,1,1,1,1,,,,,,,,,,,,
8,2,,172159-72170,,OUTERRING,1,1,1,1,1,1,,,,,,,,,,,,
20,2,,24761-040000,,"NIPPLE B,GREASE",1,1,1,1,1,1,,,,,,,,,,,,
21,1,,172159-72800,,"COVER, BOOM",1,1,1,1,1,1,,,,,,,,,,,,
24,1,,172159-72860,,SPRING,2,2,2,2,2,2,,,,,,,,,,,,
25,1,,22157-100000,,"WASHER 10",1,1,1,1,1,1,,,,,,,,,,,,
26,1,,22217-100000,,"SPRING WASHER 10",1,1,1,1,1,1,,,,,,,,,,,,
27,1,,26116-100162,,"BOLT M10X 16 PLATED",1,1,1,1,1,1,,,,,,,,,,,,
```

Fig. 28 ブームシリンダ(NEW) BOOM CYLINDER FROM M/#910501

https://truckmanualshub.com/

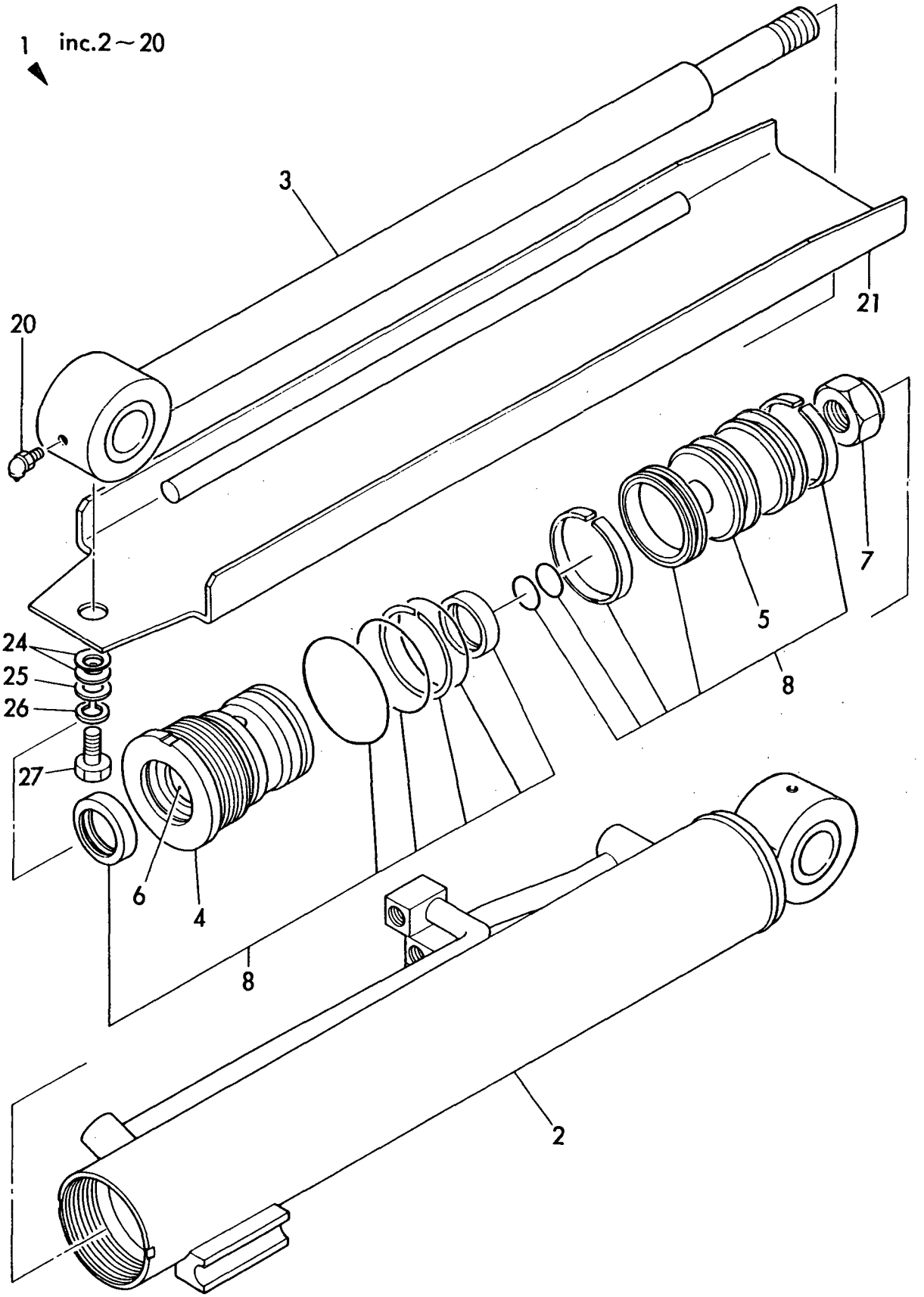

https://truckmanualshub.com/

```
1,1,,172149-72350,,"CYLINDER ASSY, ARM",1,1,1,1,1,1,,,,,,,,,,,,
2,2,,772149-72360,,"TUBE W/BUSH, ARM",1,1,1,1,1,1,,,,,,,,,,,,
4,3,,933125-05400,,"BUSH 30X40, PIN",1,1,1,1,1,1,,,,,,,,,,,,
5,2,,772149-72380,,"ROD W/BUSH, ARM",1,1,1,1,1,1,,,,,,,,,,,,
7,3,,933125-05400,,"BUSH 30X40, PIN",1,1,1,1,1,1,,,,,,,,,,,,
8,2,,172137-72431,,"PISTON 60G",1,1,1,1,1,1,,,,,,,,,,,,
9,2,,172141-72540,,"HEAD 6035, CYLINDER",1,1,1,1,1,1,,,,,,,,,,,,
10,3,,933111-01600,,"BUSH 35 30, ROD",1,1,1,1,1,1,,,,,,,,,,,,
11,2,,172137-72452,,"SEAL SET 60A, PISTON",1,1,1,1,1,1,,,,,,,,,,,,
14,2,,172141-71900,,"SEAL SET, HEAD",1,1,1,1,1,1,,,,,,,,,,,,
19,2,,172141-72580,,"NUT M20",1,1,1,1,1,1,,,,,,,,,,,,
20,2,,172141-73090,,"RING 50, SPRING",1,1,1,1,1,1,,,,,,,,,,,,
21,2,,24761-040000,,"NIPPLE B,GREASE",2,2,2,2,2,2,,,,,,,,,,,,
22,2,,933125-59600,,"WASHER 60 B, LOCK",1,1,1,1,1,1,,,,,,,,,,,,
```

Fig. 29 アームシリンダ(PREVIOUS) ARM CYLINDER UPTO M/#910500

https://truckmanualshub.com/

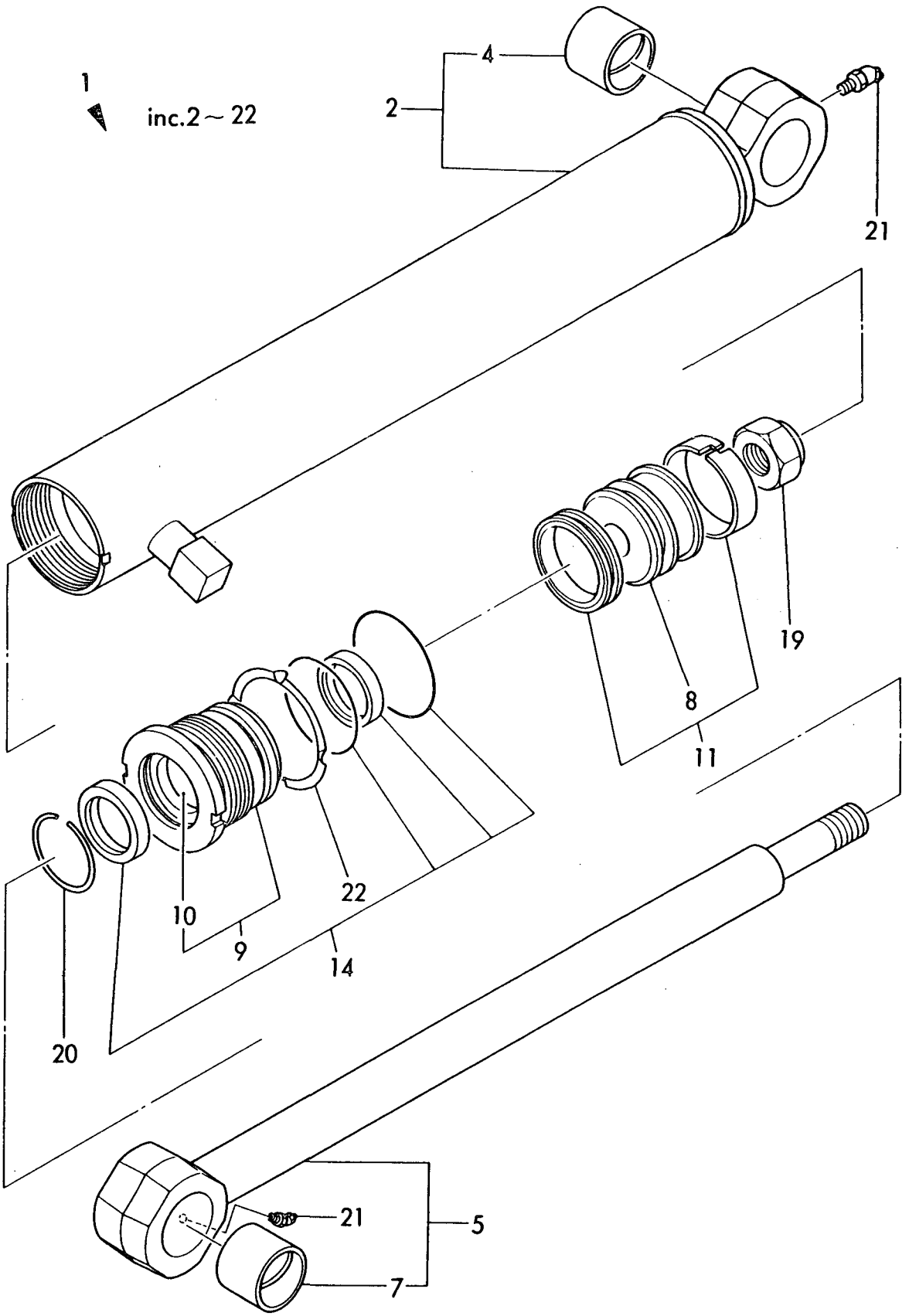

https://truckmanualshub.com/

```
1,1,,172159-72350,,"CYLINDER ASSY, ARM",1,1,1,1,1,1,,,,,,,,,,,,
2,2,,172159-72150,,BEARING,1,1,1,1,1,1,,,,,,,,,,,,
3,2,,172159-72360,,"TUBE W/BUSH, ARM",1,1,1,1,1,1,,,,,,,,,,,,
4,2,,172159-72370,,"PISTON ROD ASSY",1,1,1,1,1,1,,,,,,,,,,,,
5,2,,172159-72380,,BEARING,1,1,1,1,1,1,,,,,,,,,,,,
6,2,,172159-72390,,PISTON,1,1,1,1,1,1,,,,,,,,,,,,
7,2,,172159-72400,,"SEAL KIT, ARM",1,1,1,1,1,1,,,,,,,,,,,,
18,2,,172159-72420,,"LOCK NUT",1,1,1,1,1,1,,,,,,,,,,,,
19,2,,24761-040000,,"NIPPLE B,GREASE",2,2,2,2,2,2,,,,,,,,,,,,
```

Fig. 30 アームシリンダ(NEW) ARM CYLINDER FROM M/#910501

https://truckmanualshub.com/

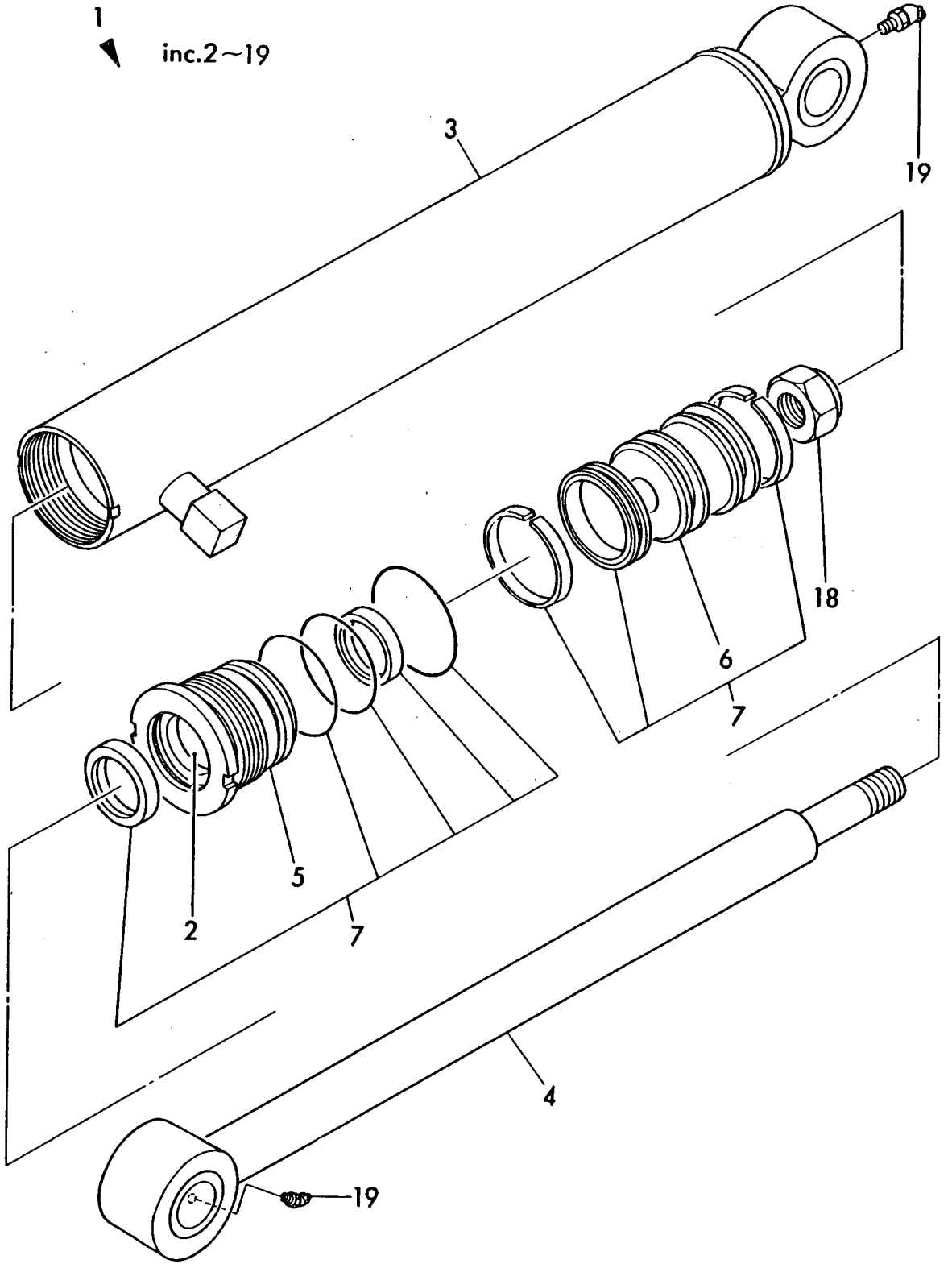

https://truckmanualshub.com/

```
1,1,,933120-28401,,"CYLINDER ASSY,BUCKET",1,1,1,1,1,1,,,,,,,,,,,,
2,2,,172137-72431,,"PISTON 60G",1,1,1,1,1,1,,,,,,,,,,,,
3,2,,172137-72452,,"SEAL SET 60A, PISTON",1,1,1,1,1,1,,,,,,,,,,,,
6,2,,24761-040000,,"NIPPLE B,GREASE",1,1,1,1,1,1,,,,,,,,,,,,
7,2,,933721-28401,,"TUBE W/BUSH, BUCKET",1,1,1,1,1,1,,,,,,,,,,,,
9,3,,933125-05400,,"BUSH 30X40, PIN",1,1,1,1,1,1,,,,,,,,,,,,
10,2,,172141-71900,,"SEAL SET, HEAD",1,1,1,1,1,1,,,,,,,,,,,,
15,2,,933722-28300,,"ROD ASSY",1,1,1,1,1,1,,,,,,,,,,,,
17,3,,933125-05500,,"BUSH 30X40 B, PIN",1,1,1,1,1,1,,,,,,,,,,,,
18,2,,933125-59600,,"WASHER 60 B, LOCK",1,1,1,1,1,1,,,,,,,,,,,,
19,2,,172141-72580,,"NUT M20",1,1,1,1,1,1,,,,,,,,,,,,
20,2,,172141-72540,,"HEAD 6035, CYLINDER",1,1,1,1,1,1,,,,,,,,,,,,
21,3,,933111-01600,,"BUSH 35 30, ROD",1,1,1,1,1,1,,,,,,,,,,,,
22,2,,172141-73090,,"RING 50, SPRING",1,1,1,1,1,1,,,,,,,,,,,,
```

Fig. 31 バケットシリンダ(PREVIOUS) BUCKET CYLINDER UPTO M/#910500

https://truckmanualshub.com/

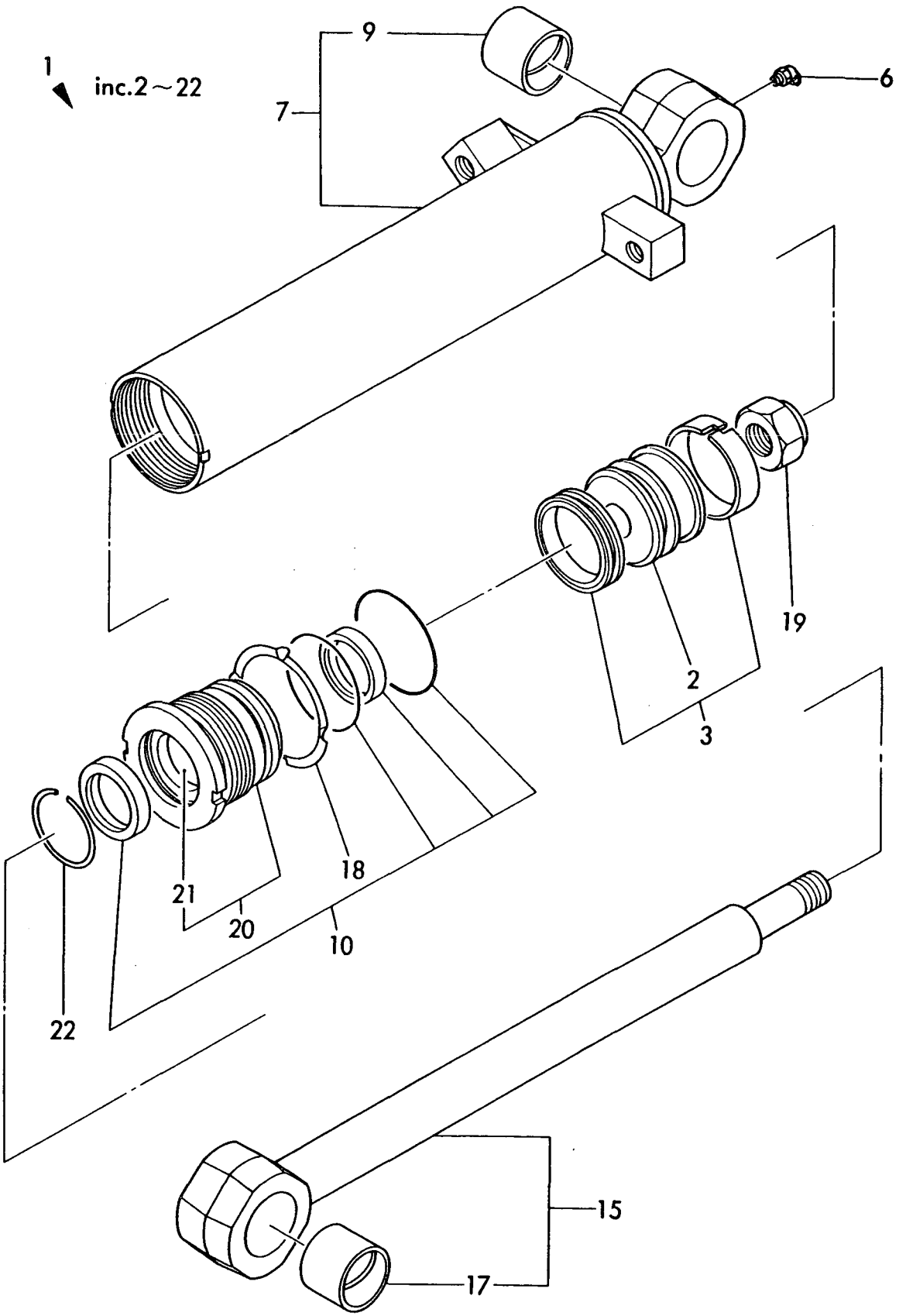

https://truckmanualshub.com/

```
1,1,,172159-72600,,"CYLINDER ASSY,BUCKET",1,1,1,1,1,1,,,,,,,,,,,,
2,2,,172159-72150,,BEARING,1,1,1,1,1,1,,,,,,,,,,,,
3,2,,172159-72380,,BEARING,1,1,1,1,1,1,,,,,,,,,,,,
4,2,,172159-72390,,PISTON,1,1,1,1,1,1,,,,,,,,,,,,
5,2,,172159-72400,,"SEAL KIT, ARM",1,1,1,1,1,1,,,,,,,,,,,,
16,2,,172159-72420,,"LOCK NUT",1,1,1,1,1,1,,,,,,,,,,,,
17,2,,172159-72670,,"TUBE W/BUSH, BUCKET",1,1,1,1,1,1,,,,,,,,,,,,
18,2,,172159-72680,,"PISTON ROD ASSY",1,1,1,1,1,1,,,,,,,,,,,,
19,2,,24761-040000,,"NIPPLE B,GREASE",1,1,1,1,1,1,,,,,,,,,,,,
```

Fig. 32 バケットシリンダ (NEW) BUCKET CYLINDER FROM M/#910501

https://truckmanualshub.com/

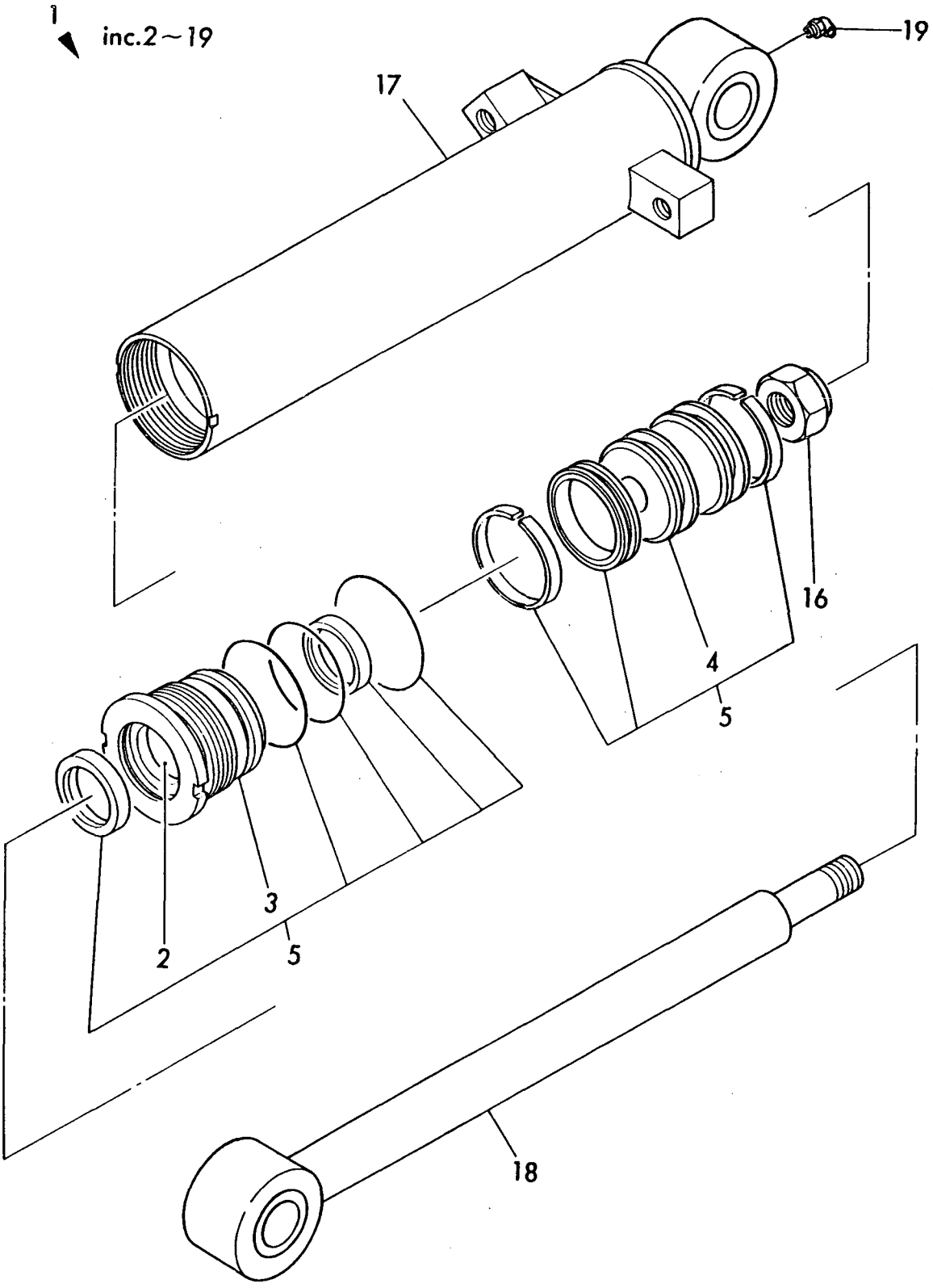

https://truckmanualshub.com/

```
1,1,,172149-72450,,"CYLINDER ASSY, SWING",1,1,1,1,1,1,,,,,,,,,,,,
2,2,,172149-72020,,"SEAL SET, HEAD",1,1,1,1,1,1,,,,,,,,,,,,
8,2,,172141-72250,,"U-NUT M27",1,1,1,1,1,1,,,,,,,,,,,,
9,2,,172141-72420,,"WASHER 70, LOCK",1,1,1,1,1,1,,,,,,,,,,,,
10,2,,772149-72460,,"TUBE W/BUSH, SWING",1,1,1,1,1,1,,,,,,,,,,,,
12,3,,933125-12701,,"BUSH 38 50A",1,1,1,1,1,1,,,,,,,,,,,,
13,2,,772149-72510,,"ROD W/BUSH, SWING",1,1,1,1,1,1,,,,,,,,,,,,
15,3,,933125-12701,,"BUSH 38 50A",1,1,1,1,1,1,,,,,,,,,,,,
16,2,,172149-72530,,GLAND,1,1,1,1,1,1,,,,,,,,,,,,
17,3,,172137-72542,,"PISTON 70",1,1,1,1,1,1,,,,,,,,,,,,
18,2,,172149-72540,,"HEAD 7040",1,1,1,1,1,1,,,,,,,,,,,,
19,3,,933135-14600,,"BUSH 40 30, ROD",1,1,1,1,1,1,,,,,,,,,,,,
20,2,,172149-72000,,"SEAL SET, PISTON",1,1,1,1,1,1,,,,,,,,,,,,
25,2,,172137-72700,,"RING 40A, CUSHION",1,1,1,1,1,1,,,,,,,,,,,,
26,2,,172137-72710,,"COLLAR 40B, CUSHION",1,1,1,1,1,1,Z,,,,,,,,,,,
27,2,,172137-72720,,"COLLAR 40A, CUSHION",1,1,1,1,1,1,,,,,,,,,,,,
28,2,,172137-72730,,"RING 44B, CUSHION",1,1,1,1,1,1,,,,,,,,,,,,
29,2,,172137-72740,,"CUSHION PLUNGER 44 A",1,1,1,1,1,1,,,,,,,,,,,,
30,2,,172142-72810,,"CIRCLIP 22",1,1,1,1,1,1,,,,,,,,,,,,
31,2,,22252-000561,,"CIRCLIP   56",1,1,1,1,1,1,,,,,,,,,,,,
32,2,,24761-020000,,"NIPPLE PT1/8,GREASE",1,1,1,1,1,1,,,,,,,,,,,,
33,2,,933111-26600,,"RING 55, SPRING",1,1,1,1,1,1,,,,,,,,,,,,
34,1,,172149-72570,,"COVER, SWING",1,1,1,1,1,1,,,,,,,,,,,,
35,1,,22157-100000,,"WASHER 10",1,1,1,1,1,1,,,,,,,,,,,,
36,1,,22217-100000,,"SPRING WASHER 10",1,1,1,1,1,1,,,,,,,,,,,,
37,1,,26116-100162,,"BOLT M10X 16 PLATED",1,1,1,1,1,1,,,,,,,,,,,,
38,1,,933168-14170,,"SPRING 16",1,1,1,1,1,1,,,,,,,,,,,,
```

Fig. 33 スイングシリンダ(PREVIOUS) SWING CYLINDER UPTO M/#910500

https://truckmanualshub.com/

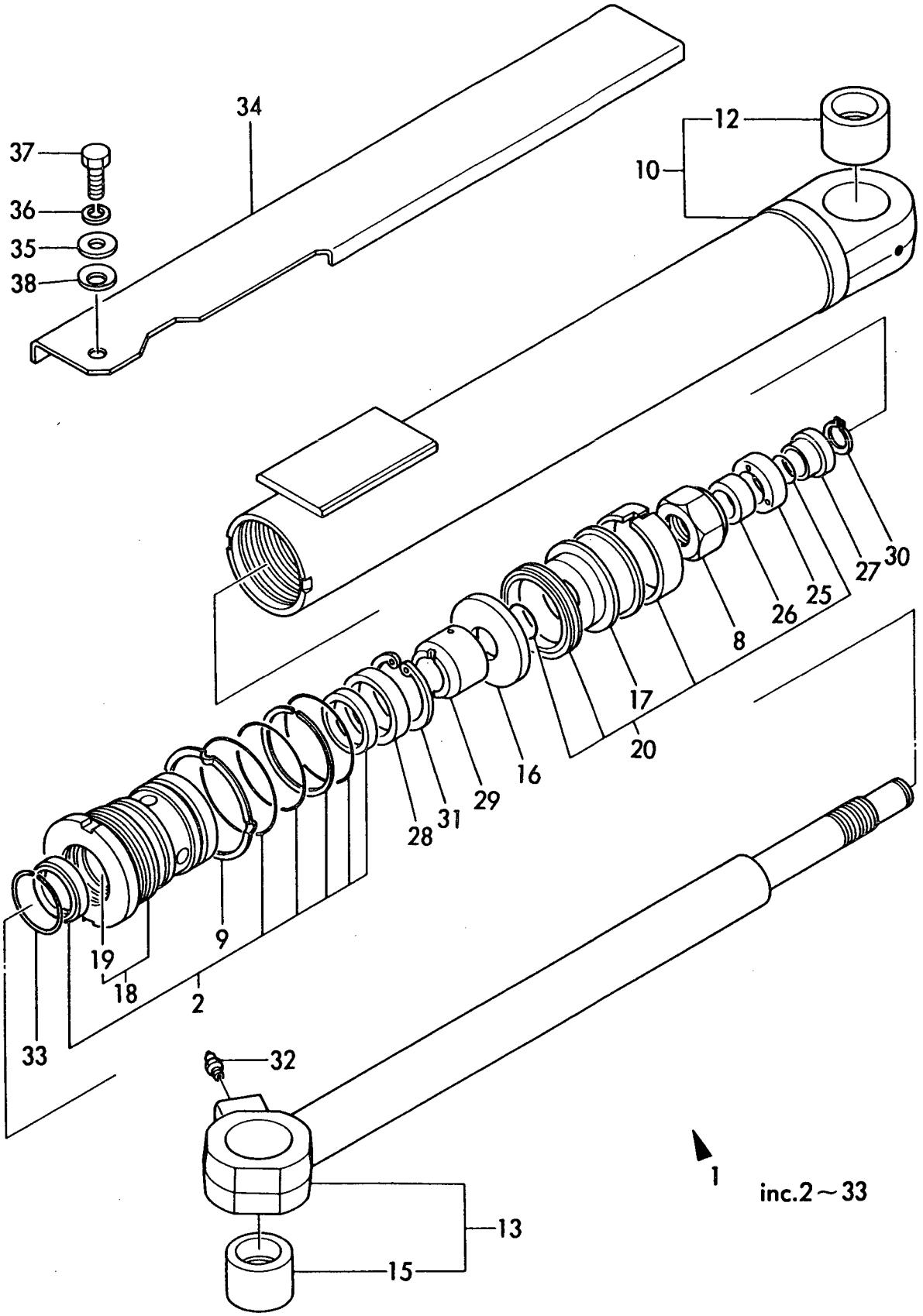

https://truckmanualshub.com/

```
1,1,,172159-72450,,"CYLINDER ASSY, SWING",1,1,1,1,1,1,,,,,,,,,,,,
2,2,,172159-72460,,"TUBE W/BUSH, SWING",1,1,1,1,1,1,,,,,,,,,,,,
3,2,,172159-72470,,"PISTONROD ASSY",1,1,1,1,1,1,,,,,,,,,,,,
4,2,,172159-72480,,"BEARING ASSY",1,1,1,1,1,1,,,,,,,,,,,,
5,2,,172159-72490,,PISTON,1,1,1,1,1,1,,,,,,,,,,,,
6,2,,172159-72510,,"SEAL KIT",1,1,1,1,1,1,,,,,,,,,,,,
19,2,,172159-72650,,BEARING,1,1,1,1,1,1,,,,,,,,,,,,
20,2,,24761-020000,,"NIPPLE PT1/8,GREASE",2,2,2,2,2,2,,,,,,,,,,,,
21,1,,172159-72830,,"COVER, SWING",1,1,1,1,1,1,,,,,,,,,,,,
24,1,,172159-72860,,SPRING,1,1,1,1,1,1,,,,,,,,,,,,
25,1,,22157-100000,,"WASHER 10",1,1,1,1,1,1,,,,,,,,,,,,
26,1,,22217-100000,,"SPRING WASHER 10",1,1,1,1,1,1,,,,,,,,,,,,
27,1,,26116-100162,,"BOLT M10X 16 PLATED",1,1,1,1,1,1,,,,,,,,,,,,
```

Fig. 34 スイングシリンダ(NEW) SWING CYLINDER FROM M/#910501

https://truckmanualshub.com/

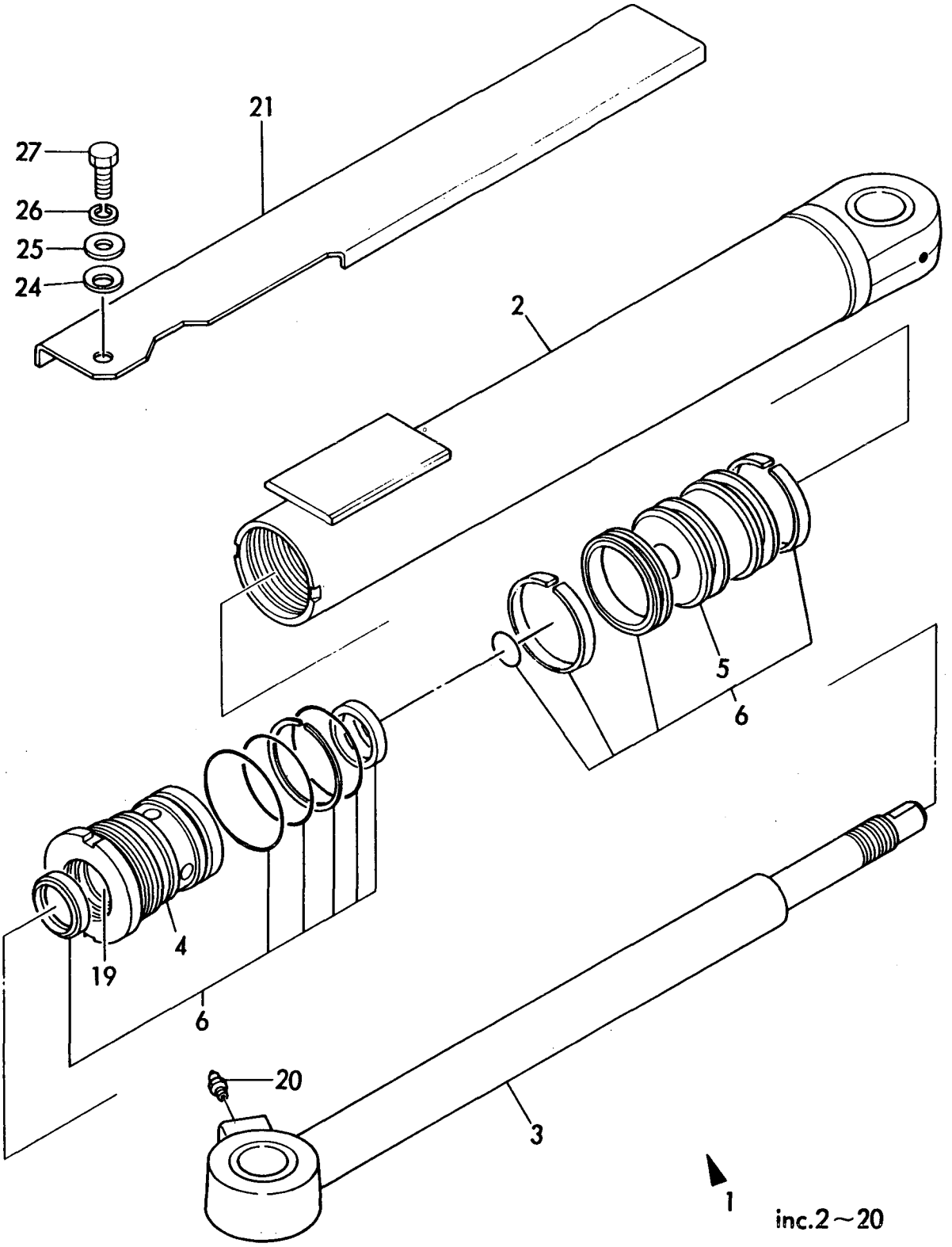

https://truckmanualshub.com/

```
1,1,,933120-28501,,"CYLINDER ASSY, BLADE",1,1,1,1,1,1,,,,,,,,,,,,
2,2,,172137-72431,,"PISTON 60G",1,1,1,1,1,1,,,,,,,,,,,,
3,2,,172137-72452,,"SEAL SET 60A, PISTON",1,1,1,1,1,1,,,,,,,,,,,,
6,2,,172141-71900,,"SEAL SET, HEAD",1,1,1,1,1,1,,,,,,,,,,,,
11,2,,933721-28501,,"TUBE W/BUSH, BLADE",1,1,1,1,1,1,,,,,,,,,,,,
13,3,,933125-05500,,"BUSH 30X40 B, PIN",1,1,1,1,1,1,,,,,,,,,,,,
14,2,,933722-28400,,"ROD W/BUSH, BLADE",1,1,1,1,1,1,,,,,,,,,,,,
16,3,,933125-05500,,"BUSH 30X40 B, PIN",1,1,1,1,1,1,,,,,,,,,,,,
17,2,,933125-59600,,"WASHER 60 B, LOCK",1,1,1,1,1,1,,,,,,,,,,,,
18,2,,172141-72580,,"NUT M20",1,1,1,1,1,1,,,,,,,,,,,,
19,2,,172141-72540,,"HEAD 6035, CYLINDER",1,1,1,1,1,1,,,,,,,,,,,,
20,3,,933111-01600,,"BUSH 35 30, ROD",1,1,1,1,1,1,,,,,,,,,,,,
21,2,,172141-73090,,"RING 50, SPRING",1,1,1,1,1,1,,,,,,,,,,,,
```

Fig. 35 ブレードシリンダ(PREVIOUS) BLADE CYLINDER UPTO M/#910500

https://truckmanualshub.com/

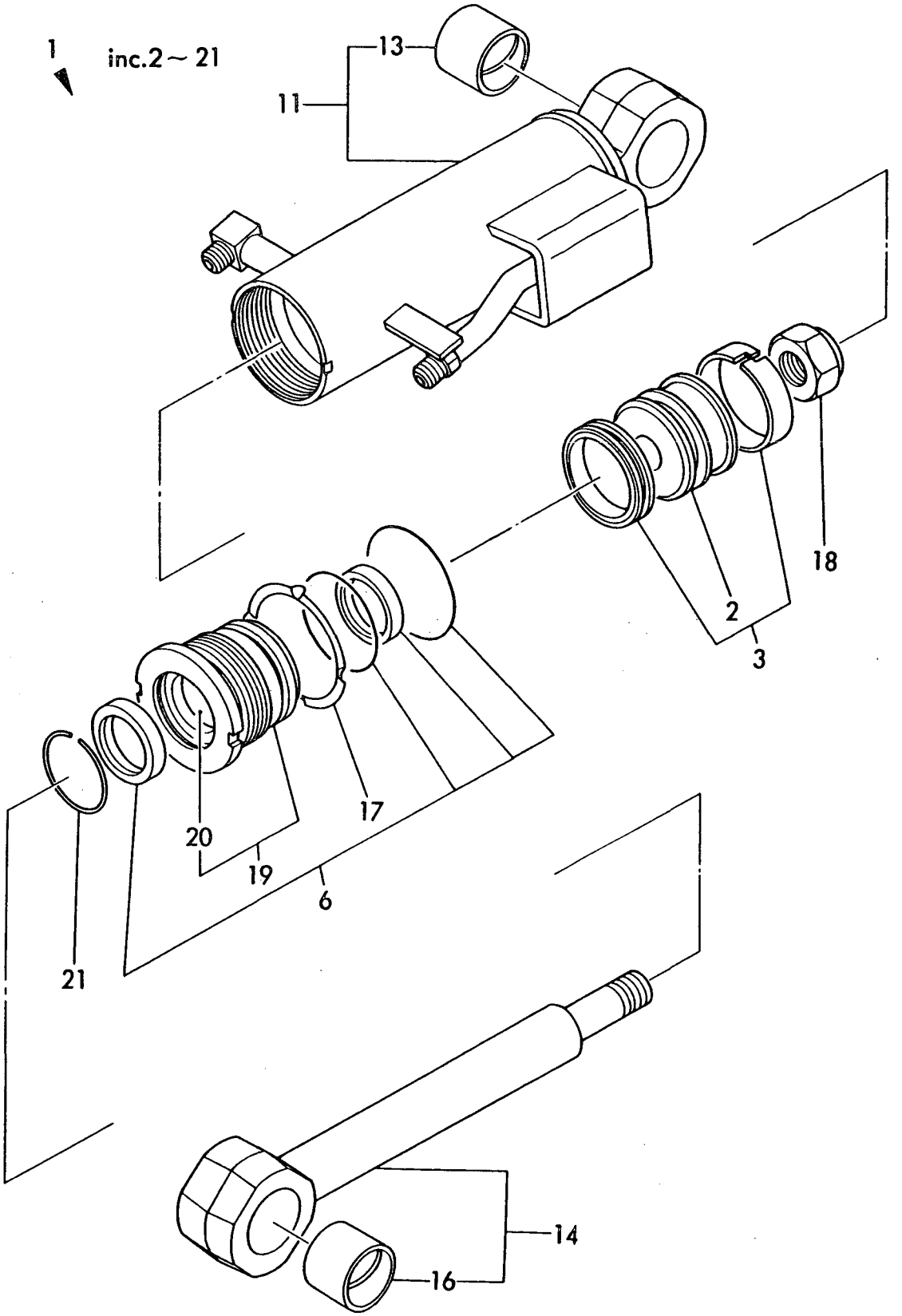

https://truckmanualshub.com/

```
1,1,,172159-72750,,"CYLINDER ASSY, BLADE",1,1,1,1,1,1,,,,,,,,,,,,
2,2,,172159-72150,,BEARING,1,1,1,1,1,1,,,,,,,,,,,,
3,2,,172159-72380,,BEARING,1,1,1,1,1,1,,,,,,,,,,,,
4,2,,172159-72390,,PISTON,1,1,1,1,1,1,,,,,,,,,,,,
5,2,,172159-72400,,"SEAL KIT, ARM",1,1,1,1,1,1,,,,,,,,,,,,
16,2,,172159-72760,,"TUBE W/BUSH, BLADE",1,1,1,1,1,1,,,,,,,,,,,,
17,2,,172159-72770,,"ROD W/BUSH, PISTON",1,1,1,1,1,1,,,,,,,,,,,,
18,2,,172159-72780,,"LOCK NUT",1,1,1,1,1,1,,,,,,,,,,,,
```

Fig. 36 ブレードシリンダ (NEW) BLADE CYLINDER FROM M/#910501

https://truckmanualshub.com/

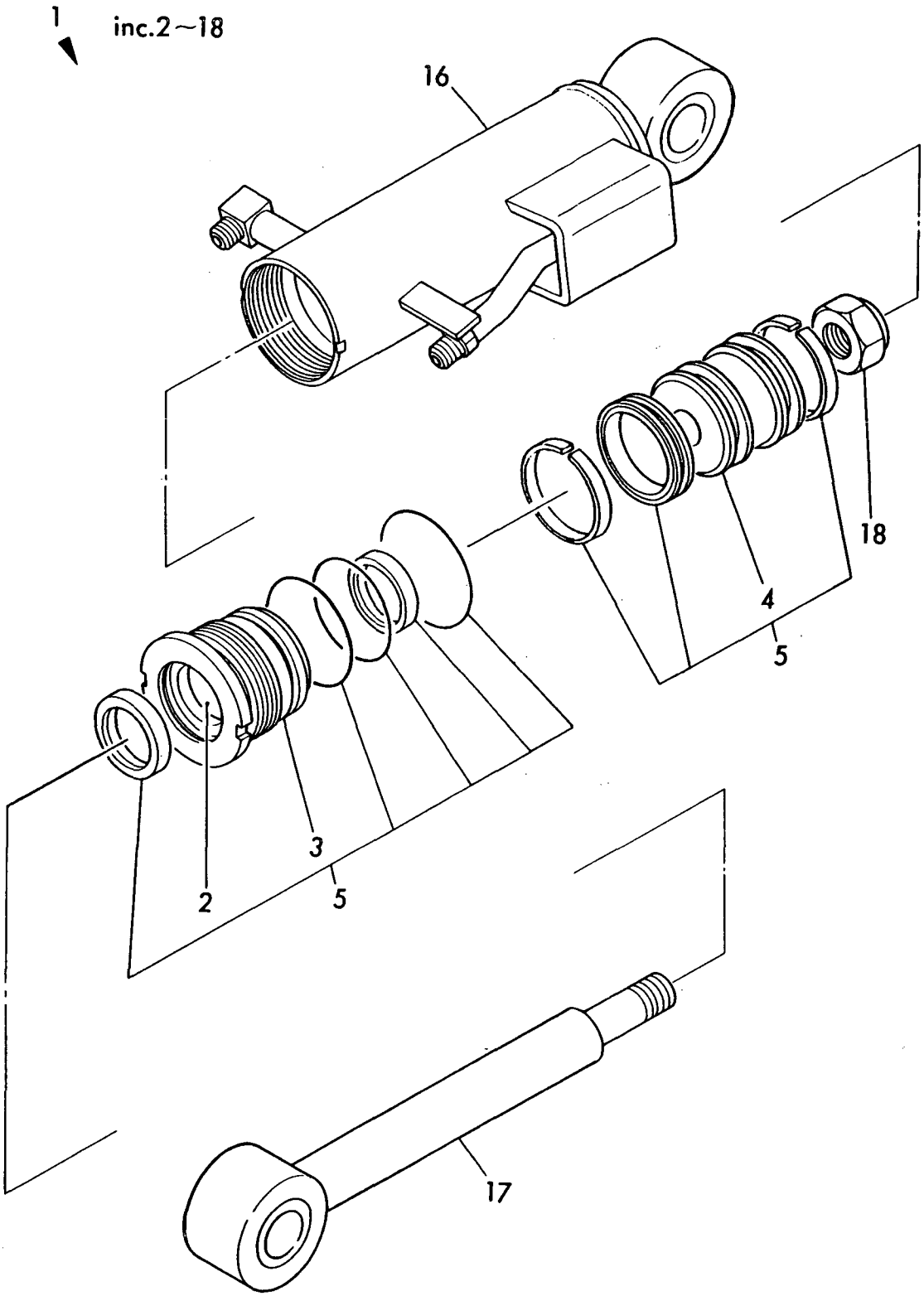

https://truckmanualshub.com/

```
1,1,,172149-71110,,"MOUNT, PUMP",1,1,1,1,1,1,,,,,,,,,,,,
1-1,1,,172159-71110,,"MOUNT, PUMP",1,1,1,1,1,1,R,,72159AMA-3,M920001,72159AMA-
3,M920001,72159AMA-3,M920001,72159AMA-3,M920001,72159AMA-3,M920001,72159AMA-
3,M920001,I
2,1,,22137-100000,,"WASHER
10,POLISHED",2,2,2,2,2,2,Z,,72159010,*1990.03,72159010,*1990.03,72159010,*1990.0
3,72159010,*1990.03,72159010,*1990.03,72159010,*1990.03
3,1,,26013-100302,,"BOLT M10X 30",4,4,4,4,4,4,,,,,,,,,,,,
3-1,1,,26013-100302,,"BOLT M10X
30",6,6,6,6,6,6,K,1,72159010,*1990.03,72159010,*1990.03,72159010,*1990.03,721590
10,*1990.03,72159010,*1990.03,72159010,*1990.03
4,1,,26013-100352,,"BOLT M10X 35",2,2,2,2,2,2,,1,,,,,,,,,,
5,1,,172137-71210,,"JOINT, PUMP",1,1,1,1,1,1,,,,,,,,,,,,
6,1,,172137-71220,,COUPLING,1,1,1,1,1,1,,,,,,,,,,,,
7,1,,22351-040008,,"SPRING PIN 4X 8",6,6,6,6,6,6,,,,,,,,,,,,
8,1,,26450-100352,,"BOLT M10X 35",6,6,6,6,6,6,,1,,,,,,,,,,
9,1,,172122-71130,,"BOLT M10X 30",2,2,2,2,2,2,,,,,,,,,,,,
9-1,1,,172159-71130,,"BOLT M10X 30",2,2,2,2,2,2,R,,72159AMA-3,M920001,72159AMA-
3,M920001,72159AMA-3,M920001,72159AMA-3,M920001,72159AMA-3,M920001,72159AMA-
3,M920001,I
10,1,,172149-73110,,"PUMP ASSY, HYD. OIL",1,1,1,1,1,1,,,,,,,,,,,,
11,2,,172149-73120,,"REAR KIT",1,1,1,1,1,1,,,,,,,,,,,,
12,2,,172137-73130,,"PUMP ASSY, CENTER",1,1,1,1,1,1,,,,,,,,,,,,
13,2,,172149-73130,,"FRONT KIT",1,1,1,1,1,1,,,,,,,,,,,,
14,2,,172122-73140,,COVER,1,1,1,1,1,1,,,,,,,,,,,,
15,2,,172149-73140,,BOLT,4,4,4,4,4,4,,,,,,,,,,,,
16,2,,172122-73150,,"PLATE, CENTER",2,2,2,2,2,2,,,,,,,,,,,,
17,2,,172122-73170,,"COUPLING, SPLINE",2,2,2,2,2,2,,,,,,,,,,,,
18,2,,172137-73170,,"MOUNTING FLANGE",1,1,1,1,1,1,,,,,,,,,,,,
19,2,,172122-73200,,"SEAL SET",1,1,1,1,1,1,,,,,,,,,,,,
20,2,,22217-100000,,"SPRING WASHER 10",4,4,4,4,4,4,,,,,,,,,,,,
```

Fig. 37 ポンプ＆ジクツギテ HYD.OIL PUMP & JOINT

https://truckmanualshub.com/

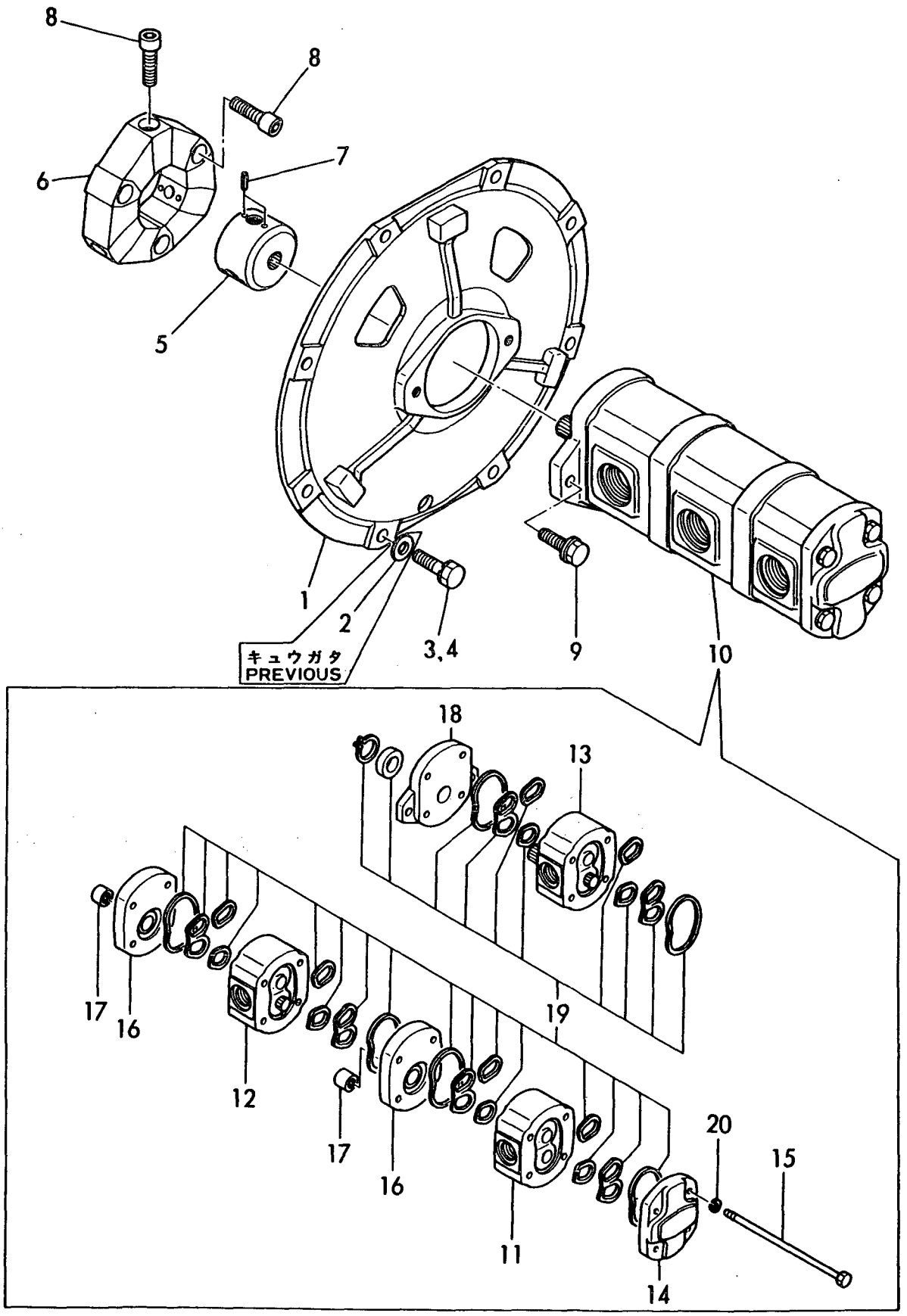

https://truckmanualshub.com/

```
1,1,,172149-73310,,"MOTOR ASSY, TURNING",1,1,1,1,1,1,,,,,,,,,,,,
2,2,,172149-73320,,"MOTOR ASSY, TURNING",1,1,1,1,1,1,,,,,,,,,,,,
3,3,,172149-73440,,"PINION(SUB) ASSY",1,1,1,1,1,1,,,,,,,,,,,,
4,4,,172149-73330,,"HOUSING, BEARING",1,1,1,1,1,1,,,,,,,,,,,,
5,4,,172149-73340,,"SHAFT ASSY, PINION",1,1,1,1,1,1,,,,,,,,,,,,
6,4,,172149-73350,,"SPACER, BEARING",1,1,1,1,1,1,,,,,,,,,,,,
7,4,,172149-73460,,"SEAL KIT, PINION(SUB",1,1,1,1,1,1,,,,,,,,,,,,
8,4,,172141-77030,,"BEARING, ROLLER",1,1,1,1,1,1,,,,,,,,,,,,
9,4,,172141-77040,,BEARING,1,1,1,1,1,1,,,,,,,,,,,,
10,4,,172141-77050,,"RING, RETAINING",1,1,1,1,1,1,,,,,,,,,,,,
11,4,,172141-77110,,BOLT,4,4,4,4,4,4,,,,,,,,,,,,
12,4,,22217-120000,,"WASHER 12,SPRING",4,4,4,4,4,4,,,,,,,,,,,,
13,4,,22252-000900,,"CIRCLIP   90",1,1,1,1,1,1,,,,,,,,,,,,
14,3,,172149-73450,,"MOTOR(SUB) ASSY",1,1,1,1,1,1,,,,,,,,,,,,
15,4,,172137-70520,,PLUG,2,2,2,2,2,2,,,,,,,,,,,,
16,4,,172137-70530,,BALL,2,2,2,2,2,2,,,,,,,,,,,,
17,4,,172137-70600,,VALVE,1,1,1,1,1,1,,,,,,,,,,,,
18,4,,172148-73360,,DRIVE,1,1,1,1,1,1,,,,,,,,,,,,
19,4,,172149-73360,,ROLLER,1,1,1,1,1,1,,,,,,,,,,,,
20,4,,172149-73380,,"HOUSING, VALVE",1,1,1,1,1,1,,,,,,,,,,,,
21,4,,172149-73390,,PLUG,1,1,1,1,1,1,,,,,,,,,,,,
22,4,,172149-73400,,BOLT,4,4,4,4,4,4,,,,,,,,,,,,
23,4,,172149-73410,,FLANGEMOUTING,1,1,1,1,1,1,,,,,,,,,,,,
24,4,,172149-73470,,"SEAL KIT, MOTOR(SUB",1,1,1,1,1,1,,,,,,,,,,,,
25,4,,172141-77160,,"PLATE, VALVE",1,1,1,1,1,1,,,,,,,,,,,,
26,4,,172137-77190,,PLATE,1,1,1,1,1,1,,,,,,,,,,,,
27,4,,172137-77200,,SPRING,2,2,2,2,2,2,,,,,,,,,,,,
28,4,,172137-77220,,"TUBE, 3RD",1,1,1,1,1,1,,,,,,,,,,,,
29,4,,172148-77260,,"DRIVE, VALVE",1,1,1,1,1,1,,,,,,,,,,,,
30,2,,172149-73500,,"VALVE, BRAKE",1,1,1,1,1,1,,,,,,,,,,,,
31,3,,172149-73620,,CONNECTOR,2,2,2,2,2,2,,,,,,,,,,,,
32,3,,172149-73630,,BUSHING,2,2,2,2,2,2,,,,,,,,,,,,
33,3,,172149-73650,,"SEAL KIT, BRAKE",1,1,1,1,1,1,,,,,,,,,,,,
34,1,,26013-120402,,"BOLT M12X 40",4,4,4,4,4,4,,,,,,,,,,,,
```

Fig. 38 センカイモータ TURNING MOTOR

https://truckmanualshub.com/

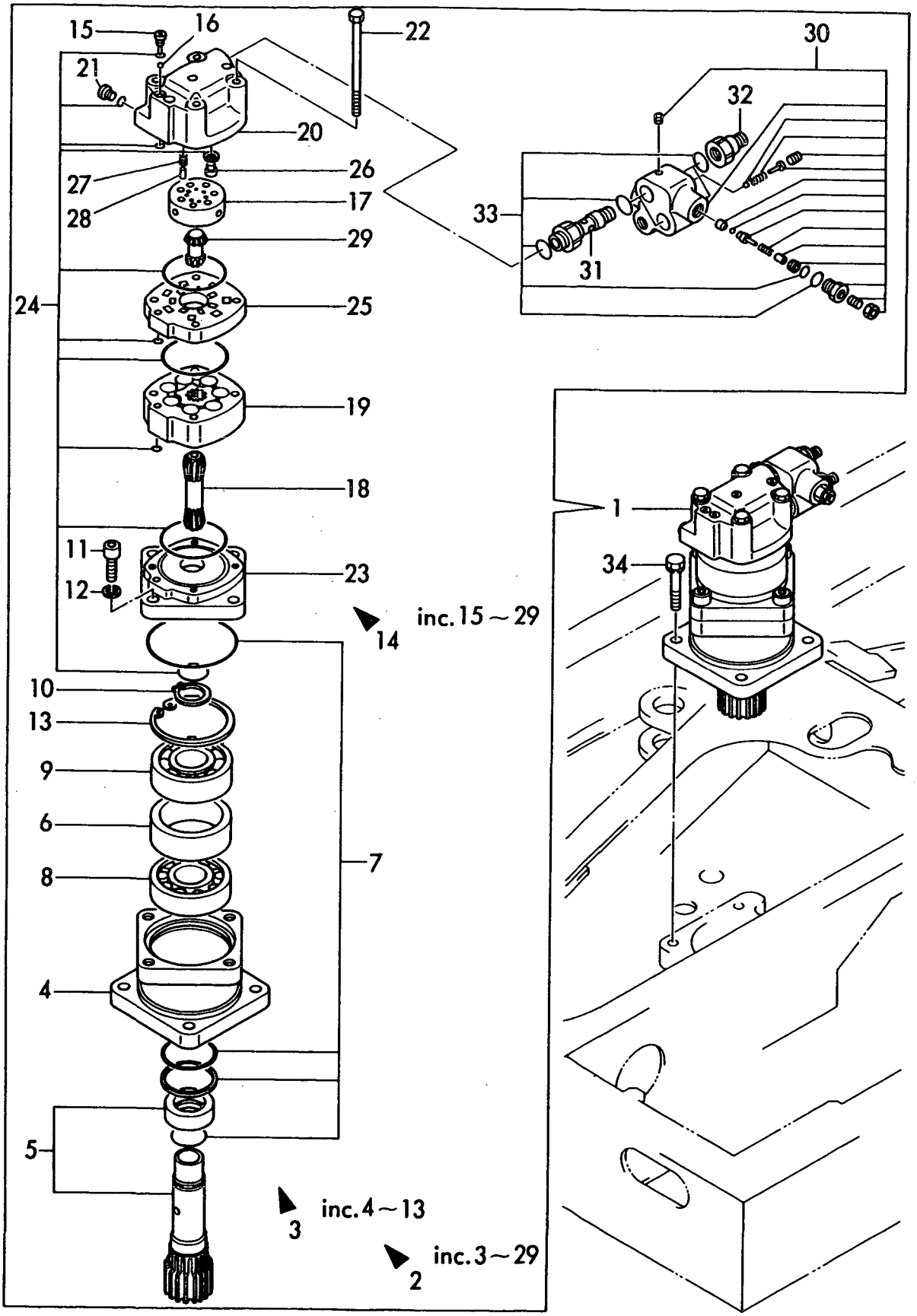

https://truckmanualshub.com/

```
1,1,,172137-73351,,"MOTOR ASSY, DRIVE",2,2,2,2,2,2,,,,,,,,,,,,
2,2,,172137-73361,,"MOTOR ASSY",2,2,2,2,2,2,,,,,,,,,,,,
3,3,,172137-70631,,"REDUCTION GEAR ASSY",2,2,2,2,2,2,,,,,,,,,,,,
4,4,,172137-70461,,"SEAL KIT, REDUCTION",2,2,2,2,2,2,,,,,,,,,,,,
5,4,,172137-70471,,SPACER,2,2,2,2,2,2,,,,,,,,,,,,
6,4,,172137-70651,,"GEAR, SUN",2,2,2,2,2,2,,,,,,,,,,,,
7,4,,172137-70661,,BUSH,2,2,2,2,2,2,,,,,,,,,,,,
8,4,,172137-70681,,COVER,2,2,2,2,2,2,,,,,,,,,,,,
9,4,,172137-70741,,HOUSING,2,2,2,2,2,2,,,,,,,,,,,,
10,4,,172137-70770,,"BEARING, DRIVE MOTOR",4,4,4,4,4,4,,,,,,,,,,,,
11,4,,172137-70781,,"SEAL W/PLATE KIT",2,2,2,2,2,2,,,,,,,,,,,,
12,4,,172137-70791,,PIN,2,2,2,2,2,2,,,,,,,,,,,,
13,4,,172137-70811,,FLANGE,2,2,2,2,2,2,,,,,,,,,,,,
14,4,,172137-70820,,WASHER,2,2,2,2,2,2,,,,,,,,,,,,
15,4,,172137-70830,,WASHER,2,2,2,2,2,2,,,,,,,,,,,,
16,4,,172137-70840,,"CARRIER KIT",2,2,2,2,2,2,,,,,,,,,,,,
17,4,,22242-001100,,"CIRCLIP  110",2,2,2,2,2,2,,,,,,,,,,,,
18,4,,23871-030000,,"PLUG PT3/8,SCREW",4,4,4,4,4,4,,,,,,,,,,,,
19,4,,26450-060162,,"BOLT M 6X 16",18,18,18,18,18,18,,,,,,,,,,,,
20,3,,172137-70641,,"MOTOR SUB ASSY",2,2,2,2,2,2,,,,,,,,,,,,
21,4,,172137-70451,,"SEAL KIT, MOTOR",2,2,2,2,2,2,,,,,,,,,,,,
22,4,,172137-70480,,BOLT,8,8,8,8,8,8,,,,,,,,,,,,
23,4,,172137-70490,,PLUG,2,2,2,2,2,2,,,,,,,,,,,,
24,4,,172137-70500,,PLUG,2,2,2,2,2,2,,,,,,,,,,,,
25,4,,172137-70510,,"HOUSING, VALVE",2,2,2,2,2,2,,,,,,,,,,,,
26,4,,172137-70520,,PLUG,4,4,4,4,4,4,,,,,,,,,,,,
27,4,,172137-70530,,BALL,4,4,4,4,4,4,,,,,,,,,,,,
28,4,,172137-70540,,"DRIVE, VALVE",2,2,2,2,2,2,,,,,,,,,,,,
29,4,,172137-70551,,ROLLER,2,2,2,2,2,2,,,,,,,,,,,,
30,4,,172137-70561,,DRIVE,2,2,2,2,2,2,,,,,,,,,,,,
31,4,,172137-70570,,PIN,4,4,4,4,4,4,,,,,,,,,,,,
32,4,,172137-70580,,SPRING,4,4,4,4,4,4,,,,,,,,,,,,
33,4,,172137-70590,,PLATE,2,2,2,2,2,2,,,,,,,,,,,,
34,4,,172137-70600,,VALVE,2,2,2,2,2,2,,,,,,,,,,,,
35,4,,172137-70610,,"PLATE, VALVE",2,2,2,2,2,2,,,,,,,,,,,,
36,4,,172137-70620,,"PLATE, SPACER",2,2,2,2,2,2,,,,,,,,,,,,
37,2,,172137-73370,,"VALVE,COUNTER BALAN.",2,2,2,2,2,2,,,,,,,,,,,,
38,3,,172137-70850,,"SEAL SET",2,2,2,2,2,2,,,,,,,,,,,,
39,1,,26013-100252,,"BOLT W/WASHER M10X25",16,16,16,16,16,16,,,,,,,,,,,,
```

Fig. 39 ソウコウモータ TRAVEL MOTOR

https://truckmanualshub.com/

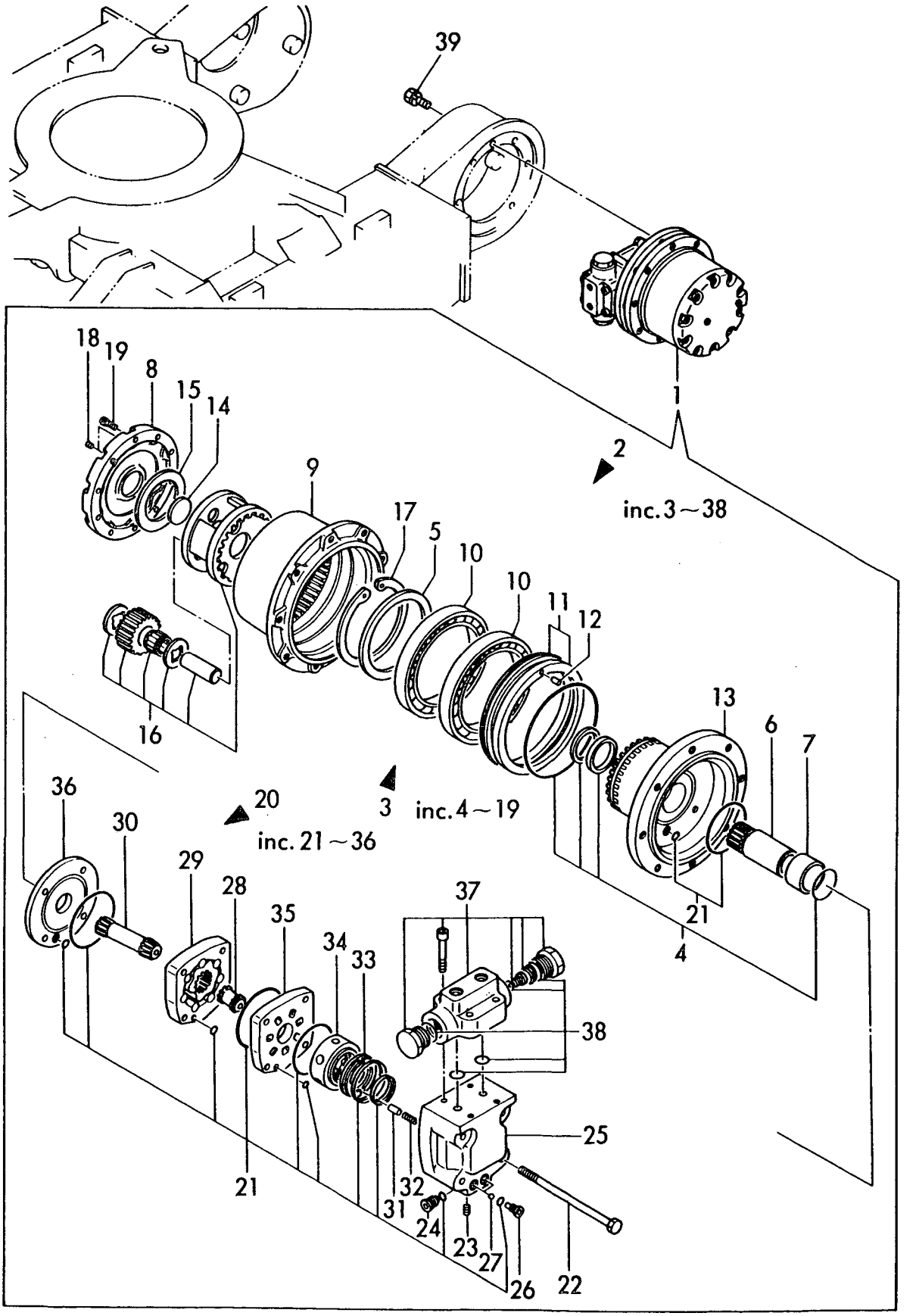

https://truckmanualshub.com/

```
1,1,,172131-73800,,"SWIVEL JOINT ASSY",1,1,1,1,1,1,,,,,,,,,,,,
2,2,,194630-31910,,"LINER 22.5X40X2",1,1,1,1,1,1,,,,,,,,,,,,
3,2,,172142-73800,,"O-RING 55.76X5.7",8,8,8,8,8,8,,,,,,,,,,,,
4,2,,172131-73810,,"SHAFT,SWIVEL",1,1,1,1,1,1,,,,,,,,,,,,
5,2,,172137-73810,,"HUB, SWIVEL JOINT",1,1,1,1,1,1,,,,,,,,,,,,
6,2,,172131-73830,,"FLANGE,SWIVEL",1,1,1,1,1,1,,,,,,,,,,,,
7,2,,172137-73860,,"SPACER, SWIVEL",1,1,1,1,1,1,,,,,,,,,,,,
8,2,,22242-000451,,"CIRCLIP   45",1,1,1,1,1,1,,,,,,,,,,,,
9,2,,23871-020000,,"PLUG PT1/4,SCREW",6,6,6,6,6,6,,,,,,,,,,,,
10,2,,24311-000750,,"O-RING 1A P-75.0",1,1,1,1,1,1,,,,,,,,,,,,
11,2,,24321-000700,,"O-RING 1A G-70.0",1,1,1,1,1,1,,,,,,,,,,,,
12,2,,26013-100252,,"BOLT W/WASHER M10X25",3,3,3,3,3,3,,,,,,,,,,,,
13,1,,172149-76100,,BUSH,1,1,1,1,1,1,,,,,,,,,,,,
14,1,,26013-100252,,"BOLT W/WASHER M10X25",4,4,4,4,4,4,,,,,,,,,,,,
```

Fig. 40 スイベルジョイント SWIVEL JOINT

https://truckmanualshub.com/

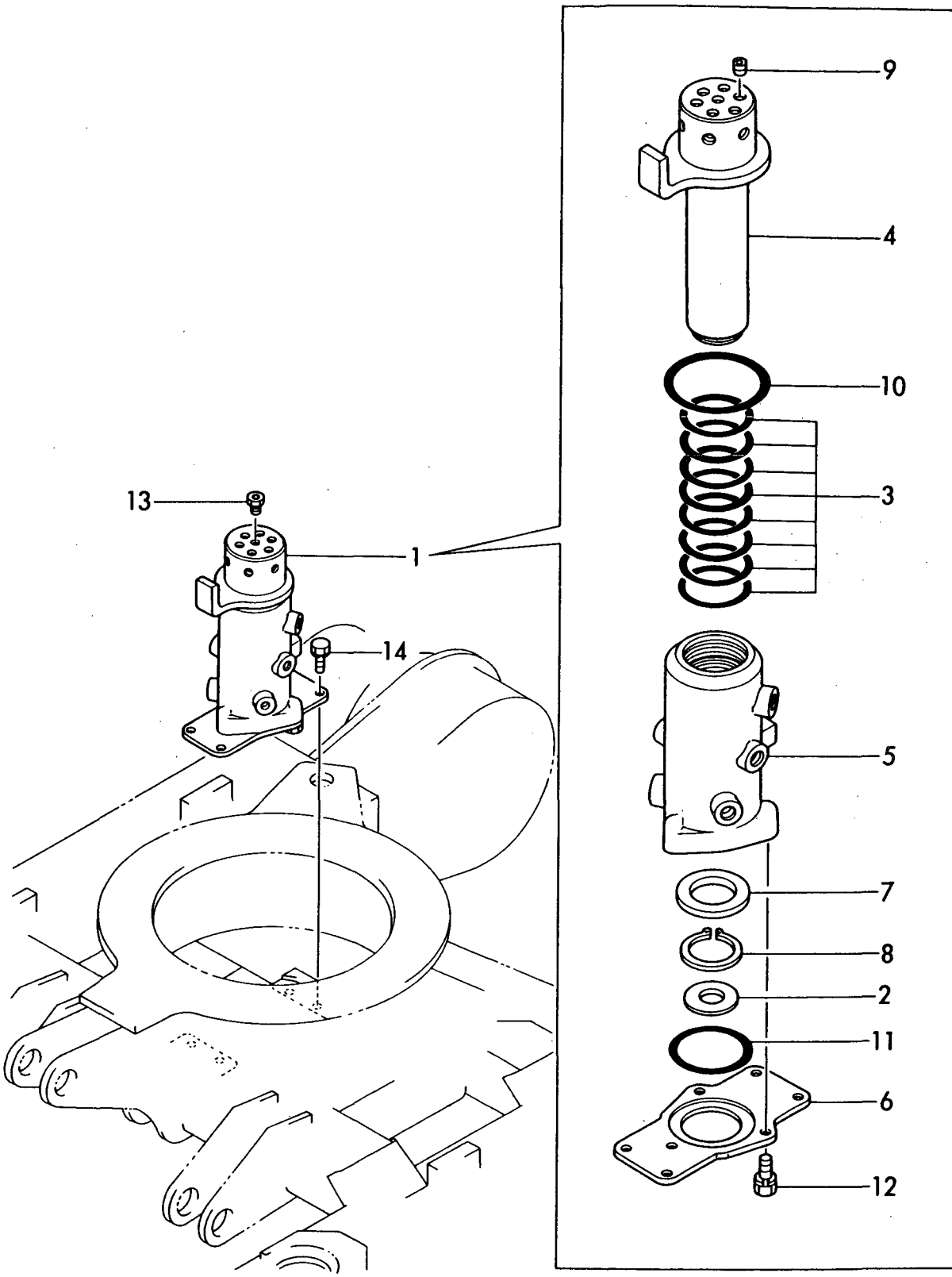

https://truckmanualshub.com/

```
1,1,,172149-74100,,"VALVE ASSY, CONTROL",1,1,1,1,1,1,,1,,,,,,,,,,
2,2,,172149-74150,,"SECTION ASSY, DRIVE",2,2,2,2,2,2,,,,,,,,,,,
4,3,,24325-000550,,"O-RING 1B G-55.0",2,2,2,2,2,2,,,,,,,,,,,
5,3,,172137-74440,,"SEAL, OIL",4,4,4,4,4,4,,,,,,,,,,,
6,3,,172137-74450,,"PLATE,SEAL",4,4,4,4,4,4,,,,,,,,,,,
7,3,,172137-74460,,"SEAT, SPRING",4,4,4,4,4,4,,,,,,,,,,,
8,3,,172137-74420,,"SPRING (A), RETURN",2,2,2,2,2,2,,,,,,,,,,,
9,3,,172137-74470,,SPACER,2,2,2,2,2,2,,,,,,,,,,,
10,3,,172137-74480,,"BOLT, SPOOL",2,2,2,2,2,2,,,,,,,,,,,
11,3,,172137-74490,,CAP,2,2,2,2,2,2,,,,,,,,,,,
12,3,,172137-74500,,"BOLT, PLATE",4,4,4,4,4,4,,,,,,,,,,,
13,3,,172137-74510,,"BOLT, CAP",4,4,4,4,4,4,,,,,,,,,,,
14,2,,172149-74360,,"SECTION ASY, TURNING",1,1,1,1,1,1,,,,,,,,,,,
16,3,,24325-000550,,"O-RING 1B G-55.0",1,1,1,1,1,1,,,,,,,,,,,
17,3,,172137-74440,,"SEAL, OIL",2,2,2,2,2,2,,,,,,,,,,,
18,3,,172137-74450,,"PLATE,SEAL",2,2,2,2,2,2,,,,,,,,,,,
19,3,,172137-74460,,"SEAT, SPRING",2,2,2,2,2,2,,,,,,,,,,,
20,3,,172137-74420,,"SPRING (A), RETURN",1,1,1,1,1,1,,,,,,,,,,,
21,3,,172137-74470,,SPACER,1,1,1,1,1,1,,,,,,,,,,,
22,3,,172137-74480,,"BOLT, SPOOL",1,1,1,1,1,1,,,,,,,,,,,
23,3,,172137-74490,,CAP,1,1,1,1,1,1,,,,,,,,,,,
24,3,,172137-74500,,"BOLT, PLATE",2,2,2,2,2,2,,,,,,,,,,,
25,3,,172137-74510,,"BOLT, CAP",2,2,2,2,2,2,,,,,,,,,,,
26,3,,172137-74520,,"VALVE, CHECK",1,1,1,1,1,1,,,,,,,,,,,
27,3,,172137-74530,,"GUIDE, VALVE",1,1,1,1,1,1,,,,,,,,,,,
28,3,,172137-74540,,"SPRING, VALVE",1,1,1,1,1,1,,,,,,,,,,,
```

Fig. 41 コントロールバルブ(ソウコウ、センカイ) CONTROL VALVE(TRAVEL、TURNING)

https://truckmanualshub.com/

コントロールバルブ ASSY
CONTROL VALVE ASSY
(172149-74100)
Fig. 41 Ref. No. 1
INC Fig. 41 Ref. No. 2～28
Fig. 42 Ref. No. 1～36
Fig. 43 Ref. No. 1～39
Fig. 44 Ref. No. 1～35
Fig. 45 Ref. No. 1～39

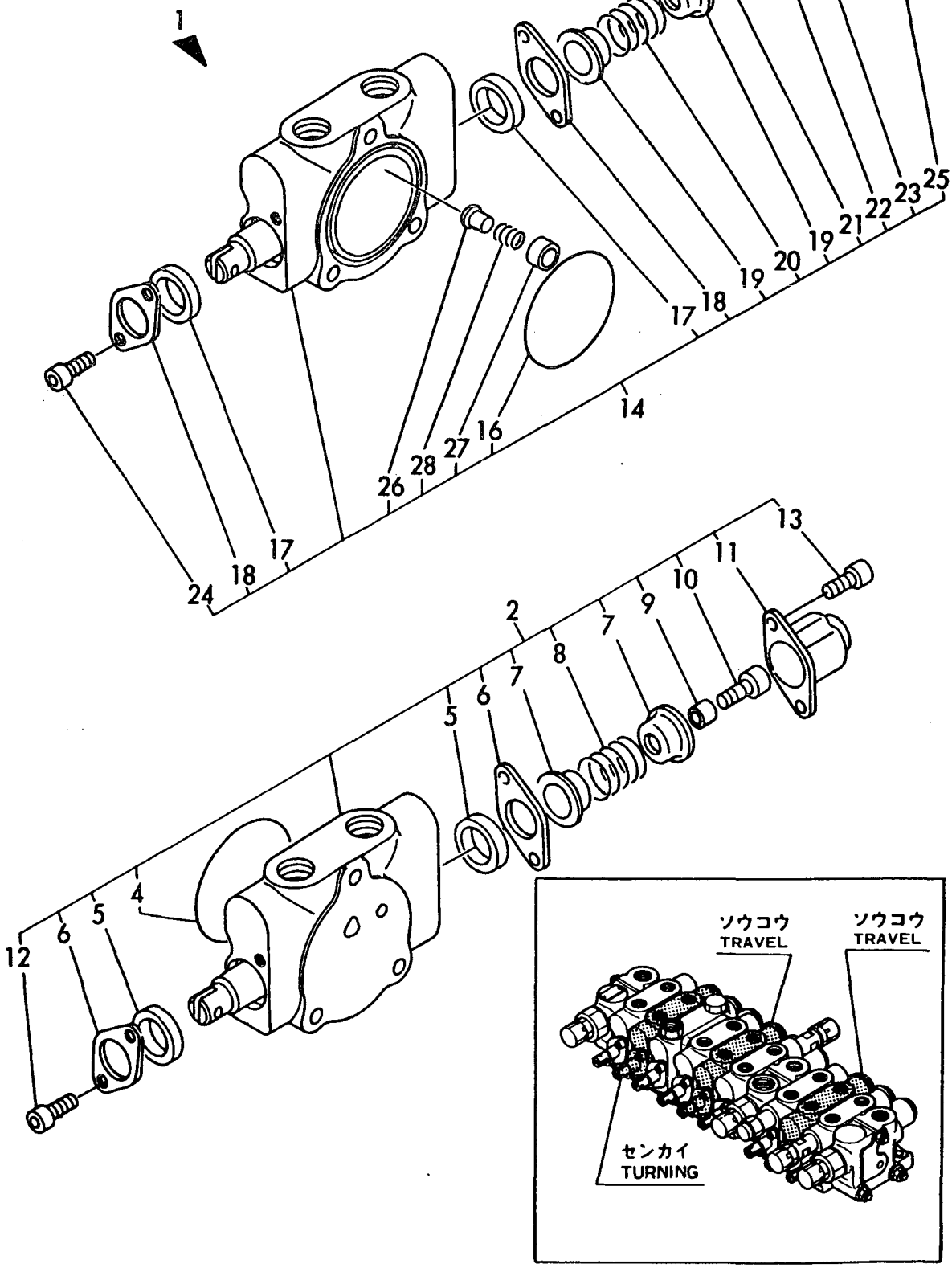

https://truckmanualshub.com/

```
1,2,,172149-74130,,"SECTION ASSY, ARM",1,1,1,1,1,1,,,,,,,,,,,,
3,3,,24325-000550,,"O-RING 1B G-55.0",1,1,1,1,1,1,,,,,,,,,,,,
4,3,,172137-74440,,"SEAL, OIL",2,2,2,2,2,2,,,,,,,,,,,,
5,3,,172137-74450,,"PLATE,SEAL",2,2,2,2,2,2,,,,,,,,,,,,
6,3,,172137-74460,,"SEAT, SPRING",2,2,2,2,2,2,,,,,,,,,,,,
7,3,,172137-74420,,"SPRING (A), RETURN",1,1,1,1,1,1,,,,,,,,,,,,
8,3,,172137-74470,,SPACER,1,1,1,1,1,1,,,,,,,,,,,,
9,3,,172137-74480,,"BOLT, SPOOL",1,1,1,1,1,1,,,,,,,,,,,,
10,3,,172137-74490,,CAP,1,1,1,1,1,1,,,,,,,,,,,,
11,3,,172137-74500,,"BOLT, PLATE",2,2,2,2,2,2,,,,,,,,,,,,
12,3,,172137-74510,,"BOLT, CAP",2,2,2,2,2,2,,,,,,,,,,,,
13,3,,172137-74520,,"VALVE, CHECK",1,1,1,1,1,1,,,,,,,,,,,,
14,3,,172137-74530,,"GUIDE, VALVE",1,1,1,1,1,1,,,,,,,,,,,,
15,3,,172137-74540,,"SPRING, VALVE",1,1,1,1,1,1,,,,,,,,,,,,
16,2,,172137-74600,,"VALVE ASSY,OVER ROAD",2,2,2,2,2,2,,,,,,,,,,,,
17,3,,172131-74030,,"NUT M14X1",1,1,1,1,1,1,,,,,,,,,,,,
18,3,,172131-74050,,"CAP NUT M16X1",1,1,1,1,1,1,,,,,,,,,,,,
19,3,,24315-000150,,"O-RING 1B P-15.0",1,1,1,1,1,1,,,,,,,,,,,,
20,3,,172137-74640,,"O-RING 1B S 12.5",1,1,1,1,1,1,,,,,,,,,,,,
21,3,,24341-000160,,"O-RING 1A S-16.0",2,2,2,2,2,2,,,,,,,,,,,,
22,2,,172149-74270,,"SECTION ASSY, BUCKET",1,1,1,1,1,1,,,,,,,,,,,,
24,3,,24325-000550,,"O-RING 1B G-55.0",1,1,1,1,1,1,,,,,,,,,,,,
25,3,,172137-74440,,"SEAL, OIL",2,2,2,2,2,2,,,,,,,,,,,,
26,3,,172137-74450,,"PLATE,SEAL",2,2,2,2,2,2,,,,,,,,,,,,
27,3,,172137-74460,,"SEAT, SPRING",2,2,2,2,2,2,,,,,,,,,,,,
28,2,,172137-74420,,"SPRING (A), RETURN",1,1,1,1,1,1,,,,,,,,,,,,
29,3,,172137-74470,,SPACER,1,1,1,1,1,1,,,,,,,,,,,,
30,3,,172137-74480,,"BOLT, SPOOL",1,1,1,1,1,1,,,,,,,,,,,,
31,3,,172137-74490,,CAP,1,1,1,1,1,1,,,,,,,,,,,,
32,3,,172137-74500,,"BOLT, PLATE",2,2,2,2,2,2,,,,,,,,,,,,
33,3,,172137-74510,,"BOLT, CAP",2,2,2,2,2,2,,,,,,,,,,,,
34,3,,172137-74520,,"VALVE, CHECK",1,1,1,1,1,1,,,,,,,,,,,,
35,3,,172137-74530,,"GUIDE, VALVE",1,1,1,1,1,1,,,,,,,,,,,,
36,3,,172137-74540,,"SPRING, VALVE",1,1,1,1,1,1,,,,,,,,,,,,
```

Fig. 42 コントロールバルブ(アーム、バケット) CONTROL VALVE (ARM、BUCKET)

https://truckmanualshub.com/

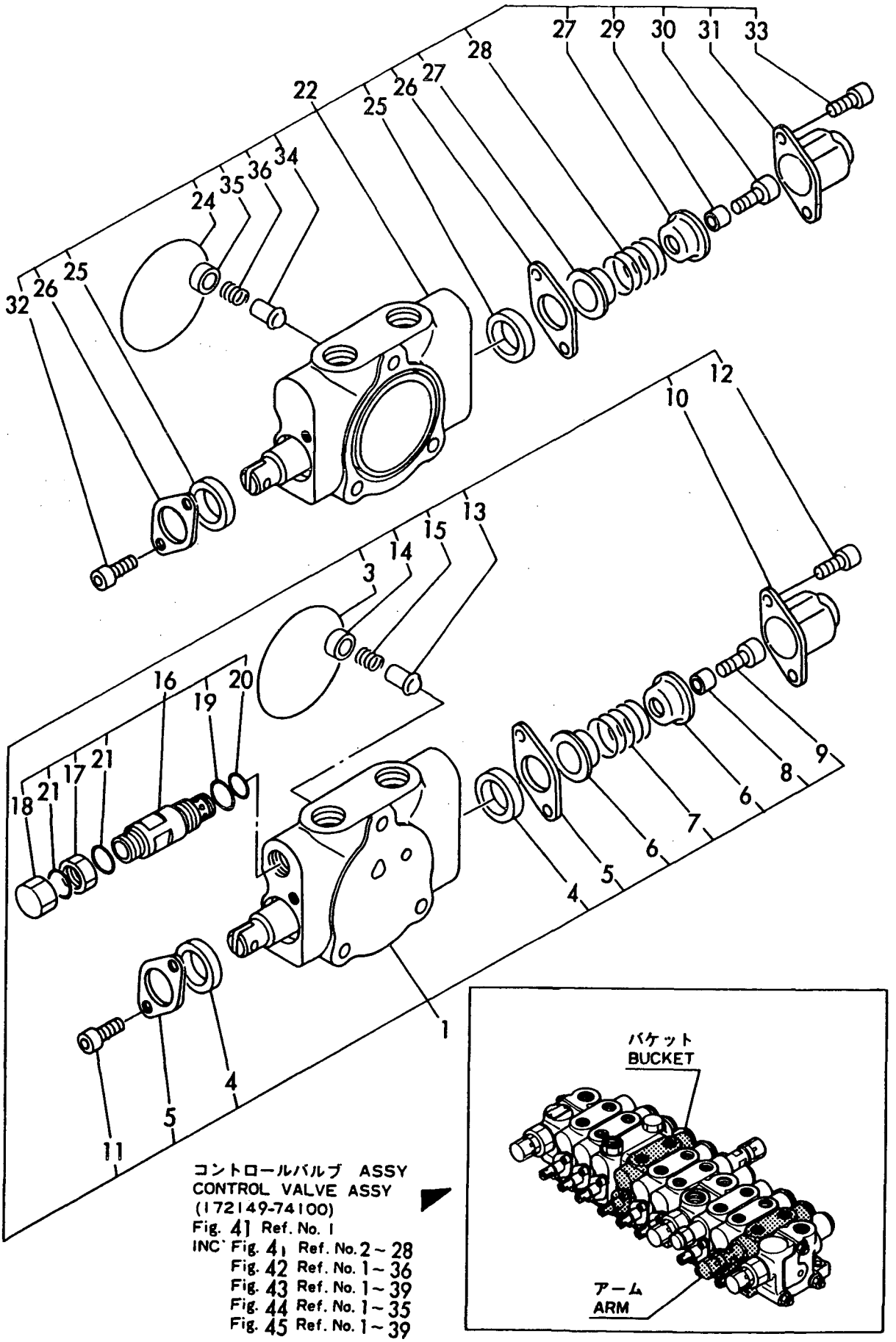

コントロールバルブ ASSY
CONTROL VALVE ASSY
(172149-74100)
Fig. 41 Ref. No. 1
INC. Fig. 41 Ref. No. 2 ~ 28
Fig. 42 Ref. No. 1 ~ 36
Fig. 43 Ref. No. 1 ~ 39
Fig. 44 Ref. No. 1 ~ 35
Fig. 45 Ref. No. 1 ~ 39

https://truckmanualshub.com/

```
1,2,,172149-74200,,"SECTION ASSY, SEING",1,1,1,1,1,1,,,,,,,,,,,,
3,3,,24325-000550,,"O-RING 1B G-55.0",1,1,1,1,1,1,,,,,,,,,,,,
4,3,,172137-74440,,"SEAL, OIL",2,2,2,2,2,2,,,,,,,,,,,,
5,3,,172137-74450,,"PLATE,SEAL",2,2,2,2,2,2,,,,,,,,,,,,
6,3,,172137-74460,,"SEAT, SPRING",2,2,2,2,2,2,,,,,,,,,,,,
7,3,,172137-74420,,"SPRING (A), RETURN",1,1,1,1,1,1,,,,,,,,,,,,
8,3,,172137-74470,,SPACER,1,1,1,1,1,1,,,,,,,,,,,,
9,3,,172137-74480,,"BOLT, SPOOL",1,1,1,1,1,1,,,,,,,,,,,,
10,3,,172137-74490,,CAP,1,1,1,1,1,1,,,,,,,,,,,,
11,3,,172137-74500,,"BOLT, PLATE",2,2,2,2,2,2,,,,,,,,,,,,
12,3,,172137-74510,,"BOLT, CAP",2,2,2,2,2,2,,,,,,,,,,,,
13,3,,172137-74520,,"VALVE, CHECK",1,1,1,1,1,1,,,,,,,,,,,,
14,3,,172137-74530,,"GUIDE, VALVE",1,1,1,1,1,1,,,,,,,,,,,,
15,3,,172137-74540,,"SPRING, VALVE",1,1,1,1,1,1,,,,,,,,,,,,
16,2,,172137-74630,,"VALVE ASSY, SUCTION",1,1,1,1,1,1,,,,,,,,,,,,
17,3,,24315-000150,,"O-RING 1B P-15.0",2,2,2,2,2,2,,,,,,,,,,,,
18,3,,172137-74640,,"O-RING 1B S 12.5",1,1,1,1,1,1,,,,,,,,,,,,
19,2,,172149-74250,,"SECTION ASSY, BOOM",1,1,1,1,1,1,,,,,,,,,,,,
21,3,,24325-000550,,"O-RING 1B G-55.0",1,1,1,1,1,1,,,,,,,,,,,,
22,3,,172137-74440,,"SEAL, OIL",2,2,2,2,2,2,,,,,,,,,,,,
23,3,,172137-74450,,"PLATE,SEAL",2,2,2,2,2,2,,,,,,,,,,,,
24,3,,172137-74460,,"SEAT, SPRING",2,2,2,2,2,2,,,,,,,,,,,,
25,3,,172137-74420,,"SPRING (A), RETURN",1,1,1,1,1,1,,,,,,,,,,,,
26,3,,172137-74470,,SPACER,1,1,1,1,1,1,,,,,,,,,,,,
27,3,,172137-74480,,"BOLT, SPOOL",1,1,1,1,1,1,,,,,,,,,,,,
28,3,,172137-74490,,CAP,1,1,1,1,1,1,,,,,,,,,,,,
29,3,,172137-74500,,"BOLT, PLATE",2,2,2,2,2,2,,,,,,,,,,,,
30,3,,172137-74510,,"BOLT, CAP",2,2,2,2,2,2,,,,,,,,,,,,
31,3,,172137-74520,,"VALVE, CHECK",1,1,1,1,1,1,,,,,,,,,,,,
32,3,,172137-74530,,"GUIDE, VALVE",1,1,1,1,1,1,,,,,,,,,,,,
33,3,,172137-74540,,"SPRING, VALVE",1,1,1,1,1,1,,,,,,,,,,,,
34,2,,172137-74600,,"VALVE ASSY,OVER ROAD",1,1,1,1,1,1,,,,,,,,,,,,
35,3,,172131-74030,,"NUT M14X1",1,1,1,1,1,1,,,,,,,,,,,,
36,3,,172131-74050,,"CAP NUT M16X1",1,1,1,1,1,1,,,,,,,,,,,,
37,3,,24315-000150,,"O-RING 1B P-15.0",1,1,1,1,1,1,,,,,,,,,,,,
38,3,,172137-74640,,"O-RING 1B S 12.5",1,1,1,1,1,1,,,,,,,,,,,,
39,3,,24341-000160,,"O-RING 1A S-16.0",2,2,2,2,2,2,,,,,,,,,,,,
```

Fig. 43 コントロールバルブ(スイング、ブーム) CONTROL VALVE (SWING、BOOM)

https://truckmanualshub.com/

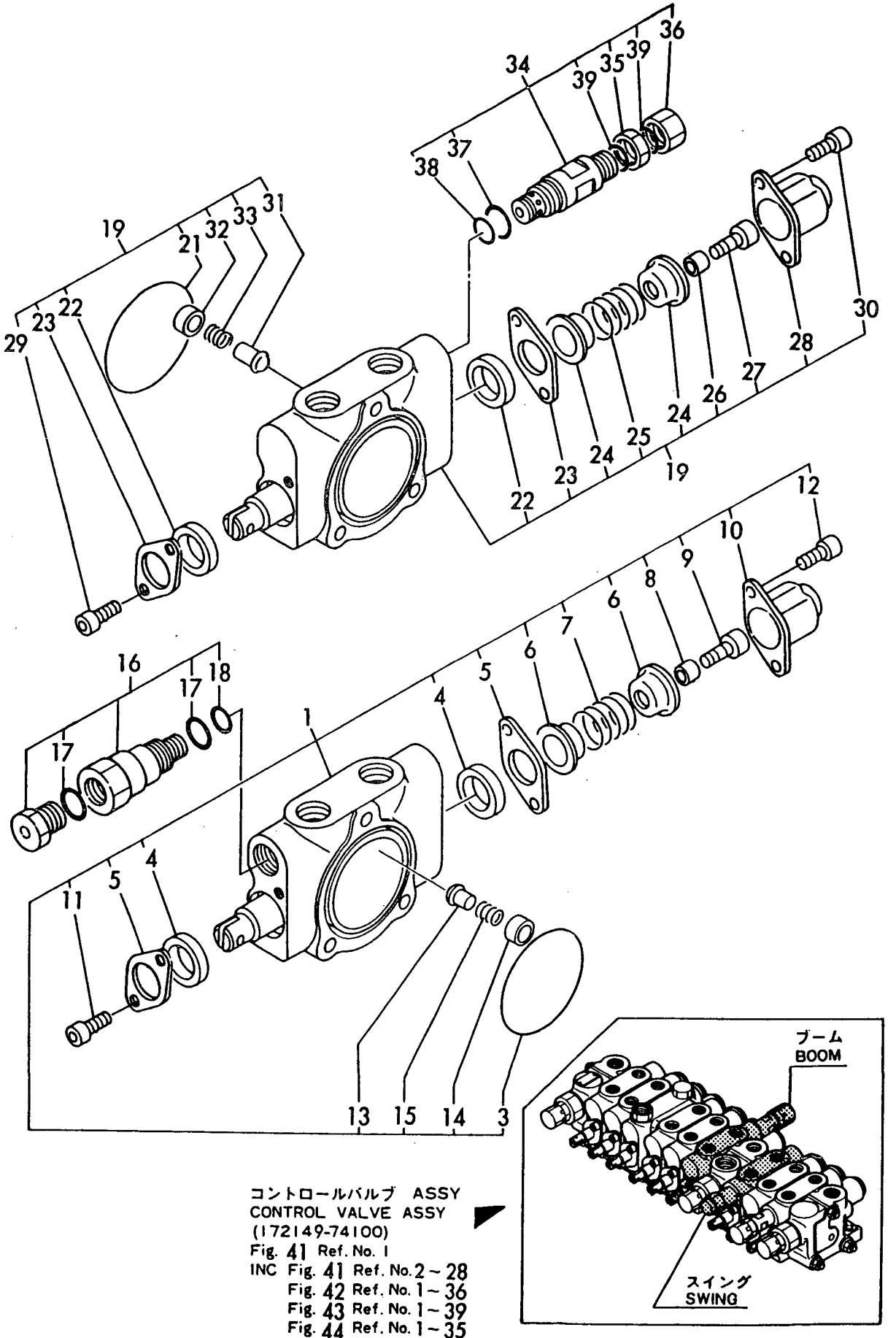

コントロールバルブ ASSY
CONTROL VALVE ASSY
(172149-74100)
Fig. 41 Ref. No. 1
INC Fig. 41 Ref. No. 2 ~ 28
Fig. 42 Ref. No. 1 ~ 36
Fig. 43 Ref. No. 1 ~ 39
Fig. 44 Ref. No. 1 ~ 35
Fig. 45 Ref. No. 1 ~ 39

https://truckmanualshub.com/

```
1,2,,172149-74380,,"SECTION ASSY, BLADE",1,1,1,1,1,1,,,,,,,,,,,,
3,3,,24325-000550,,"O-RING 1B G-55.0",1,1,1,1,1,1,,,,,,,,,,,,
4,3,,172137-74440,,"SEAL, OIL",2,2,2,2,2,2,,,,,,,,,,,,
5,3,,172137-74450,,"PLATE,SEAL",2,2,2,2,2,2,,,,,,,,,,,,
6,3,,172137-74460,,"SEAT, SPRING",2,2,2,2,2,2,,,,,,,,,,,,
7,3,,172137-74420,,"SPRING (A), RETURN",1,1,1,1,1,1,,,,,,,,,,,,
8,3,,172137-74470,,SPACER,1,1,1,1,1,1,,,,,,,,,,,,
9,3,,172137-74480,,"BOLT, SPOOL",1,1,1,1,1,1,,,,,,,,,,,,
10,3,,172137-74490,,CAP,1,1,1,1,1,1,,,,,,,,,,,,
11,3,,172137-74500,,"BOLT, PLATE",2,2,2,2,2,2,,,,,,,,,,,,
12,3,,172137-74510,,"BOLT, CAP",2,2,2,2,2,2,,,,,,,,,,,,
13,3,,172137-74520,,"VALVE, CHECK",1,1,1,1,1,1,,,,,,,,,,,,
14,3,,172137-74530,,"GUIDE, VALVE",1,1,1,1,1,1,,,,,,,,,,,,
15,3,,172137-74540,,"SPRING, VALVE",1,1,1,1,1,1,,,,,,,,,,,,
16,2,,172149-74320,,"SECTION ASSY, P.T.O",1,1,1,1,1,1,,,,,,,,,,,,
18,3,,24325-000550,,"O-RING 1B G-55.0",1,1,1,1,1,1,,,,,,,,,,,,
19,3,,172137-74440,,"SEAL, OIL",2,2,2,2,2,2,,,,,,,,,,,,
20,3,,172137-74450,,"PLATE,SEAL",2,2,2,2,2,2,,,,,,,,,,,,
21,3,,172137-74460,,"SEAT, SPRING",2,2,2,2,2,2,,,,,,,,,,,,
22,3,,172137-74420,,"SPRING (A), RETURN",1,1,1,1,1,1,,,,,,,,,,,,
23,3,,172137-74470,,SPACER,1,1,1,1,1,1,,,,,,,,,,,,
24,3,,172137-74480,,"BOLT, SPOOL",1,1,1,1,1,1,,,,,,,,,,,,
25,3,,172137-74490,,CAP,1,1,1,1,1,1,,,,,,,,,,,,
26,3,,172137-74500,,"BOLT, PLATE",2,2,2,2,2,2,,,,,,,,,,,,
27,3,,172137-74510,,"BOLT, CAP",2,2,2,2,2,2,,,,,,,,,,,,
28,3,,172137-74520,,"VALVE, CHECK",1,1,1,1,1,1,,,,,,,,,,,,
29,3,,172131-74060,,"GUIDE,CHECK VALVE",1,1,1,1,1,1,,,,,,,,,,,,
30,3,,172137-74540,,"SPRING, VALVE",1,1,1,1,1,1,,,,,,,,,,,,
31,3,,172131-74080,,"O-RING 1B S9",1,1,1,1,1,1,,,,,,,,,,,,
32,3,,172149-74340,,PLUG,1,1,1,1,1,1,,,,,,,,,,,,
33,3,,24315-000070,,"O-RING 1B P-7.0",1,1,1,1,1,1,,,,,,,,,,,,
34,3,,172137-74270,,PLUG,2,2,2,2,2,2,,,,,,,,,,,,
35,3,,24315-000140,,"O-RING 1B P-14.0",2,2,2,2,2,2,,,,,,,,,,,,
```

Fig. 44 コントロールバルブ(ブレード、P.T.O) CONTROL VALVE (BLADE、P.T.O)

https://truckmanualshop.com/

コントロールバルブ ASSY
CONTROL VALVE ASSY
(172149-74100)
Fig. 41 Ref. No. 1
INC Fig. 41 Ref. No. 2～28
Fig. 42 Ref. No. 1～36
Fig. 43 Ref. No. 1～39
Fig. 44 Ref. No. 1～35
Fig. 45 Ref. No. 1～39

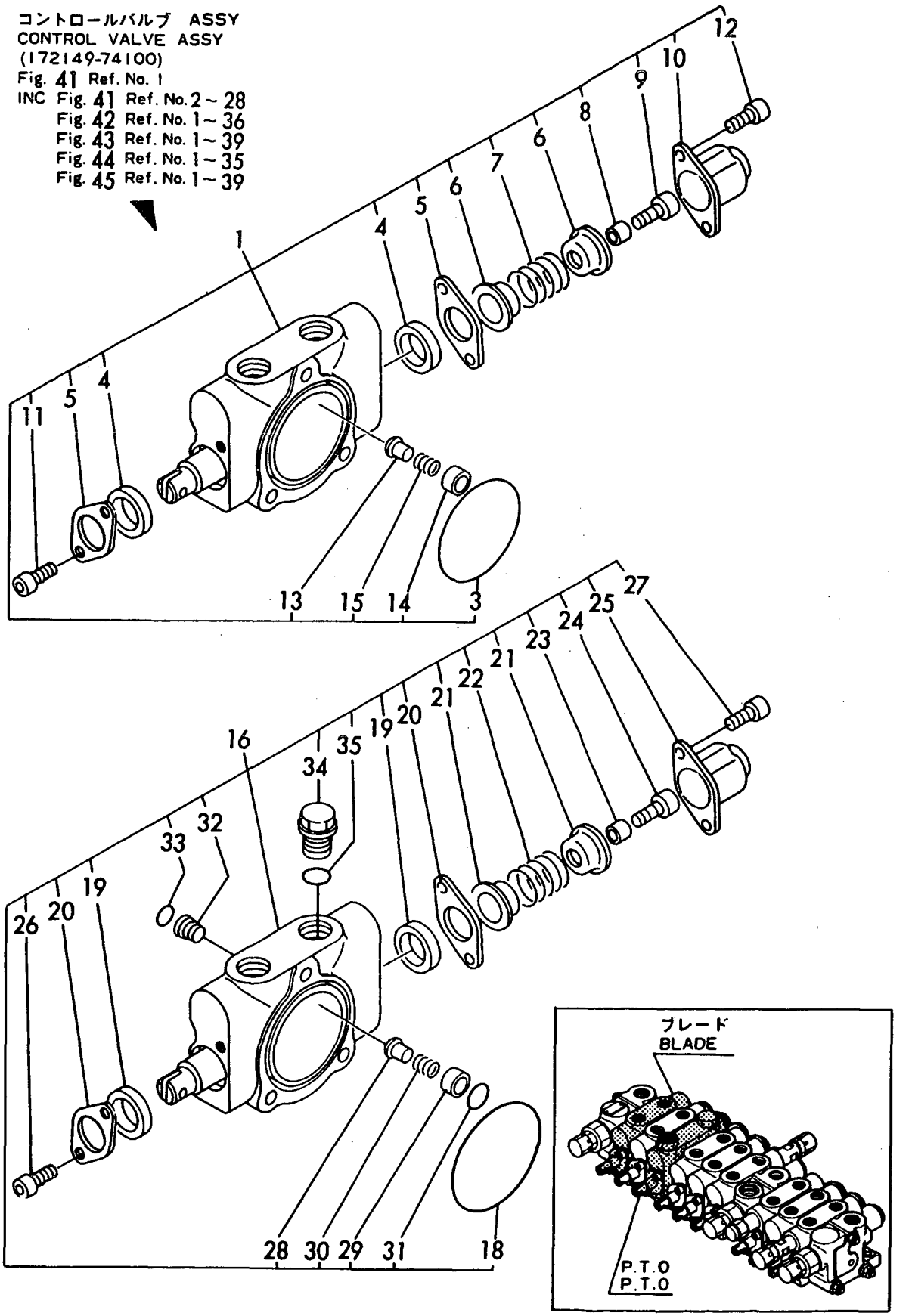

https://truckmanualshub.com/

```
1,2,,172149-74110,,"SECTION ASSY, P1",1,1,1,1,1,1,,,,,,,,,,,,
3,3,,24325-000550,,"O-RING 1B G-55.0",1,1,1,1,1,1,,,,,,,,,,,,
4,3,,23871-020000,,"PLUG PT1/4,SCREW",1,1,1,1,1,1,,,,,,,,,,,,
5,2,,172149-74440,,"VALVE, RELIEF",1,1,1,1,1,1,,,,,,,,,,,,
6,3,,172131-74340,,"VALVE,RELIEF",1,1,1,1,1,1,,,,,,,,,,,,
7,3,,172137-74580,,"O-RING 15",1,1,1,1,1,1,,,,,,,,,,,,
8,3,,24315-000220,,"O-RING 1B P-22.0",1,1,1,1,1,1,,,,,,,,,,,,
9,3,,24315-000100,,"O-RING 1B P-10.0",1,1,1,1,1,1,,,,,,,,,,,,
10,3,,172137-74040,,"NUT M14",1,1,1,1,1,1,,,,,,,,,,,,
11,3,,172131-74050,,"CAP NUT M16X1",1,1,1,1,1,1,,,,,,,,,,,,
12,3,,24341-000160,,"O-RING 1A S-16.0",2,2,2,2,2,2,,,,,,,,,,,,
13,2,,172149-74220,,"SECTION ASSY, P2",1,1,1,1,1,1,,,,,,,,,,,,
15,3,,24325-000550,,"O-RING 1B G-55.0",2,2,2,2,2,2,,,,,,,,,,,,
16,3,,23871-020000,,"PLUG PT1/4,SCREW",1,1,1,1,1,1,,,,,,,,,,,,
17,2,,172149-74440,,"VALVE, RELIEF",1,1,1,1,1,1,,,,,,,,,,,,
18,3,,172131-74340,,"VALVE,RELIEF",1,1,1,1,1,1,,,,,,,,,,,,
19,3,,172137-74580,,"O-RING 15",1,1,1,1,1,1,,,,,,,,,,,,
20,3,,24315-000220,,"O-RING 1B P-22.0",1,1,1,1,1,1,,,,,,,,,,,,
21,3,,24315-000100,,"O-RING 1B P-10.0",1,1,1,1,1,1,,,,,,,,,,,,
22,3,,172137-74040,,"NUT M14",1,1,1,1,1,1,,,,,,,,,,,,
23,3,,172131-74050,,"CAP NUT M16X1",1,1,1,1,1,1,,,,,,,,,,,,
24,3,,24341-000160,,"O-RING 1A S-16.0",2,2,2,2,2,2,,,,,,,,,,,,
25,2,,172149-74410,,"SECTION ASSY, P3",1,1,1,1,1,1,,,,,,,,,,,,
27,3,,24325-000550,,"O-RING 1B G-55.0",1,1,1,1,1,1,,,,,,,,,,,,
28,2,,172149-74480,,"VALVE, RELIEF",1,1,1,1,1,1,,,,,,,,,,,,
29,3,,172131-74340,,"VALVE,RELIEF",1,1,1,1,1,1,,,,,,,,,,,,
30,3,,172137-74580,,"O-RING 15",1,1,1,1,1,1,,,,,,,,,,,,
31,3,,24315-000220,,"O-RING 1B P-22.0",1,1,1,1,1,1,,,,,,,,,,,,
32,3,,24315-000100,,"O-RING 1B P-10.0",1,1,1,1,1,1,,,,,,,,,,,,
33,3,,172137-74040,,"NUT M14",1,1,1,1,1,1,,,,,,,,,,,,
34,3,,172131-74050,,"CAP NUT M16X1",1,1,1,1,1,1,,,,,,,,,,,,
35,3,,172131-74020,,O-RING,2,2,2,2,2,2,,,,,,,,,,,,
36,2,,172149-76170,,PLATE,1,1,1,1,1,1,,,,,,,,,,,,
37,2,,172149-74300,,PLATE,1,1,1,1,1,1,,,,,,,,,,,,
38,2,,172149-74460,,TIE-ROD,3,3,3,3,3,3,,,,,,,,,,,,
39,2,,26716-080002,,"NUT M 8",6,6,6,6,6,6,,,,,,,,,,,,
40,1,,26013-080202,,"BOLT W/WASHER M8X20",1,1,1,1,1,1,,,,,,,,,,,,
41,1,,26013-080252,,"BOLT M 8X 25",2,2,2,2,2,2,,,,,,,,,,,,
```

Fig. 45 コントロールバルブ(P1、P2、P3) CONTROL VALVE (P1、P2、P3)

https://truckmanualshub.com/

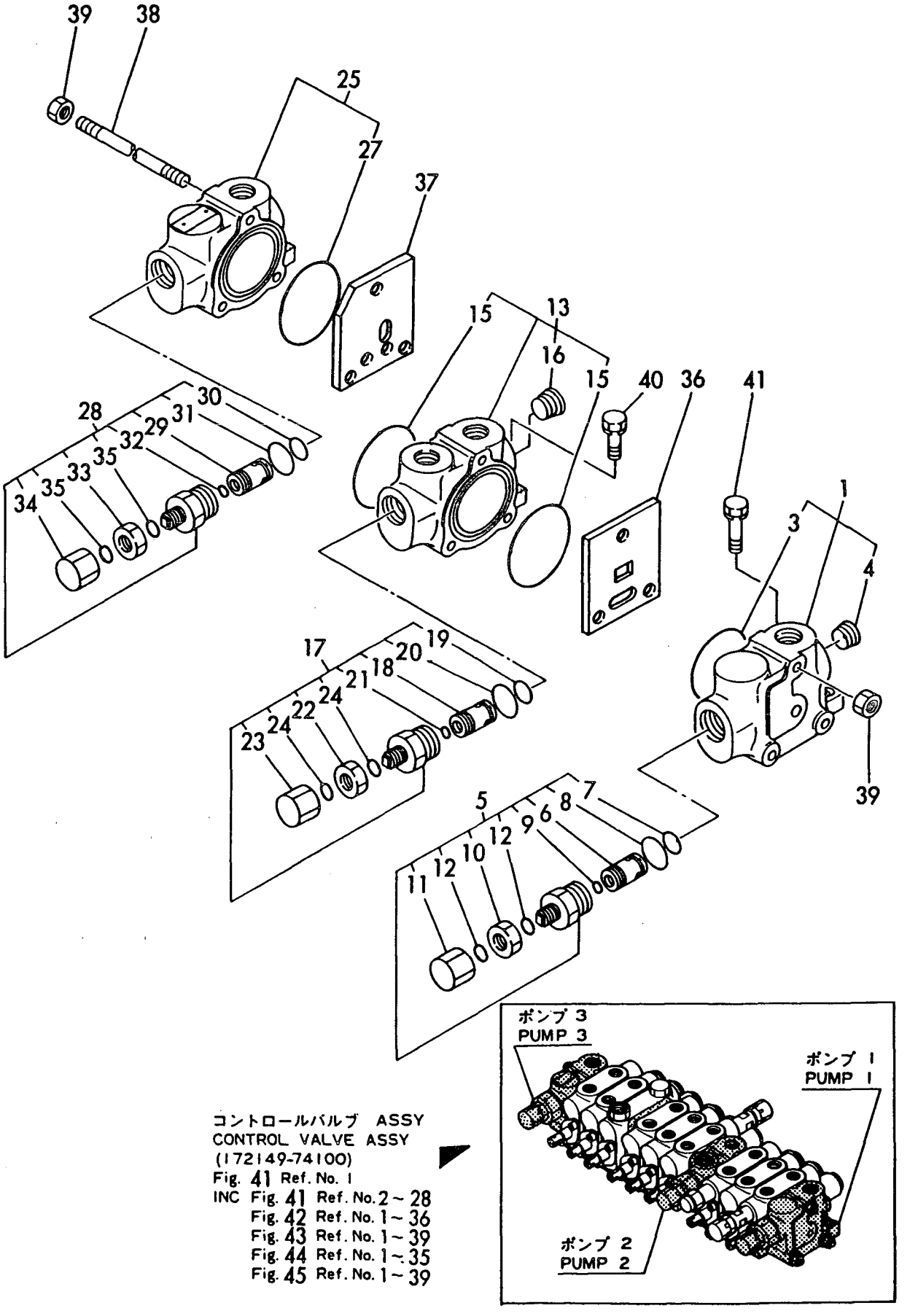

コントロールバルブ ASSY
CONTROL VALVE ASSY
(172149-74100)
Fig. 41 Ref. No. 1
INC Fig. 41 Ref. No. 2 ~ 28
Fig. 42 Ref. No. 1 ~ 36
Fig. 43 Ref. No. 1 ~ 39
Fig. 44 Ref. No. 1 ~ 35
Fig. 45 Ref. No. 1 ~ 39

https://truckmanualshub.com/

```
1,1,,772149-75100,,"RESERVOIR ASSY",1,1,1,1,1,1,,,,,,,,,,,,
1-1,1,,772159-75100,,"RESERVOIR ASSY",1,1,1,1,1,1,R,,72159AMA-
2,M910001,72159AMA-2,M910001,72159AMA-2,M910001,72159AMA-2,M910001,72159AMA-
2,M910001,72159AMA-2,M910001
2,2,,172137-73700,,"FILTER, SUCTION",1,1,1,1,1,1,,,,,,,,,,,,
3,2,,172141-73710,,"ROD, STRAINER",1,1,1,1,1,1,,,,,,,,,,,,
3-1,2,,172159-73710,,"ROD, FILTER",1,1,1,1,1,1,R,,72159AMA-2,M910001,72159AMA-
2,M910001,72159AMA-2,M910001,72159AMA-2,M910001,72159AMA-2,M910001,72159AMA-
2,M910001
4,2,,172141-73750,,"FILTER ASSY, RETURN",1,1,1,1,1,1,,,,,,,,,,,,
5,3,,172141-73760,,ELEMENT,1,1,1,1,1,1,,,,,,,,,,,,
6,3,,172141-73770,,"VALVE ASSY, BYPASS",1,1,1,1,1,1,,,,,,,,,,,,
7,2,,172112-75780,,"SPRING, STRAINER",1,1,1,1,1,1,,,,,,,,,,,,
7-1,2,,172159-73780,,"SPRING, SIDE CLUTCH",1,1,1,1,1,1,R,,72159AMA-
2,M910001,72159AMA-2,M910001,72159AMA-2,M910001,72159AMA-2,M910001,72159AMA-
2,M910001,72159AMA-2,M910001
8,2,,26716-100002,,"NUT M10",1,1,1,1,1,1,,,,,,,,,,,,
9,2,,933152-02710,,"SPRING, SIDE CLUTCH",1,1,1,1,1,1,,,,,,,,,,,,
9-1,2,,172159-73700,,"SPRING, SIDE CLUTCH",1,1,1,1,1,1,R,,72159AMA-
2,M910001,72159AMA-2,M910001,72159AMA-2,M910001,72159AMA-2,M910001,72159AMA-
2,M910001,72159AMA-2,M910001
11,2,,172141-75400,,"COVER, EXIT",1,1,1,1,1,1,,,,,,,,,,,,
11-1,2,,172159-75400,,"COVER, EXIT",1,1,1,1,1,1,R,,72159AMA-2,M910001,72159AMA-
2,M910001,72159AMA-2,M910001,72159AMA-2,M910001,72159AMA-2,M910001,72159AMA-
2,M910001
12,2,,172141-75430,,"COVER, INTAKE",1,1,1,1,1,1,,,,,,,,,,,,
12-1,2,,172159-75430,,"COVER, INTAKE",1,1,1,1,1,1,R,,72159AMA-
2,M910001,72159AMA-2,M910001,72159AMA-2,M910001,72159AMA-2,M910001,72159AMA-
2,M910001,72159AMA-2,M910001
13,2,,172122-75600,,"GAUGE, OIL LEVEL",1,1,1,1,1,1,,,,,,,,,,,,
14,3,,172122-75620,,BOLT,2,2,2,2,2,2,,,,,,,,,,,,
15,3,,172122-75630,,GASKET,4,4,4,4,4,4,,,,,,,,,,,,
16,2,,172116-75850,,"PLUG, OIL FEED",1,1,1,1,1,1,,,,,,,,,,,,
16-1,2,,172159-75850,,"PLUG, OIL FEED",1,1,1,1,1,1,R,,72159AMA-
2,M910001,72159AMA-2,M910001,72159AMA-2,M910001,72159AMA-2,M910001,72159AMA-
2,M910001,72159AMA-2,M910001
17,2,,22134-240000,,"WASHER 24",1,1,1,1,1,1,,,,,,,,,,,,
18,2,,22417-200160,,"COTTER PIN 2.0X16",1,1,1,1,1,1,,,,,,,,,,,,
19,2,,24311-000380,,"O-RING 1A P-38.0",1,1,1,1,1,1,,,,,,,,,,,,
20,2,,24321-001050,,"O-RING 1A G-105.0",2,2,2,2,2,2,,,,,,,,,,,,
21,2,,26013-080202,,"BOLT W/WASHER M8X20",6,6,6,6,6,6,,,,,,,,,,,,
22,2,,933171-23042,,MAGNET,1,1,1,1,1,1,,,,,,,,,,,,
22-1,2,,172159-75550,,MAGNET,1,1,1,1,1,1,R,,72159AMA-2,M910001,72159AMA-
2,M910001,72159AMA-2,M910001,72159AMA-2,M910001,72159AMA-2,M910001,72159AMA-
2,M910001
23,2,,933171-23050,,"PLUG 1/4",1,1,1,1,1,1,,,,,,,,,,,,
23-1,2,,172159-75560,,"PLUG 1/4",1,1,1,1,1,1,R,,72159AMA-2,M910001,72159AMA-
2,M910001,72159AMA-2,M910001,72159AMA-2,M910001,72159AMA-2,M910001,72159AMA-
2,M910001
23-2,2,,172159-75560,,"PLUG
1/4",1,1,1,1,1,1,Z,,72159010,*1990.03,72159010,*1990.03,72159010,*1990.03,721590
10,*1990.03,72159010,*1990.03,72159010,*1990.03,I
24,2,,933171-23062,,"PLUG 24, DRAIN",1,1,1,1,1,1,,,,,,,,,,,,
24-1,2,,172159-75720,,"PLUG 24, DRAIN",1,1,1,1,1,1,R,,72159AMA-
2,M910001,72159AMA-2,M910001,72159AMA-2,M910001,72159AMA-2,M910001,72159AMA-
2,M910001,72159AMA-2,M910001
25,1,,26013-120302,,"BOLT W/WASHER M12X30",3,3,3,3,3,3,,,,,,,,,,,,
26,1,,933152-03700,,"WASHER, SIDE CLUTCH",3,3,3,3,3,3,,,,,,,,,,,,
26-1,1,,172159-75500,,"WASHER, SIDE CLUTCH",3,3,3,3,3,3,R,,72159AMA-
2,M910001,72159AMA-2,M910001,72159AMA-2,M910001,72159AMA-2,M910001,72159AMA-
2,M910001,72159AMA-2,M910001
```

https://truckmanualshub.com/

26-2,1,,172159-66550,,WASHER,3,3,3,3,3,3,R,,72159AMA-3,M920001,72159AMA-3,M920001,72159AMA-3,M920001,72159AMA-3,M920001,72159AMA-3,M920001,72159AMA-3,M920001,I
27,1,,933169-22940,,"SPACER, RESERVOIR",1,1,1,1,1,1,,,,,,,,,,,,,
27-1,1,,172159-14270,,"SPACER, RESERVOIR",1,1,1,1,1,1,R,,72159AMA-2,M910001,72159AMA-2,M910001,72159AMA-2,M910001,72159AMA-2,M910001,72159AMA-2,M910001,72159AMA-2,M910001

Fig. 46 サドウユタンク HYD.OIL TANK

https://truckmanualshub.com/

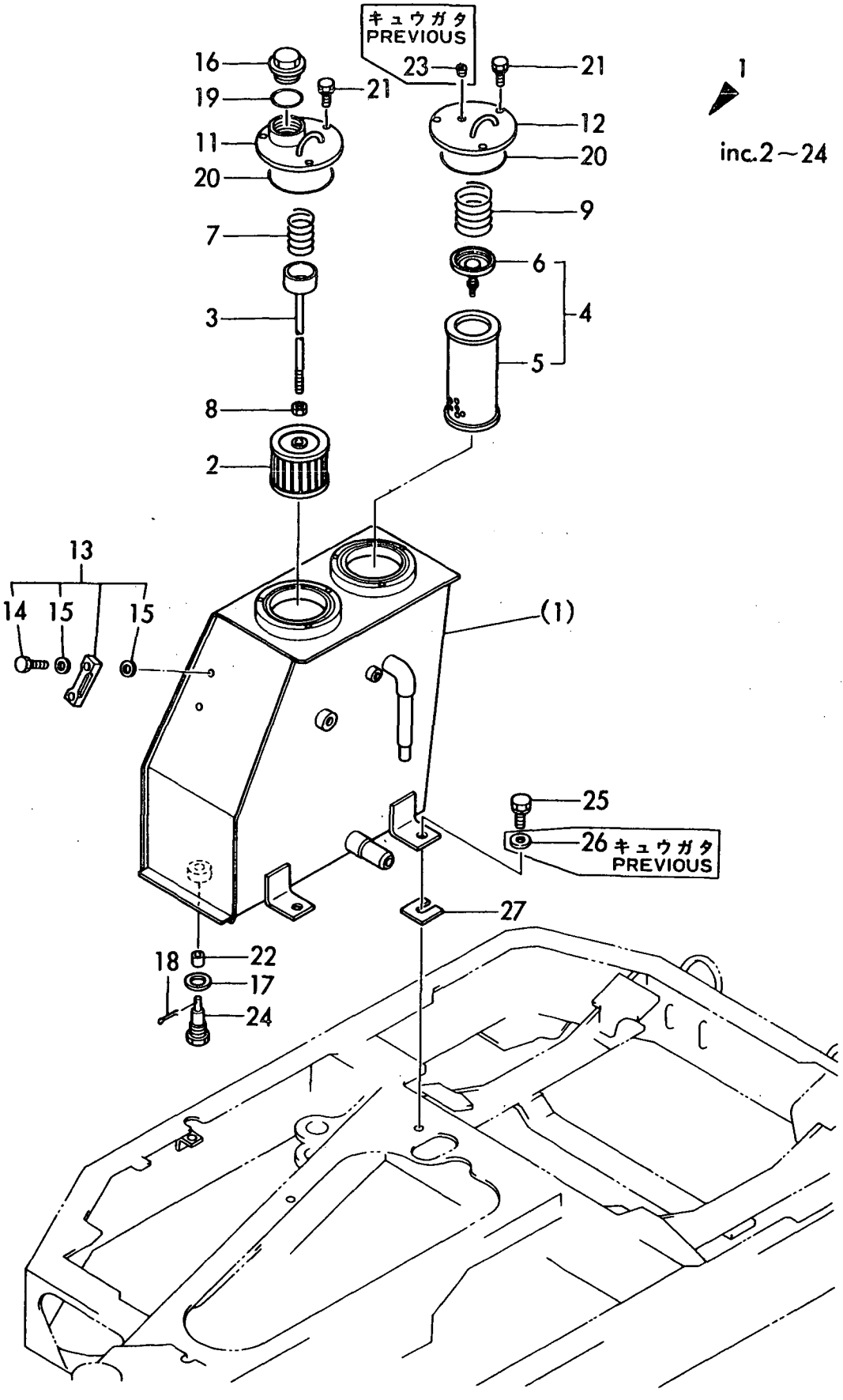

https://truckmanualshub.com/

```
1,1,,172112-77660,,"L-JOINT 1/8",2,2,2,2,2,2,,,,,,,,,,,,
1-1,1,,172159-76130,,"L-JOINT 1/8",2,2,2,2,2,2,R,,72159AMA-3,M920001,72159AMA-
3,M920001,72159AMA-3,M920001,72159AMA-3,M920001,72159AMA-3,M920001,72159AMA-
3,M920001,I
2,1,,172141-77800,,"JOINT, GREASE",4,4,4,4,4,4,,,,,,,,,,,,
2-1,1,,172159-77800,,"JOINT, GREASE",4,4,4,4,4,4,R,,72159AMA-3,M920001,72159AMA-
3,M920001,72159AMA-3,M920001,72159AMA-3,M920001,72159AMA-3,M920001,72159AMA-
3,M920001,I
3,1,,172137-78520,,"PIPE P202FF095",1,1,1,1,1,1,,,,,,,,,,,,
3-1,1,,172159-78490,,"PIPE P202FF095",1,1,1,1,1,1,R,,72159AMA-
3,M920001,72159AMA-3,M920001,72159AMA-3,M920001,72159AMA-3,M920001,72159AMA-
3,M920001,72159AMA-3,M920001,I
4,1,,172149-77811,,HOSE,2,2,2,2,2,2,,,,,,,,,,,,
4-1,1,,172159-77810,,HOSE,2,2,2,2,2,2,R,,72159AMA-3,M920001,72159AMA-
3,M920001,72159AMA-3,M920001,72159AMA-3,M920001,72159AMA-3,M920001,72159AMA-
3,M920001,I
5,1,,172312-77820,,"FITTING, GREASE",1,1,1,1,1,1,,,,,,,,,,,,
5-1,1,,172159-76140,,"FITTING, GREASE",1,1,1,1,1,1,R,,72159AMA-
3,M920001,72159AMA-3,M920001,72159AMA-3,M920001,72159AMA-3,M920001,72159AMA-
3,M920001,72159AMA-3,M920001,I
6,1,,23871-010000,,"PLUG PT1/8,SCREW",1,1,1,1,1,1,,,,,,,,,,,,
7,1,,24761-020000,,"NIPPLE PT1/8,GREASE",3,3,3,3,3,3,,,,,,,,,,,,
```

Fig. 47 エンカクキュウシ GREASING

https://truckmanualshub.com/

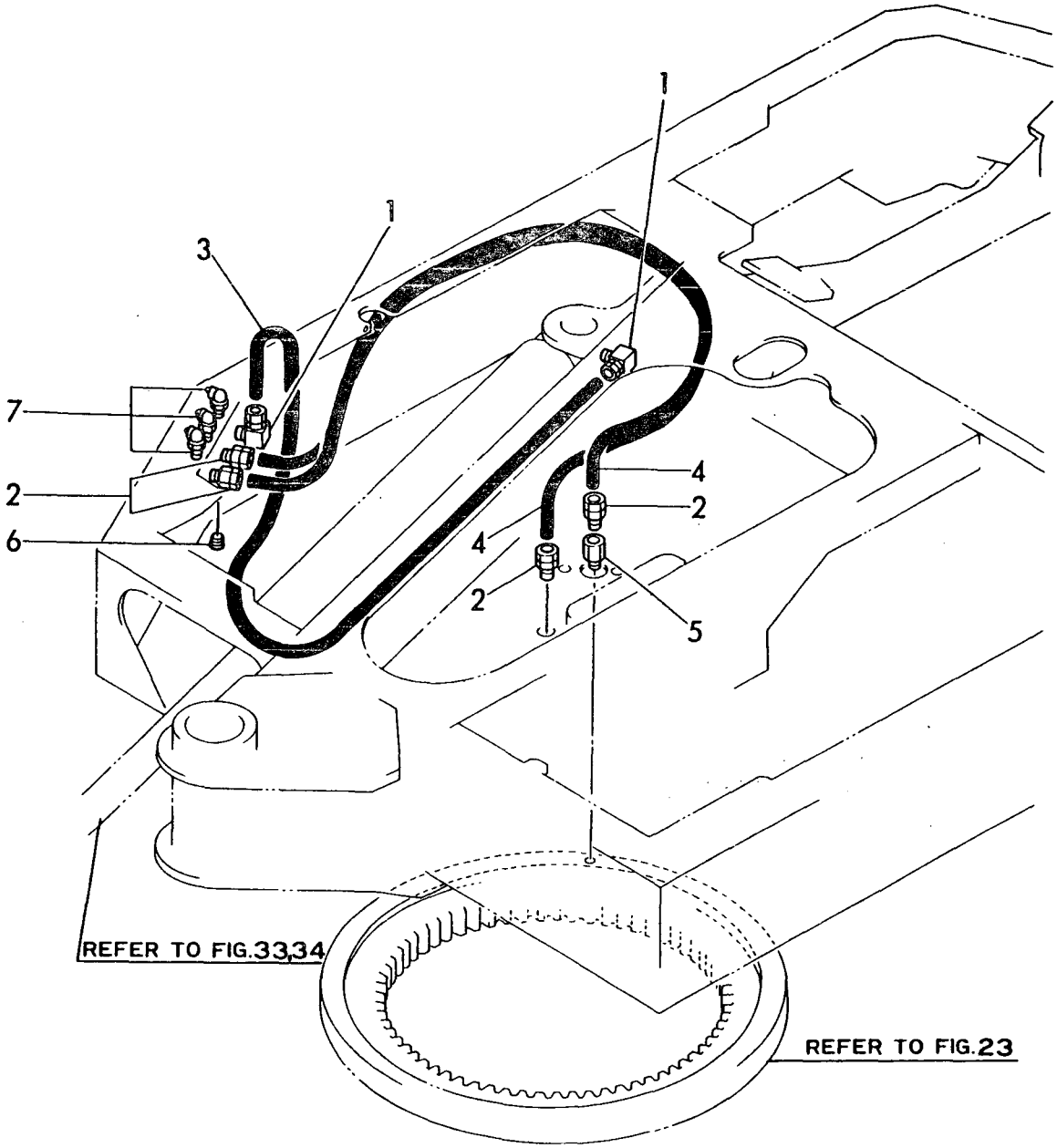

https://truckmanualshub.com/

1,1,,172149-76150,,JOINT,3,3,3,3,3,3,,,,,,,,,,,,
1-1,1,,172159-76150,,JOINT,3,3,3,3,3,3,R,,72159AMA-3,M920001,72159AMA-3,M920001,72159AMA-3,M920001,72159AMA-3,M920001,72159AMA-3,M920001,72159AMA-3,M920001,I
2,1,,172149-76300,,ELBOW,3,3,3,3,3,3,,,,,,,,,,,,
2-1,1,,172159-76320,,ELBOW,2,2,2,2,2,2,N,,72159AMA-3,M920001,72159AMA-3,M920001,72159AMA-3,M920001,72159AMA-3,M920001,72159AMA-3,M920001,72159AMA-3,M920001,I
3,1,,933152-07400,,"O-RING (A)",3,3,3,3,3,3,,,,,,,,,,,,
3-1,1,,172159-76350,,"O-RING (A)",3,3,3,3,3,3,R,,72159AMA-3,M920001,72159AMA-3,M920001,72159AMA-3,M920001,72159AMA-3,M920001,72159AMA-3,M920001,72159AMA-3,M920001,I
4,1,,933160-03530,,"PORT, PUMP EXH.",3,3,3,3,3,3,,,,,,,,,,,,
4-1,1,,172159-76050,,"CONNECTOR 3/8",3,3,3,3,3,3,R,,72159AMA-3,M920001,72159AMA-3,M920001,72159AMA-3,M920001,72159AMA-3,M920001,72159AMA-3,M920001,72159AMA-3,M920001,I
5,1,,933160-03570,,"O-RING (B)",3,3,3,3,3,3,,,,,,,,,,,,
5-1,1,,172159-76360,,"O-RING (B)",3,3,3,3,3,3,R,,72159AMA-3,M920001,72159AMA-3,M920001,72159AMA-3,M920001,72159AMA-3,M920001,72159AMA-3,M920001,72159AMA-3,M920001,I
6,1,,172149-76400,,"TUBE, SUCTION",1,1,1,1,1,1,,,,,,,,,,,,
6-1,1,,172159-76400,,"TUBE, SUCTION",1,1,1,1,1,1,R,,72159AMA-2,M910001,72159AMA-2,M910001,72159AMA-2,M910001,72159AMA-2,M910001,72159AMA-2,M910001
7,1,,22137-100000,,"WASHER 10,POLISHED",2,2,2,2,2,2,,,,,,,,,,,,
8,1,,26013-100202,,"BOLT W/WASHER M10X20",2,2,2,2,2,2,,,,,,,,,,,,
9,1,,172149-78100,,HOSE,1,1,1,1,1,1,,,,,,,,,,,,
9-1,1,,172159-78100,,HOSE,1,1,1,1,1,1,R,,72159AMA-3,M920001,72159AMA-3,M920001,72159AMA-3,M920001,72159AMA-3,M920001,72159AMA-3,M920001,72159AMA-3,M920001,I
10,1,,172149-78110,,HOSE,3,3,3,3,3,3,,,,,,,,,,,,
10-1,1,,172159-78110,,HOSE,3,3,3,3,3,3,R,,72159AMA-3,M920001,72159AMA-3,M920001,72159AMA-3,M920001,72159AMA-3,M920001,72159AMA-3,M920001,72159AMA-3,M920001,I
11,1,,23000-035000,,"CLAMP 35",12,12,12,12,12,12,,,,,,,,,,,,
12,1,,23000-048000,,"CLAMP 48",4,4,4,4,4,4,,,,,,,,,,,,
13,1,,933171-15680,,"GROMMET 40X13",3,3,3,3,3,3,,,,,,,,,,,,
14,1,,172149-78150,,HOSE,1,1,1,1,1,1,,,,,,,,,,,,
14-1,1,,172159-78150,,HOSE,1,1,1,1,1,1,R,,72159AMA-3,M920001,72159AMA-3,M920001,72159AMA-3,M920001,72159AMA-3,M920001,72159AMA-3,M920001,72159AMA-3,M920001,I
15,1,,172149-78160,,HOSE,1,1,1,1,1,1,,,,,,,,,,,,
15-1,1,,172159-78160,,HOSE,1,1,1,1,1,1,R,,72159AMA-3,M920001,72159AMA-3,M920001,72159AMA-3,M920001,72159AMA-3,M920001,72159AMA-3,M920001,72159AMA-3,M920001,I
16,1,,172149-78170,,HOSE,1,1,1,1,1,1,,,,,,,,,,,,
16-1,1,,172159-78170,,HOSE,1,1,1,1,1,1,R,,72159AMA-3,M920001,72159AMA-3,M920001,72159AMA-3,M920001,72159AMA-3,M920001,72159AMA-3,M920001,72159AMA-3,M920001,I
17,1,,172149-17640,,CLAMP,1,1,1,1,1,1,,,,,,,,,,,,
18,1,,26013-100202,,"BOLT W/WASHER M10X20",2,2,2,2,2,2,,,,,,,,,,,,
19,1,,172159-76060,,"CONNECTOR 3/8",1,1,1,1,1,1,W,,72159AMA-3,M920001,72159AMA-3,M920001,72159AMA-3,M920001,72159AMA-3,M920001,72159AMA-3,M920001,72159AMA-3,M920001,I

Fig. 48 ユアツハイカン(タンク－バルブ) HYD. OIL PIPING (TANK-VALVE)

https://truckmanualshub.com/

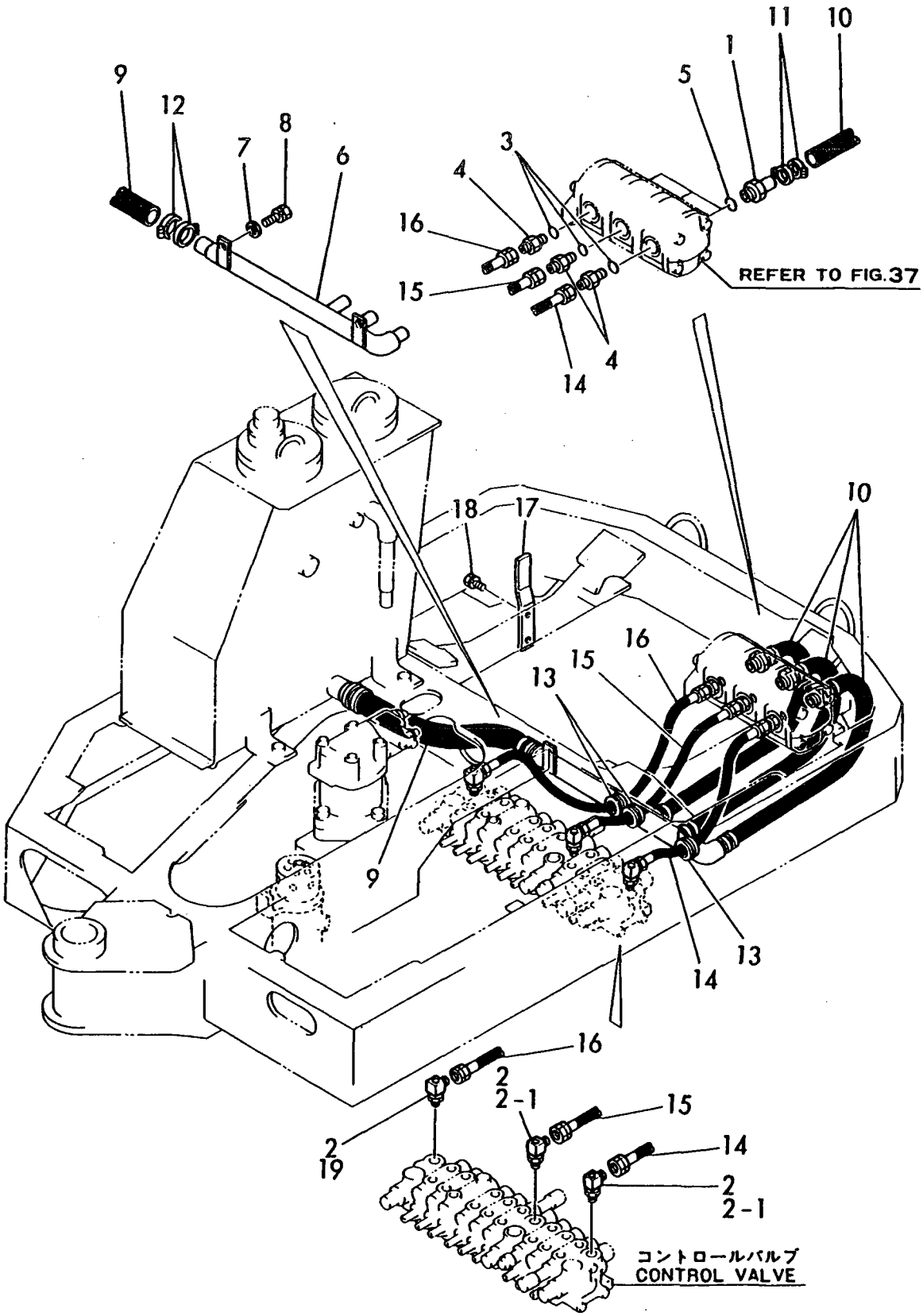

https://truckmanualshub.com/

1,1,,23393-020000,,"JOINT 90RGI1/4",6,6,6,6,6,6,,,,,,,,,,,,
2,1,,172149-76250,,"CONNECTER, GAUGE",1,1,1,1,1,1,,,,,,,,,,,,
2-1,1,,172159-76250,,"CONNECTER, GAUGE",1,1,1,1,1,1,R,,72159AMA-
2,M910001,72159AMA-2,M910001,72159AMA-2,M910001,72159AMA-2,M910001,72159AMA-
2,M910001,72159AMA-2,M910001
3,1,,172112-77660,,"L-JOINT 1/8",3,3,3,3,3,3,,,,,,,,,,,,
3-1,1,,172159-76130,,"L-JOINT 1/8",3,3,3,3,3,3,R,,72159AMA-3,M920001,72159AMA-
3,M920001,72159AMA-3,M920001,72159AMA-3,M920001,72159AMA-3,M920001,72159AMA-
3,M920001,I
4,1,,26013-100202,,"BOLT W/WASHER M10X20",2,2,2,2,2,2,,,,,,,,,,,,
4-1,1,,26013-100252,,"BOLT W/WASHER
M10X25",2,2,2,2,2,2,N,,72159022,*1991.07,72159022,*1991.07,72159022,*1991.07,721
59022,*1991.07,72159022,*1991.07,72159022,*1991.07,I
5,1,,172149-78020,,BUSH,1,1,1,1,1,1,,,,,,,,,,,,
6,1,,172149-78781,,GROMET,2,2,2,2,2,2,,,,,,,,,,,,
7,1,,172149-78790,,BUSH,1,1,1,1,1,1,,,,,,,,,,,,
8,1,,172149-78210,,HOSE,1,1,1,1,1,1,,,,,,,,,,,,
8-1,1,,172159-78210,,HOSE,1,1,1,1,1,1,R,,72159AMA-3,M920001,72159AMA-
3,M920001,72159AMA-3,M920001,72159AMA-3,M920001,72159AMA-3,M920001,72159AMA-
3,M920001,I
9,1,,172149-78220,,HOSE,1,1,1,1,1,1,,,,,,,,,,,,
9-1,1,,172159-78220,,HOSE,1,1,1,1,1,1,R,,72159AMA-3,M920001,72159AMA-
3,M920001,72159AMA-3,M920001,72159AMA-3,M920001,72159AMA-3,M920001,72159AMA-
3,M920001,I
10,1,,172149-78230,,HOSE,1,1,1,1,1,1,,,,,,,,,,,,
10-1,1,,172159-78230,,HOSE,1,1,1,1,1,1,R,,72159AMA-3,M920001,72159AMA-
3,M920001,72159AMA-3,M920001,72159AMA-3,M920001,72159AMA-3,M920001,72159AMA-
3,M920001,I
11,1,,172149-78240,,HOSE,1,1,1,1,1,1,,,,,,,,,,,,
11-1,1,,172159-78240,,HOSE,1,1,1,1,1,1,R,,72159AMA-3,M920001,72159AMA-
3,M920001,72159AMA-3,M920001,72159AMA-3,M920001,72159AMA-3,M920001,72159AMA-
3,M920001,I
12,1,,172149-78270,,HOSE,2,2,2,2,2,2,,,,,,,,,,,,
12-1,1,,172159-78270,,HOSE,2,2,2,2,2,2,R,,72159AMA-3,M920001,72159AMA-
3,M920001,72159AMA-3,M920001,72159AMA-3,M920001,72159AMA-3,M920001,72159AMA-
3,M920001,I
13,1,,172149-78290,,HOSE,2,2,2,2,2,2,,,,,,,,,,,,
13-1,1,,172159-78290,,HOSE,2,2,2,2,2,2,R,,72159AMA-3,M920001,72159AMA-
3,M920001,72159AMA-3,M920001,72159AMA-3,M920001,72159AMA-3,M920001,72159AMA-
3,M920001,I
14,1,,172149-78300,,HOSE,2,2,2,2,2,2,,,,,,,,,,,,
14-1,1,,172159-78300,,HOSE,2,2,2,2,2,2,R,,72159AMA-3,M920001,72159AMA-
3,M920001,72159AMA-3,M920001,72159AMA-3,M920001,72159AMA-3,M920001,72159AMA-
3,M920001,I
15,1,,172149-78500,,HOSE,1,1,1,1,1,1,,,,,,,,,,,,
15-1,1,,172149-
78501,,HOSE,1,1,1,1,1,1,N,,72149144,*1990.11,72149144,*1990.11,72149144,*1990.11
,72149144,*1990.11,72149144,*1990.11,72149144,*1990.11,I
15-2,1,,172159-78500,,HOSE,1,1,1,1,1,1,R,,72159AMA-3,M920001,72159AMA-
3,M920001,72159AMA-3,M920001,72159AMA-3,M920001,72159AMA-3,M920001,72159AMA-
3,M920001,I
16,1,,172149-78510,,HOSE,1,1,1,1,1,1,,,,,,,,,,,,
16-1,1,,172149-
78511,,HOSE,1,1,1,1,1,1,N,,72149144,*1990.11,72149144,*1990.11,72149144,*1990.11
,72149144,*1990.11,72149144,*1990.11,72149144,*1990.11,I
16-2,1,,172159-78510,,HOSE,1,1,1,1,1,1,R,,72159AMA-3,M920001,72159AMA-
3,M920001,72159AMA-3,M920001,72159AMA-3,M920001,72159AMA-3,M920001,72159AMA-
3,M920001,I
17,1,,172149-78520,,HOSE,1,1,1,1,1,1,,,,,,,,,,,,
17-1,1,,172159-78520,,HOSE,1,1,1,1,1,1,R,,72159AMA-3,M920001,72159AMA-
3,M920001,72159AMA-3,M920001,72159AMA-3,M920001,72159AMA-3,M920001,72159AMA-
3,M920001,I
18,1,,23871-030000,,"PLUG PT3/8,SCREW",3,3,3,3,3,3,,,,,,,,,,,,

```
19,1,,24315-000110,,"O-RING 1B P-11.0",8,8,8,8,8,8,,,,,,,,,,,,
20,1,,172123-76120,,"CONNECTOR PF1/4",2,2,2,2,2,2,,,,,,,,,,,,
20-1,1,,172159-76120,,"CONNECTOR PF1/4",2,2,2,2,2,2,R,,72159AMA-
3,M920001,72159AMA-3,M920001,72159AMA-3,M920001,72159AMA-3,M920001,72159AMA-
3,M920001,72159AMA-3,M920001,I
21,1,,24315-000110,,"O-RING 1B P-11.0",2,2,2,2,2,2,,,,,,,,,,,,
22,1,,172110-76450,,ELBOW,1,1,1,1,1,1,,,,,,,,,,,,
23,1,,172149-78350,,"COVER, HOSE",2,2,2,2,2,2,,,,,,,,,,,,
23-1,1,,23061-220130,,"TUBE 22X130,VINYL",2,2,2,2,2,2,R,,72159AMA-
3,M920001,72159AMA-3,M920001,72159AMA-3,M920001,72159AMA-3,M920001,72159AMA-
3,M920001,72159AMA-3,M920001,I
24,1,,23000-025000,,"CLAMP 25",2,2,2,2,2,2,,,,,,,,,,,,
25,1,,172131-78350,,"GROMMET 13.5",2,2,2,2,2,2,W,,72159AMA-3,M920001,72159AMA-
3,M920001,72159AMA-3,M920001,72159AMA-3,M920001,72159AMA-3,M920001,72159AMA-
3,M920001,I
26,1,,198511-04300,,W-CLAMP,1,1,1,1,1,1,W,,72159AMA-3,M920001,72159AMA-
3,M920001,72159AMA-3,M920001,72159AMA-3,M920001,72159AMA-3,M920001,72159AMA-
3,M920001,I
27,1,,172159-78360,,COVER,1,1,1,1,1,1,W,,72159AMA-3,M920001,72159AMA-
3,M920001,72159AMA-3,M920001,72159AMA-3,M920001,72159AMA-3,M920001,72159AMA-
3,M920001,I
28,1,,172159-78080,,CLAMP,2,2,2,2,2,2,W,,72159AMA-3,M920001,72159AMA-
3,M920001,72159AMA-3,M920001,72159AMA-3,M920001,72159AMA-3,M920001,72159AMA-
3,M920001,I
```

Fig. 49 ユアツハイカン(バルブ－スイベル モータ)
https://truckmanualshub.com/
HYD. OIL PIPING (VALVE－SWIVEL MOTOR)

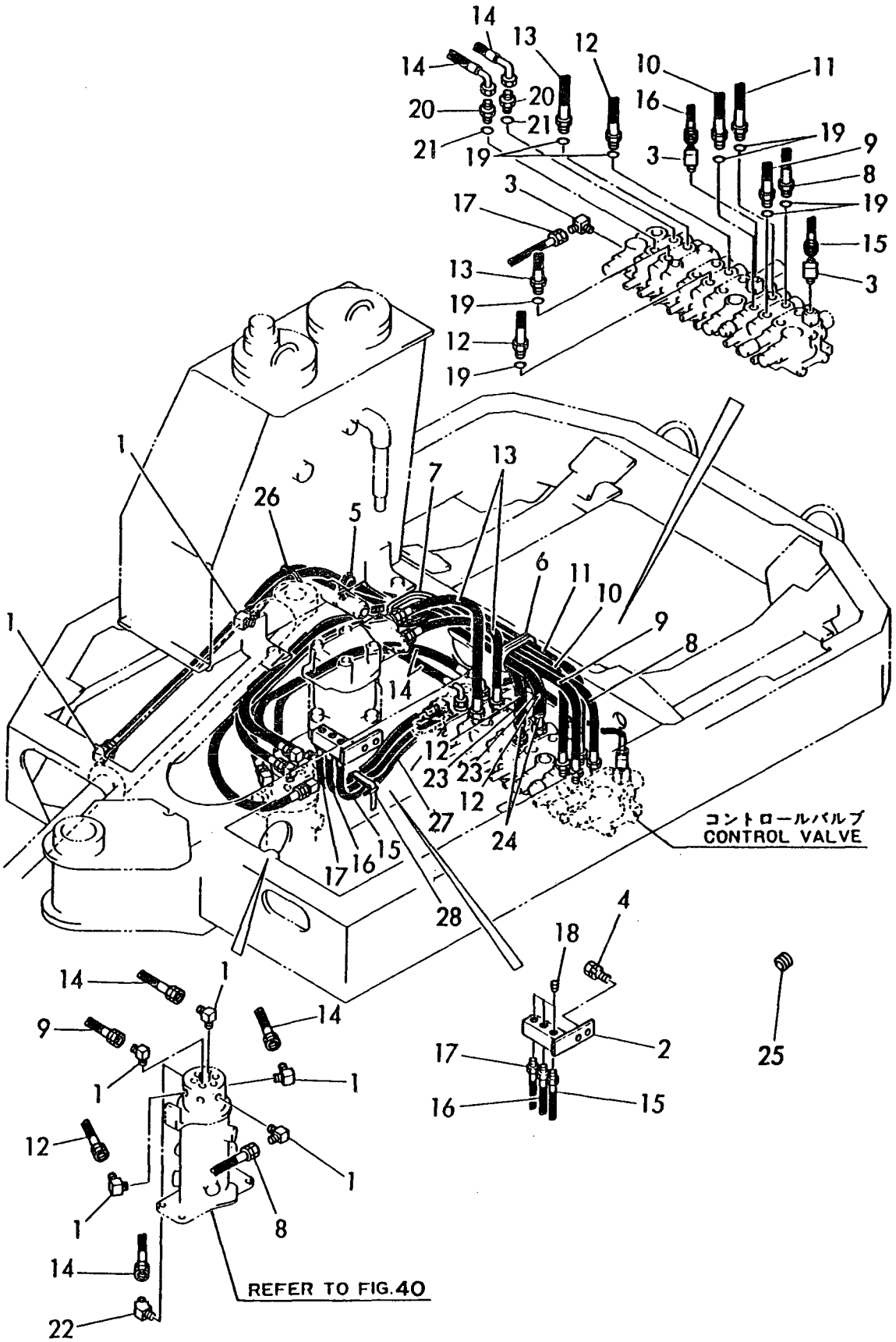

https://truckmanualshub.com/

```
1,1,,172149-76120,,ELBOW,1,1,1,1,1,1,,,,,,,,,,,,
1-1,1,,172159-76860,,ELBOW,1,1,1,1,1,1,R,,72159AMA-3,M920001,72159AMA-
3,M920001,72159AMA-3,M920001,72159AMA-3,M920001,72159AMA-3,M920001,72159AMA-
3,M920001,I
2,2,,24311-000180,,"O-RING 1A P-18.0",1,1,1,1,1,1,,,,,,,,,,,,
3,1,,172141-76180,,CONNECTOR,1,1,1,1,1,1,,,,,,,,,,,,
3-1,1,,172159-76180,,CONNECTOR,1,1,1,1,1,1,R,,72159AMA-3,M920001,72159AMA-
3,M920001,72159AMA-3,M920001,72159AMA-3,M920001,72159AMA-3,M920001,72159AMA-
3,M920001,I
4,2,,24315-000110,,"O-RING 1B P-11.0",1,1,1,1,1,1,,,,,,,,,,,,
5,1,,172141-76200,,CONNECTOR,1,1,1,1,1,1,,,,,,,,,,,,
5-1,1,,172159-76200,,CONNECTER,1,1,1,1,1,1,R,,72159AMA-3,M920001,72159AMA-
3,M920001,72159AMA-3,M920001,72159AMA-3,M920001,72159AMA-3,M920001,72159AMA-
3,M920001,I
6,2,,24315-000110,,"O-RING 1B P-11.0",1,1,1,1,1,1,,,,,,,,,,,,
7,1,,172141-77800,,"JOINT, GREASE",2,2,2,2,2,2,,,,,,,,,,,,
7-1,1,,172159-77800,,"JOINT, GREASE",2,2,2,2,2,2,R,,72159AMA-3,M920001,72159AMA-
3,M920001,72159AMA-3,M920001,72159AMA-3,M920001,72159AMA-3,M920001,72159AMA-
3,M920001,I
8,1,,172142-77810,,HOSE,1,1,1,1,1,1,,,,,,,,,,,,
9,1,,172149-78120,,HOSE,1,1,1,1,1,1,,,,,,,,,,,,
9-1,1,,172159-78120,,HOSE,1,1,1,1,1,1,R,,72159AMA-3,M920001,72159AMA-
3,M920001,72159AMA-3,M920001,72159AMA-3,M920001,72159AMA-3,M920001,72159AMA-
3,M920001,I
10,1,,172149-78130,,HOSE,1,1,1,1,1,1,,,,,,,,,,,,
10-1,1,,172159-78130,,HOSE,1,1,1,1,1,1,R,,72159AMA-3,M920001,72159AMA-
3,M920001,72159AMA-3,M920001,72159AMA-3,M920001,72159AMA-3,M920001,72159AMA-
3,M920001,I
11,1,,172141-78500,,HOSE,1,1,1,1,1,1,,,,,,,,,,,,
11-1,1,,172159-78070,,HOSE,1,1,1,1,1,1,R,,72159AMA-3,M920001,72159AMA-
3,M920001,72159AMA-3,M920001,72159AMA-3,M920001,72159AMA-3,M920001,72159AMA-
3,M920001,I
13,2,,172141-78900,,"TUBE, SPIRAL",1,1,1,1,1,1,,,,,,,,,,,,
13-1,2,,172159-78140,,"TUBE, SPIRAL",1,1,1,1,1,1,R,,72159AMA-3,M920001,72159AMA-
3,M920001,72159AMA-3,M920001,72159AMA-3,M920001,72159AMA-3,M920001,72159AMA-
3,M920001,I
14,1,,933166-25350,,"ELBOW 1/2 (90ß)",1,1,1,1,1,1,,,,,,,,,,,,
15,1,,23000-048000,,"CLAMP 48",1,1,1,1,1,1,,,,,,,,,,,,
16,1,,172149-78400,,"TUBE, COIL",1,1,1,1,1,1,,,,,,,,,,,,
16-1,1,,172159-78400,,"TUBE, COIL",1,1,1,1,1,1,R,,72159AMA-3,M920001,72159AMA-
3,M920001,72159AMA-3,M920001,72159AMA-3,M920001,72159AMA-3,M920001,72159AMA-
3,M920001,I
17,1,,172159-76900,,CONNECTOR,1,1,1,1,1,1,W,,72159AMA-3,M920001,72159AMA-
3,M920001,72159AMA-3,M920001,72159AMA-3,M920001,72159AMA-3,M920001,72159AMA-
3,M920001,I
```

Fig. 50 ユアツハイカン(サドウユタンクモドシ)
https://truckmanualshub.com/
HYD. OIL PIPING(TANK RETURN)

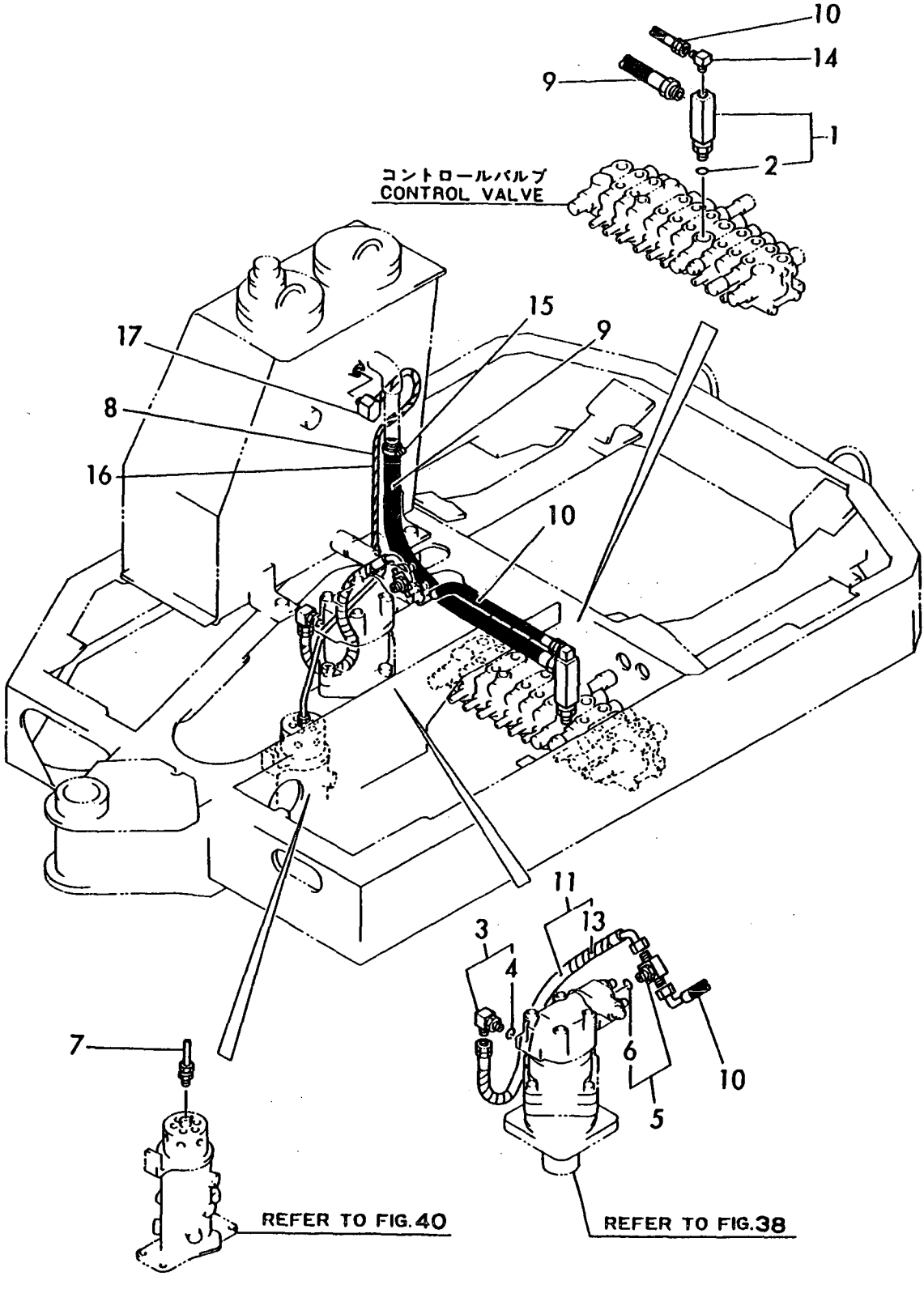

https://truckmanualshub.com/

```
1,1,,172123-76120,,"CONNECTOR PF1/4",4,4,4,4,4,4,,,,,,,,,,,,
1-1,1,,172159-76120,,"CONNECTOR PF1/4",4,4,4,4,4,4,R,,72159AMA-
3,M920001,72159AMA-3,M920001,72159AMA-3,M920001,72159AMA-3,M920001,72159AMA-
3,M920001,72159AMA-3,M920001,I
2,1,,23394-020000,,"JOINT 45RGI1/4",2,2,2,2,2,2,,,,,,,,,,,,
3,1,,172110-76470,,NIPPLE,4,4,4,4,4,4,,,,,,,,,,,,
4,1,,24315-000110,,"O-RING 1B P-11.0",4,4,4,4,4,4,,,,,,,,,,,,
5,1,,172149-78330,,HOSE,2,2,2,2,2,2,,,,,,,,,,,,
5-1,1,,172159-78330,,HOSE,2,2,2,2,2,2,R,,72159AMA-3,M920001,72159AMA-
3,M920001,72159AMA-3,M920001,72159AMA-3,M920001,72159AMA-3,M920001,72159AMA-
3,M920001,I
6,1,,172149-78310,,HOSE,2,2,2,2,2,2,,,,,,,,,,,,
6-1,1,,172159-78310,,HOSE,2,2,2,2,2,2,R,,72159AMA-3,M920001,72159AMA-
3,M920001,72159AMA-3,M920001,72159AMA-3,M920001,72159AMA-3,M920001,72159AMA-
3,M920001,I
7,1,,172149-78320,,HOSE,2,2,2,2,2,2,,,,,,,,,,,,
7-1,1,,172159-78320,,HOSE,2,2,2,2,2,2,R,,72159AMA-3,M920001,72159AMA-
3,M920001,72159AMA-3,M920001,72159AMA-3,M920001,72159AMA-3,M920001,72159AMA-
3,M920001,I
```

Fig. 51 ユアツハイカン(ソウコウ) HYD. OIL PIPING(TRAVEL)

https://truckmanualshub.com/

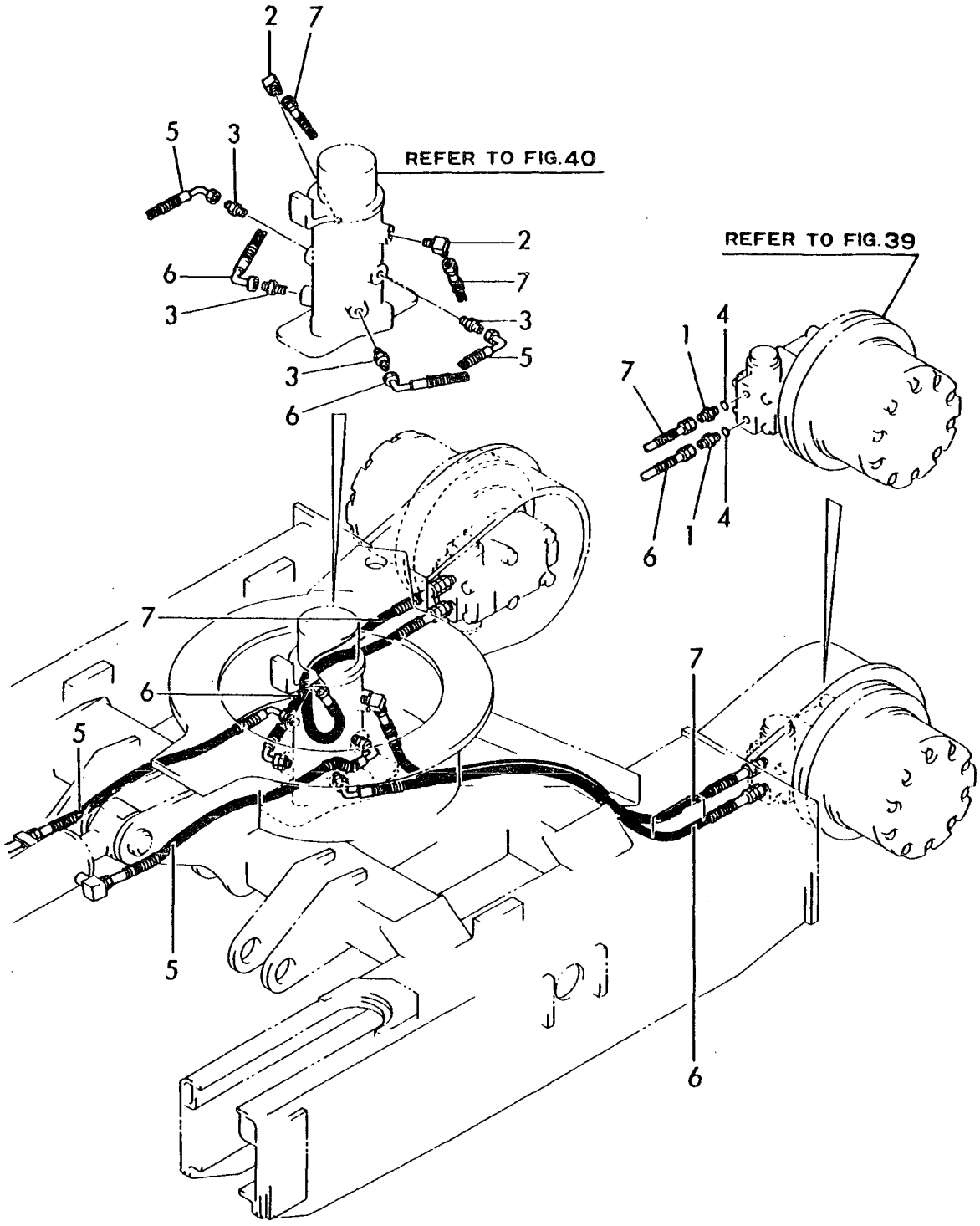

https://truckmanualshub.com/

```
1,1,,172123-76120,,"CONNECTOR PF1/4",2,2,2,2,2,2,,,,,,,,,,,,
1-1,1,,172159-76120,,"CONNECTOR PF1/4",4,4,4,4,4,4,R,,72159AMA-
3,M920001,72159AMA-3,M920001,72159AMA-3,M920001,72159AMA-3,M920001,72159AMA-
3,M920001,72159AMA-3,M920001,I
2,1,,24315-000110,,"O-RING 1B P-11.0",6,6,6,6,6,6,,,,,,,,,,,,
3,1,,172110-76170,,PLATE,4,4,4,4,4,4,,,,,,,,,,,,
3-1,1,,172159-76700,,PLATE,4,4,4,4,4,4,R,,72159AMA-1,M900001,72159AMA-
1,M900001,72159AMA-1,M900001,72159AMA-1,M900001,72159AMA-1,M900001,72159AMA-
1,M900001
4,1,,172149-76450,,"TUBE(L), ARM",1,1,1,1,1,1,,,,,,,,,,,,
4-1,1,,172159-76450,,"TUBE(L),ARM",1,1,1,1,1,1,R,,72159AMA-1,M900001,72159AMA-
1,M900001,72159AMA-1,M900001,72159AMA-1,M900001,72159AMA-1,M900001,72159AMA-
1,M900001
5,1,,172149-76470,,"TUBE(R), ARM",1,1,1,1,1,1,,,,,,,,,,,,
5-1,1,,172159-76470,,"TUBE(R),ARM",1,1,1,1,1,1,R,,72159AMA-1,M900001,72159AMA-
1,M900001,72159AMA-1,M900001,72159AMA-1,M900001,72159AMA-1,M900001,72159AMA-
1,M900001
6,1,,172149-76490,,"TUBE(L), BUCKET",1,1,1,1,1,1,,,,,,,,,,,,
6-1,1,,172159-76490,,"TUBE(L),BUCKET",1,1,1,1,1,1,R,,72159AMA-
1,M900001,72159AMA-1,M900001,72159AMA-1,M900001,72159AMA-1,M900001,72159AMA-
1,M900001,72159AMA-1,M900001
7,1,,172149-76520,,"TUBE(R), BUCKET",1,1,1,1,1,1,,,,,,,,,,,,
7-1,1,,172159-76520,,"TUBE(R),BUCKET",1,1,1,1,1,1,R,,72159AMA-
1,M900001,72159AMA-1,M900001,72159AMA-1,M900001,72159AMA-1,M900001,72159AMA-
1,M900001,72159AMA-1,M900001
8,1,,172137-76580,,"COLLER 9X11",4,4,4,4,4,4,,,,,,,,,,,,
8-1,1,,172159-76710,,"COLLER 9X11",4,4,4,4,4,4,R,,72159AMA-1,M900001,72159AMA-
1,M900001,72159AMA-1,M900001,72159AMA-1,M900001,72159AMA-1,M900001,72159AMA-
1,M900001
9,1,,172149-76580,,"JOINT, BOOM",1,1,1,1,1,1,,,,,,,,,,,,
9-1,1,,172159-76580,,"JOINT,BOOM",1,1,1,1,1,1,R,2,72159AMA-1,M900001,72159AMA-
1,M900001,72159AMA-1,M900001,72159AMA-1,M900001,72159AMA-1,M900001,72159AMA-
1,M900001
10,1,,26013-080162,,"BOLT W/WASHER M8X16",3,3,3,3,3,3,,,,,,,,,,,,
11,1,,26013-080252,,"BOLT M 8X 25",4,4,4,4,4,4,,,,,,,,,,,,
12,1,,26013-100202,,"BOLT W/WASHER M10X20",2,2,2,2,2,2,,2,,,,,,,,,,
13,1,,172137-78340,,HOSE,2,2,2,2,2,2,,,,,,,,,,,,
13-1,1,,172159-78340,,HOSE,2,2,2,2,2,2,R,,72159AMA-3,M920001,72159AMA-
3,M920001,72159AMA-3,M920001,72159AMA-3,M920001,72159AMA-3,M920001,72159AMA-
3,M920001,I
14,1,,172137-78350,,HOSE,2,2,,,2,,,,,,,,,,,,
14-1,1,,172159-78590,,HOSE,2,2,,,2,,R,,72159AMA-3,M920001,72159AMA-
3,M920001,,,,,72159AMA-3,M920001,,,I
15,1,,172149-78600,,CLAMP,1,1,1,1,1,1,,,,,,,,,,,,
16,1,,172149-78620,,"PLATE,
CLAMP",1,1,1,1,1,1,W,,72159010,*1990.03,72159010,*1990.03,72159010,*1990.03,7215
9010,*1990.03,72159010,*1990.03,72159010,*1990.03
16-1,1,,172159-78620,,"PLATE, CLAMP",1,1,1,1,1,1,R,2,72159AMA-
2,M910001,72159AMA-2,M910001,72159AMA-2,M910001,72159AMA-2,M910001,72159AMA-
2,M910001,72159AMA-2,M910001
17,1,,172149-78650,,"SUPPORT, HOSE",1,1,1,1,1,1,,,,,,,,,,,,
17-1,1,,172159-78660,,"SUPPORT, HOSE",1,1,1,1,1,1,R,,72159AMA-
2,M910001,72159AMA-2,M910001,72159AMA-2,M910001,72159AMA-2,M910001,72159AMA-
2,M910001,72159AMA-2,M910001
18,1,,172149-78760,,GROMMET,1,1,1,1,1,1,,,,,,,,,,,,
19,1,,23271-020501,,HOSE,1,1,1,1,1,1,,,,,,,,,,,,
20,1,,23271-020571,,HOSE,1,1,1,1,1,1,,,,,,,,,,,,
21,1,,26013-100202,,"BOLT W/WASHER M10X20",4,4,4,4,4,4,,2,,,,,,,,,,
22,1,,172149-78190,,HOSE,1,1,1,1,1,1,,,,,,,,,,,,
22-1,1,,172159-78190,,HOSE,1,1,1,1,1,1,R,,72159AMA-3,M920001,72159AMA-
3,M920001,72159AMA-3,M920001,72159AMA-3,M920001,72159AMA-3,M920001,72159AMA-
3,M920001,I
23,1,,172149-78200,,HOSE,1,1,1,1,1,1,,,,,,,,,,,,
```

https://truckmanualshub.com/

```
23-1,1,,172159-78200,,HOSE,1,1,1,1,1,1,R,,72159AMA-3,M920001,72159AMA-
3,M920001,72159AMA-3,M920001,72159AMA-3,M920001,72159AMA-3,M920001,72159AMA-
3,M920001,I
24,1,,172149-78250,,HOSE,1,1,1,1,1,1,,,,,,,,,,,,
24-1,1,,172159-78250,,HOSE,1,1,1,1,1,1,R,,72159AMA-3,M920001,72159AMA-
3,M920001,72159AMA-3,M920001,72159AMA-3,M920001,72159AMA-3,M920001,72159AMA-
3,M920001,I
25,1,,172149-78260,,HOSE,1,1,1,1,1,1,,,,,,,,,,,,
25-1,1,,172159-78260,,HOSE,1,1,1,1,1,1,R,,72159AMA-3,M920001,72159AMA-
3,M920001,72159AMA-3,M920001,72159AMA-3,M920001,72159AMA-3,M920001,72159AMA-
3,M920001,I
26,1,,172149-78280,,HOSE,1,1,1,1,1,1,,,,,,,,,,,,
26-1,1,,172159-78280,,HOSE,1,1,1,1,1,1,R,,72159AMA-3,M920001,72159AMA-
3,M920001,72159AMA-3,M920001,72159AMA-3,M920001,72159AMA-3,M920001,72159AMA-
3,M920001,I
27,1,,172150-
78620,,CLAMP,1,1,1,1,1,1,,,72159010,*1990.03,72159010,*1990.03,72159010,*1990.03
,72159010,*1990.03,72159010,*1990.03,72159010,*1990.03
27-1,1,,172159-78630,,CLAMP,1,1,1,1,1,1,R,,72159AMA-3,M920001,72159AMA-
3,M920001,72159AMA-3,M920001,72159AMA-3,M920001,72159AMA-3,M920001,72159AMA-
3,M920001
28,1,,172150-78150,,HOSE,,,2,2,,2,,,,,,,,,,,,
28-1,1,,172159-78580,,HOSE,,,2,2,,2,R,,,,,,72159AMA-3,M920001,72159AMA-
3,M920001,,,72159AMA-3,M920001,I
29,1,,172149-78870,,CLAMP,2,2,2,2,2,2,,,,,,,,,,,,
29-1,1,,172149-
78871,,CLAMP,2,2,2,2,2,2,N,,72149144,*1990.11,72149144,*1990.11,72149144,*1990.1
1,72149144,*1990.11,72149144,*1990.11,72149144,*1990.11,I
29-2,1,,172159-78870,,"CLAMP, HOSE",2,2,2,2,2,2,R,,72159AMA-3,M920001,72159AMA-
3,M920001,72159AMA-3,M920001,72159AMA-3,M920001,72159AMA-3,M920001,72159AMA-
3,M920001,I
30,1,,26013-100202,,"BOLT W/WASHER M10X20",2,2,2,2,2,2,,,,,,,,,,,,
31,1,,172149-78180,,HOSE,1,1,1,1,1,1,,,,,,,,,,,,
31-1,1,,172159-78180,,HOSE,1,1,1,1,1,1,R,,72159AMA-3,M920001,72159AMA-
3,M920001,72159AMA-3,M920001,72159AMA-3,M920001,72159AMA-3,M920001,72159AMA-
3,M920001,I
32,1,,172149-78960,,"COVER, HOSE",1,1,1,1,1,1,,,,,,,,,,,,
32-1,1,,172159-78960,,"COVER, HOSE",1,1,1,1,1,1,R,,72159AMA-3,M920001,72159AMA-
3,M920001,72159AMA-3,M920001,72159AMA-3,M920001,72159AMA-3,M920001,72159AMA-
3,M920001,I
33,1,,172149-78970,,"COVER, HOSE",3,3,3,3,3,3,,,,,,,,,,,,
33-1,1,,172159-78970,,"COVER, HOSE",2,2,2,2,2,2,N,,72159AMA-3,M920001,72159AMA-
3,M920001,72159AMA-3,M920001,72159AMA-3,M920001,72159AMA-3,M920001,72159AMA-
3,M920001,I
34,1,,172149-78350,,"COVER, HOSE",2,2,2,2,2,2,,,,,,,,,,,,
34-1,1,,23061-220130,,"TUBE 22X130,VINYL",4,4,4,4,4,4,R,,72159AMA-
3,M920001,72159AMA-3,M920001,72159AMA-3,M920001,72159AMA-3,M920001,72159AMA-
3,M920001,72159AMA-3,M920001,I
35,1,,23000-025000,,"CLAMP 25",2,2,2,2,2,2,,,,,,,,,,,,
36,1,,172312-76250,,"ELBOW PT1/4",2,2,2,2,2,2,,,,,,,,,,,,
36-1,1,,172159-76090,,"ELBOW PT1/4",2,2,2,2,2,2,R,,72159AMA-3,M920001,72159AMA-
3,M920001,72159AMA-3,M920001,72159AMA-3,M920001,72159AMA-3,M920001,72159AMA-
3,M920001,I
37,1,,172137-78070,,HOSE,,,2,2,,2,,1,,,,,,,,,,
38,1,,172138-78280,,HOSE,2,2,,,2,,,1,,,,,,,,,,
39,1,,172116-76240,,"NIPPLE PT1/4",2,2,2,2,2,2,,1,,,,,,,,,,
40,1,,194630-77250,,COUPLER,2,2,2,2,2,2,,1,,,,,,,,,,
41,2,,194630-77270,,COUPLER,2,2,2,2,2,2,,1,,,,,,,,,,
42,2,,194630-77280,,COUPLER,2,2,2,2,2,2,,1,,,,,,,,,,
43,1,,172131-78350,,"GROMMET 13.5",2,2,2,2,2,2,W,,72159AMA-3,M920001,72159AMA-
3,M920001,72159AMA-3,M920001,72159AMA-3,M920001,72159AMA-3,M920001,72159AMA-
3,M920001,I
```

https://truckmanualshub.com/

44,1,,172159-78940,,"COVER 16-610",2,2,2,2,2,2,W,,72159AMA-3,M920001,72159AMA-3,M920001,72159AMA-3,M920001,72159AMA-3,M920001,72159AMA-3,M920001,I
45,1,,172159-78980,,"COVER 16-590",1,1,1,1,1,1,W,,72159AMA-3,M920001,72159AMA-3,M920001,72159AMA-3,M920001,72159AMA-3,M920001,72159AMA-3,M920001,I
46,1,,172159-78800,,"COVER 16-550",1,1,1,1,1,1,W,,72159AMA-3,M920001,72159AMA-3,M920001,72159AMA-3,M920001,72159AMA-3,M920001,72159AMA-3,M920001,I
47,1,,172159-78990,,"COVER 16-320",2,2,2,2,2,2,W,,72159AMA-3,M920001,72159AMA-3,M920001,72159AMA-3,M920001,72159AMA-3,M920001,72159AMA-3,M920001,I

Fig. 52 ユアツハイカン(サギョウキブ) HYD.OIL PIPING (WORK SECTION)

https://truckmanualshub.com/

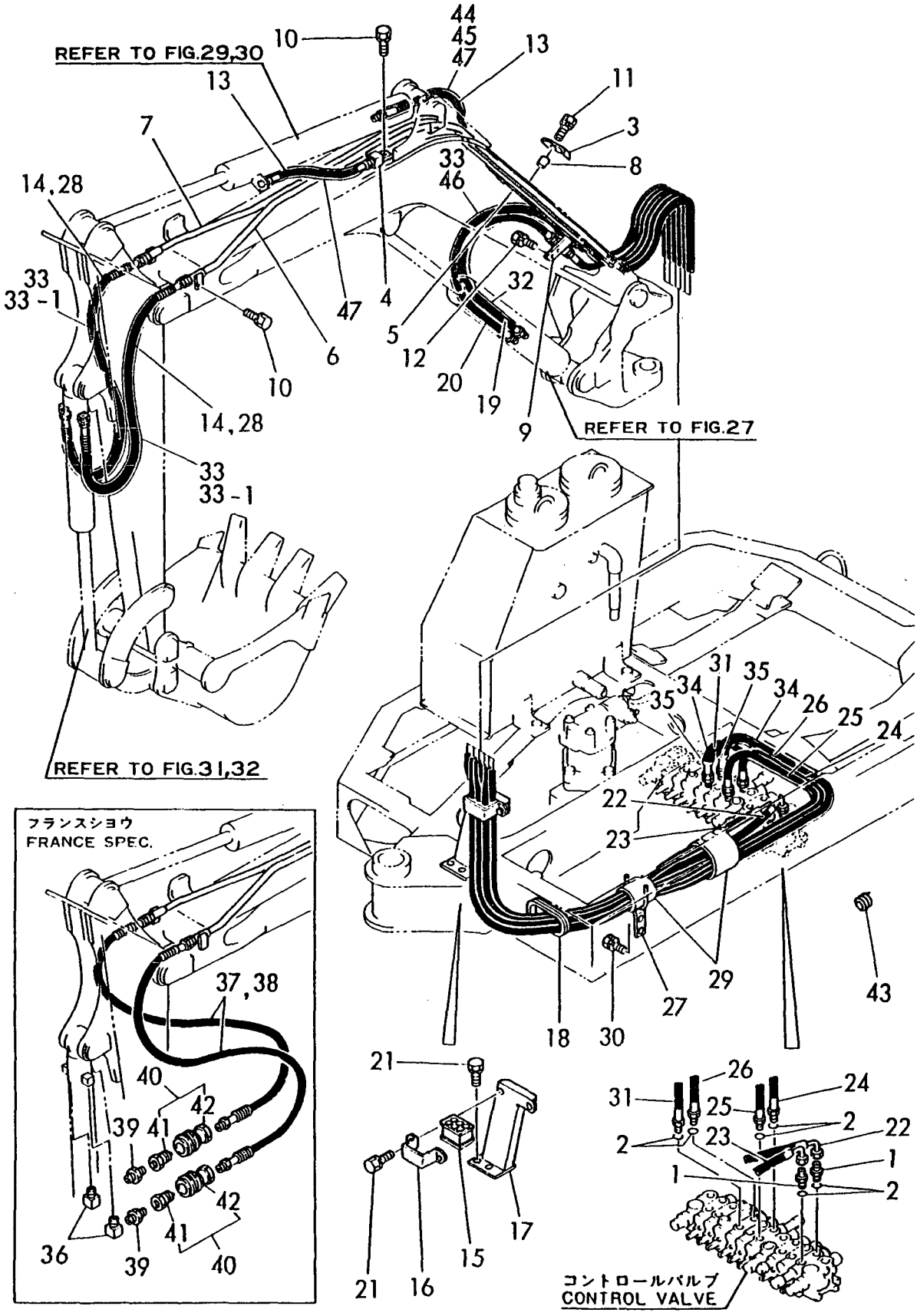

```
1,1,,23871-040000,,"PLUG PT1/2,SCREW",1,1,1,1,1,1,,,,,,,,,,,,
2,1,,23871-030000,,"PLUG PT3/8,SCREW",1,1,1,1,1,1,,,,,,,,,,,,
3,1,,172730-75140,,ADAPTOR,2,2,2,2,2,2,,,,,,,,,,,,
3-1,1,,172159-76160,,ADAPTOR,2,2,2,2,2,2,R,,72159AMA-3,M920001,72159AMA-
3,M920001,72159AMA-3,M920001,72159AMA-3,M920001,72159AMA-3,M920001,72159AMA-
3,M920001,I
4,1,,24311-000140,,"O-RING 1A P-14.0",2,2,2,2,2,2,,,,,,,,,,,,
5,1,,172149-76200,,CONNECTER,1,1,1,1,1,1,,,,,,,,,,,,
5-1,1,,172159-76200,,CONNECTER,1,1,1,1,1,1,R,,72159AMA-3,M920001,72159AMA-
3,M920001,72159AMA-3,M920001,72159AMA-3,M920001,72159AMA-3,M920001,72159AMA-
3,M920001,I
6,1,,172150-76350,,CONNECTOR,1,1,1,1,1,1,,,,,,,,,,,,
6-1,1,,172159-76280,,CONNECTOR,1,1,1,1,1,1,R,,72159AMA-2,M910001,72159AMA-
2,M910001,72159AMA-2,M910001,72159AMA-2,M910001,72159AMA-2,M910001,72159AMA-
2,M910001
7,1,,933166-25420,,ADAPTER,1,1,1,1,1,1,,,,,,,,,,,,
8,1,,933152-24410,,"CONNECTOR (A)",1,1,1,1,1,1,,,,,,,,,,,,
9,1,,26013-100252,,"BOLT W/WASHER M10X25",1,1,1,1,1,1,,,,,,,,,,,,
10,1,,172112-76300,,"RETAINER A,BOOM PIPE",1,1,1,1,1,1,,,,,,,,,,,,
10-1,1,,172159-76720,,"RETAINER A,BOOM PIPE",1,1,1,1,1,1,R,,72159AMA-
2,M910001,72159AMA-2,M910001,72159AMA-2,M910001,72159AMA-2,M910001,72159AMA-
2,M910001,72159AMA-2,M910001
11,1,,172149-76540,,"TUBE, 3RD",1,1,1,1,1,1,,,,,,,,,,,,
11-1,1,,172159-76540,,"TUBE, 3RD",1,1,1,1,1,1,R,,72159AMA-1,M900001,72159AMA-
1,M900001,72159AMA-1,M900001,72159AMA-1,M900001,72159AMA-1,M900001,72159AMA-
1,M900001
12,1,,172149-76560,,"TUBE, 3RD",1,1,1,1,1,1,,,,,,,,,,,,
12-1,1,,172159-76560,,"TUBE, 3RD",1,1,1,1,1,1,R,,72159AMA-1,M900001,72159AMA-
1,M900001,72159AMA-1,M900001,72159AMA-1,M900001,72159AMA-1,M900001,72159AMA-
1,M900001
13,1,,23871-030000,,"PLUG PT3/8,SCREW",1,1,1,1,1,1,,,,,,,,,,,,
14,1,,23871-040000,,"PLUG PT1/2,SCREW",1,1,1,1,1,1,,,,,,,,,,,,
15,1,,26013-100402,,"BOLT M10X 40",2,2,2,2,2,2,,,,,,,,,,,,
16,1,,933155-09670,,"CLAMP, PIPE",1,1,1,1,1,1,,,,,,,,,,,,
16-1,1,,172159-76730,,"CLAMP, PIPE",1,1,1,1,1,1,R,,72159AMA-2,M910001,72159AMA-
2,M910001,72159AMA-2,M910001,72159AMA-2,M910001,72159AMA-2,M910001,72159AMA-
2,M910001
17,1,,172149-78540,,HOSE,1,1,1,1,1,1,,,,,,,,,,,,
17-1,1,,172159-78540,,HOSE,1,1,1,1,1,1,R,,72159AMA-3,M920001,72159AMA-
3,M920001,72159AMA-3,M920001,72159AMA-3,M920001,72159AMA-3,M920001,72159AMA-
3,M920001,I
18,1,,172149-78530,,HOSE,1,1,1,1,1,1,,,,,,,,,,,,
18-1,1,,172159-78530,,HOSE,1,1,1,1,1,1,R,,72159AMA-3,M920001,72159AMA-
3,M920001,72159AMA-3,M920001,72159AMA-3,M920001,72159AMA-3,M920001,72159AMA-
3,M920001,I
19,1,,172149-78470,,HOSE,1,1,1,1,1,1,,,,,,,,,,,,
19-1,1,,172159-78470,,HOSE,1,1,1,1,1,1,R,,72159AMA-3,M920001,72159AMA-
3,M920001,72159AMA-3,M920001,72159AMA-3,M920001,72159AMA-3,M920001,72159AMA-
3,M920001,I
20,1,,172149-78480,,HOSE,1,1,1,1,1,1,,,,,,,,,,,,
20-1,1,,172159-78480,,HOSE,1,1,1,1,1,1,R,,72159AMA-3,M920001,72159AMA-
3,M920001,72159AMA-3,M920001,72159AMA-3,M920001,72159AMA-3,M920001,72159AMA-
3,M920001,I
21,1,,172150-
78620,,CLAMP,1,1,1,1,1,1,,,72159010,*1990.03,72159010,*1990.03,72159010,*1990.03
,72159010,*1990.03,72159010,*1990.03,72159010,*1990.03
21-1,1,,172159-78630,,CLAMP,1,1,1,1,1,1,R,,72159AMA-1,M900001,72159AMA-
1,M900001,72159AMA-1,M900001,72159AMA-1,M900001,72159AMA-1,M900001,72159AMA-
1,M900001
22,1,,172150-78650,,HOSE,1,1,1,1,1,1,,,,,,,,,,,,
22-1,1,,172159-78050,,HOSE,1,1,1,1,1,1,R,,72159AMA-3,M920001,72159AMA-
3,M920001,72159AMA-3,M920001,72159AMA-3,M920001,72159AMA-3,M920001,72159AMA-
3,M920001,I
```

https://truckmanualshub.com/

23,1,,172145-76180,,"JOINT 3/8",1,1,1,1,1,1,,,,,,,,,,,,
23-1,1,,172159-76830,,"JOINT 3/8",1,1,1,1,1,1,R,,72159AMA-3,M920001,72159AMA-3,M920001,72159AMA-3,M920001,72159AMA-3,M920001,72159AMA-3,M920001,I
24,1,,172138-74351,,"VALVE ASSY",1,1,1,1,1,1,,,,,,,,,,,,
25,2,,172138-74360,,BODY,1,1,1,1,1,1,,,,,,,,,,,,
26,2,,172138-74370,,ROTOR,1,1,1,1,1,1,,,,,,,,,,,,
27,2,,172138-74380,,"SEAL, OIL",2,2,2,2,2,2,,,,,,,,,,,,
28,2,,172138-74390,,SPRING,1,1,1,1,1,1,,,,,,,,,,,,
29,2,,172138-74400,,ROLLER,1,1,1,1,1,1,,,,,,,,,,,,
30,2,,172138-74411,,LEVER,1,1,1,1,1,1,,,,,,,,,,,,
31,2,,172138-74420,,"KNOB, LEVER",1,1,1,1,1,1,,,,,,,,,,,,
32,2,,172138-74470,,"SEAL SET",1,1,1,1,1,1,,,,,,,,,,,,
33,2,,23871-010000,,"PLUG PT1/8,SCREW",1,1,1,1,1,1,,,,,,,,,,,,
34,2,,23871-020000,,"PLUG PT1/4,SCREW",1,1,1,1,1,1,,,,,,,,,,,,
35,1,,26116-080852,,"BOLT M 8X 85 PLATED",4,4,4,4,4,4,,,,,,,,,,,,
36,1,,22217-080000,,"SPRING WASHER 8",4,4,4,4,4,4,,,,,,,,,,,,
37,1,,172149-78550,,HOSE,1,1,1,1,1,1,,,,,,,,,,,,
37-1,1,,172159-78550,,HOSE,1,1,1,1,1,1,R,,72159AMA-3,M920001,72159AMA-3,M920001,72159AMA-3,M920001,72159AMA-3,M920001,72159AMA-3,M920001,I
38,1,,172142-78770,,"COVER 16-730, HOSE",1,1,1,1,1,1,,,,,,,,,,,,
38-1,1,,172159-78770,,"COVER, HOSE",1,1,1,1,1,1,R,,72159AMA-3,M920001,72159AMA-3,M920001,72159AMA-3,M920001,72159AMA-3,M920001,72159AMA-3,M920001,I
39,1,,172149-78950,,"COVER, HOSE",1,1,1,1,1,1,,,,,,,,,,,,
39-1,1,,172159-78950,,"COVER, HOSE",1,1,1,1,1,1,R,,72159AMA-3,M920001,72159AMA-3,M920001,72159AMA-3,M920001,72159AMA-3,M920001,72159AMA-3,M920001,I
40,1,,23000-035000,,"CLAMP 35",2,2,2,2,2,2,,,,,,,,,,,,
41,1,,23000-025000,,"CLAMP 25",2,2,2,2,2,2,,,,,,,,,,,,
42,1,,172138-76100,,COVER(A),1,1,1,1,1,1,,1,,,,,,,,,,
42-1,1,,172159-76100,,COVER(A),1,1,1,1,1,1,R,1,72159AMA-1,M900001,72159AMA-1,M900001,72159AMA-1,M900001,72159AMA-1,M900001,72159AMA-1,M900001
43,1,,172138-76110,,COVER(B),1,1,1,1,1,1,,1,,,,,,,,,,
43-1,1,,172159-76110,,COVER(B),1,1,1,1,1,1,R,1,72159AMA-1,M900001,72159AMA-1,M900001,72159AMA-1,M900001,72159AMA-1,M900001,72159AMA-1,M900001
44,1,,194630-77290,,"CAP, COUPLER",1,1,1,1,1,1,Z,1,72159010,*1990.03,72159010,*1990.03,72159010,*1990.03,72159010,*1990.03,72159010,*1990.03
45,1,,194630-77240,,"CAP, COUPLER",1,1,1,1,1,1,,1,,,,,,,,,,
46,1,,933168-02340,,"PLUG 1/2",1,1,1,1,1,1,,1,,,,,,,,,,
47,1,,933171-23050,,"PLUG 1/4",2,2,2,2,2,2,,1,,,,,,,,,,
48,1,,933171-24740,,"PLUG PT3/8",1,1,1,1,1,1,,1,,,,,,,,,,
49,1,,172137-78080,,HOSE,,,1,1,,1,,1,,,,,,,,,,
50,1,,172137-78090,,HOSE,,,1,1,,1,,1,,,,,,,,,,
51,1,,172138-78260,,HOSE,1,1,,,1,,,1,,,,,,,,,,
52,1,,172138-78270,,HOSE,1,1,,,1,,,1,,,,,,,,,,
53,1,,172116-76240,,"NIPPLE PT1/4",2,2,2,2,2,2,,1,,,,,,,,,,
54,1,,194630-77270,,COUPLER,1,1,1,1,1,1,Z,1,72159010,*1990.03,72159010,*1990.03,72159010,*1990.03,72159010,*1990.03,72159010,*1990.03
55,1,,194630-77280,,COUPLER,1,1,1,1,1,1,,1,,,,,,,,,,
56,1,,26013-100162,,"BOLT M10X 16",3,3,3,3,3,3,,1,,,,,,,,,,
57,1,,933166-25420,,ADAPTER,1,1,1,1,1,1,,1,,,,,,,,,,
58,1,,933152-24410,,"CONNECTOR (A)",1,1,1,1,1,1,,1,,,,,,,,,,
59,1,,172122-79920,,CLAMP,8,8,8,8,8,8,,,,,,,,,,,,
59-1,1,,172159-78080,,CLAMP,9,9,9,9,9,9,R,,72159AMA-2,M910001,72159AMA-2,M910001,72159AMA-2,M910001,72159AMA-2,M910001,72159AMA-2,M910001

https://truckmanualshub.com/

60,1,,172131-78350,,"GROMMET 13.5",2,2,2,2,2,2,W,,72159AMA-3,M920001,72159AMA-3,M920001,72159AMA-3,M920001,72159AMA-3,M920001,72159AMA-3,M920001,I

Fig. 53 サードバルブハイカン 3RD VALVE PIPING

https://truckmanualshub.com/

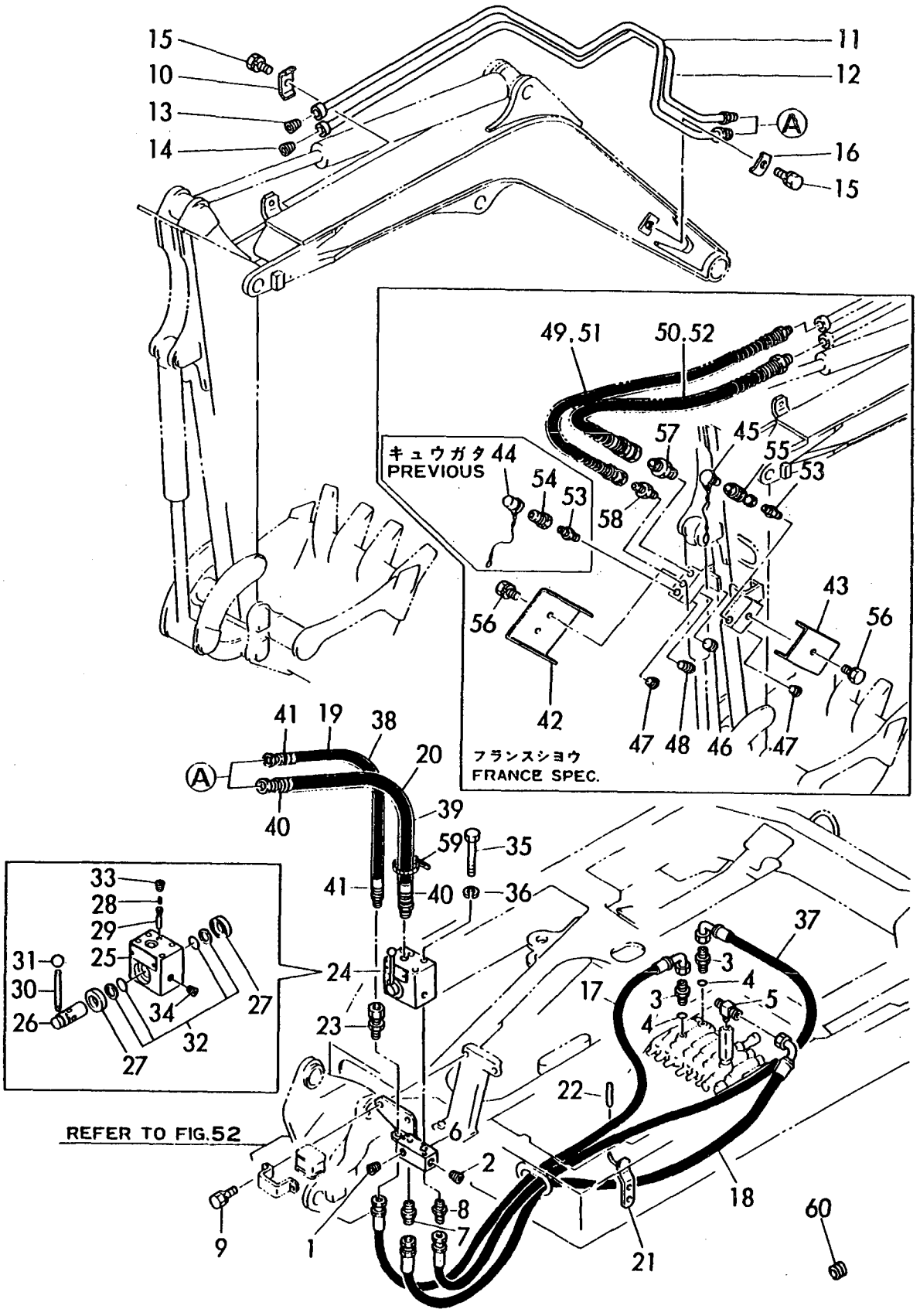

1,1,,172149-81300,,PIN,1,1,1,1,1,1,,,,,,,,,,,,
1-1,1,,172159-81300,,PIN,1,1,1,1,1,1,R,,72159AMA-1,M900001,72159AMA-
1,M900001,72159AMA-1,M900001,72159AMA-1,M900001,72159AMA-1,M900001,72159AMA-
1,M900001
2,1,,172149-81320,,PIN,1,1,1,1,1,1,,,,,,,,,,,,
2-1,1,,172159-81320,,PIN,1,1,1,1,1,1,R,,72159AMA-1,M900001,72159AMA-
1,M900001,72159AMA-1,M900001,72159AMA-1,M900001,72159AMA-1,M900001,72159AMA-
1,M900001
3,1,,172137-81360,,"PIN 30-109, BOOM",1,1,1,1,1,1,,,,,,,,,,,,
3-1,1,,172159-81340,,"PIN 30-109, BOOM",1,1,1,1,1,1,R,,72159AMA-
1,M900001,72159AMA-1,M900001,72159AMA-1,M900001,72159AMA-1,M900001,72159AMA-
1,M900001,72159AMA-1,M900001
4,1,,172149-81400,,"BOOM, 3RD",1,1,1,1,1,1,,,,,,,,,,,,
4-1,1,,172159-81400,,"BOOM, 3RD",1,1,1,1,1,1,R,,72159AMA-1,M900001,72159AMA-
1,M900001,72159AMA-1,M900001,72159AMA-1,M900001,72159AMA-1,M900001,72159AMA-
1,M900001
5,2,,172141-82270,,"BUSH 35 45",2,2,2,2,2,2,,,,,,,,,,,,
5-1,2,,172159-81480,,"BUSH 38 45, PIN",2,2,2,2,2,2,R,,72159AMA-
1,M900001,72159AMA-1,M900001,72159AMA-1,M900001,72159AMA-1,M900001,72159AMA-
1,M900001,72159AMA-1,M900001
6,1,,172141-84600,,"SHIM 35",1,1,1,1,1,1,,,,,,,,,,,,
6-1,1,,172159-81500,,"SHIM 35",1,1,1,1,1,1,R,,72159AMA-1,M900001,72159AMA-
1,M900001,72159AMA-1,M900001,72159AMA-1,M900001,72159AMA-1,M900001,72159AMA-
1,M900001
7,1,,22417-800450,,"COTTER PIN 8.0X45",3,3,3,3,3,3,,,,,,,,,,,,
8,1,,24761-020000,,"NIPPLE PT1/8,GREASE",1,1,1,1,1,1,,,,,,,,,,,,
9,1,,933160-06710,,"SHIM 30, PIN ADJUST",2,2,2,2,2,2,,,,,,,,,,,,
9-1,1,,172159-81530,,"SHIM 30, PIN ADJUST",2,2,2,2,2,2,R,,72159AMA-
1,M900001,72159AMA-1,M900001,72159AMA-1,M900001,72159AMA-1,M900001,72159AMA-
1,M900001,72159AMA-1,M900001
10,1,,172137-82101,,"ARM 950 ASSY",,,1,1,,1,,,,,,,,,,,,
10-1,1,,172159-82400,,"ARM 950 ASSY",,,1,1,,1,R,,,,,,72159AMA-
1,M900001,72159AMA-1,M900001,,,72159AMA-1,M900001
11,2,,172137-81300,,"BUSH 30X45, PIN",,,6,6,,6,,,,,,,,,,,,
11-1,2,,172159-82270,,"BUSH 30X45, PIN",,,6,6,,6,R,,,,,,72159AMA-
1,M900001,72159AMA-1,M900001,,,72159AMA-1,M900001
12,1,,172138-82101,,"ARM 780 ASSY",1,1,,,1,,,,,,,,,,,,,
12-1,1,,172159-82100,,"ARM 780 ASSY",1,1,,,1,,R,,72159AMA-1,M900001,72159AMA-
1,M900001,,,,,72159AMA-1,M900001,
13,2,,172137-81300,,"BUSH 30X45, PIN",6,6,,,6,,,,,,,,,,,,
13-1,2,,172159-82270,,"BUSH 30X45, PIN",6,6,,,6,,R,,72159AMA-1,M900001,72159AMA-
1,M900001,,,,,72159AMA-1,M900001,
14,1,,172137-94250,,"PIN 30- 71",2,2,2,2,2,2,,,,,,,,,,,,
14-1,1,,172159-94250,,"PIN 30-71",2,2,2,2,2,2,R,,72159AMA-1,M900001,72159AMA-
1,M900001,72159AMA-1,M900001,72159AMA-1,M900001,72159AMA-1,M900001,72159AMA-
1,M900001
15,1,,22417-800450,,"COTTER PIN 8.0X45",2,2,2,2,2,2,,,,,,,,,,,,
16,1,,24761-040000,,"NIPPLE B,GREASE",1,1,1,1,1,1,,,,,,,,,,,,
17,1,,933160-06710,,"SHIM 30, PIN ADJUST",2,2,2,2,2,2,,,,,,,,,,,,
17-1,1,,172159-81530,,"SHIM 30, PIN ADJUST",2,2,2,2,2,2,R,,72159AMA-
1,M900001,72159AMA-1,M900001,72159AMA-1,M900001,72159AMA-1,M900001,72159AMA-
1,M900001,72159AMA-1,M900001
18,1,,172137-84401,,"LINK, BUCKET",1,1,1,1,1,1,,,,,,,,,,,,
18-1,1,,172159-84400,,"LINK,BUCKET",1,1,1,1,1,1,R,,72159AMA-1,M900001,72159AMA-
1,M900001,72159AMA-1,M900001,72159AMA-1,M900001,72159AMA-1,M900001,72159AMA-
1,M900001
19,2,,172137-81300,,"BUSH 30X45, PIN",2,2,2,2,2,2,,,,,,,,,,,,
19-1,2,,172159-82270,,"BUSH 30X45, PIN",2,2,2,2,2,2,R,,72159AMA-
1,M900001,72159AMA-1,M900001,72159AMA-1,M900001,72159AMA-1,M900001,72159AMA-
1,M900001,72159AMA-1,M900001
20,2,,172137-84450,,"BUSH 30X11, PIN",2,2,2,2,2,2,,,,,,,,,,,,

https://truckmanualshub.com/

20-1,2,,172159-84450,,"BUSH 30-31",2,2,2,2,2,2,R,,72159AMA-1,M900001,72159AMA-1,M900001,72159AMA-1,M900001,72159AMA-1,M900001,72159AMA-1,M900001
21,1,,172137-84502,,"ARM (L), BUCKET",1,1,1,1,1,1,,,,,,,,,,,,
21-1,1,,172159-84500,,"ARM(L), BUCKET",1,1,1,1,1,1,R,,72159AMA-1,M900001,72159AMA-1,M900001,72159AMA-1,M900001,72159AMA-1,M900001,72159AMA-1,M900001
22,1,,172137-84512,,"ARM (R), BUCKET",1,1,1,1,1,1,,,,,,,,,,,,
22-1,1,,172159-84510,,"ARM(R), BUCKET",1,1,1,1,1,1,R,,72159AMA-1,M900001,72159AMA-1,M900001,72159AMA-1,M900001,72159AMA-1,M900001,72159AMA-1,M900001
23,1,,172137-86250,,"PIN, BUCKET",2,2,2,2,2,2,,,,,,,,,,,,
23-1,1,,172159-86250,,"PIN, BUCKET",2,2,2,2,2,2,R,,72159AMA-1,M900001,72159AMA-1,M900001,72159AMA-1,M900001,72159AMA-1,M900001,72159AMA-1,M900001
24,1,,22417-800450,,"COTTER PIN 8.0X45",2,2,2,2,2,2,,,,,,,,,,,,
25,1,,24761-020000,,"NIPPLE PT1/8,GREASE",2,2,2,2,2,2,,,,,,,,,,,,
26,1,,24761-020000,,"NIPPLE PT1/8,GREASE",2,2,2,2,2,2,,,,,,,,,,,,
27,1,,933160-06710,,"SHIM 30, PIN ADJUST",4,4,4,4,4,4,,,,,,,,,,,,
27-1,1,,172159-81530,,"SHIM 30, PIN ADJUST",4,4,4,4,4,4,R,,72159AMA-1,M900001,72159AMA-1,M900001,72159AMA-1,M900001,72159AMA-1,M900001,72159AMA-1,M900001
28,1,,172137-86250,,"PIN, BUCKET",2,2,2,2,2,2,,,,,,,,,,,,
28-1,1,,172159-86250,,"PIN, BUCKET",2,2,2,2,2,2,R,,72159AMA-1,M900001,72159AMA-1,M900001,72159AMA-1,M900001,72159AMA-1,M900001,72159AMA-1,M900001
29,1,,22417-800450,,"COTTER PIN 8.0X45",2,2,2,2,2,2,,,,,,,,,,,,
30,1,,24761-020000,,"NIPPLE PT1/8,GREASE",2,2,2,2,2,2,,,,,,,,,,,,
31,1,,933160-06710,,"SHIM 30, PIN ADJUST",2,2,2,2,2,2,,,,,,,,,,,,
31-1,1,,172159-81530,,"SHIM 30, PIN ADJUST",2,2,2,2,2,2,R,,72159AMA-1,M900001,72159AMA-1,M900001,72159AMA-1,M900001,72159AMA-1,M900001,72159AMA-1,M900001
32,1,,172149-83100,,"BRACKET, BOOM",1,1,1,1,1,1,,,,,,,,,,,,
32-1,1,,172159-83100,,"BRACKET, BOOM",1,1,1,1,1,1,R,,72159AMA-2,M910001,72159AMA-2,M910001,72159AMA-2,M910001,72159AMA-2,M910001,72159AMA-2,M910001
33,1,,172149-83110,,PIN,1,1,1,1,1,1,,,,,,,,,,,,
33-1,1,,172159-83110,,PIN,1,1,1,1,1,1,R,,72159AMA-2,M910001,72159AMA-2,M910001,72159AMA-2,M910001,72159AMA-2,M910001,72159AMA-2,M910001
34,1,,172149-83130,,PIN,1,1,1,1,1,1,,,,,,,,,,,,
34-1,1,,172159-83130,,PIN,1,1,1,1,1,1,R,,72159AMA-1,M900001,72159AMA-1,M900001,72159AMA-1,M900001,72159AMA-1,M900001,72159AMA-1,M900001
35,1,,172149-83150,,PIN,1,1,1,1,1,1,,,,,,,,,,,,
35-1,1,,172159-83150,,PIN,1,1,1,1,1,1,R,,72159AMA-1,M900001,72159AMA-1,M900001,72159AMA-1,M900001,72159AMA-1,M900001,72159AMA-1,M900001
36,1,,172149-83170,,PIN,1,1,1,1,1,1,,,,,,,,,,,,
36-1,1,,172159-83170,,PIN,1,1,1,1,1,1,R,,72159AMA-2,M910001,72159AMA-2,M910001,72159AMA-2,M910001,72159AMA-2,M910001,72159AMA-2,M910001
37,1,,172149-83180,,PIN,1,1,1,1,1,1,,,,,,,,,,,,
37-1,1,,172159-83180,,PIN,1,1,1,1,1,1,R,,72159AMA-2,M910001,72159AMA-2,M910001,72159AMA-2,M910001,72159AMA-2,M910001,72159AMA-2,M910001
38,1,,172149-83190,,"PLATE, LOCK",1,1,1,1,1,1,,,,,,,,,,,,
38-1,1,,172159-83190,,"PLATE, LOCK",1,1,1,1,1,1,R,,72159AMA-2,M910001,72159AMA-2,M910001,72159AMA-2,M910001,72159AMA-2,M910001,72159AMA-2,M910001
39,1,,172117-83970,,"PLATE(C),LOCK(YELLOW",2,2,2,2,2,2,,,,,,,,,,,,

https://truckmanualshub.com/

39-1,1,,172159-83210,,"PLATE (C), LOCK",2,2,2,2,2,2,R,,72159AMA-
2,M910001,72159AMA-2,M910001,72159AMA-2,M910001,72159AMA-2,M910001,72159AMA-
2,M910001,72159AMA-2,M910001
40,1,,172141-84600,,"SHIM 35",2,2,2,2,2,2,,,,,,,,,,,,
40-1,1,,172159-81500,,"SHIM 35",2,2,2,2,2,2,R,,72159AMA-1,M900001,72159AMA-
1,M900001,72159AMA-1,M900001,72159AMA-1,M900001,72159AMA-1,M900001,72159AMA-
1,M900001
41,1,,22417-800450,,"COTTER PIN 8.0X45",2,2,2,2,2,2,,,,,,,,,,,,
42,1,,22417-800630,,"COTTER PIN 8.0X63",1,1,1,1,1,1,,,,,,,,,,,,
43,1,,26013-100252,,"BOLT W/WASHER M10X25",6,6,6,6,6,6,,,,,,,,,,,,
43-1,1,,26013-100252,,"BOLT W/WASHER
M10X25",4,4,4,4,4,4,K,,72159014,*1990.08,72159014,*1990.08,72159014,*1990.08,721
59014,*1990.08,72159014,*1990.08,72159014,*1990.08,I
44,1,,933171-29750,,"SHIM SET, PIN 38",2,2,2,2,2,2,,,,,,,,,,,,
44-1,1,,172159-83220,,"SHIM SET, PIN 38",2,2,2,2,2,2,R,,72159AMA-
2,M910001,72159AMA-2,M910001,72159AMA-2,M910001,72159AMA-2,M910001,72159AMA-
2,M910001,72159AMA-2,M910001
45,1,,172138-82200,,"ARM 780 ASSY, 3RD",1,1,,,1,,,1,,,,,,,,,,
45-1,1,,172159-82200,,"ARM 780 ASSY,3RD",1,1,,,1,,R,1,72159AMA-
1,M900001,72159AMA-1,M900001,,,,,72159AMA-1,M900001,
46,2,,172137-81300,,"BUSH 30X45, PIN",6,6,,,6,,,1,,,,,,,,,,
46-1,2,,172159-82270,,"BUSH 30X45, PIN",6,6,,,6,,R,1,72159AMA-
1,M900001,72159AMA-1,M900001,,,,,72159AMA-1,M900001,
47,1,,172137-82201,,"ARM(950), 3RD",,,1,1,,1,,1,,,,,,,,,,
47-1,1,,172159-82500,,"ARM 950 ASSY,3RD",,,1,1,,1,R,1,,,,,72159AMA-
1,M900001,72159AMA-1,M900001,,,72159AMA-1,M900001
48,2,,172137-81300,,"BUSH 30X45, PIN",,,6,6,,6,,1,,,,,,,,,,
48-1,2,,172159-82270,,"BUSH 30X45, PIN",,,6,6,,6,R,1,,,,,72159AMA-
1,M900001,72159AMA-1,M900001,,,72159AMA-1,M900001
49,1,,26013-100202,,"BOLT W/WASHER
M10X20",2,2,2,2,2,2,W,,72159014,*1990.08,72159014,*1990.08,72159014,*1990.08,721
59014,*1990.08,72159014,*1990.08,72159014,*1990.08,I

Fig. 54 ブーム＆アーム BOOM & ARM

https://truckmanualshub.com/

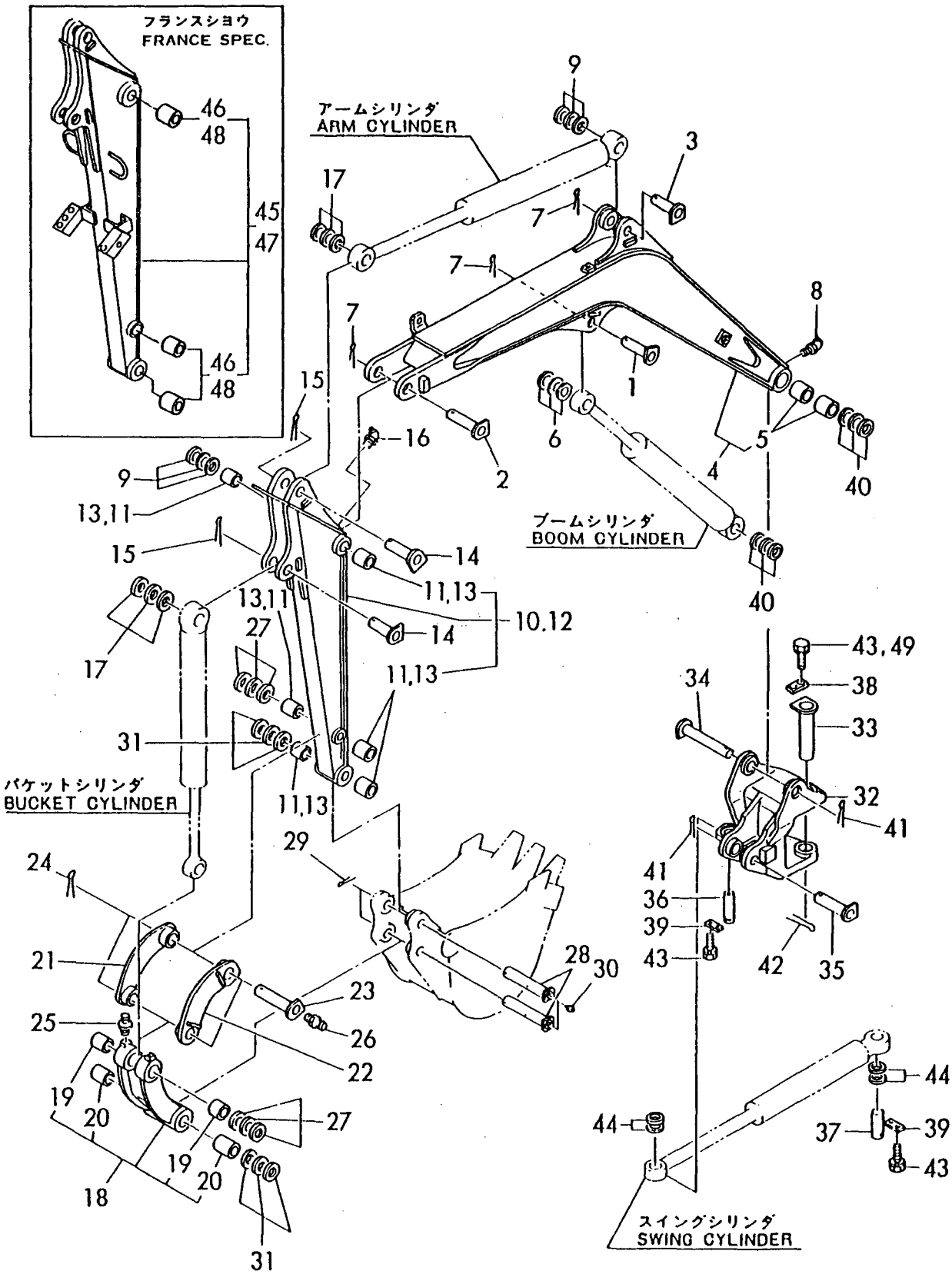

https://truckmanualshub.com/

```
1,1,,172137-94100,,"BLADE ASSY",1,1,1,1,1,1,,,,,,,,,,,,
1-1,1,,172159-94100,,"BLADE ASSY",1,1,1,1,1,1,R,,72159AMA-1,M900001,72159AMA-
1,M900001,72159AMA-1,M900001,72159AMA-1,M900001,72159AMA-1,M900001,72159AMA-
1,M900001
2,1,,172137-94250,,"PIN 30- 71",2,2,2,2,2,2,,,,,,,,,,,,
2-1,1,,172159-94250,,"PIN 30-71",2,2,2,2,2,2,R,,72159AMA-1,M900001,72159AMA-
1,M900001,72159AMA-1,M900001,72159AMA-1,M900001,72159AMA-1,M900001,72159AMA-
1,M900001
3,1,,172137-94270,,"PIN 30-71B, BLADE",2,2,2,2,2,2,,,,,,,,,,,,
3-1,1,,172159-94270,,"PIN 30-71B, BLADE",2,2,2,2,2,2,R,,72159AMA-
1,M900001,72159AMA-1,M900001,72159AMA-1,M900001,72159AMA-1,M900001,72159AMA-
1,M900001,72159AMA-1,M900001
4,1,,22417-800450,,"COTTER PIN 8.0X45",4,4,4,4,4,4,,,,,,,,,,,,
5,1,,24761-020000,,"NIPPLE PT1/8,GREASE",2,2,2,2,2,2,,,,,,,,,,,,
6,1,,24761-040000,,"NIPPLE B,GREASE",2,2,2,2,2,2,,,,,,,,,,,,
7,1,,933160-06710,,"SHIM 30, PIN ADJUST",2,2,2,2,2,2,,,,,,,,,,,,
7-1,1,,172159-81530,,"SHIM 30, PIN ADJUST",2,2,2,2,2,2,R,,72159AMA-
1,M900001,72159AMA-1,M900001,72159AMA-1,M900001,72159AMA-1,M900001,72159AMA-
1,M900001,72159AMA-1,M900001
```

Fig. 55 ブレード BLADE

https://truckmanualshub.com/

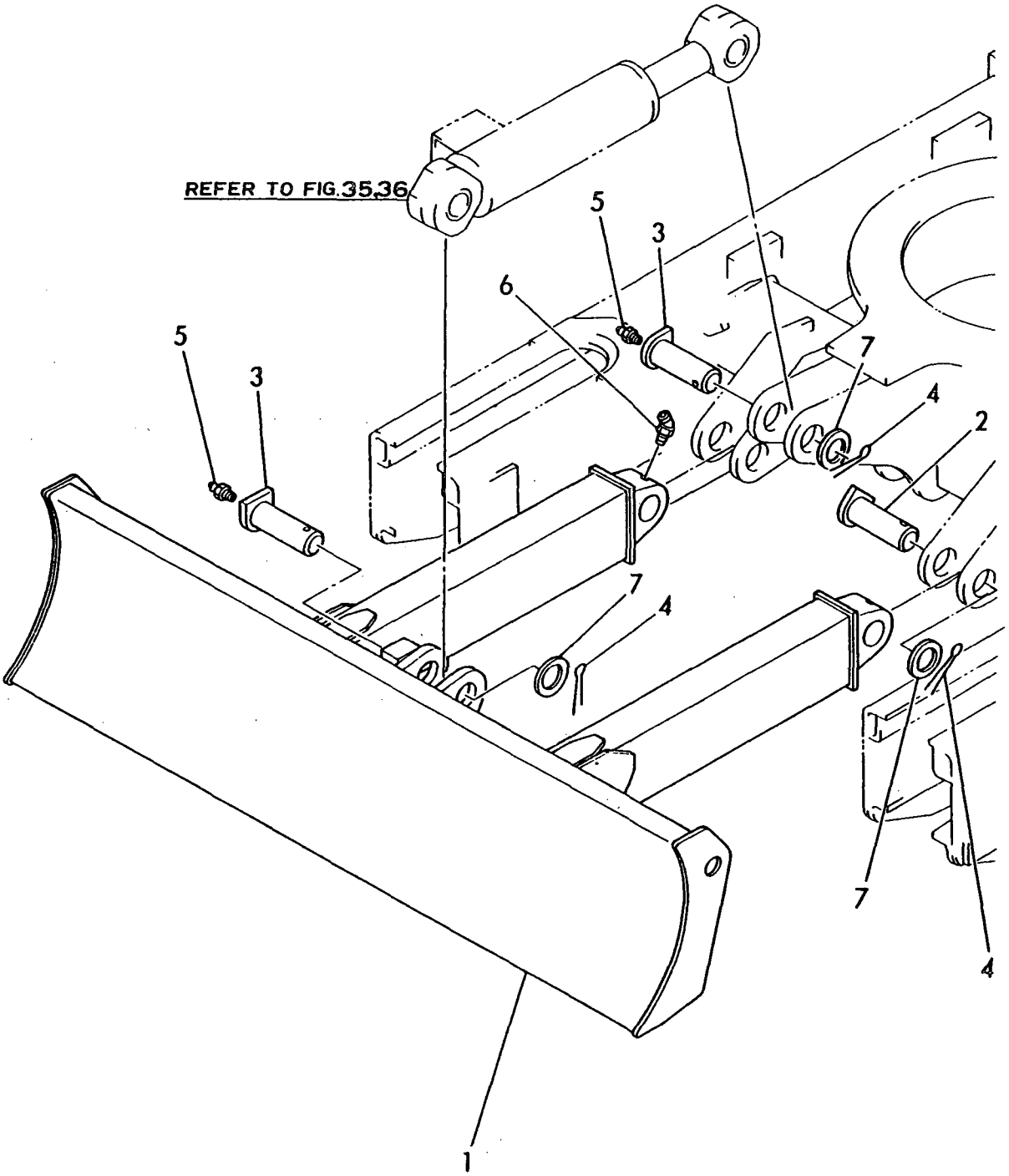

https://truckmanualshub.com/

```
1,1,,172137-66230,,GROMMET,,,,,1,1,W,,,,,,,,,,72159AMA-1,M900001,72159AMA-
1,M900001
2,1,,172137-66240,,"LOCK, DOOR",,,,,1,1,W,,,,,,,,,,72159AMA-1,M900001,72159AMA-
1,M900001
3,1,,172137-69200,,"HANDLE, OUTER",,,,,1,1,W,,,,,,,,,,72159AMA-
1,M900001,72159AMA-1,M900001
4,1,,172137-69210,,"HANDLE, INNER",,,,,1,1,W,,,,,,,,,,72159AMA-
1,M900001,72159AMA-1,M900001
5,1,,172137-69220,,GROMMET,,,,,1,1,W,,,,,,,,,,72159AMA-1,M900001,72159AMA-
1,M900001
6,1,,22312-030160,,"PARALLEL PIN 3X16",,,,,1,1,W,,,,,,,,,,72159AMA-
1,M900001,72159AMA-1,M900001
7,1,,26022-060122,,"SCREW M 6X 12",,,,,4,4,W,,,,,,,,,,72159AMA-
1,M900001,72159AMA-1,M900001
8,1,,26023-050122,,"SCREW M 5X 12",,,,,4,4,W,,,,,,,,,,72159AMA-
1,M900001,72159AMA-1,M900001
9,1,,26577-050162,,"SCREW M 5X 16",,,,,2,2,W,,,,,,,,,,72159AMA-
1,M900001,72159AMA-1,M900001
```

Fig. 56 キャビンパーツ CABIN PARTS

https://truckmanualshub.com/

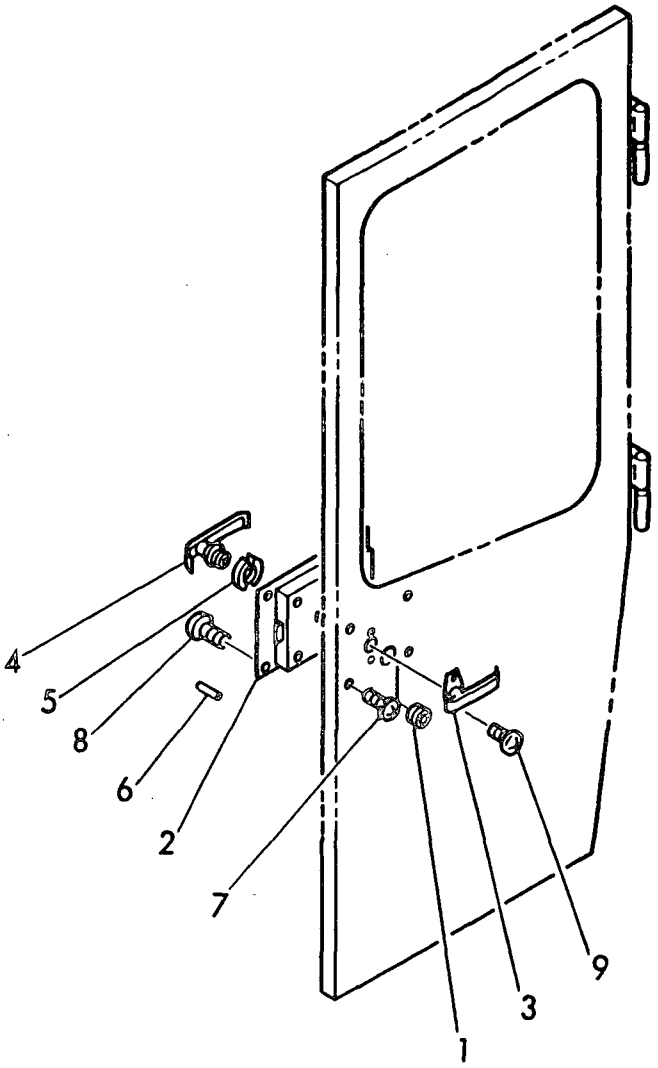

https://truckmanualshub.com/

```
Y00S2983,"Construction equipment",Excavator,B
[Info]
PcNo=Y00S2983
PcName=B12/B17(STEP 3)
JpnUse=0
JpnSec1=
JpnSec2=
JpnSec3=
JpnPreface=0
EngUse=1
EngSec1=CONSTRUCTION
EngSec2=EXCAVATOR (B)
EngSec3=B
EngPreface=1
```

https://truckmanualshub.com/

0,Y00S2983
1,001,,"VEHICLE B12/B17"
2,1,,"LABEL(SWISS SPEC.)","B12P AY EP","B12PR AY EP","B17P AY EP","B17PR AY EP","B12C(R)AY EP","B17C(R)AY EP"
2,2,,"LABEL(GERMANY SPEC.)","B12P AY EP","B12PR AY EP","B17P AY EP","B17PR AY EP","B12C(R)AY EP","B17C(R)AY EP"
2,3,,"LABEL(FRANCE SPEC.)","B12P AY EP","B12PR AY EP","B17P AY EP","B17PR AY EP","B12C(R)AY EP","B17C(R)AY EP"
2,4,,TOOL,"B12P AY EP","B12PR AY EP","B17P AY EP","B17PR AY EP","B12C(R)AY EP","B17C(R)AY EP"
2,5,,"INLET HOSE & EXHAUST PIPE","B12P AY EP","B12PR AY EP","B17P AY EP","B17PR AY EP","B12C(R)AY EP","B17C(R)AY EP"
2,6,,ACCELERATOR,"B12P AY EP","B12PR AY EP","B17P AY EP","B17PR AY EP","B12C(R)AY EP","B17C(R)AY EP"
2,7,,"ENGINE MOUNT & RADIATOR","B12P AY EP","B12PR AY EP","B17P AY EP","B17PR AY EP","B12C(R)AY EP","B17C(R)AY EP"
2,8,,"FUEL TANK & FUEL LINE","B12P AY EP","B12PR AY EP","B17P AY EP","B17PR AY EP","B12C(R)AY EP","B17C(R)AY EP"
2,9,,BATTERY,"B12P AY EP","B12PR AY EP","B17P AY EP","B17PR AY EP","B12C(R)AY EP","B17C(R)AY EP"
2,10,,"ELECTRIC PARTS","B12P AY EP","B12PR AY EP","B17P AY EP","B17PR AY EP","B12C(R)AY EP","B17C(R)AY EP"
2,11,,HEATER,"B12P AY EP","B12PR AY EP","B17P AY EP","B17PR AY EP","B12C(R)AY EP","B17C(R)AY EP"
2,12,,"WORK LAMP","B12P AY EP","B12PR AY EP","B17P AY EP","B17PR AY EP","B12C(R)AY EP","B17C(R)AY EP"
2,13,,"TRACK ROLLER","B12P AY EP","B12PR AY EP","B17P AY EP","B17PR AY EP","B12C(R)AY EP","B17C(R)AY EP"
2,14,,"TRACK FRAME & IDLER","B12P AY EP","B12PR AY EP","B17P AY EP","B17PR AY EP","B12C(R)AY EP","B17C(R)AY EP"
2,15,,CRAWLER,"B12P AY EP","B12PR AY EP","B17P AY EP","B17PR AY EP","B12C(R)AY EP","B17C(R)AY EP"
2,16,,"LINK STAND","B12P AY EP","B12PR AY EP","B17P AY EP","B17PR AY EP","B12C(R)AY EP","B17C(R)AY EP"
2,17,,"CONTROL EQUIP. (BOOM & BUCKET)","B12P AY EP","B12PR AY EP","B17P AY EP","B17PR AY EP","B12C(R)AY EP","B17C(R)AY EP"
2,18,,"CONTROL EQUIP. (ARM & TURNING)","B12P AY EP","B12PR AY EP","B17P AY EP","B17PR AY EP","B12C(R)AY EP","B17C(R)AY EP"
2,19,,"CONTROL EQUIP.(TRAVEL & SWING)","B12P AY EP","B12PR AY EP","B17P AY EP","B17PR AY EP","B12C(R)AY EP","B17C(R)AY EP"
2,20,,"CONTROL EQUIPMENT(BLADE)","B12P AY EP","B12PR AY EP","B17P AY EP","B17PR AY EP","B12C(R)AY EP","B17C(R)AY EP"
2,21,,"OPERATION LEVER STOPPER","B12P AY EP","B12PR AY EP","B17P AY EP","B17PR AY EP","B12C(R)AY EP","B17C(R)AY EP"
2,22,,"TURNING FRAME","B12P AY EP","B12PR AY EP","B17P AY EP","B17PR AY EP","B12C(R)AY EP","B17C(R)AY EP"
2,23,,"TURNING DRIVING GEARS","B12P AY EP","B12PR AY EP","B17P AY EP","B17PR AY EP","B12C(R)AY EP","B17C(R)AY EP"
2,24,,BONNET,"B12P AY EP","B12PR AY EP","B17P AY EP","B17PR AY EP","B12C(R)AY EP","B17C(R)AY EP"
2,25,,"SEAT MOUNT & STEP","B12P AY EP","B12PR AY EP","B17P AY EP","B17PR AY EP","B12C(R)AY EP","B17C(R)AY EP"
2,26,,ROPS,"B12P AY EP","B12PR AY EP","B17P AY EP","B17PR AY EP","B12C(R)AY EP","B17C(R)AY EP"
2,27,,"BOOM CYLINDER(PREVIOUS)","B12P AY EP","B12PR AY EP","B17P AY EP","B17PR AY EP","B12C(R)AY EP","B17C(R)AY EP"
2,28,,"BOOM CYLINDER(NEW)","B12P AY EP","B12PR AY EP","B17P AY EP","B17PR AY EP","B12C(R)AY EP","B17C(R)AY EP"
2,29,,"ARM CYLINDER(PREVIOUS)","B12P AY EP","B12PR AY EP","B17P AY EP","B17PR AY EP","B12C(R)AY EP","B17C(R)AY EP"
2,30,,"ARM CYLINDER(NEW)","B12P AY EP","B12PR AY EP","B17P AY EP","B17PR AY EP","B12C(R)AY EP","B17C(R)AY EP"

2,31,,"BUCKET CYLINDER(PREVIOUS)","B12P AY EP","B12PR AY EP","B17P AY EP","B17PR AY EP","B12C(R)AY EP","B17C(R)AY EP"
2,32,,"BUCKET CYLINDER(NEW)","B12P AY EP","B12PR AY EP","B17P AY EP","B17PR AY EP","B12C(R)AY EP","B17C(R)AY EP"
2,33,,"SWING CYLINDER(PREVIOUS)","B12P AY EP","B12PR AY EP","B17P AY EP","B17PR AY EP","B12C(R)AY EP","B17C(R)AY EP"
2,34,,"SWING CYLINDER(NEW)","B12P AY EP","B12PR AY EP","B17P AY EP","B17PR AY EP","B12C(R)AY EP","B17C(R)AY EP"
2,35,,"BLADE CYLINDER(PREVIOUS)","B12P AY EP","B12PR AY EP","B17P AY EP","B17PR AY EP","B12C(R)AY EP","B17C(R)AY EP"
2,36,,"BLADE CYLINDER(NEW)","B12P AY EP","B12PR AY EP","B17P AY EP","B17PR AY EP","B12C(R)AY EP","B17C(R)AY EP"
2,37,,"HYD. OIL PUMP & JOINT","B12P AY EP","B12PR AY EP","B17P AY EP","B17PR AY EP","B12C(R)AY EP","B17C(R)AY EP"
2,38,,"TURNING MOTOR","B12P AY EP","B12PR AY EP","B17P AY EP","B17PR AY EP","B12C(R)AY EP","B17C(R)AY EP"
2,39,,"TRAVEL MOTOR","B12P AY EP","B12PR AY EP","B17P AY EP","B17PR AY EP","B12C(R)AY EP","B17C(R)AY EP"
2,40,,"SWIVEL JOINT","B12P AY EP","B12PR AY EP","B17P AY EP","B17PR AY EP","B12C(R)AY EP","B17C(R)AY EP"
2,41,,"CONTROL VALVE(TRAVEL, TURNING)","B12P AY EP","B12PR AY EP","B17P AY EP","B17PR AY EP","B12C(R)AY EP","B17C(R)AY EP"
2,42,,"CONTROL VALVE(ARM, BUCKET)","B12P AY EP","B12PR AY EP","B17P AY EP","B17PR AY EP","B12C(R)AY EP","B17C(R)AY EP"
2,43,,"CONTROL VALVE(SWING, BOOM)","B12P AY EP","B12PR AY EP","B17P AY EP","B17PR AY EP","B12C(R)AY EP","B17C(R)AY EP"
2,44,,"CONTROL VALVE(BLADE, P.T.O)","B12P AY EP","B12PR AY EP","B17P AY EP","B17PR AY EP","B12C(R)AY EP","B17C(R)AY EP"
2,45,,"CONTROL VALVE(P1,P2,P3)","B12P AY EP","B12PR AY EP","B17P AY EP","B17PR AY EP","B12C(R)AY EP","B17C(R)AY EP"
2,46,,"HYD. OIL TANK","B12P AY EP","B12PR AY EP","B17P AY EP","B17PR AY EP","B12C(R)AY EP","B17C(R)AY EP"
2,47,,GREASING,"B12P AY EP","B12PR AY EP","B17P AY EP","B17PR AY EP","B12C(R)AY EP","B17C(R)AY EP"
2,48,,"HYD. OIL PIPING (TANK-VALVE)","B12P AY EP","B12PR AY EP","B17P AY EP","B17PR AY EP","B12C(R)AY EP","B17C(R)AY EP"
2,49,,"HYD. OIL PIPING (VALVE-SWIVEL.","B12P AY EP","B12PR AY EP","B17P AY EP","B17PR AY EP","B12C(R)AY EP","B17C(R)AY EP"
2,50,,"HYD. OIL PIPING (TANK RETURN)","B12P AY EP","B12PR AY EP","B17P AY EP","B17PR AY EP","B12C(R)AY EP","B17C(R)AY EP"
2,51,,"HYD. OIL PIPING (TRAVEL)","B12P AY EP","B12PR AY EP","B17P AY EP","B17PR AY EP","B12C(R)AY EP","B17C(R)AY EP"
2,52,,"HYD. OIL PIPING (WORK SECTION)","B12P AY EP","B12PR AY EP","B17P AY EP","B17PR AY EP","B12C(R)AY EP","B17C(R)AY EP"
2,53,,"3RD VALVE PIPING","B12P AY EP","B12PR AY EP","B17P AY EP","B17PR AY EP","B12C(R)AY EP","B17C(R)AY EP"
2,54,,"BOOM & ARM","B12P AY EP","B12PR AY EP","B17P AY EP","B17PR AY EP","B12C(R)AY EP","B17C(R)AY EP"
2,55,,BLADE,"B12P AY EP","B12PR AY EP","B17P AY EP","B17PR AY EP","B12C(R)AY EP","B17C(R)AY EP"
2,56,,"CABIN PART","B12P AY EP","B12PR AY EP","B17P AY EP","B17PR AY EP","B12C(R)AY EP","B17C(R)AY EP"