https://truckmanualshub.com/

# Model 7450
# VT Plus
# Parts Manual

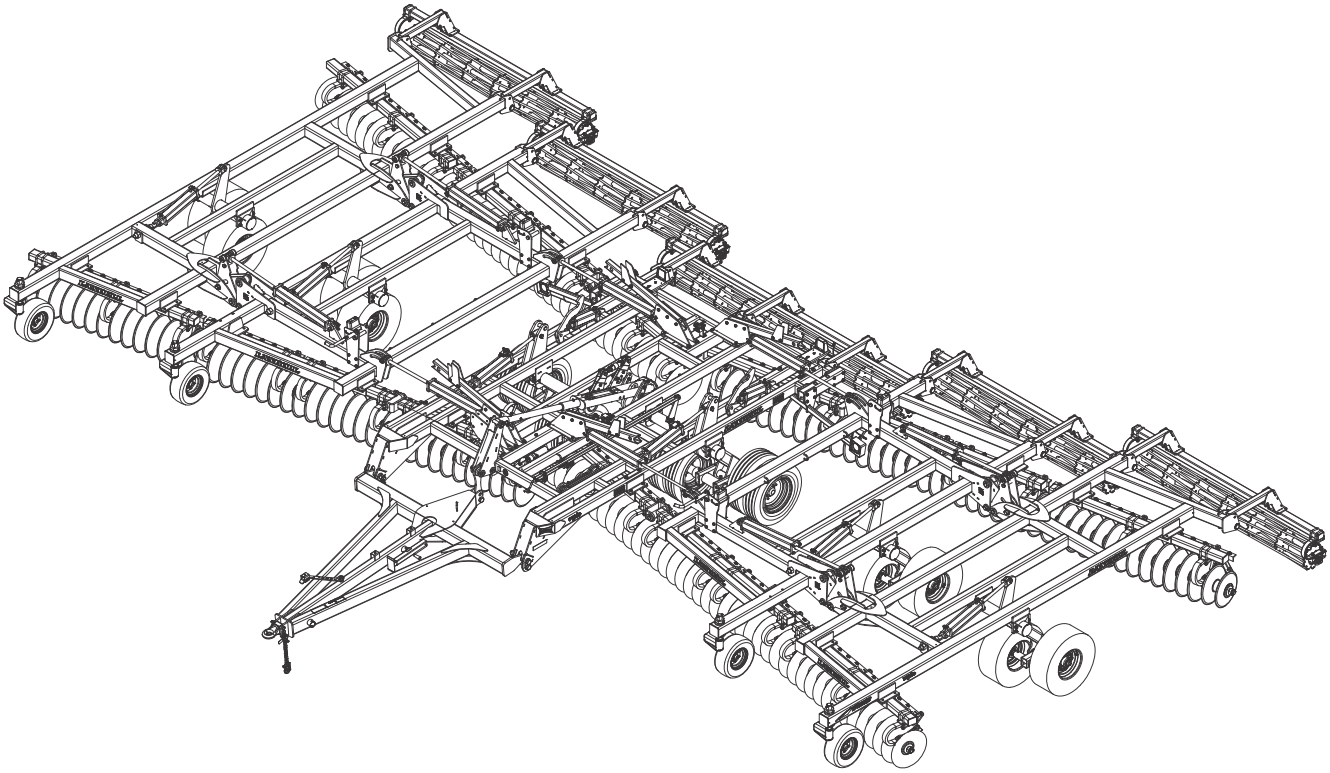

**LANDOLL CORPORATION**
1900 North Street
Marysville, Kansas 66508
(785) 562-5381
**800-428-5655 ~ WWW.LANDOLL.COM**

**F-608-1118** **11/2018-Present**

https://truckmanualshub.com/

# Table of Contents


## 1 Instructions for Ordering Parts

## 2 Illustrated Parts List

GENERAL ASSEMBLY . . . . . 2-1
FRAME CENTER AND DEPTH CONTROL ASSEMBLY . . . . . 2-4
DEPTH STOP TUBE ASSEMBLY . . . . . 2-7
LIFT WHEEL ASSEMBLY, FRAME CENTER . . . . . 2-9
HUB/SPINDLE ASSEMBLY 164558-PRIOR 1-1-2017 . . . . . 2-11
HUB/SPINDLE ASSEMBLY 191974-AFTER 1-1-2017 . . . . . 2-13
INNER WING FRAME AND STABILIZER ASSEMBLY . . . . . 2-15
INNER WING LIFT WHEEL ASSEMBLY . . . . . 2-17
OUTER WING FRAME AND FOLD LOCK ASSEMBLY . . . . . 2-21
OUTER WING LIFT WHEEL ASSEMBLY . . . . . 2-23
HUB AND SPINDLE ASSEMBLY - 8 Bolt (2-1/4”) . . . . . 2-25
HUB AND SPINDLE ASSEMBLY - 8 BOLT (3”) . . . . . 2-26
HITCH ASSEMBLY . . . . . 2-29
HITCH ASSEMBLIES . . . . . 2-30
LEVELING LINKAGE ASSEMBLY . . . . . 2-33
7,000 LB. SIDEWIND JACK ASSEMBLY . . . . . 2-34
LEVELER ASSEMBLY . . . . . 2-35
DUAL TIRE SCRAPER KIT ASSEMBLY . . . . . 2-36
REAR TOW HITCH ASSEMBLY . . . . . 2-37
REAR TOW ASSEMBLY . . . . . 2-38
REAR TOW HITCH HYDRAULIC KIT (OPTION) . . . . . 2-39
FRONT GAUGE WHEEL ASSEMBLY . . . . . 2-41
DISC GANG ASSEMBLY . . . . . 2-43
39' DISC GANG PLACEMENT PARTS . . . . . 2-45
44' DISC GANG PLACEMENT PARTS . . . . . 2-47
49' DISC GANG PLACEMENT PARTS . . . . . 2-49
CONDITIONER REEL ASSEMBLY . . . . . 2-51
HYDRAULIC CONDITIONER REEL ASSEMBLY . . . . . 2-54

https://truckmanualshub.com/

REEL/GANGBAR ASSEMBLY . . . . . 2-59
REEL DOUBLE SPRING ASSEMBLY . . . . . 2-61
REEL DOUBLE HYDRAULIC ASSEMBLY WINGS . . . . . 2-63
REEL DOUBLE ASSEMBLY . . . . . 2-65
DOUBLE ROUND REEL ASSEMBLY . . . . . 2-67
DOUBLE REEL ASSEMBLY CENTER . . . . . 2-69
CYLINDER - 2-1/2” X 1” (1” THDS) . . . . . 2-70
CYLINDER - 2-1/2” X 1” (1-1/8” THDS) . . . . . 2-71
ELECTRICAL ASSEMBLY . . . . . 2-73
LIFT HYDRAULIC ASSEMBLY . . . . . 2-77
FOLD HYDRAULIC ASSEMBLY . . . . . 2-82
FRONT MANIFOLD ASSEMBLY . . . . . 2-84
REAR MANIFOLD ASSEMBLY . . . . . 2-85
CYLINDER ASSEMBLY - 4 X 8 . . . . . 2-86
CYLINDER - REPHASE ASSEMBLY - 3-1/4 X 8 . . . . . 2-87
CYLINDER - REPHASE ASSEMBLY - 3-1/2 X 8 . . . . . 2-88
CYLINDER - REPHASE ASSEMBLY - 4 X 16 . . . . . 2-89
CYLINDER - REPHASE ASSEMBLY - 4-1/2 X 16 . . . . . 2-90
CYLINDER ASSEMBLY - 4 X 30 . . . . . 2-91
CYLINDER ASSEMBLY - 4-1/2 X 30 . . . . . 2-92
CYLINDER - REPHASE ASSEMBLY - 3-3/4 X 16 . . . . . 2-93
DECAL INSTALLATION . . . . . 2-95

# 1 Numerical Index

https://truckmanualshub.com/

# Instructions for Ordering Parts

**ORDER PARTS FROM LANDOLL PARTS DISTRIBUTION CENTER**

**** Repair parts must be ordered through an Authorized Dealer ****

**Phone #:: 800-423-4320 or 785-562-538** **Fax #: 888-527-3909**
**Order online: dealer.landoll.com**

**IDENTIFICATION PLATE**

The identification plate, which lists the model number and serial number, is located on the front of the frame See Figure 1-1.

**SERIAL NUMBER NOMENCLATURE**

The serial number for the 7431 VT Plus is located on the identification plate.

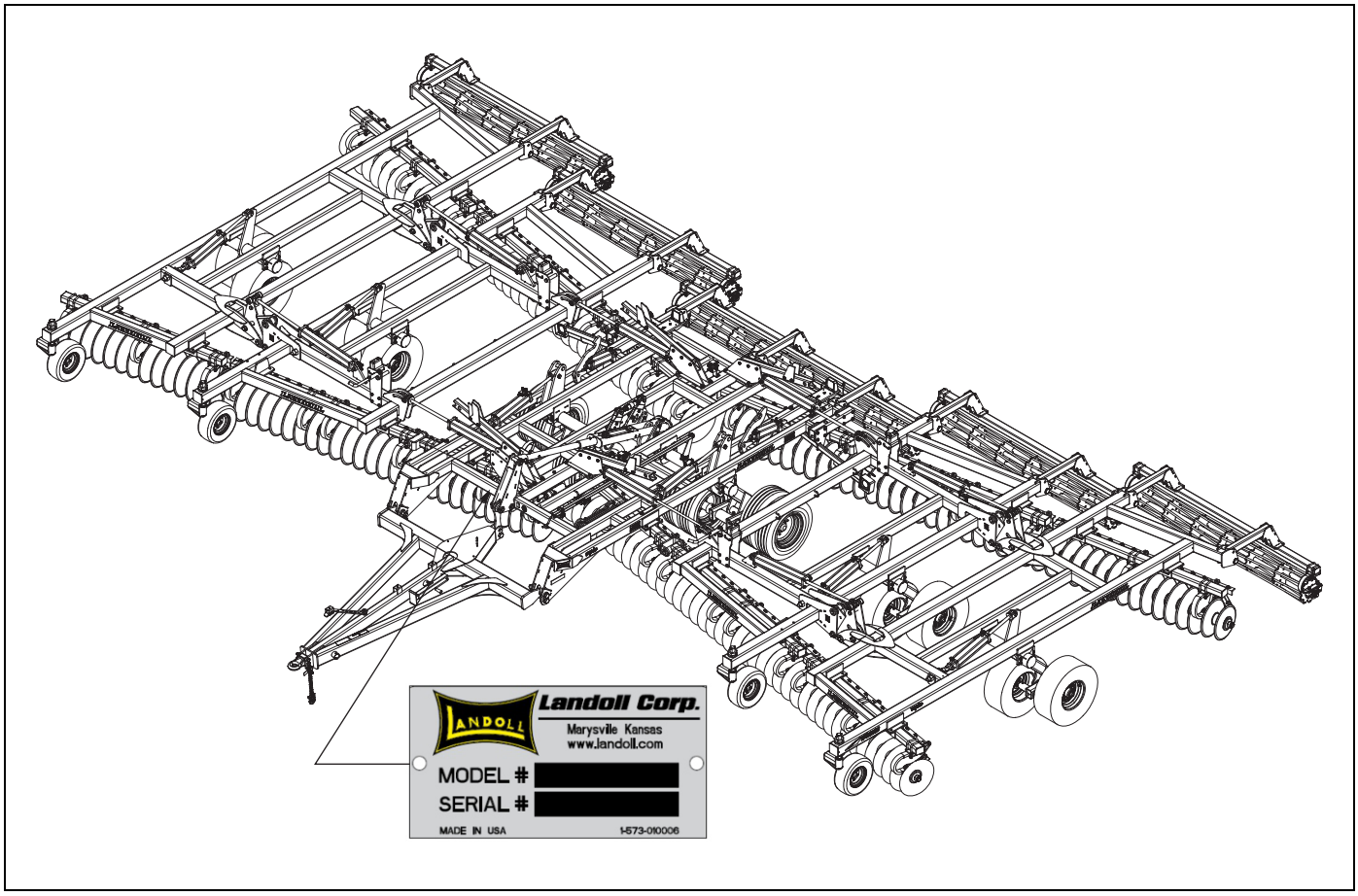


**Figure 1-1: Identification Plate and Location**

https://truckmanualshub.com/


Table provided for general use.T

| NOTES: |
|---|
| |
| |
| |
| |
| |
| |
| |
| |
| |
| |
| |
| |
| |
| |
| |
| |
| |
| |
| |
| |
| |
| |
| |
| |
| |
| |
| |
| |
| |
| |
| |
| |
| |
| |
| |
| |
| |
| |

https://truckmanualshub.com/

# Illustrated Parts List

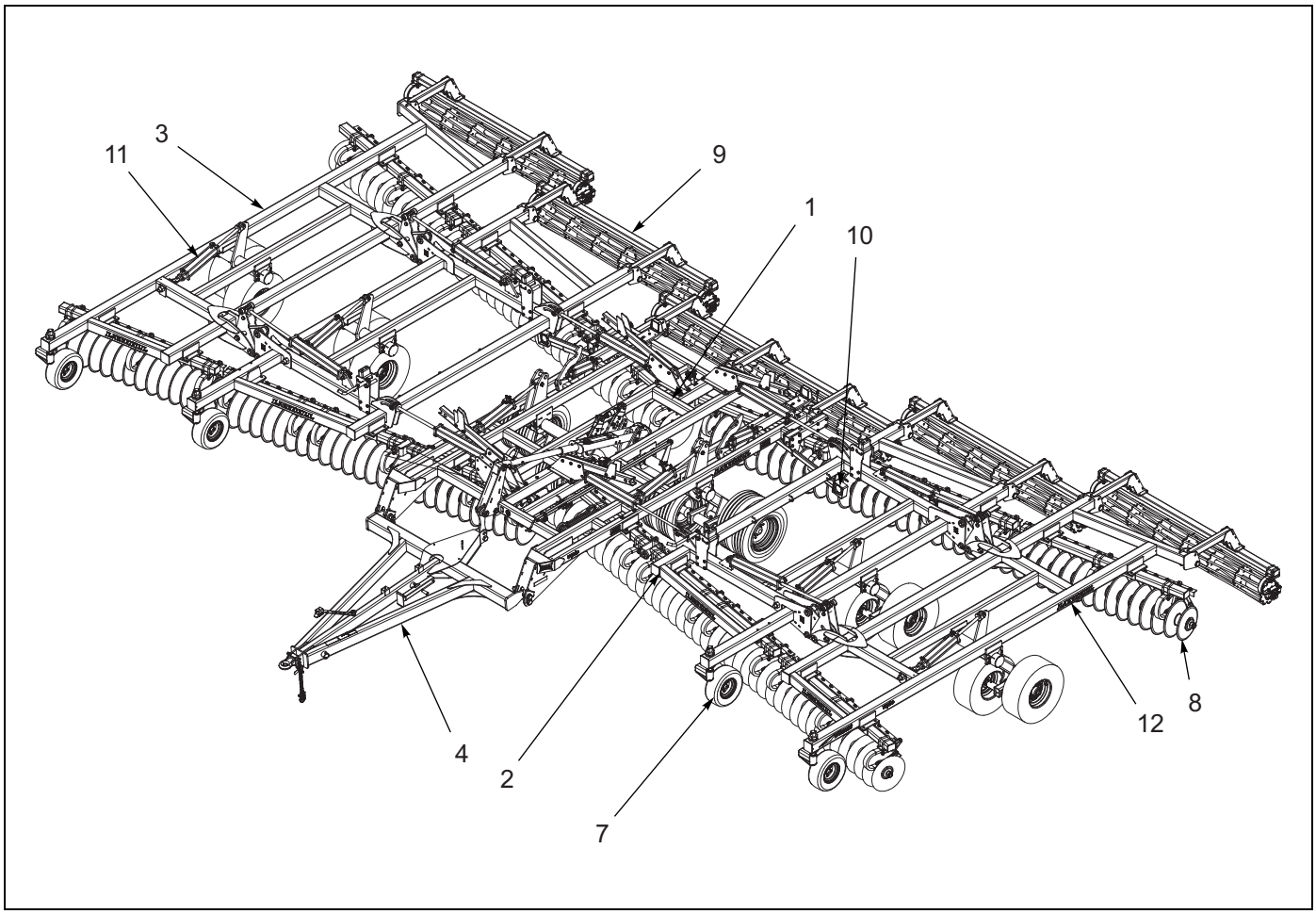


Figure 2-1: General Assembly

## GENERAL ASSEMBLY

| ITEM | PAGE NO. | DESCRIPTION | QTY. |
|---|---|---|---|
| 1 | 2-2 - 2-13 | FRAME CENTER AND LIFT WHEEL ASSEMBLIES | |
| 2 | 2-14 - 2-15 | INNER FRAME AND LIFT WHEEL ASSEMBLIES | |
| 3 | 2-20 - 2-23 | OUTER FRAME AND LIFT WHEEL ASSEMBLIES | |
| 4 | 2-28 - 2-35 | HITCH AND LEVELING LINKAGE ASSEMBLIES | |
| 5 | 2-36 | DUAL TIRE SCRAPER ASSEMBLY (NOT SHOWN) | |
| 6 | 2-37 | REAR TOW HITCH ASSEMBLY (NOT SHOWN) | |
| 7 | 2-40 - 2-41 | FRONT GAUGE WHEEL ASSEMBLY | |
| 8 | 2-42 - 2-49 | DISC GANG ASSEMBLIES | |
| 9 | 2-50 - 2-71 | CONDITIONER REEL ASSEMBLIES | |
| 10 | 2-72 - 2-73 | ELECTRICAL ASSEMBLY | |
| 11 | 2-74 - 2-93 | HYDRAULIC ASSEMBLIES | |
| 12 | 2-94 - 2-95 | DECAL INSTALLATION | |

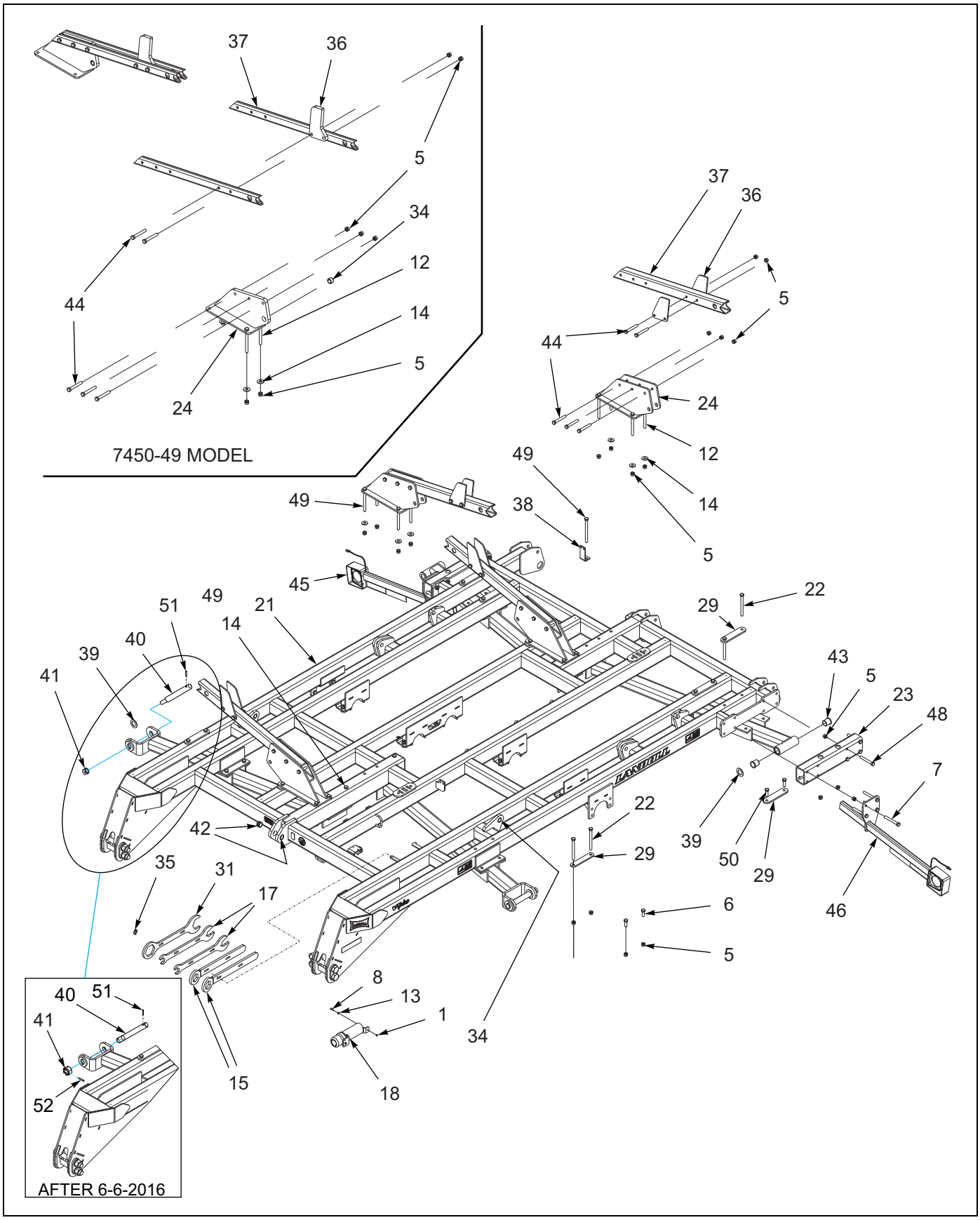


**Figure 2-2: Frame Center and Depth Control Assembly (1 of 2)**

https://truckmanualshub.com/



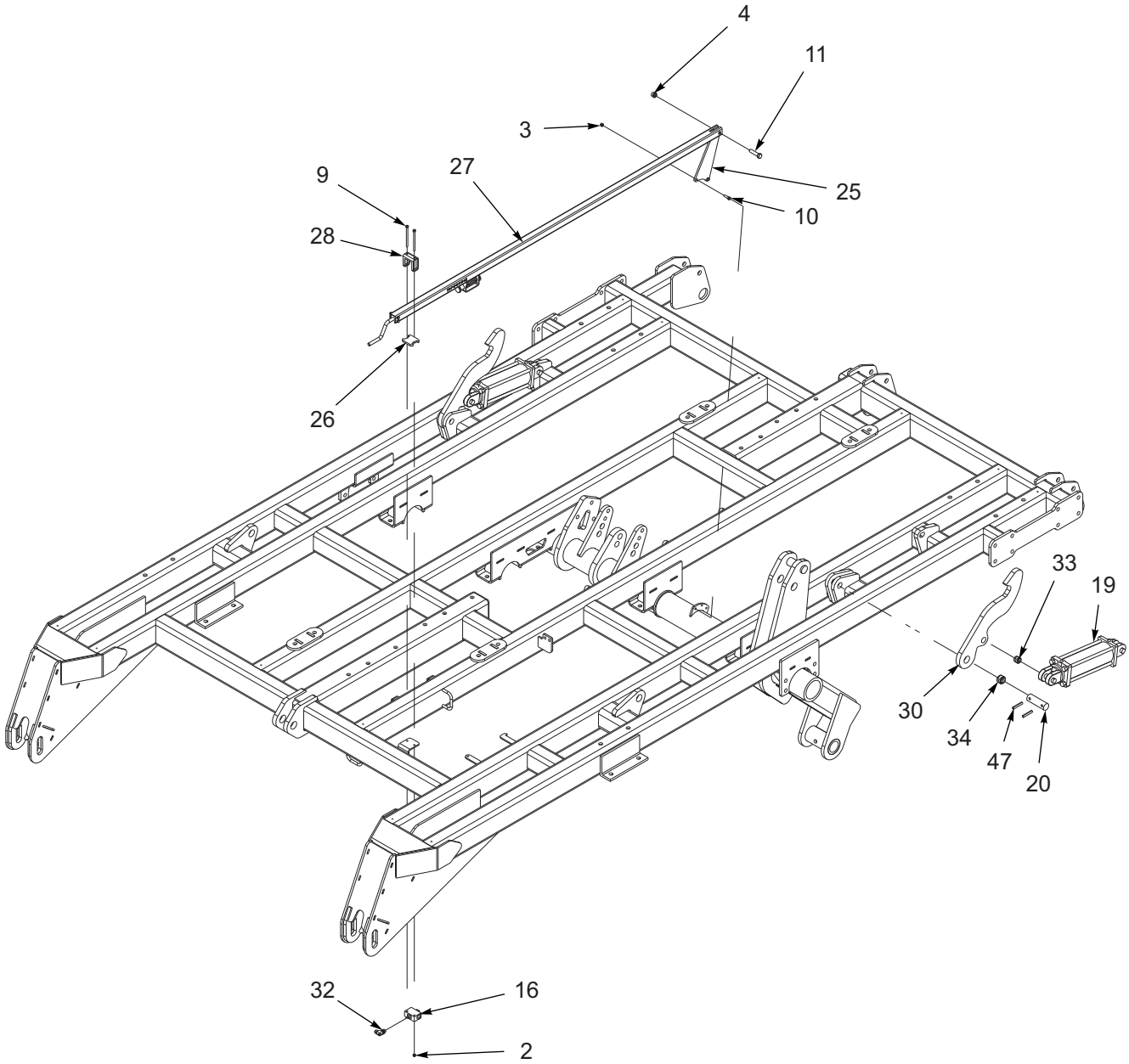


**Figure 2-3: Frame Center and Depth Control Assembly (2 of 2)**

https://truckmanualshub.com/



# FRAME CENTER AND DEPTH CONTROL ASSEMBLY

| ITEM | PART NO. | DESCRIPTION | QTY. |
|---|---|---|---|
| | 161676 | FRAME CENTER ASSEMBLY (39’ & 44’) | |
| | 161678 | FRAME CENTER ASSEMBLY (49’) | |
| 1 | 1-512-010005-01 | NUT, HEX LOCK 1/4-20 GRB | 2 |
| 2 | 1-512-010005-03 | NUT, HEX LOCK 5/16-18 GRB | 2 |
| 3 | 1-512-010005-05 | NUT, HEX LOCK 3/8-16 GRB | 2 |
| 4 | 1-512-010005-13 | NUT, HEX LOCK 5/8-11 GRB | 1 |
| 5 | 1-512-010005-15 | NUT, HEX LOCK 3/4-10 GRB | 11 |
| 6 | 1-654-010032-05 | SCREW, HEX HEAD CAP 3/4-10 X 2 GR8 | 6 |
| 7 | W908409-4 | SCREW, HEX HEAD CAP 3/4-10 X 6 GR5 | 8 |
| 8 | 1-654-010047-06 | SCREW, HEX HEAD CAP 1/4-20 X 1 GR5 | 2 |
| 9 | 1-654-010049-19 | SCREW, HEX HEAD CAP 5/16-18 X 5 GR5 | 2 |
| 10 | 1-654-010051-06 | SCREW, HEX HEAD CAP 3/8-16 X 1-1/4 GR5 | 2 |
| 11 | 1-654-010059-07 | SCREW, HEX HEAD CAP 5/8-11 X 2-1/2 GR5 | 1 |
| 12 | 1-654-010061-21 | SCREW, HEX HEAD CAP 3/4-10 X 8 GR5 | 8 |
| 13 | 1-861-010032-07 | WASHER, FLAT 1/4 | 2 |
| 14 | 1-861-010032-21 | WASHER, FLAT 3/4 W | 11 |
| 15 | 140533 | GANG WRENCH | 2 |
| 16 | 140693 | VALVE, LIMIT | 1 |
| 17 | 141109 | WRENCH, ADJUSTMENT | 2 |
| 18 | 142753 | MANUAL HOLDER | 1 |
| 19 | 145203 | CYLINDER, HYDRAULIC 3-1/2 X 8 **(SEE PAGE 2-88)** | 1 |
| 20 | 147755 | CLEVIS PIN | 2 |
| 21 | 161662 | FRAME CENTER | 1 |
| 22 | 162249 | SCREW, HEX HEAD CAP 3/4-10 X 8 GR8 | 16 |
| 23 | 163629 | TUBE, ARM SHORT | 2 |
| 24 | 163639 | MOUNT, FOLD-STABILIZER (39’) | 4 |
| 24 | 163639 | MOUNT, FOLD-STABILIZER (44’) | 4 |
| 24 | 167576 | MOUNT, FOLD-STABILIZER (49’) | 4 |
| 25 | 164124 | MOUNT, DEPTH CONTROL | 1 |
| 26 | 165257 | PAD, SLIDE | 1 |
| 27 | 165264 | DEPTH STOP ASSEMBLY, **(S/N 5186 AND BELOW) (SEE PAGE 2-7)** | 1 |
| 27 | 180120 | DEPTH STOP ASSEMBLY, **(S/N 5187 AND ABOVE) (SEE PAGE 2-7)** | 1 |
| 28 | 165265 | GUIDE, DEPTH STOP | 1 |
| 29 | 165267 | PLATE, CLAMP | 8 |
| 30 | 165283 | LOCK, TRANSPORT | 2 |
| 31 | 165302 | WRENCH, GAUGE WHEEL | 1 |
| 32 | 2062-8-8S | ADAPTER, 90 | 1 |
| 33 | 2-150-010008 | BUSHING, STEEL 1-1/4OD X 1ID X 1 | 2 |
| 34 | 2-150-010174 | BUSHING, STEEL 1-5/8 X 1-1/4 X 1 | 2 |
| 35 | 70239854 | PIN, QUICK HITCH | 1 |
| 36 | 164554 | STOP, OUTER WING (39’) | 8 |
| 36 | 167574 | STOP, OUTER WING (44’) | 8 |
| 36 | 167580 | STOP, OUTER WING (49’) | 8 |
| 37 | 163642 | WING STABILIZER (39’ & 44’) | 4 |
| 37 | 167579 | WING STABILIZER (49’) | 4 |
| 38 | 141854 | BRACKET, MANIFOLD MOUNT | REF |
| 39 | 164539 | WASHER, THRUST 1-3/4 | 8 |
| 40 | 164553 | PIN, HINGE (BEFORE 6-6-2016) | 4 |
| 40 | 198404 | PIN, HINGE 1-3/4 (AFTER 6-6-2016) | 4 |

https://truckmanualshub.com/


# FRAME CENTER AND DEPTH CONTROL ASSEMBLY

| ITEM | PART NO. | DESCRIPTION | QTY. |
|---|---|---|---|
| 41 | 101385 | NUT, HEX LOCK 1-1/4-7 GRB **(BEFORE 6-6-2016)** | 4 |
| 41 | 23085 | NUT HEX SLOTTED 1 3/4-5 **(AFTER 6-6-2016)** | 4 |
| 42 | 2-150-010218 | BUSHING, LEVELING LINKAGE | 8 |
| 43 | 164533 | BEARING, FLANGE 1-3/4 | 4 |
| 44 | 1-654-010061-15 | SCREW, HEX HEAD CAP 3/4-10 X 5 GR5 | 5 |
| 45 | 165268 | BRACKET WELDMENT, RH W/ REFLECTORS **(SEE PAGE 2-73)** | REF |
| 46 | 165269 | BRACKET WELDMENT, LH W/ REFLECTORS **(SEE PAGE 2-73)** | REF |
| 47 | 111789 | ROLL PIN | 2 |
| 48 | 1-654-010061-16 | SCREW, HEX HEAD CAP 3/4-10 X 5-1/2 GR5 | 8 |
| 49 | 1-654-010032-23 | SCREW, HEX HEAD CAP 3/4-10 X 9 GR8 | 10 |
| 50 | 100941 | SCREW, HEX HEAD CAP 3/4-10 X 2-1/4 GR8 | 16 |
| 51 | 144115 | PIN, GROOVED ALLOY 1/2 X 2-1/4 **(BEFORE 6-6-2016)** | 8 |
| 51 | 148382 | PIN, WALKING BEAM SPINDLE **(AFTER 6-6-2016)** | 8 |
| 52 | 1-647-010004257 | PIN,SPRING,SLOTTED 3/8X2-1/2 **(AFTER 6-6-2016)** | 4 |

https://truckmanualshub.com/



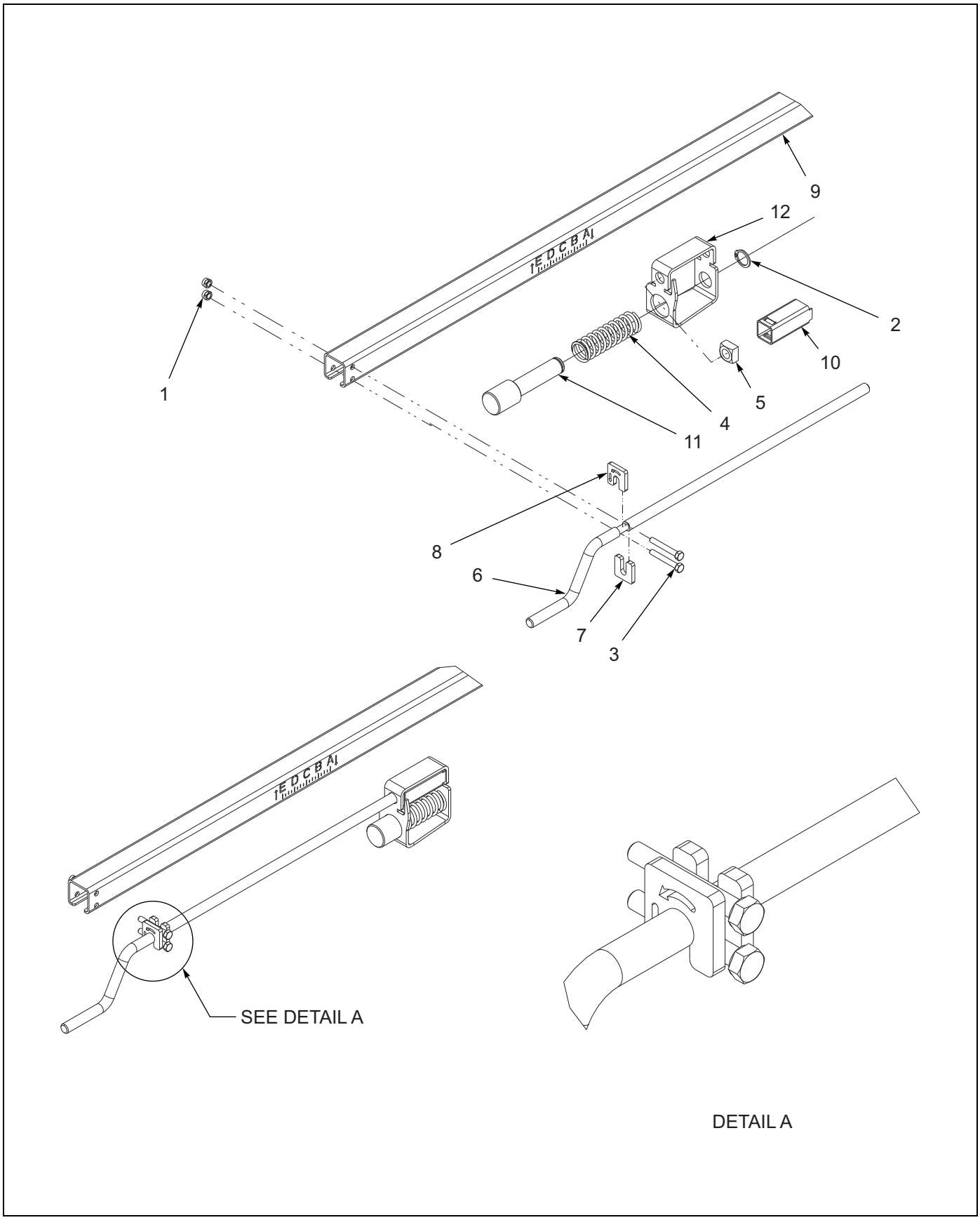


Figure 2-4: Depth Stop Tube Assembly

https://truckmanualshub.com/


# DEPTH STOP TUBE ASSEMBLY

| ITEM | PART NO. | DESCRIPTION | QTY. |
|---|---|---|---|
| | 165264 | DEPTH STOP ASSEMBLY 96”, S/N 5186 AND BELOW | 1 |
| | 180120 | DEPTH STOP ASSEMBLY 95”, S/N 5187 AND UP | |
| 1 | 1-512-010005-03 | NUT, HEX LOCK 5/16-18 GRB | 2 |
| 2 | 1-630-010021-03 | RING, RETAINING 1 HD | 1 |
| 3 | 108628 | SCREW, HEX HEAD CAP 5/16-18 X 2-1/4 GR5 | 2 |
| 4 | 122917 | SPRING, COMPRESSION 4-1/2 | 1 |
| 5 | 144048 | NUT, SQUARE 5/8-11 GR5 | 1 |
| 6 | 165258 | HANDLE, DEPTH STOP | 1 |
| 7 | 165259 | STOP, HANDLE LONG | 1 |
| 8 | 165260 | STOP, HANDLE SHORT | 1 |
| 9 | 165264 | SQUARE TUBE, DEPTH STOP 96”, **(S/N 5186 AND BELOW)** | 1 |
| 9 | 180121 | SQUARE TUBE, DEPTH STOP 95”, **(S/N 5187 AND ABOVE)** | 1 |
| 10 | 166717 | SQUARE TUBE, FLOATING | 1 |
| 11 | 174708 | PIN, DEPTH STOP | 1 |
| 12 | 174709 | SQUARE TUBE, DEPTH STOP | 1 |

https://truckmanualshub.com/



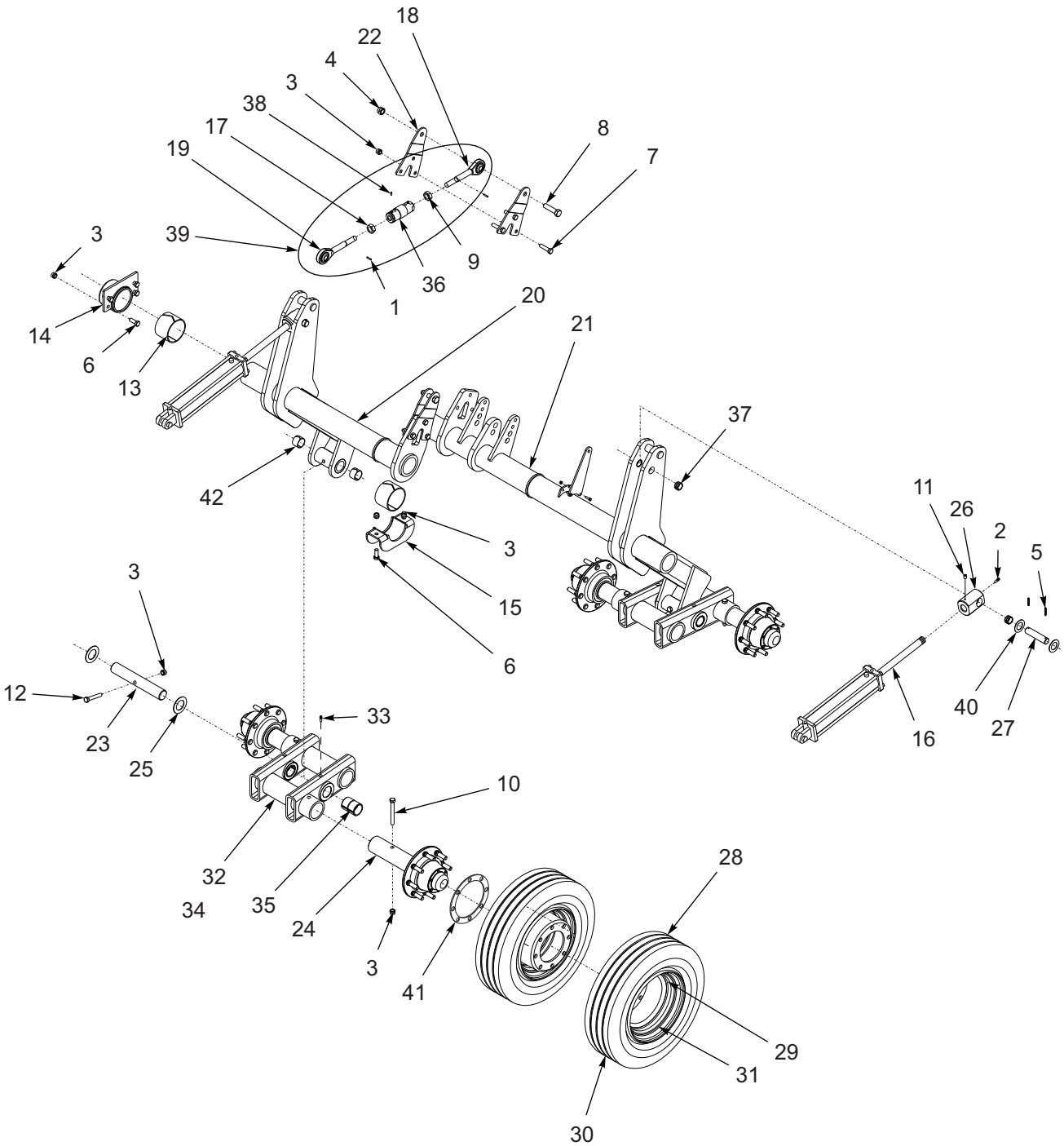


Figure 2-5: Lift Wheel Assembly, Frame Center

https://truckmanualshub.com/



# LIFT WHEEL ASSEMBLY, FRAME CENTER

| ITEM | PART NO. | DESCRIPTION | QTY. |
|---|---|---|---|
| | 161676 | FRAME CENTER ASSEMBLY | |
| 1 | 0600-250-01250 | ROLL PIN 1/4 X 1-1/4 LONG | 2 |
| 2 | 1-298-010001-1 | ZERK FITTING 1/4 | 4 |
| 3 | 1-512-010005-15 | NUT, HEX LOCK 3/4-10 GRB | 30 |
| 4 | 1-512-010005-19 | NUT, HEX LOCK 1-8 GRB | 2 |
| 5 | 1-647-010004240 | PIN, SPRING SLOTTED 5/16 X 2-1/2 | 4 |
| 6 | 1-654-010061-05 | SCREW, HEX HEAD CAP 3/4-10 X 2 GR5 | 18 |
| 7 | 1-654-010061-09 | SCREW, HEX HEAD CAP 3/4-10 X 3 GR5 | 6 |
| 8 | 1-654-010065-13 | SCREW, HEX HEAD CAP 1-8 X 4 GR5 | 2 |
| 9 | 100823 | NUT, HEX JAM 1-1/4-7 GR2 | 1 |
| 10 | 100855 | SCREW, HEX HEAD CAP 3/4-10 X 6-1/2 GR5 | 4 |
| 11 | 122709 | SET SCREW, HEX SOCKET CUP PT 3/8-16 X 1/2 | 2 |
| 12 | 126108 | SCREW, HEX HEAD CAP 3/4-10 X 4-1/2 GR8 | 2 |
| 13 | 140519 | BEARING, UHMW 4IN | 7 |
| 14 | 141209 | BEARING CAP, LIFT | 2 |
| 15 | 141234 | BEARING CAP, LIFT | 5 |
| 16 | 146824 | CYLINDER, 4-1/2 X16 REPHASE **(SEE PAGE 2-90)** | 2 |
| 17 | 153803 | NUT HEX JAM, LH 1-1/4-7 GR2 | 1 |
| 18 | 159553 | SCREW, SHORT LH RADIUS ROD | 1 |
| 19 | 159557 | SCREW, SHORT RH RADIUS ROD | 1 |
| 20 | 162724 | LIFT, CENTER RIGHT | 1 |
| 21 | 162725 | LIFT, CENTER LEFT | 1 |
| 22 | 162765 | PLATE, OFFSET | 4 |
| 23 | 164501 | SPINDLE, WALKING BEAM | 2 |
| 24 | 164558 | HUB/SPINDLE ASSEMBLY **(PRIOR 1-1-2017) (SEE PAGE 2-11)** | 4 |
| 24 | 191974 | HUB/SPINDLE ASSY, 4" W/ZERK **(AFTER1-1-2017) (SEE PAGE 2-13)** | 1 |
| 25 | 164563 | WASHER, THRUST 2-1/2 | 4 |
| 26 | 165238 | BLOCK, CYLINDER ROD | 2 |
| 27 | 165256 | PIN, LIFT | 2 |
| 28 | 167551 | TIRE AND WHEEL ASSEMBLY 235/75R17.5 DC STL PLT **(INCL ITEMS 29-31)** | 8 |
| 29 | TR416 | VALVE STEM | 8 |
| 30 | 147473 | TIRE 235/75R 17.5 DOUBLE COIN | 8 |
| 31 | 167552 | WHEEL, DISC PILOT MOUNT 17.5 X 6.75 **(AFTER 01/15/2012)** | 8 |
| 31 | 3-870-010097 | WHEEL, DISC PILOT MOUNT 17.5 X 6.75 **(PRIOR TO 01/15/2012)** | 8 |
| 32 | 167553 | WALKING BEAM ASSEMBLY 4" **(INCL ITEMS 33 - 35)** | 2 |
| 33 | 153804 | FITTING, GREASE STR LONG 1/4-28 **(PRIOR TO JULY, 2013)** | 4 |
| 33 | 171024 | FITTING, GREASE STR 5/16-24 **(AFTER JULY, 2013)** | 8 |
| 34 | 163696 | WALKING TANDEM - 4" SP | 1 |
| 35 | 165286 | BUSHING, SPRING 3 X 2-1/2 X 4 | 2 |
| 36 | 167569 | RADIUS ROD WELDMENT 7" | 1 |
| 37 | 2-150-010218 | BUSHING, LEVELING LINKAGE | 8 |
| 38 | 1-654-010080-22 | SET SCREW, SQ HEAD CUP PT 1/2-13 X 1-1/4 | 1 |
| 39 | 167568 | RADIUS ROD ASSEMBLY, LIFT **(INCL. ITEMS 1-2, 9, 17-19, 36, 38)** | 1 |
| 40 | 170258 | BUSHING, MACHINE 1-1/2 X 10 GA | 4 |
| 41 | 167586 | SPACER, WHEEL | REF |
| 42 | 198351 | CONNEX, 2-3/4 X 2-1/2 X 1-1/2L **(AFTER 02/20/2017)** | 4 |

https://truckmanualshub.com/



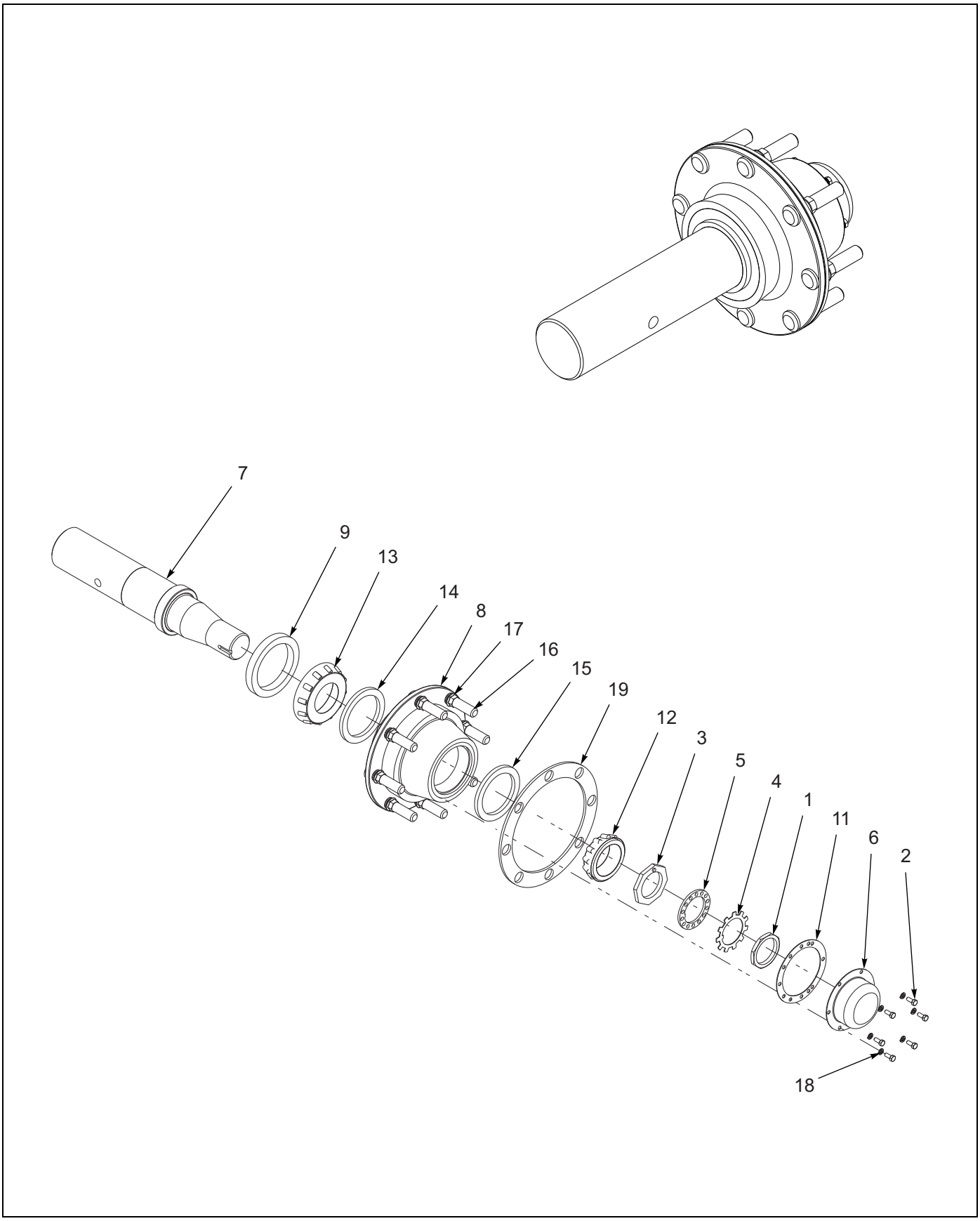


Figure 2-6: Hub/Spindle Assembly 164558

https://truckmanualshub.com/



# HUB/SPINDLE ASSEMBLY 164558-PRIOR 1-1-2017

| ITEM | PART NO. | DESCRIPTION | QTY. |
|---|---|---|---|
| | 164558 | HUB/SPINDLE ASSEMBLY | |
| 1 | 006-115-00 | NUT, OUTER SPINDLE | 1 |
| 2 | 1-654-010049-03 | SCREW, HEX HEAD CAP 5/16-18 X 3/4 GR5 | 6 |
| 3 | 103103-002 | INNER SPINDLE NUT | 1 |
| 4 | 105106 | STAR LOCKWASHER | 1 |
| 5 | 105107 | LOCK WASHER | 1 |
| 6 | 168456 | HUBCAP | 1 |
| 7 | 167649 | SPINDLE AND SLEEVE ASSEMBLY, 4 X 22-1/4 | 1 |
| 8 | 164557 | HUB W/CUPS, 8 BOLT **(INCL. ITEMS 14-17)** | 1 |
| 9 | 165254 | SEAL, TRIPLE TEFLON 4-5/8 | 1 |
| 11 | 3067 | GASKET, HUB | 1 |
| 12 | HM212049 | OUTER BEARING A19S | 1 |
| 13 | HM218248 | INNER BEARING | 1 |
| 14 | HM218210 | INNER BEARING CUP | 1 |
| 15 | HM212011 | OUTER BEARING CUP | 1 |
| 16 | 101162 | STUD BOLT (8 BOLT) | 8 |
| 17 | 179933 | LUG NUT (8 BOLT) | 8 |
| 18 | 1-861-010034-10 | WASHER, SPLIT LOCK 5/16 | 6 |
| 19 | 167586 | SPACER, WHEEL | 1 |

https://truckmanualshub.com/



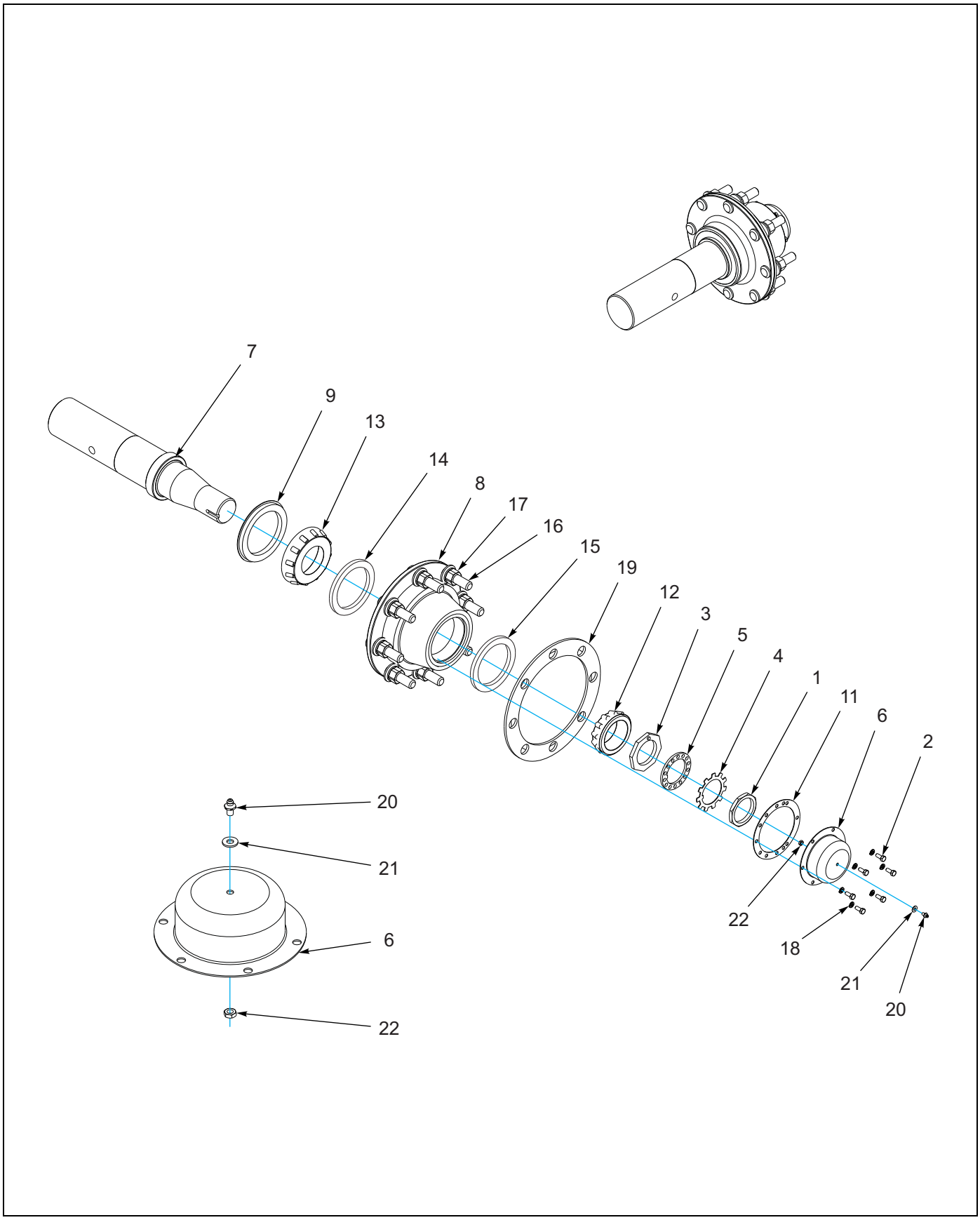


Figure 2-7: Hub/Spindle Assembly 191974

https://truckmanualshub.com/



# HUB/SPINDLE ASSEMBLY 191974-AFTER 1-1-2017

| ITEM | PART NO. | DESCRIPTION | QTY. |
|---|---|---|---|
| | 191974 | HUB/SPINDLE ASSY, 4" W/ZERK | |
| 1 | 006-115-00 | NUT, OUTER SPINDLE | 1 |
| 2 | 1-654-010049-03 | SCREW, HEX HEAD CAP 5/16-18 X 3/4 GR5 | 6 |
| 3 | 103103-002 | INNER SPINDLE NUT | 1 |
| 4 | 105106 | STAR LOCKWASHER | 1 |
| 5 | 105107 | LOCK WASHER | 1 |
| 6 | 191976* | HUBCAP W/ 1/4 HOLE | 1 |
| 7 | 167649 | SPINDLE AND SLEEVE ASSEMBLY, 4 X 22-1/4 | 1 |
| 8 | 164557 | HUB W/CUPS, 8 BOLT **(INCL. ITEMS 14-17)** | 1 |
| 9 | 184769* | SEAL, PURGABLE 6 OD X 4-4/8 ID | 1 |
| 11 | 3067 | GASKET, HUB | 1 |
| 12 | HM212049 | OUTER BEARING A19S | 1 |
| 13 | HM218248 | INNER BEARING | 1 |
| 14 | HM218210 | INNER BEARING CUP | 1 |
| 15 | HM212011 | OUTER BEARING CUP | 1 |
| 16 | 101162 | STUD BOLT (8 BOLT) | 8 |
| 17 | 179933 | LUG NUT (8 BOLT) | 8 |
| 18 | 1-861-010034-10 | WASHER, SPLIT LOCK 5/16 | 6 |
| 19 | 167586 | SPACER, WHEEL | 1 |
| 20 | 5013* | ZERK, FITTING 1/4-28SAEX11/16 | 1 |
| 21 | 1-861-010032-06* | WASHER, FLAT 1/4 N ZP/CD | 1 |
| 22 | 1404013* | NUT JAM HEX HD GR 5 1/4-28 | 1 |

* NOTE: DFFERENCE BETWEEN 164588 AND 191974 ARE ITEMS 6, 9, 20, 21, 22

https://truckmanualshub.com/



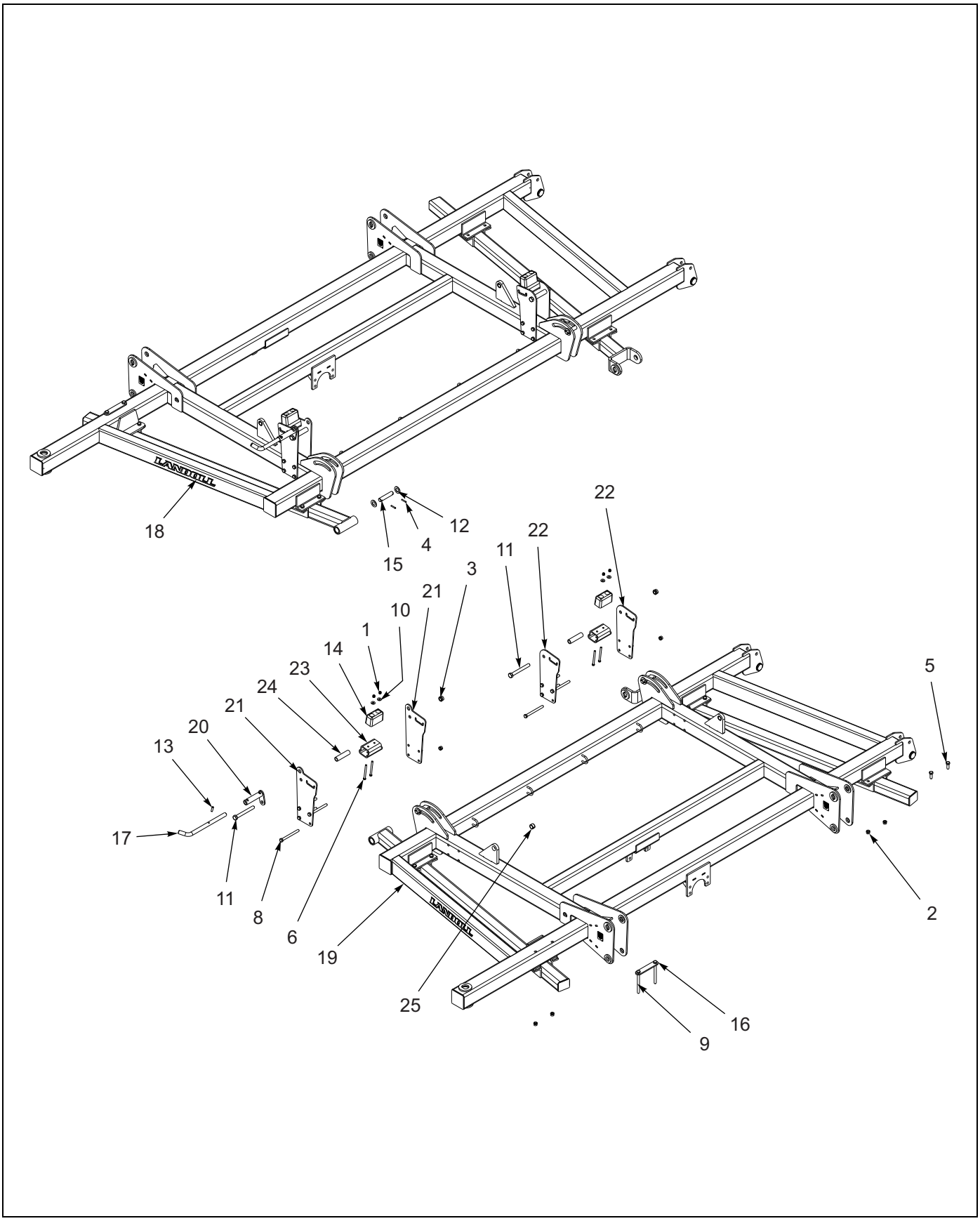


Figure 2-8: Inner Wing Frame and Stabilizer Assembly

https://truckmanualshub.com/


# INNER WING FRAME AND STABILIZER ASSEMBLY

| ITEM | PART NO. | DESCRIPTION | QTY. |
|---|---|---|---|
| | 161679 | FRAME, RIGHT INNER WING ASSEMBLY **(39')** | |
| | 161683 | FRAME, RIGHT INNER WING ASSEMBLY **(44')** | |
| | 161687 | FRAME, RIGHT INNER WING ASSEMBLY **(49')** | |
| | 161680 | FRAME, LEFT INNER WING ASSEMBLY **(39')** | |
| | 161684 | FRAME, LEFT INNER WING ASSEMBLY **(44')** | |
| | 161688 | FRAME, LEFT INNER WING ASSEMBLY **(49')** | |
| 1 | 1-512-010005-09 | NUT, HEX LOCK 1/2-13 GRB | 8 |
| 2 | 1-512-010005-15 | NUT, HEX LOCK 3/4-10 GRB | 8 |
| 3 | 1-512-010005-19 | NUT, HEX LOCK 1-8 GRB | |
| 4 | 1-647-010004240 | PIN, SPRING SLOTTED 5/16 X 2-1/2 | |
| 5 | 1-654-010032-05 | SCREW, HEX HEAD CAP 3/4-10 X 2 GR8 | |
| 6 | 1-654-010055-11 | SCREW, HEX HEAD CAP 1/2-13 X 3-1/2 GR5 | |
| 7 | 163644 | WING LOCK ASSEMBLY **(INCL. ITEMS 13, 17, AND 20)** | 2 |
| 8 | 1-654-010061-21 | SCREW, HEX HEAD CAP 3/4-10 X 8 GR5 | |
| 9 | 1-654-010061-22 | SCREW, HEX HEAD CAP 3/4-10 X 8-1/2 GR5 | |
| 10 | 1-861-010032-15 | WASHER, FLAT 1/2W | |
| 11 | 114616 | SCREW, HEX HEAD CAP 1-8 X 8-1/2 GR5 | 4 |
| 12 | 116100 | WASHER, FLAT 1-1/4N | 1 |
| 13 | 127351 | PIN, SPRING SLOTTED 1/2 X 2 | 2 |
| 14 | 128874 | BUMPER, RUBBER 6 X 3 X 3-1/2 | 4 |
| 15 | 141244 | PIN, FOLD | 1 |
| 16 | 158850 | PLATE, CLAMP | 2 |
| 17 | 160656 | PIN, WING LOCK | 2 |
| 18 | 161664 | FRAME RIGHT INNER WING **(39')** | 1 |
| 18 | 161668 | FRAME RIGHT INNER WING **(44')** | 1 |
| 18 | 161672 | FRAME RIGHT INNER WING **(49')** | 1 |
| 19 | 161665 | FRAME, LEFT INNER WING **(39')** | 1 |
| 19 | 161669 | FRAME, LEFT INNER WING **(44')** | 1 |
| 19 | 161673 | FRAME, LEFT INNER WING **(49')** | 1 |
| 20 | 163645 | MOUNT LOCK | 2 |
| 21 | 163718 | MOUNT, WING STABILIZER FRONT | 4 |
| 22 | 163719 | MOUNT, WING STABILIZER REAR | 4 |
| 23 | 164474 | MOUNT, WING REST **(39')** | 4 |
| 23 | 166628 | MOUNT, WING REST **(44')** | 4 |
| 23 | 166629 | MOUNT, WING REST **(49')** | 4 |
| 24 | 164555 | SPACER, WING STABILIZER | 4 |
| 25 | 2-150-010174 | BUSHING, 1-5/8 X 1-1/4 X 1 **(44' & 49')** | 3 |

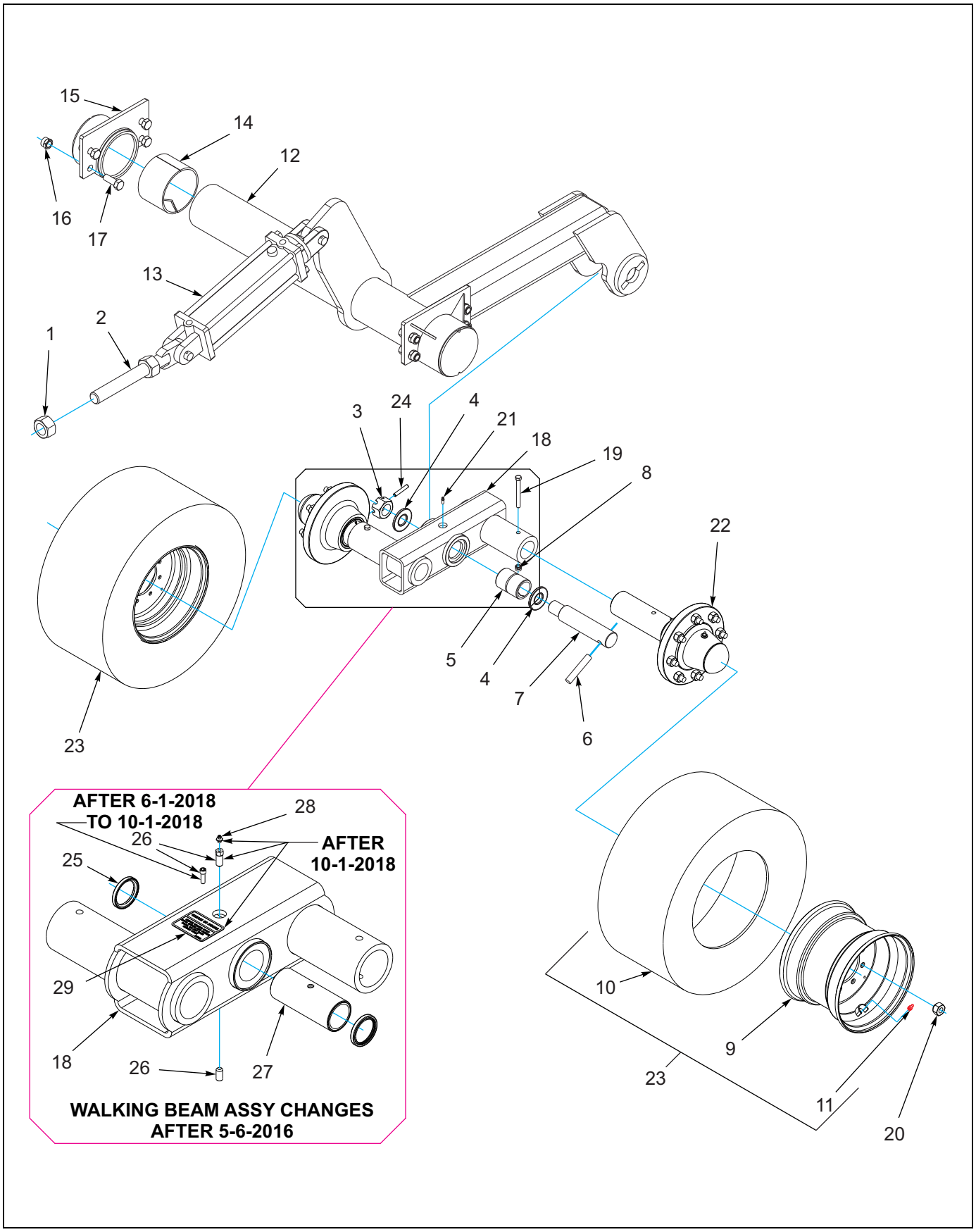


Figure 2-9: Inner Wing Lift Wheel Assembly

https://truckmanualshub.com/



# INNER WING LIFT WHEEL ASSEMBLY

| ITEM | PART NO. | DESCRIPTION | QTY. |
|---|---|---|---|
| | 161679 | FRAME, RIGHT INNER WING ASSEMBLY **(39')** | |
| | 161683 | FRAME, RIGHT INNER WING ASSEMBLY **(44')** | |
| | 161687 | FRAME, RIGHT INNER WING ASSEMBLY **(49')** | |
| | 161680 | FRAME, LEFT INNER WING ASSEMBLY (**39')** | |
| | 161684 | FRAME, LEFT INNER WING ASSEMBLY **(44')** | |
| | 161688 | FRAME, LEFT INNER WING ASSEMBLY **(49')** | |
| 1 | 159954 | NUT, HEX 1-3/4 GRB | 2 |
| 2 | 164546 | ROD, CYLINDER ANCHOR 1-1/4 | 1 |
| 3 | 119118 | NUT, HEX SLOTTED 1-1/2-12 | 2 |
| 4 | 160597 | WASHER, THRUST 2" **(4" OD) (BEFORE 01/2013)** | 4 |
| 4 | 171070 | WASHER, THRUST 2" **(3-11/16" OD) (AFTER 01/2013)** | 4 |
| 5 | 158903 | BUSHING, SPRING 2-1/2 X 2 X 4-5/8 **(BEFORE 5-6-2016)** | 2 |
| 6 | 156992 | PIN, WALKING BEAM SPINDLE | 2 |
| 7 | 157019 | SPINDLE, WALKING BEAM **(40' & ALL BEFORE 7-10-2017)** | 2 |
| 7 | 207849 | SPINDLE, WALKING BEAM-2" **(45'/50' AFTER 7-10-2017)** | 2 |
| 8 | 101988 | NUT, HEX LOCK 7/16-14 GRB **(BEFORE 7-10-2017)** | 4 |
| 8 | 1-512-010005-09 | NUT,HEX,SLFLKG, 1/2-13 GRB **(AFTER 7-10-2017)** | 4 |
| 9 | 140548 | WHEEL, 15 X 10 LB 8 BOLT **(184708)** | 4 |
| 9 | 157001 | WHEEL, 8 BOLT 16.5 X 12, NEGATIVE 1/2" OFFSET **(157000/215351)** | 4 |
| 10 | 204385 | FIRESTONE RADIAL 320/70R15 **(184708)** | 4 |
| 10 | 157002 | TIRE, 32/1550 X 16.5 SL, (GALAXY) **(7450-44/49 AFTER 6-15-2016 TO 12-1-2018) (157000)** | 4 |
| 10 | 215352 | TIRE, VF410/50R16.5 **(AFTER 12-1-2018)** | 4 |
| 11 | 415 | VALVE STEM, TUBELESS TIRE **(187408)** | 4 |
| 11 | TR575 | VALVE STEM, TUBELESS TIRE **(157000/215351)** | 4 |
| 12 | 162729 | LIFT, WING LEFT **(44' & 49' BEFORE 6-15-2016) (ALL 39' MODELS)** | 1 |
| 12 | 178969 | LIFT WLDMT WING LEFT **(44' & 49' AFTER 6-15-2016 TO 7-10-2017)** | 1 |
| 12 | 162728 | LIFT, WING RIGHT **(44' & 49' BEFORE 6-15-2016) (ALL 39' MODELS)** | 1 |
| 12 | 178968 | LIFT, WING RIGHT **(44' & 49' AFTER 6-15-2016 TO 7-10-2017)** | 1 |
| 12 | 207876 | LIFT, WING RIGHT **(44' & 49' AFTER 7-10-2017)** | 1 |
| 12 | 207877 | LIFT, WING LEFT **(44' & 49' AFTER 7-10-2017)** | 1 |
| 13 | 146825 | CYLINDER, 4X16, REPHASE **(SEE PAGE 2-89**) | 1 |
| 14 | 140519 | BEARING, UHMW 4" | 4 |
| 15 | 141209 | BEARING CAP, LIFT | 4 |
| 16 | 1-512-010005-15 | NUT, HEX LOCK 3/4-10 GRB | 16 |
| 17 | 1-654-010061-05 | SCREW, HEX HEAD CAP 3/4-10 X 2 GR5 | 16 |
| 18 | 172962 | WALKING BEAM ASSY, 2-1/4 (ITEMS 5 & 21) **(BEFORE 5-06-2016)** | 1 |
| 18 | 198342 | WALKING BEAM ASSY, 2-1/4 (ITEMS 25-27) **(AFTER 5-06-2016 TO 7-10-2017) (WILL ALSO REPLACE 172962)** | 1 |
| 18 | 198344 | WALKING BEAM ASSY, 3" (ITEMS 25-27) **(40' AFTER 7-10-2017)** | 1 |
| 18 | 204544 | WALKING BEAM ASSY, 3" (ITEMS 25-27) **(45'/50' AFTER 7-10-2017)** | 1 |
| 19 | 141809 | SCREW, HEX HEAD CAP 7/16-14 X 4 GR5 **(BEFORE 7-10-2017)** | 4 |
| 19 | 1-654-010055-15 | SCR, HX CP, 1/2-13UNCX5 GR5 **(AFTER 7-10-2017)** | 4 |
| 20 | 102600 | LUG NUT (8 BOLT) | 32 |
| 21 | 153804 | FITTING, GREASE 1/4-28 STR LONG **(BEFORE 1/2013** | 2 |
| 21 | 171024 | FITTING, GREASE 5/16-24 STR **(AFTER1/2013 TO 5-06-2016)** | 2 |
| 22 | 147553 | 8 BOLT HUB ASSY, 2-1/4" SPDL **(BEFORE 7-10-2017) (SEE PAGE 2-25)** | 4 |
| 22 | 156972 | HUB & SPINDLE ASSY, 8 BOLT 3" SPDL **(AFTER 7-10-2017) (SEE PAGE 2-26)** | 4 |

https://truckmanualshub.com/



# INNER WING LIFT WHEEL ASSEMBLY

| ITEM | PART NO. | DESCRIPTION | QTY. |
|---|---|---|---|
| 23 | 184708 | TTIRE ASSY,320/70R15,8 BOLTWHL **(ALL 39' MODELS') (INCL ITEMS 9 140548, 10 204385 &11 TR575)** | 4 |
| 23 | 157000 | TIRE AND WHEEL ASSY 32/1550 X 16.5 SL **(44' & 49' AFTER6-15-2016 TO 12-1-2018) (INCL ITEMS 9 157001, 10 157002 & 11 TR575)** | 4 |
| 23 | 215351 | TIRE&WHL ASSY, VF410/50R16.5 **(AFTER 12-1-2018) (INCLUDES ITEMS 9 147001, 10 215352 & 11 TR575)** | 4 |
| 24 | 127712 | PIN, SPRING SLOTTED 3/8 X 2-1/4 | 2 |
| 25 | 198322 | SEAL, V17, DOUBLE LIP 2" | 2 |
| 26 | 200129 | SCREW SOCKET HD CAP 5/16-24X1 **(BEFORE 6-1-2018)** | 2 |
| 26 | 15G816ER | SCREW SET SOC HD CPPT.5-13X1 **(AFTER 6-1-18 TO 10-1-2018)** | 1 |
| 26 | 212046 | SCREW, SET FOR ZERK **(AFTER 10-1-18)** | 1 |
| 27 | 200310 | ASSY, TANDEM PIVOT 2" **(4" LONG) (198342 &198344)** | 1 |
| 27 | 204548 | ASSY, TANDEM PIVOT 2" **(6" LONG) (20544)** | 1 |
| 28 | 1-298-010001-1 | ZERK FITTING 1/4 SAE **(AFTER 10-1-18)** | 1 |
| 29 | 215341 | DECAL, GREASE WALKER **(AFTER 10-1-18)** | 1 |

https://truckmanualshub.com/



Table provided for general use.

| NOTES: |
| --- |
| |

https://truckmanualshub.com/



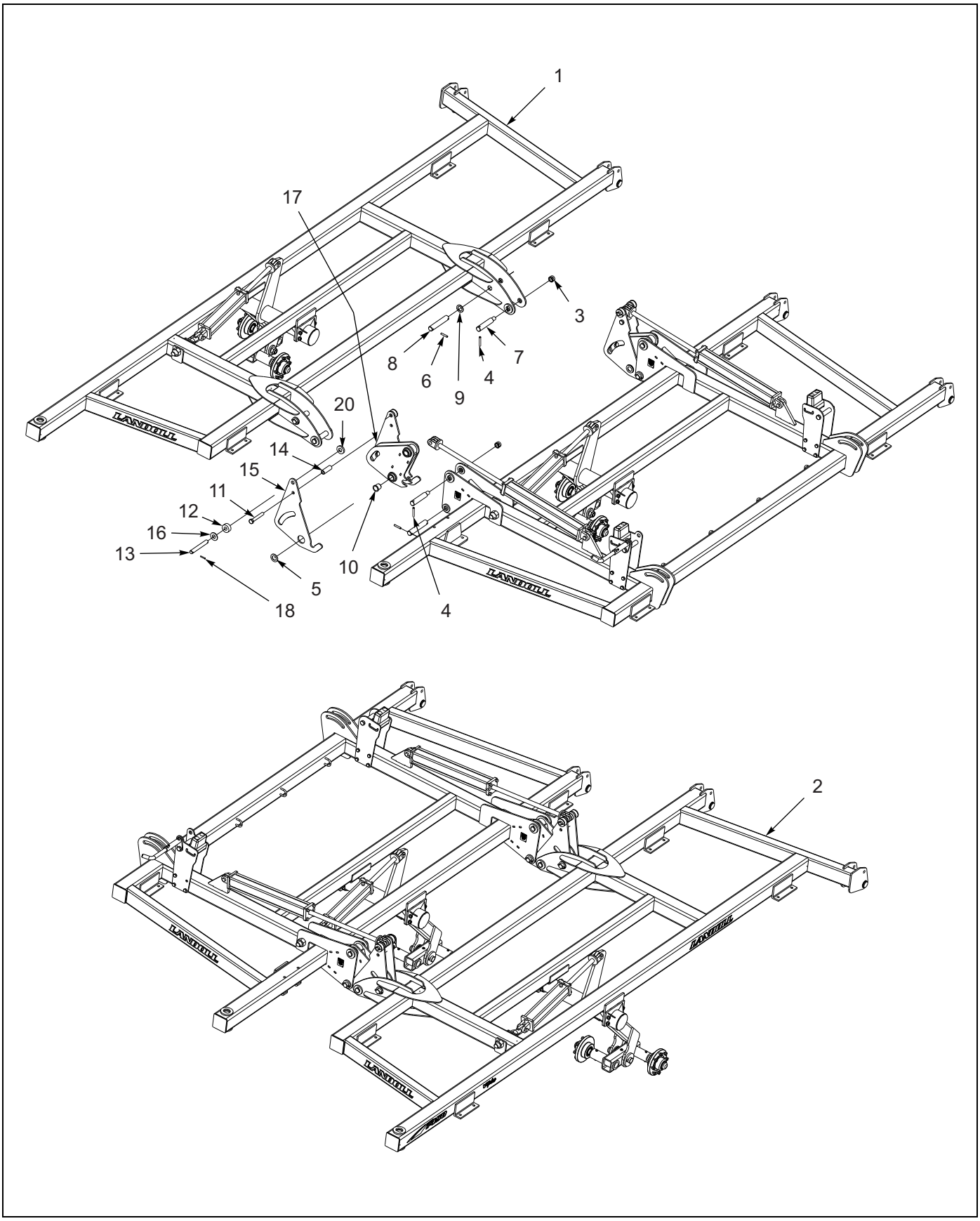


Figure 2-10: Outer Wing Frame and Fold Lock Assembly

https://truckmanualshub.com/


# OUTER WING FRAME AND FOLD LOCK ASSEMBLY

| ITEM | PART NO. | DESCRIPTION | QTY. |
|---|---|---|---|
| | 161681 | FRAME, RIGHT OUTER WING ASSEMBLY (39’) | |
| | 161685 | FRAME, RIGHT OUTER WING ASSEMBLY (44’) | |
| | 161689 | FRAME, RIGHT OUTER WING ASSEMBLY (49’) | |
| | 161682 | FRAME, LEFT OUTER WING ASSEMBLY (39’) | |
| | 161686 | FRAME, LEFT OUTER WING ASSEMBLY (44’) | |
| | 161690 | FRAME, LEFT OUTER WING ASSEMBLY (49’) | |
| 1 | 161666 | FRAME RIGHT OUTER WING (39') | 1 |
| 1 | 161670 | FRAME RIGHT OUTER WING (44') | 1 |
| 1 | 161674 | FRAME RIGHT OUTER WING (49') | 1 |
| 2 | 161667 | FRAME, LEFT OUTER WING (39') | 1 |
| 2 | 161671 | FRAME, LEFT OUTER WING (44') | 1 |
| 2 | 161675 | FRAME, LEFT OUTER WING (49') | 1 |
| 3 | 101385 | NUT, HEX LOCK 1-1/4-7 GRB | 4 |
| 4 | 144115 | PIN, GROOVED ALLOY 1/2 X 2-1/4 | 8 |
| 5 | 164539 | WASHER, THRUST 1-3/4 | 8 |
| 6 | 167594 | SNAP RING 1-3/4 SHAFT | 16 |
| 7 | 164541 | PIN, HINGE | 8 |
| 8 | 167593 | PIN, 1-3/4 W/ SNAP RING | 8 |
| 9 | 141154 | WASHER, GANG SHAFT | 8 |
| 10 | 164533 | BEARING, FLANGE 1-3/4 | 4 |
| 11 | 100829 | SCREW, HEX HEAD CAP 1-8 X 6-1/2 GR5 | 4 |
| 12 | 164564 | ROLLER, WING FOLD | 8 |
| 13 | 164565 | PIN, FOLD | 4 |
| 14 | 165295 | SPACER, WING FOLD | 4 |
| 15 | 164490 | LINK, FOLD | 8 |
| 16 | 1-861-010032-29 | WASHER, FLAT 1-1/4W | 8 |
| 17 | 164491 | HINGE, DOUBLE | 4 |
| 18 | 1-647-010004240 | PIN, SPRING SLOTTED 5/16 X 2-1/2 | 4 |
| 19 | 164540 | HINGE ASSEMBLY (INCL. ITEMS 10 & 17) | 4 |
| 20 | 173018 | SPACER, WING FOLD 1/2” | 8 |

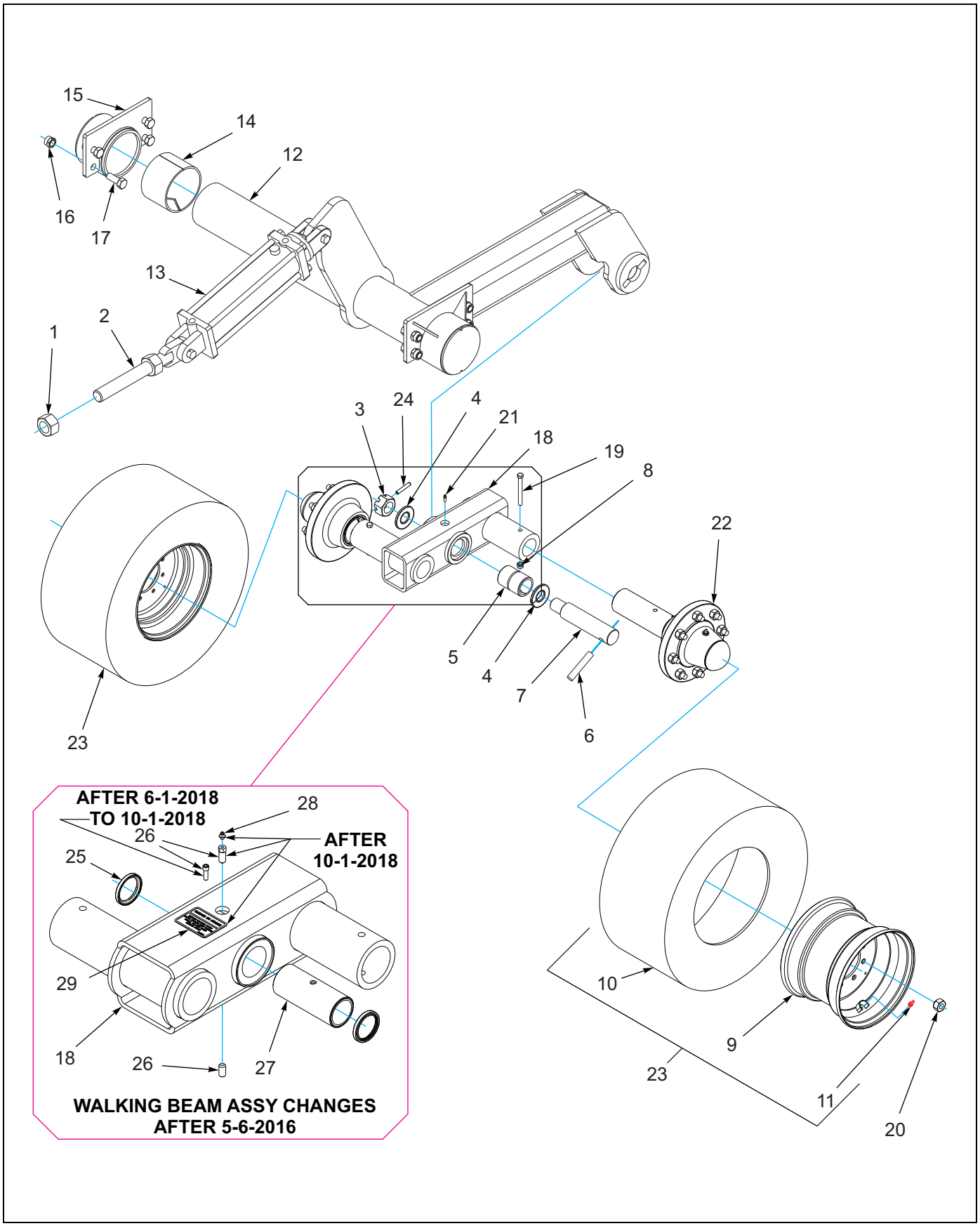


Figure 2-11: Outer Wing Lift Wheel Assembly

https://truckmanualshub.com/



# OUTER WING LIFT WHEEL ASSEMBLY

| ITEM | PART NO. | DESCRIPTION | QTY. |
|---|---|---|---|
| | 161681 | FRAME, RIGHT OUTER WING ASSEMBLY (39') | |
| | 161685 | FRAME, RIGHT OUTER WING ASSEMBLY (44') | |
| | 161689 | FRAME, RIGHT OUTER WING ASSEMBLY (49') | |
| | 161682 | FRAME, LEFT OUTER WING ASSEMBLY (39') | |
| | 161686 | FRAME, LEFT OUTER WING ASSEMBLY (44') | |
| | 161690 | FRAME, LEFT OUTER WING ASSEMBLY (49') | |
| 1 | 159954 | NUT, HEX 1-3/4 GRB | 2 |
| 2 | 164546 | ROD, CYLINDER ANCHOR 1-1/4 | 1 |
| 3 | 119118 | NUT, HEX SLOTTED 1-1/2-12 | 2 |
| 4 | 160597 | WASHER, THRUST 2" **(4" OD) (BEFORE 01/2013)** | 4 |
| 4 | 171070 | WASHER, THRUST 2" **(3-11/16" OD) (AFTER 01/2013)** | 4 |
| 5 | 158903 | BUSHING, SPRING 2-1/2 X 2 X 4-5/8 **(BEFORE 5-6-2016)** | 2 |
| 6 | 156992 | PIN, WALKING BEAM SPINDLE | 2 |
| 7 | 157019 | SPINDLE, WALKING BEAM **(40' & ALL BEFORE 7-10-2017)** | 2 |
| 7 | 207849 | SPINDLE, WALKING BEAM-2" **(45'/50' AFTER 7-10-2017)** | 2 |
| 8 | 101988 | NUT, HEX LOCK 7/16-14 GRB **(BEFORE 7-10-2017)** | 4 |
| 8 | 1-512-010005-09 | NUT,HEX,SLFLKG, 1/2-13 GRB **(AFTER 7-10-2017)** | 4 |
| 9 | 140548 | WHEEL, 15 X 10 LB 8 BOLT **(184708)** | 4 |
| 9 | 157001 | WHEEL, 8 BOLT 16.5 X 12, NEGATIVE 1/2" OFFSET **(157000/215351)** | 4 |
| 10 | 204385 | FIRESTONE RADIAL 320/70R15 **(184708)** | 4 |
| 10 | 157002 | TIRE, 32/1550 X 16.5 SL, (GALAXY) **(7450-44/49 AFTER 6-15-2016 TO 12-1-2018) (157000)** | 4 |
| 10 | 215352 | TIRE, VF410/50R16.5 **(AFTER 12-1-2018)** | 4 |
| 11 | 415 | VALVE STEM, TUBELESS TIRE **(187408)** | 4 |
| 11 | TR575 | VALVE STEM, TUBELESS TIRE **(157000/215351)** | 4 |
| 12 | 162729 | LIFT, WING LEFT **(44' & 49' BEFORE 6-15-2016) (ALL 39' MODELS)** | 1 |
| 12 | 178969 | LIFT WLDMT WING LEFT **(44' & 49' AFTER 6-15-2016 TO 7-10-2017)** | 1 |
| 12 | 162728 | LIFT, WING RIGHT **(44' & 49' BEFORE 6-15-2016) (ALL 39' MODELS)** | 1 |
| 12 | 178968 | LIFT, WING RIGHT **(44' & 49' AFTER 6-15-2016 TO 7-10-2017)** | 1 |
| 12 | 207876 | LIFT, WING RIGHT **(44' & 49' AFTER 7-10-2017)** | 1 |
| 12 | 207877 | LIFT, WING LEFT **(44' & 49' AFTER 7-10-2017)** | 1 |
| 13 | 163700 | CYLINDER, 3-3/4X16, REPHASE **(SEE PAGE 2-93)** | 1 |
| 14 | 140519 | BEARING, UHMW 4" | 4 |
| 15 | 141209 | BEARING CAP, LIFT | 4 |
| 16 | 1-512-010005-15 | NUT, HEX LOCK 3/4-10 GRB | 16 |
| 17 | 1-654-010061-05 | SCREW, HEX HEAD CAP 3/4-10 X 2 GR5 | 16 |
| 18 | 172962 | WALKING BEAM ASSY, 2-1/4 **(ITEMS 5 & 21) (BEFORE 5-06-2016)** | 1 |
| 18 | 198342 | WALKING BEAM ASSY, 2-1/4 **(ITEMS 25-27) (AFTER 5-06-2016 TO 7-10-2017) (WILL ALSO REPLACE 172962)** | 1 |
| 18 | 198344 | WALKING BEAM ASSY, 3" **(ITEMS 25-27) (40' AFTER 7-10-2017)** | 1 |
| 18 | 204544 | WALKING BEAM ASSY, 3" **(ITEMS 25-27) (45'/50' AFTER 7-10-2017)** | 1 |
| 19 | 141809 | SCREW, HEX HEAD CAP 7/16-14 X 4 GR5 **(BEFORE 7-10-2017)** | 4 |
| 19 | 1-654-010055-15 | SCR, HX CP, 1/2-13UNCX5 GR5 **(AFTER 7-10-2017)** | 4 |
| 20 | 102600 | LUG NUT (8 BOLT) | 32 |
| 21 | 153804 | FITTING, GREASE 1/4-28 STR LONG **(BEFORE 1/2013** | 2 |
| 21 | 171024 | FITTING, GREASE 5/16-24 STR **(AFTER1/2013 TO 5-06-2016)** | 2 |
| 22 | 147553 | 8 BOLT HUB ASSY, 2-1/4" SPDL **(BEFORE 7-10-2017) (SEE PAGE 2-25)** | 4 |
| 22 | 156972 | HUB & SPINDLE ASSY, 8 BOLT 3" SPDL **(AFTER 7-10-2017) (SEE PAGE 2-26)** | 4 |

https://truckmanualshub.com/



# OUTER WING LIFT WHEEL ASSEMBLY

| ITEM | PART NO. | DESCRIPTION | QTY. |
|---|---|---|---|
| 23 | 184708 | TTIRE ASSY,320/70R15,8 BOLTWHL **(ALL 39' MODELS') (INCL ITEMS 9 140548, 10 204385 &11 TR575)** | 4 |
| 23 | 157000 | TIRE AND WHEEL ASSY 32/1550 X 16.5 SL **(44' & 49' AFTER6-15-2016 TO 12-1-2018) (INCL ITEMS 9 157001, 10 157002 & 11 TR575)** | 4 |
| 23 | 215351 | TIRE&WHL ASSY, VF410/50R16.5 **(AFTER 12-1-2018) (INCLUDES ITEMS 9 147001, 10 215352 & 11 TR575)** | 4 |
| 24 | 127712 | PIN, SPRING SLOTTED 3/8 X 2-1/4 | 2 |
| 25 | 198322 | SEAL, V17, DOUBLE LIP 2" | 2 |
| 26 | 200129 | SCREW SOCKET HD CAP 5/16-24X1 **(BEFORE 6-1-18)** | 2 |
| 26 | 15G816ER | SCREW SET SOC HD CPPT.5-13X1 **(AFTER 6-1-2018 TO 10-1-2018)** | 1 |
| 26 | 212046 | SCREW, SET FOR ZERK **(AFTER 10-1-18)** | 1 |
| 27 | 200310 | ASSY, TANDEM PIVOT 2" **(4" LONG) (198342 &198344)** | 1 |
| 27 | 204548 | ASSY, TANDEM PIVOT 2" **(6" LONG) (20544)** | 1 |
| 28 | 1-298-010001-1 | ZERK FITTING 1/4 SAE **(AFTER 10-1-18)** | 1 |
| 29 | 215341 | DECAL, GREASE WALKER **(AFTER 10-1-18)** | 1 |

https://truckmanualshub.com/



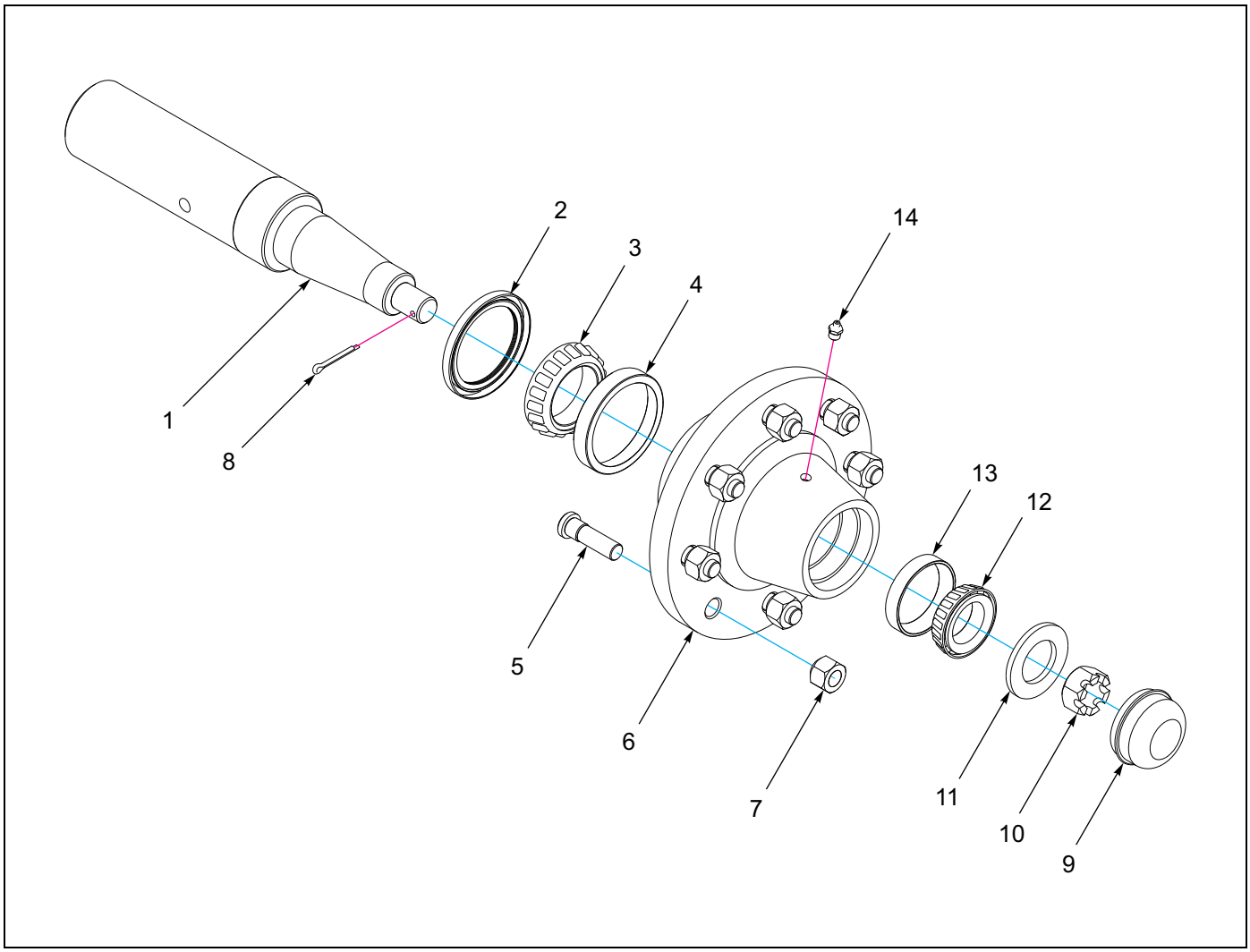


Figure 2-12: Hub and Spindle Assembly - 8 Bolt “2-1/4”

# HUB AND SPINDLE ASSEMBLY - 8 Bolt (2-1/4”)

| ITEM | PART NO. | DESCRIPTION | QTY. |
|---|---|---|---|
| | 147553 | HUB AND SPINDLE ASSEMBLY - 8 BOLT “2-1/4” | |
| 1 | 141198 | SPINDLE, 2-1/4” | 1 |
| 2 | 140554 | SEAL, GREASE | 1 |
| 3 | 140595 | CONE, BEARING | 1 |
| 4 | 140594 | CUP, INNER BEARING | 1 |
| 5 | 143067 | STUD BOLT | 1 |
| 6 | 140646 | HUB W/ CUPS, 8 BOLT | 1 |
| 7 | 210606 | NUT, WHEEL, 9/16 - 18 UNF | 8 |
| 8 | 1-557-010362-51 | COTTER PIN, 3/16 X 1-1/2 | 1 |
| 9 | 141236 | DUST CAP, WHEEL HUB | 1 |
| 10 | 1-516-010001-20 | NUT, SLDT HEX, 1-14 UNS | 1 |
| 11 | 141238 | WASHER, SPINDLE | 1 |
| 12 | 1-076-010007 | CONE, OUTER BEARING | 1 |
| 13 | 1-076-010010 | CUP, OUTER BEARING | 1 |
| 14 | 5000 | ZERK | 1 |

https://truckmanualshub.com/



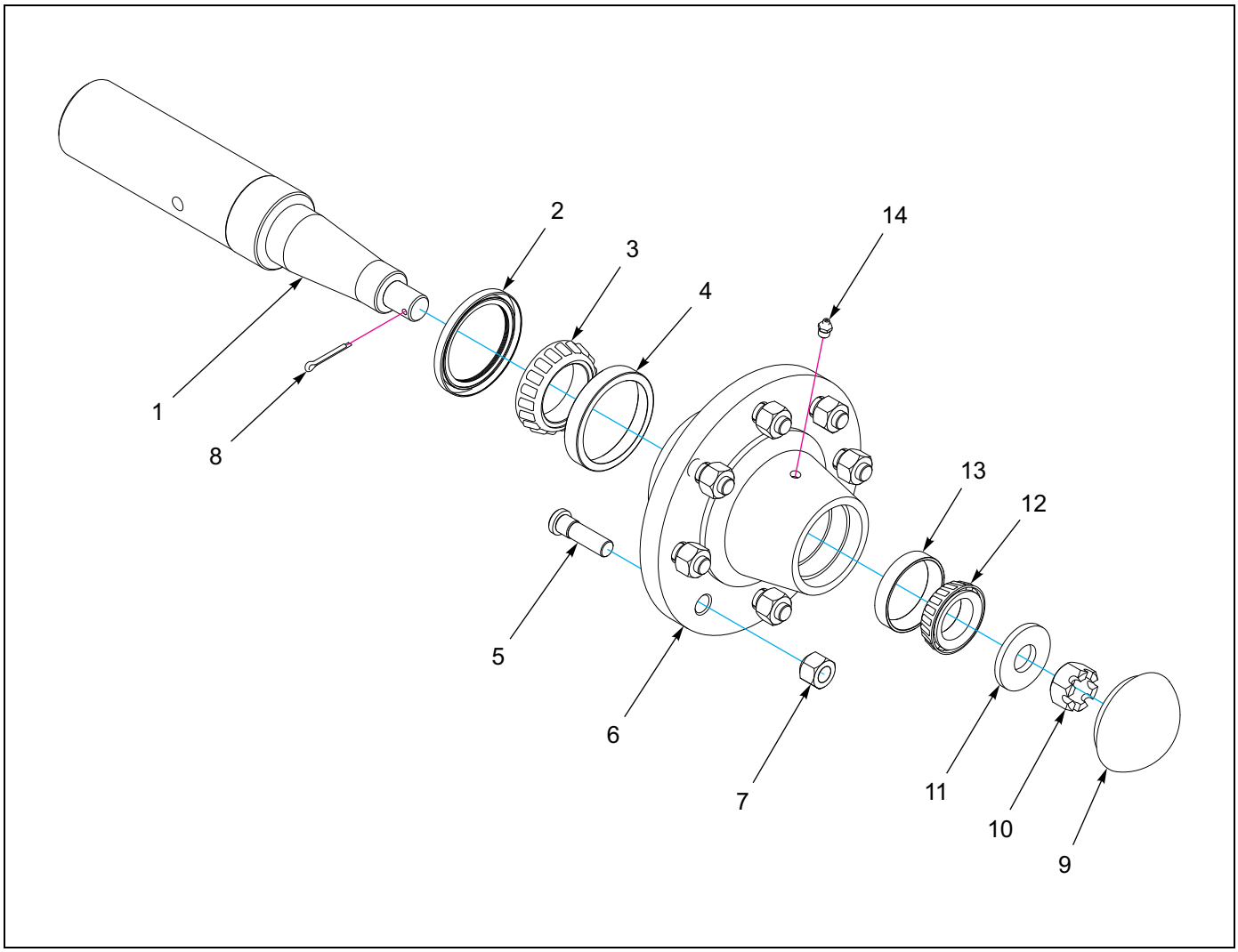


Figure 2-13: Hub and Spindle Assembly

# HUB AND SPINDLE ASSEMBLY - 8 BOLT (3”)

| ITEM | PART NO. | DESCRIPTION | QTY. |
|---|---|---|---|
| | 156972 | HUB AND SPINDLE ASSEMBLY - 8 BOLT, 3” | |
| 1 | 156973 | SPINDLE, 3 X16-1/2 | 1 |
| 2 | 159970 | SEAL, TRIPLE LIP, 4OD X 3ID X 3/8 | 1 |
| 3 | 156979 | CONE, BEARING, 387AS | 1 |
| 4 | 111962 | CUP, INNER BEARING | 1 |
| 5 | 4001060 | STUD BOLT, 5/8 X 2-1/2 | 1 |
| 6 | 156974 | HUB W/ CUPS, 8 BOLT | 1 |
| 7 | 102600 | NUT, WHEEL BOLT, 5/8-18 | 8 |
| 8 | 1-557-010362-51 | COTTER PIN, 3/16 X 1-1/2 | 1 |
| 9 | 102601 | HUBCAP, 8-BOLT HUB | 1 |
| 10 | 1-516-010001-20 | NUT, SLDT HEX, 1-14 UNS | 1 |
| 11 | 1-816-010005 | WASHER, SPINDLE | 1 |
| 12 | 102498 | CONE, BORE BEARING OUTER 1.625 | 1 |
| 13 | 102604 | CUP, OUTER BEARING | 1 |
| 14 | 5000 | ZERK | 1 |

https://truckmanualshub.com/



Table provided for general use.

| NOTES: |
| --- |
| |

https://truckmanualshub.com/



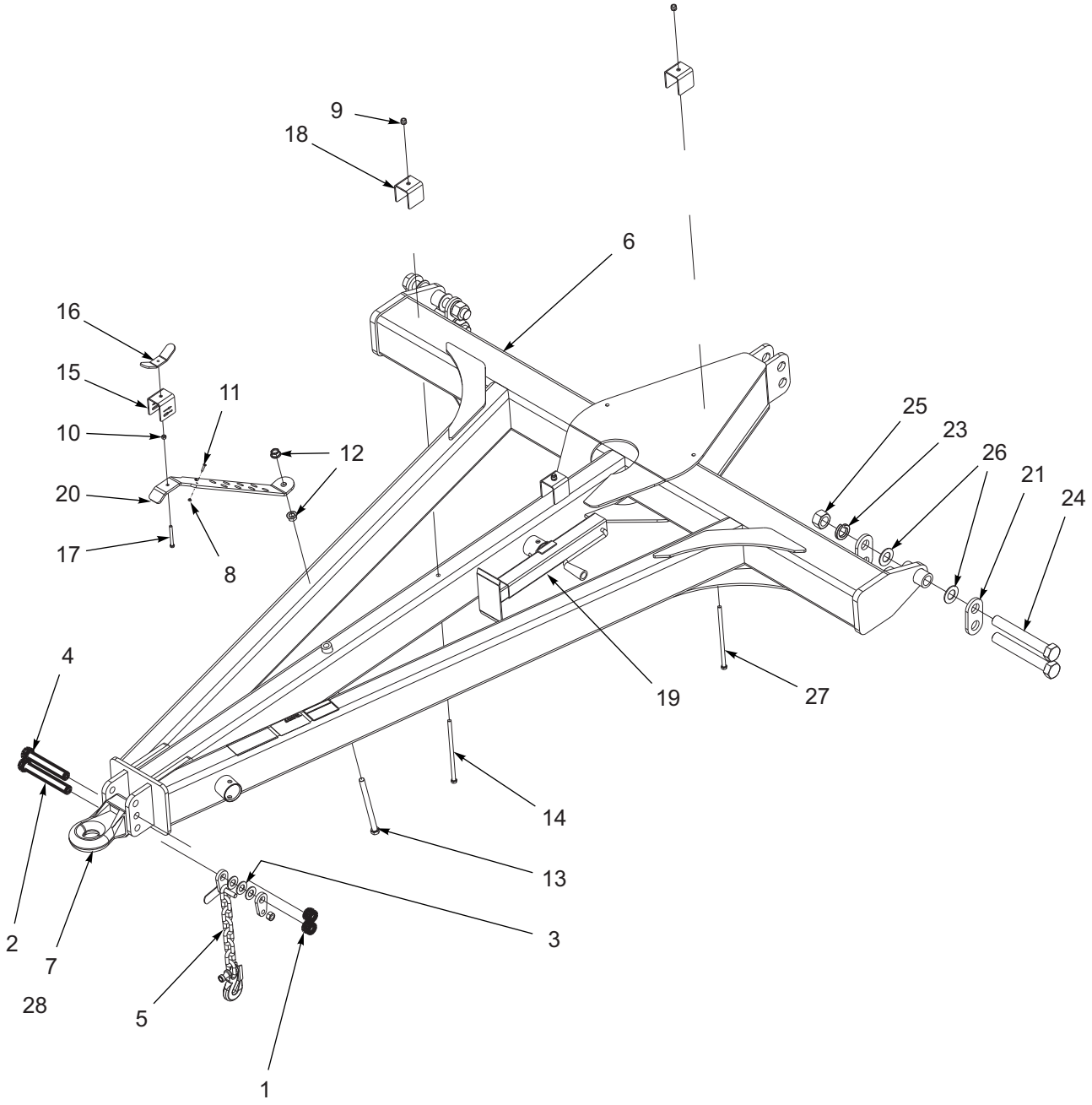


**NOTE:** ITEM 3 (WASHERS) ARE *NOT* INCLUDED W/ ITEM 5 (SAFETY CHAIN)

**Figure 2-14: Hitch Assembly**

https://truckmanualshub.com/


# HITCH ASSEMBLY

| ITEM | PART NO. | DESCRIPTION | QTY. |
|---|---|---|---|
| | 164508 | HITCH ASSEMBLY, CAT IV **(ITEMS 1 - 7)** | |
| | 164509 | HITCH ASSEMBLY, CAT V **(ITEMS 1 - 7)** | |
| 1 | 1-512-010005-19 | NUT, HEX LOCK 1-8 GRB | 3 |
| 2 | 1-654-010125-22 | SCREW, HEX HEAD CAP 1-8 X 8-1/2 G8 | 1 |
| 3 | 1-861-010032-24 | WASHER FL 1IN NARROW | 8 |
| 4 | 153696 | BOLT, HITCH CLEVIS | 2 |
| 5 | 156950 | SAFETY CHAIN, 41,000 LB | 1 |
| 6 | 162770 | HITCH 98”, **(S/N 5186 AND BELOW)** | 1 |
| 6 | 177097 | HITCH 116”, **(S/N 5187 AND ABOVE)** | 1 |
| 7 | 2-375-010602 | HITCH RING CAT IV | 1 |
| 7 | 156949 | HITCH RING CAT V **(NOT SHOWN)** | 1 |
| 8 | 1-512-010005-01 | NUT HEX LOCK 1/4-20 GRB | 2 |
| 9 | 1-512-010005-09 | NUT, HEX LOCK 1/2-13 GRB | 1 |
| 10 | 1-512-010007-07 | NUT, HEX 3/8-16 | 1 |
| 11 | 1-654-010047-06 | SCREW, HEX HEAD CAP 1/4-20 X 1 GR5 | 2 |
| 12 | 103841 | NUT, FLANGE PREVAILING TORQUE 3/4-10 | 2 |
| 13 | 126235 | SCREW, HEX HEAD CAP 3/4-10 X 10-1/2 GR5 | 1 |
| 14 | 131081 | SCREW, HEX HEAD CAP 1/2-13 X 11 | 2 |
| 15 | 141247 | CLAMP, HOSE HOLDER | 1 |
| 16 | 141249 | WING NUT, HOSE HOLDER | 1 |
| 17 | 141807 | SCREW, ALL THREAD 3/8-16 X 3-1/2 | 1 |
| 18 | 165266 | CLAMP, HOSE HOLDER | 2 |
| 19 | 140647 | JACK, SIDEWIND 7,000LB **(SEE PAGE 2-34)** | 1 |
| 20 | 141246 | BRACKET, HOSE HOLDER | 1 |
| 21 | 164543 | PLATE, HITCH MOUNT 1-1/2 | 4 |
| 22 | 1-557-010403 | HAIRPIN 1/8 | 1 |
| 23 | 1-1/2SLW | WASHER, SPLIT LOCK 1-1/2 | 2 |
| 24 | 1-654-010076-26 | SCREW HEX HEAD CAP 1-1/2-6 X 11 GR8 | 4 |
| 25 | 102351 | NUT, HEX 1-1/2-6 GR2 | 2 |
| 26 | 141266 | WASHER, THRUST 1-1/2 | 4 |
| 27 | 167638 | SCREW, HEX HEAD CAP 1/2-13 X 12 GR5 | 1 |
| 28 | 189451 | HITCH, BALL CAT IV, 3-HOLE **(SEE PAGE 2-30)** | 1 |

https://truckmanualshub.com/



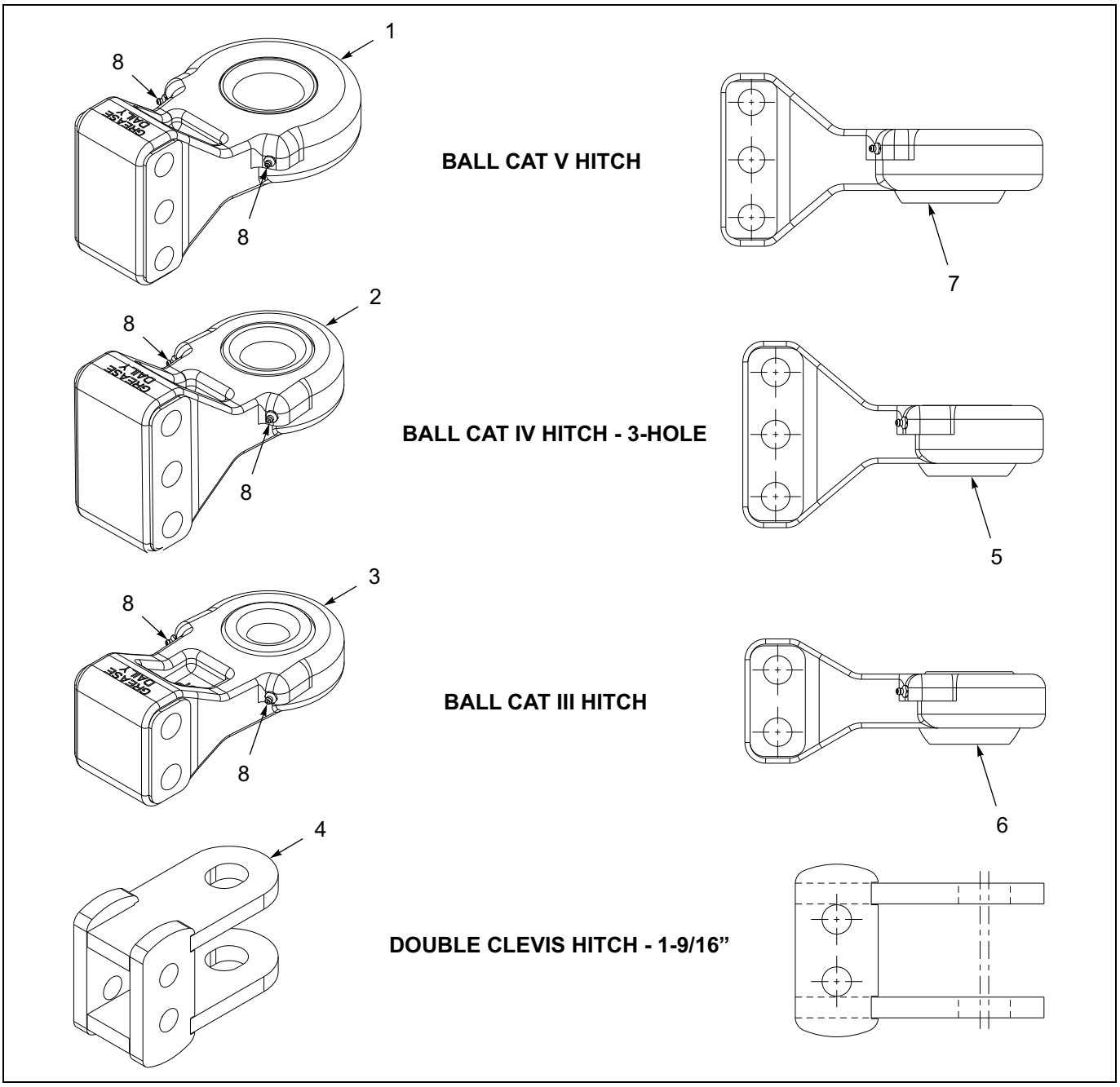


Figure 2-15: Hitch Assemblies

# HITCH ASSEMBLIES

| ITEM | PART NO. | DESCRIPTION | QTY. |
|---|---|---|---|
| 1 | 177032 | HITCH, BALL V | 1 |
| 2 | 189451 | HITCH, BALL CAT IV, 3-HOLE | 1 |
| 3 | 177030 | HITCH, BALL CAT III | 1 |
| 4 | 161550 | HITCH CLEVIS, DOUBLE 1-9/16” | 1 |
| 5 | 189454 | BUSHING, SPHERICAL, 2” ID | 1 |
| 6 | 189453 | BUSHING, SPHERICAL, 1-1/2” ID | 1 |
| 7 | 189468 | BUSHING, SPHERICAL, 2-3/4” ID | 1 |
| 8 | 1-298-010001-01 | ZERK | 1 |

https://truckmanualshub.com/



Table provided for general use.

| NOTES: |
| --- |
| |

https://truckmanualshub.com/



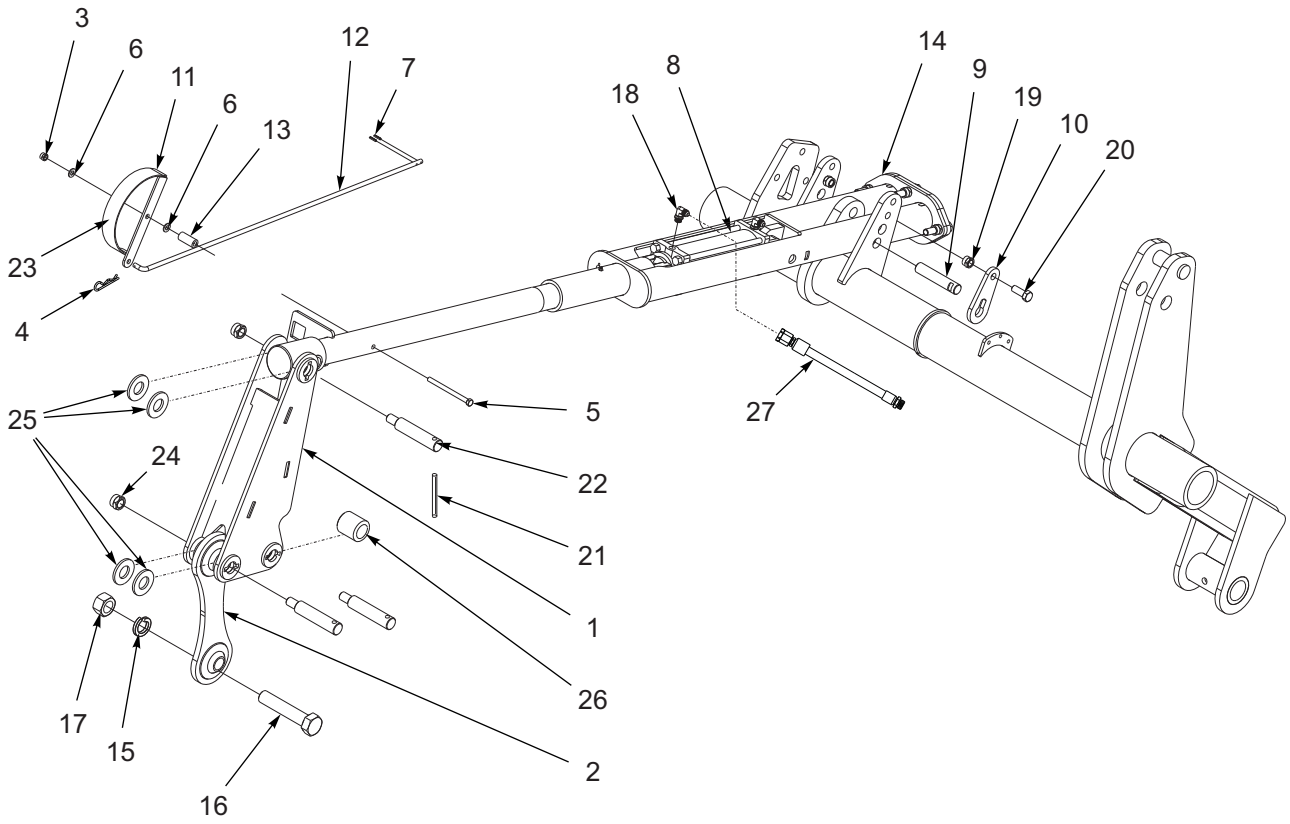


Figure 2-16: Leveling Linkage Assembly

https://truckmanualshub.com/


# LEVELING LINKAGE ASSEMBLY

| ITEM | PART NO. | DESCRIPTION | QTY. |
|---|---|---|---|
| 1 | 163690 | LEVELER TOWER, (S/N 5186 AND BELOW) | 1 |
| 1 | 180043 | LEVELER TOWER, (S/N 5187 AND ABOVE) | 1 |
| 2 | 163716 | LINK, LEVELER BALL JOINT | 1 |
| 3 | 1-512-010005-09 | NUT, HEX LOCK 1/2-13 GRB | 1 |
| 4 | 1-557-010403 | HAIRPIN 1/8 | 1 |
| 5 | 1-654-010055-18 | SCREW, HEX HEAD CAP 1/2-13 X 6-1/2 GR5 | 1 |
| 6 | 1-861-010032-14 | WASHER, FLAT 1/2N | 2 |
| 7 | 104597 | PIN, SPRING SLOTTED 3/16 X 1 | 2 |
| 8 | 148387 | CYLINDER, HYDRAULIC 4 X 8 **(SEE PAGE 2-86)** | REF |
| 9 | 163705 | PIN, LEVELER | 2 |
| 10 | 164544 | KEEPER, LEVELER PIN | 2 |
| 11 | 166705 | GAUGE, LEVEL INDICATOR | 1 |
| 12 | 166707 | ROD, LEVEL INDICATOR | 1 |
| 13 | 166710 | SPACER, LEVELER | 1 |
| 14 | 163685 | LEVELER ASSEMBLY **(SEE PAGE 2-35)** | 1 |
| 15 | 1-1/2SLW | WASHER, SPLIT LOCK 1-1/2 | 1 |
| 16 | 1-654-010068-17 | SCREW, HEX HEAD CAP 1-1/2-6 X 6 GR8 | 1 |
| 17 | 102351 | NUT, HEX 1-1/2-6 GR2 | 1 |
| 18 | 141827 | ELBOW, 90 W/ 1/32 RESTRICTOR | 2 |
| 19 | 1-512-010005-15 | NUT, HEX LOCK 3/4-10 GRB | 2 |
| 20 | 100941 | SCREW, HEX HEAD CAP 3/4-10 X 2-1/4 GR8 | 2 |
| 21 | 144115 | PIN, GROOVED ALLOY 1/2 X 2-1/4 | 3 |
| 22 | 144493 | PIN, HITCH | 3 |
| 23 | 141263 | DECAL, LEVEL INDICATOR | 1 |
| 24 | 1-512-010005-19 | NUT, HEX LOCK 1-8 GRB | 3 |
| 25 | 1-861-010032-32 | WASHER, FLAT 1-1/2 | 4 |
| 26 | 167645 | SPACER, LEVELER | 1 |
| 27 | 176998 | HOSE ASSEMBLY 3/8 X 312 | 2 |

https://truckmanualshub.com/



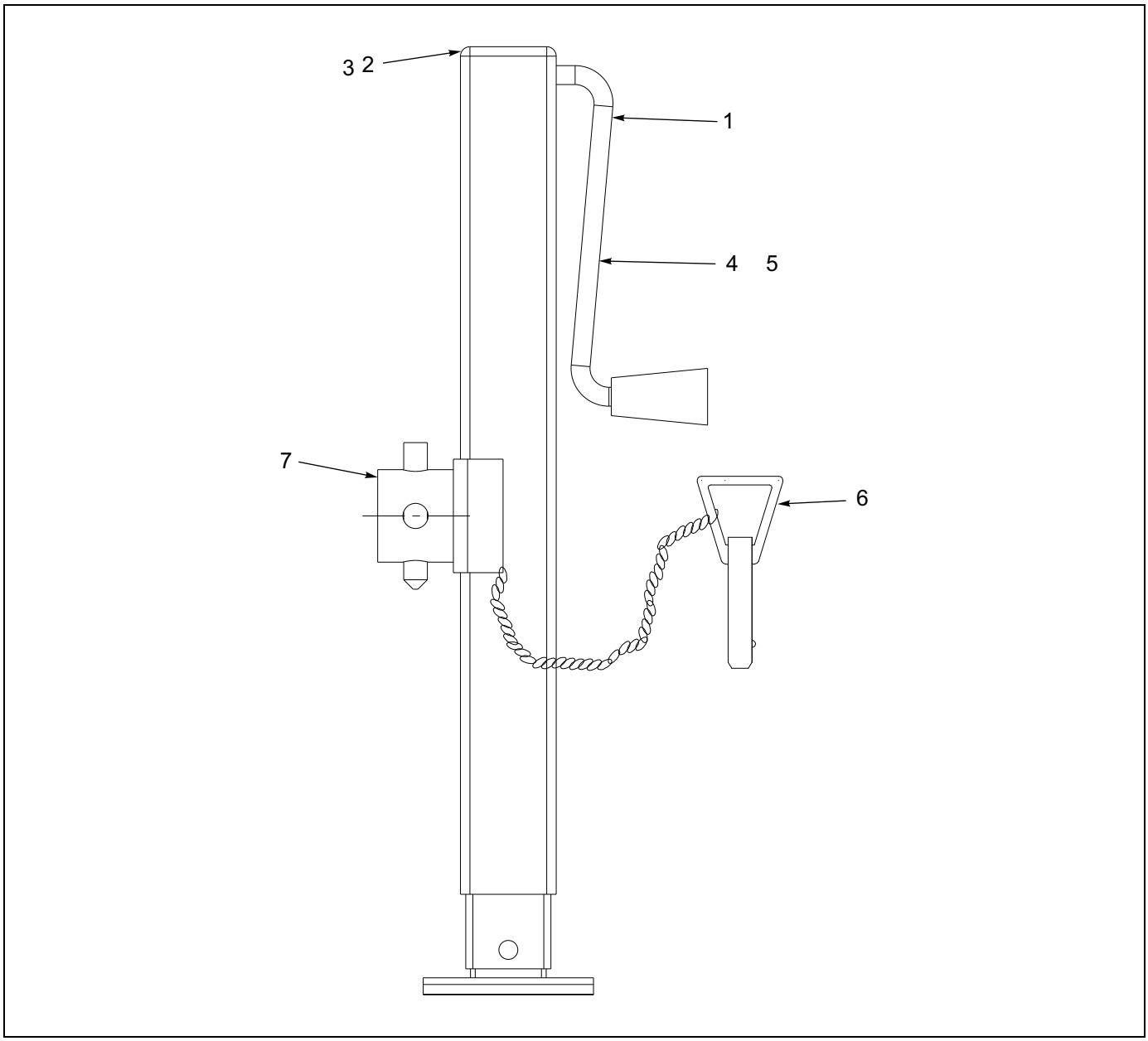


Figure 2-17: 7,000 Lb. Sidewind Jack Assembly

# 7,000 LB. SIDEWIND JACK ASSEMBLY

| ITEM | PART NO. | DESCRIPTION | QTY. |
|---|---|---|---|
| | 140647 | JACK, SIDEWIND 7000LB | |
| 1 | 142189 | 9" HANDLE KIT **(USED WITH NORTHFIELD JACK)** | 1 |
| 1 | 500171 | 9” HANDLE KIT **(USED WITH BULLDOG JACK)** | 1 |
| 2 | 142190 | GEAR KIT **(USED WITH NORTHFIELD JACK)** | 1 |
| 3 | 142191 | BEARING KIT **(USED WITH NORTHFIELD JACK)** | 1 |
| 4 | 142192 | BLACK HANDLE **(USED WITH NORTHFIELD JACK)** | 1 |
| 5 | 142193 | RETAINING CLIP **(USED WITH NORTHFIELD JACK)** | 1 |
| 6 | 142194 | 5/8” PIN AND CHAIN - L **(USED WITH NORTHFIELD JACK)** | 1 |
| 6 | 2-557-010426 | PIN,DETENT 5/8 DIA W/CHAIN **(USED WITH BULLDOG JACK)** | 1 |
| 7 | 142195 | 5/8” FEMALE WELD-ON MOUNT **(USED WITH NORTHFIELD JACK)** | 1 |

https://truckmanualshub.com/



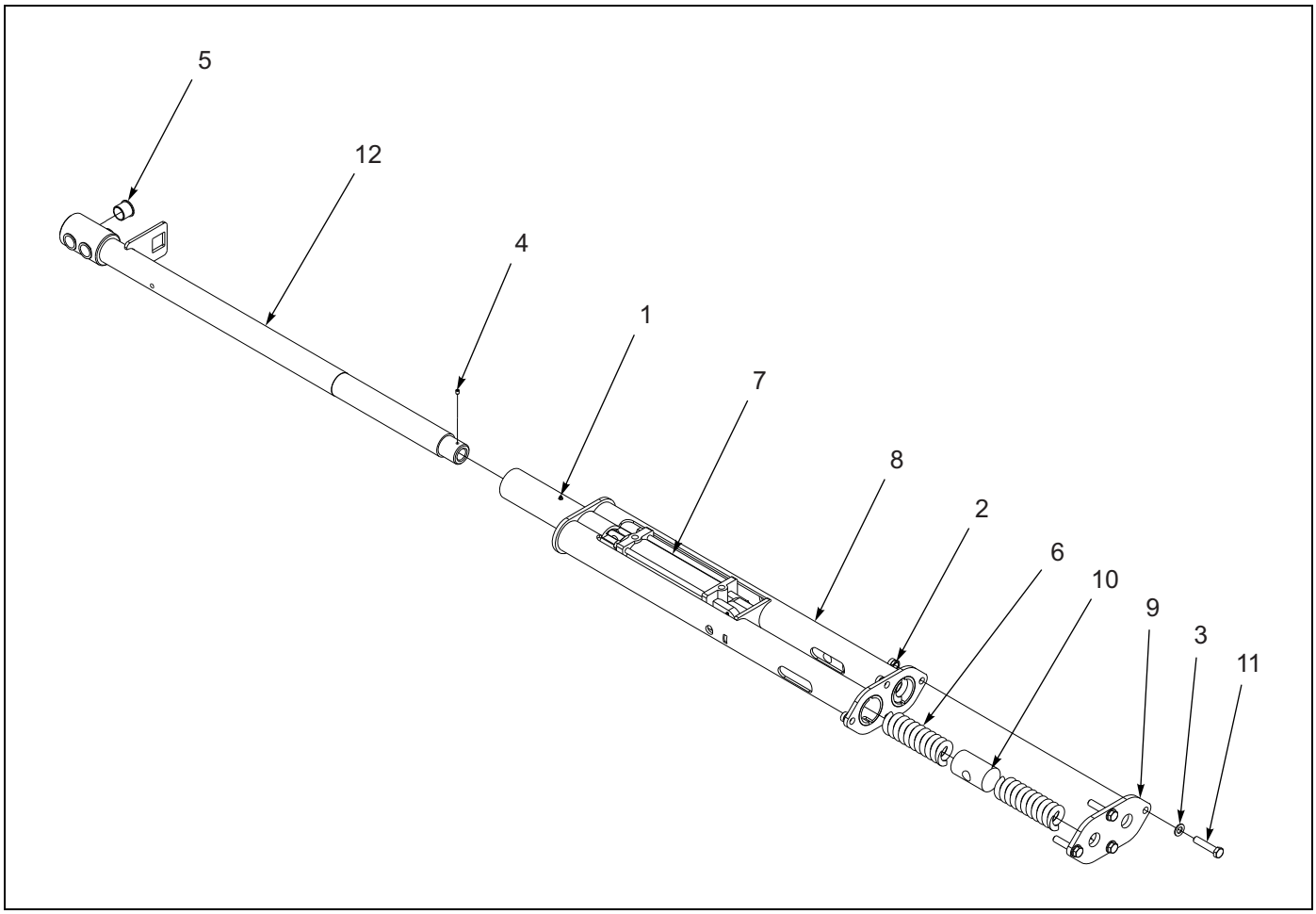


**Figure 2-18: Leveler Assembly**

## LEVELER ASSEMBLY

| ITEM | PART NO. | DESCRIPTION | QTY. |
|---|---|---|---|
| | 163685 | LEVELER ASSEMBLY | |
| 1 | 1-298-010001-1 | ZERK FITTING 1/4 | 1 |
| 2 | 1-512-010005-15 | NUT, HEX LOCK 3/4-10 GRB | 4 |
| 3 | 1-861-010032-20 | WASHER, FLAT 3/4 N | 4 |
| 4 | 122709 | SCREW, SET HEX SOCKET CUP PT 3/8-16 X 1/2 | 1 |
| 5 | 140599 | BEARING, FLANGE 1-1/2 | 4 |
| 6 | 140649 | SPRING, LEVELER | 4 |
| 7 | 148387 | CYLINDER, HYDRAULIC 4 X 8 **(SEE PAGE 2-86)** | 1 |
| 8 | 163672 | BASE, LEVELER | 1 |
| 9 | 163679 | CAP, LEVELER SPRINGS | 1 |
| 10 | 164545 | LEVELER CROSS | 2 |
| 11 | 165288 | BOLT, LEVELER 3/4-10 X 3-1/2 GR8 | 4 |
| 12 | 166701 | TUBE LEVELER ASSEMBLY | 1 |

https://truckmanualshub.com/



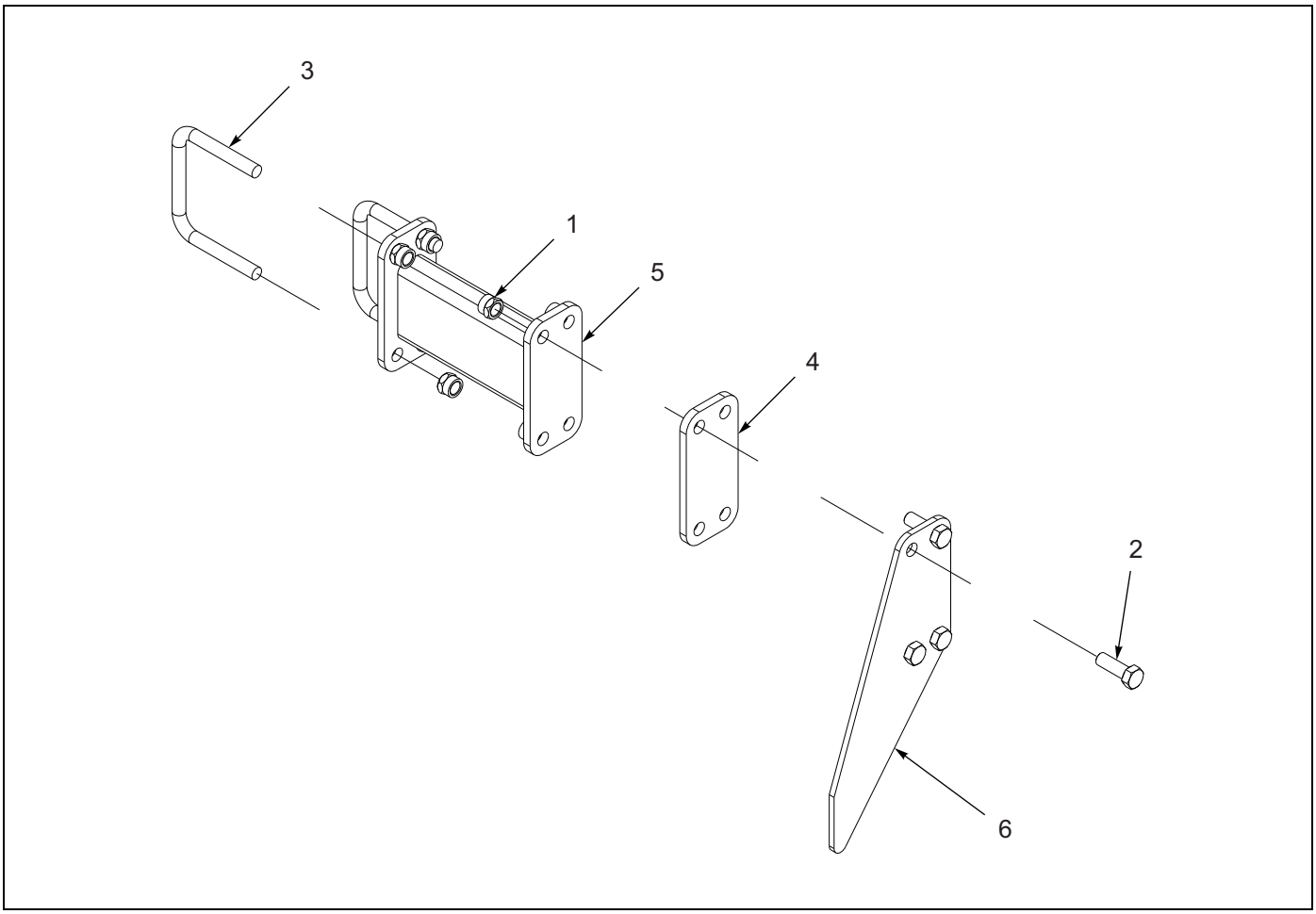


Figure 2-19: Dual Tire Scraper Kit Assembly

# DUAL TIRE SCRAPER KIT ASSEMBLY

| ITEM | PART NO. | DESCRIPTION | QTY. |
|---|---|---|---|
| | 170214 | DUAL TIRE SCRAPER KIT ASSEMBLY | |
| 1 | 1-512-010005-15 | NUT, HEX LOCK 3/4-10 GRB | 32 |
| 2 | 1-654-010061-04 | SCREW, HEX HEAD CAP 3/4-10 X 1-3/4 GR5 (USED WHEN SCRAPER PLATE (ITEM 4) IS NOT USED) | 8 |
| 2 | 1-654-010061-06 | SCREW, HEX HEAD CAP 3/4-10 X 2-1/4 GR5 (USED WHEN SCRAPER PLATE (ITEM 4) IS USED) | 8 |
| 3 | 111392 | U-BOLT, GAUGE WHEEL | 8 |
| 4 | 170209P | PLATE, SCRAPER (USED ON OUTER TIRES ONLY) | 2 |
| 5 | 170212 | MOUNT, SCRAPER | 4 |
| 6 | 170213 | SCRAPER, DUAL TIRE | 4 |

https://truckmanualshub.com/



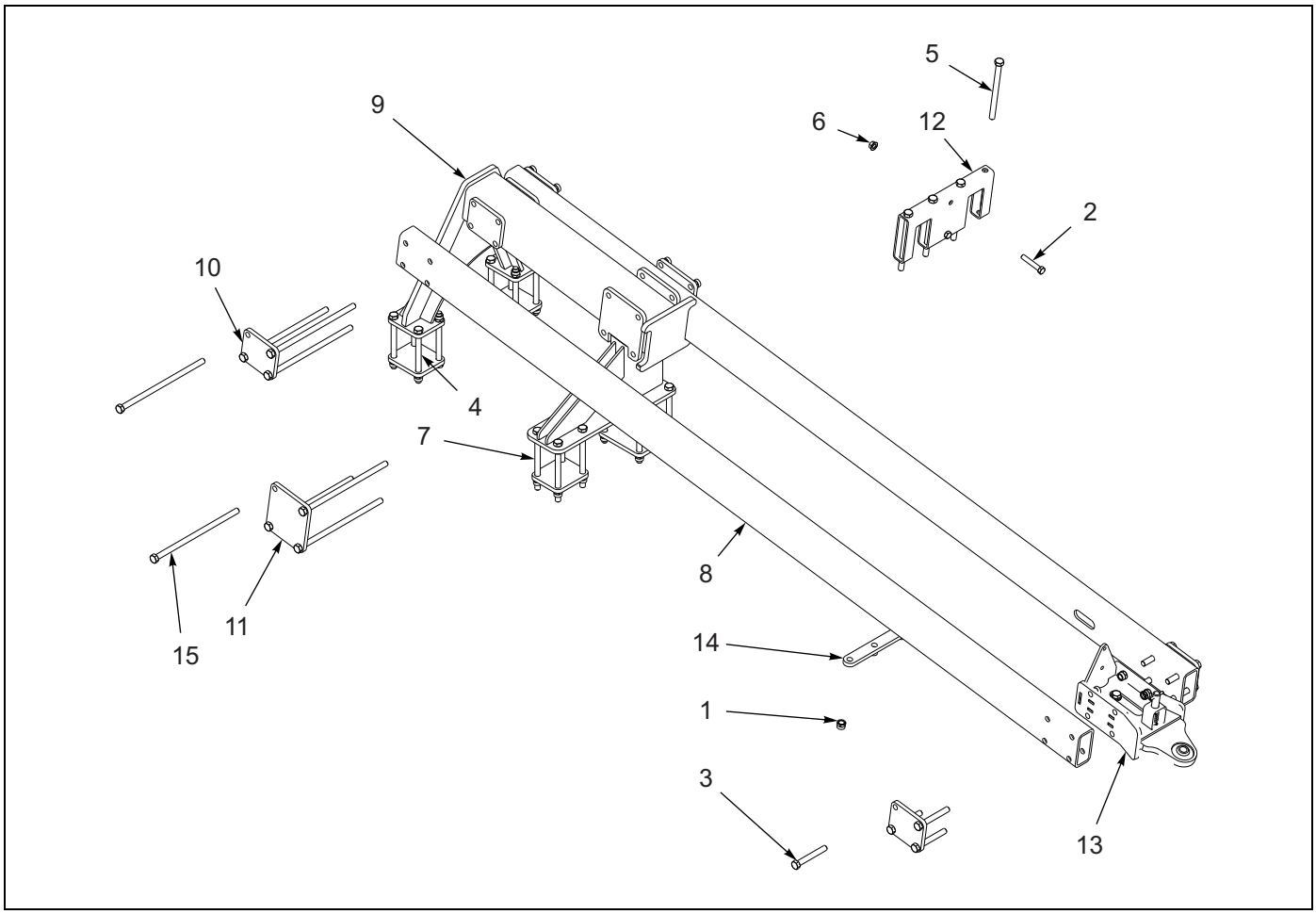


Figure 2-20: Rear Tow Hitch Assembly

# REAR TOW HITCH ASSEMBLY

| ITEM | PART NO. | DESCRIPTION | QTY. |
|---|---|---|---|
| | 167603 | HITCH ASSEMBLY, REAR TOW | |
| 1 | 1-512-010005-15 | NUT HEX LOCK 3/4-10 GRB | 36 |
| 2 | 1-654-010059-11 | SCREW, HEX HEAD CAP 5/8-11 X 3-1/2 GR5 | 2 |
| 3 | 1-654-010061-16 | SCREW, HEX HEAD CAP 3/4-10 X 5-1/2 GR5 | 8 |
| 4 | 1-654-010061-22 | SCREW, HEX HEAD CAP 3/4-10 X 8-1/2 GR5 | 8 |
| 5 | 1-654-010061-25 | SCREW, HEX HEAD CAP 3/4-10 X 10 GR5 | 4 |
| 6 | 100827 | NUT, FLANGE HEAD SERRATED 5/8-11 | 2 |
| 7 | 104436 | SCREW, HEX HEAD CAP 3/4-10 X 9-1/2 GR5 | 8 |
| 8 | 167605 | TUBE, HITCH | 2 |
| 9 | 167609 | HITCH, REAR TOW | 1 |
| 10 | 167612P | PLATE, HITCH | 7 |
| 11 | 167624P | PLATE, MOUNT | 3 |
| 12 | 167630 | BRACE, HITCH | 1 |
| 13 | 167632 | REAR TOW ASSEMBLY **(SEE PAGE 2-38)** | 1 |
| 14 | 167633 | PLATE, DOUBLER | 1 |
| 15 | 167637 | SCREW, HEX HEAD CAP 3/4-10 X 16 GR5 | 8 |

https://truckmanualshub.com/



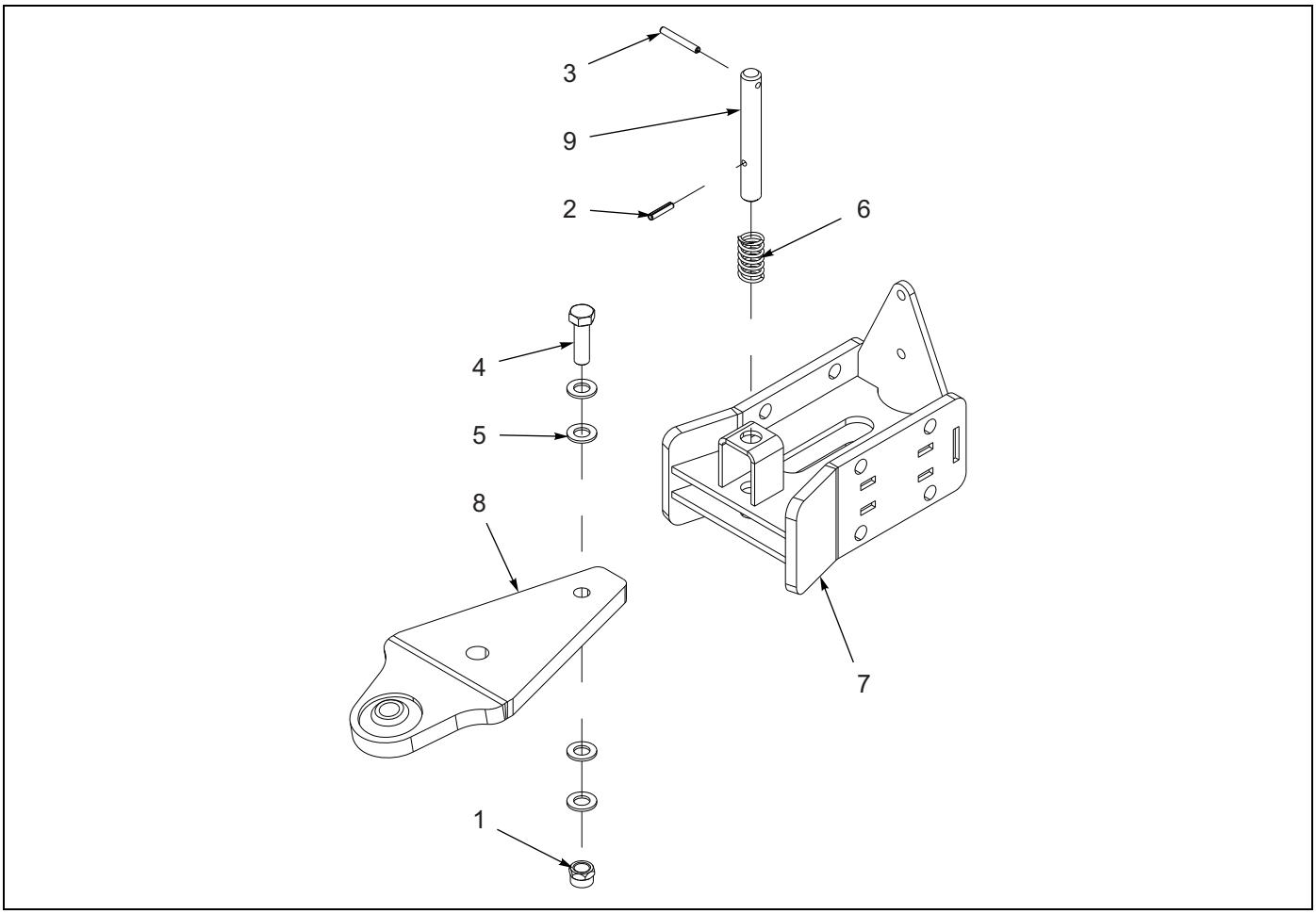


Figure 2-21: Rear Tow Hitch Assembly

# REAR TOW ASSEMBLY

| ITEM | PART NO. | DESCRIPTION | QTY. |
|---|---|---|---|
| | 167632 | REAR TOW ASSEMBLY | |
| 1 | 1-512-010005-15 | NUT HEX LOCK 3/4-10 GRB | 36 |
| 2 | 1-647-010004236 | SPRING PIN, SLOTTED 5/16 X 1-1/2 | 22 |
| 3 | 1-647-010004240 | PIN, SPRING SLOTTED 5/16 X 2-1/2 | 4 |
| 4 | 1-654-010061-07 | SCREW, HEX HEAD CAP 3/4-10 X 2-1/2 GR5 | 18 |
| 5 | 1-861-010032-20 | WASHER, FLAT 3/4 N | 4 |
| 6 | 162191 | SPRING, COMP 1.218 X 2.5 | 1 |
| 7 | 167628 | HITCH, REAR TOW | 1 |
| 8 | 168771 | HITCH, REAR TOW | 1 |
| 9 | 168773 | PIN, REAR TOW HITCH | 1 |

https://truckmanualshub.com/



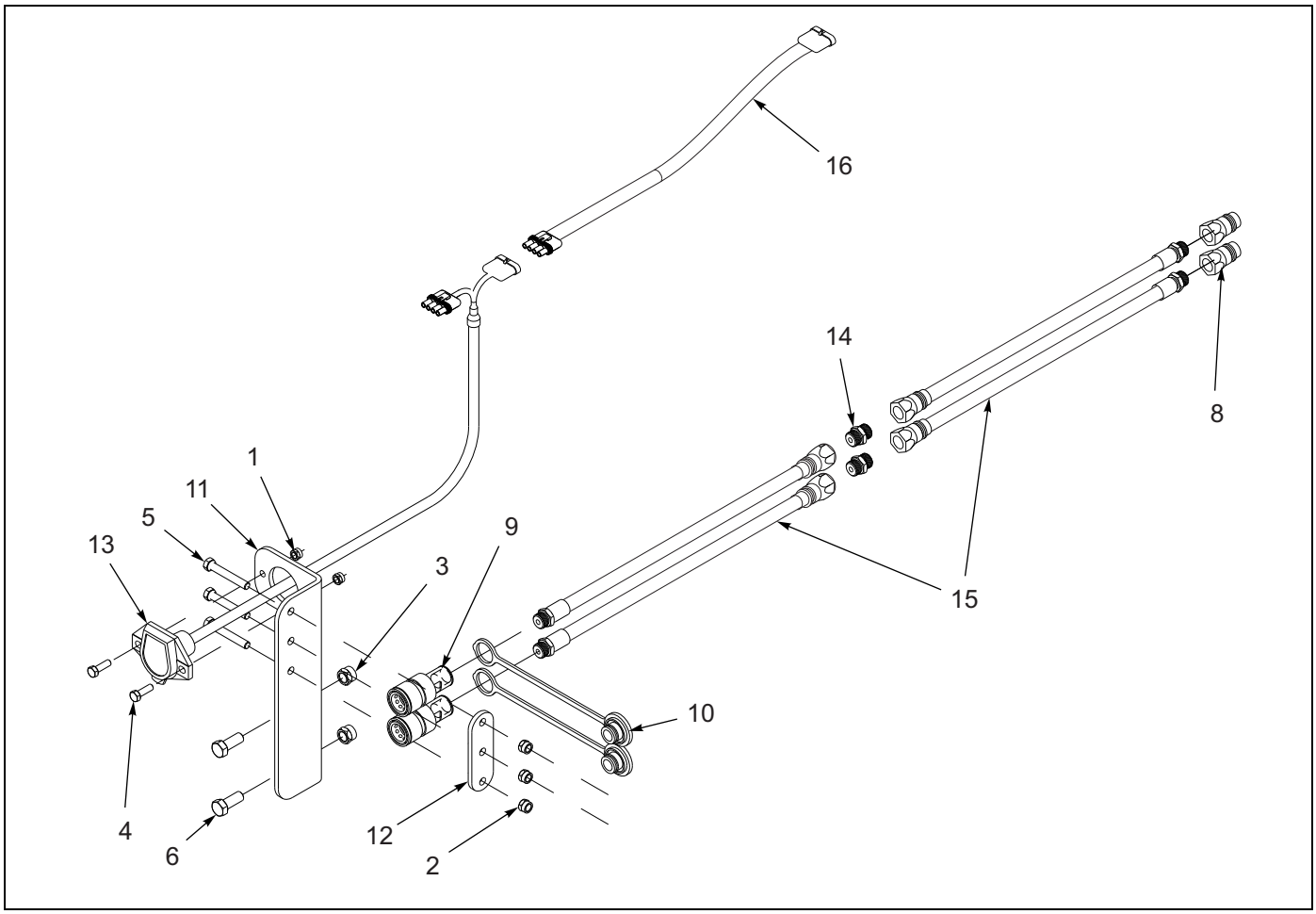


Figure 2-22: Rear Tow Hitch Hydraulic Kit (Option)

# REAR TOW HITCH HYDRAULIC KIT (OPTION)

| ITEM | PART NO. | DESCRIPTION | QTY. |
|---|---|---|---|
| | 167636 | REAR TOW HITCH HYDRAULIC KIT | |
| 1 | 1-512-010005-03 | NUT, HEX LOCK 5/16-18 GRB | 2 |
| 2 | 1-512-010005-05 | NUT, HEX LOCK 3/8-16 GRB | 3 |
| 3 | 1-512-010005-09 | NUT, HEX LOCK 1/2-13 GRB | 2 |
| 4 | 1-654-010049-05 | SCREW, HEX HEAD CAP 5/16-18 X 1 GR5 | 2 |
| 5 | 1-654-010051-11 | SCREW, HEX HEAD CAP 3/8-16 X 2-1/2 GR5 | 3 |
| 6 | 1-654-010055-02 | SCREW, HEX HEAD CAP 1/2-13 X 1-1/4 GR5 | 2 |
| 7 | 105874 | TIE, STRAP PLASTIC .301 X 21.5 **(NOT SHOWN)** | 6 |
| 8 | 141828 | COUPLER, MALE 3/4-16 | 2 |
| 9 | 142668 | COUPLER, FEMALE 3/4-16 | 2 |
| 10 | 142669 | PLUG, COUPLER DUST | 2 |
| 11 | 142670 | BRACKET, COUPLER MOUNT | 1 |
| 12 | 142671 | PLATE, COUPLER | 1 |
| 13 | 143871 | HARNESS, TANDEM ADAPTER | 1 |
| 14 | 148338 | FITTING, UNION | 2 |
| 15 | 158295 | HOSE ASSEMBLY 3/8 X 255 | 4 |
| 16 | 2-368-010273 | HARNESS, 34” EXTENSION | 2 |

https://truckmanualshub.com/



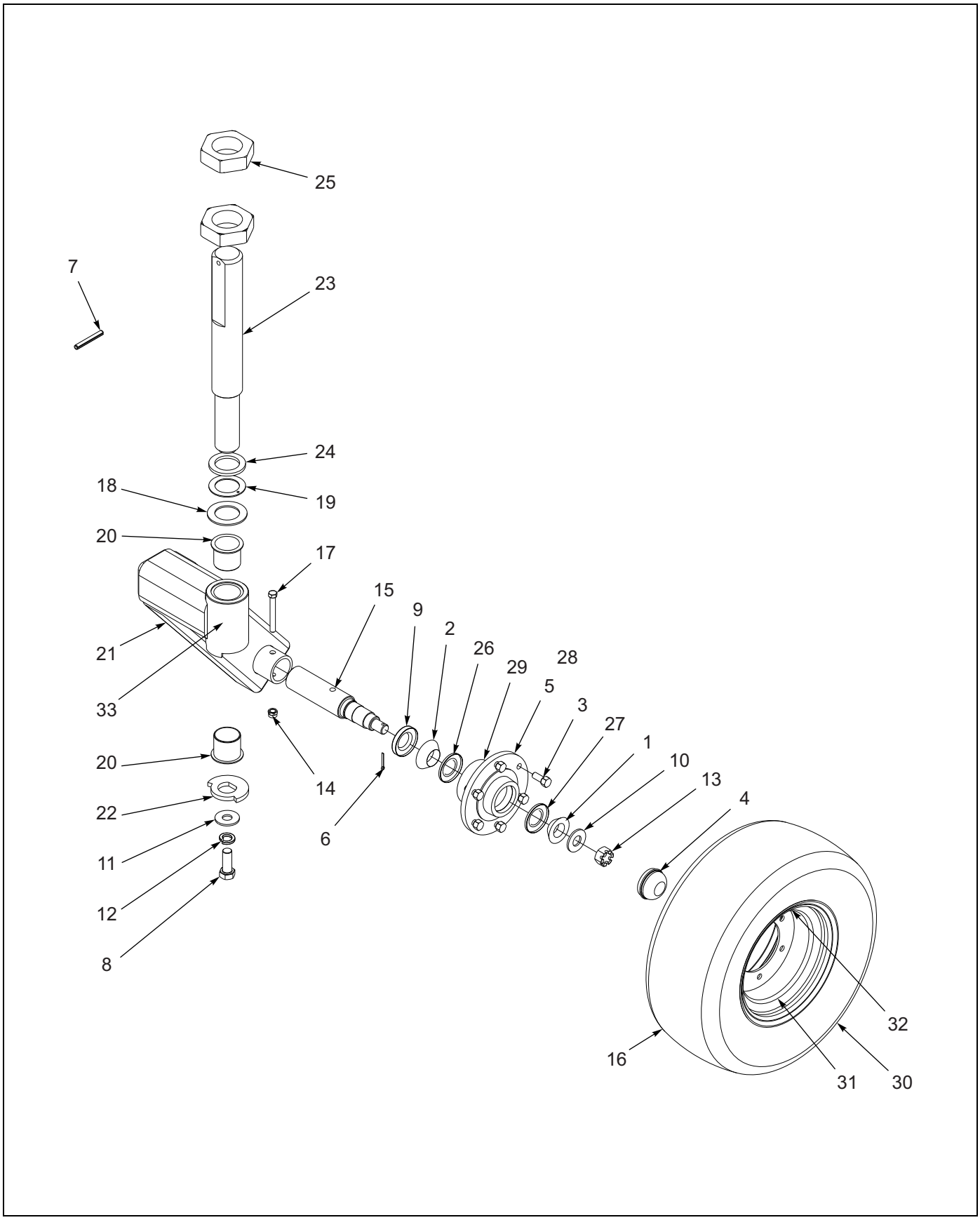


Figure 2-23: Front Gauge Wheel Assembly

https://truckmanualshub.com/


# FRONT GAUGE WHEEL ASSEMBLY

| ITEM | PART NO. | DESCRIPTION | QTY. |
|---|---|---|---|
| | 164475 | FRONT GAUGE WHEEL ASSEMBLY | |
| 1 | 1-076-010007 | CONE, INNER | 2 |
| 2 | 1-076-010009 | CONE, INNER | 2 |
| 3 | 1-104-010002 | WHEEL BOLT, 1/2 X 1-3/8 | 6 |
| 4 | 1-161-010003 | HUB CAP, 6 BOLT | 2 |
| 5 | 1-406-010012 | HUB, 6 BOLT W/ CUPS **(INCL ITEMS 26-29)** | 2 |
| 6 | 1-557-010362-40 | PIN, COTTER 5/32 X 1-1/4 | 2 |
| 7 | 1-647-010004259 | PIN, SPRING SLOTTED 3/8 X 3 | 2 |
| 8 | 1-654-010032-05 | SCREW, HEX HEAD CAP 3/4-10 X 2 GR8 | 1 |
| 9 | 1-659-010004 | 1-5/8 ID GREASE SEAL | 2 |
| 10 | 1-861-010004 | WASHER, SPINDLE 7/8 | 2 |
| 11 | 168750 | WASHER FLAT 3/4 | 1 |
| 12 | 1-861-010034-17 | WASHER, SPLIT LOCK 3/4 | 1 |
| 13 | 100966 | NUT, HEX SLOTTED 7/8-14 | 2 |
| 14 | 101988 | NUT, HEX LOCK 7/16-14 GRB | 2 |
| 15 | 141245 | SPINDLE, GAUGE WHEEL | 2 |
| 16 | 141271 | TIRE AND WHEEL ASSEMBLY, FRONT **(INCL ITEMS 30 - 32)** | 2 |
| 17 | 141808 | SCREW, HEX HEAD CAP 7/16-14 X 3-1/2 GR5 | 2 |
| 18 | 164471 | WASHER, THRUST | 1 |
| 19 | 164472 | WASHER, THRUST | 1 |
| 20 | 164473 | BEARING, FLANGE | 2 |
| 21 | 164477 | AXLE, GAUGE WHEEL | 1 |
| 22 | 164481 | PLATE, STOP | 1 |
| 23 | 165296 | SPINDLE, GAUGE WHEEL | 1 |
| 24 | 165298 | WASHER, HEAVY 3 X 2 | 1 |
| 25 | 166709 | NUT, HEX JAM 2-1/2-4 ACME RH | 2 |
| 26 | 1-076-010012 | INNER CUP | 1 |
| 27 | 1-076-010010 | OUTER CUP | 1 |
| 28 | 2-406-010005 | HUB | 1 |
| 29 | 1-298-010001-1 | ZERK FITTING 1/4 | 1 |
| 30 | 160151 | TIRE, 20.5 X 8 10/8 PLY | 1 |
| 31 | 160155 | WHEEL, 10 X 6 6 BOLT | 1 |
| 32 | TR416 | VALVE STEM | 1 |
| 33 | 1-298-010001-1 | ZERK | 1 |

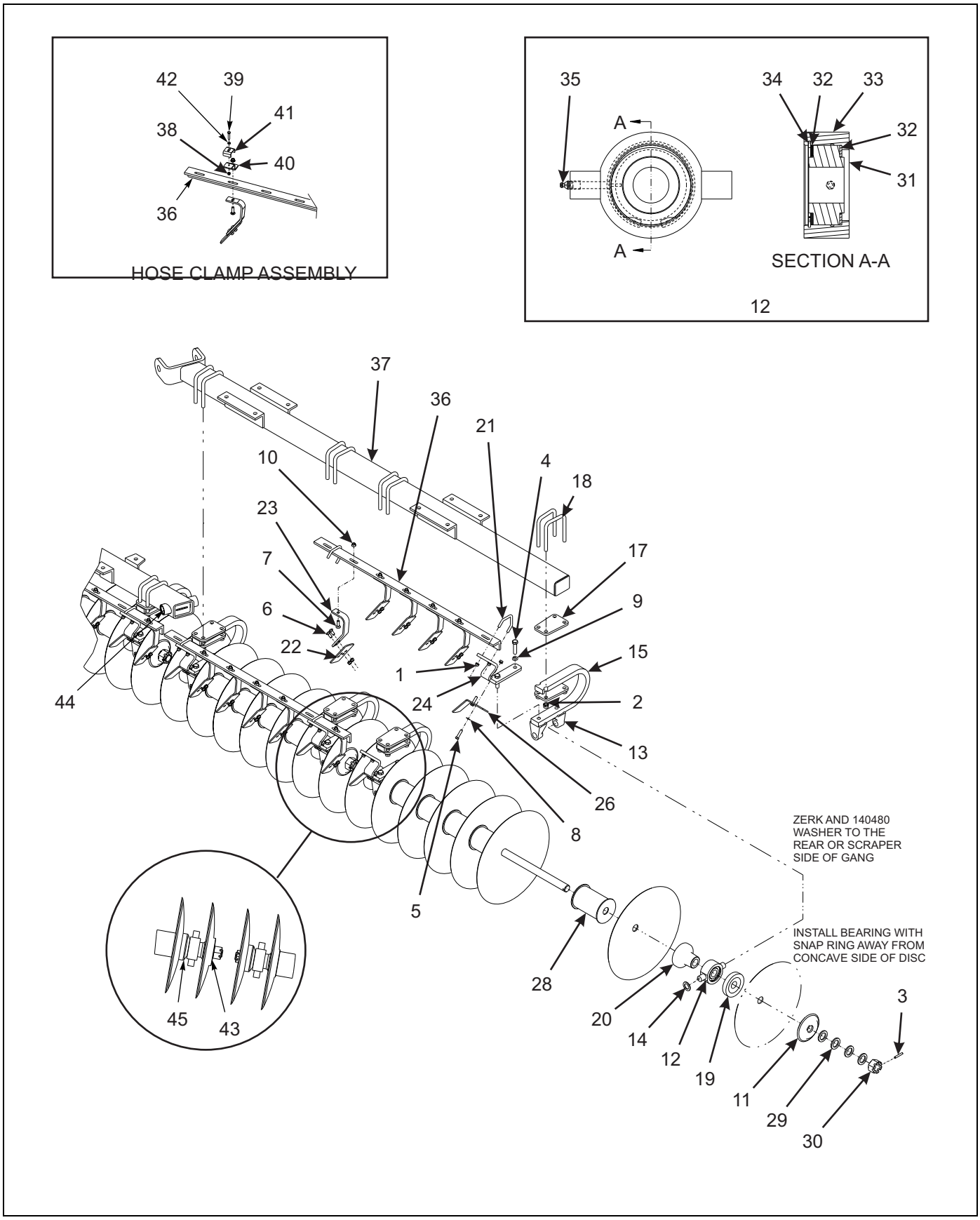


Figure 2-24: Disc Gang Assembly

https://truckmanualshub.com/


# DISC GANG ASSEMBLY

| ITEM | PART NO. | DESCRIPTION | QTY. |
|---|---|---|---|
| 1 | 1-512-010005-09 | NUT HEX LOCK 1/2-13 GRB | |
| 2 | 1-512-010005-15 | NUT HEX LOCK 3/4-10 GRB | |
| 3 | 1-647-010004257 | PIN, SPRING SLOTTED 3/8 X 2-1/2 | |
| 4 | 1-654-010032-09 | SCREW, HEX HEAD CAP 3/4-10 X 3 GR8 | |
| 5 | 1-654-010055-05 | SCREW, HEX HEAD CAP 1/2-13 X 2 GR5 | |
| 6 | 1-654-010070-02 | SCREW, RD HEAD SQ NECK 1/2-13 X 1-1/4 | |
| 7 | 160161 | SHAKER BOLT, 1/2-13 X 1-3/4 GR8 | |
| 8 | 1-861-010032-14 | WASHER, FLAT 1/2N | |
| 9 | 1-861-010034-17 | WASHER, SPLIT LOCK 3/4 | |
| 10 | 172509 | NUT, WIDE FLANGE TOP LOCK 1/2-13 | |
| 11 | 140469 | END COLLAR | |
| 12 | 140477 | BEARING ASSEMBLY, DISC 1.775 ID **(INCL ITEMS 31-35)** | |
| 13 | 140479 | MOUNT, TRUNNION BEARING | |
| 14 | 140480 | WASHER, TRUNNION | |
| 15 | 140481* | SHANK, DISC BEARING, RIGHT | |
| 16 | 140482** | SHANK, DISC BEARING, LEFT **(NOT SHOWN)** | |
| 17 | 140483 | PLATE, DISC SHANK MOUNT | |
| 18 | 140484 | U-BOLT, 3/4 X 5 | |
| 19 | 140485 | HALF SPOOL, CONCAVE | |
| 20 | 153651 | HALF SPOOL, CONVEX | |
| 21 | 140487 | U-BOLT, SCRAPER BAR MOUNT | |
| 22 | 151550 | SCRAPER, 4" **(BEFORE 03/01/2015)** | |
| 22 | 166718 | SCRAPER, 5-1/2” **(AFTER 03/01/2015)** | |
| 23 | 172724 | ARM, SCRAPER | |
| 24 | 140490* | MOUNT, SCRAPER BAR RIGHT | |
| 25 | 140491** | MOUNT, SCRAPER BAR LEFT **(NOT SHOWN)** | |
| 26 | 153649* | SCRAPER, DUAL RIGHT 7 | |
| 27 | 153650** | SCRAPER, DUAL LEFT 7 **(NOT SHOWN)** | |
| 28 | 153652 | SPOOL WELDMENT 7" **(REAR GANGS)** | |
| 28 | 154668 | SPOOL CAST 7 SP **(FRONT GANGS)** | |
| 29 | 141154 | WASHER, GANG SHAFT | |
| 30 | 23085 | NUT, HEX SLOTTED 1-3/4 - 5 | |
| 31 | 140464 | BEARING, DISC 1.775ID | |
| 32 | 140473 | WASHER, BEARING | |
| 33 | 140475 | CASTING, TRUNNION BEARING | |
| 34 | 140476 | INTERNAL RETAINING RING | |
| 35 | 5000 | ZERK, FITTING 1/8 | |
| 36 | ----- | SCRAPER BAR **(SEE PAGES 2-44 - 2-49)** | |
| 37 | ----- | GANG BAR **(SEE PAGES 2-44 - 2-49)** | |
| 38 | 1-512-010005-05 | NUT, HEX LOCK 3/8-16 GRB | |
| 39 | 1-654-010051-11 | SCREW, HEX HEAD CAP 3/8-16 X 2-1/2 GR5 | |
| 40 | 141275 | BRACKET, HOSE CLAMP | |
| 41 | 2-181-010001 | HOSE CLAMP | |
| 42 | 1-861-010032-11 | WASHER, FLAT 3/8 | |
| 43 | 153709 | WASHER, DISC GANG END | |
| 44 | 164533 | BEARING, FLANGE 1-3/4 **(USED IN GANG BARS)** | |
| 45 | 170195 | SPACER, 1/2 (2 PER INNER WING GANG 2/ SPRING END COLLAR) | |

* USED RIGHT FRONT AND LEFT REAR GANGS

** USED LEFT FRONT AND RIGHT REAR GANGS

https://truckmanualshub.com/

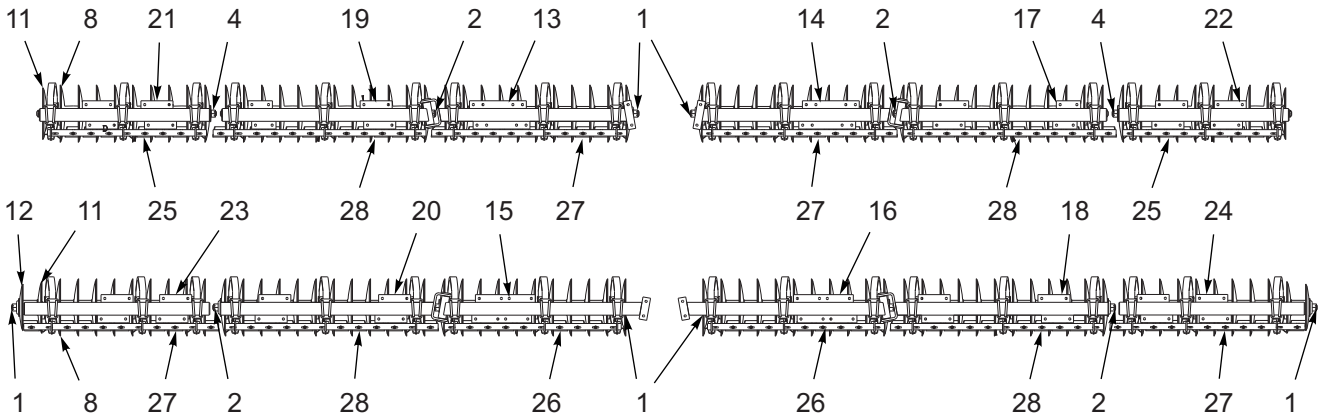


7450-39’ 22” 6 GA LC DISC BLADES (164513)

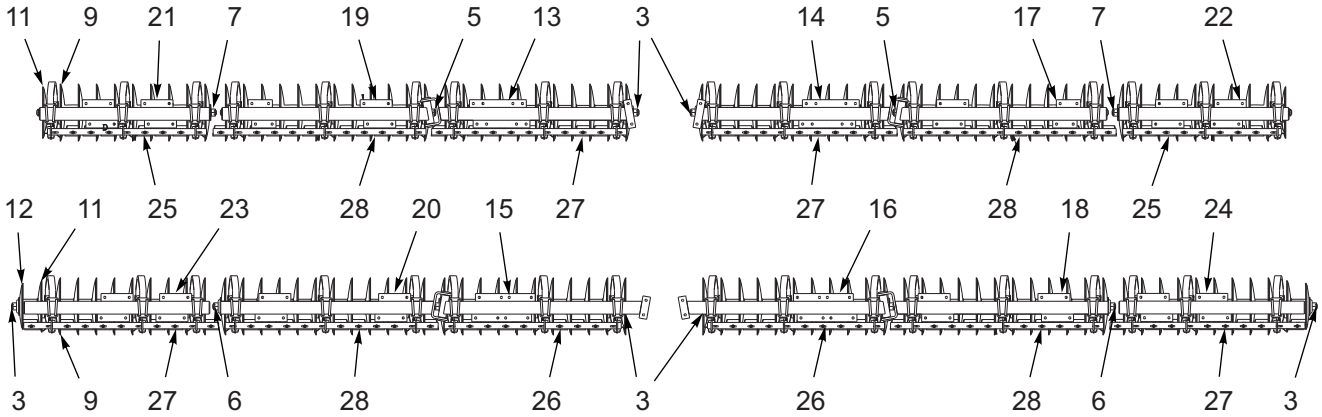


7450-39’ 22” 4 GA LC DISC BLADES (164514)

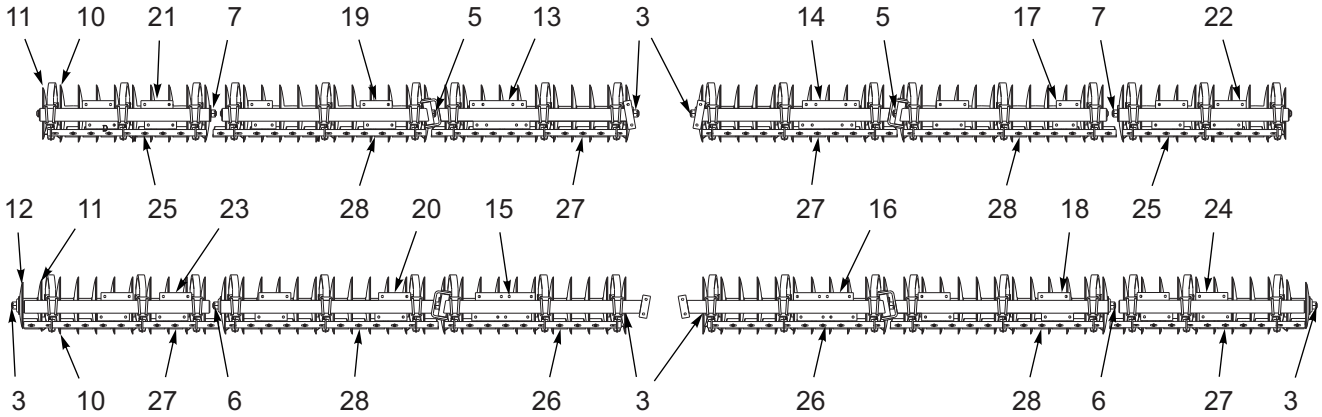


7450-39’ 22” 4GA ROLLABLE LC DISC BLADES (164515)

**Figure 2-25: 39’ Disc Gang Placement**

https://truckmanualshub.com/



# 39' DISC GANG PLACEMENT PARTS

| ITEM | PART NO. | DESCRIPTION | QTY. | | |
|---|---|---|---|---|---|
| | 164513 | DISC GANG ASSEMBLY, 22” 6 GA LC | * | | |
| | 164514 | DISC GANG ASSEMBLY, 22” 4 GA LC | | * | |
| | 164515 | DISC GANG ASSEMBLY, 22” 4 GA ROLLABLE | | | * |
| 1 | 156922 | SHAFT, GANG 76L | 6 | ----- | ----- |
| 2 | 154661 | SHAFT, GANG 83L (PRIOR TO 08/2012) | 4 | ----- | ----- |
| 2 | 171082 | SHAFT, GANG 82L (AFTER 08/2012) | 4 | ----- | ----- |
| 3 | 141165 | SHAFT, GANG 76-1/2L | ----- | 6 | 6 |
| 4 | 164562 | SHAFT, GANG 69L | 2 | ----- | ----- |
| 5 | 156084 | SHAFT, GANG 84L (PRIOR TO 08/2012) | ----- | 2 | 2 |
| 5 | 154661 | SHAFT, GANG 83L (AFTER 08/2012) | ----- | 2 | 2 |
| 6 | 156921 | SHAFT, GANG 83-1/2L (PRIOR TO 08/2012) | ----- | 2 | 2 |
| 6 | 154661 | SHAFT, GANG 83L (AFTER 08/2012) | ----- | 2 | 2 |
| 7 | 156951 | SHAFT, GANG 70L | ----- | 2 | 2 |
| 8 | 151548 | DISC BLADE 22" X 6 GA | 128 | ----- | ----- |
| 9 | 155617 | DISC BLADE 22" X 1/4 - 1-3/4” ID | ----- | 128 | ----- |
| 10 | 155618 | DISC BLADE 22" X 1/4 - 1-3/4” ID ROLLABLE | ----- | ----- | 128 |
| 11 | 155619 | DISC BLADE,20” X 1/4” - 1-3/4” ID ROLLABLE, OSMUNDSON **(PRIOR TO 10-1-14)** | 4 | 4 | 4 |
| 11 | 186100 | DISC BLADE, 20" X 1/4” - 1-3/4” ID ROLLABLE, INGERSOLL **(AFTER 10-1-14)** | 4 | 4 | 4 |
| 12 | 158898 | DISC BLADE, 18” X 1/4” - 1-3/4” ID ROLLABLE, OSMUNDSON **(PRIOR TO 10-1-14)** | 2 | 2 | 2 |
| 12 | 186101 | DISC BLADE, 18” X 1/4” - 1-3/4” ID DISC BLADES, INGERSOLL **(AFTER 10-1-14)** | 2 | 2 | 2 |
| 13 | 162677 | GANG BAR, LCF | 1 | 1 | 1 |
| 14 | 162676 | GANG BAR, RCF | 1 | 1 | 1 |
| 15 | 162679 | GANG BAR, LCR | 1 | 1 | 1 |
| 16 | 162678 | GANG BAR, RCR | 1 | 1 | 1 |
| 17 | 162680 | GANG BAR RIWF | 1 | 1 | 1 |
| 18 | 162681 | GANG BAR RIWR | 1 | 1 | 1 |
| 19 | 162682 | GANG BAR LIWF | 1 | 1 | 1 |
| 20 | 162683 | GANG BAR LIWR | 1 | 1 | 1 |
| 21 | 162686 | GANG BAR LOWF | 1 | 1 | 1 |
| 22 | 162684 | GANG BAR ROWF | 1 | 1 | 1 |
| 23 | 162687 | GANG BAR LOWR | 1 | 1 | 1 |
| 24 | 162685 | GANG BAR ROWR | 1 | 1 | 1 |
| 25 | 153700 | SCRAPER BAR 7 SP 9 HOLE | 2 | 2 | 2 |
| 26 | 153701 | SCRAPER BAR, 7 SP 10 HOLE | 2 | 2 | 2 |
| 27 | 153702 | SCRAPER BAR, 7 SP 11 HOLE | 4 | 4 | 4 |
| 28 | 153703 | SCRAPER BAR 7 AP 12 HOLE | 4 | 4 | 4 |

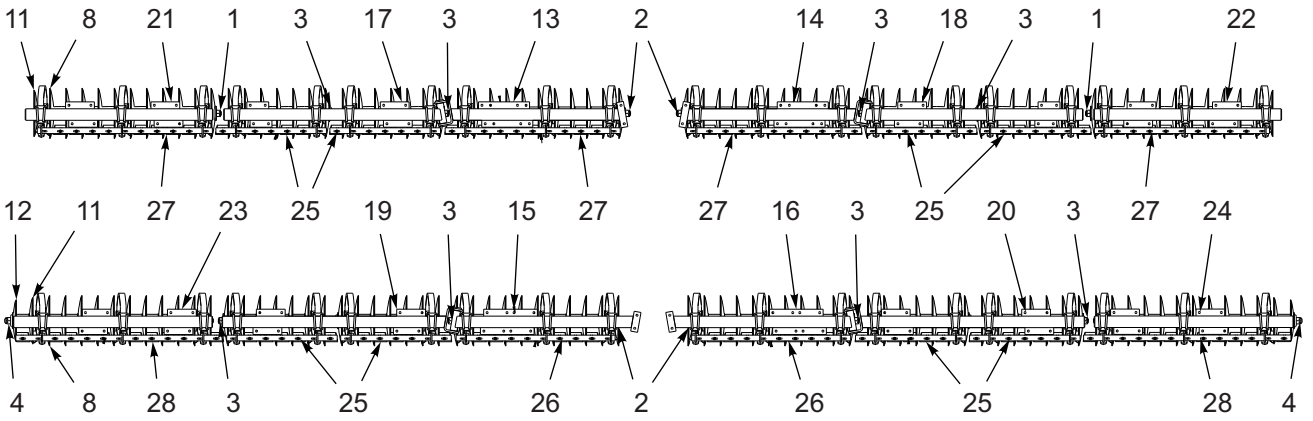


7450-44’ 22” 6 GA LC DISC BLADES (164516)

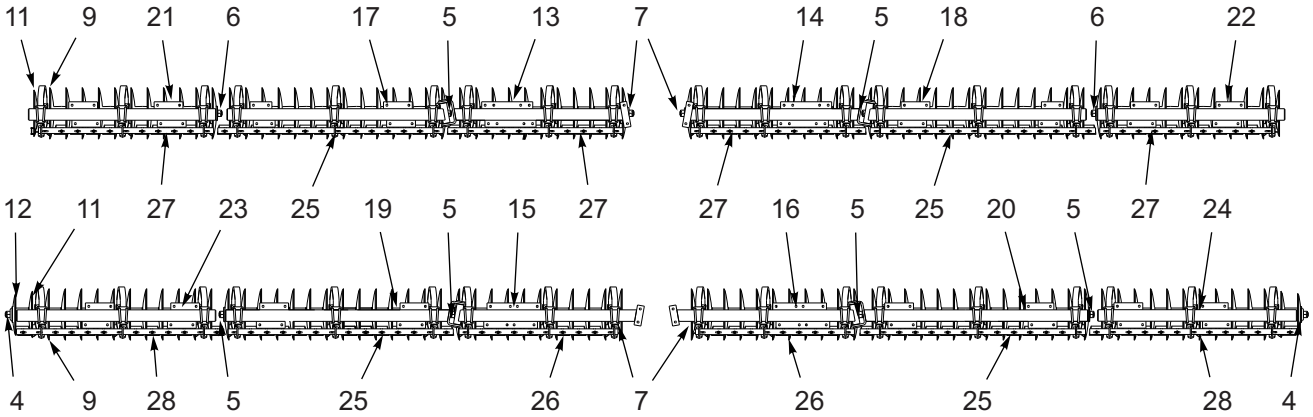


7450-44’ 22” 4 GA LC DISC BLADES (164517)

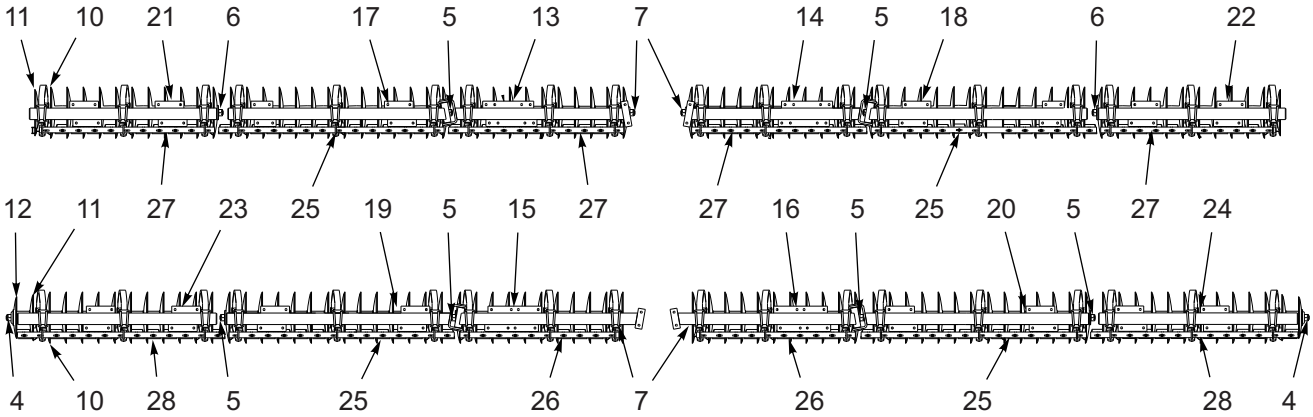


7450-44’ 22” 4GA ROLLABLE LC DISC BLADES (164518)

**Figure 2-26: 44’ Disc Gang Placement**

https://truckmanualshub.com/



# 44' DISC GANG PLACEMENT PARTS

| ITEM | PART NO. | DESCRIPTION | QTY. | | |
|---|---|---|---|---|---|
| | 164516 | DISC GANG ASSEMBLY, 22” 6 GA LC | * | | |
| | 164517 | DISC GANG ASSEMBLY, 22” 4 GA LC | | * | |
| | 164518 | DISC GANG ASSEMBLY, 22” 4 GA ROLLABLE | | | * |
| 1 | 156921 | SHAFT, GANG 83-1/2L | 2 | ----- | ----- |
| 2 | 156922 | SHAFT, GANG 76L | 4 | ----- | ----- |
| 3 | 167571 | SHAFT, GANG 48L (PRIOR TO 08/2012) | 8 | ----- | ----- |
| 3 | 170196 | SHAFT, GANG 47L (AFTER 08/2012) | 8 | ----- | ----- |
| 4 | 149592 | SHAFT, GANG 90-1/2 | 2 | 2 | 2 |
| 5 | 167589 | SHAFT, GANG 48-1/4 (PRIOR TO 08/2012) | ----- | 8 | 8 |
| 5 | 170223 | SHAFT, GANG 47-1/2L (AFTER 08/2012 THRU 164517 & 164518 PRIOR 3-1-2016) (164516 STILL USES 170223) | ----- | 8 | 8 |
| 5 | 153710 | SHAFT, GANG 97 L (164517 & 164518 AFTER 3-1-2016) | ----- | 4 | 4 |
| 6 | 156084 | SHAFT, GANG 84L | ----- | 2 | 2 |
| 7 | 141165 | SHAFT, GANG 76-1/2L | ----- | 4 | 4 |
| 8 | 151548 | DISC BLADE 22" X 6 GA | 144 | ----- | ----- |
| 9 | 155617 | DISC BLADE 22" X 1/4 - 1-3/4 “ID | ----- | 144 | ----- |
| 10 | 155618 | DISC BLADE 22" X 1/4 - 1-3/4” ID ROLLABLE | ----- | ----- | 144 |
| 11 | 155619 | DISC BLADE,20” X 1/4” - 1-3/4” ID ROLLABLE, OSMUNDSON **(PRIOR TO 10-1-14)** | 4 | 4 | 4 |
| 11 | 186100 | DISC BLADE, 20" X 1/4” - 1-3/4” ID ROLLABLE, INGERSOLL **(AFTER 10-1-14)** | 4 | 4 | 4 |
| 12 | 158898 | DISC BLADE, 18” X 1/4” - 1-3/4” ID ROLLABLE, OSMUNDSON **(PRIOR TO 10-1-14)** | 2 | 2 | 2 |
| 12 | 186101 | DISC BLADE, 18” X 1/4” - 1-3/4” ID DISC BLADES, INGERSOLL **(AFTER 10-1-14)** | 2 | 2 | 2 |
| 13 | 162677 | GANG BAR, LCF | 1 | 1 | 1 |
| 14 | 162676 | GANG BAR, RCF | 1 | 1 | 1 |
| 15 | 162679 | GANG BAR, LCR | 1 | 1 | 1 |
| 16 | 162678 | GANG BAR, RCR | 1 | 1 | 1 |
| 17 | 165307 | GANG BAR, LIWF | 1 | 1 | 1 |
| 18 | 165305 | GANG BAR, RIWF | 1 | 1 | 1 |
| 19 | 165308 | GANG BAR, LIWR | 1 | 1 | 1 |
| 20 | 165306 | GANG BAR, RIWR | 1 | 1 | 1 |
| 21 | 165311 | GANG BAR, LOWF | 1 | 1 | 1 |
| 22 | 165309 | GANG BAR, ROWF | 1 | 1 | 1 |
| 23 | 165312 | GANG BAR, LOWR | 1 | 1 | 1 |
| 24 | 165310 | GANG BAR, ROWR | 1 | 1 | 1 |
| 25 | 153698 | SCRAPER BAR 7 SP 7 HOLE (164516) (164517 & 164518 PRIOR 3-1-2016) | 8 | 8 | 8 |
| 25 | 153705 | SCRAPER BAR, 7 SP 14 HOLE (164517 & 164518 AFTER 3-1-2016) | 4 | 4 | 4 |
| 26 | 153701 | SCRAPER BAR, 7 SP 10 HOLE | 2 | 2 | 2 |
| 27 | 153702 | SCRAPER BAR, 7 SP 11 HOLE | 4 | 4 | 4 |
| 28 | 153704 | SCRAPER BAR, 7 SP 13 HOLE | 2 | 2 | 2 |

https://truckmanualshub.com/

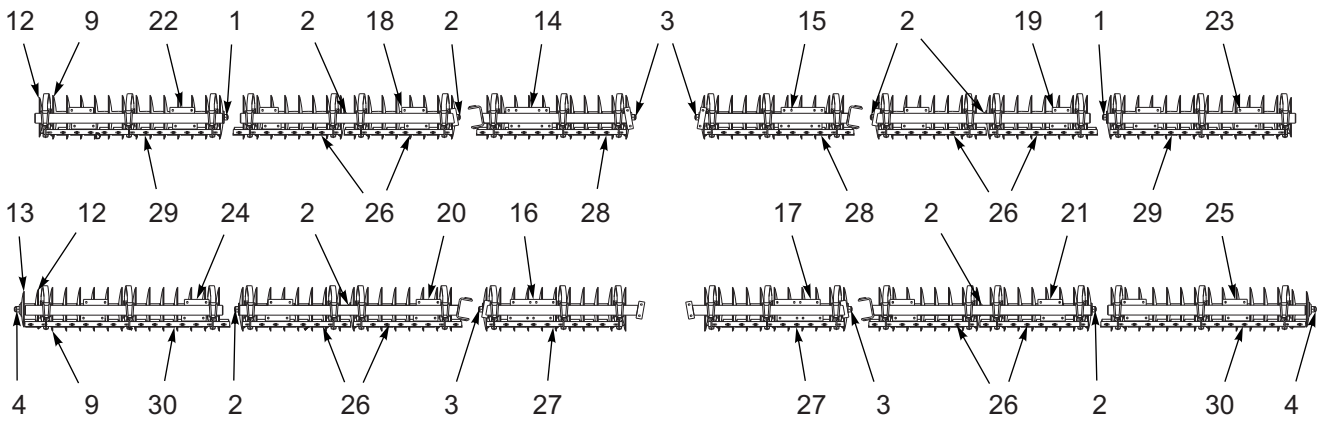


7450-49’ 22” 6 GA LC DISC BLADES (164519)

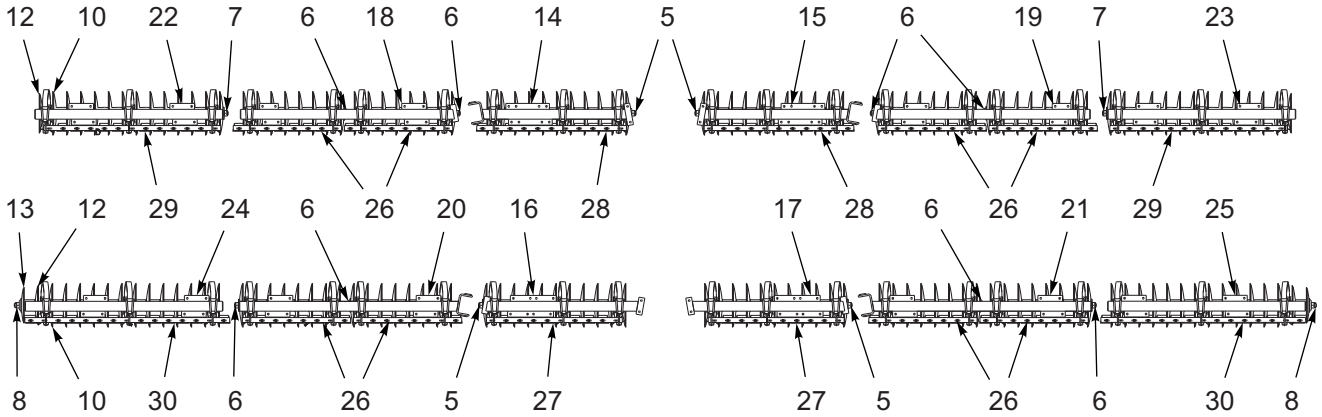


7450-49’ 22” 4 GA LC DISC BLADES (164520)

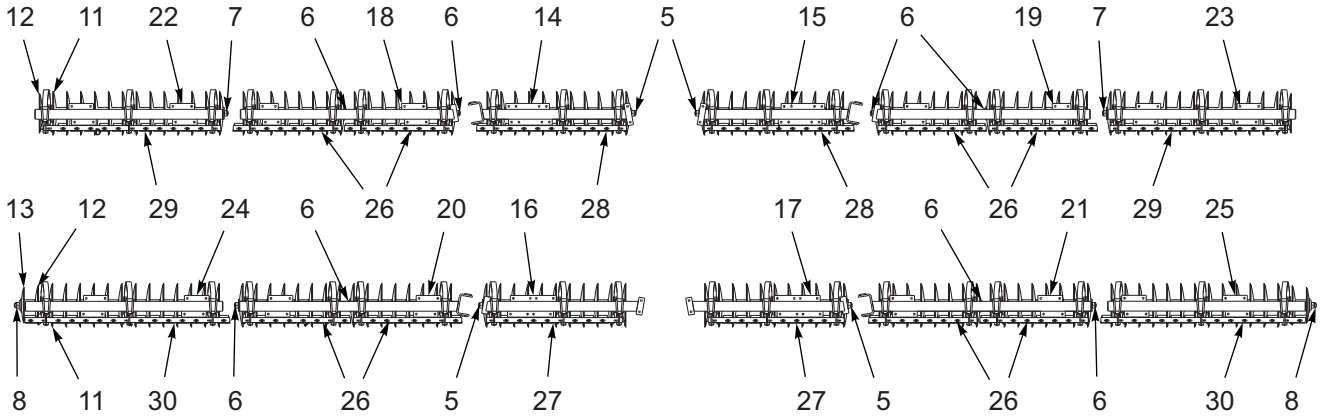


7450-49’ 22” 4GA ROLLABLE LC DISC BLADES (164521)

**Figure 2-27: 49’ Disc Gang Placement**

https://truckmanualshub.com/



# 49' DISC GANG PLACEMENT PARTS

| ITEM | PART NO. | DESCRIPTION | QTY. | | |
|---|---|---|---|---|---|
| | 164519 | DISC GANG ASSEMBLY, 22” 6 GA LC | * | | |
| | 164520 | DISC GANG ASSEMBLY, 22” 4 GA LC | | * | |
| | 164521 | DISC GANG ASSEMBLY, 22” 4 GA ROLLABLE | | | * |
| 1 | 153710 | SHAFT, GANG 97L | 2 | ----- | ----- |
| 2 | 154662 | SHAFT, GANG 55L **(PRIOR TO 08/2012)** | 8 | ----- | ----- |
| 2 | 171020 | SHAFT, GANG 54L **(AFTER 08/2012)** | 8 | ----- | ----- |
| 3 | 156922 | SHAFT, GANG 76L | 4 | ----- | ----- |
| 4 | 153711 | SHAFT, GANG 104L | 2 | ----- | ----- |
| 5 | 141165 | SHAFT, GANG 76-1/2L | ----- | 4 | 4 |
| 6 | 153713 | SHAFT, GANG 55-1/2L **(PRIOR TO 08/2012)** | ----- | 8 | 8 |
| 6 | 171021 | SHAFT, GANG 54-1/2L **(AFTER 08/2012)** | ----- | 8 | 8 |
| 7 | 156082 | SHAFT, GANG 98L | ----- | 2 | 2 |
| 8 | 156083 | SHAFT, GANG 105L | ----- | 2 | 2 |
| 9 | 151548 | DISC BLADE, 22" X 6 GA | 160 | ----- | ----- |
| 10 | 155617 | DISC BLADE, 22" X 1/4 - 1-3/4 “ID | ----- | 160 | ----- |
| 11 | 155618 | DISC BLADE, 22" X 1/4 - 1-3/4” ID ROLLABLE | ----- | ----- | 160 |
| 12 | 155619 | DISC BLADE,20” X 1/4” - 1-3/4” ID ROLLABLE, OSMUNDSON **(PRIOR TO 10-1-14)** | 4 | 4 | 4 |
| 12 | 186100 | DISC BLADE, 20" X 1/4” - 1-3/4” ID ROLLABLE, INGERSOLL **(AFTER 10-1-14)** | 4 | 4 | 4 |
| 13 | 158898 | DISC BLADE, 18” X 1/4” - 1-3/4” ID ROLLABLE, OSMUNDSON **(PRIOR TO 10-1-14)** | 2 | 2 | 2 |
| 13 | 186101 | DISC BLADE, 18” X 1/4” - 1-3/4” ID DISC BLADES, INGERSOLL **(AFTER 10-1-14)** | 2 | 2 | 2 |
| 14 | 162677 | GANG BAR, LCF | 1 | 1 | 1 |
| 15 | 162676 | GANG BAR, RCF | 1 | 1 | 1 |
| 16 | 162679 | GANG BAR, LCR | 1 | 1 | 1 |
| 17 | 162678 | GANG BAR, RCR | 1 | 1 | 1 |
| 18 | 165315 | GANG BAR, LIWF | 1 | 1 | 1 |
| 19 | 165313 | GANG BAR, RIWF | 1 | 1 | 1 |
| 20 | 165316 | GANG BAR, LIWR | 1 | 1 | 1 |
| 21 | 165314 | GANG BAR, RIWR | 1 | 1 | 1 |
| 22 | 165319 | GANG BAR, LOWF | 1 | 1 | 1 |
| 23 | 165317 | GANG BAR, ROWF | 1 | 1 | 1 |
| 24 | 165320 | GANG BAR, LOWR | 1 | 1 | 1 |
| 25 | 165318 | GANG BAR, ROWR | 1 | 1 | 1 |
| 26 | 153699 | SCRAPER BAR, 7 SP 8 HOLE | 8 | 8 | 8 |
| 27 | 153701 | SCRAPER BAR, 7 SP 10 HOLE | 2 | 2 | 2 |
| 28 | 153702 | SCRAPER BAR, 7 SP 11 HOLE | 2 | 2 | 2 |
| 29 | 153704 | SCRAPER BAR, 7 SP 13 HOLE | 2 | 2 | 2 |
| 30 | 153706 | SCRAPER BAR 7 SP 15 HOLE | 2 | 2 | 2 |

https://truckmanualshub.com/



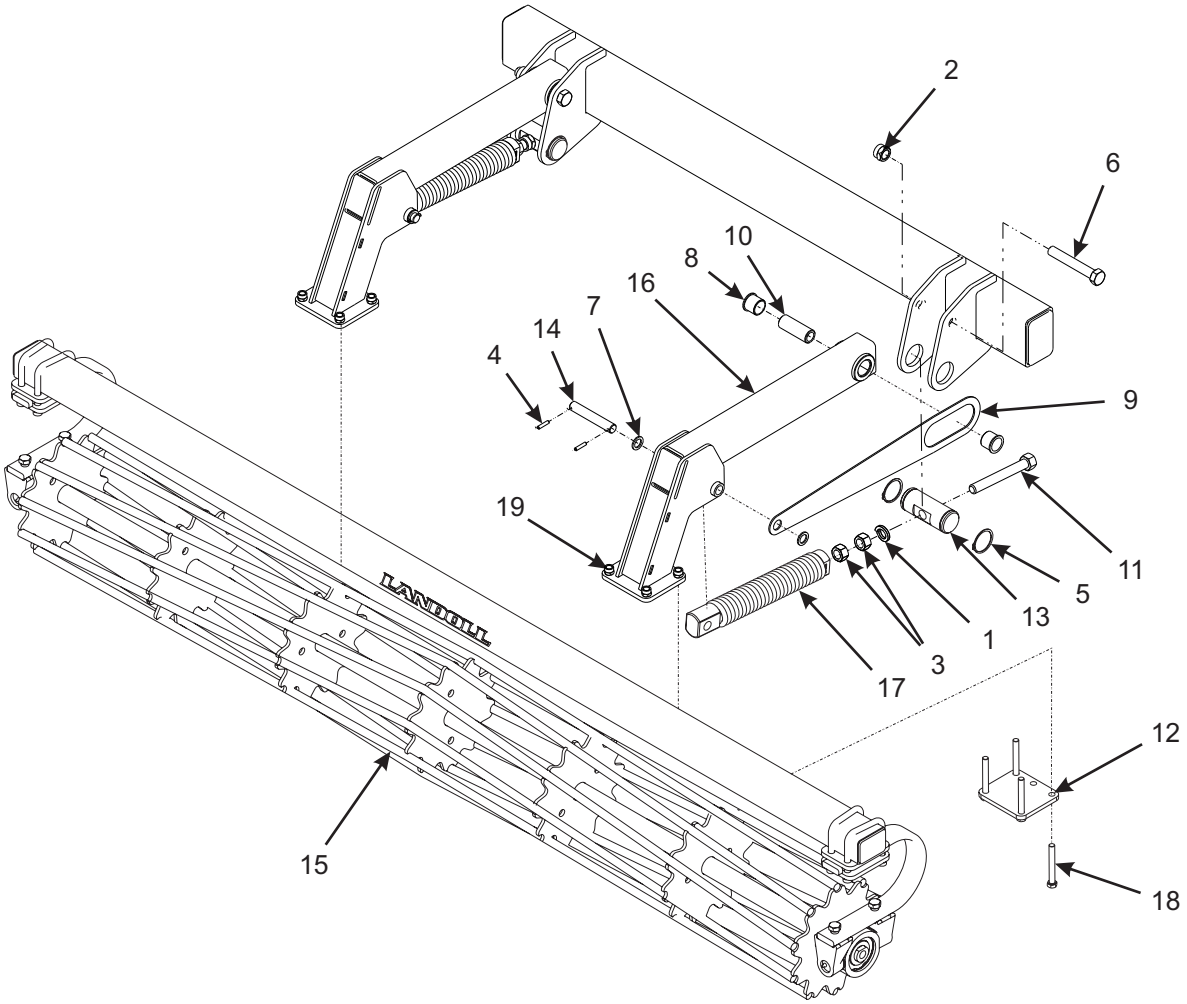


Figure 2-28: Conditioner Reel Assembly

https://truckmanualshub.com/



# CONDITIONER REEL ASSEMBLY

| ITEM | PART NO. | DESCRIPTION | QTY. |
|---|---|---|---|
| | 164525 | CONDITIONER REEL ASSEMBLY (39') | |
| | 164526 | CONDITIONER REEL ASSEMBLY (44') | |
| | 164527 | CONDITIONER REEL ASSEMBLY (49') | |
| 1 | 1-861-010034-21 | WASHER, LOCK 1" | 11 |
| 2 | 1-512-010005-19 | NUT, HEX LOCK 1-8 GRB | 11 |
| 3 | 1-512-010007-14 | NUT, HEX 1-8 GRB | 22 |
| 4 | 1-647-010004236 | SPRING PIN, SLOTTED 5/16 X 1-1/2 | 22 |
| 5 | 158896 | SNAP RING | 22 |
| 6 | 100829 | SCREW, HEX HEAD CAP 1-8 X 6-1/2 GR5 | 11 |
| 7 | 117957 | MACHINERY BUSHING | 22 |
| 8 | 140599 | BEARING, FLANGE 1-1/2 | 22 |
| 9 | 167554 | STOP, REEL ARM | 4 |
| 10 | 152209 | BUSHING, PIVOT 1-1/2 | 11 |
| 11 | 152210 | BOLT, ADJ 1 X 8 | 11 |
| 12 | 154748P | PLATE, GANGBAR MOUNT | 11 |
| 13 | 158897 | PIN, ADJUSTMENT W/ SNAP RING | 11 |
| 14 | 154392 | PIN, PIVOT | 11 |
| 15 | 154686 | CONDITIONER REEL/GANGBAR ASSY, 91" **(SEE PAGE 2-59)** | 4 |
| 15 | 165127 | CONDITIONER REEL/GANGBAR ASSY, 156" **(SEE PAGE 2-59)** | 1 |
| 15 | 155545 | CONDITIONER REEL/GANGBAR ASSY, 97" **(SEE PAGE 2-59**) | 4 |
| 15 | 154687 | CONDITIONER REEL/GANGBAR ASSY, 114" **(SEE PAGE 2-59)** | 4 |
| 16 | 158847 | ARM, REEL | 11 |
| 17 | 158795 | SPRING ASSEMBLY, HEAVY 17" | 11 |
| 18 | 172884 | SCREW, HEX HEAD CAP 3/4-10 X 6 GR8 | 55 |
| 19 | 1-512-010005-15 | NUT, HEX LOCK 3/4-10 GRB | 110 |

https://truckmanualshub.com/



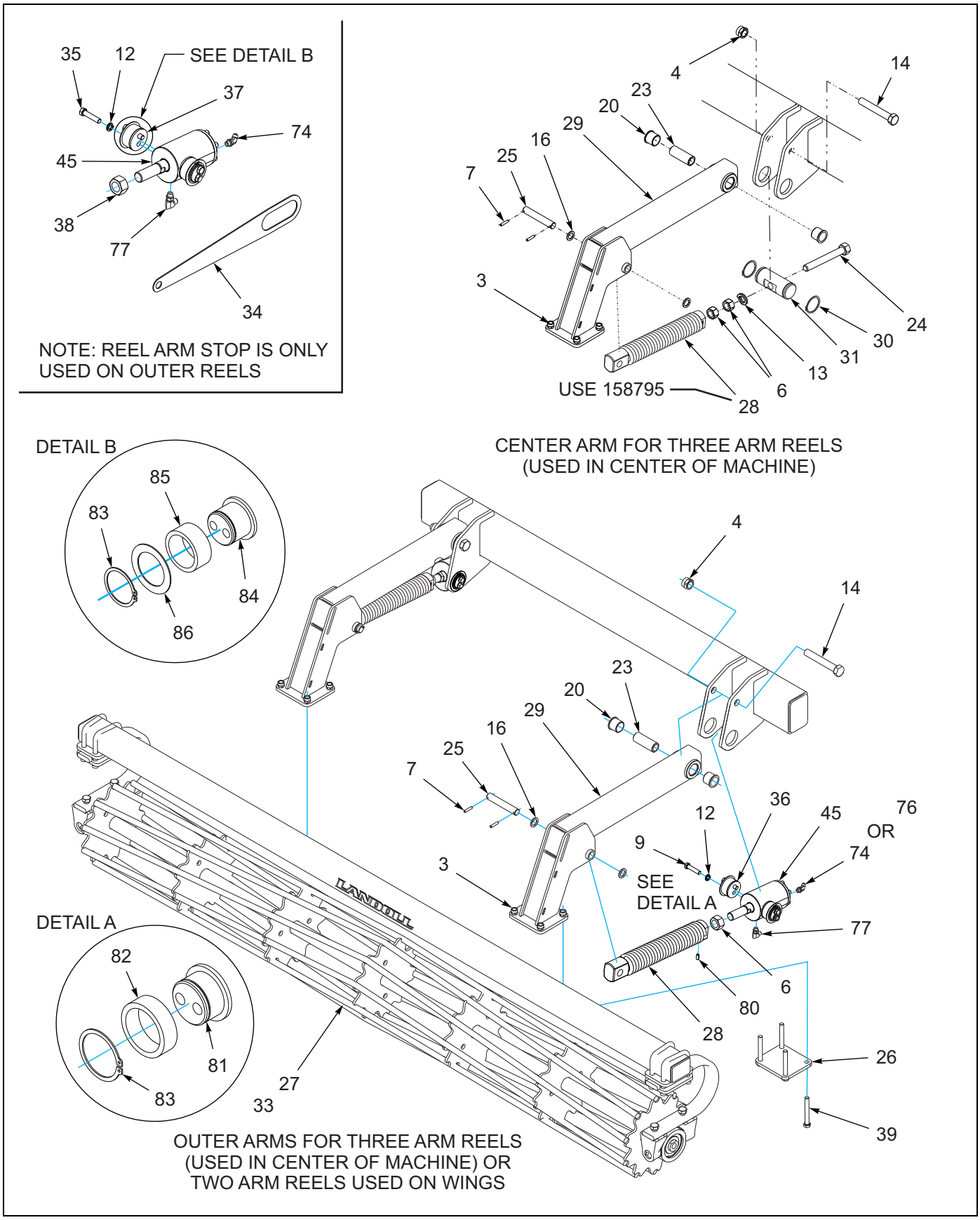


**Figure 2-29: Hydraulic Conditioner Reel Assembly**

https://truckmanualshub.com/



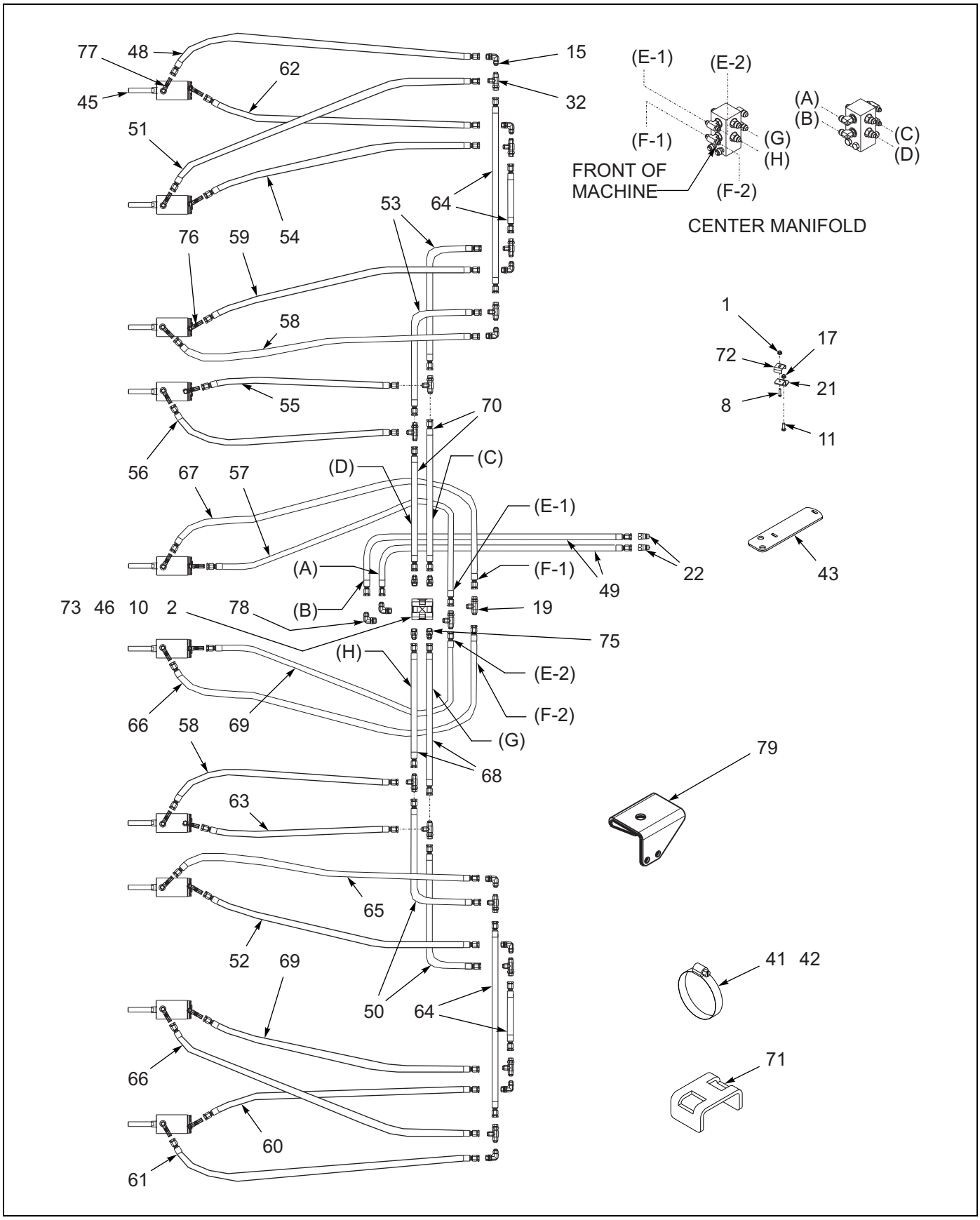


Figure 2-30: Hydraulic Conditioner Reel Assembly

https://truckmanualshub.com/



# HYDRAULIC CONDITIONER REEL ASSEMBLY

| ITEM | PART NO. | DESCRIPTION | QTY. | | |
|---|---|---|---|---|---|
| | 172989 | HYDRAULIC CONDITIONER REEL ASSEMBLY **(39')** | * | | |
| | 172990 | HYDRAULIC CONDITIONER REEL ASSEMBLY **(44')** | | * | |
| | 172991 | HYDRAULIC CONDITIONER REEL ASSEMBLY **(49')** | | | * |
| 1 | 1-510-010001 | NUT, FLANGE LOCK 3/8-16 | 4 | 4 | 4 |
| 2 | 1-512-010005-09 | NUT, HEX LOCK 1/2-13 GRB | 2 | 2 | 2 |
| 3 | 1-512-010005-15 | NUT, HEX LOCK 3/4-10 GRB | 110 | 110 | 110 |
| 4 | 1-512-010005-19 | NUT, HEX LOCK 1-8 GRB | 11 | 11 | 11 |
| 5 | 1-512-010007-07 | NUT, HEX 3/8-16 ZP | 1 | 1 | 1 |
| 6 | 1-512-010007-14 | NUT, HEX 1-8 GRB **(BEFORE 6-8-2017)** | 12 | 12 | 12 |
| 6 | 206675 | NUT, 1-1/8 -12 UNF, Z/P GR 2 **(AFTER 6-8-2017)** | 12 | 12 | 12 |
| 7 | 1-647-010004236 | SPRING PIN, SLOTTED 5/16 X 1-1/2 | 22 | 22 | 22 |
| 8 | 1-654-010051-07 | SCREW, HEX HEAD CAP 3/8-16 X 1-1/2 GR5 | 4 | 4 | 4 |
| 9 | 1-654-010055-03 | SCREW, HEX HEAD CAP 1/2-13 X 1-1/2 GR5 | 24 | 24 | 24 |
| 10 | 1-654-010055-11 | SCREW, HEX HEAD CAP 1/2-13 X 3-1/2 GR5 | 2 | 2 | 2 |
| 11 | 1-654-010070-03 | SCREW, RD HEAD SQ NECK 1/2-13 X 1-1/2 | 4 | 4 | 4 |
| 12 | 1-861-010034-13 | WASHER, SPLIT LOCK 1/2 | 40 | 40 | 40 |
| 13 | 1-861-010034-21 | WASHER, LKG HEL SPRG 1IN | 1 | 1 | 1 |
| 14 | 100829 | SCREW, HEX HEAD CAP 1-8 X 6-1/2 GR5 | 11 | 11 | 11 |
| 15 | 102-0031 | ADAPTER,90 JIC SWIVEL #6 | 8 | 8 | 8 |
| 16 | 117957 | MACHINERY BUSHING | 22 | 22 | 22 |
| 17 | 124971 | NUT, HEX FLANGE LOCK 1/2-13 | 4 | 4 | 4 |
| 18 | 129698 | SCREW, HEX HEAD CAP 3/8-16 X 4-1/2 GR5 | 1 | 1 | 1 |
| 19 | 139347 | ADAPTER, TEE | 2 | 2 | 2 |
| 20 | 140599 | BEARING, FLANGE 1-1/2 | 22 | 22 | 22 |
| 21 | 141275 | BRACKET, HOSE CLAMP | 4 | 4 | 4 |
| 22 | 141828 | COUPLER, MALE 3/4-16 | 2 | 2 | 2 |
| 23 | 152209 | BUSHING, PIVOT 1-1/2 | 11 | 11 | 11 |
| 24 | 152210 | BOLT, ADJUSTMENT1 X 9 | 1 | 1 | 1 |
| 25 | 154392 | PIN, PIVOT | 11 | 11 | 11 |
| 26 | 154748P | PLATE, GANGBAR MOUNT | 11 | 11 | 11 |
| 27 | 154686 | CONDITIONER REEL/ GANG BAR 91" | 4 | -- | -- |
| 27 | 155545 | CONDITIONER REEL/GANGBAR ASSEMBLY, 97" **(SEE PAGE 2-59**) | -- | 4 | -- |
| 27 | 154687 | CONDITIONER REEL/ GANG BAR 114" | -- | -- | 4 |
| 28 | 158795 | SPRING ASSEMBLY, 17" **(USED ON CENTER ARM) (BEFORE 6-8-2017 WITH 174720-CYLINDER-1" THD.)** | 11 | 11 | 11 |
| 28 | 206652 | SPRING ASSY 17" 1-1/8 THD **(AFTER 6-8-2017 WITH 206670-CYLINDER-1-1/8" THD.)** | 11 | 11 | 11 |
| 29 | 158847 | ARM, REEL | 11 | 11 | 11 |
| 30 | 158896 | SNAP RING, 2-1/2 SHAFT | 2 | 2 | 2 |
| 31 | 158897 | PIN, ADJUSTMENT W/ SNAP RING | 1 | 1 | 1 |
| 32 | 162569 | TEE, BULKHEAD RUN | 12 | 12 | 12 |
| 33 | 165127 | CONDITIONER REEL/GANGBAR ASSEMBLY, 156" **(SEE PAGE 2-59)** | 1 | 1 | 1 |
| 34 | 167554 | STOP, REEL ARM | 4 | 4 | 4 |
| 35 | 169690 | SCREW, HEX HEAD CAP 1/2-13 X 2-1/4 GR5 | 16 | 16 | 16 |
| 36 | 171074 | TRUNNION, CYLINDER **(BEFORE 2-21-2016)** | 12 | 12 | 12 |
| 36 | 198320 | ASSY, TRUNION MOUNT 1-1/4" **(AFTER 2-21-2016) (INCLUDES ITEMS 81-83)** | 12 | 12 | 12 |

https://truckmanualshub.com/



# HYDRAULIC CONDITIONER REEL ASSEMBLY

| ITEM | PART NO. | DESCRIPTION | QTY. | | |
|---|---|---|---|---|---|
| 37 | 172534 | TRUNNION, CYLINDER **(BEFORE 2-21-2016)** | 8 | 8 | 8 |
| 37 | 198321 | ASSY, TRUNION MOUNT 1-5/8"**(AFTER 2-21-2016) (INCLUDES ITEMS 83-86)** | 8 | 8 | 8 |
| 38 | 172535 | TRUNNION STOP, CYLINDER **(NOT SHOWN, USED WITH 172534) (BEFORE 2-21-2016)** | 8 | 8 | 8 |
| 39 | 172884 | SCREW, HEX HEAD CAP 3/4-10 X 6 GR8 | 55 | 55 | 55 |
| 40 | 172973 | HOSE WRAP, RED (NOT SHOWN) | 1 | 1 | 1 |
| 41 | 172976 | CLAMP, HOSE 4-1/2 - 6-1/2 | 10 | 10 | 10 |
| 42 | 172977 | CLAMP, HOSE 2-1/2 - 8-1/2 | 12 | 12 | 12 |
| 43 | 172992 | PLATE, BULKHEAD | 6 | 6 | 6 |
| 44 | 173044 | SCREW, ALL THREAD 3/8-16 X 4-1/2 | 1 | 1 | 1 |
| 45 | 174720 | CYLINDER, 2-1/2" X 1" STROKE 1" THD ROD **(SEE PAGE 2-70) (BEFORE 6-8-2017)** | 10 | 10 | 10 |
| 45 | 206670 | CYLINDER, 2-1/2" X 1" ST 1-1/8" THD ROD **(SEE PAGE 2-71) (AFTER 6-8-2017)** | 10 | 10 | 10 |
| 46 | 174722 | MOUNT, DUAL MANIFOLD | 1 | 1 | 1 |
| 47 | 174724 | HOSE KIT, REEL CYLINDER **(39') (INCL. ITEMS 48-70)** | 1 | -- | -- |
| 47 | 174725 | HOSE KIT, REEL CYLINDER **(44') (INCL. ITEMS 48-70)** | -- | 1 | -- |
| 47 | 174726 | HOSE KIT, REEL CYLINDER **(49') (INCL. ITEMS 48-70)** | -- | -- | 1 |
| 48 | 172978 | HOSE ASSEMBLY 1/4 X 94 | 1 | -- | -- |
| 48 | 125648 | HOSE ASSEMBLY 1/4 X 108 | -- | 1 | -- |
| 48 | 172980 | HOSE ASSEMBLY 1/4 X 125 | -- | -- | 1 |
| 49 | 153622 | HOSE ASSEMBLY 3/8 X 385 | 2 | 2 | 2 |
| 50 | 7779-72 | HOSE ASSEMBLY1/4 X 72 | 2 | -- | -- |
| 50 | 172568 | HOSE ASSEMBLY1/4 X 86 | -- | 2 | -- |
| 50 | 7779-102 | HOSE ASSEMBLY1/4 X 102 | -- | -- | 2 |
| 51 | 172979 | HOSE ASSEMBLY 1/4 X 60 | 6 | 6 | 6 |
| 52 | 172981 | HOSE ASSEMBLY 1/4 X 50 | 1 | 1 | 1 |
| 53 | 172979 | HOSE ASSEMBLY 1/4 X 60 | 2 | -- | -- |
| 53 | 172998 | HOSE ASSEMBLY 1/4 X 75 | -- | 2 | -- |
| 53 | 7779-90 | HOSE ASSEMBLY 1/4 X 90 | -- | -- | 2 |
| 54 | 173013 | HOSE ASSEMBLY 1/4 X 57 | 1 | 1 | 1 |
| 55 | 176929 | HOSE ASSEMBLY 1/4 X 24 | 1 | 1 | 1 |
| 56 | 176930 | HOSE ASSEMBLY 1/4 X 28 | 1 | 1 | 1 |
| 57 | 71509006 | HOSE ASSEMBLY 1/4 X 80 | 1 | 1 | 1 |
| 58 | 71509008 | HOSE ASSEMBLY 1/4 X 40 | 2 | 2 | 2 |
| 59 | 71509009 | HOSE ASSEMBLY 1/4 X 36 | 1 | 1 | 1 |
| 60 | 7779-102 | HOSE ASSEMBLY 1/4 X 102 | 1 | -- | -- |
| 60 | 71509124 | HOSE ASSEMBLY 1/4 X 116 | -- | 1 | -- |
| 60 | 71508981 | HOSE ASSEMBLY 1/4 X 130 | -- | -- | 1 |
| 61 | 125648 | HOSE ASSEMBLY 1/4 X 108 | 1 | -- | -- |
| 61 | 71600529 | HOSE ASSEMBLY 1/4 X 120 | -- | 1 | -- |
| 61 | 71509001 | HOSE ASSEMBLY 1/4 X 137 | -- | -- | 1 |
| 62 | 7779-102 | HOSE ASSEMBLY 1/4 X 102 | 1 | 1 | 1 |
| 63 | 7779-34 | HOSE ASSEMBLY 1/4 X 34 | 1 | 1 | 1 |
| 64 | 7779-48 | HOSE ASSEMBLY 1/4 X 48 | 4 | 4 | 4 |
| 65 | 7779-54 | HOSE ASSEMBLY 1/4 X 54 | 1 | 1 | 1 |
| 66 | 7779-78 | HOSE ASSEMBLY 1/4 X 78 | 2 | 2 | 2 |
| 67 | 7779-84 | HOSE ASSEMBLY 1/4 X 84 | 1 | 1 | 1 |

https://truckmanualshub.com/



# HYDRAULIC CONDITIONER REEL ASSEMBLY

| ITEM | PART NO. | DESCRIPTION | QTY. | | |
|---|---|---|---|---|---|
| 68 | 125648 | HOSE ASSEMBLY 1/4 X 108 | 2 | 2 | 2 |
| 69 | 172998 | HOSE ASSEMBLY 1/4 X 75 | 2 | 2 | 2 |
| 70 | 71600529 | HOSE ASSEMBLY 1/4 X 120 | 2 | 2 | 2 |
| 71 | 174784 | CLAMP HOSE | 20 | 20 | 20 |
| 72 | 2-181-010001 | HOSE CLAMP | 5 | 5 | 5 |
| 73 | 2-474-010022 | MANIFOLD, HYDRAULIC ASSEMBLY 8 PORT | 1 | 1 | 1 |
| 74 | 202702-6-6S | ADAPTER, STR | 8 | 8 | 8 |
| 75 | 202702-8-6S | ADAPTER | 4 | 4 | 4 |
| 76 | 2061-6-6S | ADAPTER, 45 | 2 | 2 | 2 |
| 77 | 2062-6-6S | ADAPTER, 90 | 10 | 10 | 10 |
| 78 | 2062-8-8S | ADAPTER, 90 | 2 | 2 | 2 |
| 79 | 174722 | MOUNT, DUAL MANIFOLD | 5 | 5 | 5 |
| 80 | 1P444 | SET SCREW, 3/8-16 X 3/4 NYLON **(AFTER 6-8-2017)** | 10 | 10 | 10 |
| 81 | 191924 | TRUNION, CYLINDER | 1 | 1 | 1 |
| 82 | 191925 | TRUNION, BEARING | 1 | 1 | 1 |
| 83 | 188530 | SNAP RING, 2 SHAFT | 1 | 1 | 1 |
| 84 | 188528 | TRUNION, CYLINDER | 1 | 1 | 1 |
| 85 | 188531 | TRUNION, BEARING | 1 | 1 | 1 |
| 86 | 109895 | WASHER,3ODX2-1/16X14GA | 1 | 1 | 1 |

https://truckmanualshub.com/



Table provided for general use.

| NOTES: |
| --- |
| |

https://truckmanualshub.com/



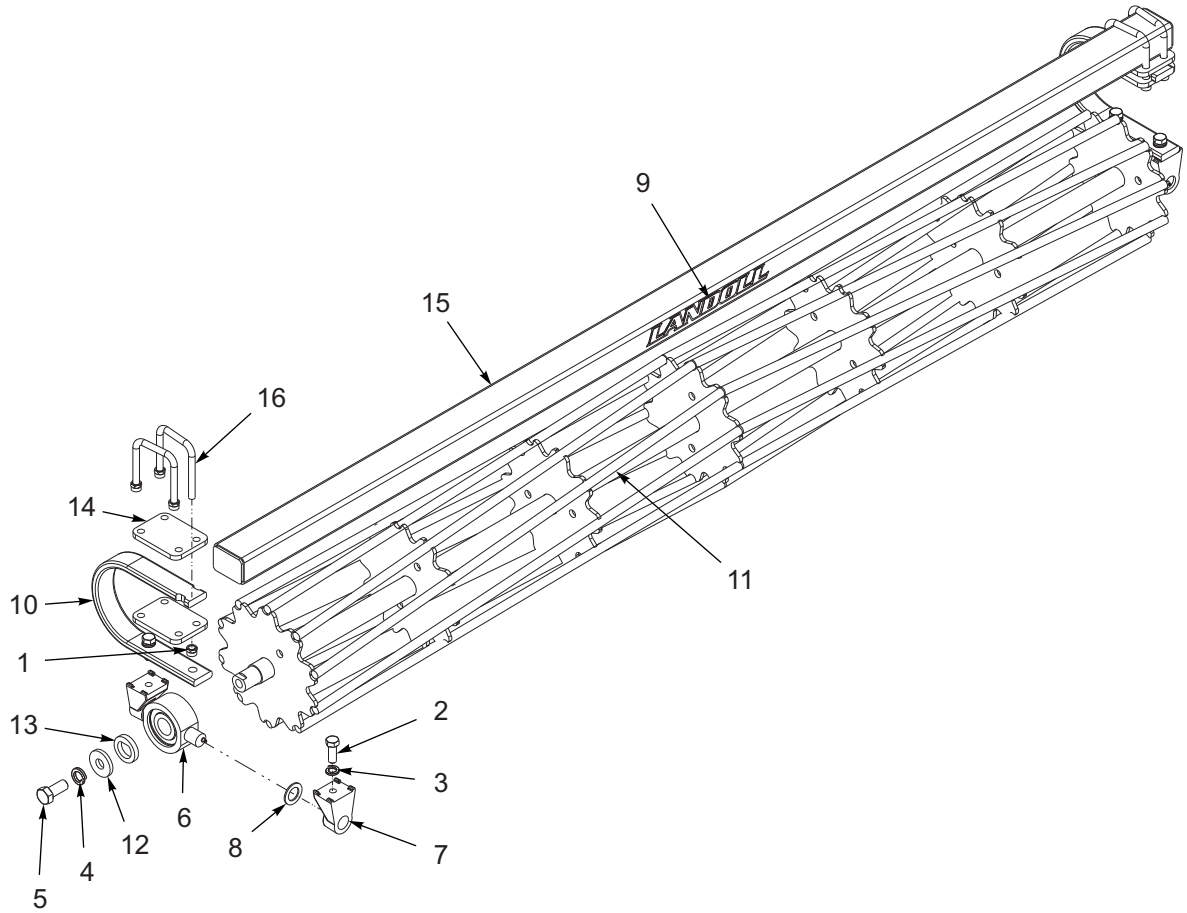


Figure 2-31: Reel/Gang Bar Assembly

https://truckmanualshub.com/


# REEL/GANGBAR ASSEMBLY

| ITEM | PART NO. | DESCRIPTION | QTY. |
|---|---|---|---|
| | 154686 | CONDITIONER REEL/GANGBAR ASSY, 91" (39’) | |
| | 165127 | CONDITIONER REEL/GANGBAR ASSY, 156" (ALL MODELS) | |
| | 155545 | CONDITIONER REEL/GANGBAR ASSY, 97" (44’) | |
| | 154687 | CONDITIONER REEL/GANGBAR ASSY, 114" (49’) | |
| 1 | 1-512-010005-13 | NUT, HEX LOCK 5/8-11 GRB | 8 |
| 2 | 1-654-010032-05 | SCREW, HEX HEAD CAP 3/4-10 X 2 GR8 | 4 |
| 3 | 1-861-010034-17 | WASHER, SPLIT LOCK 3/4 | 4 |
| 4 | 1-861-010034-21 | WASHER, SPLIT LOCK 1" | 2 |
| 5 | 137943 | SCREW, HEX HEAD CAP 1-8 X 2-1/4 GR5 | 2 |
| 6 | 140477 | BEARING, DISC 1.775 ID ASSEMBLY | 2 |
| 7 | 140479 | MOUNT, TRUNNION BEARING | 4 |
| 8 | 140480 | WASHER, TRUNNION | 2 |
| 9 | 148337 | ATTACHMENT DECAL, LANDOLL | 1 |
| 10 | 153716 | SHANK, STRAIGHT 3/4 X 2-1/2 | 2 |
| 11 | 154691 | CONDITIONER REEL, 91" (154686) | 1 |
| 11 | 164378 | CONDITIONER REEL, 156" (165127) | 1 |
| 11 | 155520 | CONDITIONER REEL, 97" (155545) | 1 |
| 11 | 154692 | CONDITIONER REEL, 114" (154687) | 1 |
| 12 | 154185 | WASHER, 3/8 THICK | 2 |
| 13 | 154186 | WASHER, FLAT TOP | 2 |
| 14 | 154393 | PLATE, SHANK MOUNT | 4 |
| 15 | 165226 | GANG BAR, 166" REEL 156" (165127) | 1 |
| 15 | 154658 | GANG BAR, 101" REEL 91" (154686) | 1 |
| 15 | 155544 | GANG BAR, 107” REEL 97" (155545) | 1 |
| 15 | 154659 | GANG BAR, 124" REEL 114" (154687) | 1 |
| 16 | 6-102-010009 | U-BOLT | 4 |

https://truckmanualshub.com/



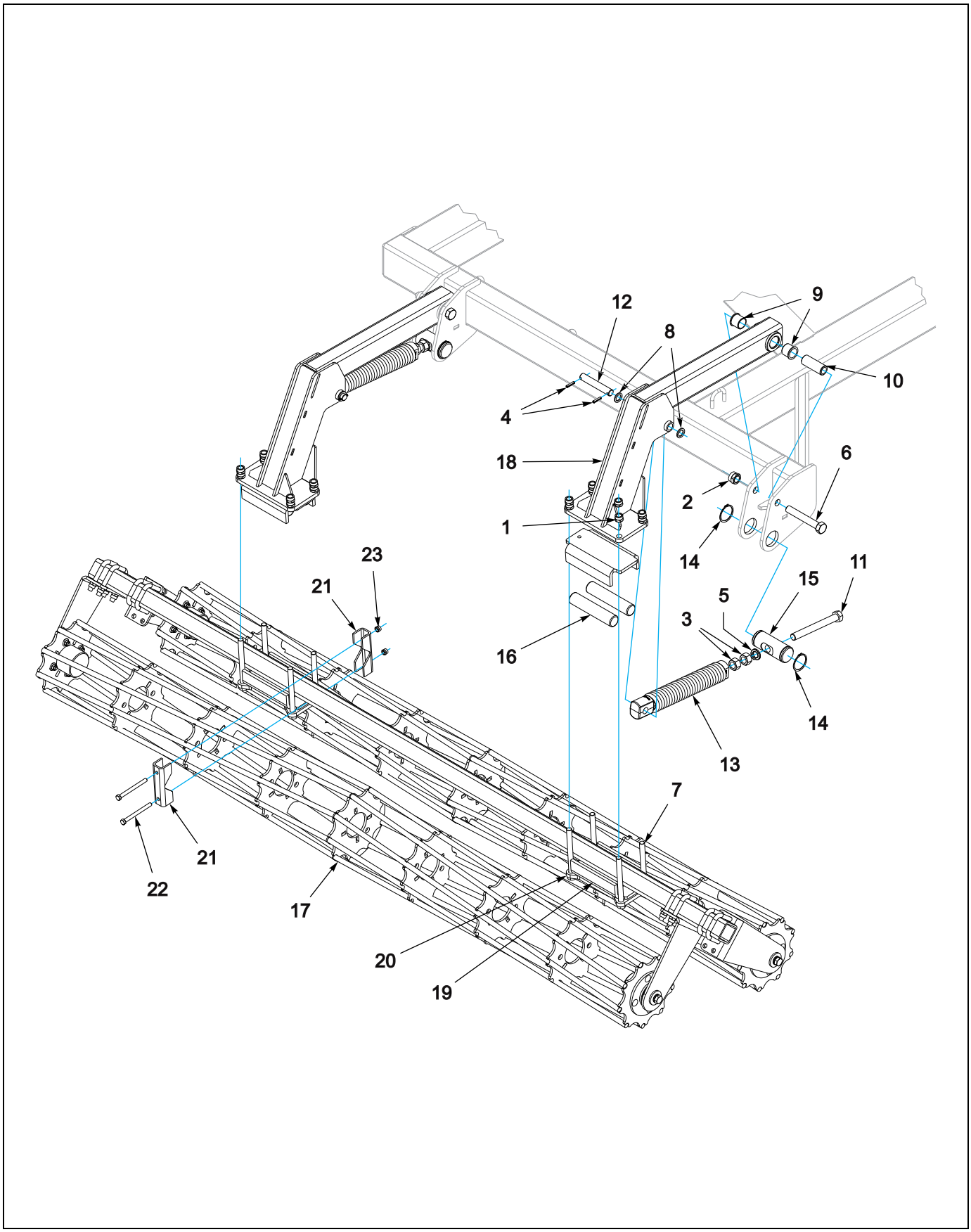


Figure 2-32: Reel Double Spring Assembly

https://truckmanualshub.com/


# REEL DOUBLE SPRING ASSEMBLY

| ITEM | PART NO. | DESCRIPTION | QTY. |
|---|---|---|---|
| | 191954 | DOUBLE REEL ASSY ROUND 7450-39 | |
| | 191955 | DOUBLE REEL ASSY ROUND 7450-44 | |
| | 191956 | DOUBLE REEL ASSY ROUND 7450-49 | |
| 1 | 1-512-010005-15 | NUT,HEX,SLFLKG GRB 3/4-10 | 88 |
| 2 | 1-512-010005-19 | NUT 1-8 HEX SLF-LOCKING GRB | 11 |
| 3 | 1-512-010007-14 | NUT, HEX 1-8 GR2 ZP | 22 |
| 4 | 1-647-010004236 | SPRING PIN,SLOTTED 5/16X1-1/2 | 22 |
| 5 | 1-861-010034-21 | WASHER, LKG HEL SPRG 1IN | 1 |
| 6 | 100829 | SCREW,HEX CAP,1-8X6-1/2,GR5 | 11 |
| 7 | 107491 | SCREW,HEX CAP,3/4-10X8-1/2,GR8 | 44 |
| 8 | 117957 | MACHINERY BUSHING,ZINC PLATED | 22 |
| 9 | 140599 | BEARING, FLANGE 1-1/2 | 22 |
| 10 | 152209 | BUSHING, PIVOT 1-1/2 | 11 |
| 11 | 152210 | BOLT, ADJ, 1 X 9 | 11 |
| 12 | 154392 | PIN,PIVOT | 11 |
| 13 | 158795 | SPRING ASSY, 17" | 11 |
| 14 | 158896 | SNAP RING, 2-1/2 SHAFT | 22 |
| 15 | 158897 | PIN, ADJUSTMENT | 11 |
| 16 | 203525 | SPRING-TORSION, RUBBER, 1-3/4 | 44 |
| 17 | ---- | DOUBLE REEL ASSY **(SEE PAGE 2-67)** | |
| 18 | 204505 | ARM WLDMT DOUBLE REEL | 11 |
| 19 | 204510 | PLATE GANGBAR MOUNT | 11 |
| 20 | 204511 | TUBE, CLAMP | 22 |
| 21 | 191487 | CLAMP, TUBE 3X3 | 8 |
| 22 | 1-654-010055-16 | SCREW HEX CAP 1/2-13X5-1/2GR5 | 8 |
| 23 | 1-512-010005-09 | NUT,HEX,SLFLKG, 1/2-13 GRB | 8 |

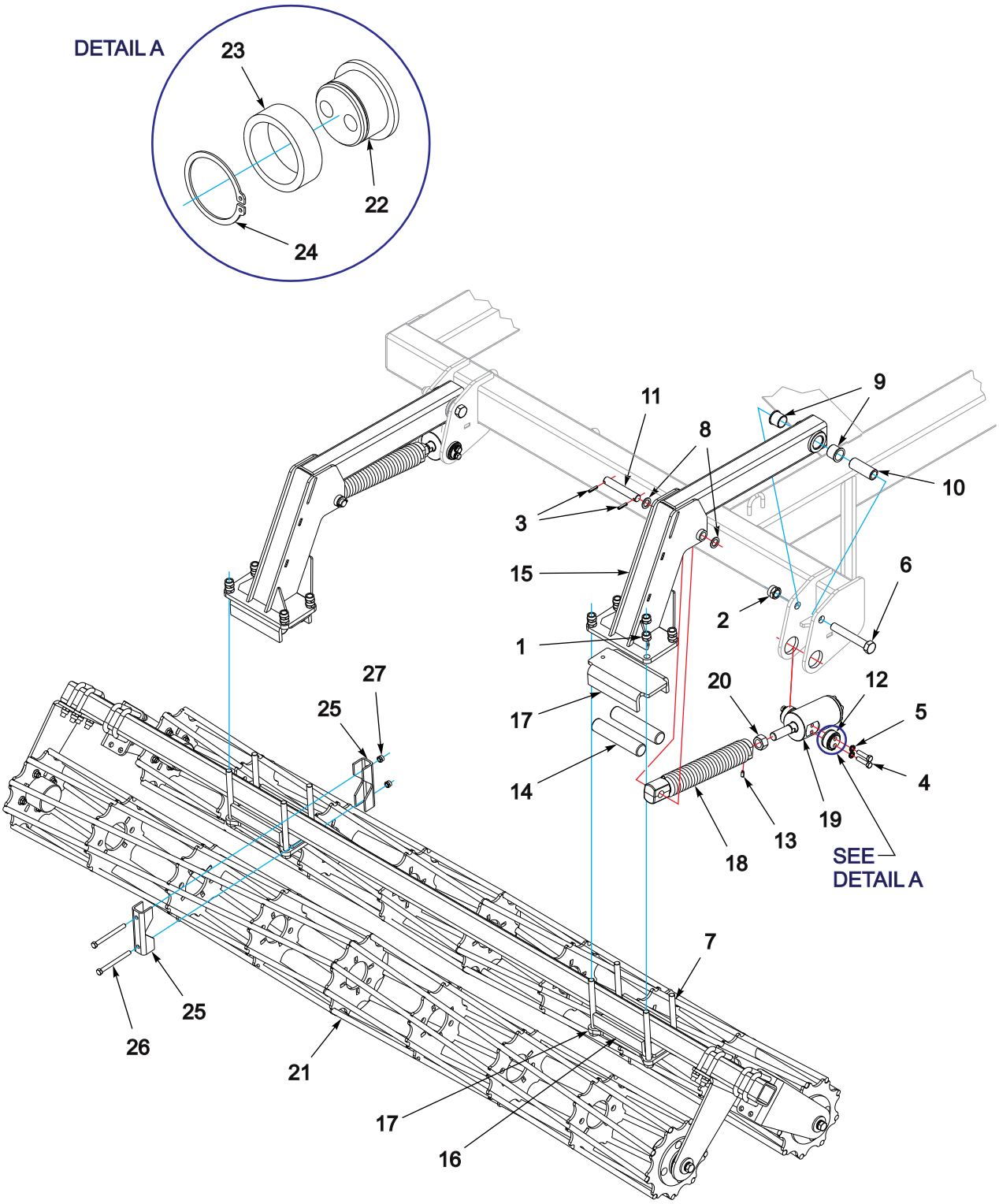


Figure 2-33: Reel Double Hydraulic Assembly Wings

https://truckmanualshub.com/


# REEL DOUBLE HYDRAULIC ASSEMBLY WINGS

| ITEM | PART NO. | DESCRIPTION | QTY. |
|---|---|---|---|
| 1 | 1-512-010005-15 | NUT,HEX,SLFLKG GRB 3/4-10 | 88 |
| 2 | 1-512-010005-19 | NUT 1-8 HEX SLF-LOCKING GRB | 11 |
| 3 | 1-647-010004236 | SPRING PIN,SLOTTED 5/16X1-1/2 | 22 |
| 4 | 1-654-010055-05 | SCREW,HEX CAP,1/2-13UNCX2 GR5 | 24 |
| 5 | 1-861-010034-13 | WASHER, LKG HLCL SPR, 1/2 | 40 |
| 6 | 100829 | SCREW,HEX CAP,1-8X6-1/2,GR5 | 11 |
| 7 | 107491 | SCREW HX CP 3/4-10X8-1/2 GR8 | 44 |
| 8 | 117957 | MACHINERY BUSHING,ZINC PLATED | 22 |
| 9 | 140599 | BEARING, FLANGE 1-1/2 | 22 |
| 10 | 152209 | BUSHING, PIVOT 1-1/2 | 11 |
| 11 | 154392 | PIN,PIVOT | 11 |
| 12 | 198320 | ASSY, TRUNION MOUNT 1-1/4" | 12 |
| 13 | 1P444 | SET SCREW, 3/8-16 X 3/4 NYLON | 10 |
| 14 | 203525 | SPRING-TORSION, RUBBER, 1-3/4 | 44 |
| 15 | 204505 | ARM WLDMT DOUBLE REEL | 11 |
| 16 | 204510 | PLATE GANGBAR MOUNT | 11 |
| 17 | 204511 | TUBE, CLAMP | 22 |
| 18 | 206652 | SPRING ASSY 17" 1-1/8 THD | 10 |
| 19 | 206670 | CYL ASM 2-1/2X1 ST 1-1/8 THDS **(SEE PAGE 2-71)** | 10 |
| 20 | 1-511-010002-11 | NUT,HEX JAM,1-1/8-12 UNF,GR2 | 10 |
| 21 | ---- | DOUBLE REEL ASSY **(SEE PAGE 2-67)** | 1 |
| 22 | 191924 | TRUNION, CYLINDER | 12 |
| 23 | 191925 | TRUNION, BEARING | 12 |
| 24 | 188530 | SNAP RING, 2 SHAFT | 12 |
| 25 | 191487 | CLAMP, TUBE 3X3 | 8 |
| 26 | 1-512-010005-09 | NUT,HEX,SLFLKG, 1/2-13 GRB | 16 |
| 27 | 1-512-010005-09 | 1-512-010005-09 | 16 |

https://truckmanualshub.com/

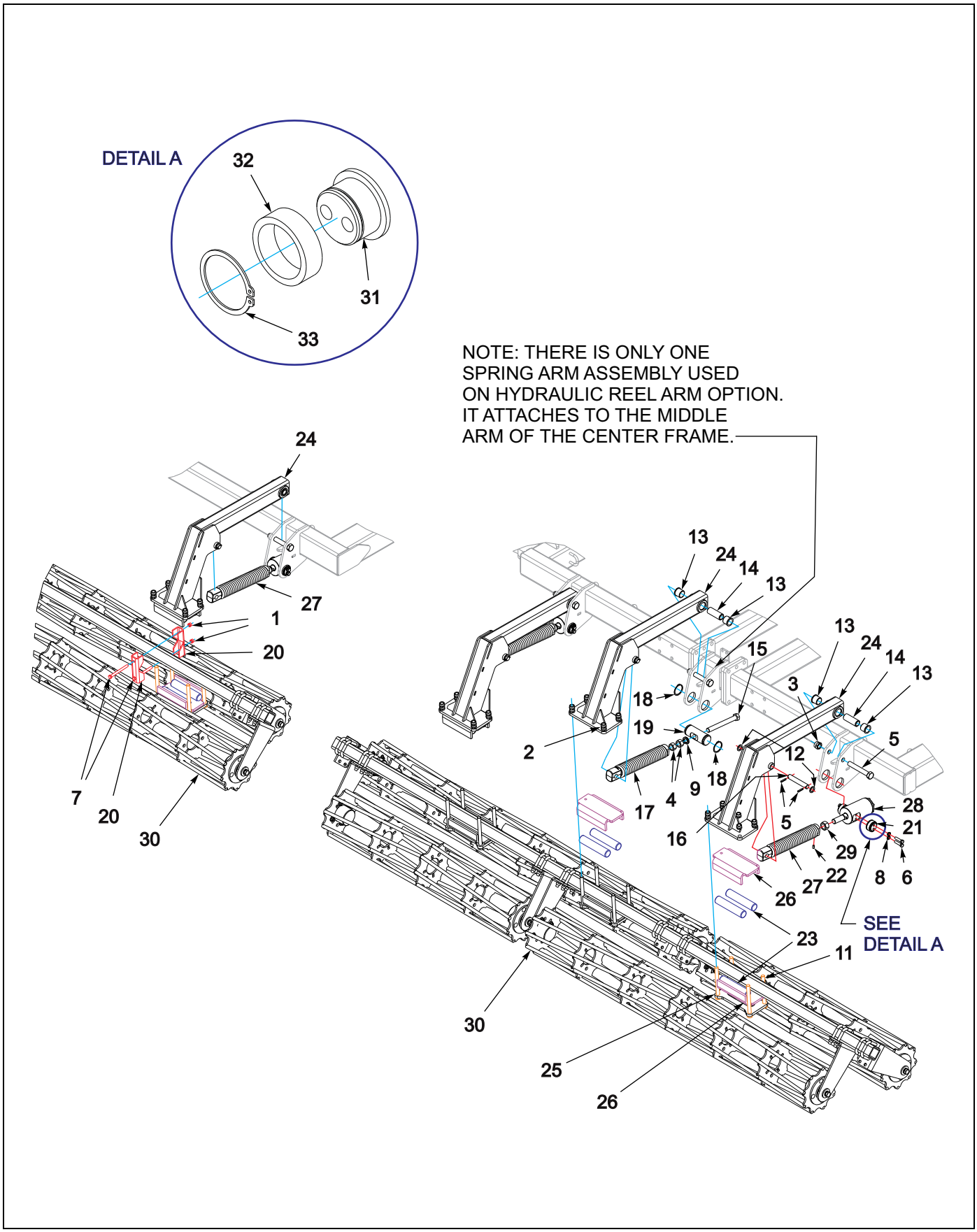


Figure 2-34: Reel Double Assembly

https://truckmanualshub.com/


# REEL DOUBLE ASSEMBLY

| ITEM | PART NO. | DESCRIPTION | QTY. |
|---|---|---|---|
| 1 | 1-512-010005-09 | NUT,HEX,SLFLKG, 1/2-13 GRB | |
| 2 | 1-512-010005-15 | NUT,HEX,SLFLKG GRB 3/4-10 | |
| 3 | 1-512-010005-19 | NUT 1-8 HEX SLF-LOCKING GRB | |
| 4 | 1-512-010007-14 | NUT, HEX 1-8 GR2 ZP | |
| 5 | 1-647-010004236 | SPRING PIN,SLOTTED 5/16X1-1/2 | |
| 6 | 1-654-010055-05 | SCREW,HEX CAP,1/2-13UNCX2 GR5 | |
| 7 | 1-654-010055-16 | SCREW HEX CAP 1/2-13X5-1/2GR5 | |
| 8 | 1-861-010034-13 | WASHER, LKG HLCL SPR, 1/2 | |
| 9 | 1-861-010034-21 | WASHER, LKG HEL SPRG 1IN | |
| 10 | 100829 | SCREW,HEX CAP,1-8X6-1/2,GR5 | |
| 11 | 107491 | SCREW HX CP 3/4-10X8-1/2 GR8 | |
| 12 | 117957 | MACHINERY BUSHING,ZINC PLATED | |
| 13 | 140599 | BEARING, FLANGE 1-1/2 | |
| 14 | 152209 | BUSHING, PIVOT 1-1/2 | |
| 15 | 152210 | BOLT, ADJ, 1 X 9 | |
| 16 | 154392 | PIN,PIVOT | |
| 17 | 158795 | SPRING ASSY, 17" | |
| 18 | 158896 | SNAP RING, 2-1/2 SHAFT | |
| 19 | 158897 | PIN, ADJUSTMENT | |
| 20 | 191487 | CLAMP, TUBE 3X3 | |
| 21 | 198320 | ASSY, TRUNION MOUNT 1-1/4" | |
| 22 | 1P444 | SET SCREW, 3/8-16 X 3/4 NYLON | |
| 23 | 203525 | SPRING-TORSION, RUBBER, 1-3/4 | |
| 24 | 204505 | ARM WLDMT DOUBLE REEL | |
| 25 | 204510 | PLATE GANGBAR MOUNT | |
| 26 | 204511 | TUBE, CLAMP | |
| 27 | 206652 | SPRING ASSY 17" 1-1/8 THD | |
| 28 | 206670 | CYL ASM 2-1/2X1 ST 1-1/8 THDS **(SEE PAGE 2-71)** | |
| 29 | 1-511-010002-11 | NUT,HEX JAM,1-1/8-12 UNF,GR2 | |
| 30 | ---- | DOUBLE REEL ASSEMBLIE**S (SEE PAGE 2-67 OR SEE PAGE 2-69)** | |
| 31 | 191924 | TRUNION, CYLINDER | |
| 32 | 191925 | TRUNION, BEARING | |
| 33 | 188530 | SNAP RING, 2 SHAFT | |

https://truckmanualshub.com/



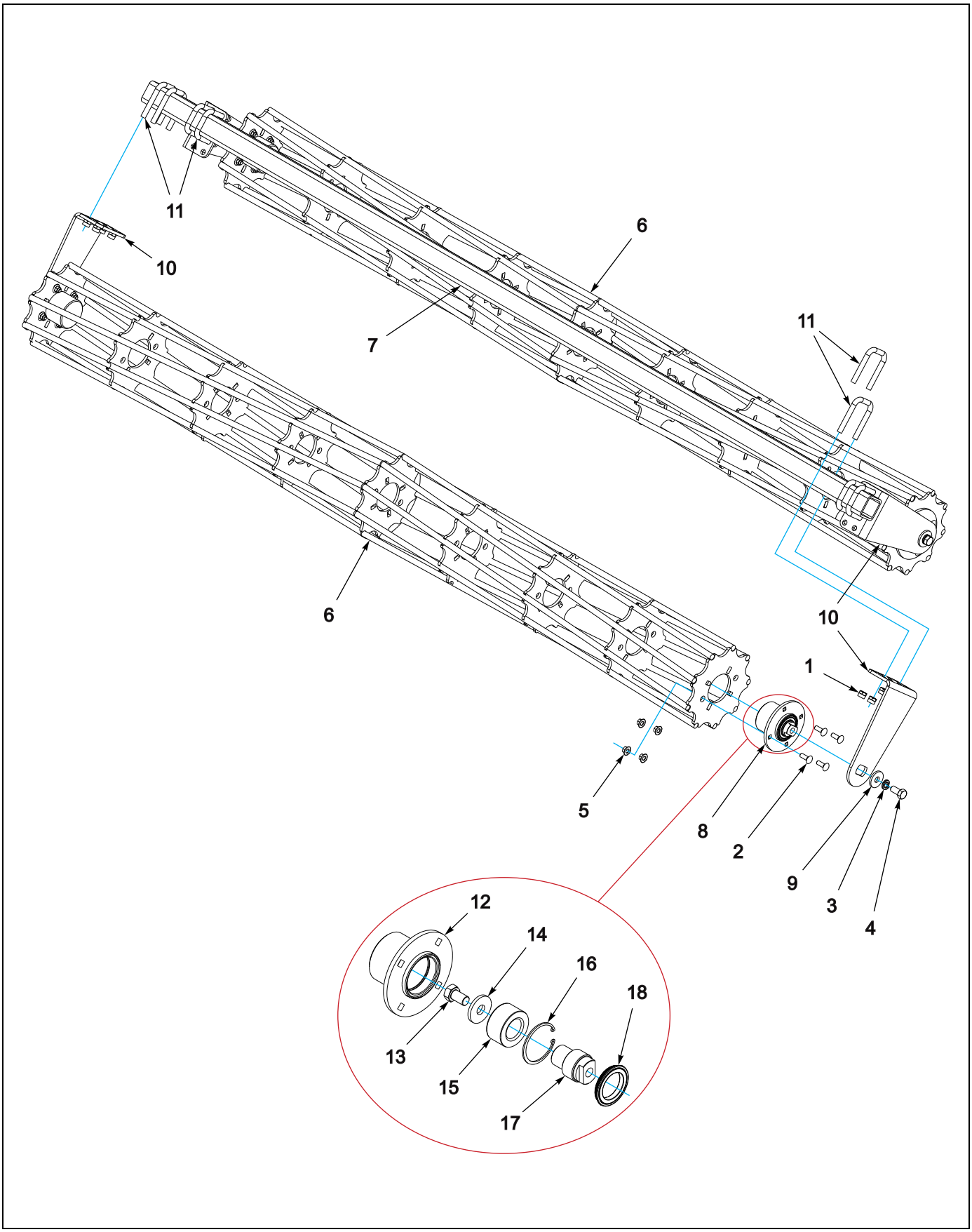


Figure 2-35: Double Round Reel Assembly

https://truckmanualshub.com/



# DOUBLE ROUND REEL ASSEMBLY

| ITEM | PART NO. | DESCRIPTION | QTY. | | | | | | | |
|---|---|---|---|---|---|---|---|---|---|---|
| | 204416 | DOUBLE REEL ASSY 135/150 | * | | | | | | | |
| | 204417 | DOUBLE REEL ASSY, 75/75 | | * | | | | | | |
| | 204418 | DOUBLE REEL ASSY, 90/90 | | | * | | | | | |
| | 204419 | DOUBLE REEL ASSY, 105/105 | | | | * | | | | |
| | 204422 | DOUBLE REEL ASSY, 120/120 | | | | | * | | | |
| | 204423 | DOUBLE REEL ASSY, 75/75 | | | | | | * | | |
| | 204424 | DOUBLE REEL ASSY, 90/90 | | | | | | | * | |
| | 204425 | DOUBLE REEL ASSY, 105/105 | | | | | | | | * |
| 1 | 1-512-010005-13 | DOUBLE REEL ASSY, 120/120 | 16 | 16 | 16 | 16 | 16 | 16 | 16 | 16 |
| 2 | 1-654-010070-03 | SCREW RDHD SQNK1/2-13X1-1/2 | 16 | 16 | 16 | 16 | 16 | 16 | 16 | 16 |
| 3 | 1-861-010034-17 | WASHER,LKG,HLCL SPR,3/4 | 4 | 4 | 4 | 4 | 4 | 4 | 4 | 4 |
| 4 | 108705 | SCREW,HEXCAP,3/4-10X1-1/2 GR8 | 4 | 4 | 4 | 4 | 4 | 4 | 4 | 4 |
| 5 | 172509 | NUT,1/2-13 WIDE FLNG TOP LCK F | 16 | 16 | 16 | 16 | 16 | 16 | 16 | 16 |
| 6 | 176635 | REEL WLDMT 12 DIA X 75 | 2 | -- | -- | -- | 2 | -- | -- | -- |
| 6 | 176636 | REEL WLDMT 12 DIA X 90 | -- | 2 | -- | -- | -- | 2 | -- | -- |
| 6 | 176637 | REEL WLDMT 12 DIA X 105 | -- | -- | 2 | -- | -- | -- | 2 | -- |
| 6 | 176638 | REEL WLDMT 12 DIA X 120 | -- | -- | -- | -2 | -- | -- | -- | 2 |
| 7 | 190955 | GANG BAR, DOUBLE REEL 85L | 1 | -- | -- | -- | 1 | -- | -- | -- |
| 7 | 190956 | GANG BAR, DOUBLE REEL 100 L | -- | 1 | -- | -- | -- | 1 | -- | -- |
| 7 | 190957 | GANG BAR, DOUBLE REEL 115 L | -- | -- | 1 | -- | -- | -- | 1 | -- |
| 7 | 190958 | GANG BAR, DOUBLE REEL 130 L | -- | -- | -- | 1 | -- | -- | -- | 1 |
| 8 | 200222 | HUB ASSY REEL | 4 | 4 | 4 | 4 | 4 | 4 | 4 | 4 |
| 9 | 200259 | WASHER, 3/4 HEAVY - 2-1/4 | 4 | 4 | 4 | 4 | 4 | 4 | 4 | 4 |
| 10 | 204400 | BEARING MOUNT, REEL | 4 | 4 | 4 | 4 | 4 | 4 | 4 | 4 |
| 11 | 8-102-010012 | U BOLT | 8 | 8 | 8 | 8 | 8 | 8 | 8 | 8 |
| 12 | 200221 | HUB WLDMT REEL | 4 | 4 | 4 | 4 | 4 | 4 | 4 | 4 |
| 13 | 129263 | SCREW HEX CAP 3/4-10 X 1-1/4 | 4 | 4 | 4 | 4 | 4 | 4 | 4 | 4 |
| 14 | 200259 | WASHER, 3/4 HEAVY - 2-1/4 | 4 | 4 | 4 | 4 | 4 | 4 | 4 | 4 |
| 15 | 174526 | BEARING, DOUBLE TAPER RLLR | 4 | 4 | 4 | 4 | 4 | 4 | 4 | 4 |
| 16 | 174532 | INTERNAL SNAP RING | 4 | 4 | 4 | 4 | 4 | 4 | 4 | 4 |
| 17 | 200218 | SPINDLE REEL BEARING | 4 | 4 | 4 | 4 | 4 | 4 | 4 | 4 |
| 18 | 185757 | SEAL, MAINT FREE HUB HSL | 4 | 4 | 4 | 4 | 4 | 4 | 4 | 4 |

https://truckmanualshub.com/



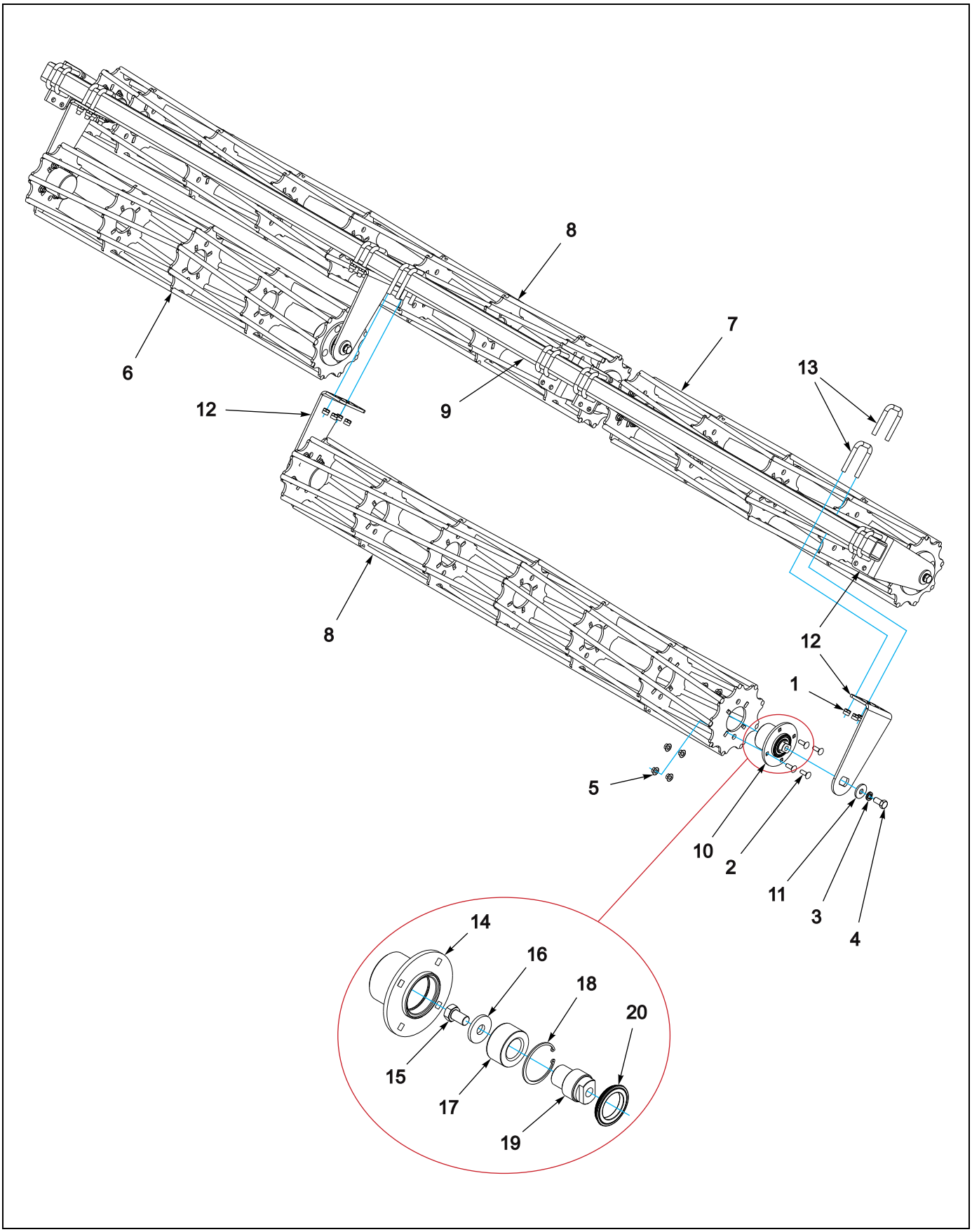


Figure 2-36: Double Reel Assembly Center

https://truckmanualshub.com/


# DOUBLE REEL ASSEMBLY CENTER

| ITEM | PART NO. | DESCRIPTION | QTY. |
|---|---|---|---|
| | 204522 | DOUBLE REEL ASSY 135/150 | |
| 1 | 1-512-010005-13 | NUT,HEX SLFLKG GRB 5/8-11 | 32 |
| 2 | 1-654-010070-03 | SCREW RDHD SQNK1/2-13X1-1/2 | 32 |
| 3 | 1-861-010034-17 | WASHER,LKG,HLCL SPR,3/4 | 8 |
| 4 | 108705 | SCREW,HEXCAP,3/4-10X1-1/2 GR8 | 8 |
| 5 | 172509 | NUT,1/2-13 WIDE FLNG TOP LCK F | 32 |
| 6 | 176633 | REEL WLDMT 12 DIA X 45 | 1 |
| 7 | 176634 | REEL WLDMT 12 DIA X 60 | 1 |
| 8 | 176636 | REEL WLDMT 12 DIA X 90 | 2 |
| 9 | 191998 | GANG BAR, DOUBLE REEL 174L | 1 |
| 10 | 200222 | HUB ASSY REEL | 8 |
| 11 | 200259 | WASHER, 3/4 HEAVY - 2-1/4 | 8 |
| 12 | 204400 | BEARING MOUNT, REEL | 8 |
| 13 | 8-102-010012 | U BOLT | 16 |
| 14 | 200221 | HUB WLDMT REEL | 4 |
| 15 | 129263 | SCREW HEX CAP 3/4-10 X 1-1/4 | 4 |
| 16 | 200259 | WASHER, 3/4 HEAVY - 2-1/4 | 4 |
| 17 | 174526 | BEARING, DOUBLE TAPER RLLR | 4 |
| 18 | 174532 | INTERNAL SNAP RING | 4 |
| 19 | 200218 | SPINDLE REEL BEARING | 4 |
| 20 | 185757 | SEAL, MAINT FREE HUB HSL | 4 |

https://truckmanualshub.com/



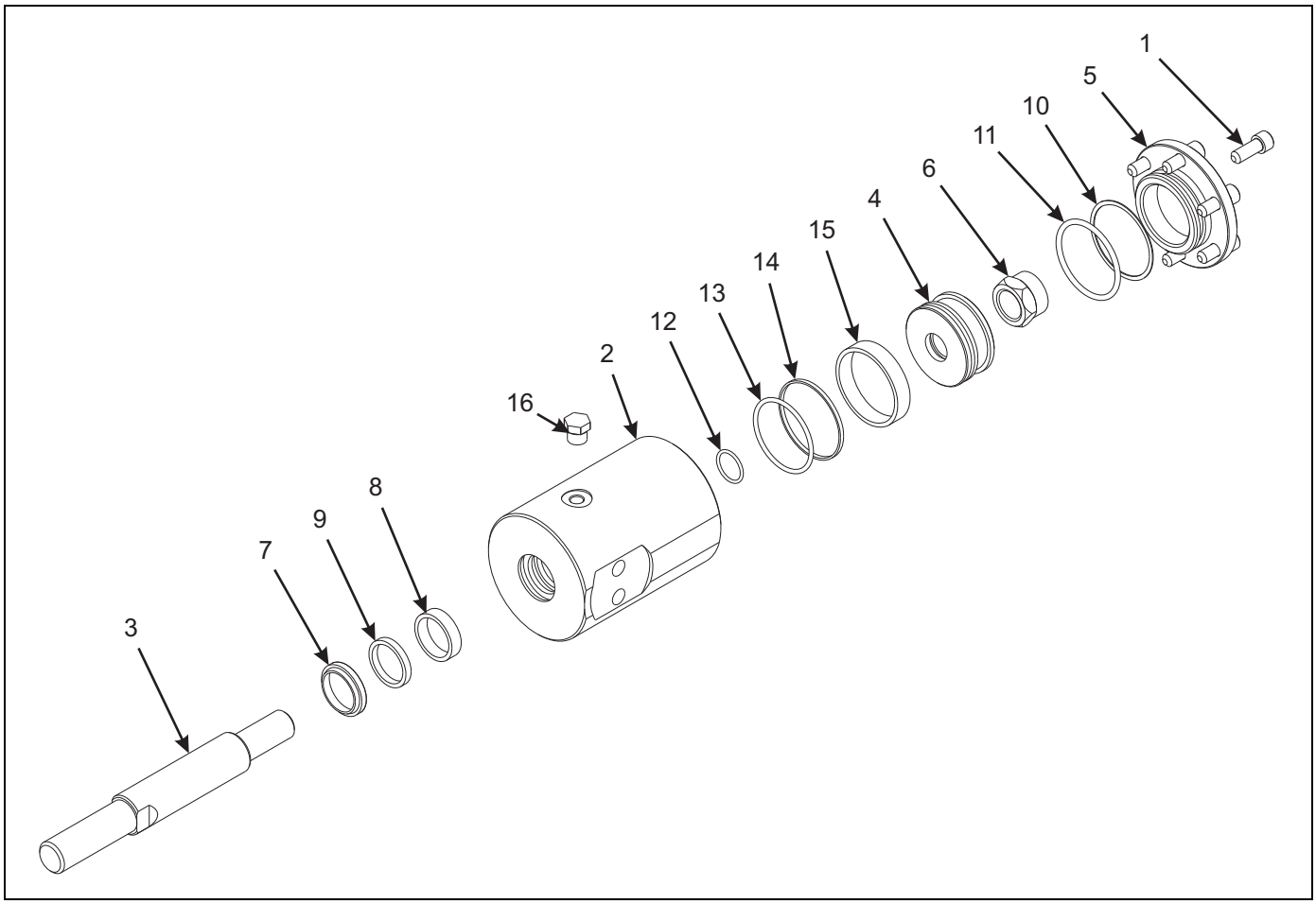


Figure 2-37: Cylinder - 2-1/2” X 1” (1” Thds)

# CYLINDER - 2-1/2” X 1” (1” THDS)

| ITEM | PART NO. | DESCRIPTION | QTY. |
|---|---|---|---|
| | 174720 | CYLINDER ASM 2-1/2"X1" STROKE **(BEFORE 6-8-2017)** | |
| 1 | 1-654-010104245 | SCREW, HEX SOCKET 3/8-16 X 1 | 6 |
| 2 | 171077 | CYLINDER, BARREL | 1 |
| 3 | 171078 | ROD 1-1/4 DIA **(1” THREADS)** | 1 |
| 4 | 174719 | PISTON, 2-1/2 BORE | 1 |
| 5 | 171080 | BASE CAP 2-1/2 | 1 |
| 6 | 171093 | NUT, HEX LOCK 7/8-14 GRC | 1 |
| 7 | ----- | WIPER, 1-1/4 ROD | 1 |
| 8 | ----- | WEAR RING, 1-1/4 ROD | 1 |
| 9 | ----- | U-CUP, 1-1/4 ROD | 1 |
| 10 | ----- | BACK-UP RING, CAP | 1 |
| 11 | ----- | O-RING, CAP | 1 |
| 12 | ----- | O-RING, PISTON | 1 |
| 13 | ----- | O-RING, PISTON | 1 |
| 14 | ----- | SEAL, 2-1/2 PISTON | 1 |
| 15 | ----- | WEAR RING, 2-1/2 PISTON | 1 |
| 16 | 900598-6S | PLUG, O-RING 9/16-18 | 2 |
| 17 | 171081 | SEAL KIT **(NOT SHOWN) (INCLUDES ITEMS 7 - 15)** | |

https://truckmanualshub.com/



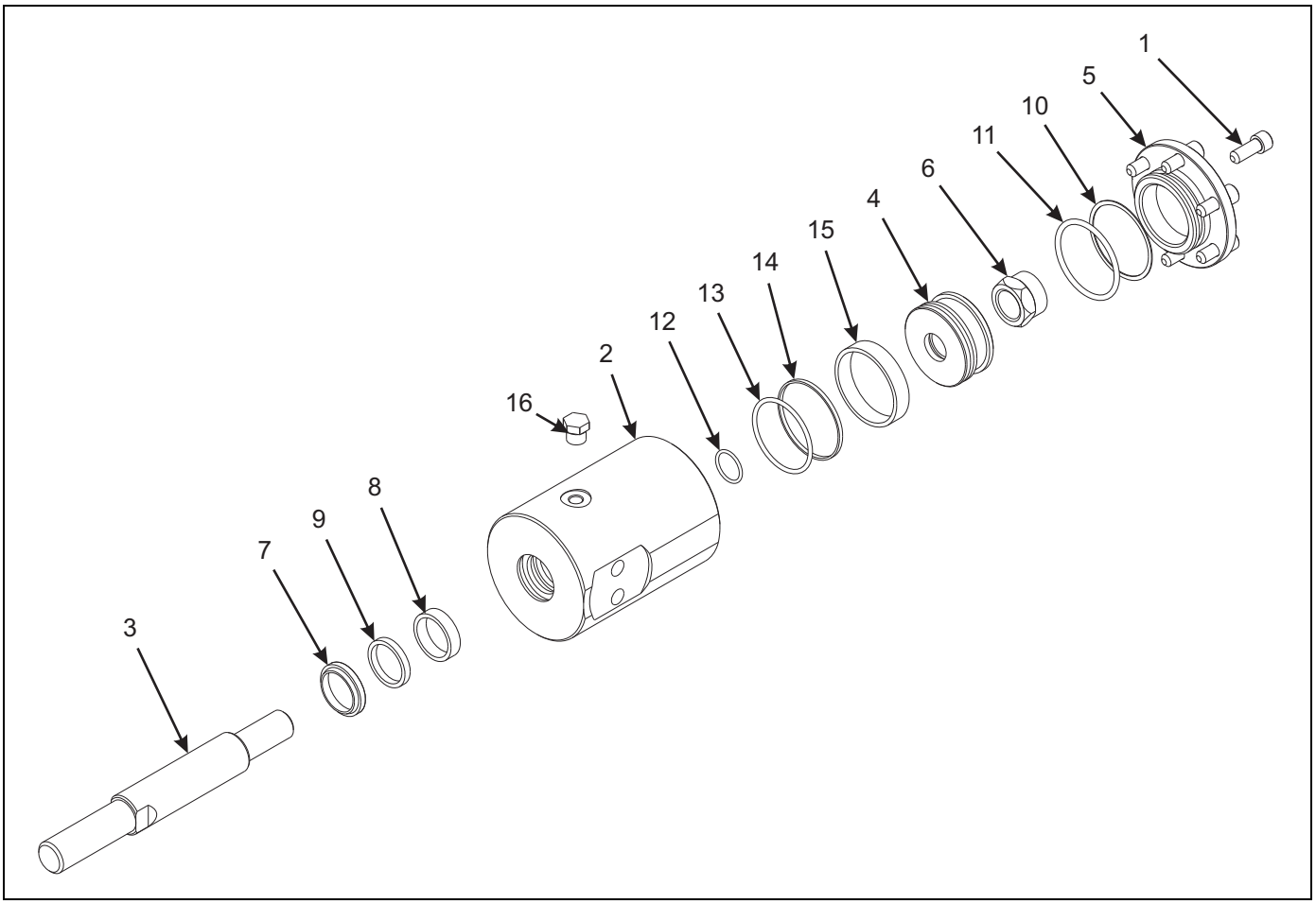


Figure 2-38: Cylinder - 2-1/2” X 1” (1-1/8” Thds)

# CYLINDER - 2-1/2” X 1” (1-1/8” THDS)

| ITEM | PART NO. | DESCRIPTION | QTY. |
|---|---|---|---|
| | 206670 | CYL ASM 2-1/2X1 ST 1-1/8 THDS **(AFTER 6-8-2017)** | |
| 1 | 1-654-010104245 | SCREW, HEX SOCKET 3/8-16 X 1 | 6 |
| 2 | 171077 | CYLINDER, BARREL | 1 |
| 3 | 206599 | ROD, 1-1/4 1-1/8” THD | 1 |
| 4 | 171079 | PISTON, 2-1/2 | 1 |
| 5 | 171080 | BASE CAP 2-1/2 | 1 |
| 6 | 171093 | NUT, HEX LOCK 7/8-14 GRC | 1 |
| 7 | ----- | WIPER, 1-1/4 ROD | 1 |
| 8 | ----- | WEAR RING, 1-1/4 ROD | 1 |
| 9 | ----- | U-CUP, 1-1/4 ROD | 1 |
| 10 | ----- | BACK-UP RING, CAP | 1 |
| 11 | ----- | O-RING, CAP | 1 |
| 12 | ----- | O-RING, PISTON | 1 |
| 13 | ----- | O-RING, PISTON | 1 |
| 14 | ----- | SEAL, 2-1/2 PISTON | 1 |
| 15 | ----- | WEAR RING, 2-1/2 PISTON | 1 |
| 16 | 900598-6S | PLUG, O-RING 9/16-18 | 2 |
| 17 | 171081 | SEAL KIT **(NOT SHOWN) (INCLUDES ITEMS 7 - 15)** | |

| 7-PIN CONN | 4-PIN TOWER | CIRCUIT | WIRE COLOR |
|---|---|---|---|
| 1 | D | GROUND | GROUND |
| 2 | | WORK LAMPS | BLACK |
| 3 | B | LEFT FLASHING & TURN | YELLOW |
| 4 | | STOP LAMPS | RED |
| 5 | A | RIGHT FLASHING & TURN | GREEN |
| 6 | C | TAIL LAMPS | BROWN |
| 7 | | SWITCHED POWER (12V) | BLUE |

13

| | 1 | 2 | 3 | 4 | 5 |
|---|---|---|---|---|---|
| | 2-PIN TOWER | 3-PIN TOWER | 6-PIN SHROUD | 3-PIN TOWER | 2-PIN TOWER |
| BLACK LEFT TURN | | | A | C | |
| WHITE GROUND | A | A | B | A | A |
| BROWN TAIL LIGHT | | B | C | B | |
| YELLOW LEFT TURN | | | D | | B |
| GREEN RIGHT TURN | B | | E | | |
| RED RIGHT TURN | | C | F | | |

14

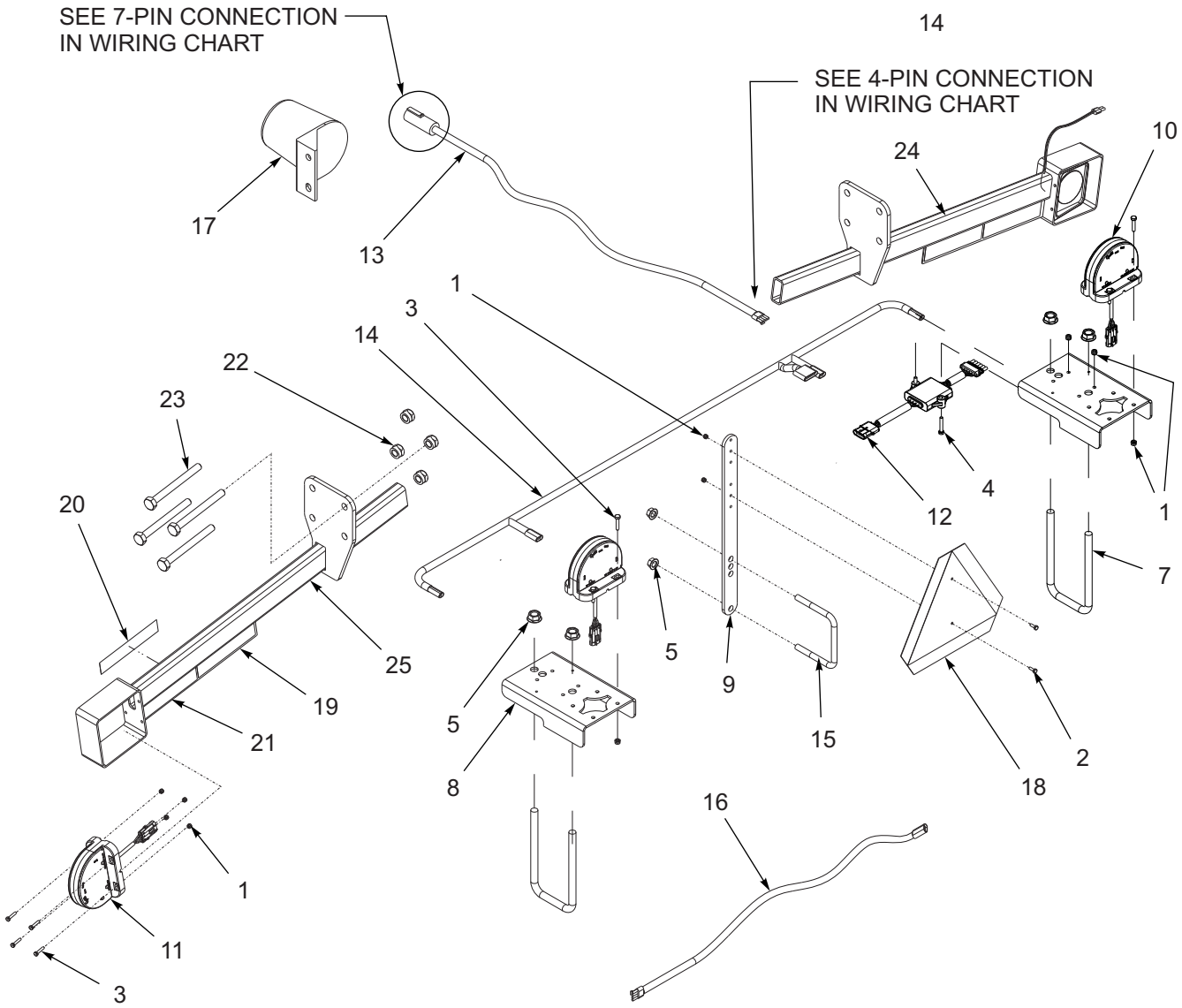


**Figure 2-39: Electrical Assembly**

https://truckmanualshub.com/


# ELECTRICAL ASSEMBLY

| ITEM | PART NO. | DESCRIPTION | QTY. |
|---|---|---|---|
| | 177035 | LIGHT KIT | |
| 1 | 1-512-010005-01 | NUT, HEX LOCK 1/4-20 GRB | 20 |
| 2 | 1-654-010047-04 | SCREW, HEX HEAD CAP 1/4-20 X 3/4 GR5 | 2 |
| 3 | 1-654-010047-07 | SCREW, HEX HEAD CAP 1/4-20 X 1-1/4 GR5 | 16 |
| 4 | 1-654-010047-08 | SCREW, HEX HEAD CAP 1/4-20 X 1-1/2 GR5 | 2 |
| 5 | 100827 | NUT, FLANGE HEAD SERRATED 5/8-11 | 6 |
| 6 | 105874 | TIE SELF LOCKING 19" **(NOT SHOWN)** | 15 |
| 7 | 157648 | U-BOLT, HYDRAULIC MOUNT | 2 |
| 8 | 164138 | MOUNT, TAIL LIGHT | 2 |
| 9 | 164142 | BRACKET MOUNTING, SMV | 1 |
| 10 | 174435 | LAMP, AG RED SINGLE LED | 2 |
| 11 | 174436 | LAMP, AG AMBER SINGLE LED | 2 |
| 12 | 174437 | MODULE, AG FLASHER CONTROL | 1 |
| 13 | 174438 | HARNESS, MAIN WARNING LIGHTS | 1 |
| 14 | 174439 | HARNESS, REAR WARNING LIGHTS | 1 |
| 15 | 2-102-010032 | U-BOLT | 1 |
| 16 | 2-368-010273 | HARNESS, 34" EXTENSION | 2 |
| 17 | 2-368-010287 | HARNESS, STOR-AWAY | 1 |
| 18 | 70260977 | SMV EMBLEM | 1 |
| 19 | 528933 | REFLECTOR, RED | 2 |
| 20 | 528934 | REFLECTOR, YELLOW | 2 |
| 21 | 528938 | STRIPE, ORANGE | 2 |
| 22 | 1-512-010005-15 | NUT, HEX LOCK 3/4-10 GRB | REF |
| 23 | W908409-4 | SCREW, HEX HEAD CAP 3/4-10 X 6 GR5 | REF |
| 24 | 165268 | BRACKET WELDMENT, RH W/ REFLECTORS **(INCL. ITEMS 19-21)** | 1 |
| 25 | 165269 | BRACKET WELDMENT, LH W/ REFLECTORS **(INCL. ITEMS 19-21)** | 1 |

https://truckmanualshub.com/



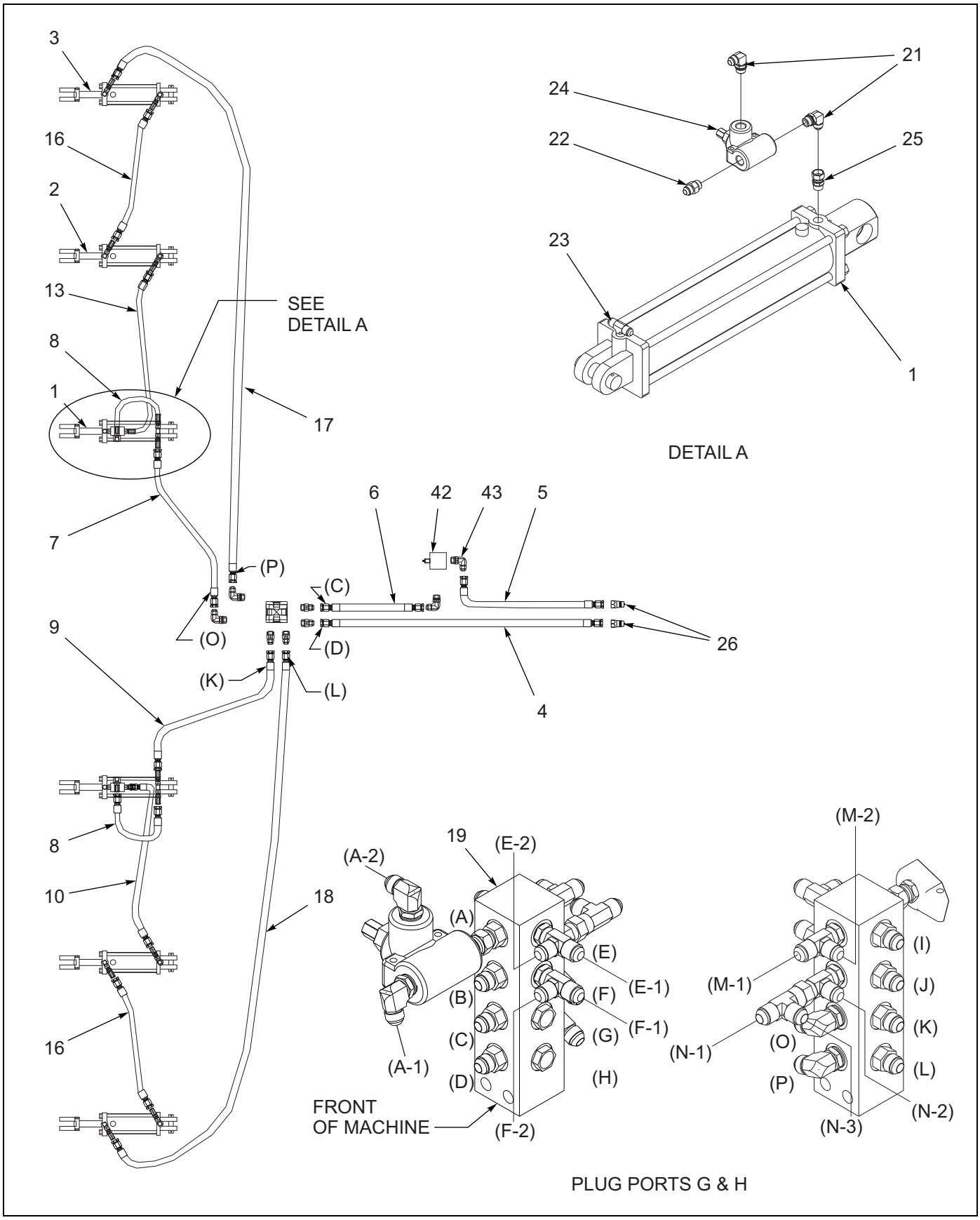


**Figure 2-40: Lift Hydraulic Assembly (39')**

https://truckmanualshub.com/



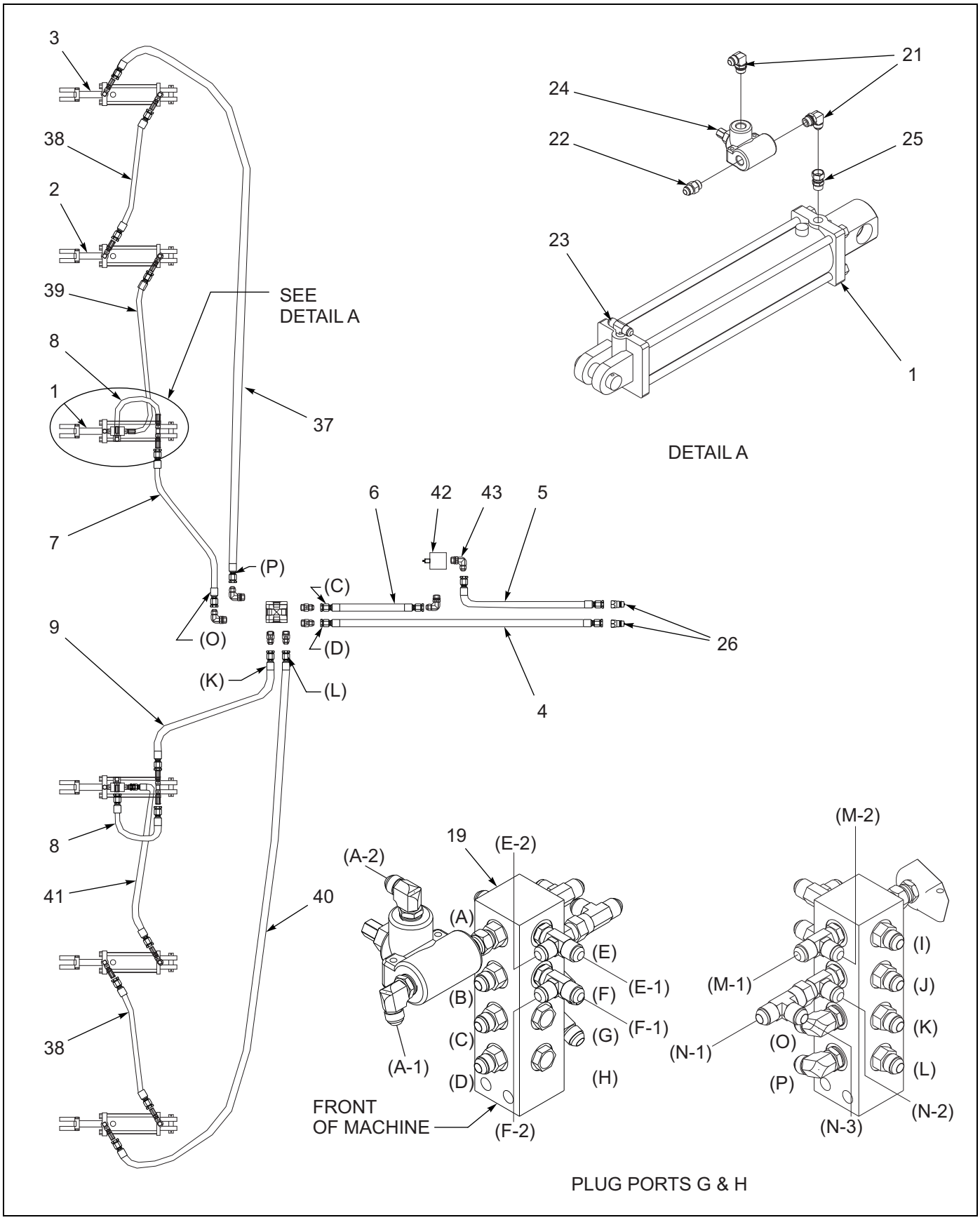


**Figure 2-41: Lift Hydraulic Assembly (44')**

https://truckmanualshub.com/



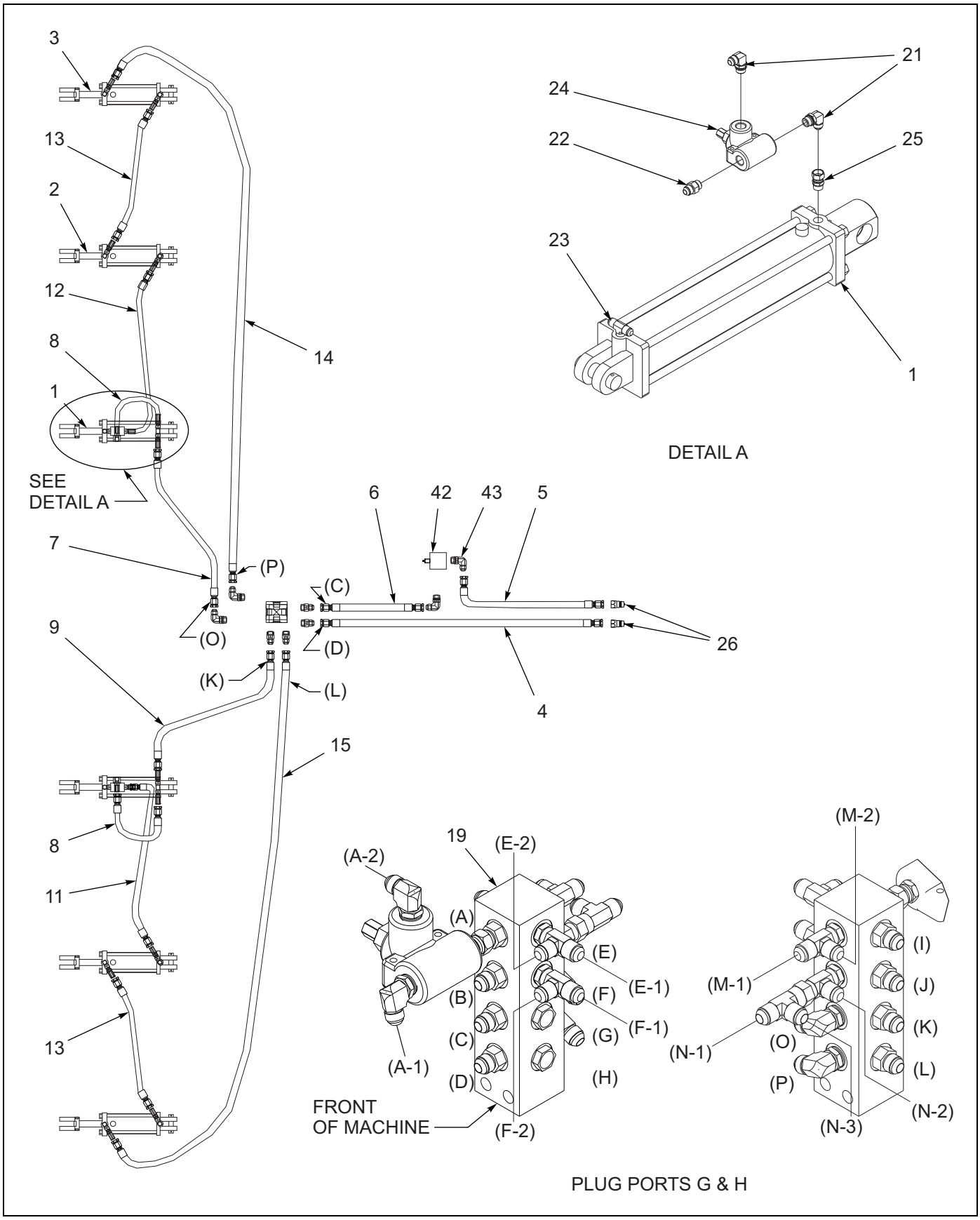


**Figure 2-42: Lift Hydraulic Assembly (49')**

https://truckmanualshub.com/


# LIFT HYDRAULIC ASSEMBLY

| ITEM | PART NO. | DESCRIPTION | QTY. |
|---|---|---|---|
| | 165284 | HYDRAULIC KIT (INCL. ITEMS 14-35) | |
| | 166715 | HOSE KIT (49') (INCL. ITEMS 4-9, 11-15) | |
| | 166714 | HOSE KIT (44') (INCL. ITEMS 4-9, 37 - 41) | |
| | 165285 | HOSE KIT (39') (INCL. ITEMS 4-9, 10, 13, 16 - 18) | |
| 1 | 146824 | CYLINDER, 4-1/2 X 16 REPHASE **(SEE PAGE 2-90)** | |
| 2 | 146825 | CYLINDER, 4 X 16 REPHASE **(SEE PAGE 2-89)** | |
| 3 | 163700 | CYLINDER, 3-3/4 X 16 REPHASE **(SEE PAGE 2-93)** | |
| 4 | 168892 | HOSE ASSEMBLY, 1/2 X 271 | |
| 5 | 180020 | HOSE ASSEMBLY, 1/2 X 230 | |
| 6 | 124132 | HOSE ASSEMBLY, 1/2 X 49 | |
| 7 | 147123 | HOSE ASSEMBLY, 3/8 X 31 | |
| 8 | 147582 | HOSE ASSEMBLY, 3/8 X 24 | |
| 9 | 116491 | HOSE ASSEMBLY, 3/8 X 96 | |
| 10 | 116434 | HOSE ASSEMBLY, 3/8 X 120 | |
| 11 | 116435 | HOSE ASSEMBLY, 3/8 X 146 | |
| 12 | 153620 | HOSE ASSEMBLY, 3/8 X 140 | |
| 13 | 1422176 | HOSE ASSEMBLY, 3/8 X 116 | |
| 14 | 116437 | HOSE ASSEMBLY, 3/8 X 267 | |
| 15 | 166978 | HOSE ASSEMBLY, 3/8 X 340 | |
| 16 | 71508987 | HOSE ASSEMBLY, 3/8 X 86 | |
| 17 | 153621 | HOSE ASSEMBLY, 3/8 X 212 | |
| 18 | 164308 | HOSE ASSEMBLY, 3/8 X 285 | |
| 19 | 167557 | MANIFOLD ASSEMBLY, FRONT **(SEE PAGE 2-84)** | |
| 20 | 141275 | BRACKET, HOSE CLAMP **(NOT SHOWN)** | |
| 21 | 2062-8-8S | ADAPTER, 90 | |
| 22 | 202702-8-8S | ADAPTER | |
| 23 | 203003-8-8S | ADAPTER, TEE | |
| 24 | 165287 | VALVE, RELIEF 1000 PSI | |
| 25 | 102-1130 | FITTING, STR SWIVEL | |
| 26 | 141828 | COUPLER, MALE 3/4-16 | |
| 27 | 141854 | BRACKET, MANIFOLD MOUNT | |
| 28 | 155528 | HOSE WRAP, BLUE **(USED TO WRAP LIFT HOSES) (NOT SHOWN)** | |
| 29 | 1-512-010005-05 | NUT, HEX LOCK 3/8-16 GRB **(NOT SHOWN)** | |
| 30 | 1-512-010005-09 | NUT, HEX LOCK 1/2-13 GRB | |
| 31 | 1-654-010051-11 | SCREW, HEX HEAD CAP 3/8-16 X 2-1/2 GR5 | |
| 32 | 1-654-010055-11 | SCREW, HEX HEAD CAP 1/2-13 X 3-1/2 GR5 | |
| 33 | 1-654-010070-04 | SCREW, RD HEAD SQ NECK 1/2-13 X 1-3/4 | |
| 34 | 1-861-010032-11 | WASHER, FLAT 3/8W | |
| 35 | 124971 | NUT, HEX FLANGE SPIRALOCK 1/2-13 | |
| 36 | *2-573-010149 | DECAL, SLAVE | |
| 37 | 71510821 | HOSE ASSEMBLY, 3/8 X 244 | |
| 38 | 139213 | HOSE ASSEMBLY, 3/8 X 105 | |
| 39 | 137600 | HOSE ASSEMBLY, 3/8 X 130 | |
| 40 | 116493 | HOSE ASSEMBLY, 3/8 X 312 | |
| 41 | 141881 | HOSE ASSEMBLY, 3/8 X 136 | |
| 42 | 140693 | VALVE, LIMIT | |
| 43 | 2062-8-8S | ADAPTER, 90 | |

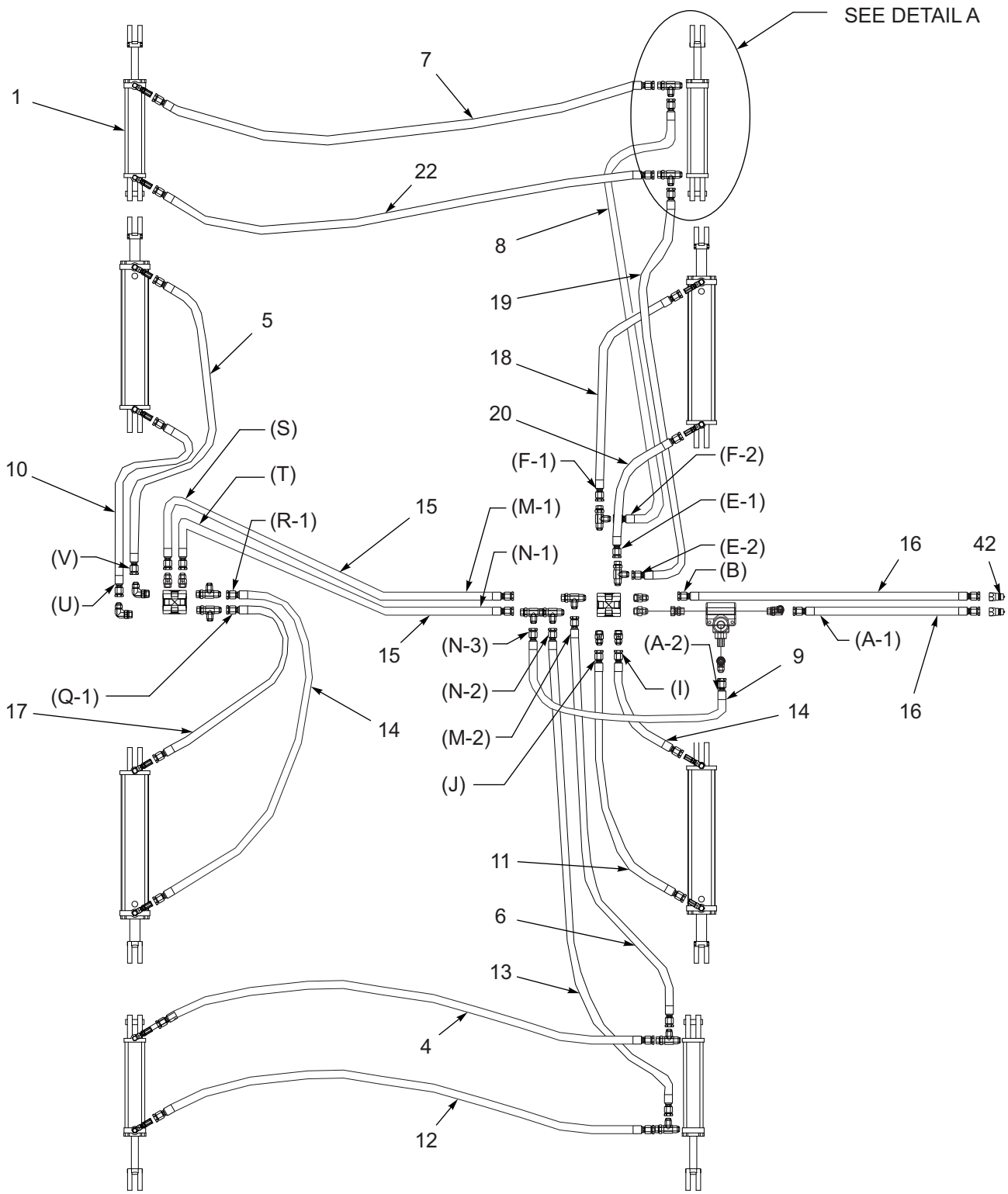


NOTE: ALL FOLD CYLINDERS ARE P/N 140472 1

**Figure 2-43: Fold Hydraulic Assembly (39')**

https://truckmanualshub.com/



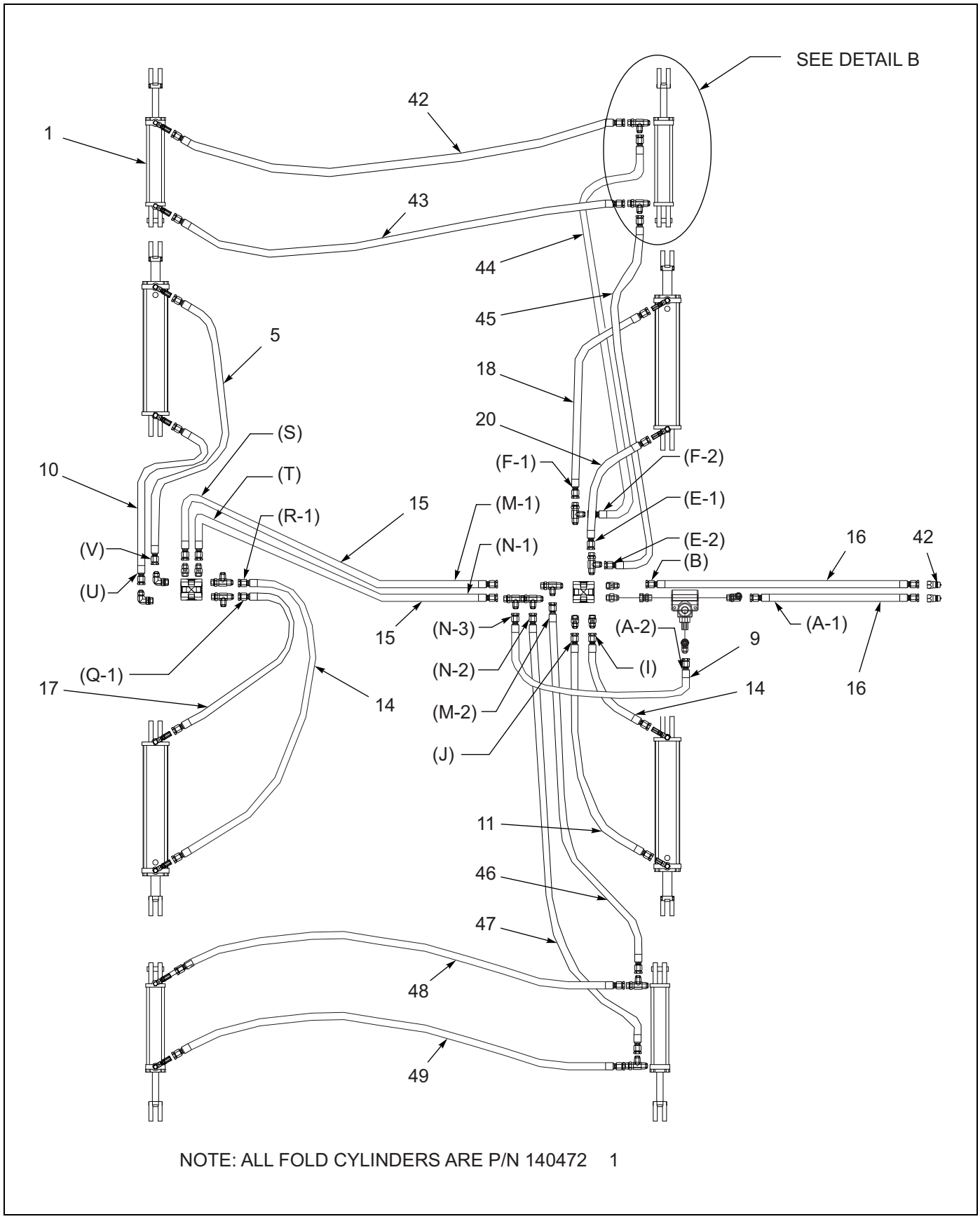


NOTE: ALL FOLD CYLINDERS ARE P/N 140472 1

**Figure 2-44: Fold Hydraulic Assembly (44')**

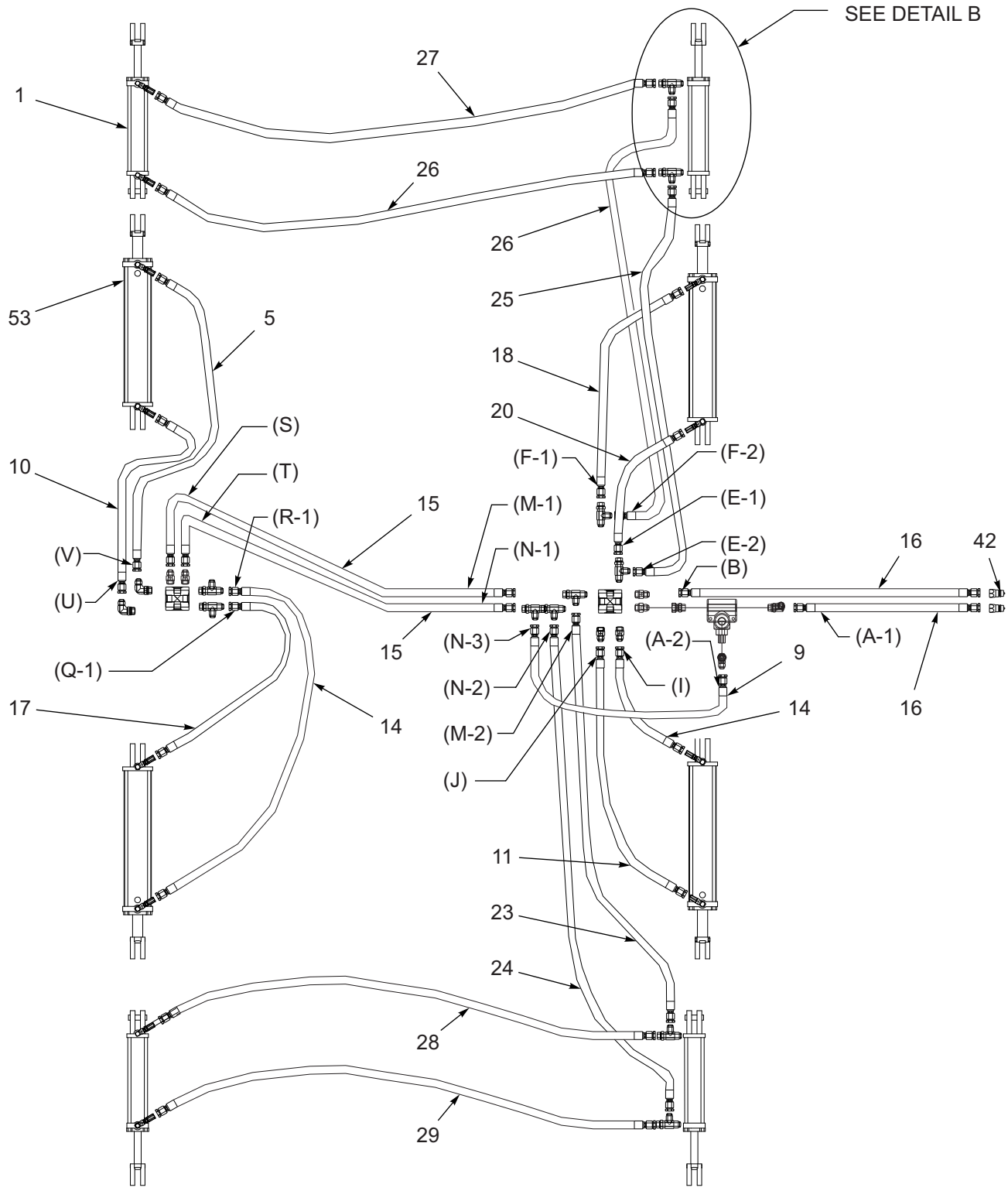


NOTE: ALL OUTER FOLD CYLINDERS ARE P/N 140472 1

ALL INNER FOLD CYLINDERS ARE P/N 167575 53

**Figure 2-45: Fold Hydraulic Assembly (49')**

https://truckmanualshub.com/



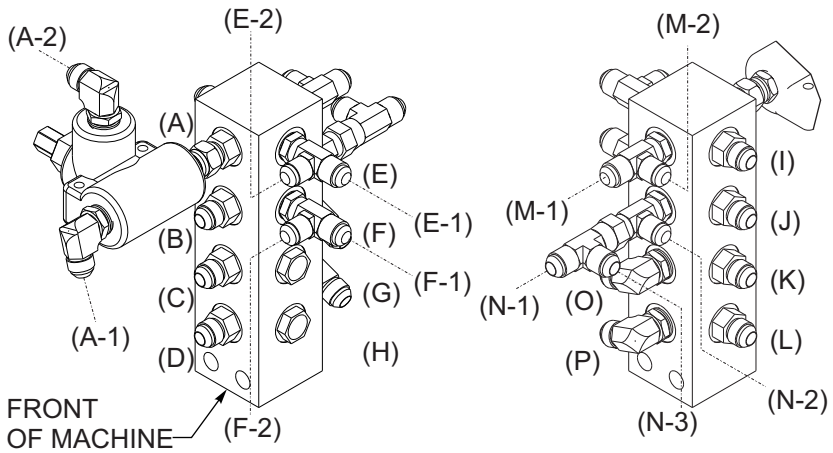


FRONT MANIFOLD ASSEMBLY 30

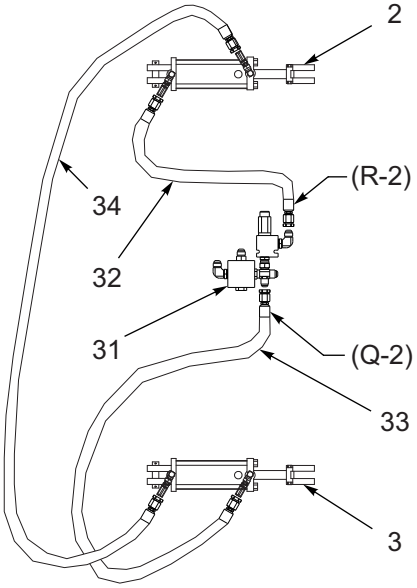


TRANSPORT LOCK HYDRAULICS

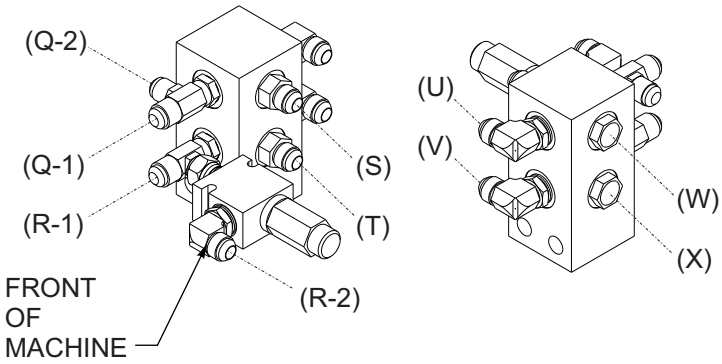


REAR MANIFOLD ASSEMBLY 31

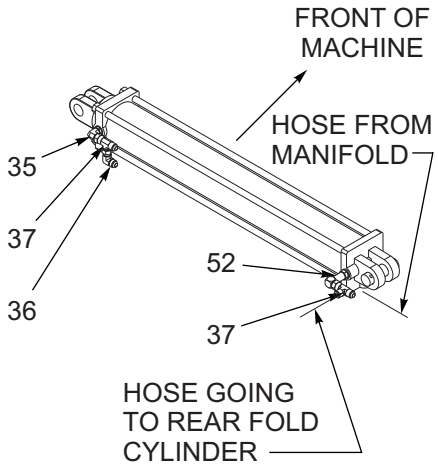


DETAIL A
7450-39

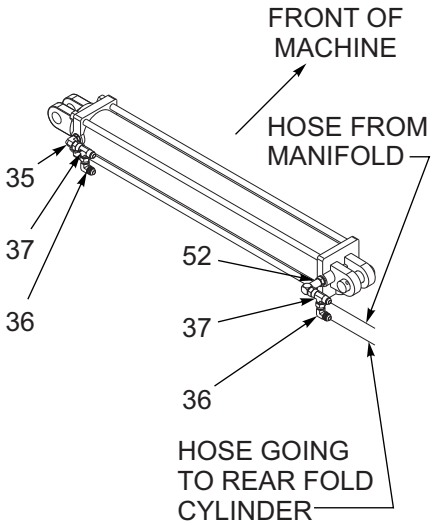


DETAIL B
7450-44/49

**Figure 2-46: Fold Hydraulic Assembly Details**

https://truckmanualshub.com/



# FOLD HYDRAULIC ASSEMBLY

| ITEM | PART NO. | DESCRIPTION | QTY. |
|---|---|---|---|
| | 165284 | HYDRAULIC KIT **(INCL. ITEMS 30-31, 36-39)** | |
| | 166715 | HOSE KIT **(49') (INCL. ITEMS 5, 9-11, 14-18, 20, 23-29, 32-34)** | |
| | 166714 | HOSE KIT **(44') (INCL. ITEMS 5, 9-11, 14-18, 20, 42-49)** | |
| | 165285 | HOSE KIT **(39') (INCL. ITEMS 4-20, 22)** | |
| 1 | 140472 | CYLINDER 4 X 30 1-1/2 ROD **(SEE PAGE 2-91)** | |
| 2 | 145203 | CYLINDER, HYDRAULIC 3-1/2 X 8 **(SEE PAGE 2-88)** | |
| 3 | 145204 | CYLINDER, HYDRAULIC 3-1/4 X 8 **(SEE PAGE 2-87)** | |
| 4 | 116434 | HOSE ASSEMBLY, 3/8 X 120 | |
| 5 | 116489 | HOSE ASSEMBLY, 3/8 X 64 | |
| 6 | 117260 | HOSE ASSEMBLY, 3/8 X 156 | |
| 7 | 122911 | HOSE ASSEMBLY, 3/8 X 168 | |
| 8 | 137600 | HOSE ASSEMBLY, 3/8 X 130 | |
| 9 | 137601 | HOSE ASSEMBLY, 3/8 X 20 | |
| 10 | 137602 | HOSE ASSEMBLY, 3/8 X 27 | |
| 11 | 139213 | HOSE ASSEMBLY, 3/8 X 105 | |
| 12 | 141864 | HOSE ASSEMBLY, 3/8 X 175 | |
| 13 | 141883 | HOSE ASSEMBLY, 3/8 X 190 | |
| 14 | 147583 | HOSE ASSEMBLY, 3/8 X 72 | |
| 15 | 156945 | HOSE ASSEMBLY, 3/8 X 100 | |
| 16 | 147588 | HOSE ASSEMBLY, 3/8 X 276 | |
| 17 | 71508982 | HOSE ASSEMBLY, 3/8 X 36 | |
| 18 | 71508984 | HOSE ASSEMBLY, 3/8 X 42 | |
| 19 | 116491 | HOSE ASSEMBLY, 3/8 X 96 | |
| 20 | 147582 | HOSE ASSEMBLY, 3/8 X 24 | |
| 21 | 147583 | HOSE ASSEMBLY, 3/8 X 72 | |
| 22 | 1422176 | HOSE ASSEMBLY, 3/8 X 116 | |
| 23 | 150273 | HOSE ASSEMBLY, 3/8 X 185 | |
| 24 | 160693 | HOSE ASSEMBLY, 3/8 X 222 | |
| 25 | 116492 | HOSE ASSEMBLY 3/8 X 128 | |
| 26 | 141889 | HOSE ASSEMBLY, 3/8 X 159 | |
| 27 | 71600088 | HOSE ASSEMBLY, 3/8 X 228 | |
| 28 | 159569 | HOSE ASSEMBLY, 3/8 X 161 | |
| 29 | 167556 | HOSE ASSEMBLY, 3/8 X 232 | |
| 30 | 167557 | MANIFOLD ASSEMBLY, FRONT **(SEE PAGE 2-84)** | |
| 31 | 167558 | MANIFOLD ASSEMBLY, REAR **(SEE PAGE 2-85)** | |
| 32 | 116432 | HOSE ASSEMBLY, 3/8 X 60 | |
| 33 | 116490 | HOSE ASSEMBLY, 3/8 X 78 | |
| 34 | 141881 | HOSE ASSEMBLY, 3/8 X 136 | |
| 35 | 141826 | ELBOW 90 W/ 1/16 RESTRICTOR | |
| 36 | 2071-8-8S | ADAPTER, 90 | |
| 37 | 203102-8-8S | ADAPTER, TEE SWIVEL | |
| 38 | 2062-8-8S | ADAPTER, 90 | |
| 39 | 155529 | HOSE WRAP, YELLOW **(USED TO WRAP WING FOLD HOSES) (NOT SHOWN)** | |
| 40 | 144117 | CYLINDER ASSEMBLY W/ FITTINGS, 4 X 30 **(INCL ITEMS 1, 35,38)** | |
| 41 | 141828 | COUPLER, MALE 3/4-16 | |
| 42 | 141883 | HOSE ASSEMBLY, 3/8 X 190 | |
| 43 | 137598 | HOSE ASSEMBLY, 3/8 X 123 | |
| 44 | 116435 | HOSE ASSEMBLY, 3/8 X 146 | |

https://truckmanualshub.com/


# FOLD HYDRAULIC ASSEMBLY

| ITEM | PART NO. | DESCRIPTION | QTY. |
|---|---|---|---|
| 45 | 166171 | HOSE ASSEMBLY, 3/8 X 114 | |
| 46 | 122911 | HOSE ASSEMBLY, 3/8 X 168 | |
| 47 | 141882 | HOSE ASSEMBLY, 3/8 X 206 | |
| 48 | 116492 | HOSE ASSEMBLY, 3/8 X 128 | |
| 49 | 71509000 | HOSE ASSEMBLY, 3/8 X 202 | |
| 50 | 141275 | BRACKET, HOSE CLAMP **(NOT SHOWN)** | |
| 51 | 2-181-010001 | HOSE CLAMP **(NOT SHOWN)** | |
| 52 | 1400548 | ELBOW, EXTRA LONG | |
| 53 | 167575 | CYLINDER, 4-1/2 X 30 2” DIA ROD **(SEE PAGE 2-92)** | |

https://truckmanualshub.com/



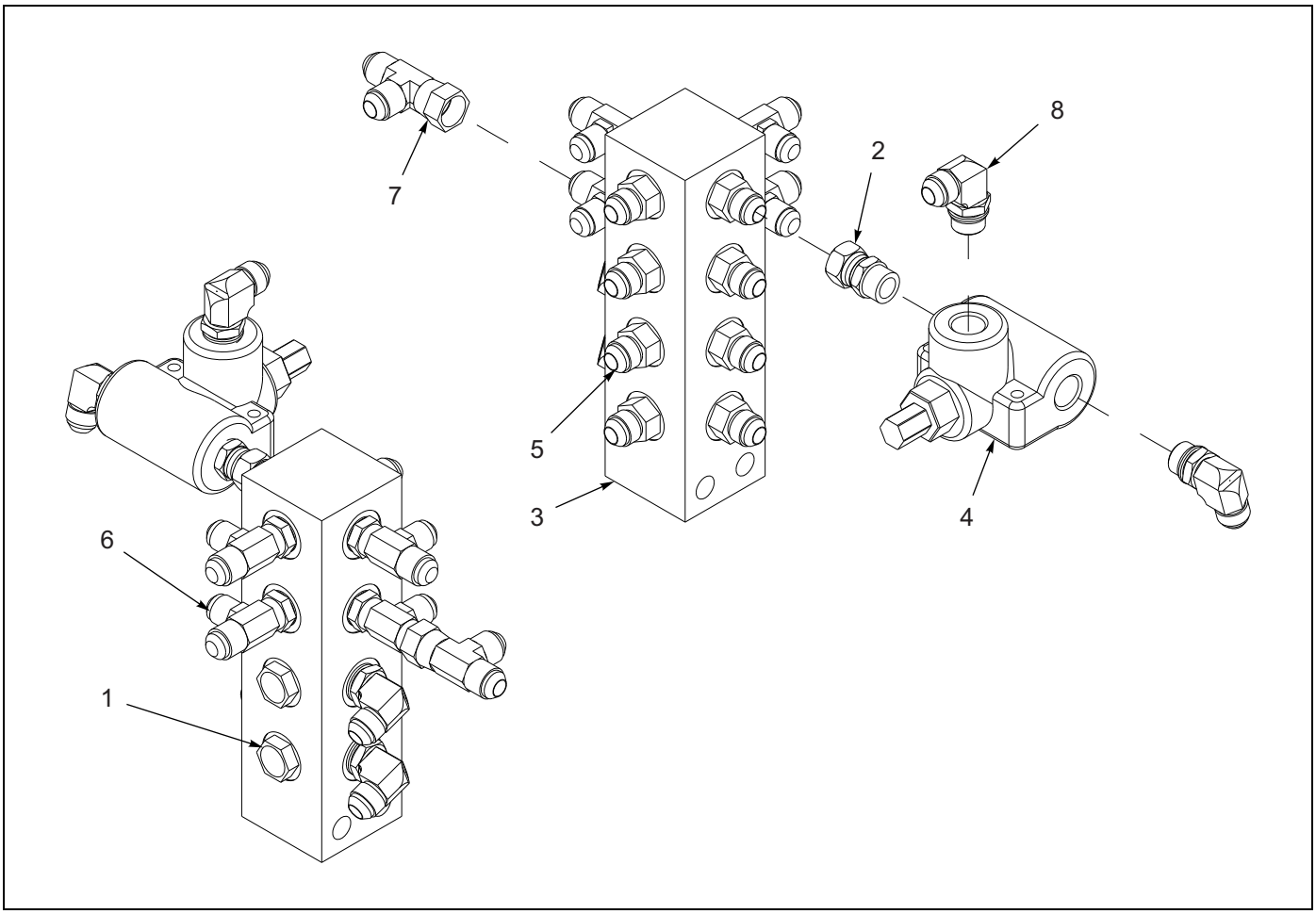


Figure 2-47: Front Manifold Assembly

# FRONT MANIFOLD ASSEMBLY

| ITEM | PART NO. | DESCRIPTION | QTY. |
|---|---|---|---|
| | 167557 | FRONT MANIFOLD ASSEMBLY | |
| 1 | 1-007-010025 | PLUG, 3/4-16 | 2 |
| 2 | 102-1130 | FITTING, STR SWIVEL | 1 |
| 3 | 141594 | MANIFOLD, HYDRAULIC 16 PORT | 1 |
| 4 | 165287 | VALVE, RELIEF 1000 PSI | 1 |
| 5 | 202702-8-8S | ADAPTER | 8 |
| 6 | 203005-8-8S | ADAPTER, TEE | 4 |
| 7 | 203102-8-8S | ADAPTER, TEE SWIVEL | 1 |
| 8 | 2062-8-8S | ADAPTER, 90 | 4 |

https://truckmanualshub.com/


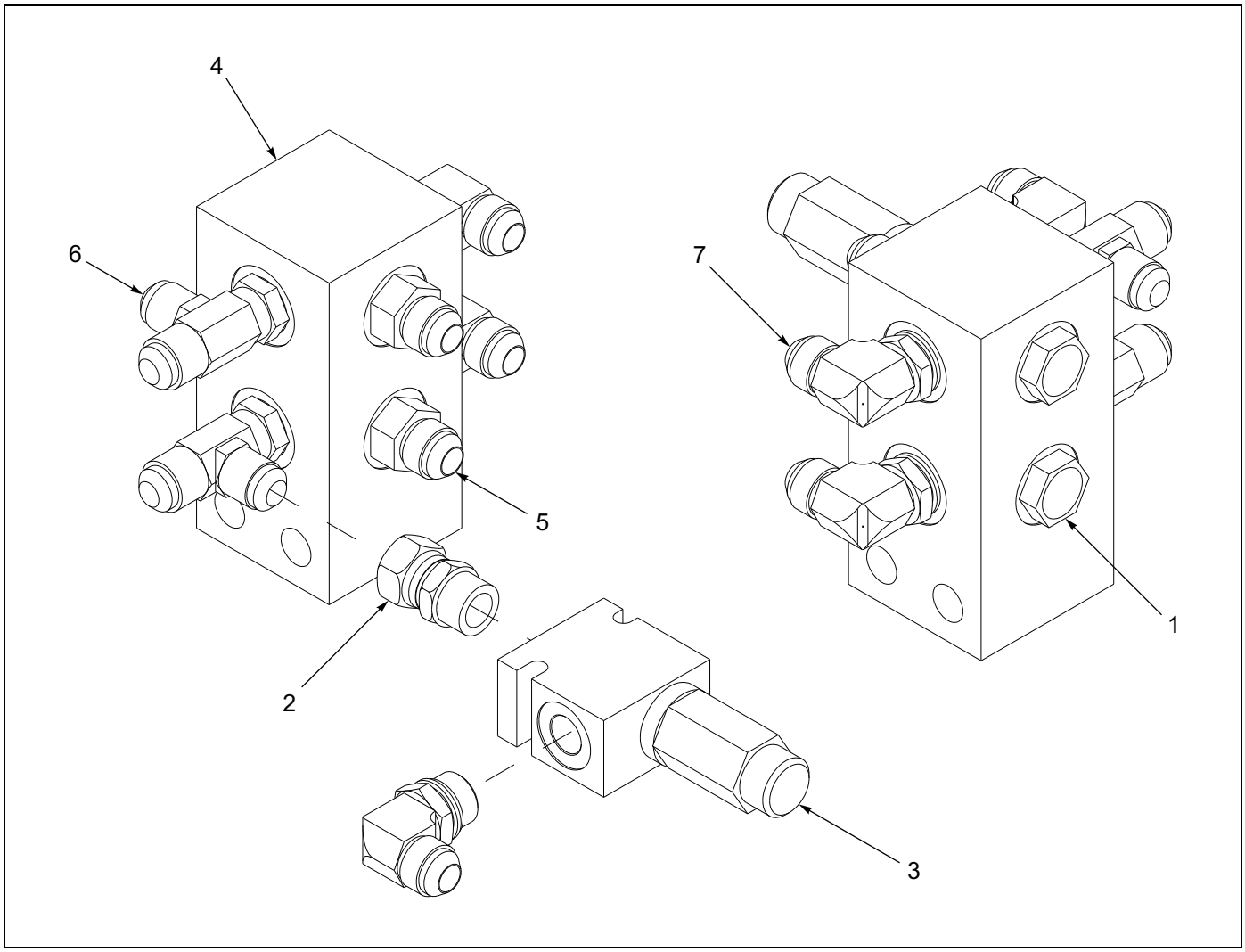


Figure 2-48: Rear Manifold Assembly

## REAR MANIFOLD ASSEMBLY

| ITEM | PART NO. | DESCRIPTION | QTY. |
|---|---|---|---|
| | 167558 | PLUG, 3/4-16 O-RING BOSS | |
| 1 | 1-007-010025 | FTG,STR 8M ORING X 8F JIC SW | 2 |
| 2 | 102-1130 | VALVE,RELIEF PILOT OP W/REV CK | 1 |
| 3 | 193149 | MANIFOLD HYDR ASSY, 8 HOSE | 1 |
| 4 | 2-474-010022 | ADAPTER #8 O-RING TO #8 TUBE | 1 |
| 5 | 202702-8-8S | ADAPTER,TEE,#8 O-RING-TUBE | 2 |
| 6 | 203005-8-8S | ADAPTER, 90, #8 O-RING-TUBE | 2 |
| 7 | 2062-8-8S | PLUG, 3/4-16 O-RING BOSS | 2 |

https://truckmanualshub.com/



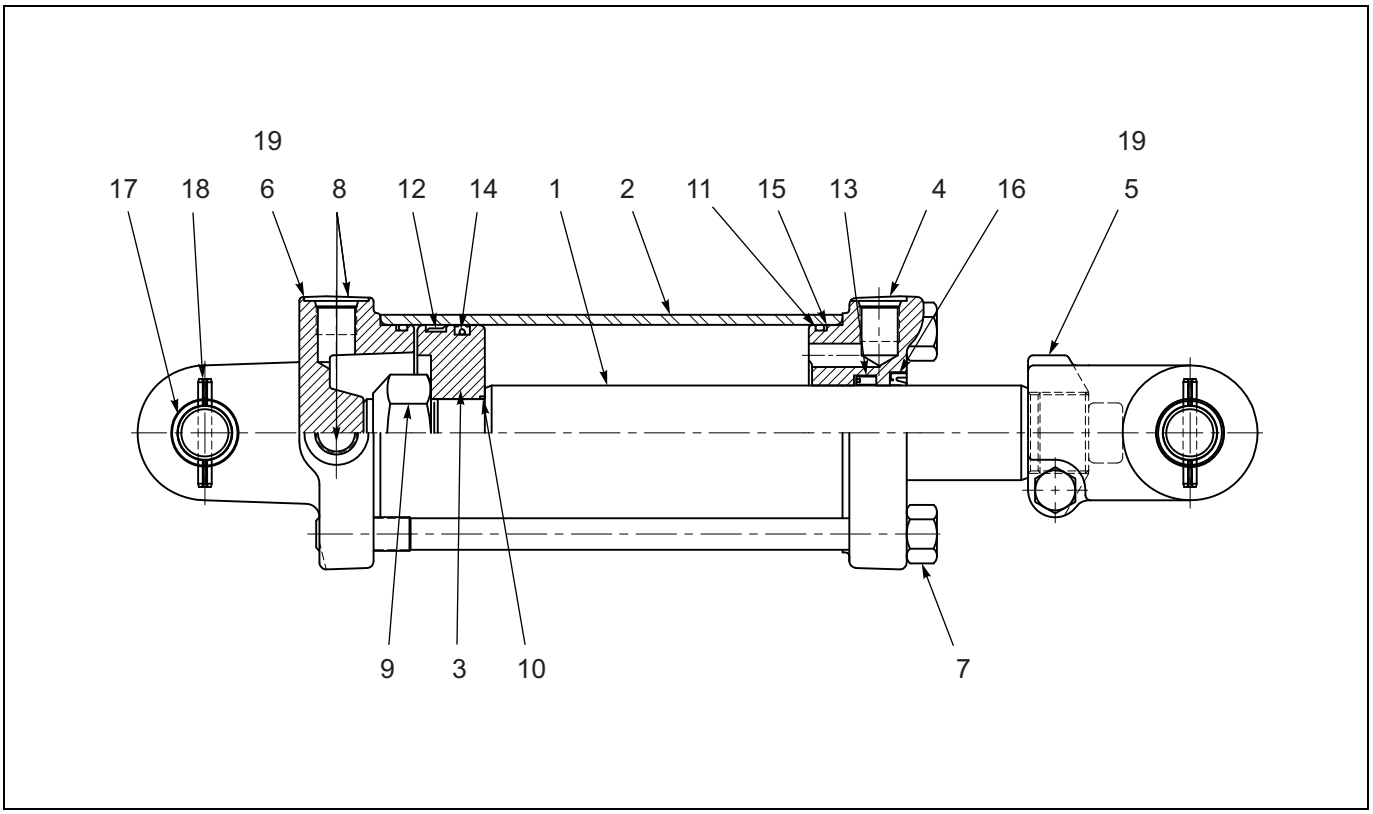


Figure 2-49: Cylinder Assembly- 4 X 8

# CYLINDER ASSEMBLY - 4 X 8

| ITEM | PART NO. | DESCRIPTION | QTY. |
|---|---|---|---|
| | 148387 | CYLINDER, HYDRAULIC 4 X 8 | |
| 1 | 147372 | PISTON ROD | 1 |
| 2 | ----- | TUBE | 1 |
| 3 | ----- | PISTON | 1 |
| 4 | 152638 | GLAND | 1 |
| 5 | 142110 | CLEVIS | 1 |
| 6 | ----- | BUTT | 1 |
| 7 | ----- | TIEROD ASSEMBLY | 4 |
| 8 | ----- | PORT PLUG | 3 |
| 9 | ----- | LOCK NUT 1-1/4-12 | 1 |
| 10 | —— | O-RING | 1 |
| 11 | —— | O-RING | 2 |
| 12 | —— | BEARING RING | 1 |
| 13 | —— | U-CUP | 1 |
| 14 | —— | CROWN SEAL | 1 |
| 15 | —— | BU-WASHER | 2 |
| 16 | —— | WIPER | 1 |
| 17 | 143994 | CLEVIS PIN | 2 |
| 18 | 111789 | ROLL PIN | 4 |
| 19 | 142112 | BUSHING | 4 |
| | 152640 | SEAL KIT **(NOT SHOWN) (INCLUDES ITEMS 10 - 16)** | |

https://truckmanualshub.com/



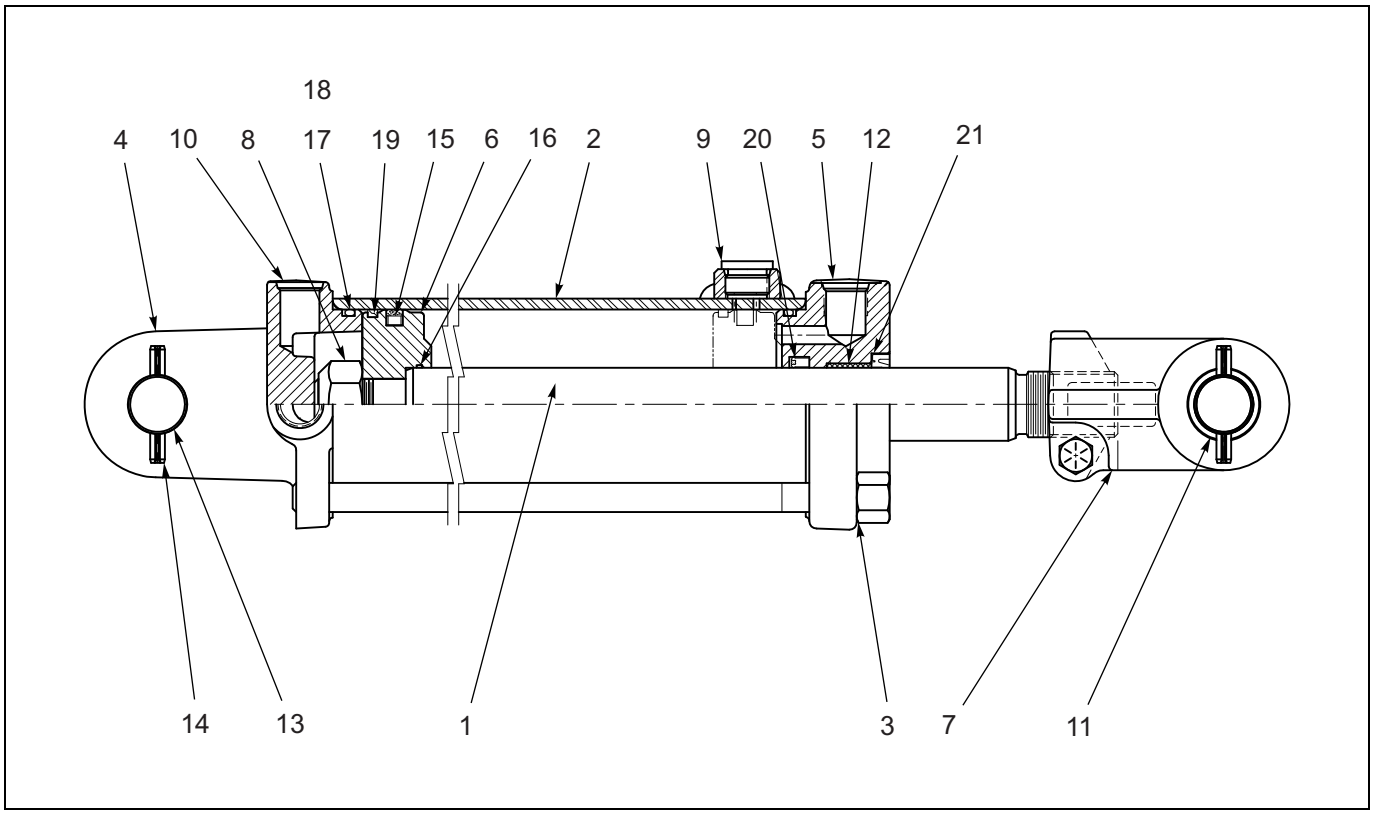


Figure 2-50: Cylinder - Rephase Assembly - 3-1/4 X 8

# CYLINDER - REPHASE ASSEMBLY - 3-1/4 X 8

| ITEM | PART NO. | DESCRIPTION | QTY. |
|---|---|---|---|
| | 145204 | CYLINDER 3-1/4 X 8 REPHASE | |
| 1 | 010600382 | ROD, PISTON | 1 |
| 2 | ----- | TUBE | 1 |
| 3 | ----- | TIE ROD ASSY | 4 |
| 4 | ----- | BUTT CLEVIS ASSY | 1 |
| 5 | 148092 | GLAND | 1 |
| 6 | ----- | PISTON | 1 |
| 7 | 148087 | CLEVIS ASSY | 1 |
| 8 | ----- | NUT, LOCK | 1 |
| 9 | ----- | PLUG, PORT | 1 |
| 10 | ----- | PLUG, PORT | 3 |
| 11 | 148088 | BUSHING | 4 |
| 12 | 125566 | BUSHING | 1 |
| 13 | 143994 | CLEVIS PIN | 2 |
| 14 | 111789 | ROLL PIN | 4 |
| 15 | —— | TEFLON SEAL | 1 |
| *6 | —— | O-RING | 1 |
| 17 | —— | O-RING | 2 |
| 18 | —— | BU-WASHER | 2 |
| 19 | —— | BEARING RING | 1 |
| 20 | —— | U-CUP | 1 |
| 21 | —— | CANNED WIPER | 1 |
| | 148094 | SEAL KIT **(NOT SHOWN) (INCLUDES ITEMS 15 - 21)** | |

https://truckmanualshub.com/



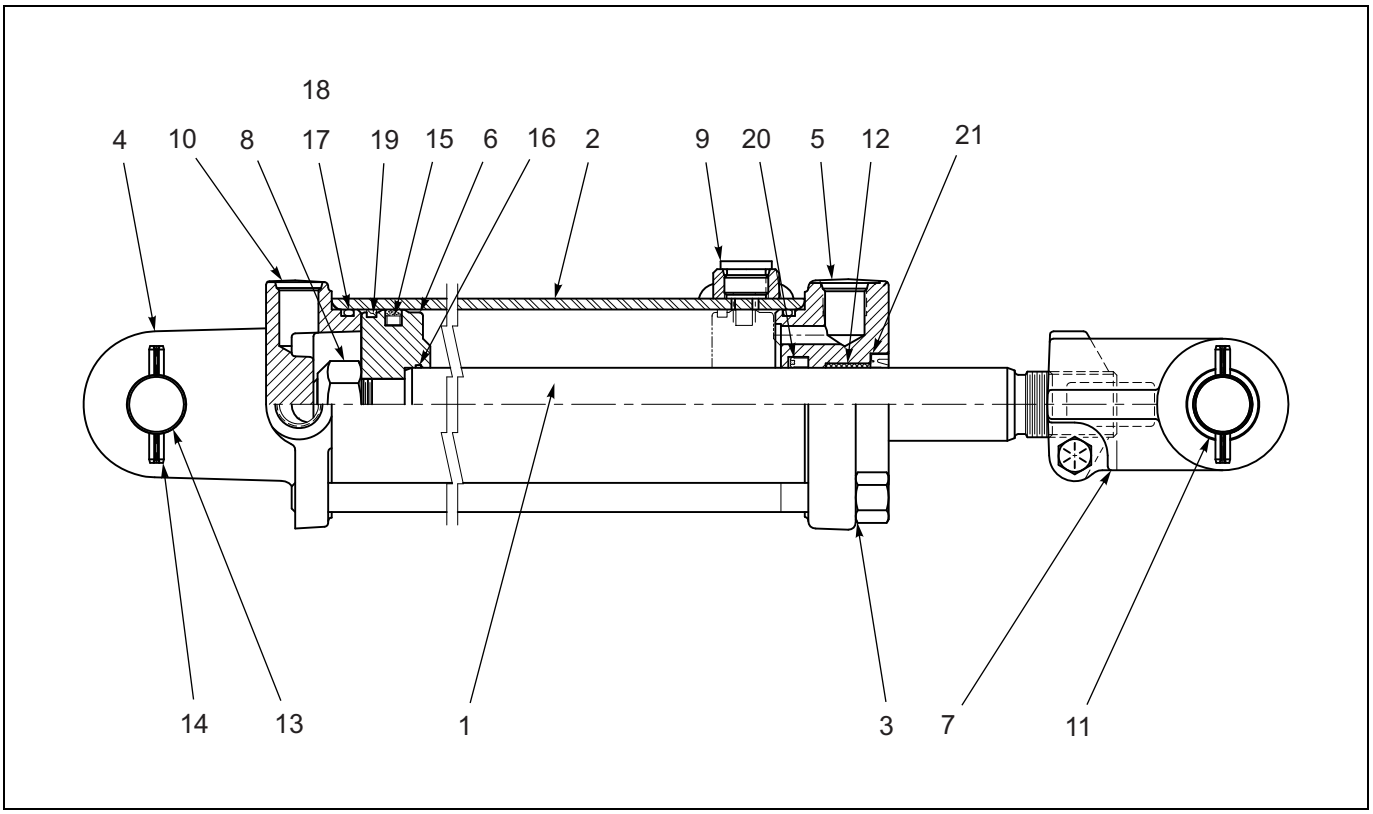


Figure 2-51: Cylinder - Rephase Assembly - 3-1/2 X 8

# CYLINDER - REPHASE ASSEMBLY - 3-1/2 X 8

| ITEM | PART NO. | DESCRIPTION | QTY. |
|---|---|---|---|
| | 145203 | CYLINDER 3-1/2 X 8 REPHASE | |
| 1 | 010600382 | ROD, PISTON | 1 |
| 2 | ----- | TUBE | 1 |
| 3 | ----- | TIE ROD ASSY | 4 |
| 4 | ----- | BUTT CLEVIS ASSY | 1 |
| 5 | 148085 | GLAND | 1 |
| 6 | ----- | PISTON | 1 |
| 7 | 148087 | CLEVIS ASSY | 1 |
| 8 | ----- | NUT, LOCK | 1 |
| 9 | ----- | PLUG, PORT | 1 |
| 10 | ----- | PLUG, PORT | 3 |
| 11 | 148088 | BUSHING | 4 |
| 12 | 125566 | BUSHING | 1 |
| 13 | 143994 | CLEVIS PIN | 2 |
| 14 | 111789 | ROLL PIN | 4 |
| 15 | —— | TEFLON SEAL | 1 |
| 16 | —— | O-RING | 1 |
| 17 | —— | O-RING | 2 |
| 18 | —— | BU-WASHER | 2 |
| 19 | —— | BEARING RING | 1 |
| 20 | —— | U-CUP | 1 |
| 21 | —— | CANNED WIPER | 1 |
| | 148089 | SEAL KIT **(NOT SHOWN) (INCLUDES ITEMS 15 - 21)** | |

https://truckmanualshub.com/



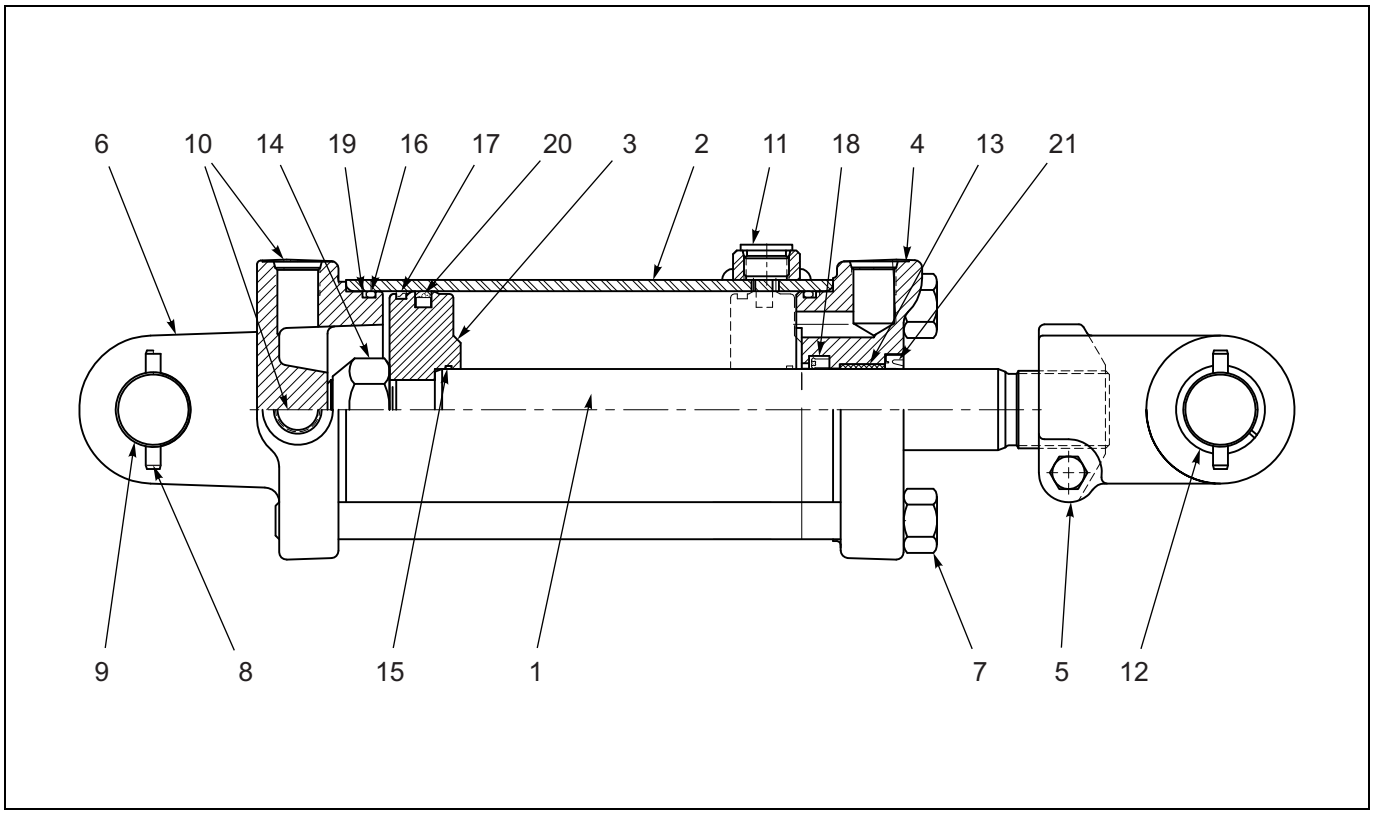


Figure 2-52: Cylinder - Rephase Assembly - 4 X16

# CYLINDER - REPHASE ASSEMBLY - 4 X 16

| ITEM | PART NO. | DESCRIPTION | QTY. |
|---|---|---|---|
| | 146825 | CYLINDER, 4X16, REPHASE | |
| 1 | 148095 | ROD, PISTON | 1 |
| 2 | ----- | TUBE | 1 |
| 3 | ----- | PISTON | 4 |
| 4 | 142109 | GLAND ASSY | 1 |
| 5 | 148097 | CLEVIS ASSY | 1 |
| 6 | ----- | BUTT CLEVIS | 1 |
| 7 | ----- | TIEROD ASSY | 4 |
| 8 | 111789 | ROLL PIN | 4 |
| 9 | 147755 | CLEVIS PIN | 2 |
| 10 | ----- | PLUG, PORT | 3 |
| 11 | ----- | PLUG, PORT | 1 |
| 12 | 135912 | BUSHING | 2 |
| 13 | 141301 | BUSHING, DU | 1 |
| 14 | ----- | LOCKNUT | 1 |
| 15 | —— | TEFLON SEAL | 1 |
| 16 | —— | O-RING | 1 |
| 17 | —— | O-RING | 1 |
| 18 | —— | BU-WASHER | 1 |
| 19 | —— | BEARING RING | 2 |
| 20 | —— | U-CUP | 1 |
| 21 | —— | CANNED WIPER | 1 |
| | 148100 | SEAL KIT **(NOT SHOWN) (INCLUDES ITEMS 15 - 21)** | |

https://truckmanualshub.com/



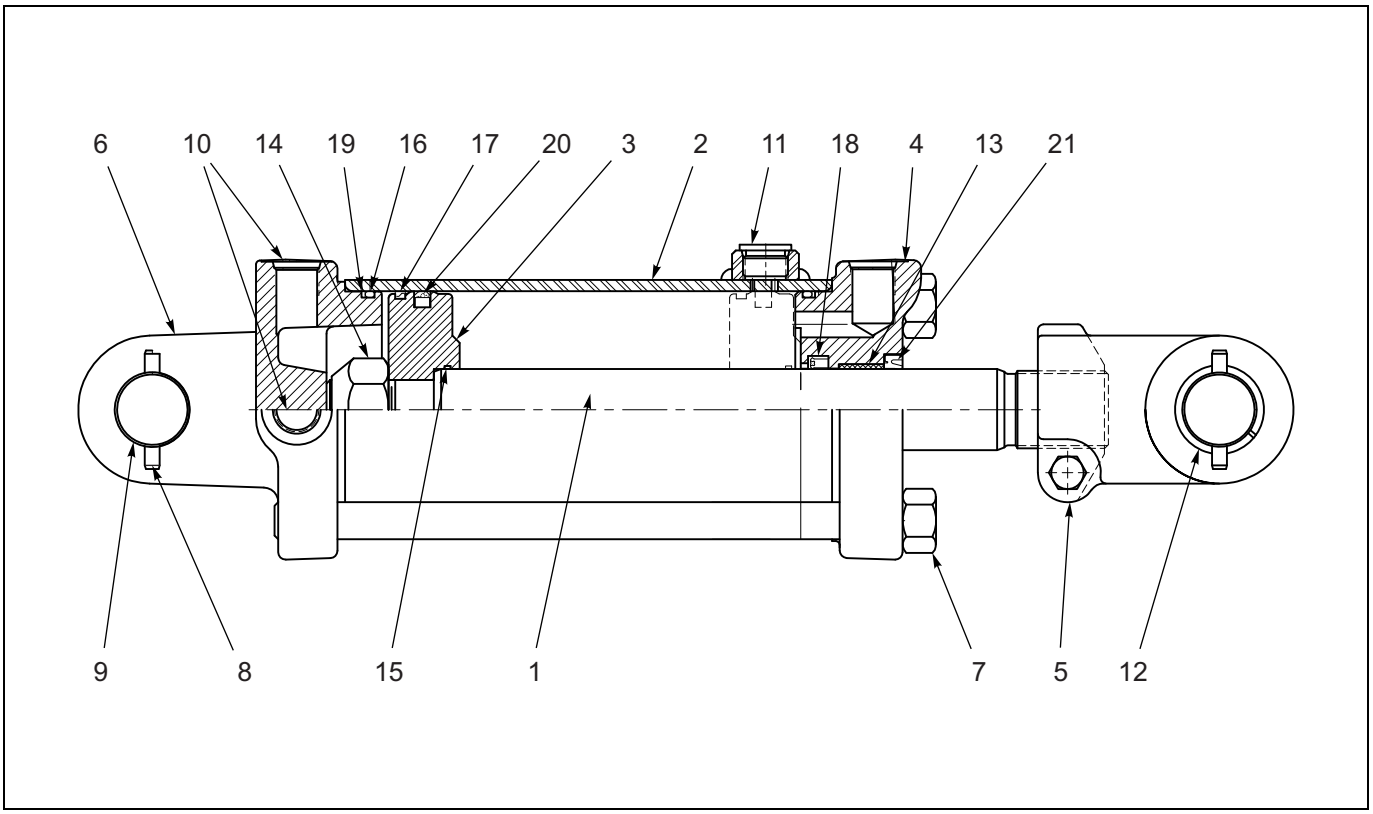


Figure 2-53: Cylinder - Rephase Assembly - 4 X 16

# CYLINDER - REPHASE ASSEMBLY - 4-1/2 X 16

| ITEM | PART NO. | DESCRIPTION | QTY. |
|---|---|---|---|
| | 146824 | CYLINDER, 4-1/2 X16, REPHASE | |
| 1 | 148101 | ROD, PISTON | 1 |
| 2 | ----- | TUBE | 1 |
| 3 | ----- | PISTON | 4 |
| 4 | 103153 | GLAND ASSY | 1 |
| 5 | 137304 | CLEVIS ASSY | 1 |
| 6 | ----- | BUTT CLEVIS | 1 |
| 7 | ----- | TIEROD ASSY | 4 |
| 8 | 111789 | ROLL PIN | 4 |
| 9 | 147755 | CLEVIS PIN | 2 |
| 10 | ----- | PLUG, PORT | 3 |
| 11 | ----- | PLUG, PORT | 1 |
| 12 | 135912 | BUSHING | 2 |
| 13 | 137702 | BUSHING, DU | 1 |
| 14 | ----- | LOCKNUT | 1 |
| 15 | —— | TEFLON SEAL | 1 |
| 16 | —— | O-RING | 1 |
| 17 | —— | O-RING | 1 |
| 18 | —— | BU-WASHER | 1 |
| 19 | —— | BEARING RING | 2 |
| 20 | —— | U-CUP | 1 |
| 21 | —— | CANNED WIPER | 1 |
| | 148106 | SEAL KIT **(NOT SHOWN) (INCLUDES ITEMS 15 - 21)** | |

https://truckmanualshub.com/



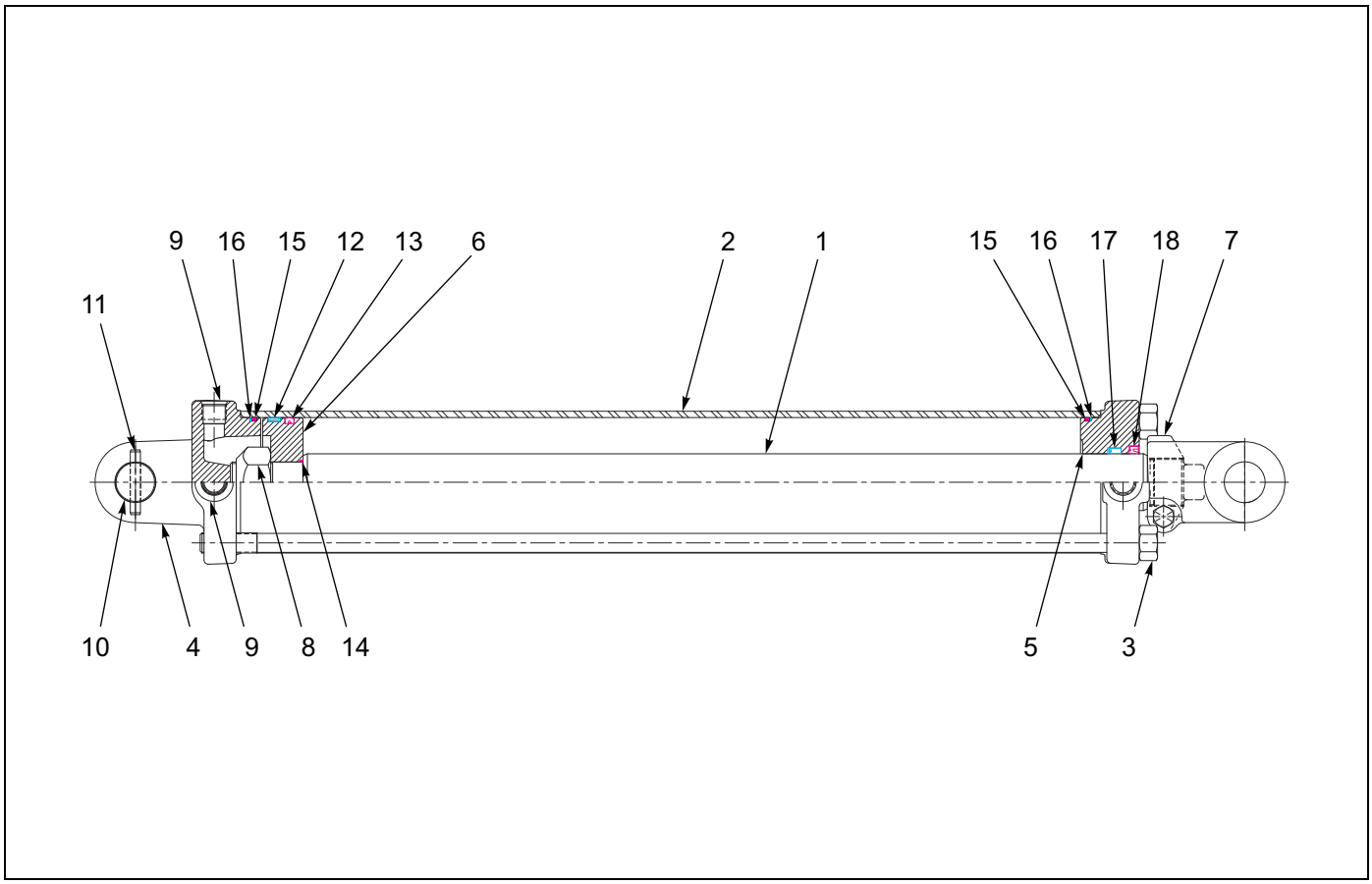


Figure 2-54: Cylinder Assembly - 4 X 30

# CYLINDER ASSEMBLY - 4 X 30

| ITEM | PART NO. | DESCRIPTION | QTY. |
|---|---|---|---|
| | 140472 | CYLINDER 4X30 1-1/2 ROD | |
| 1 | 142117 | PISTON ROD | 1 |
| 2 | -- | TUBE | 1 |
| 3 | -- | TIE ROD ASSEMBLY | 4 |
| 4 | -- | BUTT CLEVIS ASSEMBLY | 1 |
| 5 | 142120 | GLAND | 1 |
| 6 | -- | PISTON | 1 |
| 7 | -- | CLEVIS ASSEMBLY | 1 |
| 8 | -- | LOCKNUT | 1 |
| 9 | -- | PORT PLUG | 1 |
| 10 | 111789 | CLEVIS PIN | 2 |
| 11 | -- | ROLL PIN | 4 |
| 12 | -- | BEARING RING | 2 |
| 13 | -- | CROWN SEAL | 1 |
| 14 | -- | O-RING | 1 |
| 15 | -- | O-RING | 2 |
| 16 | -- | BU-WASHER | 2 |
| 17 | -- | U-CUP | 1 |
| 18 | -- | CANNED WIPER | 2 |
| | 142113 | PACKING KIT **(NOT SHOWN) (INCLUDES ITEMS 12-18)** | |

https://truckmanualshub.com/



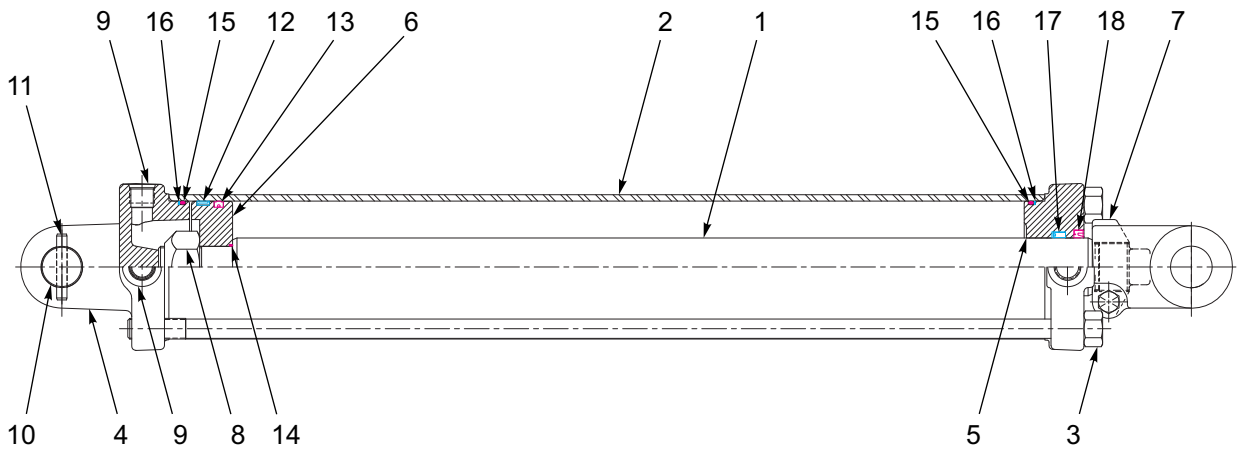


Figure 2-55: Cylinder Assembly - 4-1/2 X 30

# CYLINDER ASSEMBLY - 4-1/2 X 30

| ITEM | PART NO. | DESCRIPTION | QTY. |
|---|---|---|---|
| | 167575 | CYLINDER, 4-1/2 X 30, 2DIA ROD | |
| 1 | 169548 | PISTON ROD | 1 |
| 2 | -- | TUBE | 1 |
| 3 | -- | TIE ROD ASSEMBLY | 4 |
| 4 | -- | BUTT CLEVIS ASSEMBLY | 1 |
| 5 | 169549 | GLAND | 1 |
| 6 | -- | PISTON | 1 |
| 7 | -- | CLEVIS ASSEMBLY | 1 |
| 8 | -- | LOCKNUT | 1 |
| 9 | -- | PORT PLUG | 1 |
| 10 | 169550 | CLEVIS PIN | 2 |
| 11 | 169551 | ROLL PIN | 4 |
| 12 | -- | BEARING RING | 2 |
| 13 | -- | CROWN SEAL | 1 |
| 14 | -- | O-RING | 1 |
| 15 | -- | O-RING | 2 |
| 16 | -- | BU-WASHER | 2 |
| 17 | -- | U-CUP | 1 |
| 18 | -- | CANNED WIPER | 2 |
| | 169552 | PACKING KIT **(NOT SHOWN) (INCLUDES ITEMS 12-18)** | |

https://truckmanualshub.com/



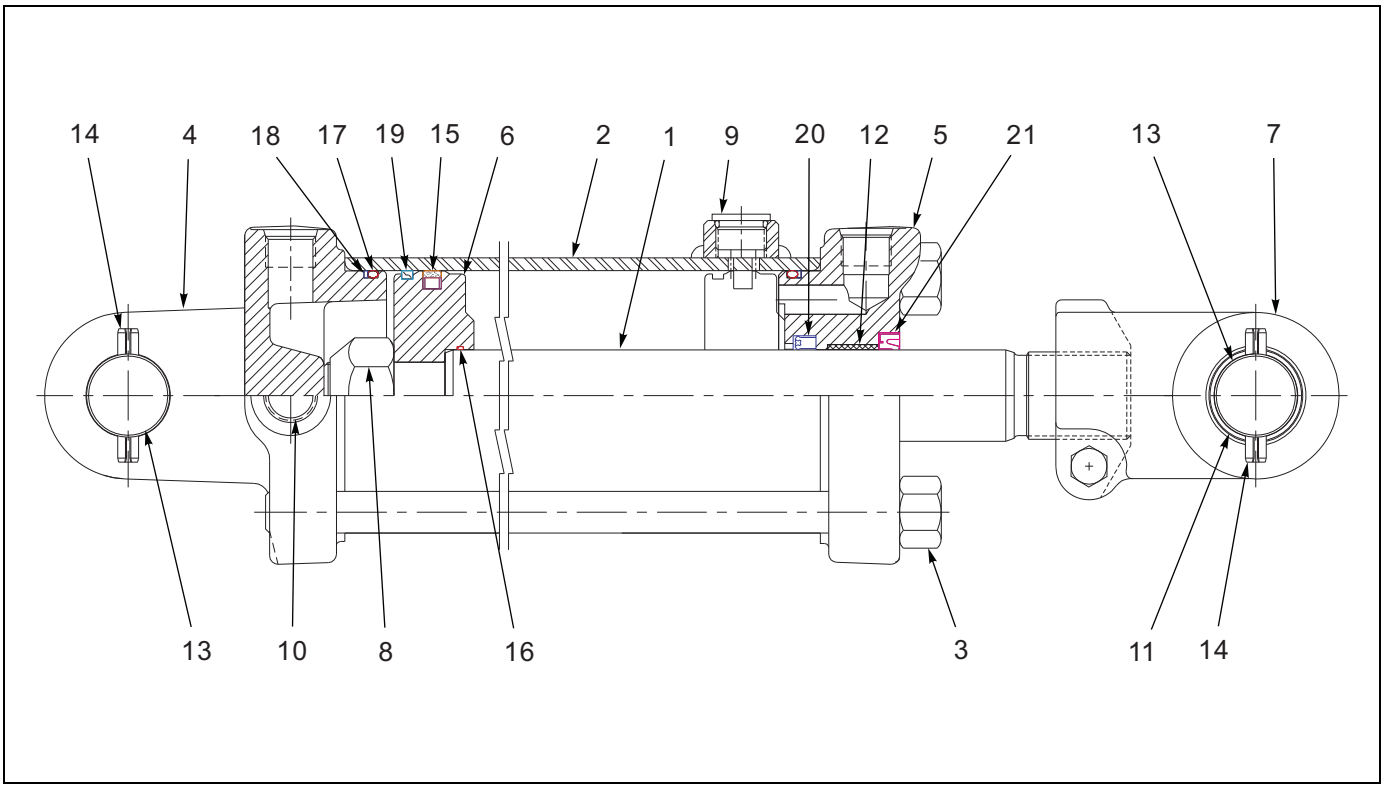


Figure 2-56: Cylinder - Rephase Assembly - 3-3/4 X 16

# CYLINDER - REPHASE ASSEMBLY - 3-3/4 X 16

| ITEM | PART NO. | DESCRIPTION | QTY. |
|---|---|---|---|
| | 163700 | CYLINDER 3-3/4 X 16, REPHASE | |
| 1 | 148095 | PISTON ROD | 1 |
| 2 | ----- | TUBE ASSEMBLY | 1 |
| 3 | ----- | TIE ROD ASSEMBLY | 4 |
| 4 | ----- | BUTT CLEVIS ASSEMBLY | 1 |
| 5 | 111871 | GLAND ASSEMBLY | 1 |
| 6 | ----- | PISTON | 1 |
| 7 | 148097 | CLEVIS ASSEMBLY | 1 |
| 8 | ----- | LOCKNUT | 1 |
| 9 | ----- | SHIPPING PLUG | 1 |
| 10 | ----- | SHIPPING PLUG | 3 |
| 11 | ----- | BUSHING | 2 |
| 12 | ----- | BUSHING | 1 |
| 13 | 147755 | CLEVIS PIN | 2 |
| 14 | 169332 | ROLL PIN | 4 |
| 15 | ----- | TEFLON SEAL | 1 |
| 16 | ----- | O-RING | 1 |
| 17 | ----- | O-RING | 2 |
| 18 | ----- | BU-WASHER | 2 |
| 19 | ----- | BEARING RING | 1 |
| 20 | ----- | U-CUP | 1 |
| 21 | ----- | CANNED WIPER | 1 |
| 22 | ----- | ROYAL PLATE DECAL **(NOT SHOWN)** | 1 |
| | 167690 | PACKING KIT **(NOT SHOWN) (INCLUDES ITEMS 15-21)** | |

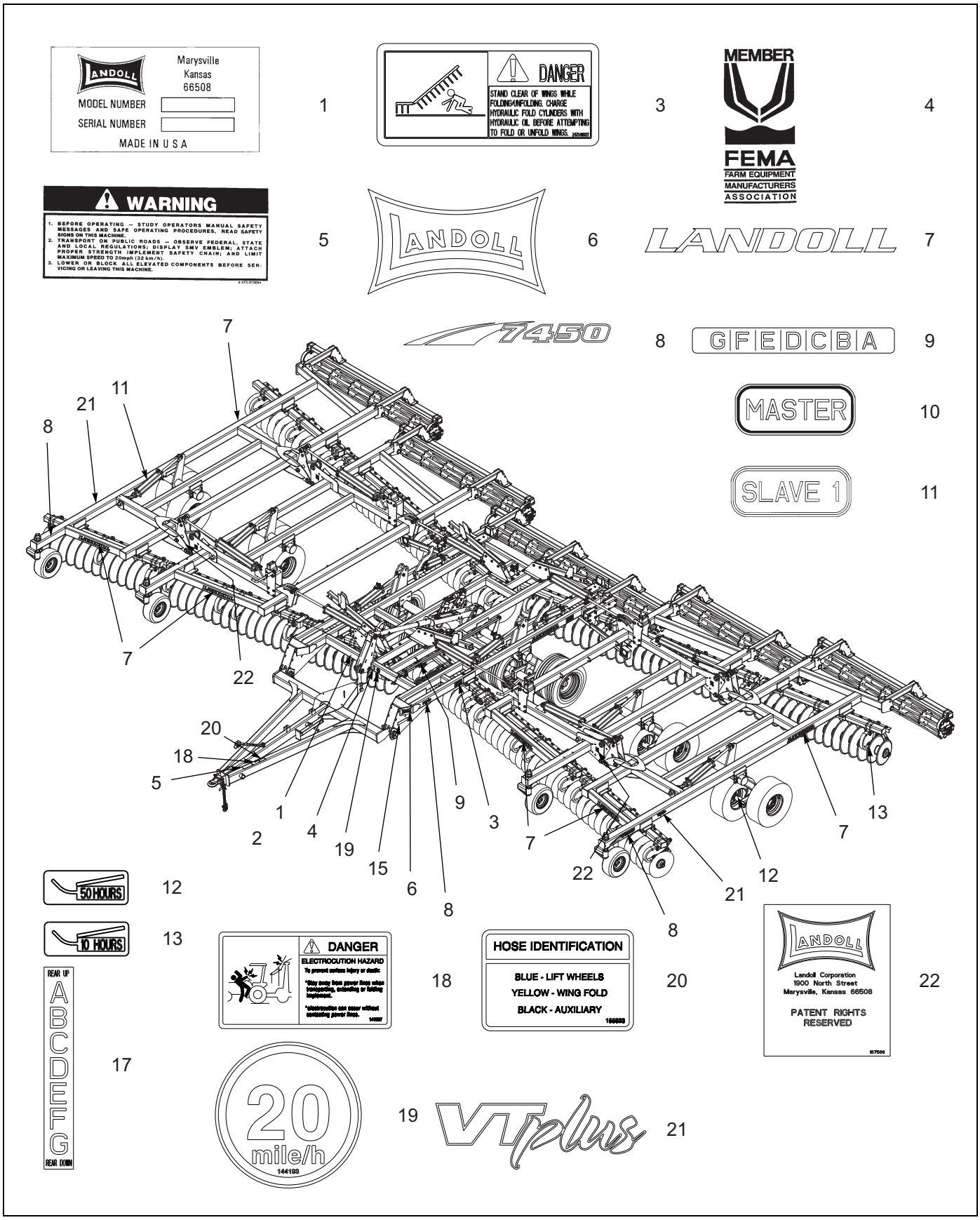


Figure 2-57: Decal Installation

https://truckmanualshub.com/


# DECAL INSTALLATION

| ITEM | PART NO. | DESCRIPTION | QTY. |
|---|---|---|---|
| 1 | 1-573-010006 | PLATE, NAME | |
| 2 | 156010 | RIVET, BLIND .156 X 1/2 GRIP | |
| 3 | 2-573-010037 | DECAL, DANGER, WING | |
| 4 | 2-573-010198 | DECAL MEMBER FEMA | |
| 5 | 8-573-010084 | DECAL WARNING BEFORE OPERATING | |
| 6 | 141259 | DECAL, LANDOLL YELLOW | |
| 7 | 141260 | DECAL, LANDOLL | |
| 8 | 164550 | DECAL, MODEL 7450 | |
| 9 | 141262 | DECAL, DEPTH STOP INDICATOR | |
| 10 | *2-573-010150 | DECAL, MASTER | |
| 11 | *2-573-010149 | DECAL, SLAVE | |
| 12 | 2-573-010330-03 | DECAL LUBRICATION 50 HOURS | |
| 13 | 2-573-010330-02 | DECAL LUBRICATION 10 HOURS | |
| 14 | **528933 | REFLECTOR, RED | |
| 15 | **528934 | REFLECTOR, YELLOW | |
| 16 | **528938 | STRIPE, ORANGE | |
| 17 | ***141263 | DECAL, LEVEL INDICATOR | |
| 18 | 141597 | DECAL, DANGER ELECTROCUTION | |
| 19 | 144193 | DECAL, SIS 20 MPH | |
| 20 | 155523 | DECAL, HOSE IDENTIFICATION | |
| 21 | 155600 | DECAL, VT PLUS | |
| 22 | 167566 | DECAL, PATENT RIGHTS RESERVED | |

* SEE PAGE 2-77 FOR DECAL LOCATIONS.
** SEE PAGE 2-73 FOR DECAL LOCATION.
*** SEE PAGE 2-33 FOR DECAL LOCATION.

https://truckmanualshub.com/



Table provided for general use.

| NOTES: |
| --- |
| |

https://truckmanualshub.com/

# Numerical Index

## Numerics


006-115-00 . . . . . *2-11*, *2-13*
010600382 . . . . . *2-87*, *2-88*
0600-250-01250 . . . . . *2-9*
1-007-010025 . . . . . *2-84*, *2-85*
100823 . . . . . *2-9*
100827 . . . . . *2-37*, *2-73*
100829 . . . . . *2-21*, *2-51*, *2-54*, *2-61*, *2-63*, *2-65*
100855 . . . . . *2-9*
100941 . . . . . *2-5*, *2-33*
100966 . . . . . *2-41*
101162 . . . . . *2-11*, *2-13*
101385 . . . . . *2-5*, *2-21*
101988 . . . . . *2-17*, *2-23*, *2-41*
102-0031 . . . . . *2-54*
102-1130 . . . . . *2-77*, *2-84*, *2-85*
102351 . . . . . *2-29*, *2-33*
102498 . . . . . *2-26*
102600 . . . . . *2-17*, *2-23*, *2-26*
102601 . . . . . *2-26*
102604 . . . . . *2-26*
103103-002 . . . . . *2-11*, *2-13*
103153 . . . . . *2-90*
103841 . . . . . *2-29*
104436 . . . . . *2-37*
104597 . . . . . *2-33*
105106 . . . . . *2-11*, *2-13*
105107 . . . . . *2-11*, *2-13*
105874 . . . . . *2-39*, *2-73*
107491 . . . . . *2-61*, *2-63*, *2-65*
1-076-010007 . . . . . *2-25*, *2-41*
1-076-010009 . . . . . *2-41*
1-076-010010 . . . . . *2-25*, *2-41*
1-076-010012 . . . . . *2-41*
108628 . . . . . *2-7*
108705 . . . . . *2-67*, *2-69*
109895 . . . . . *2-56*
1-1/2SLW . . . . . *2-29*, *2-33*
1-104-010002 . . . . . *2-41*
111392 . . . . . *2-36*
111789 . . . . . *2-5*, *2-86*, *2-87*, *2-88*, *2-89*, *2-90*, *2-91*
111871 . . . . . *2-93*
111962 . . . . . *2-26*
114616 . . . . . *2-15*
116100 . . . . . *2-15*
1-161-010003 . . . . . *2-41*
116432 . . . . . *2-82*
116434 . . . . . *2-77*, *2-82*
116435 . . . . . *2-77*, *2-82*
116437 . . . . . *2-77*
116489 . . . . . *2-82*
116490 . . . . . *2-82*
116491 . . . . . *2-77*, *2-82*
116492 . . . . . *2-82*, *2-83*
116493 . . . . . *2-77*
117260 . . . . . *2-82*
117957 . . . . . *2-51*, *2-54*, *2-61*, *2-63*, *2-65*
119118 . . . . . *2-17*, *2-23*

122709 . . . . . 2-9, 2-35
122911 . . . . . 2-82, 2-83
122917 . . . . . 2-7
124132 . . . . . 2-77
124971 . . . . . 2-54, 2-77
125566 . . . . . 2-87, 2-88
125648 . . . . . 2-55, 2-56
126108 . . . . . 2-9
126235 . . . . . 2-29
127351 . . . . . 2-15
127712 . . . . . 2-18, 2-24
128874 . . . . . 2-15
129263 . . . . . 2-67, 2-69
129698 . . . . . 2-54
1-298-010001-01 . . . . . 2-30
1-298-010001-1 . . . . . 2-9, 2-18, 2-24, 2-35, 2-41
131081 . . . . . 2-29
135912 . . . . . 2-89, 2-90
137304 . . . . . 2-90
137598 . . . . . 2-82
137600 . . . . . 2-77, 2-82
137601 . . . . . 2-82
137602 . . . . . 2-82
137702 . . . . . 2-90
137943 . . . . . 2-59
139213 . . . . . 2-77, 2-82
139347 . . . . . 2-54
1400548 . . . . . 2-83
1404013 . . . . . 2-13
140464 . . . . . 2-43
140469 . . . . . 2-43
140472 . . . . . 2-82, 2-91
140473 . . . . . 2-43
140475 . . . . . 2-43
140476 . . . . . 2-43
140477 . . . . . 2-43, 2-59
140479 . . . . . 2-43, 2-59
140480 . . . . . 2-43, 2-59
140481 . . . . . 2-43
140482 . . . . . 2-43
140483 . . . . . 2-43
140484 . . . . . 2-43
140485 . . . . . 2-43
140487 . . . . . 2-43
140490 . . . . . 2-43
140491 . . . . . 2-43
140519 . . . . . 2-9, 2-17, 2-23
140533 . . . . . 2-4
140548 . . . . . 2-17, 2-23
140554 . . . . . 2-25
140594 . . . . . 2-25
140595 . . . . . 2-25
140599 . . . . . 2-35, 2-51, 2-54, 2-61, 2-63, 2-65
1-406-010012 . . . . . 2-41
140646 . . . . . 2-25
140647 . . . . . 2-29, 2-34
140649 . . . . . 2-35
140693 . . . . . 2-4, 2-77
141109 . . . . . 2-4
141154 . . . . . 2-21, 2-43
141165 . . . . . 2-45, 2-47, 2-49
141198 . . . . . 2-25
141209 . . . . . 2-9, 2-17, 2-23
141234 . . . . . 2-9
141236 . . . . . 2-25
141238 . . . . . 2-25
141244 . . . . . 2-15
141245 . . . . . 2-41
141246 . . . . . 2-29
141247 . . . . . 2-29
141249 . . . . . 2-29
141259 . . . . . 2-95
141260 . . . . . 2-95
141262 . . . . . 2-95
141263 . . . . . 2-33, 2-95
141266 . . . . . 2-29

https://truckmanualshub.com/




141271 . . . . . 2-41
141275 . . . . . 2-43, 2-54, 2-77, 2-83
141301 . . . . . 2-89
141594 . . . . . 2-84
141597 . . . . . 2-95
141807 . . . . . 2-29
141808 . . . . . 2-41
141809 . . . . . 2-17, 2-23
141826 . . . . . 2-82
141827 . . . . . 2-33
141828 . . . . . 2-39, 2-54, 2-77, 2-82
141854 . . . . . 2-4, 2-77
141864 . . . . . 2-82
141881 . . . . . 2-77, 2-82
141882 . . . . . 2-83
141883 . . . . . 2-82
141889 . . . . . 2-82
142109 . . . . . 2-89
142110 . . . . . 2-86
142112 . . . . . 2-86
142113 . . . . . 2-91
142117 . . . . . 2-91
142120 . . . . . 2-91
142189 . . . . . 2-34
142190 . . . . . 2-34
142191 . . . . . 2-34
142192 . . . . . 2-34
142193 . . . . . 2-34
142194 . . . . . 2-34
142195 . . . . . 2-34
1422176 . . . . . 2-77, 2-82
142668 . . . . . 2-39
142669 . . . . . 2-39
142670 . . . . . 2-39
142671 . . . . . 2-39
142753 . . . . . 2-4
143067 . . . . . 2-25
143871 . . . . . 2-39
143994 . . . . . 2-86, 2-87, 2-88
144048 . . . . . 2-7
144115 . . . . . 2-5, 2-21, 2-33
144117 . . . . . 2-82
144193 . . . . . 2-95
144493 . . . . . 2-33
145203 . . . . . 2-4, 2-82
145204 . . . . . 2-82
146824 . . . . . 2-9, 2-77, 2-90
146825 . . . . . 2-17, 2-77, 2-89
147123 . . . . . 2-77
147372 . . . . . 2-86
147473 . . . . . 2-9
147553 . . . . . 2-17, 2-23, 2-25
147582 . . . . . 2-77, 2-82
147583 . . . . . 2-82
147588 . . . . . 2-82
147755 . . . . . 2-4, 2-89, 2-90, 2-93
148085 . . . . . 2-88
148087 . . . . . 2-87, 2-88
148088 . . . . . 2-87, 2-88
148089 . . . . . 2-88
148092 . . . . . 2-87
148094 . . . . . 2-87
148095 . . . . . 2-89, 2-93
148097 . . . . . 2-89, 2-93
148100 . . . . . 2-89
148101 . . . . . 2-90
148106 . . . . . 2-90
148337 . . . . . 2-59
148338 . . . . . 2-39
148382 . . . . . 2-5
148387 . . . . . 2-33, 2-35, 2-86
149592 . . . . . 2-47
150273 . . . . . 2-82
1-510-010001 . . . . . 2-54
1-511-010002-11 . . . . . 2-63, 2-65
1-512-010005-01 . . . . . 2-4, 2-29, 2-73

1-512-010005-03 . . . . . 2-4, 2-7, 2-39
1-512-010005-05 . . . . . 2-4, 2-39, 2-43, 2-77
1-512-010005-09 2-15, 2-17, 2-23, 2-29, 2-33, 2-39, 2-43, 2-54, 2-61, 2-65, 2-77
1-512-010005-13 . . . . . 2-4, 2-59, 2-67, 2-69
1-512-010005-15 . . 2-4, 2-9, 2-15, 2-17, 2-23, 2-33, 2-35, 2-36, 2-37, 2-38, 2-43, 2-51, 2-54, 2-61, 2-63, 2-65, 2-73
1-512-010005-19 . 2-9, 2-15, 2-29, 2-33, 2-51, 2-54, 2-61, 2-63, 2-65
1-512-010007-07 . . . . . 2-29, 2-54
1-512-010007-14 . . . . . 2-51, 2-54, 2-61, 2-65
151548 . . . . . 2-45, 2-47, 2-49
151550 . . . . . 2-43
1-516-010001-20 . . . . . 2-25, 2-26
152209 . . . . . 2-51, 2-54, 2-61, 2-63, 2-65
152210 . . . . . 2-51, 2-54, 2-61, 2-65
152638 . . . . . 2-86
152640 . . . . . 2-86
153620 . . . . . 2-77
153621 . . . . . 2-77
153622 . . . . . 2-55
153649 . . . . . 2-43
153650 . . . . . 2-43
153651 . . . . . 2-43
153652 . . . . . 2-43
153696 . . . . . 2-29
153698 . . . . . 2-47
153699 . . . . . 2-49
153700 . . . . . 2-45
153701 . . . . . 2-45, 2-47, 2-49
153702 . . . . . 2-45, 2-47, 2-49
153703 . . . . . 2-45
153704 . . . . . 2-47, 2-49
153705 . . . . . 2-47
153706 . . . . . 2-49
153709 . . . . . 2-43
153710 . . . . . 2-49
153711 . . . . . 2-49
153713 . . . . . 2-49
153716 . . . . . 2-59
153803 . . . . . 2-9
153804 . . . . . 2-9, 2-17, 2-23
154185 . . . . . 2-59
154186 . . . . . 2-59
154392 . . . . . 2-51, 2-54, 2-61, 2-63, 2-65
154393 . . . . . 2-59
154658 . . . . . 2-59
154659 . . . . . 2-59
154661 . . . . . 2-45
154662 . . . . . 2-49
154668 . . . . . 2-43
154686 . . . . . 2-51, 2-54, 2-59
154687 . . . . . 2-51, 2-54, 2-59
154691 . . . . . 2-59
154692 . . . . . 2-59
154748P . . . . . 2-51, 2-54
155520 . . . . . 2-59
155523 . . . . . 2-95
155528 . . . . . 2-77
155529 . . . . . 2-82
155544 . . . . . 2-59
155545 . . . . . 2-51, 2-54, 2-59
155600 . . . . . 2-95
155617 . . . . . 2-45, 2-47, 2-49
155618 . . . . . 2-45, 2-47, 2-49
155619 . . . . . 2-45, 2-47, 2-49
1-557-010362-40 . . . . . 2-41
1-557-010362-51 . . . . . 2-25, 2-26
1-557-010403 . . . . . 2-29, 2-33
156010 . . . . . 2-95
156082 . . . . . 2-49
156083 . . . . . 2-49
156084 . . . . . 2-45, 2-47
156921 . . . . . 2-45, 2-47
156922 . . . . . 2-45, 2-47, 2-49
156945 . . . . . 2-82

https://truckmanualshub.com/




156949 . . . . . 2-29
156950 . . . . . 2-29
156951 . . . . . 2-45
156972 . . . . . 2-17, 2-23, 2-26
156973 . . . . . 2-26
156974 . . . . . 2-26
156979 . . . . . 2-26
156992 . . . . . 2-17, 2-23
157000 . . . . . 2-18, 2-24
157001 . . . . . 2-17, 2-23
157002 . . . . . 2-17, 2-23
157019 . . . . . 2-17, 2-23
1-573-010006 . . . . . 2-95
157648 . . . . . 2-73
158295 . . . . . 2-39
158795 . . . . . 2-51, 2-54, 2-61, 2-65
158847 . . . . . 2-51, 2-54
158850 . . . . . 2-15
158896 . . . . . 2-51, 2-54, 2-61, 2-65
158897 . . . . . 2-51, 2-54, 2-61, 2-65
158898 . . . . . 2-45, 2-47, 2-49
158903 . . . . . 2-17, 2-23
159553 . . . . . 2-9
159557 . . . . . 2-9
159569 . . . . . 2-82
159954 . . . . . 2-17, 2-23
159970 . . . . . 2-26
15G816ER . . . . . 2-18, 2-24
160151 . . . . . 2-41
160155 . . . . . 2-41
160161 . . . . . 2-43
160597 . . . . . 2-17, 2-23
160656 . . . . . 2-15
160693 . . . . . 2-82
161550 . . . . . 2-30
161662 . . . . . 2-4
161664 . . . . . 2-15
161665 . . . . . 2-15
161666 . . . . . 2-21
161667 . . . . . 2-21
161668 . . . . . 2-15
161669 . . . . . 2-15
161670 . . . . . 2-21
161671 . . . . . 2-21
161672 . . . . . 2-15
161673 . . . . . 2-15
161674 . . . . . 2-21
161675 . . . . . 2-21
161676 . . . . . 2-4, 2-9
161678 . . . . . 2-4
161679 . . . . . 2-15, 2-17
161680 . . . . . 2-15, 2-17
161681 . . . . . 2-21, 2-23
161682 . . . . . 2-21, 2-23
161683 . . . . . 2-15, 2-17
161684 . . . . . 2-15, 2-17
161685 . . . . . 2-21, 2-23
161686 . . . . . 2-21, 2-23
161687 . . . . . 2-15, 2-17
161688 . . . . . 2-15, 2-17
161689 . . . . . 2-21, 2-23
161690 . . . . . 2-21, 2-23
162191 . . . . . 2-38
162249 . . . . . 2-4
162569 . . . . . 2-54
162676 . . . . . 2-45, 2-47, 2-49
162677 . . . . . 2-45, 2-47, 2-49
162678 . . . . . 2-45, 2-47, 2-49
162679 . . . . . 2-45, 2-47, 2-49
162680 . . . . . 2-45
162681 . . . . . 2-45
162682 . . . . . 2-45
162683 . . . . . 2-45
162684 . . . . . 2-45
162685 . . . . . 2-45
162686 . . . . . 2-45

https://truckmanualshub.com/




162687 . . . . . 2-45
162724 . . . . . 2-9
162725 . . . . . 2-9
162728 . . . . . 2-17, 2-23
162729 . . . . . 2-17, 2-23
162765 . . . . . 2-9
162770 . . . . . 2-29
1-630-010021-03 . . . . . 2-7
163629 . . . . . 2-4
163639 . . . . . 2-4
163642 . . . . . 2-4
163644 . . . . . 2-15
163645 . . . . . 2-15
163672 . . . . . 2-35
163679 . . . . . 2-35
163685 . . . . . 2-33, 2-35
163690 . . . . . 2-33
163696 . . . . . 2-9
163700 . . . . . 2-23, 2-77, 2-93
163705 . . . . . 2-33
163716 . . . . . 2-33
163718 . . . . . 2-15
163719 . . . . . 2-15
164124 . . . . . 2-4
164138 . . . . . 2-73
164142 . . . . . 2-73
164308 . . . . . 2-77
164378 . . . . . 2-59
164471 . . . . . 2-41
164472 . . . . . 2-41
164473 . . . . . 2-41
164474 . . . . . 2-15
164475 . . . . . 2-41
164477 . . . . . 2-41
164481 . . . . . 2-41
164490 . . . . . 2-21
164491 . . . . . 2-21
164501 . . . . . 2-9
164508 . . . . . 2-29
164509 . . . . . 2-29
164513 . . . . . 2-45
164514 . . . . . 2-45
164515 . . . . . 2-45
164516 . . . . . 2-47
164517 . . . . . 2-47
164518 . . . . . 2-47
164519 . . . . . 2-49
164520 . . . . . 2-49
164521 . . . . . 2-49
164525 . . . . . 2-51
164526 . . . . . 2-51
164527 . . . . . 2-51
164533 . . . . . 2-5, 2-21, 2-43
164539 . . . . . 2-4, 2-21
164540 . . . . . 2-21
164541 . . . . . 2-21
164543 . . . . . 2-29
164544 . . . . . 2-33
164545 . . . . . 2-35
164546 . . . . . 2-17, 2-23
164550 . . . . . 2-95
164553 . . . . . 2-4
164554 . . . . . 2-4
164555 . . . . . 2-15
164557 . . . . . 2-11, 2-13
164558 . . . . . 2-9, 2-11
164562 . . . . . 2-45
164563 . . . . . 2-9
164564 . . . . . 2-21
164565 . . . . . 2-21
1-647-010004236 2-38, 2-51, 2-54, 2-61, 2-63, 2-65
1-647-010004240 . . . . . 2-9, 2-15, 2-21, 2-38
1-647-010004257 . . . . . 2-5, 2-43
1-647-010004259 . . . . . 2-41
165127 . . . . . 2-51, 2-54, 2-59
165226 . . . . . 2-59

https://truckmanualshub.com/




165238 . . . . . 2-9
165254 . . . . . 2-11
165256 . . . . . 2-9
165257 . . . . . 2-4
165258 . . . . . 2-7
165259 . . . . . 2-7
165260 . . . . . 2-7
165264 . . . . . 2-4, 2-7
165265 . . . . . 2-4
165266 . . . . . 2-29
165267 . . . . . 2-4
165268 . . . . . 2-5, 2-73
165269 . . . . . 2-5, 2-73
165283 . . . . . 2-4
165284 . . . . . 2-77, 2-82
165285 . . . . . 2-77, 2-82
165286 . . . . . 2-9
165287 . . . . . 2-77, 2-84
165288 . . . . . 2-35
165295 . . . . . 2-21
165296 . . . . . 2-41
165298 . . . . . 2-41
165302 . . . . . 2-4
165305 . . . . . 2-47
165306 . . . . . 2-47
165307 . . . . . 2-47
165308 . . . . . 2-47
165309 . . . . . 2-47
165310 . . . . . 2-47
165311 . . . . . 2-47
165312 . . . . . 2-47
165313 . . . . . 2-49
165314 . . . . . 2-49
165315 . . . . . 2-49
165316 . . . . . 2-49
165317 . . . . . 2-49
165318 . . . . . 2-49
165319 . . . . . 2-49
165320 . . . . . 2-49
1-654-010032-05 . . . . . 2-4, 2-15, 2-41, 2-59
1-654-010032-09 . . . . . 2-43
1-654-010032-23 . . . . . 2-5
1-654-010047-04 . . . . . 2-73
1-654-010047-06 . . . . . 2-4, 2-29
1-654-010047-07 . . . . . 2-73
1-654-010047-08 . . . . . 2-73
1-654-010049-03 . . . . . 2-11, 2-13
1-654-010049-05 . . . . . 2-39
1-654-010049-19 . . . . . 2-4
1-654-010051-06 . . . . . 2-4
1-654-010051-07 . . . . . 2-54
1-654-010051-11 . . . . . 2-39, 2-43, 2-77
1-654-010055-02 . . . . . 2-39
1-654-010055-03 . . . . . 2-54
1-654-010055-05 . . . . . 2-43, 2-63, 2-65
1-654-010055-11 . . . . . 2-15, 2-54, 2-77
1-654-010055-15 . . . . . 2-17, 2-23
1-654-010055-16 . . . . . 2-61, 2-65
1-654-010055-18 . . . . . 2-33
1-654-010059-07 . . . . . 2-4
1-654-010059-11 . . . . . 2-37
1-654-010061-04 . . . . . 2-36
1-654-010061-05 . . . . . 2-9, 2-17, 2-23
1-654-010061-06 . . . . . 2-36
1-654-010061-07 . . . . . 2-38
1-654-010061-09 . . . . . 2-9
1-654-010061-15 . . . . . 2-5
1-654-010061-16 . . . . . 2-5, 2-37
1-654-010061-21 . . . . . 2-4, 2-15
1-654-010061-22 . . . . . 2-15, 2-37
1-654-010061-25 . . . . . 2-37
1-654-010065-13 . . . . . 2-9
1-654-010068-17 . . . . . 2-33
1-654-010070-02 . . . . . 2-43
1-654-010070-03 . . . . . 2-54, 2-67, 2-69
1-654-010070-04 . . . . . 2-77

https://truckmanualshub.com/




1-654-010076-26 . . . . . 2-29
1-654-010080-22 . . . . . 2-9
1-654-010104245 . . . . . 2-70, 2-71
1-654-010125-22 . . . . . 2-29
1-659-010004 . . . . . 2-41
166171 . . . . . 2-83
166628 . . . . . 2-15
166629 . . . . . 2-15
166701 . . . . . 2-35
166705 . . . . . 2-33
166707 . . . . . 2-33
166709 . . . . . 2-41
166710 . . . . . 2-33
166714 . . . . . 2-77, 2-82
166715 . . . . . 2-77, 2-82
166717 . . . . . 2-7
166718 . . . . . 2-43
166978 . . . . . 2-77
167551 . . . . . 2-9
167552 . . . . . 2-9
167553 . . . . . 2-9
167554 . . . . . 2-51, 2-54
167556 . . . . . 2-82
167557 . . . . . 2-77, 2-82, 2-84
167558 . . . . . 2-82, 2-85
167566 . . . . . 2-95
167568 . . . . . 2-9
167569 . . . . . 2-9
167571 . . . . . 2-47
167574 . . . . . 2-4
167575 . . . . . 2-83, 2-92
167576 . . . . . 2-4
167579 . . . . . 2-4
167580 . . . . . 2-4
167586 . . . . . 2-9, 2-11, 2-13
167589 . . . . . 2-47
167593 . . . . . 2-21
167594 . . . . . 2-21
167603 . . . . . 2-37
167605 . . . . . 2-37
167609 . . . . . 2-37
167612P . . . . . 2-37
167624P . . . . . 2-37
167628 . . . . . 2-38
167630 . . . . . 2-37
167632 . . . . . 2-37, 2-38
167633 . . . . . 2-37
167636 . . . . . 2-39
167637 . . . . . 2-37
167638 . . . . . 2-29
167645 . . . . . 2-33
167649 . . . . . 2-11, 2-13
167690 . . . . . 2-93
168456 . . . . . 2-11
168750 . . . . . 2-41
168771 . . . . . 2-38
168773 . . . . . 2-38
168892 . . . . . 2-77
169332 . . . . . 2-93
169548 . . . . . 2-92
169549 . . . . . 2-92
169550 . . . . . 2-92
169551 . . . . . 2-92
169552 . . . . . 2-92
169690 . . . . . 2-54
170195 . . . . . 2-43
170196 . . . . . 2-47
170206 . . . . . 2-41
170209P . . . . . 2-36
170212 . . . . . 2-36
170213 . . . . . 2-36
170214 . . . . . 2-36
170223 . . . . . 2-47
170258 . . . . . 2-9
171020 . . . . . 2-49
171021 . . . . . 2-49

https://truckmanualshub.com/




171024 . . . . . 2-9, 2-17, 2-23
171070 . . . . . 2-17, 2-23
171074 . . . . . 2-54
171077 . . . . . 2-70, 2-71
171078 . . . . . 2-70
171079 . . . . . 2-71
171080 . . . . . 2-70, 2-71
171081 . . . . . 2-70, 2-71
171082 . . . . . 2-45
171093 . . . . . 2-70, 2-71
172509 . . . . . 2-43, 2-67, 2-69
172534 . . . . . 2-55
172535 . . . . . 2-55
172568 . . . . . 2-55
172724 . . . . . 2-43
172884 . . . . . 2-51, 2-55
172962 . . . . . 2-17, 2-23
172973 . . . . . 2-55
172976 . . . . . 2-55
172977 . . . . . 2-55
172978 . . . . . 2-55
172979 . . . . . 2-55
172980 . . . . . 2-55
172981 . . . . . 2-55
172989 . . . . . 2-54
172990 . . . . . 2-54
172991 . . . . . 2-54
172992 . . . . . 2-55
172998 . . . . . 2-55, 2-56
173013 . . . . . 2-55
173018 . . . . . 2-21
173044 . . . . . 2-55
174435 . . . . . 2-73
174436 . . . . . 2-73
174437 . . . . . 2-73
174438 . . . . . 2-73
174439 . . . . . 2-73
174526 . . . . . 2-67, 2-69
174532 . . . . . 2-67, 2-69
174708 . . . . . 2-7
174709 . . . . . 2-7
174719 . . . . . 2-70
174720 . . . . . 2-55, 2-70
174722 . . . . . 2-55, 2-56
174724 . . . . . 2-55
174725 . . . . . 2-55
174726 . . . . . 2-55
174784 . . . . . 2-56
176633 . . . . . 2-69
176634 . . . . . 2-69
176635 . . . . . 2-67
176636 . . . . . 2-67, 2-69
176637 . . . . . 2-67
176638 . . . . . 2-67
176929 . . . . . 2-55
176930 . . . . . 2-55
176998 . . . . . 2-33
177030 . . . . . 2-30
177032 . . . . . 2-30
177035 . . . . . 2-73
177097 . . . . . 2-29
178968 . . . . . 2-17, 2-23
178969 . . . . . 2-17, 2-23
179933 . . . . . 2-11, 2-13
180020 . . . . . 2-77
180043 . . . . . 2-33
180120 . . . . . 2-4, 2-7
180121 . . . . . 2-7
1-816-010005 . . . . . 2-26
184708 . . . . . 2-18, 2-24
184769 . . . . . 2-13
185757 . . . . . 2-67, 2-69
186100 . . . . . 2-45, 2-47, 2-49
186101 . . . . . 2-45, 2-47, 2-49
1-861-010004 . . . . . 2-41
1-861-010032-06 . . . . . 2-13

1-861-010032-07 . . . . . 2-4
1-861-010032-11 . . . . . 2-43, 2-77
1-861-010032-14 . . . . . 2-33, 2-43
1-861-010032-15 . . . . . 2-15
1-861-010032-20 . . . . . 2-35, 2-38
1-861-010032-21 . . . . . 2-4
1-861-010032-24 . . . . . 2-29
1-861-010032-29 . . . . . 2-21
1-861-010032-32 . . . . . 2-33
1-861-010034-10 . . . . . 2-11, 2-13
1-861-010034-13 . . . . . 2-54, 2-63, 2-65
1-861-010034-17 . . . . . 2-41, 2-43, 2-59, 2-67, 2-69
1-861-010034-21 . . . . . 2-51, 2-54, 2-59, 2-61, 2-65
188528 . . . . . 2-56
188530 . . . . . 2-56, 2-63, 2-65
188531 . . . . . 2-56
189451 . . . . . 2-29, 2-30
189453 . . . . . 2-30
189454 . . . . . 2-30
189468 . . . . . 2-30
190955 . . . . . 2-67
190956 . . . . . 2-67
190957 . . . . . 2-67
190958 . . . . . 2-67
191487 . . . . . 2-61, 2-65
191924 . . . . . 2-56, 2-63, 2-65
191925 . . . . . 2-56, 2-63, 2-65
191954 . . . . . 2-61
191955 . . . . . 2-61
191956 . . . . . 2-61
191974 . . . . . 2-9, 2-13
191976 . . . . . 2-13
191998 . . . . . 2-69
193149 . . . . . 2-85
198320 . . . . . 2-54, 2-63, 2-65
198322 . . . . . 2-18, 2-24
198342 . . . . . 2-17, 2-23
198344 . . . . . 2-17, 2-23
198351 . . . . . 2-9
198404 . . . . . 2-4
1P444 . . . . . 2-56, 2-63, 2-65
200129 . . . . . 2-18, 2-24
200218 . . . . . 2-67, 2-69
200221 . . . . . 2-67, 2-69
200222 . . . . . 2-67, 2-69
200259 . . . . . 2-67, 2-69
200310 . . . . . 2-18, 2-24
202702-6-6S . . . . . 2-56
202702-8-6S . . . . . 2-56
202702-8-8S . . . . . 2-77, 2-84, 2-85
203003-8-8S . . . . . 2-77
203005-8-8S . . . . . 2-84, 2-85
203102-8-8S . . . . . 2-82, 2-84
203525 . . . . . 2-61, 2-63, 2-65
204385 . . . . . 2-17, 2-23
204400 . . . . . 2-67, 2-69
204416 . . . . . 2-67
204417 . . . . . 2-67
204418 . . . . . 2-67
204419 . . . . . 2-67
204422 . . . . . 2-67
204423 . . . . . 2-67
204424 . . . . . 2-67
204425 . . . . . 2-67
204505 . . . . . 2-61, 2-63, 2-65
204510 . . . . . 2-61, 2-63, 2-65
204511 . . . . . 2-61, 2-63, 2-65
204522 . . . . . 2-69
204544 . . . . . 2-17, 2-23
204548 . . . . . 2-18, 2-24
2061-6-6S . . . . . 2-56
2062-6-6S . . . . . 2-56
2062-8-8S . . . . . 2-4, 2-56, 2-77, 2-82, 2-84, 2-85
206599 . . . . . 2-71
206652 . . . . . 2-54, 2-63, 2-65
206670 . . . . . 2-55, 2-71

https://truckmanualshub.com/




206675 . . . . . 2-54
2071-8-8S . . . . . 2-82
207849 . . . . . 2-17, 2-23
207876 . . . . . 2-17, 2-23
207877 . . . . . 2-17, 2-23
2-102-010032 . . . . . 2-73
210606 . . . . . 2-25
212046 . . . . . 2-18, 2-24
2-150-010008 . . . . . 2-4
2-150-010174 . . . . . 2-4, 2-15
2-150-010218 . . . . . 2-5, 2-9
215341 . . . . . 2-18, 2-24
215351 . . . . . 2-18, 2-24
215352 . . . . . 2-17, 2-23
2-181-010001 . . . . . 2-43, 2-56, 2-83
23085 . . . . . 2-5, 2-43
2-368-010273 . . . . . 2-39, 2-73
2-368-010287 . . . . . 2-73
2-375-010602 . . . . . 2-29
2-406-010005 . . . . . 2-41
2-474-010022 . . . . . 2-56, 2-85
2-557-010426 . . . . . 2-34
2-573-010037 . . . . . 2-95
2-573-010149 . . . . . 2-77, 2-95
2-573-010150 . . . . . 2-95
2-573-010198 . . . . . 2-95
2-573-010330-02 . . . . . 2-95
2-573-010330-03 . . . . . 2-95
3067 . . . . . 2-11, 2-13
3-870-010097 . . . . . 2-9
4001060 . . . . . 2-26
415 . . . . . 2-17, 2-23
5000 . . . . . 2-25, 2-26, 2-43
500171 . . . . . 2-34
5013 . . . . . 2-13
528933 . . . . . 2-73, 2-95
528934 . . . . . 2-73, 2-95
528938 . . . . . 2-73, 2-95
6-102-010009 . . . . . 2-59
70239854 . . . . . 2-4
70260977 . . . . . 2-73
71508981 . . . . . 2-55
71508982 . . . . . 2-82
71508984 . . . . . 2-82
71508987 . . . . . 2-77
71509000 . . . . . 2-83
71509001 . . . . . 2-55
71509006 . . . . . 2-55
71509008 . . . . . 2-55
71509009 . . . . . 2-55
71509124 . . . . . 2-55
71510821 . . . . . 2-77
71600088 . . . . . 2-82
71600529 . . . . . 2-55, 2-56
7779-102 . . . . . 2-55
7779-34 . . . . . 2-55
7779-48 . . . . . 2-55
7779-54 . . . . . 2-55
7779-72 . . . . . 2-55
7779-78 . . . . . 2-55
7779-84 . . . . . 2-55
7779-90 . . . . . 2-55
8-102-010012 . . . . . 2-67, 2-69
8-573-010084 . . . . . 2-95
900598-6S . . . . . 2-70, 2-71


## H


HM212011 . . . . . 2-11, 2-13
HM212049 . . . . . 2-11, 2-13
HM218210 . . . . . 2-11, 2-13
HM218248 . . . . . 2-11, 2-13


## T


TR416 . . . . . 2-9, 2-41

https://truckmanualshub.com/



**TR575** . . . . . *2-17*, *2-23*

## W

**W908409-4** . . . . . *2-4*, *2-73*

https://truckmanualshub.com/

## Document Control Revision Log:

| Date | Revision | End Item # | Improvement(s) Description and Comments |
|---|---|---|---|
| 03/28/11 | F-608 | 7450 | Initial Release |
| 11/02/18 | F-608-1118 | 7450 | ECN44047 walking beam revision, ECN44101 Galaxy Tire/Wheel revision |
| | | | |
| | | | |

https://truckmanualshub.com/

Equipment from Landoll Corporation is built to exacting standards ensured by ISO 9001 registration at all Landoll manufacturing facilities.

# Model 7450

## VT Plus
## Parts Manual

Re-Order Part Number F-608-1118

**LANDOLL CORPORATION**
1900 North Street
Marysville, Kansas 66508
(785) 562-5381
**800-428-5655 ~ WWW.LANDOLL.COM**

Copyright 2010. Landoll Corporation
"All rights reserved, including the right to reproduce this material or portions thereof in any form."

Scan to go to www.landoll.com