https://truckmanualshub.com/

Form No.
908424

552/553

Dynalift®
Telescopic Boom Forklift

OPERATOR'S MANUAL

GEHL®

Courtesy of Crane.Market

https://truckmanualshub.com/

Dynalift® Indicator & Operation Symbols

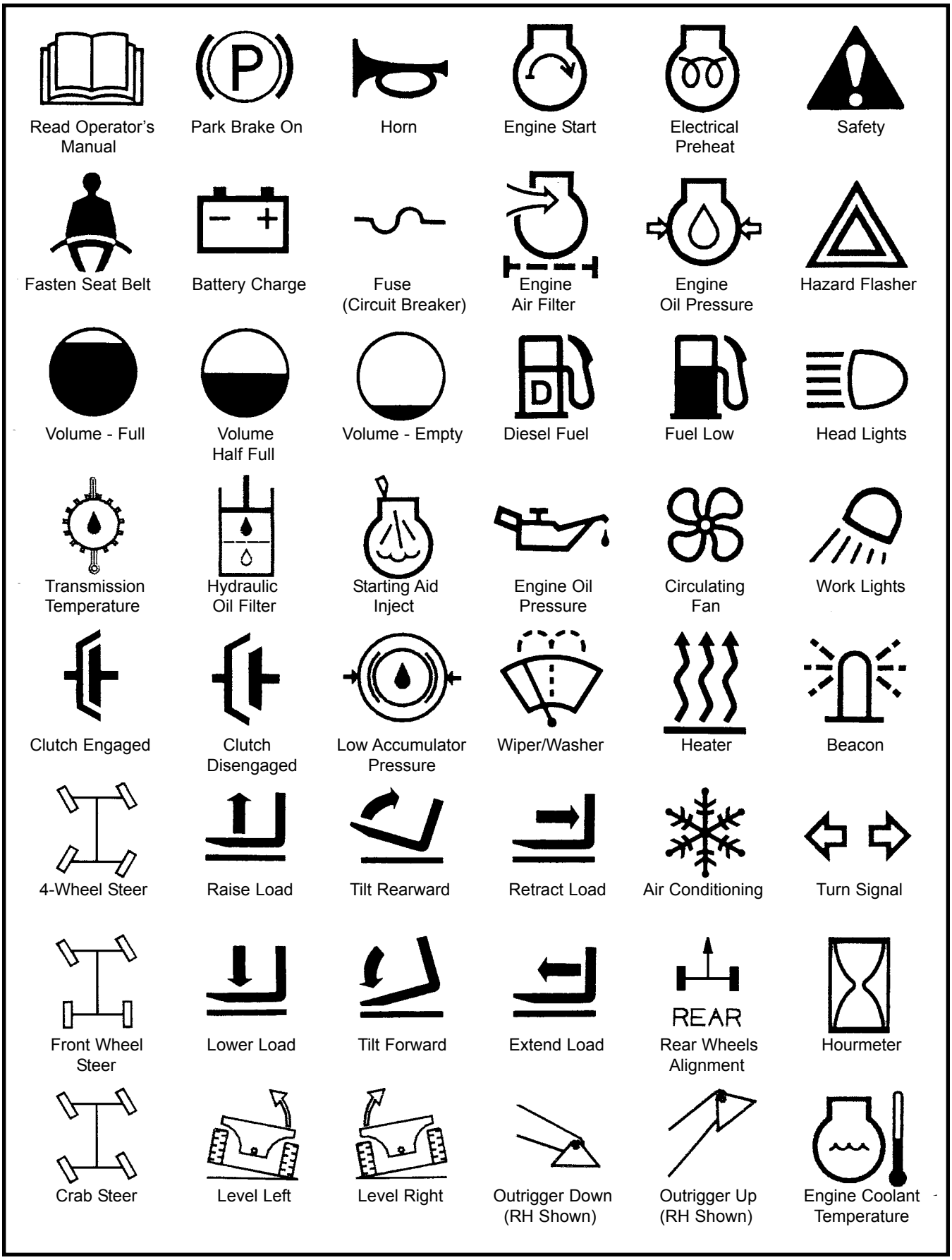

Courtesy of Crane.Market

https://truckmanualshub.com/

Table of Contents

Chapter	Description	Page
	International Symbols	Inside Front Cover
1	Introduction	2
2	Specifications	4
3	Check Lists	7
4	**SAFETY**	10
5	Indicators & Controls	21
6	Operation & Adjustments	28
7	Lubrication	39
8	Service & Storage	42
9	Decal Locations	55
10	Maintenance	61
	Index	64
	Electrical & Hydraulic Schematics	68
	Standard Hardware Torque Data	72
	Load Zone Charts	73
	Warranty	Inside Back Cover

IDENTIFICATION INFORMATION

Write your Gehl Dynalift Model and Serial Numbers in the space provided below.
Refer to these numbers when inquiring about parts or service from your Gehl dealer.

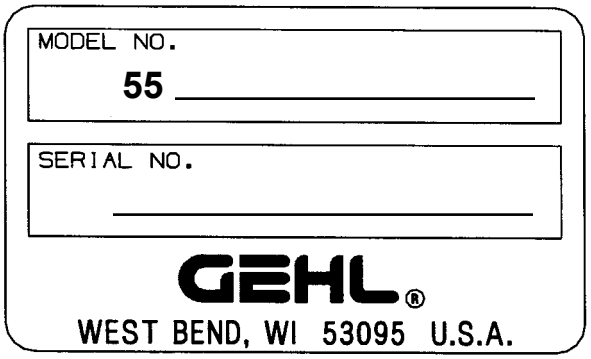

The Model and Serial Numbers for this machine are on a decal located inside the Operator's Station.

Courtesy of Crane.Market

https://truckmanualshub.com/

Chapter 1

INTRODUCTION

The information in this Operator's Manual was written to give the owner/operator assistance in preparing, adjusting, maintaining and servicing of the Telescopic Boom Forklift. More importantly, this manual provides an operating plan for safe and proper use of the machine. Major points of safe operation are detailed in the **SAFETY** chapter of this manual.

The GEHL® Company asks that you read and understand the contents of this manual COMPLETELY and become familiar with your new machine, BEFORE operating it.

Throughout this manual, information is provided that is set in *italic* type and introduced by the word **IMPORTANT** or **NOTE.** Be sure to read carefully and comply with the message or directive given. Following this information will improve your operating or maintenance efficiency, help you to avoid breakdowns or damage and extend your machine's life. A chart of standard hardware torques is located in the back of this manual.

A plastic container is provided on the unit for storing the Operator's Manual. After using the manual, please return it to the container and keep it with the unit at all times! If this machine is resold, **GEHL** Company recommends that this manual be given to the new owner.

"Right" and "left" are determined from a position sitting on the seat and facing forward.

Our wide dealership network stands ready to provide you with any assistance you may require, including genuine **GEHL** service parts. All parts should be obtained from or ordered through your **GEHL** dealer. Give complete information about the part and include the model and serial numbers of your machine. Record the serial number in the space provided on the previous page as a handy record for quick reference.

GEHL Company reserves the right to make changes or improvements in the design or construction of any part without incurring the obligation to install such changes on any unit previously delivered.

The GEHL Company, in cooperation with the Society of Automotive Engineers, has adopted this

Safety Alert Symbol

to pinpoint characteristics which, if NOT properly followed, can create a safety hazard. When you see this symbol in this manual or on the machine itself, you are reminded to BE ALERT! Your personal safety is involved!

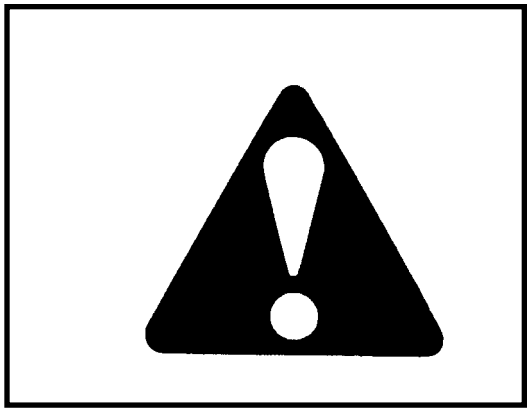

Courtesy of Crane.Market

https://truckmanualshub.com/

Identification

(553 Shown)

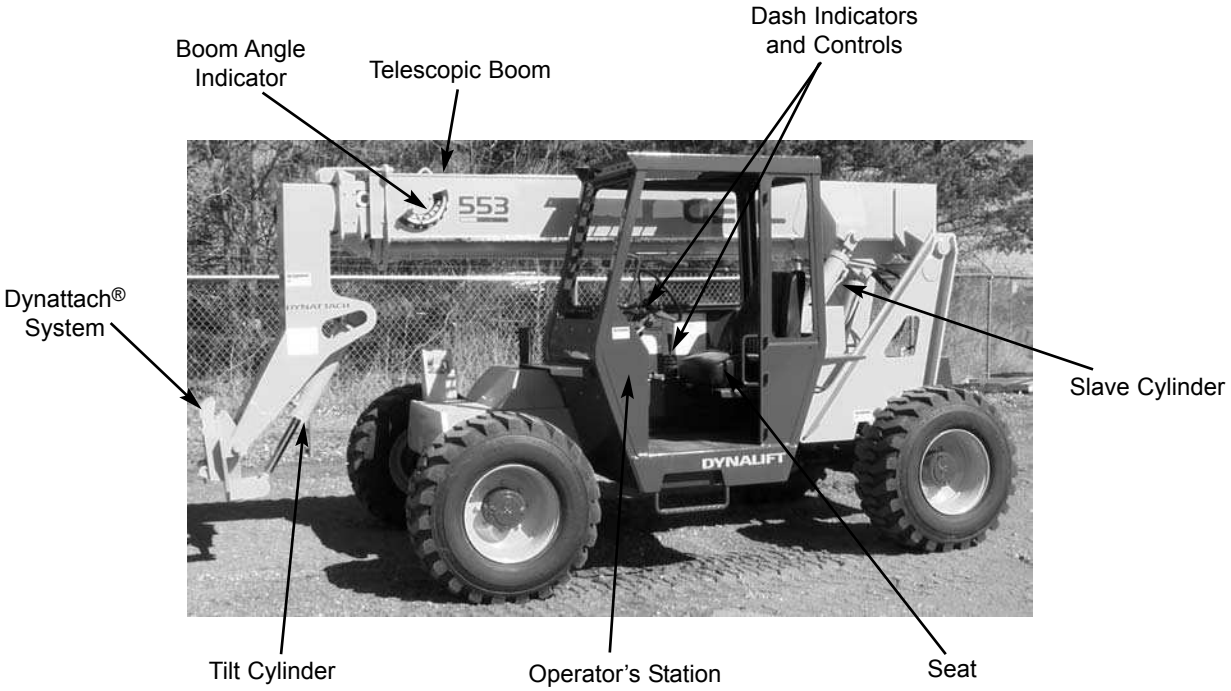

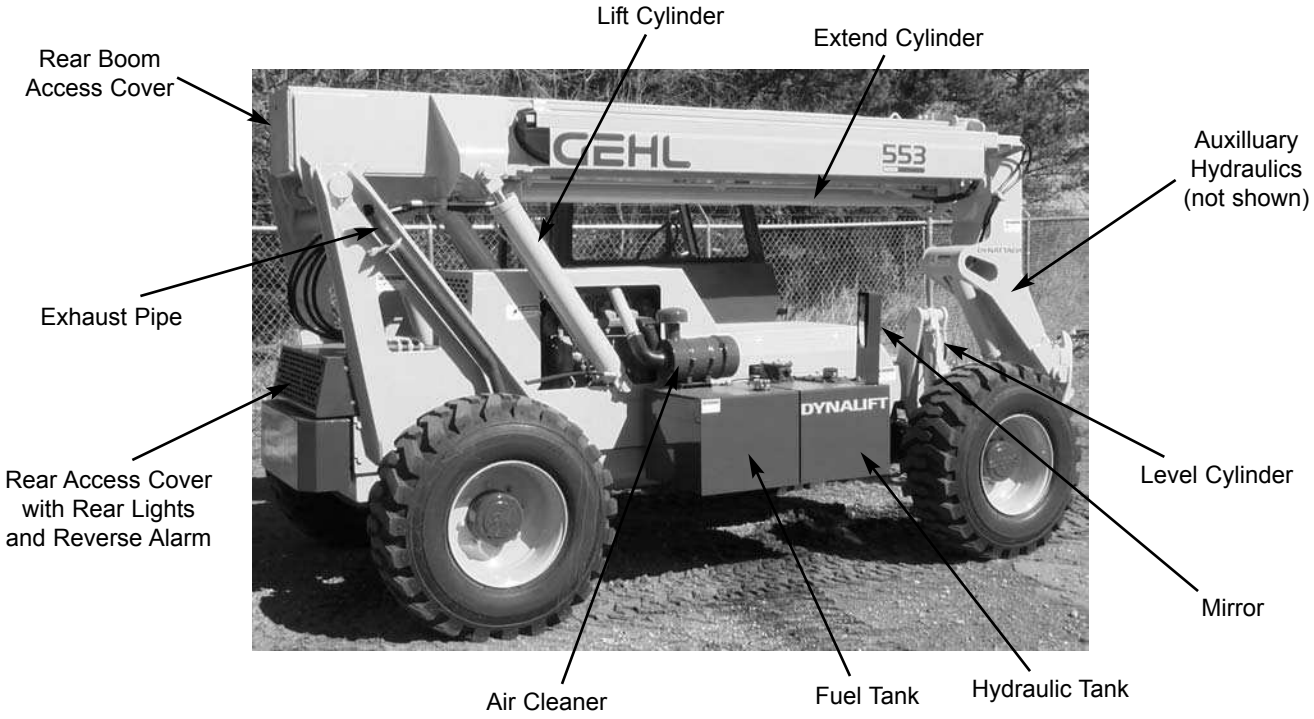

Courtesy of Crane.Market

https://truckmanualshub.com/

Chapter 2

SPECIFICATIONS

Lifting Performance

Maximum lift capacity:
552: 5500 lbs (2495 kg)
553: 6000 lbs (2721 kg)

Maximum lift height:
552: 25’-5” (7.75 m)
553: 34’-3” (10.44 m)

Capacity at maximum lift height:
552: 5500 lbs (2595 kg)
553: 4000 lbs (1820 kg)

Max. forward reach to load center:
552: 14’-0” (4.27 m)
553: 23’-3” (7.09 m)

Capacity at maximum forward reach:
552: 2500 lbs (1135 kg)
553: 900 lbs (408 kg)

Maximum below grade reach:
552: 12” (305 mm)
553: 24” (610 mm)

Frame Leveling:
10º left/10º right

General Dimensions

Based on standard machine equipped with listed tires, 48” masonry carriage and 48” pallet forks.

Recommended tire type:
15.00 x 19.5 12 ply
405/70 R 20 x M27 Traction Type
9.00 R 20 x Mine D2 Severe Duty

Overall length, less forks:
552: 15’-5” (4.70 m)
553: 16’-0” (4.88 m)

Overall width:
7’-10” (2.39 m)

Overall height:
7’-9” (2.36 m)

Ground clearance: 14” (356 mm)
Wheel base: 9’-2” (2.8 m)
Outside turn radius: 12’-6” (3.81 m)

Machine weight:
552: 13,800 lbs (6265 kg)
553: 15,100 lbs (6855 kg)

Instrumentation

Gauges: Fuel level, hourmeter and coolant temperature

Monitoring lights:
Engine oil pressure, alternator, transmission oil temperature, brake failure

Monitoring alarms:
Park brake on

Visual indicators:
Boom angle, frame angle

Steering System

Steer Valve: Fixed displacement rotary
Displacement/Rev: 17.9 cu. in. (293 cc)
System pressure: 2000 psi (138 bar)
Steer cylinders: 1 per axle
Steer mode valve:
3-position, 4-way solenoid with dash-mounted switch actuation.
Steer modes: 2 wheel, 4 wheel, crab

Braking System

Service brakes: Oil immersed in-board hydraulic wet disc type. Separate front and rear systems.
Manual foot pedal actuation.

Parking brake: Mechanical disc type.

Electrical System

Type: 12 volt negative ground
Battery: 745 cold cranking amps
Circuit protection: Circuit breakers
Backup alarm: 107 dB(A)
Horn: 111 dB(A)

Standard on all models:
Brake lights, neutral start switch

Alternator: (See Engine Options)

Service Capacities

Cooling System: 17.2 qts. (16.3 L)
50/50 mixture
Anti-freeze protection: -34ºF (-31ºC)
Pressure cap: 10 psi (69 kPa)

Fuel tank: 29 gals. (110 L)
Hydraulic tank & system: 35 gals. (133 L)
Transmission & cooler: 24 qts. (22.7 L)
Axles:
Differentials: 9.6 qts. (9 L) ea.
Hubs: 0.6 qts. (0.5 L) ea.

Transmission

Type: Clark Powershift T12000
Speeds: 3 fwd / 3 rev
Torque converter:
Single stage, dual phase

Travel Speeds:
1st gear: 3.6 mph (5.8 km/h)
2nd gear: 7.9 mph (12.7 km/h)
3rd gear: 20.2 mph (32.5 km/h)

Axles (front and rear)

Type: Hurth
Drive/steer, open differential, double reduction planetary, full-time four wheel drive
Overall ratio: 15.4:1

Engine Options

Common to all options:
In-line 4 cycle, 4 cylinder, direct injection diesel fuel system, in-line fuel filter w/water trap, positive pressure lubrication, liquid pressurized cooling system, 18” (457 mm) blower fan, dry single-element air cleaner, spin-on oil filter, 65 amp alternator.

Natural aspiration:
John Deere 4045D
276 cu. in. (4523 cc) displacement
80 hp (60 kW) @ 2500 rpm
Oil capacity: 10 qts. (9.5 L)

Turbocharged aspiration:
John Deere 4045T
276 cu. in. (4523 cc) displacement
115 hp (86 kW) @ 2500 rpm
Oil capacity: 10 qts. (9.5 L)

Perkins 4236
243 cu. in. (3982 cc) displacement
86 hp (65 kW) @ 2500 rpm
Oil capacity: 8 qts. (7.6 L)

Courtesy of Crane.Market

https://truckmanualshub.com/

Hydraulic System

Type: Open center
Pump: Single section gear type

Displacement / revolution:
2.7 cu. in. (44.3 cc)

Flow @ 2500 RPM:
29 gpm (110 L/min)

Main relief pressure:
2800 psi (194 bar)
Steer relief pressure:
2000 psi (138 bar)

Hydraulic filter:
In-tank return type, 10 micron media, replaceable element.
Rated flow: 100 gpm (379 L/min)
Rated pressure: 100 psi (690 kPa)
By-pass pressure (full flow):
25 psi (172 kPa)

Hydraulic strainer:
In-tank suction, 149 micron media, replaceable element.
Rated flow: 50 gpm (189 L/min)
By-pass pressure: 3 psi (21 kPa)

Courtesy of Crane.Market

https://truckmanualshub.com/

INTENTIONALLY BLANK PAGE

Courtesy of Crane.Market

https://truckmanualshub.com/

Chapter 3

CHECKLISTS

PRE-DELIVERY

The following Checklist is an important reminder of valuable information and inspections which MUST be made before delivering the Telescopic Forklift to the Customer. Check off each item after prescribed action is taken.

✔ Check that:

- ❑ NO parts of machine have been damaged in shipment. Check for such things as dents and loose or missing parts; correct or replace components as required.
- ❑ Battery is securely mounted and not cracked, cable connections are tight, electrolyte at proper level.
- ❑ Cylinders, hoses and fittings are not damaged, leaking or loosely secured.
- ❑ Oil, fuel and air filters are not damaged leaking or loosely secured.
- ❑ All grease fittings have been properly lubricated and no fittings are missing; see LUBRICATION chapter of this manual.
- ❑ Hydraulic system reservoir, engine crankcase, engine coolant, transmission and axles are filled to the proper operating fluid levels.
- ❑ All adjustments have been made to comply with the settings given in this manual and in the separate engine manual.
- ❑ All guards, shields and decals are in place and securely attached. All tires have proper operating pressure.
- ❑ Model and Serial Number for this unit is recorded in space provided on this page and page 1.

Start the machine and test-run the unit while checking that proper operation is exhibited by all controls.

✔ Check that:

- ❑ All indicators (lamps, switches, etc.) function properly.
- ❑ All hand and foot controls operate properly.
- ❑ Boom, Dynattach® with attachment tool and frame level control all function properly.
- ❑ No hydraulic system leaks when under pressure.
- ❑ Listen for abnormal noises or vibrations; if detected, determine their cause and repair as necessary.

I acknowledge that pre-delivery procedures were performed on this unit as outlined above.

_____
Dealership's Name

_____
Dealer Representative's Name

_____
Date Checklist filled-out

_____
Machine Model# Machine Serial # Engine Serial #

DELIVERY

✔ Check that:

The following Checklist is an important reminder of valuable information that MUST be passed on to the Customer at the time the unit is delivered. Check off each item as you explain it to the Customer.

- ❑ Review with the Customer the contents of the EMI Safety Manual and this manual for the following:
- ❑ The INDEX at the back, for quickly locating topics;
- ❑ The SAFETY; INDICATORS/CONTROLS; and OPERATION/ADJUSTMENTS chapters for information regarding safe use of the machine.
- ❑ The LUBRICATION, SERVICE/STORAGE chapters for information regarding proper maintenance of the machine. Explain that regular lubrication and maintenance are required for continued safe operation and long life.
- ❑ Give this Operator's Manual and the EMI Safety Manual to the Customer and instruct them to be sure to read and completely understand its contents BEFORE operating the unit.
- ❑ Explain that the Customer MUST consult the Engine Manual (provided) for related specifications, operating adjustments and maintenance instructions.
- ❑ Completely fill out the Owner's Registration, including Customer's signature and, return it to the company.

_____
Customer's Signature

_____
Date Delivered

(Dealer's File Copy - Remove at Perforation)

Courtesy of Crane.Market

https://truckmanualshub.com/

INTENTIONALLY BLANK

(To be removed as Dealer's file copy)

Courtesy of Crane.Market

https://truckmanualshub.com/

Chapter 3

CHECKLISTS

PRE-DELIVERY

The following Checklist is an important reminder of valuable information and inspections which MUST be made before delivering the Telescopic Forklift to the Customer. Check off each item after prescribed action is taken.

✔ Check that:

- ❑ NO parts of machine have been damaged in shipment. Check for such things as dents and loose or missing parts; correct or replace components as required.
- ❑ Battery is securely mounted and not cracked, cable connections are tight, electrolyte at proper level.
- ❑ Cylinders, hoses and fittings are not damaged, leaking or loosely secured.
- ❑ Oil, fuel and air filters are not damaged leaking or loosely secured.
- ❑ All grease fittings have been properly lubricated and no fittings are missing; see LUBRICATION Chapter of this manual.
- ❑ Hydraulic system reservoir, engine crankcase, engine coolant, transmission and axles are filled to the proper operating fluid levels.
- ❑ All adjustments have been made to comply with the settings given in this manual and in the separate engine manual.
- ❑ All guards, shields and decals are in place and securely attached. All tires have proper operating pressure.
- ❑ Model and Serial Number for this unit is recorded in space provided on this page and page 1.

Start the machine and test-run the unit while checking that proper operation is exhibited by all controls.

✔ Check that:

- ❑ All indicators (lamps, switches, etc.) function properly.
- ❑ All hand and foot controls operate properly.
- ❑ Boom, Dynattach® with attachment tool and frame level control all function properly.
- ❑ No hydraulic system leaks when under pressure.
- ❑ Listen for abnormal noises or vibrations; if detected, determine their cause and repair as necessary.

I acknowledge that pre-delivery procedures were performed on this unit as outlined above.

_____
Dealership's Name

_____
Dealer Representative's Name

_____
Date Checklist filled-out

_____
Machine Model# Machine Serial # Engine Serial #

DELIVERY

✔ Check that:

The following Checklist is an important reminder of valuable information that MUST be passed on to the Customer at the time the unit is delivered. Check off each item as you explain it to the Customer.

- ❑ Review with the Customer the contents of the EMI Safety Manual and this manual for the following:
- ❑ The *Index* at the back, for quickly locating topics;
- ❑ The SAFETY; INDICATORS/CONTROLS; and OPERATION/ADJUSTMENTS chapters for information regarding safe use of the machine.
- ❑ The LUBRICATION, SERVICE/STORAGE chapters for information regarding proper maintenance of the machine. Explain that regular lubrication and maintenance are required for continued safe operation and long life.
- ❑ Give this Operator's Manual and the EMI Safety Manual to the Customer and instruct them to be sure to read and completely understand its contents BEFORE operating the unit.
- ❑ Explain that the Customer MUST consult the Engine Manual (provided) for related specifications, operating adjustments and maintenance instructions.
- ❑ Completely fill out the Owner's Registration, including Customer's signature and, return it to the company.

_____
Customer's Signature

_____
Date Delivered

(Pages 7 & 8 - have been removed at perforation)

Courtesy of Crane.Market

https://truckmanualshub.com/

Chapter 4

SAFETY

The above Safety Alert Symbol means **ATTENTION! ALWAYS BE ALERT! YOUR SAFETY IS INVOLVED!** It stresses an attitude of "Heads Up for Safety" and can be found throughout this Operator's Manual and the machine itself.

Before operating this equipment, read and study the following safety information. In addition, be sure that every individual who operates or works with this equipment, whether family member or employee, is familiar with these safety precautions.

The Gehl Company ALWAYS takes the operator's safety into consideration when designing its machinery and guards exposed moving parts for his/her protection. However, some areas cannot be guarded or shielded in order to assure proper operation. Further, this Operator's Manual, the EMI Safety Manual and decals on the machine warn of additional hazards and should be read and observed closely.

DANGER

"DANGER" indicates an imminently hazardous situation which, if not avoided, will result in death or serious injury.

WARNING

"WARNING" indicates a potentially hazardous situation which, if not avoided, will result in death or serious injury.

CAUTION

"CAUTION" indicates a potentially hazardous situation which, if not avoided, may result in minor or moderate injury. Also alerts to unsafe practices.

REMEMBER! It is the owner's responsibility for communicating information on the safe use and proper maintenance of this machine! This includes providing understandable interpretation of these instructions for operators who are not fluent in reading English.

It is the responsibility of the operator to read and understand the Operator's Manual and other information provided and use the correct operating procedure. Machines should be operated only by qualified operators.

MANDATORY SAFETY SHUTDOWN PROCEDURE

BEFORE cleaning, adjusting, lubricating or servicing the unit:

1. Stop machine on a level surface. (AVOID parking on a slope, but if necessary, park across the slope and block the wheels).

2. Fully retract the boom and lower the attachment tool to the ground. Idle engine for gradual cooling.

3. Place controls in neutral and set parking brake.

4. Shut off engine and remove key.

ONLY when you have taken these precautions can you be sure it is safe to proceed. Failure to follow the above procedure could lead to death or serious injury.

Courtesy of Crane.Market

https://truckmanualshub.com/

SAFETY

WARNING

U.S. OSHA regulations require employers in general industry and the construction, shipyard and cargo-handling industries (excepting agricultural operations) to ensure that forklift operators are competent, as demonstrated by successful completion of a training course.

The training course must consist of a combination of formal instruction and practical training, including both forklift-related and workplace-related topics, and evaluation of the operator's performance in the workplace.

All operator training and evaluation is to be conducted by persons who have the knowledge, training and experience to train and evaluate operators.

WARNING

ALWAYS maintain a safe distance from electric power lines and avoid contact with any electrically charged conductor or gas line. It is not necessary to make direct contact with a power line for power to ground through the structure of the machine. Keep the boom at least 10 ft. (3 m) from all power lines. Accidental contact or rupture can result in electrocution or an explosion. Contact the North American One Call Referral System at (888) 258-0808 for the local "Digger's Hotline" number or proper local authorities for utility line locations BEFORE starting to dig!

ADDITIONAL SAFETY REMINDERS

- User/operator safety practices, as established by industry standards, are included in this Operator's Manual and intended to promote safe operation of the machine. These guidelines do not, of course, preclude the use of good judgment, care and common sense as may be indicated by the particular jobsite work conditions.

- It is essential that operators be physically and mentally free of mind altering drugs and chemicals and thoroughly trained in the safe operation of the machine. Such training should be presented completely to all new operators and not condensed for those claiming previous experience. Information on operator training is available from several sources including the manufacturer.

- Some illustrations used in this manual may show doors, guards and shields open or removed for illustration purposes ONLY. BE SURE that all doors, guards and shields are in their proper operating positions BEFORE starting the engine.

- Any or all of the following elements: terrain, engine speed, type of load being carried and placed, and abrupt movement of any control lever may affect the stability of the machine. **IF YOU ARE NOT CAREFUL WHILE OPERATING THIS MACHINE, ANY OF THE ABOVE FACTORS COULD CAUSE THE MACHINE TO TIP AND THROW YOU OUT OF THE OPERATOR'S STATION, WHICH MAY CAUSE SERIOUS BODILY INJURY OR DEATH!**

Courtesy of Crane.Market

https://truckmanualshub.com/

SAFETY

- ALWAYS wear the seat belt provided to prevent being throwned from the machine. If you are in an overturn:
  - DO NOT jump!
  - Hold on tight and stay with the machine!
  - Lean away from the fall!

- ALWAYS keep hands, feet and arms inside of the operator's station when operating the machine!

- ALWAYS wear appropriate personal protective equipment for the job and working conditions. Hard hats, goggles, protective shoes, gloves, reflector-type vests, respirators and ear protection are exampes of types of equipment that may be required. DO NOT wear loose fitting clothing, long hair, jewelry or loose personal items while operating or servicing the machine.

- ALWAYS be aware of and avoid pinch point areas on the machine such as wheels-to-frame, cylinders-to-frame, and boom attachment tool-to-frame.

- ALWAYS maintain safe clearance from electrical powerlines and avoid contact with any electrically charged conductor. Contact can result in electrocution. Contact proper local authorities for utility line location BEFORE starting a job.

- ALWAYS check the job site for terrain hazards, obstructions and people. Remove all objects which do not belong in or on the machine and its equipment.

- Walk around the machine and warn all personnel who may be servicing the machine or who are in the machine path prior to starting. DO NOT start until all personnel are clearly away from the machine.

- ALWAYS use the recommended hand holds and steps with at least three points of support when getting on and off the machine. Keep steps and platform clean. Face the machine when climbing up and down.

- NEVER attempt to by-pass the keyswitch to start the engine. ONLY use the jump-starting procedure detailed in the SERVICE & STORAGE chapter.

- NEVER use your hands to search for hydraulic fluid leaks. Use a piece of paper or cardboard. Escaping fluid under pressure can be invisible and can penetrate the skin, causing serious injury. If any fluid is injected into your skin, see a doctor at once. Injected fluid MUST be surgically removed by a doctor familiar with this type of injury or gangrene may result.

- ALWAYS wear safety glasses with side shields when striking metal against metal. In addition, it is also recommended that a softer (non-chipable) material be used to cushion the blow. Failure to heed could lead to serious injury to the eyes or other parts of the body.

- DO NOT raise or drop a loaded fork or bucket suddenly. Abrupt movements under load can cause serious instability.

- DO NOT exceed the machine's rated operating capacity for the type of attachment tool being used.

- DO NOT allow minors or any unqualified personnel to operate or be near the machine unless properly supervised.

- DO NOT start the engine or operate any controls unless properly seated in the operator's seat!

Courtesy of Crane.Market

https://truckmanualshub.com/

SAFETY

- DO NOT run the engine in an enclosed area without providing proper ventilation for the exhaust. Exhaust gases contain carbon monoxide, an odorless and deadly gas. Internal combustion engines deplete the oxygen supply within enclosed spaces and may create a serious hazard unless the oxygen is replaced. This includes the atmosphere within the cab when provided.

- DO NOT leave the operator's station with the boom and attachment tool raised. ALWAYS lower the boom and attachment tool to the ground, shut off the engine and engage the parking brake BEFORE leaving the operator's station.

- DO NOT refill the fuel tank when the engine is hot. Allow engine to cool down BEFORE refilling to prevent hot engine from igniting the fuel if it should spill or splash.

- DO NOT smoke while filling the fuel tank, while working on the fuel or hydraulic systems, or while working around the battery.

- DO NOT drive too close to an excavation or ditch. BE SURE that the surrounding ground has adequate strength to support the weight of the machine and the load it is carrying.

- DO NOT turn quickly while traveling on a slope or operate the machine beyond the grade and slope limits noted in the OPERATION & ADJUSTMENT chapter of the Operator's Manual.

- If necessary to park on a grade, park across the slope and block the wheels.

- DO NOT fill the fuel tank to capacity. Allow room for expansion. Maintain control of the fuel filler nozzle when filling the tank. Use the correct fuel grade for the operating season.

- NEVER use fuel for cleaning purposes.

- DO NOT remove the radiator cap after the engine has reached operating temperature or if it is overheated. At operating temperatures, the engine coolant will be extremely hot and under pressure. ALWAYS wait for the engine to cool down before attempting to relieve pressure and remove the radiator cap. Failure to heed this warning could result in severe burns.

- DO NOT loosen or disconnect any hydraulic lines, hoses or fittings without first relieving hydraulic circuit pressure. Also, be careful not to touch any hydraulic components that have been in recent operation because they can be extremely hot and can burn you!

- Avoid lubrication or mechanical adjustments with the machine in motion or the engine operating. If the engine must be in operation to make certain adjustments, place the transmission in neutral, apply the parking brake, place the equipment in a safe position, securely block the wheels and use extreme caution.

- NEVER allow any riders on this machine or use as a lift for personnel. This is strictly a single seat, NO passenger machine!

- To insure continued safe operation, replace damaged or worn-out parts with genuine GEHL service parts, BEFORE using this equipment.

Courtesy of Crane.Market

https://truckmanualshub.com/

SAFETY

- When road travel is required, know and use the signaling devices on the machine. Provide an escort and Slow Moving Vehicle (SMV) emblem when required.

Modifications, Nameplates, Markings And Capacities

- Modifications and additions that affect capacity or safe operation shall not be performed without the manufacturer's prior written approval. Where such authorization is granted, tags or decals shall be changed accordingly.

- All attachment tools MUST be marked to identify the attachment tool and the total capacity with attachment tool at maximum elevation with load laterally centered.

- ALWAYS be sure all nameplates, caution and instruction markings are in place and legible. Local government regulations may require specific decals, which then become the responsibility of the local owner to provide.

- Study the load chart carefully. It shows maximum capacity to be lifted and placed at specific outward and upward distances. ALWAYS be aware of load weights prior to attempting lift and placement with this machine.

Safety Guards and Warning Devices

- This machine is fitted with an overhead guard in accordance with industry standards. It is intended to offer protection to the operator from falling objects, but cannot protect against every possible impact. Therefore, it should not be considered a substitute for good judgment and care in operating the machine.

- This machine is equipped with a horn and backup alarm. The user must determine if operating conditions require the machine be equipped with additional devices (mirrors, rotating beacon, etc.) and be responsible for providing and maintaining such devices.

- Do NOT modify the ROPS in any manner. Unauthorized modifications such as welding, drilling, cutting or adding components can weaken the structure and reduce its protective ability. If a ROPS is subjected to roll-over or other damage, it must be replaced. Do NOT attempt to repair a ROPS

Courtesy of Crane.Market

https://truckmanualshub.com/

INTENTIONALLY BLANK

Courtesy of Crane.Market

https://truckmanualshub.com/

SAFETY

WARNING FOR MAXIMUM STABILITY CARRY LOAD AS LOW AS POSSIBLE. FAILURE TO HEED COULD RESULT IN DEATH OR SERIOUS INJURY. 093475

093475

DANGER

HIGH VOLTAGE POWER LINE HAZARD.

KEEP BOOM AND MACHINE A MINIMUM OF 10 FT. FROM HIGH VOLTAGE POWER LINES. CHECK LOCAL ELECTRIC POWER COMPANY CODES FOR ADDITIONAL REQUIREMENTS IN YOUR AREA.

FAILURE TO HEED WILL RESULT IN DEATH OR SERIOUS INJURY.

L65929

L65929

DANGER

MACHINE MOVING PARTS HAZARD.

DO NOT REMOVE THIS PANEL EXCEPT FOR REPLACEMENT.

FAILURE TO HEED WILL RESULT IN DEATH OR SERIOUS INJURY.

L65948

L65948

L65928

DANGER

PERSONAL INJURY HAZARD.

DO NOT USE THIS MACHINE AS A PERSONLIFT, OR FIT MACHINE WITH ANY FORM OF PERSONNEL WORK PLATFORM.

FAILURE TO HEED WILL RESULT IN DEATH OR SERIOUS INJURY.

L65928

L66042

WARNING

- REARWARD TILT AND TRANSPORT HAZARD.
- DO NOT TILT TRUSS BOOM OR WINCH REARWARD MORE THAN 45° WHEN MAIN BOOM IS ELEVATED ABOVE 45°.
- DO NOT TRANSPORT MATERIAL WITH TRUSS BOOM OR WINCH. SEE OPERATOR'S MANUAL.
- FAILURE TO HEED COULD RESULT IN DEATH OR SERIOUS INJURY.

L66042

Courtesy of Crane.Market

https://truckmanualshub.com/

SAFETY

WARNING

BEFORE OPERATING READ AND FULLY UNDERSTAND THE OPERATOR'S MANUAL AND LOAD CHARTS.

ALWAYS START AND OPERATE THIS MACHINE SEATED ON THE SEAT.

BE SURE ATTACHMENT IS IN LOCKED POSITION BEFORE OPERATING MACHINE.

SET PARK BRAKE AND PUT TRANSMISSION IN NEUTRAL BEFORE RAISING OR EXTENDING BOOM.

USE ONLY FRONT WHEEL STEER FOR HIGH SPEED TRAVEL.

IF BRAKE FAILURE LAMP ILLUMINATES DURING NORMAL OPERATION, FOLLOW MANDATORY SAFETY SHUTDOWN PROCEDURE.

NEVER LEAVE OPERATOR'S SEAT WITH BOOM IN ELEVATED POSITION.

FAILURE TO HEED COULD RESULT IN DEATH OR SERIOUS INJURY.

L63690

WARNING

BEFORE STARTING ENGINE

FASTEN SEAT BELT

UNSTABLE TERRAIN OR MISUSE OF THE MACHINE CAN CAUSE A ROLLOVER. DO NOT JUMP, HOLD TIGHT AND LEAN AWAY FROM FALL, KEEP SEAT BELT FASTENED AT ALL TIMES.

FAILURE TO HEED WARNING COULD RESULT IN DEATH OR SERIOUS INJURY.

L65440

PARKING BRAKE

WARNING

AN UNATTENDED MACHINE CAN MOVE OR ROLL.

SET PARKING BRAKE, LOWER CARRIAGE OR ATTACHMENT TO GROUND BEFORE LEAVING MACHINE.

FAILURE TO HEED COULD RESULT IN DEATH OR SERIOUS INJURY.

L65925

L63690

L65440

L65925

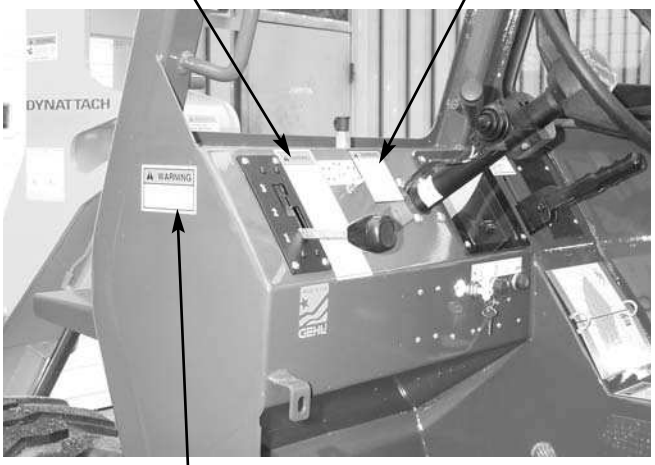

L65925

L65925

WARNING

RIDER INJURY HAZARD.

ABSOLUTELY NO RIDERS ALLOWED.

FAILURE TO HEED COULD RESULT IN DEATH OR SERIOUS INJURY.

L65932

WARNING

MACHINE ROLLOVER HAZARD.

ALWAYS LEVEL MACHINE BEFORE ELEVATING BOOM. NEVER LEVEL FRAME TO POSITION AN ELEVATED LOAD.

FAILURE TO HEED COULD RESULT IN DEATH OR SERIOUS INJURY.

L65930

Courtesy of Crane.Market

https://truckmanualshub.com/

SAFETY

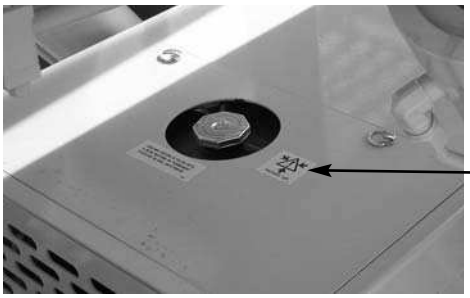

072798

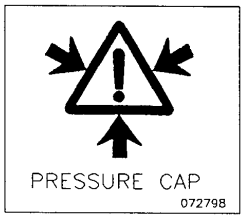

L65924

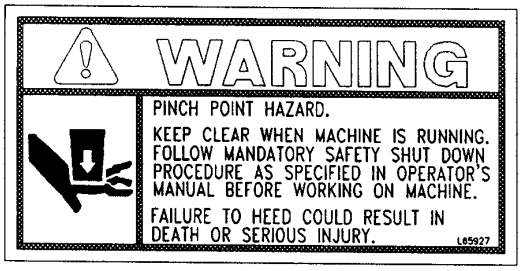

L65927

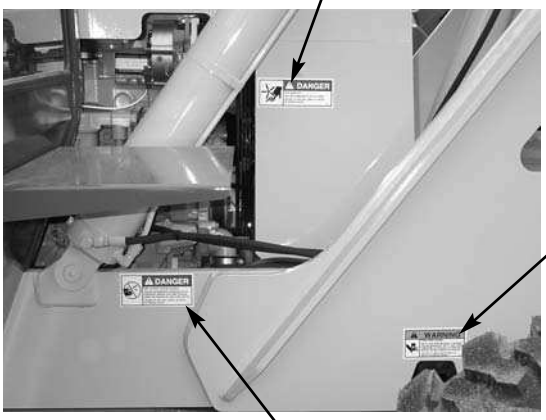

L65933

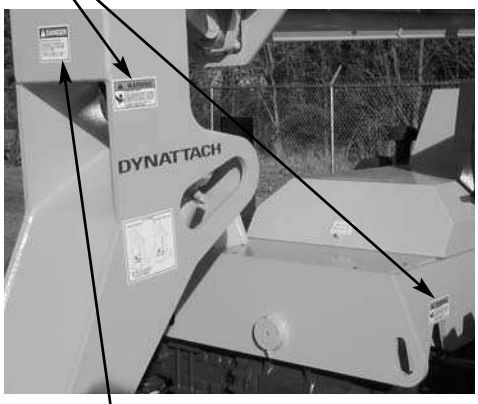

L65928

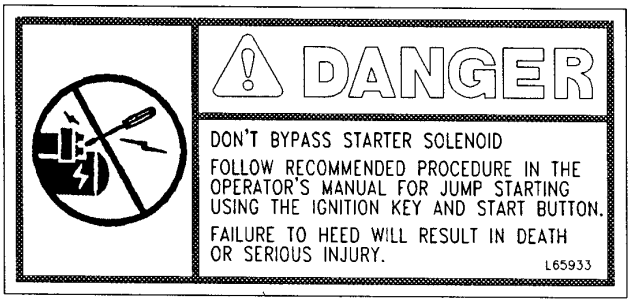

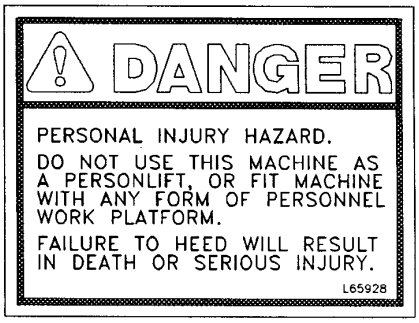

Courtesy of Crane.Market

https://truckmanualshub.com/

SAFETY

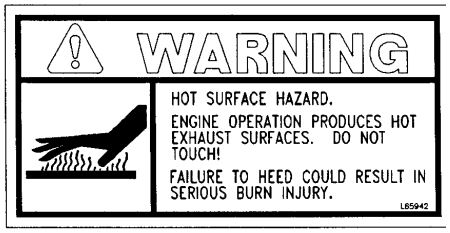

L65942

L65924

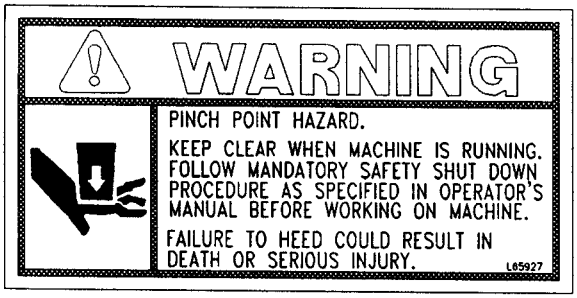

L65927

L65932

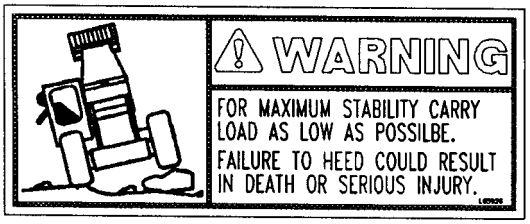

L65925

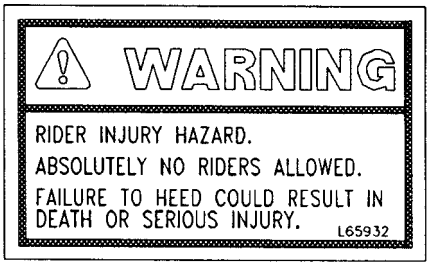

L65927

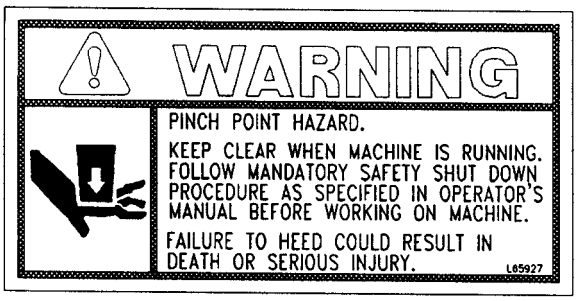

Courtesy of Crane.Market

https://truckmanualshub.com/

SAFETY

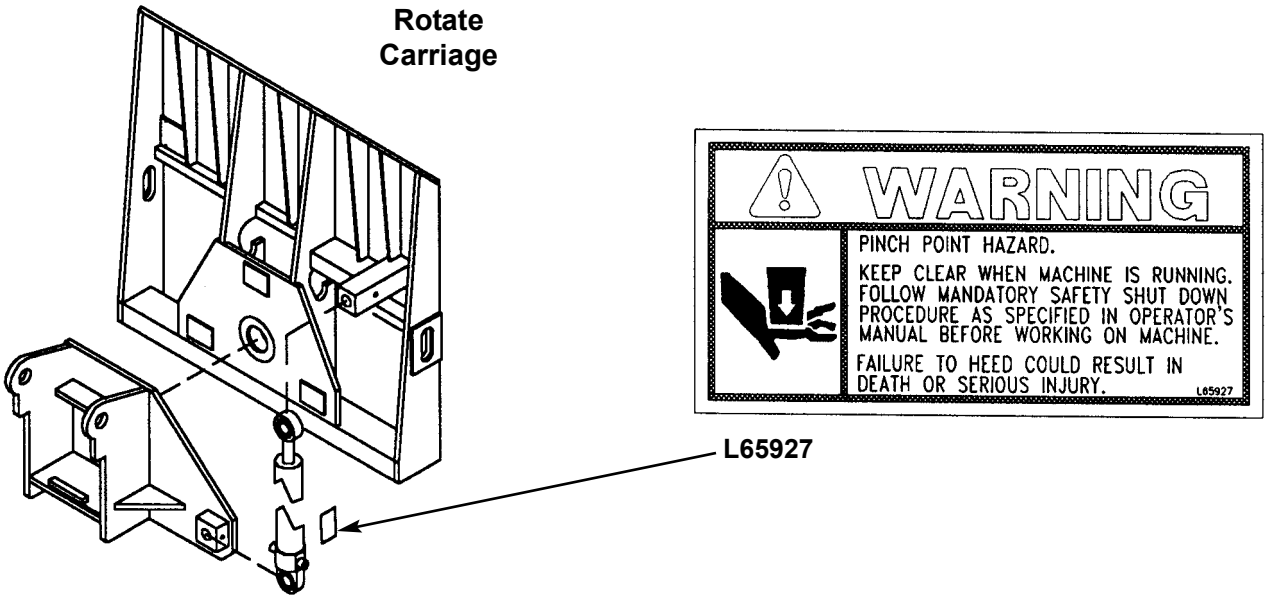

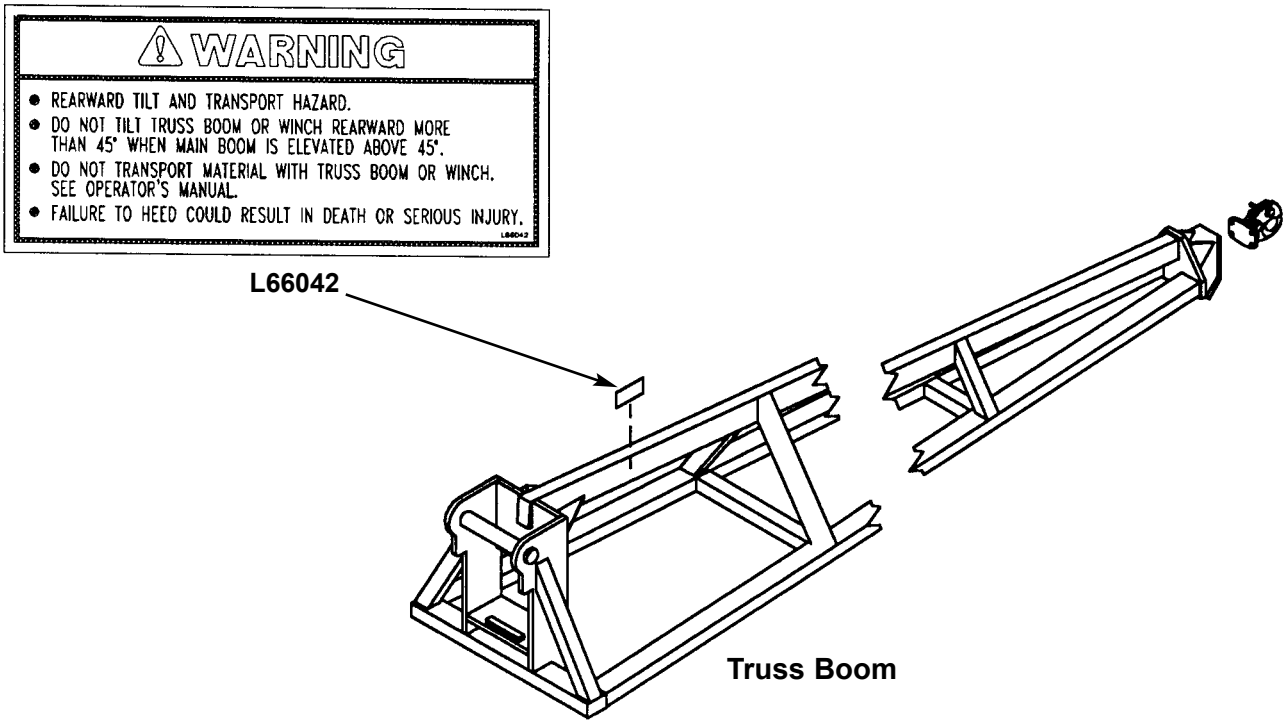

Courtesy of Crane.Market

https://truckmanualshub.com/

Chapter 5

INDICATORS AND CONTROLS

CAUTION

Become familiar with and know how to use ALL safety devices and controls on the Telescopic Handler BEFORE operating it. Know how to stop the machine operation BEFORE operating it. This GEHL machine is designed and intended to be used ONLY with a GEHL Company attachment tool, or a GEHL Company approved accessory or referral attachment tool. The GEHL Company cannot be responsible for operator safety if the machine is used with an unapproved attachment tool.

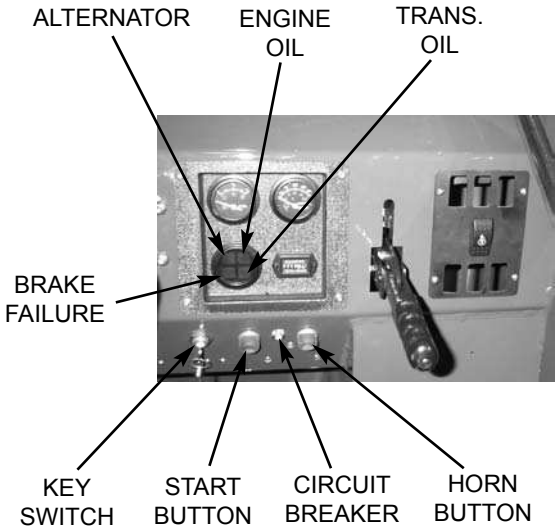

GUARDS AND SHIELDS

Whenever possible and without affecting machine operation, guards and shields are used to protect potentially hazardous areas. In many places, decals are also provided to warn of potential dangers and to display special operating procedures.

WARNING

Read and thoroughly understand all safety decals on the Telescopic Forklift BEFORE operating it. DO NOT operate the machine unless all factory-installed guards and shields are properly secured in place.

DASH AREA

Start Keyswitch & Pushbutton

Keyswitch OFF: When the key is vertical in the keyswitch, power from the battery is disconnected to the control and instrument panel electrical circuits. Also, this is the only position in which the key can be inserted or removed.

Keyswitch ON: When the key is turned one position clockwise from the vertical (OFF) position, power from the battery is supplied to all control and instrument panel electrical circuits.

NOTE: *If the engine requires repeated attempts to start, the key MUST be returned to the OFF position between starting attempts to prevent battery run down.*

Start Pushbutton: With keyswitch in ON position, depress the button to activate the starter. Release it as soon as the engine starts.

Courtesy of Crane.Market

https://truckmanualshub.com/

Circuit Breaker: The 15 amp breaker protects dash and engine electrical circuits. If it is not in the depressed position, the gauges and indicators on the dash will not work and the engine will shut off.

Horn Push Button: With the keyswitch ON, depress the horn button to activate horn.

Park Brake On: A buzzer located behind the dash sounds as long as the park brake lever is engaged, and the transmission is in forward or reverse.

Transmission Oil Temperature: This lamp indicates whether the transmission oil is at the proper operating temperature. During normal operation this lamp should be off, indicating that the transmission oil system is at the proper temperature.

IMPORTANT: *If this lamp comes ON during normal operation, a problem may exist in the transmission oil system. Stop the machine immediately and investigate the cause of the problem.*

Alternator Lamp: Indicates the condition of the electrical charging system. During normal operation, this lamp should be off. If the charge rate is too high or too low, this lamp will come on.

Brake Failure Lamp: The front and rear brakes are on independent brake line systems. If during normal operation with the brake pedal depressed, a loss of pressure occurs in either system, the brake failure lamp will come on.

Failure in one line of the system does not affect the operation of the other system line. However, the **MANDATORY SAFETY SHUTDOWN PROCEDURE** should be followed and required repairs made immediately.

During normal operation the lamp should remain off.

Engine Oil Pressure Lamp: Indicates whether sufficient engine libricating oil pressure is present or not. During normal operation, with the engine running, this lamp should be off. During starting and when the engine is not running with key in the on position, this lamp will be on.

IMPORTANT: *If this lamp comes ON during normal operation with the engine running, STOP the engine immediately. After allowing the oil to drain down for a few minutes, check the engine oil level. Maintain oil level at the FULL mark on the dipstick.*

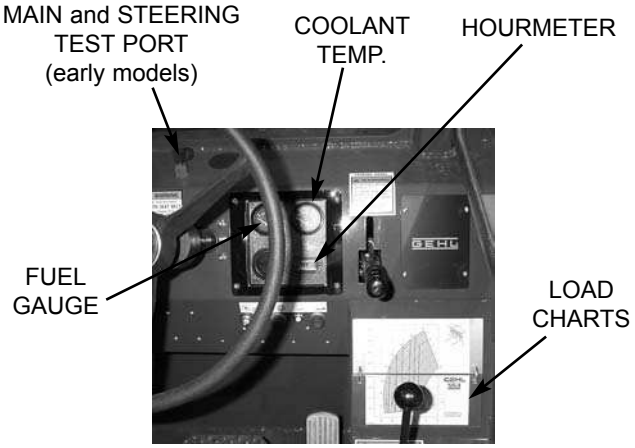

Hourmeter: Indicates the operating time of the machine and should be used for keeping up the maintenance log.

Coolant Temperature Gauge: Indicates the temperature of the engine coolant. Under normal conditions, this gauge should indicate approximately 185°F (85°C).

Fuel Level Gauge: Indicates the amount of fuel remaining in the fuel tank.

Load Charts: A series of flip charts show lift height and reach limits relative to the load weight being handled with various attachment tools.

TEST PORTS ON LATER MODELS

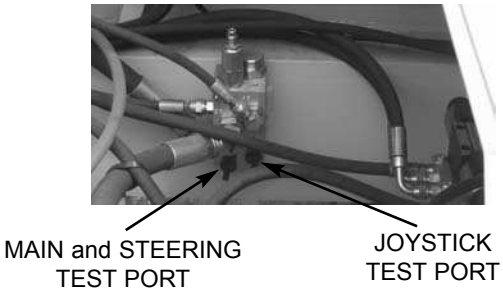

Hydraulic Pressure Test Port: A test gauge can be inserted to check main and steering system pressures, and joystick pressure on later units.

Courtesy of Crane.Market

https://truckmanualshub.com/

Switch Panel

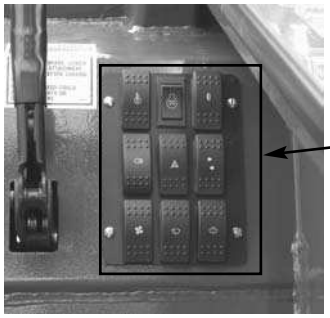

Clutch Cutout: When activated, it allows greater engine acceleration and power to the hydraulics system without power to the drive axles while the service brake pedal is depressed.

In the "off" position, the clutch mechanism of the transmission remains engaged when applying the brakes.

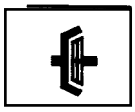

In the "on" position, the clutch mechanism is disengaged while applying the brakes.

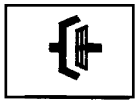

Normal brake force will hold the machine in position while accelerating the engine to power hydraulic control functions during load placement.

NOTE: *The switch panel also includes control switches for the following accessories used with the cab enclosure option.*

Heater: Provides circulating heated air throughout the cab interior.

Heater/AC: This switch turns on or off either heating or cooling selection for the operator's station interior. Units without air conditioning have only the heater mode switch.

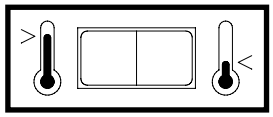

Lights Option: Work lights may be added to the operator station and boom to provide illumination for forward travel and work operations.

Windshield Wiper: Wiper motors can be activated with this switch to maintain proper visibility for the operator through the windshield and the top of the operator's station.

Windshield Washer: Used to apply cleansing agent while activating the windshield wipers.

Turn Signal: This switch is used to indicate the direction of a turn. Depress the arrow which indicates the direction of your turn.

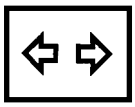

Hazard: This switch can be activated to make the tail lights flash off and on if the machine is stalled or temporarily stopped in a traffic area on the road or jobsite.

Cold Starting: This switch activates the injection of an ether agent for faster engine start in cold weather.

Engine Preheat ***(Perkins engine only)*****:** Warms intake air to the engine manifold to aid in cold weather starting.

Travel Controls

These controls are used to maneuver the machine around the jobsite or for road travel. Decals on the dash area provide graphic representation of the various control actions.

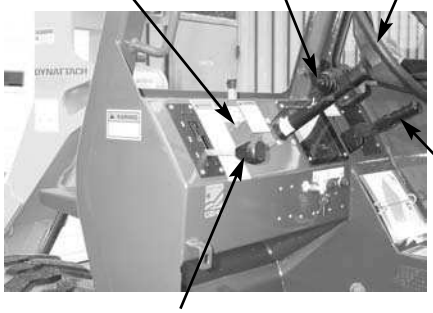

Steering: The power steering motor is designed to give effortless steering with no shock reaction from the axle wheels to the steering wheel. Turn the direct connected steering wheel to the right or left to turn the machine in the direction of wheel turn action.

Courtesy of Crane.Market

https://truckmanualshub.com/

Steer Select: Use "2-wheel mode" for higher speed travel. Use "4-wheel mode" for making tighter turns, usually on jobsite. Use "crab mode" when a small amount of side shift is needed for picking or placing loads. Any mode can be used in forward or reverse travel.

NOTE: *The rear wheels are not self-centering. Make sure all wheels are in a straight ahead position before changing the selector mode.*

Any of the steering position modes can be used in forward or reverse travel. The operator should learn to anticipate changes in machine movement if the steering selector mode must be changed.

Parking Brake: Functions as both a parking brake and emergency brake. The parking brake handle is linked by a cable to a brake assembly on the transmission output shaft.

⚠ WARNING

Unattended machine hazard.

Set parking brake and lower attachment tool to ground before leaving machine. An unattended machine can move or roll and cause death or serious injury to operator or bystanders.

Periodically check the parking brake tension and adjust, if required, to maintain adequate holding power. Always be sure the parking brake lever is off when resuming machine operation.

To adjust the tension, insert a flat blade screw driver through the hole in the top of the hand grip on the brake lever, and turn the screw until a pull effort of 20 lbs. (89 N) is achieved on the hand lever.

The parking brake may be used as an emergency stopping system on relatively level terrain should the service brakes fail. When properly adjusted and maintained it meets ANSI test requirements providing 35% of service brake performance at 20 lb. (89 N) hand lever effort.

Travel Direction Selector: Changes the direction of travel between forward and reverse. The selector MUST be in N (NEUTRAL) position before the engine will start.

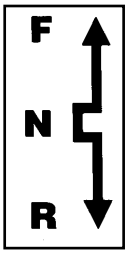

Position **"F"** (FORWARD)
Position **"N"** (NEUTRAL)
Position **"R"** (REVERSE)

NOTE: *Backup alarm automatically sounds with travel lever in reverse.*

IMPORTANT: *Care should be taken when downshifting or reversing as damage to the transmission can occur if shifting is forced or attempted at too high a speed. Allow engine RPM to slow before any shift down or directional change is attempted.*

NOTE: *Later models have the direction selector and speed range selector combined in one lever. This lever is located off the steering column directly below the steering wheel. The direction selector operation is the same on all models.*

Speed Range Selector on early models: This lever, located on the dash to the left of the steering column, changes the transmission speed between low, medium, and high range.

3 (HIGH) - Forward or Up
2 (MEDIUM) - Center position
1 (LOW) - Back or Down

Speed Range Selector on later models: Twist the outer end of the direction selector counter-clockwise or clockwise to change the transmission speed between low, medium, and high range.

Position **"3"** HIGH RANGE
Position **"2"** MEDIUM RANGE
Position **"1"** LOW RANGE

Adjustable Steering Wheel if equipped: On later models the steering wheel can be adjusted to one of five positions for operator comfort. Push the small black handle on the left side of the steering console and re-position the steering wheel. Release the handle to lock in place.

Courtesy of Crane.Market

https://truckmanualshub.com/

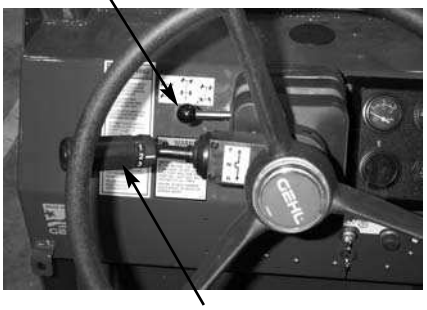

FLOOR AND SEAT AREA

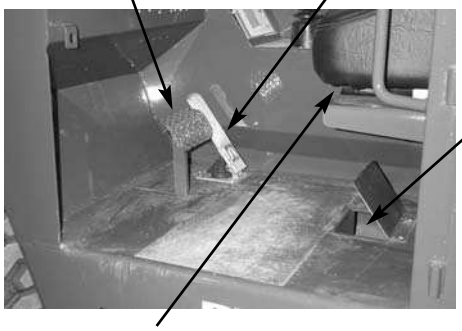

Throttle Pedal: This is right-foot operated and controls the engine RPM to match increased power requirements. Pushing down on the pedal increases the RPM. Letting up on the pedal decreases RPM.

Service Brake Pedal: Depressing this pedal activates inboard hydraulic wet disc-type brakes on all four wheels. Seperate front and rear brake systems allows brake power to bring the machine to a safe stop, should either system lose pressure.

Seat Positioning: The seat is mounted on rails for forward or backward repositioning to accommodate operator's size and comfort. A spring-loaded latch handle under the front of the seat activates the adjustment mechanism.

Suspension Seat Option: Option is available for additional operator comfort. It is adjustable for a soft or firm ride.

Brake Fluid Reservoirs: Lift hinged cover located on the cab floor.

RIGHT SIDE PANEL

These controls and indicators are used to position the frame, boom, and attachment. Graphic symbols on the side panel illustrate the control actions.

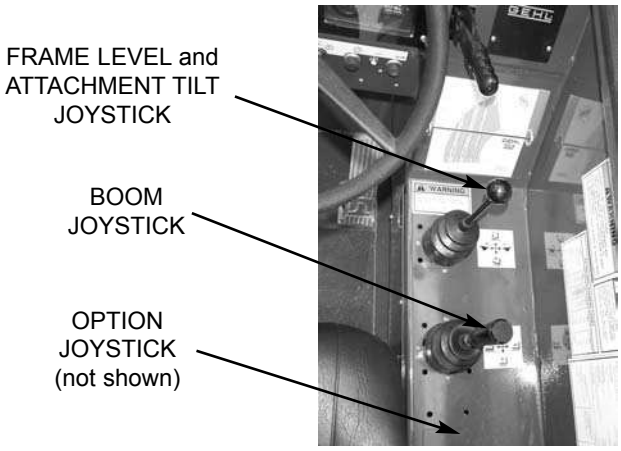

Frame Level/Tilt Joystick: The machine may be tilted slowly 10º to the left or right to level the frame and boom in relation to the ground. Move the joystick handle to the left to level the frame to the left. Move the joystick handle to the right to level the frame to the right.

Bubble Indicator: Located in front of the operator on the ROPS upper cross tube. Movement of the bubble shows when the frame is level relative to sloping ground surface.

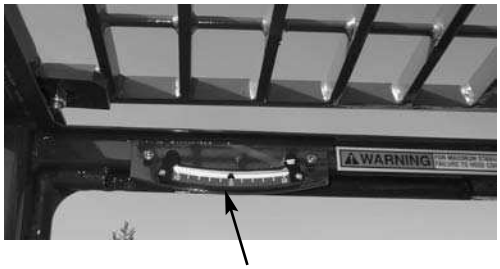

⚠ WARNING

DO NOT level the frame with the boom raised or extended. Only level the machine while stopped with the boom fully retracted and the attachment raised just enough to clear the ground.

Courtesy of Crane.Market

https://truckmanualshub.com/

The inner boom nose section has an attachment carrying device feature called Dynattach® system. This provides the operator with a convenient means of utilizing optional attachment tools. Refer to the OPERATION & ADJUSTMENTS chapter for changing attachment tools procedures.

Once the operator tilts the attachment tool to a desired angle, that angle will be maintained as the boom is raised or lowered, extended or retracted, until a new angle is desired.

To tilt the attachment tool, move the joystick handle rearward to tilt the attachment tool up. To tilt the attachment tool down, move the joystick handle forward.

Boom Joystick: This machine has a hydraulic type boom with telescopic sections. The sections extend by means of a hydraulic cylinder (Model 552) or hydraulic cylinder and chain system inside the boom (Model 553), sequenced for uniform extension of each section.

To extend the boom, move the joystick handle to the right. To retract the boom, move the joystick handle to the left. To raise the boom, move the joystick handle rearward. To lower the boom, move the joystick handle forward.

⚠ WARNING

Use extreme caution when raising or extending the boom. The Telescopic Forklift MUST be level. Loaded or empty, this machine can tip if not level.

ALWAYS place the transmission in neutral, set the parking brake switch and keep the service brake pedal fully depressed before raising or extending the boom.

NEVER exceed the specified lifting or extending capacities of this machine. Serious machine damage or personal injury may result. Refer to the load zone charts in the operator's station or this manual.

If a boom circuit hose should break with the boom up, with or without a load, shut down the machine following the MANDATORY SAFETY SHUTDOWN PROCEDURE. DO NOT attempt repairs. Call your GEHL dealer immediately for assistance.

The truss boom and winch attachment tools should ONLY be used to lift and place loads when the machine is in a stationary position. DO NOT use to transport loads around the jobsite. This can cause the load to swing, resulting in either load dropping or machine tipover.

NEVER use winch for lifting or moving personnel. NEVER exceed the maximum rated capacity of the winch (3000 lbs., 1360 kg) or exceed the load chart rating for winch applications.

DO NOT tilt the truss boom back more than 45º from horizontal. DO NOT attempt to use the rotating carriage as a load leveling function. Always level the frame prior to raising a load.

Failure to heed could result in death or serious injury.

Boom Angle Indicator: Mounted on the left side of the outer boom. The position of the bubble in the Boom Angle Indicator, shows the angle of the boom relative to the ground surface.

BOOM ANGLE INDICATOR

Optional Attachments Joystick: For other attachment options which require additional hydraulics, a 2-position joystick is provided.

OTHER OPERATION INDICATORS

The following indicators are for fluid level and operator rear vision/safety.

Courtesy of Crane.Market

https://truckmanualshub.com/

Hydraulic Reservoir Oil Level and Fill Cap: The dipstick on the fill cap of the reservoir indicates the level of the hydraulic oil in the reservoir.

Side Mirror: Located on the front outside corner of the hydraulic reservoir, provides the operator with a rear view of the right side and rear area of the machine.

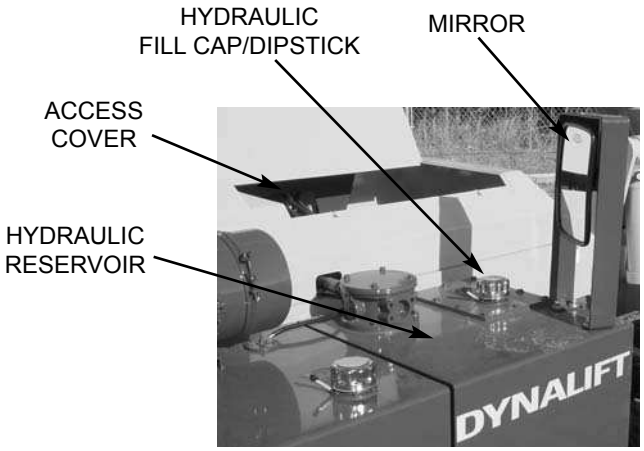

Transmission Oil Level: The dipstick is located under the access cover on the front hood section.

Battery Compartment: The battery is located under the access cover on the front hood section.

Engine Oil Level: The dipstick is located on the left-side of the engine.

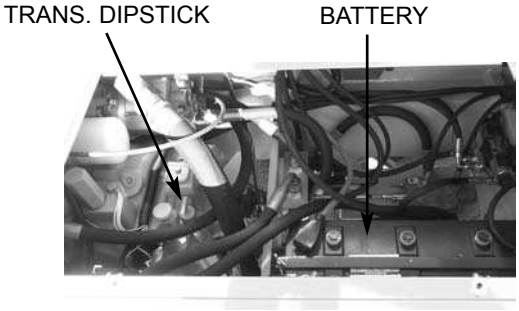

Engine Coolant Level: The radiator cap is located under the opening toward the rear of the main hood section.

Backup Alarm: Located inside the rear frame cover, produces a loud warning sound whenever the machine is in reverse.

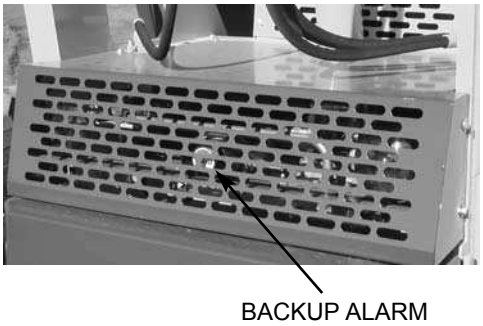

ATTACHMENT TOOLS

Gehl offers a versatile range of attachment tools to meet various lifting and material handling applications for this machine. Contact your area Gehl dealer for specifications and ordering information.

ACCESSORIES

Gehl offers a versatile range of special accessories for this machine. Contact your area Gehl dealer for specifications and ordering information.

NOTE: *All accessories are field installed unless otherwise noted. Information and parts for field installing of all of the accessories will be provided by the Gehl Company or Gehl Telescopic Forklift dealers.*

Courtesy of Crane.Market

https://truckmanualshub.com/

Chapter 6

OPERATION & ADJUSTMENTS

GENERAL INFORMATION

CAUTION

BEFORE starting the engine and operating the Telescopic Forklift, review and comply with ALL safety recommendations set forth in the SAFETY chapter of this manual. Know how to STOP the machine before starting it. Also, BE SURE to fasten and properly adjust the seat belt.

PRESTART INSPECTION

Every Prestart Inspection must include more than simply checking the fuel and oil levels. It is the operator's responsibility to inspect the machine before the start of each workday. It is also a good practice to personally inspect any machine you are assigned to use, even though it has already been put into service by other personnel.

The most efficient method of checking a machine is by conducting a "Walk-Around Inspection."

ENGINE BREAK-IN

Your new engine does not require extensive "break-in." However, for the first 100 hours of operation, keep the following in mind: Allow the engine to idle for a few minutes after every cold start. DO NOT idle the engine for long periods of time. DO NOT operate the engine at maximum power for long periods of time. Check the oil level frequently and replenish, as necessary.

A special "break-in" oil is NOT used. The oil in the engine crankcase is the same specified for regular oil changes. Change the oil and replace the oil filter at the intervals specified in the SERVICE & STORAGE chapter. DO NOT add special additives or special "break-in" components to the crankcase.

BEFORE STARTING ENGINE

Before starting the engine and running the machine, refer to the INDICATORS & CONTROLS chapter and familiarize yourself with the various operating controls, indicators and safety features.

STARTING THE ENGINE

Before mounting the operator's compartment, walk completely around the machine to be sure NO one is under, on, or close to it. Let others in the area know you are going to start up and wait until everyone is clear of the machine.

WARNING

ALWAYS fasten your seatbelt BEFORE starting the engine. Leave the parking brake "engaged" until the engine is running and you are ready to operate the machine.

The following procedure is recommended for starting the engine:

1. Carefully step up and grasp the hand holds to step into the operator's compartment.

2. Adjust the seat and fasten the seatbelt.

3. Check that all controls are in their "neutral" positions, except the parking brake lever, which should be in the "ON" position.

4. Adjust the position of the steering wheel tilt, if available on your machine, to provide comfortable handling.

5. Turn the keyswitch to "ON" position and depress the start button. If the button is released before the engine starts, turn the keyswitch to "OFF" position, allowing the starter to stop before attempting to start again.

Courtesy of Crane.Market

https://truckmanualshub.com/

IMPORTANT: *Crank the starter until the engine is started. If the engine fails to start within 30 seconds, return the key to the "OFF" position, wait 2 minutes, and try to restart the engine. Cranking the engine for longer than 30 seconds will result in premature failure of the starter.*

6. After the engine starts, allow a sufficient warm-up time before attempting to operate the controls.

7. Check that indicators are in normal condition.

8. Check that there are no fuel, oil or engine coolant leaks, and no abnormal noises or vibrations.

COLD STARTING PROCEDURES

A block heater or lower radiator hose heater is recommended for starting in temperatures of 20º F (-7° C) or lower. See your Gehl dealer for recommended heater.

If prevailing temperature is 40º F (4° C) or below, it may be necessary to use a cold weather starting aid to start the diesel engine. For proper use of starting aids, check instructions in the engine manual.

WARNING

For Perkins engines. DO NOT use ether starting aid with electric pre-heat.

If the battery becomes discharged and fails to have sufficient power to start the engine, jumper cables can be used to obtain starting assistance. Refer to the jump starting instructions in the SERVICE & STORAGE chapter of this manual for safe jump-start procedure.

STOPPING

The following procedure is the recommended sequence for stopping the machine:

1. Bring the machine to a stop on a level surface. Avoid parking on a slope, but if neccessary park across the slope and block the tires.

2. Fully retract the boom and lower the attachment to the ground. Idle the engine for gradual cooling.

3. Place controls in neutral. Set the parking brake lever to "ON."

4. Turn the keyswitch key to the "OFF" position. Remove the key.

5. Unlatch the seat belt, and grasp the hand holds while climbing out of the operator's compartment.

CAUTION

Be sure the area being used for test-running is clear of spectators and obstructions. Initially, operate the machine with an empty attachment tool.

FIRST TIME OPERATION

Be sure the engine is warm and then go through the following procedures.

Place the travel lever in a speed range and in forward or reverse direction. Release the parking brake lever and move slowly, while testing the steering and brakes. Stop and operate all boom functons and frame leveling controls, checking for smooth response.

Apply the service brakes, stop the machine and move the travel selector to the opposite direction (forward or reverse).

Shifting to the next higher gear may be done at any engine RPM while the machine is in motion.

DO NOT overspeed the engine when down shifting. Allow the machine to slow down before shifting to the next lower gear.

PARKING BRAKE

NOTE: *The parking brake mechanism is NOT designed for, NOR intended to be used as, the primary means of stopping movement of the machine. Hydraulic braking provided through the service brakes within the axle is the primary means for stopping movement.*

The proper sequence for correct machine operation is to always engage the parking brake lever before shutting off the engine, and to disengage the brake ONLY after the engine is running. In an EMERGENCY, if it becomes necesary to STOP movement, pull the parking brake lever to "ON."

Courtesy of Crane.Market

https://truckmanualshub.com/

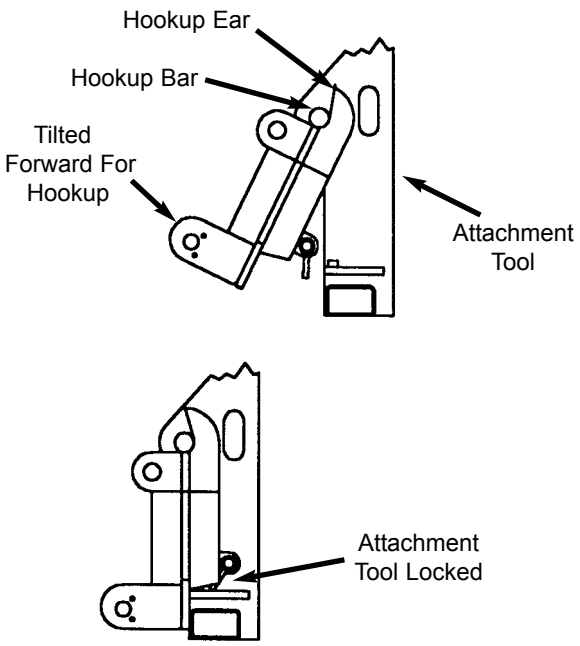

Dynattach® System Attaching Detail

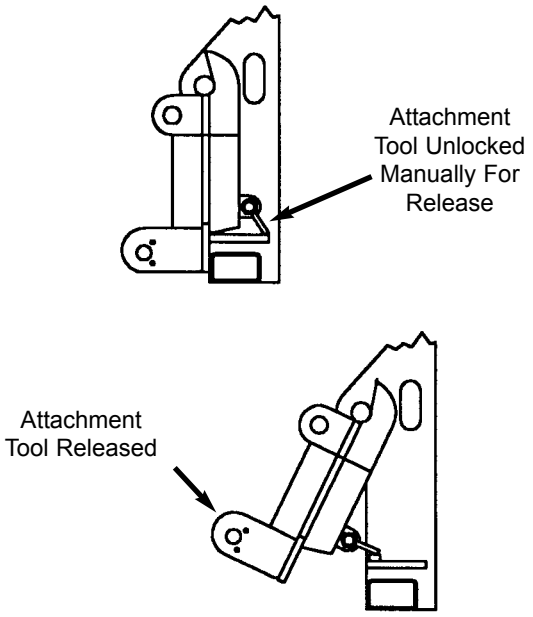

Dynattach® System Detaching Detail

CHANGING ATTACHMENT TOOLS

The Telescopic Forklift boom nose will accept Dynattach® quick-attach system Gehl attachment tools. The Dynattach® quick-attach system has a quick-release hookup and locking mechanism for mounting framing, masonary, or material handling type attachment tools to the boom nose.

Attaching - Using Dynattach® Quick-attach System

To pickup the attachment tool proceed as follows:

1. Raise the boom slightly and extend it 2 or 3 feet (0.6-0.9 m) for better visibility and tilt the Dynattach system forward.

2. Align the Dynattach system squarely with the back of the attachment tool.

3. Slowly extend the Dynattach system and lower the hooks under the attachment tool hookup bar.

4. Tilt the Dynattach system back so that the lock plate engages the attachment tool. This secures the attachment tool to the Dynattach system.

5. For attachment tool with auxiliary hydraulics, connect hoses to the quick-connect connectors on the boom nose.

Detaching - Using Dynattach® Quick-attach System

To detach attachment tool, proceed as follows:

1. Raise the boom slightly and extend it 2 or 3 feet (0.6-0.9 m) for better visibility. Lower the boom until the attachment tool is approximately 12” (0.3 m) off the ground.

2. Roll the carrier backward as far as it will go. Once the carrier is rolled all the way back, perform the MANDATORY SAFETY SHUTDOWN PROCEDURE *(Safety chapter)*

3. With the engine off, leave the operator’s station. Manually raise the lock spring and flip the lock plate up and outward at least 180º so it is in position to re-lock on the next attachment tool.

4. Tilt the Dynattach system forward to allow the attachment tool to roll out, then lower the boom so the hook ears clear the hookup bar on the attachment tool.

NOTE: *One side of the lock plate has a bright red decal to indicate the unlocked position.*

5. If the attachment tool has auxiliary hydraulics, disconnect the hoses from the quick-disconnects on the boom nose.

Courtesy of Crane.Market

https://truckmanualshub.com/

6. Start the engine and roll the Dynattach system forward, then slowly back the machine until the attachment tool is free from the boom nose.

WARNING

Modifications, alterations to, or use of attachment tools not authorized by GEHL Company can void the warranty and cause machine damage, and may result in serious personal injury or death.

SELF-LEVELING

The machine is provided with a hydraulic self-leveling feature. This feature is designed to keep the attachment tool level while the boom is being raised.

GENERAL MACHINE OPERATION

Take time to check the Telescopic Forklift to be sure all systems are in good operating condition. Perform the following steps before starting the machine for the first time each day.

1. Check the engine oil and coolant, transmission oil and hydraulic oil levels.

2. Be sure weekly lubrication has been done.

3. Visually inspect for leaks, broken or malfunctioning parts. Make sure all caps, covers and safety shields are in place.

WARNING

Exhaust fumes can kill. Insure proper ventilation when starting indoors or in enclosed areas.

Use proper grab handles, NOT the steering wheel or control levers as hand holds when mounting or dismounting.

NEVER operate the machine with safety guards or covers removed.

Over-inflated tires can explode and cause injury or death. Tire repairs MUST be made only by authorized personnel using proper tools and equipment.

4. Check tires for cuts, bulges, nails, correct pressure, loose wheel nuts, etc.

5. Inspect the work area. Be sure you know where you will make load pickups, lifts, and turns. Look over the terrain of the jobsite for holes, obstacles, slippery surfaces, soft or deep mud.

6. Check clearances of ramps, doorways and passage ways. Check overhead clearances if you will travel and place loads near power or telephone lines.

If the machine is found to be in need of repair or in any way unsafe, or contributes to an unsafe condition, the matter shall be reported immediately to the user's designated authority. The machine shall NOT be operated until it has been restored to a safe operating condition.

Operate the travel controls gradually and smoothly when starting, stopping, turning and reversing the directions.

Grade and Slope Precautions

The Telescopic Forklift complies with industry stability tests requirements and is stable when properly operated. However, improper operation, faulty maintenance, or poor housekeeping may contribute to a condition of instability and defeat the purpose of the standard.

The amount of forward and rearward tilt to be used is governed by the application. Although use of maximum rearward tilt is allowable under certain conditions such as traveling with the load fully lowered, the stability of the machine as determined by the industry standard tests, does not encompass consideration for excessive tilt at high elevations, or the handling of off-center loads.

Handle only loads within the capacity limits of the machine, and that are stable or safely arranged. When attachments are used, extra care shall be taken in securing, manipulating, positioning and transporting the load.

Grade Limits

NOTE: *Grade limits are based on ANSI/ASME standard B56.6-1992*

1. DO NOT place or retrieve loads on a up or down slope or grade that exceeds 7% or 4º grade.

Courtesy of Crane.Market

https://truckmanualshub.com/

2. DO NOT travel up or down a grade or slope that exceeds 22% or 12º grade while loaded.

3. DO NOT place or retrieve loads on a side hill with a slope or grade that exceeds 12% or 7º grade. Regardless of terrain or position of wheels, the **FRAME MUST BE LEVEL** as indicated by the level indicator on the ROPS cross member.

4. DO NOT travel across a side hill that exceeds 18% or 10º grade. Regardless of the terrain or position of the wheels, the **FRAME MUST BE LEVEL** as indicated by the level indicator on the ROPS cross member. The attachment tool MUST be maintained at the "carry" position with the boom fully retracted, and attachment tool at minimum ground clearance.

When ascending or descending grades in excess of 5% or 3º, the machine shall be driven with the load upgrade. An unloaded machine should be operated on all forward grades with the load handling attachment tool downgrade, tilted back if applicable, and raised only as far as necessary to clear the road surface.

Avoid turning if possible and use extreme caution on grades, ramps or inclines. Normally travel straight up and down the slope.

⚠ WARNING

DO NOT level the frame with the boom raised or extended. Only level the frame while stopped, and with the boom fully retracted and the attachment tool raised just enough to clear the ground.

Traffic Flow Patterns

Know and understand the traffic flow patterns of your-jobsite and also know all Telescopic Forklift hand signals for safety. Utilize signalmen and make sure you can see the signal man and acknowledge the signals given.

The backup alarm automatically sounds with the travel selector in reverse. Care should be taken when down shifting or reversing as damage to the transmission can occur if shifting is forced or attempted while traveling.

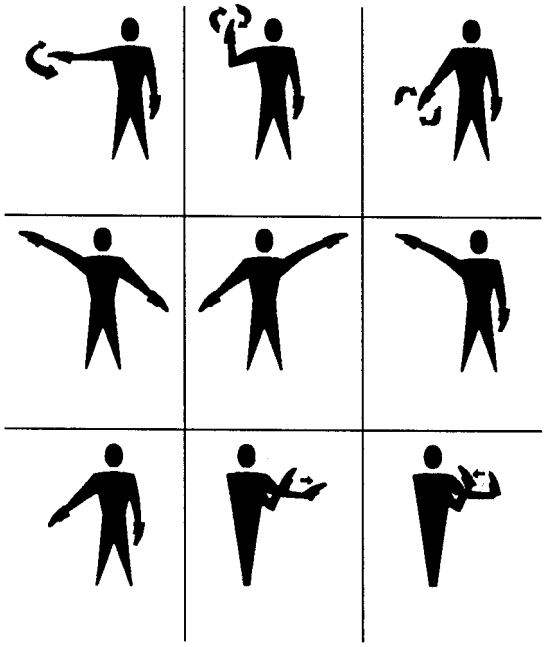

Safety Hand Signals

When ramps MUST be utilized in transporting loads with the machine, the following shall be minimum widths for safe travel:

Compacted dirt, gravel, etc. - 12 ft. (3.6 m)
Woodboard, concrete, etc. - 10 ft. (3 m)

Permanent aisles, roadways or passageways, floors and ramps shall be defined in some fashion or marked. Permanent or temporary protrusion of loads, equipment, material and construction facilities into the usual operating area shall be guarded, clearly and distinctively marked, or clearly visible.

Maintain a safe distance from the edge of ramps, platforms or other similar working surfaces.

Controlled lighting of adequate intensity should be provided in operating areas. Where operating conditions indicate, the operator/user shall be responsible for having the machine equipped with lights.

Provision shall be made to prevent trucks, semi-trailers and railroad cars from being moved during loading and unloading.

Wheel stops, parking brakes, or other recognized positive means shall be used to prevent movement during loading and unloading.

DO NOT move railroad cars or trailers with the forklift truck.

DO NOT use the boom and attachment for leverage to push the machine out of mud.

Courtesy of Crane.Market

https://truckmanualshub.com/

IMPORTANT: *DO NOT lower boom at high engine RPM when attachment tool is at maximum rearward tllt. Damage to slave cylinders may result.*

GENERAL LOAD HANDLING

NEVER attempt to work controls except from the operator's seat. NEVER jerk or use fast movements. Avoid sudden stops, starts or changes in direction.

Operation of the hydraulic system depends on engine speed and the distance the controls are moved. When operating these controls it is important to develop a technique called "feathering." Feathering the control means you start the desired motion by moving the control away from neutral a small amount. After movement has started, the control can be eased to full power. Use the same technique to stop the motion.

⚠ WARNING

Excessive speed can be hazardous. ALWAYS exercise caution and good judgement while operating the machine.

Twice daily, increase the engine speed (fast idle) and extend and retract the frame leveling cylinder to the stroke limit. This removes any trapped air in the circuit, which could cause the machine to lean to one side or the other.

The machine shall not be used to lift or carry personnel, or be fitted with any form of personnel work platform.

ALWAYS maintain a safe distance from electric power lines and avoid contact with any electrically charged conductor or gas line. It is not necessary to make direct contact with a power line for power to ground through the structure of the machine. Keep the boom at least 10 ft. (3 m) from all power lines. Accidental contact or rupture can result in electrocution or an explosion. Contact the North American One Call Referral System at (888) 258-0808 for the local "Digger's Hotline" number or proper local authorities for utility line locations BEFORE starting to dig!

Keep all body parts inside the operator's station while operating the machine. BE SURE of clearance for the attachment tool when turning, working around buildings, etc.

Turning corners too fast can tip the machine, or cause a load to tip off the attachment. Sudden slowing or stopping of the machine may cause the load to drop off the attachment tool.

Be certain you can control both speed and direction before moving. Always place the machine in neutral and set the parking brake before raising or extending the boom. NEVER drive the machine up to someone standing in front of the load.

NEVER leave the operator's station without first lowering the attachment tool to the ground. Set the parking brake, place controls in neutral, shut off engine and remove the key. AVOID parking the machine on a slope, but if necessary, park across the slope and block the tires.

Load Capacity and Reach

This machine has flip-charts in the operator's station that provide, at a glance, the capacity limits at various positions of attachment tool extension and elevation. A set of load zone charts is reproduced at the end of this manual for reference.

A typical load chart is shown on the next page. The scale on the left indicates height in feet above the ground level. The scale on the bottom shows the distance in feet out from the front of the machine. The arc lines noted by the numbers "1" through "5" correspond with the position extension markers on the operator side of the intermediate boom section on model 553. Model 552 has arc lines noted by the numbers "1" and "2" which correspond with the position extension markers on the operator side of the inner boom section.

The following example illustrates proper use of the load charts for the Telescopic Handler:

Example:

The operator, using a standard carriage attachment tool wants to raise a 2000 lb load 20 feet high, and can only get to within 15 feet of the load placement point. Can it be done within the capacity of the machine?

Analysis: See "Typical Load Zone Chart" p. 37.

By projecting up from the 15 foot mark on the horizontal axis to intersect a line through the 20 foot mark on the vertical axis shows the load can be placed in the 2000 lb zone.

Courtesy of Crane.Market

https://truckmanualshub.com/

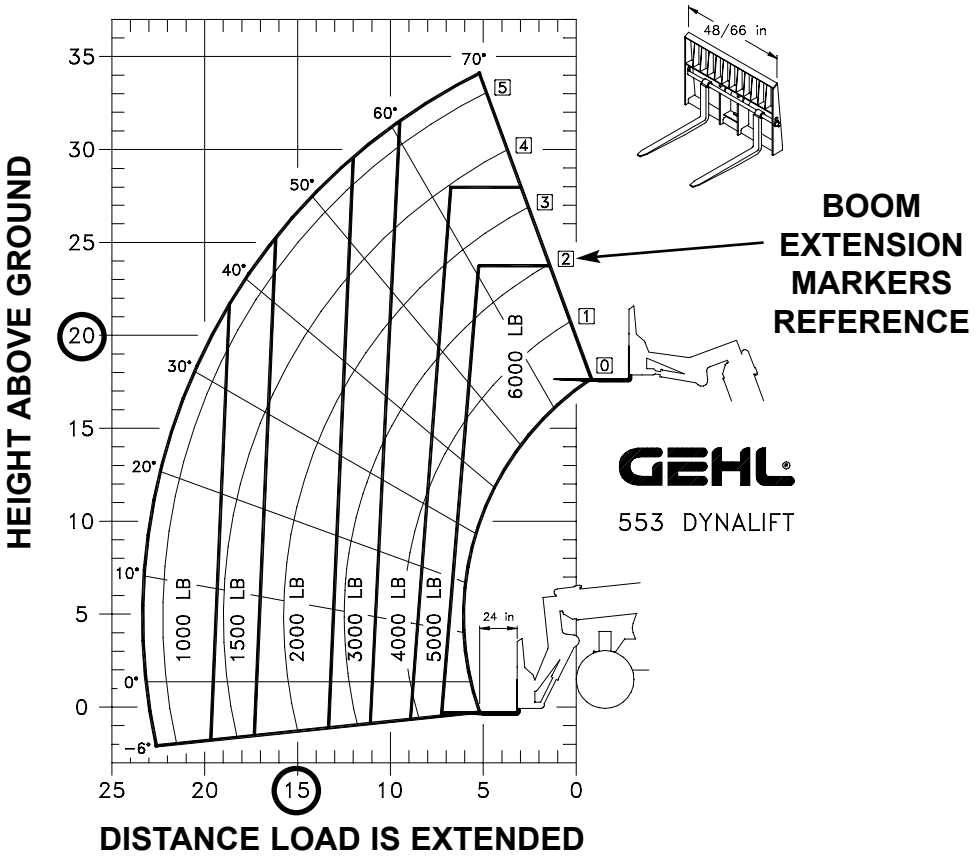

Typical Load Zone Chart

During placement, the operator observes when the arc reference number "3" on the boom is visible and stops. He knows the maximum safe distance of extension with this load has been reached.

WARNING

NEVER exceed the rated operating capacity of the Telescopic Forklift as shown on the capacity decal.

LIFTING ATTACHMENT TOOL APPLICATIONS

Picking Up the Load

Inspect the load. If it appears unstable, DO NOT attempt to move it. DO NOT attempt lifting double-tiered loads, or straddling side-by-side pallets one on each fork. NEVER add extra unauthorized counterweights to this machine. Consider the additional weight of any attachment tool as part of the picking load capacity of the machine.

WARNING

Operating conditions can reduce the machine's safe operating capacity. Exceeding capacity when raising or extending the boom will cause the machine to tip forward.

Approach the load squarely and slowly with the machine straight and level. Adjust the space between forks, if necessary. Engage the load equally on all forks until the load touches the carriage backrest. Tilt the forks back to position the load for travel.

Carrying the Load

If the load obstructs your view, get someone to direct you. Maintain ground speed consistent with ground conditions and that permit stopping in a safe manner.

Courtesy of Crane.Market

https://truckmanualshub.com/

⚠ WARNING

NEVER travel with the boom above the carry position (attachment tool should be at minimum ground clearance). Boom should be fully retracted.

Use lower gear when traveling down an incline. NEVER coast with the transmission in neutral. Travel up and down grades slowly.

DO NOT operate the machine on a slope or grade that exceeds 22% or 12º.

Load Elevation and Placement

For ground level placement, be sure the area under the load and around the machine is clear of equipment and personnel. Lower the load to the ground, tilt the forks to the horizontal position, then back away carefully to disengage forks from the load. For elevated or overhead placement, bring the machine as close as possible to the landing point.

Level the machine BEFORE raising the load. Use extreme caution for high placement. Be sure personnel are clear of the area where the load or the machine could tip or fall.

Set the parking brake, hold the service brake pedal in fully depressed position and slowly raise the load, maintaining a slight rearward tilt to cradle the load. As the load approaches the desired height, feather the boom control at minimum speed until the load is slightly higher than the landing point.

Continue the feathering technique and lower the load into place, until the forks are free. Level the forks and retract clear of the load. Lower the forks to travel height before moving the machine.

SUSPENDED LOADS

DO NOT exceed the Telescopic Forklift capacity as equipped for handling suspended loads. Only lift the load vertically and NEVER drag it horizontally. Use guy lines to restrain load swing, whenever possible.

The handling of suspended loads by means of the truss boom or other similar device can introduce dynamic forces affecting the stability of the machine that are not considered in the stability criteria of industry test standards. Grades and sudden starts, stops and turns can cause the load to swing and create a hazard.

⚠ WARNING

NEVER use frame leveling to position an elevated load. Always lower the load to the ground and reposition the machine.

If a hydraulic boom circuit hose should break with the boom up, shut down the machine. DO NOT attempt to bring down the boom or make repairs. Call your GEHL dealer immediately.

As lift height increases, depth perception decreases. High elevation placement may require a signal man to guide the operator. The machine becomes less stable as load is raised higher.

DO NOT ram the lift cylinders to the end of the stroke. The resulting jolt could spill the load.

The truss boom attachment tools should ONLY be used to lift and place loads when the machine is in a stationary position. DO NOT use to transport loads around the jobsite. This can cause the load to swing, resulting in either load dropping or machine tipover.

ROAD TRAVEL

For short distance highway travel, attach a SMV (Slow Moving Vehicle) emblem (purchased locally) to the back of the Telescopic Forklift. Activate hazard lights on the machine. For highway operation, obtain and install an amber flashing beacon.

NOTE: *ALWAYS follow ALL state and local regulations regarding the operation of equipment on or across public highways! Whenever any appreciable distance exists between jobsites, or if operation on public highway is prohibited, transport the machine using a vehicle of appropriate size and weight.*

TRANSPORTING BETWEEN JOBSITES

When transporting the Telescopic Forklift, know the overall height to allow clearance of obstructions. Remove or tape over the Slow Moving Vehicle emblem (SMV) if it will be visible to traffic.

Courtesy of Crane.Market

ALWAYS abide by the following recommended procedures and guidelines, when attempting to use ramps to load the machine onto (or unload it from) a truck or trailer. Failure to heed can result in damage to equipment and serious personal injury or death!

Tie-down hooks are provided for inserting chains through to secure the machine while transporting.

Loading Machine Using Ramps

NOTE: *A matched pair of ramps is required.*

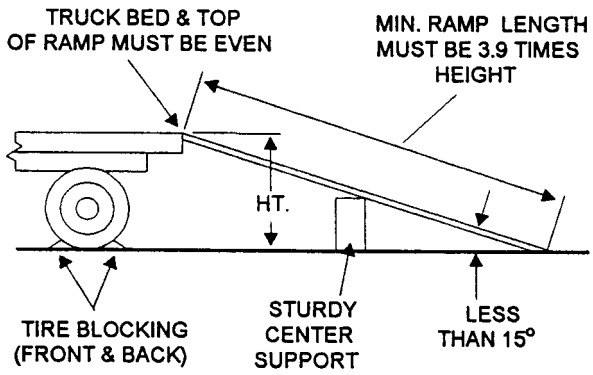

Ramp Placement

1. The ramps MUST be of sufficient strength to support the machine. Whenever possible, the use of strong steel ramps is recommended as well as some type of center supporting block.

2. The ramps MUST be firmly attached to the truck or trailer bed with NO step between the bed and the ramps.

3. Incline of ramps MUST be less than 15 degrees (ramp length MUST be at least 16 feet (4.9 m) long.

4. Ramp width MUST be at least 1-1/2 times the tire width.

5. Slowly (at the lowest engine speed possible) and carefully drive the machine up the ramps.

WARNING

NEVER adjust travel direction (even slightly) while traveling on the ramps. Instead, back down off the ramps, and then realign the machine with the ramps.

6. Remove the attachment tool from the boom. Position the machine (with the boom facing toward the front of the truck or trailer) so that it is straight in line with the ramps. Tie down slots are provided on the front and rear sides of the frame structure.

7. Block the front and rear of the tires on the truck or trailer. Engage the parking brake.

Unloading Machine Using Ramps

NOTE: *A matched pair of ramps is requlred.*

Use ramps as described in Steps 1 thru 4 and proceed as follows to unload the machine:

8. If necessary, adjust the machine so that the wheels are in line and centered with the ramps.

9. Slowly (at the lowest engine speed possible) and carefully drive the machine down the ramps

WARNING

NEVER transport the machine with the boom raised or extended. BE SURE to secure the machine (including boom) to the truck or trailer bed using chain and binders or steel cables to prevent any movement while transporting.

THEFT DETERRENTS

GEHL has recorded all part numbers and serial numbers. Users should take as many of the following actions as possible to discourage theft, to aid in the recovery in the event that the machine is stolen, and to reduce vandalism:

1. Remove keys from unattended machines.

2. Attach, secure, and lock all anti-vandalism and anti-theft devices on the machine.

3. Lock doors of cabs when not in use.

4. Inspect the gates and fences of the vehicle storage yard. If possible, keep machines in well lighted areas. Ask the law enforcement agency having jurisdiction to make frequent checks around the storage or work sites, especially at night, during weekends, or on holidays.

5. Report any theft to the dealer and insurance company. Provide the model, and all serial numbers. Request that your dealer forward this same information to GEHL Company

Courtesy of Crane.Market

https://truckmanualshub.com/

GEHL

Order Form
Safety Training for Operators of Rough Terrain Forklifts

OPERATOR TRAINING KIT (P/N 908405)	**PRICE**
Includes: Instructor's Guide, Agenda, Objectives and Goals Sheet, Instructor's Resource Guide, Evaluation Test, Evaluation Log Book, Student Material Sets (5), Visual Aids (PowerPoint® Disk, Overheads, Charts), EMI Rough Terrain Forklift Safety Manual	**English:** $160.00 ea. * **Spanish:** *

ADDITIONAL STUDENT MATERIALS (P/N 908406) (NOTE: 5 Sets included in OPERATOR TRAINING KIT)	**PRICE**
Includes: Operator's Workbooks (5), Operator Certificates of Completion (5), Operator Wallet-Size Complation ID Cards (5)	**English:** $80.00 ea. * **Spanish:** *

ADDITIONAL VISUAL AIDS (P/N 908426) (NOTE: Set included in OPERATOR TRAINING KIT)	**PRICE**
Includes: PowerPoint® Disk (1), Overheads (26), Oversize Visual Charts (6)	**English:** $48.00 ea. * **Spanish:** *

Qty	Description	Cost Each*	Total
_ _ _ _	Operator Training Kits (English)	@ $160.00 =	$ _____
_ _ _ _	Operator Training Kits (Spanish)	@ $ * =	$ _____
_ _ _ _	Additional Student Materials (English) . .	@ $ 80.00 =	$ _____
_ _ _ _	Additional Student Materials (Spanish) .	@ $_____ =	$ _____
_ _ _ _	Additional Visual Aids (English)	@ $ 48.00 =	$ _____
_ _ _ _	Additional Visual Aids (Spanish)	@ $_____ =	$ _____
	Order Processing Fee	@ $ 10.00 =	$ _____
	Sales Tax ** (Wisconsin Only - 5.5%) . .	=	$ _____
		Total =	$ _____

Sales Tax *

For orders within the state of Wisconsin, add 5.5% for the state sales tax.

Billing Information

Name: _____
Company: _____
Address: _____
City: _____ State: _____ Zip Code: _____
Phone No.: (____) _____
Fax No.: (____) _____

❑ Check Enclosed _____

❑ Credit Card: ❑ Visa ❑ Mastercard
Card No.: _____
Expiration Date: _____
Authorized name as appears on card (PRINT)
_____
Signature: _____

Shipping Information (if different from billing information):

Company: _____
Name: _____
Street: _____
City: _____ State: _____ Zip Code: _____
Country: _____
Phone No.: (____)_____ FAX No.: (____) _____

*** Call for current prices.**
NOTE: Price includes shipping by **U.S. MAIL** of **UPS - Ground**. Express delivery is available for an additional charge.

FAX or Mail to: Ken Cook Co.
9929 W. Silver Spring Drive
Milwaukee, WI 53225
Attn: EMI/RTFL Dept.

Telephone: (414) 466-6060
FAX Number: (414) 466-0840
Website: http://www.kencook.com

(Remove this page at perforation to use as Fax or Mail sheet)

Courtesy of Crane.Market

https://truckmanualshub.com/

INTENTIONALLY BLANK

(May be removed at perforation as Fax or Mail order sheet)

Courtesy of Crane.Market

https://truckmanualshub.com/

Chapter 7

LUBRICATION

GENERAL INFORMATION

CAUTION

NEVER lubricate or service this unit when any part of the machine is in motion. ALWAYS exercise the MANDATORY SAFETY SHUT-DOWN PROCEDURE ("SAFETY" chapter) before lubricating or servicing this equipment.

NOTE: *The Maintenance chapter in this manual has provisions for recording the dates and hourmeter readings after lubrication or other service has been performed; use those spaces to keep a log for maintaining a current service interval record. Proper routine lubrication is an important factor in preventing excessive part wear and early failure.*

LUBRICANTS

The chart on this page lists the locations, temperature ranges and types of recommended lubricants to be used when servicing this machine. Also refer to the separate engine manual for additional information regarding recommended engine lubricants, quantities required and grades.

NOTE: *Refer to Operator Services topic in the "Service & Storage" chapter of this manual for detailed information regarding periodical checking and replenishing of lubricants.*

GREASING

Refer to the illustration and listing on the next page for fitting locations. Wipe dirt from the fittings before greasing them to prevent contamination. Replace any missing or damaged fittings. To minimize dirt build-up, avoid excessive greasing.

Hydraulic System Reservoir

Use a Mobil DTE 15M, or equivalent which contains anti-rust, anti-foam and anti-oxidation additives & conforms to ISO VG46.
Capacity:
35 Gallons (133 liters)

All Grease Fittings

Use No. 2 Lithium-based Grease

Engine Crankcase Oil

Ambient Temperature	Grade*
Below 32°F (0°C)	SAE 10 or 10W-30
32-77°F (0-25°C)	SAE 20 or 10W-30
Above 77°F (25°C)	SAE 30 or 10W-30

***Service Classification: API - CD/CE/CF-4**

Capacity
Refer to Engine Specifications, Chapter 2

Axle Gear Oil

Use MobilFluid® 423
or equivalent
Differential Capacity:
9.6 Quarts (9.0 liters)
Planetary Capacity (each side):
0.6 Quarts (0.5 liters)

Transmission Oil

Use Sunco Multi-ATF or equivalent
Capacity
24 Quarts (22.7 liters)

Brake System

Use Sunco Multi-ATF or equivalent

Courtesy of Crane.Market

https://truckmanualshub.com/

REPLACEMENT FILTER CHART

MODEL		AIR FILTER	FUEL FILTER	ENGINE OIL	HYDRAULIC OIL	TRANSMISSION OIL
552	JOHN DEERE	L120054	L98600 (a) L98978	L94746	L97489	L99184
	PERKINS	L120054	078850 (b) L88976	078849		
553	JOHN DEERE	L120054	L98600 (a) L98978	L94746	L97489	L99184
	PERKINS	L120054	078850 (b) L88976	078849		

(a) 552 After S/N 1010, 553 After S/N 3176 including S/N 3173
(b) 552 After S/N 1006, 553 After S/N 3077

BASIC MACHINE GREASE FITTING LOCATIONS

Every 50 Hours (or weekly)

Refer to the illustration below for locations.

Ref. No.	Description	Qty.
	CHASSIS AREA	
1	Brake foot pedal linkage	1
2	Wheel spindle pins (per axle)	4
3	Tie rod ends (per axle)	2
4	Axle to frame pivot pins (per axle)	1
5	Drive shaft, slip joint (per shaft)	1
6	Drive shaft, U-Joint (per shaft)	2
7	Level cylinder pivot pins	2
8	Base end lift cylinder pivot pins	2
9	Base end slave cylinder pivot pins	2
	BOOM AREA	
10	Boom to frame upright pivot pins	2
11	Rod end slave cylinder pivots pins	2
12	Rod end lift cylinder pins	2
13	Extend cylinder pivot pins	2
14	Chain sheave pins (Model 553 only)	2
15	Dynattach to boom nose pivot pins	2
16	Tilt cylinder pivot pins	2
17	Rotate cylinder pivot pins	2
18	Rotate carriage wear pads	3
19	Rotate pivot bearing	1
20	Boom slide pads - as required, front and rear	

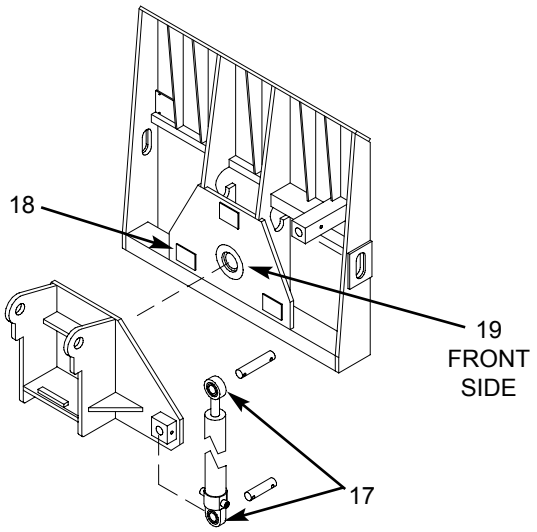

Courtesy of Crane.Market

https://truckmanualshub.com/

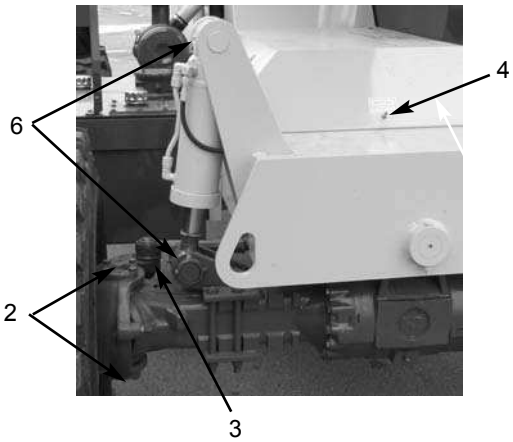

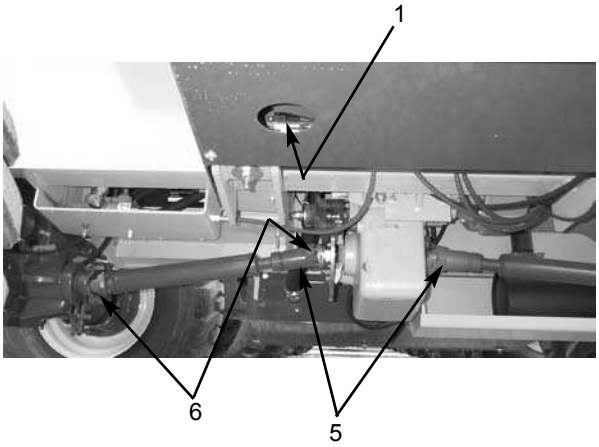

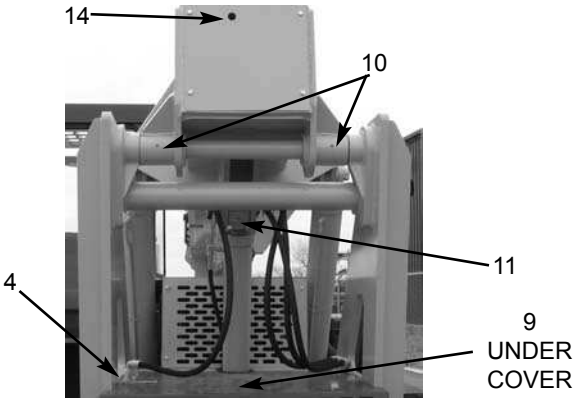

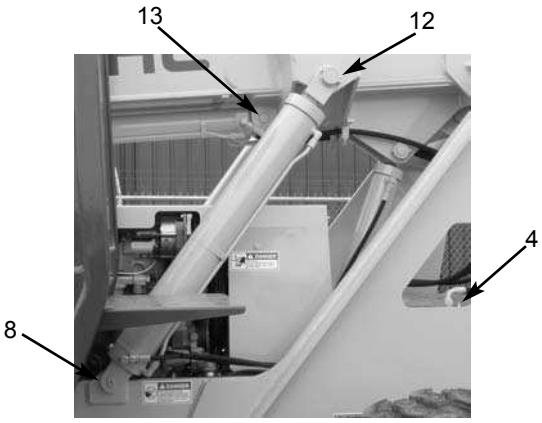

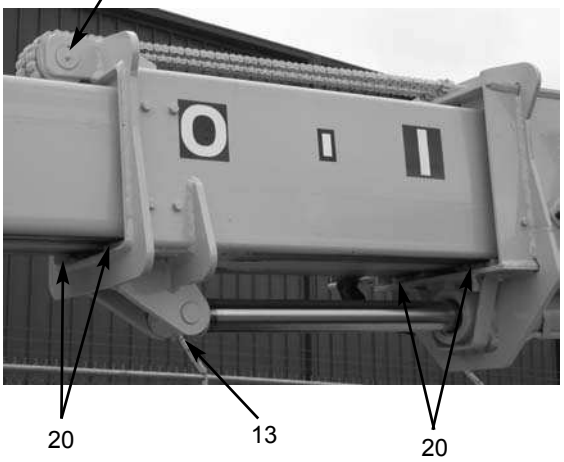

Courtesy of Crane.Market

https://truckmanualshub.com/

Chapter 8

SERVICE & STORAGE

GENERAL INFORMATION

WARNING

BEFORE performing any service on the Telescopic Forklift, unless expressly instructed to the contrary, exercise the MANDATORY SAFETY SHUTDOWN PROCEDURE (Safety chapter, p.10). After service has been performed, BE SURE to restore all guards, shields and covers to their original positions BEFORE resuming machine operation.

NOTE: *All service routines, with the exception of those described under the "Dealer Services" topic are owner-operator responsibilities. All operator services described under the daily subtopics are also referred to on a decal which is located on the inside right side panel of the operator's station. Refer to the LUBRICATION chapter of this manual for lubrication information.*

NOTE: *This SERVICE & STORAGE chapter describes procedures to follow for making routine maintenance checks, adjustments and replacements. The majority of the procedures are also referred to in the MAINTENANCE chapter of this manual. For engine related adjustments and servicing procedures, refer to the engine manual provided.*

PRECAUTIONS

DO NOT perform any maintenance or repair without the owner's prior authorization. Allow only trained personnel to service the machine.

WARRANTY repairs can only be done by a GEHL Dealer. He will know what portions of the machine are covered under the terms of the GEHL Warranty and what portions are covered by other vendor OEM warranties.

When a problem occurs, don't overlook simple causes such as an empty fuel tank. Check for leaks and broken connections. Make note of any specific problem symptoms, noises, etc. and contact your local Gehl Dealer.

IMPORTANT: *Always dispose of waste lubricating oils, anti-freeze and hydraulic fluids according to local regulations or take them to a recycling center for disposal. DO NOT pour them onto the ground or into a drain.*

DEALER SERVICES

The following areas of internal components service, replacement and operating adjustments should only be attempted by (or under the direction of) an authorized GEHL Telescopic Forklift Dealer.

IMPORTANT: *DO NOT service or repair major components, unless authorized to do so by your Gehl Dealer. Any unauthorized repair will void the warranty.*

POWER TRAIN COMPONENTS

The engine and transmission are coupled directly to each other. All service routines, related to the internal components are precise and critical to proper power train operation. The axle differential and planetary ends are also sophisticated assemblies which require special know-how and tools for servicing.

NOTE: *If power train components are suspected of faulty operation, contact your Gehl Dealer for further assistance.*

HYDRAULIC SYSTEM COMPONENTS

Valves, pumps, motors and cylinders are also sophisticated assemblies which require special know-how and tools for servicing. All cylinders are appropriately designed with particular strokes, diameters, checks and hose connection provisions unique to the machine application requirements. A schematic (located at the end of this manual) can be used as a guide for service reference, as required.

Courtesy of Crane.Market

https://truckmanualshub.com/

WARNING

Tilt, lift, extend and leveling cylinders have counterbalance valves. These valves keep hydraulic fluid from entering or exiting the cylinders while not being used, and are under extremely high pressure. Before removing any of these valves, you ARE REQUIRED to call Gehl Service. Failure to do so may result in serious injury or death.

Internal service on any of these components should only be attempted by (or under the direction of) an authorized GEHL Telescopic Forklift dealer. WARRANTY repairs can only be done by a GEHL dealer. He will know what portions of the machine are covered under the terms of the GEHL warranty and what portions are covered by other vendor warranties.

ELECTRICAL COMPONENTS

An electrical system schematic is provided which includes instrumentation, electrical components and switch connections. It is located at the end of this manual and can be used as a guide for service reference, as required.

OPERATOR SERVICES

Some of the operator related services will require access to components located inside the superstructure under shields, hoods and covers. The reference chart on this page notes components accessed in each particular area.

ACCESS TO COMPONENTS REFERENCE CHART

Component	Operator Station	Frame	Front Cover	Mid-Rear Hood
Axle (underside)		●		
Engine				●
Transmission (mid area)			●	
Drive Shafts (underside)		●		
Main Control Valve (rear)		●		
Muffler (underside)		●		
Air Cleaner (top fuel tank)		●		
Battery		●		
Radiator				●
Brake Valve (underside)	●			
Travel Controls (dash area)	●			
Boom Controls (right side)	●			
Hydraulic Test Ports (dash)	●			
Hourmeter (dash)	●			
Switches/Indicators (dash)	●			
Hydraulic Pump			●	
Hydraulic Filter (Reservoir)			●	
Misc. Hydraulic Valves			●	
Air Conditioner (rear)	●			
Heater (lower front)	●			

Courtesy of Crane.Market

https://truckmanualshub.com/

WARNING

DO NOT smoke or allow any open flames in the area while checking or servicing hydraulic, battery or fuel systems; all contain highly flammable liquids or explosive gases which can cause an explosion or fire if ignited.

Wear a face shield when you disassemble spring loaded components or work with battery acid. Wear a helmet or goggles with special lenses when you weld or cut with a torch.

When working beneath a raised machine, always use blocks, jack-stands or other rigid and stable supports. Wear appropriate protective clothing, gloves, shoes. Keep feet, clothing, hands and hair away from moving parts.

Always wear safety glasses or goggles for eye protection from electric arcs from shorts, fluids under pressure, and flying debris or loose material when the engine is running or tools are used for grinding or pounding.

NEVER weld on bucket, forks, boom, support frame or overhead guards without the consent of the manufacturer. Special metals may be used which require special welding techniques, or have a design which should not have welded repairs. NEVER cut or weld on fuel lines or tanks.

If repair welding is ever required, BE SURE to attach the ground (-) cable from the welder as close as possible to the area to be repaired. Also, remove battery (+) positive terminal connection before welding.

Choose a clean, level work area. Make sure you have sufficient room, clearances, and adequate ventilation. Clean the walking and working surfaces. Remove oil, grease and water to eliminate slippery areas. Utilize sand or oil absorbing compound, as necessary, while servicing the Telescopic Forklift.

Before starting inspection and repair, move the machine onto a level surface, shut down engine, and release all hydraulic pressure. Always block the boom securely, or lower it to full ground contact. Place all controls in neutral.

Block the wheels. Remove the ignition key. Remove only guards or covers that provide needed access. Wipe away excess grease and oil.

NEVER weld on attachment tools, boom support frame or overhead guards without the consent of the manufacturer. Special metals may be used which require special welding techniques or have a design which should not have welded repairs. NEVER cut or weld on fuel lines or tank.

Excessively worn or damaged parts can fail and cause injury or death. Replace any cracked or damaged part. Care should be taken to assure that all replacement parts are interchangeable with original parts and of equal quality.

Use care not to damage machined and polished surfaces. Clean or replace all damaged or painted over plates and decals that cannot be read.

WARNING

NEVER leave guards off or access doors open when the machine is unattended. Keep bystanders away if access doors are open.

After servicing, check the work performed, no parts left over, etc. Install all guards, covers.

Service Every 10 Hours or Daily

CHECK FUEL TANK LEVEL

After operation each day, the fuel tank should be filled to prevent water from condensing in the tank. To fill, remove the filler cap and add fuel.

A drain plug is provided in the bottom of the fuel tank for removing condensation and other foreign materials. Open the plug and allow water and fuel to drain into a container until only clear fuel is flowing from the tank.

CHECK FUEL FILTER

NOTE: *The fuel filter will require occasional replacement to maintain a clean and adequate fuel flow for maximum engine horsepower. The frequency of filter replacement will be determined by the cleanliness of available fuel, the care used in storing fuel supplies and the operating conditions in which the machine is used.*

Courtesy of Crane.Market

https://truckmanualshub.com/

Small amounts of water can be drained from the fuel filter. The drain plug should be removed weekly to drain off water accumulation until clear fuel is flowing from the outlet.

CHECK ENGINE OIL LEVEL

With the machine on level ground, and the engine stopped for ten minutes or more, remove the engine dipstick. Wipe it clean, re-insert it and remove to obtain a reading. If the oil level is down, or below the ADD mark, fill with the required amount of oil to bring the level to the FULL mark. See the LUBRICATION chapter for the type of oil to use.

CHECK RADIATOR COOLANT LEVEL

With the machine on level ground, remove the radiator cap. Add a 50/50 water and anti-freeze mixture if the coolant level is below the filler neck. Replace the radiator cap securely.

IMPORTANT: *If the engine is operated with a loose radiator cap, the pressure bypass will not work and the engine will run hot.*

⚠ WARNING

DO NOT remove the radiator cap when the engine is running hot or overheated. Coolant is extremely hot and under pressure and it can burn your skin. Allow sufficient time for the radiator to cool BEFORE relieving the pressure and removing the radiator cap.

CHECK TRANSMISSION OIL LEVEL

The machine must be on level ground and make sure the boom is lowered and completely retracted. With engine and transmission at operating temperature; park brake on, transmission in neutral and engine speed at low idle, remove the access cover to the transmission and hydraulic pump. Remove the dipstick and check the oil level. Add the required amount of oil to bring the level to the FULL mark. See the LUBRICATION chapter for the type of oil to use.

CHECK HYDRAULIC OIL LEVEL

The machine must be on level ground and make sure the boom is lowered and completely retracted. The fluid MUST be cool when checking the reservoir level. By doing this, you will reduce the possibility of overfilling the hydraulic system, and also reduce potential injury due to hot fluid.

Remove the front cover from the front hood section. Loosen the filler cap to release pressure. Remove the filler cap and check the level on the dipstick. If the oil level is down, or below the ADD mark, fill with the required amount of oil to bring the level to the FULL mark. See the Lubricants chapter for the type of oil to use.

IMPORTANT: *Be careful when removing the reservoir filler cap so that no dirt or other foreign matter enters the hydraulic system while the cap is removed. DO NOT OVERFILL.*

CHECK BRAKE RESERVOIR LEVELS

Flip up the floor cover under the seat mount. Remove both reservoir covers to check the levels. If low, fill to the proper level with correct fluid. See LUBRICATION chapter for the type used.

CHECK PARK BRAKE LEVER

Check the tension when pulled. Adjust, if necessary, to a pull of 20 lbs (89 N)

CHECK TIRE PRESSURES

Proper tire pressure should be maintained equally for all four tires to enhance operating stability and extend tire life.

When installing tires on the machine, be sure that all tires are of the same size and style. ALWAYS replace tires with the same size furnished as original equipment. Replacement tires must be purchased locally.

Check the tire pressure “cold”. All 12 ply tires should be inflated to 55 PSI (380 kPa).

NOTE: *If the tires have been filled with water or calcium chloride for weight, a calcium chloride tire pressure gauge MUST be used to check the tire pressure.*

When removing tires follow industry safety practices. Deflate completely prior to removal. Following assembly of the tire on the rim, use a safety cage or restraining device while inflating.

Courtesy of Crane.Market

https://truckmanualshub.com/

WARNING

Inflating or servicing tires can be dangerous. Whenever possible, trained personnel should service and mount tires. To avoid possible death or serious injury, follow the safety precautions below:

1. BE SURE the rim is clean and free of rust.

2. Lubricate both the tire beads and rim flanges with a soap solution. DO NOT use oil or grease.

3. DO NOT place your fingers on the tire bead or rim during inflation. Use a clip-on tire chuck with a remote hose and gauge which allows you to stand clear of the tire while inflating it.

4. NEVER inflate beyond 35 PSI (240 kPa) to seat the beads. If the beads have not seated by the time the pressure reaches 35 PSI (240 kPa), deflate the assembly, reposition the tire on the rim, relubricate both parts and re-inflate. Inflation pressure beyond 35 PSI (240 kPa) with unseated beads may break the bead or rim with explosive force sufficient to cause death or serious injury.

5. After seating the beads, adjust the inflation pressure to the recommended operating pressure listed.

6. DO NOT weld, braze, or otherwise attempt to repair and use a damaged rim.

CHECK WHEEL NUT TORQUE

On NEW machines, or anytime wheel has been removed, re-torque until 300 ft-lbs (407 Nm) is maintained.

CHECK INSTRUMENTS OPERATION

Allow the engine to warm up for about five minutes before beginning operation. Indicator lamps should be OFF and gauges should register normal readings. Tilt the frame from side to side with the sway control and note the angle indicator movement.

CHECK GENERAL MACHINE OPERATION AND CONDITION

Are any decals missing or damaged? Are all guards, shields and covers in place? Do all controls function smoothly and properly? Are there any abnormal vibrations or noises? Are any hose or fitting connections leaking? Is the engine exhaust color normal (light grey or colorless)?

WARNING

Manufacturers of push-pull control cables advise taking the following operation and maintenance precautions.

Do not adjust the control cable with the engine running.

A gradual or sudden increase in the no-load friction (cable disconnected at both ends) of a control cable is an indication of a pending or present performance problem. The control cable should be replaced.

A gradual or sudden decrease in the useable travel is a indication of a pending or present performance problem. The cable should be replaced.

Control cables which have moisture inside of them and/or have frozen should be replaced. Do not apply heat to thaw or dry control cables.

Control cable are lubricated for the life of the control cable. Do not remove the seals or lubricate the control cable.

Control cables are designed to be non-repairable. Do not attempt to repair control cables.

Failure to heed could result in death or serious injury.

Service Every 50 Hours or Weekly

LUBRICATE GREASE POINTS

Refer to the LUBRICATION chapter of this manual for weekly grease fitting locations and other related details.

Courtesy of Crane.Market

https://truckmanualshub.com/

100 Hours (New Machine Only)

The following initial oil and filter changes should be made at this time on a new machine. Thereafter these changes should be made at the regular maintenance schedule listed. Refer to those schedules for procedures necessary.

Engine Oil and Filter	(250 Hours)
Transmission Filter	(1000 Hours)
Hydraulic Oil Filter	(1000 Hours)

Service Every 250 Hours

NOTE: *Perform all other service requirements up to this point as well as the following:*

CHANGE AIR FILTER ELEMENT

This air filter contains a single dry element. Wipe the outside of the body with a rag or cloth. Blow off excess dirt and dust with compressed air. Refer to illustration on the next page.

1. Loosen the clamp ring and remove the dust cup. Remove the baffle. Wipe the cup and baffle completely clean. Reassemble the dust cup.

2. Remove the element wing bolt and slide out the element. Avoid knocking the element against the housing. Dirt accidentally transferred to the inside of the outlet tube will reach the engine and cause wear.

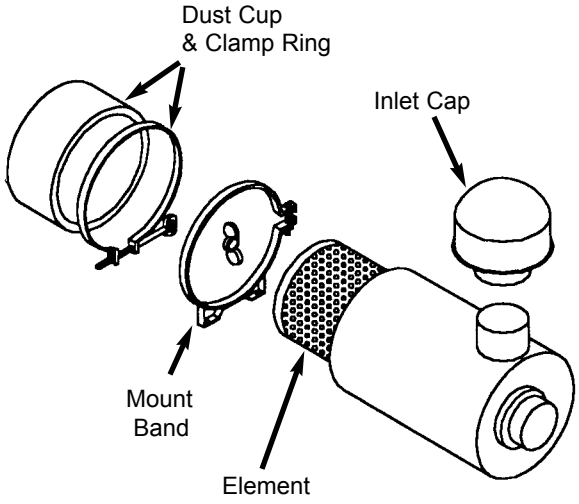

Air Cleaner Assembly

3. Wipe the entire inside of the main body and inlet cap screen.

A streak of dust on the clean air side of the old element indicates a leakage problem. Be sure to remove the cause before installing a new element.

4. Inspect the new element for possible damage. Placing a bright light inside the element and inspecting the outside will show up any holes or tears. Discard the element if such damage appears.

IMPORTANT: *NEVER use an element that is damaged. Severe engine wear and eventual failure can result if dirt gets through a hole in the element.*

5. Install the element and reassemble the end cup to housing. Make sure the large o-ring is in place between the end cup and the main body.

NOTE: *Keep spare elements on hand to eliminate down time.*

CHECK AXLE OIL LEVELS

Differential

NOTE: *The Telescopic Forklift should be on a level surface for this procedure.*

See illustration. Remove the oil check plug. Oil should flow from the hole. If low, remove the oil fill plug and add oil until it flows from the check hole. Replace the plug, wait 10 to 15 minute and repeat the fill procedure. Continue this process until the differential is full.

FRONT AXLE SHOWN

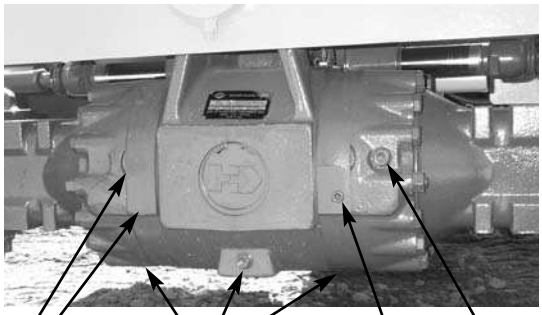

NOTE: These fill/check plugs are located on the opposite side of the differential.

Axle Oil Plugs Location

Courtesy of Crane.Market

https://truckmanualshub.com/

See the LUBRICATION chapter of this manual for the proper oil specification. Replace the oil level check/fill plug.

Planetary Hubs

NOTE: *The planetary hubs can be checked without jacking up the machine.*

See illustrations below. The planetary hubs have one plug each used for filling and draining. For checking the level and filling, position the Wheel until the arrow points down. Remove the plug. If oil does not run out, add oil until it flows from the hole. Check the remaining hubs the same way. Refer to the oil specifications found in the LUBRICATION chapter of this manual.

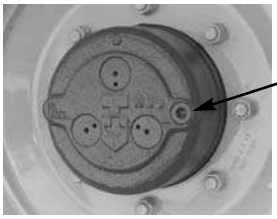

CHANGE FUEL FILTER

The frequency of filter replacement will be determined by the cleanliness of available fuel, the care used in storing fuel supplies and the operating conditions in which the machine is used.

NOTE: *For proper replacement procedures refer to the engine manual for your machine.*

WARNING

NEVER service the fuel system while smoking, while near an open flame, or after the engine has been operated and is hot.

After fuel filter replacement, bleed the air out of the fuel system following the procedures in the engine manual.

Fuel Bleeding Procedures

When the fuel filter is removed and replaced, or the engine runs out of fuel, air must be bled from the system. Refer to the engine manual relative to proper bleeding procedures.

If the engine still will not start, consult your nearest authorized engine dealer.

NOTE: *Only an authorized engine dealer can perform WARRANTY Service on the engine.*

Diesel Fuel Injectors

Whenever faulty or plugged injectors are indicated, see your nearest authorized engine dealer.

Diesel Injection Pump Timing

Whenever injection pump timing, or other pump service is indicated by abnormal engine operation, contact your nearest engine dealer.

WARNING

Escaping diesel fuel under pressure can have sufficient force to penetrate the skin. Before applying pressure to the fuel system, BE SURE all connections are tight and lines and hoses are NOT damaged. Use a piece of wood or cardboard to search for suspected leaks. If injured by escaping fuel, see a doctor familiar with this type of injury at once or gangrene may result.

CHANGE ENGINE OIL AND FILTER

Change the engine oil and filter using the following procedure:

1. With the engine warm, remove the crankcase drain plug. Some plugs are equipped with a magnet to gather metal particles. Completely clean and flush away all metallic filings from the plug and re-install it.

IMPORTANT: *DO NOT discharge oil onto the ground. Catch and dispose of per local waste disposal regulations.*

2. The engine oil filter should be changed at every oil change interval. Remove and discard the throw away filter canister. Wipe the gasket sealing area of the block with a clean cloth.

NOTE: *Your OEM engine oil filters have special by-pass valves built in. Use only genuine OEM engine replacement filters.*

3. Apply a thin coat of clean oil to the new oil filter gasket and spin tighten. Refill the crankcase with new oil. Follow specifications in the LUBRICATION chapter for type and viscosity of new oil to put in.

Courtesy of Crane.Market

https://truckmanualshub.com/

4. After new oil has been added, run the engine at idle speed until the oil pressure light is OFF. Check for leaks at the filter and drain plug. Re-tighten only as much as necessary to eliminate leakage.

CHECK THE BATTERY

The battery furnished with this machine is a 12 volt, wet-cell battery.

Handling Battery Safely

The top of the battery must always be kept clean. Clean the battery with a brush dipped in an alkaline solution (ammonia or baking soda and water). After the foaming has stopped, flush the top of the battery with clean water. If the terminals and cable connection clamps are corroded or have a buildup, disconnect the cables and clean the terminals and clamps with the same alkaline solution.

NOTE: *The battery in this machine is warranted by the supplier. See the punch tag on the top of the battery for warranty information.*

Jump Starting

If the battery becomes discharged or does not have enough power to start the engine, use jumper cables and the following procedure to jump-start the engine.

WARNING

Explosive gas is produced while a battery is in use or being charged. Keep flames or sparks away from the battery area. Make sure battery is charged in a well-ventilated area.

NEVER lay a metal object on top of a battery as a short circuit can result.

Battery acid is harmful on contact with skin or fabrics. If acid spills, follow these firstaid tips:

1. **IMMEDIATELY remove any clothing on which acid spills.**
2. **If acid contacts the skin, rinse the affected area with running water for 10 to 15 minutes.**
3. **If acid comes in contact with the eyes, flood the eyes with running water for 10 to 15 minutes. See a doctor at once. NEVER use any medication or eye drops unless prescribed by the doctor.**
4. **To neutralize acid spilled on the floor, use one of the following mixtures:**
   a. **1 Pound (0.5 kg) of baking soda in 4 quarts (4 liters) of water.**
   b. **1 Pint (0.4 liters) of household ammonia in 4 quarts (4 liters) of water.**

Whenever battery is removed from the unit, BE SURE to disconnect the negative (-) battery terminal connection cable first.

IMPORTANT: *BE SURE that the jumper battery is also a 12 volt D. C. battery, and the vehicle used for jump starting has a negative ground electrical system.*

1. Turn the keyswitches on both vehicles to OFF. Be sure that both vehicles are in “Neutral” and NOT touching.

WARNING

The ONLY safe method for jump-starting a discharged battery is for TWO PEOPLE to perform the following procedure. The second person is needed for removing the jumper cables so that the operator does not have to leave the operator’s compartment while the engine is running. NEVER make the jumper cable connections directly to the starter solenoid of either engine. DO NOT start the engine from any position other than the operator’s seat, and then ONLY after being sure all controls are in “neutral”.

Closely follow the jump-start procedures, in the order listed, to avoid personal injury. In addition, wear safety glasses to protect your eyes, and avoid leaning over the batteries while jump-starting.

DO NOT attempt to jump-start the machine if the battery is frozen, because this may cause it to rupture or explode.

2. Connect one end of the positive (+) jumper cable to the positive (+) battery terminal on the disabled machine first. DO NOT allow the jumper’s positive (+) cable clamps to touch any metal other than the positive (+) battery terminals. Connect the other end of the pos-

Courtesy of Crane.Market

https://truckmanualshub.com/

itive jumper cable to the jumper battery positive (+) terminal.

3. Connect one end of the negative (-) jumper cable to the jumper battery negative (-) terminal.

4. Make the final negative (-) jumper cable connection to the disabled Telescopic Forklift's engine block or frame (ground) - NOT to the disabled battery negative post. If making the connection to the engine, keep the jumper clamp away from the battery, fuel lines, or moving parts.

NOTE: *Twist the jumper cable clamps on the battery terminals to insure a good electrical connection.*

5. Proceed to start the machine. If it does not start immediately, start the jumper vehicle engine to avoid excessive drain on the booster battery.

6. After the machine is started and running smoothly, have the second person remove the jumper cables (negative (-) jumper cable, first) from the jumper vehicle battery, and then from the disabled machine while insuring NOT to short the two cables together.

Allow sufficient time for the alternator to build-up a charge in the battery before attempting to operate the machine or shut the engine off.

NOTE: *If the battery frequently becomes discharged, have the battery checked for possible dead cell(s), or troubleshoot the entire electrical system for possible short circuits or damaged wire insulation.*

CHECK ALTERNATOR AND FAN BELT TENSION

Refer to the engine manual for proper belt tension adjustment and replacement procedures. If the belt shows wear or cuts, it should be replaced. Order replacement belt from your engine dealer.

CHECK BOOM LEAF CHAINS AND SHEAVES

Inspect the leaf chains for wear and proper tension (Model 553 only). Two of the chains and sheaves are on the top of the boom. A third is accessible from inside the rear of the boom (see illustration). Run the boom out slowly to inspect. Conditions to look for include cracked or broken plates, protruding or turned pins, and excessive wear. With a steel tape, measure 16 links of the strand that flexes over the sheaves. When the distance measures 10.31" (262 mm), the chain should be discarded. DO NOT repair sections of a chain. Replace the complete chain.

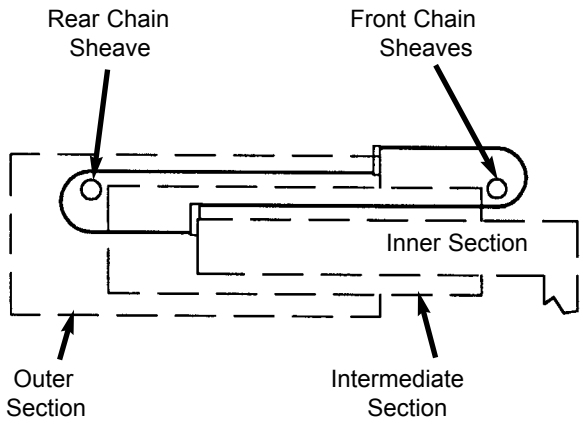

Chain Hookup Detail

Chain anchors and sheaves also require inspection for wear or broken fingers and worn flanges. If a chain has been replaced, operate under load conditions and recheck the torque. Adjust the chains per the following procedure.

Extend the boom straight out to its maximum length. Then retract the boom slowly until the chain slack allows the chain to rest on the top of the boom. Torque the chains on the front of the boom to 25 ft-lb (34 Nm). Lubricate with 80/90 W oil.

CHECK BOOM SLIDE PADS WEAR AND CLEARANCE

This boom is equipped with special nylon low friction slide pads between the telescopic sections (see illustration). These are pre-greased and initially worn-in at the factory. Normally greasing is not required, except for

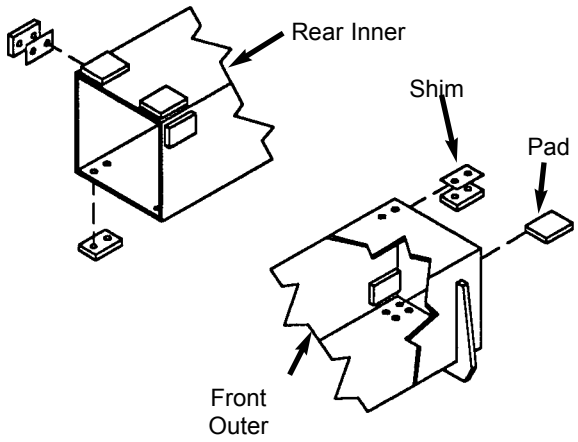

Slide Pad Detail

Courtesy of Crane.Market

https://truckmanualshub.com/

maintaining a light film of grease on the pad tracking areas of the boom sections. An exception would be if a boom section has been replaced.

Visually check for loose pad bolts. The bolts are torqued to 30 ft-lb (40 Nm). If the bolts are re-torqued at any time, Loctite® thread lock must be re-applied to the bolts.

If the boom starts to chatter under load, grease the slide pads and wipe off the excess. If a top or side slide pad shows excessive wear, loosen bolts. Insert shims to each side or top and bottom for even distribution of clearance. Re-apply Loctite® thread lock to the bolts and re-torque to 30 ft-lbs (40 Nm). Bottom slide pads should be replaced when the thickness is worn down to 3/8” (9.5 mm).

WARNING

Failure to maintain proper slide pad clearance and thickness could cause damage to the boom and boom chains, resulting in sudden boom failure.

Service Every 1000 Hours

NOTE: *Perform all other service requirements up to this point, as well as the following.*

CHANGE TRANSMISSION OIL and FILTER

Operate the machine long enough to warm up the transmission oil. Shut down the engine. Access to filter and drain plug is from underneath the machine. Proceed as follows:

1. Remove the drain plug and drain out old oil. Replace the drain plug.

IMPORTANT: *DO NOT discharge oil onto ground. Catch and dispose of per local waste disposal regulations.*

2. Remove and discard the oil filter. Wipe the sealing surface on the transmission with a clean cloth. Apply a thin coat of clean oil to the new oil filter gasket. Spin tighten.

3. Refill the transmission with new oil as shown in the LUBRICATION chapter of this manual.

IMPORTANT: *DO NOT OVERFILL! If the oil level is too high, oil foaming, excessively high oil temperature and oil leakage at the seal could result.*

4. Start and run the machine long enough for the oil to circulate and warm slightly. Recheck the level with the dipstick.

CHANGE RADIATOR COOLANT

Drain, flush and refill the cooling system as follows:

IMPORTANT: *DO NOT discharge coolant onto ground. Catch and dispose of per local waste disposal regulations.*

WARNING

Remove the radiator cap only when the engine is cool, or painful burns could result.

1. Loosen the radiator cap to its stop. This will release any system pressure. Remove the cap when all pressure is bled off.

2. Open the radiator drain cock. Remove the water jacket drain plug from the engine block. When all coolant is drained, flush the system with clean fresh water. Allow the flush to drain completely.

3. Replace all drain plugs and tighten the radiator drain cock. Clean out the cooling fins in the radiator with water pressure or steam.

NOTE: *When cold weather is expected, fill the cooling system with a 50-50% mixture of water and ethylene glycol anti-freeze.*

4. Inspect the radiator cap seal before installing it. Replace it if it appears defective. The 10 PSI (69 kPa) pressure cap and engine thermostat work in conjunction with each other to maintain proper engine cooling.

NOTE: *Check the engine temperature lamp every minute or two after coolant has been changed. Air pockets can form, and it may be necessary to refill the cooling system after a short period of use, as the air will naturally bleed out of the system.*

Courtesy of Crane.Market

https://truckmanualshub.com/

CHANGE HYDRAULIC RETURN FILTER ELEMENT

WARNING

When servicing the hydraulic system, lower the boom to the ground.

This element is a cartridge type accessible from a housing on top of the hydraulic reservoir. Initial replacement is after the first 100 hours. See illustration. Remove the top cover of the housing. Remove the element and discard. Insert the new element onto the housing and replace the cover.

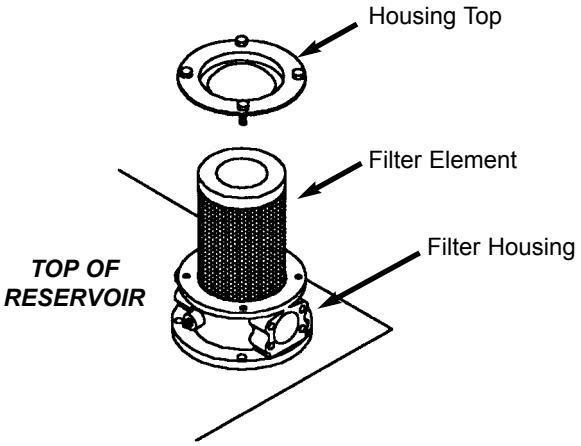

Reservoir Filter Removal

CHANGE AXLE DIFFERENTIAL AND PLANETARY OIL

Differential

1. Remove the three drain plugs and drain out the old oil. Replace the drain plugs (see illustration).

IMPORTANT: *DO NOT discharge oil onto ground. Catch and dispose of per local waste disposal regulations.*

2. Remove the check and fill plugs. Fill the differential with oil as specified in the LUBRICATION chapter. When the oil flows from the check hole, replace the plug. Wait 10 to 15 minutes and repeat this process until the axle is full Repeat the procedure with the other axle.

FRONT AXLE SHOWN

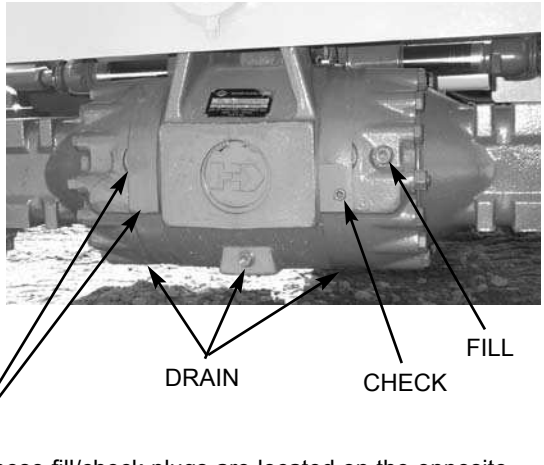

NOTE: These fill/check plugs are located on the opposite side of the differential.

Axle Oil Plugs Location

Axle Planetary Hubs

The hubs have one plug each used for draining and filling *(see illustration)*.

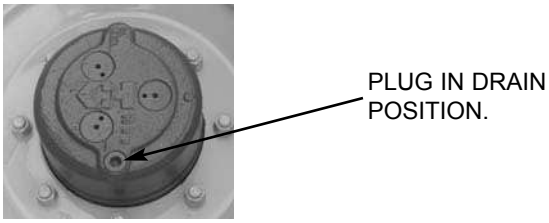

1. Position the wheel until the arrow points to the left. Remove the drain/fill plug and allow the oil to drain out. Replace the plug.

IMPORTANT: *DO NOT discharge oil onto ground. Catch and dispose of per local waste disposal regulations.*

2. Re-position the hub so the arrow points down. Fill with fresh oil as specified in the LUBRICATION chapter. When the oil runs out, install the drain/fill plug. Repeat this procedure on the three remaining hubs.

CHECK EXHAUST SYSTEM

Examine the muffler and tail pipe for possible holes. Re-tighten any loose clamps and make sure the manifold outlet gasket is not leaking.

Courtesy of Crane.Market

https://truckmanualshub.com/

Service Every 2000 Hours

NOTE: *Perform all other service requlrements up to this point, as well as the following.*

CHECK HYDRAULIC SYSTEM RELIEF PRESSURES

Pressure settings for relief valves are pre-set at the factory. A single test port is provided on the dash front of early units. Later units have two test ports located under the hood center section access cover. The second test port is used to check the joystick relief pressure.

Before conducting any test port pressure checks, check the engine RPM. Engine speed must be 950 to 1000 RPM at idle and 2500 RPM at high idle.

Steering Relief Pressure

Plug a 3000 PSI (207 bar) oil or liquid filled gauge in the test port. Cramp the steering full to the right or left. The gauge should read 2000 PSI (138 bar).

Check Main Relief Pressure

With the gauge in the test port and the boom extended, retract the boom fully. The gauge should read 2800 PSI (193 bar).

Joystick Relief Pressure on Later Units

Plug a 1000 PSI (69 bar) gauge in the joystick test port. Start the engine. The gauge should read 425 PSI (30 bar) with the engine at any RPM.

CHANGE HYDRAULIC RESERVOIR OIL AND STRAINER

Clean all dirt and debris from around the top of the reservoir, especially around the access cover. Refer to illustration below and use the following procedure:

1. Remove the drain plug and drain out all used oil. Wash or blow off all collected particles from the magnetic drain plug.

IMPORTANT: *DO NOT discharge oil onto ground. Catch and dispose of per local waste disposal regulations.*

2. Remove the access cover and wash the inlet screen with clean solvent. Remove the sump filter strainer from the bottom inside of the reservoir. Wash it also. If the strainer has any damage, holes, etc. it should be replaced.

3. Flush out the bottom of the tank with clean hydraulic oil. Re-install all cleaned components and put the top back on the reservoir with a new gasket. Clean the filter/breather cap.

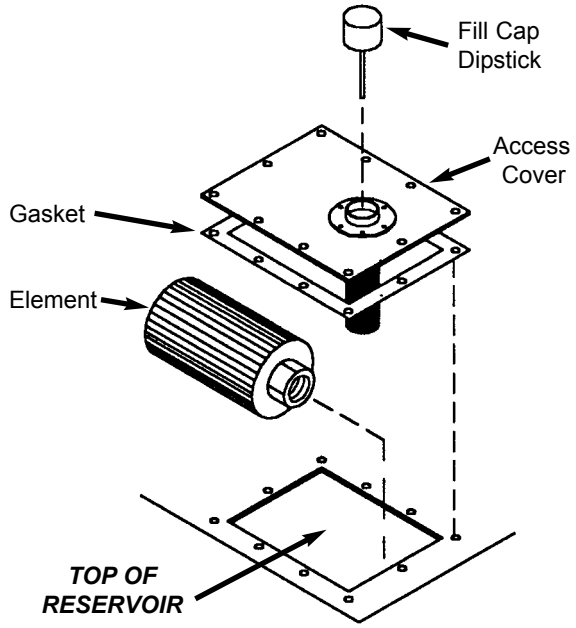

Hydraulic Reservoir Sump Strainer Removal

4. Fill the tank with fresh oil. Follow specifications found in LUBRICATION chapter of this manual.

WARNING

Escaping hydraulic oil under pressure can have sufficient force to penetrate the skin. Before applying pressure to the hydraulic system, be sure all connections are tight and lines and hoses are not damaged. Use a piece of wood or cardboard to search for suspected leaks. If injured by excaping hydraulic oil, see a doctor familiar with this type of injury at once or gangrene may result.

IMPORTANT: *Hydraulic fluid and filters should be replaced any time contamination is present before the normally scheduled change.*

Courtesy of Crane.Market

https://truckmanualshub.com/

STORAGE

If the Telescopic Forklift will not be operated for a long period of time, prepare and store it using the procedures as follows.

Before Storage

Perform the following prior to placing the machine in storage:

1 Wash off the entire machine.

2. Lubricate all grease fittings as described in the Lubrication chapter of this manual.

3. Change engine oil as outlined in the SERVICE & STORAGE chapter of this manual.

4. Apply grease to all exposed hydraulic cylinder rod areas.

5. Disconnect the battery cable clamps and cover the battery or remove the battery from the machine and store it separately.

6. If the ambient temperature (at anytime during the storage period) is expected to drop below freezing, make sure the engine coolant is either completely drained from the radiator and engine block or that the amount of anti-freeze in it is adequate to keep the coolant from freezing. Refer to the separate engine manual provided for anti-freeze recommendations and quantities.

During Storage

1. About once each month, connect the battery and check all fluid levels to make sure they are at the proper level before starting the engine.

2. Start the engine and allow it to run until it warms up and then move the machine a short distance to help relubricate the internal parts. Run the engine until the battery has a chance to recharge and then shut it off.

IMPORTANT: *If it is desired to operate the hydraulic cylinders at this time, BE SURE to wipe the protective grease (and any adhering dirt) from the cylinder rods prior to starting the engine. After operating, BE SURE to recoat the cylinder rods with grease if the machine is to be returned to storage.*

After Storage

After removing the machine from storage and BEFORE operating it, perform the following:

1. Change engine oil and filter to remove condensation or other residuals.

2. Wipe off grease from cylinder rods.

3. Lubricate ALL grease fittings.

4. Review and refamiliarize yourself with all safety precautions as outlined in the SAFETY chapter of this manual.

5. Follow the starting and warm-up procedures as outlined in the OPERATION & ADJUSTMENTS chapter of this manual.

Courtesy of Crane.Market

https://truckmanualshub.com/

Chapter 9

DECAL LOCATIONS

GENERAL INFORMATION

CAUTION

ALWAYS follow the safety precautions on decals. Replace decals if they are damaged, or if the unit is repainted. If repainting, be sure that all applicable decals are affixed in their proper locations.

Decal Locations information is provided to assist in the proper selection and application of new decals, in the event the original decal(s) become(s) damaged or the machine is repainted.

For correct replacement of decal(s) compare the location illustrations to your machine before starting to refinish the unit. Check-off each required decal using the illustration reference number to find the part number, description and quantity in the list. Refer to the appropriate illustration(s) for replacement location(s).

NEW DECAL APPLICATION

Before applying the new decals, surfaces must be free from dirt, dust, grease and other foreign material. To apply a solid-formed decal, remove the smaller portion of the decal backing paper and apply this part of the exposed adhesive backing to the clean surface while maintaining proper position and alignment. Slowly peel off the other portion of the backing paper while applying hand pressure to smooth-out decal surface. To apply a die-cut decal, first remove the backing paper. Then, properly orient and position the decal onto the clean mounting surface. After the decal is firmly applied and smoothly pressed down, remove the front covering paper.

PAINT FINISH

Use this list to order paint for refinishing:

906213	One Gal. Yellow
906317	One Gal. Charcoal Grey
906214	6 (12 oz. Spray Cans) Yellow
906318	6 (12 oz. Spray Cans) Charcoal Grey

Decal Kits

L98863	Model 552
L98864	Model 553

NOTE: *Decals may be purchased in kits or individually.*

Courtesy of Crane.Market

https://truckmanualshub.com/

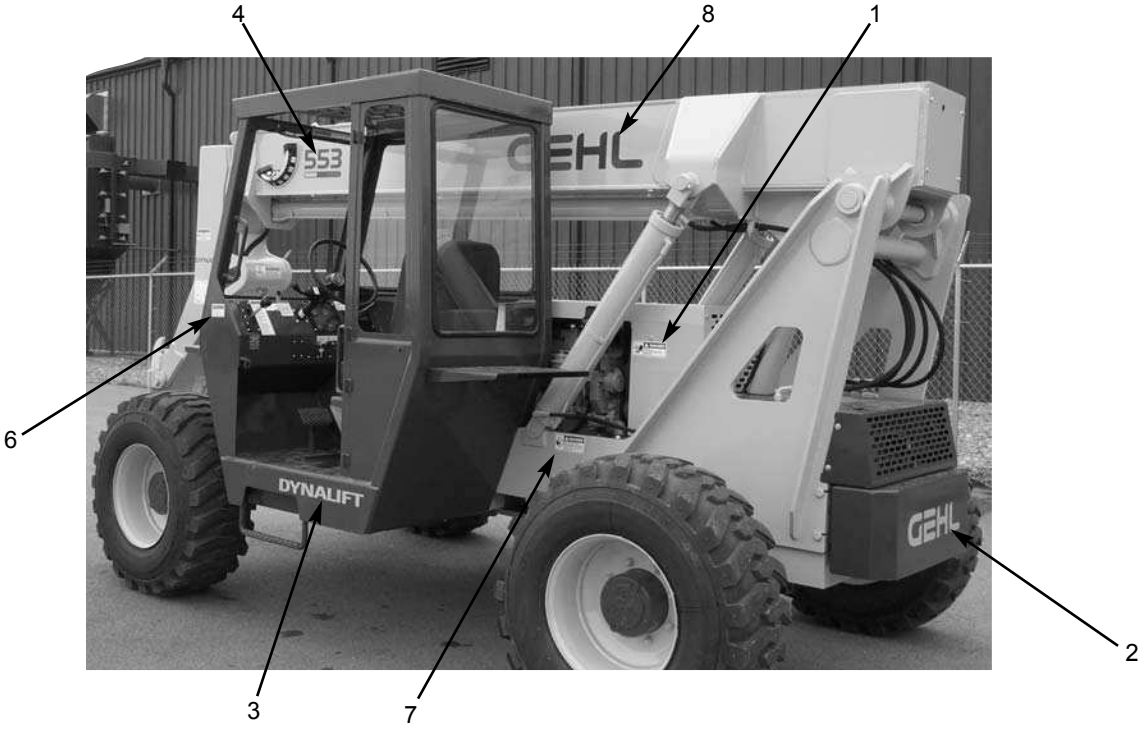

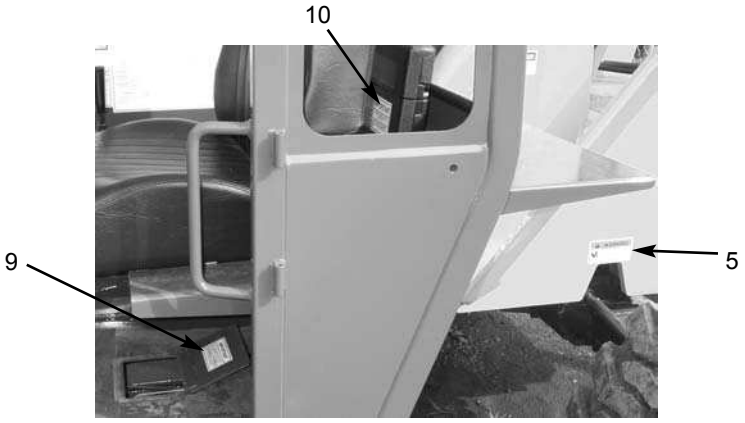

DECAL LOCATIONS - LEFT SIDE OF MACHINE

REF. NO.	DESCRIPTION	552	553
01	DANGER - ROTATING FAN	L99863	L98864
02	GEHL 4.5”	L66565	L66565
03	DYNALIFT	L66568	L66568
04	552	L66585	---
04	553	---	L66581
05	WARNING - PINCH POINT	L65927	L65927
06	WARNING - NO RIDERS	122288	122288
07	WARNING - JUMP START	L65933	L65933
08	GEHL 6.38”	L65932	L65932
09	BRAKE FLUID LEVEL	L63474	L63474
10	OPERATOR MANUAL INSIDE	L65922	L65922

Courtesy of Crane.Market

https://truckmanualshub.com/

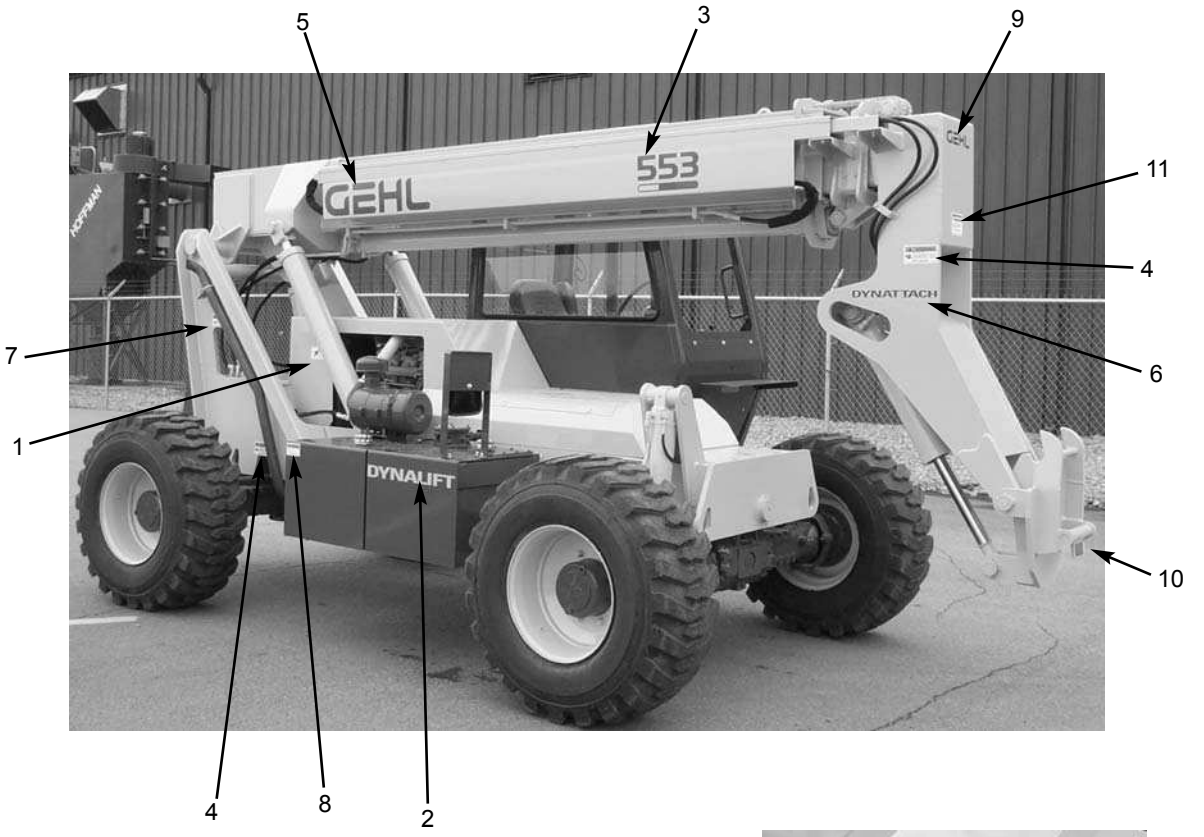

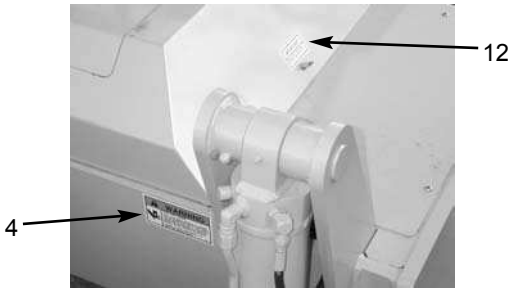

DECAL LOCATIONS - RIGHT SIDE OF MACHINE

REF. NO.	DESCRIPTION	552	553
01	DANGER - ROTATING FAN	L65924	L65924
02	DYNALIFT	L66568	L66568
03	552	L66585	---
03	553	---	L66581
04	WARNING - PINCH POINT	L65927	L65927
05	GEHL 6.38”	122288	122288
06	DYNATTACH 1-1/2”	L66569	L66569
07	WARNING - HOT SURFACE	L65942	L65942
08	WARNING - NO RIDERS	L65932	L65932
09	GEHL 2”	L66584	L66584
10	DYNATTACH UNLOCK RED STRIPE	L66613	L66613
11	DANGER - PERSONNEL	L65928	L65928
12	GREASE DAILY	L65920	L65920

Courtesy of Crane.Market

https://truckmanualshub.com/

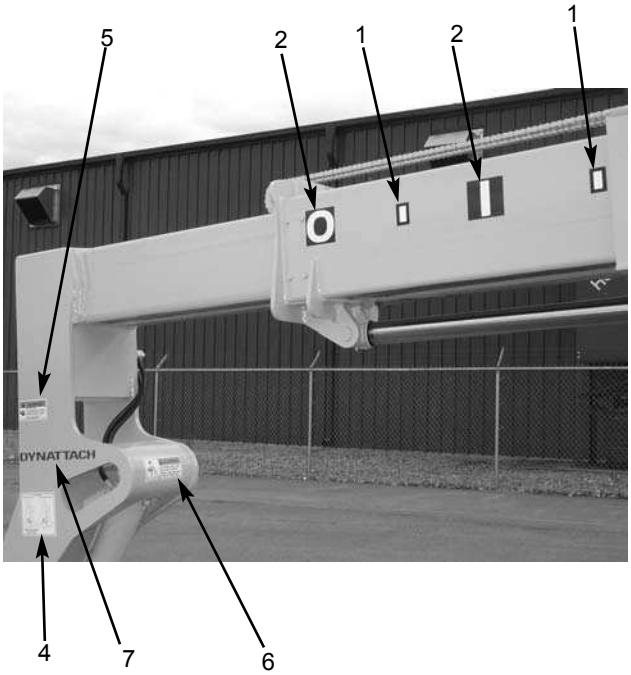

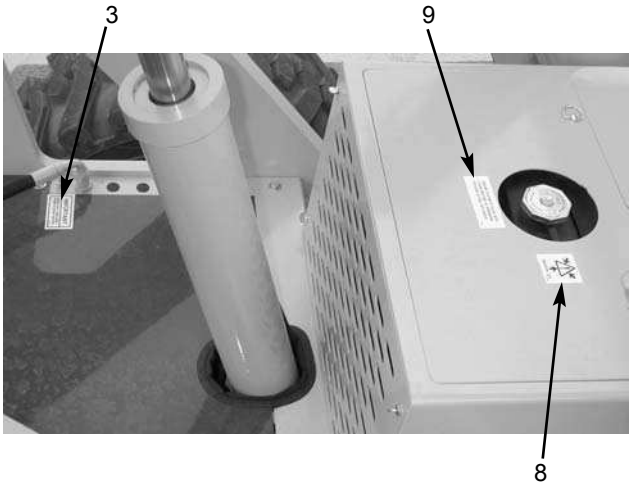

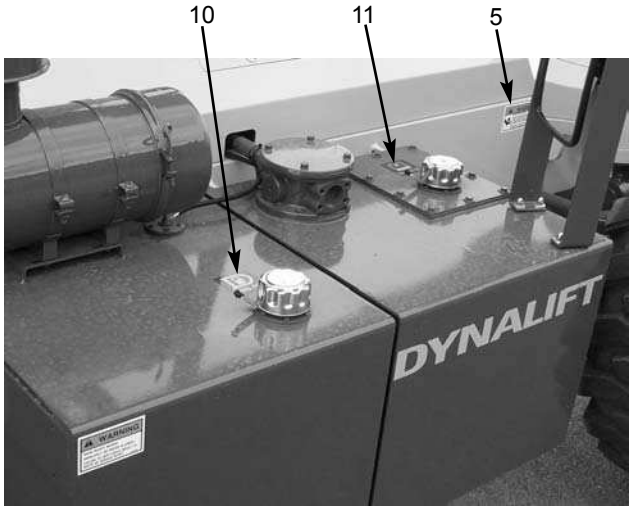

DECAL LOCATIONS

REF. NO.	DESCRIPTION	552	553
01	HALF ZONE EXTENSION MARKER	L62583 (3 ea.)	L62583 (5 ea.)
02	NO. “0” EXTENSION MARKER	---	L67718
02	NO. “1” EXTENSION MARKER	L67719	L67719
02	NO. “2” EXTENSION MARKER	L67720	L67720
02	NO. “3” EXTENSION MARKER	---	L67721
02	NO. “4” EXTENSION MARKER	---	L67722
02	NO. “5” EXTENSION MARKER	---	L67723
03	GREASE DAILY	L65920	L65920
04	DYANTTACH DIAGRAM	L65937	L65937
05	WARNING - PINCH POINT	L65927	L65927
06	WARNING - CARRY LOAD LOW	L65926	L65926
07	DYNATTACH - 1 1/2”	L66569	L66569
08	COOLANT UNDER PRESSURE	072798	072798
09	ANTI-FREEZE NOTE	056859	056859
10	DIESEL FUEL	072797	072797
11	HYDRAULIC OIL	072794	072794

Courtesy of Crane.Market

https://truckmanualshub.com/

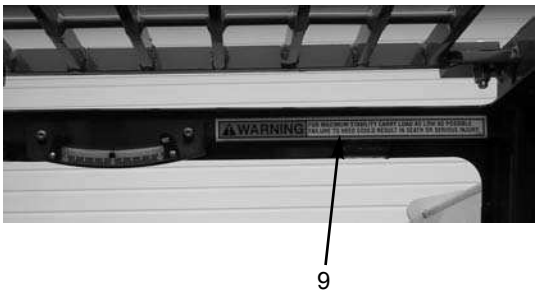

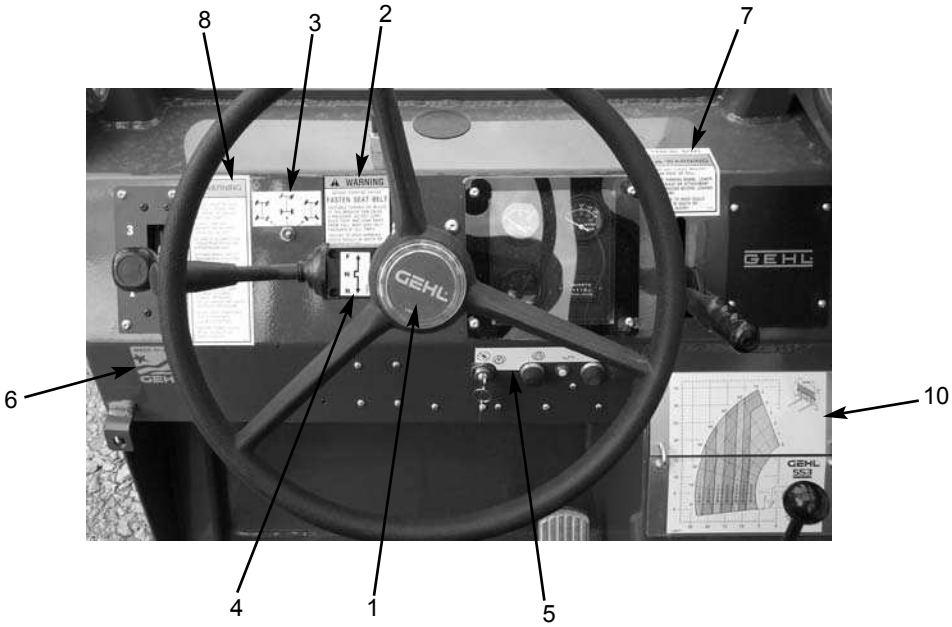

DECAL LOCATIONS - DETAILS IN OPERATOR STATION

REF. NO.	DESCRIPTION	552	553
01	GEHL 2.0” DIA.	L65224	L65224
02	WARNING - SEAT BELT	L65440	L65440
03	STEER SELECTOR	L63618	L63618
04	F-N-R CONTROL	L68295	L68295
05	IGNITION/HORN (w/o Pushbutton Start)	L68052	L68052
05	IGNITION/HORN (Perkins Engine only)	L63692	L63692
05	IGNITION/HORN (w/ Pushbutton Start)	L68513	L68513
06	MADE IN USA	094951	094951
07	WARNING - PARK BRAKE	L65925	L65925
08	WARNING - OPERATOR	L63690	L63690
09	WARNING CARRY LOAD LOW	093475	093475
10	LOADCHART-ROTATING CARRIAGE	L63437	---
10	LOADCHART-TRUSS BOOM	L63454	---
10	LOADCHART-STANDARD CARRIAGE	L63661	---
10	LOADCHART-BUCKET	L63926	---

Courtesy of Crane.Market

https://truckmanualshub.com/

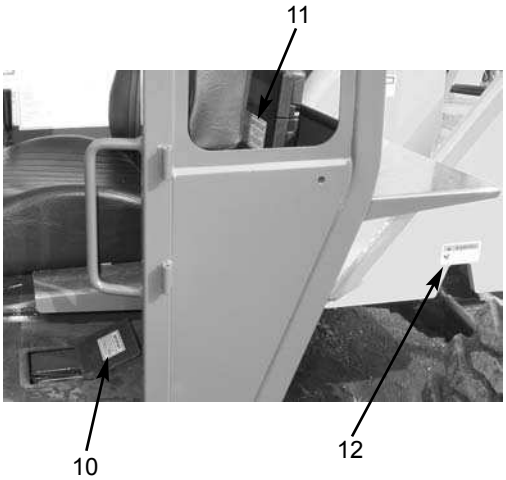

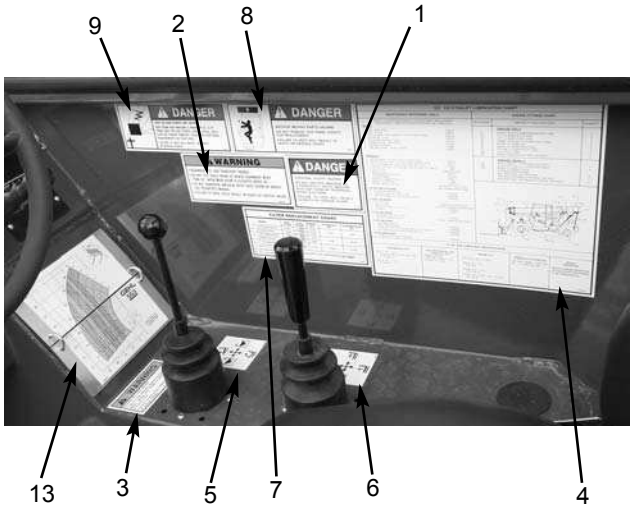

DECAL LOCATIONS - DETAILS IN OPERATOR STATION

REF. NO.	DESCRIPTION	552	553
01	DANGER - PERSONNEL	L65928	L65928
02	WARNING - TRUSS BOOM	L66042	L66042
03	WARNING - MACHINE LEVEL	L65930	L65930
04	MAINTENANCE CHART	L63542	L63542
05	TILT/LEVEL CONTROL	L63632	L63632
06	BOOM CONTROL	L63631	L63631
07	FILTER CHART	L68084	L68084
08	DANGER - PANEL IN PLACE	L65948	L65948
09	DANGER - POWER LINES	L65929	L65929
10	BRAKE FLUID LEVEL	L63474	L63474
11	OPERATOR MANUAL INSIDE	L65922	L65922
12	WARNING - PINCH POINT	L65927	L65927
13	LOADCHART-STANDARD CARRIAGE	---	L68671
13	LOADCHART-ROTATING CARRIAGE	---	L68672
13	LOADCHART-TRUSS BOOM	---	L68673
13	LOADCHART-BUCKET	---	L68674
13	LOADCHART-WINCH	---	L68675

Courtesy of Crane.Market

https://truckmanualshub.com/

Chapter 10

MAINTENANCE

This Maintenance Chart was developed to match the Service chapter of this manual. Detailed information on each Service Procedure may be found in the Service chapter. A Maintenance Log follows the Interval Chart for recording the maintenance procedures performed. Recording the 10 Hour (or Daily) service intervals would be impractical and is therefore not recommended.

IMPORTANT: *Under extreme operating conditions more frequent service than the recommended intervals may be required. You must decide if your operation requires more frequent service.*

MAINTENANCE INTERVAL CHART

SERVICE PROCEDURE	Every 10 Hours (or Daily)	Every 50 Hours (or Weekly)	First 100 Hours	Every 250 Hours
Check Fuel Tank Level	●			
Check Fuel Filter (Drain Water If Required)	●			
Check Engine Oil	●			
Check Radiator Coolant Level	●			
Check Transmission Oil Level	●			
Check Hydraulic Oil Level	●			
Check Brake Reservoir Levels	●			
Check Park Brake Handle	●			
Check Tire Pressures	●			
Check Wheel Nut Torque	●[1]			
Check Instruments Operation	●			
Check General Machine Operation & Condition	●			
Lubricate Weekly Grease Points		●		
Change Hydraulic Return Filter Element			●	
Change Transmission Filter			●	
Change Engine Oil & Filter			●	●
Check Axle Oil Levels				●
Change Fuel Filter				●
Check Transmission Oil Level				●
Check Battery				●
Check Boom Leaf Chains & Torque				●

1 - Only Until 300 Ft-Lbs (407 Nm) Is Maintained.

Courtesy of Crane.Market

https://truckmanualshub.com/

MAINTENANCE INTERVAL CHART (CONT.)

SERVICE PROCEDURE	Every 250 Hours	Every 1000 Hours	Every 2000 Hours
Change Air Filter Element	●		
Check Alternator & Fan Belt Tension	●		
Check Boom Slide Pads Wear & Clearance	●		
Change Transmission Oil and Filter		●	
Change Radiator Coolant		●	
Change Hydraulic Return Filter Element		●	
Change Axle Differential & Planetary Oil		●	
Check Exhaust System		●	
Check Hydraulic System Relief Pressures			●
Check Hydraulic Reservoir Oil & Strainer			●

MAINTENANCE LOG

Date	Hours	Service Procedure

Courtesy of Crane.Market

https://truckmanualshub.com/

MAINTENANCE LOG

Date	Hours	Service Procedure

Courtesy of Crane.Market

https://truckmanualshub.com/

Index

A

Access To Components Chart 43
Accessories 27
Adjustments
  Slide Pads Clearance 50
  Wheel Lug Nuts Torque 46
Air Filter
  Service Element 47
Alternator
  Belt Service 50
  Indicator Lamp 22
Anti-freeze - *See* Radiator
Attachment Tools
  Changing 30
  Operating Methods - *See* Chapter 6
Axles
  Description - *See* Chapter 2
  Greasing 40
  See Also Service
Axle Oil
  Change 52
  Check Levels 47
  Recommended Grades 39

B

Backup Alarm 4,27
Battery
  Charging Lamp 22
  Jump Starting 49
  Service 49
Boom Travel
  Function Controls 26
  Function Indicators 26
  Service 50

C

Capacities - *See* Chapter 2
Carriage Lifting Applications
  Load Capacity & Reach 33
  Load Carry, Elevation & Placement 34
Checklists, delivery & pre-delivery 7
Controls,
  Dash 21
  Right Side Panel 25
  Floor & Seat 25
  Other Miscellaneous 26
Cylinders
  Servicing 42

D

Dealer Services 42
Decal Locations 56
Decals, applying new 55
Dimensions - *See* Chapter 2
Dynattach® System
  Attach/Detach Mechanism 30

E

Electrical Components
  Characteristics - *See* Chapter 2
  Controls & Indicators - *See* Chapter 4
  Servicing 43
Engine
  Cold Weather Start Procedures 29
  Description - *See* Chapter 2
  Oil Pressure Lamp 22
  Starting 28
  Temperature Gauge 22
Engine Oil
  Changing 48
  Check Level 45
  Recommended Grades 39
Engine Oil Filter, replacing 48
Exhaust System, check 52

F

Fan Belt - *See* Alternator Belt
Frame Level Control & Indicator 25
Fuel - *See* Separate Engine Manual
Fuel Filter
  Check & Drain Water 44
  Replacing 48
Fuel Gauge 22

Courtesy of Crane.Market

https://truckmanualshub.com/

G

Grease Fittings
- Locations 40
- Types Of Grease 39

Guards 21
Grade & Slope Precautions 31
Grade Limits 31

H

Hand Signals 32
Hourmeter 22
Hydraulic Components, servicing 42
Hydraulic Oil
- Change 53
- Check level 45
- Recommended type 39

Hydraulic Maintenance
- Oil Filters, replacing 52
- Oil Sump Strainer, replacing 53
- Pressure Checks 53

Hydraulic Pump, servicing 42
Hydraulic Valves, servicing 42

I

Identification Reference 3
Indicators 21
Indicator Symbols . . . . . Inside Front Cover
Introduction 2

J

Joystick Relief Pressure Check 53

L

Light Switch 23
Lubrication,
- *See also Service*
- Locations 40
- Lubricants 39

M

Main Relief Pressure Check 53
Maintenance
- Recording 62
- Scheduled Intervals 61

Mandatory SAFETY Shutdown Procedure 10

O

Oils - *See* Lubrication
Operation
- Load Handling 33
- Starting 28
- Stopping 29
- Symbols . . . . . Inside Front Cover
- Travel 35

Operator Manual, storing 2
Operator Services 43
Operator's Station
- Environment Controls 23

P

Park Brake
- Lever 29
- Operation 45

Paint, refinish 55
Pump, Delivery Rates - *See* Chapter 2

R

Radiator
- Check coolant 45
- Cleaning 51
- Flushing & Refilling 51

Road Travel 35

S

SAFETY 10
Schematics
- Electrical 68
- Hydraulic 70

Seat, operator's 25
Service Intervals
- Daily 44
- Weekly 46
- 100 hours 47
- 250 hours 47
- 1000 hours 51
- 2000 hours 53

Shields 21
Side Mirror 27
Specifications 4
Steering - *See* Controls
Steering Relief Pressure Check 53
Storage 54
Suspended Loads 35

Courtesy of Crane.Market

https://truckmanualshub.com/

T

Tables
- Lubricants 39
- Paint Notice 55
- Replacement Filters 40

Theft Deterrents 36
Tire Pressures 45
Torque Specifications 72
Traffic Flow Patterns 32
Transmission
- Description - *See* Chapter 2
- Temperature Lamp 22

Transmission Oil
- Changing 51
- Check level 45
- Recommended Trades 39

Transporting
- Loading 36
- Unloading 36

Travel Speed - *See* Controls

W

Warranty . . . . . Inside Rear Cover
Water Trap - *See* Fuel Filter
Windshield Wiper/Washer Switch 23

Courtesy of Crane.Market

https://truckmanualshub.com/

Notes

Courtesy of Crane.Market

https://truckmanualshub.com/

552/553 Electrical Schematic

(J.D. Engine)

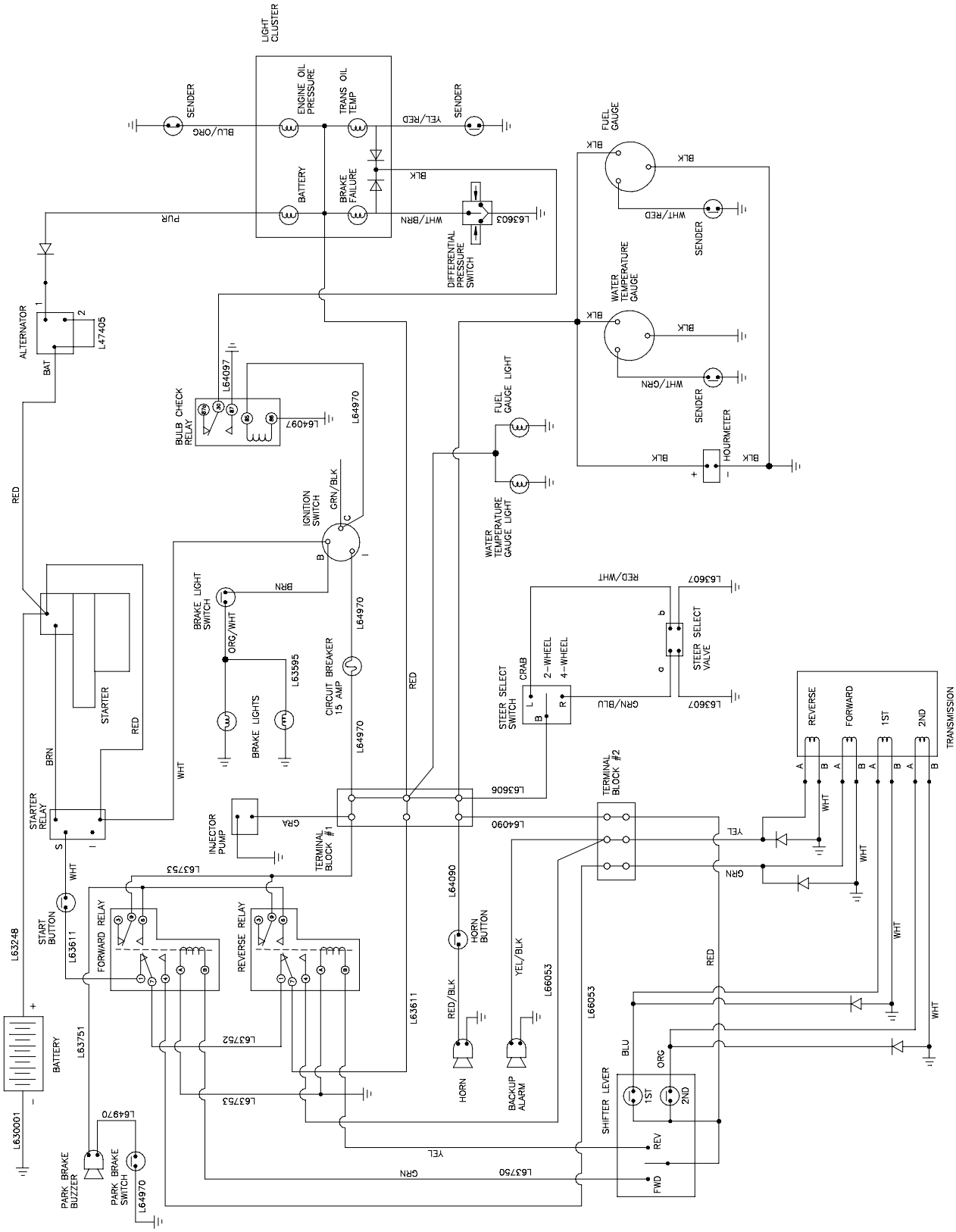

Courtesy of Crane.Market

https://truckmanualshub.com/

552/553 Electrical Schematic

(Perkins Engine)

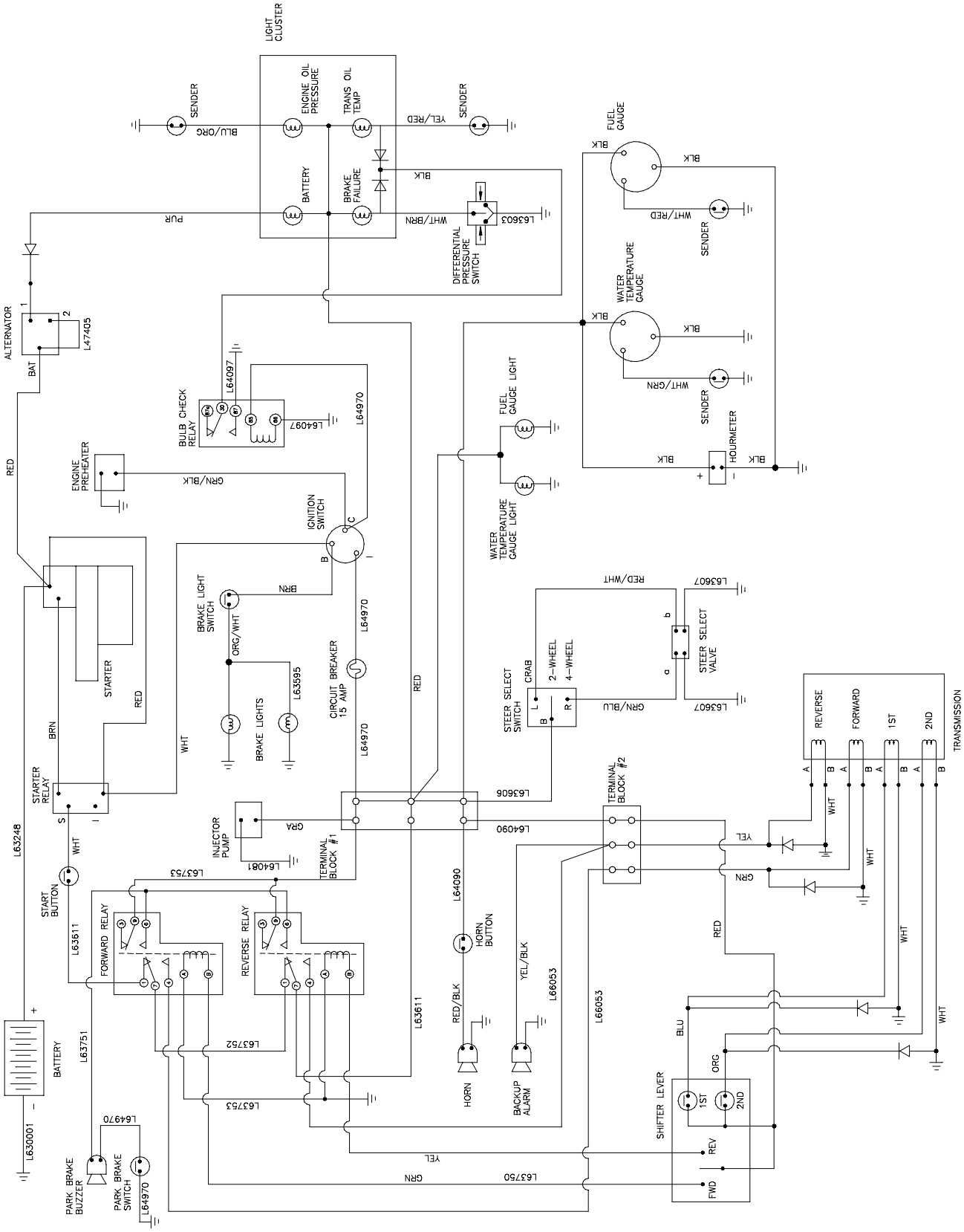

Courtesy of Crane.Market

https://truckmanualshub.com/

552/553 Hydraulic Schematic

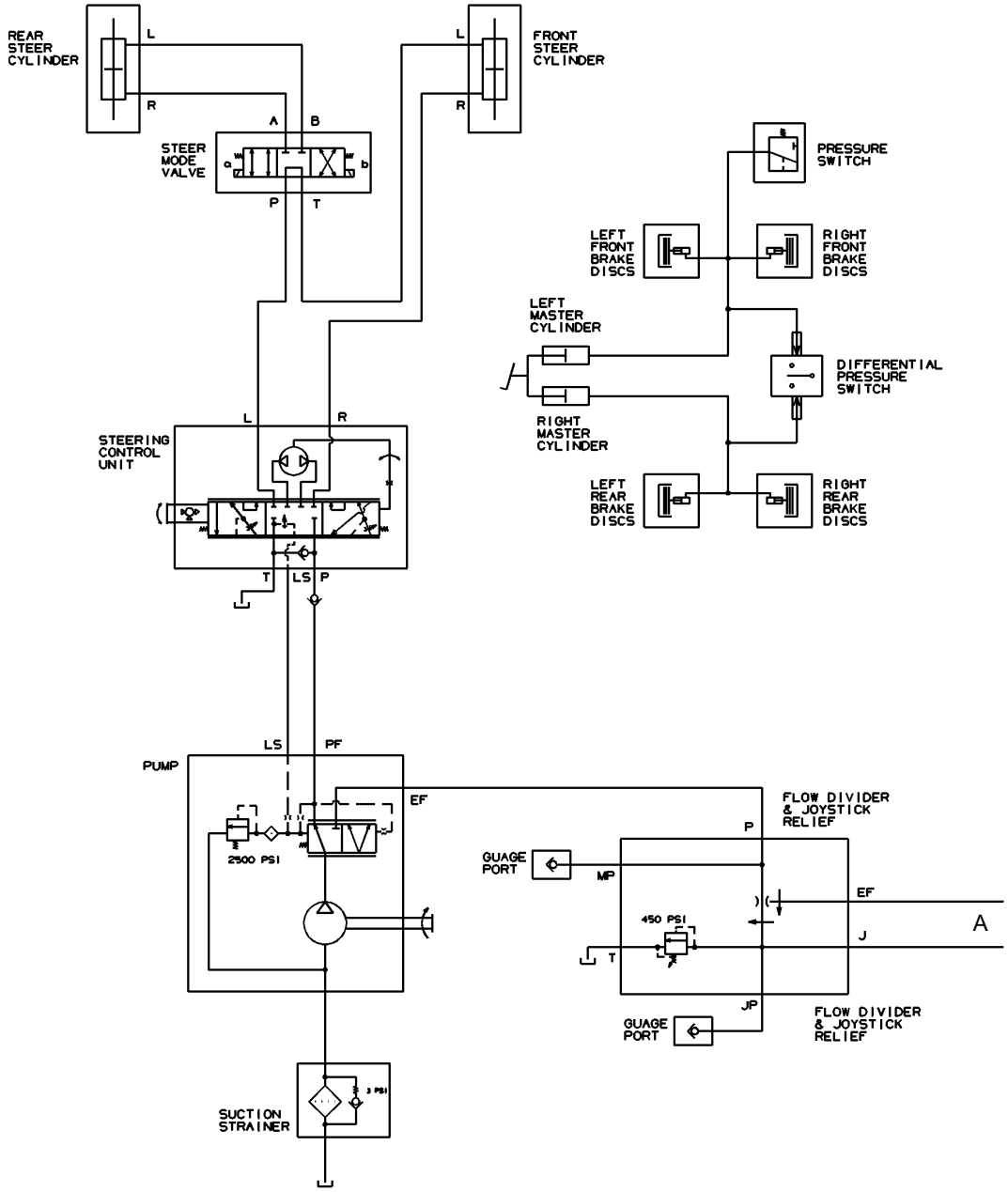

Courtesy of Crane.Market

https://truckmanualshub.com/

552/553 Hydraulic Schematic

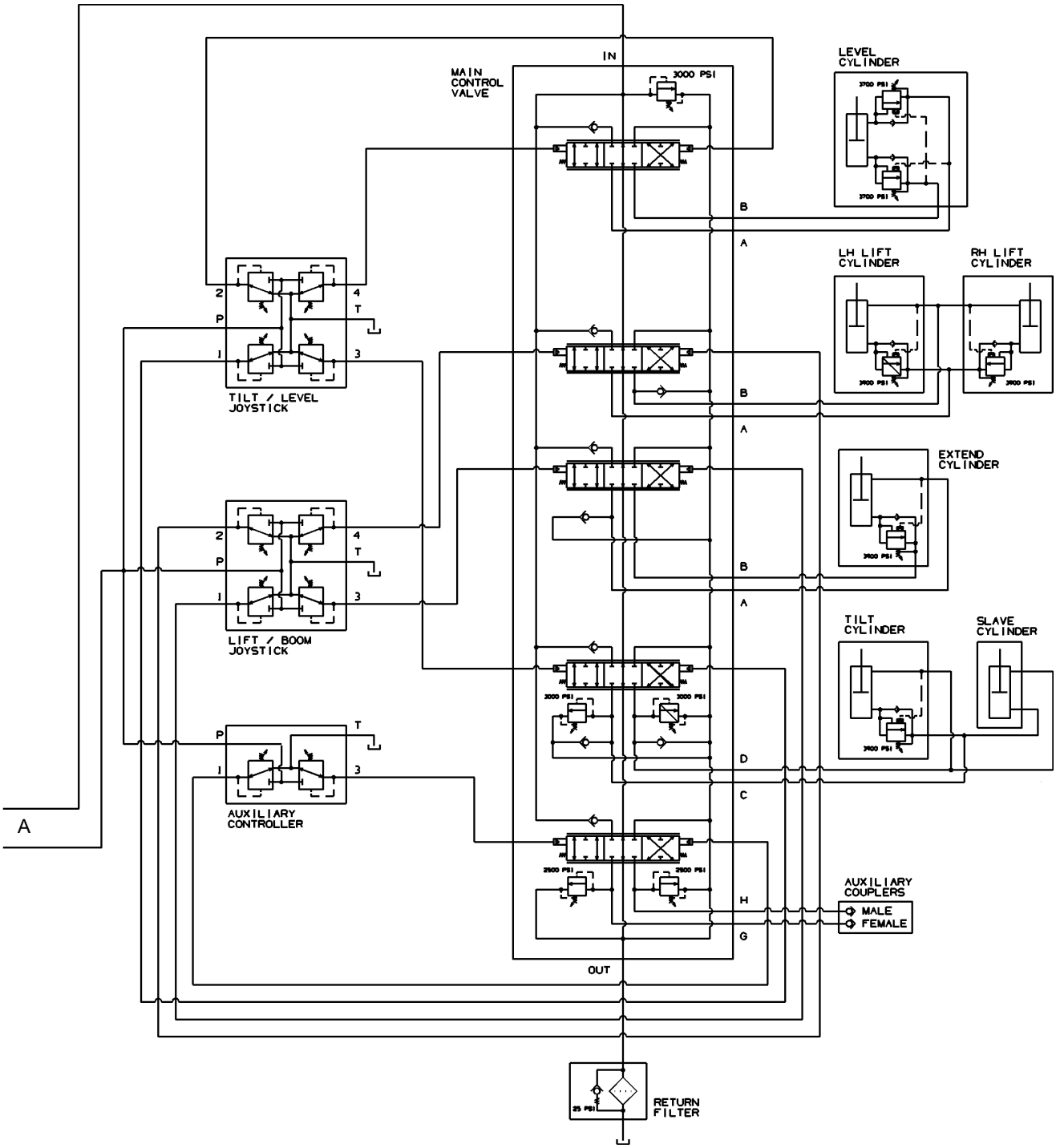

Courtesy of Crane.Market

https://truckmanualshub.com/

Torque Specifications

Use these torque values when tightening GEHL hardware (excluding: Locknuts and Self-tapping, Thread-forming and Metal Screws) unless otherwise specified.

Unified National Thread	Grade 2		Grade 5		Grade 8	
	Dry	Lubed	Dry	Lubed	Dry	Lubed
8-32	19*	14*	30*	22*	41*	31*
8-36	20*	15*	31*	23*	43*	32*
10-24	27*	21*	43*	32*	60*	45*
10-32	31*	23*	49*	36*	68*	51*
1/4-20	66*	50*	9	75*	12	9
1/4-28	76*	56*	10	86*	14	10
5/16-18	11	9	17	13	25	18
5/16-24	12	9	19	14	25	20
3/8-16	20	15	30	23	45	35
3/8-24	23	17	35	25	50	35
7/16-14	32	24	50	35	70	55
7/16-20	36	27	55	40	80	60
1/2-13	35	35	75	55	110	80
1/2-20	40	40	90	65	120	90
9/16-12	55	55	110	80	150	110
9/16-18	60	60	120	90	170	130
5/8-11	75	75	150	110	220	170
5/8-18	85	85	180	130	240	180
3/4-10	130	130	260	200	380	280
3/4-16	150	150	300	220	420	320
7/8-9	125	125	430	320	600	460
7/8-14	140	140	470	360	660	500
1-8	190	190	640	480	900	680
1-14	210	210	710	530	1000	740

Metric Course Thread	Grade 8.8		Grade 10.9		Grade 12.9	
	Dry	Lubed	Dry	Lubed	Dry	Lubed
M6-1	8	6	11	7	13.5	10*
24M8-1.25	19	14	27	20	32.5	24*
M10-1.5	37.5	28	53	39	64	47
M12-1.75	65	48	91.5	67.5	111.5	82
M14-2	103.5	76.5	145.5	108	176.5	131
M16-2	158.5	117.5	223.5	165.5	271	200

* *All torque values are in lb-ft except those marked with an * which are in lb-in.*
For metric torque value (Nm) muiltiply lb-ft x 1.355 or lb-in value x 0.113.

Courtesy of Crane.Market

https://truckmanualshub.com/

Load Zone Charts

552
L63661 - Standard Carriage

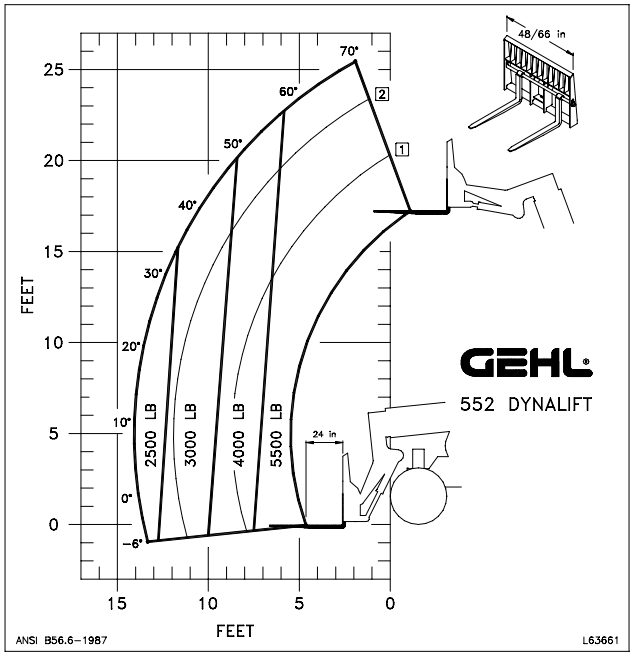

552
L63926 - 1 Cu. Yd. Bucket

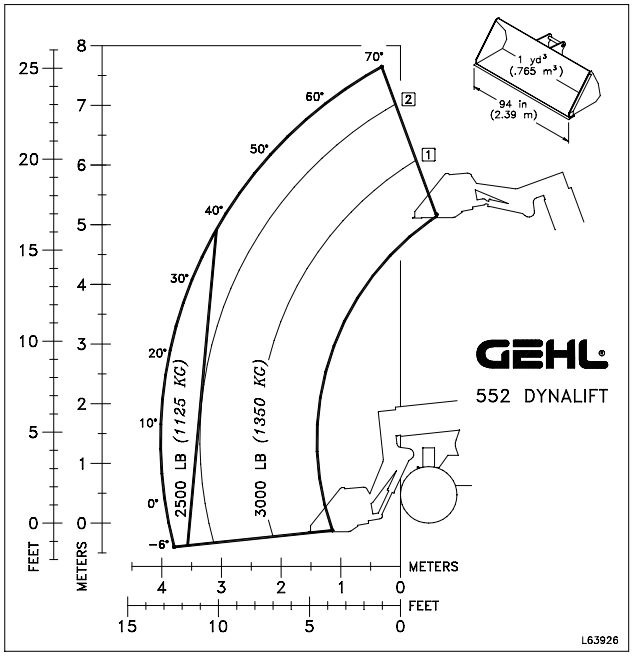

552
L63437 - Rotating Carriage

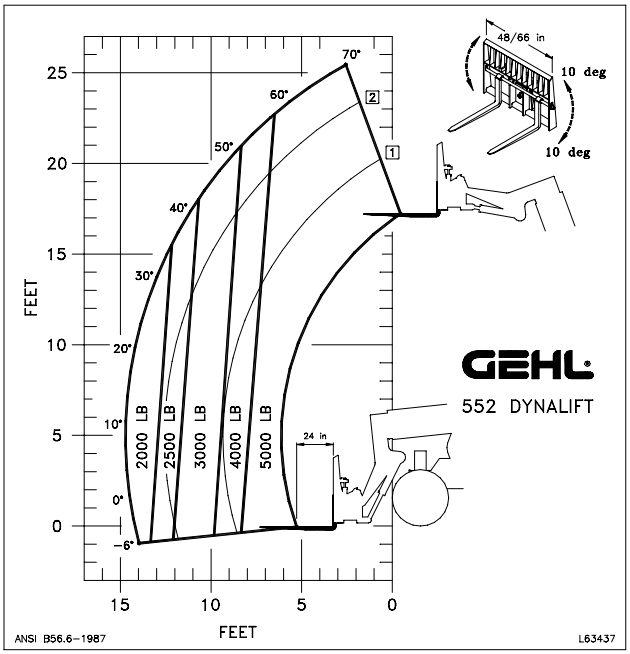

552
L63454 - 8 Ft. Truss Boom

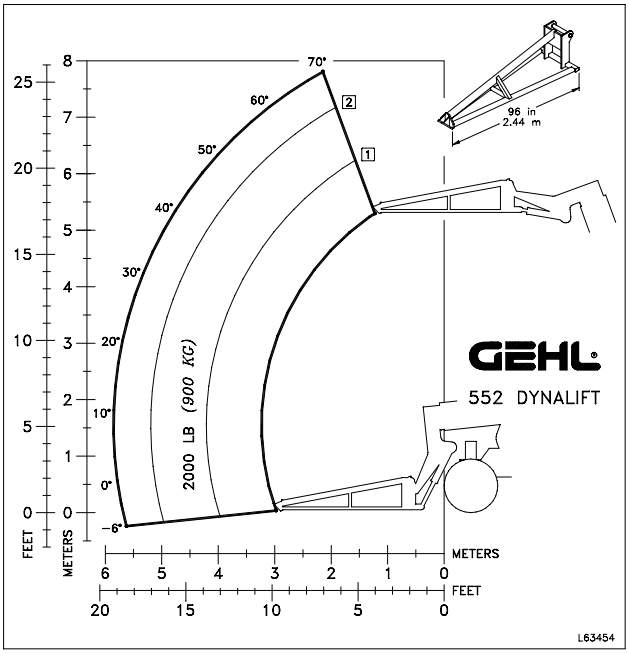

Courtesy of Crane.Market

https://truckmanualshub.com/

Load Zone Charts

553
L68671 - Standard Carriage

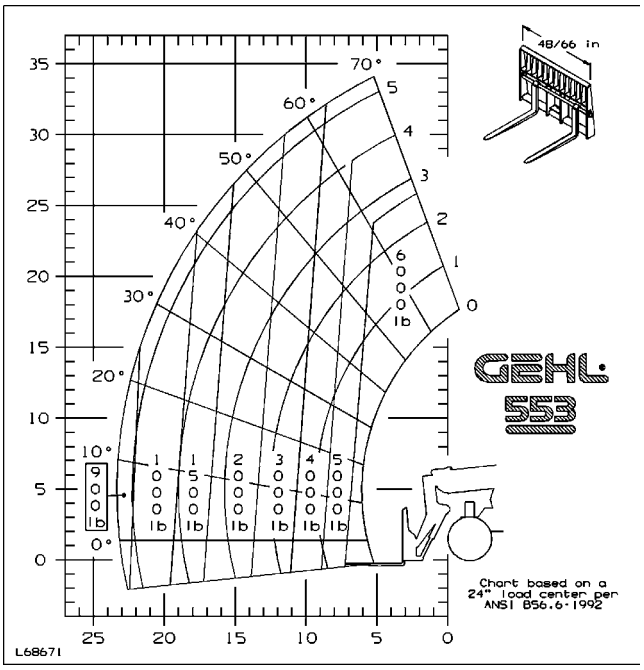

553
L68674 - Cu. Yd. Bucket

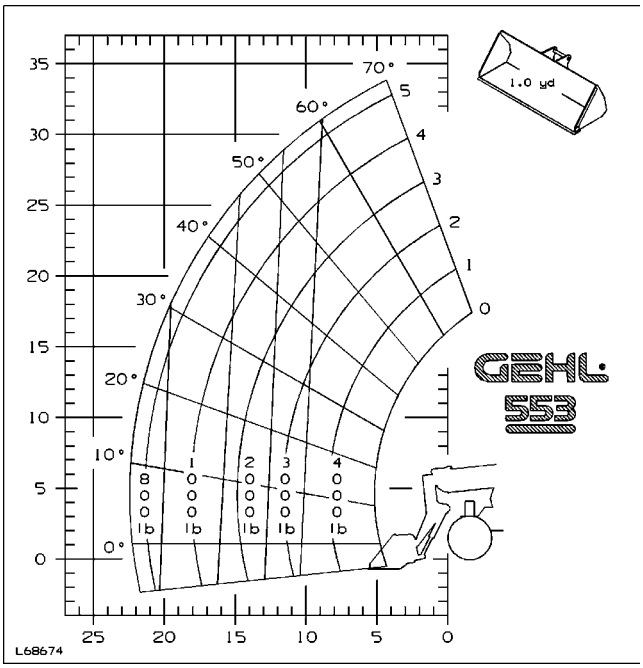

553
L68672 - Rotating Carriage

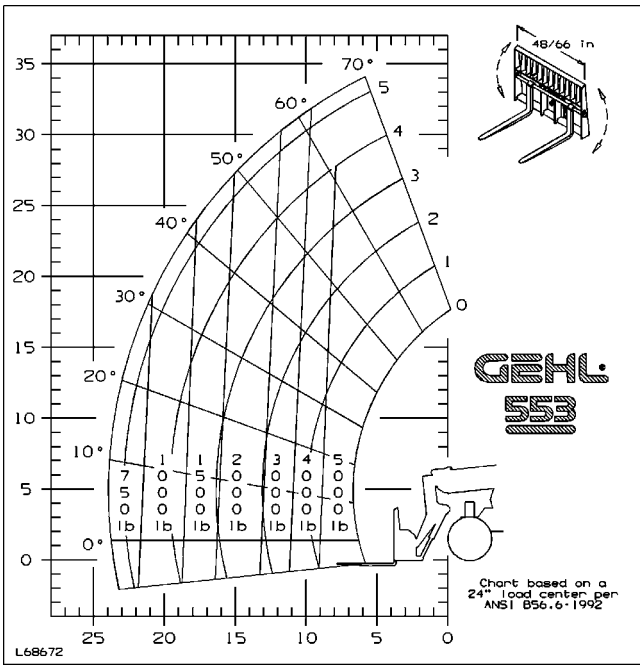

553
L68673 - 8 Ft. Truss Boom

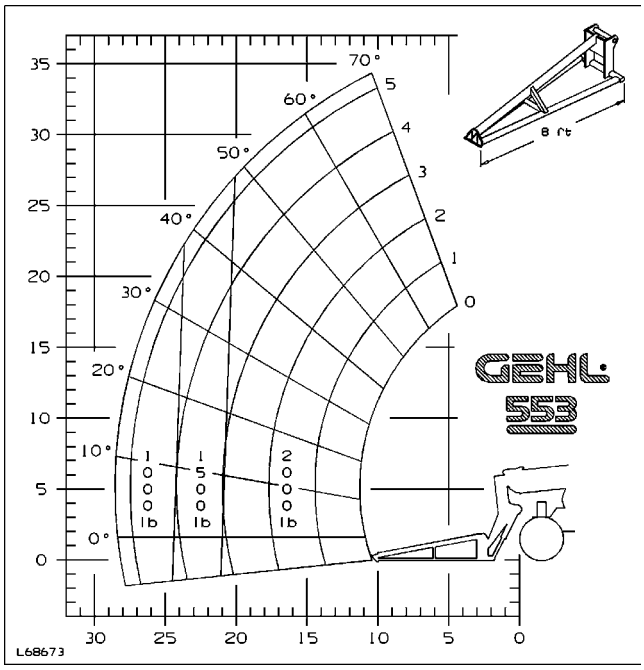

Courtesy of Crane.Market

https://truckmanualshub.com/

Load Zone Charts

553
L68675 - Winch Boom

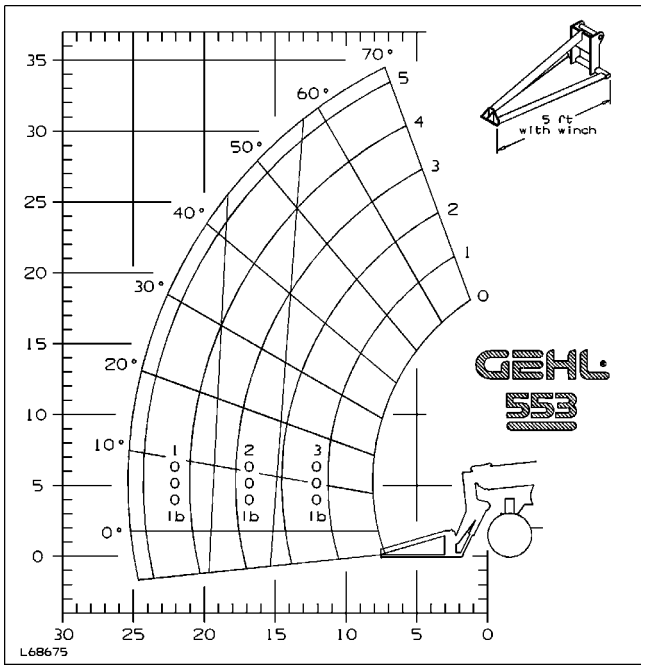

Courtesy of Crane.Market

https://truckmanualshub.com/

Intentionally Blank

Courtesy of Crane.Market

https://truckmanualshub.com/

GEHL®

NEW CONSTRUCTION EQUIPMENT

552/553 DYNALIFT®

WARRANTY

GEHL CONSTRUCTION DIVISION of the **GEHL COMPANY**, hereinafter referred to as GEHL, warrants new GEHL 552/553 Dynalift Telescopic Forklifts to the Original Retail Purchaser to be free from defects in material and workmanship for a period of twelve (12) months from the Warranty Start Date.

GEHL CONSTRUCTION WARRANTY SERVICE INCLUDES:

Genuine Gehl parts and labor costs required to repair or replace equipment at the selling dealer's business location.

GEHL MAKES NO REPRESENTATIONS OR WARRANTIES OF ANY KIND, EXPRESS OR IMPLIED (INCLUDING THE IMPLIED WARRANTIES OF MERCHANTABILITY AND FITNESS FOR PARTICULAR PURPOSE), EXCEPT AS EXPRESSLY STATED IN THIS WARRANTY STATEMENT.

GEHL WARRANTY DOES NOT INCLUDE:

1. Transportation to selling dealer's business location or, at the option of the Original Retail Purchaser, the cost of a service call.
2. Used equipment.
3. Components covered by their own non-Gehl warranties, such as tires, trade accessories and engines.
4. Normal maintenance service and expendable, high-wear items.
5. Repairs or adjustments caused by: improper use; failure to follow recommended maintenance procedures; use of unauthorized attachments; accident or other casualty.
6. Liability for incidental or consequential damages of any type, including, but not limited to lost profits and expenses of acquiring replacement equipment.

No agent, employee or representative of GEHL has any authority to bind GEHL to any warranty except as specifically set forth herein. Any of these limitations excluded by local law shall be deemed deleted from this warranty; all other terms will continue to apply.

Courtesy of Crane.Market

https://truckmanualshub.com/

⚠ WARNING ⚠

THIS OPERATOR'S MANUAL IS PROVIDED FOR OPERATOR USE

DO NOT REMOVE FROM THIS MACHINE

THANK YOU

DO NOT START, OPERATE OR WORK ON THIS MACHINE UNTIL YOU HAVE CAREFULLY READ AND THOROUGHLY UNDERSTAND THE CONTENTS OF THE OPERATOR'S MANUAL.

FAILURE TO FOLLOW SAFETY, OPERATING AND MAINTENANCE INSTRUCTIONS COULD RESULT IN SERIOUS INJURY TO THE OPERATOR OR BYSTANDERS, POOR OPERATION, AND COSTLY BREAKDOWN.

IF YOU HAVE ANY QUESTIONS ON PROPER OPERATION, ADJUSTMENT OR MAINTENANCE OF THIS MACHINE, CONTACT YOUR DEALER OR THE SERVICE DEPARTMENT OF GEHL COMPANY BEFORE STARTING OR CONTINUING OPERATION.

California Proposition 65 Warnings

Diesel engine exhaust and some of its constituents are known to the State of California to cause cancer and birth defects or other reproductive harm.

Battery posts, terminals and related accessories contain lead and lead compounds, chemicals known to the State of California to cause cancer and birth defects or other reproductive harm. **Wash hands after handling battery.**

GEHL®

GEHL Company 143 Water Street, P.O. Box 179, West Bend, WI 53095-0179 U.S.A.

908424/AP500

©Gehl Company 2000
All Rights Reserved

PRINTED IN U.S.A.

Courtesy of Crane.Market