https://truckmanualshub.com/

M SERIES 40-75HP TRACTOR

LOVOL

M Series multi-functional tractor will bring you new working experience that is comfortable, highly efficient, multi-functional and with multiple configuration options.

https://truckmanualshub.com/

Luxury and comfortable G3 model

G3 model of M Series 40-75hp tractor

G3 model of Lovol M Series 40-75hp tractor is a new product with the spare parts design of the complete tractor re-optimized by Lovol’ s European Technical Team .
With a brand new cab structure, air conditioner + sunroof window, first-class tightness + manipulation space, interior trim, luxury adjustable seat, adjustable steering wheel, brand new hood assembly, the whole cab looks more fashionable and energetic, with its safety improved.

You can choose the paddy field, radial tires dry field, grassland and engineering tires according to the working conditions.

https://truckmanualshub.com/

Handle is properly positioned and easily controlled, allowing safer and more comfortable operation

Optimized ergonomic design, reasonable control distribution and color division, as well as right-side manipulation; suspended accelerator and clutch pedal; manual accelerator and shuttle shift mechanism below the steering wheel; and steering gear can be adjusted back and forth.

The air inlet and outlet pipes are concealed behind the A-pillar of cab, providing you with better vision.

The larger oil tank will provide you with a longer operation time.

https://truckmanualshub.com/

Standard four-cylinder engine

Engine

The new 4-cylinder in-line diesel engine is used for M Series 40-75hp tractor, which has a power range of 35-70hp; the ultralow fuel consumption (less than 245g/kwh) and extra-large torque output (155-245n.m) will make your work more efficient and energy-saving. In addition, it has passed the EPA and Euro III Emission Standards certification.

High torque reserve

The torque reserve of engine is up to 25%, so it can provide you with enough torque in the traction operation; help you to overcome the resistance produced in the tillage so that you do not need to frequently shift gears; and make your work more efficient.

Enhanced cylinder

The cylinder is enhanced and connected with the gearbox, when they are to bear the weight of the complete tractor, the high-strength and high-rigidness cylinder will help you to calmly handle the heavy operations or bad ground working conditions.

High fuel efficiency

Direct injection technology is adopted in cylinder to realize full combustion. The engine does more work with unit fuel consumption.

Battery

Being maintenance-free, no electrolyte is required for the storage battery, which guarantees its high reliability and long service life, and saves the maintenance costs.

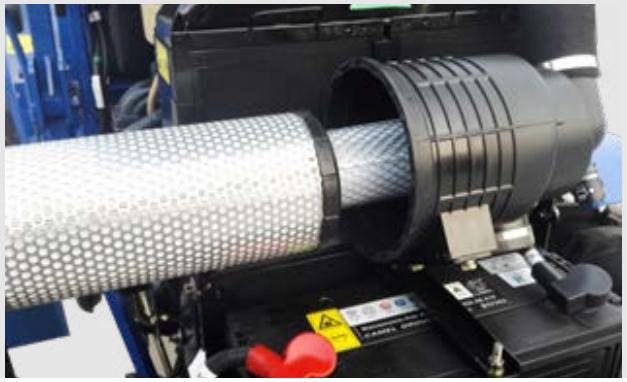

https://truckmanualshub.com/

Smooth and convenient gearbox

Shuttle shift gear lever C is located on the right side of floor. If you push the gear lever C forward from the neutral position, forward gear is reached; and if you push it backward, reverse gear is reached.

12+12 gearbox

12+12 gearbox consists of 3 gear levers. The main gear lever A can reach 4 gears (1, 2, 3 and 4), auxiliary gear lever B can reach 2 forward speed zones (1, 2 and 3), and shuttle shift gear lever C can reach the forward and reverse gears.

Proper speed distribution

Proper working speed selection can not only deliver maximum productivity and economic efficiency, but also extend the service life of tractors. Tractors shall not always be operated at overload, so that engine can have a certain power reserve. Field working speed of tractors shall ensure that engine works at around 80% of its rated load. To save fuel, you can throttle down at gear H1 in case of light load operation and low working speed.

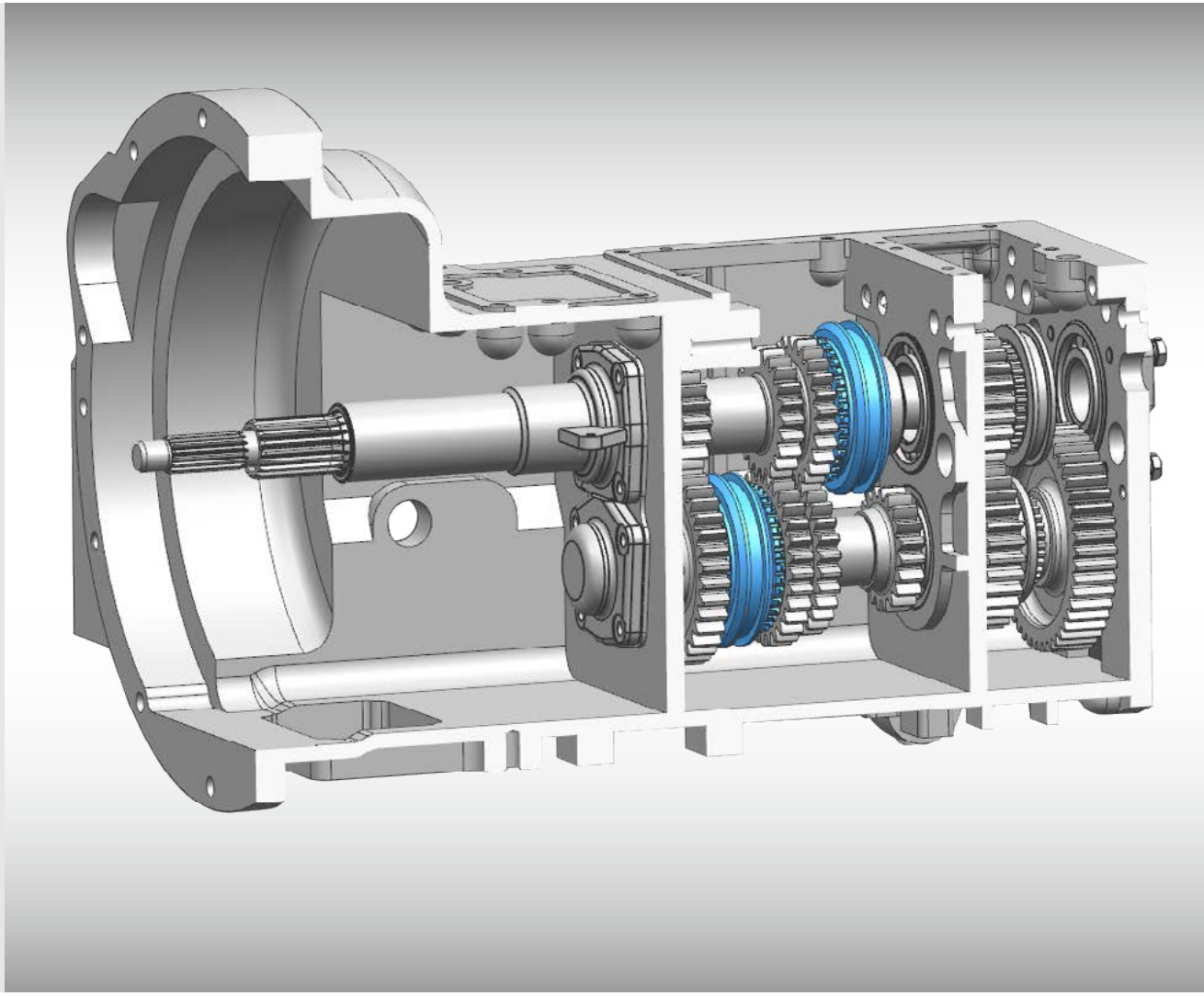

Digital Model for Synchronizer Gearbox of M Series 40-75hp Tractor

https://truckmanualshub.com/

Front axle with good manipulating performance and high reliability

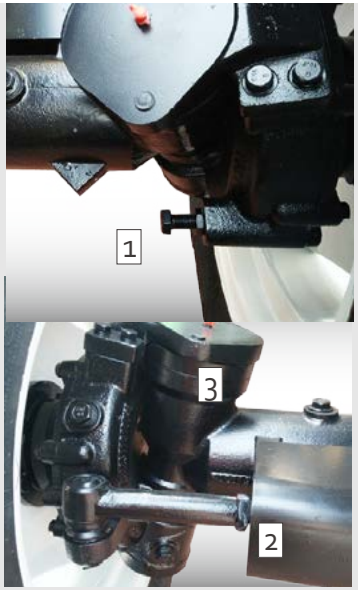

The middle double action oil cylinder is more flexible in manipulation, and the overall ground clearance is larger.

The middle double action oil cylinder is provided with the oil inlet and outlet functions, which shortens the lever between the cylinders, and makes the structure simpler. One cylinder controls the action of levers on both sides, and the hydraulic steering makes the manipulation more flexible. With larger ground clearance and better accessibility, the user can drive it without trouble in complex landforms.

1. Step-less adjustable limit bolt

The steering angle is limited, which not only ensures the steering safety, but also provides more adjustment options for users on the steering radius.

2. Regulating lever

The regulating lever can be shorter, which makes the manipulation more accurate and helps to obtain consistent, reliable and strong steering performance in case of uneven landform.

3. Excellent tightness

The tractor design is optimized, and high-quality seals are provided to achieve high waterproofness.

Rear axle with high reliability and large driving force

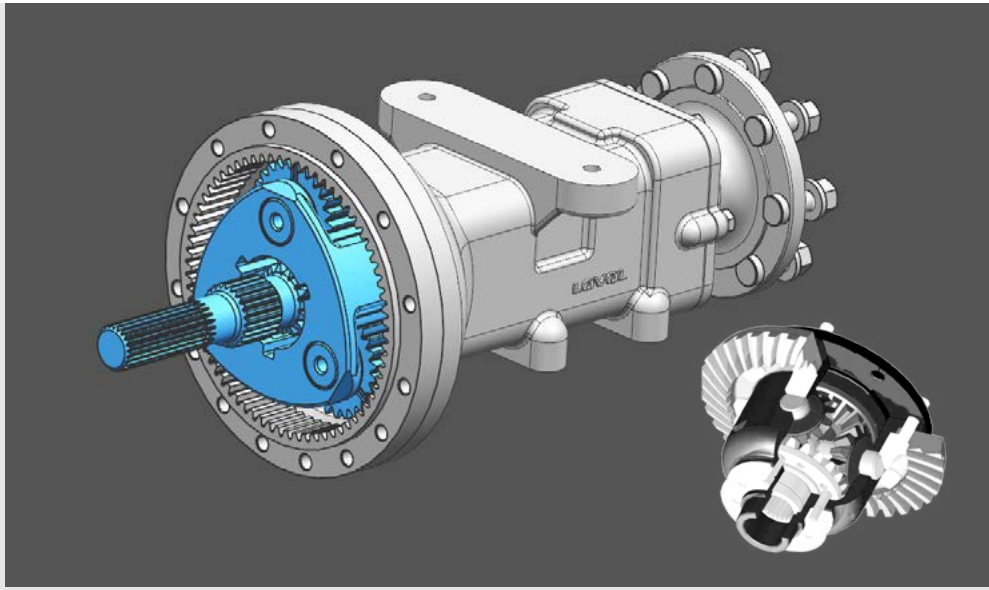

lanetary reduction mechanism with high reliability

This rear axle with planetary reduction mechanism, differential mechanism and wet brake is used on the rear drive axle of M Series 40-75hp products, which possesses high durability, stability and reliability and is almost free of maintenance under normal conditions. In addition, the operation is comfortable, safe and reliable.

Differential lock provides the driving force that is more stable.

The differential lock pedal is located on the floor at the right side of cab so that the driver can hitch the differential lock when releasing the clutch. If the driving forces on both sides of the rear axle are uniform, the differential lock will be automatically released.

https://truckmanualshub.com/

Multi-functional operation capacity

A Field operations

The driver can choose the optimum PTO speed according to the actual ground conditions, which not only improves the working efficiency, but also reduces the fuel consumption. Low speed is applicable to heavy PTO operations like rotary tillage, especially in the case that soil is compact. You can switch to the high PTO speed when the soil is soft in such light PTO operations as the secondary rotary tillage or mowing, to maximize the working efficiency and complete the operations faster.

B Construction operations

High-performance control valve

High-performance hydraulic control valve of European brand is applied, which is stable in performance, reliable in quality, and low in maintenance costs. You can choose the third loop to provide hydraulic control for the multi-functional equipment.

C Transportation operation

The standard M Series 40-75hp tractor is equipped with 25mm-thick draw bar (enhanced 36mm-thick draw bar optional) made of high-quality steel produced with heat treatment process, featuring high strength and toughness. When small-sized trailers or pesticide vehicles are dragged, enhanced draw bars are capable to bear stronger traction and torque force.

https://truckmanualshub.com/

Product parameter and configuration

		Unit	M404	M454	M504	M604	M754
Engine			C490	C495	A498	A4K41T	A4K43T
Rated Engine Power *ISO TR14396-ECE R120		hp/kW	40/29.4	45/35.3	50/36.8	60/44	75/55.5
Type			4 cylinders, diesel	4 cylinders, diesel	4 cylinders, diesel	4 cylinders, diesel	4 cylinders, diesel
Rated Engine Speed		rpm	2400	2400	2400	2400	2400
Max. Torque ISO TR14396		Nm	">150/1600~1800"	">170/1600~1800"	">180/1600~1800"	">235/1600~1800"	">260/1600~1800"
Raded PTO Power		kW	25	30	31.2	37.5	44
Displacement		ltr	2.672	3.168	3.168	4.087	4.32
Fuel Tank Capacity		ltr	60				
Transmission							
Dry Dual Clutch (Ceramic disk)		in.	10	10	10	10/11	11
12F+12R Collar Shift/ Shuttle Shift			○	○	○	○	○
12F+12R Synchro / Shuttle Shift			●	●	○	●	●
Speed Range		km/h	F:2.17-29.9 R:1.9-26.2				
Differential Lock			●	●	●	●	●
Power Take-Off 540/1000 rpm			●	●	●	●	●
Power Take-Off 540/760 rpm			○	○	○	○	○
Brake							
Type			Wet Disc, Mechanical				
Parking Brake			Mechanical, Hand lever operated				
Air Trailer Brake			○	○	○	○	○
Front Axle							
4WD Front Axle			●	●	●	●	●
2WD Front Axle			○	○	○	○	○
Steering Angle		°	>40	>40	>40	>40	>40
Turning Radius Without Brake		m	4.3±0.3				4.3±0.3
Turning Radius With One Side Brake		m	3.8±0.3				3.2±0.3
Hydraulic Power Lift							
Type			Force control, position control, separated force and position control				
Cat. I Three Point Hitch			●	●	●	●	●
Hydraulic Flow		l/min	38				
Lift Capacity at 610mm behind Hitch Point		kg	740	830	910	1150	1530
No. of Multi-way Valves			2	2	2	2	2
Cab							
ROPS			●	●	●	●	●
Full-View Cab			○	○	○	○	○
Air Conditioning			○	○	○	○	○
SKD CAB			○	○	○	○	*
Tires and Weights							
Front Tires	Standard		8.3-20	8.3-20	8.3-20	8.3-20	8.3-24
	Optional		260/70R20	260/70R20	260/70R20	9.5R20	9.5R20
Rear Tires	Standard		12.4-28	12.4-28	12.4-28	14.9-28	14.9-30
	Optional		14.9-24 / 380/85R24	14.9-24 / 380/85R24	14.9-24 / 380/85R24	380/85R28	380/85R28
Structure Weight（ROPS）*		kg	1965	1965	1965	2190	2500
Structure Weight（Cab）*		kg	2165	2165	2165	2370	2630
Appearance of the Machine							
Length			3980			4030	4100
Width			1650			1650	1795
Height			2520			2520	2675
Wheelbase			1990			2040	2072
Ground Clearance			310			360	410

Note: ● Standard ○ Optional* Tractor Dry Mass

LOVOL HEAVY INDUSTRY CO., LTD.

Add:No.192 S Beihai Road,Weifang,Shandong,China. PC:261206
Tel:+86-536-7527358 Fax:+86-536-2288909 Website:www.fotonlovol.com
E-mail:lovol_agriexport@lovol.com

Specifications and designs are subject to change without prior notice.
Machines shown may include optional parts.
The above parameters are subject to change without notice, the illustrations in text is not always the type of standard models.

LOVOL website

LOVOL Europe