https://truckmanualshub.com/

9790 Combine Parts Catalog

Eff. S/N HM36101

https://truckmanualshub.com/

https://truckmanualshub.com/

ALPHABETICAL INDEX

The complete alphabetical index appears at the beginning of this publication. It is used to locate major groups, assemblies and components.

NUMERICAL INDEX

The numerical index of this publication follows the Alphabetical Index at the beginning of the publication and indicates which page a part number appears.

ILLUSTRATIONS

All illustrations are located on the left hand page with the text on the right. Except for some common hardware, all parts are identified with an item number which corresponds to the “item” column on the text page. This is followed by the parts number, quantity and description.

HARDWARE

Common hardware not identified such as bolts, nuts, cotter pins and lube fittings, are listed indented in the text beneath the item to which they attach or fit. Common hardware listed indented beneath an item is NOT included unless specified. Example: (Incl. BOLT, LOCKWASHER AND NUT).

ORDERING PARTS

Be sure to refer to both the text and the illustration to assure ordering the correct part.

RECOMMENDED DEALER STOCK

A recommended dealer stock listing appears at the end of this publication.

AGCO

https://truckmanualshub.com/

CAB

AIR CONDITIONER COMPRESSOR (SANDEN) 209
AIR CONDITIONER LINES 207
BRAKE MASTER CYLINDER 173
CONSOLE - SEAT 167
CONTROL GEARSHIFT 177
CONTROL PARK BRAKE & HYDRO PROPEL CABLE 175
CONTROL SERVICE BRAKES 171
CONTROL STEERING COLUMN 179
DECK EXTENSION 145" TREAD AND DUALS 155
FRAME & MOUNTING 139
HEATER & LINES (PRIOR S/N HR36101) 211
HEATER LINES (EFF. S/N HR36101) 213
HVAC BLOWER ASY. EVANS TEMPCON (PRIOR S/N HS36---) 203
HVAC CONTROL PANEL (EFF. S/N HS36101) 197
HVAC CONTROL PANEL (PRIOR S/N HS36---) 195
HVAC PRESSURIZER UNIT & DUCTING 193
HVAC PRESSURIZER UNIT EVANS-TEMPCON (EFF. S/N HS36---) 205
HVAC PRESSURIZER UNIT EVANS-TEMPCON (PRIOR S/N HS36---) 199
INTERIOR COVERINGS & TRIM LOWER AND REAR 147
INTERIOR COVERINGS & TRIM UPPER AND FRONT 145
LH DOOR INTERIOR & EXTERIOR HANDLES 143
MIRRORS & EXTREMITY LIGHTS MANUAL & ELECTRIC ADJUST 161
PIVOTING LADDER LH 153
PLATFORM LEFT & RIGHT 151
ROOF & INTERIOR/EXTERIOR LIGHTS 165
SEAT BASE & SUSPENSION 185
SEAT CUSHION AND BACKREST 189
SEAT OPERATOR & INSTRUCTOR 183
STAIRCASE LADDER & PLATFORM 157
STEERING COLUMN 181
WINDOWS AND DOORS 141
WINDSHIELD WIPER 163

CHOPPER & SPREADER

CHAFF SPREADER FAN HOUSING, REKORD (EFF. S/N HS36101) 407
CHAFF SPREADER FAN HOUSING, REKORD (PRIOR S/N HS36101) 405
CHAFF SPREADER HYDRAULIC DRIVE (EFF. S/N HS36101) 403
CHAFF SPREADER HYDRAULIC DRIVE (PRIOR S/N HS36101) 401
CHAFF SPREADER HYDRAULICS, REKORD 409
JACKSHAFT DRIVE 371
STRAW CHOPPER DRIVE 375
STRAW CHOPPER DRIVE KIT HEAVY DUTY 379
STRAW CHOPPER HOOD & SUPPORTS 389
STRAW CHOPPER HOUSING REDEKOP 381
STRAW CHOPPER ROTOR 385
STRAW SPREADER COMPONENTS 395
STRAW SPREADER DRIVE 391

DECALS & LABELS

LEFT SIDE & FRONT LABELS (EFF. S/N HS36101) 43
LEFT SIDE & FRONT LABELS (PRIOR S/N HS36101) 39
RIGHT SIDE & REAR LABELS (EFF. S/N HS36101) 45
RIGHT SIDE & REAR LABELS (PRIOR S/N HS36101) 41

DRIVES

BELTS LEFT 709
BELTS RIGHT 711
CHAINS DRIVE 713

ELECTRICAL

ALTERNATOR - 150 AMP 229
ALTERNATOR DELCO #1117965 257
BEACON LIGHTS FIELD KIT 249
CAB COMPONENTS CONTROLS & SWITCHES 233

https://truckmanualshub.com/

ELECTRICAL (CONTINUED)

CAB COMPONENTS FUSE PANEL & HYDRO HANDLE 237
CAB COMPONENTS RADIO AND ANTENNA 241
CAB COMPONENTS UPPER CONSOLE 239
ELECTRICAL HARNESSES & SWITCHES FRONT 219
ELECTRICAL HARNESSES REAR 247
ENGINE & BATTERY WIRING (EFF. S/N HR36101) 225
ENGINE & BATTERY WIRING (PRIOR S/N HR36101) 221
FEEDER ELECTRICAL (EFF. S/N HS36101) 217
FEEDER ELECTRICAL (PRIOR S/N HS36101) 215
GRID HEATER (PRIOR S/N HR36101) 231
HARNESSES & LIGHTING GRAIN BIN 245
HIGH INTENSITY LIGHTING FIELD KIT 251
MONITORING SYSTEMS DIGITAL TACHOMETER 243
SERVICE CONNECTORS HARNESS REPAIR 259
STARTER MOTOR 253

ENGINE

AIR CLEANER CUMMINS QSL9 ENGINE 101
AIR INTAKE & EXHAUST CUMMINS QSL9 ENGINE (S/N HP36101 - HP36999) 103
AIR INTAKE AND EXHAUST CUMMINS QSL9 ENGINE (PRIOR S/N HP36101) 97
AIR INTAKE AND EXHAUST SISU ENGINE (EFF. S/N HR36101) 107
ALTERNATOR & MOUNTING SISU 87
CAMSHAFT AND VALVE TRAIN SISU 65
CENTRIFUGAL OIL CLEANER SISU 75
COOLING FAN DRIVE KIT, CUMMINS (PRIOR S/N HR36101) 95
COOLING SYSTEM 117
CRANKSHAFT SISU 63
CYLINDER BLOCK SISU 57
CYLINDER HEAD SISU 67
DRIVE BELT SYSTEM SISU 91
ENGINE & MOUNTS CUMMINS (PRIOR S/N HR36101) 47
ENGINE & MOUNTS SISU (EFF. S/N HR36101) 53
ENGINE ELECTRICAL SISU 85
ENGINE OVERHAUL KITS SISU 93
FLYWHEEL AND HOUSING SISU 61
FRONT GEAR HOUSING SISU 59
FUEL FILTER & LINES KIT (EAST EUROPE)(PRIOR MID-PRODN S/N HR36-) 137
FUEL FILTER OPTION (EFF. S/N HR36- STRAINER MOUNT ON ELEV.) 135
FUEL FILTERS SISU 83
FUEL LINES (EFF. S/N HR36- STRAINER MOUNT ON ELEV.) 133
FUEL LINES (STRAINER MOUNT AT FUEL TANK) 129
INJECTOR PUMP SYSTEM SISU 81
INTAKE & EXHAUST MANIFOLD SISU 69
MAIN ENGINE DRIVES 111
OIL COOLER & FILTER SISU 77
OIL SUMP & PUMP SISU 73
RADIATOR SLINGER 123
ROTARY SCREEN DOOR & SCREEN 125
ROTARY SCREEN MOTOR & DRIVE 127
STARTER MOTOR SISU 89
TURBOCHARGER SISU 71
WATER PUMP SYSTEM SISU 79

FEEDER

CONVEYOR (EFF. S/N HP36101) 303
CONVEYOR (PRIOR S/N HP36101) 301
COUNTERSHAFT HEADER DRIVE (PRIOR S/N HP36101) 295
COUNTERSHAFT VARIABLE & FIXED SPEED HEADER DRIVE (EFF. S/N HP36101) 297
FEED FLOOR (PRIOR S/N HS36101) 275
FEEDER REVERSER DRIVE & HYDRAULICS (EFF. S/N HP36101) 307
FEEDER REVERSER LINES & FITTINGS (PRIOR S/N HP36101) 305
FLOOR, MIDDLE (EFF. S/N HS36101) 277
HOUSING & SHIELDS (EFF. S/N HP36101) 267
HOUSING & SHIELDS (PRIOR S/N HP36101) 263

https://truckmanualshub.com/

FEEDER (CONTINUED)

HYDRAULIC LINES V.S. HEADER DRIVE (EFF. S/N HP36101) 291
JACK 273
JACKSHAFT & C'SHAFT DRIVE IDLER FIXED SPEED HEADER DRIVE (EFF. S/N HP36101) 293
JACKSHAFT & V.S. IDLER V.S. HEADER DRIVE (EFF. S/N HP36101) 289
JACKSHAFT DRIVE R.H. FEEDERHOUSE (EFF. S/N HP36101) 287
LATCH HEADER 299
LH PIVOT DRIVE (EFF. S/N HP36101) 283
PIVOT SHAFT (EFF. S/N HP36101) 281
PIVOT SHAFT (PRIOR S/N HP36101) 279
REVERSER MOTOR & CLUTCH COMPONENTS (PRIOR S/N HP36101) 309
REVERSER MOTOR CLUTCH HOUSING & SHAFT ASSEMBLY (EFF. S/N HP36101) 311
REVERSER MOTOR TORQUE MOTOR ASY. (EFF. S/N HP36101) 313
RH DRIVE (PRIOR S/N HP36101) 285

FIELDSTAR II SYSTEM

SOFTWARE/DATA CARD 719
YIELD MONITOR SYSTEM W/ 1 HZ WAAS DGPS 715

GRAIN BIN & ELEVATOR

BIN EXTENSIONS 511
FUEL TANKS 513
GRAIN BIN LOWER STRUCTURE 497
GRAIN BIN UPPER STRUCTURE & MOUNTS 503
GRAIN ELEVATOR BIN FILL AUGER 457
GRAIN ELEVATOR HEAD ASSEMBLY 455
GRAIN ELEVATOR LOWER 451
RETURN ELEVATOR DRIVE 475
RETURN ELEVATOR LOWER (EFF. S/N HP36101) 465
RETURN ELEVATOR LOWER (PRIOR S/N HP36101) 461
RETURN ELEVATOR UPPER 469
STAINLESS STEEL ELEVATOR PACKAGE RICE 473
UNLOADER DRIVE 493
UNLOADING AUGER LOWER 477
UNLOADING AUGER UPPER 489
UNLOADING AUGER VERTICAL EFFECTIVE S/N HN36101 485
UNLOADING AUGER VERTICAL PRIOR S/N HN36101 481

HYDRAULICS

ACCUMULATOR PARKER 595
CONTROL VALVE & LINES (EFF. S/N HS36101) 579
CONTROL VALVE & LINES SISU ENGINE (EFF. S/N HR36101-HR36999) 565
CONTROL VALVE STACK (PRIOR S/N HS36101) 603
FEEDER REVERSER VALVE 609
GREASE LINES 633
HEADER LIFT CYLINDERS 597
HEADER LIFT VALVE 605
HEADER SUPPLY PLUMBING (EFF. S/N HS36101) 585
HYDRAULIC PUMP 559
HYDRAULIC PUMP & LINES (PRIOR S/N HR36101) 553
HYDRAULIC PUMP & LINES SISU ENGINE (EFF. S/N HR36101) 561
HYDRAULIC VALVE ASSEMBLY (EFF. S/N HS36101) 569
MAIN CONTROL VALVE (EFF. S/N HS36101) 571
PRIORITY VALVE 601
PROPEL PUMP AND MOTOR LINES 631
REEL DRIVE VALVE (PRIOR S/N HS36101) 613
REEL LIFT VALVE 607
RESERVOIR & FILTER 625
ROTARY SCREEN MOTOR LINES (PRIOR S/N HS36101) 617
ROTARY SCREEN VALVE & MOTOR 615
ROTOR PUMP AND MOTOR LINES 629
STEERING & HEADER FUNCTIONS (EFF. S/N HS36101) 583
STEERING & HEADER FUNCTIONS (PRIOR S/N HS36101) 573
STEERING CYLINDER RWA AXLE 593

https://truckmanualshub.com/

HYDRAULICS (CONTINUED)

STEERING CYLINDER STD. ADJUSTABLE AXLE (EFF. S/N HP36101) 591
STEERING CYLINDER STD. ADJUSTABLE AXLE (PRIOR S/N HP36101) 589
STEERING UNIT PLUMBING (EFF. S/N HS36101) 587
SYSTEM PUMP (EFF. S/N HR36101) 563
UNLOADER ENGAGE LINES (EFF. S/N HP36101) 621
UNLOADER ENGAGE LINES (PRIOR S/N HP36101) 619
UNLOADER ENGAGE VALVE 623
UNLOADER SWING CYLINDER 599
UNLOADER SWING VALVE 611

LATERAL TILT

ANCHORS & SENSOR 319
HOUSING 315
HYDRAULIC CYLINDER (EFF. S/N HN36101) 323
HYDRAULIC CYLINDER (PRIOR S/N HN36101) 321
HYDRAULICS 325
VALVE & CONTROL 327

PROCESSOR

CONCAVE & CONTROLS 341
FRONT BEATER 329
FRONT BEATER DRIVE BELT & IDLER 335
INLET HOUSING AND STONE TRAP 337
MAIN COUNTERSHAFT 331
MAIN COUNTERSHAFT DRIVE AND IDLER 333
MOTOR, HYDROSTATIC ROTOR 369
POWER CONCAVE CONTROL 347
REAR ROTOR HOUSING 349
ROTOR 359
ROTOR DRIVE 2-SPEED GEARBOX 367
ROTOR DRIVE GEARBOX SHIFT LINKAGE 363
SEPARATOR GRATE SUPPORTS RICE 357
SEPARATOR GRATES 353

RECOMMENDED DEALER LIST

RECOMMENDED DEALER LIST 721

SEPARATOR

CLEANING SHOE LOWER PAN (EFF. S/N HS36101) 441
CLEANING SHOE UPPER FRAME & SIEVES 439
GRAIN ELEVATOR DRIVE (EFF. S/N HP36101) 449
GRAIN ELEVATOR DRIVE (PRIOR S/N HP36101) 447
LOWER AUGER HOUSING AND FANNING MILL 411
PITMAN DRIVE (EFF. S/N HS36101) 445
PITMAN DRIVE (PRIOR S/N HS36101) 443
PITMAN SHAFT (EFF. S/N HS36101) 425
SEPARATOR PAN (EFF. S/N HS36101) 423
SEPARATOR PAN (PRIOR S/N HS36101) 419
SHAKER SHOE AND SIEVES (PRIOR S/N HS36101) 427
SHOE SHAKER (EFF. S/N HS36101) 435
VARIABLE SPEED FAN DRIVE 417

SHIELDS

ENGINE COVERS 515
MUD SHIELDS LEFT SIDE (EFF. S/N HP36101) 549
MUD SHIELDS LEFT SIDE (PRIOR S/N HP36101) 543
MUD SHIELDS RIGHT SIDE (EFF. S/N HS36101) 541
MUD SHIELDS RIGHT SIDE (PRIOR S/N HS36101) 537
REAR DECK AND LADDER 521
SIDE SHIELDS LEFT SIDE 525
SIDE SHIELDS RIGHT SIDE 531

TRANSMISSION & AXLES

4" AXLE RISERS FINAL DRIVE, S39 (PRIOR S/N HS36101) 671

https://truckmanualshub.com/

TRANSMISSION & AXLES (CONTINUED)

4" AXLE RISERS FINAL DRIVE, S40 (EFF. S/N HS36101) 673
DRUM BRAKES LINES & FITTINGS 685
DRUM BRAKES SERVICE & PARKING 683
FINAL DRIVE, S39 (PRIOR S/N HS36101) 663
FINAL DRIVE, S40 (EFF. S/N HS36101) 669
FRONT AXLE AND FINAL DRIVES (EFF. S/N HS36101) 667
MAIN FRAME AND AXLE SUPPORTS 687
MOTOR, HYDRO PROPEL COMPONENTS 643
PROPEL PUMP COMPONENTS, 1 OF 4 635
PROPEL PUMP COMPONENTS, 2 OF 4 637
PROPEL PUMP COMPONENTS, 3 OF 4 639
PROPEL PUMP COMPONENTS, 4 OF 4 641
REAR AXLE & WHEELS ADJUSTABLE TREAD (EFF. S/N HP36101) 693
REAR AXLE & WHEELS ADJUSTABLE TREAD (PRIOR S/N HP36101) 689
REAR AXLE & WHEELS REAR WHEEL ASSIST 697
REAR WHEEL ASSIST SELECTOR VALVE & FLOW DIVIDER 705
REAR WHEEL ASSIST WHEEL MOTOR UNIT 703
ROTOR PUMP FRONT, 1 OF 4 647
ROTOR PUMP FRONT, 2 OF 4 649
ROTOR PUMP FRONT, 3 OF 4 651
ROTOR PUMP FRONT, 4 OF 4 653
ROTOR PUMP REAR, 1 OF 4 655
ROTOR PUMP REAR, 2 OF 4 657
ROTOR PUMP REAR, 3 OF 4 659
ROTOR PUMP REAR, 4 OF 4 661
ROTOR PUMPS TANDEM PUMP 645
TRANSMISSION, GEAR DIFFERENTIAL 681
TRANSMISSION, GEAR INPUT SHAFT & GEARS 677
TRANSMISSION, GEAR INTERMEDIATE & MAIN SHAFT 679
TRANSMISSION, GEAR PRESSURE LUBE & HYDRO MOTOR 675
WHEELS DRIVE 707

https://truckmanualshub.com/

Part No.	Page
10033	469
10033	721
100801	697
101065M1	377
101065M1	393
101066M1	377
101066M1	393
101069M1	377
101069M1	391
101074M2	373
101075M1	373
101078M1	329
101098M91	371
101100M91	371
101102M1	493
101102M1	709
101102M1	721
101126M1	429
101158M1	471
101218M91	543
101218M91	551
101221M92	547
101221M92	551
101231M1	547
101231M1	551
101232M1	547
101232M1	551
101276M2	371
101276M2	375
101276M2	493
101411M91	375
101411M91	391
1014575M1	255
101575M1	493
101588M1	553
101588M1	561
101589M91	573
101589M91	583
101590M1	401
101590M1	557
101590M1	565
101590M1	567
101590M1	583
101596M92	573
101596M92	583
101598M1	557
101598M1	567
101598M1	583
101618M1	557
101618M1	567
101618M1	583
101618M1	629
10163	393
101643M91	557
101643M91	565
101646M1	133
101646M1	137
101646M1	207
101646M1	223
101646M1	225
101650M1	553
101650M1	561
101650M1	565
101698M1	573
101698M1	579
101705M1	573
101705M1	579
10171	589
101751M1	557
101751M1	567
101751M1	579
101752M1	557
101752M1	565
101783M1	279
101785M1	279
101832M1	575
101832M1	583
101832M1	619
101832M1	621
101841M1	119
101841M1	629
101841M1	631
101841M1	701
101842M1	121
101842M1	629
101842M1	631
101842M1	701
101843M1	631
101843M1	699
101844M1	631
1018729M1	247
1018729M1	723
101930M1	359
102028M1	699
102038M1	687
102158M1	545
102237M1	547
1022645M1	253
102302M1	47
102302M1	53
102367M1	701
1026105M1	675
102764M91	341
102835M91	359
102903M91	507
102934M1	373
102981M91	359
103001M91	345
103004M91	345
103284M1R	111
103316M1	375
103338W1	389
103338W1	399
103339W1	389
103339W1	399
103342W91	383
103600W1	573
1036543M1	253
103657W91	417
103668W1	151
103668W1	157
103714W1	559
103732W1	309
103736W1	309
103737W1	309
103738W1	309
103745W1	605
103746W1	605
103747W1	605
103753W1	605
103754W1	605
103759W91	603
103764W1	603
103766W92	603
103766W92	607
103778W91	603
103789W1	605
103789W1	613
103796W1	605
103797W1	605
103830W91	103
103830W91	107
103830W91	97
103834W1	279
103834W1	281
104021W1	481
104035W1	389
104128W1	605
104128W1	613
104130W91	605
104135W91	555
104135W91	565
104135W91	613
104139W91	605
104139W91	609
104145W91	603
104145W91	605
104156W91	625
104201W1	339
104207W1	443
1042752M1	309
1042836M1	255
104307W91	305
104307W91	309
104308W1	625
104309W91	625
104309W91	723
104456W1	559
104458W91	559
104468W1	309
104468W1	311
104473W91	309
104475W1	309
104476W1	309
104476W1	313
104477W1	309
104478W91	309
104479W1	309
104479W1	313
104480W91	309
104482W1	309
104483W1	309
104484W1	309
104485W1	309
104486W1	309
104500W1	329
104500W1	547
104502W1	613
104503W1	613
104505W1	613
104508W1	613
104509W1	613
104510W1	613
104512W1	613
104715W1	331
104740W1	483
104740W1	487
104741W1	483
104741W1	487
104742W1	483
104742W1	487
104751W1	329
104751W1	331
104751W1	373
104904W91	343
104916W91	545
104916W91	549
104928W1	349
105068W1	611
105076W1	611
105077W1	611
105078W1	611
105084W1	611
105085W1	611
105086W91	335
105091W1	101
105092W1	101
105177W1	383
1052337M1	605
1052341M1	605
1052349M1	605
1052351M1	605
1052358M1	611
1052359M91	607
1052370M91	603
1052370M91	605
1052370M91	607
1052370M91	611
1052384M1	607
1052393M1	611
1052394M1	605
1052408M1	611
1053766M1	255
105493W1	343
105495W1	343
1055753M1	253
1055944M1	611
105733W1	309
1064659M1	323
1064661M1	323
1068614M91	417
1068617M1	417
1068620M91	417
1070229M1	101
1070229M1	723
1070230M1	101
1070230M1	723
1070231M91	101
107041	233
1070554M1	253
1070564M1	253
1070578M1	253
1070580M1	253
1073032M1	605
1073032M1	607
107320M1	235
107499M1	239
107500M1	239
1077183M91	699
1077238M91	705
1077239M91	705
1077240M91	705
1077602M1	651
1077602M1	659
1077604M1	647
1077604M1	649
1077604M1	655
1077604M1	657
1077605M1	635
1077605M1	641
1077605M1	643
1077605M1	647
1077605M1	653
1077605M1	655
1077605M1	661
1077611M1	639
1077611M1	643
1077611M1	651
1077627M1	641
1077627M1	653
1077627M1	661
1077628M1	641
1077628M1	653
1077631M91	635
1077631M91	647
1077631M91	655
1077635M2	639
1077635M2	651
1077637M1	641
1077637M1	653
1077638M1	641
1077638M1	653
1077638M1	661
1077639M92	649
1077651M1	635
1077651M1	647
1077651M1	655
1077654M1	637
1077654M1	649
1077656M1	637

https://truckmanualshub.com/

INDEX

Part No.	Page
1077656M1	649
1077658M1	637
1077658M1	649
1077658M1	657
1077661M1	637
1077661M1	657
1077664M1	641
1077664M1	643
1077664M1	653
1077666M1	369
1077666M1	635
1077666M1	643
1077666M1	647
1077673M1	641
1077673M1	653
1077673M1	661
1077675M1	653
1077678M1	653
1077684M1	637
1077684M1	649
1077684M1	657
1077695M1	643
1077696M1	643
1077960M1	643
108047W1	221
108047W1	225
108048W1	221
108048W1	225
108076W1	221
108076W1	225
1081151M1	703
1081158M91	703
1081670M1	659
1081671M1	659
1081673M1	659
1081684M1	659
1081699M1	641
1081699M1	653
1081706M1	637
1081706M1	649
1081706M1	657
1081707M91	647
1081707M91	655
1081711M1	661
1081720M91	649
1081721M1	649
1081723M1	649
1081724M1	649
1081725M1	649
1081726	649
1081727M1	645
1081727M1	649
1081728M1	649
1081729M1	649
1081731M1	641
1081731M1	653
1081733M1	635
1081733M1	647
1081734M91	653
108202W1	415
108202W1	477
108275W91	493
108531W91	619
108531W91	621
108531W91	623
108541W1	625
108575W1	481
108575W1	485
108575W1	493
108586W91	493
108592W1	493
108593W91	493
108597W91	493
108599W1	493
108600W1	493
108601W1	493
108602W1	493
108610W1	505
108664W1	233
108664W1	327
108843W1	453
108910W91	555
108910W91	565
108925W1	619
108925W1	621
1089933M1	101
1089941M91	101
10970	385
1107164	47
1107164	49
1109055	419
1109055	721
1109070	681
111089W1	605
111091W1	383
111091W1	39
111091W1	41
111091W1	43
111091W1	45
111095W1	265
111095W1	39
111095W1	41
111095W1	43
111095W1	45
1112299	185
1112407	209
1112407	49
1114720W1	419
1114720W1	423
111670W1	39
111670W1	41
111670W1	43
111670W1	45
111670W1	537
111670W1	545
111711W1	175
111736W2	41
111736W2	45
111737W1	383
111737W1	401
111737W1	403
111741W1	39
111741W1	43
111743W1	41
111743W1	45
111743W1	473
112016W1	625
112020W1	629
112022W1	629
112027W1	619
112027W1	621
112041W1	553
112043W1	557
112044W1	557
112046W1	305
112050W1	553
112050W1	565
112159W1	219
112174W1	555
112202W91	703
112204W91	703
112235W91	705
112236W1	233
112253W1	697
112283W1	699
112412W1	339
112678W1	131
112678W1	133
112685W1	329
112716W92	481
112716W92	485
112720W91	483
112720W91	487
112734W1	171
112735W91	171
112752W1	361
112774W1	493
112785W92	557
112785W92	599
112811W1	235
112812W1	235
112814W1	235
112845W1	511
112845W1	511
112845W1	525
112845W1	527
112845W1	529
112845W1	531
112845W1	533
112858W91	625
112887W1	625
112887W1	721
112887W1	723
112890W91	561
112890W91	625
112942W1	121
112942W1	375
112942W1	391
112942W1	545
112942W1	549
112967W1	39
112967W1	43
112972W1	557
112972W1	567
112972W1	573
112972W1	579
112977W92R	481
1130100W1	419
1130100W1	423
1138480	331
1138480	721
1139003	421
1139003	721
11538	425
11538	429
11538	433
1157990W1	419
1157990W1	423
1157990W1	433
116047W1	169
116082W1	385
116106W1	279
116106W1	281
116107W1	279
116107W1	281
116108W1	279
116108W1	281
116143W1	599
116145W1	599
116146W1	599
116147W91	599
116148W1	599
116149W1	599
116246W91	381
116247W91	381
116248W91	383
116249W1	383
116250W1	383
116281W1	645
116282W1	645
116312W1	299
116328W1	265
116328W1	267
116339W1	299
116343W1	267
116343W1	299
116346W1	299
116348W1	299
116349W1	299
116354W1	275
116354W1	277
116362W1	275
116363W1	275
116465W91	603
116465W91	611
116482W1	573
116518W1	265
116519W1	265
116616W1	431
116616W1	435
116626W1	597
116627W1	597
116640W1	553
116640W1	561
116644W1	555
116644W1	565
116757W1	597
116759W1	597
116953W91	385
1177981	99
133827M1	625
133828M91	625
13601	281
13601	341
13811X	283
13811X	285
13811X	287
13811X	293
13811X	297
13887X	297
13887X	691
13887X	693
1440716X1	425
1440921X1	405
1440921X1	405
1441500X1	409
1441500X1	409
1441590X1	667
1441932X1	405
148022M1	305
148022M1	573
148022M1	583
148039M1	555
148039M1	567
148039M1	579
148039M1	583
148203M1	133
148203M1	137
148203M1	223
148203M1	225
148203M1	619
148203M1	621
14987	429
14987	435
1500050W1	483
1500050W1	487
1500060W1	483
1500060W1	487
1500070W1	483
1500070W1	487
1501043W91	441
1501060W1	419
1501060W1	423
1501060W1	429
1501060W1	433
1501060W1	439
1501060W1	441
1508070W1P	477
1510740W1	461
1510831W91	469

https://truckmanualshub.com/

Part No.	Page
151257M1	355
151257M1	447
151257M1	449
1564540W1	419
1564540W1	423
1564540W1	427
1564540W1	429
1564540W1	435
1564540W1	441
1565240W1	171
1579720W1	391
1579720W1	449
1579720W1	475
1588480W1	419
1588480W1	423
1599410W1	489
1605510W1	443
1605510W1	469
1609121W91	273
1609200W1	273
1611180W1	273
1651910W1	119
1651910W1	461
1656110W2	269
1656110W2	511
1656110W2	517
1656110W2	537
1656110W2	541
1656110W2	545
1656110W2	549
1659630W1	279
1659630W1	281
1659650W1	279
1659650W1	281
1659660W1	279
167550A	253
1680230W1	391
1680230W1	711
1680230W1	721
1689170W1	335
1689170W1	371
1689170W1	375
1689170W1	391
1689170W1	445
1689170W1	447
1689170W1	449
1689170W1	493
1703354	119
1703354	121
1703354	143
1703354	153
1703354	167
1703354	215
1703354	217
1706380W1	329
1706380W1	331
1706393W91	331
1712530W1	489
1714400W1	489
1714410W1	489
1714430W1	489
1716190W1	491
1717640W1	279
1717640W1	281
1717650W1	279
1717650W1	281
1720176	385
1720176	453
1721491W2R	489
1736510W1	491
1736870W1	489
1737620W1	489
1737660W1	491
1742670W1	371
1742670W1	447
1742670W1	449
1774490W91	175
1777403W91	279
1777403W91	281
17789	411
17789	413
17789	453
1786320W1	481
1787520W1	377
1787520W1	391
1787520W1	547
1787520W1	551
1791851W91	175
1797450W1	493
1799410W1	125
1799410W1	451
1799410W1	463
1799410W1	465
1799410W1	477
1817730W1	419
1817730W1	423
1905314M1	49
1905376M1	631
1907162M1	221
1907162M1	225
1907162M1	721
195160M1	691
195160M1	693
195160M1	723
195412M1	417
195441M1	147
195441M1	233
195441M1	237
195441M1	241
1R61628	323
22289X	419
22289X	425
22602X	361
22602X	429
22602X	435
227455M1	371
227455M1	447
227455M1	709
227455M1	711
227455M1	721
2400540W1	431
2400540W1	441
2403570W1	429
2403570W1	435
2403610W1	279
2403610W1	281
2407570W1	443
2407570W1	445
2407570W1	487
2412670W1	451
2412670W1	465
2412960W1	459
2414623W1	489
2414630W2	489
2414640W1	489
2438160W1	481
2440720W1	413
2441250W1	689
2441250W1	693
2441250W1	697
2441340W1	691
2441340W1	693
2441340W1	701
2441490W1	371
2441490W1	375
2441490W1	391
2441490W1	447
2441490W1	449
2441970W1	469
2442480W2	413
2442960W1	341
2442970W1	341
2443410W1	419
2443410W1	423
2443420W1	419
2443420W1	423
2445360W1	329
2446310W1	417
2446400W1	429
2446400W1	435
2446893W91	411
2446903W91	411
2446920W1	411
2446930W1	411
2447080W1	475
2449760W1	443
2449760W1	445
2450441W4	489
2450500W1	489
2451440W1	115
2451440W1	377
2451440W1	447
2451440W1	449
2452270W1	483
2452270W1	487
2460840W2	483
2460840W2	487
2461793W91	101
2464250W1	417
2466861W91	343
2466960W2	343
2467220W1	341
2467220W1	353
2467220W1	727
2467230W1	341
2467230W1	353
2467230W1	727
2469711W91	359
2469760W1	359
2472450W1	343
2476070W1	443
2476203W1R	477
2476230W1	477
2476240W1	451
2476240W1	465
2476240W1	477
2485470W1	371
2485470W1	481
2486140W1	481
2486150W1	481
2486150W1	485
2486160W1	481
2486160W1	485
2486170W2	481
2486170W2	485
2488980W1	337
2489330W1	361
2489920W1	361
2489940W1	361
2492063W91	429
2492063W91	435
2493000W1	481
2493870W1	483
2493870W1	487
2495780W1	245
2497273W91	359
2498390W1	353
2498390W1	727
2503350W1	373
2513840W1	687
2522600W1	337
252502M1	345
2526120W1	481
2526120W1	485
2530670W1	345
2530670W1	355
2531340W1	345
2531671W91	337
2531681W91	337
2537670W2	415
2537720W1	417
2538810W1	355
2544120W1	343
2545270W1	417
2545270W1	493
2545471W91	343
2545511W91	343
2547531W91	345
2547540W1	345
254763M1	345
2551250W1	419
2551250W1	423
2551250W1	431
2551250W1	435
2551250W1	441
255301M2	111
2553251W91	469
2553271W92	471
2553290W1	471
2553300W1	471
2553320W1	469
2553560W1	371
2553560W1	447
2553560W1	449
2554680W1	451
2554761W91	359
2554761W91	725
2555130W1	461
2555170W1	461
2555180W1	461
2555190W1	461
2555190W1	545
2555190W1	549
2555200W1	461
2555211B91	461
2555231W91	461
2555310W1	419
2555310W1	423
2555401W91	451
2556880W1	633
2556880W1	685
2563800W1	279
2563800W1	281
2571510W1	453
2571520W1	453
2573180W1	279
2573370W1	393
2573610W1	393
2577893W91	101
2577893W91	97
2580580W1	687
2580593W91	687
2588071W92	417
2588510W1	329
2590650W1	425
2590650W1	443
2591531W91	463
2597740W1	483
2601260W1	481
2601260W1	501
2605880W91	713
2605880W91	725
2609080W1	41
2612870W1	337
2612880W1	337
2612961W91	337
2613771W91	443
2614090W1	443
2614090W1	449
2615094W91	419

https://truckmanualshub.com/

INDEX

Part No.	Page
2615094W91	425
2615101W92	419
2615101W92	425
2615120W1	421
2615140W2	419
2615140W2	425
2615181W91	429
2615233W92	463
2615233W92	713
2615233W92	723
2616131W91	687
2616141W91	687
2618670W1	355
2618680W1	355
2619180W1	371
2619180W1	379
2619380W1	373
2619560W1	331
2619570W1	443
2619570W1	445
2619570W1	483
2620021W91	461
2620021W91	467
2620130W1	329
2620180W1	329
2620180W1	331
2620190W1	385
2620853W91	447
2620853W91	449
2620871W91	447
2620920W1	447
2624230W1	493
2625050W1	689
2625050W1	693
2625050W1	701
2625940W1	103
2625940W1	107
2625940W1	99
2626120W1	335
2627000W1	335
2628221W91	371
2628310W1	371
2628321W92	391
2628340W1	375
2629073W91	625
2629080W1	625
2629511W93	493
2629570W1	431
2629570W1	435
2629720W1	555
2630100W2	373
2630100W2	375
2630420W1R	521
2630430W1R	521
2630960W1	629
2631400W1	393
2631433W91	687
2631690W1	399
2631700W1	399
2632680W1	103
2632680W1	107
2632690W1	523
2633681W2	505
2634840W1	475
2635230W1	495
2635250W1R	521
2635460W1	493
2635690W1	713
2636000W1	411
2636010W1	411
2636010W1	463
2636170W1	335
2636170W1	445
2636210W1	335
2636210W1	445
2636631W91	475
2636870W2	341
2636890W1	397
2637890W1	373
26674	689
26674	693
27342	121
2813878M1	187
28280440	265
28280440	271
286501M1	553
286501M1	561
286501M1	565
293766M1	219
293766M1	245
293817M91	417
293888M1	629
293888M1	631
294148M91	491
29780X	419
29780X	423
29780X	425
29780X	459
29780X	469
3000193X1	405
3000193X1	407
3000193X1	407
3000258X1	585
3001429X1	277
3001429X1	379
3001429X1	387
3001968X1	667
3008169X1	385
3008469	665
3008469	669
3009183X1	267
3009183X1	439
3009207X1	445
3009208X1	439
3009213X1	55
3009219X1	585
3009222X1	667
3009227X1	425
3009244X1	445
3009245X1	283
3009247X1	283
3009292X1	111
3009316X1	425
3009330X1	303
3009340X1	385
3009495X1	371
3009495X1	375
3009495X1	379
3009627X1	379
3009627X1	387
3009695X1	383
3009695X1	385
3009695X1	405
3009695X1	407
3009747X1	445
3009920X1	439
3010013X1	561
3010492X1	669
3010639X1	409
3010783X1	669
3010842X1	385
3011004X1	425
3011004X1	667
3015159X1	383
3019124X1	383
3019124X1	405
3019124X1	405
3019124X1	405
3019125X1	383
3019168X1	425
3019398X1	55
3019418X91	55
3019856X1	669
3019865X1	425
3019871X1	425
3019894X1	409
30-3076830	211
30-3076830	213
30-3076830	49
30-3076830	727
30-3413837	257
30-3413918	257
30-3413926	257
30-3427978	253
30-3429865	209
30-3429865	49
3067979	103
3071049	103
3071049	99
31-1588410	425
31-1588410	443
31-1588410	721
31-2446490	447
31-2455700	375
31-2455700	391
31-2530050	101
31-2530050	105
31-2530050	109
31-2530050	247
31-2530050	97
31752	675
318618P	129
318618P	133
3289213V	47
3289213V	711
3289213V	721
329951M91	713
329951M91	725
339025X1	405
339030X1	267
339030X1	303
339081X1	277
339123X1	439
339124X1	405
339124X1	405
339124X1	407
339124X1	407
339169X1	267
339369X1	361
339369X1	675
339374X1	267
339374X1	407
339375X1	267
339375X1	303
339375X1	405
339375X1	407
339376X1	171
339376X1	227
339376X1	277
339376X1	371
339376X1	375
339376X1	379
339376X1	379
339376X1	387
339376X1	439
339402X1	227
339402X1	277
339402X1	407
339402X1	439
339437X1	425
339474X1	425
339583X1	425
339666X1	143
339666X1	407
339679X1	407
339768X1	387
350392X1	331
353062X1	289
353426X1	171
353436X1	127
353436X1	319
353438X1	613
353446X1	405
353505X1	113
353509X1	199
353509X1	205
353538X1	605
353609X1	305
353609X1	307
353613X1	695
353724X1	309
353769X1	119
353769X1	125
353769X1	153
353769X1	243
353769X1	267
353770X1	407
353771X1	339
353771X1	341
353771X1	353
353771X1	359
353771X1	361
353771X1	375
353771X1	391
353773X1	111
353773X1	113
353773X1	329
353773X1	359
353773X1	489
353919X1	613
353924X1	123
354273X1	455
354920X1	371
354920X1	379
354920X1	483
354920X1	487
354920X1	489
354920X1	721
355485X1	481
355485X1	487
355547X1	309
355602X1	559
355736X1	263
355997X1	279
355997X1	281
356044X1	489
356612X1	633
357194X1	573
357194X1	579
357194X1	595
358990X1	607
360202X91	127
360202X91	403
360202X91	569
360202X91	575
360202X91	587
360202X91	699
360503X1	477
360503X1	539
360555X1	447
3617859M1	249
3617860M1	249
3619622M1	193
3619622M1	207
3619622M1	211
3619622M1	213
3619622M1	249
363282X1	305
363282X1	307
363712X1	253

https://truckmanualshub.com/

Part No.	Page
3637625M1	63
3638002M1	101
364076X1	611
364125X1	47
364377X1	697
364578X1	429
364578X1	435
364578X1	441
364988X1	449
365098X1	417
365098X1	493
365775X1	171
365775X1	263
365775X1	267
367451X1	279
367451X1	281
3682177	103
3682674	103
368384X1	429
368615X1	267
368615X1	329
368615X1	493
368933X1	279
3714264M1	239
3715144M92	249
372536X1	143
3725830M1	375
3725830M1	393
3725988M1	513
372728X1	149
372729X1	155
372729X1	215
372729X1	215
372729X1	217
372729X1	315
372729X1	477
372729X1	477
372729X1	575
3728019M1	127
3729528M1	245
3729545M1	247
3729545M1	247
373115X1	441
373124X1	359
373159X1	463
373197X1	715
373839X1	151
373839X1	157
375028X1	267
375028X1	299
375028X1	315
375028X1	431
375028X1	435
375028X1	441
375028X1	723
375098X1	253
375112X1	115
375112X1	345
375114X1	419
375114X1	423
375114X1	431
377690X1	483
377690X1	485
377690X1	493
3778093M91	249
385361X1	383
385362X1	383
385368X1	405
385368X1	407
385370X1	267
385373X1	383
385391X1	383
385391X1	385
3883284	105
3883284	99
3902603	553
3903044M1	185
390734X1	439
390734X1	445
390734X1	55
390735X1	405
390735X1	407
3907674	257
390809X1	439
390912X1	339
390972X1	185
390972X1	189
391038X1	405
391038X1	407
391038X1	409
391039X1	189
391148X1	191
391212X1	383
391290X1	405
391290X1	407
3913106	51
3917892	99
391904X1	425
391990X1	107
3923060	105
3923060	99
3926704	103
3926704	99
3929751	553
3942197	51
3965146	223
3965146	257
45080021	627
487777	121
5000002X1	439
5000003X1	439
5000004X1	439
5000004X1	445
5000005X1	425
5000005X1	667
5000006X1	283
5000006X1	425
5000006X1	445
5000007X1	667
5000017X1	665
5000017X1	669
5000018X1	445
50021	443
50021	479
50021	721
50468	411
50468	453
50468	721
510060W1	477
51871M1	363
52167	153
52175	177
530132M1	221
530132M1	225
539651M1	691
539651M1	695
539651M1	707
590769M1	39
590769M1	43
590817M1	41
60049M1	421
60049M1	425
61002	127
61085	471
61101	453
61234	387
6131916	139
6136964	475
61523	443
61523	445
61770	279
61770	281
62026	525
62026	525
62026	531
62026	531
62075	121
62075	125
62182	523
62190	345
62232	315
63834	413
63834	597
64642	431
64642	441
6514772	153
6522940	459
6529705	113
6555346	413
6661624	689
6661624	695
68619	139
68619	295
68619	297
68619	307
68619	329
68619	383
68619	411
68619	413
68619	449
6875314	425
6875314	429
68759	395
68759	411
68759	413
68759	477
68759	479
68759	515
68759	517
700101804	561
700129058	505
700129071	511
700134393	511
700149006	285
700164650	149
700164650	195
700525379	433
700525382	351
700525400	195
700700057	157
700700628	717
700701160	243
700701265	165
700701287	179
700701331	129
700701331	133
700701350	555
700701350	561
700701354	629
700701354	631
700701355	325
700701355	401
700701355	553
700701355	565
700701355	569
700701355	617
700701356	553
700701356	561
700701356	569
700701356	617
700701744	553
700701744	565
700701753	555
700701753	561
700701772	233
700701772	241
700701814	555
700701814	561
700701834	557
700701834	567
700701834	583
700702119	635
700702137	369
700702137	639
700702137	659
700702141	341
700702198	429
700702358	121
700702916	171
700702979	181
700703830	241
700703922	155
700703922	279
700703922	305
700703922	331
700703922	335
700703923	363
700703923	507
700703923	687
700704010	121
700704010	139
700704010	339
700704010	359
700704010	453
700704010	467
700704010	513
700704837	717
700704854	417
700704856	417
700704927	417
700705088	375
700705088	393
700705088	525
700705088	531
700705088	715
700705119	573
700705119	579
700705135	169
700705185	165
700705614	451
700705676	157
700706151	327
700706356	171
700706419	687
700706463	359
700706490	559
700707139	295
700707139	297
700707203	151
700707203	157
700707391	621
700707619	147
700707823	201
700707823	491
700708270	429
700708270	433
700708340	245
700708349	171
700708349	207
700708349	363
700708349	387
700708349	405
700708349	425
700708349	677
700708349	679
700708351	363
700708359	367
700708367	111
700708367	207
700708367	49

https://truckmanualshub.com/

INDEX

Part No.	Page
700708367	49
700708367	55
700708367	55
700708648	151
700708648	157
700708848	361
700709503	309
700709503	313
700709601	145
700709601	165
700709601	243
700709601	381
700709601	383
700709601	455
700709602	165
700709602	165
700709602	193
700709602	219
700709602	343
700709607	341
700709608	441
700709608	449
700709866	121
700709919	261
700710188	147
700710188	233
700710188	235
700710788	177
700710957	595
700710959	595
700710960	595
700710961	595
700710984	159
700711132	123
700711134	123
700711167	715
700711262	155
700711357	417
700711659	215
700711659	217
700711659	235
700711876	585
700712632	573
700712632	579
700712632	595
700712651	595
700712652	595
700712973	49
700712973	625
700713219	135
700713516	327
700714064	127
700714189	327
700714528	139
700714529	139
700714529	517
700714529	725
700714706	517
700715255	165
700715255	251
700715271	213
700715277	141
700715278	141
700715285	141
700715662	327
700715848	553
700715848	561
700715848	569
700715848	625
700715848	629
700715848	631
700715944	581
700716061	55
700716238	55
700716462	325
700716510	307
700717212	459
700717212	469
700717365	665
700717365	669
700717402	41
700717402	45
700717403	39
700717403	43
700717403	45
700717404	41
700717404	45
700717509	479
700717509	491
700717539	127
700717591	127
700717621	165
700717627	401
700717627	403
700717635	263
700717635	267
700717635	455
700717635	457
700717635	471
700717635	497
700717635	499
700717644	175
700717644	177
700717644	193
700717761	103
700717761	107
700717761	97
700718010	179
700718109	669
700718245	141
700718444	51
700718444	53
700718515	139
700718515	139
700718599	247
700718792	261
700718807	153
700718869	327
700719027	569
700719105	617
700719780	559
700719782	559
700719783	559
700719784	559
700719785	559
700719940	251
700720004	111
700720605	41
700720605	43
700720618	39
700720618	43
700720621	623
700720727	41
700720727	45
700720863	233
700720909	179
700720917	623
700720958	337
700720958	341
700720958	341
700720958	353
700721125	39
700721125	41
700721586	215
700721586	217
700721602	525
700721602	531
700721620	237
700721620	725
700721684	675
700721776	261
700721781	39
700721781	43
700721781	45
700721916	525
700721916	531
700722351	247
700722351	723
700723598	147
700724394	707
700724395	707
700724622	185
700724623	187
700724693	401
700724693	615
700725468	563
700725471	563
700725475	563
700725576	165
700725576	723
700725632	139
700725632	157
700725632	175
700725633	139
700725633	139
700725633	149
700725633	195
700725634	139
700725634	151
700725634	157
700725670	41
700725670	45
700725806	189
700725810	189
700725832	581
700725833	191
700725836	187
700725837	187
700725840	185
700725843	185
700725844	185
700725845	185
700725864	369
700725864	635
700725864	643
700725871	191
700725918	243
700725918	379
700725918	387
700725958	151
700725958	161
700725958	165
700726076	627
700726168	247
700726172	247
700726543	109
700726696	233
700726978	401
700726979	401
700726979	615
700727621	561
700727622	565
700727841	43
700727843	43
700727844	45
700727847	45
700727848	43
700727848	45
700727906	45
700727993	39
700727993	43
700728245	585
700728301	187
700728339	239
700728472	147
700728473	149
700728473	195
700728474	193
700728474	195
700728631	149
700728631	195
700728711	149
700728713	199
700728714	149
700728714	195
700728745	199
700728746	199
700728779	43
700728811	45
700728845	195
700728892	571
700728893	571
700728894	571
700728895	571
700728896	571
700728897	571
700728898	571
700728900	571
700728901	571
700728902	571
700728903	571
700728904	571
700728905	571
700728906	571
700728908	571
700728909	571
700728910	571
700728911	571
700728912	571
700728913	571
700729019	45
700729234	323
700729235	323
700729237	323
700729238	323
700729240	627
700729369	45
700729396	41
700729399	43
700729399	45
700729423	43
700729424	43
700729424	45
700729503	667
700730037	147
700929239	627
700953657	379
701235	111
701235	289
701235	293
701235	305
701235	307
701565	117
701565	121
701953	171
701953	239
7020027	513
7020589	45
70210011	665
70210011	669
70210012	665
70210012	669
702217	629
70225441	675
70226012	675
70226012	725
70228509	679
70228509	723
70232758	223
70232758	225

https://truckmanualshub.com/

Part No.	Page
70232758	231
70232758	257
70234847	253
70241336	255
70241344	253
70241345	253
70241352	255
7024938	105
7024938	99
7025075	547
7025075	551
702514	429
70257297	101
70257297	105
70257297	109
70261383	559
70262754	257
70263605	185
702670	393
70267132	559
70267148	559
70267150	559
70267155	559
70267167	559
70268364	255
70269246	101
70269246	105
70269246	109
70269408V	97
70269722	559
70269723	559
70270210	559
70272355	559
70272357	559
70272358	559
70272360	559
70272361	559
70272365	559
7027469	691
7027469	695
7027469	707
70276103	253
702928	279
70301781	285
70301781	287
70301781	293
70301781	333
70301781	335
703082	329
703249	101
703249	113
703249	117
703249	131
703249	139
703249	161
70327382	311
70327997	311
7035983	559
703603	499
703983	111
703983	111
703983	113
703983	341
703983	357
704007	119
704007	129
704007	205
704007	247
704007	317
704007	343
704007	347
704031	115
704031	165
704031	279
704031	281
704031	283
704031	285
704031	285
704056	115
704056	285
704056	335
704056	413
7041015	207
7041015	307
7041015	575
7041015	577
7041015	579
7041015	585
704247	157
704247	171
704247	221
704247	221
704247	225
704247	225
704254	157
704254	161
704262	343
704494	215
704494	217
704551	147
704551	233
704551	235
704551	241
704551	265
704551	269
704627	667
704692	689
704692	693
704858	689
704858	693
704858	701
705004	139
705004	169
705004	175
705004	221
705004	225
705012	113
705012	119
705012	125
705012	129
705012	143
705038	131
705038	139
705038	219
705038	245
705038	247
705038	263
705160	215
705160	217
705160	219
70522328	419
70522328	423
70529432	127
70534931	295
70534931	297
70537291	121
70537291	269
70537291	471
70537291	687
70537291	715
70547934	499
705541	127
705541	157
705541	269
705541	375
705541	391
705541	413
705632	139
705632	511
705665	663
705665	667
705665	707
705681	315
705681	363
70569880	239
705707	119
705707	139
705707	143
705707	347
705707	505
70590704	411
70590704	423
70590704	461
70590704	465
70590704	469
70590704	721
70590709	419
70590709	721
706176	503
706382	225
706432	139
706432	521
70714	337
7087398	459
7087398	727
70901480	665
70901480	667
70901480	671
70901651	311
70901651	675
70901763	687
70901828	513
70901840	665
70901840	667
70901840	671
70901840	673
70903082	481
70903082	485
70903835	267
70903835	299
70903835	315
70905126	267
70905126	299
70905126	315
70905127	395
70905262	513
70906852	385
70910224	127
70910815	597
70911201	453
70911255	279
70911255	281
70912278	427
70912278	435
70912299	329
70913160	273
70913160	333
70913160	345
70913160	363
70913160	417
70913160	47
70913160	507
70913160	53
70913160	693
70913680	713
70913682	713
70913719	601
70913744	279
70913744	281
70913744	283
70913744	333
70913744	385
70913744	475
70914192	113
70914192	317
70914383	321
70914465	177
70914465	371
70914465	375
70914465	391
70914465	443
70914465	447
70914465	449
70914465	633
70914584	307
70914584	713
70914584	713
70914584	725
70914687	127
70914687	417
70914767	365
70914767	445
70915019	475
70915276	365
70915276	633
70915314	603
70915314	605
70915314	607
70915314	609
70915314	611
70915500	463
70915500	467
70915500	469
70915711	255
70915726	301
70915726	303
70915726	333
70915794	299
70915935	299
70915955	101
70915955	105
70915955	109
70915955	247
70915955	97
70915988	115
70915988	333
70916079	547
70916080	551
70916602	605
70916621	121
70916621	247
70916621	247
70916621	441
70916621	547
70916621	551
70916621	715
70916622	227
70916622	243
70916622	243
70916622	243
70916622	243
70916767	459
70916937	517
70916950	101
70916950	103
70916950	107
70916950	119
70916950	131
70916950	133
70916950	139
70916952	41
70916952	45
70916952	505
70916964	301
70916964	303
70916964	305
70916964	317
70916964	345
70916965	101
70916965	103

https://truckmanualshub.com/

INDEX

Part No.	Page	Part No.	Page	Part No.	Page	Part No.	Page
70916965	107	70917861	289	70919062	585	70920333	625
70916965	117	70917861	293	70919062	675	70920397	301
70916965	117	70917919	121	70919089	263	70920397	303
70916965	119	70917970	119	70919089	267	70920397	713
70917356	103	70918111	167	70919089	289	70920415	111
70917356	103	70918111	315	70919089	319	70920415	131
70917356	105	70918151	243	70919089	353	70920415	133
70917356	107	70918151	319	70919089	443	70920415	139
70917356	107	70918151	347	70919089	695	70920415	159
70917356	109	70918168	443	70919128	575	70920426	239
70917356	117	70918199	111	70919128	579	70920438	153
70917365	121	70918199	301	70919135	291	70920469	395
70917372	103	70918199	303	70919140	291	70920469	453
70917372	103	70918213	321	70919171	291	70920469	459
70917372	107	70918222	151	70919171	365	70920655	633
70917372	107	70918222	159	70919171	625	70920787	123
70917372	117	70918249	121	70919171	633	70920787	337
70917372	119	70918249	521	70919173	633	70920787	339
70917372	119	70918264	121	70919195	129	70920808	211
70917373	113	70918264	715	70919195	133	70920808	213
70917373	115	70918264	717	70919195	573	70920809	51
70917373	139	70918265	265	70919197	553	70920821	171
70917373	151	70918265	451	70919197	561	70920990	491
70917373	155	70918265	477	70919197	619	70921024	157
70917373	157	70918265	99	70919197	621	70921024	429
70917373	267	70918266	107	70919214	171	70921024	435
70917377	129	70918266	121	70919214	557	70921050	713
70917377	235	70918266	123	70919214	567	70921050	723
70917377	345	70918266	171	70919214	583	70921159	557
70917377	355	70918266	177	70919214	685	70921159	565
70917377	379	70918267	301	70919272	211	70921159	573
70917377	387	70918267	303	70919272	47	70921159	583
70917378	117	70918267	305	70919310	263	70921160	133
70917378	119	70918268	257	70919312	257	70921160	137
70917378	157	70918268	279	70919332	127	70921169	329
70917378	179	70918268	301	70919332	301	70921169	331
70917378	223	70918268	303	70919332	303	70921169	373
70917378	227	70918268	305	70919332	47	70921176	111
70917380	121	70918268	331	70919332	491	70921176	111
70917380	243	70918268	431	70919332	53	70921176	113
70917380	245	70918268	435	70919342	51	70921176	333
70917380	347	70918269	363	70919378	547	70921176	335
70917380	457	70918269	47	70919381	167	70921176	337
70917380	525	70918269	53	70919387	315	70921176	339
70917380	531	70918431	111	70919391	315	70921203	569
70917380	715	70918431	111	70919393	299	70921203	629
70917385	257	70918431	113	70919431	597	70921203	631
70917395	215	70918431	169	70919434	285	70921205	127
70917395	217	70918431	223	70919434	287	70921205	305
70917395	233	70918432	113	70919434	293	70921205	307
70917395	235	70918432	115	70919434	355	70921205	553
70917395	237	70918432	283	70919434	361	70921205	555
70917415	231	70918432	285	70919434	371	70921205	561
70917421	177	70918432	287	70919434	447	70921206	553
70917421	385	70918433	417	70919439	385	70921206	555
70917421	469	70918433	507	70919472	129	70921206	561
70917421	471	70918447	121	70919472	133	70921206	565
70917421	479	70918447	383	70919472	137	70921206	569
70917458	265	70918447	451	70919624	553	70921206	573
70917458	269	70918447	463	70919889	671	70921210	103
70917459	235	70918447	465	70919889	673	70921210	107
70917459	265	70918447	477	70920037	355	70921210	111
70917459	269	70918452	115	70920117	321	70921210	117
70917467	323	70918452	119	70920117	323	70921210	117
70917579	677	70918452	123	70920161	151	70921211	419
70917579	679	70918452	171	70920161	165	70921211	423
70917580	485	70918452	283	70920272	689	70921214	129
70917642	107	70918455	417	70920272	693	70921214	133
70917642	121	70918459	181	70920272	701	70921214	369
70917642	135	70918459	299	70920328	279	70921214	553
70917642	137	70918459	339	70920328	281	70921214	555
70917642	141	70918461	341	70920328	337	70921214	561
70917642	167	70918547	121	70920328	481	70921214	629
70917673	105	70918830	489	70920328	485	70921214	637
70917673	99	70919062	291	70920328	489	70921217	629

https://truckmanualshub.com/

Part No.	Page
70921221	177
70921235	553
70921235	625
70921235	629
70921235	631
70921263	267
70921263	299
70921263	315
70921279	129
70921279	561
70921279	569
70921279	705
70921291	141
70921295	689
70921295	691
70921295	695
70921297	555
70921297	567
70921298	291
70921298	325
70921298	401
70921298	553
70921298	561
70921298	573
70921298	579
70921298	617
70921298	705
70921324	341
70921324	343
70921324	371
70921324	375
70921326	553
70921326	565
70921327	555
70921327	567
70921328	569
70921332	103
70921332	107
70921332	109
70921332	117
70921332	119
70921333	105
70921333	135
70921333	137
70921333	167
70921333	167
70921343	321
70921349	127
70921349	129
70921349	133
70921349	135
70921349	315
70921349	403
70921349	569
70921360	331
70921360	335
70921360	443
70921360	687
70921364	573
70921364	583
70921368	129
70921368	133
70921467	705
70921472	573
70921472	583
70921525	359
70921671	379
70921671	449
70921691	569
70921691	625
70921691	629
70921719	223
70921719	225
70921719	555
70921719	565
70921865	169
70921880	113
70921880	257
70921880	603
70921881	605
70921881	613
70921882	559
70921883	401
70921883	553
70921883	555
70921883	561
70921883	561
70921883	569
70921884	617
70921885	223
70921885	227
70921885	291
70921885	325
70921885	325
70921885	365
70921885	401
70921887	561
70921887	625
70921887	625
70921887	625
70921888	625
70921898	699
70921910	513
70921911	201
70921911	205
70921911	211
70921911	213
70921911	51
70921911	55
70921912	103
70921912	107
70921912	625
70921912	631
70921912	97
70921915	207
70921958	381
70921958	419
70921958	423
70921958	455
70921958	469
70921958	683
70921958	717
70921958	717
70921959	199
70921959	205
70921959	431
70921960	165
70921960	291
70921961	581
70921962	393
70921962	547
70921962	551
70921963	579
70921963	583
70921963	619
70921963	621
70921963	715
70921965	151
70921965	175
70921965	179
70921965	219
70921965	247
70921965	263
70921966	337
70921966	341
70921966	419
70921966	423
70921966	465
70921966	469
70921969	123
70921969	177
70921969	179
70921969	273
70921969	281
70921971	101
70921971	123
70921971	419
70921971	423
70921971	435
70921971	481
70921971	519
70921971	523
70921971	523
70921977	129
70921977	133
70921977	161
70921977	161
70921977	165
70921978	393
70921978	401
70921978	617
70922002	363
70922002	689
70922002	693
70922037	111
70922037	113
70922037	285
70922037	287
70922037	293
70922080	381
70922127	321
70922127	323
70922127	363
70922127	397
70922127	397
70922130	151
70922130	157
70922130	483
70922181	553
70922181	565
70922285	431
70922522	401
70922523	325
70922523	553
70922523	555
70922523	565
70922523	569
70922571	569
70922571	575
70922571	587
70922586	353
70922632	629
70922645	127
70922645	339
70922645	347
70922645	471
70922658	337
70922664	139
70922664	267
70922664	315
70922664	329
70922664	47
70922664	53
70922760	341
70922770	417
70922771	279
70922784	497
70922786	381
70922786	427
70922786	453
70922786	455
70922786	457
70922786	497
70922786	503
70922837	555
70922837	567
70922837	579
70922837	583
70922845	111
70922862	365
70922862	633
70922863	513
70922874	705
70922887	687
70922890	689
70922890	693
70922918	695
70922928	265
70922928	269
70922974	569
70923014	425
70923014	429
70923014	435
70923027	629
70923027	631
70923086	405
70923093	405
70923094	115
70923094	283
70923094	333
70923094	443
70923094	445
70923104	375
70923111	285
70923111	301
70923111	303
70923111	417
70923111	687
70923112	151
70923112	155
70923112	487
70923112	687
70923113	303
70923114	267
70923114	329
70923114	341
70923114	345
70923114	361
70923114	371
70923114	375
70923126	273
70923151	301
70923151	431
70923151	441
70923151	443
70923151	445
70923154	311
70923154	681
70923163	401
70923163	603
70923163	705
70923219	413
70923219	663
70923219	667
70923220	421
70923220	423
70923220	457
70923220	459
70923220	481
70923220	485
70923220	501
70923230	329
70923230	695
70923240	315
70923240	493
70923306	295
70923306	297
70923320	477
70923325	337
70923325	353

https://truckmanualshub.com/

INDEX

Part No.	Page
70923325	429
70923325	435
70923325	489
70923326	385
70923326	453
70923326	471
70923326	479
70923341	263
70923341	345
70923341	355
70923341	471
70923343	553
70923353	115
70923353	177
70923353	47
70923353	53
70923356	689
70923362	167
70923362	177
70923362	321
70923362	323
70923362	395
70923362	491
70923362	713
70923404	677
70923404	679
70923427	299
70923427	417
70923470	361
70923470	697
70923473	419
70923501	493
70923504	495
70923510	249
70923520	215
70923520	217
70923520	233
70923530	469
70923544	431
70923544	435
70923550	167
70923558	613
70923559	233
70923577	297
70923584	297
70923588	253
70923594	681
70923683	263
70923690	633
70923690	671
70923690	673
70923690	675
70923690	687
70923701	339
70923701	371
70923701	391
70923701	483
70923701	541
70923717	603
70923737	555
70923737	561
70923737	567
70923737	579
70923737	625
70923808	635
70923808	647
70923808	655
70923813	297
70923816	665
70923816	669
70923816	677
70923816	679
70923818	679
70923828	289
70923831	289
70923841	585
70923841	611
70923843	699
70923843	701
70923846	605
70923858	331
70923858	675
70923865	641
70923865	653
70923894	575
70923906	179
70923906	215
70923906	217
70923906	233
70923906	235
70923943	605
70923945	605
70924022	129
70924022	133
70924048	603
70924048	605
70924048	607
70924048	611
70924095	115
70924095	333
70924113	459
70924114	599
70924186	675
70924192	629
70924204	271
70924272	675
70924272	687
70924283	503
70924290	55
70924296	699
70924296	705
70924403	705
70924622	613
70924744	155
70924744	157
70924744	47
70924744	53
70924746	697
70924763	363
70924764	529
70924764	535
70924783	555
70924783	561
70924783	705
70924786	305
70924791	559
70924799	457
70924837	125
70924837	265
70924837	269
70924837	269
70924837	271
70924837	455
70924845	289
70924856	217
70924856	217
70924856	265
70924856	319
70924856	381
70924906	429
70924946	39
70924946	43
70924947	199
70924947	205
70925011	599
70925011	603
70925011	611
70925094	185
70925094	193
70925094	207
70925094	215
70925094	217
70925094	219
70925097	621
70925097	687
70925160	339
70925160	411
70925160	415
70925160	499
70925160	501
70925160	575
70925160	725
70925205	265
70925205	269
70925246	219
70925284	111
70925310	561
70925459	663
70925459	673
70925468	617
70925615	331
70925617	119
70925617	129
70925617	133
70925617	291
70925617	365
70925619	581
70925619	617
70925621	207
70925621	699
70925625	301
70925625	303
70925690	631
70925693	167
70925696	301
70925696	303
70925702	375
70925702	391
70925702	447
70925703	283
70925703	285
70925703	287
70925703	293
70925703	333
70925703	475
70925704	113
70925704	139
70925704	283
70925704	285
70925704	371
70925705	375
70925705	391
70925705	417
70925706	335
70925706	447
70925706	449
70925719	113
70925719	689
70925719	691
70925719	699
70925721	695
70925731	171
70925731	689
70925785	363
70925806	663
70925806	707
70925834	629
70925852	553
70925852	561
70925852	619
70925852	621
70925863	693
70925872	53
70925872	693
70925919	675
70925960	151
70925960	153
70925974	443
70925991	455
70925997	371
70925997	379
70925997	481
70925997	485
70926049	129
70926049	133
70926049	207
70926049	555
70926049	561
70926049	573
70926049	579
70926049	627
70926106	121
70926106	701
70926115	331
70926126	491
70926127	687
70926127	693
70926137	177
70926154	359
70926155	429
70926157	681
70926161	431
70926161	435
70926165	493
70926192	681
70926208	113
70926292	325
70926292	553
70926292	565
70926292	629
70926292	631
70926356	605
70926356	607
70926356	609
70926356	611
70926533	629
70926533	631
70926533	699
70926542	605
70926551	665
70926551	677
70926622	199
70926626	297
70926647	289
70926694	279
70926694	477
70926762	649
70926762	661
70926768	325
70926838	279
70926838	281
70926838	413
70926838	429
70926838	437
70926850	575
70926850	583
70926874	239
70926919	171
70926919	633
70926919	683
70926919	685
70926946	111
70926957	443
70926977	453
70927029	253
70927034	713
70927034	725
70927035	713
70927035	725
70927075	265

https://truckmanualshub.com/

Part No.	Page
70927097	119
70927097	235
70927103	177
70927103	725
70927104	221
70927104	225
70927122	139
70927134	219
70927134	319
70927134	411
70927134	617
70927261	131
70927261	133
70927321	681
70927340	555
70927340	565
70927401	145
70927401	153
70927401	317
70927401	347
70927401	713
70927469	681
70927477	315
70927477	477
70927523	125
70927523	451
70927523	461
70927523	465
70927523	477
70927529	689
70927557	275
70927692	123
70927700	559
70927708	421
70927732	417
70927738	177
70927738	725
70927745	297
70927879	697
70927903	603
70927903	605
70927974	611
70927999	609
70928136	111
70928148	131
70928148	133
70928148	193
70928148	207
70928148	575
70928148	579
70928148	617
70928178	681
70928304	153
70928348	247
70928348	723
70928352	465
70928367	449
70928397	279
70928397	281
70928464	211
70928464	213
70928486	369
70928486	635
70928486	643
70928486	647
70928486	655
70928488	369
70928488	369
70928488	559
70928488	563
70928488	643
70928488	643
70928488	649
70928512	301
70928512	303
70928512	713
70928605	605
70928605	647
70928605	649
70928605	655
70928605	657
70928605	705
70928635	509
70928654	171
70928654	633
70928656	129
70928656	133
70928656	175
70928656	401
70928656	403
70928656	633
70928705	501
70929018	329
70929019	689
70929095	459
70929116	307
70929257	625
70929288	111
70929356	419
70929356	423
70929356	431
70929356	441
70929402	129
70929402	131
70929402	133
70929402	171
70929402	51
70929402	55
70929591	525
70929591	531
70929593	115
70929593	283
70929593	285
70929593	287
70929593	293
70929593	315
70929593	333
70929593	443
70929593	445
70929594	345
70929595	525
70929595	531
70929602	673
70929720	175
70929722	247
70929725	219
70929748	225
70929748	631
70929785	701
70929807	221
70929807	225
70929872	701
70929957	171
70930224	617
70930235	279
70930357	585
70930368	625
70930415	297
70930424	681
70930426	681
70930441	559
70930510	553
70930510	561
70930594	161
70930594	383
70930611	145
70930611	147
70930708	243
70930757	301
70930757	303
70930760	199
70930760	205
70930777	603
70930777	611
70930791	221
70930879	625
70930883	663
70930883	669
70930884	663
70930884	669
70930889	695
70930897	607
70930897	635
70930897	647
70930897	655
70930911	675
70930911	677
70930986	257
70930999	633
70931187	453
70931209	151
70931209	159
70931209	161
70931209	219
70931209	235
70931209	243
70931226	513
70931240	629
70931277	127
70931277	143
70931277	151
70931277	153
70931277	165
70931277	167
70931316	451
70931316	451
70931316	453
70931316	461
70931316	465
70931317	119
70931317	243
70931317	243
70931317	245
70931317	263
70931348	337
70931348	351
70931348	461
70931350	269
70931350	381
70931350	461
70931350	465
70931350	469
70931350	481
70931350	491
70931350	517
70931449	505
70931589	641
70931589	653
70931640	629
70931643	371
70931809	385
70931809	429
70931809	435
70931809	453
70931810	385
70931810	453
70931820	517
70931822	131
70931822	133
70931822	207
70931822	207
70931832	715
70931833	221
70931833	225
70931833	231
70931942	175
70931942	177
70931942	481
70931942	485
70932612	385
70932619	315
70932665	113
70932665	115
70932665	139
70932665	283
70932665	285
70932665	285
70932665	287
70932720	241
70932747	185
70932747	191
70932996	481
70932996	485
70932997	481
70932997	485
70933036	121
70933255	559
70933339	405
70933339	407
70933375	329
70933454	135
70933454	137
70933454	573
70933454	579
70933817	665
70933817	671
70933818	597
70933955	305
70933988	453
70933988	457
70933988	539
70934063	561
70934417	667
70934417	673
70934422	667
70934424	673
70934479	161
70934479	469
70934704	697
70934704	697
70934728	221
70934728	225
70934728	231
70934739	221
70934739	723
70934740	221
70934740	723
70934842	485
70934892	141
70934892	517
70934923	315
70935032	305
70935033	289
70935035	293
70935036	285
70935036	287
70935072	239
70935118	559
70935275	275
70935275	277
70935275	319
70935290	333
70935299	285
70935299	287
70935299	293
70935299	333
70935416	213
70935416	291
70935426	221
70935426	725

https://truckmanualshub.com/

INDEX

Part No.	Page
70935768	555
70935768	561
70935781	603
70935781	675
70935830	605
70935836	559
70935847	559
70935902	605
70935902	609
70935902	611
70935989	561
70936104	491
70936296	433
70936298	707
70936306	689
70936306	693
70936314	245
70936314	247
70936314	339
70936314	351
70936314	507
70936314	579
70936326	243
70936326	675
70936348	345
70936348	507
70936419	689
70936419	695
70936467	575
70936472	175
70936472	177
70936473	131
70936473	577
70936474	207
70936474	211
70936474	213
70936474	47
70936498	559
70936525	453
70936592	145
70936592	219
70936592	247
70936747	513
70936765	103
70936765	107
70936765	129
70936765	239
70936774	211
70936774	49
70936778	121
70936778	215
70936778	219
70936778	263
70936778	269
70936813	193
70937005	329
70937005	445
70937005	689
70937005	695
70937010	333
70937101	349
70937101	455
70937101	505
70937101	517
70937133	129
70937133	131
70937133	133
70937133	215
70937133	217
70937179	513
70937253	419
70937253	423
70937253	427
70937253	427
70937253	431
70937253	433
70937253	439
70937254	439
70937263	147
70937280	145
70937280	145
70937280	161
70937280	169
70937280	233
70937280	383
70937294	395
70937295	199
70937295	205
70937295	207
70937296	207
70937297	207
70937297	209
70937300	301
70937300	303
70937300	713
70937300	725
70937347	289
70937348	289
70937424	199
70937424	205
70937461	285
70937461	287
70937461	293
70937465	115
70937465	283
70937465	285
70937465	287
70937465	293
70937465	333
70937465	443
70937465	445
70937480	301
70937480	391
70937498	133
70937534	691
70937548	301
70937548	303
70937550	165
70937550	239
70937550	251
70937603	301
70937603	303
70937603	713
70937605	237
70937605	725
70937606	237
70937606	725
70937607	237
70937607	725
70937608	237
70937608	725
70937609	193
70937609	201
70937609	237
70937609	725
70937610	237
70937610	725
70937646	289
70937649	515
70937649	525
70937649	529
70937649	531
70937649	535
70937650	511
70937650	515
70937650	517
70937650	531
70937658	239
70937658	243
70937660	141
70937660	145
70937660	145
70937660	145
70937660	147
70937660	147
70937676	683
70937677	215
70937677	217
70937677	221
70937677	225
70937677	247
70937677	47
70937677	55
70937682	215
70937682	217
70937682	617
70937682	687
70937684	219
70937684	221
70937684	225
70937684	51
70937684	55
70937685	215
70937685	217
70937685	219
70937685	221
70937685	243
70937691	247
70937712	51
70937714	517
70937715	483
70937716	443
70937727	459
70937730	145
70950002	405
70950037	209
70950038	209
70950038	209
70950038	49
70950038	49
70950046	47
70950052	47
70950052	675
70950052	677
70950052	679
70950220	209
70950220	209
70950377	665
70950382	681
70950388	663
70950394	683
70950417	665
70950420	697
70950453	47
70950453	53
70950453	553
70950453	683
70950490	681
70950717	223
70950945	209
70950945	209
70951055	213
70951067	99
71012174	559
71122510	413
71122510	721
71124448	457
71127313	411
71127313	457
71127313	461
71127313	467
71127313	469
71127313	723
71130258	295
71130258	297
71130258	723
71133361	127
71133361	723
71148120	209
71148120	49
71148120	53
71148120	711
71148120	723
71149388	713
71149388	725
71149894	301
71149894	303
71149894	713
71149894	725
71149895	301
71149895	303
71149895	713
71149895	725
71149896	301
71149896	303
71149896	315
71149896	713
71149896	725
71149992	713
71149992	723
71149999	301
71149999	713
71151362	717
71154722	279
71154722	281
71154722	329
71154722	331
71154722	721
71157144	471
71157144	723
71160040	677
71160040	679
71160055	681
71160067	677
71160067	679
71160085	681
71160303	677
71160303	679
71161396	297
71162565	677
71162781	665
71162781	669
71162782	665
71162782	669
71166170	665
71166170	669
71166171	665
71166171	669
71166172	665
71166172	669
71169204	707
71170388	691
71170388	695
71170388	707
71170390	691
71170390	695
71170390	707
71173328	257
71173857	297
71174391	289
71174391	305
71174718	605
71174718	609
71175918	691
71175918	695
71175918	707
71175919	691
71175919	695
71175919	707

https://truckmanualshub.com/

Part No.	Page
71175961	677
71175961	679
71175962	677
71175962	679
71175963	677
71175963	679
71176951	605
71176951	607
71176962	605
71176962	609
71176963	607
71176964	605
71176964	607
71176964	609
71176964	611
711770	177
711770	721
71177385	679
71177386	679
71178962	111
71179395	295
71179395	297
71181443	335
71182840	283
71182840	285
71182840	335
71182840	475
71183535	675
71183746	675
71183747	675
71183750	675
71183757	665
71183757	669
71183828	675
71183839	677
71184133	677
71184134	677
71184135	677
71184144	677
71184144	679
71184145	675
71184147	675
71184148	675
71184188	707
71184401	609
71184409	609
71184415	605
71184418	605
71184418	607
71184418	609
71184418	611
71186166	411
71186745	677
71186745	679
71186746	677
71186746	679
71186814	513
71188145	245
71188145	459
71188145	461
71188145	465
71188503	603
71188503	605
71188503	607
71188503	609
71188503	611
71188503	613
71188504	603
71188504	605
71188504	607
71188504	609
71188504	611
71188504	723
71188949	457
71190292	677
71190960	503
71191799	211
71192243	395
71192243	413
71192243	723
71193260	247
71194263	115
71194263	333
71194367	459
71195328	677
71195328	679
71195913	329
71195913	721
71197117	283
71197117	285
71197117	287
71197117	293
71197117	333
71197117	475
71197323	285
71197376	451
712208	679
71300327	609
71300327	611
71300507	679
71300509	677
71302422	613
71302467	677
71302468	677
71302469	677
71302470	677
71302471	677
71304149	265
71304149	269
71304149	541
71304261	663
71304261	669
71304262	663
71304263	663
71304264	663
71304266	663
71304266	669
71304267	663
71304267	669
71304271	665
71304271	669
71304292	665
71304292	669
71304362	115
71304362	333
71305916	517
71306949	185
71306949	725
71307131	517
71307132	517
71307626	689
71308156	285
71308156	293
71308156	725
71308770	419
71308770	423
71308770	429
71308770	435
71308770	441
71308770	721
71308951	127
71308951	431
71308951	433
71308951	439
71308951	441
71308951	721
71308984	469
71308984	721
71308995	457
71309117	301
71309117	303
71309117	413
71309117	721
71309514	663
71309514	667
71309515	663
71309515	667
71309766	289
71309767	371
71309767	379
71309767	445
71309768	115
71309768	283
71309768	287
71309768	333
71309768	725
71310379	663
71310379	667
71310976	265
71310976	269
71311456	665
71311456	671
71312323	665
71312323	667
71312323	671
71312323	673
71312602	115
71312602	283
71312602	287
71312602	289
71312602	333
71312602	373
71312602	379
71312602	445
71312603	113
71312603	115
71312603	289
71312819	289
71312823	289
71314321	329
71314321	331
71314321	725
71314481	663
71314481	669
71314833	315
71314842	315
71314999	317
71315780	385
71315780	413
71315785	385
71315785	413
71315999	301
71315999	303
71315999	721
71317628	679
71317841	267
71317841	299
71317841	315
71318052	331
71319846	253
71323575	501
71325523	727
71325553	395
71326336	507
71327160	257
71327595	663
71327984	455
71328361	291
71328361	585
71328362	575
71328362	585
71328365	291
71328365	575
71328365	585
71328912	707
71330802	333
71332011	291
71332011	365
71333276	253
71333299	255
71333904	253
71334329	573
71334329	579
71334986	691
71334986	693
71334988	689
71334988	693
71334989	689
71334989	693
71335184	295
71335184	297
71335184	721
71335195	329
71335195	331
71335689	353
71335690	315
71335782	675
71335783	675
71335784	675
71336386	119
71337414	223
71337414	227
71338308	689
71338308	693
71338651	691
71338789	691
71338789	693
71338799	691
71338799	693
71339238	665
71339238	667
71339238	673
71339847	119
71339847	141
71339847	525
71339847	531
71340437	665
71340437	667
71341448	395
71341450	395
71341450	725
71342216	219
71342216	243
71342216	675
71342217	675
71342768	139
71343344	47
71343344	507
71343344	53
71344597	681
71344598	681
71344647	285
71344649	285
71344833	457
71345822	517
71345898	397
71345898	727
71346267	113
71346267	285
71346267	287
71346267	293
71346267	333
71346998	119
71347777	681
71347780	681
71347782	681
71347910	231
71348314	415
71348455	665
71348455	707

https://truckmanualshub.com/

INDEX

Part No.	Page
71348560	41
71348560	45
71349270	115
71349270	287
71349270	293
71349270	333
71349763	525
71349763	531
71349811	287
71349811	293
71349811	333
71349813	115
71349813	287
71349813	293
71349813	333
71350535	471
71350536	471
71351200	395
71351285	211
71351285	47
71351389	175
71351392	257
71351816	727
71351859	97
71352670	581
71352828	265
71352828	269
71352945	559
71353127	283
71353127	373
71353127	379
71354306	691
71354306	693
71354345	477
71354636	415
71354855	309
71354855	311
71354856	311
71354859	309
71354859	311
71354861	309
71354861	311
71354863	309
71354863	311
71354864	311
71354865	309
71354865	311
71355001	311
71355063	687
71355063	701
71355339	635
71355339	647
71355339	655
71355340	643
71355340	651
71355384	661
71355395	699
71355604	161
71356058	283
71356058	443
71356058	445
71356060	115
71356060	283
71356060	285
71356060	287
71356060	293
71356060	333
71356060	475
71356060	723
71356061	283
71356061	285
71356061	287
71356061	293
71356061	333
71356061	475
71356061	725
71356067	283
71356529	113
71356529	641
71356529	653
71356938	283
71358545	641
71358545	653
71358564	575
71359538	681
71359545	691
71359772	689
71359841	689
71359841	693
71359864	697
71359865	697
71359889	705
71359890	705
71359891	705
71359897	701
71359912	703
71359922	703
71359923	703
71359927	703
71359946	703
71360326	253
71360328	253
71360330	253
71360331	253
71360332	253
71360333	253
71360334	253
71360335	253
71360336	253
71360337	253
71360338	253
71360341	253
71360342	253
71360343	255
71360344	255
71360345	255
71360348	253
71360349	253
71360350	253
71360378	253
71360379	255
71360381	253
71360382	253
71361243	609
71361312	609
71361355	613
71361357	613
71361358	613
71361359	613
71361361	613
71361364	613
71361367	613
71361368	613
71361406	707
71361720	171
71361831	165
71361940	171
71361941	171
71361947	171
71362149	575
71362390	139
71362391	139
71362525	153
71362539	613
71362813	241
71362941	307
71362941	311
71362941	313
71362970	457
71363526	301
71363526	303
71363845	177
71364016	597
71364024	597
71364349	141
71364946	713
71364946	725
71365064	329
71365064	331
71365065	331
71365101	605
71365101	609
71365102	589
71365114	589
71365245	575
71365245	589
71365245	691
71365312	687
71365412	39
71365412	43
71365476	239
71365477	239
71365880	575
71365883	575
71366126	589
71366127	589
71366540	47
71366540	53
71367032	119
71367037	47
71367037	53
71367308	313
71367309	309
71367309	313
71367312	313
71367314	313
71367316	313
71367317	309
71367317	313
71367320	309
71367320	313
71367323	309
71367323	313
71367324	309
71367324	313
71367526	313
71367528	309
71367528	313
71367529	311
71368074	41
71368074	45
71368570	283
71368598	455
71368741	129
71368741	133
71368741	137
71368761	283
71368951	97
71368953	103
71368953	107
71368961	101
71368961	105
71368961	109
71368962	101
71368962	105
71368962	109
71368963	101
71368963	105
71368963	109
71368991	291
71369299	665
71369299	669
71369307	671
71369307	673
71369670	51
71369761	207
71369761	725
71369762	209
71369877	101
71369877	105
71369877	109
71370120	301
71370120	303
71370121	301
71370121	303
71370121	723
71370165	111
71370232	41
71370232	45
71370306	223
71370306	257
71370496	301
71370496	303
71370496	727
71370508	141
71370570	257
71370634	301
71370634	303
71370634	723
71370808	257
71370813	253
71370852	257
71370854	257
71370855	257
71370856	257
71370858	257
71370859	257
71370860	257
71370861	257
71370862	257
71370863	257
71370864	257
71370865	257
71370866	257
71370867	257
71370868	257
71370872	257
71370874	257
71370877	257
71370878	257
71370879	257
71370880	257
71370881	257
71370926	665
71370926	667
71370926	707
71370926	727
71370934	707
71371331	199
71371331	205
71371332	203
71371332	205
71371333	199
71371333	205
71371336	199
71371336	205
71371338	199
71371338	205
71371343	199
71371343	205
71371346	199
71371346	205
71371347	199
71371347	205
71371349	199
71371520	359
71371520	721
71371526	359
71371526	721
71371720	41

https://truckmanualshub.com/

Part No.	Page
71371720	45
71372132	691
71372132	695
71372133	691
71372133	695
71372724	207
71372724	233
71372724	727
71372880	51
71372880	723
71373126	199
71373127	199
71373127	205
71373144	195
71373144	201
71373144	203
71373144	205
71373145	195
71373146	199
71373146	205
71373403	619
71373403	621
71373513	503
71373538	555
71373538	565
71373538	617
71373684	415
71373693	457
71373962	321
71374425	265
71374425	269
71374564	101
71374564	105
71374564	109
71374565	101
71374565	105
71374565	109
71374663	319
71374666	319
71374667	319
71374669	319
71374670	319
71374671	321
71374672	315
71374674	315
71374776	321
71374778	321
71374779	321
71374781	321
71374782	321
71374785	609
71374790	611
71374793	611
71374794	611
71374796	315
71374798	315
71374803	319
71374807	321
71374807	323
71374808	321
71374808	323
71374816	315
71374827	643
71374828	643
71374831	369
71374831	635
71374831	637
71374831	643
71374831	647
71374831	655
71374834	637
71374834	643
71374834	649
71374836	635
71374836	647
71374840	635
71374840	643
71374840	647
71374840	655
71374841	643
71374842	639
71374842	643
71374842	651
71374843	639
71374843	643
71374843	651
71374844	639
71374844	643
71374844	651
71374845	639
71374845	643
71374845	651
71374846	639
71374846	643
71374846	651
71374847	639
71374847	643
71374847	651
71374848	643
71374849	643
71374853	637
71374853	649
71374853	657
71374855	637
71374855	657
71374857	637
71374859	635
71374859	647
71374859	655
71374860	641
71374860	653
71374865	641
71374866	641
71374867	641
71374868	635
71374870	637
71374870	649
71374870	657
71374872	639
71374872	651
71374875	639
71374875	651
71374876	639
71374876	651
71374877	639
71374877	651
71374879	639
71374879	651
71374880	639
71374880	651
71374881	639
71374881	651
71374881	659
71374882	639
71374882	651
71374883	639
71374883	651
71374883	659
71374884	639
71374884	651
71374884	659
71374886	639
71374886	651
71374886	655
71374890	641
71374890	653
71374890	661
71374891	641
71374891	653
71374892	641
71374894	637
71374894	649
71374894	657
71374895	637
71374895	649
71374895	657
71374896	637
71374896	649
71374896	657
71374897	637
71374897	649
71374897	657
71374898	637
71374898	649
71374900	637
71374900	649
71374900	657
71374901	641
71374901	653
71374904	639
71374904	651
71374907	641
71374908	641
71374908	653
71374908	661
71374909	641
71374909	653
71374909	661
71374915	635
71374915	639
71374915	641
71374915	647
71374918	635
71374918	647
71374918	655
71374932	315
71374958	639
71374958	651
71374959	651
71374960	641
71374960	653
71374961	661
71374963	637
71374967	635
71374967	643
71374967	647
71374968	643
71374970	643
71375122	317
71375335	301
71375335	303
71375388	265
71375388	271
71375556	315
71375559	315
71375564	315
71375751	671
71375752	671
71375902	237
71375911	245
71376042	457
71376154	389
71376154	397
71376157	389
71376158	397
71376170	389
71376312	501
71376324	503
71376349R	503
71376350	511
71376446	683
71376758P	413
71376825	243
71376825	319
71376825	347
71376825	725
71376888	301
71376907	321
71376908	321
71376909	321
71377109	179
71377109	725
71377310	301
71377310	303
71377407	677
71377408	677
71377410	679
71377411	679
71377412	679
71377413	679
71377414	679
71377415	679
71377416	679
71377417	679
71377418	679
71377419	675
71377420	675
71377531	675
71377534	679
71377535	679
71377548	677
71377549	679
71377709	675
71377710	677
71377711	679
71377712	679
71377713	679
71377714	679
71377715	679
71377716	679
71377717	681
71377718	681
71377719	681
71377720	681
71377721	681
71377722	679
71377723	679
71377941	631
71377945	599
71378013	433
71378014	491
71378016	273
71378019	359
71378021	343
71378022	343
71378025	341
71378060	101
71378104	225
71378250	381
71378364	171
71378364	173
71378441	119
71378577	359
71378579	359
71378711	715
71378711	727
71378873	279
71378873	305
71378873	477
71379103	295
71379105	285
71379105	711
71379105	721
71379126	41
71379126	45
71379126	473
71379127	39
71379127	41
71379127	43
71379127	45

https://truckmanualshub.com/

INDEX

Part No.	Page
71379127	521
71379127	527
71379127	529
71379128	39
71379128	41
71379128	43
71379128	45
71379128	525
71379128	531
71379129	39
71379129	41
71379129	43
71379129	45
71379129	473
71379129	521
71379130	39
71379130	43
71379132	41
71379132	43
71379132	515
71379134	263
71379134	267
71379249	381
71379254	363
71379254	517
71379260	389
71379261	389
71379303	553
71379303	561
71379304	553
71379304	561
71379306	603
71379323	235
71379325	603
71379325	605
71379434	41
71379519	333
71379520	333
71379601	207
71379601	209
71379601	49
71379601	53
71379601	721
71379631	305
71379631	307
71379701	175
71379811	405
71379824	483
71379824	487
71379825	481
71379825	485
71380028	297
71380043	297
71380423	263
71380460	289
71380463	297
71380468	115
71380905	297
71380994	471
71381213	431
71381680	301
71381682	301
71381682	303
71382053	289
71382055	289
71382057	289
71382057	293
71382256	385
71382257	385
71382269	383
71382607	319
71382694	49
71382716	443
71382716	445
71382758	385
71382758	723
71382759	385
71382759	723
71382868	443
71382868	445
71382871	115
71382871	443
71382871	445
71382933	485
71382983	289
71382983	293
71382985	289
71383233	101
71383233	97
71383653	185
71383661	187
71383662	187
71383667	185
71383667	189
71383673	189
71383736	381
71383737	381
71383783	263
71383783	267
71383783	271
71383785B	263
71383785B	267
71383914	243
71383932	387
71383932	725
71383934	387
71383934	727
71384272	199
71384272	205
71384284	699
71384406	597
71384407	597
71384411	597
71384412	597
71384413	597
71384414	597
71384551	201
71384551	205
71384552	199
71384552	205
71384553	203
71384555	203
71384556	203
71384558	203
71384558	205
71384836	279
71384878	707
71384879	707
71384912	475
71384922	469
71385055	209
71385055	49
71385108	243
71385633	265
71385633	269
71385690	471
71385694	475
71385697	475
71385793	41
71385801	475
71385801	711
71385801	721
71385802	471
71385836	373
71385837	371
71385837	711
71385837	721
71385907	219
71385907	235
71385907	243
71385907	675
71385996	119
71386129	327
71386139	129
71386139	133
71386140	129
71386140	133
71386169	351
71386195	381
71386353	633
71386394	427
71386394	439
71386400	413
71386414	555
71386414	565
71386436	209
71386436	53
71386557	603
71386557	609
71386572	609
71386574	645
71386574	647
71386668	279
71386669	279
71386773	521
71386805	231
71386806	231
71386807	223
71386807	231
71386866	681
71386867	681
71386880	111
71386886	97
71386887	97
71386890	105
71386890	99
71386895	99
71386986	47
71386989	47
71386992	47
71387142	177
71387145	179
71387148	177
71387152	139
71387177	171
71387178	171
71387181	171
71387185	139
71387186	139
71387195	141
71387205	177
71387266	141
71387267	165
71387268	165
71387271	161
71387272	161
71387273	161
71387274	165
71387275	165
71387278	161
71387279	161
71387280	161
71387281	161
71387292	139
71387293	179
71387295	163
71387297	163
71387297	723
71387307	375
71387307	391
71387325	471
71387329	347
71387334	353
71387335	353
71387336	353
71387337	353
71387351	381
71387355	389
71387357	389
71387375	413
71387393	361
71387393	367
71387408	233
71387413	233
71387414	235
71387414	701
71387416	233
71387417	233
71387418	239
71387419	249
71387420	163
71387420	239
71387422	239
71387423	239
71387424	239
71387453	339
71387454	337
71387455	339
71387459	339
71387463	339
71387464	339
71387465	339
71387466	339
71387470	361
71387515	371
71387517	331
71387523	331
71387538	463
71387546	411
71387552	715
71387553	715
71387554	715
71387576	337
71387577	337
71387578	337
71387580	337
71387584	337
71387587	339
71387625	97
71387643	117
71387644	117
71387650	97
71387676	429
71387676	437
71387677	429
71387677	437
71387678	427
71387678	437
71387700	351
71387703	411
71387703	413
71387703	427
71387703	435
71387703	439
71387704	411
71387710	411
71387730	47
71387749	41
71387749	45
71387749	99
71387755	117
71387759	515
71387761	515
71387797	121
71387797	193
71387797	211
71387797	577
71387797	587
71387798	401
71387801	389

https://truckmanualshub.com/

Part No.	Page
71387803	349
71387807	349
71387826	351
71387842	381
71387845	375
71387846	381
71387848	375
71387848	391
71387872	341
71387891	279
71387894	301
71387894	303
71387895	301
71387895	303
71387896	301
71387896	303
71387896	713
71387896	725
71387900	263
71387900	267
71387908	231
71387975	119
71387996	125
71388052	363
71388056	401
71388056	403
71388061	121
71388062	121
71388063	119
71388063	207
71388064	119
71388071	129
71388072	131
71388073	131
71388073	133
71388076	207
71388081	557
71388085	555
71388086	555
71388086	561
71388089	121
71388093	627
71388098	401
71388099	401
71388100	401
71388100	403
71388129	167
71388131	169
71388133	233
71388133	237
71388136	145
71388142	167
71388149	167
71388152	167
71388154	167
71388157	189
71388167	139
71388178	183
71388188	193
71388189	139
71388202	329
71388206	331
71388207	335
71388209	335
71388212	335
71388213	335
71388216	335
71388216	709
71388216	721
71388217	285
71388217	335
71388226	263
71388226	267
71388230	275
71388232	275
71388233	275
71388234	275
71388237	263
71388237	267
71388239	295
71388248	265
71388248	271
71388256	375
71388256	391
71388265	427
71388301	341
71388302	341
71388312	341
71388314	341
71388315	341
71388318	341
71388321	343
71388322	347
71388351	419
71388351	423
71388391	249
71388439	353
71388441	353
71388442	353
71388451	355
71388453	353
71388458	355
71388459	353
71388465	355
71388466	353
71388476	427
71388476	439
71388483	419
71388483	423
71388490	419
71388490	423
71388494	427
71388494	439
71388712	375
71388712	711
71388712	721
71388713	707
71388717	393
71388736	375
71388736	391
71388739	493
71388748	371
71388751	513
71388752	513
71388826	401
71388826	403
71388829	363
71388833	363
71388843	363
71388844	363
71388852	111
71388852	645
71388856	207
71388864	553
71388864	559
71388873	113
71388873	635
71388876	47
71388877	209
71388877	49
71388880	121
71388882	121
71388883	99
71388887	99
71388895	47
71388895	53
71388899	47
71388900	99
71388912	543
71388938	517
71388940	457
71388942	517
71388944	517
71388967	381
71388968	427
71388968	439
71388972	429
71388973	429
71388973	435
71388974	429
71388975	431
71388975	441
71388998	51
71389053	349
71389055	351
71389057	351
71389084	341
71389158	141
71389158	41
71389158	45
71389182	441
71389184	431
71389184	441
71389185	431
71389185	441
71389212	339
71389221	279
71389229	683
71389230	683
71389232	683
71389233	683
71389235	683
71389268	687
71389309	221
71389309	225
71389310	231
71389313	221
71389313	225
71389319	247
71389344	317
71389356	689
71389362	689
71389381	689
71389385	689
71389386	689
71389394	689
71389394	697
71389405	49
71389405	53
71389409	47
71389410	105
71389410	99
71389428	419
71389428	423
71389429	419
71389429	423
71389451	381
71389473	381
71389474	381
71389509	173
71389511	173
71389512	173
71389513	173
71389514	173
71389515	173
71389516	173
71389522	493
71389602	687
71389611	331
71389638	285
71389638	287
71389638	293
71389641	113
71389647	663
71389647	669
71389710	497
71389729	623
71389731	623
71389732	623
71389733	623
71389737	603
71389740	401
71389741	401
71389742	401
71389743	401
71389743	615
71389746	223
71389746	227
71389746	629
71389747	609
71389754	219
71389754	575
71389765	363
71389766	633
71389769	629
71389775	685
71389784	513
71389785	513
71389811	233
71389812	237
71389813	237
71389814	237
71389815	237
71389818	243
71389818	675
71389842	455
71389862	419
71389862	423
71389863	419
71389863	423
71389910	97
71389997	405
71389997	407
71390000	411
71390005	343
71390079	111
71390080	113
71390081	113
71390082	113
71390084	111
71390087	113
71390090	111
71390091	111
71390092	113
71390093	417
71390101	401
71390101	403
71390122	161
71390148	503
71390152	501
71390157	501
71390178	331
71390179	687
71390183	333
71390185	469
71390188	333
71390188	709
71390188	721
71390190	333
71390191	495
71390196	443
71390196	445
71390199	443
71390199	445
71390199	709
71390199	721
71390203	113
71390204	115
71390208	115
71390209	115

https://truckmanualshub.com/

INDEX

Part No.	Page
71390209	709
71390209	721
71390210	115
71390210	709
71390210	721
71390223	331
71390241	513
71390242	513
71390248	513
71390259	405
71390259	407
71390260	405
71390267	409
71390268	409
71390279	409
71390284	409
71390292	687
71390314	179
71390316	231
71390323	235
71390325	233
71390325	239
71390357	489
71390360	481
71390364	477
71390384	507
71390407	171
71390413	171
71390414	171
71390417	179
71390450	161
71390451	161
71390452	161
71390453	161
71390468	163
71390472	163
71390502	687
71390517	469
71390575	329
71390654	415
71390672	461
71390672	467
71390673	413
71390755	515
71390756	489
71390759R	517
71390762	515
71390764	503
71390770	517
71390789	523
71390804	259
71390806	259
71390809	259
71390810	259
71390813	259
71390815	259
71390816	259
71390817	259
71390820	259
71390821	259
71390822	259
71390823	259
71390824	259
71390825	259
71390851	443
71390853	443
71390855	675
71390860	483
71390861	113
71390863	633
71390866	633
71390867	633
71390867	683
71390870	111
71390872	111
71390887	681
71390888	681
71390909	545
71390910	537
71390911	539
71390911	543
71390913	543
71390913	551
71390914	513
71390926	481
71390929	491
71390939	413
71391001	259
71391002	259
71391003	259
71391016	219
71391017	219
71391018	243
71391020	245
71391021	219
71391021	243
71391021	245
71391021	385
71391021	395
71391021	459
71391031	125
71391036	125
71391037	125
71391039	127
71391040	101
71391040	97
71391041	101
71391041	97
71391045	51
71391083	179
71391083	575
71391083	587
71391086	305
71391087	305
71391100	207
71391112	537
71391113	539
71391114	515
71391131	481
71391131	487
71391133	479
71391135	477
71391140	477
71391141	477
71391143	497
71391146	501
71391147	499
71391150	503
71391153	193
71391153	723
71391157	169
71391158	145
71391172	145
71391175	193
71391181	543
71391219	329
71391220	329
71391221	329
71391224	329
71391225	329
71391230	625
71391234	129
71391234	133
71391236	573
71391238	625
71391239	631
71391240	629
71391241	629
71391242	629
71391243	629
71391244	629
71391246	557
71391246	567
71391246	581
71391252	557
71391252	567
71391252	579
71391253	171
71391254	171
71391255	171
71391256	171
71391257	363
71391260	631
71391261	363
71391263	367
71391270	363
71391303	175
71391322	193
71391336	481
71391343	395
71391403	249
71391404	249
71391416	239
71391417	239
71391418	247
71391418	625
71391420	215
71391421	243
71391424	225
71391435	483
71391435	487
71391441	483
71391441	487
71391453	553
71391453	561
71391453	601
71391461	123
71391462	123
71391463	123
71391466	123
71391489	343
71391501	161
71391515	177
71391516	177
71391518	143
71391519	143
71391526	417
71391529	333
71391540	123
71391541	123
71391567	289
71391572	663
71391576	395
71391577	395
71391579	395
71391592	397
71391620	537
71391624	545
71391624	549
71391625	513
71391643	363
71391648	207
71391653	631
71391654	363
71391654	499
71391656	627
71391657	631
71391659	327
71391660	363
71391709	247
71391710	221
71391713	139
71391726	139
71391746	145
71391747	145
71391748	147
71391752	359
71391762	339
71391763	337
71391792B	289
71391805	431
71391805	435
71391831	521
71391835	521
71391848	501
71391849	499
71391850	497
71391851	141
71391860	221
71391860	253
71391860	47
71391860	727
71391866	221
71391869	215
71391869	217
71391869	233
71391869	725
71391870	221
71391870	247
71391871	247
71391874	243
71391897	141
71391899	141
71391932	513
71391935	497
71391938	497
71391939	497
71391946	497
71391947	497
71391948	499
71391951	497
71391953	503
71391954	501
71391956	499
71391957	501
71391960	503
71391961	505
71391962	505
71391963	505
71391964	505
71391966	503
71391967	501
71391968	501
71391969	501
71391970	501
71391971	501
71391972	501
71391974	477
71391975	477
71392194	625
71392195	625
71392196	631
71392197	631
71392198	629
71392199	631
71392601	503
71392602	503
71392605	501
71392610	501
71392611	499
71392616	499
71392616	505
71392618	503
71392620	499
71392621	505
71392622	505
71392624	505
71392654	501
71392656	499
71392657	499

https://truckmanualshub.com/

Part No.	Page
71392658	505
71392663	503
71392664	503
71392675	477
71392677	431
71392677	433
71392680	427
71392690	351
71392691	431
71392691	441
71392693	433
71392693	439
71392693	721
71392700	453
71392705	123
71392705	519
71392766	633
71392767	633
71392776	41
71392776	417
71392787	683
71392788	683
71392830	531
71392831R	525
71392832R	525
71392833R	527
71392835R	529
71392836R	533
71392837	525
71392838P	529
71392841R	533
71392842	531
71392843	515
71392846	515
71392847	517
71392852	601
71392853	601
71392854	601
71392855	601
71392856	601
71392857	601
71392870	643
71392870	675
71392872	575
71392872	587
71392875	575
71392875	587
71392876	179
71392876	575
71392876	587
71392879	553
71392881	575
71392882	553
71392886	367
71392887	367
71392888	367
71392889	367
71392890	367
71392891	367
71392892	367
71392894	367
71392895	367
71392896	367
71392897	367
71392898	367
71392899	367
71392900	367
71393101	329
71393107	359
71393118	343
71393122	345
71393220	329
71393236	687
71393251	505
71393252	503
71393253	503
71393257	503
71393258	457
71393259	457
71393260	459
71393261	459
71393262	459
71393263	455
71393264	455
71393265	455
71393268	455
71393269	455
71393273	455
71393274	455
71393277	233
71393281	179
71393282	179
71393285	233
71393287	241
71393301	177
71393307	139
71393323	161
71393324	161
71393350	237
71393384	395
71393387	395
71393389	395
71393391	395
71393392	395
71393394	397
71393401	455
71393402	455
71393403B	457
71393404	457
71393405	455
71393410	503
71393411	503
71393413	497
71393414	497
71393419	457
71393424B	507
71393425P	507
71393429	451
71393439	381
71393440	419
71393440	423
71393440	433
71393455	161
71393463	193
71393467	177
71393468	143
71393469	143
71393470	143
71393471	143
71393472	143
71393473	143
71393474	143
71393475	143
71393476	517
71393492	521
71393493	521
71393494	521
71393497R	531
71393506	121
71393512	49
71393520	117
71393523	117
71393524	51
71393525	119
71393526	451
71393529	429
71393529	435
71393532	453
71393533	713
71393534	453
71393534	713
71393534	723
71393547	451
71393551	193
71393601	145
71393604	145
71393605	145
71393609	167
71393612	167
71393613	167
71393614	167
71393615	167
71393616	193
71393617	193
71393619	193
71393620	193
71393623	233
71393636	127
71393650	125
71393665	295
71393671	295
71393694	171
71393695B	171
71393703	165
71393703	251
71393704	245
71393713	221
71393713	225
71393716	243
71393717	243
71393717	715
71393718	243
71393718	675
71393742	245
71393776	263
71393778	263
71393780	263
71393782	265
71393784	263
71393786	263
71393788	263
71393812	431
71393812	441
71393813	431
71393815	431
71393815	441
71393818	433
71393818	439
71393831	121
71393833	119
71393834	121
71393835	121
71393838	49
71393839	99
71393840	121
71393841	117
71393842	117
71393842	207
71393843	573
71393847	131
71393847	133
71393854	483
71393854	487
71393867	511
71393868	511
71393869	511
71393870	511
71393871R	511
71393873	507
71393875	509
71393876	143
71393878	143
71393879	143
71393881	143
71393883	143
71393885	141
71393886	143
71393887	143
71393888	143
71393893	139
71393893	193
71393893	199
71393893	723
71393901	507
71393907	507
71393908	507
71393909	507
71393913	507
71393916	483
71393916	487
71393917	497
71393918	497
71393919	543
71393919	551
71393921	547
71393923	547
71393924	537
71393926	145
71393926	169
71393926	233
71393926	233
71393929	169
71393931	233
71393938	147
71393939	167
71393940	145
71393941	147
71393943	161
71393943	195
71393944	147
71393947	147
71393948	193
71393949	193
71393950	193
71393977R	527
71393978R	527
71393982	525
71393983R	527
71393984	523
71393985R	529
71393987	533
71393992	523
71393994	523
71393995	523
71394119	431
71394119	441
71394126	367
71394127	367
71394128	367
71394129	367
71394130	367
71394131	367
71394132	367
71394133	367
71394134	367
71394137	305
71394138	573
71394138	583
71394139	553
71394140	553
71394140	561
71394144	211
71394146	575
71394150	575
71394151	575
71394161	555
71394168	553
71394169	325
71394170	325
71394172	207

https://truckmanualshub.com/

INDEX

Part No.	Page
71394173	573
71394175	41
71394175	473
71394222	315
71394223	315
71394303	545
71394303	549
71394306	547
71394318	477
71394321	499
71394321	505
71394322	499
71394323	499
71394325	505
71394352	417
71394352	711
71394352	721
71394353	329
71394354	329
71394356B	417
71394363	333
71394364	333
71394397	331
71394402	533
71394405R	527
71394406	531
71394407R	529
71394413R	533
71394414	533
71394415	533
71394418	511
71394419	505
71394420	505
71394425R	535
71394472	153
71394501	141
71394502	141
71394502	151
71394503	141
71394514	145
71394515	145
71394516	145
71394517	145
71394518	145
71394519	145
71394521	145
71394522	145
71394523	141
71394525	139
71394534	453
71394535	463
71394535	467
71394540	431
71394540	441
71394544	429
71394681	499
71394688	505
71394690	39
71394690	41
71394691	39
71394691	41
71394692	39
71394693	41
71394696	39
71394697	41
71394716	233
71394716	327
71394717	237
71394725	223
71394791	143
71394792	143
71394795	177
71394796	175
71394797	177
71394799	175
71394800	165
71394821	265
71394821	269
71394833	427
71394841	431
71394841	441
71394865R	535
71394867	529
71394868R	533
71394873R	527
71394874	525
71394874	531
71394877	147
71394878	145
71394879	147
71394880	175
71394884	147
71394885	147
71394886	183
71394887	183
71394888	183
71394889	183
71394890	147
71394891	147
71394892	147
71394893	147
71394894	183
71394896	149
71394897	149
71394898	149
71394899	147
71394900	147
71394920	507
71394933	349
71394965	427
71395048	249
71395065	701
71395151	683
71395152	683
71395153	683
71395154	683
71395155	683
71395157	683
71395158	683
71395159	683
71395160	683
71395161	683
71395162	683
71395163	683
71395167	699
71395172	695
71395172	701
71395173	695
71395173	701
71395175	115
71395205	717
71395205	727
71395218	717
71395233	397
71395234	397
71395236	397
71395245	383
71395246	385
71395247	383
71395249	383
71395250	385
71395250	727
71395252	411
71395255	139
71395263	427
71395263	439
71395266	431
71395322	661
71395325	645
71395332	687
71395334	341
71395335	341
71395336	341
71395337	343
71395338	343
71395339	341
71395346	349
71395351	525
71395351	531
71395352	525
71395352	531
71395353	525
71395353	531
71395354	525
71395354	531
71395358	521
71395372	515
71395378R	529
71395384R	527
71395386P	511
71395387P	511
71395388	511
71395389	511
71395390	511
71395407	343
71395413	359
71395422	339
71395565	113
71395571	413
71395572	413
71395573	413
71395582	427
71395582	439
71395583	427
71395583	439
71395585	687
71395586	687
71395589	427
71395589	439
71395728	127
71395734	51
71395749	127
71395750	125
71395752	175
71395753	175
71395754	167
71395757	39
71395757	43
71395759	179
71395760	147
71395761	179
71395762	41
71395762	45
71395763	161
71395763	195
71395764	169
71395767	145
71395768	147
71395769	147
71395770	177
71395771	147
71395773	149
71395776B	115
71395781	699
71395787	699
71395789	695
71395789	701
71395799	297
71395813	113
71395825	663
71395825	673
71395830	249
71395832	215
71395832	217
71395838	217
71395838B	215
71395840	215
71395840	217
71395848	175
71395848	233
71395853	413
71395866	427
71395866	437
71395872	115
71395906	125
71395976	457
71395983	483
71395983	487
71395984	537
71395988	41
71395989	39
71395991	537
71395992R	505
71395993	539
71395996	503
71395997	503
71395998	457
71395998	727
71396110	469
71396124	461
71396126	639
71396127	639
71396127	651
71396128	639
71396128	651
71396129	641
71396129	653
71396130	641
71396130	653
71396130	661
71396131	641
71396131	653
71396132	641
71396132	653
71396133	641
71396133	653
71396134	637
71396136	637
71396136	649
71396137	641
71396137	643
71396137	653
71396138	641
71396139	649
71396139	657
71396140	639
71396140	651
71396141	639
71396141	651
71396142	639
71396142	651
71396143	369
71396144	369
71396146	369
71396147	369
71396148	369
71396149	369
71396150	369
71396151	369
71396152	369
71396153	369
71396154	369
71396155	369
71396156	369
71396158	369
71396159	369
71396160	369
71396161	369
71396162	369
71396163	369

https://truckmanualshub.com/

Part No.	Page
71396164	369
71396165	369
71396166	369
71396167	369
71396168	369
71396169	369
71396169	643
71396170	369
71396171	369
71396173	369
71396174	369
71396175	369
71396176	369
71396177	369
71396178	369
71396179	659
71396180	659
71396180	721
71396181	659
71396182	659
71396183	659
71396184	659
71396185	659
71396186	659
71396187	659
71396188	661
71396189	661
71396190	661
71396191	661
71396192	661
71396193	661
71396194	661
71396195	661
71396197	661
71396198	657
71396199	657
71396200	657
71396201	657
71396202	657
71396203	657
71396204	657
71396205	657
71396207	661
71396208	661
71396208	721
71396209	655
71396210	655
71396211	655
71396212	655
71396213	661
71396214	661
71396215	659
71396216	659
71396217	659
71396218	659
71396219	659
71396220	659
71396221	659
71396222	659
71396223	659
71396224	659
71396225	655
71396226	395
71396251	645
71396252	649
71396253	653
71396254	653
71396255	653
71396257	659
71396258	363
71396258	369
71396259	207
71396260	129
71396260	133
71396262	129
71396263	129
71396264	617
71396265	617
71396266	579
71396266	617
71396267	615
71396267	617
71396268	211
71396269	129
71396269	133
71396273	171
71396276	139
71396283	151
71396326	415
71396348	707
71396349	707
71396355	115
71396374	707
71396377	183
71396381	193
71396382	193
71396390	193
71396391	233
71396393	177
71396394	177
71396401	525
71396401	531
71396402	525
71396402	531
71396403	511
71396404R	511
71396414	489
71396452	411
71396457	431
71396457	441
71396458	451
71396462	433
71396467	451
71396469	443
71396470	421
71396472	421
71396472	721
71396481	303
71396501	151
71396501	157
71396510	151
71396510	157
71396558	683
71396565	115
71396580	697
71396580	703
71396581	703
71396582	703
71396583	703
71396584	703
71396585	703
71396586	703
71396587	703
71396588	703
71396589	703
71396590	703
71396591	703
71396592	703
71396593	703
71396594	703
71396595	703
71396596	703
71396597	703
71396598	703
71396599	703
71396600	703
71396601	699
71396601	703
71396602	703
71396603	703
71396604	703
71396605	703
71396606	703
71396607	703
71396608	703
71396609	703
71396610	703
71396611	703
71396612	703
71396613	703
71396614	703
71396615	703
71396616	703
71396617	593
71396617	699
71396618	591
71396618	593
71396619	593
71396620	591
71396620	593
71396621	591
71396621	593
71396622	593
71396623	591
71396623	593
71396624	591
71396624	593
71396625	697
71396625	705
71396653	457
71396653	725
71396662R	477
71396664	505
71396677	153
71396682	151
71396684	151
71396729	151
71396729	157
71396735	153
71396736	165
71396743	151
71396743	153
71396745	153
71396752	125
71396753	127
71396754	127
71396754	723
71396755	127
71396755	615
71396756	127
71396758	127
71396758	615
71396760	47
71396764	47
71396776	117
71396951	223
71396952	223
71396952	227
71396954	165
71396955	215
71396955	217
71396956	219
71396957	223
71396957	227
71396957	229
71396970	237
71396970	725
71396971	237
71396971	725
71396972	237
71396983	109
71396994	103
71396994	107
71397111	507
71397122	507
71397124	507
71397152	469
71397153	469
71397167	405
71397167	407
71397168	427
71397168	439
71397171	405
71397171	407
71397172	405
71397172	407
71397174	405
71397179	697
71397180	697
71397181	697
71397184	699
71397185	697
71397186	697
71397186	697
71397187	697
71397187	697
71397189	699
71397190	699
71397191	699
71397192	699
71397193	697
71397194	699
71397195	699
71397196	697
71397197	697
71397198	697
71397199	697
71397201	699
71397202	697
71397203	697
71397204	697
71397205	697
71397222	329
71397244	487
71397246	483
71397246	487
71397248	485
71397255	153
71397261	177
71397262	177
71397263	177
71397265	155
71397268	155
71397271	155
71397272	155
71397286	551
71397303	537
71397311R	535
71397312	535
71397313	535
71397349	399
71397350	399
71397376	405
71397376	407
71397377	405
71397377	407
71397381	409
71397382	409
71397383	409
71397384	409
71397385	409
71397386	409
71397388	409
71397389	409
71397390	405
71397390	407
71397391	405
71397392	405
71397392	407
71397393	405

https://truckmanualshub.com/

INDEX

Part No.	Page
71397394	405
71397427	149
71397428	113
71397429	175
71397432	195
71397433	195
71397434	195
71397436	195
71397437	195
71397438	195
71397439	195
71397440	195
71397441	195
71397443	195
71397443	723
71397444	199
71397444	205
71397445	199
71397446	199
71397447	199
71397447	205
71397448	199
71397448	205
71397449	199
71397449	205
71397452B	263
71397478	643
71397479	643
71397480	643
71397481	643
71397482	643
71397483	643
71397484	643
71397485	643
71397486	643
71397487	643
71397490	645
71397490	655
71397491	661
71397492	615
71397493	401
71397493	615
71397506	155
71397510	153
71397511	153
71397515	153
71397526	155
71397532	155
71397535	155
71397536	155
71397538	155
71397539	181
71397540	181
71397541	181
71397542	181
71397543	181
71397544	181
71397545	181
71397546	181
71397547	181
71397548	181
71397549	181
71397550	181
71397633	127
71397634	127
71397637	125
71397676	259
71397677	259
71397678	259
71397679	259
71397680	259
71397681	259
71397682	259
71397683	259
71397684	259
71397685	259
71397686	259
71397687	259
71397688	259
71397689	259
71397690	259
71397691	259
71397692	259
71397693	259
71397695	259
71397697	259
71397698	259
71397701	259
71397702	259
71397703	259
71397704	261
71397705	261
71397706	261
71397707	261
71397708	261
71397709	261
71397710	261
71397711	261
71397712	261
71397713	261
71397714	261
71397715	261
71397716	261
71397717	261
71397718	261
71397719	261
71397720	261
71397721	261
71397722	261
71397724	261
71397725	221
71397725	247
71397725	261
71397726	221
71397726	225
71397729	221
71397729	225
71397731	261
71397732	261
71397733	261
71397734	261
71397735	261
71397736	261
71397737	261
71397738	261
71397739	261
71397740	261
71397741	261
71397742	261
71397743	261
71397826	181
71397827	181
71397828	181
71397829	181
71397830	181
71397831	181
71397832	181
71397833	181
71397834	181
71397835	181
71397836	181
71397837	163
71397838	161
71397839	161
71397840	161
71397842	157
71397880	103
71397881	105
71397881	109
71397882	103
71397882	107
71397883	103
71397886	105
71397886	109
71397895	103
71397895	107
71397926	199
71397926	205
71397927	199
71397927	205
71397929	199
71397929	727
71397930	201
71397930	205
71397932	199
71397932	205
71397933	199
71397934	199
71397934	205
71397939	203
71397940	237
71397941	237
71397942	237
71397989	383
71397992	405
71397998	427
71397998	437
71398028	241
71398098	343
71398099	341
71398110	245
71398126	629
71398131	317
71398131	323
71398134	327
71398136	327
71398138	555
71398138	561
71398139	557
71398139	561
71398142	555
71398142	561
71398165	167
71398169	233
71398171	139
71398172	185
71398173	187
71398174	185
71398175	185
71398175	191
71398182	157
71398188	157
71398196	157
71398197	157
71398203	567
71398211	707
71398212	707
71398223	685
71398224	685
71398225	685
71398227	573
71398227	583
71398228	695
71398228	701
71398238	579
71398241	707
71398242	707
71398243	707
71398244	707
71398245	707
71398271	359
71398275B	343
71398327	681
71398328	681
71398329	681
71398330	681
71398331	111
71398332	111
71398333	111
71398337	633
71398354	675
71398356	681
71398357	329
71398358B	289
71398360	289
71398360	293
71398361	289
71398362B	297
71398364	293
71398365B	297
71398379B	289
71398384	287
71398384	711
71398388	283
71398388	709
71398389	283
71398391	293
71398399	487
71398401	383
71398402	383
71398403	383
71398420	399
71398421	397
71398424	397
71398429	157
71398436	157
71398445	157
71398451	525
71398452	525
71398453	525
71398453	531
71398454	525
71398473	531
71398474R	531
71398475R	531
71398477	315
71398501	157
71398505	157
71398509	159
71398510	159
71398511	159
71398514	159
71398518	159
71398525	165
71398721	539
71398721	541
71398726	185
71398727	185
71398728	187
71398730	189
71398731	189
71398732	191
71398733	189
71398734	189
71398735	189
71398736	189
71398737	189
71398738	189
71398739	189
71398740	189
71398741	189
71398742	189
71398743	189
71398744	189
71398745	189
71398746	189
71398749	189
71398750	189
71398761	357
71398762	357

https://truckmanualshub.com/

Part No.	Page
71398764	357
71398768	357
71398769	357
71398770	357
71398771	357
71398777	189
71398778	189
71398779	189
71398780	189
71398781	189
71398782	189
71398783	189
71398784	189
71398785	189
71398786	189
71398787	191
71398788	191
71398789	191
71398790	191
71398791	191
71398792	191
71398795	191
71398796	191
71398798	191
71398799	191
71398800	191
71398801	191
71398802	191
71398803	191
71398804	191
71398808	145
71398809	145
71398814	169
71398815	167
71398819	201
71398820	193
71398820	201
71398850	247
71398851	261
71398852	261
71398853	261
71398980	575
71398980	587
71398981	575
71398981	587
71398983	327
71398984	327
71398985	327
71398988	327
71398989	327
71398993	327
71398994	327
71398995	327
71399002	339
71399003	359
71399009	433
71399011	433
71399011	437
71399013	433
71399013	437
71399015	427
71399015	433
71399015	437
71399027	401
71399036	155
71399038	155
71399039	317
71399049	671
71399115	691
71399115	695
71399119	575
71399143	557
71399143	567
71399143	583
71399143	599
71399144	573
71399149	553
71399149	565
71399150	553
71399150	565
71399198	529
71399198	535
71399199	529
71399199	535
71399228	261
71399237	717
71399237	727
71399241	717
71399242	717
71399243	717
71399246	717
71399270P	509
71399271P	509
71399326	529
71399326	535
71399329	529
71399329	533
71399338	121
71399341	529
71399341	533
71399426	165
71399437	151
71399442	151
71399442	157
71399444	151
71399444	157
71399445	151
71399445	159
71399446	151
71399447	155
71399477B	417
71399481B	417
71399483	289
71399484	289
71399484	293
71399485	297
71399486	297
71399487	297
71399505	289
71399505	711
71399508	281
71399509	281
71399511	281
71399519	293
71399519	711
71399520B	293
71399521	677
71399637	359
71399641	359
71399654	485
71399656	485
71399658	489
71399661	485
71399662	485
71399665	487
71399666	487
71399669	489
71399674	487
71399675	485
71399675	501
71399682	109
71399682	207
71399697	105
71399697	109
71399802	465
71399807	451
71399829	263
71399830	263
71399854	491
71399858	485
71399861	485
71399870	543
71399985	465
71399994	451
71399999	411
71399999	473
71400069	393
71400071	377
71400383	543
71400385	489
71400413	121
71400413	723
71400418	665
71400418	669
71400420	663
71400421	667
71400421	669
71400422	667
71400422	669
71400429	453
71400430	453
71400431	451
71400432	451
71400435	451
71400461	529
71400478	383
71400501	167
71400502	147
71400504	147
71400505	235
71400508	189
71400509	189
71400510	189
71400513	193
71400520	193
71400521	193
71400522	193
71400523	193
71400523	199
71400523	203
71400549	429
71400549	437
71400551	103
71400551	107
71400553	103
71400553	107
71400554	117
71400561	103
71400561	107
71400562	103
71400581	715
71400585	715
71400588	715
71400604	415
71400626	155
71400628	153
71400630	153
71400631	153
71400635	139
71400641	153
71400645	155
71400646	155
71400653	633
71400661	329
71400669	495
71400686	445
71400691	573
71400693	693
71400698	693
71400701B	693
71400705B	693
71400710B	695
71400711	695
71400716B	695
71400719	591
71400719	695
71400729	529
71400736	517
71400738	519
71400739	269
71400739	519
71400852	307
71400911R	515
71400913	517
71400914	515
71400915	455
71400915	717
71400919	489
71400922R	477
71400971	263
71401075	343
71401204	453
71401208	467
71401212	465
71401220	465
71401221	465
71401224	465
71401307B	315
71401326	361
71401333	243
71401336	249
71401342	251
71401348	221
71401355	105
71401355	99
71401357	117
71401364	95
71401369	103
71401381	455
71401390	715
71401398	715
71401399	715
71401399	727
71401416	329
71401418	361
71401419	329
71401429	427
71401429	435
71401452	455
71401453	457
71401461	501
71401462	459
71401463	551
71401468	551
71401470	549
71401526	193
71401526	199
71401530	199
71401533	139
71401534	185
71401544	203
71401545	199
71401546	199
71401548	195
71401626	269
71401627	269
71401628	269
71401632	269
71401633	269
71401636	269
71401637	269
71401638	269
71401643	537
71401645	539
71401645	541
71401645	549
71401658B	271
71401660B	271
71401661	539
71401700	151

https://truckmanualshub.com/

INDEX

Part No.	Page
71401701	155
71401707	151
71401710B	153
71401715	141
71401718	165
71401719	165
71401722B	159
71401723B	159
71401726	557
71401726	583
71401727	557
71401727	567
71401728	557
71401728	567
71401729	567
71401730	367
71401731	361
71401731	367
71401733	707
71401735	707
71401738	599
71401739	307
71401753	365
71401755	291
71401756	291
71401766	707
71401799	117
71401800	53
71401800B	49
71401806	117
71401807	117
71401812	47
71401813	47
71401817	117
71401822	47
71401850B	427
71401912	361
71402014	155
71402105	263
71402108	249
71402111	251
71403606	39
71403618B	509
71403624B	537
71403624B	541
71403669	267
71403676	281
71403677	281
71403678	281
71403679	283
71403680	449
71403681	689
71403681	691
71403682	453
71403684	449
71403685	449
71403685	709
71403690	695
71403691	695
71403710	493
71403712B	493
71403895	687
71403918	497
71403919	483
71403919	501
71403922	499
71404300	281
71404303	551
71404305	549
71404306	549
71404306B	545
71404326	351
71404357	687
71404359	687
71404379	119
71404396	125
71404399	125
71404400	125
71404401	125
71404402	125
71404403	125
71404404	125
71404409	625
71404410B	105
71404412	47
71404414	123
71404415	119
71404416	121
71404417	119
71404420	117
71404430B	707
71404432	707
71404436	213
71404450	133
71404450	137
71404450	577
71404450	583
71405934B	507
71405945	517
71405950R	515
71405957	117
71405958	117
71405963	55
71405966	53
71405983	133
71405983	137
71405984	133
71405984	137
71405985	133
71405985	137
71406010	317
71406069	241
71406073	251
71406280	663
71406296	591
71406297	591
71406298	675
71406300	675
71406301	695
71406302	695
71406309	447
71406327	373
71406327	379
71406328	371
71406328	379
71406330	371
71406330	379
71406332	375
71406332	379
71406332	387
71406333	375
71406333	379
71406333	387
71406334	379
71406339	375
71406339	379
71406339	711
71406339	721
71406341	445
71406344	445
71406345	445
71406361	371
71406361	379
71406361	711
71406361	721
71406362	371
71406364	375
71406364	391
71406366	591
71406366	695
71406368	375
71406368	391
71406409	515
71406414	519
71406454	429
71406476	239
71406478	239
71406480	237
71406481	237
71406492	233
71406504	267
71406510	267
71406512	271
71406514	267
71406518	267
71406520	267
71406606	55
71406608	109
71406609	107
71406612	107
71406613	119
71406615	111
71406616	113
71406619	135
71406619	137
71406620	115
71406620	709
71406620	721
71406623	131
71406623	133
71406624	129
71406624	133
71406625	109
71406626	107
71406627	561
71406627	563
71406628	55
71406629	55
71406630	107
71406631	109
71406694	123
71406718	103
71406719	103
71406748	165
71406751B	159
71406753	139
71406761B	497
71406769	39
71406770	41
71406772	523
71406795	467
71406795	713
71406802	267
71406802	299
71406803B	299
71406804	267
71406842	717
71406842	727
71406844	717
71406844	727
71406849	455
71406866	165
71406876	167
71406877	147
71406878	177
71406891	199
71406894	233
71406922	521
71406934	303
71406951	383
71406952	383
71406953	383
71406954	383
71406957	427
71406957	435
71406970	383
71406971	383
71406972	383
71406973	383
71406990	569
71407047	453
71407047	467
71407139	673
71407293	245
71407293	513
71407293	725
71407297	239
71407298	233
71407327P	497
71407426	229
71407427	229
71407428	229
71407429	229
71407430	229
71407431	229
71407432	229
71407433	229
71407434	229
71407435	229
71407436	229
71407437	229
71407438	229
71407439	229
71407440	229
71407441	229
71407442	229
71407443	229
71407444	229
71407445	229
71407446	229
71407447	229
71407448	229
71407449	229
71407450	229
71407464	567
71407464	579
71407545	109
71407574	397
71407651	179
71407651	181
71407652	181
71407653	145
71407653	145
71407653	145
71407653	181
71407655	161
71407657	141
71407659	141
71407660	269
71407677	151
71407700	363
71407700	39
71407700	43
71407719	151
71407844	55
71407928	433
71407942	439
71407946	439
71407956	619
71407956	621
71407956	623
71407957	623
71407958	623
71407962	307
71408198	137
71408201	237
71408202	167
71408209	201
71408209	205
71408210	201

https://truckmanualshub.com/

Part No.	Page
71408210	205
71408211	199
71408214	205
71408215	199
71408215	205
71408217	549
71408221	195
71408222	199
71408223	147
71408224	147
71408225	149
71408376	715
71408385	251
71408386	251
71408387	251
71408391	221
71408393	251
71408394	251
71408395	251
71408396	251
71408397	251
71408408	51
71408477	435
71408492	435
71408493	435
71408494	435
71408501	455
71408514	455
71408514	473
71408686	55
71408687	55
71408692	109
71408709	667
71408711	667
71408762	387
71408765	377
71408765	379
71408766	669
71408767	669
71408768	669
71408769	669
71408770	669
71408771	669
71408772	667
71408772	673
71408773	669
71408826	507
71408827	509
71408828	509
71408989	487
71408990	487
71409063	109
71409064	53
71409065	53
71409066	55
71409176	325
71409176	327
71409181	569
71409181	571
71409265	451
71409265	473
71409266	453
71409266	473
71409267	453
71409267	473
71409268	451
71409268	473
71409269	451
71409269	473
71409270	453
71409270	473
71409271	451
71409271	473
71409280	337
71409280	473
71409284	473
71409370	465
71409370	473
71409371	467
71409371	473
71409374	465
71409374	473
71409379	465
71409379	473
71409380	465
71409380	473
71409382	465
71409382	473
71409384	465
71409384	473
71409402	457
71409402	473
71409403	429
71409405	243
71409409	433
71409415	421
71409419	473
71409452	379
71409452	381
71409453	379
71409453	383
71409457	549
71409461	271
71409576	167
71409579	169
71409581	193
71409581	195
71409582	195
71409583	145
71409584	145
71409594	169
71409600	167
71409615	277
71409618	277
71409623	277
71409768	669
71409807	227
71409809	225
71409810	227
71409811	227
71409812	227
71409820	715
71409822	225
71409833	383
71409834	385
71409835	383
71409848	399
71409910	673
71409911	673
71409926	441
71409932	441
71409942	687
71409947	687
71409952	267
71409955	267
71409970	337
71409987	337
71409994	343
71409996	337
71410009	51
71410010	51
71410021	125
71410024	125
71410025	117
71410030	533
71410031	535
71410032	535
71410033	535
71410035	535
71410036	535
71410037	535
71410038	535
71410075	541
71410115	541
71410375	517
71410423	519
71410424	519
71410437	359
71410439	361
71410441	361
71410456	451
71410458	465
71410484	561
71410485	561
71410486	561
71410489	579
71410501V	47
71410501V	711
71410501V	95
71410503	95
71410504	95
71410505	95
71410506	95
71410507	95
71410508	95
71410509	95
71410510	95
71410512	95
71410513	95
71410543	585
71410556	217
71410562	717
71410563C	717
71410574	225
71410576	337
71410630	533
71410633	533
71410634	117
71410637	533
71410646	135
71410646	137
71410648	135
71410648	137
71410649	135
71410649	137
71410657	515
71410658	517
71410659	517
71410879	471
71410902	219
71410903	219
71410912	251
71410922	195
71410926	717
71410926	727
71410927	717
71410958	145
71410959	147
71410962	715
71410976	541
71410990	521
71410998	541
71411204	579
71411208	579
71411295	585
71411296	585
71411300	585
71411311	625
71411315	585
71411372	541
71411373	541
71411425	303
71411426	303
71411427	277
71411435	337
71411452	487
71411453	487
71411647	271
71411650	271
71411658	415
71411664	135
71411826	579
71411839	561
71411843	585
71411846	585
71411847	585
71411848	585
71411849	585
71411886	283
71411902	347
71411972	407
71411974	407
71411976	407
71411978	409
71411979	409
71411980	409
71411981	407
71411982	407
71411983	407
71411984	379
71411984	381
71412027	135
71412027	137
71412028	135
71412028	137
71412029	135
71412029	137
71412030	135
71412030	137
71412031	135
71412031	137
71412057	585
71412132	415
71412136	413
71412141	435
71412150	693
71412169	591
71412266	133
71412267	133
71412348	339
71412351	219
71412356	243
71412358	239
71412359	215
71412434	443
71412437	425
71412438	425
71412441	425
71412446	425
71412594	365
71412596	673
71412754	361
71412755	361
71412894	519
71412895	515
71412896	519
71412972	479
71412973	479
71412991	409
71413028	425
71413040	425
71413047	425
71413050	425
71413062	239
71413067	197
71413084	195
71413092	217
71413219	393
71413221	377
71413223	403

https://truckmanualshub.com/

INDEX

Part No.	Page
71413228	377
71413309	219
71413325	239
71413427	579
71413428	579
71413429	579
71413431	585
71413432	579
71413434	579
71413440	585
71413447	581
71413448	307
71413456	425
71413494	435
71413548	437
71413548	439
71414221	601
71414223	579
71414225	319
71414290	425
71414291	435
71414301	479
71414409	473
71414552	343
71414554	687
71414556	687
71414681	563
71414682	563
71414687	563
71414688	563
71414689	563
71414690	563
71418093	151
71418128	541
71418427	197
71418428	205
71418429	205
71418430	205
71418431	205
71418481	153
71418482	153
71418483	151
71418944	585
71419804	205
71419805	205
71419806	205
71419807	205
71419808	205
71449001	301
71449001	713
71449003	301
71449003	713
71449003	723
71449015	303
71449015	713
71449016	303
71449016	713
71449017	303
71449017	713
71449017	723
71449019	307
71449019	713
71449025	303
71502674	609
720649	513
720656	625
72160919	235
72160919	237
72160919	249
72160919	251
72160919	725
72160927	209
72160927	49
72160927	55
72160993	103
72160993	107
72160993	97
72161024	193
72161280	97
72161999	143
72162809	253
72162811	253
72162812	253
72162815	253
72162818	253
72162819	253
72162820	253
72162821	253
72272098	191
72500822	235
72501110	247
72502789	183
72502796	147
72503309	247
72504036	179
72504740	185
72504762	187
72504775	185
72504776	185
72504785	185
72504786	185
72504786	189
72504791	185
72504792	185
72504802	185
72504803	185
72504804	185
72504808	185
72504809	185
72504810	185
72504811	185
72504812	185
72505639	147
72506418	223
72506418	257
72506489	141
72506489	147
72506694	209
72506922	209
72507231	595
72507406	209
72507407	209
72507408	209
72507682	207
72507682	209
72509305	207
72509305	727
72509675	511
72511891	187
72511906	51
72511906	723
72513700	189
72514052	185
72514053	187
72514054	187
72514055	191
72514061	185
72514066	185
72514067	187
72514069	185
72514070	185
72514076	189
72515771	715
72515775	715
72516411	715
72516412	715
72516560	51
72516560	723
72525468	555
72525468	561
72526244	553
72528004	559
72528006	559
72528008	559
72528012	559
72528014	559
72528022	559
72528024	559
72528025	559
72570001	719
72570002	719
72570003	719
72570004	719
72570023	715
72570030	719
72571014	715
72571014	727
72571032	715
72571032	727
72571068	717
72571070	719
72571081	717
72571081	727
72571136	719
727281	563
727693	195
74254699	677
74254699	723
74254700	677
74254700	723
74906743	173
755785	291
758342	121
762975	263
762975	267
762975	431
762975	441
762975	457
763136	171
763300	683
763565	121
766410	153
76695	397
768036	395
768036	411
768036	485
768226	381
768432	469
7700107	153
7700156	341
7700156	343
7700461	107
7700461	121
7700461	127
7700461	275
7700461	359
7700461	381
7700578	395
7700578	427
7700578	515
7701055	159
7701055	431
7701055	481
7701055	485
7701188	565
7701329	47
7701485	305
7701485	557
7701485	565
7701485	567
7701485	573
7701501	233
7701550	357
7701592	183
7701634	397
7701634	539
7701659	507
7701659	675
7701659	687
7701683	475
7701683	675
7701717	151
7701717	157
7701766	363
7701964	235
7701964	619
7701964	621
7702012	269
7702012	269
7702012	271
7702145	507
7702194	115
7702202	111
7703242	55
7703259	361
7703275	53
7703416	427
7703416	437
7703424	151
7703424	157
7703424	157
7703424	527
7703424	529
7703432	183
7703432	265
7703457	119
7703457	119
7703457	121
7703457	125
7703457	129
7703473	511
7703473	685
7703473	717
7703499	353
7703507	223
7703507	227
7703507	619
7703531	115
7703838	153
7703838	415
7704000	127
7704117	153
7704117	351
7704117	701
7704141	157
7704141	171
7704141	523
7704141	523
7704141	689
7704141	695
7704703	225
7704778	665
7704919	151
7704919	155
7704919	157
7705205	541
77057	485
7710551	301
7710551	303
7710551	413
7710551	469
7710551	721
7711401	385
7711419	385
7713860	663
7713860	669
7720063	193
772418	553
772418	561
772418	629

https://truckmanualshub.com/

Part No.	Page
772426	139
772525	215
772525	215
773473	221
773697	699
7744477	663
7744477	669
7745193	221
7746449	51
774745	237
7751605	671
7751605	673
7751605	675
7751605	723
776682	377
776682	393
776682	547
776682	551
7770167	243
7770167	505
7770308	103
7770456	349
7770456	351
7770456	383
7770456	395
7770456	397
7770456	435
7771371	139
7771470	151
7771470	157
7771504	345
7771629	697
7771728	111
7771728	55
7771744	121
7771744	207
7771751	395
7771769	507
7771785	683
7772049	151
7772056	183
7772197	405
7772197	407
7772312	679
7772312	681
7772361	185
7772767	343
7772767	511
7773856	675
7773864	343
7774383	435
7774383	441
7774466	689
7774466	693
7774466	695
7774664	49
7774664	49
7774664	55
7774664	55
7791361	569
7792922	445
7827629	249
7827983	165
7845068	113
7846777	575
7883267	219
7883267	237
7883267	269
7883267	525
7883267	531
7883275	183
7883275	41
7883275	45
7883283	183
7883283	235

Part No.	Page
7883317	457
7883325	155
7883325	165
7883325	183
7883325	239
7883325	245
7883325	537
7883325	541
7883325	99
7883333	103
7883333	107
7883333	127
7883333	177
7883333	541
7883333	97
7883374	271
7883382	155
7883382	249
7883382	269
7883382	271
7883408	127
7883408	159
7883408	159
7883408	507
7883424	157
7883978	715
7884570	675
79001879	323
79014728	483
79014728	487
79017915	489
79019067	491
79021648	123
79021648	315
79021649	367
79021649	663
79021649	725
79021665	301
79021665	303
79021665	315
79021665	319
79021668	123
79021668	725
79021669	665
79021669	671
79021669	677
79021669	679
79021669	681
79021669	683
79021669	725
79021671	489
79021672	123
79021676	279
79021676	315
79021676	319
79021676	665
79021676	671
791319	413
791541	569
8022691	667
8027427	175
8027427	177
803783	671
803783	673
8046955	625
8046955	629
8050866	153
8050866	721
81370306	257
81370306	721
827758	365
831268M1	417
831822M1	477
831822M1	491
831822M1	721

Part No.	Page
831861M1	425
832088M1	361
832563M1	489
832653M1	243
832982M1	485
833059M1	481
833059M1	485
834580M1	677
834580M1	679
834580M1	723
834581M1	677
834581M1	679
834581M1	723
837853M91	653
837853M91	661
840327M91	713
844173M1	111
844174M1	111
846204	555
846204	565
846337	569
846337	577
846337	587
846337	675
846634	325
846634	619
846634	621
846774	291
850181M1	691
850181M1	693
850181M1	723
850182M1	689
850182M1	693
853288	623
863415	271
863415	511
863415	519
863415	537
863415	541
863415	545
863415	549
8701211	115
8701708	329
8701708	359
8701708	425
8701781	127
8722910	377
8722910	393
873026	553
873026	561
873141	469
873364	153
873497	157
873802	113
8746018	127
8746018	307
8746018	561
8746430	129
8746430	133
915891W1	493
940134W1	633
942253	635
942253	643
942253	647
98-2107	397
9863040W1B	469
AG132254	185
AG133717	369
AG512664	101
AG512664	103
AG512664	107
AG512664	97
AG519751	627
D49070008	405
D49070008	407

Part No.	Page
D49070022	409
D49070025	409
D49070026	409
D49070031	409
D49080047	405
D49080090	381
D49100159	405
K1846	121
K3518	419
K3518	423
K3518	461
K3518	467
K3518	469
K3518	723
K3999	295
K3999	395
K3999	479
K3999	723
K4037	395
K4037	721
K7873	253
N12998	171
PZND1041V	383
PZND1041V	439
RE210066	165
RE210066	241
RE530013	241
RE701128D6	241
RE701141D6	241
RE701169D6	241
V500050642	85
V500050840	57
V500150642	57
V500150840	73
V500950800	67
V500950800	73
V500950800	81
V500951000	61
V500951000	75
V500951200	59
V500951200	61
V500951200	67
V500951400	61
V504600502	81
V504600602	71
V504600602	85
V504601000	61
V504601400	59
V504601600	79
V504602002	91
V504611802	81
V504800800	69
V504800800	71
V504800800	73
V504800800	77
V504800800	85
V504800802	75
V504861000	73
V510600602	69
V510600602	81
V510600802	87
V510601002	69
V510601002	87
V512861000	65
V513601002	69
V521601000	71
V528801062	59
V528801082	69
V528801082	81
V528801360	67
V528801360	85
V528801360	91
V528801362	57
V528801362	73
V528801362	79

https://truckmanualshub.com/

INDEX

Part No.	Page
V528801380	57
V528801380	59
V528801380	69
V528801380	71
V528801380	73
V528801380	75
V528801380	77
V528801380	79
V528801380	81
V528801400	59
V528801400	69
V528801410	59
V528801410	69
V528801420	69
V528801800	67
V528801800	91
V528801810	75
V528801810	91
V528801830	67
V528802602	59
V528802602	75
V528803042	75
V528901400	59
V528902200	59
V528902220	61
V528902230	63
V529701880	91
V529702630	61
V529801102	57
V529801112	71
V529801430	79
V529801440	59
V529801440	69
V529801450	91
V529801470	69
V529801470	91
V529801490	69
V529801490	87
V529801490	91
V529801500	69
V529801510	59
V529801510	87
V529801520	79
V529801530	69
V529801550	59
V529801550	69
V529801550	79
V529801550	91
V529801562	91
V529801830	69
V529801910	65
V529801910	87
V529903180	57
V540801780	67
V540801910	67
V546801360	57
V546801400	57
V546801490	69
V546801490	77
V546801800	61
V546801800	71
V546801900	67
V580704670	59
V581704660	81
V581704710	59
V581705030	61
V581705030	83
V581705440	61
V581705910	59
V581804182	57
V581804600	57
V581804600	73
V581804600	77
V581804600	79
V581804602	67
V581804620	59
V581804620	77
V581804630	67
V581804650	77
V581804650	81
V581804670	75
V581804690	77
V581805000	73
V590253388	57
V598355365	69
V602060610	75
V602060610	85
V602060612	73
V602060612	85
V602070605	81
V602074608	81
V602087528	71
V603305760	65
V610032065	91
V610060085	91
V610062055	91
V610063064	91
V610072040	79
V610072109	59
V610073040	59
V614600724	77
V614601125	83
V614601324	59
V614601924	59
V614602030	77
V614602430	77
V614602430	79
V614603540	59
V614604740	67
V614604958	79
V614605930	71
V614606825	59
V614607930	79
V614609430	59
V614703042	79
V614901030	67
V614903430	75
V615571014	57
V615571014	59
V615571014	83
V615870812	81
V615870814	59
V615871014	79
V615871016	75
V615881216	77
V615881216	79
V615881216	81
V615881216	83
V615881418	67
V615881418	79
V615881420	57
V615881420	71
V615881420	83
V615881620	57
V615881620	71
V615881620	79
V615881622	73
V615881822	213
V615881822	67
V615881822	79
V615881824	57
V615882227	73
V615882227	79
V615893946	75
V617330047	79
V617330052	59
V617330052	91
V617330068	91
V617330072	91
V617350062	91
V640016012	57
V640016016	57
V640016018	57
V640016040	57
V640016045	67
V640045022	73
V640045022	79
V640045126	61
V640255210	83
V640305012	77
V640305012	79
V640325014	57
V640325014	79
V640325014	83
V640325018	67
V640325018	79
V640325039	75
V640325110	57
V640325110	59
V640325110	79
V640425005	81
V640425008	81
V640435005	81
V640435006	83
V640435008	83
V640435010	83
V641016008	75
V641086010	83
V641086012	71
V641086012	73
V641166006	59
V641436008	81
V641830008	75
V644611006	91
V651754720	85
V651755320	85
V685121585	53
V685121585	711
V685121585	723
V685121585	91
V835261462	53
V835324324	71
V835329746	67
V836007871	73
V836008449	73
V836014264	65
V836015156	79
V836015967	69
V836017927	59
V836020054	61
V836117943	61
V836119079	57
V836119079	79
V836119384	69
V836119643	67
V836119837	79
V836120022	75
V836120989	87
V836120989	91
V836122910	73
V836122910	83
V836138015	69
V836214478	57
V836322190	77
V836322190	79
V836322221	63
V836322538	73
V836322852	57
V836322906	73
V836322909	73
V836322909	73
V836331590	79
V836336302	63
V836336302	93
V836336425	79
V836336934	83
V836338180	73
V836338182	73
V836338186	73
V836338188	73
V836338201	73
V836338512	77
V836338601	57
V836338650	63
V836338651	63
V836338652	63
V836338653	63
V836338667	73
V836338733	67
V836340948	63
V836347308	73
V836359603	75
V836362228	75
V836362229	75
V836362567	55
V836362567	723
V836362567	77
V836362567	93
V836640752	67
V836646393	79
V836647942	67
V836652081	73
V836652468	61
V836655406	65
V836659521	77
V836659524	77
V836662130	77
V836662619	87
V836662620	87
V836662621	87
V836662622	87
V836662623	87
V836662624	87
V836662625	87
V836664013	69
V836664226	75
V836664377	57
V836666980	85
V836667029	79
V836667315	87
V836667650	77
V836667732	85
V836747849	67
V836747849	69
V836840882	63
V836840883	59
V836840884	61
V836840887	63
V836840930	71
V836840934	57
V836840944	63
V836840944	93
V836840945	63
V836840945	93
V836840978	63
V836840979	63
V836840980	63
V836840981	63
V836840982	63
V836840983	63
V836840992	71
V836840998	57
V836852010	91
V836852459	57
V836852460	57
V836852461	57
V836852744	57
V836855297	73
V836855300	73
V836855348	67

https://truckmanualshub.com/

Part No.	Page
V836855350	67
V836855446	57
V836855447	57
V836855484	77
V836855517	77
V836855519	77
V836855520	77
V836855521	77
V836855522	77
V836855523	77
V836855525	63
V836855554	57
V836855558	63
V836855562	59
V836855565	59
V836855601	79
V836855602	79
V836855603	79
V836855625	79
V836855629	57
V836855636	59
V836855637	63
V836855639	77
V836855641	63
V836855651	59
V836855666	91
V836855673	73
V836855674	73
V836855678	57
V836855689	91
V836855690	63
V836855714	71
V836855755	91
V836855756	91
V836855757	91
V836855758	91
V836855762	91
V836855789	91
V836855921	73
V836855928	87
V836855934	91
V836855935	91
V836855941	91
V836855956	87
V836859034	69
V836859109	67
V836859110	67
V836859153	57
V836859188	69
V836859288	91
V836859311	61
V836859347	91
V836859348	91
V836859356	91
V836859357	91
V836859363	91
V836859364	91
V836859452	79
V836859485	61
V836859560	73
V836859561	73
V836859683	91
V836859684	91
V836862051	83
V836862454	89
V836862455	89
V836862456	89
V836862457	89
V836862458	89
V836862459	89
V836862460	89
V836862461	89
V836862462	89
V836862496	83
V836864141	63
V836864288	63
V836864296	91
V836864541	85
V836866036	65
V836866069	57
V836866341	87
V836866576	83
V836866735	79
V836866809	71
V836866817	89
V836866831	85
V836866909	73
V836866958	75
V836867046	57
V836867048	57
V836867048	93
V836867050	57
V836867390	67
V836867391	67
V836867533	71
V836867556	69
V836867559	71
V836867567	67
V836867591	55
V836867591	723
V836867591	83
V836867593	83
V836867595	55
V836867595	723
V836867595	83
V836867602	83
V836867642	69
V836867775	59
V836873001	71
V836873003	71
V836873004	71
V837062565	67
V837062617	79
V837062626	93
V837062627	93
V837062628	93
V837062629	81
V837064906	67
V837064907	67
V837064908	67
V837064910	65
V837067295	69
V837067345	69
V837067801	81
V837067881	67
V837067967	75
V837067968	75
V837067969	75
V837067970	75
V837069001	67
V837069002	65
V837069003	65
V837069004	65
V837069005	65
V837069006	65
V837069007	81
V837069009	69
V837069011	65
V837069013	65
V837069014	65
V837069015	65
V837069016	65
V837069017	65
V837069018	65
V837069019	65
V837069020	65
V837069021	67
V837069023	65
V837069025	67
V837069026	67
V837069027	81
V837069029	67
V837069032	81
V837069047	69
V837069050	81
V837069052	57
V837069056	57
V837069057	57
V837069060	63
V837069069	59
V837069070	59
V837069076	79
V837069077	79
V837069078	79
V837069085	65
V837069088	63
V837069146	81
V837069147	81
V837069150	85
V837069216	85
V837069268	81
V837069313	81
V837069314	81
V837069410	85
V837070000	59
V837070001	59
V837070002	59
V837070003	59
V837070004	59
V837070005	59
V837070020	79
V837070021	57
V837070036	65
V837070048	85
V837070049	85
V837070050	85
V837070051	85
V837070054	85
V837070055	85
V837070072	59
V837070073	81
V837070074	79
V837070075	79
V837070077	81
V837070078	81
V837070079	81
V837070080	81
V837070081	81
V837070082	81
V837070107	59
V837070108	59
V837070113	59
V837070121	81
V837070130	85
V837070137	59
V837070147	57
V837070148	65
V837070170	67
V837070171	71
V837070179	59
V837070184	79
V837070185	63
V837070185	93
V837070187	67
V837070188	67
V837070189	85
V837070197	57
V837070198	85
V837070201	85
V837070209	85
V837070219	69
V837070223	83
V837070228	69
V837070249	81
V837070252	83
V837070253	83
V837070255	81
V837070258	81
V837070277	81
V837070284	69
V837070285	57
V837070286	57
V837070290	67
V837070292	85
V837070314	81
V837070328	69
V837070343	67
V837070347	67
V837070381	75
V886325175	71
VHA9220	81
VHC8338	73
VJD0408	67
VJD0408	85
VJE8802	59
VJE8802	61
VKH7070	57
VKH7070	59
VLA1014	59
W1207843	419
W1207843	423
W1511670	713
W1511670	723
W500053E	171
W900194-4	715
W915795-4	329
W937119	483
W937119	487
W943003	213
W944142	255
W9863030	461
W9863030	467
WSP1344	157
Y46086	665
Y46086	667
Y46086	671
Y46086	673
Y52209	177
Y52894	665
Y52894	669
Y58040	529
Y58040	535
Y61879	329
Y61879	373
Y702951	223
Y702951	225
Y702951	291
Y702951	497
Y702951	499
Y702951	555
Y702951	561
Y702951	579
Y702951	617
Y703132	139
Y703132	165
Y703132	175
Y703140	347
Y703140	377
Y704015	715
Y704015	717
Y704072	139
Y704072	169
Y704072	525
Y704072	531
Y704072	717
Y704072	717
Y704288	315
Y704361	221
Y704361	225
Y704395	713

https://truckmanualshub.com/

INDEX

Part No.	Page
Y704445	113
Y704445	175
Y704445	221
Y704445	225
Y704445	239
Y704635	525
Y704635	531
Y704726	103
Y704726	107
Y704726	119
Y704726	121
Y704726	127
Y704726	133
Y704734	101
Y704734	103
Y704734	105
Y704734	107
Y704734	109
Y704734	111
Y704734	113
Y704742	111
Y704742	111
Y704742	111
Y704742	113
Y704742	113
Y704742	127
Y705020	343
Y705020	349
Y705020	381
Y705020	381
Y705020	413
Y705020	415
Y705020	455
Y705046	127
Y705046	165
Y705046	221
Y705046	263
Y705046	267
Y705046	267
Y705046	279
Y705269	223
Y705269	715
Y705525	103
Y705525	105
Y705525	117
Y705525	119
Y705525	121
Y705525	151
Y705533	103
Y705533	105
Y705533	117
Y705533	117
Y705533	123
Y705533	127
Y705566	707
Y705582	303
Y705582	47
Y705582	53
Y705608	103
Y705608	107
Y705608	109
Y705608	125
Y705608	129
Y705608	131
Y705624	221
Y705624	289
Y705624	291
Y705624	299
Y705624	315
Y705624	333
Y707042	457
Y707042	467
Y710293	469
Y730804	675
Y761312	477
Y763318	663
Y763318	667
Y764126	431
Y764126	441
Y772129	143
Y851774	713
Y851774	723

https://truckmanualshub.com/

Part No.	Page	Part No.	Page	Part No.	Page	Part No.	Page

https://truckmanualshub.com/

LEFT SIDE & FRONT LABELS
(PRIOR S/N HS36101)

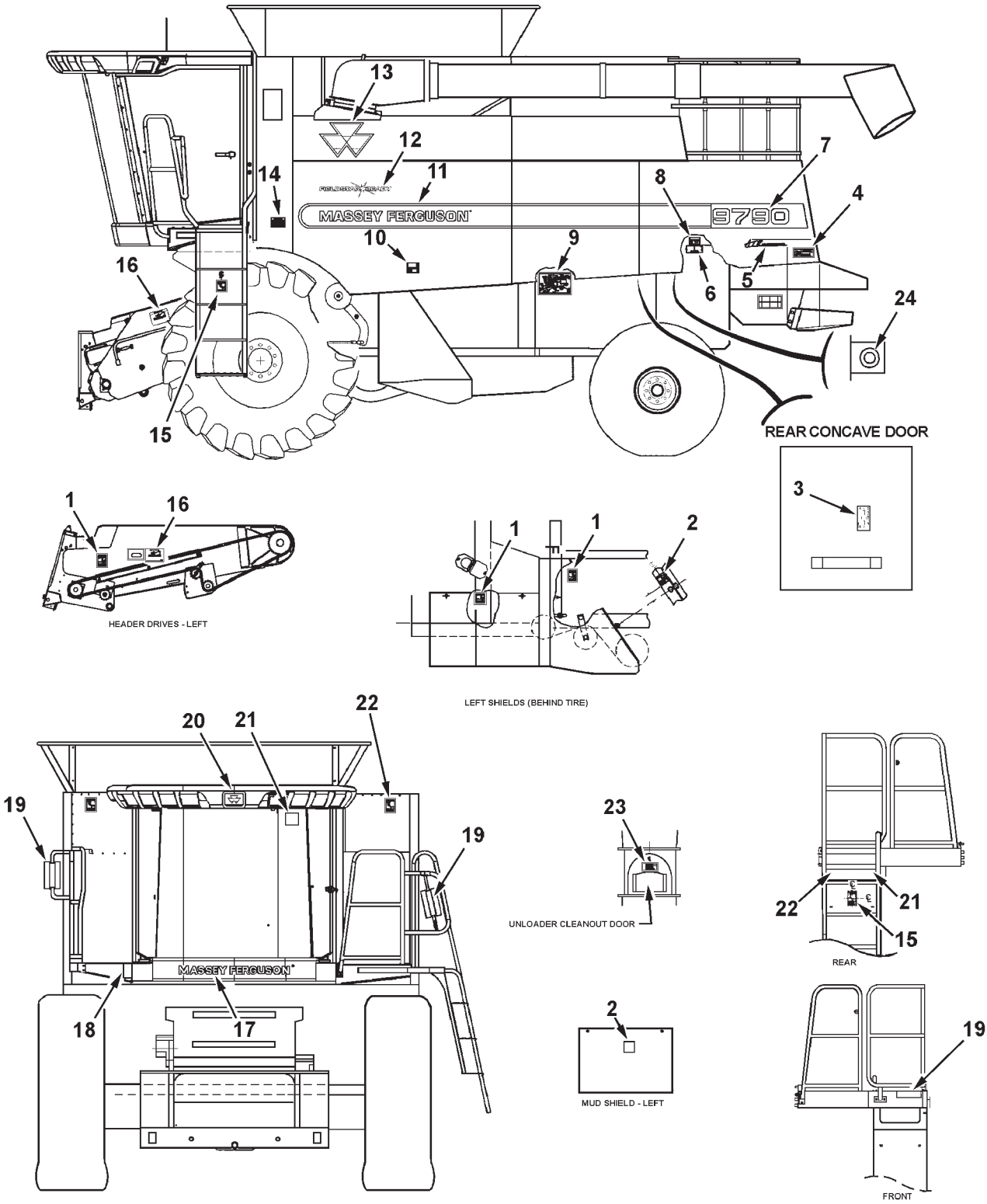

MC00326

https://truckmanualshub.com/

LEFT SIDE & FRONT LABELS
(PRIOR S/N HS36101)

ITEM	NUMBER	QTY	DESCRIPTION
1	111091W1	3	DECAL, DANGER, SHIELD MISSING
2	111670W1	2	DECAL, WARNING, BELT OR CHAIN
3	71407700	1	DECAL, CYLINDER GEAR SHIFT
4	71379127	1	DECAL, WARNING, STAND CLEAR
5	700721125	1	DECAL, ATR
6	----------	1	PLATE, SERIAL NUMBER
	70924946	2	RIVET, 1/8 X 9/32
7	71394696	1	DECAL, 9790
8	590769M1	1	DECAL, PATENT
9	71395989	1	DECAL, LUBE GUIDE (PRIOR S/N HN36101)
	71403606	1	DECAL, LUBE GUIDE (EFF. S/N HN36101)
	71406769	1	DECAL, LUBE GUIDE (EFF. S/N HP36101)
10	71379128	1	DECAL, WARNING
11	71394692	1	DECAL, MASSEY FERGUSON
12	71394691	1	DECAL, FIELDSTAR
13	71394690	1	DECAL, MF LOGO
14	700720618	1	DECAL, TIRE USAGE
15	700721781	1	DECAL, WARNING, KEEP OFF
16	111095W1	2	DECAL, DANGER, HEADER FALLING
17	112967W1	1	DECAL, MASSEY FERGUSON
18	71379129	1	DECAL, WARNING, KEEP OFF
19	700717403	2	REFLECTOR, AMBER
20	71395757	1	EMBLEM, MF
21	71365412	1	DECAL, US FLAG
22	71379130	2	DECAL, WARNING, GRAIN TANK
23	111741W1	1	DECAL, DANGER, CLEANOUT
24	700727993	1	DECAL, BATTERY SWITCH (EFF. S/N HR36101)

MC00326
PR: 456

https://truckmanualshub.com/

RIGHT SIDE & REAR LABELS
(PRIOR S/N HS36101)

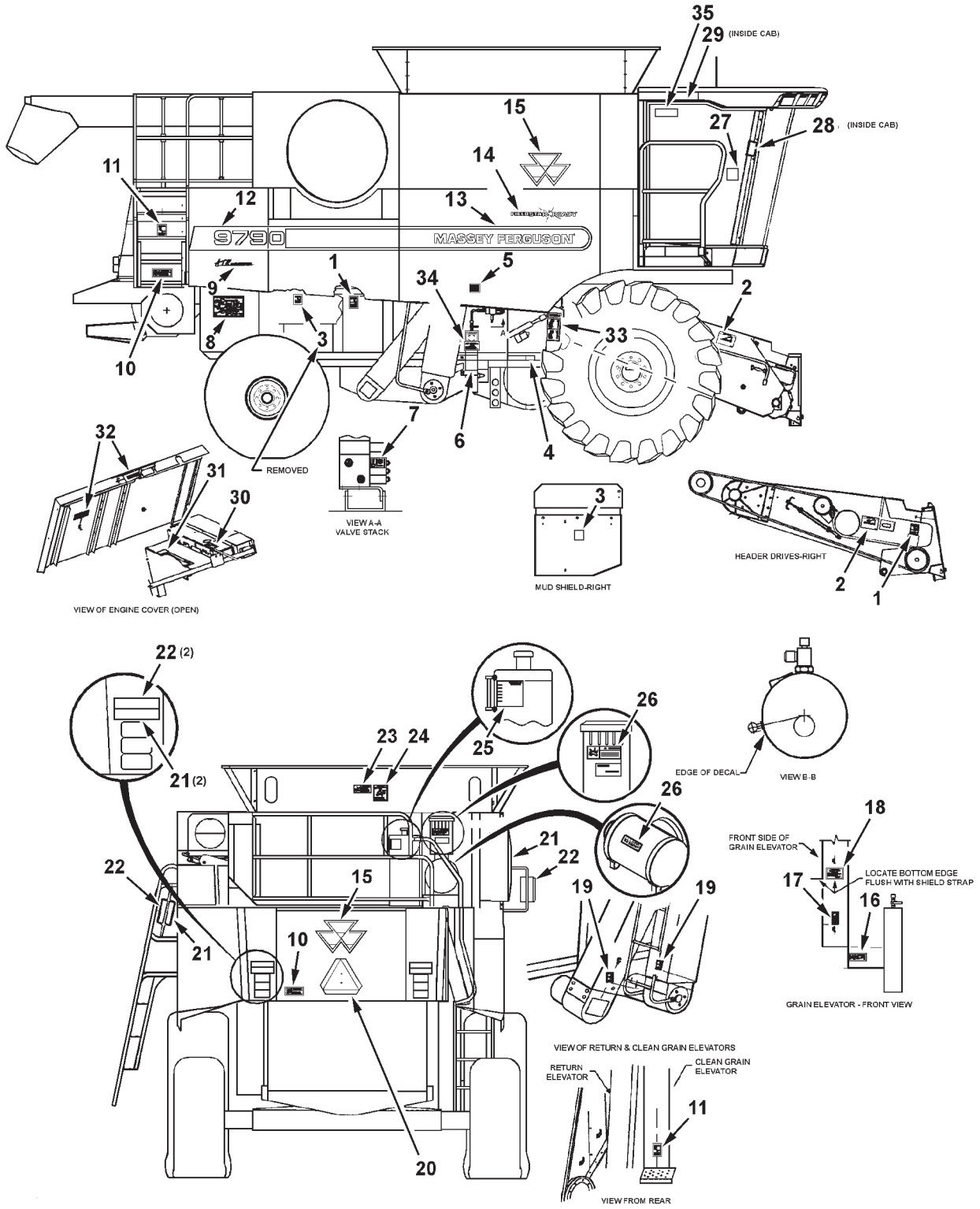

MC00325

https://truckmanualshub.com/

RIGHT SIDE & REAR LABELS
(PRIOR S/N HS36101)

ITEM	NUMBER	QTY	DESCRIPTION
1	111091W1	2	DECAL, DANGER, SHIELD MISSING
2	111095W1	2	DECAL, DANGER, HEADER FALLING
3	111670W1	2	DECAL, WARNING, BELT OR CHAIN (QTY 2 PRIOR S/N HR36101)
4	700720727	1	DECAL, DANGER, SHIELD MISSING
5	71379128	1	DECAL, WARNING
6	71371720	1	DECAL, DANGER, ENGAGE RAM STOP
7	2609080W1	1	DECAL, HEAD LOWER ADJUST
8	71395988	1	DECAL, LUBE GUIDE (PRIOR S/N HP36101)
	71406770		DECAL, LUBE GUIDE (EFF. S/N HP36101)
9	700721125	1	DECAL, ATR
10	71379127	2	DECAL, WARNING, STAND CLEAR
11	71379129	2	DECAL, WARNING, KEEP OFF
12	71394697	1	DECAL, 9790
13	71394693	1	DECAL, MASSEY FERGUSON
14	71394691	1	DECAL, FIELDSTAR
15	71394690	2	DECAL, MF LOGO
16	71348560	1	DECAL, DANGER,USE NITROGEN
17	71379126	1	DECAL, WARNING, FLUID PRESSURE
18	71394175	1	DECAL, VALVE STACK
19	111743W1	2	DECAL, WARNING, HAND AWAY
20	71379434	1	EMBLEM, SMV
	7883275	2	SCR, HEX WSHR HD MACH, 1/4-20 X 3/4
	70931209	2	NUT, SERR FLANGE, 1/4-20
	70917377	2	WASHER, 1/4, WIDE
	70916952	2	WING NUT, 1/4-20
21	700717404	4	REFLECTOR, RED/ORANGE
22	700717402	4	REFLECTOR, RED
23	111736W2	1	DECAL, DANGER, STOP ENGINE
24	71368074	1	DECAL, BIN LOADER
25	590817M1	1	DECAL, HYDRAULIC RESERVOIR
26	71387749	1	DECAL, DANGER, STARTING FLUID
27	71389158	1	LABEL, EXIT
28	700725670	1	DECAL, WARNING
29	71395762	1	DECAL, DANGER
30	700720605	1	DECAL, WARNING, RADIATOR CAP
31	71385793	1	DECAL, AIR CONDTNING (PRIOR S/N HP36101)
32	71379132	2	DECAL, WARNING
33	71392776	1	DECAL, V.S. FAN DRIVE
34	71370232	1	DECAL, ACCUMULATOR SHUT-OFF
35	700729396	1	DECAL, BIODIESEL

MC00325
PR: 458

https://truckmanualshub.com/

LEFT SIDE & FRONT LABELS
(EFF. S/N HS36101)

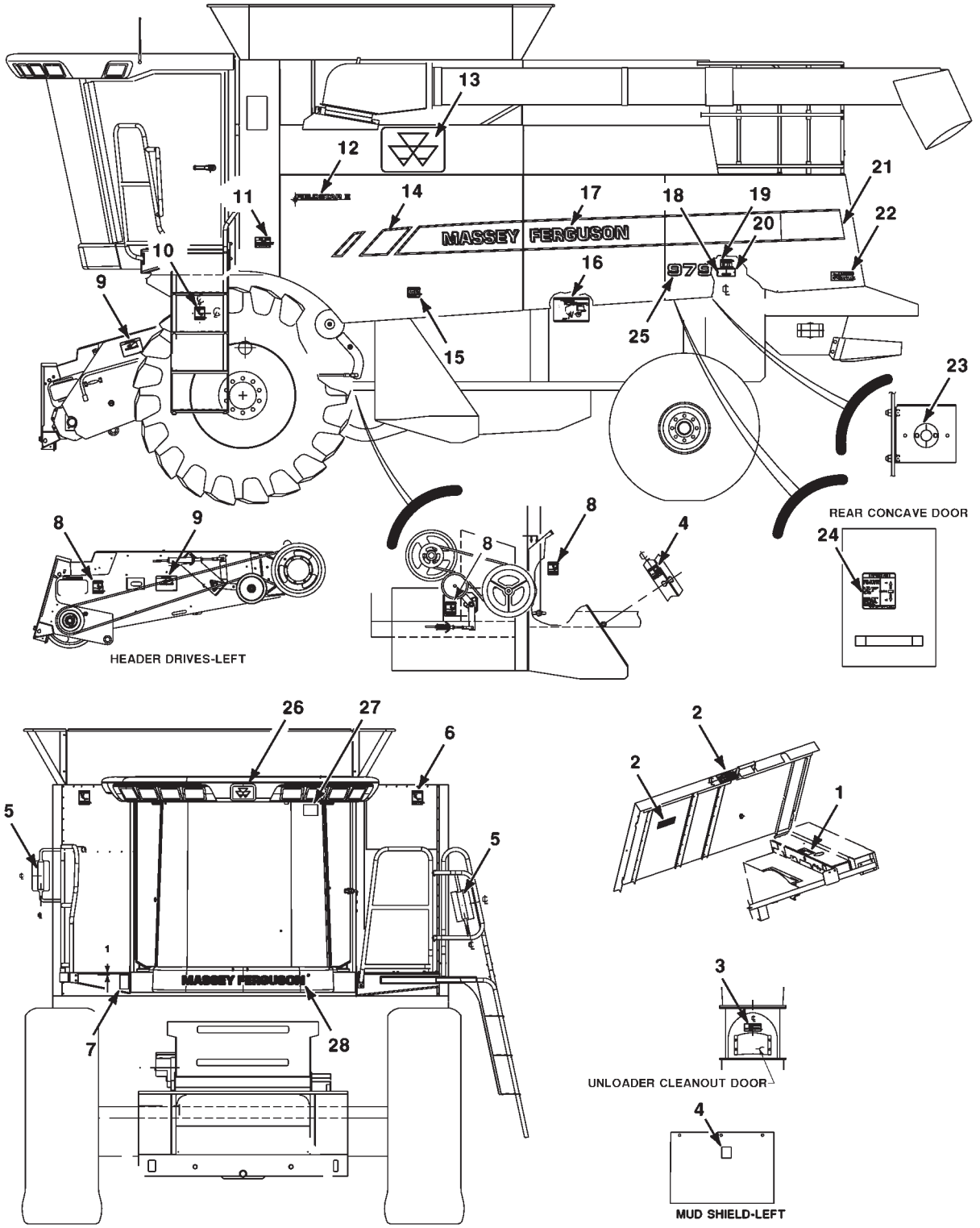

MC00567

https://truckmanualshub.com/

LEFT SIDE & FRONT LABELS
(EFF. S/N HS36101)

ITEM	NUMBER	QTY	DESCRIPTION
1	700720605	1	DECAL-WARNING, RADIATOR CAP
2	71379132	2	DECAL-WARNING, BELT, FAN
3	111741W1	1	DECAL-DANGER, CLEANOUT
4	111670W1	2	DECAL-WARNING, BELT OR CHAIN
5	700717403	2	DECAL-REFLECTOR, AMBER
6	71379130	1	DECAL-WARNING, GRAIN TANK
7	71379129	1	DECAL-WARNING, FALLING OFF
8	111091W1	3	DECAL, DANGER, SHIELD MISSING
9	111095W1	2	DECAL-DANGER, HEADER FALLING
10	700721781	1	DECAL-WARNING, KEEP OFF
11	700720618	1	DECAL-TIRE USAGE
12	700729424	1	DECAL-FIELDSTAR II
13	700727848	1	DECAL-MF
14	700727841	1	DECAL-MF, FRONT, LEFT
15	71379128	1	DECAL-WARNING, SHIELDS IN PLACE
16	700728779	1	DECAL-LUBE INTERVAL
17	700727843	1	DECAL-MF, LEFT
18	70924946	2	RIVET, 1/8 X 9/32
19	590769M1	1	DECAL-PATENT
20	- - - - -	1	PLATE-SERIAL (NOT SERVICE)
21	700729423	1	DECAL-STRIPE, LEFT REAR
22	71379127	1	DECAL-WARNING, STAND CLEAR
23	700727993	1	DECAL-BATTERY SWITCH
24	71407700	1	DECAL-CYLINDER GEAR SHIFT
25	700729399	1	DECAL-9790
26	71395757	1	EMBLEM, MF
27	71365412	1	DECAL, U.S. FLAG
28	112967W1	1	DECAL, MASSEY FERGUSON

MC00567
PR: 71418088-03-12

https://truckmanualshub.com/

RIGHT SIDE & REAR LABELS
(EFF. S/N HS36101)

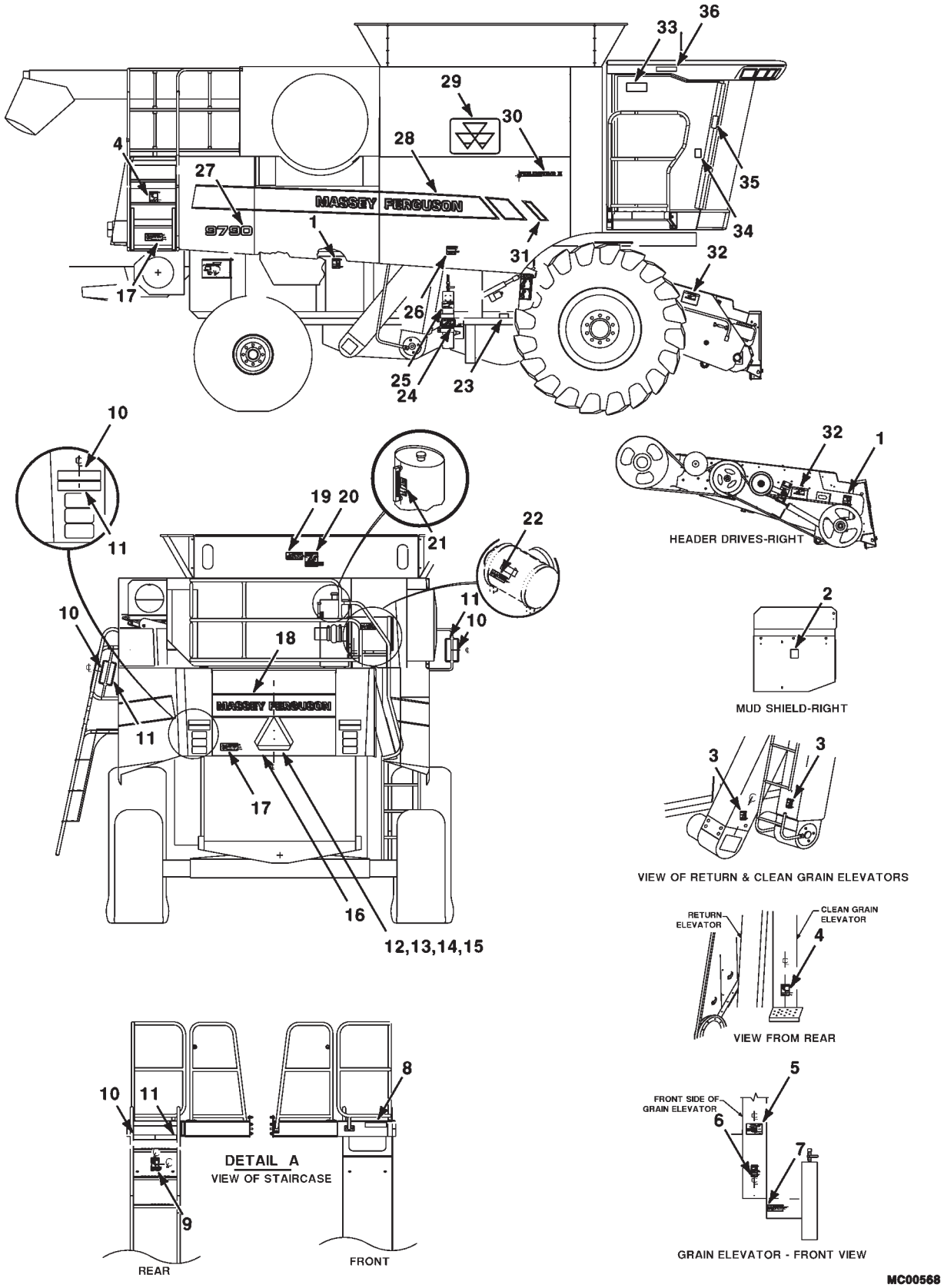

https://truckmanualshub.com/

RIGHT SIDE & REAR LABELS
(EFF. S/N HS36101)

ITEM	NUMBER	QTY	DESCRIPTION
1	111091W1	2	DECAL-DANGER, SHIELD MISSING
2	111670W1	1	DECAL-WARNING, BELT OR CHAIN
3	111743W1	2	DECAL-WARNING, HANDS AWAY
4	71379129	2	DECAL-WARNING, FALLING OFF
5	700728811	1	DECAL-VALVE STACK
6	71379126	1	DECAL-WARNING, FLUID PRESSURE
7	71348560	1	DECAL-DANGER
8	700717403	1	DECAL-REFLECTOR, AMBER
9	700721781	1	DECAL-WARNING, KEEP OFF
10	700717402	4	DECAL-REFLECTOR, RED
11	700717404	4	DECAL-REFLECTOR, RED/ORANGE
12	7883275	2	SCREW, HEX WSHR HD MACH, 1/4-20 X 3/4
13	70931209	2	NUT, SERR FLANGE, 1/4-20
14	353769X1	2	WASHER, 1/4 HARDENED
15	70916952	2	WING NUT, 1/4-20
16	7020589	1	EMBLEM-SMV
17	71379127	2	DECAL-WARNING, STAND CLEAR
18	700727844	1	DECAL-MF, BACK
19	111736W2	1	DECAL-DANGER, STOP ENGINE
20	71368074	1	DECAL-BIN LOADER
21	700729019	1	DECAL-HYDRAULIC RESERVOIR
22	71387749	1	DECAL-DANGER, STARTING FLUID
23	700720727	1	DECAL-DANGER, BELT OR CHAIN
24	71371720	1	DECAL-DANGER, RAM STOP
25	71370232	1	DECAL-ACCUMULATOR
26	71379128	1	DECAL-WARNING, SHIELDS IN PLACE
27	700729399	1	DECAL-9790
28	700727906	1	DECAL-MF, RIGHT
29	700727848	1	DECAL-MF LOGO
30	700729424	1	DECAL-FIELDSTAR II
31	700727847	1	DECAL-MF, FRONT, RIGHT
32	111095W1	2	DECAL-DANGER, HEADER FALLING
33	700729369	1	DECAL, BIODIESEL
34	71389158	1	LABEL, EXIT
35	700725670	1	DECAL, WARNING
36	71395762	1	DECAL, DANGER

MC00568
PR: 71418088-03-22

https://truckmanualshub.com/

ENGINE & MOUNTS
CUMMINS
(PRIOR S/N HR36101)

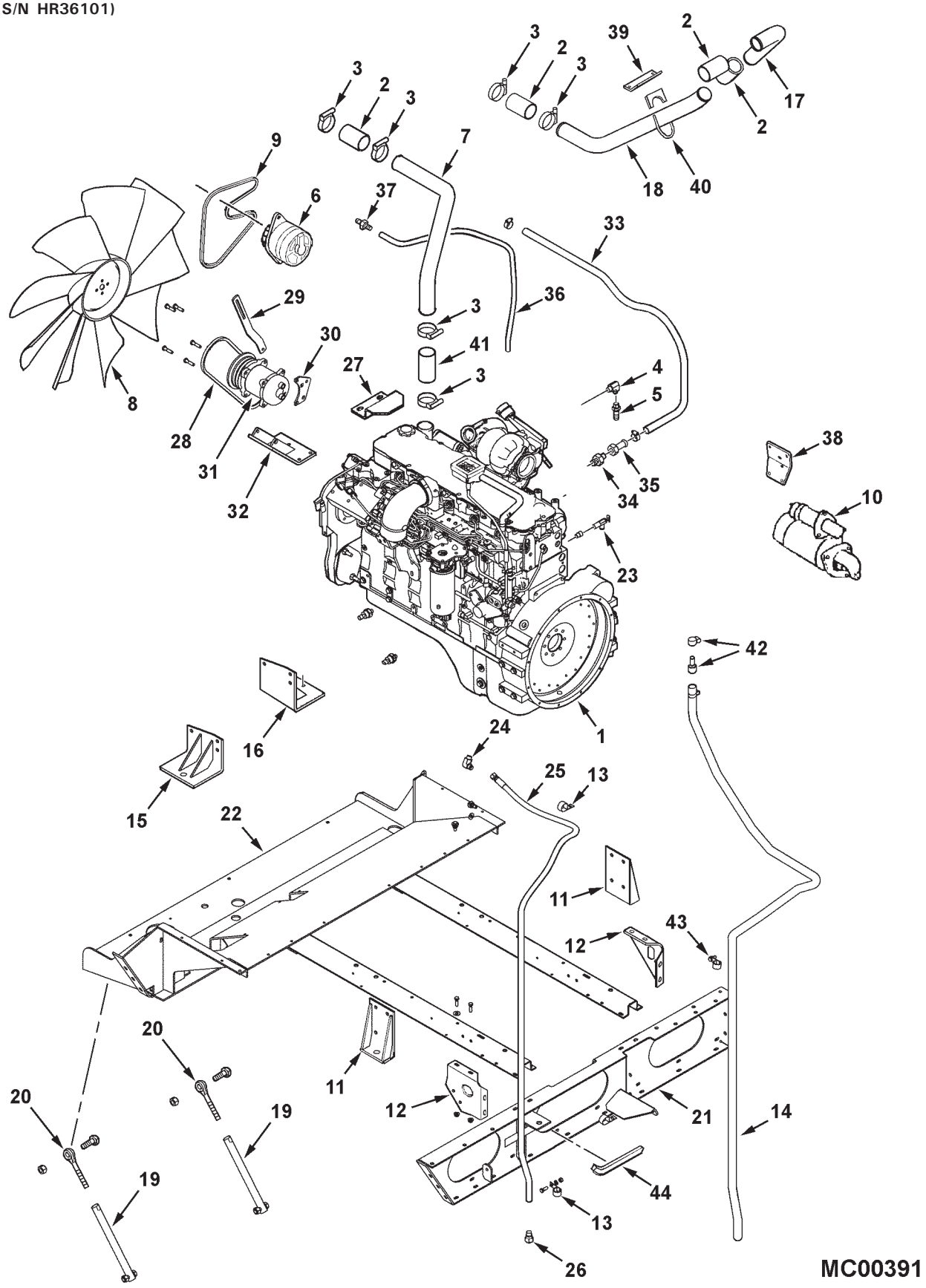

https://truckmanualshub.com/

ITEM	NUMBER	QTY	DESCRIPTION
1	71387730	1	*ENGINE, QSL9, 330 HP(PRIOR S/N HP36101)
	71401812	1	*ENGINE, QSL9, 350 HP (EFF. S/N HP36101)
2	71367037	4	HOSE CONNECTOR, 2.25 ID X 4.0 LG
3	71366540	10	CLAMP, CONSTANT TORQUE
4	70919272	1	ELBOW, 90 DEG, 3/4-16 JIC X 3/4 NPTF
5	71351285	1	FITTING, BARB 3/4-16 FEM JIC X .62 HOSE
6	-----	1	ALTERNATOR (SEE ELECTRICAL SECTION)
7	71389409	1	TUBE,COOLNT,UPPR ENG.(PRIOR S/N HP36101)
	71401822	1	TUBE,COOLANT,UPPR ENG.(EFF. S/N HP36101)
8	71396760	1	FAN BLADE ASY. (PRIOR S/N HP36101)
	71404412	1	FAN BLADE ASY. (EFF. S/N HP36101)
	70950046	4	CAPSCREW, M10-1.5 X 120MM
	1107164	4	WASHER, NARR, M10
9	3289213V	1	BELT, FAN/ALT. DRIVE (68.5" LG)(PRIOR S/N HP36101)
	71410501V	1	BELT, FAN/ALT. DRIVE (CUMMINS)(EFF. S/N HP36101)
10	71391860	1	STARTER MOTOR (DELCO)
11	71386992	2	BRACKET WLDMT, ENG REAR, LH & RH
	70950453	8	CAPSCREW, M12-1.75 X 35, CL 8.8
	705541	8	WASHER, HARDENED 1/2
	70924744	2	CAPSCREW, 5/8-11 X 1-1/2
	Y705582	2	WASHER, HVY, HARD, 5/8
12	102302M1	2	GUSSET, ENGINE RAIL
	70920415	8	CAPSCREW, 3/8-16 X 1-1/4
	Y704734	8	NUT, HEX FLANGE TOP LOCK, 3/8-16
	70917378	8	WASHER, 3/8 WIDE
13	70936474	3	CLAMP, DOUBLE, 1 DIA X .406 HOLE (PRIOR S/N HP36101)
	70937677	4	J-CLIP, 1" X .406 HOLE (EFF.S/N HP36101)
	70921210	4	CAPSCREW, 3/8-16 X 1"
	70916965	4	LOCKWASHER, 3/8
	70916950	4	NUT, 3/8-16 REG
14	-----	1	HOSE, EMISSIONS (SUPPLIED WITH ENGINE) (PRIOR S/N HP36101)
	71396764	1	HOSE, EMISSIONS, 1"ID (EFF. S/N HP36101)
	364125X1	1	CLAMP, WORM GR, .81 - 1.75 DIA
15	71386986	1	BRACKET WLDMT, ENG MTG, LH FRT
16	71386989	1	BRACKET WLDMT, ENG MTG, RH FRT
	70950052	7	CAPSCREW, M12-1.75 X 30, CL8.8
	705541	7	WASHER, HARDENED 1/2
	70924744	2	CAPSCREW, 5/8-11 X 1-1/2
	Y705582	2	WASHER, HVY, HARD, 5/8
17	71388876	1	TUBE, COOLANT, LOWER ENG.
18	71388899	1	TUBE, COOLANT,LWR RAD(PRIOR S/N HP36101)
	71401813	1	TUBE, COOLANT,LWR RAD (EFF. S/N HP36101)
19	71388895	2	BRACE, RAD SUPPORT
	70922664	2	CAPSCREW, 5/8-11 X 2
	70923353	2	NUT, CENTER LOCK, 5/8-11
20	71343344	2	EYEBOLT
	7701329	2	CAPSCREW, 3/4-10 X 2-1/4
	70918269	4	WASHER, FLAT 3/4 NARR
	70919332	2	LOCKWASHER, 3/4
	70913160	6	NUT, 3/4-10 REG

CONTINUED

https://truckmanualshub.com/

ENGINE & MOUNTS
CUMMINS
(PRIOR S/N HR36101)

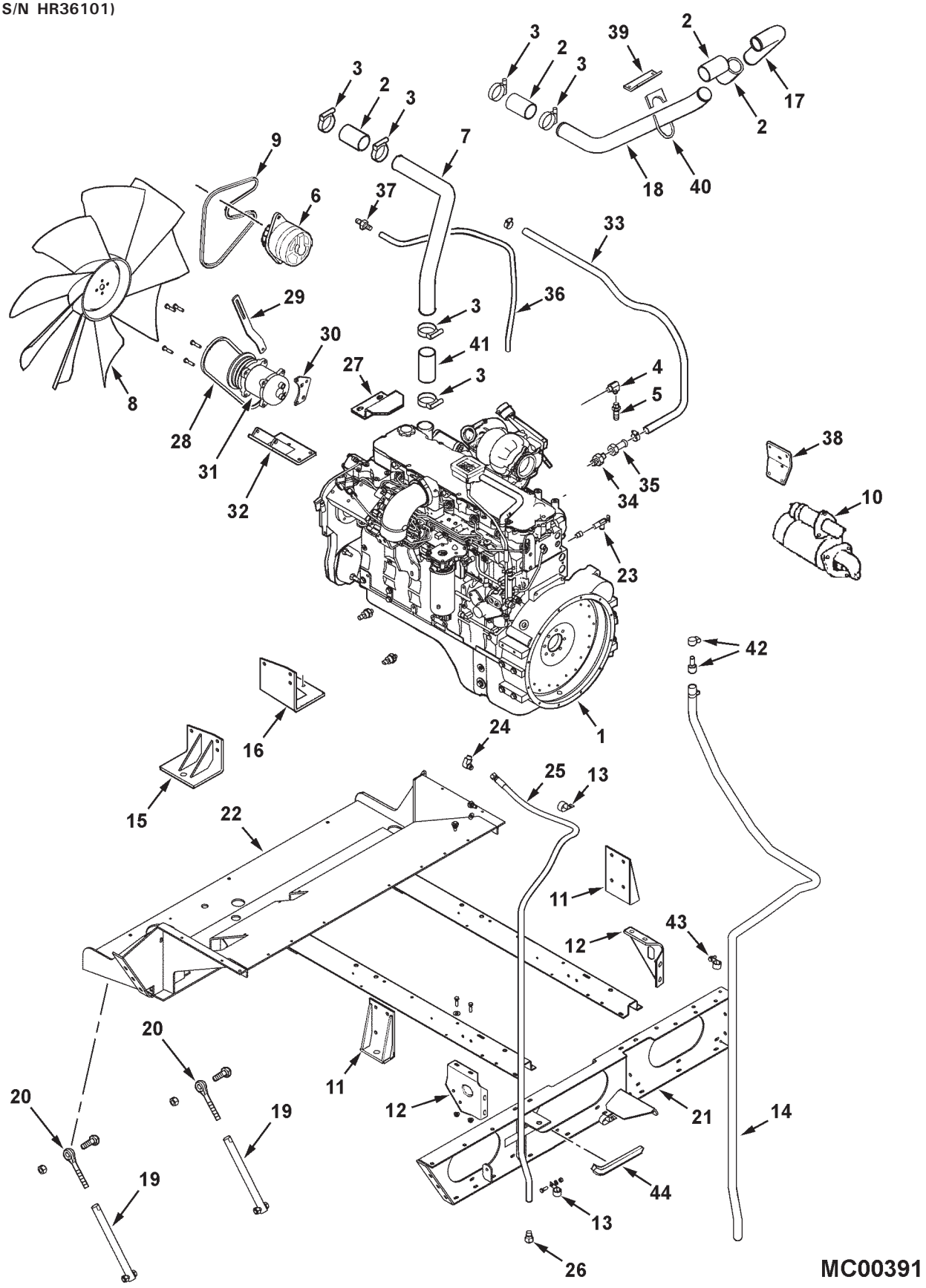

https://truckmanualshub.com/

ITEM	NUMBER	QTY	DESCRIPTION
21	71389405	1	SUB FRAME WLMT. LH ENGINE
	70920415	8	CAPSCREW 3/8-16 X 1-1/4
	70917378	8	WASHER, FLAT 3/8-14 GA
	Y704734	8	NUT, HEX FLANGE TOP LOCK, 3/8-16
22	71393512	1	FRAME WLDMT, ENG MOUNT (PRIOR S/N HP36101)
	71401800B	1	FRAME WLDMT, ENG MOUNT(EFF. S/N HP36101)
	70920415	5	CAPSCREW 3/8-16 X 1-1/4
	70917378	5	WASHER, FLAT 3/8-14 GA
	Y704734	12	NUT, HEX FLANGE TOP LOCK, 3/8-16
23	30-3076830	1	VALVE, SHUTOFF
	70936774	1	BUSH,PIPE REDUCER 3/4 MALE X 3/8 FEM
24	1905314M1	1	ELBOW, 90 DEG. 3/4-16 JIC X M18-1.5
25	71382694	1	HOSE, ENGINE OIL DRAIN
	70925094	2	TIE, BLACK NYLON, SELF-LOCK, .18 X 7.3
26	700712973	1	PLUG, 37 DEG. FLARE, 3/4-16
27	71393838	1	SHIELD, SENSOR (PRIOR S/N HP36101)
28	71148120	1	BELT, A/C COMPRESSOR
29	71388877	1	LINK, ADJUSTING, A/C COMP
	1112407	1	CAPSCREW, M10-1.5 X 20
	700708367	2	LOCKWASHER, M10
	70950038	1	CAPSCREW, M10-1.5 X 40
	1107164	1	WASHER, FLAT M10
	7774664	1	NUT, M10-1.5
30	30-3429865	1	PLATE COMPRESSOR
	70950038	2	CAPSCREW, M10-1.5 X 40
	700708367	2	LOCKWASHER, M10
	7774664	2	NUT, M10-1.5
31	71379601	1	A/C COMPRESSOR & CLUTCH ASSEMBLY
32	71385055	1	SUPPORT WLDMT, COMPRESSOR
	72160927	1	SLEEVE, SLIT
	70950038	2	CAPSCREW, M10-1.5 X 40
	700708367	2	LOCKWASHER, M10
	7774664	2	NUT, M10-1.5

CONTINUED

https://truckmanualshub.com/

ENGINE & MOUNTS
CUMMINS
(PRIOR S/N HR36101)

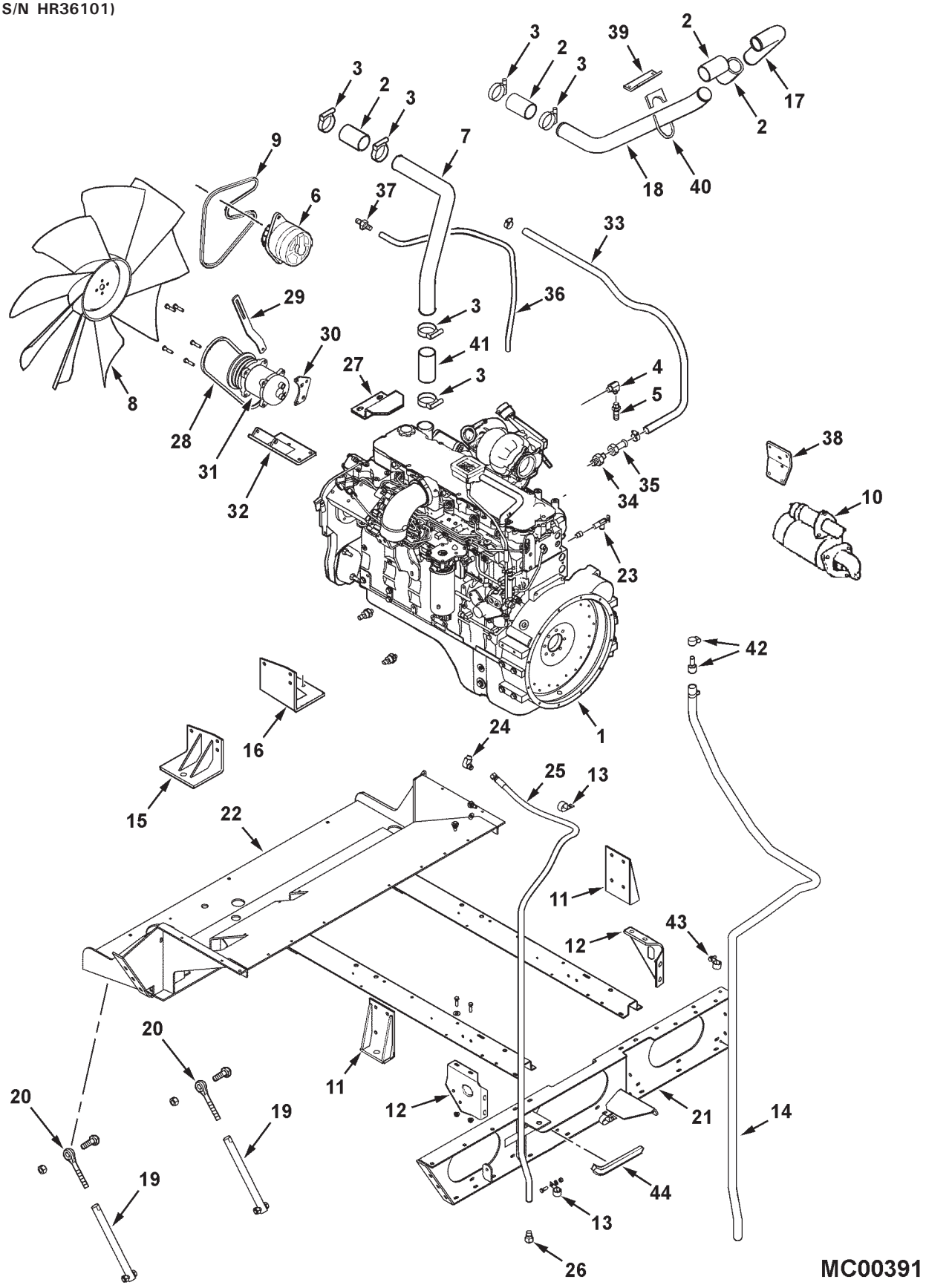

https://truckmanualshub.com/

ITEM	NUMBER	QTY	DESCRIPTION
33	71388998	1	HOSE, MAKE-UP, 3/4 ID
	70921911	2	CLAMP, HOSE, WORM DRIVE, #12
34	70919342	1	CONNECTOR, STR, 1-1/16-12 JIC X 3/4 NPTF
35	70920809	1	FITTING, PUSH-ON
36	71391045	1	HOSE, DEAERATION, .38 ID X 40"
	70929402	2	CLAMP, HOSE, WORM, #4M
37	7746449	1	FITTING, HOSE, 3/8 ID X 1/4 NPTF
38	71395734	1	SUPPORT, WATER FILTER(PRIOR S/N HP36101)
39	71393524	1	BRACKET, RAD TUBE
40	70937712	1	CLAMP, EXHAUST, 2-3/8 DIA
41	71369670	1	HOSE, CONNECTOR (EFF. S/N HP36101)
42	71408408	1	REDUCER, 1" X 1/2 DIA
	70921911	1	CLAMP, HOSE, WORM DRIVE, #12
43	70937684	4	J-CLIP,1.25 X .406 HOLE(EFF.S/N HP36101)
44	700718444	1	TRIM, EDGE PROTECTOR
-	72511906	1	FUEL FILTER/WATER SEPARATOR (TIER 2, PRIOR S/N HP36101)
-	71410009	1	FILTER, FUEL (TIER 3, EFF. S/N HP36101)
-	71410010	1	FILTER, FUEL/WATER SEPARATOR (TIER 3, EFF. S/N HP36101)
-	72516560	1	FILTER, ENGINE OIL
-	71372880	1	FILTER,COOLANT(23 UNITS DCA-4/FULL FILL) (TIER 2 ENG. ONLY. TIER 3 NO FILTER)
-	3942197	1	HEATER, BLOCK, 120V, 1000 WATT (PRIOR S/N HP36101)(ORDER FROM CUMMINS)
-	3913106	1	CORD, 12" LG. (PRIOR S/N HP36101)

*NOTE: FOR SERVICE REFERENCE CUMMINS OPERATION & MAINTENANCE MANUALS AND CUMMINS ENGINE PARTS CATALOGUES AND, OR CEPC/ QSOL SYSTEM

MC00391
PR: 26

https://truckmanualshub.com/

ENGINE & MOUNTS
SISU
(EFF. S/N HR36101)

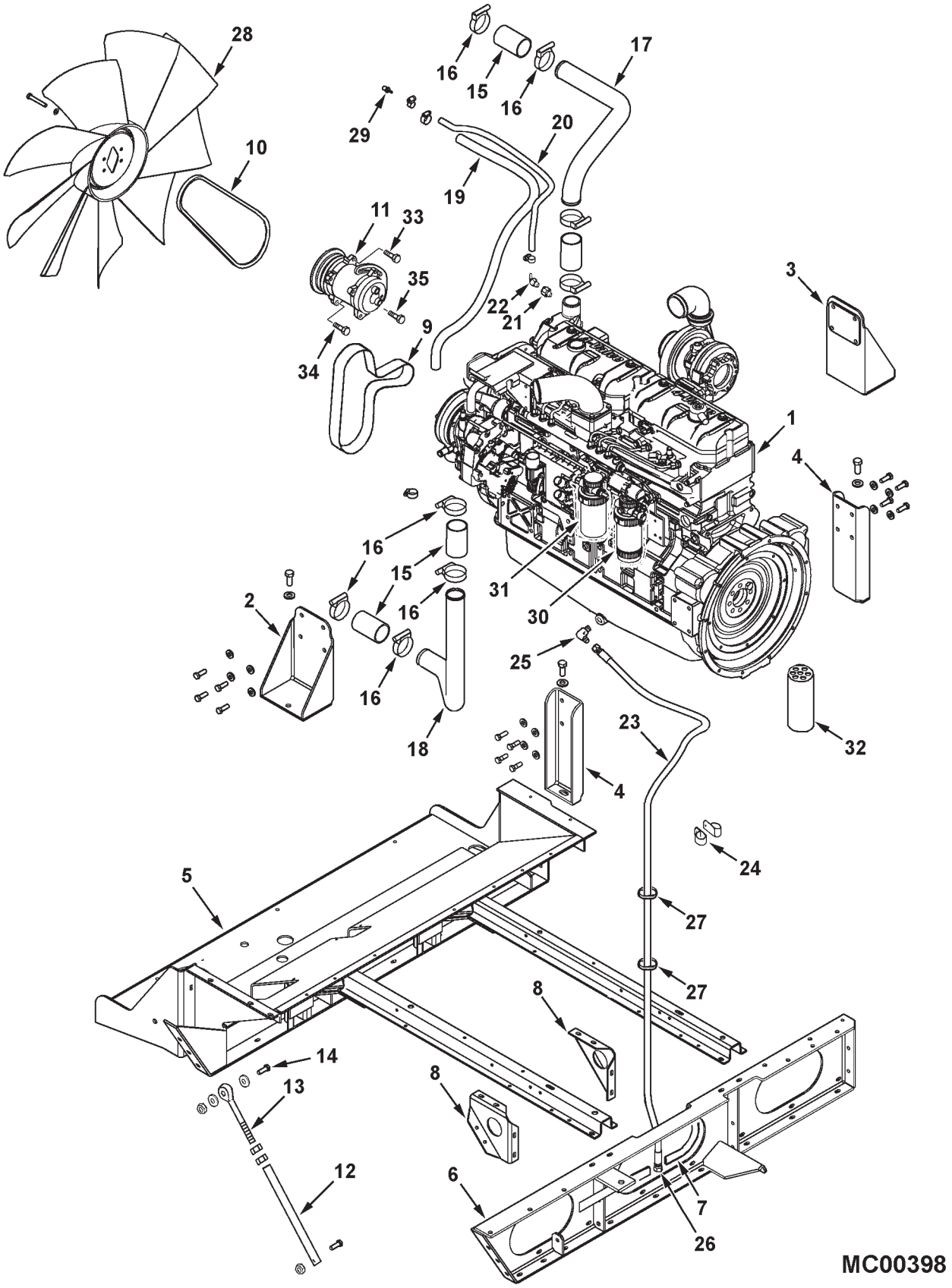

https://truckmanualshub.com/

ITEM	NUMBER	QTY	DESCRIPTION
1	V835261462	1	ENGINE ASY, TIER 3, SISU
2	71409064	1	MOUNT BRACKET WLMT, FRONT RH
3	71409065	1	MOUNT BRACKET WLMT, REAR RH
	70924744	2	CAPSCREW, 5/8-11 X 1-1/2 GR5
	Y705582	2	WASHER, HARD, .688 X 1.34 X .13 TH
	70950453	6	CAPSCREW, M12-1.75 X 35 CL8.8
	705541	6	WASHER, HARD, .531 X 1.09 X .097 TH
4	71405966	2	MOUNT BRACKET, ENG., LEFT
	70924744	2	CAPSCREW, 5/8-11 X 1-1/2 GR5
	Y705582	2	WASHER, HARD, .688 X 1.34 X .13 TH
	7703275	8	CAPSCREW, M12-1.75 X 25 CL8.8
	705541	8	WASHER, HARD, .531 X 1.09 X .097 TH
5	71401800	1	SUBFRAME WLMT, ENGINE
	70920415	9	CAPSCREW, 3/8-16 X 1-1/4 GR5
	70917378	9	WASHER, 3/8, WIDE
	Y704734	16	NUT, HEX FLANGE TOP LOCK, 3/8-16
6	71389405	1	SUB-FRAME WLDMT. LH ENGINE
	70920415	16	CAPSCREW, 3/8-16 X 1-1/4 GR5
	70917378	16	WASHER, 3/8, WIDE
	Y704734	16	NUT, HEX FLANGE TOP LOCK, 3/8-16
7	700718444	1	TRIM, PUSH-ON
8	102302M1	2	GUSSET, ENGINE RAIL
	70920415	4	CAPSCREW, 3/8-16 X 1-1/4 GR5
	70917378	4	WASHER, 3/8, WIDE
	Y704734	4	NUT, HEX FLANGE TOP LOCK, 3/8-16
9	V685121585	1	BELT, FAN & ALT'R DRIVE
10	71148120	1	BELT, A/C COMPRESSOR DRIVE
11	71379601	1	A/C COMPRESSOR & CLUTCH ASY.
	71386436	1	CLUTCH ASY (SEALED BRG.)
12	71388895	2	BRACE, TUBE
	70922664	2	CAPSCREW, 5/8-11 X 2 GR5
	70923353	2	NUT, CENTER LOCK, 5/8-11
13	71343344	2	EYE-BOLT, 3/4-10 UNC
	70913160	4	NUT, 3/4-10, REG
14	70925872	2	CAPSCREW, 3/4-10 X 2-1/4 GR5
	70918269	4	WASHER, 3/4, NARROW
	70919332	2	LOCKWASHER, 3/4
	70913160	6	NUT, 3/4-10, REG
15	71367037	4	SLEEVE CONN. 2.25 ID X 4.0
16	71366540	8	CLAMP, CONSTANT TORQUE

CONTINUED

https://truckmanualshub.com/

ENGINE & MOUNTS
SISU
(EFF. S/N HR36101)

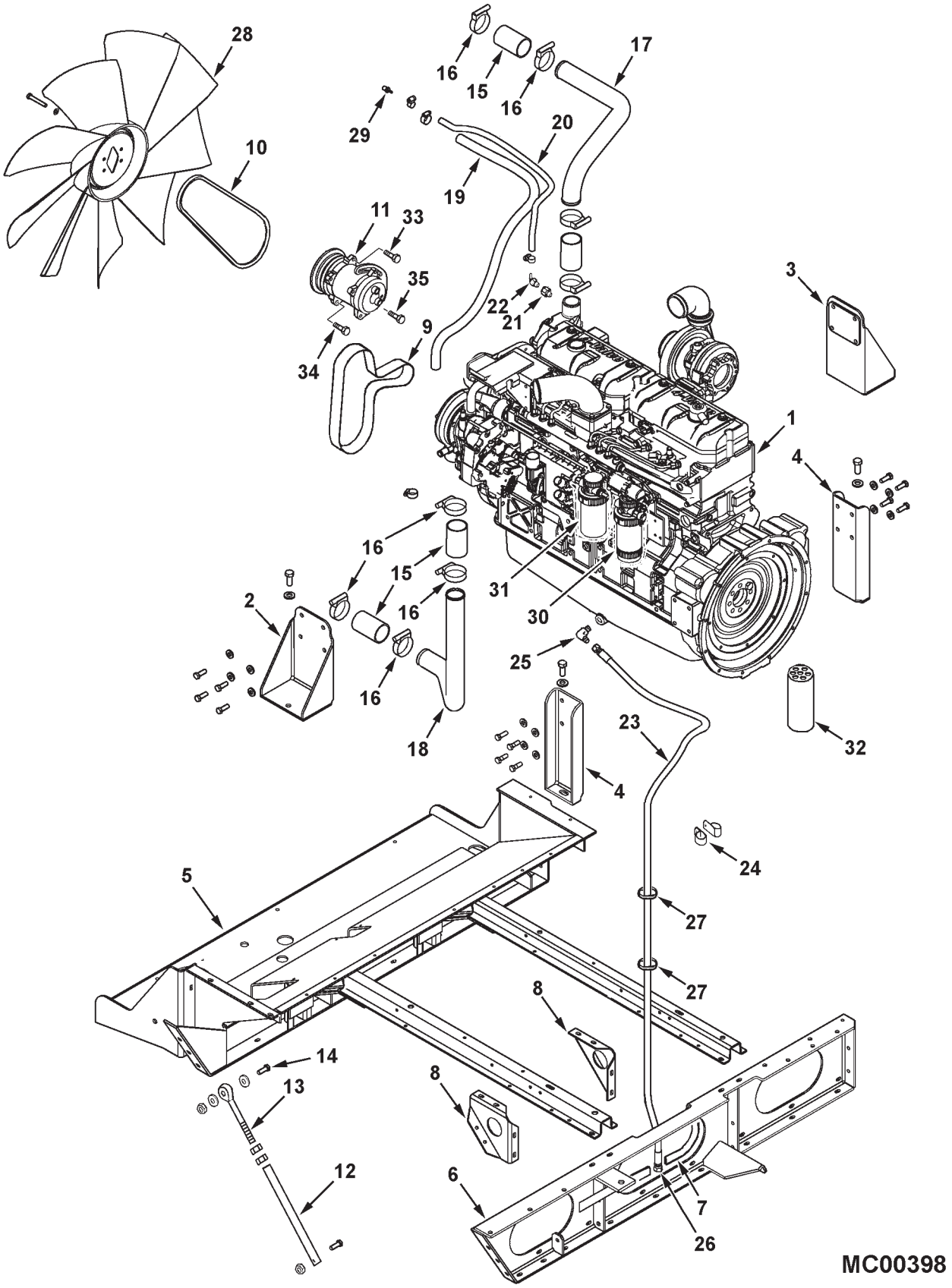

https://truckmanualshub.com/

ITEM	NUMBER	QTY	DESCRIPTION
17	71406606	1	TUBE, UPPER COOLANT, ENG. TO RAD
18	71405963	1	TUBE, LOWER COOLANT, ENG. TO RAD
19	71408686	1	HOSE, SHUNT, 3/4 ID
	70921911	2	CLAMP, WORM DRIVE, .69-1.25 DIA
20	71408687	1	HOSE, DEAERATION, 3/16 ID X 33.5"
	70929402	2	CLAMP, WORM DRIVE, .22-.63 DIA
21	700716238	1	ADAPTER, M10 ORB X 1/8 NPTF FEM
	700716061	1	O-RING, METRIC, 1.6 X 8.10 ID
22	71406629	1	ELBOW, 90 DEG, 1/8 NPTF X 3/16 STEM
23	71409066	1	HOSE ASY, ENG OIL DRAIN
24	70937677	4	J-CLIP, 1 DIA X .406 HOLE
	70937684	4	J-CLIP, 1-1/4 DIA X .406 HOLE
	70921210	4	CAPSCREW, 3/8-16 X 1 GR5
	70916965	4	LOCKWASHER, 3/8
	70916950	4	NUT, 3/8-16
25	3019418X91	1	ELBOW,90 D, M22-1.5 ORB X 7/8-14 JIC M
	3019398X1	1	O-RING, METRIC, 2.1 X 19.4 ID
26	70924290	1	PLUG, 37 DEG. FLARE, 7/8-14
27	3619622M1	2	TIE, NYLON LOCKING, .184 X 14.2 LG
28	71407844	1	FAN BLADE ASY.
	3009213X1	6	SCREW, HEX FLNG, M10-1.5 X 60 CL10.9
	390734X1	6	WASHER, M10, STD
29	71406628	1	COUPLING, 1/4 NPTF X 3/16 BARB STEM
30	V836867591	1	PRE-FILTER, FUEL
31	V836867595	1	FILTER, FUEL, MAIN
32	V836362567	1	FILTER, OIL
33	7703242	1	CAPSCREW, M10-1.5 X 45 CL8.8
	70917378	1	WASHER, 3/8, WIDE
	700708367	1	LOCKWASHER, M10
	7774664	1	NUT, M10-1.5
34	7771728	1	CAPSCREW, M10-1.5 X 40 CL8.8
	700708367	1	LOCKWASHER, M10
	7774664	1	NUT, M10-1.5
35	72160927	1	SLEEVE
	7771728	1	CAPSCREW, M10-1.5 X 40 CL8.8
	700708367	1	LOCKWASHER, M10
	7774664	1	NUT, M10-1.5

MC00398
PR: t05l09o11c0001

https://truckmanualshub.com/

CYLINDER BLOCK
SISU

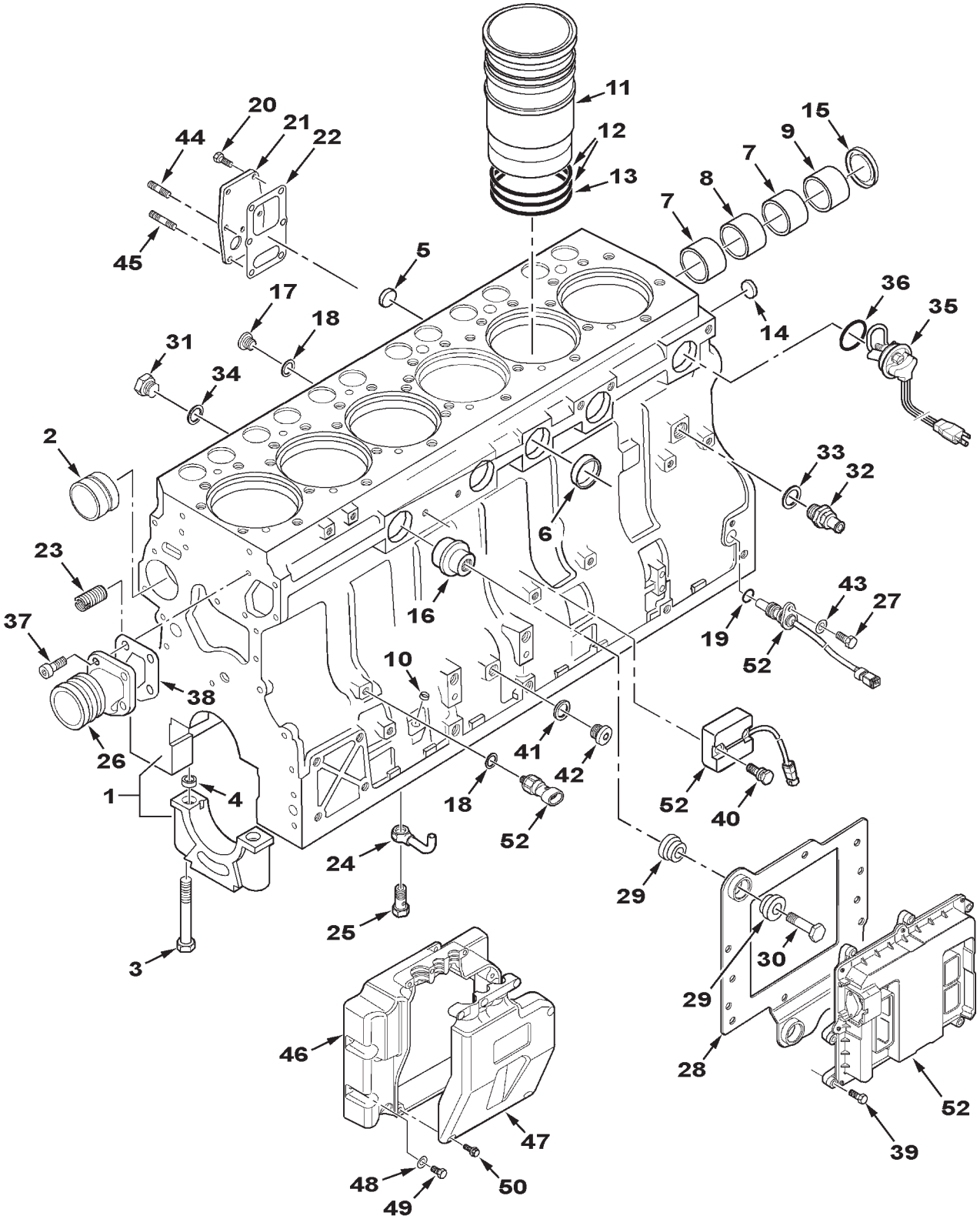

SIS0054

https://truckmanualshub.com/

ITEM	NUMBER	QTY	DESCRIPTION
1	V836867046	1	BLOCK, CYLINDER (INCLS. ITEMS 2-9)
2	V836866069	1	BUSHING
3	V529903180	14	SCREW
4	V836214478	24	GUIDE
5	V640016018	1	PLUG, CUP
6	V640016040	4	PLUG, CUP
7	V836852460	2	BUSHING
8	V836852459	1	BUSHING
9	V836852461	1	BUSHING
10	V640016012	1	PLUG, CUP
11	V836867048	6	LINER, CYLINDER
	V836867050	AR	LINER, CYLINDER (9.08MM)
12	V836855446	12	O-RING
13	V836855447	6	O-RING
14	V640016016	4	PLUG, CUP
15	V836852744	1	PLUG
16	V837069057	1	PLUG
17	V640325110	5	PLUG
18	V615571014	5	RING, SEAL
19	VKH7070	1	O-RING
20	V528801380	5	SCREW, M8 X 20
21	V836855678	1	COVER
22	V836322852	1	GASKET
23	V836859153	1	NIPPLE, THREADED
24	V837070021	6	PIPE
25	V836338601	6	VALVE
26	V836855629	1	PIPE
27	V528801362	5	SCREW, M8 X 16
28	V837070147	1	BRACKET
29	V837069052	6	BUSHING, RUBBER
30	V837069056	3	SCREW
31	V836119079	1	PLUG
32	V836664377	1	COCK
33	V615881824	1	RING, SEAL
34	V615881620	1	RING, SEAL
35	V836840934	1	BLOCK HEATER, 110V, 1000W
36	V836840998	1	O-RING
37	V581804600	4	SCREW, M8 X 20
38	V836855554	1	GASKET
39	V529801102	8	SCREW, M6 X 25
40	V837070197	2	SCREW
41	V615881420	1	RING, SEAL
42	V640325014	1	PLUG
43	V500050840	1	WASHER
44	V546801360	1	STUDBOLT, M8 X 16
45	V546801400	1	STUDBOLT, M8 X 25
46	V837070285	1	HOUSING
47	V837070286	1	COVER
48	V500150642	5	WASHER
49	V581804182	5	SCREW, M6 X 12
50	V590253388	6	SCREW, 5.1 X 14
52	- - - - -	-	SEE ENGINE ELECTRICAL

SIS0054
PR: t05l09o11c0002

https://truckmanualshub.com/

FRONT GEAR HOUSING
SISU

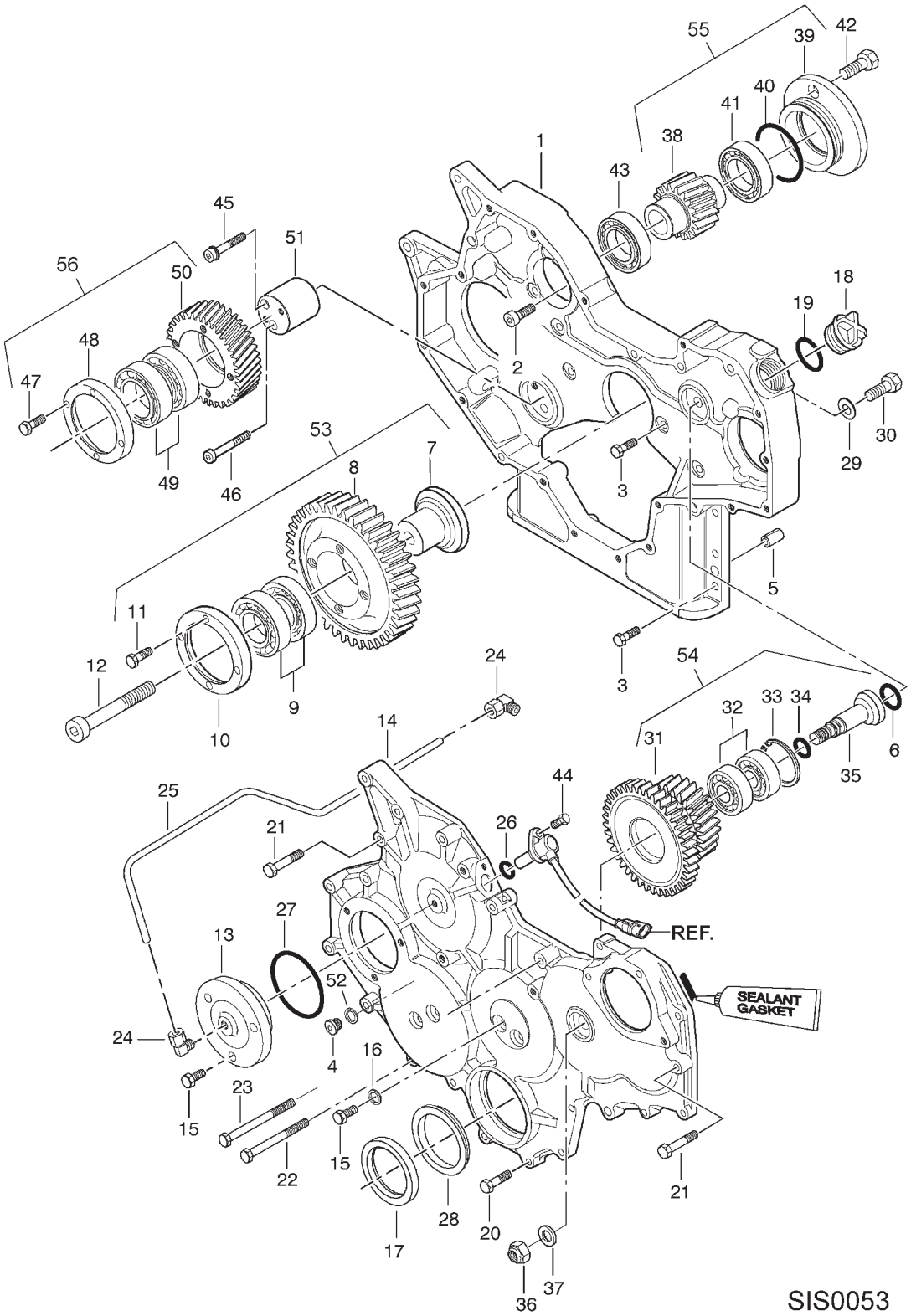

https://truckmanualshub.com/

FRONT GEAR HOUSING
SISU

ITEM	NUMBER	QTY	DESCRIPTION
1	V837070107	1	HOUSING, GEAR
2	V581804620	2	SCREW, M8X25
3	V528801400	12	SCREW, M8X25
4	V640325110	1	PLUG
5	VJE8802	2	PIN
6	V614601924	1	O-RING
7	V836855562	1	SHAFT
8	V837070000	1	GEAR
9	V610072109	2	BEARING
10	V836855565	1	FLANGE
11	V528901400	4	SCREW, M8X25
12	V581705910	1	SCREW, M14X70
13	V837070179	1	COVER, LOCK
14	V837070108	1	COVER, FRONT
15	V528801380	7	SCREW, M8X20
16	V615870814	4	RING, SEAL
17	V836840883	1	SEAL, OIL
18	V836017927	1	CAP
19	V614603540	1	O-RING
20	V528801410	10	SCREW, M8X30
21	V529801440	9	SCREW, M8X45
22	V529801510	1	SCREW, M8X50
23	V529801550	1	SCREW, M8X95
24	V641166006	2	UNION
25	V836867775	1	PIPE
26	VKH7070	1	O-RING
27	V614606825	1	O-RING
28	V836855636	1	PLATE, SHIELD
29	V500951200	1	WASHER
30	V528902200	1	SCREW, M12X25
31	V837070113	1	GEAR
32	V610073040	2	BEARING
33	V617330052	1	CIRCLIP
34	V614601324	1	O-RING
35	V837069069	1	SHAFT
36	V504601400	1	NUT, M14
37	V837069070	1	WASHER
38	V837070005	1	SHAFT
39	V836855651	1	COVER
40	V614609430	1	O-RING
41	VLA1014	1	BEARING
42	V528802602	2	SCREW, M14X25
43	VLA1014	1	BEARING
44	V528801062	1	SCREW, M6X16
45	V580704670	1	SCREW, M8X50
46	V581704710	1	SCREW, M8X70
47	V528901400	4	SCREW, M8X25
48	V836855565	1	FLANGE
49	V610072109	2	BEARING
50	V837070002	1	GEAR
51	V837070003	1	SHAFT
52	V615571014	1	RING, SEAL
53	V837070001	1	GEAR ASSY (INCLS ITEMS 7-11)
54	V837070072	1	GEAR ASSY (INCLS ITEMS 31-35)
55	V837070137	1	DRIVE ASSY (INCLS ITEMS 38-41)
56	V837070004	1	GEAR ASSY (INCLS ITEMS 47-51)

SIS0053
PR: t05I09o11c0003

https://truckmanualshub.com/

FLYWHEEL AND HOUSING
SISU

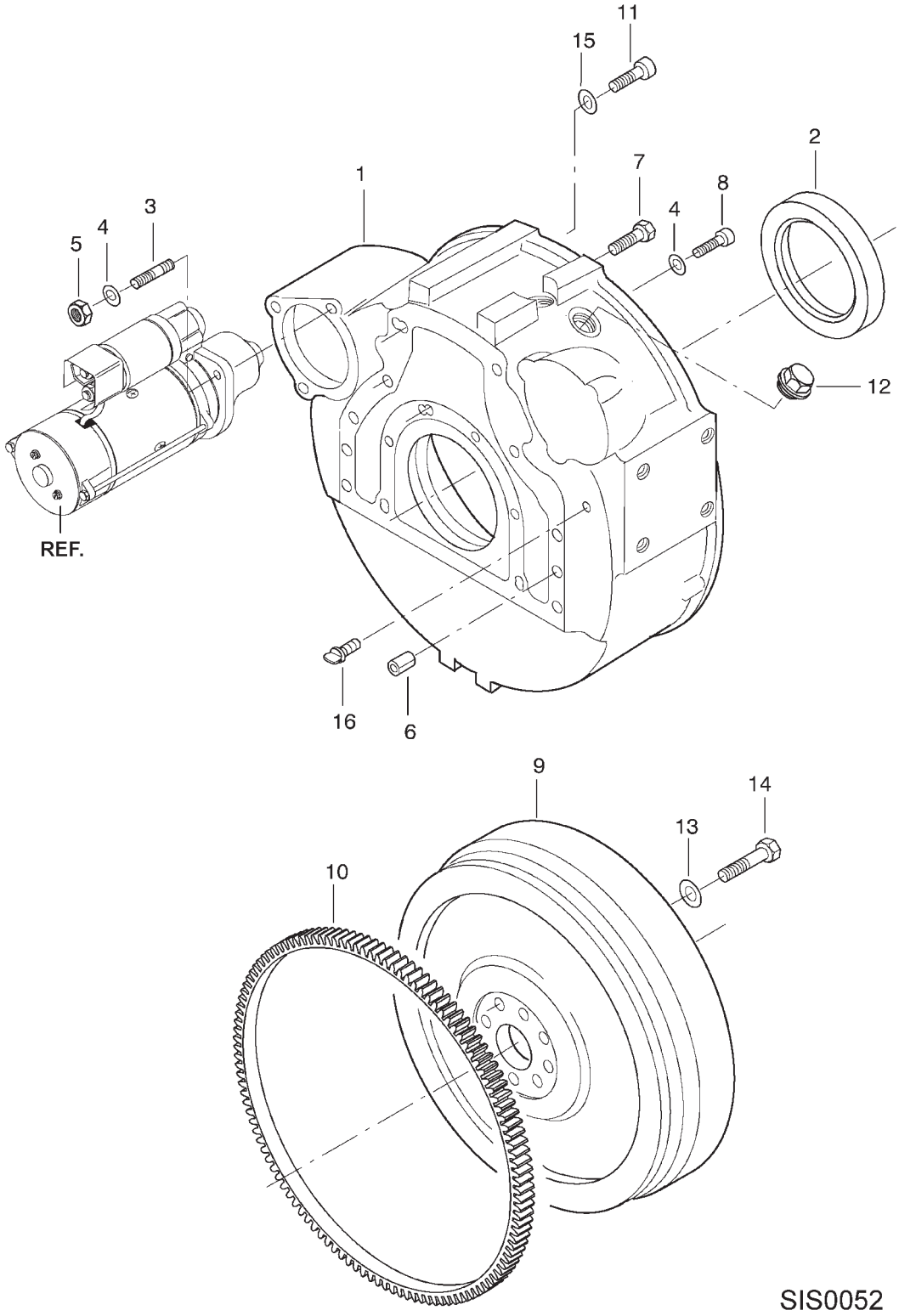

https://truckmanualshub.com/

ITEM	NUMBER	QTY	DESCRIPTION
1	V836652468	1	HOUSING, FLYWHEEL
2	V836840884	1	SEAL, OIL
	V836020054	AR	RING, SEAL SPACER (2.0MM)
3	V546801800	3	STUDBOLT, M10X25
4	V500951000	6	WASHER
5	V504601000	3	NUT, M10
6	VJE8802	2	PIN
7	V528902220	6	SCREW, M12X35
8	V581705030	6	SCREW, M10X30
9	V836859485	1	FLYWHEEL (INCLS RING GEAR ITEM 10)
10	V836117943	1	GEAR, RING
11	V581705440	2	SCREW, M12X35
12	V640045126	1	PLUG
13	V500951400	8	WASHER
14	V529702630	8	SCREW, 200NM
15	V500951200	1	WASHER
16	V836859311	1	PLUG

SIS0052
PR: t05l09o11c0004

https://truckmanualshub.com/

CRANKSHAFT
SISU

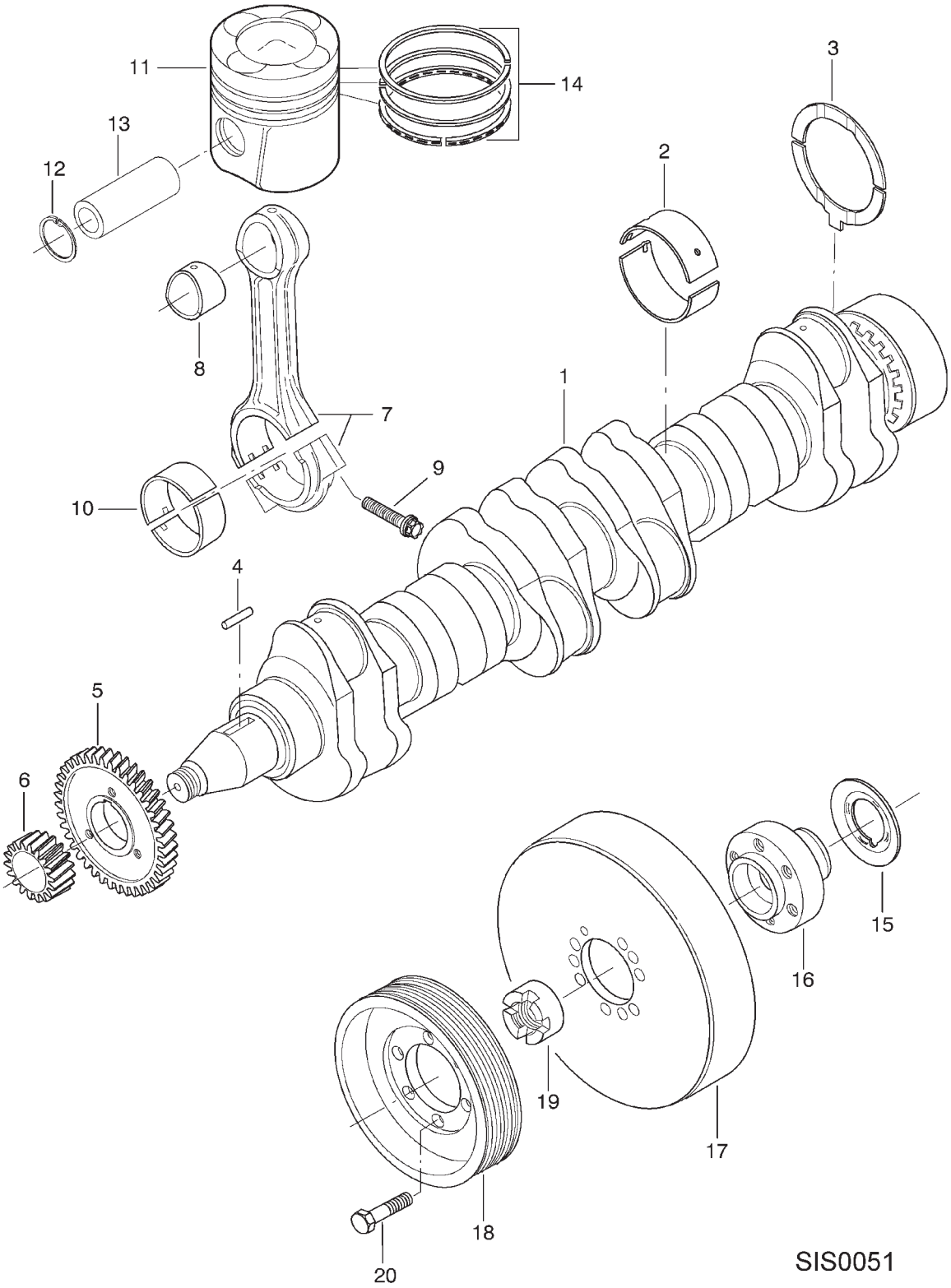

https://truckmanualshub.com/

ITEM	NUMBER	QTY	DESCRIPTION
1	V837069088	1	CRANKSHAFT
2	V836840944	7	BEARING, MAIN (STD)
	V836840978	7	BEARING, MAIN (-0.25MM)
	V836840979	7	BEARING, MAIN (-0.50MM)
	V836840980	7	BEARING, MAIN (-1.00MM)
	V836840981	7	BEARING, MAIN (-1.50MM)
3	V836840945	2	PLATE, THRUST (STD)
	V836840982	2	PLATE, THRUST (-.10MM)
	V836840983	2	PLATE, THRUST (-.20MM)
4	V836855525	1	KEY
5	V836855558	1	GEAR
6	V837069060	1	GEAR
7	V836340948	AR	KIT, CONNECTING ROD (INCLS 6 RODS IN SAME WEIGHT CLASS & ITEMS 8 & 9)
	- - - - -	6	ROD, CONNECTING (STAMPED E, ON LOWER) BEARING CAP)(NOT SERVICED)
	- - - - -	6	ROD,CONNECTING (STAMPED F)(NOT SERVICED)
	- - - - -	6	ROD,CONNECTING (STAMPED G)(NOT SERVICED)
	- - - - -	6	ROD,CONNECTING (STAMPED H)(NOT SERVICED)
	- - - - -	6	ROD,CONNECTING (STAMPED I)(NOT SERVICED)
	- - - - -	6	ROD,CONNECTING (STAMPED J)(NOT SERVICED)
	- - - - -	6	ROD,CONNECTING (STAMPED K)(NOT SERVICED) CONN ROD INCLS ITEMS 8&9
8	V836864288	6	BUSHING
9	V836864141	12	SCREW, TORX E18
10	V836336302	6	BEARING, ROD (STD)
	V836338650	6	BEARING, ROD (-0.25MM)
	V836338651	6	BEARING, ROD (-0.50MM)
	V836338652	6	BEARING, ROD (-1.00MM)
	V836338653	6	BEARING, ROD (-1.50MM)
	3637625M1	AR	BUSHING, OUTER, CONN ROD BRG (+0.5MM)
11	V837070185	6	PISTON ASSY (INCLS ITEMS 12,13,14)
12	----------	12	CIRCLIP (SERVICED IN ITEM 11)
13	----------	6	PIN, PISTON (SERVICED IN ITEM 11)
14	V836840887	6	SET, PISTON RING
15	V836855637	1	RING
16	V836855641	1	HUB
17	V836840882	1	DAMPER, VIBRATION
18	V836855690	1	PULLEY
19	V836322221	1	NUT, SLOTTED
20	V528902230	6	SCREW, M12 X 40

https://truckmanualshub.com/

CAMSHAFT AND VALVE TRAIN
SISU

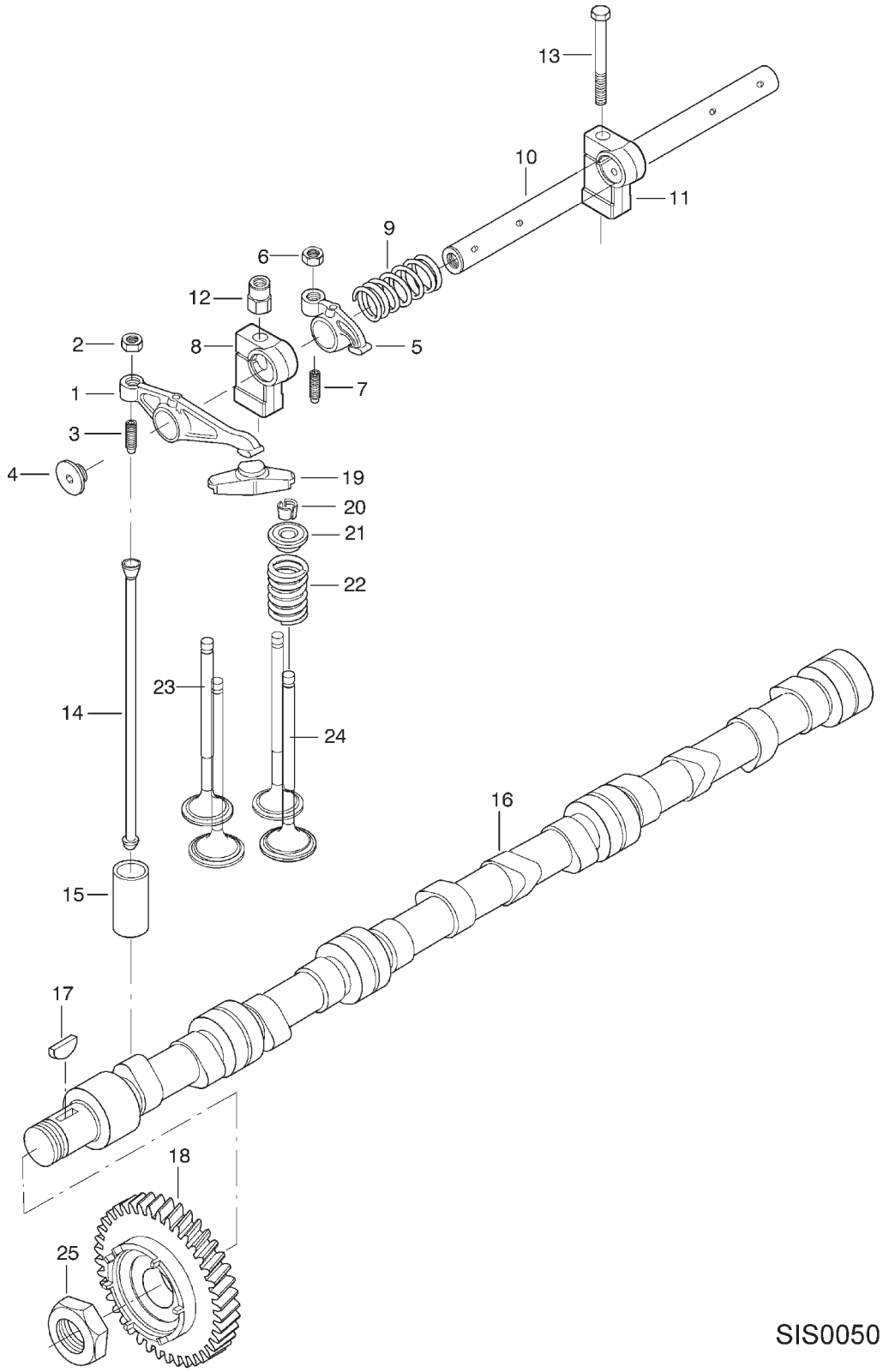

https://truckmanualshub.com/

ITEM	NUMBER	QTY	DESCRIPTION
-	V837069016	2	VALVE MECHANISM (INCLS ITEMS 1-11)
1	V837069011	6	ARM, ROCKER (INCLS ITEMS 2-3)
2	V512861000	6	HEX NUT
3	V837069023	6	SCREW, ADJUSTING
4	V837069020	4	PLUG
5	V837069013	6	ARM, ROCKER (INCLS ITEMS 6-7)
6	V512861000	6	HEX NUT
7	V837069023	6	SCREW, ADJUSTING
8	V837069017	4	BRACKET
9	V837069019	4	SPRING
10	V837069015	2	SHAFT, ROCKER
11	V837069018	2	BRACKET
12	V836655406	4	NUT
13	V529801910	2	SCREW, M10X85
14	V837069014	12	PUSHROD
15	V836014264	12	TAPPET, VALVE
16	V837070148	1	CAMSHAFT
	V836866036	AR	BRG BUSHING,CAMSHFT, FRONT,OUTER(+0.4MM)
17	V603305760	1	KEY
18	V837070036	1	GEAR
19	V837069006	12	GUIDE
20	V837064910	48	KEEPER, VALVE
21	V837069004	24	RETAINER
22	V837069005	24	SPRING, VALVE
23	V837069002	12	VALVE, EXHAUST
24	V837069003	12	VALVE, INTAKE
25	V837069085	1	HEX NUT

SIS0050
PR: t05l09o11c0006

https://truckmanualshub.com/

CYLINDER HEAD
SISU

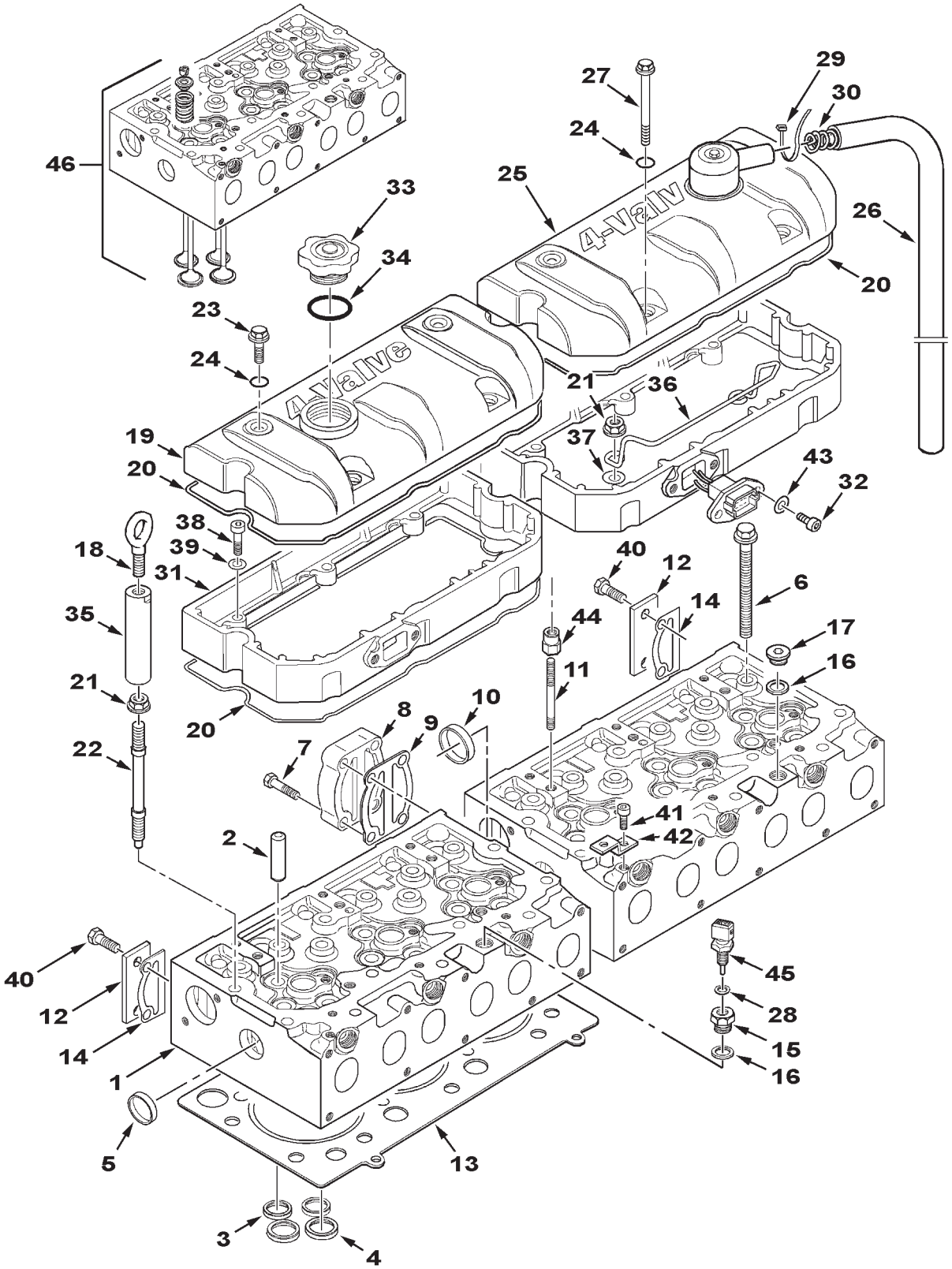

https://truckmanualshub.com/

ITEM	NUMBER	QTY	DESCRIPTION
1	V837069001	2	HEAD, CYLINDER (INCLS ITEMS 2-5)
2	V837064906	24	GUIDE, VALVE
3	V837064907	12	SEAT RING, VALVE (EXHAUST)
	V837070187	AR	SEAT RING, REPAIR VALVE (OVERSIZE 0.2MM)
4	V837064908	12	SEAT RING, VALVE (INTAKE)
	V837070188	AR	SEAT RING, REPAIR VALVE (OVERSIZE 0.2MM)
5	V836647942	4	PLUG
6	V837069025	28	SCREW
7	V528801830	4	SCREW, M10 X 40
8	V836855348	1	CONNECTOR
9	V836867390	1	GASKET
10	V640016045	1	PLUG
11	V546801900	4	STUDBOLT, M10 X 75
12	V836855350	2	COVER
13	V837070290	2	GASKET
14	V836867391	2	GASKET
15	V836119643	1	NIPPLE, THREADED
16	V615881822	2	RING, SEAL
17	V640325018	1	PLUG
18	V836640752	2	LIFTEYE
19	V837070170	1	COVER
20	V837067881	4	GASKET
21	V836859110	8	HEX NUT
22	V836859109	6	STUDBOLT
23	V540801780	4	SCREW, M10 X 20
24	V614901030	8	O-RING
25	V837069029	1	COVER
26	V837070347	1	PIPE, RUBBER
27	V540801910	4	SCREW, M10 X 80
28	V615881418	1	RING, SEAL
29	V835329746	1	STRAP, TIE
30	V837070343	1	SPRING
31	V837069021	2	FRAME
32	V581804602	1	SCREW, M8 X 20
33	V836338733	1	CAP
34	V614604740	1	O-RING
35	V836867567	2	NUT, EXTENDED, M12/M16
36	V837069026	1	BRACKET
37	V500951200	4	WASHER
38	V581804630	6	SCREW, M8 X 30
39	V500950800	6	WASHER
40	V528801800	4	SCREW, M10 X 25
41	V528801360	5	SCREW, M8 X 16
42	V836747849	2	SUPPORT
43	VJD0408	4	WASHER
44	- - - - -	-	(SEE "CAMSHAFT & VALVETRAIN")
45	- - - - -	-	(SEE "ENGINE ELECTRICAL")
46	V837062565	2	HEAD ASSY, CYLINDER

https://truckmanualshub.com/

INTAKE & EXHAUST MANIFOLD
SISU

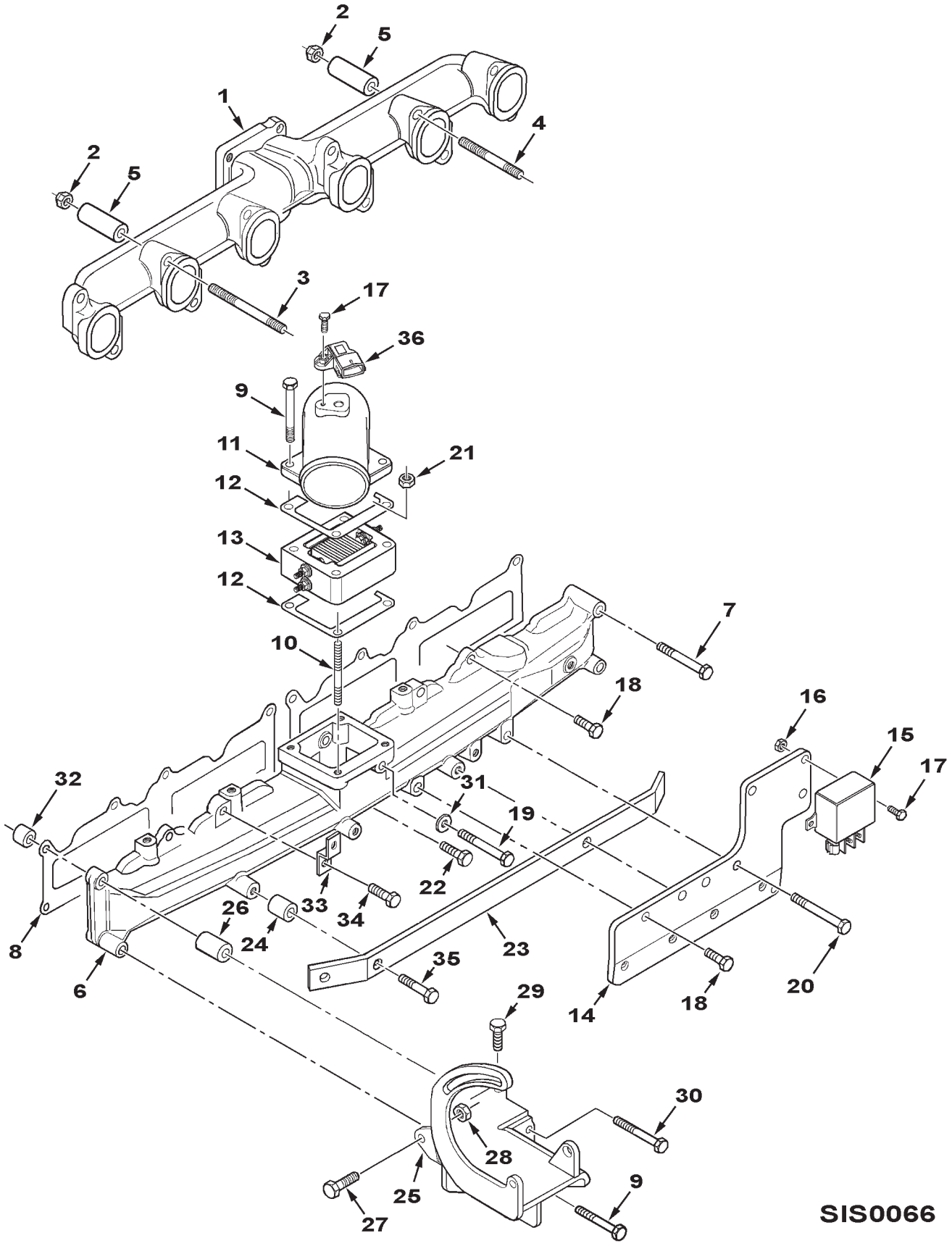

https://truckmanualshub.com/

INTAKE & EXHAUST MANIFOLD
SISU

ITEM	NUMBER	QTY	DESCRIPTION
1	V836867556	1	EXHAUST MANIFOLD
2	V513601002	12	HEX NUT
3	V836859188	12	STUDBOLT, M10 X 100
4	V836859034	4	STUDBOLT, M10 X 130
5	V836664013	12	SLEEVE, 45MM LG
6	V837070219	1	INTAKE MANIFOLD
7	V529801470	2	CAPSCREW, M8 X 60
8	V837069009	2	GASKET (SEE ENGINE OVERHAUL KITS)
9	V529801490	4	CAPSCREW, M8 X 70
10	V546801490	1	STUDBOLT, M8 X 70
11	V836867642	1	PIPE
12	V837067345	2	GASKET (SEE ENGINE OVERHAUL KITS)
13	V837067295	1	HEATER, 12V
14	V837070228	1	BRACKET
15	V837069047	1	SOLENOID, 12V
16	V510600602	2	NUT, M6
17	V528801082	3	CAPSCREW, M6 X 20
18	V528801400	4	CAPSCREW, M8 X25
19	V529801550	1	CAPSCREW, M8 X 100
20	V529801530	2	CAPSCREW, M8 X 90
21	V504800800	1	HEX NUT, M8
22	V528801410	8	CAPSCREW, M8 X 30
23	V837070328	1	SUPPORT
24	V836119384	2	SLEEVE
25	V837070284	1	BRACKET
26	V836138015	1	SLEEVE
27	V529801830	1	CAPSCREW, M10 X 40
28	V510601002	1	HEX NUT, M10
29	V528801380	1	SCREW, M8 X 20
30	V529801500	1	CAPSCREW, M8 X 75
31	V836015967	1	SEAL RING
32	V598355365	1	PIN
33	V836747849	1	SUPPORT
34	V528801420	1	CAPSCREW, M8 X 35
35	V529801440	2	CAPSCREW, M8 X 45
36	- - - - -	-	(SEE "ENGINE ELECTRICAL")

SIS0066
PR: t05I09o11c0008

https://truckmanualshub.com/

TURBOCHARGER
SISU

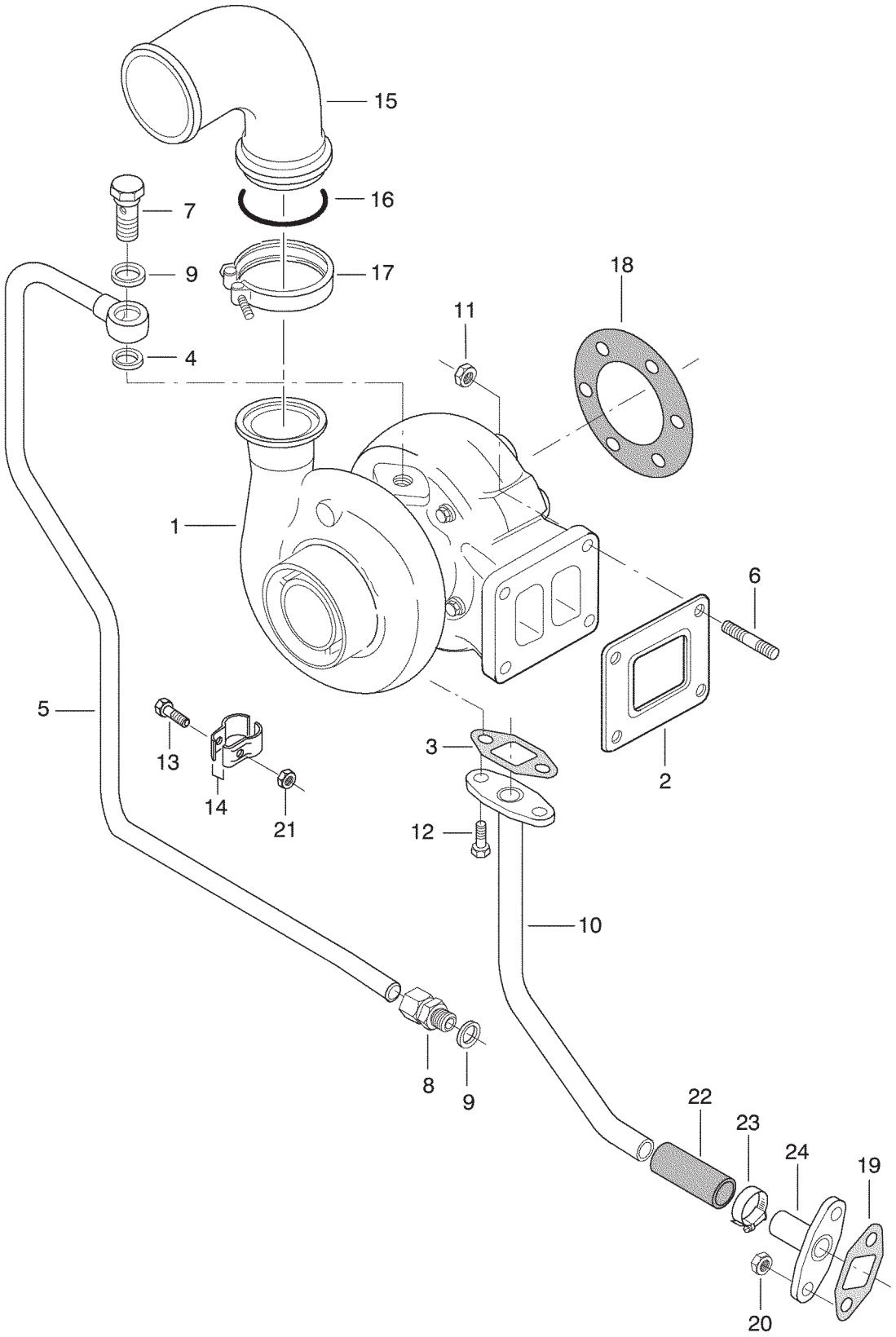

SIS0065

https://truckmanualshub.com/

ITEM	NUMBER	QTY	DESCRIPTION
1	V837070171	1	TURBOCHARGER ASY (INCL. ITEMS 2-3) (REPAIR ASY. MAY HAVE TO BE RE-ASSEMBLED TO FIT THIS INSTALLATION)
2	V836840992	1	GASKET (SEE ENGINE OVERHAUL KITS)
3	V836866809	1	GASKET (SEE ENGINE OVERHAUL KITS)
4	V615881420	1	RING, SEAL
5	V836867559	1	PIPE
6	V546801800	4	STUDBOLT, M10 X 25
7	V836855714	1	SCREW
8	V641086012	1	UNION
9	V615881620	2	RING, SEAL
10	V836873003	1	PIPE
11	V521601000	4	HEX NUT
12	V528801380	2	CAPSCREW, M8 X 20
13	V529801112	1	CAPSCREW, M6 X 30
14	V835324324	1	BAND
15	V836867533	1	PIPE
16	V614605930	1	O-RING
17	V836840930	1	CLIP
18	V886325175	1	GASKET (SEE ENGINE OVERHAUL KITS)
19	V836866809	1	GASKET (SEE ENGINE OVERHAUL KITS)
20	V504800800	2	HEX NUT, M8
21	V504600602	1	HEX NUT, M6
22	V836873001	1	HOSE, RUBBER
23	V602087528	2	CLAMP, WORM GEAR
24	V836873004	1	PIPE, LOWER

SIS0065
PR: t05I09o11c0009

https://truckmanualshub.com/

OIL SUMP & PUMP
SISU

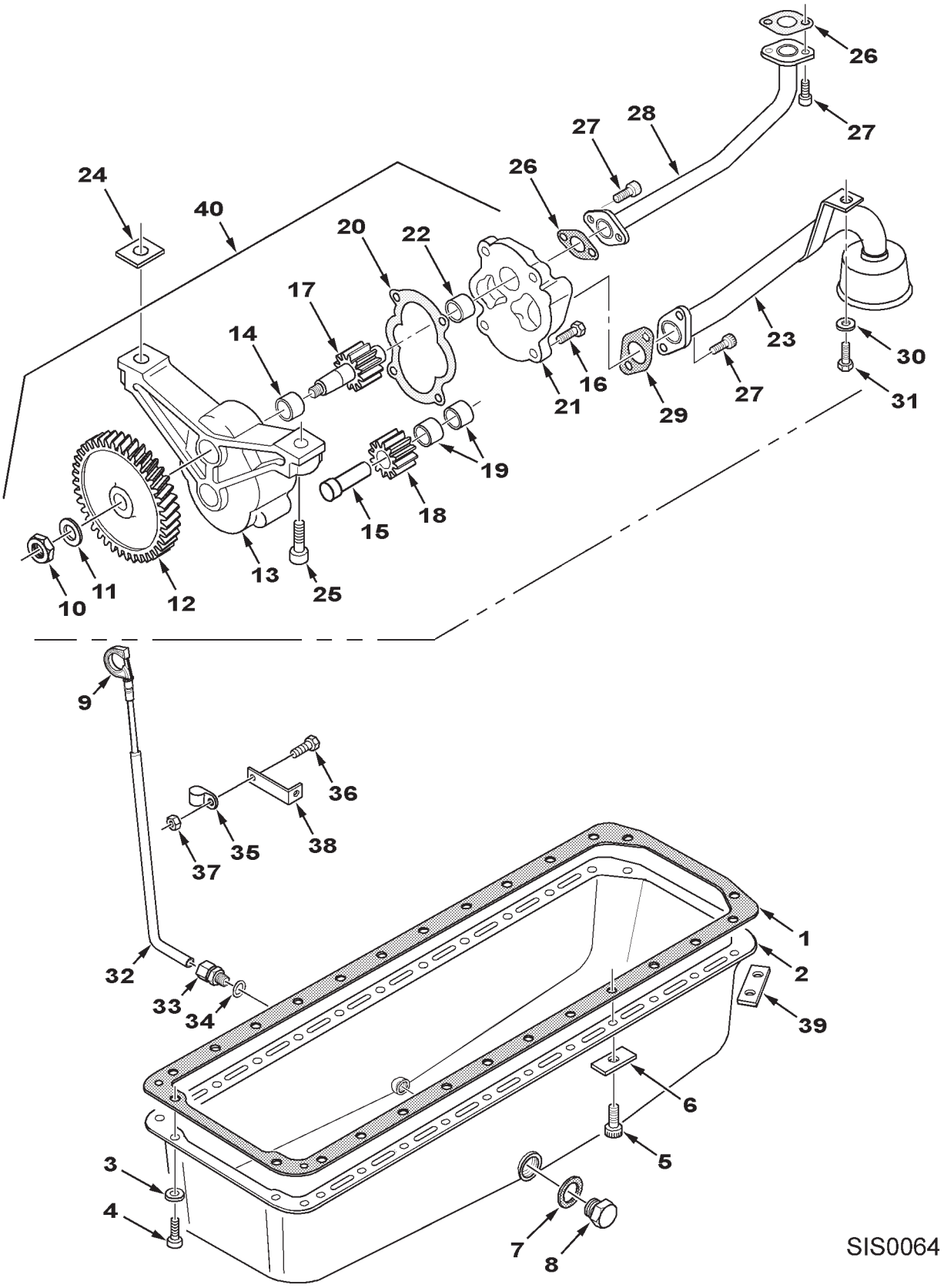

https://truckmanualshub.com/

ITEM	NUMBER	QTY	DESCRIPTION
1	V836347308	1	SUMP PAN, OIL
2	V836322538	1	GASKET (SEE ENGINE OVERHAUL KITS)
3	V500950800	4	WASHER
4	V581804600	4	SCREW, M8 X 20
5	V581805000	24	SCREW, M10 X 20
6	V836859560	20	WASHER
7	V615882227	1	RING, SEAL (SEE ENGINE OVERHAUL KITS)
8	V640045022	1	PLUG
9	V836866909	1	DIPSTICK, OIL
10	V504861000	1	NUT, M10
11	V836122910	1	WASHER
12	V836338667	1	GEAR
13	V836338186	1	FRAME ASSY (INCLS. ITEMS 14-15)
14	V836322909	1	BUSHING
15	V836322906	1	SHAFT
16	V528801380	4	SCREW, M8 X 20
17	V836338182	1	GEAR
18	V836338180	1	GEAR (INCLS BUSHING)
19	V836322909	2	BUSHING
20	V836338188	1	GASKET (SEE ENGINE OVERHAUL KITS)
21	V836855297	1	COVER (INCLS BUSHING)
22	V836322909	1	BUSHING
23	V836855674	1	PIPE
24	V836007871	AR	SHIM, SPACING
25	VHC8338	2	SCREW, M10 X 40
26	V836008449	2	GASKET (SEE ENGINE OVERHAUL KITS)
27	V581804600	6	SCREW, M8 X 20
28	V836855673	1	PIPE
29	V836338201	1	GASKET (SEE ENGINE OVERHAUL KITS)
30	V500150840	1	WASHER
31	V528801362	1	SCREW, M8 X 16
32	V836855921	1	PIPE
33	V641086012	1	UNION
34	V615881622	1	RING, SEAL (SEE ENGINE OVERHAUL KITS)
35	V602060612	1	BAND
36	V528801380	1	SCREW, M8 X 20
37	V504800800	1	NUT, M8
38	V836652081	1	SUPPORT
39	V836859561	2	WASHER
40	V836855300	1	OIL PUMP ASY (INCLS ITEMS 10-22)

SIS0064
PR: t05I09o11c0010

https://truckmanualshub.com/

CENTRIFUGAL OIL CLEANER
SISU

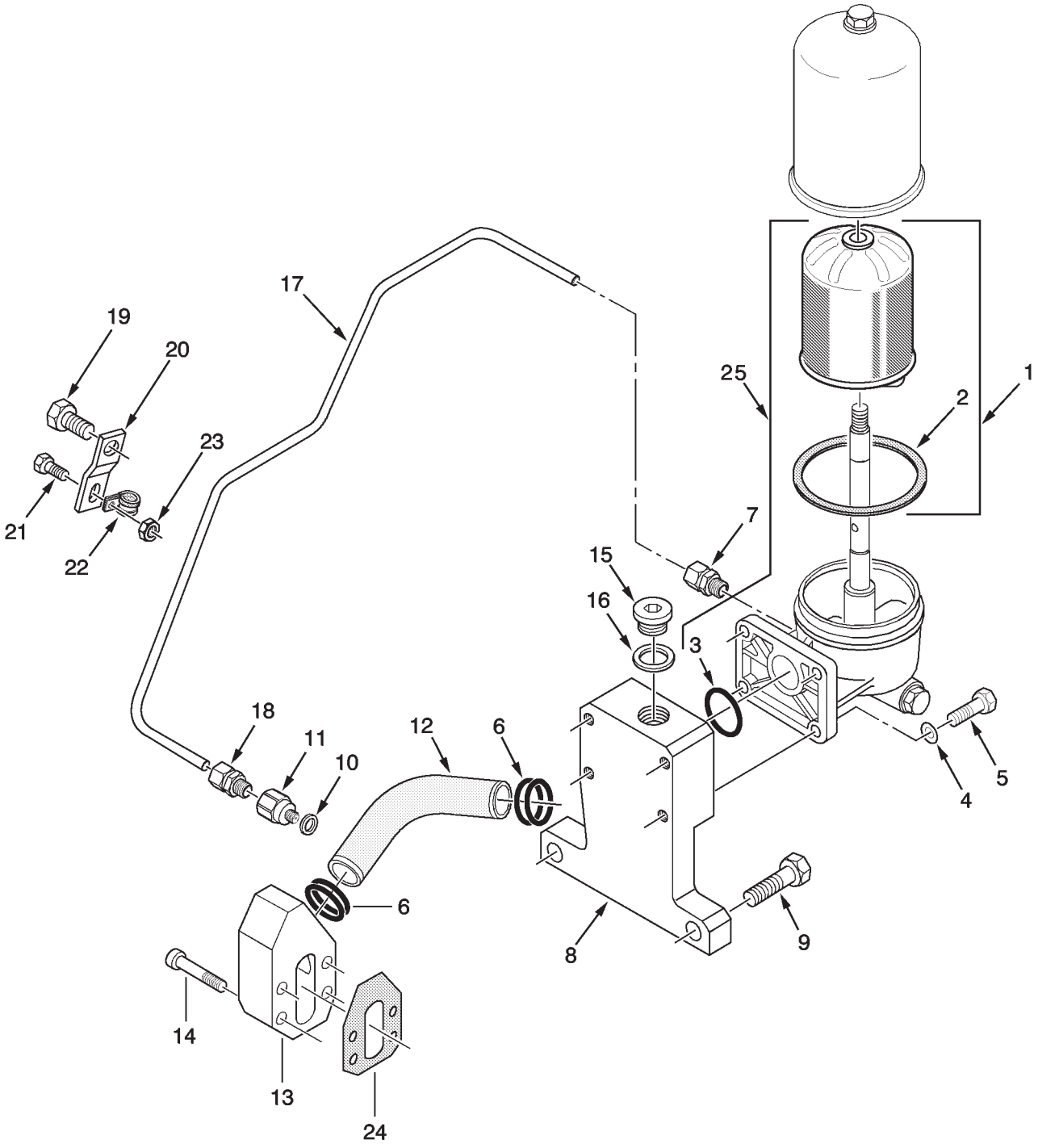

SIS0072

https://truckmanualshub.com/

CENTRIFUGAL OIL CLEANER
SISU

ITEM	NUMBER	QTY	DESCRIPTION
1	V836362228	1	ROTOR ASY (INCL. ITEM 2)
2	V836362229	1	SEAL RING
3	V836664226	1	O-RING
4	V500951000	4	WASHER
5	V528801810	4	SCREW, M10 X 30
6	V614903430	4	O-RING
7	V641830008	1	UNION CONNECTOR
8	V837067970	1	ADAPTER MANIFOLD
9	V528803042	2	SCREW, M16 X 45
10	V615871016	1	SEAL RING
11	V836120022	1	NIPPLE, THREADED
12	V837067968	1	PIPE
13	V837067969	1	ADAPTER PLATE
14	V581804670	4	SCREW, M8 X 50
15	V640325039	1	PLUG
16	V615893946	1	SEAL RING
17	V837067967	1	PIPE
18	V641016008	1	UNION CONNECTOR
19	V528802602	1	SCREW, M14 X 25
20	V837070381	1	SUPPORT STRAP
21	V528801380	1	SCREW, M8 X 20
22	V602060610	1	CLAMP, LINE
23	V504800802	1	NUT, M8
24	V836866958	1	GASKET
25	V836359603	1	OIL CLEANER, CENTRIFUGAL(INCL ITEMS 1&3)

SIS0072
PR: t07a23o20b0001

https://truckmanualshub.com/

OIL COOLER & FILTER
SISU

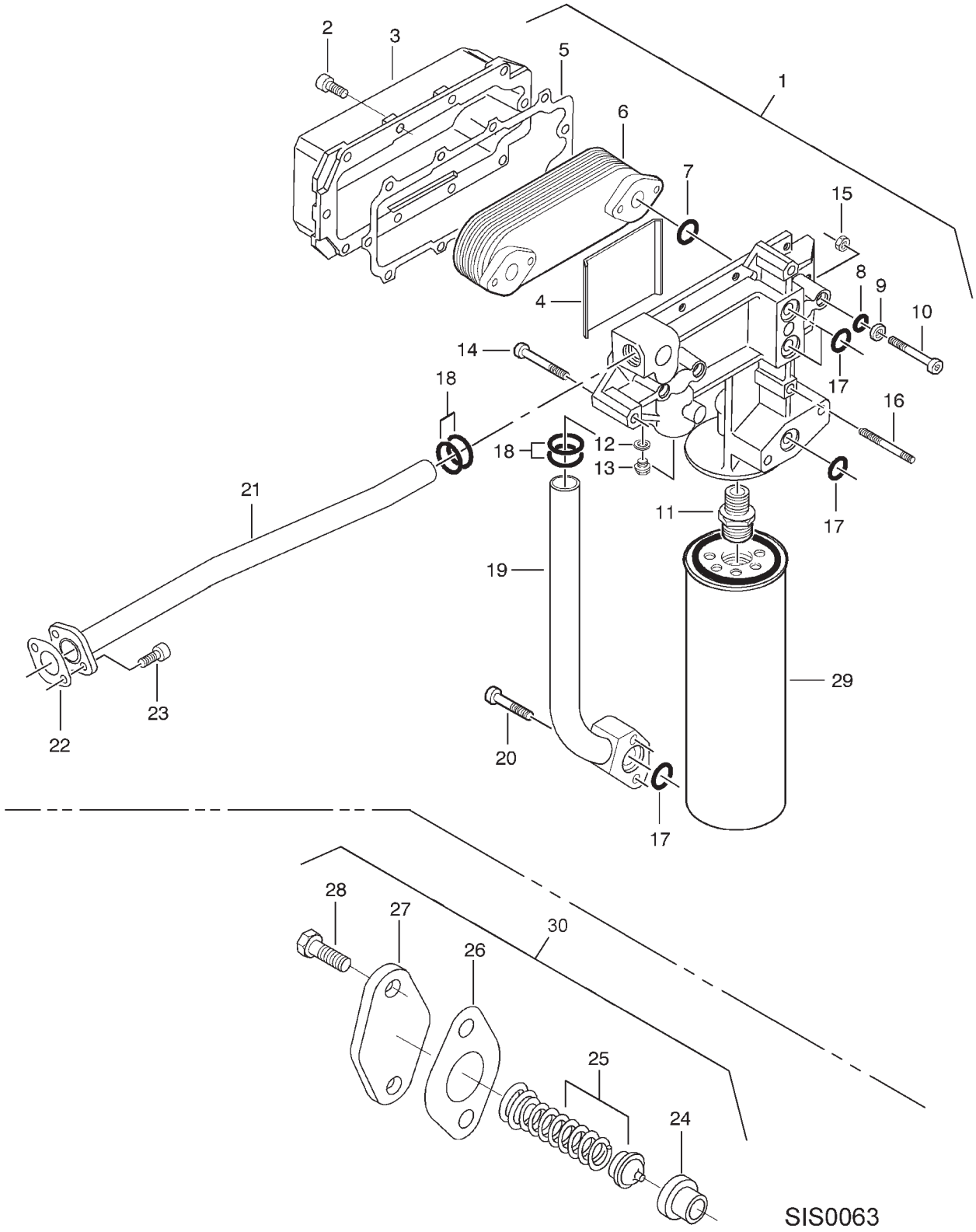

https://truckmanualshub.com/

ITEM	NUMBER	QTY	DESCRIPTION
1	V836855522	1	COOLER, OIL (INCLS ITEMS 2-13)
2	V581804620	10	SCREW, M8 X 25
3	V836855519	1	HOUSING
4	V836855521	1	PLATE, GUIDE
5	V836855520	1	GASKET (SEE ENGINE OVERHAUL KITS)
6	V836855484	1	CELL
7	V614602030	2	O-RING
8	V614600724	4	O-RING
9	V836855517	4	WASHER
10	V581804690	4	SCREW, M8 X 60
11	V836338512	1	NIPPLE, THREADED
12	V615881216	1	SEAL RING
13	V640305012	1	PLUG
14	V581804690	4	SCREW, M8 X 60
15	V504800800	1	NUT, M8
16	V546801490	1	STUDBOLT, M8 X 70
17	V614602030	4	O-RING
18	V614602430	4	O-RING
19	V836855523	1	PIPE
20	V581804650	2	SCREW, M8 X 40
21	V836855639	1	PIPE
22	V836322190	1	GASKET
23	V581804600	2	SCREW, M8 X 20
24	V836659521	1	SEAT, VALVE
25	V836667650	1	VALVE
26	V836322190	1	GASKET
27	V836659524	1	COVER
28	V528801380	2	SCREW, M8 X 20
29	V836362567	1	FILTER, OIL
30	V836662130	1	VALVE, CONTROL (INCL. ITEMS 24-28)

SIS0063
PR: t05I09o11c0011

https://truckmanualshub.com/

WATER PUMP SYSTEM
SISU

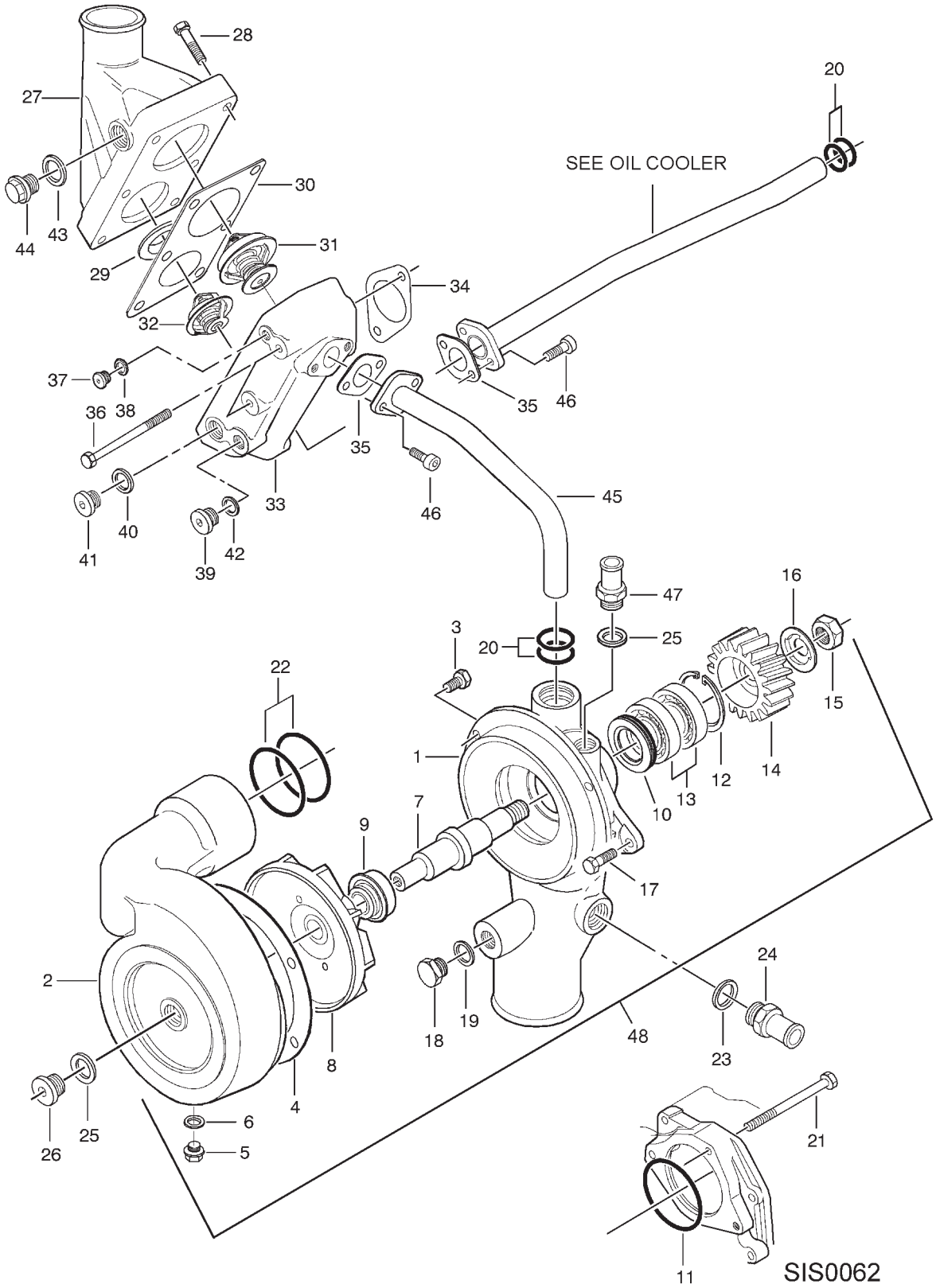

https://truckmanualshub.com/

ITEM	NUMBER	QTY	DESCRIPTION
-	V837062617	1	KIT, WATER PUMP REPAIR (INCLS. ITEMS 4, 6-13,15,19,20,22)
1	V837069076	1	FRAME
2	V837069077	1	HOUSING
3	V528801362	4	SCREW, M8 X 16
4	V836855625	1	GASKET
5	V640305012	1	PLUG
6	V615881216	1	RING, SEAL
7	V837069078	1	SHAFT
8	V836866735	1	IMPELLER
9	V836859452	1	GASKET
10	V614703042	1	SEAL, OIL
11	V614607930	1	O-RING
12	V617330047	1	CIRCLIP
13	V610072040	2	BEARING
14	V837070074	1	GEAR
15	V504601600	1	NUT
16	V837070184	1	RING
17	V528801380	1	SCREW, M8 X 20
18	V836119079	1	PLUG
19	V615881620	1	RING, SEAL
20	V614602430	4	O-RING
21	V529801520	2	SCREW, M8 X 85
22	V614604958	2	O-RING
23	V615882227	1	RING, SEAL (SEE ENGINE OVERHAUL KITS)
24	V836667029	1	UNION
25	V615881822	2	RING, SEAL (SEE ENGINE OVERHAUL KITS)
26	V640325018	1	PLUG
27	V836855602	1	MANIFOLD, RETURN
28	V529801430	6	SCREW, M8 X 40
29	V836336425	1	RING, SPACING
30	V836855603	1	GASKET (SEE ENGINE OVERHAUL KITS)
31	V836331590	1	THERMOSTAT, 83 C (181 DEG F)
32	V836015156	1	THERMOSTAT, 79 C (174 DEG F)
33	V836855601	1	HOUSING
34	V836646393	1	GASKET (SEE ENGINE OVERHAUL KITS)
35	V836322190	2	GASKET (SEE ENGINE OVERHAUL KITS)
36	V529801550	2	SCREW, M8 X 100
37	V640325110	1	PLUG
38	V615871014	1	RING, SEAL (SEE ENGINE OVERHAUL KITS)
39	V640325014	1	PLUG
40	V615881822	1	RING, SEAL (SEE ENGINE OVERHAUL KITS)
41	V640325018	1	PLUG
42	V615881418	1	RING, SEAL (SEE ENGINE OVERHAUL KITS)
43	V615882227	1	RING, SEAL (SEE ENGINE OVERHAUL KITS)
44	V640045022	1	PLUG
45	V837070020	1	PIPE
46	V581804600	4	SCREW, M8 X 20
47	V836119837	1	UNION
48	V837070075	1	WATER PUMP ASSY (INCLS ITEMS 1-16)

https://truckmanualshub.com/

INJECTOR PUMP SYSTEM
SISU

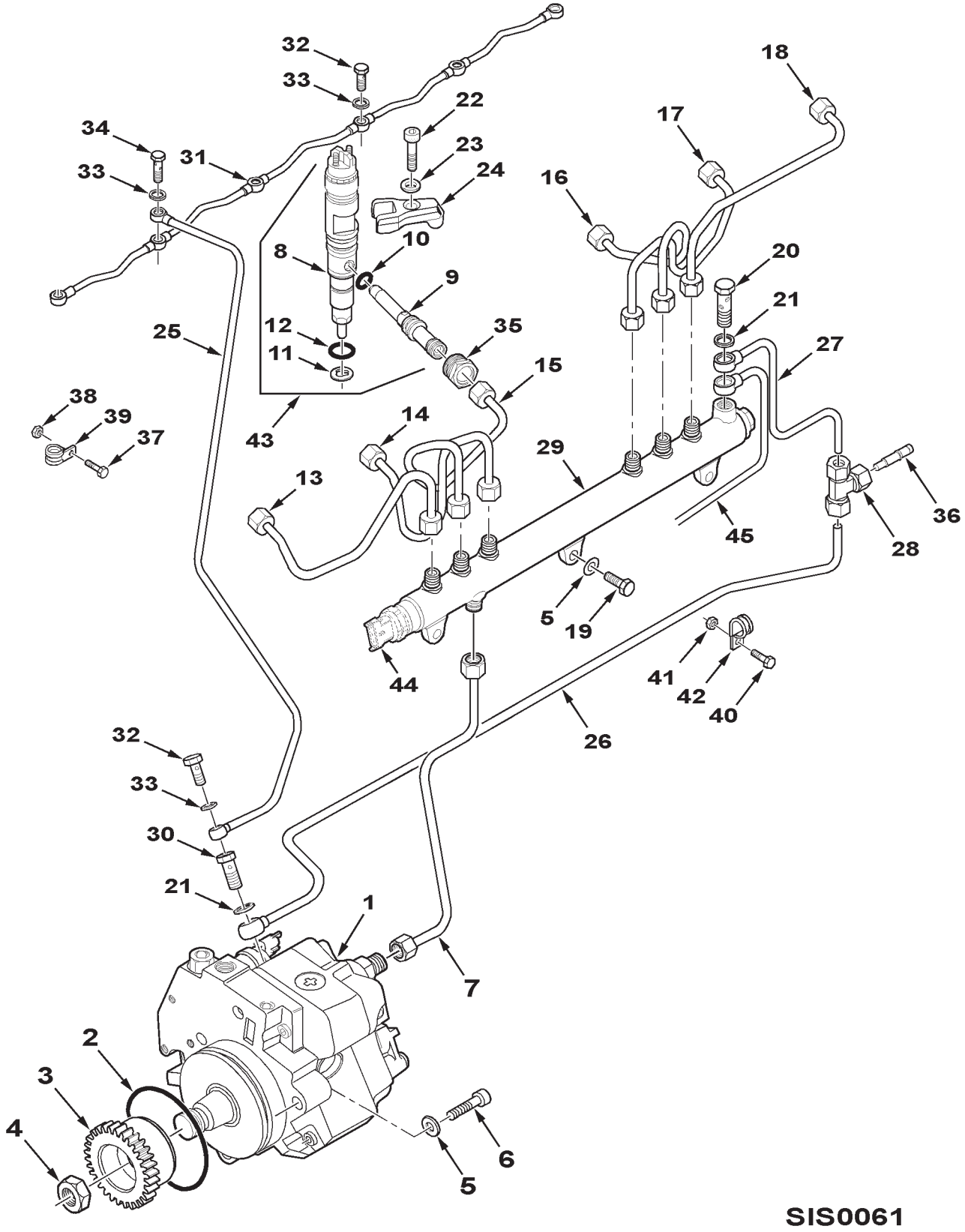

https://truckmanualshub.com/

ITEM	NUMBER	QTY	DESCRIPTION
1	V837069146	1	PUMP, INJECTOR
2	V837069147	1	O-RING
3	V837070073	1	GEAR
4	V504611802	1	NUT, M18
5	V500950800	6	WASHER
6	V581804650	3	SCREW, M8 X 40
7	V837070249	1	TUBE ASY
8	- - - - -	1	INJECTOR UNIT (SERVICE WITH ITEM 43)
9	- - - - -	1	PIPE (SERVICE WITH ITEM 43)
10	V837069314	1	O-RING
11	V837069032	1	RING, SEAL
12	V837069313	1	O-RING
13	V837070077	1	TUBE, FUEL #1 CYL.
14	V837070078	1	TUBE, FUEL #2 CYL.
15	V837070079	1	TUBE, FUEL #3 CYL.
16	V837070080	1	TUBE, FUEL #4 CYL.
17	V837070081	1	TUBE, FUEL #5 CYL.
18	V837070082	1	TUBE, FUEL #6 CYL.
19	V528801380	3	SCREW, M8 X 20
20	V640425008	1	SCREW
21	V615881216	5	RING, SEAL
22	V581704660	6	SCREW, M8 X 45
23	V837070121	6	WASHER
24	V837069007	6	FASTENER
25	V837070277	1	TUBE
26	V837070258	1	TUBE
27	V837070255	1	TUBE
28	V641436008	1	TEE, UNION
29	V837069050	1	MANIFOLD ASY
30	V837070314	1	SCREW
31	V837069027	1	TUBE ASY
32	V640435005	6	SCREW
33	V615870812	14	RING, SEAL
34	V640425005	1	SCREW
35	V837069268	6	NUT
36	V837067801	1	TUBE
37	VHA9220	1	SCREW, M5 X 20
38	V504600502	1	NUT, M5
39	V602070605	1	CLAMP, LINE
40	V528801082	1	SCREW, M6 X 20
41	V510600602	3	NUT, M6
42	V602074608	5	CLAMP, LINE
43	V837062629	6	INJECTOR ASY (INCLS ITEMS 8-12)
44	- - - - -	-	SEE "ENGINE ELECTRICAL"
45	- - - - -	-	SEE "FUEL FILTERS"

SIS0061
PR: t05l09o11c0013

https://truckmanualshub.com/

FUEL FILTERS
SISU

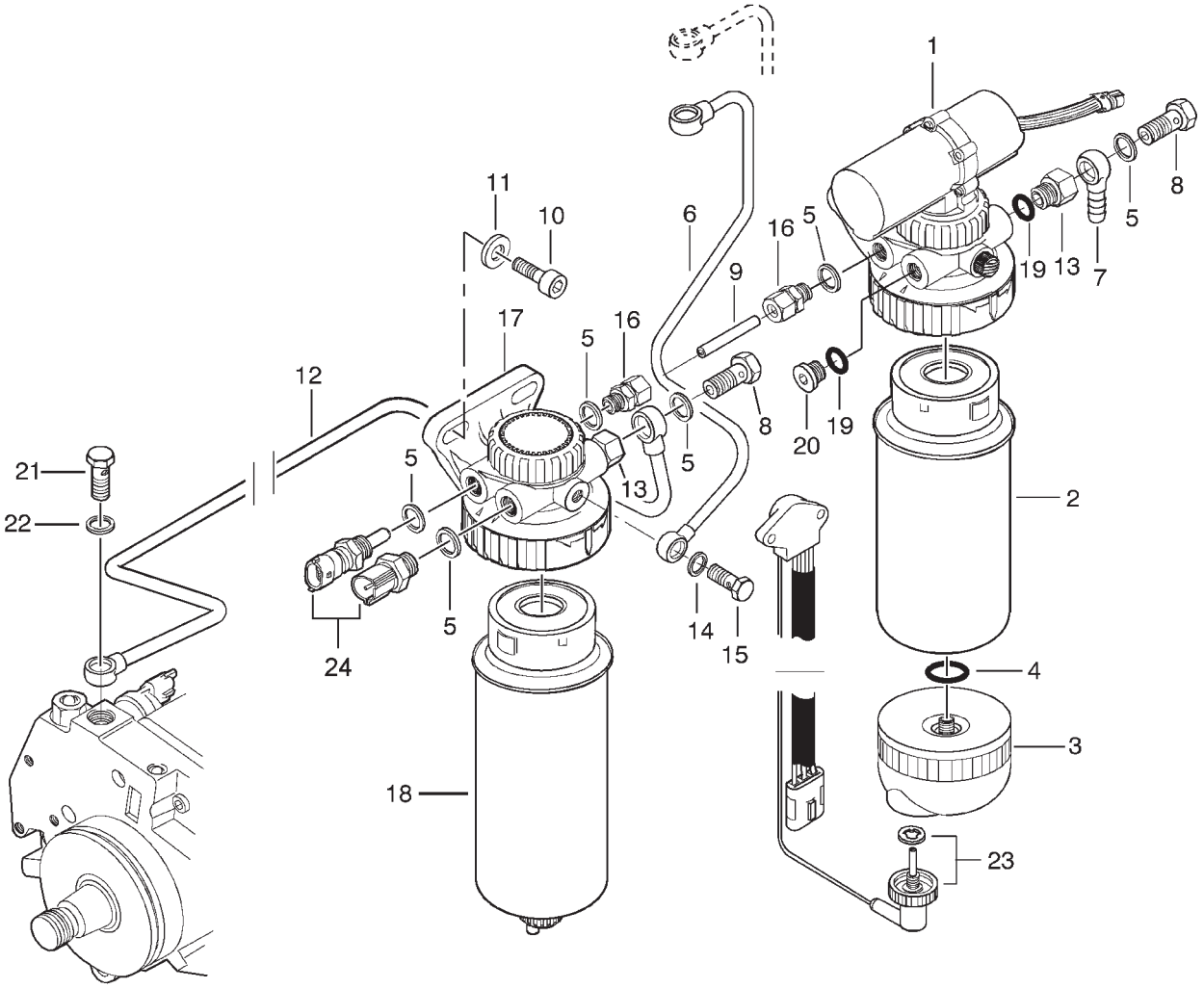

SIS0060

https://truckmanualshub.com/

ITEM	NUMBER	QTY	DESCRIPTION
1	V836867602	1	PRE-FILTER ASY (INCLS ITEMS 2-4)
2	V836867591	1	ELEMENT, PRE-FILTER
3	V836862051	1	SEPARATOR, WATER (INCLS O-RING)
4	V836862496	1	O-RING
5	V615881420	10	RING, SEAL (SEE ENGINE OVERHAUL KITS)
6	V837070253	1	TUBE
7	V640255210	1	FITTING
8	V640435010	2	SCREW
9	V837070223	1	PIPE
10	V581705030	4	SCREW, M10 X 30
11	V836122910	4	WASHER
12	V837070252	1	TUBE
13	V836336934	2	UNION FTG
14	V615571014	2	RING, SEAL (SEE ENGINE OVERHAUL KITS)
15	V640435006	1	SCREW
16	V641086010	2	UNION
17	V836867593	1	FILTER, FUEL (INCLS ITEM 18)
18	V836867595	1	ELEMENT, FILTER
19	V614601125	2	O-RING
20	V640325014	2	PLUG
21	V640435008	1	SCREW
22	V615881216	2	RING, SEAL (SEE ENGINE OVERHAUL KITS)
23	V836866576	1	SENSOR, WATER
24	- - - - -	-	SEE "ENGINE ELECTRICAL"

SIS0060
PR: t05I09o11c0014

https://truckmanualshub.com/

ENGINE ELECTRICAL
SISU

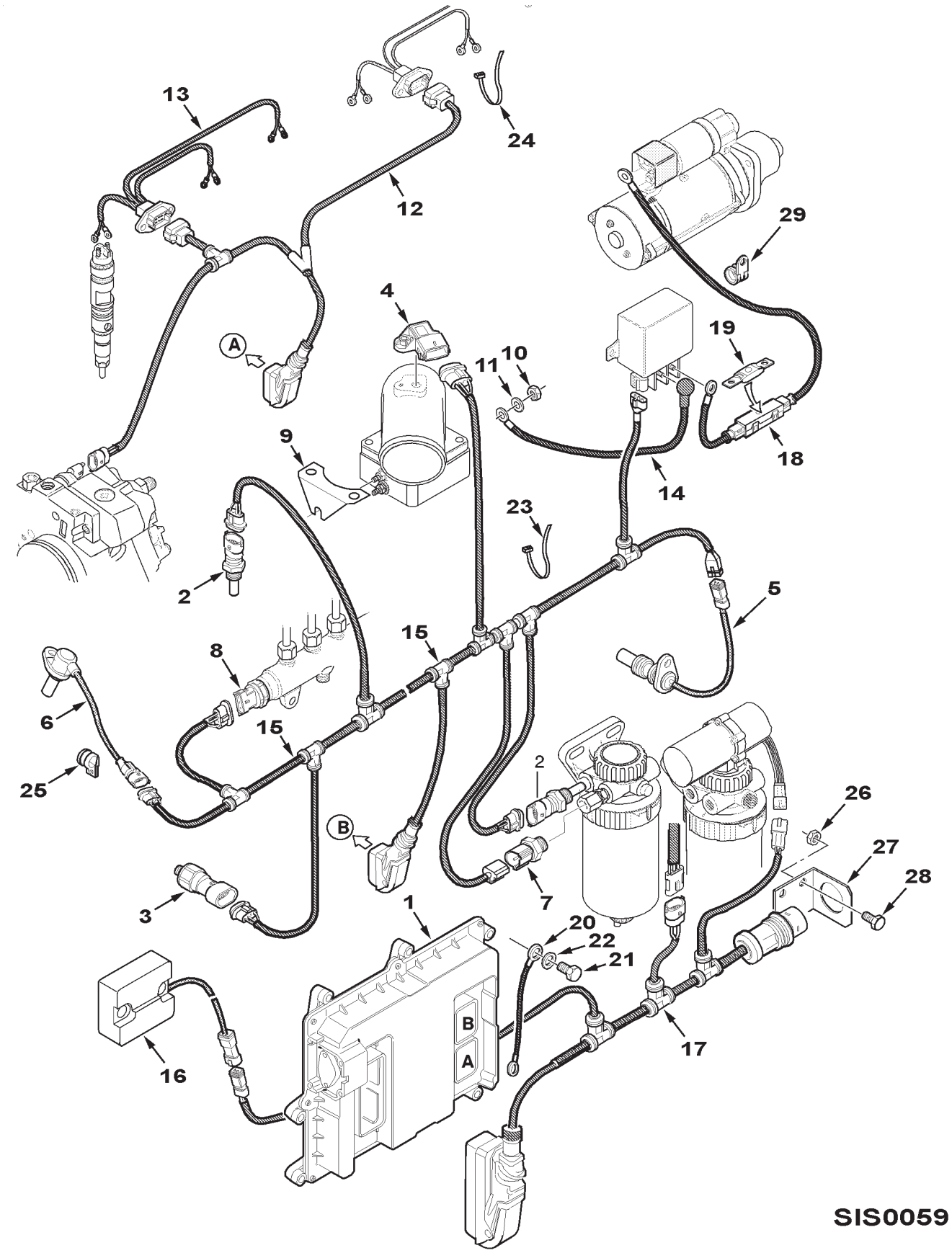

https://truckmanualshub.com/

ITEM	NUMBER	QTY	DESCRIPTION
1	V837069216	1	UNIT, CONTROL (9790)
2	V836667732	2	SENSOR, TEMPERATURE
3	V837070201	1	SENSOR, OIL PRESSURE
4	V836666980	1	SENSOR, BOOST PRESSURE
5	V837069150	1	SENSOR, SPEED
6	V837070189	1	SENSOR, SPEED
7	V837070209	1	SWITCH, PRESSURE
8	V837069410	1	SENSOR
9	V837070130	1	STRAP, GROUND
10	V504600602	2	HEX NUT, M6
11	V500050642	2	WASHER
12	V837070049	1	HARNESS, INJECTOR
13	V837070048	2	HARNESS, INJECTOR
14	V837070055	1	HARNESS
15	V837070050	1	HARNESS, SENSOR
16	V837070198	1	MODULE, ID
17	V837070051	1	HARNESS
18	V837070054	1	HARNESS (INCLS FUSE)
19	V836864541	1	FUSE, 250A
20	V837070292	1	STRAP, GROUND
21	V528801360	1	CAPSCREW, M8 X 16
22	VJD0408	1	WASHER
23	V651754720	5	TIE, NYLON LOCKING
24	V651755320	5	TIE, NYLON LOCKING
25	V602060610	2	CLAMP, LINE
26	V504800800	1	NUT, M8
27	V836866831	1	BRACKET, FASTENER
28	V528801360	1	CAPSCREW, M8 X 16
29	V602060612	2	CLAMP, LINE

SIS0059
PR: t05I09o11c0015

https://truckmanualshub.com/

ALTERNATOR & MOUNTING
SISU

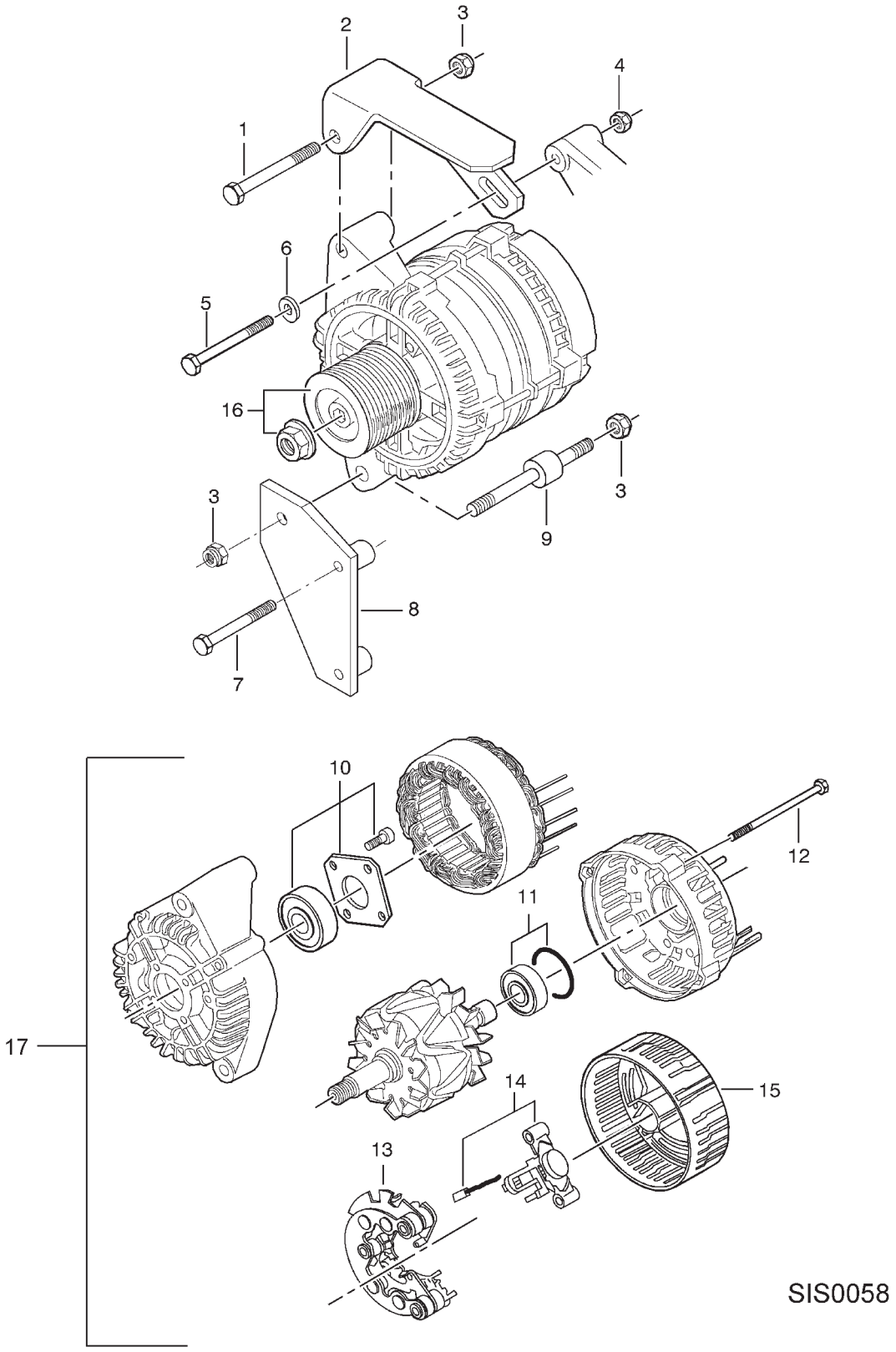

https://truckmanualshub.com/

ITEM	NUMBER	QTY	DESCRIPTION
1	V529801910	1	CAPSCREW, M10 X 80
2	V836855928	1	SUPPORT
3	V510601002	3	HEX NUT, M10
4	V510600802	1	HEX NUT, M8
5	V529801510	1	CAPSCREW, M8 X 80
6	V836120989	1	WASHER
7	V529801490	2	CAPSCREW, M8 X 70
8	V836855956	1	SUPPORT
9	V836866341	1	SCREW, SPECIAL
10	V836662619	1	BEARING
11	V836662622	1	BEARING
12	V836662620	1	SCREW
13	V836662623	1	RECTIFIER
14	V836662625	1	REGULATOR
15	V836662624	1	COVER
16	V836662621	1	PULLEY & NUT
17	V836667315	1	ALTERNATOR ASY (INCLS ITEMS 10-16)

SIS0058
PR: t05I09o11c0016

https://truckmanualshub.com/

STARTER MOTOR
SISU

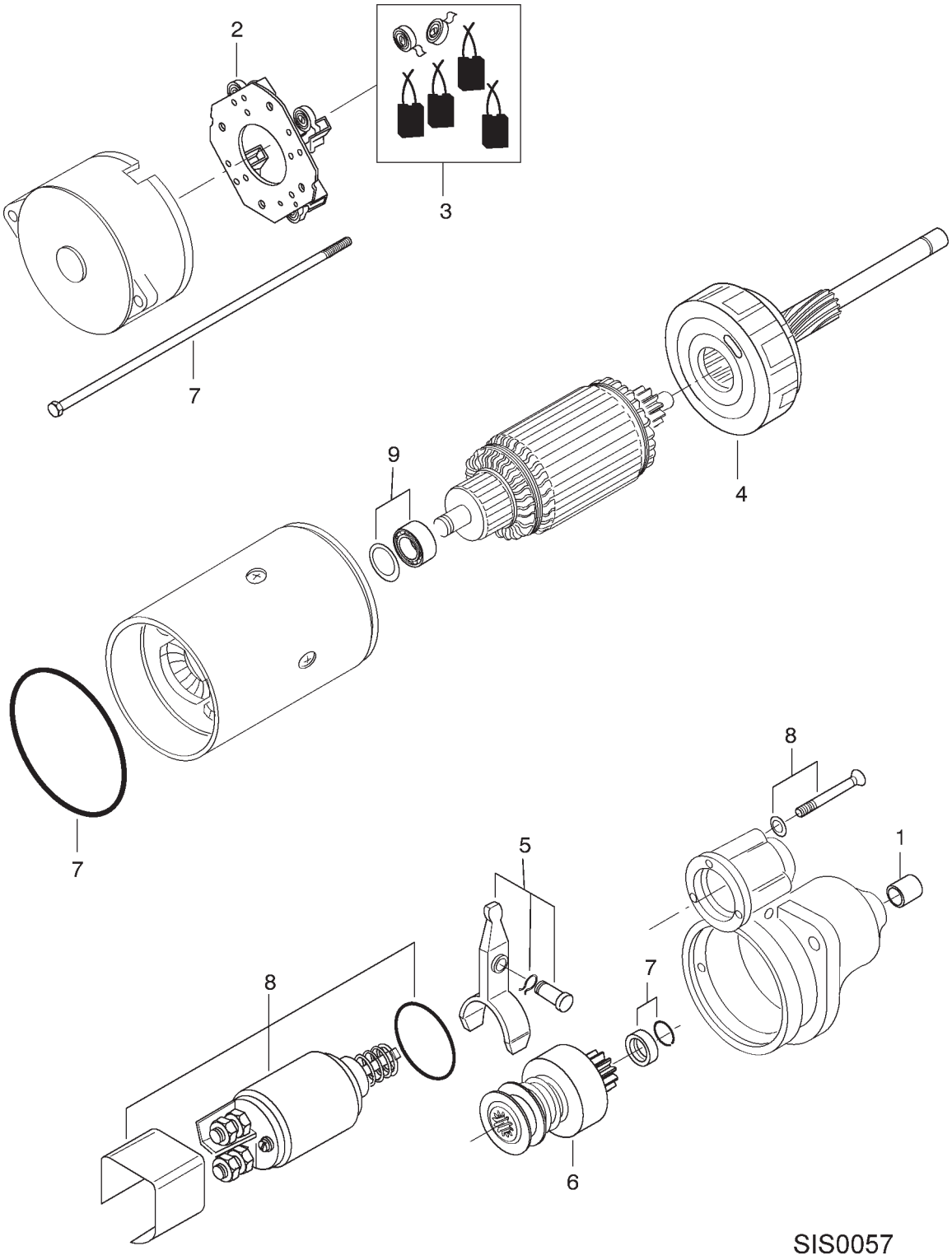

https://truckmanualshub.com/

ITEM	NUMBER	QTY	DESCRIPTION
-	V836866817	1	STARTER ASY
1	V836862454	1	BUSHING
2	V836862461	1	HOLDER, BRUSH (INCLUDES ITEM 3)
3	V836862462	1	BRUSH SET
4	V836862458	1	SHAFT
5	V836862457	1	SHIFT LEVER SET
6	V836862456	1	DRIVE GEAR
7	V836862460	1	KIT, MISC. PARTS
8	V836862455	1	SOLENOID
9	V836862459	1	BEARING

SIS0057
PR: t05I09o11c0017

https://truckmanualshub.com/

DRIVE BELT SYSTEM
SISU

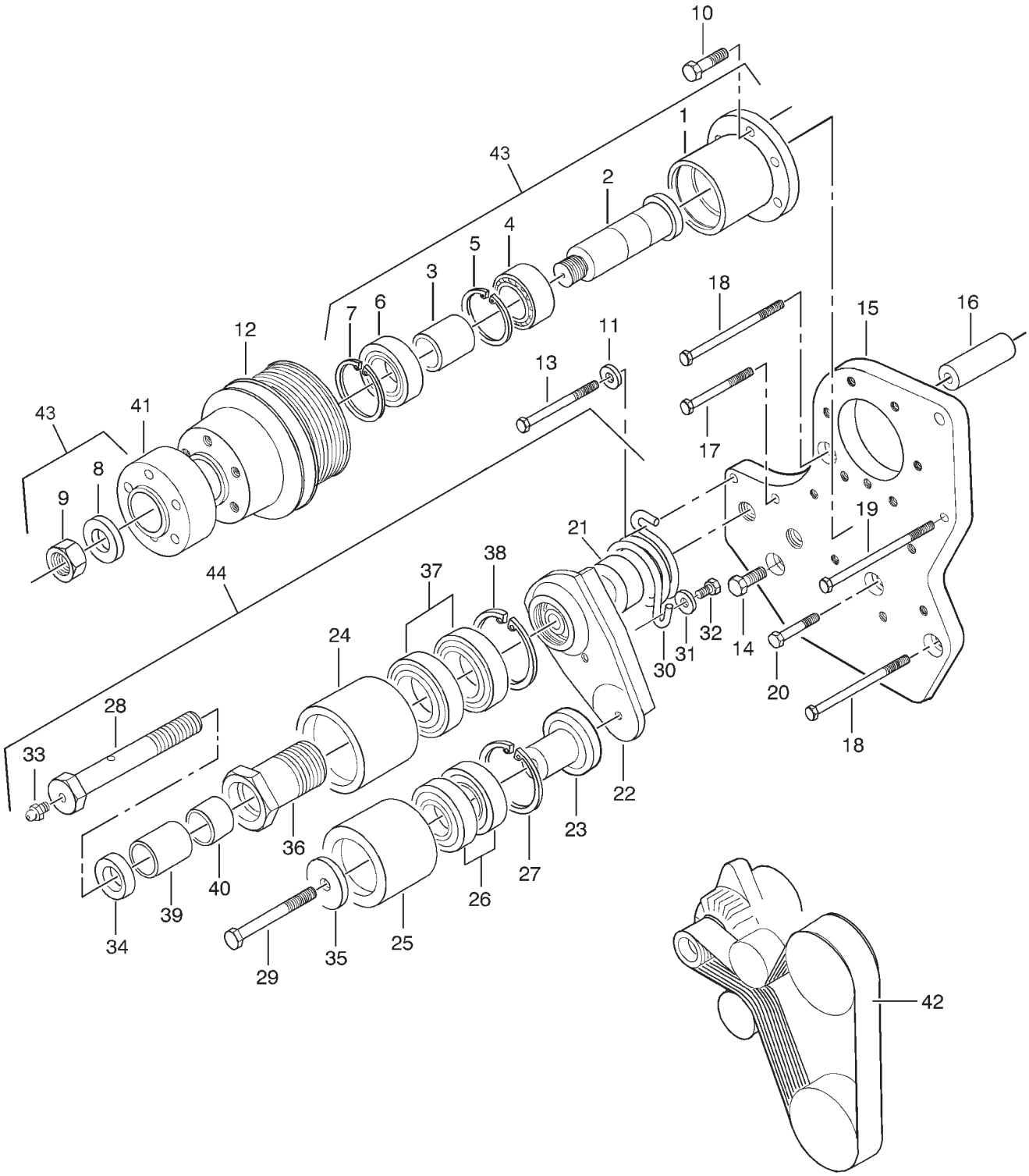

SIS0056

https://truckmanualshub.com/

ITEM	NUMBER	QTY	DESCRIPTION
1	V836855758	1	FRAME
2	V836855755	1	SHAFT
3	V836855757	1	SLEEVE
4	V610032065	1	BEARING
5	V617350062	1	CIRCLIP
6	V610063064	1	BEARING
7	V617330072	1	CIRCLIP
8	V836855756	1	WASHER
9	V504602002	1	HEX NUT, M20
10	V528801810	6	SCREW, M10 X 30
11	V836120989	1	WASHER
12	V836859288	1	PULLEY
13	V529801490	1	SCREW, M8 X 70
14	V528801800	1	SCREW, M10 X 25
15	V836855935	1	PLATE
16	V836855934	2	SLEEVE
17	V529801470	1	SCREW, M8 X 60
18	V529801550	2	SCREW, M8 X 100
19	V529801562	1	SCREW, M8 X 110
20	V529801450	1	SCREW, M8 X 50
21	V836859348	1	SHAFT
22	V836859347	1	SUPPORT
23	V836855789	1	SHAFT
24	V836859683	1	ROLLER
25	V836855666	1	ROLLER
26	V610062055	2	BEARING
27	V617330052	1	CIRCLIP
28	V836859357	1	SCREW
29	V529701880	1	SCREW, M10 X 65
30	V836855689	1	SPRING
31	V836120989	1	WASHER
32	V528801360	1	SCREW, M8 X 16
33	V644611006	1	FITTING, LUBE
34	V836859356	1	SPACER
35	V836855941	1	WASHER
36	V836859684	1	SHAFT
37	V610060085	2	BEARING
38	V617330068	1	CIRCLIP
39	V836859364	1	BUSHING
40	V836859363	1	BUSHING
41	V836852010	1	HUB, FAN SPACER
42	V685121585	1	BELT, V-RIBBED
43	V836855762	1	DRIVE ASY (INCLS ITEMS 1-9)
44	V836864296	1	TENSIONER ASY, BELT (INCLS ITEMS 21-40)

SIS0056
PR: t05l09o11c0018

https://truckmanualshub.com/

ENGINE OVERHAUL KITS
SISU

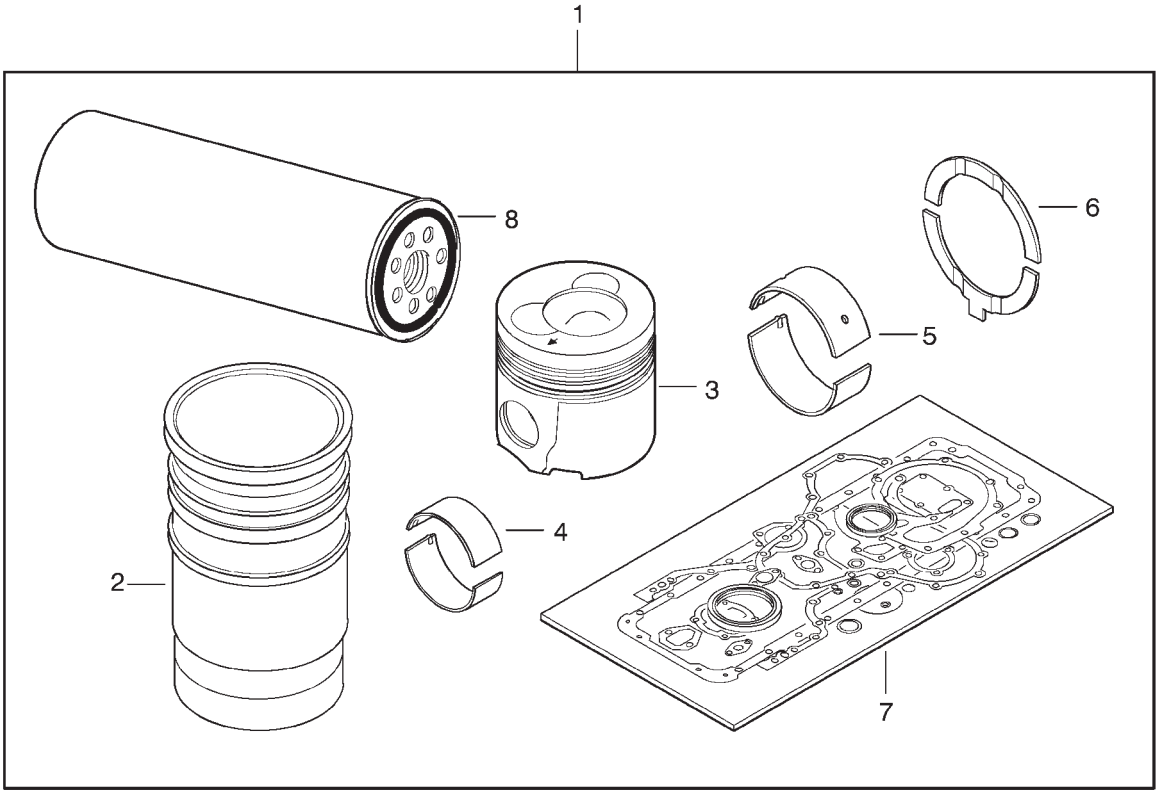

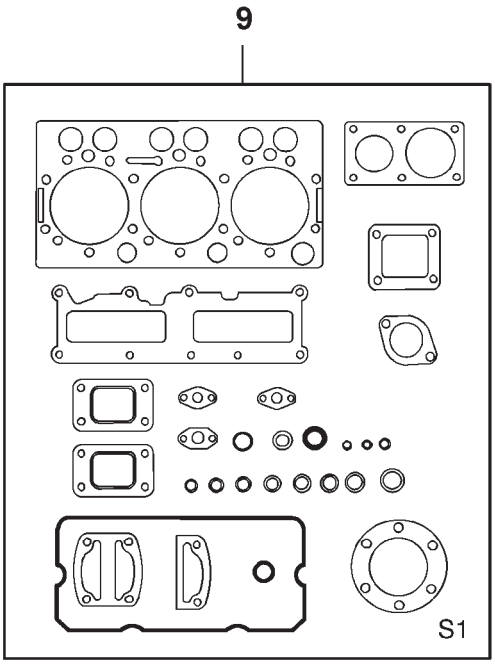

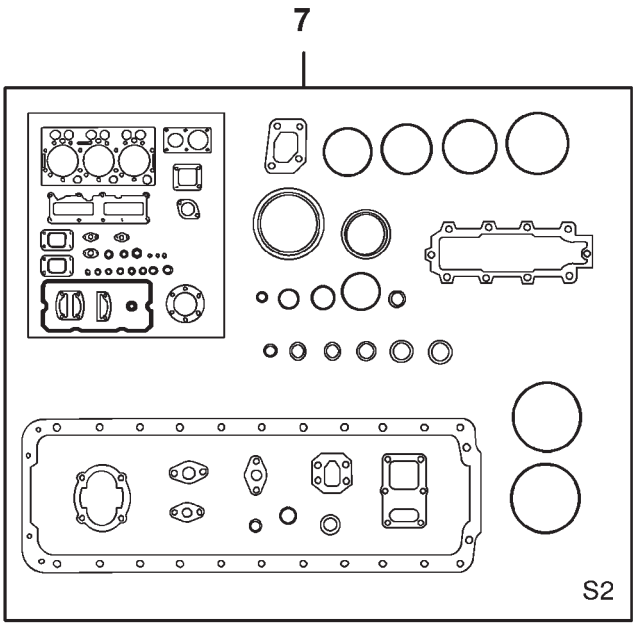

SIS0055

https://truckmanualshub.com/

ENGINE OVERHAUL KITS
SISU

ITEM	NUMBER	QTY	DESCRIPTION
1	V837062626	1	KIT, REPAIR (INCLS ITEMS 2-8)
2	V836867048	6	LINER, CYLINDER
3	V837070185	6	PISTON
4	V836336302	6	BEARING
5	V836840944	7	BEARING, MAIN
6	V836840945	2	PLATE, THRUST
7	V837062628	1	SET, GASKET FOR ENGINE
8	V836362567	1	FILTER, OIL
9	V837062627	1	SET, GASKET FOR CYLINDER HEAD

SIS0055
PR: t05I09o11c0019

https://truckmanualshub.com/

COOLING FAN DRIVE KIT, CUMMINS
(PRIOR S/N HR36101)

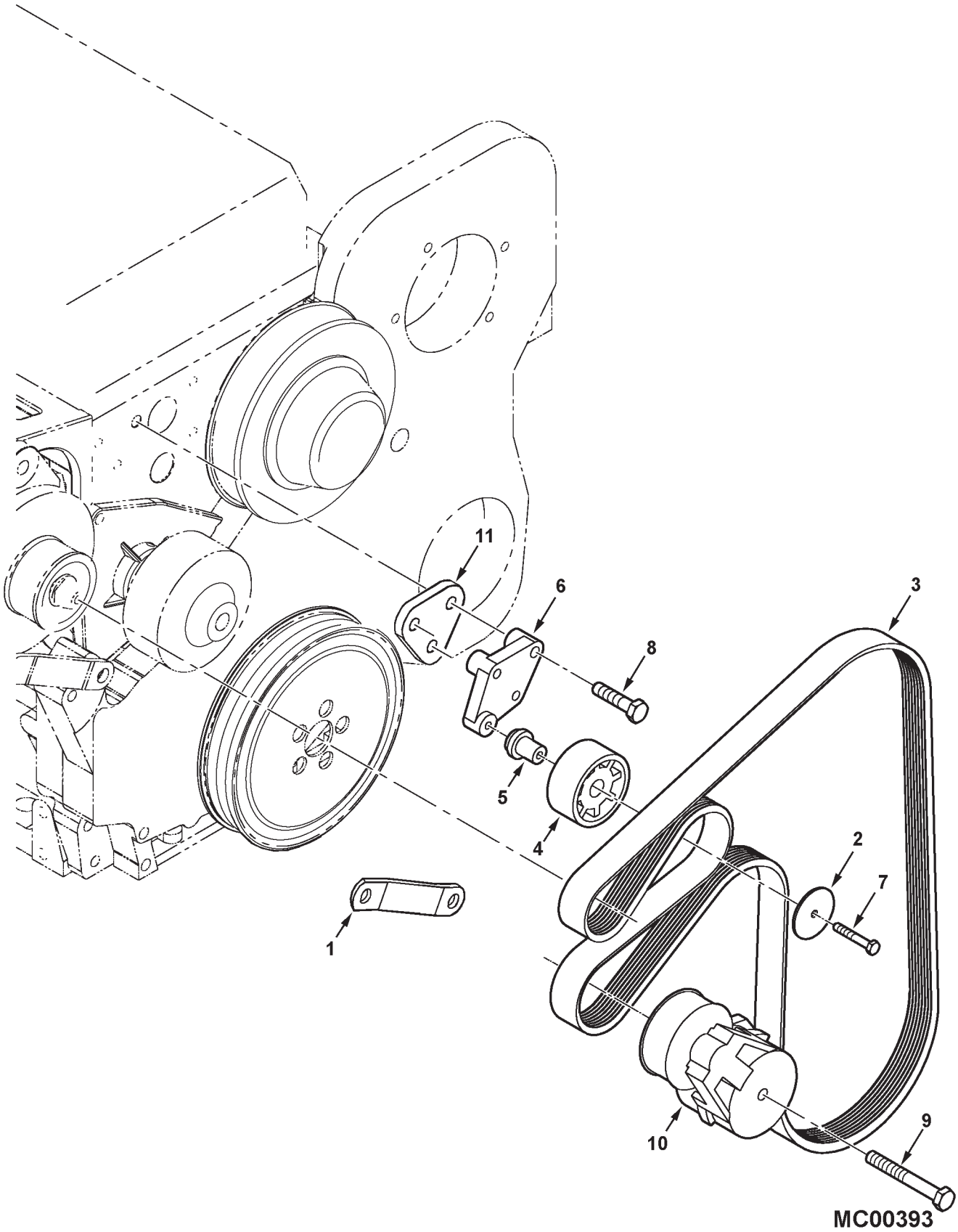

https://truckmanualshub.com/

COOLING FAN DRIVE KIT, CUMMINS
(PRIOR S/N HR36101)

ITEM	NUMBER	QTY	DESCRIPTION
-	71410513	AR	KIT, COOLING FAN DRIVE (INCL. FOLLOWING)
1	71410512	1	BRACKET, ALTERNATOR SUPPORT, LOWER
2	71410509	1	WASHER, DUST SHIELD, IDLER
3	71410501V	1	BELT, FAN DRIVE
4	71410507	1	PULLEY, IDLER
5	71410508	1	SHAFT, IDLER PULLEY
6	71410505	1	SUPPORT BRACKET, IDLER PULLEY
7	71410510	1	CAPSCREW, IDLER PULLEY
8	71410506	3	CAPSCREW, M10 X 45, IDLER SUPPORT BRKT
9	71410504	1	CAPSCREW, M10 X 85, TENSIONER MOUNTING
10	71410503	1	TENSIONER, FAN BELT (ORDER FROM CUMMINS)
11	71401364	1	SPACER PLATE, SUPPORT BRKT

MC00393
PR: t05e26j58c0001

https://truckmanualshub.com/

AIR INTAKE AND EXHAUST
CUMMINS QSL9 ENGINE
(PRIOR S/N HP36101)

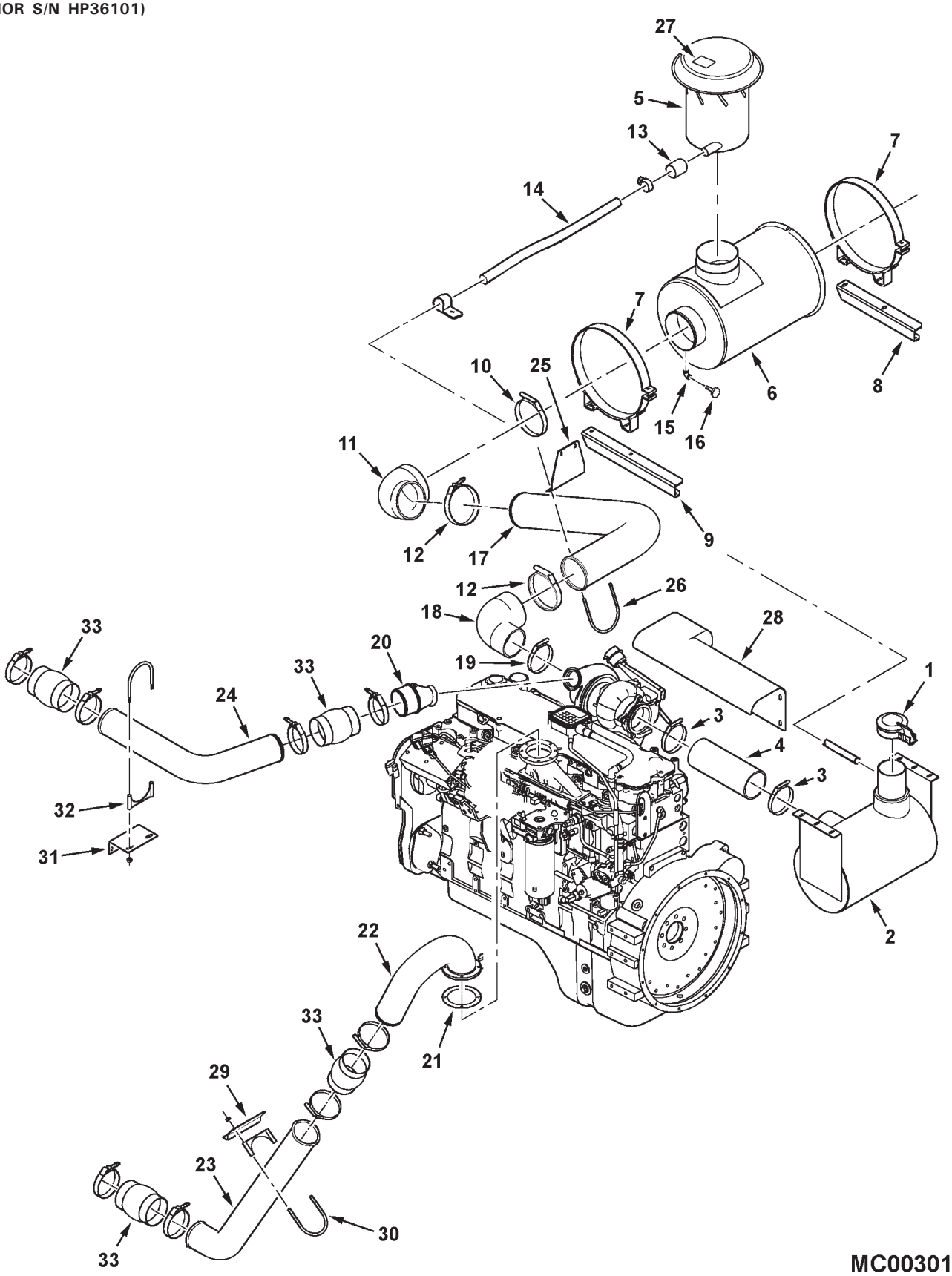

MC00301

https://truckmanualshub.com/

AIR INTAKE AND EXHAUST
CUMMINS QSL9 ENGINE
(PRIOR S/N HP36101)

ITEM	NUMBER	QTY	DESCRIPTION
1	70269408V	1	CAP ASSEMBLY, 4" ID, PLATED
2	71386887	1	MUFFLER
	7700461	6	BOLT, RHSN, 5/16-18 X 3/4
	70917356	6	LOCKWASHER, 5/16
	70917372	6	NUT, HEX 5/16-18
	70917642	6	WASHER, WIDE 5/16
3	103830W91	2	CLAMP ASSEMBLY, 4" ID, PLATED
4	71386886	1	PIPE, EXHAUST
5	2577893W91	1	PRE-CLEANER
6	71383233	1	AIR CLEANER ASY
7	AG512664	2	BAND CLAMP, 14" ID
	70921210	4	CAPSCREW, 3/8-16 X 1"
	Y704734	4	NUT, HEX FLNG TOP LOCK, 3/8-16
8	71391041	1	CHANNEL, REAR
	7883333	2	SCREW, HEX WSHR HD, 5/16-18 X 1"
	Y704726	2	NUT, HEX FLANGE TOP LOCK, 5/16-18
9	71391040	1	CHANNEL, FRONT
	7883333	2	SCREW, HEX WSHR HD, 5/16-18 X 1"
	Y704726	2	NUT, HEX FLANGE TOP LOCK, 5/16-18
10	700717761	1	CLAMP, HOSE T-BOLT, 6-1/2
11	71368951	1	ELBOW, 90 DEG, RED. 6 X 5
12	72160993	2	CLAMP, HOSE T-BOLT, 5-1/2
13	71387650	1	BUSHING, HOSE
14	71387625	1	HOSE ASPIRATOR, 1.5 ID
	70921912	2	CLAMP, HOSE, WORM, 1.06 - 2.0 RANGE
15	70915955	1	ELBOW, 90 DEG FEM. 1/8-27 NPTF
16	31-2530050	1	SWITCH, AIR CLEANER VACUUM
17	71389910	1	TUBE, AIR ENGINE INTAKE
18	71351859	1	ELBOW, 90 DEG, RED. 5 X 4
19	72161280	1	CLAMP, HOSE T-BOLT, 4-1/2

CONTINUED

https://truckmanualshub.com/

AIR INTAKE AND EXHAUST
CUMMINS QSL9 ENGINE
(PRIOR S/N HP36101)

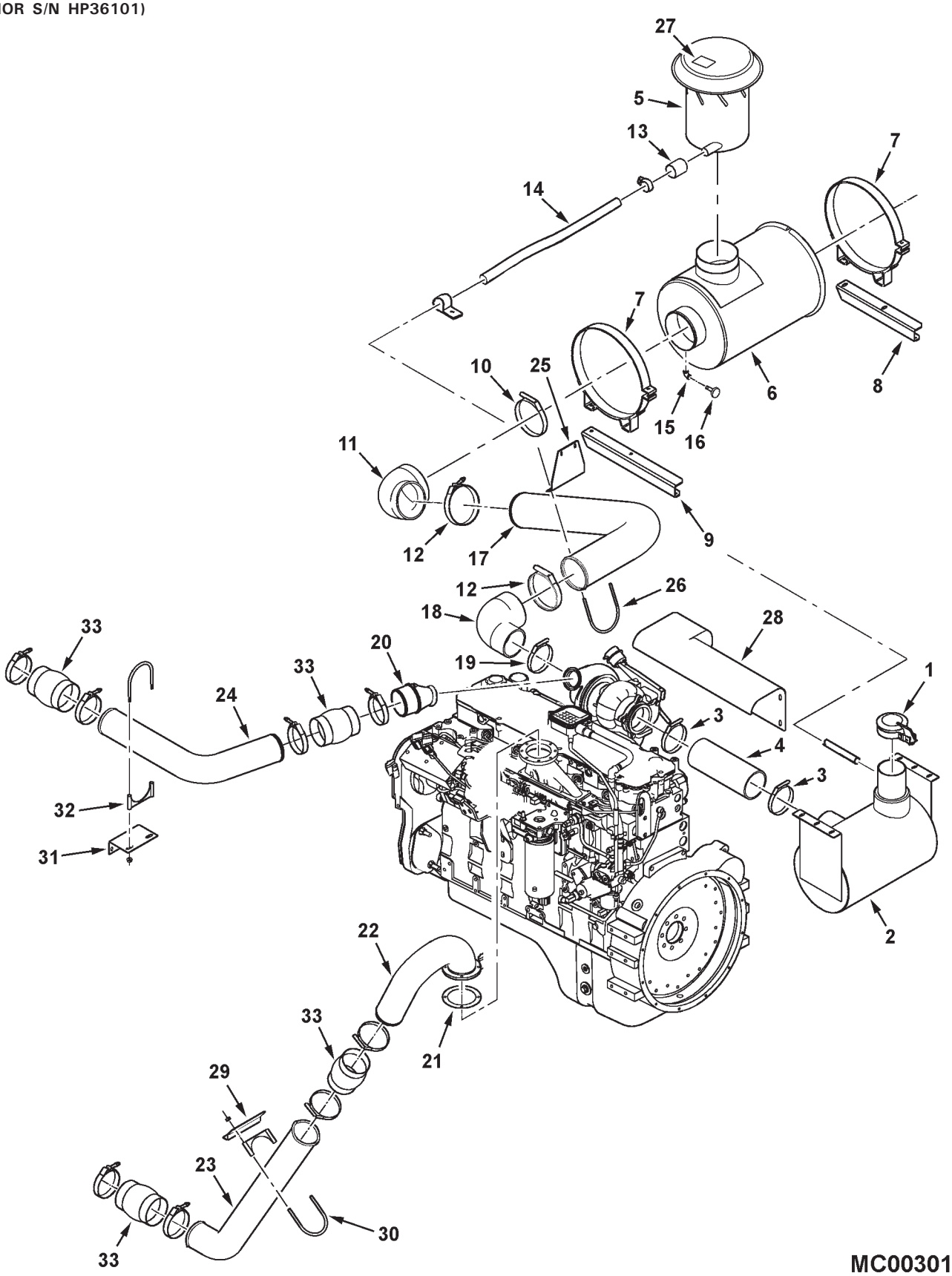

https://truckmanualshub.com/

AIR INTAKE AND EXHAUST
CUMMINS QSL9 ENGINE
(PRIOR S/N HP36101)

ITEM	NUMBER	QTY	DESCRIPTION
20	71386890	1	ELBOW, AIR TRANSFER, TURBO OUT
	70917673	2	PLUG, 1/8 NPT
	3883284	1	O-RING, (CUMMINS)
	3923060	1	V-CLAMP, (CUMMINS)
21	3917892	1	GASKET, AIR INTAKE (CUMMINS)
22	71386895	1	TUBE, AIR, CAC TO ENGINE
	70951067	4	SCREW, SOCKET HEAD, M8-1.25 X 25
	1177981	4	LOCKWASHER, M8
23	71388887	1	TUBE, AIR, CAC TO ENGINE
24	71389410	1	TUBE, AIR, ENGINE TO CAC
25	71388900	1	SUPPORT, INLET TUBE
	7883325	2	SCREW, HEX WSHR HD, 5/16-18 X 3/4
	70917642	2	WASHER, 5/16 WIDE
	70917356	2	LOCKWASHER, 5/16
	70917372	2	NUT, HEX 5/16-18
26	2625940W1	1	U-BOLT, 5" ID
	Y704726	2	NUT, HEX FLANGE TOP LOCK, 5/16-18
27	71387749	2	DECAL - WARNING
28	71388883	1	SHIELD WLDMT
29	71393839	1	BRACKET, AIR COOLER TUBE
30	7024938	1	CLAMP, EXHAUST, 4-1/8 DIA
31	71401355	1	SUPPT BRKT, CAC TUBE (EFF. S/N HN36101)
	70921332	2	CAPSCREW, 5/16-18 X 3/4
	70918265	2	WASHER, 5/16 NARR
	70917356	2	LOCKWASHER, 5/16
32	7024938	1	U-CLAMP ASY, 4 ID (EFF. S/N HN36101)
	Y704734	2	NUT, HEX FLANGE TOP LOCK, 3/8-16
33	3071049	4	HOSE, HUMP (CUMMINS)
	3926704	8	T-CLAMP (CUMMINS)

MC00301
PR: 30

https://truckmanualshub.com/

AIR CLEANER
CUMMINS QSL9 ENGINE

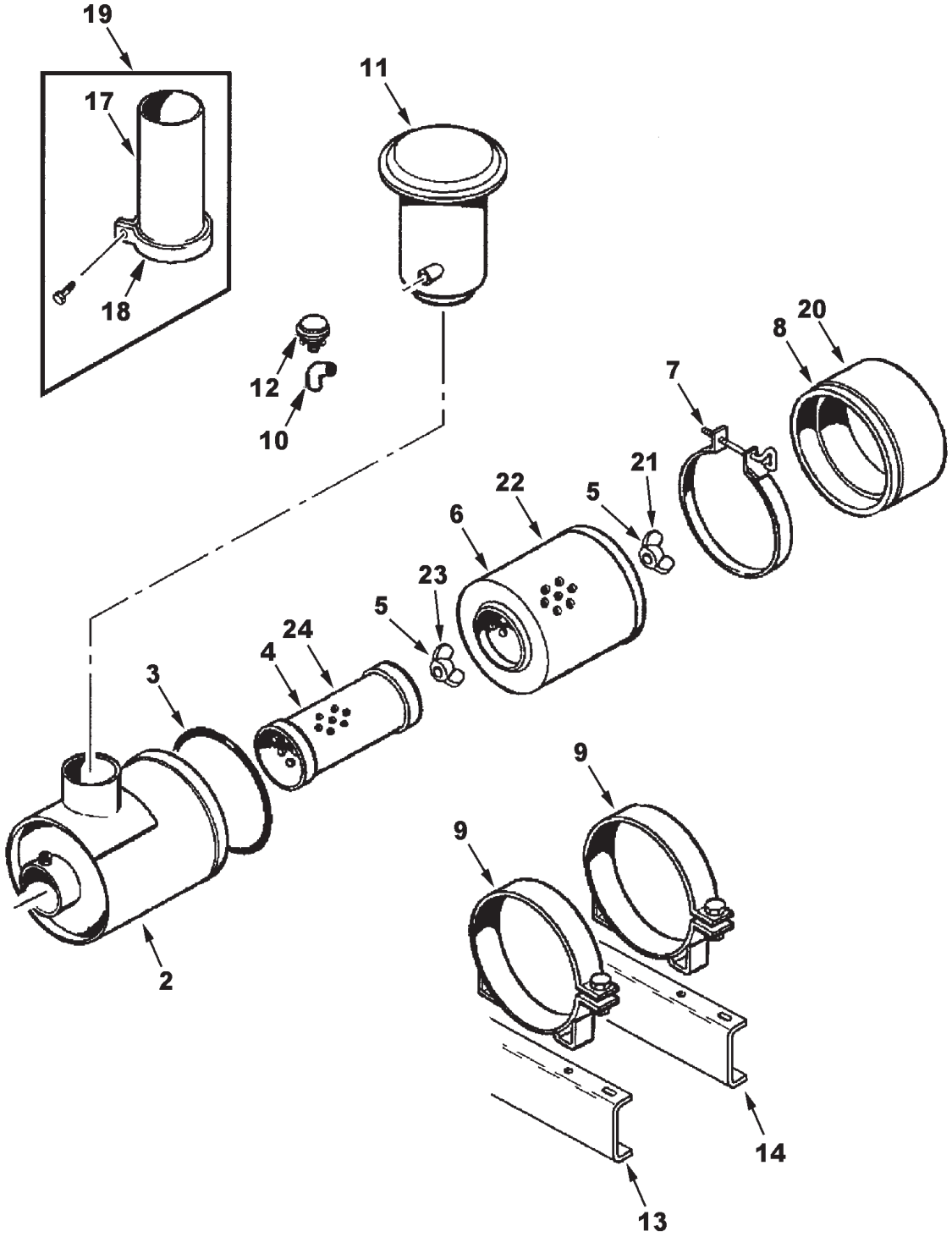

MC00295

https://truckmanualshub.com/

AIR CLEANER
CUMMINS QSL9 ENGINE

ITEM	NUMBER	QTY	DESCRIPTION
2	2461793W91	1	AIR CLEANER ASY (INCL ITEMS 3-8)(PRIOR S/N HN36101)(SERVICE ORDER 71383233)
	71383233	1	AIR CLEANER ASY (INCL ITEMS 20-24)(EFF. S/N HN36101)
3	1089933M1	1	O-RING
4	1070230M1	1	ELEMENT, SAFETY
5	3638002M1	1	NUT, WING SPECIAL, 7/16 UNF
6	1070229M1	1	ELEMENT, PRIMARY
7	1089941M91	1	CLAMP ASSEMBLY
8	1070231M91	1	CUP ASSEMBLY
9	AG512664	2	MOUNTING BAND, AIR CLNR
	703249	4	CAPSCREW, 3/8-16 X 1" GR5
	Y704734	4	NUT, HEX FLANGE TOP LOCK, 3/8-16
10	70915955	1	ELBOW, 90 DEG.
11	2577893W91	1	PRE-CLEANER ASSEMBLY
12	31-2530050	1	SWITCH, VACUUM
13	71391040	1	CHANNEL, AIR CLEANER - FRONT
14	71391041	1	CHANNEL, AIR CLEANER - REAR
17	105092W1	1	TUBE 11" AIR INLET
18	105091W1	1	STRAP, CLAMP
	70921971	1	BOLT, HEX, 3/8-16 X 1-3/4
	70916965	1	LOCKWASHER, 3/8
	70916950	1	NUT, 3/8-16
19	71378060	AR	AIR INTAKE KIT, 11" EXTEN. (INCL. ITEMS 17 & 18)(ORDER THRU DEALER CENTRAL)
20	71368963	1	COVER ASY, (INCL. NUT, CLIP & GASKET)
	71374564	1	WING NUT
	71374565	1	CLIP
	71369877	1	GASKET, COVER
21	70269246	1	NUT ASY.
22	71368961	1	ELEMENT, PRIMARY FILTER
23	70257297	1	NUT ASY, SAFETY
24	71368962	1	ELEMENT, FILTER, SAFETY

MC00295
PR: 32

https://truckmanualshub.com/

AIR INTAKE & EXHAUST
CUMMINS QSL9 ENGINE
(S/N HP36101 - HP36999)

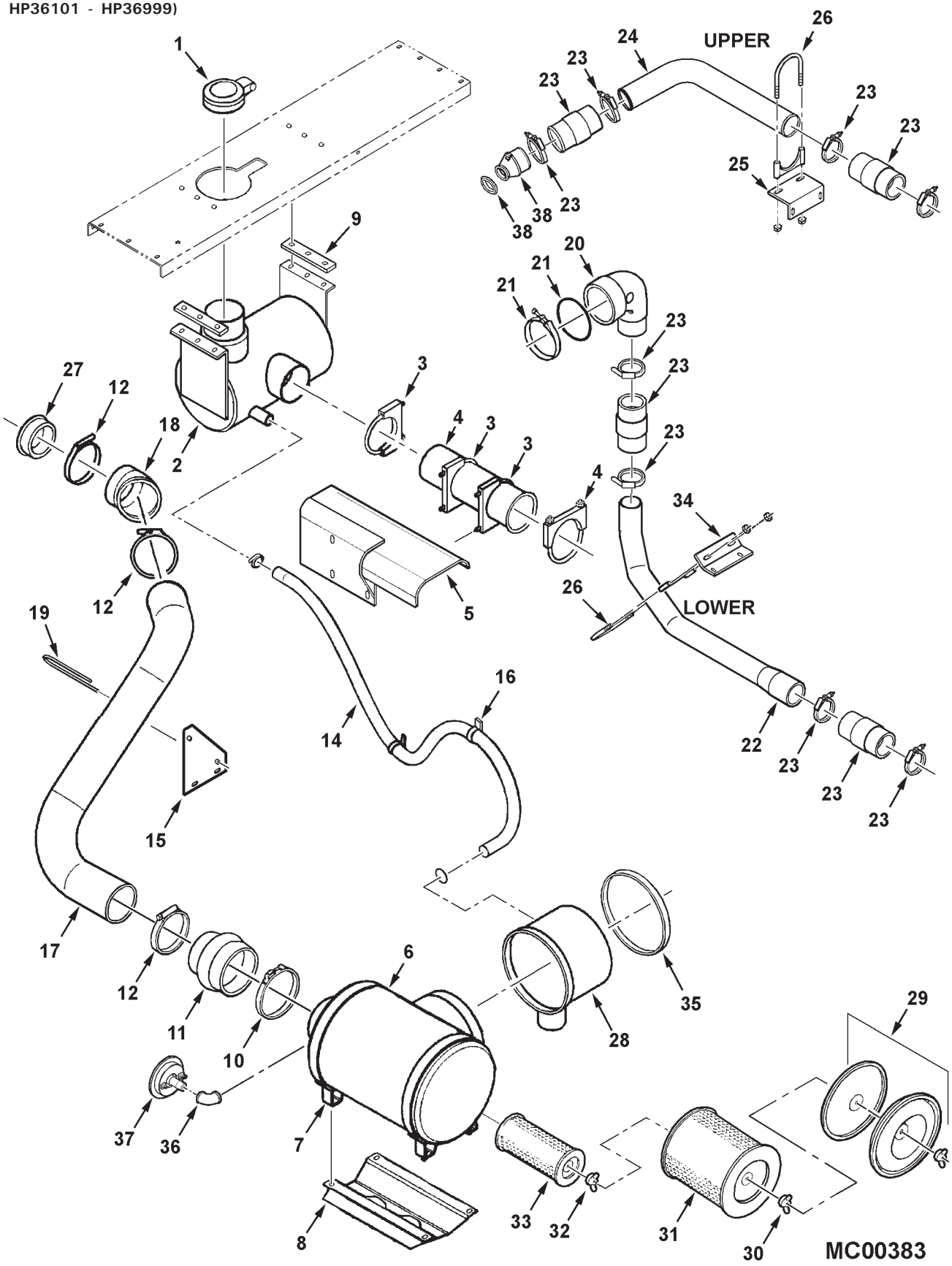

https://truckmanualshub.com/

AIR INTAKE & EXHAUST
CUMMINS QSL9 ENGINE
(S/N HP36101 - HP36999)

ITEM	NUMBER	QTY	DESCRIPTION
1	71400553	1	CAP ASY, 5.0" EXHAUST
2	71400551	1	MUFFLER
	70917372	6	NUT, 5/16-18 REG
	70917356	6	LOCKWASHER, 5/16 REG
	Y705525	6	WASHER, 5/16 HARD
	7770308	6	BOLT, RD HD SQ NK, 5/16-18 X 1-1/2
3	71396994	3	CLAMP, 5" MUFFLER
	Y704734	6	NUT, HEX FLANGE TOP LOCK, 3/8-16
4	71406719	1	TUBE, EXHAUST
	103830W91	1	CLAMP, 4" MUFFLER
	Y704734	2	NUT, HEX FLANGE TOP LOCK, 3/8-16
5	71406718	1	SHIELD WLDMT, EXHAUST
6	71368953	1	AIR CLEANER (INCL ITEMS 29 - 33)
7	AG512664	2	BAND CLAMP, 14" ID
	70921210	4	CAPSCREW, 3/8-16 X 1 GR5
	Y705533	4	WASHER, 3/8 HARD
	70916965	4	LOCKWASHER, 3/8
	70916950	4	NUT, 3/8-16 REG
8	71397882	1	CHANNEL, MOUNT, AIR CLNR
	7883333	2	SCREW, HEX WSHR HD MACH, 5/16-18 X 1
	Y704726	2	NUT, HEX FLANGE TOP LOCK, 5/16-18
9	71400562	2	SPACER BAR, MUFFLER
10	700717761	1	CLAMP, T-BOLT
11	2632680W1	1	REDUCER, 6 X 5 DIA
12	72160993	3	CLAMP, BAND, 5.25-5.62 DIA
14	71400561	1	HOSE, ASPIRATOR, 1.5 ID
	70921912	2	CLAMP, WORM DRIVE, 1.06 - 2.0 DIA
15	71397883	1	BRACKET, INTAKE TUBE
	70917372	2	NUT, 5/16-18 REG
	Y705608	2	WASHER, 5/16, NARROW
	70917356	2	LOCKWASHER, 5/16 REG
	70921332	2	CAPSCREW, 5/16-18 X 3/4 GR5
16	70936765	1	CLAMP, TUBE, 1-3/4 X .406 HOLE
17	71397880	1	TUBE, AIR CLEANER TO ENG
18	71397895	1	ELBOW, 45 DEG, 5"
19	2625940W1	1	U-BOLT, 5 DIA, 5/16-18
	Y705608	2	WASHER, 5/16, NARROW
	70917356	2	LOCKWASHER, 5/16
	70917372	2	NUT, 5/16-18 REG
20	3682674	1	CONNECTION, 90 DEG ELBOW (CUMMINS)
21	3067979	1	CLAMP, V-BAND (CUMMINS)
	3682177	1	SEAL, O-RING (CUMMINS)
22	71401369	1	TUBE, AIR, CAC LOWER
23	3071049	4	HUMP HOSE, 4" (CUMMINS)
	3926704	8	CLAMP, T-BOLT (CUMMINS)

CONTINUED

https://truckmanualshub.com/

AIR INTAKE & EXHAUST
CUMMINS QSL9 ENGINE
(S/N HP36101 - HP36999)

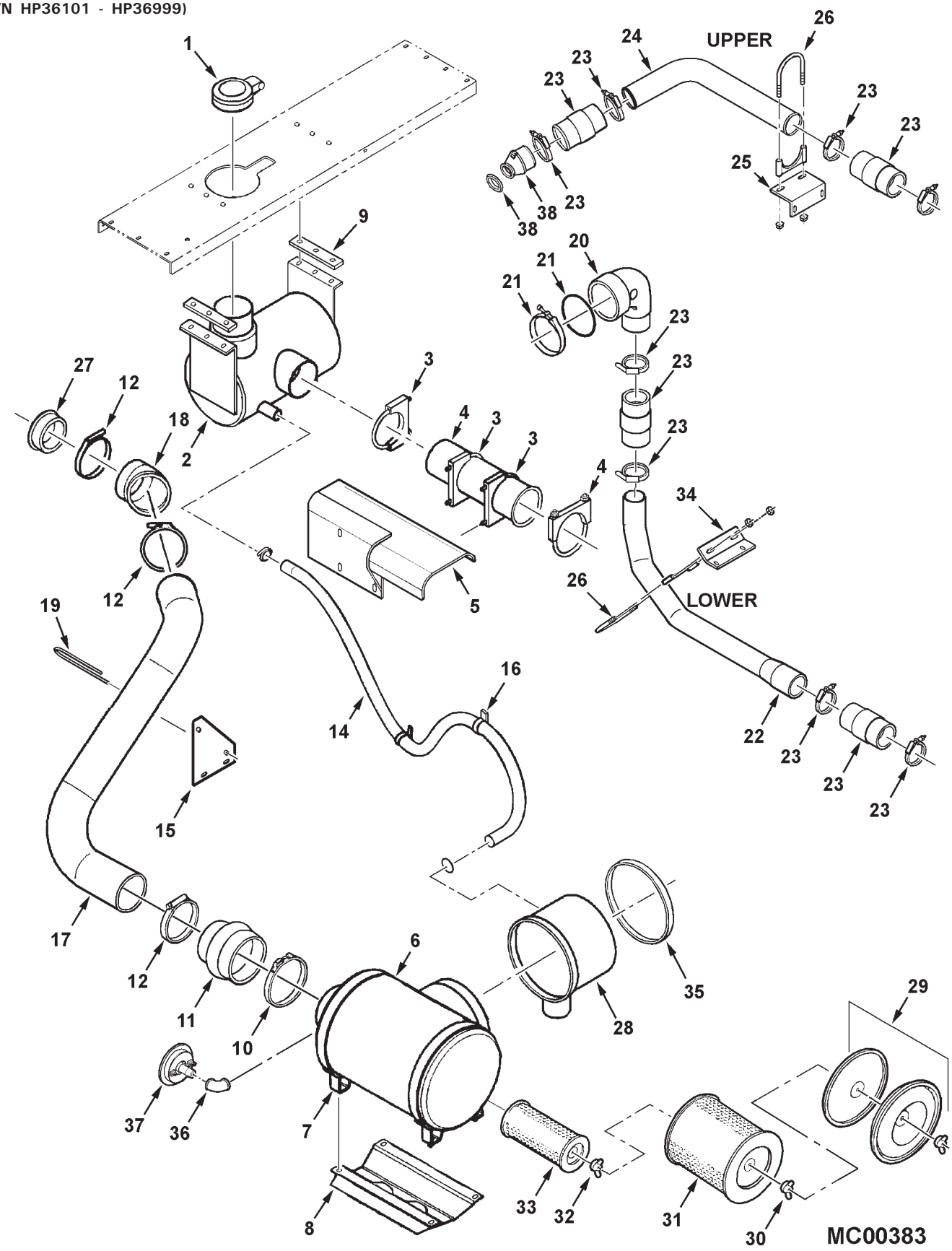

https://truckmanualshub.com/

AIR INTAKE & EXHAUST
CUMMINS QSL9 ENGINE
(S/N HP36101 - HP36999)

ITEM	NUMBER	QTY	DESCRIPTION
24	71389410	1	TUBE, AIR, CAC UPPER
25	71401355	1	ANGLE BRKT, UPPER TUBE SUPPORT
	70921333	2	CAPSCREW, 5/16-18 X 3/4 GR5
	70917356	2	LOCKWASHER, 5/16 REG
	Y705525	2	WASHER, 5/16 HARD
26	7024938	2	CLAMP, 4 DIA, MUFFLER
	Y705533	4	WASHER, 3/8, HARD
	Y704734	4	NUT, HEX FLANGE TOP LOCK, 3/8-16
27	71397881	1	REDUCER RING, 5" TO 4" DIA
28	71397886	1	PRECLEANER
29	71368963	1	COVER ASY, (INCL. NUT, CLIP & GASKET)
	71374564	1	WING NUT
	71374565	1	CLIP
	71369877	1	GASKET, COVER
30	70269246	1	NUT ASY
31	71368961	1	ELEMENT, PRIMARY, FILTER
32	70257297	1	NUT ASY, SAFETY
33	71368962	1	ELEMENT, FILTER, SAFETY
34	71404410B	1	ANGLE BRKT, LOWER TUBE SUPPORT
35	71399697	1	SEAL, AIR CLEANER
36	70915955	1	ELBOW, 90 DEG FEM. 1/8-27 NPTF
37	31-2530050	1	SWITCH, AIR CLEANER VACUUM
38	71386890	1	ELBOW, AIR TRANSFER, TURBO OUT
	70917673	2	PLUG, 1/8 NPT
	3883284	1	O-RING, (CUMMINS)
	3923060	1	V-CLAMP, (CUMMINS)

MC00383
PR: t05b08m42d0001

https://truckmanualshub.com/

AIR INTAKE AND EXHAUST

SISU ENGINE
(EFF. S/N HR36101)

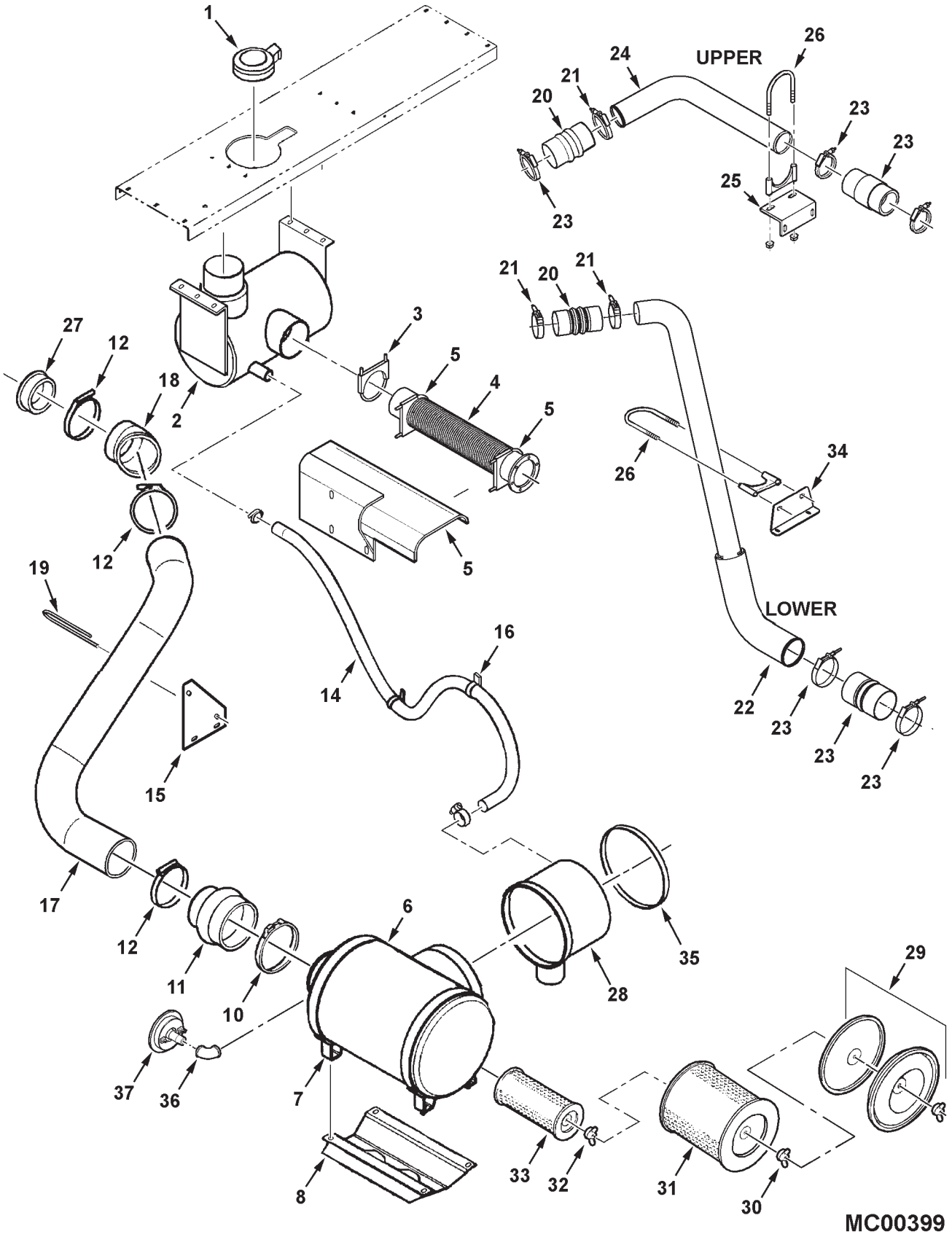

https://truckmanualshub.com/

AIR INTAKE AND EXHAUST

SISU ENGINE
(EFF. S/N HR36101)

ITEM	NUMBER	QTY	DESCRIPTION
1	71400553	1	CAP ASY, 5.0 ID, EXHAUST
2	71400551	1	MUFFLER, EXHAUST
	7700461	6	BOLT, RD HD SHT SQ NK, 5/16-18 X 3/4
	70917642	6	WASHER, 5/16, WIDE
	70917356	6	LOCKWASHER, 5/16 REG
	70917372	6	NUT, 5/16-18 REG
3	71396994	1	CLAMP, 5" MUFFLER
	Y704734	2	NUT, HEX FLANGE TOP LOCK, 3/8-16
4	71406630	1	TUBE, EXHAUST
	391990X1	6	CPSCR,HX SOCK HD, M8-1.25 X 25, 10.9
5	71406612	1	SHIELD WLMT, EXHAUST
	103830W91	2	CLAMP, 4" MUFFLER
	Y704734	4	NUT, HEX FLANGE TOP LOCK, 3/8-16
6	71368953	1	AIR CLEANER (INCL ITEMS 29 - 33)
7	AG512664	2	BAND CLAMP, 14" ID
	70921210	4	CAPSCREW, 3/8-16 X 1 GR5
	70918266	4	WASHER, 3/8, NARROW
	70916965	4	LOCKWASHER, 3/8
	70916950	4	NUT, 3/8-16 REG
8	71397882	1	CHANNEL, MOUNT, AIR CLNR
	7883333	2	SCREW, HEX WSHR HD MACH, 5/16-18 X 1
	Y704726	2	NUT, HEX FLANGE TOP LOCK, 5/16-18
10	700717761	1	CLAMP, T-BOLT
11	2632680W1	1	REDUCER, 6 X 5 DIA
12	72160993	3	CLAMP, BAND, 5.25-5.62 DIA
14	71400561	1	HOSE, ASPIRATOR, 1.5 ID
	70921912	2	CLAMP, WORM DRIVE, 1.06 - 2.0 DIA
15	71406609	1	BRACKET, INTAKE TUBE
	70921332	2	CAPSCREW, 5/16-18 X 3/4 GR5
	Y705608	2	WASHER, 5/16, NARROW
	70917356	2	LOCKWASHER, 5/16 REG
	70917372	2	NUT, 5/16-18 REG
16	70936765	2	CLAMP, TUBE, 1-3/4 X .406 HOLE
17	71406626	1	TUBE, AIR CLEANER TO ENG
18	71397895	1	ELBOW, 45 DEG, 5"
19	2625940W1	1	U-BOLT, 5 DIA, 5/16-18
	Y705608	2	WASHER, 5/16, NARROW
	70917356	2	LOCKWASHER, 5/16
	70917372	2	NUT, 5/16-18 REG

CONTINUED

https://truckmanualshub.com/

AIR INTAKE AND EXHAUST

SISU ENGINE
(EFF. S/N HR36101)

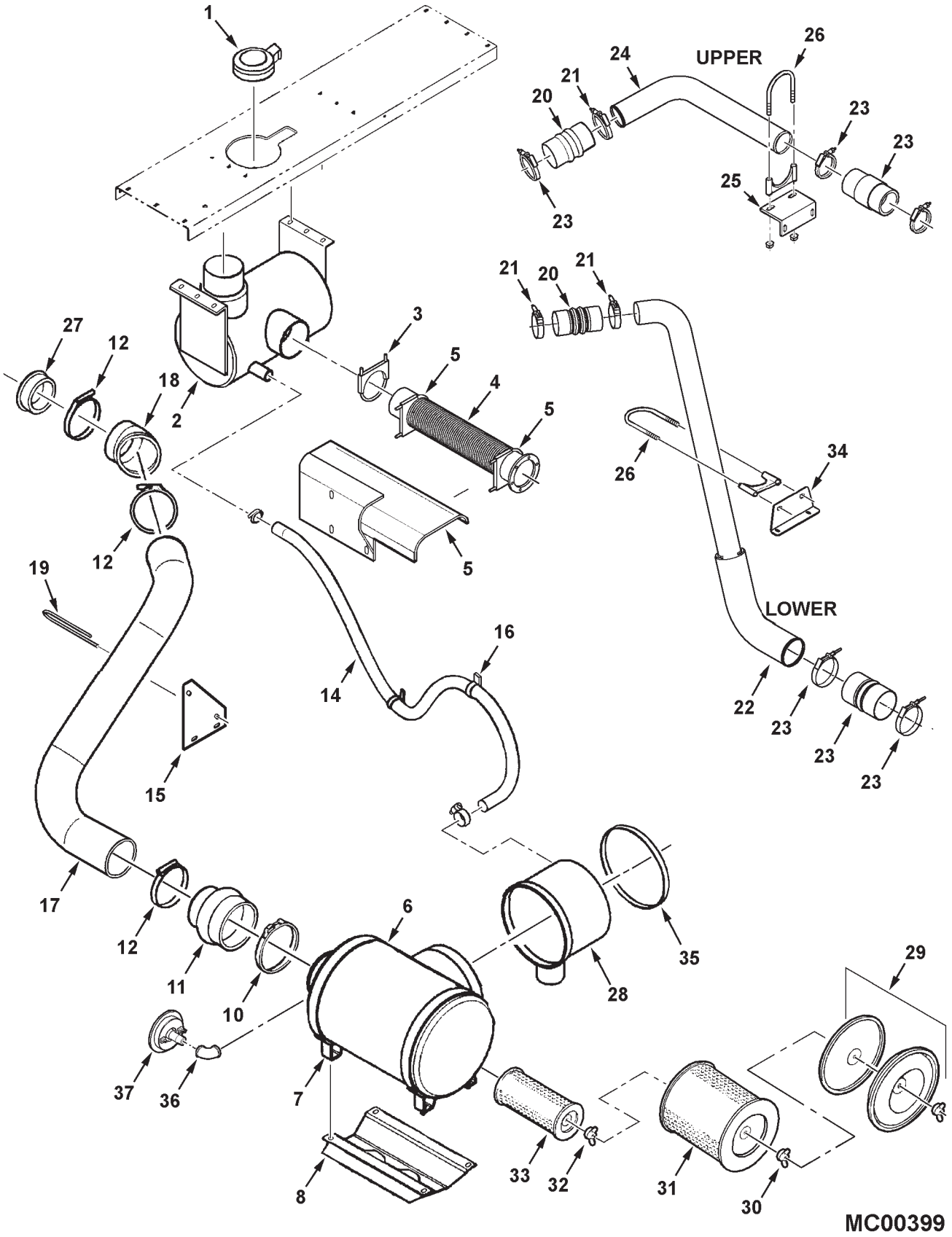

https://truckmanualshub.com/

ITEM	NUMBER	QTY	DESCRIPTION
20	71408692	2	HOSE, BELLOWS, 3.0 ID
21	700726543	4	CLAMP, SPRING HOSE, 3.13-3.44 ID
22	71406631	1	TUBE, AIR, CAC TO ENGINE, LOWER
23	71407545	2	HOSE, BELLOWS, 4.0 ID
	71396983	4	CLAMP, T-BOLT, 4.13-4.44 DIA
24	71406625	1	TUBE, AIR, ENGINE TO CAC, UPPER
25	71406608	1	SUPPORT BRKT, CAC TUBE
	70921332	2	CAPSCREW, 5/16-18 X 3/4 GR5
	Y705608	2	WASHER, 5/16, NARROW
	70917356	2	LOCKWASHER, 5/16 REG
26	71399682	2	CLAMP, 3" DIA, EXHAUST
	Y704734	4	NUT, HEX FLANGE TOP LOCK, 3/8-16
27	71397881	1	REDUCER RING, 5" TO 4" DIA
28	71397886	1	PRECLEANER
29	71368963	1	COVER ASY, (INCL. NUT, CLIP & GASKET)
	71374564	1	WING NUT
	71374565	1	CLIP
	71369877	1	GASKET, COVER
30	70269246	1	NUT ASY
31	71368961	1	ELEMENT, PRIMARY, FILTER
32	70257297	1	NUT ASY, SAFETY
33	71368962	1	ELEMENT, FILTER, SAFETY
34	71409063	1	SUPPORT BRKT, CAC TUBE
35	71399697	1	SEAL, AIR CLEANER
36	70915955	1	ELBOW, 90 DEG FEM. 1/8-27 NPTF
37	31-2530050	1	SWITCH, AIR CLEANER VACUUM

MC00399
PR: t05I09o11c0020

https://truckmanualshub.com/

MAIN ENGINE DRIVES

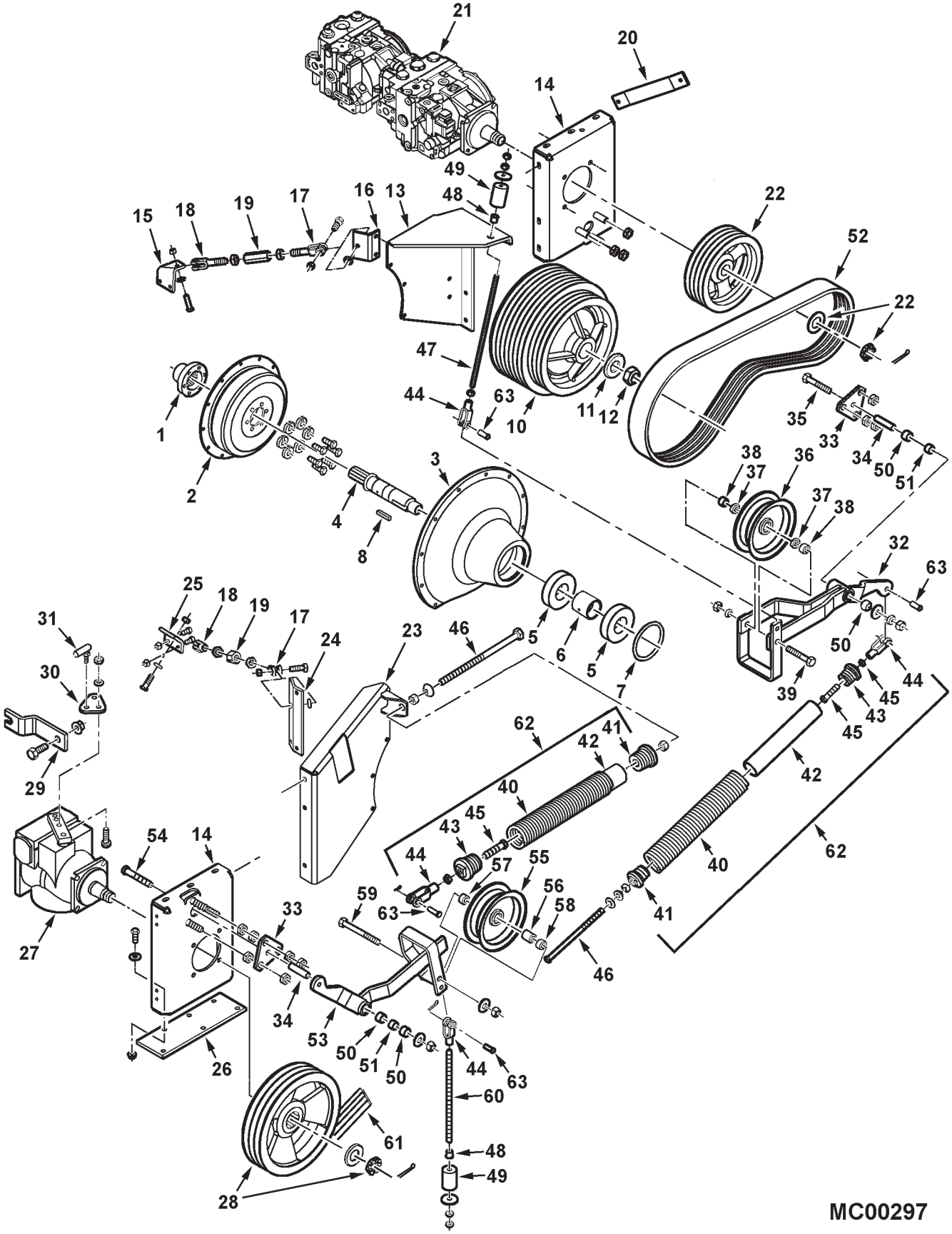

https://truckmanualshub.com/

ITEM	NUMBER	QTY	DESCRIPTION
1	71386880	1	HUB, FLEX COUPLING
2	71370165	1	COUPLING, FLEX
	7702202	6	CAPSCREW, 7/16-14 X 1-1/4 GR5
	70918199	6	LOCKWASHER, 7/16, REG
	70922845	8	SCR,FLNG 12-PT HD, 3/8-16 X 3/4 GR8 (PRIOR S/N HR36101)
	3009292X1	8	CPS,HEX SOCK HD, M10-1.5 X 25 CL10.9 (EFF. S/N HR36101)
3	71390090	1	HOUSING, PTO
	7771728	9	CAPSCREW, M10-1.5 X 40, CL8.8(WAS 10 PRIOR S/N HP36--- MID PROD'N RUN)
	700708367	9	LOCKWASHER, M10 REG (WAS QTY 10)
4	71398332	1	SHAFT, PTO
5	71398331	2	BEARING, BALL, SPECIAL
6	71398333	1	SPACER, BEARING
7	700720004	1	RING, RETAINING, INTERNAL
8	71178962	1	KEY, 3/8 SQ. ROUND END
10	71390091	1	SHEAVE, PTO DRIVER
11	70928136	1	WASHER, HARD, 1.56 ID X 3.0 OD
12	70925284	1	NUT, HEX, NYLON LOCK, 1-1/2-12
13	71390872	1	BRACE, PUMP SUPPORT (PRIOR S/N HR36101)
	71406615	1	BRACE, PUMP SUPPORT (EFF. S/N HR36101)
	70921176	3	CAPSCREW, 1/2-13 X 1-1/4 GR5
	70918431	3	WASHER, FLAT, 1/2, WIDE
	Y704742	3	LOCKNUT, HEX FLANGE, 1/2-13, GR G
14	71390084	2	SUPPORT WLDMT, PUMP
	701235	6	CAPSCREW, 1/2-13 X 1-1/2 GR5
	70918431	6	WASHER, FLAT, 1/2, WIDE
	Y704742	6	LOCKNUT, HEX FLANGE, 1/2-13, GR G
15	103284M1R	1	BRACE, PUMP SUPPORT
	70921210	2	CAPSCREW, 3/8-16 X 1" GR5
	Y704734	2	NUT, HEX FLANGE TOP LOCK, 3/8-16
16	71390079	1	ANCHOR, CLEVIS
	70921176	2	CAPSCREW, 1/2-13 X 1-1/4 GR5
	Y704742	2	LOCKNUT, HEX FLANGE, 1/2-13, GR G
17	844174M1	2	CLEVIS, 3/4-10UNC, LH THD
	703983	2	CAPSCREW, 1/2-13 X 1-3/4, GR5
	70918431	4	WASHER, FLAT, 1/2, WIDE
	70926946	2	LOCKNUT, HEX TOP, 1/2-13
18	844173M1	2	CLEVIS, 3/4-10UNC, RH THD
	703983	2	CAPSCREW, 1/2-13 X 1-3/4, GR5
	70918431	4	WASHER, FLAT, 1/2, WIDE
	70926946	2	LOCKNUT, HEX TOP, 1/2-13
19	255301M2	2	TURNBUCKLE, 3/4-10UNC
	70929288	2	NUT, JAM, 3/4-10 LH
	70922037	2	NUT, JAM, 3/4-10 RH
20	71390870	1	BRACE, ROTOR PUMP
	70920415	1	CAPSCREW, 3/8-16 X 1-1/4, GR5
	Y704734	1	NUT, HEX FLANGE TOP LOCK, 3/8-16
	70921176	1	CAPSCREW, 1/2-13 X 1-1/4, GR5
	Y704742	1	LOCKNUT, HEX FLANGE, 1/2-13, GR G
21	71388852	1	TANDEM PUMPS
	703983	4	CAPSCREW, 1/2-13 X 1-3/4, GR5
	353773X1	4	WASHER, HVY HARD, .50
	Y704742	4	LOCKNUT, HEX FLANGE, 1/2-13, GR G

CONTINUED

https://truckmanualshub.com/

MAIN ENGINE DRIVES

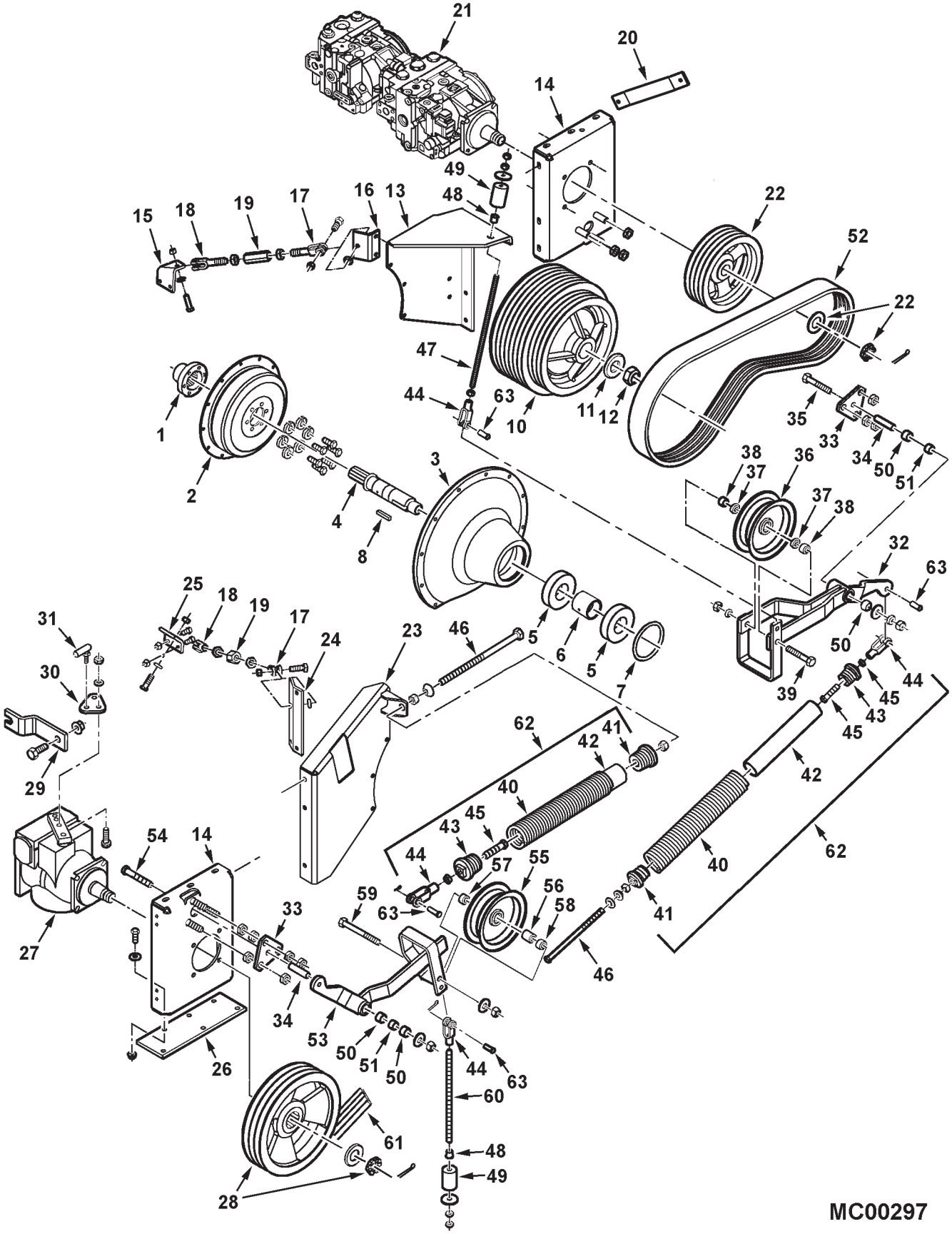

https://truckmanualshub.com/

ITEM	NUMBER	QTY	DESCRIPTION
22	71390092	1	SHEAVE, ROTOR PUMP
	70926208	1	WASHER, HARD, 1.31 X 2.25 X .25
	71356529	1	NUT, SLOTTED HEX (SUPPLIED W/ PUMP)
	70925719	1	PIN, COTTER, 1/8 X 2"
23	71390087	1	BRACE WLMT,PUMP SUPPT(PRIOR S/N HR36101)
	71406616	1	BRACE WLMT,PUMP SUPPT (EFF. S/N HR36101)
	703983	2	CAPSCREW, 1/2-13 X 1-3/4 GR5
	70921176	1	CAPSCREW, 1/2-13 X 1-1/4 GR5
	70918431	3	WASHER, FLAT, 1/2, WIDE
	Y704742	3	LOCKNUT, HEX FLANGE, 1/2-13, GR G
24	71390081	1	ANCHOR, CLEVIS
25	71390080	1	ANCHOR, CLEVIS
	703249	2	CAPSCREW, 3/8-16 X 1" GR5
	Y704734	2	NUT, HEX FLANGE TOP LOCK, 3/8-16
26	71390082	1	PLATE, PUMP SUPPORT
	70921176	2	CAPSCREW, 1/2-13 X 1-1/4, GR5
	Y704742	2	LOCKNUT, HEX FLANGE, 1/2-13, GR G
27	71388873	1	PUMP, VARIABLE DISPL, PROPEL
	703983	4	CAPSCREW, 1/2-13 X 1-3/4, GR5
	353773X1	4	WASHER, HVY HARD, .50
	Y704742	4	LOCKNUT, HEX FLANGE, 1/2-13, GR G
28	71389641	1	SHEAVE, PROPEL PUMP
	70926208	1	WASHER, HARD, 1.31 X 2.25 X .25
	71356529	1	NUT, SLOTTED HEX (SUPPL'D W/ PUMP)
	70925719	1	PIN, COTTER, 1/8 X 2"
29	71395565	1	BRACKET, CABLE ANCHOR
	703249	2	CAPSCREW, 3/8-16 X 1" GR5
	Y704734	2	NUT, HEX FLANGE TOP LOCK, 3/8-16
30	71397428	1	PLATE, ADAPTER
	353505X1	2	CAPSCREW, 1/4-28 X 1" GR5
	705012	2	LOCKWASHER, 1/4 REG
	70914192	2	NUT, 1/4-28UNF
31	7845068	1	BALL JOINT
	Y704445	1	NUT, HEX, #10-32 REG
	70921880	1	WASHER, EXT TOOTH, .25 NOM.
	70914192	1	NUT, 1/4-28UNF
32	71395813	1	ARM ASY, IDLER
33	71346267	2	PLATE, MOUNTING
	70922037	12	NUT, JAM, 3/4-10UNC
34	71390203	2	SLEEVE, IDLER PIVOT
35	70925704	1	CAPSCREW, 5/8-11 X 4-1/2 GR5
	70918432	1	WASHER, 5/8, WIDE
	70917373	1	LOCKWASHER, 5/8
	70932665	1	NUT, 5/8-11UNC, REG
36	71390861	1	IDLER, FLAT, 8" DIA
37	71312603	2	SPACER, IDLER
38	6529705	2	SPACER, 1" OD X .492 LG
39	873802	1	CAPSCREW, 5/8-11 X 7" GR5
	70917373	1	LOCKWASHER, 5/8
	70932665	1	NUT, 5/8-11UNC, REG

CONTINUED

https://truckmanualshub.com/

MAIN ENGINE DRIVES

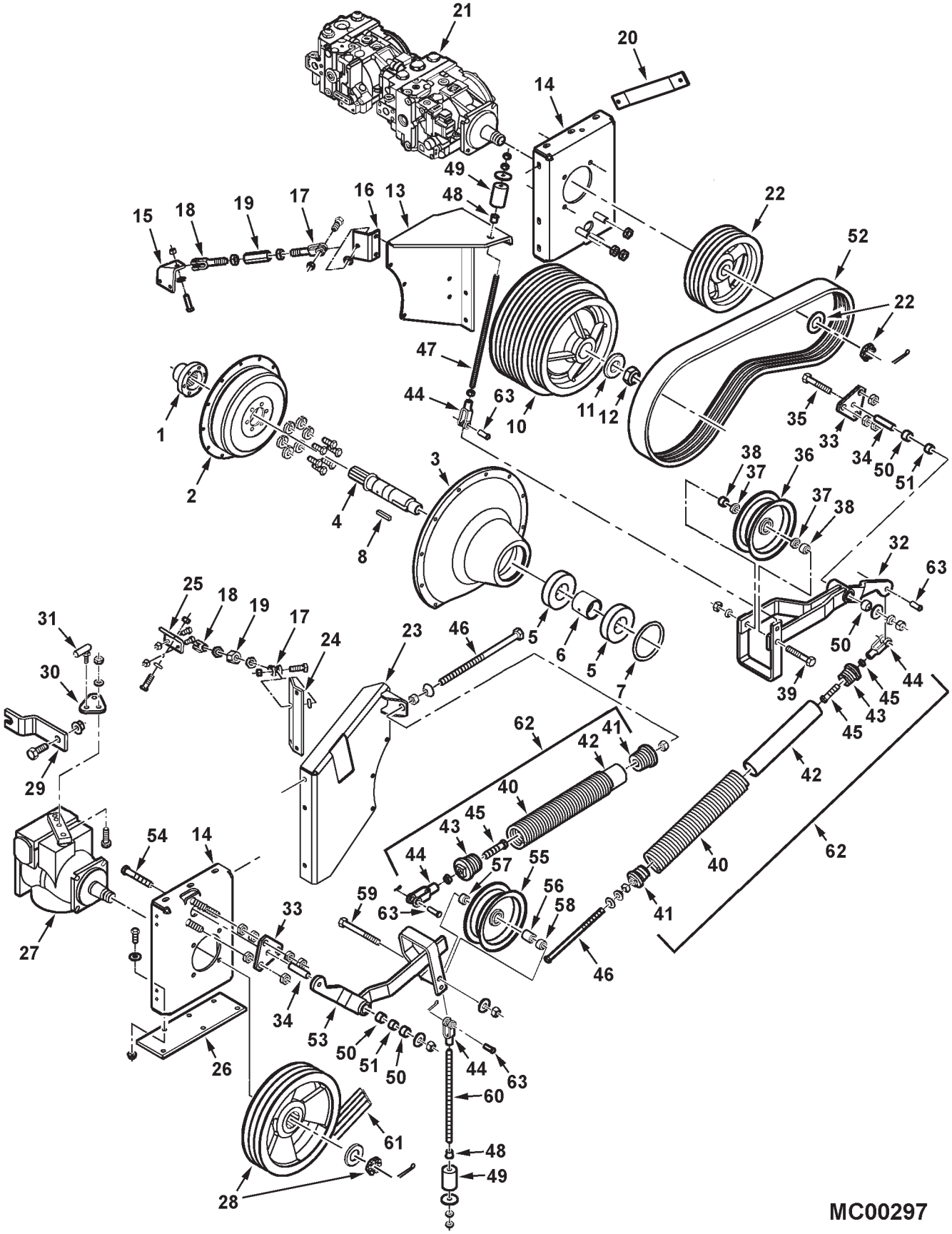

https://truckmanualshub.com/

ITEM	NUMBER	QTY	DESCRIPTION
40	71349270	2	SPRING, EXTENSION
41	71395776B	2	PLUG, SPRING, 5/8-11UNC
42	71396355	2	HOSE, SPRING DAMPER
43	71349813	2	PLUG, SPRING, .53 HOLE
44	70937465	4	YOKE, 1/2-13UNC
45	7703531	2	CAPSCREW, 1/2-13 X 2-1/2 GR5
	704056	2	NUT, HEX JAM, 1/2-13
46	8701211	2	BOLT, HEX, 5/8-11 X 13" FULL THD, GR5
	71395175	2	PIVOT WASHER, 11/16 HOLE
	70918432	2	WASHER, 5/8, WIDE
	375112X1	2	NUT, HEX JAM, 5/8-11
47	71380468	1	ROD, THREADED, 1/2-13UNC X 15.3 LG
	704056	3	NUT, HEX JAM, 1/2-13
48	71304362	2	BUSHING, NYLON
	70924095	2	NUT, SPEED, FLAT, 3/4 NOM
49	71194263	2	BUSHING, RUBBER
	70923094	2	WASHER, .53 X 2.0 X .18 FLAT
50	71356060	4	BUSHING, IDLER ARM
51	71390208	2	SPACER
52	71390210	1	BELT, ROTOR PUMP DRIVE
53	71390204	1	ARM ASY, IDLER
54	70915988	1	CAPSCREW, 5/8-11 X 4-1/4 GR5
	70918432	1	WASHER, 5/8, WIDE
	70923353	1	NUT, CENTER LOCK, 5/8-11UNC
55	71309768	1	IDLER, FLAT, 8" DIA
56	71312603	1	SPACER, IDLER
57	71312602	1	SPACER, IDLER
58	2451440W1	1	SPACER
59	7702194	1	CAPSCREW, 5/8-11 X 5" GR5
	70917373	1	LOCKWASHER, 5/8 REG
	70932665	1	NUT, 5/8-11, REG
60	71382871	1	ROD, THREADED, 1/2-13UNC X 15.3 LG (PRIOR S/N HR36101)
	71396565	1	ROD, THREADED, 1/2-13UNC X 14.75 LG (EFF. S/N HR36101)
	704031	3	NUT, 1/2-13, REG
61	71390209	1	BELT, PROPEL PUMP (PRIOR S/N HR36101)
	71406620	1	BELT, PROPEL PUMP (EFF. S/N HR36101)
62	71395872	2	SPRING ASY, PUMP DRIVE (INCL IT'S 40-45)
63	70929593	4	PIN, CLEVIS, 1/2 DIA
	70918452	4	COTTER PIN, 1/8 X 1"

MC00297
PR: 34

https://truckmanualshub.com/

COOLING SYSTEM

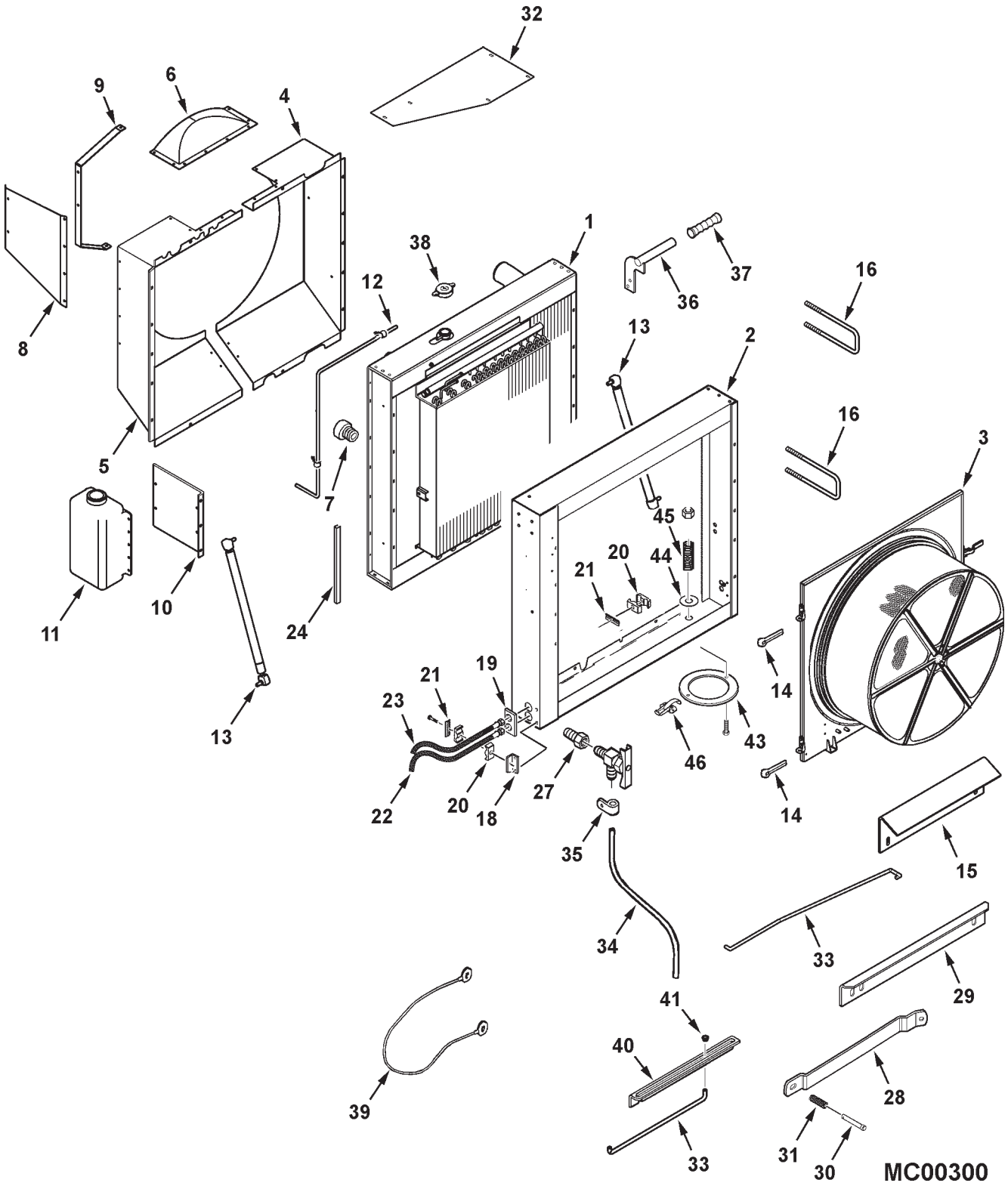

https://truckmanualshub.com/

ITEM	NUMBER	QTY	DESCRIPTION
1	-----	1	COOLING PACKAGE ASY.(PRIOR S/N HP36101) (INCL. FOLLOWING 4 COMPONENTS)
	71393841	1	RAD & CHARGE AIR COOLER ASY W/FRAME
	71387643	1	RADIATOR, NKKX, 7 ROW, 5 FPI
	71387644	1	CHARGE AIR COOLER, 4 ROW, 4 FPI
	71393842	1	COMBINATION COOLER, 4 ROW, 5 FPI (A/C, OIL & FUEL COOLER)
	-----	1	COOLING PACKAGE ASY.(EFF. S/N HP36101) (INCL. FOLLOWING 4 COMPONENTS)
	71401799	1	RAD & CHARGE AIR COOLER ASY W/FRAME
	71400554	1	RADIATOR, NKXX, 7 ROW, 6 FPI
	71404420	1	CHARGE AIR COOLER, 4 ROW, 4 FPI
	71393842	1	COMBINATION COOLER, 4 ROW, 5 FPI (A/C, OIL & FUEL COOLER)
	70921210	2	CAPSCREW, 3/8-16 X 1" GR5
	70916965	2	LOCKWASHER, 3/8, REG
	Y705533	2	WASHER, 3/8, HARD PLAIN
2	71401357	1	SHROUD WLMT, ROTARY SCREEN (PRIOR S/N HP36101)(FILL UNUSED HOLES W/SCREWS)
	71401807	1	SHROUD WLMT, ROTARY SCREEN (S/N HP36101-HP36999)(FILL UNUSED HOLES W/SCREWS)
	71410025	1	SHROUD WLMT, ROTARY SCREEN (EFF. S/N HR36101)
	Y704734	4	NUT, HEX FLANGE TOP LOCK, 3/8-16
	70917378	3	WASHER, 3/8, WIDE
	Y705533	9	WASHER, 3/8, HARD PLAIN
	70921210	12	CAPSCREW, 3/8-16 X 1, GR5
	70916965	9	LOCKWASHER, 3/8, REG
3	-----	1	SCREEN ASY. 40", COMPLETE (SEE COMPONENTS LISTING)
4	71393520	1	SHROUD WLMT,FAN FRONT(PRIOR S/N HP36101)
	71401817	1	SHROUD WLMT, FAN FRONT (S/N HP36101-HP36999)
	71405958	1	SHROUD WLMT,FAN FRONT (EFF. S/N HR36101)
	701565	5	SCR,HX WSHR HD,TAPPING, 1/4-20 X 3/4
	Y704734	1	NUT, HEX FLANGE TOP LOCK, 3/8-16
	Y705533	4	WASHER, 3/8, HARD PLAIN
	70916965	4	LOCKWASHER, 3/8, REG
	70921210	4	CAPSCREW, 3/8-16 X 1" GR5
5	71393523	1	SHROUD WLMT, FAN REAR(PRIOR S/N HP36101)
	71401806	1	SHROUD WLMT, FAN REAR (S/N HP36101-HP36999)
	71405957	1	SHROUD WLMT, FAN REAR (EFF. S/N HR36101)
	701565	6	SCR,HX WSHR HD,TAPPING, 1/4-20 X 3/4
	Y704734	1	NUT, HEX FLANGE TOP LOCK, 3/8-16
	Y705533	4	WASHER, 3/8, HARD PLAIN
	70916965	4	LOCKWASHER, 3/8, REG
	703249	4	CAPSCREW, 3/8-16 X 1" GR5
6	71387755	1	SHROUD WLMT, FAN TOP (PRIOR S/N HP36101)
	71396776	1	SHROUD WLMT, FAN TOP (S/N HP36101-HP36999)
	71410634	1	SHROUD WLMT, FAN TOP (EFF. S/N HR36101)
	70921332	8	CAPSCREW, 5/16-18 X 3/4 GR5
	70917356	8	LOCKWASHER, 5/16
	Y705525	8	WASHER, 5/16, HARD PLAIN
	70917372	8	NUT, 5/16-18 REG (PRIOR S/N HP36101)

CONTINUED

https://truckmanualshub.com/

COOLING SYSTEM

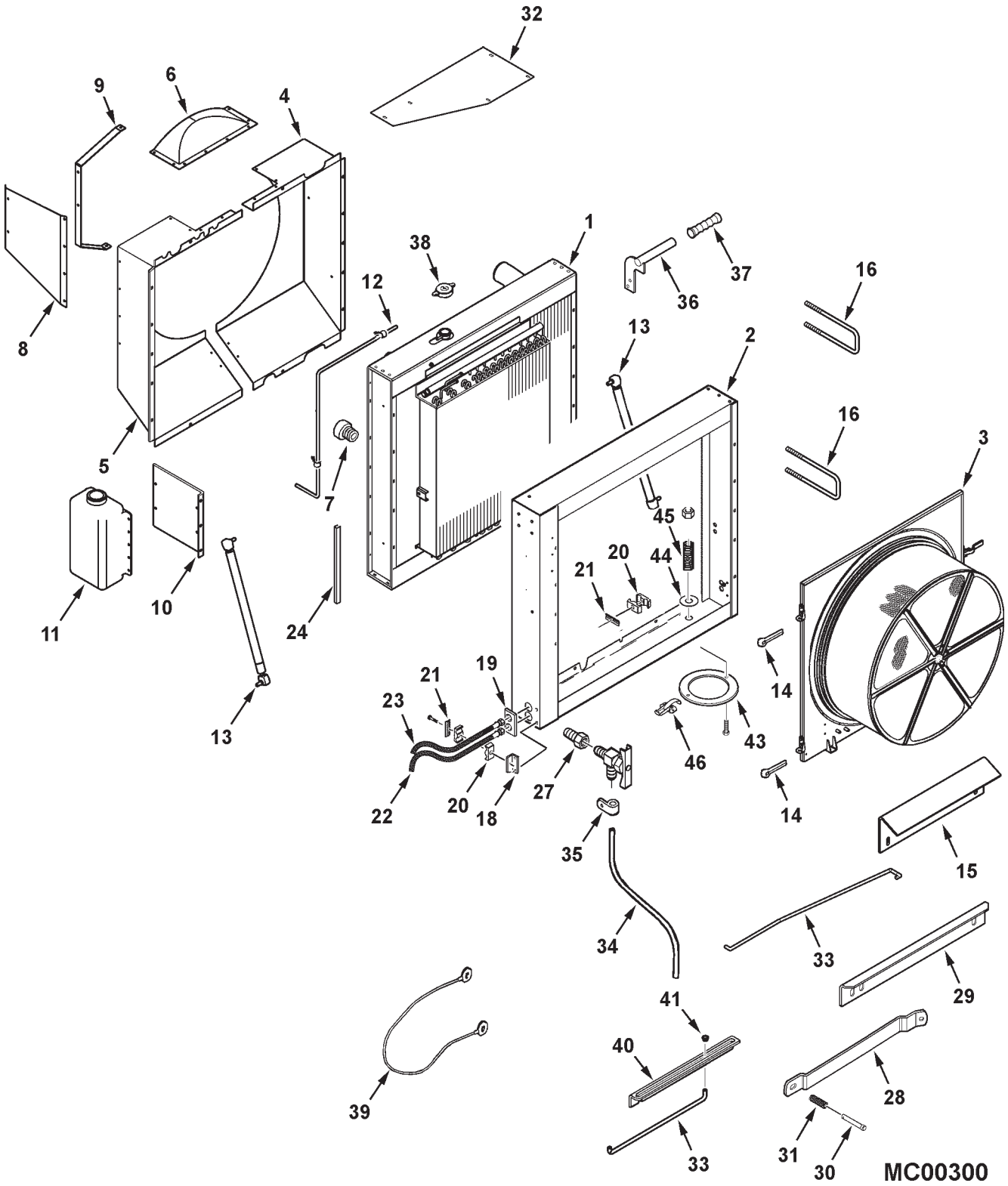

https://truckmanualshub.com/

ITEM	NUMBER	QTY	DESCRIPTION
7	70917970	1	PLUG, HEX SOCKET, 1/2 NTP
8	71387975	1	DEFLECTOR, AIR (PRIOR S/N HP36101)
	71404379	1	DEFLECTOR, AIR (S/N HP36101-HP36999)
	71406613	1	DEFLECTOR, AIR (EFF. S/N HR36101)
	Y705525	4	WASHER, 5/16, HARD PLAIN
	70917356	4	LOCKWASHER, 5/16
	70917372	2	NUT, 5/16-18 REG (PRIOR S/N HP36101)
	70921332	4	CAPSCREW, 5/16-18 X 3/4 GR5
9	71393525	1	STRAP, AIR DEFLECTOR (PRIOR S/N HP36101)
	71404415	1	STRAP, AIR DEFLECTOR (EFF. S/N HP36101)
	705707	1	WASHER, 1/4 WIDE
	705012	1	LOCKWASHER, 1/4
	704007	1	NUT, 1/4-20 REG
	7703457	1	CAPSCREW, 1/4-20 X 3/4 GR5
	70921332	3	CAPSCREW, 5/16-18 X 3/4 GR5
	Y705525	3	WASHER, 5/16, HARD PLAIN
	70917356	1	LOCKWASHER, 5/16
	Y704726	2	NUT, HEX FLANGE TOP LOCK, 5/16-18
10	71385996	1	PLATE, SUPPORT, OVERFLOW TANK (PRIOR S/N HP36101)
	705707	3	WASHER, 1/4 WIDE
	705012	3	LOCKWASHER, 1/4
	704007	3	NUT, 1/4-20, REG
	7703457	3	CAPSCREW, 1/4-20 X 3/4 GR5
11	71346998	1	TANK, COOLANT OVERFLOW
	70931317	4	BOLT, RD HD,SHT SQ NK, 1/4-20 X 3/4 (PRIOR S/N HP36101)
	7703457	4	CAPSCREW, 1/4-20 X 3/4 GR5
	353769X1	4	WASHER, 1/4, HARD PLAIN
	1703354	4	NUT, HEX FLANGE TOP LOCK, 1/4-20
12	71367032	1	HOSE,COOLNT RECOVERY (PRIOR S/N HP36101)
	71404417	1	HOSE,COOLANT RECOVERY (EFF. S/N HP36101)
	70925617	2	CLAMP, 1/2 X .406 HOLE
	70927097	1	CLAMP, 1/2 X .281 HOLE
13	71336386	2	SPRING, GAS
	71339847	4	STUD, BALL
	70917356	4	LOCKWASHER, 5/16
	70917372	2	NUT, 5/16-18 REG
14	70918452	2	PIN, COTTER, 1/8 X 1
15	71393833	1	RAMP, ROTARY SCREEN (PRIOR S/N HN36101)
	71378441	1	RAMP, ROTARY SCREEN (EFF. S/N HN36101)
	70921210	2	CAPSCREW, 3/8-16 X 1
	70917378	2	WASHER, 3/8 WIDE
	70916965	2	LOCKWASHER, 3/8
	70916950	2	NUT, 3/8-16 REG
16	1651910W1	2	LATCH BOLT
	70916950	8	NUT, 3/8-16 REG
18	71388063	1	ANGLE, SUPPORT, HOSE
	70921332	2	CAPSCREW, 5/16-18 X 3/4 GR5
	70917356	2	LOCKWASHER, 5/16
	70917372	2	NUT, 5/16-18 REG
19	71388064	1	SEAL, COOLER HOSE
20	101841M1	4	CLAMP PAIR, DOUBLE, 1-1/2 DIA

CONTINUED

https://truckmanualshub.com/

COOLING SYSTEM

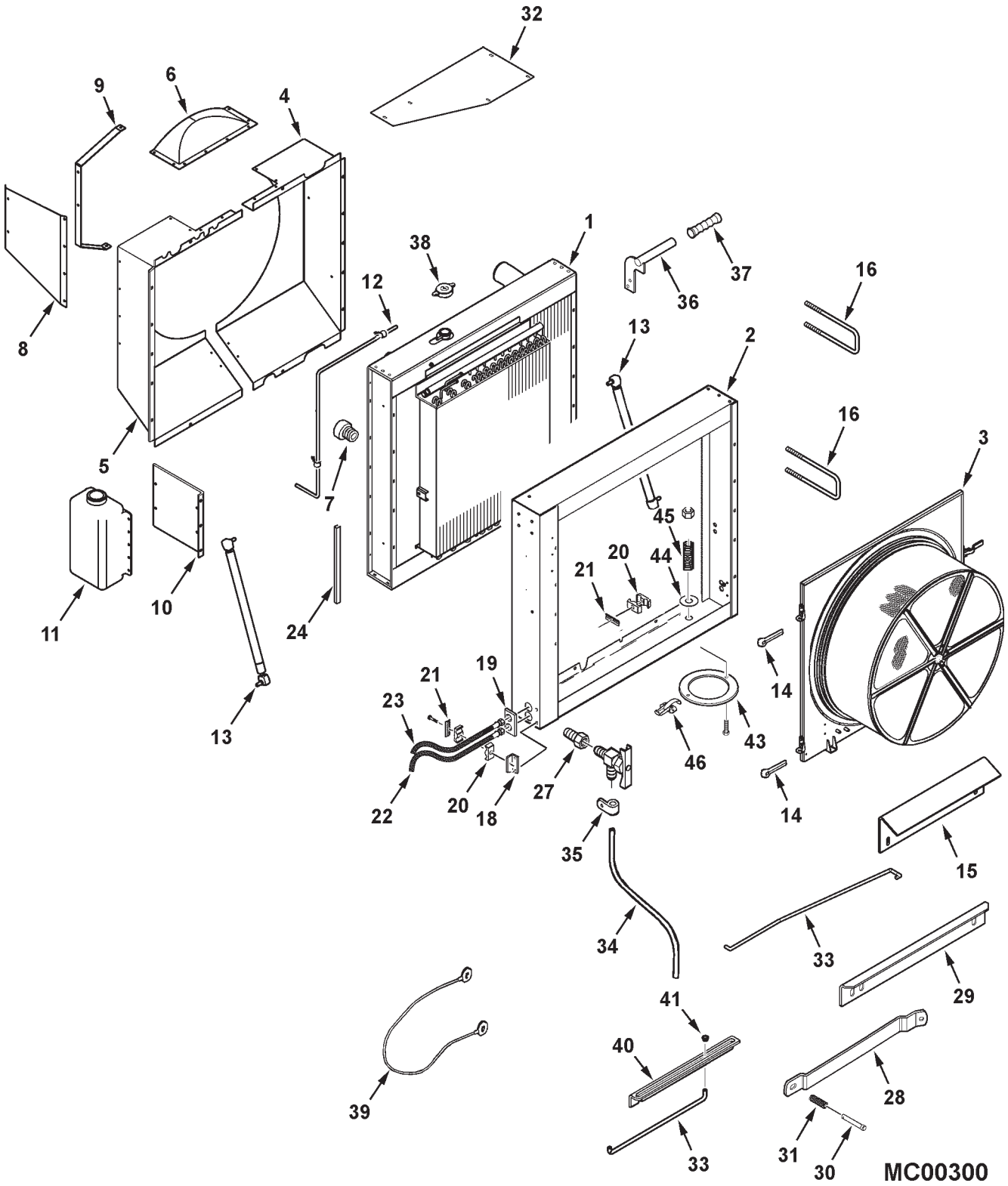

https://truckmanualshub.com/

ITEM	NUMBER	QTY	DESCRIPTION
21	101842M1	4	PLATE, COVER
	70926106	4	CAPSCREW, 5/16-18 X 3-1/4, GR5
	70917356	2	LOCKWASHER, 5/16
	Y704726	2	NUT, HEX FLANGE TOP LOCK, 5/16-18
22	71388061	1	HOSE ASY., COOLER
23	71388062	1	HOSE ASY., COOLER
24	71387797	1	EDGE MOULDING (EFF. S/N HR36101)
27	70933036	1	VALVE, DRAIN
	70917919	1	ADAPTER, 1/4 X 1/4 NPTF
28	71393834	1	LATCH, ROTARY SCREEN (PRIOR S/N HN36101)
29	71393840	1	GUIDE, PROP ROD (PRIOR S/N HN36101)
30	763565	1	PIN, CLVS, 5/16 X 2" (PRIOR S/N HN36101)
	70917642	1	WASHER, 5/16, WIDE
	62075	1	COTTER PIN, 1/8 X 3/4
31	K1846	1	SPRING (PRIOR S/N HN36101)
32	71393506	1	COVER, LWR SUB-FRAME (PRIOR S/N HP36101)
	71404416	1	COVER, LOWER SUB-FRAME(EFF. S/N HP36101)
	701565	5	SCR,HX WSHR HD,TAPPING, 1/4-20 X 3/4
33	71393835	1	PROP ROD, ROTARY SCRN(PRIOR S/N HN36101)
	71399338	1	PROP ROD, ROTARY SCRN (EFF. S/N HN36101)
	70918266	2	WASHER, 3/8 NARROW
	70918447	3	COTTER PIN, 3/32 X 3/4 (QTY 2,PRIOR S/N HN36101)
	70918547	1	PIN, SPRING, 1/8 X 1/2
34	71388089	1	HOSE ASY, RAD DRAIN
	700704010	AR	SILICONE SEALANT, BLACK
35	70936778	1	J-CLIP, 3/4 X .406 HOLE
	70917642	1	WASHER, 5/16, WIDE
	70917372	1	NUT, 5/16-18 REG
	70918249	1	SCREW, TRUSS HD, 5/16-18 X 3/4
36	71393831	1	HANDLE WLMT, COMBINATION COOLER
	70917356	2	LOCKWASHER, 5/16
	70917372	2	NUT, 5/16-18 REG
37	27342	1	GRIP, HANDLE
38	71400413	1	CAP, RADIATOR
39	112942W1	1	TETHER STRAP
	7703457	2	CAPSCREW, 1/4-20 X 3/4
	70918264	1	WASHER, 1/4 NARROW
	1703354	2	NUT, HEX FLANGE TOP LOCK, 1/4-20
40	71388880	1	BRACKET, PROP ROD (EFF. S/N HN36101)
	7700461	3	BOLT, RND HD SQ NECK, 5/16-18 X 3/4
	Y705525	3	WASHER, 5/16, HARD PLAIN
	70917356	3	LOCKWASHER, 5/16
	70917372	3	NUT, 5/16-18 REG
41	71388882	1	BUSHING, PROP ROD (EFF. S/N HN36101)
43	487777	1	COVER, CLEANOUT ACCESS
	Y705525	1	WASHER, 5/16 HARD PLAIN
	Y704726	1	NUT, HEX FLANGE TOP LOCK, 5/16-18
	7771744	1	CAPSCREW, 5/16-18 X 2-1/4 GR5
44	700709866	1	WASHER, SELF-ADHESIVE
45	758342	1	SPRING
46	70537291	1	FASTENER, SNAP
	700702358	1	SCREW, PAN HEAD, #10-24 X 1"
	70917380	1	WASHER, #10 PLAIN
	70917365	1	LOCKWASHER, #10 REG
	70916621	1	NUT, #10-24 REG

https://truckmanualshub.com/

RADIATOR SLINGER

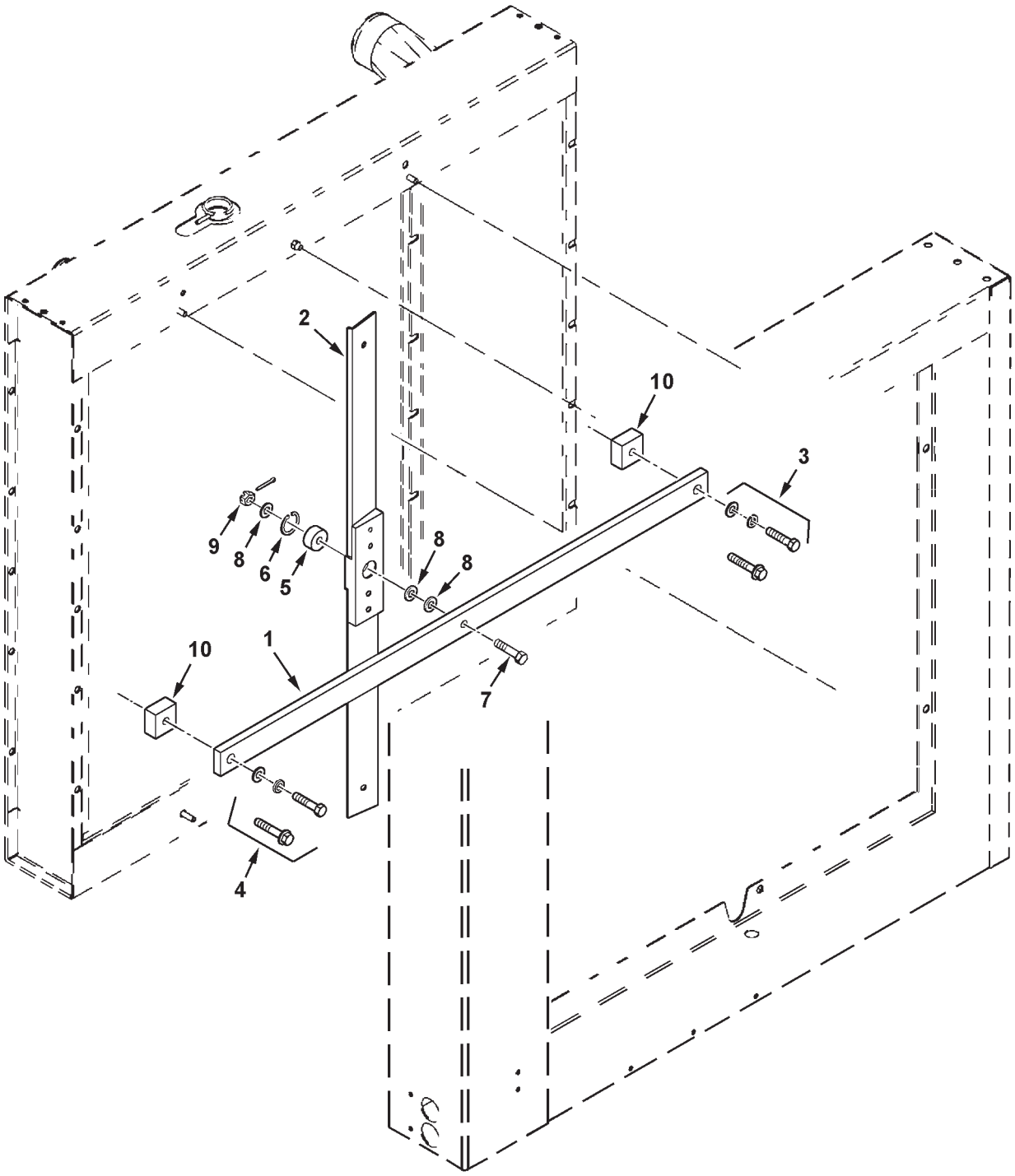

MC00386

https://truckmanualshub.com/

RADIATOR SLINGER

ITEM	NUMBER	QTY	DESCRIPTION
1	71391541	1	SUPPT CHANNEL,SLINGER(PRIOR S/N HP36101)
	71404414	1	SUPPORT BAR, SLINGER (EFF. S/N HP36101)
2	71391463	1	BLADE ASY, SLINGER
	71391461	2	BLADE, SLINGER
	71391462	1	CARRIER, BRG, SLINGER
	70920787	4	CAPSCREW, 5/16-18 X 1/2 LG, GR5
	79021668	AR	THREAD LOCKER, HIGH STRENGTH
	79021648	AR	PRIMER N
3	70921969	1	CPSCR, 3/8-16 X 1-1/2(PRIOR S/N HP36101)
	70916965	1	LOCKWASHER 3/8
	Y705533	1	WASHER, HARDENED .406 x .844
	700711134	1	CAPSCREW, HEX FLANGE, 3/8-16 X 1-3/4 (EFF. S/N HP36101)
4	70921971	1	CPSCR, 3/8-16 X 1-3/4(PRIOR S/N HP36101)
	70916965	1	LOCKWASHER 3/8
	Y705533	1	WASHER, HARDENED .406 x .844
	700711132	1	CAPSCREW, HEX FLANGE, 3/8-16 X 2 (EFF. S/N HP36101)
5	71391540	1	BEARING, BALL
6	70927692	1	RING, RETAINING
7	71391466	1	CAPSCREW, SPL. 3/8-24 X 1-1/4 (PRIOR S/N HP36101)
	71406694	1	CAPSCREW, SPL. 3/8-24 X 1-3/4 (EFF. S/N HP36101)
8	70918266	3	WASHER, 3/8, NARROW (WAS QTY 2 PRIOR TO S/N HP36101)
9	353924X1	1	NUT, SLOTTED HEX, 3/8-24
	70918452	1	COTTER PIN 1/8 X 1
	79021672	AR	THREAD LOCKER-MED. STRENGTH
	79021648	AR	PRIMER N
10	71392705	2	SPACER BLOCK, 3/4 TH

MC00386
PR: 46

https://truckmanualshub.com/

ROTARY SCREEN
DOOR & SCREEN

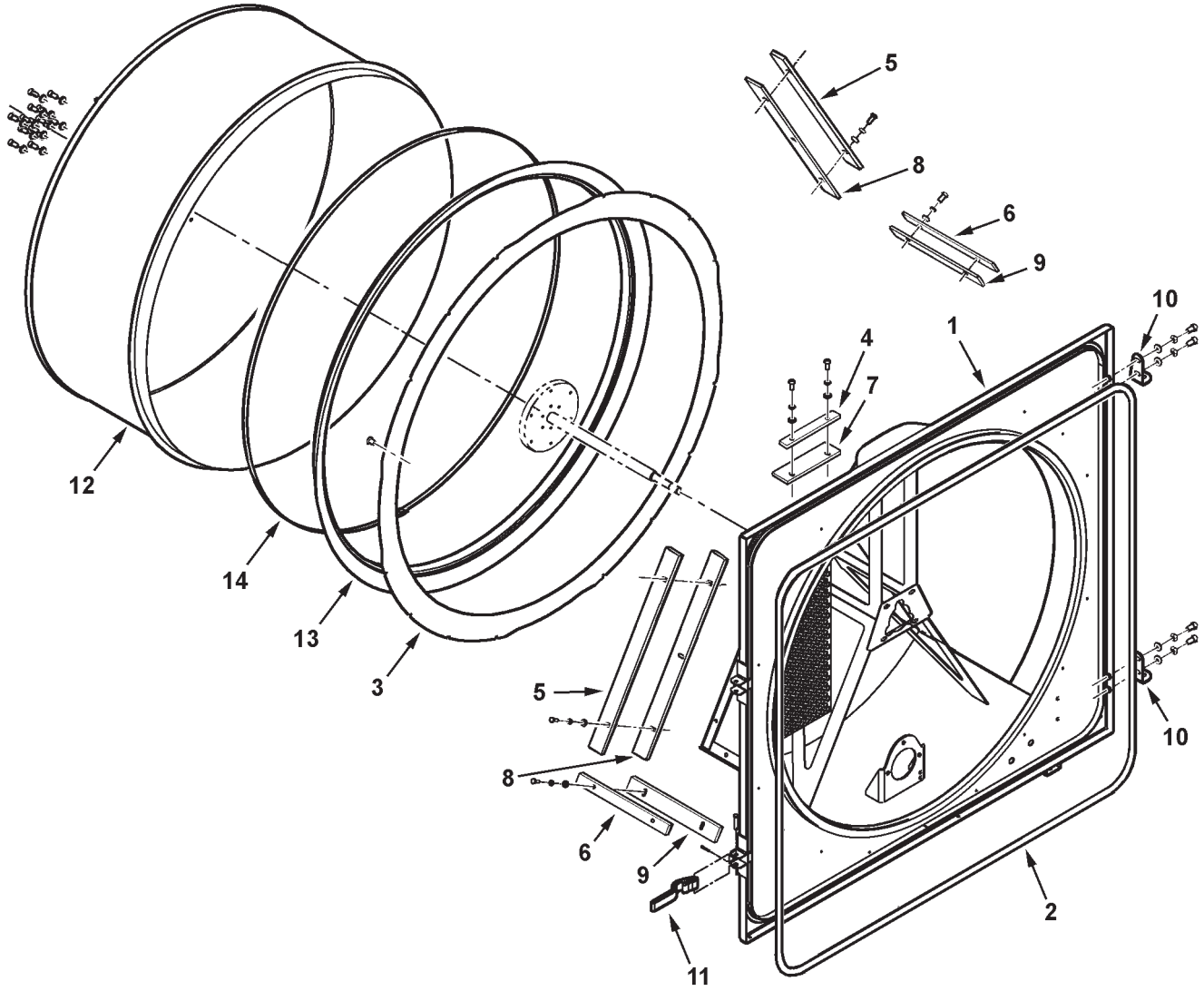

MC00384

https://truckmanualshub.com/

ITEM	NUMBER	QTY	DESCRIPTION
1	71397637	1	PANEL WLMT, 40" DIA SCREEN (PRIOR S/N HP36101)
	71404396	1	PANEL WLMT, 40" DIA SCREEN (S/N HP36101 - HP36999)
	71410021	1	PANEL WLMT, 40" D. SCRN(EFF.S/N HR36101)
2	71387996	1	SEAL, ROTARY SCREEN (PRIOR S/N HR36101)
	71410024	1	SEAL, ROTARY SCREEN (EFF. S/N HR36101)
3	71395750	1	RING, WEAR
	70924837	20	POP-RIVET, .188 X .063-.125 GRIP (QTY 16 PRIOR S/N HR36101)
4	71391036	1	PLATE, CUTOFF, UPPER (PRIOR S/N HP36101)
	71404403	1	PLATE, CUTOFF, UPPER (EFF. S/N HP36101)
	7703457	12	CAPSCREW, 1/4-20 X 3/4 GR5
	705012	12	LOCKWASHER, 1/4
	353769X1	2	WASHER, HARD, .281 X .656 X .074 TH
5	71391037	2	PLATE, CUTOFF, SIDE (PRIOR S/N HP36101)
	71404404	2	PLATE, CUTOFF, SIDE (EFF. S/N HP36101)
6	71404399	2	PLATE, CUTOFF, LOWER (EFF. S/N HP36101)
7	71404402	1	CURTAIN STRAP, FRONT (EFF. S/N HP36101)
8	71404401	2	CURTAIN STRAP, SIDE (EFF. S/N HP36101)
9	71404400	2	CURTAIN STRAP, LOWER (EFF. S/N HP36101)
10	71395906	2	BRACKET, HINGE
	Y705608	4	WASHER, 5/16 NARROW
	70917356	4	LOCKWASHER, 5/16
	70921332	4	CAPSCREW, 5/16-18 X 3/4 GR5
11	1799410W1	2	HANDLE, LATCH
	62075	2	COTTER PIN 1/8 X 3/4
	70927523	2	PIN, OVAL HD, DRILLED, 5/16 X 1-1/2
12	71391031	1	ROTARY SCREEN WLDMT
	353769X1	12	WASHER, HARD, .281 X .625 X .074 TH
	7703457	12	CAPSCREW, 1/4-20 X 3/4 GR5
13	71393650	1	SEAL, ROTARY SCREEN
14	71396752	1	CLAMP, BAND

MC00384
PR: 48

https://truckmanualshub.com/

ROTARY SCREEN
MOTOR & DRIVE

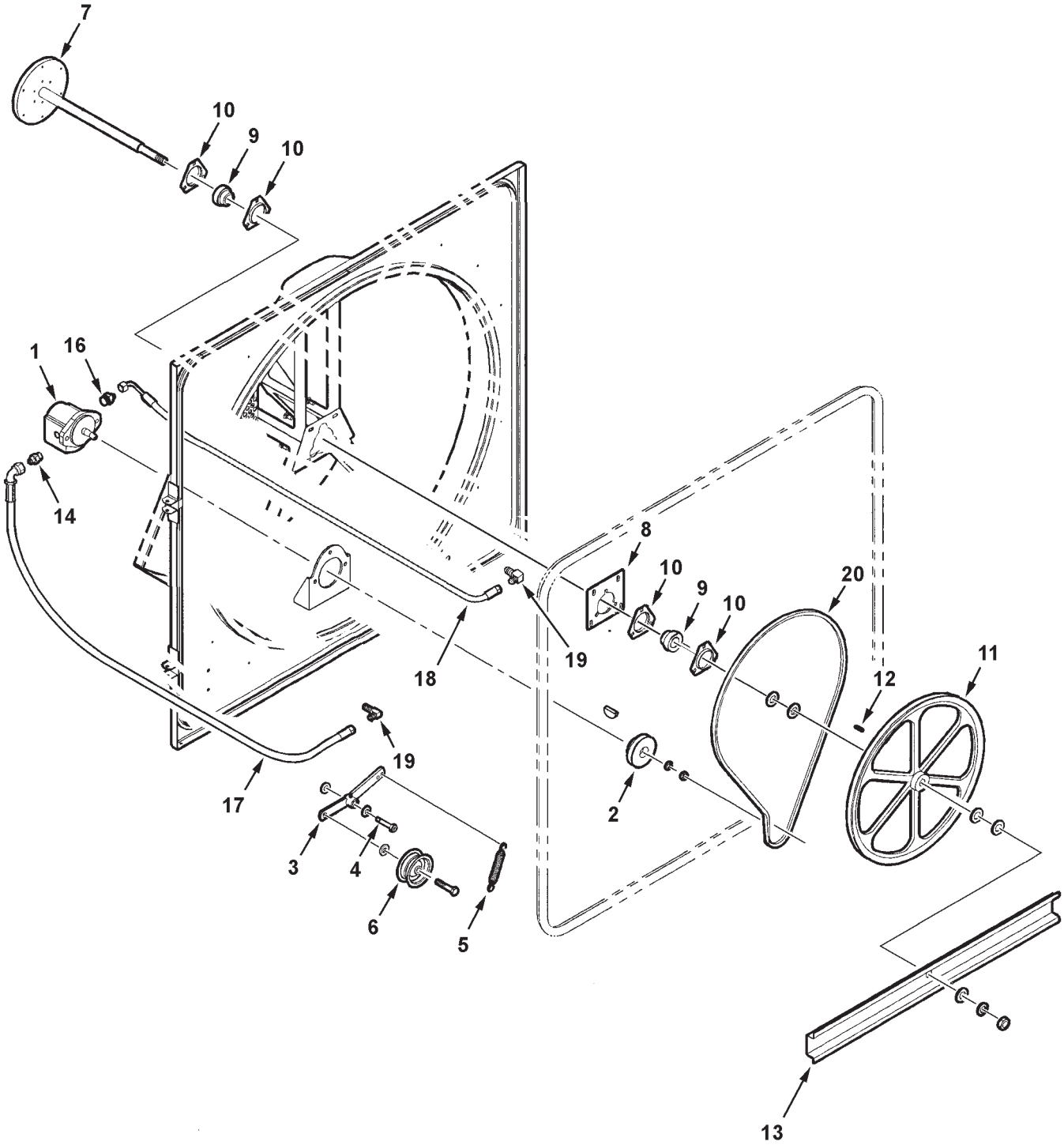

MC00294

https://truckmanualshub.com/

ITEM	NUMBER	QTY	DESCRIPTION
1	71396755	1	MOTOR, HYDRAULIC (INCL. KEY, NUT & LKWR)
	71396758	AR	SEAL KIT (SOLE SERVICE COMPONENT)
	70910224	1	KEY, WOODRUFF, 5/32 X 5/8 DIA
	7883408	2	SCREW,HEX FLANGE, 3/8-16 X 1-1/4 GR8
	Y705533	2	WASHER, HARD, .406 X .781 X .065
	Y704734	2	NUT, HEX FLANGE TOP LOCK, 3/8-16
2	71395749	1	SHEAVE, DRIVE
	Y705046	1	LOCKWASHER, 1/2 REG
	7704000	1	JAM NUT, 1/2-20 GR2
3	71396756	1	ARM ASY, IDLER
	3728019M1	2	BUSHING
	70914687	1	LUBE FTG, 1/4-28, STRAIGHT
4	8701781	1	SCREW, SOCKET HD, SHOULDER,1/2 X 3/8-16
	705541	2	WASHER, HARD, .531 X 1.03 X .120
	Y704734	1	NUT, HEX FLANGE TOP LOCK, 3/8-16
5	700714064	1	SPRING
	70931277	2	LOCKNUT, SERR FLNG, 5/16-18
	7883333	1	SCREW, HEX WSHR HD, 5/16-18 X 1"
6	70529432	1	IDLER, 2-3/4 DIA, FLAT
	705541	2	WASHER, HARD, .531 X 1.03 X .120
	Y704742	1	NUT, HEX FLANGE TOP LOCK, 1/2-13
	70922645	1	CAPSCREW, 1/2-13 X 2-1/4 GR5
7	71391039	1	SHAFT WLDMT, ROTARY SCREEN
8	71395728	1	PLATE, BEARING
	Y704726	4	NUT, HEX FLANGE TOP LOCK, 5/16-18
	7700461	4	BOLT, RND HD SQ NK, 5/16-18 X 3/4
9	71308951	2	BEARING, BALL, SPHERICAL
10	71133361	4	FLANGE, BEARING
	Y704726	6	NUT, HEX FLANGE TOP LOCK, 5/16-18
	70921332	3	CAPSCREW, 5/16-18 X 3/4 GR5
	7700461	3	BOLT, RND HD SQ NK, 5/16-18 X 3/4
11	71396753	1	SHEAVE, DRIVEN
12	61002	1	KEY, 3/16 SQ X 1"
13	71393636	1	BLADE, WINDMILL
	700717591	7	WASHER, .781 X 1.25 X .125 TH
	70919332	1	LOCKWASHER, 3/4 REG
	353436X1	1	JAM NUT, 3/4-16 GR2
14	360202X91	1	CONNECTOR, 9/16-18 JIC X 3/4-16 ORB
	70921349	1	O-RING, .087 X .644 ID
16	8746018	1	CONNECTOR, 9/16-18 JIC X 7/8-14 ORB
	70921205	1	O-RING, .097 X .755 ID
17	71397634	1	HOSE ASY, HYDRAULIC
18	71397633	1	HOSE ASY, HYDRAULIC
19	700717539	2	ELBOW, 90 D, BLKHD, 9/16-18 JIC MALE
20	71396754	1	BELT-V

https://truckmanualshub.com/

FUEL LINES
(STRAINER MOUNT AT FUEL TANK)

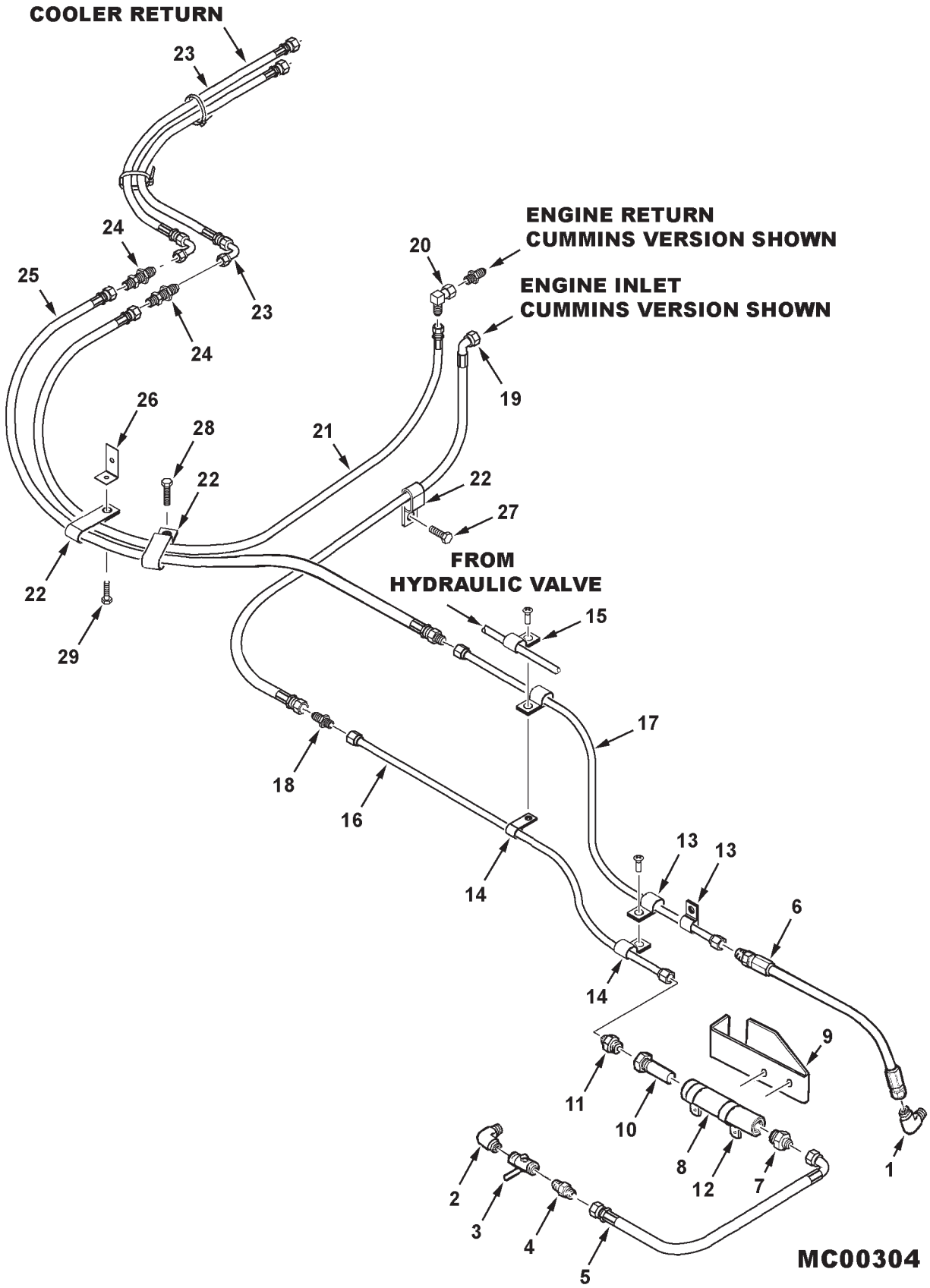

https://truckmanualshub.com/

FUEL LINES
(STRAINER MOUNT AT FUEL TANK)

ITEM	NUMBER	QTY	DESCRIPTION
1	70919195	1	ELBOW, 90 DEG, 1/2 NPT X 3/4-16 JIC
2	700701331	1	ELBOW, 90 DEG, 1/2 NPT X 1/2 NPT MALE
3	71368741	1	VALVE, BALL, 1/2 NPT
4	70919472	1	STR CONN, MALE, 1/2 NPT X 7/8-14 JIC
5	71396260	1	HOSE ASY, FUEL SUPPLY, 5/8 X 41"
	70937133	2	TIE, NYLON SELF-LOCK, .30 X 14.5"
6	71396269	1	HOSE ASY, FUEL RETURN, 1/2 X 32"
7	70924022	1	STR CONN, 7/8-14 JIC X 1-5/16-12 ORB
	70921214	1	O-RING, .116 X 1.171 ID
8	71386139	1	BODY, STRAINER
9	71396262	1	BRACKET, FUEL FILTER
	7703457	2	CAPSCREW, 1/4-20 X 3/4 GR5
	704007	2	NUT, 1/4-20, REG
	705012	2	LOCKWASHER, 1/4 REG
	70917377	2	WASHER, 1/4, WIDE
10	71386140	1	STRAINER, FUEL
	70921214	1	O-RING, .116 X 1.171 ID
11	8746430	1	STR CONN, 7/8-14 JIC X 3/4-16 ORB
	70921349	1	O-RING, .087 X .644 ID
12	70936765	2	CLAMP, 1-3/4 ID X .406 HOLE
	7703457	2	CAPSCREW, 1/4-20 X 3/4 GR5
	704007	2	NUT, 1/4-20, REG
	705012	2	LOCKWASHER, 1/4 REG
	70917377	2	WASHER, 1/4, WIDE
13	70925617	3	CLAMP, 1/2 ID X .406 HOLE
	70921977	3	CAPSCREW, 5/16-18 X 1-1/4 GR5
	Y705608	4	WASHER, 5/16, NARR.
	70917372	3	NUT, 5/16-18, REG
	70917356	3	LOCKWASHER, 5/16 REG
14	70928656	2	CLAMP, 5/8 ID X .406 HOLE
15	70926049	1	CLAMP, 3/4 ID X .406 HOLE
	318618P	1	SPACER, 1/2 OD X .50 LG
16	71396263	1	TUBE ASY, FUEL SUPPLY
17	71391234	1	TUBE ASY, FUEL RETURN
18	70921368	1	UNION, 7/8-14 JIC, MALE
19	71388071	1	HOSE ASY, 5/8 X 70" (PRIOR S/N HR36101)
	71406624	1	HOSE ASY, 3/8 X 88" (EFF. S/N HR36101)
	70929402	1	CLAMP, WORM DR. .22-.63 GRIP
20	70921279	1	ELBOW, 90 DEG SWIV, 3/4-16 JIC (PRIOR S/N HR36101)

CONTINUED

https://truckmanualshub.com/

FUEL LINES
(STRAINER MOUNT AT FUEL TANK)

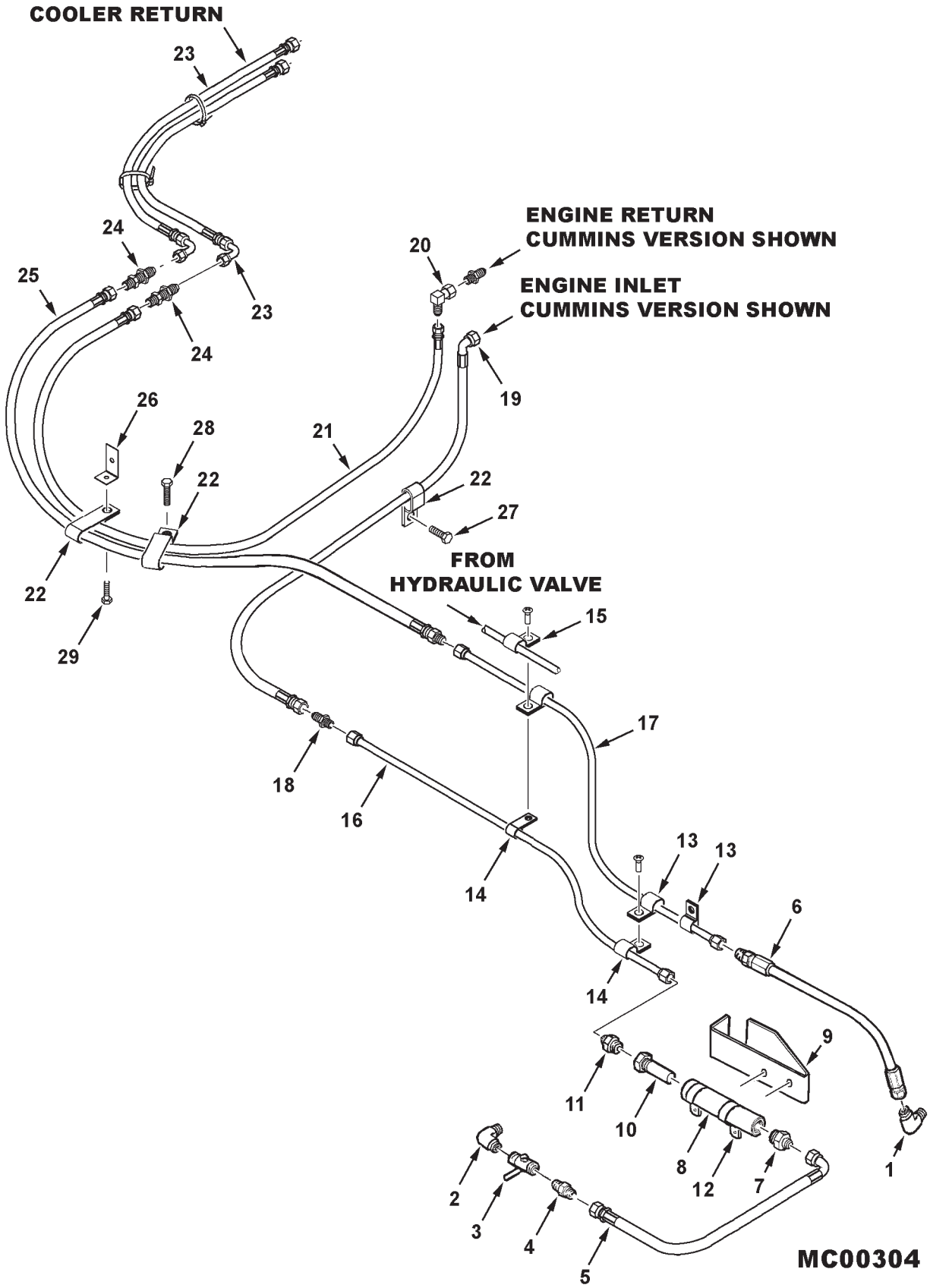

https://truckmanualshub.com/

FUEL LINES
(STRAINER MOUNT AT FUEL TANK)

ITEM	NUMBER	QTY	DESCRIPTION
21	71388072	1	HOSE ASY, 1/2 X 88" (PRIOR S/N HR36101)
	71406623	1	HOSE ASY, 3/8 X 95" (EFF. S/N HR36101)
	70929402	1	CLAMP, WORM DR. .22-.63 GRIP
22	70936473	4	CLAMP, 7/8 DBL X .406 HOLE (PRIOR S/N HR36101)
	70928148	4	CLAMP, 3/4 DBL X .406 (EFF. S/N HR36101)
23	71388073	2	HOSE ASY, 1/2 X 69"
	70937133	4	TIE, NYLON SELF-LOCK, .30 X 14.5"
24	70927261	2	UNION, BULKHEAD, 3/4-16 JIC
25	71393847	1	HOSE ASY, 1/2 X 40"
26	112678W1	1	ANGLE, SUPPORT
	Y705608	1	WASHER, 5/16, NARR.
	70921332	1	CAPSCREW, 5/16-18 X 3/4 GR5
27	70931822	2	SCREW, HEX WSHR HD TAPPG, 5/16-12 X 3/4
28	70920415	1	CAPSCREW, 3/8-16 X 1-1/4
	705038	1	LOCKWASHER, 3/8 REG
	70916950	1	NUT, 3/8 REG
29	703249	1	CAPSCREW, 3/8-16 X 1" GR5
	Y704734	1	NUT, HEX FLANGE TOP LOCK, 3/8-16

MC00304
PR: 52

https://truckmanualshub.com/

FUEL LINES
(EFF. S/N HR36- STRAINER MOUNT ON ELEV.)

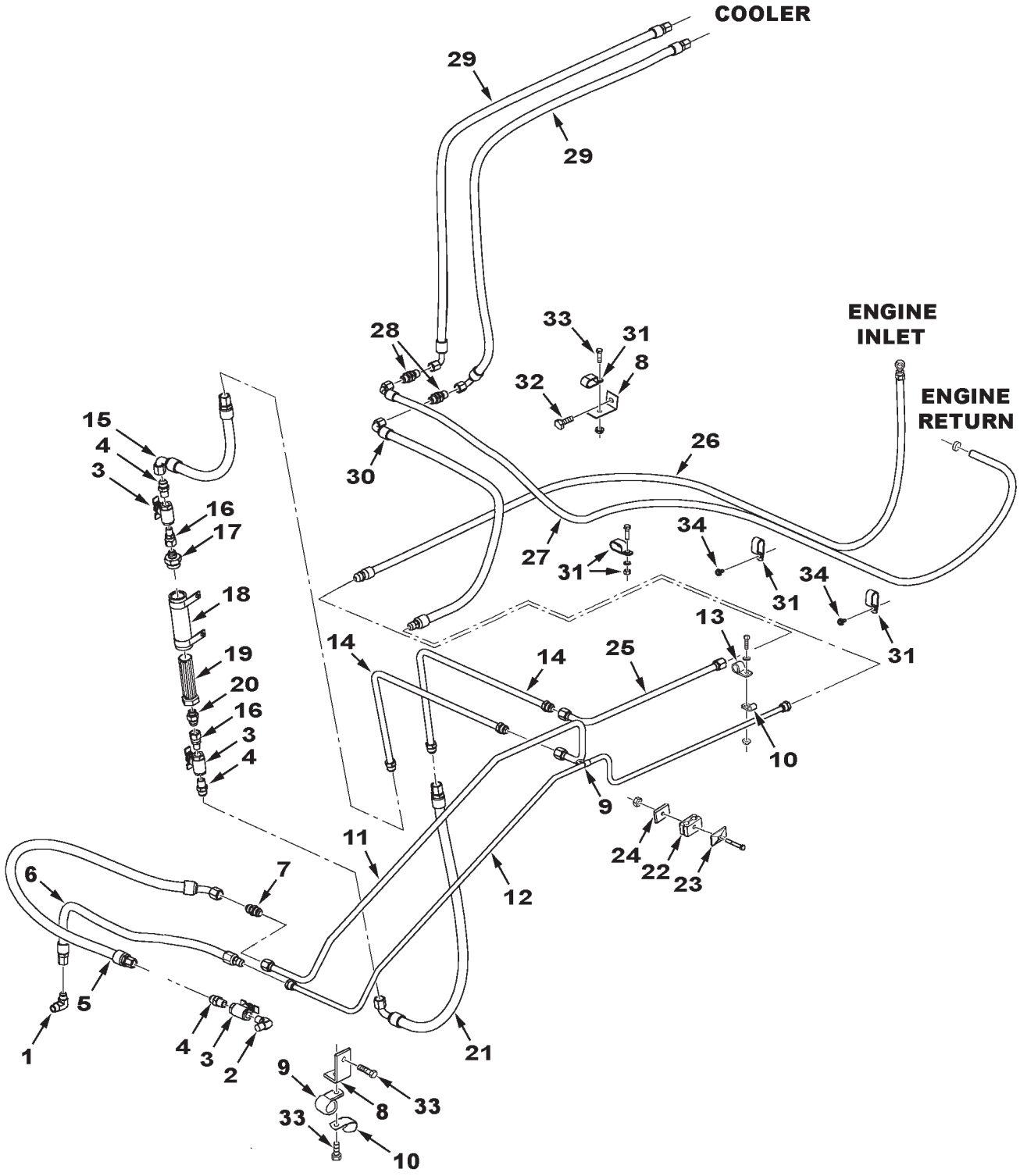

MC00437

https://truckmanualshub.com/

FUEL LINES
(EFF. S/N HR36- STRAINER MOUNT ON ELEV.)

ITEM	NUMBER	QTY	DESCRIPTION
1	70919195	1	ELBOW, 90 DEG, 1/2 NPT X 3/4-16 JIC
2	700701331	1	ELBOW, 90 DEG, 1/2 NPT X 1/2 NPT MALE
3	71368741	1	VALVE, BALL, 1/2 NPT
4	70919472	1	STR CONN, MALE, 1/2 NPT X 7/8-14 JIC
5	71396260	1	HOSE ASY, FUEL SUPPLY, 5/8 X 41"
	70937133	2	TIE, NYLON SELF-LOCK, .30 X 14.5
6	71396269	1	HOSE ASY, FUEL RETURN, 1/2 X 32"
7	70921368	1	UNION, MALE, 7/8-14 JIC
8	112678W1	2	ANGLE, SUPPORT
9	70928656	2	CLAMP, LINE, 5/8 ID X .406 HOLE
	70921977	1	CAPSCREW, 5/16-18 X 1-1/4 GR5
	Y705608	1	WASHER, 5/16, NARR.
	Y704726	1	NUT, HEX FLANGE TOP LOCK, 5/16-18
10	70925617	3	CLAMP, 1/2 ID X .406 HOLE
11	71405985	1	TUBE ASY, FUEL SUPPLY
12	71391234	1	TUBE ASY, FUEL RETURN
13	70926049	1	CLAMP, 3/4 ID X .406 HOLE
	318618P	1	SPACER, 1/2 OD X .50 LG
	70921977	1	CAPSCREW, 5/16-18 X 1-1/4 GR5
	Y705608	1	WASHER, 5/16, NARR.
	Y704726	1	NUT, HEX FLANGE TOP LOCK, 5/16-18
14	71405983	2	TUBE ASY, FUEL SUPPLY
15	71412267	1	HOSE ASY, FUEL SUPPLY, 5/8 ID
16	70937498	2	ADAPTER, SWIVEL, 1/2 NPTF X 7/8-14 JIC
17	70924022	1	STR CONN, 7/8-14 JIC X 1-5/16-12 ORB
	70921214	1	O-RING, .116 X 1.171 ID
18	71386139	1	BODY, STRAINER
19	71386140	1	STRAINER, FUEL
	70921214	1	O-RING, .116 X 1.171 ID
20	8746430	1	STR CONN, 7/8-14 JIC X 3/4-16 ORB
	70921349	1	O-RING, .087 X .644 ID
21	71412266	1	HOSE ASY, FUEL SUPPLY, 5/8 ID
22	148203M1	1	CLAMP PAIR, DOUBLE, 5/8 DIA
23	101646M1	1	COVER PLATE, CLAMP
24	71404450	1	SPACER PLATE
	70921160	1	CAPSCREW, 5/16-18 X 2-1/4 GR5
	Y704726	1	NUT, HEX FLANGE TOP LOCK, 5/16-18
25	71405984	1	TUBE ASY, FUEL SUPPLY
26	71406624	1	HOSE ASY, FUEL SUPPLY, 3/8 ID X 88"
	70929402	1	CLAMP, WORM DRIVE, .22-.63 DIA
27	71406623	1	HOSE ASY, FUEL RETURN, 3/8 ID X 95"
	70929402	1	CLAMP, WORM DRIVE, .22-.63 DIA
28	70927261	2	UNION, BULKHEAD, 3/4-16 JIC
29	71388073	2	HOSE ASY, FUEL COOLER, 1/2 X 69"
	70937133	4	TIE, NYLON SELF-LOCK, .30 X 14.5
30	71393847	1	HOSE ASY, FUEL RETURN, 1/2 X 40"
31	70928148	4	CLAMP,DOUBLE LINE, 3/4 DIA X .406 HOLE
	70920415	1	CAPSCREW, 3/8-16 X 1-1/4 GR5
	70916965	1	LOCKWASHER, 3/8 REG
	70916950	1	NUT, 3/8 REG
32	70921332	1	CAPSCREW, 5/16-18 X 3/4 GR5
	Y705608	1	WASHER, 5/16, NARR.
33	70921210	1	CAPSCREW, 3/8-16 X 1" GR5
	Y704734	1	NUT, HEX FLANGE TOP LOCK, 3/8-16
34	70931822	2	SCREW, HEX WSHR HD TAPPG, 5/16-12 X 3/4

https://truckmanualshub.com/

FUEL FILTER OPTION
(EFF. S/N HR36- STRAINER MOUNT ON ELEV.)

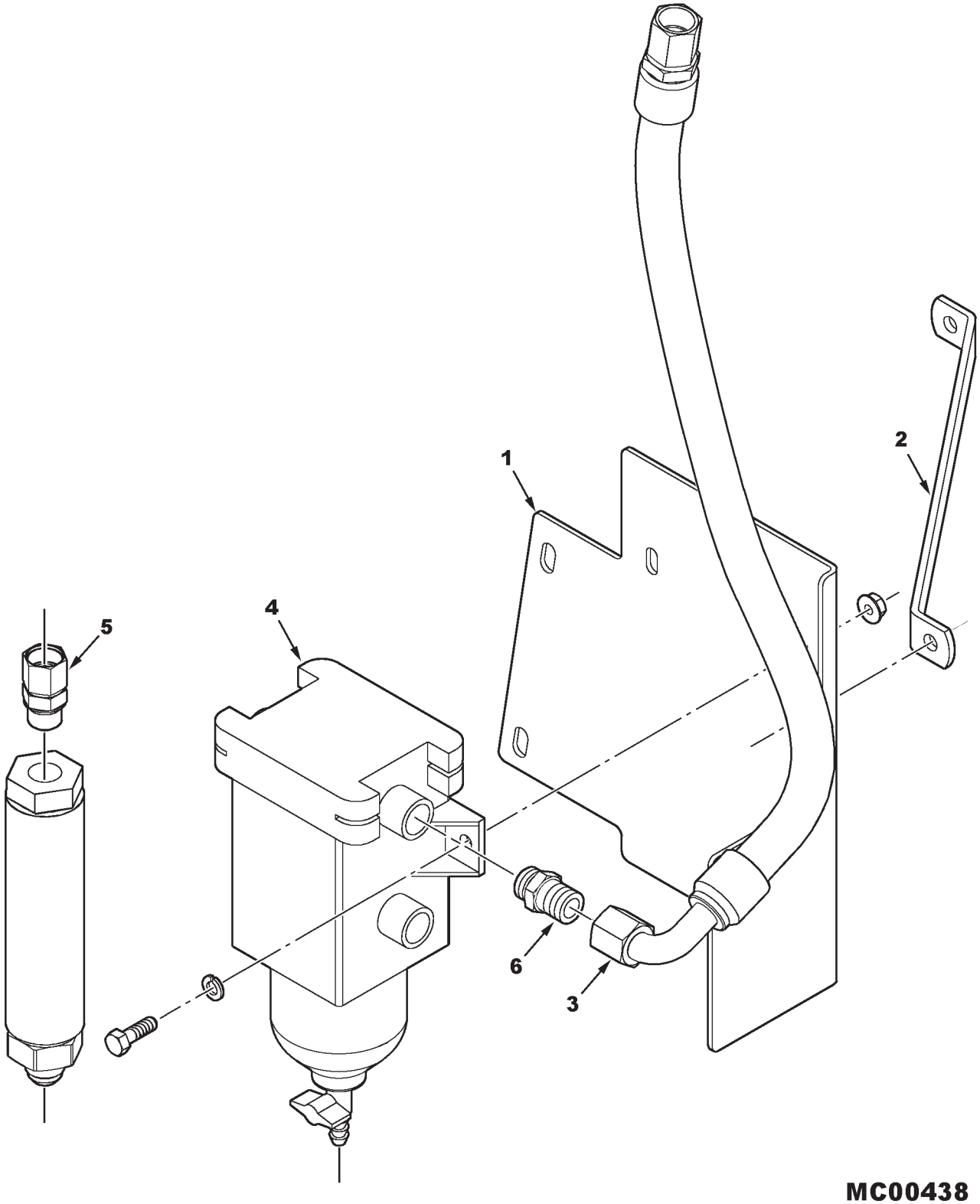

https://truckmanualshub.com/

FUEL FILTER OPTION
(EFF. S/N HR36- STRAINER MOUNT ON ELEV.)

ITEM	NUMBER	QTY	DESCRIPTION
-	71411664	AR	KIT, FUEL FILTER (INCL. FOLLOWING) (ORDER THRU DEALER CENTRAL)
1	71410646	1	SUPPORT BRKT, FUEL FILTER
2	71406619	1	BRACE STRAP, FUEL FILTER
	70921210	2	CAPSCREW, 3/8-16 X 1 GR5
	Y704734	2	NUT, HEX FLANGE TOP LOCK, 3/8-16
3	71410648	2	HOSE ASY, 5/8 ID X 26.8 LG
4	71410649	1	FILTER ASY, FUEL (INCL. FOLLOWING SERVICE ITEMS)
	71412027	1	FILTER ELEMENT
	71412030	1	CLEAR BOWL
	71412029	1	GASKET, BOWL
	71412031	1	LID
	71412028	1	GASKET, LID
	70921333	2	CAPSCREW, 5/16-18 X 1 GR5
	Y704726	2	NUT, HEX FLANGE TOP LOCK, 5/16-18
	70917642	2	WASHER, 5/16, WIDE
5	700713219	1	ADAPTER,SWIVEL 3/4-16 FEM JIC X MALE ORB
	70921349	1	O-RING, .087 X .644 ID
6	70933454	2	CONNECTOR, STR, 1/2 NPTF X 3/4-16 ORB
	70921349	1	O-RING, .087 X .644 ID

MC00438
PR: t06d19k48d0003

https://truckmanualshub.com/

FUEL FILTER & LINES KIT
(EAST EUROPE)(PRIOR MID-PRODN S/N HR36-)

ILLUSTRATION NOT AVAILABLE

XXXXXXXX

https://truckmanualshub.com/

FUEL FILTER & LINES KIT
(EAST EUROPE)(PRIOR MID-PRODN S/N HR36-)

ITEM	NUMBER	QTY	DESCRIPTION
-	71408198	AR	KIT, FUEL FILTER (INCL. FOLLOWING)
1	71410649	1	FILTER ASY, FUEL (INCL. FOLLOWING SERVICE ITEMS)
	71412027	1	FILTER ELEMENT
	71412030	1	CLEAR BOWL
	71412029	1	GASKET, BOWL
	71412031	1	LID
	71412028	1	GASKET, LID
2	71410646	1	SUPPORT BRKT, FUEL FILTER
3	71406619	1	BRACE STRAP, FUEL FILTER
4	71368741	1	VALVE, BALL, 1/2 NPT
5	71405984	1	TUBE ASY, FUEL SUPPLY
6	71405985	1	TUBE ASY, FUEL SUPPLY
7	71405983	1	TUBE ASY, FUEL SUPPLY
8	71410648	2	HOSE ASY, 5/8 ID X 26.8 LG
10	71404450	1	SPACER PLATE
11	70933454	2	CONNECTOR, STR, 1/2 NPTF X 3/4-16 ORB
12	70919472	2	CONNECTOR, STR, 1/2 NPTF X 7/8-14 JIC
13	148203M1	1	CLAMP PAIR, DOUBLE, 5/8 DIA
14	101646M1	1	COVER PLATE, CLAMP
15	70921160	1	CAPSCREW, 5/16-18 X 2-1/4 GR5
16	70921333	2	CAPSCREW, 5/16-18 X 1 GR5
17	Y704726	3	NUT, HEX FLANGE TOP LOCK, 5/16-18
18	70917642	2	WASHER, 5/16, WIDE
19	70921210	2	CAPSCREW, 3/8-16 X 1 GR5
20	Y704734	2	NUT, HEX FLANGE TOP LOCK, 3/8-16

REFER TO INSTALLATION INSTRUCTIONS
NO. 71410650 FOR PICTORIAL VIEWS.

XXXXXXX
PR: t05l09o11c0021

https://truckmanualshub.com/

FRAME & MOUNTING

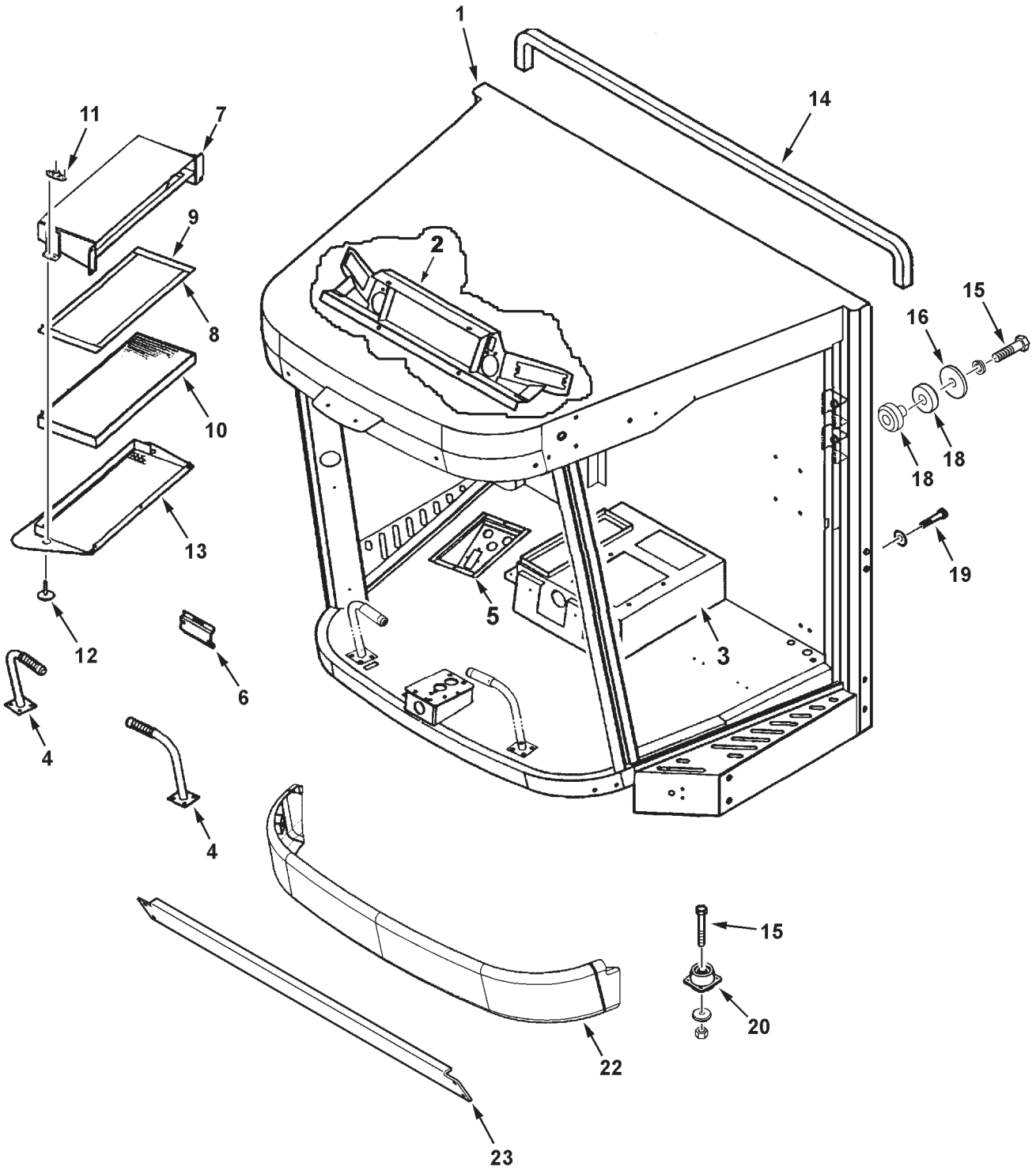

MC00280

https://truckmanualshub.com/

ITEM	NUMBER	QTY	DESCRIPTION
1	71387152	1	CAB WELDMT (PRIOR S/N HM36101, MID-YEAR)
	-----	1	CAB WELDMT (EFF. S/N HM36101, MID-YEAR) (SERVICE W/ 71406753)
	71406753	1	CAB WELDMT (EFF. S/N HP36101)
	700718515	AR	INSERT, THREADED 5/16-18
	700725632	AR	INSERT, THREADED 3/8-16
	700725634	AR	INSERT, THREADED 3/8-16
	700725633	AR	INSERT, THREADED 1/4-20
	71391713	AR	INSERT, THREADED #8-32
2	71388167	1	SUPPORT WLDMT, E.I.P.
	Y703132	4	CAPSCREW, 5/16-18 X 3/4
	700718515	4	INSERT, THREADED 5/16-18
	700725633	8	INSERT, THREADED 1/4-20
3	71388189	1	BASE, SEAT (PRIOR S/N HM36101, MID-YEAR)
4	71387185	1	FOOTREST, RH
	71387186	1	FOOTREST, LH
	71396276	2	GRIP, FOOTREST
	70920415	8	CAPSCREW, 3/8-16 X 1-1/4
	700725632	8	INSERT, THREADED 3/8-16
5	71391726	1	BOX, ELECTRICAL BLKHD (PRIOR S/N HM36101 MID-YEAR)
6	71394525	1	MOUNT, FUSE BLOCK
	7703457	4	CAPSCREW, 1/4-20 X 3/4
	705707	2	WASHER, 1/4
	700725633	5	INSERT, THREADED 1/4-20
7	71393307	1	SUPPORT WLDMT, FILTER
	Y703132	4	CAPSCREW, 5/16-18 X 3/4
	700718515	4	INSERT, THREADED 5/16-18
8	71362390	2	SEAL, FILTER (LONG)
9	71362391	2	SEAL, FILTER (SHORT)
10	71393893	1	ELEMENT, AIR FILTER
11	700714529	2	RECEPTACLE
	772426	4	SCREW, HEX WSHR HD, #10-24 X 5/8
	705004	4	LOCKWASHER, #10
	Y704072	4	HEX NUT, #10-24
12	700714528	2	LATCH, 90 DEG TURN
13	71400635	1	DOOR WLDMT, FILTER
	706432	3	SCREW, PAN HEAD MACH, 5/16-18 X 1
14	71398171	1	SEAL, CAB
15	70925704	4	CAPSCREW, 5/8-11 X 4-1/2 GR5
	70917373	4	LOCKWASHER, 5/8
16	70927122	2	WASHER, .781 X 2.50 X .25
18	71342768	2	ISOLATOR MOUNT, CAB
19	70922664	2	CAPSCREW, 5/8-11 X 2 GR5
	705632	2	WASHER, 5/8 NARROW
20	71401533	2	MOUNT, CAB
	70932665	2	NUT, 5/8-11 REG
	703249	8	CAPSCREW, 3/8-16 X 1.0
	705038	8	LOCKWASHER, 3/8
	70916950	8	HEX NUT, 3/8-16
22	71387292	1	VALANCE ASY.
	7771371	4	SCREW, HEX FLNG SERR 5/16-18 X 1-1/4
	6131916	4	BUSHING, 3/4 OD X .55 LG
	700718515	4	INSERT, THREADED, 5/16-18
23	71395255	1	CROSS BRACE, CAB SUPPORT
	68619	4	BOLT, RD HD SQ NK, 1/2-13 X 1-1/4
	Y704742	4	NUT, HEX FLNG, TOP LOCK, 1/2-13
-	700704010	AR	SEALANT, SILICONE (BLACK)

https://truckmanualshub.com/

WINDOWS AND DOORS

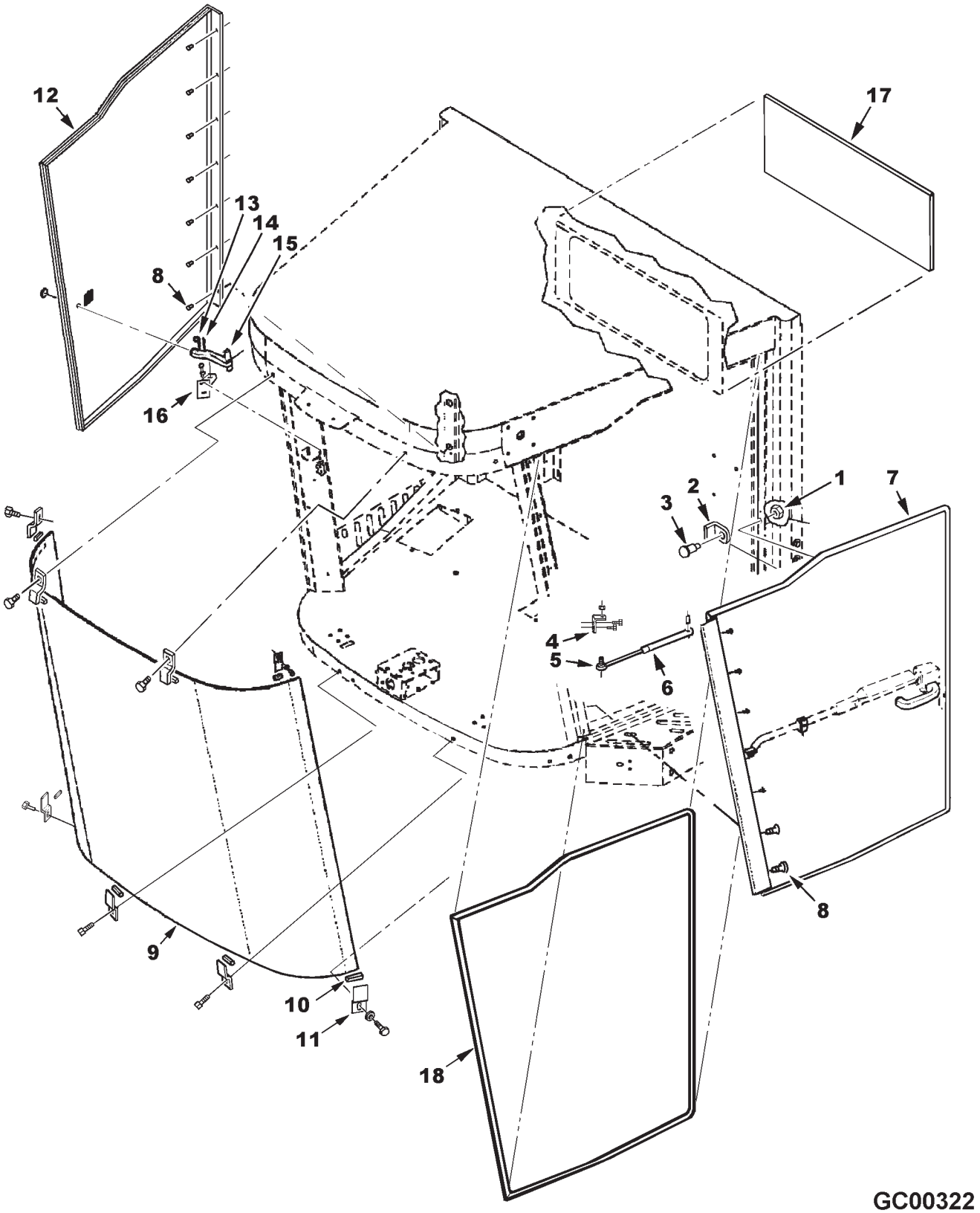

https://truckmanualshub.com/

ITEM	NUMBER	QTY	DESCRIPTION
1	71394502	1	NUT, STRIKER
2	71394503	1	GUARD, STRIKER
3	71394501	1	STRIKER, BOLT
4	71394523	1	BRACKET, GAS SPRING
	70937660	2	SCREW, PAN HD TAPPING, 1/4-20 X 5/8
5	71339847	1	STUD, BALL
	Y704726	1	NUT, HEX FLANGE TOP LOCK, 5/16-18
6	700715277	1	SPRING, GAS
	700715278	2	RETAINER, CLIP
7	71391897	1	GLASS DOOR ASY. LH (INCL HANDLES)
	71393885	1	GLASS, GASKET & HINGE ASY, LH DOOR
	71391899	1	GASKET, DOOR LH
8	70937660	14	SCREW, PAN HD, TAPTITE, 1/4-20 X 5/8
9	71391851	1	WINDSHIELD
	71370508	AR	PRIMER, GLASS ADHESIVE
	72506489	AR	ADHESIVE, GLASS
10	700715285	8	PAD, RUBBER
11	71387195	8	CLIP, WINDSHIELD
	70921332	8	CAPSCREW, 5/16-18 X 3/4
	70917642	8	WASHER, 5/16
12	71407657	1	GLASS DOOR & HINGE ASY. (INCL. DECAL)
	71391899	1	GASKET, DOOR RH
	71389158	1	DECAL, EMERGENCY EXIT
13	70934892	1	PIN, CLEVIS GRAB
14	70921291	1	PIN, SPRING, 3/16 X 5/8
15	71364349	1	LATCH, WINDOW, W/O PIN
	700718245	2	O-RING, .094 X .50 ID. NITRILE
16	71407659	1	BRACKET WLMT, LATCH
	70937660	2	SCREW, PAN HD, TAPTITE, 1/4-20 X 5/8
17	71387266	1	GLASS, REAR WINDOW
18	71401715	1	SEAL, FOAM RUBBER, DOOR FRAME

GC00322
PR: 56

https://truckmanualshub.com/

LH DOOR
INTERIOR & EXTERIOR HANDLES

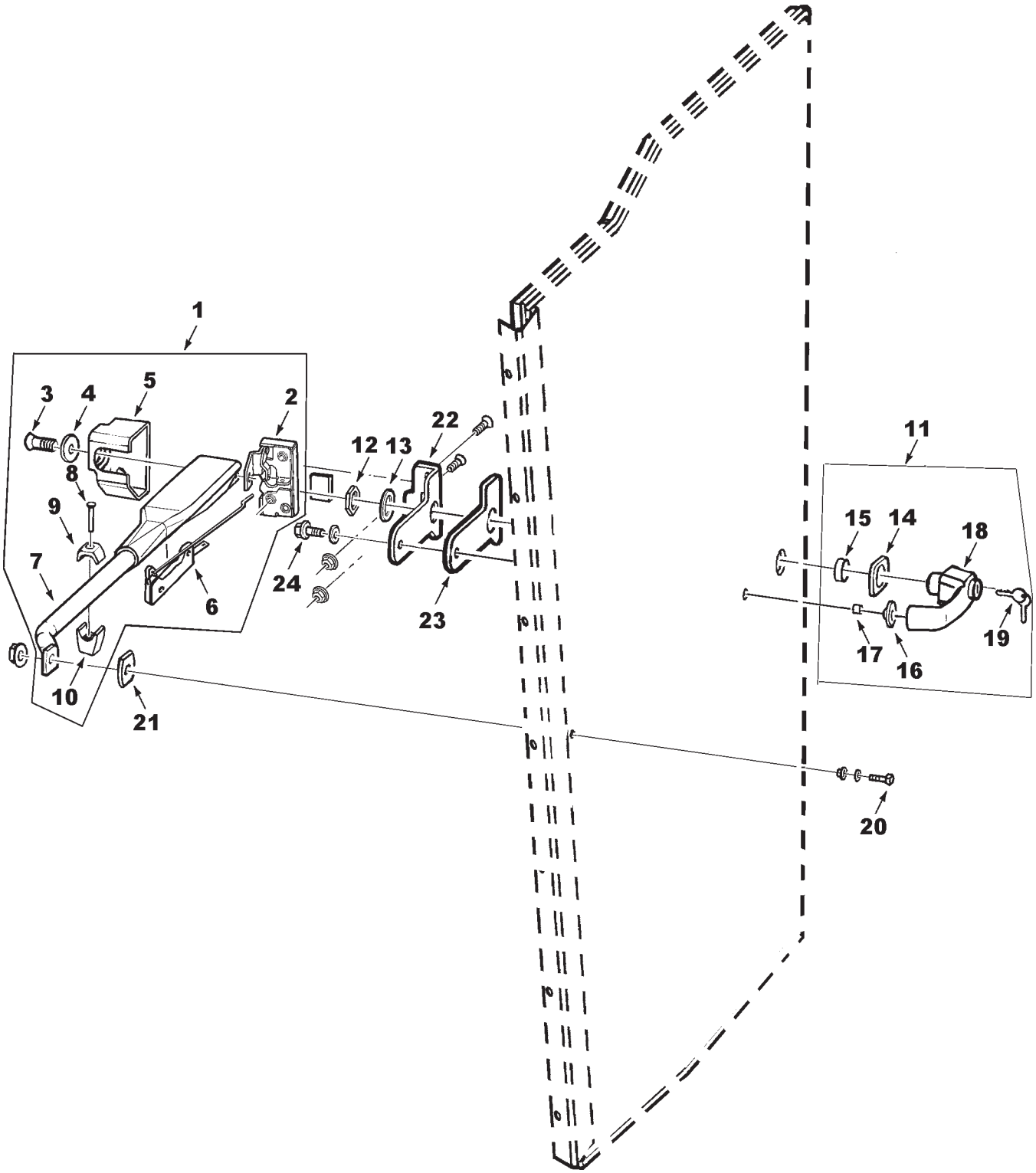

GC00323

https://truckmanualshub.com/

LH DOOR
INTERIOR & EXTERIOR HANDLES

ITEM	NUMBER	QTY	DESCRIPTION
1	71393881	1	DOOR HANDLE ASY, INNER (INCL ITEMS 2-10)
2	71393879	1	LATCH, DOOR, DOUBLE ROTOR
3	71394791	1	SCREW, INNER DOOR HANDLE
4	705012	1	WASHER, LOCK 1/4
5	71393878	1	COVER, INNER HANDLE
6	71394792	1	HANDLE, INNER RELEASE
7	----------	1	TUBE ASY, ARMREST (ORDER ITEM 1)
8	71393888	1	SCREW, HEX SOCKET, FLAT HD, M6 X 40
9	71393887	1	MOUNT, GAS SPRING UPPER
10	71393886	1	MOUNT, GAS SPRING LOWER
11	71393876	1	DOOR HANDLE ASY, EXT (INCL ITEMS 12-19)
12	71393469	1	NUT, EXTERIOR HANDLE
13	71393470	1	WASHER, EXT. HANDLE
14	71393471	1	GASKET, EXT. HANDLE (LARGE)
15	71393473	1	BUSHING
16	71393472	1	GASKET, EXT. HANDLE (SMALL)
17	71393468	1	BUSHING
18	71393475	1	HANDLE, EXTERIOR
19	71393474	AR	KEY, DOOR
20	372536X1	1	SCREW, MACH. HEX WSHR HD, 1/4-20 X 1.0
	705707	2	WASHER, 1/4
	72161999	1	SPACER
	1703354	1	LOCKNUT, HEX FLANGE TOP 1/4-20
21	71393883	1	GASKET
22	71391518	1	BRACKET, DOOR LATCH
	Y772129	2	SCR,HEX SKT FLAT HD, 5/16-18 X 1-3/4
	70931277	2	NUT, HEX FLANGE, SERRATED, 5/16-18
23	71391519	1	GASKET
24	339666X1	1	CAPSCREW, M6-1 X 16
	705707	1	WASHER, 1/4

GC00323
PR: 58

https://truckmanualshub.com/

INTERIOR COVERINGS & TRIM
UPPER AND FRONT

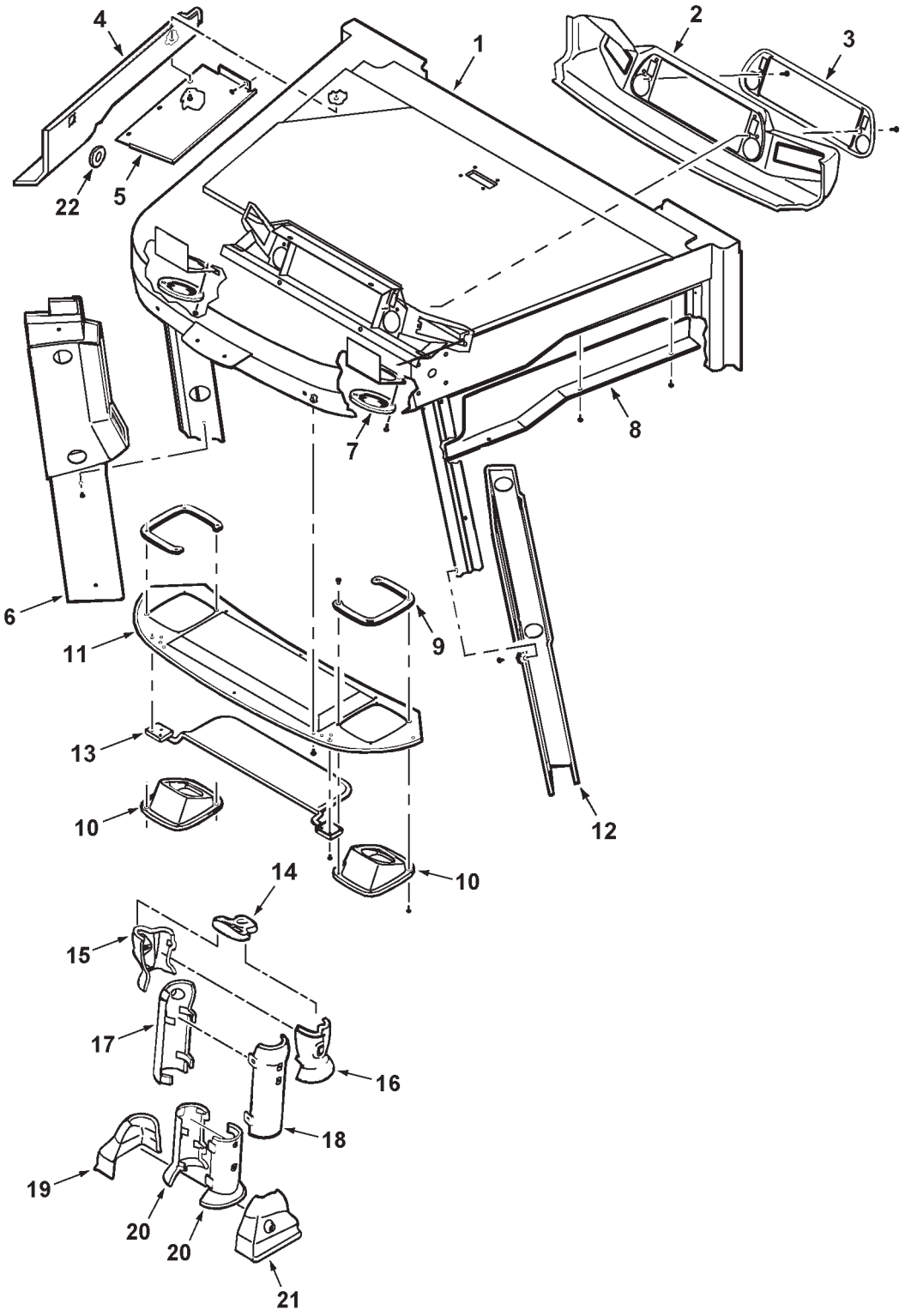

GC00457

https://truckmanualshub.com/

ITEM	NUMBER	QTY	DESCRIPTION
1	71391747	1	HEADLINER, REAR
2	71393601	1	SURROUND, ELECT. INSTRUMENT PANEL
3	71388136	1	BEZEL, ELECT. INSTRUMENT PANEL
	70937730	2	SCREW,PAN HD TAPPING, 1/4-20 X 1-1/4
4	71393605	1	TRIM, HEADER, RH (PRIOR S/N HR36101)
	71409583	1	TRIM, HEADER, RH (EFF. S/N HR36101)
	70937660	4	SCREW, PAN HD TAPPING, 1/4-20 X 5/8
	70927401	4	CAPSCREW, 1/4-20 X 1
	705012	4	LOCKWASHER, 1/4
	700709601	4	WASHER, 1/4 WIDE
5	71394878	1	PLATE, ACCESSORY MNT (PRIOR S/N HR36101)
	71410958	1	PLATE, ACCESSORY MOUNT (EFF S/N HR36101)
	70937660	4	SCREW, PAN HD TAPPING, 1/4-20 X 5/8
6	71398809	1	COVER, B-PILLER (RH)
	70937660	6	SCREW, PAN HD TAPPING, 1/4-20 X 5/8
7	71393940	2	GRILLE, SPEAKER
8	71393604	1	TRIM, HEADER (LH)
	70937660	3	SCREW, PAN HD TAPPING, 1/4-20 X 5/8
9	71395767	2	PLATE, SPEAKER HSG. RETAINER
	70937280	8	SCREW, PAN HD TAPPING, #8-32 X 3/4
10	71391158	2	HOUSING, SPEAKER TRIM
	70937280	8	SCREW, PAN HD TAPPING, #8-32 X 3/4
11	71391746	1	HEADLINER, FRONT
12	71398808	1	COVER, B-PILLER (LH)
	70937660	6	SCREW, PAN HD TAPPING, 1/4-20 X 5/8
13	71391172	1	SUNVISOR
	70936592	6	SCREW, PAN HD. TAPPING #10-16 X 3/4
14	71394514	1	COVER, TOP
	70937280	2	SCREW, PAN HD TAPPING, #8-32 X 3/4
15	71394515	1	COVER, UPPER (RH)
	71407653	2	SCREW, PAN HD. MACH., M5 X 16
	71393926	1	WELLNUT, #8-32
16	71394516	1	COVER, UPPER (LH)
	71407653	2	SCREW, PAN HD. MACH., M5 X 16
	71393926	1	WELLNUT, #8-32
17	71394517	1	COVER, LOWER (RH)
	71407653	2	SCREW, PAN HD. MACH., M5 X 16
18	71394518	1	COVER, LOWER (LH)
	71407653	2	SCREW, PAN HD. MACH., M5 X 16
19	71394521	1	COVER, BOTTOM (RH)
	70930611	2	SCREW, PAN HD. MACH. #10-24 X 3/8
20	71394519	2	COVER, MID
	71407653	4	SCREW, PAN HD. MACH., M5 X 16
21	71394522	1	COVER, BOTTOM (LH)
	70930611	2	SCREW, PAN HD. MACH. #10-24 X 3/8
22	71409584	1	GROMMET, 1 ID X 1.87 DIA PANEL HOLE (EFF. S/N HR36101)

https://truckmanualshub.com/

INTERIOR COVERINGS & TRIM
LOWER AND REAR

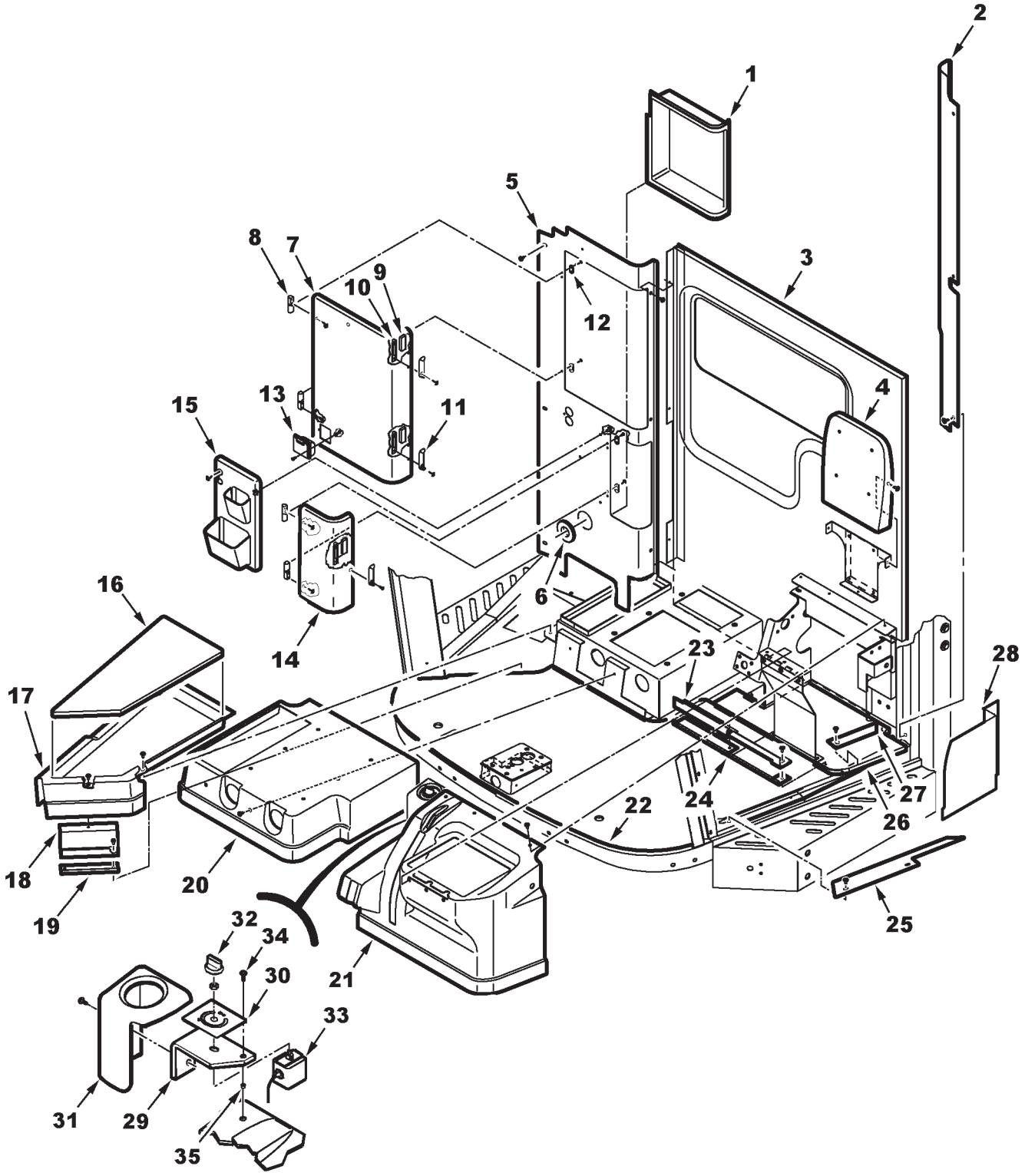

GC00304

https://truckmanualshub.com/

ITEM	NUMBER	QTY	DESCRIPTION
1	71393941	1	BOX, MANUAL HOLDER
	71395769	AR	PRIMER, PLASTIC
	72506489	AR	ADHESIVE, URETHANE
2	71394877	1	PANEL, TRIM (LH)
	70937660	3	SCREW, SELF TAPPING, 1/4-20 X 5/8
3	71391748	1	BACKLINER ASY.
	72506489	AR	ADHESIVE, URETHANE
4	71394893	1	SUPPORT, BACKREST
	70937660	3	SCREW, SELF TAPPING, 1/4-20 X 5/8
5	71406877	1	PANEL, ELECT. CABINET
	70937660	3	SCREW, SELF TAPPING, 1/4-20 X 5/8
6	71394884	1	GROMMET
7	71395768	1	DOOR ASY, FUSE PNL (SERVICED W/71400502 DOOR ASY, 71400504 ASH TRAY & SCREWS)
	71400502	1	DOOR ASY, FUSE PNL (EFF. S/N HM87---)
	71395760	1	DECAL, FUSE LABEL (INSIDE OF DOOR) (PRIOR S/N HN36101)
	700723598	1	DECAL, FUSE LABEL (EFF. HN36101-HR36999)
	700730037	1	DECAL, FUSE LABEL (EFF. S/N HS36101)
8	71393944	4	HINGE ASY.
	70930611	8	SCREW, PAN HD. MACH. #10-24 X 3/8
9	72505639	3	LATCH, MAGNETIC
10	71394879	3	PLATE, LATCH MOUNTING
11	71393947	3	PULL, CABINET DOOR
	70937263	6	SCREW, SELF TAPPING #10-16 X 1/2
12	71394885	4	SHIM
	70930611	8	SCREW, PAN HD. MACH. #10-24 X 3/8
13	72502796	1	ASH TRAY (PRIOR TO S/N HM87---)(USED W/ 71395768 DOOR ASY)
	700707619	2	SCREW, PAN HD. MACH. #6-32 X 1/2
	195441M1	2	LOCKWASHER, #6
	704551	2	HEXNUT, #6-32
	71400504	1	ASH TRAY (EFF S/N HM87---)(USED W/ 71400502 DOOR ASY, FUSE PNL)
	700710188	2	SCR, PAN HD MACH, #6-32 X 3/4
14	71393938	1	DOOR, MANUAL HOLDER
15	71395771	1	PANEL ASY.
	70937660	1	SCREW, SELF TAPPING, 1/4-20 X 5/8
16	71408224	1	FLOORMAT, (RH)
17	71394892	1	COVER, FLOOR (RH)
	70937660	3	SCREW, SELF TAPPING, 1/4-20 X 5/8
18	71394899	1	SUPPORT
	70937660	2	SCREW, SELF TAPPING, 1/4-20 X 5/8
19	71394900	1	GUIDE
20	71394891	1	SURROUND, OPERATORS SEAT
	70937660	2	SCREW, SELF TAPPING, 1/4-20 X 5/8
21	71394890	1	SURROUND, INSTRUCTORS SEAT (PRIOR S/N HS36101)
	700728472		SURROUND, INSTRUCTORS SEAT (EFF. S/N HS36101)
	70937660	3	SCREW, SELF TAPPING, 1/4-20 X 5/8
22	71408223	1	FLOORMAT, MAIN
	71410959	1	PROTECTOR SHEET, FLRMAT(EFF.S/N HR36101)

CONTINUED

https://truckmanualshub.com/

INTERIOR COVERINGS & TRIM
LOWER AND REAR

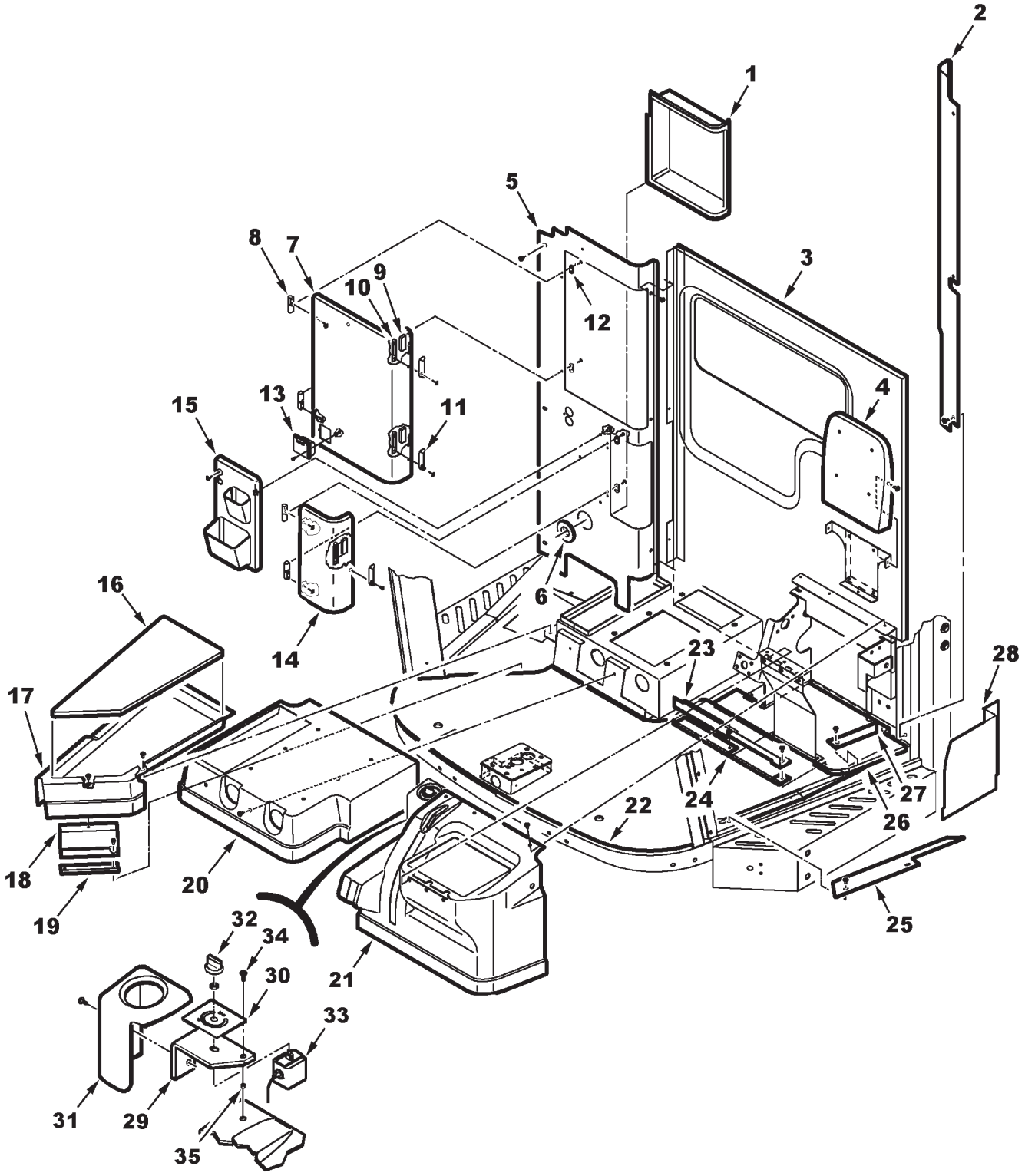

GC00304

https://truckmanualshub.com/

ITEM	NUMBER	QTY	DESCRIPTION
23	71394898	1	SUPPORT, MAIN
	70937660	2	SCREW, SELF TAPPING, 1/4-20 X 5/8
24	71394897	1	GUIDE, FRONT
25	71395773	1	THRESHOLD
	70937660	2	SCREW, SELF TAPPING, 1/4-20 X 5/8
26	71408225	1	FLOORMAT, INSTRUCTORS SEAT
27	71394896	1	SUPPORT, LEFT
	70937660	2	SCREW, SELF TAPPING, 1/4-20 X 5/8
28	71397427	1	BAFFLE
	372728X1	2	SCREW, SELF-TAPPING, 3/8-16 X 5/8
29	700164650	1	* MOUNTING BRKT
30	700728631	1	* DECAL, THERMOSTAT
31	700728473	1	* COVER, THERMOSTAT
32	700728714	1	* CONTROL KNOB
33	700728711	1	* THERMOSTAT
34	7703457	1	* CAPSCREW, 1/4-20 X 3/4 GR5
35	700725633	1	* INSERT, THREADED, 1/4-20

* ITEMS EFF. S/N HS36101

GC00304
PR: 62

https://truckmanualshub.com/

PLATFORM
LEFT & RIGHT

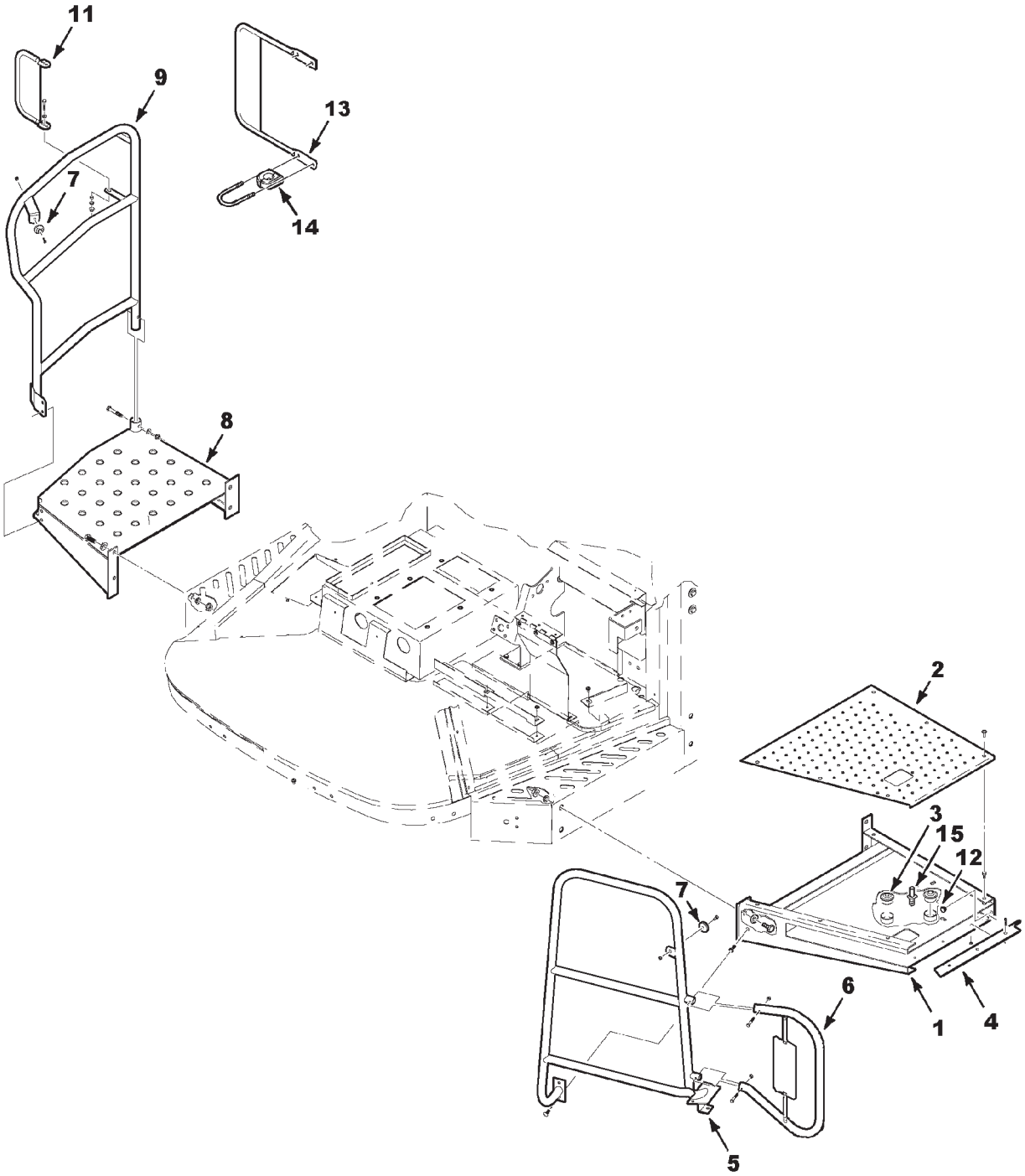

GC00307

https://truckmanualshub.com/

PLATFORM
LEFT & RIGHT

ITEM	NUMBER	QTY	DESCRIPTION
1	71399437	1	PLATFORM WLDMT, LH (PRIOR S/N HS36101)
	71418093	1	PLATFORM WLDMT, LH (EFF. S/N HS36101) (REQUIRES 71418482 LATCH ASY)
	70923112	4	CAPSCREW, 5/8-11 X 1-3/4 GR5
	70917373	4	LOCKWASHER, 5/8
	7704919	2	NUT, HEX FLANGE, 5/8-11 GR8
	70921965	2	CAPSCREW, 3/8-16 X 3/4
2	71396682	1	PLATE, TOP DECK (PRIOR S/N HS36101)
	71407719	1	PLATE, TOP DECK (EFF. S/N HS36101)
	7772049	6	SCREW, HEX FLNG SERR, 5/16-18 X 1
	700725958	6	INSERT, THREADED, 5/16-18
3	71396743	2	BALL, TRANSFER, 30MPC
4	71396684	1	PLATE, WEAR (LOWER FRT.)
	70918222	3	SCR, FLAT CSK HD MACH, 1/4-20 X 3/4
	70931209	3	LOCKNUT, HEX FLNG SERR, 1/4-20
5	71396283	1	HANDRAIL WLDMT, LH
	7703424	3	SCREW, HEX FLNG. SERR., 3/8-16 X 1.0
	700725634	3	INSERT, THREADED, 3/8-16
6	71401700	1	GRABRAIL WLDMT, LH
	70925960	2	SCREW, PAN HD MACH, 5/16-18 X 1-1/2
	70931277	2	LOCKNUT, HEX SERR. FLANGE, 5/16-18
7	700708648	2	BUMPER
	700707203	2	SCREW, HEX WSHR HD MACH #12-24 X 3/4
	373839X1	2	NUT, HEX CENTER LOCK, #12-24
8	71396501	1	PLATFORM WLMT, RH (PRIOR S/N HS36101)
	71407677	1	PLATFORM WLMT, RH (EFF. S/N HS36101)
	70923112	4	CAPSCREW, 5/8-11 X 1-3/4 GR5
	70917373	4	LOCKWASHER, 5/8
	7704919	2	NUT, HEX FLANGE, 5/8-11 GR8
9	71396510	1	HANDRAIL WLDMT, RH (PRIOR S/N HN36101)
	71399442	1	HANDRAIL WLDMT, RH (EFF. S/N HN36101)
	7771470	2	SCREW, HEX SERR FLNG, 3/8-16 X 1-1/4
	700725634	2	INSERT, THREADED, 3/8-16
	70922130	1	CAPSCREW, 3/8-16 X 2-1/4
	Y705533	1	WASHER, 3/8 HARD
	Y704734	1	NUT, HEX FLNG TOP LOCK, 3/8-16
11	71396729	1	BRKT WLDMT, REFLECTOR(PRIOR S/N HN36101)
	103668W1	2	SPACER, PRESSURE PAD (PRIOR S/N HN36101)
	7701717	2	CAPSCREW, 5/16-18 X 1-1/2
	Y705525	4	WASHER, 5/16
	Y704726	2	NUT, HEX FLNG TOP LK, 5/16-18
12	71399446	1	BUMPER, RUBBER, 5/16-18 X 1 STUD
	70920161	1	NUT, HEX JAM, 5/16-18
13	71399444	1	BRKT WLDMT, REFLECTOR (EFF. S/N HN36101)
14	71399445	2	U-CLAMP ASY, W/NUTS, 1/4-20 (EFF. S/N HN36101)
15	71401707	2	STRIKER PIN (PRIOR S/N HS36101)
	71418483	2	STRIKER PIN (EFF. S/N HS36101)
	Y705525	2	WASHER, 5/16 HARD(PRIOR S/N HS36101)
	70931277	2	NUT, SERR. FLANGE, 5/16-18
	71394502	2	NUT, M12 X 1 (EFF. S/N HS36101)

https://truckmanualshub.com/

PIVOTING LADDER LH

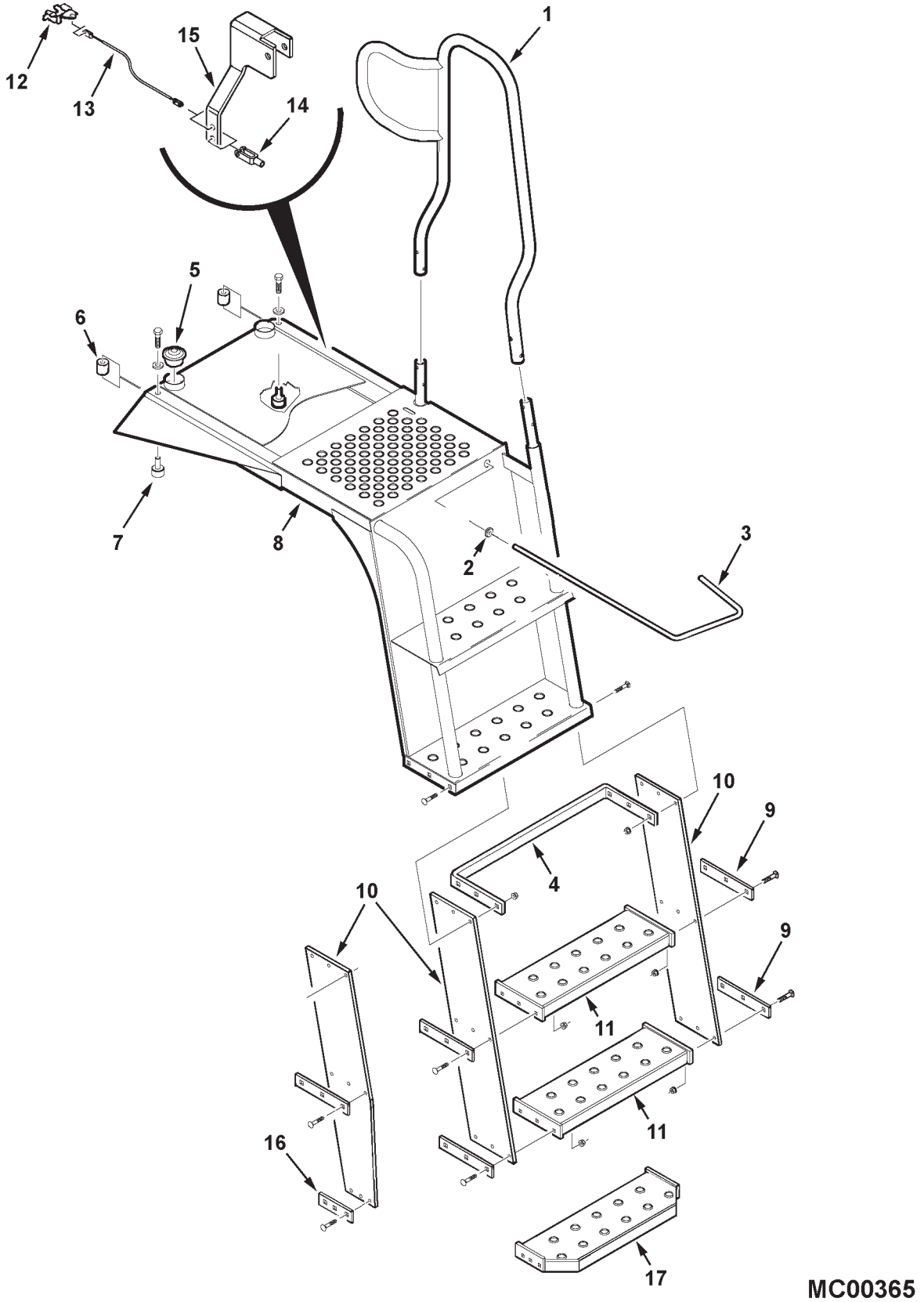

https://truckmanualshub.com/

PIVOTING LADDER LH

ITEM	NUMBER	QTY	DESCRIPTION
1	71400628	1	TUBE WLDMT, GRAB
	7703838	1	CAPSCREW, 5/16-18 X 1-3/4
	6514772	1	SPACER
	7704117	1	NUT, HEX TOP LOCK, 5/16-18
	70925960	1	SCR,PHILLIPS PAN HD, 5/16-18 X 1-1/2
	Y705525	1	WASHER, 5/16 HARD
	70931277	1	NUT, HEX FLNG SERR, 5/16-18
2	70928304	1	GROMMET
3	71396745	1	ROD, OUTER LATCH
4	71397515	1	BRACKET, TREAD SUPPORT
5	71396743	2	BALL, TRANSFER, 30MPC
6	71396677	2	SPACER, THREADED
7	8050866	2	BEARING, CAM FOLLOWER
	873364	2	CAPSCREW, 1/2-20 X 3/4
	52167	2	BUSHING, 1/2 ID X 7/8 OD X 18 GA
8	71401710B	1	LADDER WA, PLATFORM (PRIOR S/N HS36101)
	71418481	1	LADDER WA, PLATFORM (EFF. S/N HS36101) (REQUIRES 71418482 LATCH ASY)
9	71362525	4	ANCHOR STRAP (QTY 2, S/N HN36101 THRU S/N HP36183, PROD'N MID-RUN)
10	71396735	2	PLATE, FLEXIBLE, PARALLEL SIDES
	71400641	2	PLATE,FLEXIBLE, TAPERED PROFILE (EFF.S/N HN36101 THRU HP36183,PROD'N MID-RUN)
	7700107	18	BOLT, RD HD SQ NK, 5/16-18 X 1-1/4
	70931277	18	LOCKNUT, HEX SERR. FLANGE, 5/16-18
11	71394472	2	TREAD WLDMT, STEP (QTY 1 S/N HN36101 THRU S/N HP36183, PROD'N MID-RUN)
12	71397510	1	LATCH ASY (PRIOR S/N HS36101)
	71418482	1	LATCH ASY (EFF. S/N HS36101)
	700718807	2	SCR,HX SCKT FLAT HD,SPL, 5/16-18 X 1
13	71397511	1	CABLE ASY, LATCH RELEASE
	7703457	3	CAPSCREW, 1/4-20 X 3/4
	1703354	2	NUT, HEX FLANGE TOP LOCK, 1/4-20
	705012	1	LOCKWASHER, 1/4
	353769X1	3	WASHER, HARDENED, 1/4
	70920438	2	NUT, HEX JAM, 5/16-24
14	766410	1	CLEVIS
	70927401	1	CAPSCREW, 1/4-20 X 1
	1703354	1	NUT, HEX FLANGE TOP LOCK, 1/4-20
15	71397255	1	PEDAL, FLOOR LATCH
	7703838	1	CAPSCREW, 5/16-18 X 1-3/4
	Y704726	1	NUT, HEX FLANGE TOP LOCK, 5/16-18
16	71400630	2	ANCHOR STRAP, BOTTOM (EFF. S/N HN36101 THRU S/N HP36183, PROD'N MID-RUN)
17	71400631	1	TREAD WLDMT, BOTTOM (EFF. S/N HN36101 THRU S/N HP36183, PROD'N MID-RUN)

https://truckmanualshub.com/

DECK EXTENSION
145" TREAD AND DUALS

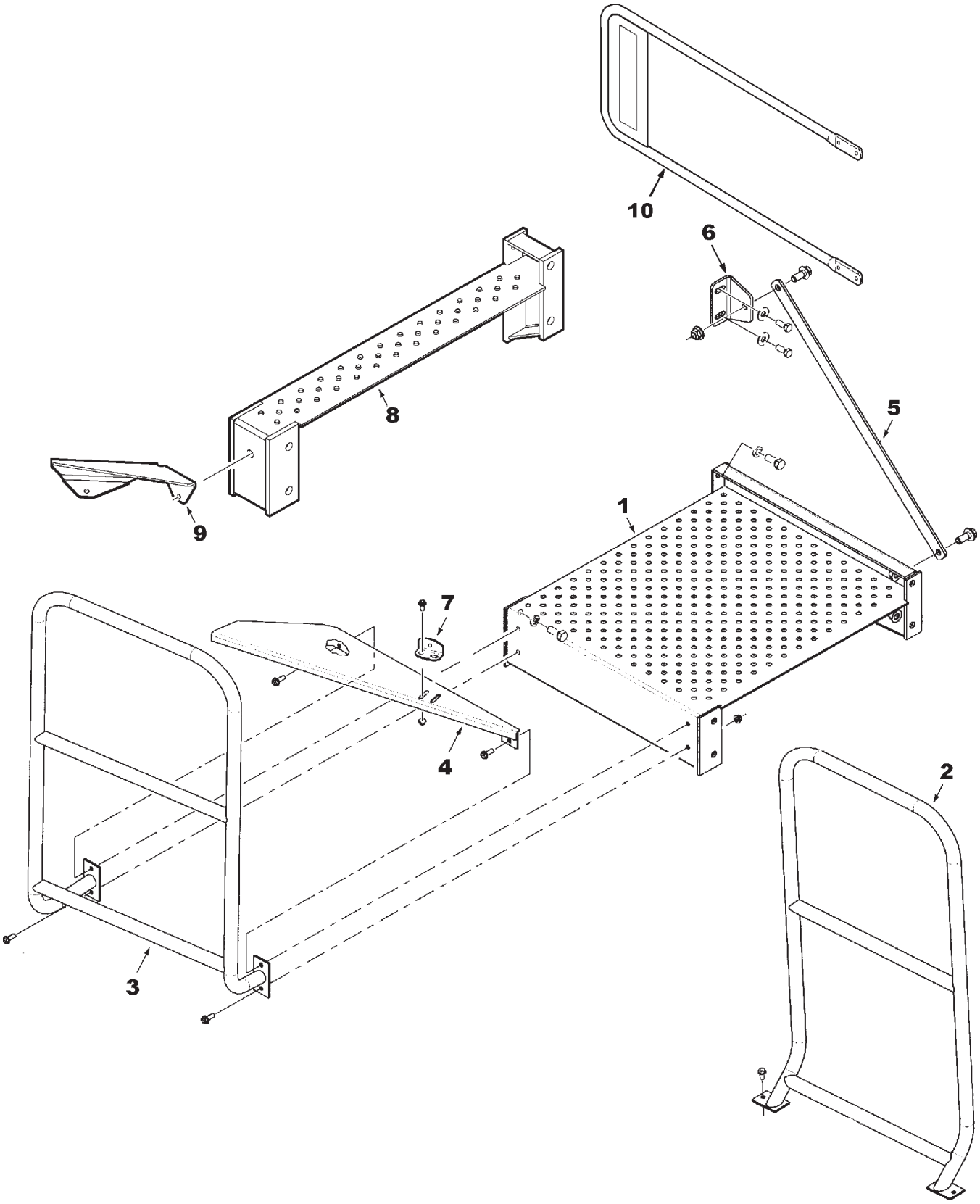

GC00320

https://truckmanualshub.com/

DECK EXTENSION
145" TREAD AND DUALS

ITEM	NUMBER	QTY	DESCRIPTION
1	71397268	1	PLATFORM EXTN WLDMT, 145" TREAD
	71397526	1	PLATFORM EXTN WLDMT, DUALS
	70924744	4	CAPSCREW, 5/8-11 X 1-1/2 GR5
	70917373	4	LOCKWASHER, 5/8 REG
	7704919	4	NUT, HEX FLANGE GR8
2	71400645	1	HANDRAIL WLDMT, SIDE, 145" TREAD
	71400646	1	HANDRAIL WLDMT, SIDE, DUALS
	372729X1	2	SCR, HX WSHR HD TAP'G, 5/16-18 X 3/4
3	71397265	1	HANDRAIL WLDMT, 145" TREAD
	71397532	1	HANDRAIL WLDMT, DUALS
	Y704734	4	NUT, HEX FLNG TOP LK, 3/8-16
	7883382	4	SCREW, HEX WSHR HD MACH 3/8-16 X 1
4	71397272	1	FILLER WLDMT, EXTENSION, 145" TREAD
	71397536	1	FILLER WLDMT, EXTENSION, DUALS
5	71397271	1	STRAP, SUPPORT, 145" TREAD
	71397535	1	STRAP, SUPPORT, DUALS
	700703922	2	NUT, HEX FLNG TOP LK, 5/8-11
	700711262	2	CAPSCREW, HEX FLG, 5/8-11 X 1-1/2
6	71397506	1	BRACKET, SUPPORT
7	71397538	1	ANGLE, DOOR STOP (DUALS)
	Y704726	2	NUT, HEX FLANGE TOP LOCK, 5/16-18
	7883325	2	SCR, HEX WSHR HD MACH, 5/16-18 X 3/4
8	71400626	1	PLATFORM EXT'N WLDMT, 4"
	70923112	4	CAPSCREW, 5/8-11 X 1-3/4 GR5
	70917373	4	LOCKWASHER, 5/8 REG
	7704919	4	NUT, HEX FLANGE GR8
9	71399447	1	PLATE, FILLER, 4" EXT'N
	7883325	2	SCR, HEX WSHR HD MACH, 5/16-18 X 3/4
	Y704726	2	NUT, HEX FLANGE TOP LOCK, 5/16-18
10	71401701	1	BRKT EXT WLDMT, RH, W/REFLECTOR DECALS
-	71399036	AR	*KIT, DECK EXTENSION (145" TREAD)
-	71399038	AR	*KIT, DECK EXTENSION (180" TREAD/DUALS)
-	71402014	AR	*KIT, 4" DECK EXTENSION

*ORDER THRU DEALER CENTRAL

GC00320
PR: 68

https://truckmanualshub.com/

STAIRCASE LADDER & PLATFORM

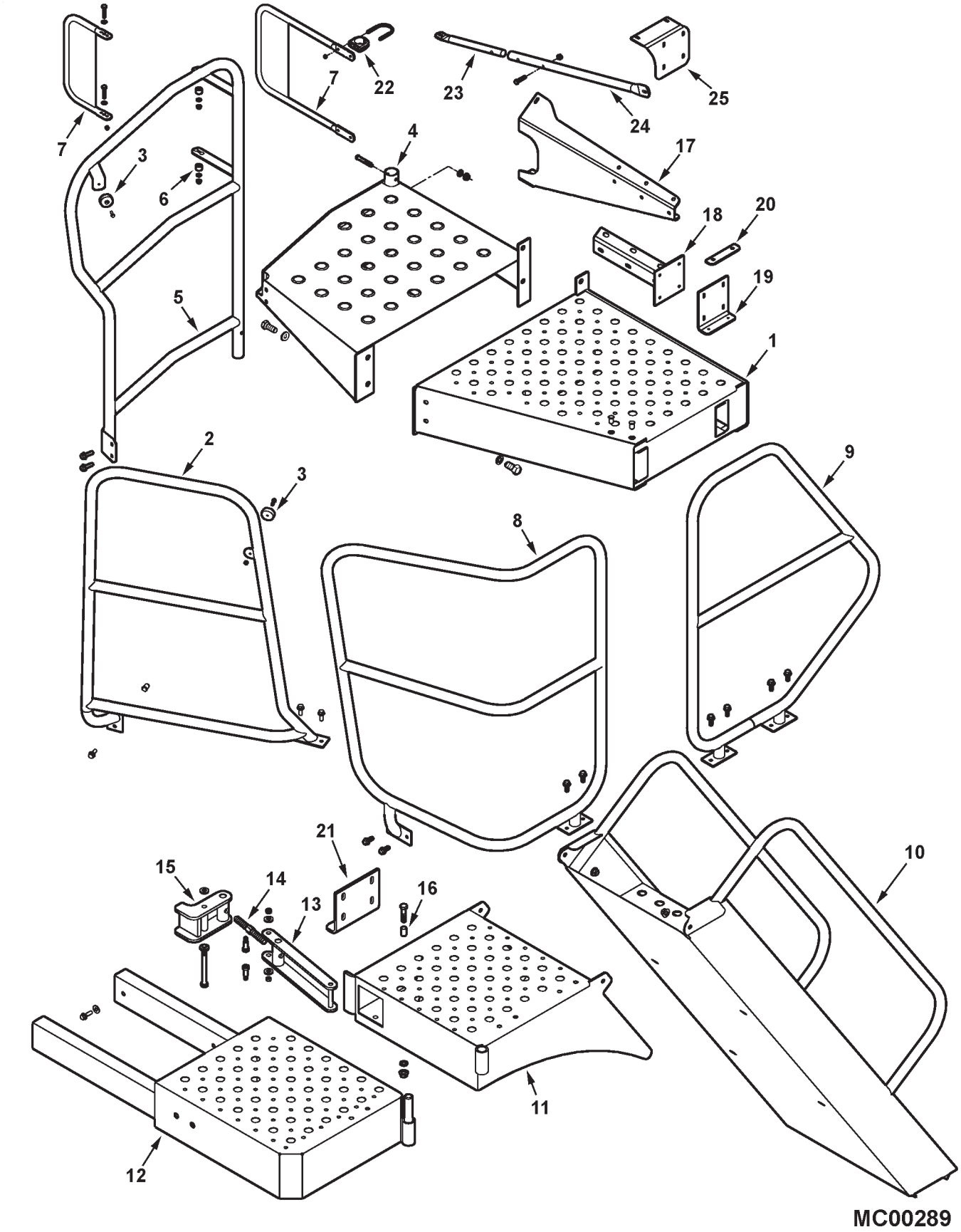

https://truckmanualshub.com/

ITEM	NUMBER	QTY	DESCRIPTION
1	71398429	1	PLATFORM WLMT, STAIRCASE
	70924744	4	CAPSCREW, 5/8-11 X 1-1/2
	70917373	4	LOCKWASHER, 5/8
	7704919	2	NUT, HEX FLANGE, 5/8-11 GR 8
2	71398436	1	HANDRAIL WLMT, LH
	700725634	4	INSERT, THREADED, 3/8-16
	7703424	4	SCREW, HEX SERR FLANGE, 3/8-16 X 1
3	700708648	2	BUMPER
	700707203	2	SCREW, HEX WSHR HD #12-24 X 3/4
	373839X1	2	NUT, HEX CENTER LOCK, #12-24
4	71396501	1	PLATFORM WLMT, RH
	70924744	4	CAPSCREW, 5/8-11 X 1-1/2
	70917373	4	LOCKWASHER, 5/8
	7704919	2	NUT, HEX FLANGE, 5/8-11 GR 8
5	71396510	1	HANDRAIL WLMT, RH (PRIOR S/N HP36101)
	71399442	1	HANDRAIL WLMT, RH (EFF. S/N HP36101)
	70922130	1	CAPSCREW, 3/8-16 X 2-1/4
	Y705533	1	WASHER, HARDENED 3/8
	Y704734	1	NUT, HEX FLANGE TOP LOCK, 3/8-16
	7771470	2	SCRW,HEX SERR FLANGE, 3/8-16 X 1-1/4
	700725634	2	INSERT, THREADED, 3/8-16
6	103668W1	2	SPACER, PRESSURE PAD (PRIOR S/N HP36101)
7	71396729	1	BRACKET WLMT, RFLCTRS(PRIOR S/N HP36101)
	71399444	1	BRACKET WLMT, RFLCTRS (EFF. S/N HP36101)
	7701717	2	CAPSCREW, 5/16-18 X 1-1/2 (PRIOR S/N HP36101)
	Y705525	4	WASHER, HARDENED 5/16
	Y704726	2	NUT, HEX FLANGE TOP LOCK, 5/16-18
8	71398196	1	HANDRAIL, CORNER
	7703424	4	SCREW, HEX SERR FLANGE, 3/8-16 X 1
9	71397842	1	HANDRAIL WLMT, STAIRCASE LEFT
	7703424	4	SCREW, HEX SERR FLANGE, 3/8-16 X 1
	704247	4	NUT, HEX SERR FLANGE, 3/8-16
10	71398182	1	STAIRCASE WLDMT
	7883424	2	CAPSCREW, HEX FLANGE, 1/2-13 X 1
	Y704742	2	NUT, HEX FLANGE TOP LOCK, 1/2-13
11	71398188	1	LANDING, STAIRCASE
12	71398197	1	EXTENSION WLMT, PLATFORM
	700725632	8	INSERT, THREADED, 3/8-16
	7771470	4	SCRW,HEX SERR FLANGE, 3/8-16 X 1-1/4
	70917378	4	WASHER, WIDE 3/8
13	71398445	1	HANDLE WLDMT
	700705676	2	SCRW,HX SOCK SHLDR, 1/2 X 1 X 3/8-16
	705541	2	WASHER, HARDENED, 1/2
	7704141	2	NUT, HEX TOP LOCK, 3/8-16
14	71398505	1	STUD, ADJUSTMENT
15	71398501	1	LATCH, HANDLE
	873497	1	CAPSCREW, 1/2-13 X 5-1/2
	705541	2	WASHER, HARDENED, 1/2
16	WSP1344	1	SPACER, TUBE
	70921024	1	CAPSCREW, 1/2-13 X 2 GR5
	700700057	1	WASHER, 1/2 X 7/8 X .075
	704254	1	NUT, HEX SERR FLANGE, 1/2-13

CONTINUED

https://truckmanualshub.com/

STAIRCASE LADDER & PLATFORM

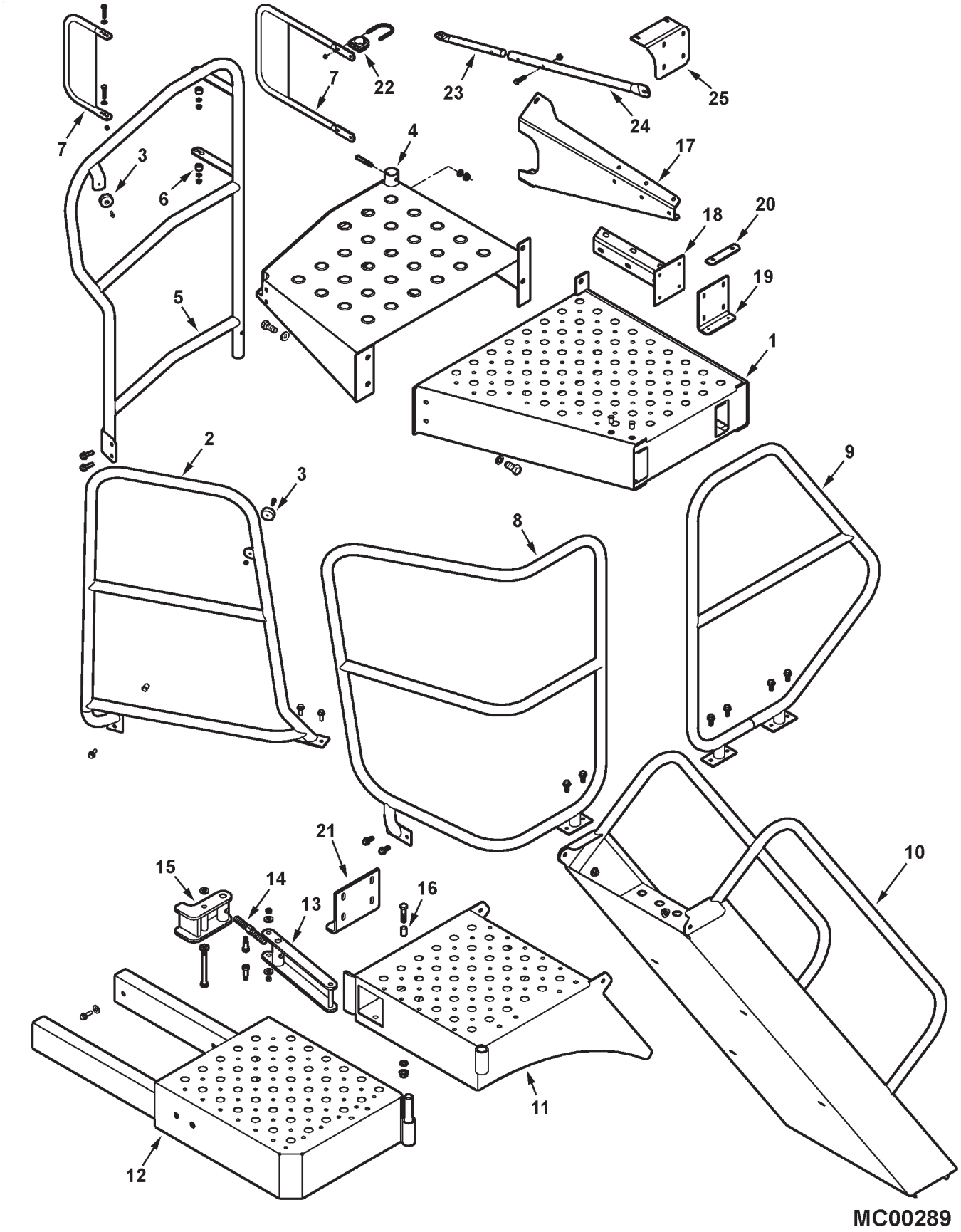

https://truckmanualshub.com/

ITEM	NUMBER	QTY	DESCRIPTION
17	71398514	1	SUPPORT WLMT, LADDER (PRIOR S/N HP36101)
	7883408	1	SCREW, HEX FLNG, 3/8-16 X 1-1/4 GR8
	Y704734	1	NUT, HEX FLNG TOP LOCK, 3/8-16
	700710984	1	SCREW, HEX FLNG, 1/2-13 X 1-1/4 GR8
	Y704742	1	NUT, HEX FLNG TOP LOCK, 1/2-13
18	71398511	1	EXTENSION WLMT, SUPPT(PRIOR S/N HP36101)
	700710984	4	SCREW, HEX FLNG, 1/2-13 X 1-1/4 GR8
	Y704742	4	NUT, HEX FLNG TOP LOCK, 1/2-13
19	71398509	1	SUPPORT BRKT, BUMPER
	7883408	4	SCREW, HEX FLNG, 3/8-16 X 1-1/4 GR8
	Y704734	4	NUT, HEX FLANGE TOP LOCK, 3/8-16
20	71398518	1	PLATE, CONTACT
	70918222	2	SCREW, MACH, 1/4-20 X 3/4
	70931209	2	NUT, HEX SERR FLANGE, 1/4-20
21	71398510	1	SUPPORT BRACKET
	70921210	4	CAPSCREW, 3/8-16 X 1"
	Y704734	4	NUT, HEX FLANGE TOP LOCK, 3/8-16
22	71399445	2	U-CLAMP ASY, W/NUTS, 1/4-20 (EFF. S/N HP36101)
23	71401723B	1	TUBE, INNER SUPPORT (EFF. S/N HP36101)
	70920415	2	CAPSCREW, 3/8-16 X 1-1/4 GR5
	Y704734	2	NUT, HEX FLANGE TOP LOCK, 3/8-16
24	71401722B	1	TUBE, OUTER SUPPORT (EFF. S/N HP36101)
	7701055	1	CAPSCREW, 3/8-16 X 1-3/4 GR5
	Y704734	1	NUT, HEX FLANGE TOP LOCK, 3/8-16
25	71406751B	1	BRKT WLDMT, SUPPORT (EFF. S/N HP36101)
	7883408	2	SCREW, HEX FLNG, 3/8-16 X 1-1/4 GR8
	Y704734	2	NUT, HEX FLANGE TOP LOCK, 3/8-16

MC00289
PR: 70

https://truckmanualshub.com/

MIRRORS & EXTREMITY LIGHTS
MANUAL & ELECTRIC ADJUST

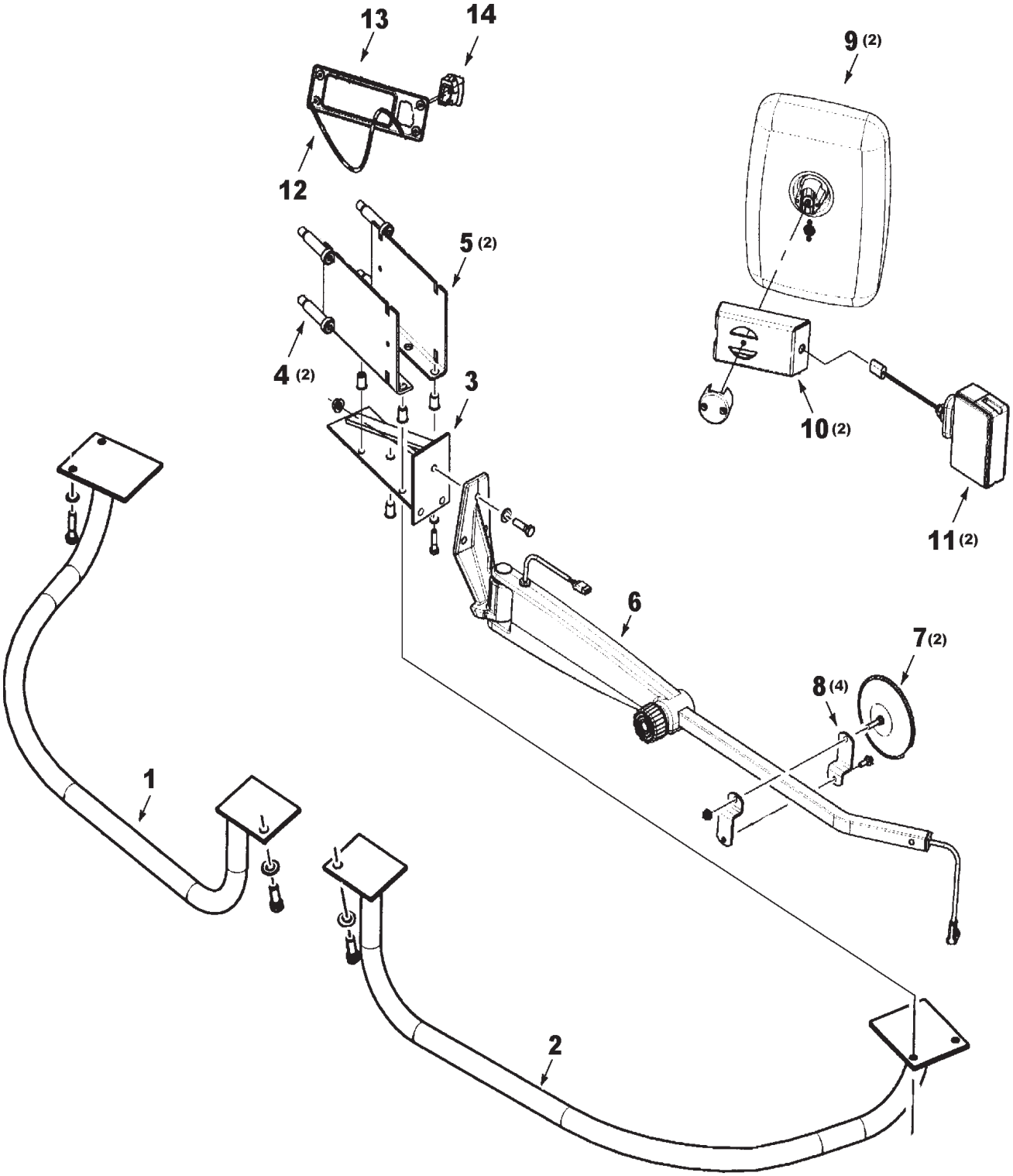

GC00315

https://truckmanualshub.com/

ITEM	NUMBER	QTY	DESCRIPTION
1	71393324	1	GRABRAIL, RIGHT
	703249	1	CAPSCREW, 3/8-16 X 1.0
	Y705533	1	WASHER, HARD, 3/8
	Y704734	1	NUT, HEX FLANGE TOP LOCK, 3/8-16
	70921977	2	CAPSCREW, 5/16-18 X 1-1/4
	70917356	2	LOCKWASHER, 5/16
2	71393323	1	GRABRAIL, LEFT
	703249	1	CAPSCREW, 3/8-16 X 1.0
	Y705533	1	WASHER, HARD, 3/8
	Y704734	1	NUT, HEX FLANGE TOP LOCK, 3/8-16
	70921977	2	CAPSCREW, 5/16-18 X 1-1/4
	70917356	2	LOCKWASHER, 5/16
3	71390453	1	BRACKET, MIRROR ARM (LH)
	71390452	1	BRACKET, MIRROR ARM (RH)
	70921977	4	CAPSCREW, 5/16-18 X 1-1/4
	70917356	4	LOCKWASHER, 5/16
	700725958	AR	INSERT, THREADED, 5/16-18
4	71390450	2	BRACKET
	704254	4	LOCKNUT, HEX FLNG SERR, 1/2-13
5	71390451	2	BRACKET
	704254	4	LOCKNUT, HEX FLNG SERR, 1/2-13
6	71387272	1	ARM, MIRROR (MANUAL) (LH)
	71387279	1	ARM, MIRROR (REMOTE) (LH)
	71387271	1	ARM, MIRROR (MANUAL) (RH)
	71387278	1	ARM, MIRROR (REMOTE) (RH)
	71397838	1	THUMBWHEEL ASY.
	70920415	6	CAPSCREW, 3/8-16 X 1-1/4
	Y705533	6	WASHER, 3/8
	Y704734	6	NUT, HEX FLANGE TOP LOCK, 3/8-16
7	71355604	2	MIRROR, GRAIN BIN
	70931209	2	LOCKNUT, HEX FLNG SERR, 1/4-20
8	71407655	4	BRACKET
	70930594	2	SCREW,HEX SERR FLANGE, 1/4-20 X 3/4
	70934479	2	NUT, HEX TOP LOCK, 1/4-20
9	71387273	2	MIRROR ASY., (MANUAL)
	71387280	2	MIRROR ASY., (REMOTE)
	71397839	2	MIRROR, GLASS
	71397840	2	RETAINING KIT, MIRROR
10	71393455	2	BRACKET, EXTREMITY LIGHT
11	71391501	2	LAMP, EXTREMITY
12	71390122	1	HARNESS, REMOTE MIRR.(PRIOR S/N HP36101)
13	71395763	1	BEZEL, HVAC (MANUAL ADJUST MIRRORS) (PRIOR S/N HN36101)
	71393943	1	BEZEL, HVAC (REMOTE ADJUST MIRRORS)
	70937280	4	SCREW, PAN HD. SELF-TAP #8-32 X 3/4
14	71387281	1	SWITCH, REMOTE MIRROR

https://truckmanualshub.com/

WINDSHIELD WIPER

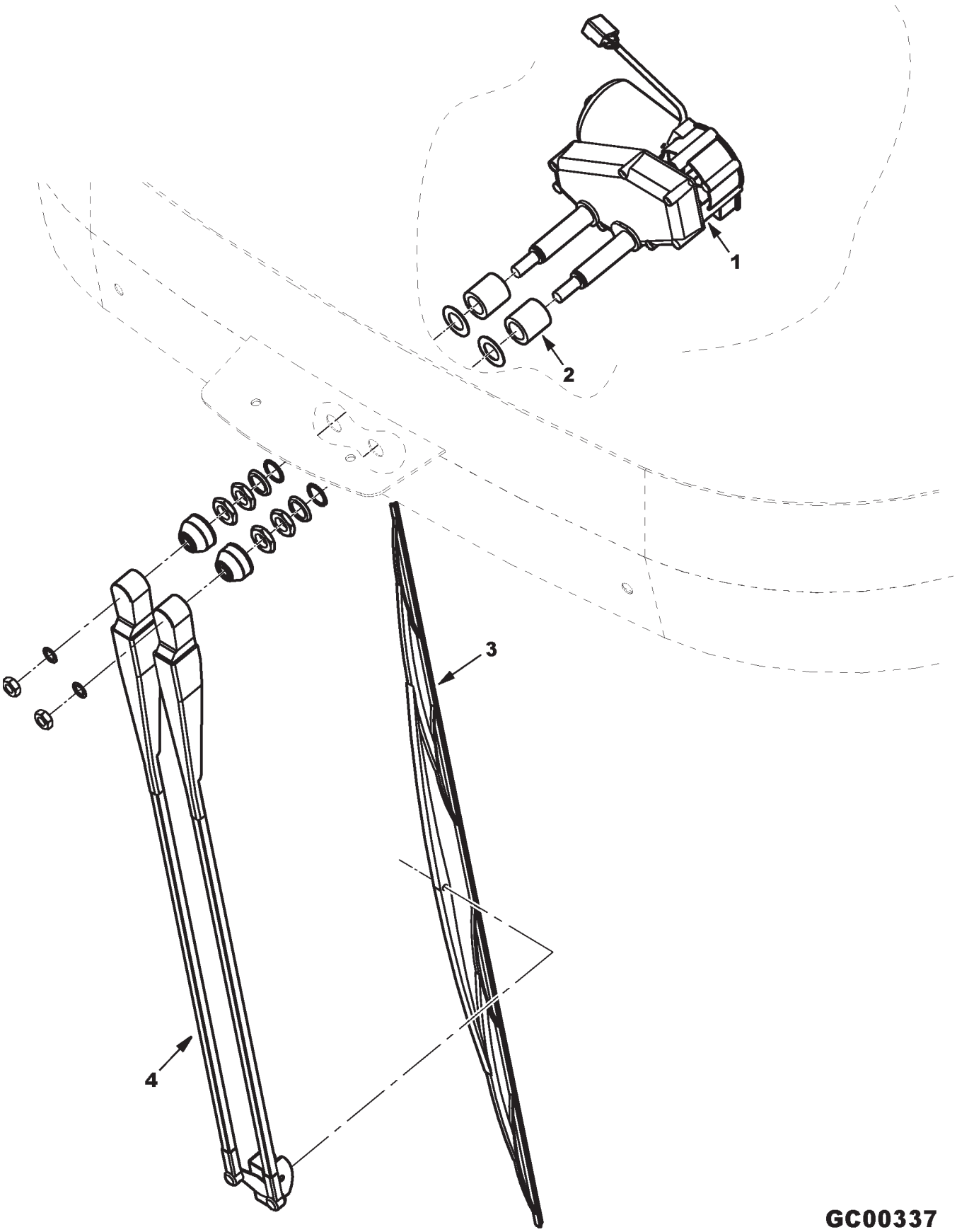

https://truckmanualshub.com/

ITEM	NUMBER	QTY	DESCRIPTION
1	71387295	1	MOTOR, WIPER (INCLUDES MOUNTING HRDWR)
	71397837	1	HRDWR KIT, MOTOR MOUNTING
-	71387420	1	SWITCH, WIPER (NOT ILL.) (REF. ALSO MODULES, UPPER CONSOLE)
2	71390468	2	BUSHING, WIPER
3	71387297	1	BLADE, WIPER
4	71390472	1	ARM, WIPER

GC00337
PR: 76

https://truckmanualshub.com/

ROOF & INTERIOR/EXTERIOR LIGHTS

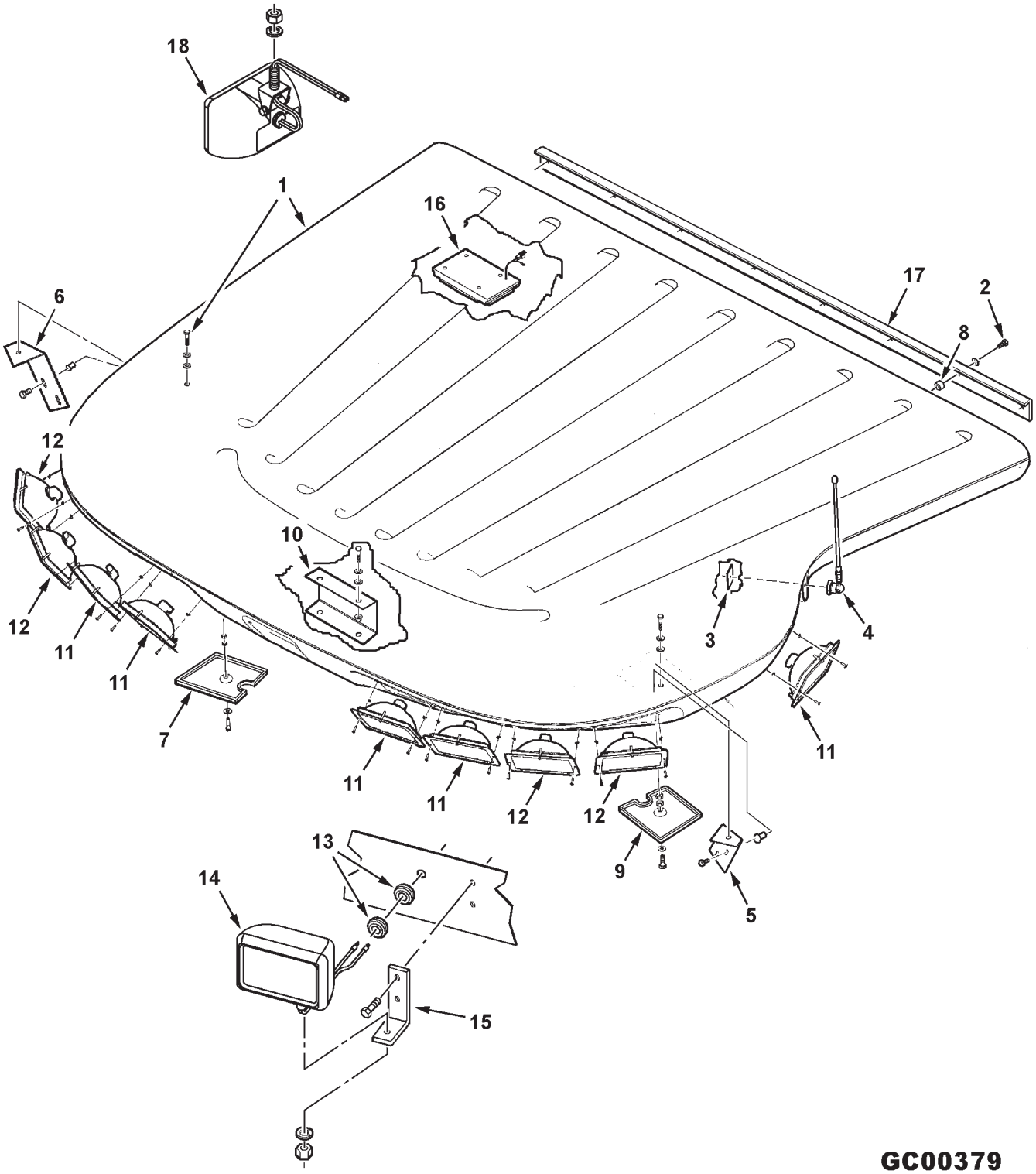

GC00379

https://truckmanualshub.com/

ITEM	NUMBER	QTY	DESCRIPTION
1	-----	1	ROOF ASY, CAB (PRIOR S/N HP36101)
			(ITEM 8 & 17 REQUIRED)
			(SERVICE W/ 71406748)
	71406748	1	ROOF ASY, CAB (EFF. S/N HP36101)
			(ITEM 8 NOT REQUIRED)
	7883325	4	SCR, HEX WSHR HD MACH, 5/16-18 X 3/4
	700709602	4	WASHER, 5/16 WIDE
	700717621	4	WASHER, RUBBER, .370 X .88 X .090
	Y704726	4	NUT, HEX FLANGE TOP LOCK, 5/16-18
2	70921960	9	CAPSCREW, 1/4-20 X 1 GR5
	700709601	9	WASHER, PLAIN WIDE, 1/4
3	71394800	1	PLATE, ANTENNA GRND.
4	RE210066	1	ANTENNA
5	71396736	1	BRACKET, ROOF SUPPORT, LH
6	71399426	1	BRACKET, ROOF SUPPORT, RH
	Y703132	4	SCR, HEX FLNG SERR., 5/16-18 X 3/4
	700725958	4	INSERT, THREADED, 5/16-18
7	71387274	1	COVER, SUPPORT ACCESS (RH)
	70921977	1	CAPSCREW, 5/16-18 X 1-1/4
	700709602	1	WASHER, WIDE PLAIN, 5/16
	70920161	1	JAM NUT, 5/16-18
	70917372	1	NUT, 5/16-18 REG
8	71401719	9	SPACER, .281 ID X .50 X .20 TH (PRIOR
			S/N HP36101)
9	71387275	1	COVER, SUPPORT ACCESS (LH)
	70921977	1	CAPSCREW, 5/16-18 X 1-1/4
	700709602	1	WASHER, PLAIN WIDE, 5/16
	70920161	1	JAM NUT, 5/16-18
	70917372	1	HEXNUT, 5/16-18
10	71398525	1	BRACKET, ROOF SUPPORT, FRONT
11	71387267	5	LAMP ASY., TRAP 25 DEG. UP
	700725576	AR	BULB, 12V 60W (GE 9004U)
	70937550	10	SCREW, PAN HD. SELF-TAP #8-18 X 3/4
	700715255	10	NUT, SPEED, #8
12	71387268	4	LAMP ASY., FLOOD 10 DEG. UP
	700725576	AR	BULB, 12V 60W (GE 9004U)
	70937550	8	SCREW, PAN HD. SELF-TAP #8-18 X 3/4
	700715255	8	NUT, SPEED, #8
13	7827983	4	GROMMET, WIRE
14	71393703	2	LIGHT, CAB, LOWER
	Y705046	2	LOCKWASHER, 1/2
	704031	2	NUT, 1/2-13 REG
15	71396954	2	BRACKET
	7883325	4	SCREW, HEX MACH. 5/16-18 X 3/4
	70931277	4	LOCKNUT, HEX SERR FLANGE, 5/16-18
16	71361831	1	LIGHT, INTERIOR
	700701265	4	SCR, PAN HD. SELF-TAP, #8-18 X 1/1/2
	700705185	1	SCREW, PAN HD. MACH. #8-32 X 1/2
			(GRND WIRE ATTACHING SCREW)
17	71401718	1	ANGLE, ROOF RETAINER, REAR
18	71406866	1	LIGHT, ROW FINDER
	Y705046	1	LOCKWASHER, 1/2
	704031	1	NUT, 1/2-13 REG

https://truckmanualshub.com/

CONSOLE - SEAT

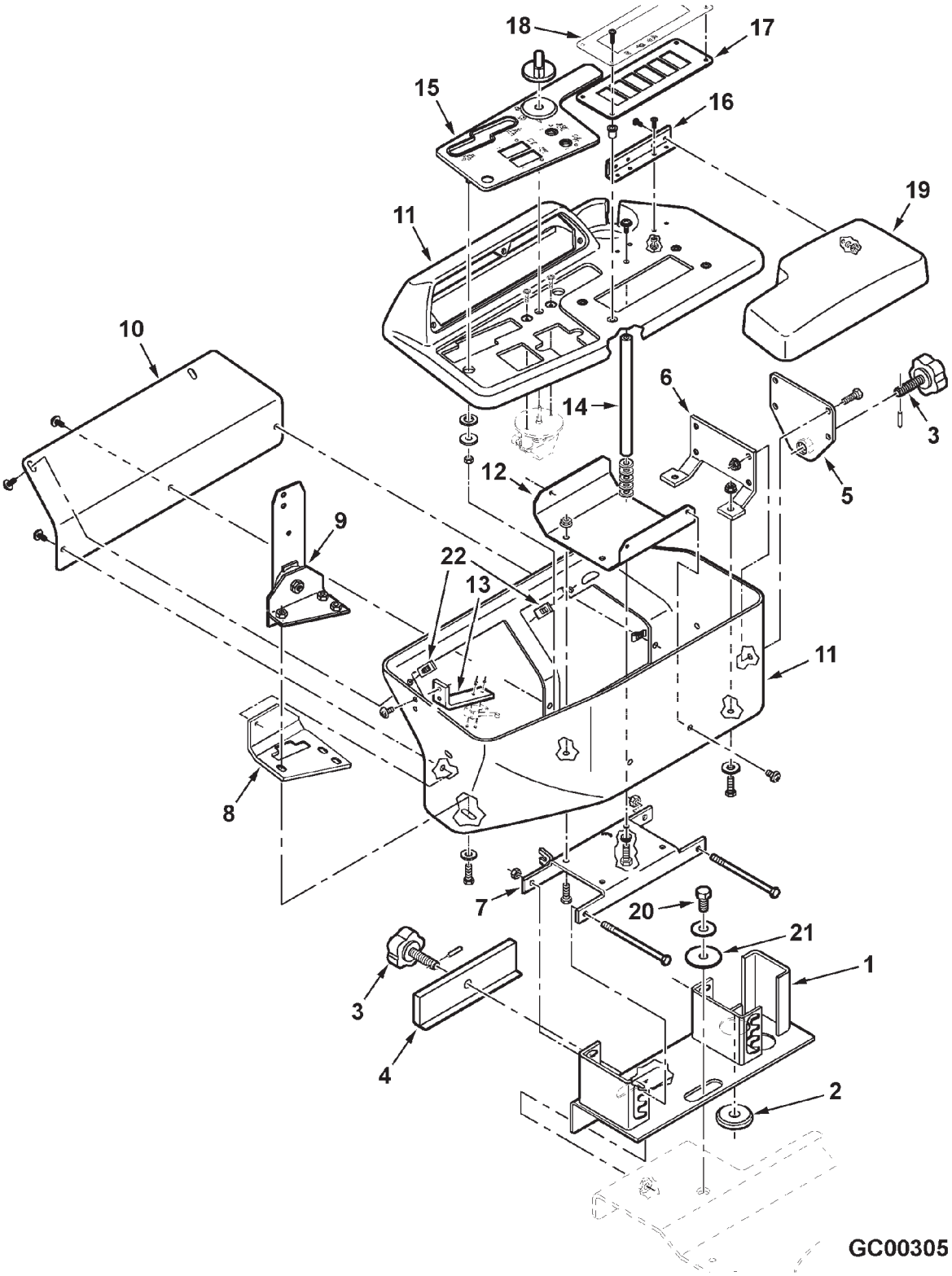

https://truckmanualshub.com/

ITEM	NUMBER	QTY	DESCRIPTION
1	71398815	1	PLATE WLMT, ADJUSTER (PRIOR S/N HR36101)
	71409576	1	PLATE WLMT, ADJUSTER (EFF. S/N HR36101)
2	71395754	1	GROMMET
3	71388152	2	KNOB, THREADED, 1/2-13 X 2
	70918111	2	PIN, SPRING, 1/8 X 1
4	71393609	1	BAR, STABILIZER
5	71388149	1	PLATE, KNOB
	70921333	4	CAPSCREW, 5/16-18 X 1.0
	70931277	4	LOCKNUT, HEX SERR. FLANGE, 5/16-18
6	71393613	1	STIFFENER, REAR
	70921333	2	CAPSCREW, 5/16-18 X 1.0
	70917642	2	WASHER, 5/16 WIDE
	70931277	2	LOCKNUT, HEX SERR. FLANGE, 5/16-18
7	71388142	1	BASEPLATE
	70925693	2	CAPSCREW, 5/16-18 X 5.0
	70923362	2	LOCKNUT, 5/16-18
8	71393615	1	STIFFENER
9	71388129	1	PIVOT ASY., HYDRO HANDLE
	71408202	AR	KIT, PIVOT ASY REPAIR (INCL. ALL COMP'TS EXCEPT MTG BRKT & PVT LEVER)
	70921333	3	CAPSCREW, 5/16-18 X 1.0
	70917642	3	WASHER, 5/16 WIDE
10	71388154	1	COVER
	70937660	5	SCREW, PAN HD,TAPPING, 1/4-20 X 5/8
11	71400501	1	CONSOLE HSG (1 PIECE. SHOWN IN 2 PIECES) (PRIOR S/N HR36101)
	71409600	1	CONSOLE HSG (1 PIECE. SHOWN IN 2 PIECES) (EFF. S/N HR36101)
12	71393612	1	STIFFENER, BOTTOM
	70921333	3	CAPSCREW, 5/16-18 X 1.0
	70931277	3	LOCKNUT, HEX FLANGE SERR, 5/16-18
	70937660	2	SCREW, PAN HD,TAPPING, 1/4-20 X 5/8
13	71398165	1	BRACKET, PROXIMITY SWITCH (SERVICE WITH #71406876 FOR MICRO SWITCH)
	71406876	1	BRACKET, MICRO SWITCH (USED W/SWITCH #107041 - SEE ELECT. SECTION)
	70937660	2	SCREW, PAN HD,TAPPING, 1/4-20 X 5/8
14	71393614	1	STIFFENER, VERTICAL
	70921333	1	CAPSCREW, 5/16-18 X 1.0
	Y705525	5	WASHER, 5/16
	70917356	1	LOCKWASHER, 5/16
	70937660	1	SCREW, PAN HD,TAPPING, 1/4-20 X 5/8
15	71393939	1	BEZEL, CONSOLE
	70923550	4	WASHER, .562 X 1.0 X 12GA
	70919381	4	WASHER, .344 X 1.0
	1703354	4	NUT, HEX FLANGE TOP LOCK, 1/4-20

CONTINUED

https://truckmanualshub.com/

CONSOLE - SEAT

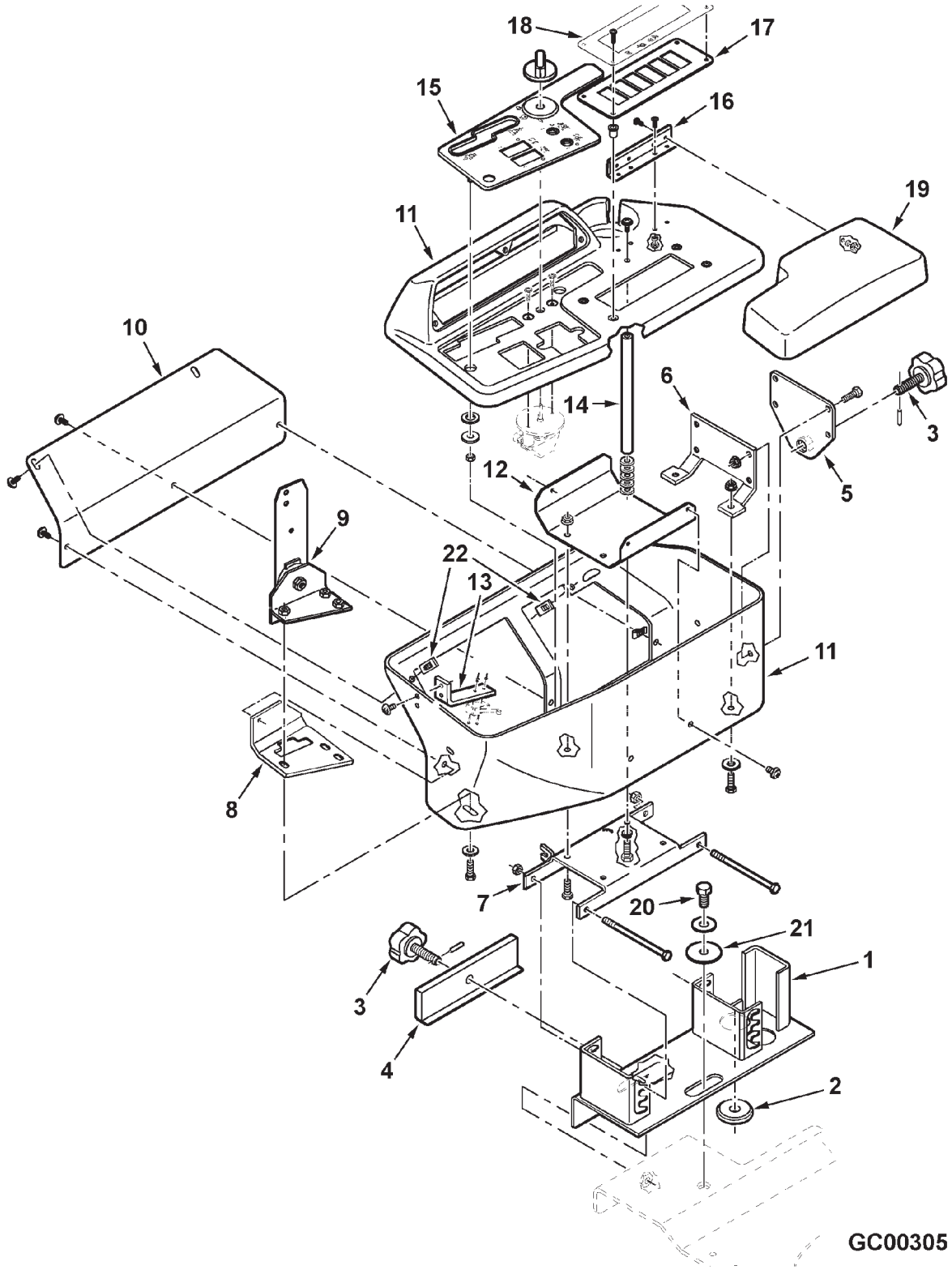

https://truckmanualshub.com/

ITEM	NUMBER	QTY	DESCRIPTION
16	71391157	1	HINGE
	116047W1	8	SCREW, PAN HD. MACH. #10-24 X 5/8
	705004	8	LOCKWASHER, #10
	Y704072	8	HEXNUT, #10-24
17	71393929	1	PLATE, SWITCH MTG. (PRIOR S/N HR36101)
	71409579	1	PLATE, SWITCH MTG. (EFF. S/N HR36101)
	70937280	4	SCREW, SELF TAPPING #8-32 X 3/4
	71393926	4	WELLNUT, #8-32
18	71395764	1	DECAL, SWITCHES (PRIOR S/N HR36101)
	71409594	1	DECAL, SWITCHES(EFF.S/N HR36101-HR36999)
19	71388131	1	ARMREST ASY.
20	70921865	1	CAPSCREW, NYLOK, 1/2-13 X 1
	70918431	1	WASHER, 1/2 WIDE
21	71398814	1	WASHER, POLYETHYLENE, NATURAL
22	700705135	3	SPEEDNUT, 1/4-20

GC00305
PR: 80

https://truckmanualshub.com/

CONTROL
SERVICE BRAKES

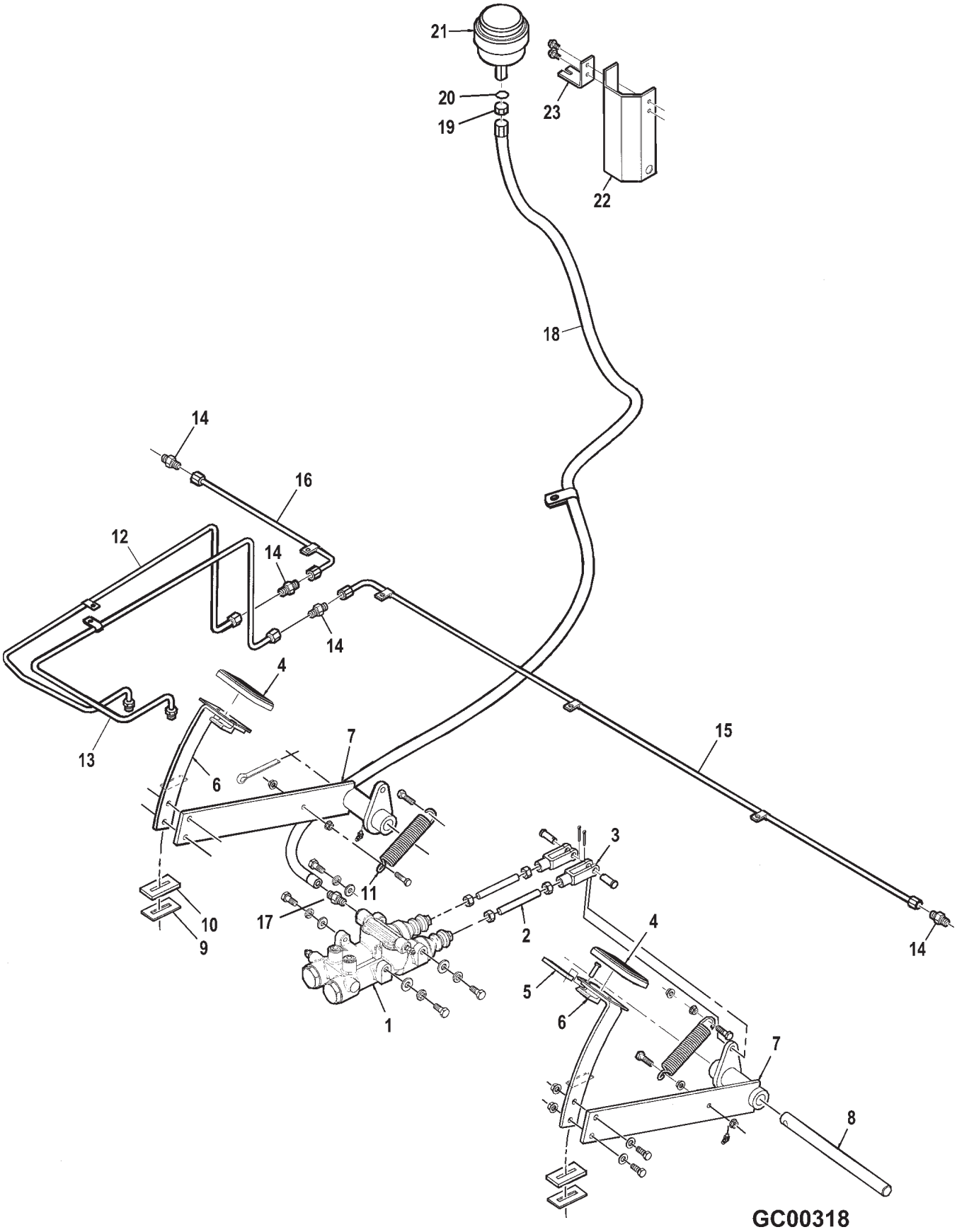

https://truckmanualshub.com/

ITEM	NUMBER	QTY	DESCRIPTION
1	71378364	1	MASTER CYLINDER, BRAKE
	700708349	4	CAPSCREW, M10 X 1.5 X 25
	339376X1	4	LOCKWASHER, M10
	700702916	4	WASHER, WIDE HARD, 3/8
2	71361940	2	ROD, BRAKE
	353426X1	4	NUT, 7/16-20 UNF
3	W500053E	2	YOKE
	700706356	2	PIN, CLEVIS, 7/16 X 1-1/4
	70918452	2	PIN, COTTER, 1/8 X 1.0
4	71361947	2	PAD, PEDAL
5	71361941	1	LOCK, LINK (LH ONLY)
	763136	1	PIN, CLEVIS, 1/4 X 1.0
6	71390414	1	PEDAL, BRAKE (LH)
	71390413	1	PEDAL, BRAKE (RH)
	703249	4	CAPSCREW, 3/8-16 X 1.0
	70918266	4	WASHER, 3/8, NARR
	704247	4	LOCKNUT, HEX SERR FLANGE, 3/8-16
7	71387178	1	ARM, BRAKE PEDAL (LH)
	71387177	1	ARM, BRAKE PEDAL (RH)
	70925731	2	FITTING, GREASE, 1/4-28 X 45 DEG.
8	71361720	1	SHAFT, BRAKE PEDAL
	70929957	1	PIN, COTTER, 3/8 X 3.0
9	71387181	2	BRACKET
10	71390407	2	SEAL, PEDAL
11	1565240W1	2	SPRING
	70921977	4	CAPSCREW, 5/16 X 1-1/4
	70931277	8	LOCKNUT, HEX SERR FLANGE, 5/6-18
12	71391255	1	TUBE, MASTER CYL. (RH)
	70928654	1	CLAMP, LINE, 1/4 X .406 HOLE
	7704141	1	NUT, HEX TOP LOCK, 3/8-16
13	71391256	1	TUBE, MASTER CYL. (LH)
	70928654	1	CLAMP, LINE, 1/4 X .406 HOLE
	7704141	1	NUT, HEX TOP LOCK, 3/8-16
14	70919214	4	UNION, 1/4 JIC X 1/4 JIC
15	71391254	1	TUBE, CAB, (LH)
	70926919	3	CLAMP, LINE, 1/4 X .281 HOLE
	365775X1	3	SCREW, HEX SELF-TAP, 1/4-20 X 1/2
16	71391253	1	TUBE, CAB, (RH)
	70926919	1	CLAMP, LINE, 1/4 X .281 HOLE
	365775X1	1	SCREW, HEX SELF-TAP, 1/4-20 X 1/2
17	70920821	1	CONNECTOR, 1/4 HOSE X 5/16 INVERTED
18	71396273	1	HOSE ASY.
	70929402	1	CLAMP, WORM DRIVE, .22-.63 DIA
19	N12998	1	NUT, HEX BULKHD, 9/16-18 UNF, SAE J514
20	112734W1	1	O-RING, .070 WIDE X .301 ID
21	112735W91	1	RESERVOIR, BRAKE
22	71393695B	1	COVER, RESERVOIR
23	71393694	1	BRACKET, RESERVOIR
	701953	2	SCREW,HEX HD, TAPPING, 5/16-18 X 3/4

https://truckmanualshub.com/

BRAKE MASTER CYLINDER

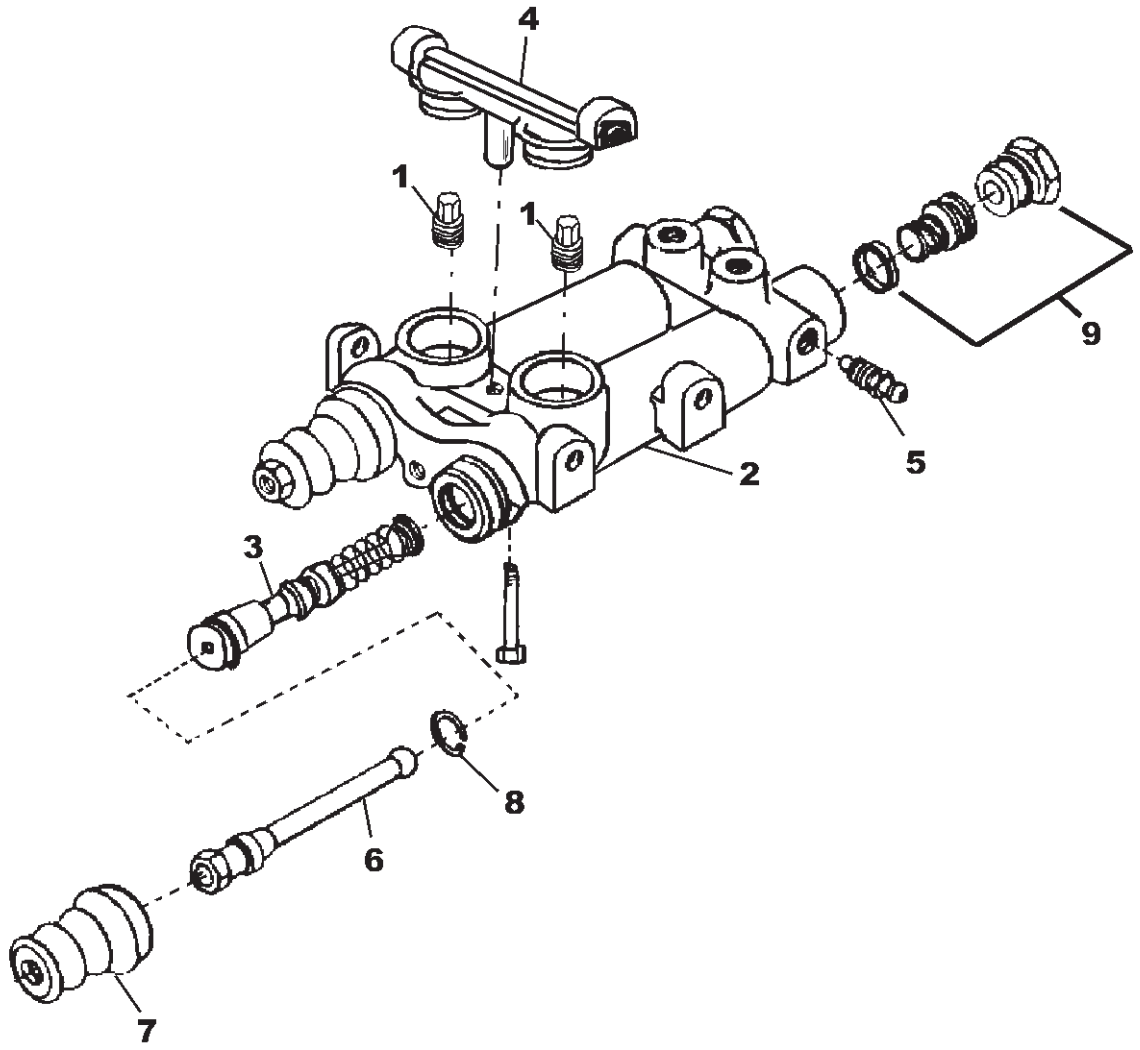

MC00218

https://truckmanualshub.com/

ITEM	NUMBER	QTY	DESCRIPTION
-	71378364	1	MASTER CYLINDER, BRAKE
1	71389509	2	VALVE ASSEMBLY, FAST FILL
2	----------	1	BODY AND TUBE SEAT ASSEMBLY (ORDER BRAKE MASTER CYLINDER)
3	71389511	2	PISTON ASSEMBLY
4	71389512	1	CONNECTOR AND TUBE SEAT ASSEMBLY
5	71389513	2	BLEED SCREW
6	74906743	2	PUSH ROD
7	71389514	2	BOOT
8	71389515	2	RETAINING RING
9	71389516	2	POPPET PACKAGE

MC00218
PR: 84

https://truckmanualshub.com/

CONTROL
PARK BRAKE & HYDRO PROPEL CABLE

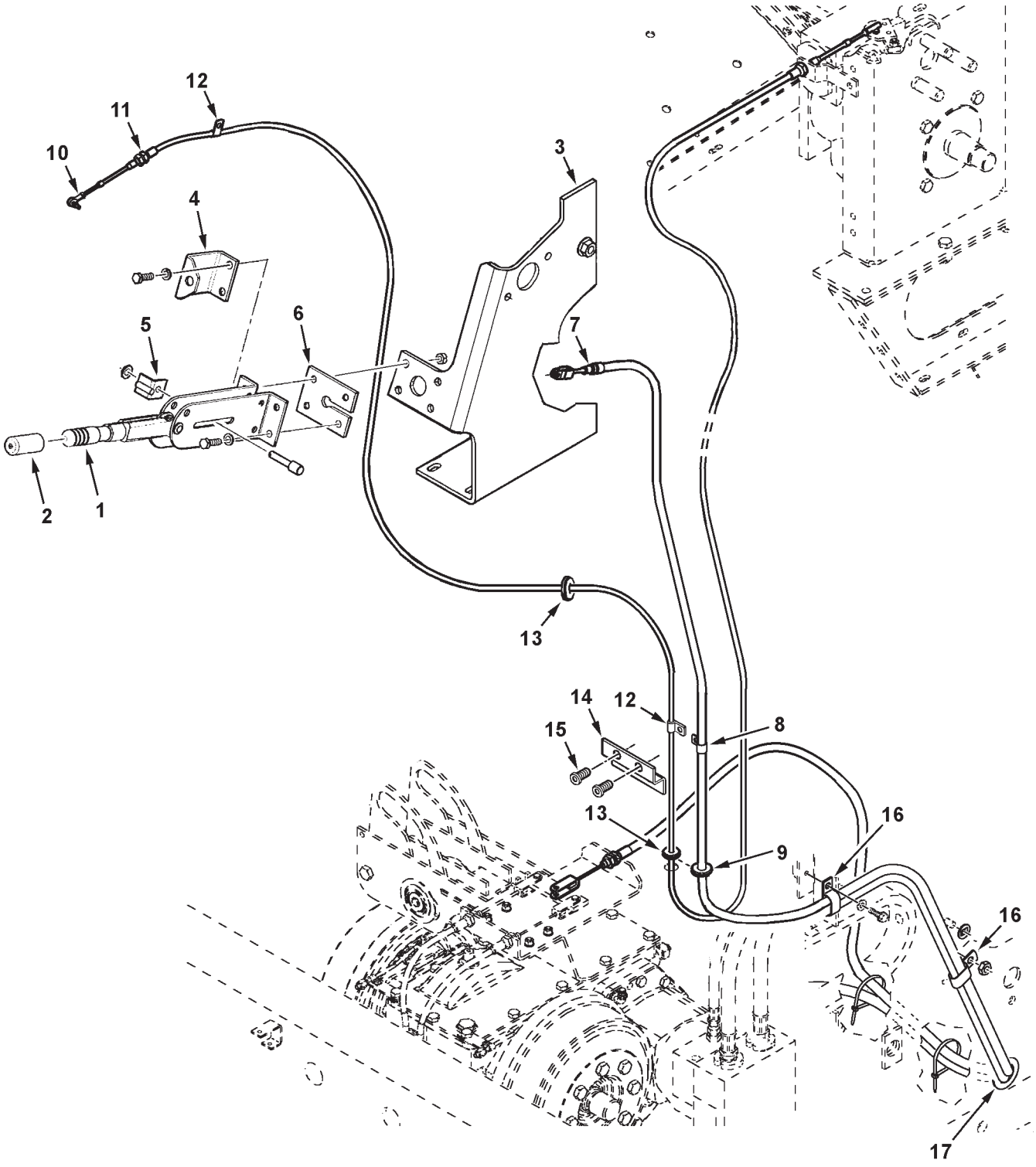

MC00396

https://truckmanualshub.com/

ITEM	NUMBER	QTY	DESCRIPTION
1	1774490W91	1	LEVER ASY., PARKING BRAKE
	70921333	4	CAPSCREW, 5/16-18 X 1.0 GR5
	70917356	4	LOCKWASHER, 5/16
	70917372	4	NUT, 5/16-18 REG
2	111711W1	1	HANDLE, GRIP
3	71394796	1	SUPPORT BRKT WLDMT
	70921977	4	CAPSCREW, 5/16-18 X 1-1/4
	Y705608	4	WASHER, 5/16 NARR
4	71394799	1	BRACKET, SWITCH
	71395848	1	SWITCH, PARK BRAKE (NOT ILL.)
5	1791851W91	1	BRACKET WLDMT, PARKING BRAKE
6	71379701	1	PLATE, ANCHOR
7	71394880	1	CABLE ASY., PARK BRAKE
8	70928656	1	CLAMP, CABLE, 5/8 X .406 HOLE
	70921965	1	CAPSCREW, 3/8-16 X 3/4
9	71395753	1	GROMMET
10	71351389	1	JOINT, BALL
	705004	1	LOCKWASHER, #10
	Y704445	1	NUT, #10-32
11	71391303	1	CABLE ASY., HYDRO
	700717644	2	NYLON TIE, .30 X 8.1 LG
12	70929720	2	CLAMP, TUBE, 5/16 X .406 HOLE
	70921965	1	CAPSCREW, 3/8-16 X 3/4
	70931277	1	LOCKNUT, HEX SERR FLANGE, 5/16-18
13	71395752	2	GROMMET
14	71397429	1	BRACKET ASY, CABLE SUPPORT (W/ INSERTS) (PRIOR S/N HP36101)
	Y703132	2	SCR,HEX SERR FLNG, 5/16-18 X 3/4 GR5
15	700725632	2	INSERT, THREADED, 3/8-16
16	70936472	2	CLAMP, DOUBLE, 9/16 DIA X .406 HOLE
	70931942	1	SPEED NUT, PUSH-ON, 3/8
17	8027427	1	GROMMET, 2.0 ID X 2.5 HOLE

MC00396
PR: 86

https://truckmanualshub.com/

CONTROL
GEARSHIFT

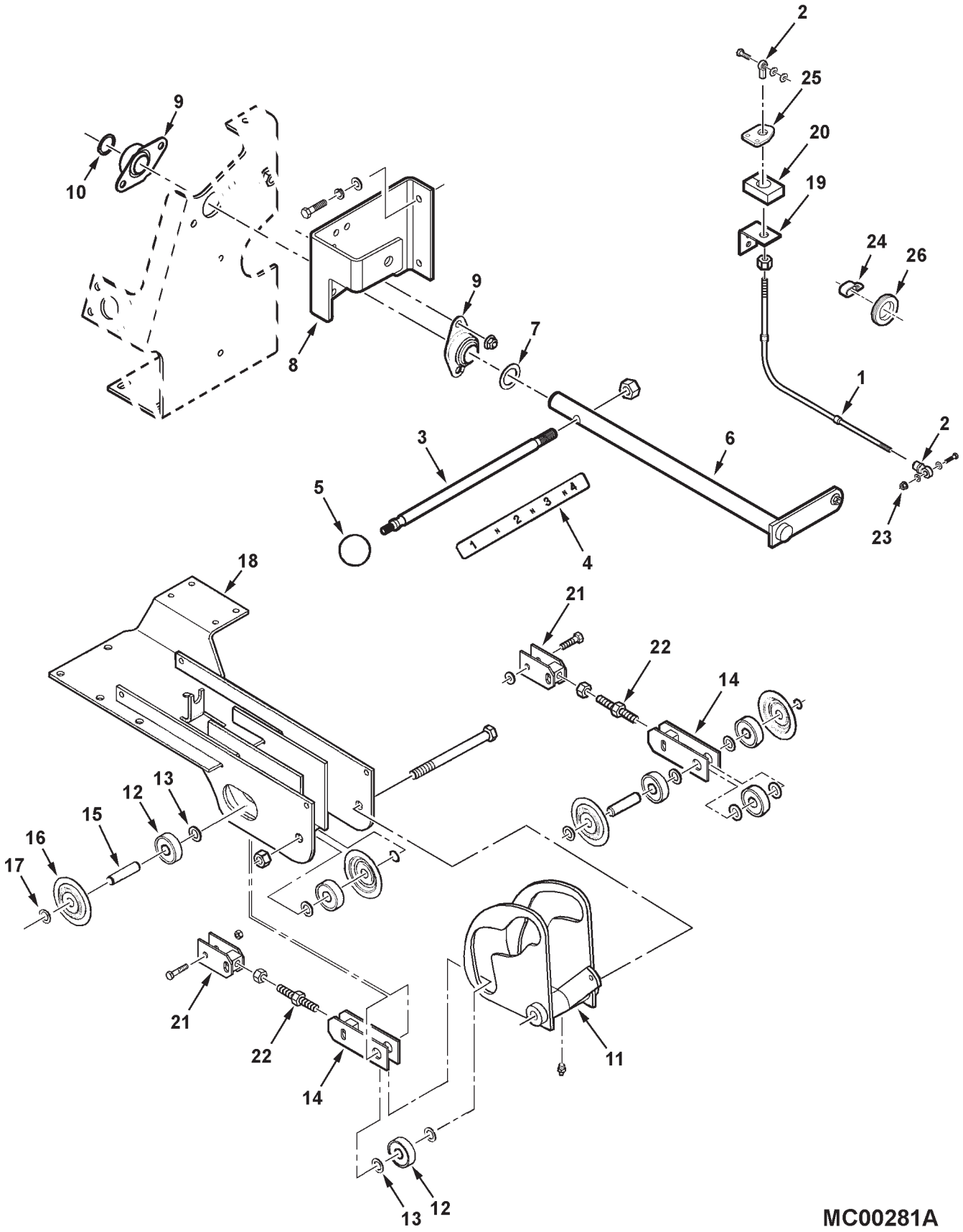

https://truckmanualshub.com/

ITEM	NUMBER	QTY	DESCRIPTION
1	71387205	1	CABLE ASY., SHIFTER
	700717644	2	NYLON TIE, .30 X 8.1 LG
2	700710788	2	BEARING, ROD END
	70921977	2	CAPSCREW, 5/16-18 X 1-1/4 GR5
	Y705525	4	WASHER, HARD, .344 X .688 X 16GA
3	71391515	1	LEVER
	Y704742	1	NUT, HEX FLANGE TOP LOCK, 1/2-13
4	71395770	1	DECAL, SHIFTER
5	71363845	1	KNOB
6	71391516	1	LEVER WLDMT, SHIFT
7	Y52209	1	WASHER, SPL, 1 X 1-1/2 X 18 GUAGE
8	71394795	1	SUPPORT WLDMT, SHAFT (LH)
	70921969	2	CAPSCREW, 3/8-16 X 1-1/2 GR5
	70916965	2	LOCKWASHER, 3/8
	70918266	2	WASHER, 3/8, NARROW
9	71394797	2	BEARING, FLANGE 1.0
	70921210	4	CAPSCREW, 3/8-16 X 1 GR5
	Y704734	4	NUT, HEX FLANGE TOP LOCK, 3/8-16
10	70927738	1	RETAINING RING
11	71387142	1	CAM WELD ASM
	70914465	1	LUBE FTG, STRAIGHT, 1/8-27 NPT
	70926137	1	CAPSCREW, 5/8-11 X 7" GR 5
	70923353	1	NUT, HEX CENTER LOCK, 5/8-11
12	711770	6	BEARING, ROLLER
13	52175	8	WASHER, SPL .62 X 1.0 X 18 GA, NON-PLTD
14	71397262	2	YOKE WLDMT, LONG
	70921221	2	CAPSCREW, 5/16-18 X 1-1/2
	70923362	2	NUT, CENTER LOCK, 5/16-18
15	71393301	2	PIN, SHIFTER
16	71393467	4	CAP, BEARING RETAINER
17	70927103	4	RING, RETAINING
18	71387148	1	BASE WELD ASM, SHIFTER
19	71396393	1	BRKT ASY, SHIFT CABLE(PRIOR S/N HP36101)
	7883333	2	SCREW, HX WSHR HD MACH, 5/16-18 X 1
	70917642	2	WASHER, 5/16, WIDE
20	71396394	1	SEAL, SHIFT CABLE (PRIOR S/N HP36101)
21	71397263	2	YOKE WLDMT, SHORT
22	71397261	2	STUD, YOKE, 3/8-16
	70917421	2	JAM NUT, 3/8-16
23	Y704726	1	NUT, HEX FLANGE TOP LOCK, 5/16-18
24	70936472	2	CLAMP, DOUBLE, 9/16 DIA X .406 HOLE
	70931942	1	SPEED NUT, PUSH-ON, 3/8
25	71406878	1	RETAINER WLMT, CABLE (EFF. S/N HP36101)
	70921210	4	CAPSCREW, 3/8-16 X 1 GR5
26	8027427	1	GROMMET, RUBBER (EFF. S/N HP36101)

https://truckmanualshub.com/

CONTROL
STEERING COLUMN

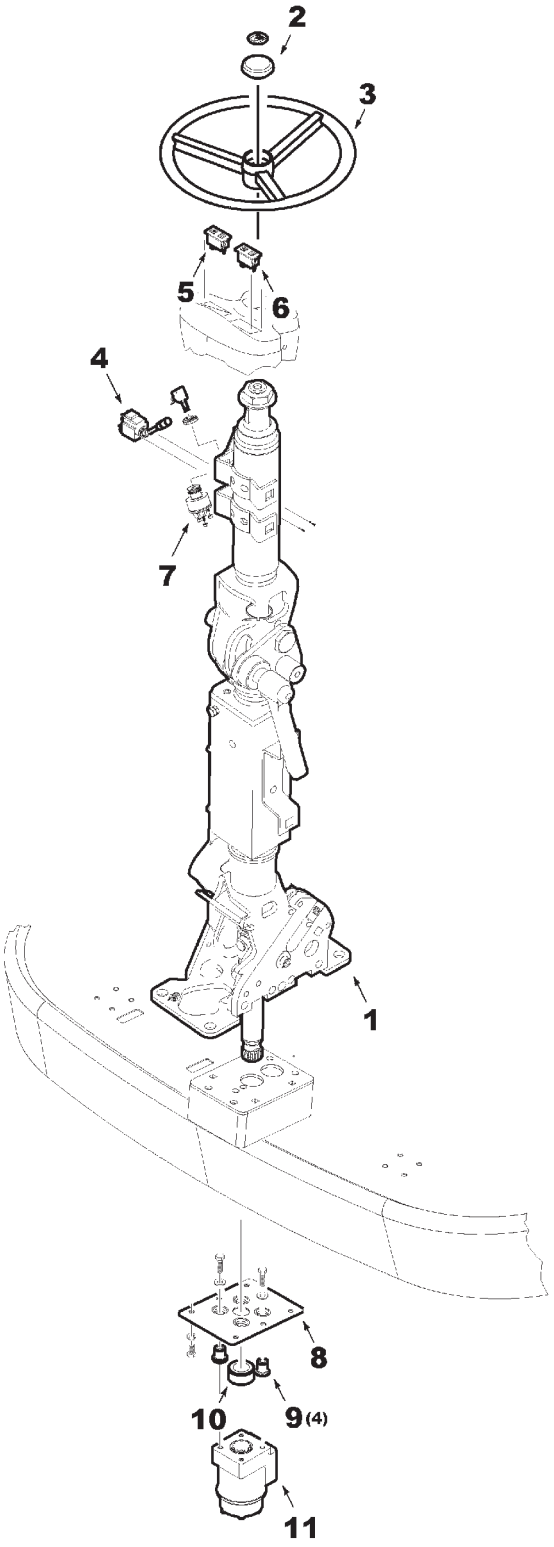

GC00302

https://truckmanualshub.com/

ITEM	NUMBER	QTY	DESCRIPTION
1	71407651	1	STEERING COLUMN ASY
	70921969	2	CAPSCREW, 3/8-16 X 1-1/2 GR5
	70916965	4	LOCKWASHER, 3/8
2	71387145	1	CAP, STRG. WHEEL, CENTER
	71395759	1	EMBLEM, MF
3	71387293	1	WHEEL, STEERING (LEATHER WRAPPED)
4	71390314	1	SWITCH, TURN SIGNAL/HORN
	700720909	2	SCREW, PAN HD MACH, M4 X 0.7 X 10
	70923906	2	WASHER, #8, NARROW
5	71393282	1	MODULE, BLINKER/WAIT TO START
6	71393281	1	MODULE, BLINKER/HIGH BEAM
7	700718010	1	SWITCH, IGNITION
	71395761	1	DECAL, IGNITION SWITCH
	71377109	1	KEY, IGNITION, X2
8	71390417	1	PLATE W/A, STRG. CONTROL
	70921965	6	CAPSCREW, 3/8-16 X 3/4
	70916965	6	LOCKWASHER, 3/8
	70920415	4	CAPSCREW, 3/8-16 X 1-1/4
	70917378	4	WASHER, 3/8, WIDE
9	700701287	4	MOUNT, RUBBER
10	72504036	1	SEAL, FOAM RING
11	71392876	1	STEERING CONTROL UNIT (200 CC/REV)
-	71391083	1	SEAL KIT, STRG CONTROL UNIT
			(NO OTHER SERVICED COMPONENTS)

GC00302
PR: 90

https://truckmanualshub.com/

STEERING COLUMN

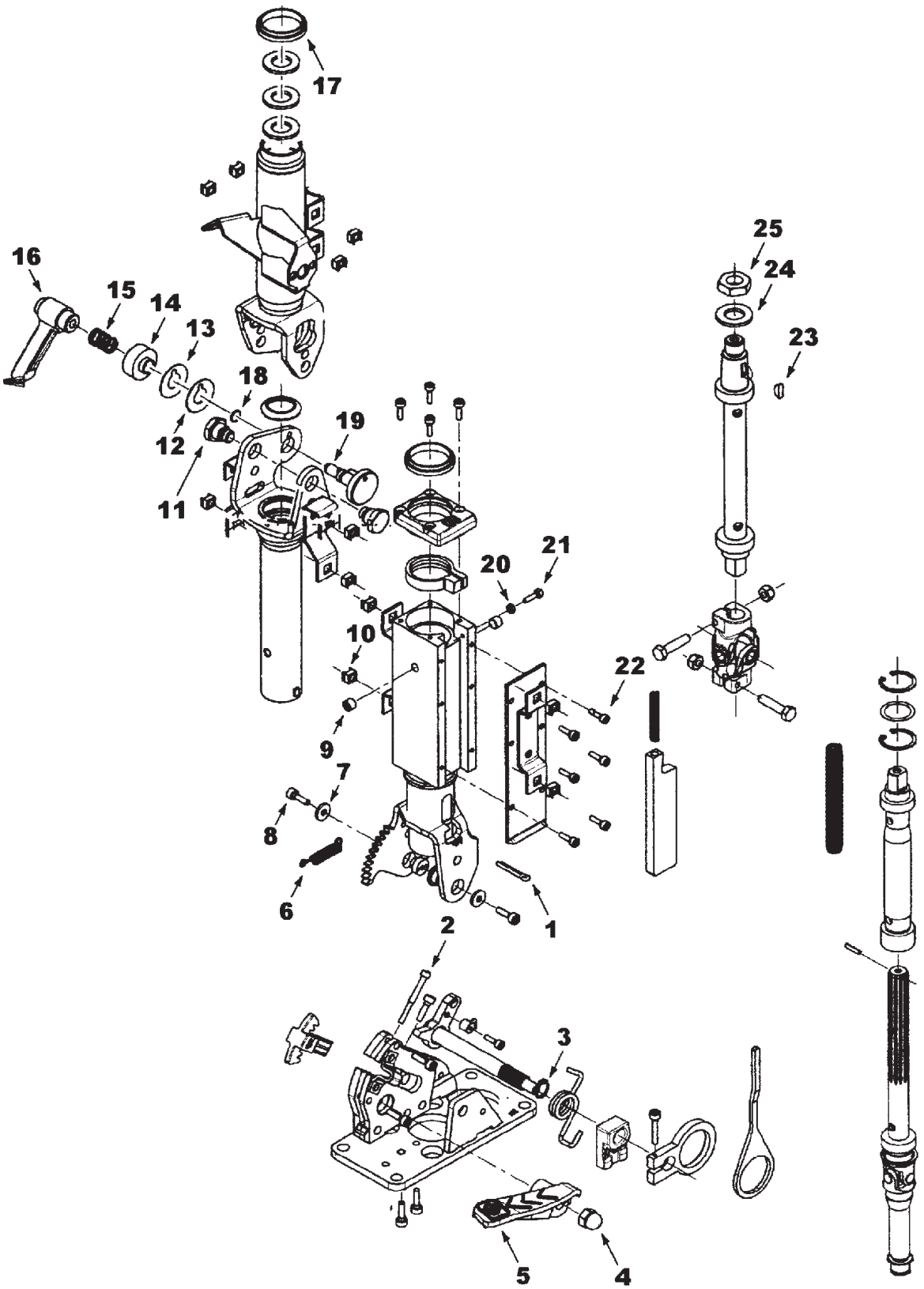

GC00396

https://truckmanualshub.com/

ITEM	NUMBER	QTY	DESCRIPTION
-	71407651	-	STEERING COLUMN ASY
1	70918459	1	COTTER PIN, 3/16 X 1-1/4
2	71397834	1	CAPSCR, HEX SOC HD, M5-1 X 50
3	71397830	1	RING, RETAINING, EXT.
4	71397550	1	NUT, HEX CAP, M10-1.5
5	71397543	1	PEDAL
6	71397546	1	SPRING, EXTENSION
7	71397827	2	WASHER, FLAT, M6
8	71397828	2	CAPSCR, HEX SOC HD, M6-1 X 18
9	71397833	2	SETSCREW, M10-1 X 8
10	71397829	12	NUT, CAGE, #10-24 (PRIOR S/N HP36101)
	71407652	12	NUT, CAGE, M5 (EFF. S/N HP36101)
	71407653	12	SCREW, M5 X 16, BLACK
11	71397539	2	SCREW, FULCRUM
12	71397544	1	SPACER, 1 MM TH.
13	71397542	1	SPACER, .5 MM TH.
14	71397541	1	RING
15	71397549	1	SPRING, COMPRESSION
16	71397548	1	HANDLE
17	71397545	2	GROMMET, RUBBER
18	71397835	1	O-RING, .344 ID X .070
19	71397547	1	STOP, TILT
20	71397540	1	NUT, HEX, M5-1.5
21	71397836	1	CAPSCREW, HEX, M5-1 X 18
22	71397826	11	CAPSCREW, HEX SOC HD, M5-1 X 16
23	71397831	1	KEY, WOODRUFF, 5 X 6.5 MM
24	700702979	1	WASHER, FLAT, 19 ID X 34 X 3 MM
25	71397832	1	NUT, HEX, M18-1.5

GC00396
PR: 92

https://truckmanualshub.com/

SEAT
OPERATOR & INSTRUCTOR

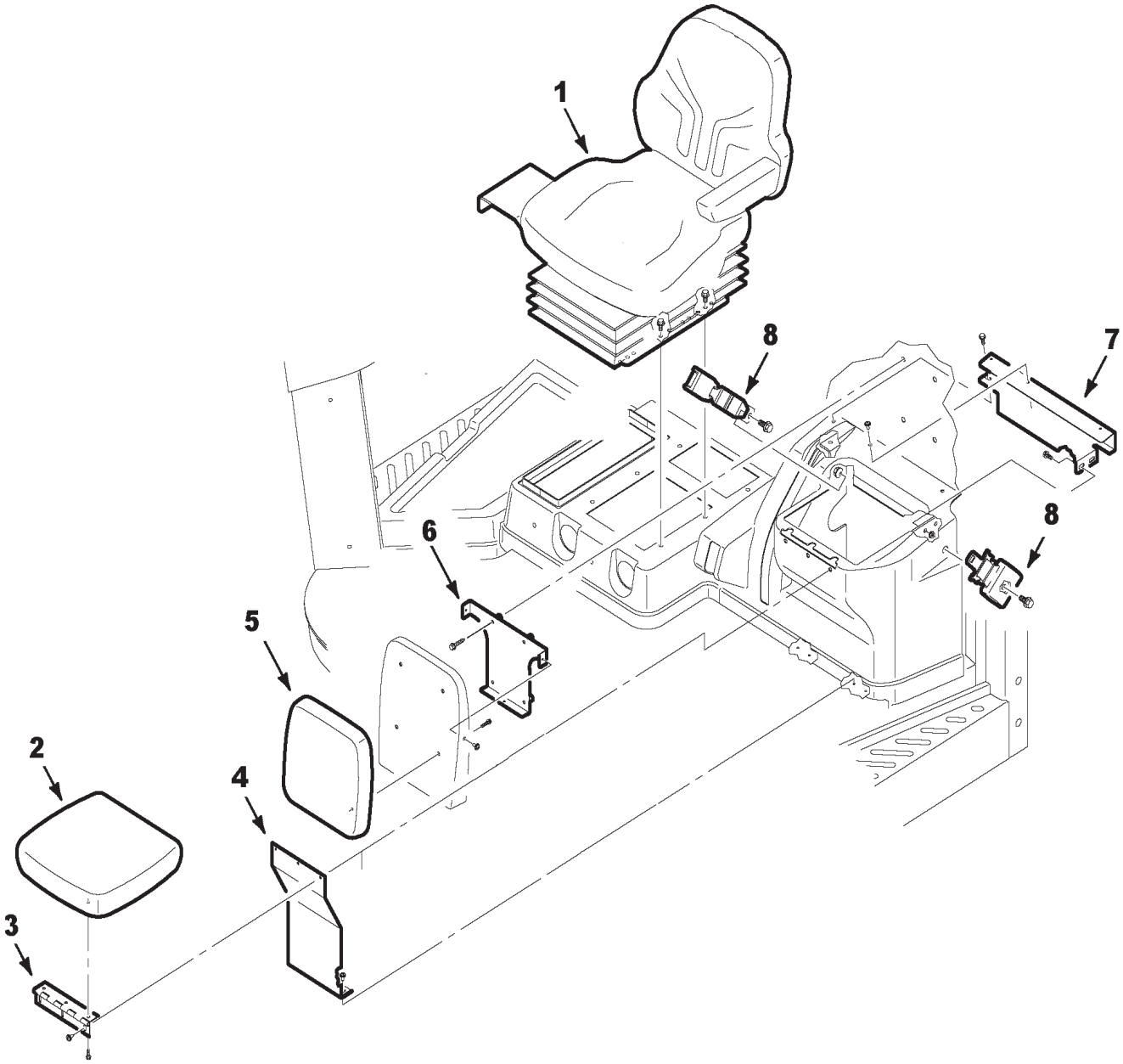

GC00306

https://truckmanualshub.com/

ITEM	NUMBER	QTY	DESCRIPTION
1	71388178	1	SEAT ASSEMBLY (SEE BREAKDOWN)
	7703432	4	SCREW, HEX SERR FLANGE, 3/8-16 X 3/4
2	71394888	1	CUSHION, INSTRUCTORS SEAT
	7883275	3	MACH SCR, HEX WSHR HD. 1/4-20 X 3/4
3	71394887	1	HINGE, INSTR. SEAT
	70937660	3	SCR, PAN HD, THD TAP'G 1/4-20 X 5/8
4	71394886	1	SUPPORT, INSTR. SEAT FRONT
	70937660	2	SCR, PAN HD, THD TAP'G 1/4-20 X 5/8
5	71394889	1	CUSHION, INSTRUCTORS SEAT BACK
	7883283	4	MACH SCREW, HEX WSHR HD, 1/4-20 X 1
6	71396377	1	BRACKET WLDMT, BACKREST MTG
	7772056	4	SCREW,HX SERR FLANGE,5/16-18 X 1-1/2
7	71394894	1	SUPPORT, INSTR. SEAT REAR
	7883325	3	MACH SCR, HEX WSHR HD. 5/16-18 X 3/4
	70931277	3	LOCKNUT, HEX SERR FLANGE, 5/16-18
	70937660	3	SCR, PAN HD, THD TAP'G 1/4-20 X 5/8
8	72502789	1	SEAT BELT ASY. (INCL. BOTH HALVES)
	7701592	2	SCREW, HEX SERR FLANGE, 1/2-13 X 1

GC00306
PR: 94

https://truckmanualshub.com/

SEAT
BASE & SUSPENSION

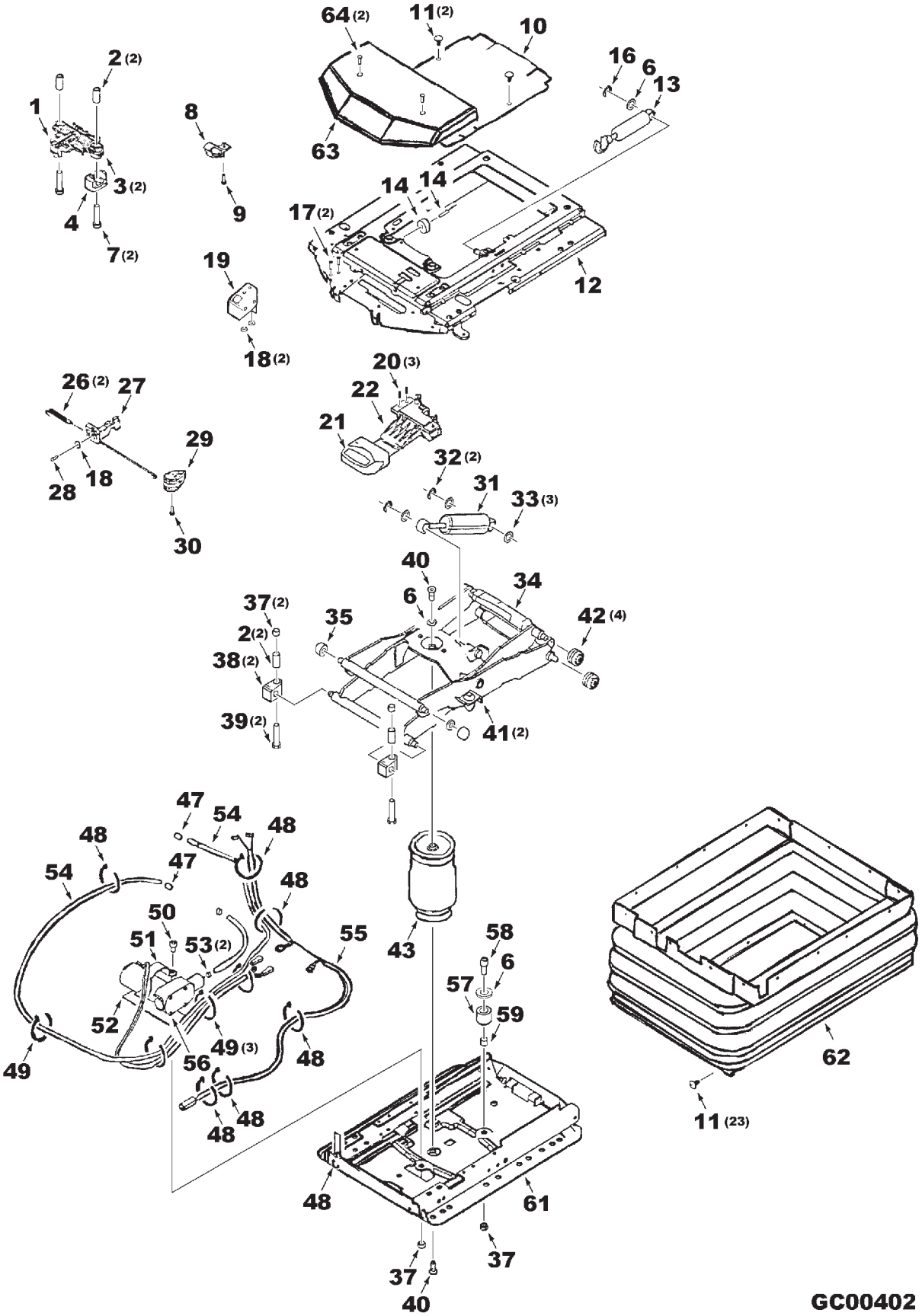

https://truckmanualshub.com/

ITEM	NUMBER	QTY	DESCRIPTION
-	71383653	AR	BASE & SUSPENSION ASY., COMPLETE
1	72504803	1	KIT, ISOLATOR, HORIZ, (INCL. ITEMS 2, 3, 4, 7, 9, 11, 14, 35)
2	72504802	4	TUBE
3	72504775	2	BUSHING
4	72504804	1	BUMPER
6	390972X1	3	WASHER, 8.4-HV140
7	7772361	2	SCREW, M8-1.25 X 35
8	72504791	2	KIT, STOP (INCL ITEMS 9, 11)
9	72504792	2	RIVET, 4 X 16.9MM
10	72514069	1	COVER
11	71306949	25	PLUG, RETAINER
12	71398172	1	KIT, SUSPENSION UPPER (INCL ITEMS 9, 11, 14, 18, 19, 26-29, 35, 42)
13	700725845	1	KIT, SHOCK ABSORBER (INCL ITEMS 6,11,16)
14	72504785	1	KIT, BUMPER & RIVET
16	72504740	1	CLIP RING, RETAINING
17	72514052	2	RIVET, 4 X 12MM
18	72504786	3	WASHER, 4.3-HV140
19	71398174	1	KIT, LEVEL CONTROL (INCL. 11, 17, 18)
20	71398175	3	SCREW, M5 X 16
21	700725844	1	HANDLE
22	72514061	1	KIT, OPERATION (INCL ITEMS 11, 20, 21)
26	3903044M1	2	SPRING, TENSION
27	72514070	1	KIT, LEVER, LOCKING (INCL ITEM 11)
28	71398726	1	SCREW, M3.5 X 12
29	AG132254	1	HANDLE
30	72514066	1	SCREW, M4 X 14
31	700725843	1	KIT, SHOCK ABSORBER (INCL ITEMS 5, 11, 32, 33)
32	72504812	4	CLIP RING, RETAINING
33	72504776	3	WASHER, 13MM
34	71398727	1	KIT, SWING ARM (INCL ITEMS 2, 6, 9, 11, 35, 37, 38, 40-42, 48-50)
35	71401534	2	ROLLER
37	71383667	4	NUT, M8-SI
38	72504809	2	BEARING
39	72504808	2	SCREW
40	72504811	2	SCREW, M8 X 20 TORX
41	70263605	2	BUMPER
42	72504810	4	ROLLER
43	700724622	1	KIT, AIR SPRING (INCL ITEMS 6, 11, 40, 47, 48, 53)
47	700725840	2	NIPPLE, HOSE
48	70932747	7	TIE, BLACK NYLON, SELF-LOCK .10 X 4.0
49	70925094	4	TIE, BLACK NYLON, SELF-LOCK .18 X 7.3
50	1112299	1	SCREW, M8 X 12

CONTINUED

https://truckmanualshub.com/

SEAT
BASE & SUSPENSION

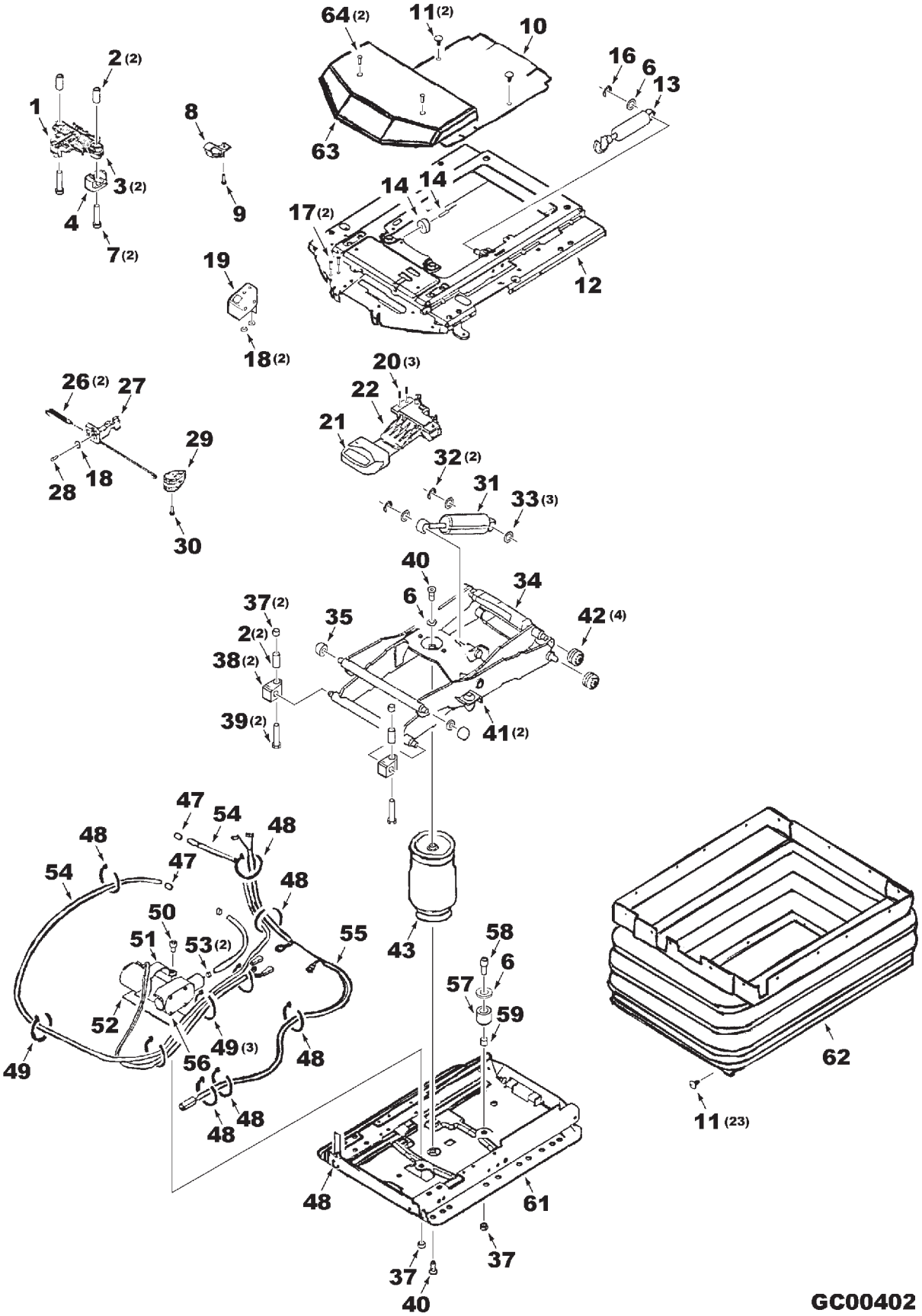

https://truckmanualshub.com/

ITEM	NUMBER	QTY	DESCRIPTION
51	72511891	1	BRACKET
52	72504762	1	PLATE
53	700725837	2	CLAMP, HOSE
54	700724623	1	KIT, AIR TUBE (REPAIR AIR LINES BETWEEN COMPRESSOR & AIR SPRING)
55	700725836	1	KIT, CABLE, CONNECTING (INCL ITEMS 11, 48, 49)
56	700728301	1	KIT, COMPRESSOR (INCL ITEMS 11,37,48-53)
57	72514067	1	KIT, BUMPER (INCLS ITEMS 6, 11, 37, 58, 59)
58	72514054	1	SCREW, M8 X 20
59	72514053	1	TUBE
61	71398728	1	KIT, SUSPENSION, LOWER (INCL ITEMS 2,11, 37-40, 42, 48-50, 57)
62	71383661	1	KIT, BELLOWS (INCL ITEM 11)
63	71383662	1	KIT, COVER (INCL ITEM 64)
64	2813878M1	2	RIVET, 4.8 X 10.3
-	71398173	1	KIT, WEAR PARTS (INCL. 2, 4, 9, 11, 14, 35, 38, 40-42, 48-50, 53 & 57)

GC00402
PR: 96

https://truckmanualshub.com/

SEAT
CUSHION AND BACKREST

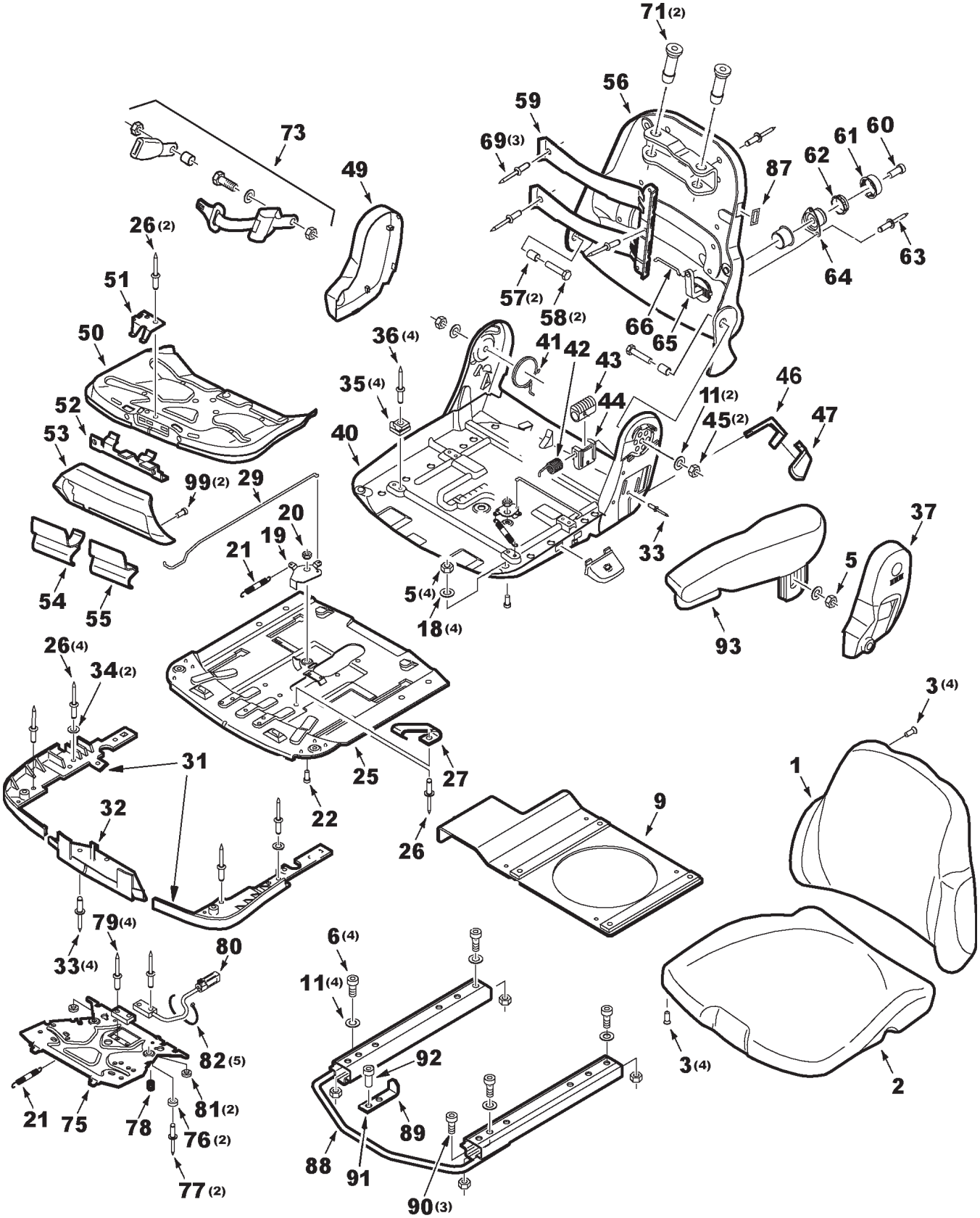

GC00403

https://truckmanualshub.com/

ITEM	NUMBER	QTY	DESCRIPTION
1	700725806	1	KIT, BACKREST CUSHION (INCL ITEM 3)
2	71398730	1	KIT, SEAT CUSHION (INCL ITEM 3)
3	71398731	8	SCREW, M5 X 25
5	72513700	5	NUT, M8
6	71383673	4	SCREW, M8 X 25
9	71388157	1	PLATE WLDMT, CONSOLE SUPPORT
11	391039X1	4	WASHER M8 WIDE, 9.0MM X 24 X 1.82 TH
18	390972X1	4	WASHER M8 STD, 9.0MM X 17 X 1.36 TH
19	71400508	1	KIT, LEVER, DEPTH ADJUST (INCL ITEMS 20, 21, 22)
20	71400509	1	BUSHING
21	700725810	2	SPRING, EXTENSION
22	71400510	1	SCREW, M8 X 12
25	71398733	1	KIT, PLATE FOR SEAT DEPTH
26	72514076	7	RIVET, 4 X 8
27	71398734	1	BRACKET, SPRING
29	71398735	1	ROD, ADJUSTER
31	71398736	1	KIT, SEAT ANGLE COVERS(INCL ITEMS 26,34)
32	71398737	1	KIT, BRACKET (INCL ITEM 33)
33	71398740	5	RIVET, 6 X 12
34	72504786	2	WASHER, 4.3MM
35	71398738	4	GLIDE
36	71398739	4	RIVET, 4 X 16
37	71398741	1	COVER, ARMREST
40	71398742	1	KIT, SEAT PAN (INCL ITEMS 11, 33, 35, 36, 45, 57, 58)
41	71398743	1	SPRING, TORSION
42	71398744	1	SPRING, SPIRAL
43	71398746	1	WORM GEAR
44	71398745	1	KIT, BEARING (INCL ITEMS 33, 43)
45	71383667	2	NUT, M8
46	- - - - -	1	KIT, BACKREST TILT LEVER (INCL ITEMS 33, 47)(NOT AVLBL AT TIME OF PRINT)
47	-----	1	KNOB (NOT AVAILABLE AT TIME OF PRINTING)
49	71398749	1	COVER, ARMREST
50	71398750	1	KIT, SEAT ANGLE ADJUST(INCL ITEMS 3, 51)
51	71398777	1	BRACKET, SPRING
52	71398778	1	LATCH
53	71398779	1	KIT, COVER, FORE & AFT (INCL ITEM 99)
54	71398780	1	KIT, HANDLE, SEAT DEPTH (INCL ITEM 29)
55	71398781	1	HANDLE
56	71398782	1	BACKREST ASY
57	71398783	2	TUBE
58	71398784	2	SCREW, M8 X 40
59	71398786	1	KIT, LUMBAR SUPPORT (INCL ITEMS 60-69)
60	71398785	1	SCREW, M6 X 10

CONTINUED

https://truckmanualshub.com/

SEAT
CUSHION AND BACKREST

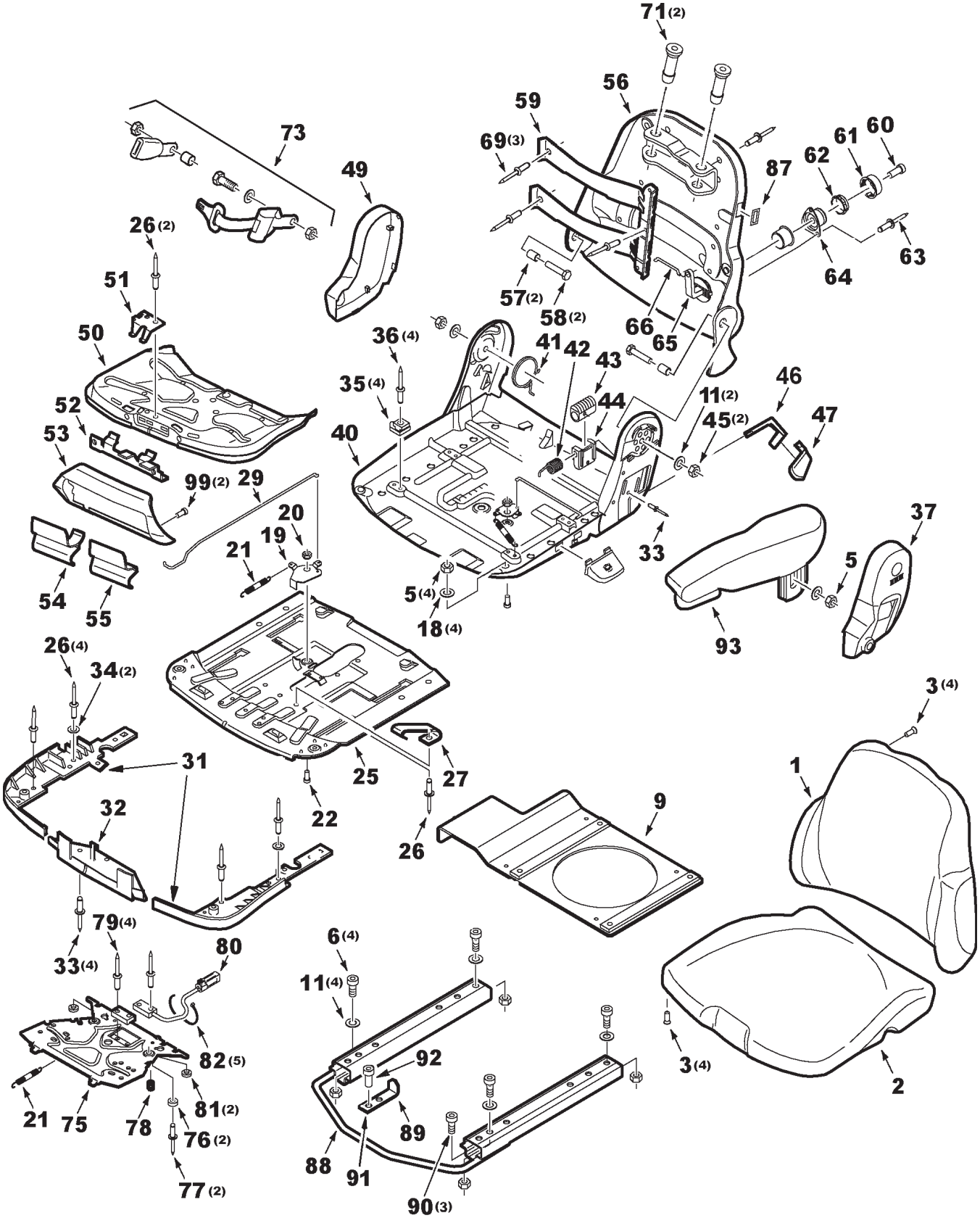

https://truckmanualshub.com/

ITEM	NUMBER	QTY	DESCRIPTION
61	71398787	1	KIT, HANDLE, LUMBAR ADJ (INCL ITEM 60)
62	71398788	1	WHEEL, TOOTHED
63	71398789	3	RIVET, 3.2 X 8
64	71398790	1	SLING, SPRING BRAKE
65	71398791	1	CARRIER
66	71398792	1	ROD, LINK
69	71398795	3	RIVET, 4 X 8
71	71398796	2	BUSHING
73	700725833	1	SEAT BELT ASY
75	700725871	1	KIT, OPERATOR PRESENCE SWITCH MTG (INCL ITEMS 21, 76, 77, 78, 80, 81)
76	-----	2	SPACER (NOT SERVICED SEPARATELY)
77	-----	2	RIVET (NOT SERVICED SEPARATELY)
78	71398798	2	SPRING, COMPRESSION
79	71398799	4	RIVET, 3.2 X 14
80	71398800	1	KIT, SWITCH (INCL ITEMS 79, 82)
81	72272098	2	GROMMET
82	70932747	5	TIE, BLACK NYLON, SELF-LOCK .10 X 4.0
87	71398801	1	COVER
88	71398802	1	RAIL ASY, ADJUSTMENT
89	71398732	1	KIT, ADJUSTMENT RAIL MOUNTING (INCLUDES ITEMS 90, 91, 92)
90	72514055	3	SCREW, M8 X 16
91	71398803	1	ANGLE
92	391148X1	1	CAPSCREW, HEX SOCKET HD, M8 X 20 CL8.8
93	71398804	1	ARMREST ASY
99	71398175	2	SCREW, M5 X 16

GC00403
PR: 100

https://truckmanualshub.com/

HVAC
PRESSURIZER UNIT & DUCTING

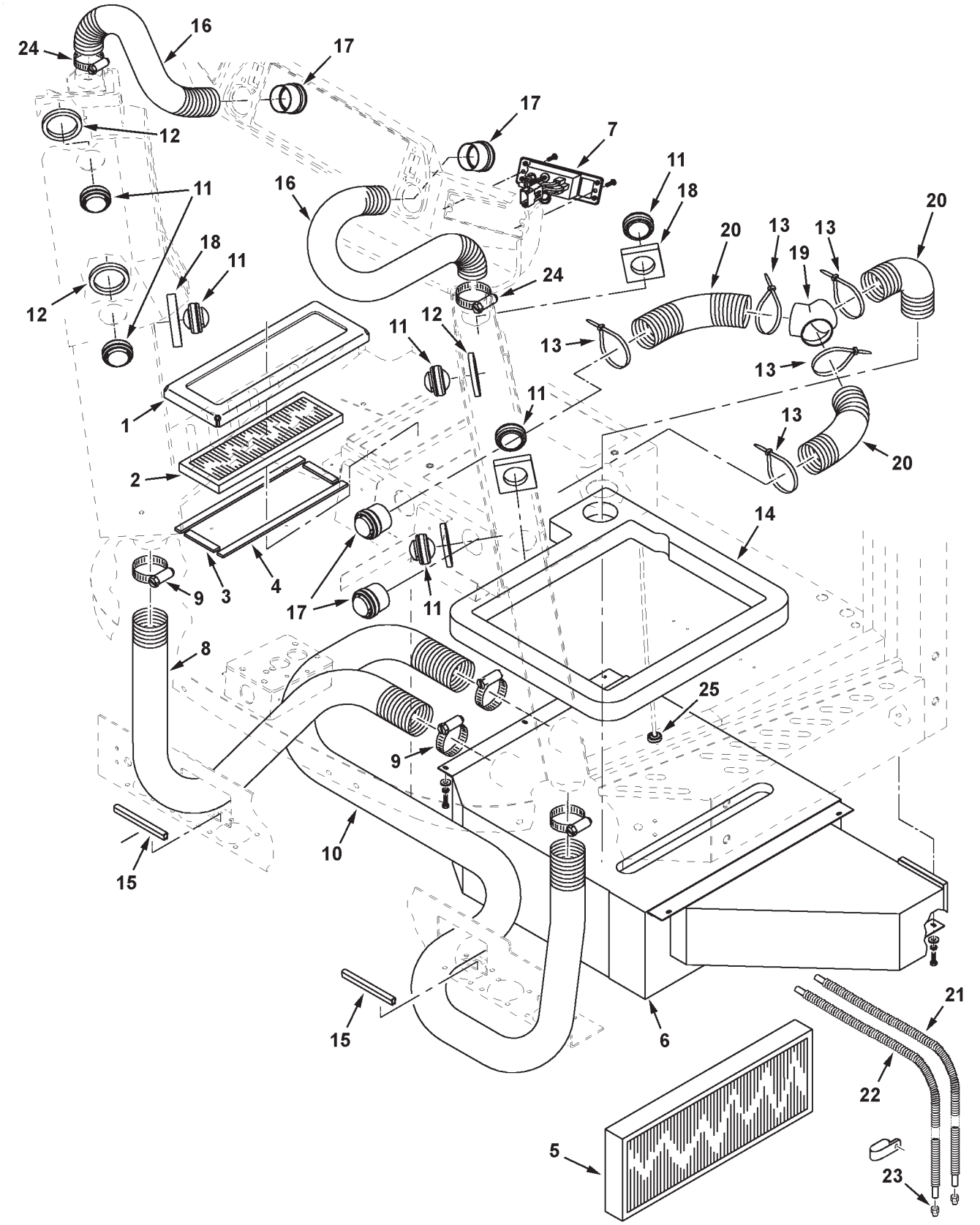

https://truckmanualshub.com/

ITEM	NUMBER	QTY	DESCRIPTION
1	71393463	1	RETAINER, FILTER
2	71391153	1	AIR FILTER
3	71393620	2	SEAL, AIR FILTER (SHORT)
4	71393619	2	SEAL, AIR FILTER (LONG)
5	71393893	1	AIR FILTER
6	- - - -	1	HVAC ASY. (SEE BREAKDOWN)
			(REQUIRES ITEM 14 & 71408216
			ASSEMBLY INSTR, PRIOR S/N HP36101)
	70921333	6	CAPSCREW, 5/16-18 X 1.0
	70917356	6	LOCKWASHER, 5/16
	700709602	6	WASHER, 5/16
7	71409581	1	CONTROL PANEL ASY. (SEE BREAKDOWN)
	7703457	2	CAPSCREW, 1/4-20 X 3/4 GR5
8	71393949	1	HOSE, FLEX AIR
9	70936813	4	CLAMP, HOSE
10	71393948	1	HOSE, FLEX AIR
11	72161024	7	LOUVER ASY., BALL
12	71393617	4	SEAL, DEFROST LOUVER
13	3619622M1	5	TIE, NYLON
14	71401526	1	SEAL (EFF. S/N HP36101)
	71393551	AR	ADHESIVE SPRAY
15	71387797	2	TRIM, EDGE PROTECTOR (EFF. S/N HP36101)
16	71393950	2	HOSE, FLEX AIR
17	71388188	4	LOUVER ASY., BALL
18	71393616	3	SEAL, A/C LOUVER
19	71391175	1	CONNECTOR, HOSE "Y"
20	71391322	3	HOSE, FLEX AIR
21	71396381	1	HOSE, DRAIN, 88" LONG
22	71396382	1	HOSE, DRAIN, 108" LONG
	700717644	3	TIE, NYLON
	70928148	1	CLAMP, DBL, 3/4 DIA X .406 HOLE
23	71396390	2	RESTRICTOR, DRAIN
24	7720063	2	CLAMP, HOSE
25	700728474	2	GROMMET, .109 ID (EFF. S/N HS36101)
-	71400513	-	KIT, HVAC HI-SPEED BLOWER PERF UPGRADE
			(APPLIES TO S/N HM36101 THRU HM36162)
			(INCLUDES FOLLOWING)
-	71400520	1	WIRE HARNESS ASY, W/FUSE
-	70937609	AR	MINI FUSE, 25 AMP
-	71398820	1	RELAY
-	71400522	1	GROMMET, 3/8 ID X 5/8 PANEL DIA
-	71400521	1	PLATE, RESTRICTOR
-	71400523	5	SCREW, HX SERR WSHR HD, #10-16 X 1/2
-	70925094	10	TIE, BLACK NYLON, SELF-LOCK .18 X 7.3

https://truckmanualshub.com/

HVAC
CONTROL PANEL
(PRIOR S/N HS36---)

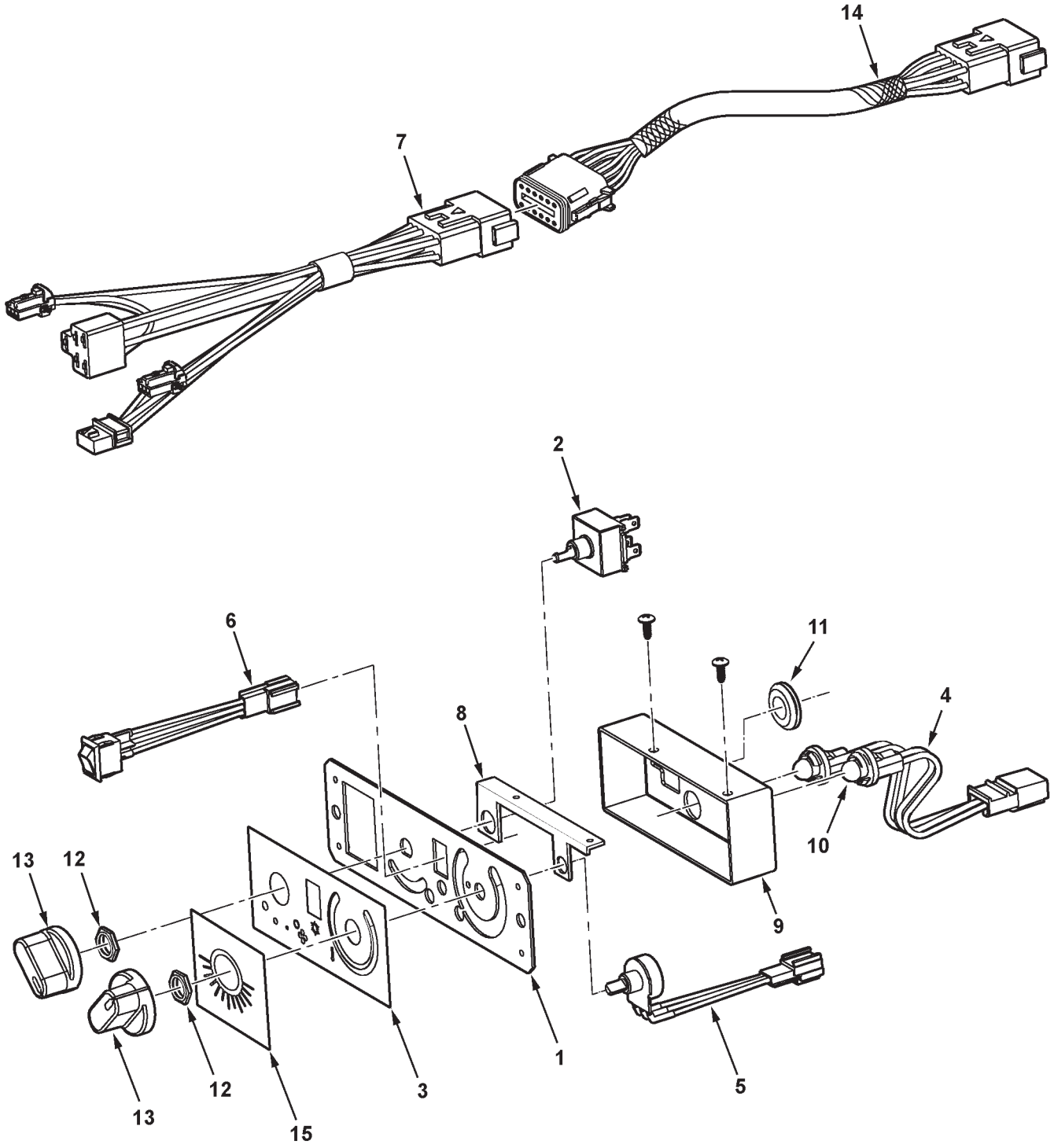

GCOO314

https://truckmanualshub.com/

HVAC
CONTROL PANEL
(PRIOR S/N HS36---)

ITEM	NUMBER	QTY	DESCRIPTION
-	71409581	1	CONTROL PANEL ASY. (INCL. ITEMS 1-13)
-	71395763	1	BEZEL, HVAC (MANUAL ADJ. MIRRORS)(PRIOR S/N HP36101)(NOT ILLUS.)(ALSO SEE MIRRORS)
-	71393943	1	BEZEL, HVAC (REMOTE ADJUST MIRRORS) (NOT ILLUSTRATED)(ALSO SEE MIRRORS)
1	71397433	1	CONTROL HOUSING ASY
2	71397432	1	SWITCH, BLOWER
3	71409582	1	DECAL, CONTROL PANEL
4	71397434	1	SOCKET ASY. LAMP
5	71401548	1	POTENTIOMETER, HEATER CONTROL
6	71397438	1	SWITCH, A/C
7	71397439	1	WIRE HARNESS
8	71397440	2	BRACKET, LIGHT BOX
9	71397437	1	LIGHT BOX
	71373144	2	SCREW, #8-18 X 1/2
10	71397443	2	BULB, LIGHT
11	71397441	1	GROMMET, RUBBER
12	71373145	2	NUT
13	71397436	2	KNOB, CONTROL
14	71410922	1	HARNESS, A/C JUMPER (PRIOR S/N HR36--)
15	71408221	1	DECAL, OVERLAY, A/C
-	700525400	AR	KIT, ADJUSTABLE THERMOSTAT (APPLIES TO S/N'S HM,HN,HP,& HR) (FIELD INSTALL) INCLUDES FOLLOWING:
	700164650	1	MOUNTING BRKT
	700728631	1	DECAL, THERMOSTAT
	700728473	1	THERMOSTAT COVER
	700728714	1	CONTROL KNOB
	7703457	1	CAPSCREW, 1/4-20 X 3/4 GR5
	700725633	1	INSERT, THREADED, 1/4-20
	700728845	1	PACKGE, ADJ THERMOSTAT & WATER VALVE
	700728474	2	GROMMET, .109 ID X 5/16 PANEL HOLE
	727693	2	GROMMET, 1/4 ID X 3/8 PANEL HOLE
	71413084	1	WIRE ASY, HVAC JUMPER
	70937660	1	SCREW,PAN HD TAPPING, 1/4-20 X 5/8

GC00314
PR: 106

https://truckmanualshub.com/

HVAC CONTROL PANEL
(EFF. S/N HS36101)

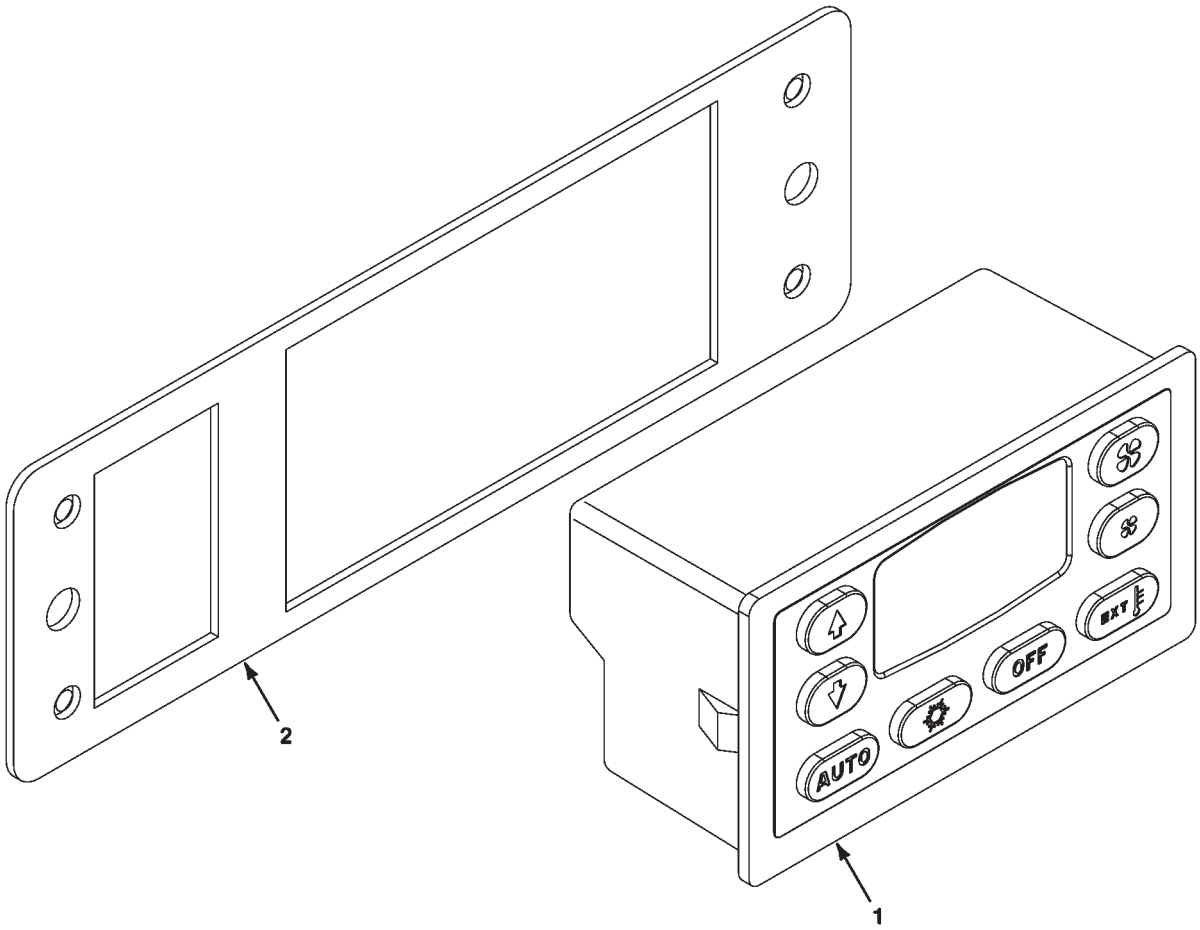

MC00570

https://truckmanualshub.com/

HVAC CONTROL PANEL
(EFF. S/N HS36101)

ITEM	NUMBER	QTY	DESCRIPTION
1	71418427	1	MODULE-AUTO TEMP CONTROL
2	71413067	1	PLATE-MOUNTING, HVAC

MC00570
PR: t07a23o20b0002

https://truckmanualshub.com/

HVAC PRESSURIZER UNIT
EVANS-TEMPCON
(PRIOR S/N HS36---)

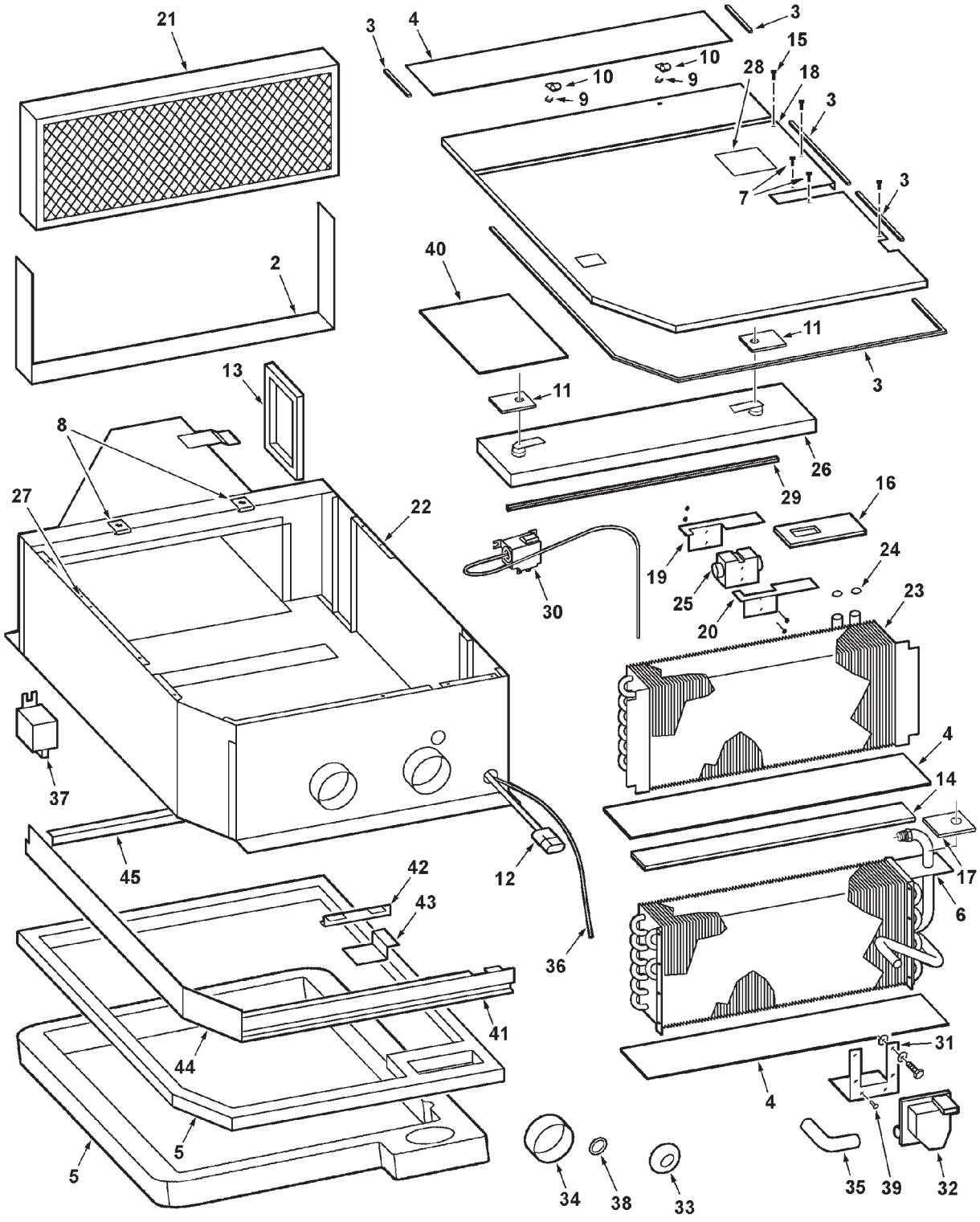

https://truckmanualshub.com/

HVAC PRESSURIZER UNIT
EVANS-TEMPCON
(PRIOR S/N HS36---)

ITEM	NUMBER	QTY	DESCRIPTION
-	71408222	1	HVAC ASY. (PRIOR S/N HR36221)
-	700728713	1	HVAC ASY. (EFF. S/N HR36221) (INCLUDES FOLLOWING)
2	71371331	1	TAPE, FOAM 1/4 X 1-1/2 (3.50 FT)
3	71397934	1	TAPE, FOAM, 1/4 X 1/2
4	71371333	1	TAPE, FOAM 1/8 X 3-7/8 (6.0 FT)
5	71401530	1	TAPE, FOAM 1" X 1-1/8" (8.67 FT)(PRIOR S/N HP36101)
	71401526	1	SEAL (EFF. S/N HP36101) (NOT INCLUDED IN A/C & HTR ASY)
6	71397445	1	HEATER CORE (PRIOR S/N HN36...)
	71401546	1	HEATER CORE (EFF. S/N HN36...)
7	71400523	2	SCREW, #10, SELF DRILLING
8	71371336	2	RECEPTACLE, CLIP-ON, #5 STUD
9	71384272	2	RETAINER, PUSH ON
10	71371338	2	FASTENER, 1/4 TURN
11	71397444	2	SEAL, DRAIN TUBE
12	71397446	1	HARNESS, WIRING
13	71397447	1	GASKET, FRESH AIR
14	71384552	1	FOAM TAPE, 3/8 X 2 (21.62" LG)
15	71373146	10	SCREW, SELF TAPPING, #10-24
16	71371343	1	SEAL, EXPANSION VALVE
17	71397449	1	SEAL, HEATER TUBES
18	71408215	1	COVER & FILTER DOOR ASY. (INCL. TAPE & POP-RIVETS)
	70924947	5	POP-RIVET, 1/8 X .251-.312
19	71371346	1	BRACKET, EXPANSION VALVE, R.H.
20	71371347	1	BRACKET, EXPANSION VALVE, L.H.
	353509X1	2	BOLT, 1/4-28 X 1-1/2
	70930760	2	NUT, LOCK, 1/4-28
21	71393893	1	FILTER, AIR
22	71406891	1	CASE ASY (INCL. ITEMS 2,4,8,13,27,33, 34 & 38)(CASE WLMT NOT SERVICE)
	700728745	1	CASE WLMT(EFF. S/N HR36221 THRU HS36---)
23	71371349	1	EVAPORATOR ASY. (INCL. ITEMS 24 & 25) (PRIOR S/N HN36...)
	71373126	1	EVAPORATOR UNIT (PRIOR S/N HN36)
	71401545	1	EVAPORATOR ASY. (INCL. ITEMS 24 & 25) (EFF. S/N HN36...)(SEE * NOTE)
24	70937295	2	O-RING, #8, R134a
25	71373127	1	VALVE, EXPANSION (REQUIRES SEAL IT. 16)
26	71397926	1	PAN ASY., DRAIN
27	70937424	10	NUT, SPEED
28	71397927	1	LABEL, WARNING, R134a
29	71397448	1	FOAM SEAL, 1/4 X 1/2 (DRAIN PAN)
30	71397929	1	THERMOSTAT, COLD CONTROL (PRIOR HR36221)
31	71397933	1	BRACKET, WATER VALVE
32	71408211	1	WATER VALVE ASY, (PRIOR S/N HR36221)
	700728746	1	WATER VALVE ASY, (EFF. S/N HR36221)
	70921959	4	CAPSCREW, 1/4-20 X 5/8
	70926622	4	HEXNUT, 1/4-20
33	71397932	1	GROMMET, WIRE

CONTINUED

https://truckmanualshub.com/

HVAC PRESSURIZER UNIT
EVANS-TEMPCON
(PRIOR S/N HS36---)

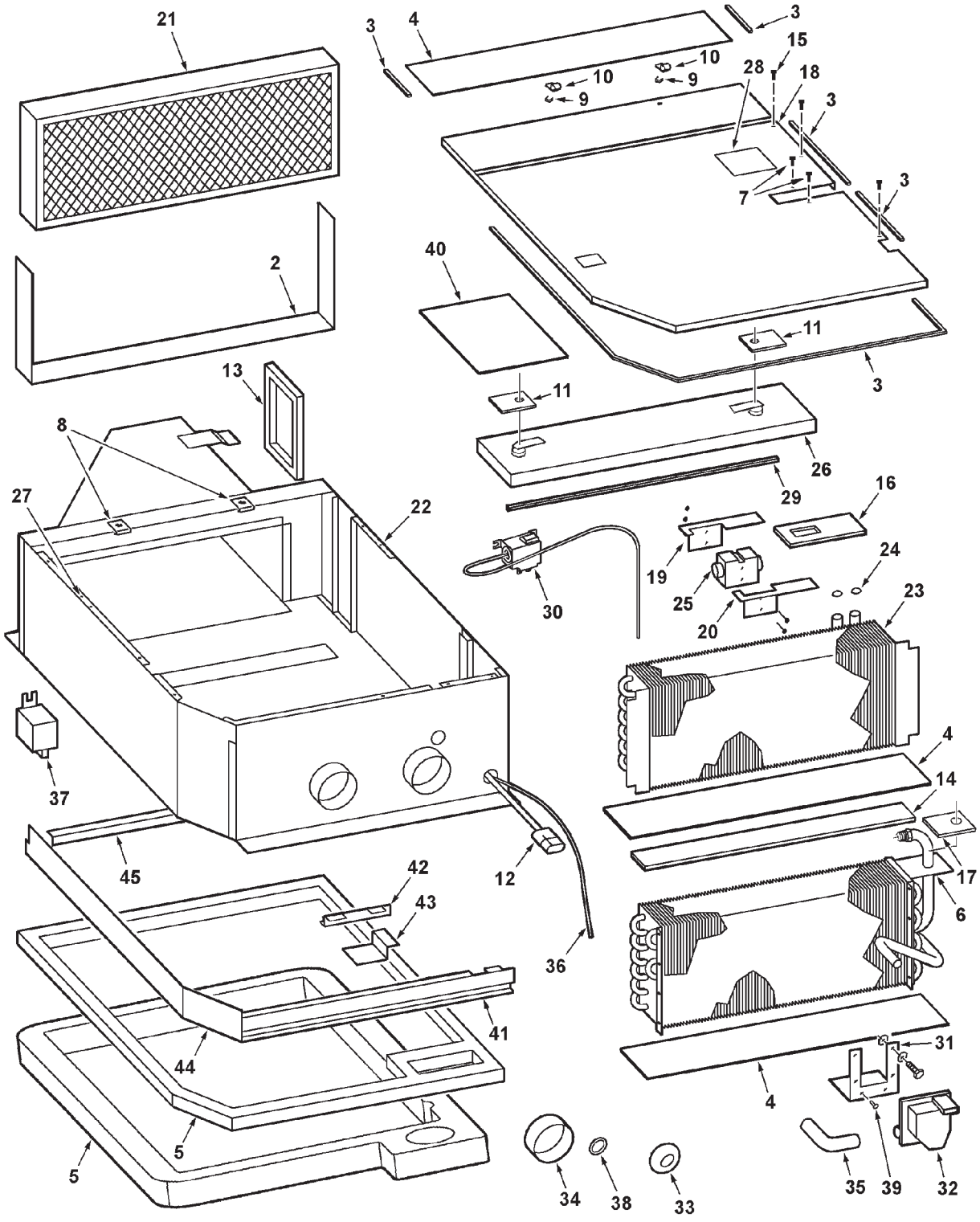

https://truckmanualshub.com/

HVAC PRESSURIZER UNIT
EVANS-TEMPCON
(PRIOR S/N HS36---)

ITEM	NUMBER	QTY	DESCRIPTION
34	71384551	2	STRIP, CLOSED CELL FOAM, 1/8 X 1 X 9.4"
35	71408209	1	HOSE, FORMED 90DEG (WATER VALVE TO CORE)
	70921911	2	CLAMP, HOSE, WORM DR, .69-1.25 DIA
36	71398819	1	WIRE HARNESS ASY, HI SPEED, W/FUSE
	70937609	AR	MINI FUSE, 25 AMP (NOT ILLUS.)
37	71398820	1	RELAY
38	71397930	1	SNAP BUSHING
39	71373144	24	SCREW, TAPPING, #8-18 X 1/2
40	71408210	1	LABEL, WIRING DIAGRAM
41	-----	1	SPACER, OUTLET (NOT SERVICED)(PRIOR S/N HP36101)
42	-----	1	SPACER, RECIRCULATOR (NOT SERVICED) (PRIOR S/N HP36101)
43	-----	1	SPACER, RECIRCULATOR END (NOT SERVICED) (PRIOR S/N HP36101)
44	-----	1	SPACER, FRONT (NOT SERVICED)(PRIOR S/N HP36101)
45	-----	1	SPACER, FRESH AIR (NOT SERVICED)(PRIOR S/N HP36101)
-	700707823	AR	SEALANT, SILASTIC (NOT ILLUS.)

* NOTE: UPGRADE OF A/C COOLING FOR MACHINES PRIOR TO S/N HN36, REQUIRES 71401545 EVAP. ASY, 71401546 HEATER CORE, 71401544 BLOWER ASY, & RECHARGE TO LATEST REFRIGERATION SPEC.

GC00410
PR: 108

https://truckmanualshub.com/

HVAC BLOWER ASY.
EVANS TEMPCON
(PRIOR S/N HS36---)

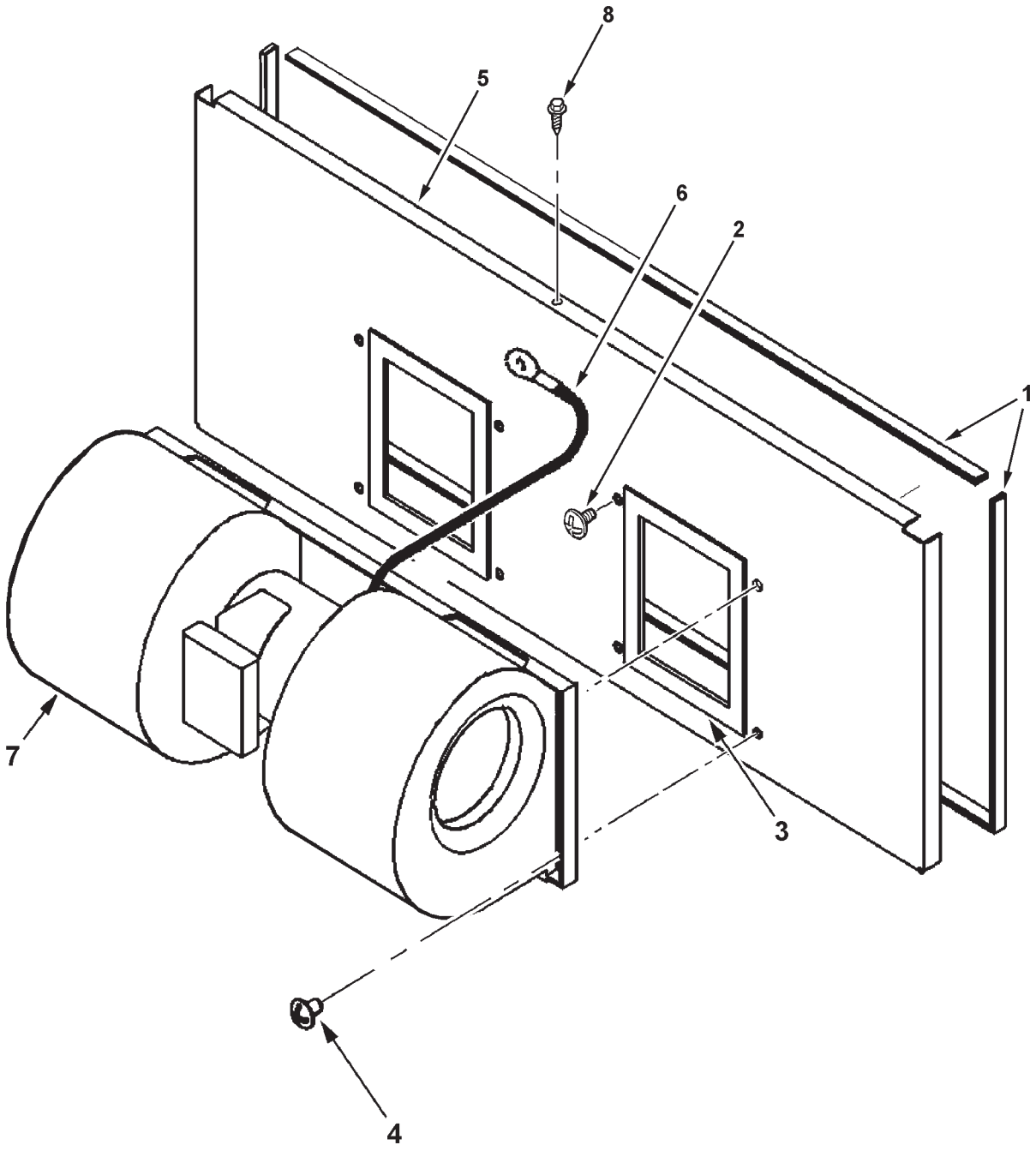

GC00267

https://truckmanualshub.com/

HVAC BLOWER ASY.

EVANS TEMPCON
(PRIOR S/N HS36---)

ITEM	NUMBER	QTY	DESCRIPTION
-	-----	1	BLOWER & PANEL ASY (NOT SERVICED)
1	71371332	1	TAPE, FOAM, 1/4 X 1/2 (4.78 FT)
2	71373144	1	SCREW, #8-18 X 1/2, SELF-TAPPING
3	71384553	1	TAPE, FOAM, 1/8 X 1/4 (2.0 FT)
4	71384558	8	SCREW, #10-24 X 1/2, SELF-TAPPING
5	71397939	1	PANEL ASY., BLOWER
6	71384555	1	WIRE ASY., (GROUND)
7	71384556	1	BLOWER ASY, PLASTIC (PRIOR S/N HN36) (SERVICE W/ 71401544)
	71401544	1	BLOWER ASY, PLASTIC (EFF. S/N HN36) (COMPONENTS NOT SERVICED)(SEE * NOTE IN PRESSURIZER UNIT)
8	71400523	1	SCREW, #10, SELF-DRILLING

GC00267
PR: 110

https://truckmanualshub.com/

HVAC PRESSURIZER UNIT
EVANS-TEMPCON
(EFF. S/N HS36---)

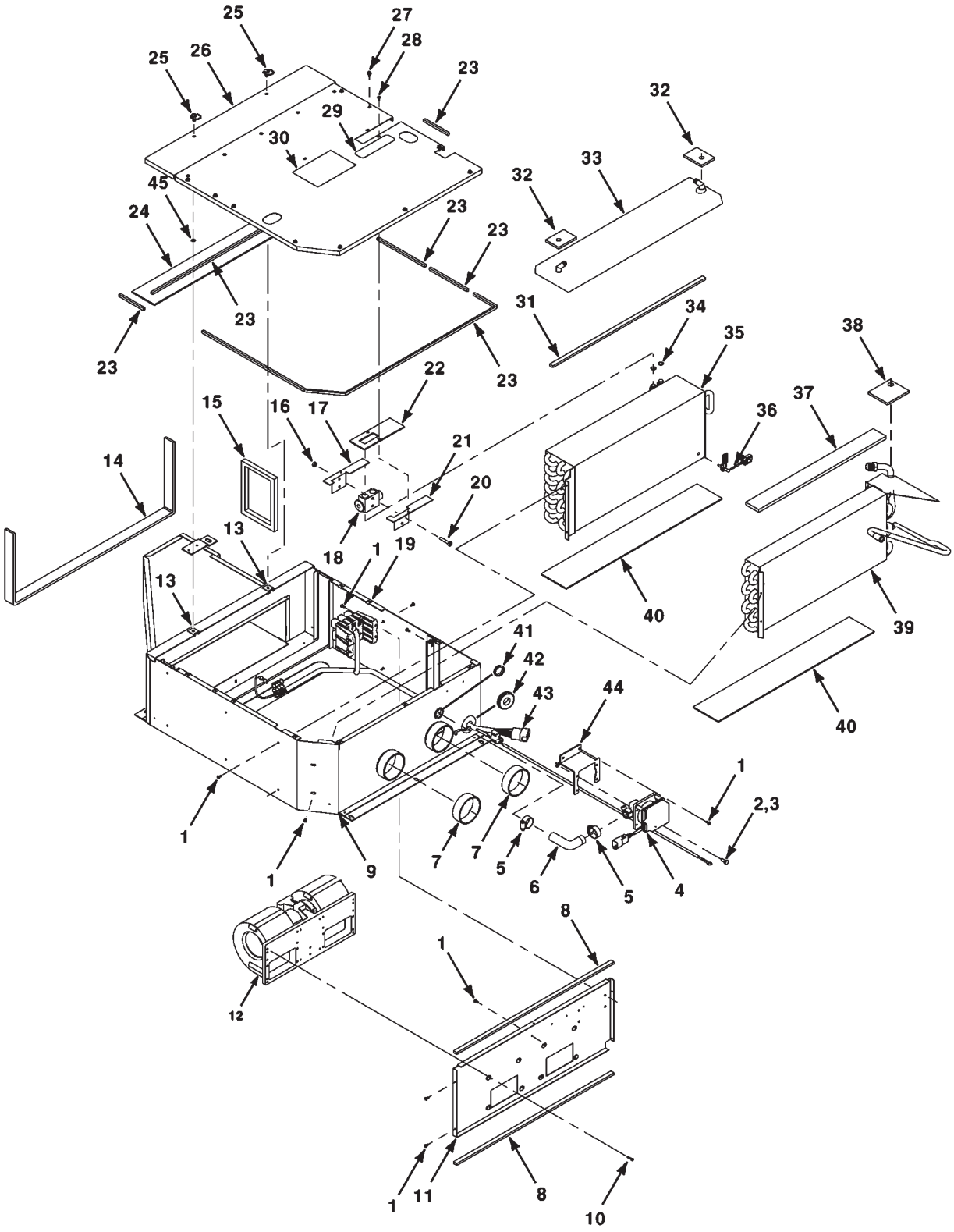

MC00569

https://truckmanualshub.com/

HVAC PRESSURIZER UNIT
EVANS-TEMPCON
(EFF. S/N HS36---)

ITEM	NUMBER	QTY	DESCRIPTION
1	71373144	16	SCREW, #8-18 X 1/2
2	70921959	4	CAPSCREW, 1/4-20 X 5/8
3	704007	4	NUT, 1/4-20 REG
4	71418429	1	WATER VALVE
5	70921911	2	CLAMP-HOSE
6	71408209	1	HOSE-FORMED 90 DEGREE
7	71384551	2	FOAM-CELL
8	71371332	2	TAPE-FOAM
9	71419804	1	CASE ASSEMBLY
10	71384558	8	SCREW, #10-24 X 1/2, SELF-TAPPING
11	71419805	1	PANEL-BLOWER ASSEMBLY
12	71418430	1	BLOWER ASSEMBLY
13	71371336	2	RECEPTACLE-NO. 85 CLIP
14	71371331	1	TAPE-FOAM
15	71397447	1	GASKET-FRESH AIR
16	70930760	2	NUT, LOCK, 1/4-28
17	71371346	1	BRACKET-R EXPANSION VALVE
18	71373127	1	VALVE-R134A EXPANSION
19	70937424	10	NUT, SPEED
20	353509X1	1	SCREW, 1/4-28 X 1-1/2
21	71371347	1	BRACKET-L EXPANSION VALVE
22	71371343	1	SEAL, EXPANSION VALVE
23	71397934	6	TAPE-FOAM 1/4 X 1/2
24	71371333	1	TAPE-FOAM 1/8 X 3-7/8
25	71371338	2	FASTENER, 1/4 TURN
26	71408215	1	COVER AND FILTER DOOR ASSEMBLY (INCL. FOAM TAPE, LABELS & FASTENERS)
	70924947	5	POP-RIVET, .125 DIA X .251-.312 GRIP
27	71373146	10	SCREW, SELF TAPPING, #10-24
28	71408214	3	SCREW, NO. 10 SELF DRILLING
29	71397927	1	LABEL-WARNING, 134a
30	71408210	1	LABEL-WIRING DIAGRAM
31	71397448	1	FOAM
32	71397444	2	SEAL-DRAIN TUBE
33	71397926	1	PAN-DRAIN
34	70937295	1	O-RING, #8, R134a
35	71419807	1	EVAPORATOR ASSEMBLY
36	71419806	1	SENSOR-ANTI-ICING
37	71384552	1	TAPE-FOAM
38	71397449	1	SEAL-HEATER TUBES
39	71419808	1	CORE-HEATER
40	71371333	2	TAPE-FOAM 1/8 X 3-7/8
41	71397930	1	BUSHING-SNAP
42	71397932	1	GROMMET-WIRE
43	71418431	1	WIRING HARNESS
44	71418428	1	BRACKET-WATER VALVE
45	71384272	2	RETAINER, PUSH-ON

MC00569
PR: t07a23o20b0003

https://truckmanualshub.com/

AIR CONDITIONER
LINES

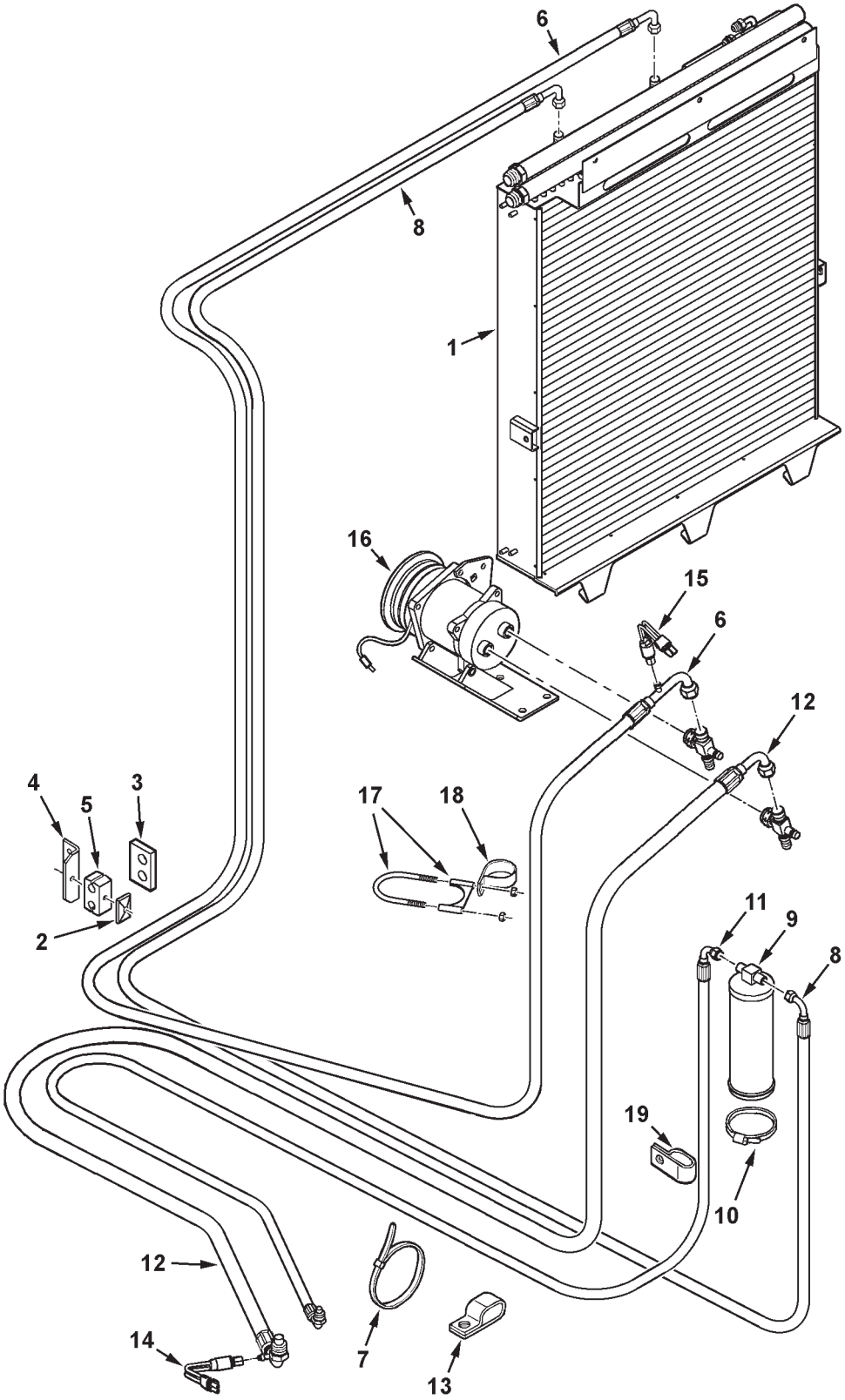

MC00284

https://truckmanualshub.com/

ITEM	NUMBER	QTY	DESCRIPTION
1	71393842	1	COMBINATION COOLER
2	101646M1	1	COVER PLATE
	7771744	1	CAPSCREW, 5/16-18 X 2-1/4
	Y704726	1	NUT, HEX FLANGE TOP LOCK, 5/16-18
3	71388076	1	SEAL, A/C HOSES
4	71388063	1	ANGLE, HOSE SUPPORT
	70921332	2	CAPSCREW, 5/16-18 X 3/4
	Y704726	1	NUT, HEX FLANGE TOP LOCK, 5/16-18
5	71388856	1	CLAMP PAIR, 7/8 DIA DOUBLE
6	71391648	1	HOSE ASY., COMPRESSOR TO CONDENSER
	70937295	2	O-RING, .070 X .426 ID, 70 DUR, HNBR
	70925621	2	CLAMP, LINE, 1" X .406 HOLE (PRIOR S/N HR36101)
	70936474	2	CLAMP, LINE, 1 DIA DBL X .406 HOLE (EFF. S/N HR36101)
	70921332	1	CAPSCREW, 5/16-18 X 3/4
	70917356	1	LOCKWASHER, 5/16
7	3619622M1	11	TIE, CABLE .189 X 14.19
8	71394172	1	HOSE ASY., CONDENSER TO DRYER
	70937296	2	O-RING, .070 X .301 ID, 70 DUR, HNBR
	70926049	1	CLAMP, SINGLE, 3/4 X .406 HOLE (PRIOR S/N HR36101)
9	71369761	1	RECEIVER, DRYER (R134A)
10	70921915	1	CLAMP, WORM DRIVE, 2.81 - 3.75 DIA
11	71396259	1	HOSE ASY., DRYER TO CAB
	70937296	2	O-RING, .070 X .301 ID, 70 DUR, HNBR
	70928148	2	CLAMP, DOUBLE, 3/4 X .406 HOLE
	70931822	2	SCR,HEX WSHR HD TAPPG, 5/16-12 X 3/4
12	71391100	1	HOSE ASY., CAB TO COMPRESSOR
	70937297	2	O-RING, .070 X .551 ID, 70 DUR, HNBR
	70925621	1	CLAMP, LINE, 1" X .406 HOLE (PRIOR S/N HR36101)
	700708349	1	CAPSCREW, M10-1.5 X 25MM
	700708367	1	LOCKWASHER, M10
13	70936474	5	CLAMP, DOUBLE, 1 DIA X .406 HOLE
	70931822	2	SCR,HEX WSHR HD TAPPG, 5/16-12 X 3/4
	70921977	3	CAPSCREW, 5/16-18 X 1-1/4
	Y704726	3	NUT, HEX FLANGE TOP LOCK, 5/16-18
14	71372724	1	SWITCH, LOW PRESSURE
15	72509305	1	SWITCH, HIGH PRESSURE
	70925094	5	TIE, NYLON LOCKING, .175 X 7.0
16	71379601	1	COMPRESSOR (SANDEN)
	72507682	AR	LUBRICANT, A/C COMPRESSOR
17	71399682	1	CLAMP, 3" DIA EXHAUST (EFF. S/N HR36101)
18	7041015	1	CLAMP, LINE, 2-1/4 DIA X .531 HOLE (EFF. S/N HR36101)
	Y704734	1	NUT, HEX FLANGE TOP LOCK, 3/8-16
19	70928148	1	CLAMP, DOUBLE, 3/4 DIA X .406 HOLE
	70931822	1	SCR,HEX WSHR HD TAPPG, 5/16-12 X 3/4

https://truckmanualshub.com/

AIR CONDITIONER
COMPRESSOR (SANDEN)

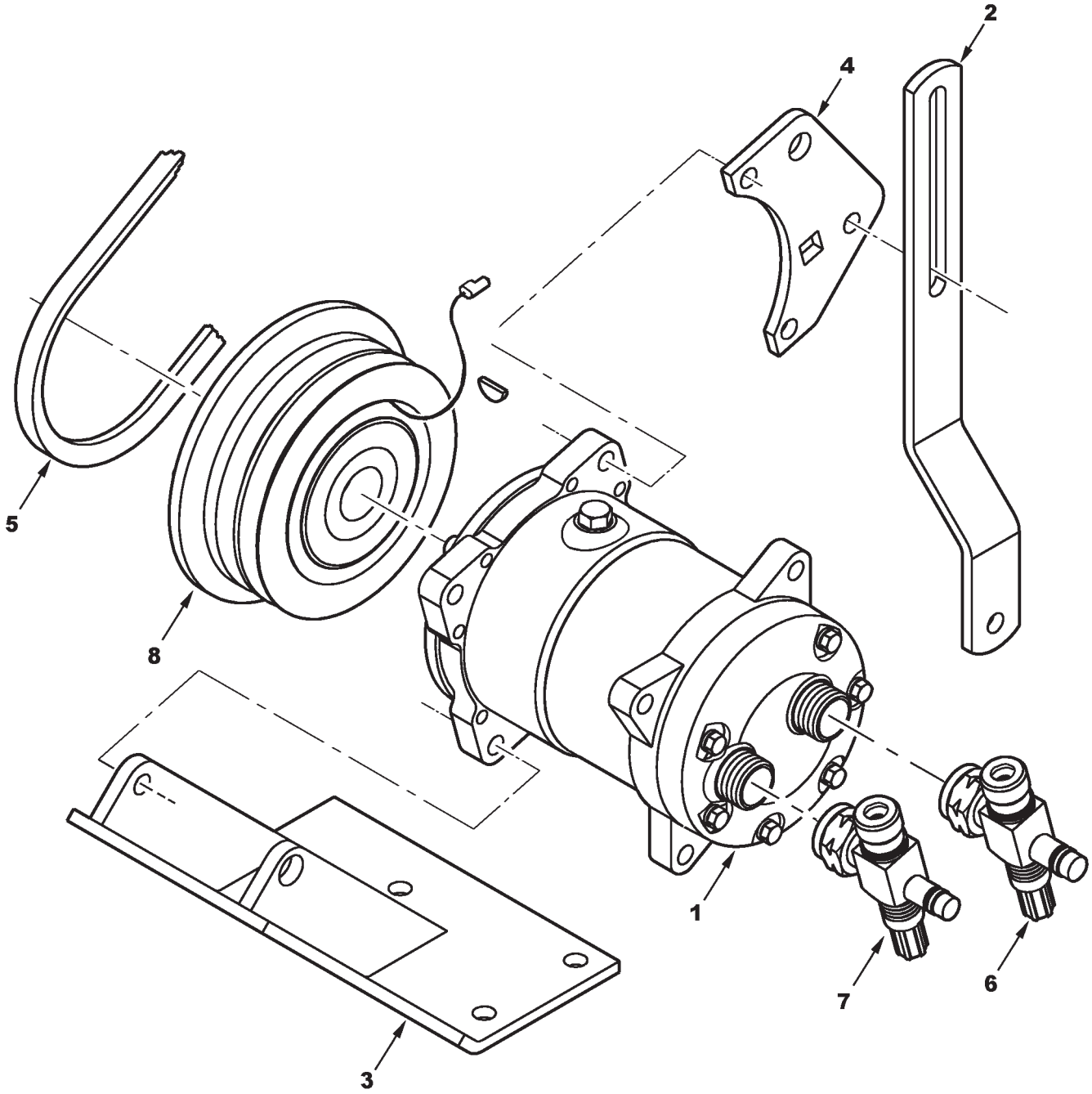

https://truckmanualshub.com/

ITEM	NUMBER	QTY	DESCRIPTION
1	71379601	1	COMPRESSOR, (COMPLETE W/SEALED BEARING CLUTCH)
	71386436	1	CLUTCH ASY. (SEALED BRG.) (SEE ITEM # 8)
	70950038	2	CAPSCREW, (M10 X 40)
	70950220	2	WASHER, LOCK, (M10)
	70950945	2	NUT, (M10)
	72160927	1	BUSHING, (SLIT-SLEEVE)
2	71388877	1	LINK, ADJUSTING, A/C COMP
	1112407	1	CAPSCREW, M10-1.5 X 20
	70950220	2	LOCKWASHER M10
	70950037	1	CAPSCREW, M1-1.5 X 30
	70918266	1	WASHER, FLAT M10
	70950945	1	NUT, M10-1.5
3	71385055	1	SUPPORT WLMT. COMPRESSOR
	72160927	1	SLEEVE SLIT
	70950038	2	CAPSCREW, M10-1.5 X 40
	70950220	2	LOCKWASHER M10
	70950945	2	NUT, M10-1.5
4	30-3429865	1	PLATE COMPRESSOR
	70950038	2	CAPSCREW, M10-1.5 X 40
	70950220	2	LOCKWASHER M10
	70950945	2	NUT, M10-1.5
5	71148120	1	BELT, A/C COMPRESSOR
6	72506694	1	SERVICE VALVE, (HI-SIDE) (DISCHARGE)
	70937297	1	O-RING, .070 X .551 ID, 70 DUR, HNBR
	72507408	1	CAP PLUG, NYLON
	72507406	1	CAP, STEM
7	72506922	1	SERVICE VALVE, (LO-SIDE) (SUCTION)
	70937297	1	O-RING, .070 X .551 ID, 70 DUR, HNBR
	72507407	1	CAP PLUG, NYLON
	72507406	1	CAP, STEM
8	71386436	1	CLUTCH ASY. (SEALED BRG.)
-	72507682	AR	LUBRICANT, PAG, AC COMPRESSOR (USE ON MODELS USING 134A REFRIGERANT)
-	71369762	AR	REFRIGERANT

71384573
PR: 114

https://truckmanualshub.com/

HEATER & LINES
(PRIOR S/N HR36101)

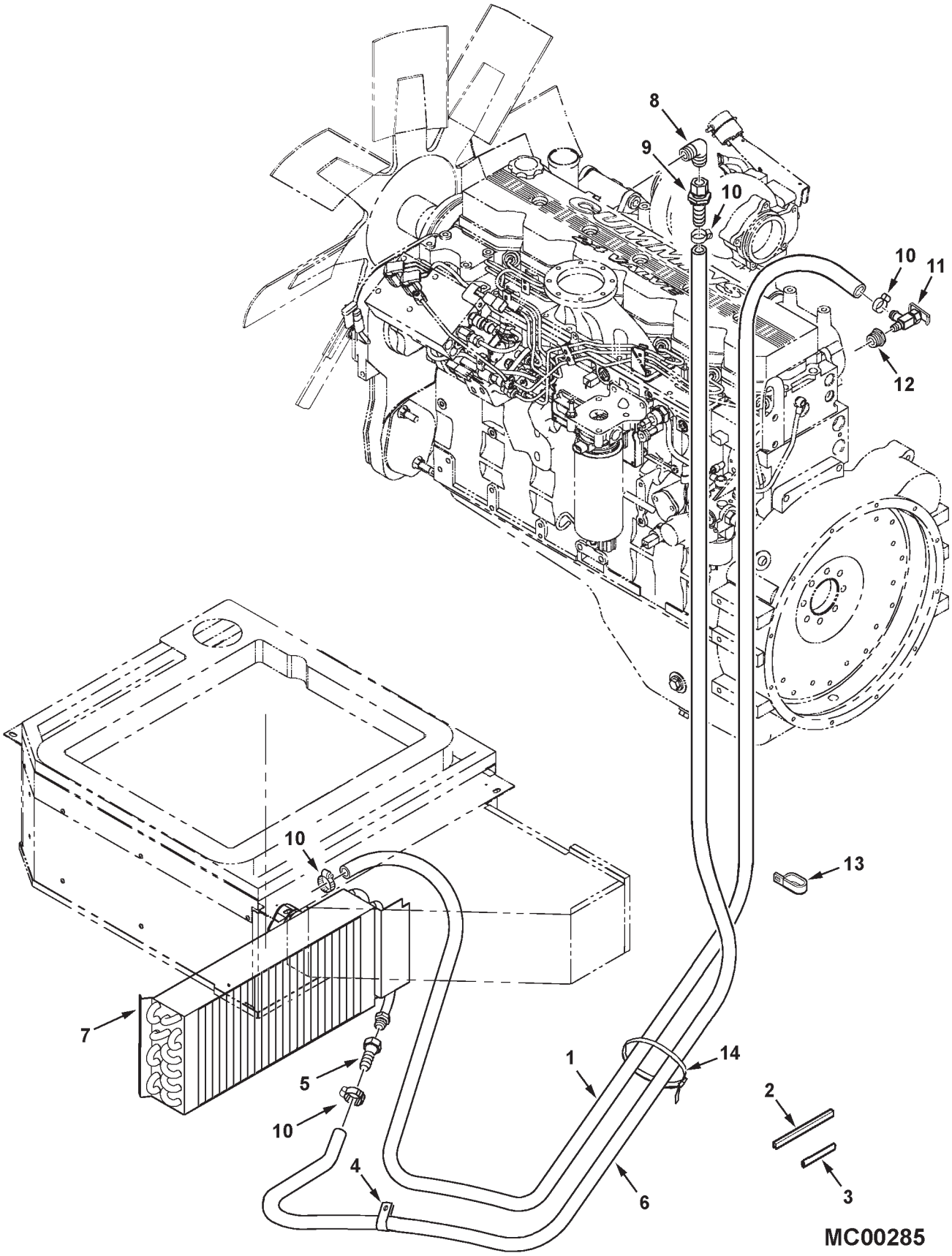

https://truckmanualshub.com/

HEATER & LINES
(PRIOR S/N HR36101)

ITEM	NUMBER	QTY	DESCRIPTION
1	71394144	1	HOSE, 5/8 ID, HEATER SUPPLY, 275" LG
2	71387797	1	EDGE PROTECTOR
3	71191799	2	EDGE PROTECTOR
4	70928464	1	CLAMP, 1 DIA. X .281 HOLE
5	70920808	1	FITTING, BARB, 7/8 X 14 JIC FEM X 5/8
6	71396268	1	HOSE, 5/8 ID, HEATER RETURN, 200" LG
7	- - - - -	1	HEATER CORE(SEE "HVAC PRESSURIZER UNIT")
8	70919272	1	ELBOW, 90 D, 3/4-16 JIC X 3/4 NPT
9	71351285	1	FITTING, BARB, 3/4-16 FEM X 5/8 HOSE
10	70921911	4	CLAMP, WORM DRIVE, .69- 1.25 DIA
11	30-3076830	1	VALVE, SHUT-OFF, WATER
12	70936774	1	BUSHING,PIPE REDUCER, 3/4 MALE X 3/8 FEM
13	70936474	3	CLAMP, DOUBLE, 1 DIA X .406 HOLE
14	3619622M1	2	TIE, SELF LOCK, .184 X 14.6 LG

MC00285
PR: 116

https://truckmanualshub.com/

HEATER LINES
(EFF. S/N HR36101)

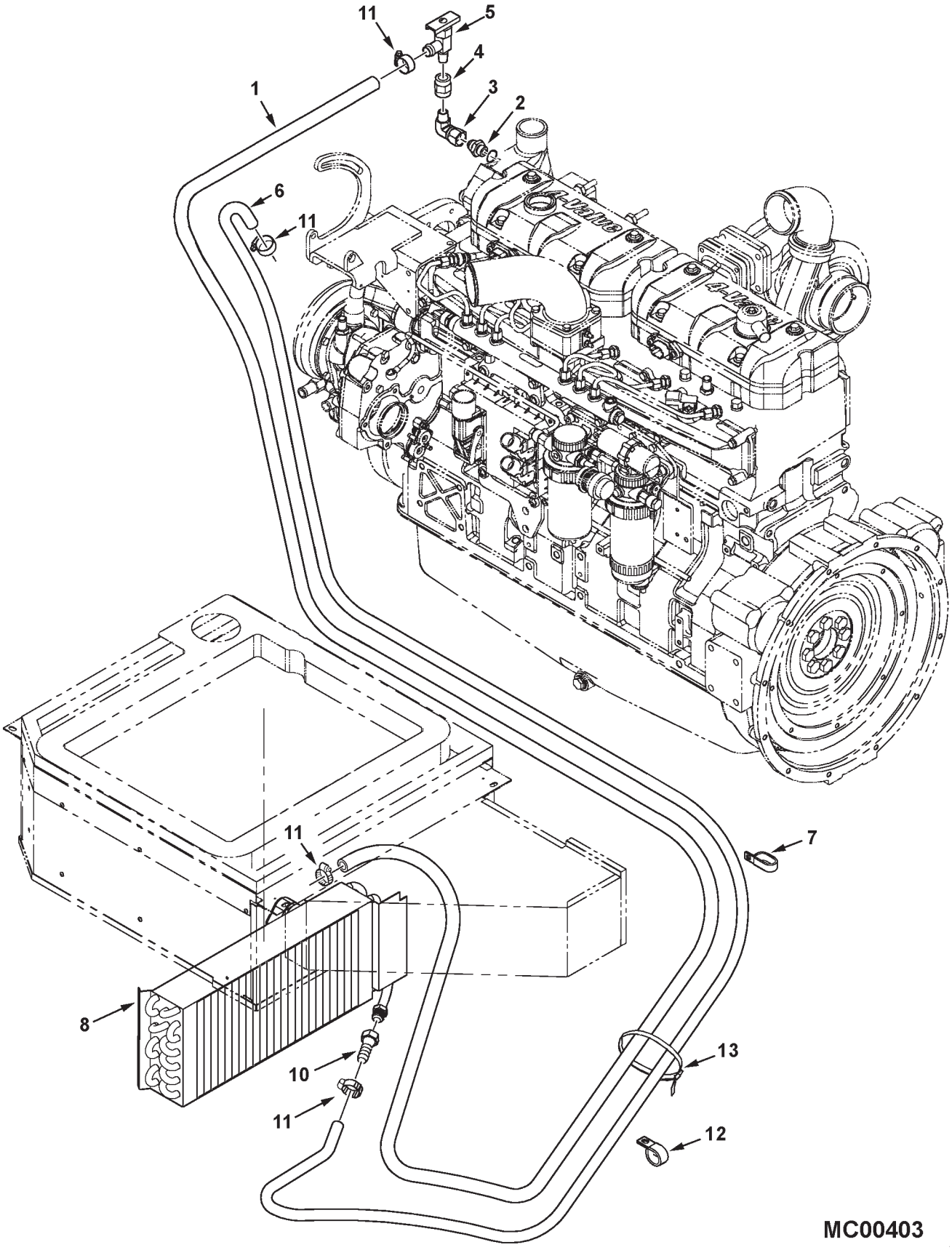

https://truckmanualshub.com/

HEATER LINES
(EFF. S/N HR36101)

ITEM	NUMBER	QTY	DESCRIPTION
1	71404436	1	HOSE, 5/8 ID, HEATER SUPPLY, 260" LG
2	70951055	1	CONN. METRIC, MALE, M18-1.5 X 3/4-16 JIC
	V615881822	1	WASHER, COPPER SEALING
3	70935416	1	ELBOW,90 DEG, 3/8 NPTF X 3/4-16 JIC FEM
4	W943003	1	COUPLING, 3/8 NPTF FEM.
5	30-3076830	1	VALVE, SHUT-OFF, WATER
6	700715271	1	HOSE, HEATER RETURN, 5/8 ID X 227.5" LG
7	70936474	5	CLAMP, DOUBLE, 1 DIA X .406 HOLE
8	- - - - -	1	HEATER CORE(SEE "HVAC PRESSURIZER UNIT")
10	70920808	1	FITTING,7/8 X 14 JIC SWIV FEM X 5/8 STEM
11	70921911	4	CLAMP, WORM DRIVE, .69- 1.25 DIA
12	70928464	1	CLAMP, LINE, 1.0 DIA X .281 HOLE
13	3619622M1	2	TIE, SELF LOCK, .184 X 14.6 LG

MC00403
PR: t06d19k48d0004

https://truckmanualshub.com/

FEEDER ELECTRICAL
(PRIOR S/N HS36101)

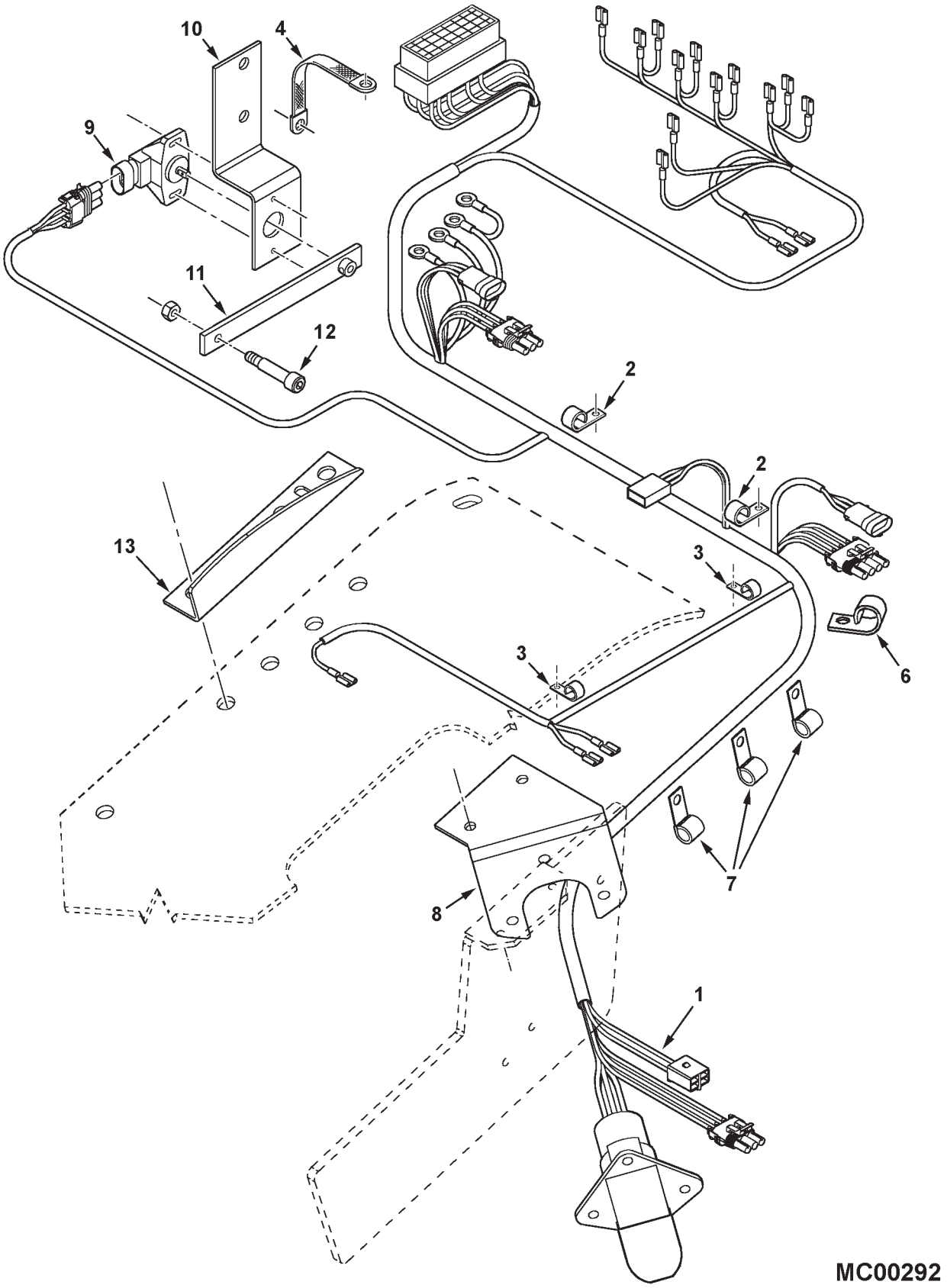

https://truckmanualshub.com/

FEEDER ELECTRICAL
(PRIOR S/N HS36101)

ITEM	NUMBER	QTY	DESCRIPTION
1	71412359	1	HARNESS, FEEDER
	70937133	2	TIE, SELF-LOCK, .300 X 14.5 LG
	70925094	2	TIE, SELF-LOCK, .184 X 7.31 LG
2	70937677	2	J-CLIP, 1.0 DIA X .406 HOLE
	772525	2	SCREW,HEX HD SELF-TAP, 5/16-18 X 1/2
3	70937685	2	J-CLIP, 3/8 DIA X .406 HOLE
	772525	2	SCREW,HEX HD SELF-TAP, 5/16-18 X 1/2
4	71396955	1	STRAP, GROUND
	372729X1	1	SCREW, HEX WASHER HD, 5/16-18 X 3/4
	772525	1	SCREW,HEX HD SELF-TAP, 5/16-18 X 1/2
	705160	2	LOCKWASHER, EXT TOOTH, 5/16
6	70937682	1	J-CLIP, 3/4 DIA X .656 HOLE
7	70936778	3	J-CLIP, 3/4 DIA X .406 HOLE
	70916950	3	HEXNUT, 3/8-16
8	71391420	1	BRACKET, HEADER CONNECTOR
	372729X1	2	SCREW,HEX HD SELF-TAP, 5/16-18 X 3/4
	70921333	3	CAPSCREW, 5/16-18 X 1.0
	70917356	3	LOCKWASHER, 5/16
	70917372	3	HEXNUT, 5/16-18
9	71391869	1	SENSOR, ROTARY POSITION
	700711659	2	SCREW, PAN HD MACH #8-32 X 3/4
	70923906	2	WASHER, #8, NARROW
	70917395	2	LOCKWASHER, #8
	704494	2	HEXNUT, #8-32
10	71395832	1	BRACKET, SENSOR MOUNT
	70920415	2	CAPSCREW, 3/8-16 X 1-1/4
	70916965	2	LOCKWASHER, 3/8
	70916950	2	HEXNUT, 3/8-16
11	71395840	1	ARM WLMT, SENSOR
	70923520	1	SETSCREW,KNURLED CUP PT, #8-32 X 1/4
12	700721586	1	SHOULDER BOLT, 5/16 X 1-1/4 X 1/4-20
	1703354	1	NUT, HEX FLANGE TOP LOCK, 1/4-20
13	71395838B	1	BRACKET, FEEDHOUSE SHARK FIN
	372729X1	4	SCREW, HEX WSH HD, 5/16-18 X 3/4

MC00292
PR: 118

https://truckmanualshub.com/

FEEDER ELECTRICAL
(EFF. S/N HS36101)

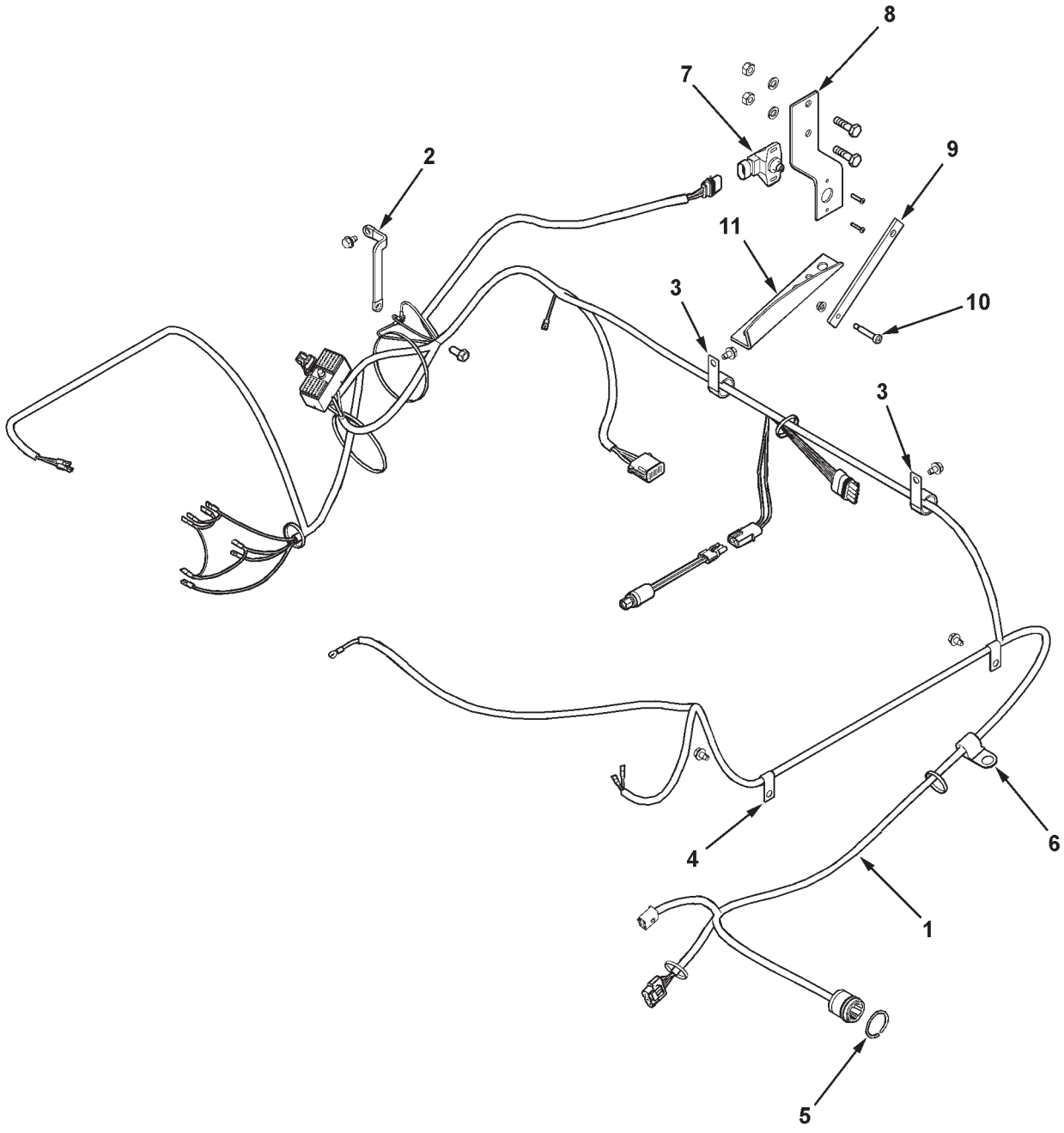

MC00427

https://truckmanualshub.com/

FEEDER ELECTRICAL
(EFF. S/N HS36101)

ITEM	NUMBER	QTY	DESCRIPTION
1	71413092	1	HARNESS, FEEDER
	70937133	4	TIE, SELF-LOCK, .300 X 14.5 LG
	70925094	3	TIE, BLK NYLN SELF-LOCK, .184 X 7.31
2	71396955	1	STRAP, GROUND
	705160	2	LOCKWASHER, EXT TOOTH, 5/16
	372729X1	1	SCR, HX WSHR HD TAPPG, 5/16-18 X 3/4
	70924856	1	SCR, HX WSHR HD TAPPG, 5/16-18 X 1/2
3	70937677	2	J-CLIP, 1.0 DIA X .406 HOLE
	70924856	2	SCREW,HEX HD SELF-TAP, 5/16-18 X 1/2
4	70937685	2	J-CLIP, 3/8 DIA X .406 HOLE
	70924856	2	SCREW,HEX HD SELF-TAP, 5/16-18 X 1/2
5	71410556	1	SNAP RING, EXTERNAL
6	70937682	1	J-CLIP, 3/4 DIA X .656 HOLE
7	71391869	1	SENSOR, ROTARY POSITION
	700711659	2	SCREW, PAN HD MACH #8-32 X 3/4
	70923906	2	WASHER, #8, NARROW
	70917395	2	LOCKWASHER, #8
	704494	2	HEXNUT, #8-32
8	71395832	1	BRACKET, POTENTIOMETER MOUNT
	70920415	2	CAPSCREW, 3/8-16 X 1-1/4
	70916965	2	LOCKWASHER, 3/8
	70916950	2	HEXNUT, 3/8-16
9	71395840	1	ARM WLMT, SENSOR
	70923520	1	SETSCREW,KNURLED CUP PT, #8-32 X 1/4
10	700721586	1	SHOULDER BOLT, 5/16 X 1-1/4 X 1/4-20
	1703354	1	NUT, HEX FLANGE TOP LOCK, 1/4-20
11	71395838	1	BRACKET, FEEDHOUSE, SHARK FIN

MC00427
PR: t07a23o20b0004

https://truckmanualshub.com/

ELECTRICAL HARNESSES & SWITCHES
FRONT

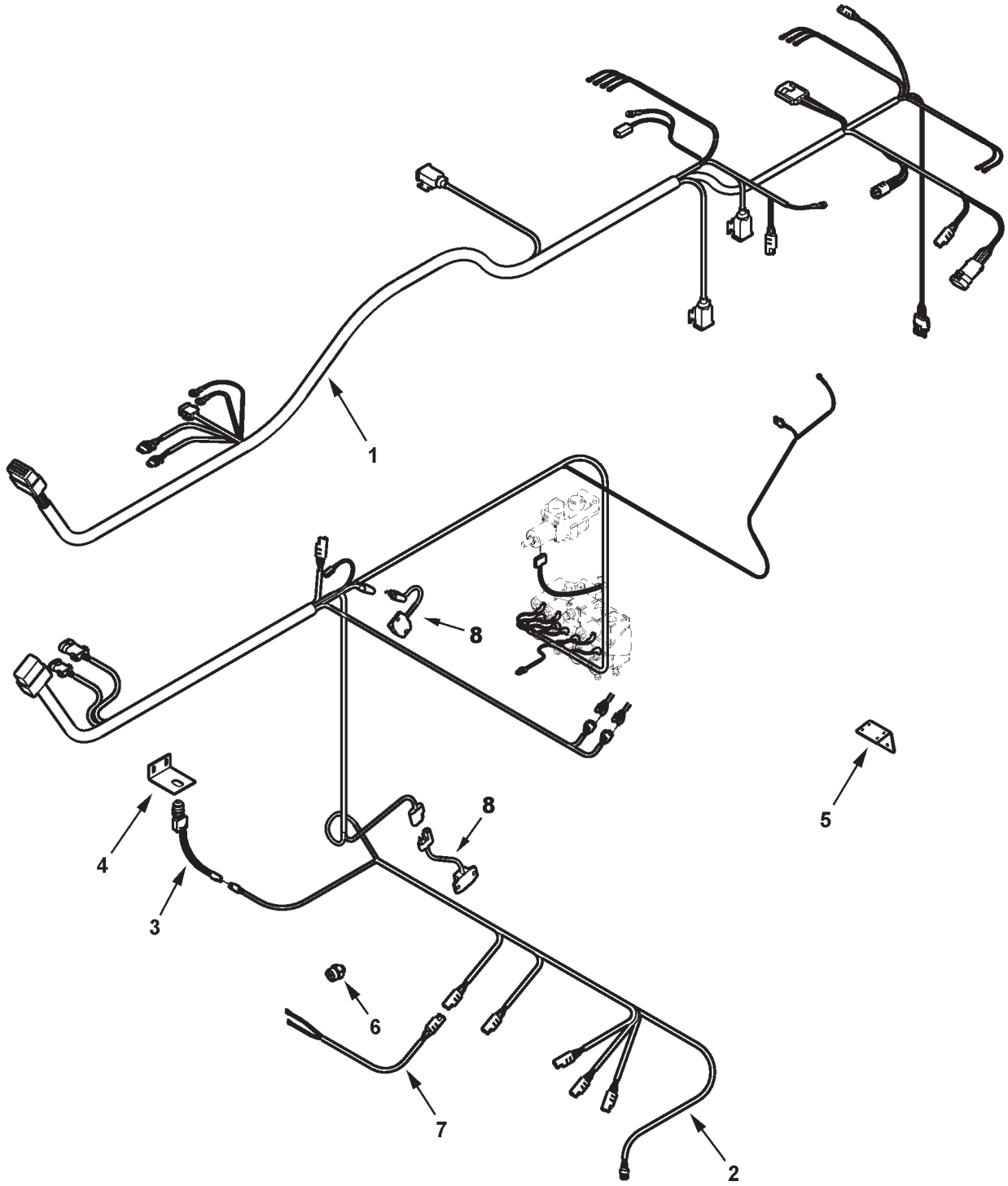

MC00308

https://truckmanualshub.com/

ELECTRICAL HARNESSES & SWITCHES
FRONT

ITEM	NUMBER	QTY	DESCRIPTION
1	71391016	1	HARNESS, MAIN (PRIOR S/N HR36101)
	71410902	1	HARNESS, MAIN (EFF. S/N HR36101)
	71413309	1	HARNESS, MAIN (EFF. S/N HS36101)
	70937685	3	J-CLIP, 3/8 DIA X .406 HOLE
	70927134	1	J-CLIP, 5/8 DIA X .406 HOLE
	70936778	6	J-CLIP, 3/4 DIA X .406 HOLE
	70937684	1	J-CLIP, 1-1/4 DIA X .406 HOLE
	70921333	1	CAPSCREW, 5/16-18 X 1.0
	700709602	1	WASHER, 5/16
	70917356	1	LOCKWASHER, 5/16
	70917372	1	HEXNUT, 5/16-18
	71389754	1	MOLDING, EDGE
	70925094	AR	TIE, SELF-LOCKING .184 X 7.31
2	71391017	1	HARNESS, FAN/HYD (PRIOR S/N HR36101)
	71410903	1	HARNESS, FAN/HYD (EFF. S/N HR36101)
	71412351	1	HARNESS, FAN/HYD (EFF. S/N HS36101)
	70925246	AR	J-CLIP, 1/2 DIA X .281 HOLE
	7883267	AR	SCREW, HX WSHR HD MACH 1/4-20 X 1/2
	70931209	AR	LOCKNUT, 1/4-20
	70937685	AR	J-CLIP, 3/8 DIA X .406 HOLE
	70936778	1	J-CLIP, 3/4 DIA X .406 HOLE
	70929725	2	J-CLIP, 7/16 DIA X .406 HOLE
	70927134	1	J-CLIP, 5/8 DIA X .406 HOLE
	70921965	4	CAPSCREW, 3/8-16 X 3/4
	705038	4	LOCKWASHER, 3/8
	70916950	4	HEXNUT, 3/8-16
	70925094	AR	TIE, SELF-LOCKING, .184 X 7.31
3	293766M1	1	SWITCH, STONE TRAP DOOR
	70925094	1	TIE, SELF-LOCKING .184 X 7.31
4	112159W1	1	BRACKET, SWITCH, STONE TRAP
	70921333	2	CAPSCREW, 5/16-18 X 1.0
	700709602	2	WASHER, 5/16
	70917356	2	LOCKWASHER, 5/16
	70917372	2	HEXNUT, 5/16-18
5	71396956	1	BRACKET, MAG LIGHT 12V POWER
	70936592	4	SCREW, PAN HD X-RECESS, #10-16 X 3/4
	705160	4	LOCKWASHER, 5/16
6	71342216	1	SWITCH, START
7	71385907	1	WIRE ASM., SWITCH
8	71391021	1	SENSOR ASY, 2-WIRE

MC00308
PR: 120

https://truckmanualshub.com/

ENGINE & BATTERY WIRING
(PRIOR S/N HR36101)

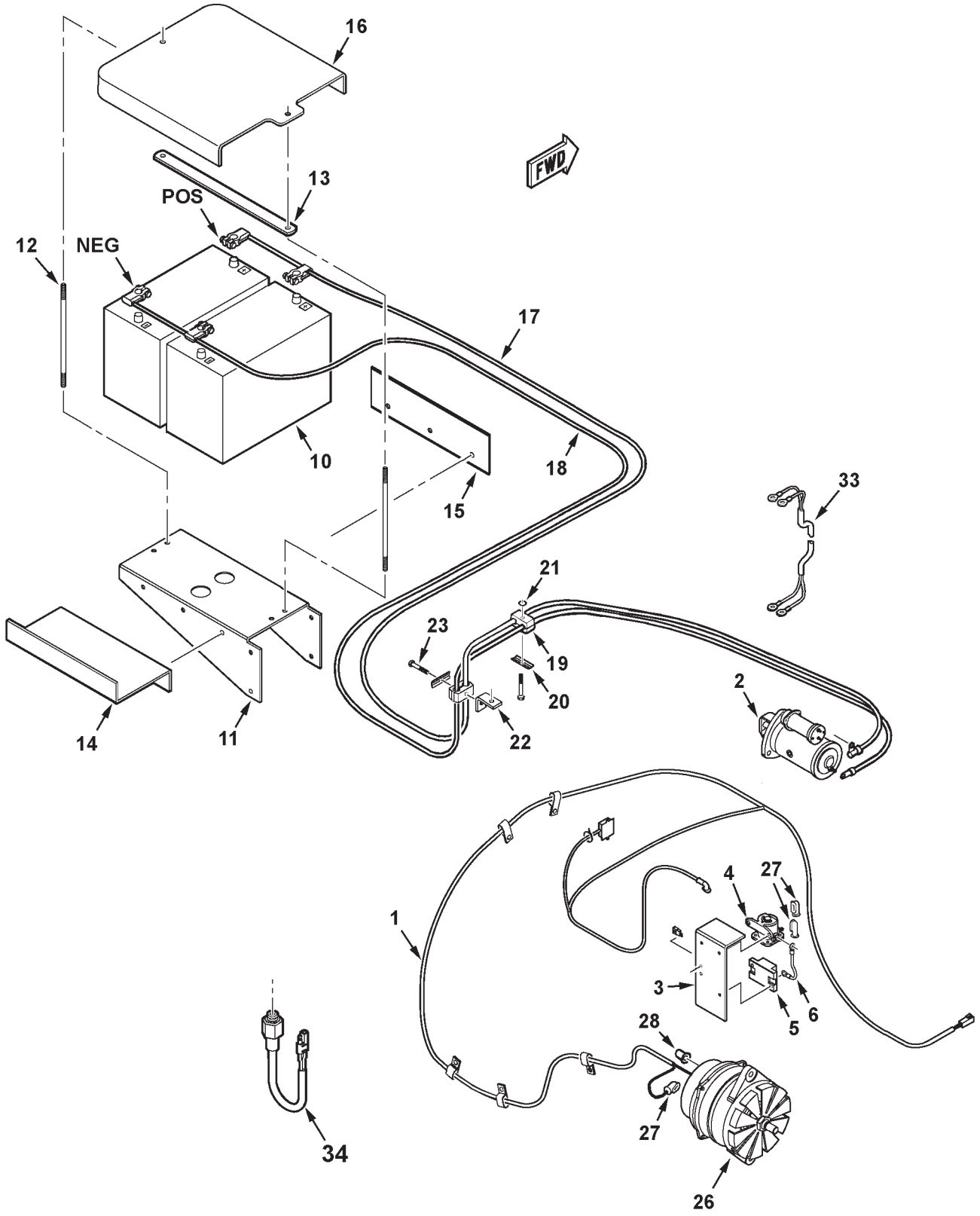

MC00298

https://truckmanualshub.com/

ENGINE & BATTERY WIRING
(PRIOR S/N HR36101)

ITEM	NUMBER	QTY	DESCRIPTION
-	71391870	1	LIGHT,MAGNETIC SRVICE(IN CAB BUDDY SEAT)
-	71397725	AR	OUTLET SOCKET, SERVICE LIGHT
1	71391710	1	HARNESS, ENG. WIRING (PRIOR S/N HP36101)
	71401348	1	HARNESS, ENG. WIRING (EFF. S/N HP36101)
	71408391	1	WIRE ASY, ALT'R, 37.4" (FIELD INSTAL'N UPGRADE. 2003 & 2004 PROD'N ONLY, S/N HM36---)(NOT ILLUS.)
	70934739	1	FUSE, 5-AMP
	70935426	3	FUSE, 7.5-AMP
	70934740	2	FUSE, 10-AMP
	70927104	1	CLAMP, .750 TUBE X .531 HOLE
	773473	1	CAPSCREW, M12-1.75 X 30MM
	Y705046	1	LOCKWASHER, 1/2
	70937684	1	J-CLIP, 1-1/4 X .406 HOLE
	70937677	2	J-CLIP, 1.0 X .406 HOLE
	70930791	2	J-CLIP, .688 X .406 HOLE
	70937685	1	J-CLIP, 3/8 X .406 HOLE
	7745193	4	CLIP, PANEL SLIDE-ON
	70925094	AR	TIE, SELF-LOCKING .184 X 7.31
	70929807	AR	TIE, SELF-LOCKING .50 X 19.0
	70937133	AR	TIE, SELF-LOCKING .300 X 14.5
2	71391860	1	STARTER MOTOR, 42MT (SEE BREAKDOWN)
3	71391866	1	BRACKET, SOLENOID MTG.
	773473	2	CAPSCREW, M12-1.75 X 30MM
	Y705624	1	WASHER, FLAT 1/2
	Y705046	2	LOCKWASHER, 1/2
4	530132M1	1	SOLENOID
	70931833	2	SCREW, MTG. 1/4-20 X 1/2
	70917356	2	LOCKWASHER, 5/16
	70917372	2	HEXNUT, TERMINAL 5/16-18
	705004	2	LOCKWASHER, #10
	Y704445	2	HEXNUT, TERMINAL #10-32
5	71389309	1	BREAKER, CIRCUIT 150A
	70934728	2	SCREW, PAN HD TAPPING, 1/4-20 X 3/4
6	71389313	1	WIRE, START RELAY (APRX. 6-1/4" LG.)
10	1907162M1	2	BATTERY, 12V HD/HI-CAPACITY
11	71393713	1	BRACKET, BATTERY SUPPORT
	70921210	4	CAPSCREW, 3/8-16 X 1.0
	704247	4	LOCKNUT, HEX SERR FLANGE, 3/8-16
12	108047W1	2	ROD, BATTERY HOLD DOWN
13	108048W1	1	STRAP, TIE BAR
	704247	4	LOCKNUT, HEX SERR FLANGE, 3/8-16
14	71397729	1	ANGLE, BATTERY SUPPORT
	70921210	3	CAPSCREW, 3/8-16 X 1.0
	704247	3	LOCKNUT, HEX SERR FLANGE, 3/8-16
15	71397726	1	PLATE, BATTERY SUPPORT
	70921210	3	CAPSCREW, 3/8-16 X 1.0
	704247	3	LOCKNUT, HEX SERR FLANGE, 3/8-16
16	108076W1	1	COVER, BATTERY
	Y704361	2	WINGNUT, 3/8-16

CONTINUED

https://truckmanualshub.com/

ENGINE & BATTERY WIRING
(PRIOR S/N HR36101)

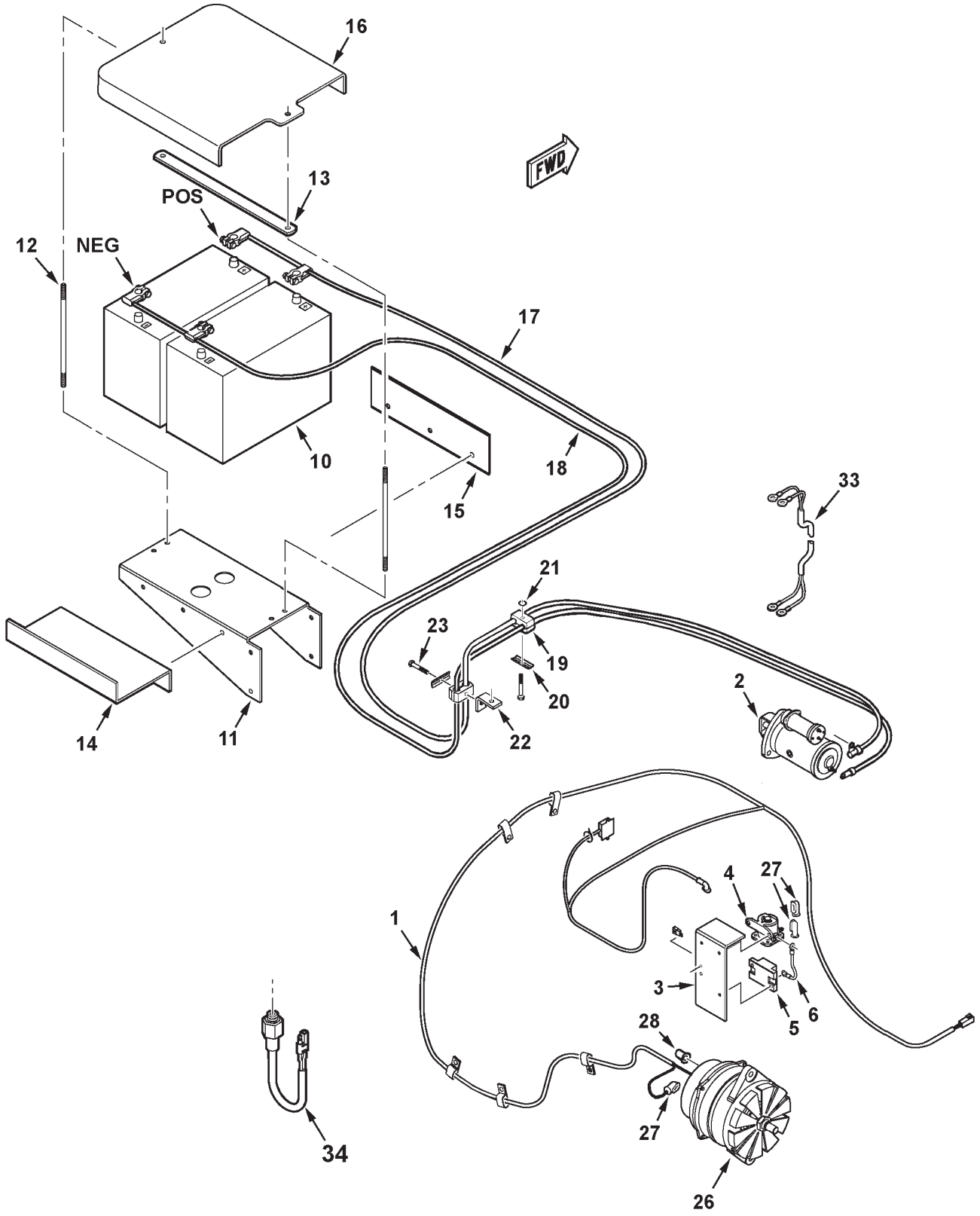

MC00298

https://truckmanualshub.com/

ENGINE & BATTERY WIRING
(PRIOR S/N HR36101)

ITEM	NUMBER	QTY	DESCRIPTION
17	71396951	1	CABLE, POSITIVE BATTERY
	71396952	AR	PROTECTOR, BATT. CABLE (SPLIT HOSE)
	70925094	2	TIE, SELF-LOCKING .184 X 7.31
18	71394725	1	CABLE, NEGATIVE BATTERY
	70925094	4	TIE, SELF-LOCKING .184 X 7.31
	Y702951	1	SCR, HEX WSHR HD TAPPG, 3/8-16 X 3/4 (GROUND LUG ATTACH)
19	148203M1	2	CLAMP PAIR, 5/8 DIA DOUBLE, BATT. CABLE
20	101646M1	2	PLATE, TOP COVER
21	70921719	1	CAPSCREW, 5/16-18 X 2-1/2
	70918431	4	WASHER, 1/2, WIDE
	70917378	1	WASHER, 3/8, WIDE
	70917356	1	LOCKWASHER, 5/16
	70917372	1	HEXNUT, 5/16-18
22	71337414	1	BRACKET
23	7703507	1	CAPSCREW, 5/16-18 X 2.0
	70917356	1	LOCKWASHER, 5/16
	70917372	1	HEXNUT, 5/16-18
26	71370306	1	ALTERNATOR ASY, 130A (SEE BREAKDOWN FOR COMPONENTS)(PRIOR S/N HM36173)
	3965146	1	PULLEY, ALTERNATOR
	71396957	1	ALTERNATOR ASY, 150A (EFF S/N HM36173)
	3965146	1	PULLEY, ALTERNATOR
27	70232758	3	TERMINAL COVER
28	72506418	2	TERMINAL COVER, ALT.
33	71386807	1	WIRE ASY., GRID HEATER TO RELAYS(60.5")
	70232758	2	COVER, TERMINAL
	70950717	2	NUT, M6 -1, CL9
	Y705269	2	LOCKWASHER, M6
34	71389746	1	SWITCH, ROTOR PRESSURE
	70921885	1	O-RING, .078 X .468 ID

MC00298
PR: 122

https://truckmanualshub.com/

ENGINE & BATTERY WIRING
(EFF. S/N HR36101)

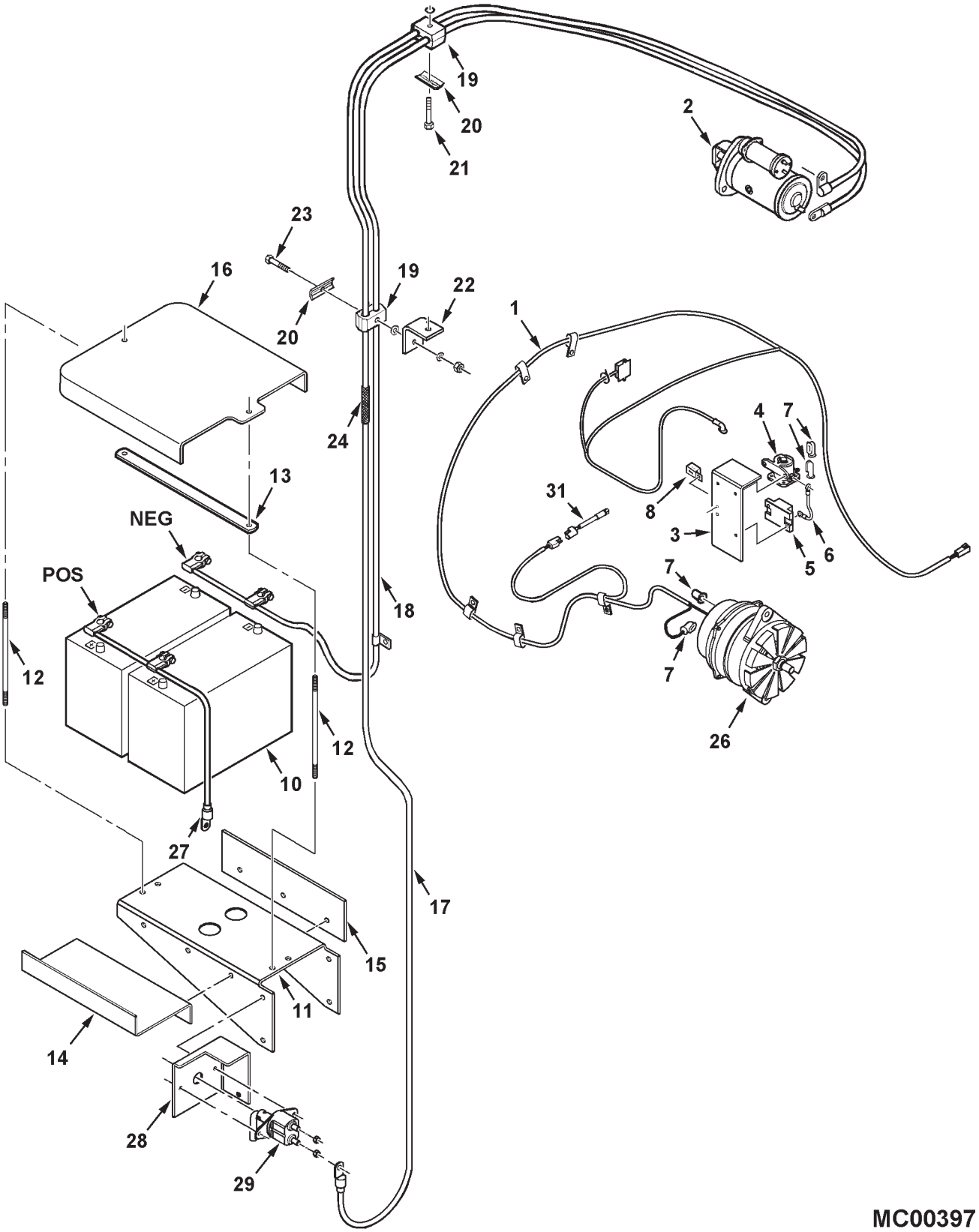

https://truckmanualshub.com/

ENGINE & BATTERY WIRING
(EFF. S/N HR36101)

ITEM	NUMBER	QTY	DESCRIPTION
1	71410574	1	HARNESS, SISU ENGINE WIRING
	70927104	2	CLAMP, LINE, 3/4 DIA X .531 HOLE
	70929748	1	CLAMP, LINE, 1-1/4 DIA X .406 HOLE
	70937684	1	J-CLIP, 1-1/4 DIA X .406 HOLE
	70937677	5	J-CLIP, 1 DIA X .406 HOLE
	7704703	1	NUT, M6 X 1.0
	70921332	3	CAPSCREW, 5/16-18 X 3/4 GR5
	70921333	1	CAPSCREW, 5/16-18 X 1 GR5
	70918266	2	WASHER, 3/8, NARROW
	70925094	5	TIE, NYLON LOCKING, .184 X 7.31
	70929807	1	TIE, NYLON LOCKING, .50 X 19.0
	70937133	8	TIE, NYLON LOCKING, .30 X 14.5
2	- - - - -	1	STARTER, 37MT (SEE ENGINE BREAKDOWN)
3	71391424	1	BRACKET, SOLENOID MTG.
	70921332	1	CAPSCREW, 5/16-18 X 3/4 GR5
4	530132M1	1	SOLENOID
	70931833	2	SCREW, PAN HD TAPPING, 1/4-20 X 1/2
	705004	1	LOCKWASHER, #10
	Y704445	1	NUT, #10-32
	70917372	2	NUT, 5/16-18
5	71389309	1	BREAKER, CIRCUIT, 150A
	70934728	2	SCREW, PAN HD TAPPING, 1/4-20 X 3/4
6	71389313	1	WIRE ASY, START RELAY (APPRX. 6-1/4 LG.)
7	70232758	4	TERMINAL COVER
8	71378104	1	RELAY, 40 AMP
	706382	1	SCREW, RND HD MACH, #10-32 X 1/2
	705004	1	LOCKWASHER, #10
	Y704445	1	NUT, #10-32
10	1907162M1	2	BATTERY, 12V HD/HI-CAPACITY
11	71393713	1	BRACKET, BATTERY SUPPORT
	70921210	4	CAPSCREW, 3/8-16 X 1.0
	704247	4	LOCKNUT, HEX SERR FLANGE, 3/8-16
12	108047W1	2	ROD, BATTERY HOLD DOWN
13	108048W1	1	STRAP, TIE BAR
	704247	8	LOCKNUT, HEX SERR FLANGE, 3/8-16
14	71397729	1	ANGLE, BATTERY SUPPORT
	70921210	3	CAPSCREW, 3/8-16 X 1.0
	704247	3	LOCKNUT, HEX SERR FLANGE, 3/8-16
15	71397726	1	PLATE, BATTERY SUPPORT
	70921210	3	CAPSCREW, 3/8-16 X 1.0
	704247	3	LOCKNUT, HEX SERR FLANGE, 3/8-16
16	108076W1	1	COVER, BATTERY
	Y704361	2	WINGNUT, 3/8-16
17	71409809	1	CABLE, BATTERY, POSITIVE
18	71409822	1	CABLE, BATTERY, NEGATIVE
	Y702951	1	SCR, HEX WSHR HD TAPPG, 3/8-16 X 3/4 (GROUND LUG ATTACH)
19	148203M1	2	CLAMP PAIR, 5/8 DIA DOUBLE, BATT. CABLE
20	101646M1	2	PLATE, TOP COVER
21	70921719	1	CAPSCREW, 5/16-18 X 2-1/2 GR5
	70918431	4	WASHER, 1/2, WIDE
	70917642	1	WASHER, 5/16, WIDE
	70917356	1	LOCKWASHER, 5/16
	70917372	1	NUT, 5/16-18 REG

CONTINUED

https://truckmanualshub.com/

ENGINE & BATTERY WIRING
(EFF. S/N HR36101)

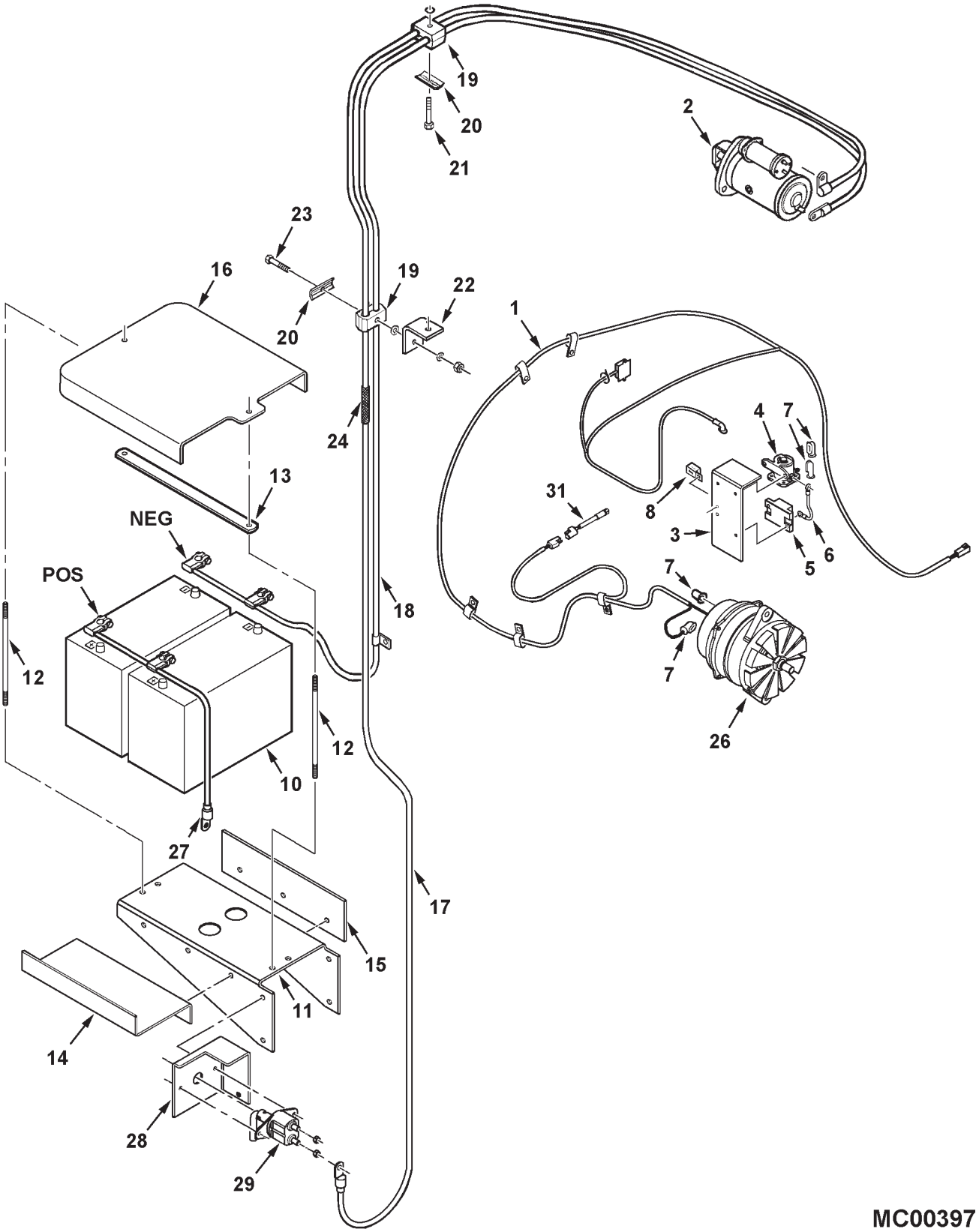

https://truckmanualshub.com/

ITEM	NUMBER	QTY	DESCRIPTION
22	71337414	1	BRACKET
23	7703507	1	CAPSCREW, 5/16-18 X 2 GR5
	70918431	1	WASHER, 1/2, WIDE
	70917642	1	WASHER, 5/16, WIDE
	70917356	1	LOCKWASHER, 5/16
	70917372	1	NUT, 5/16-18 REG
24	71396952	1	HOSE, SPLIT, .63 ID X 11.8 LG(PROTECTOR)
	70925094	2	TIE, NYLON LOCKING, .184 X 7.31
26	71396957	1	ALTERNATOR ASY, 150A (SEE BREAKDOWN)
27	71409807	1	CABLE, BATTERY, POSITIVE
28	71409810	1	BRACKET, BATTERY DISCONNECT
29	71409811	1	SWITCH, BATT DISCNT(INCL KEY & M10 HDWR)
	71409812	1	KEY, SHUTOFF
	339402X1	2	NUT, M10 REG
	70917378	2	WASHER, 3/8, WIDE
	339376X1	2	LOCKWASHER, M10
	7703457	2	CAPSCREW, 1/4-20 X 3/4 GR5
	705012	2	LOCKWASHER, 1/4
	70916622	2	NUT, 1/4-20, REG
31	71389746	1	SWITCH, ROTOR PRESSURE
	70921885	1	O-RING, .078 X .468 ID

MC00397
PR: t05l09o11c0022

https://truckmanualshub.com/

ALTERNATOR - 150 AMP

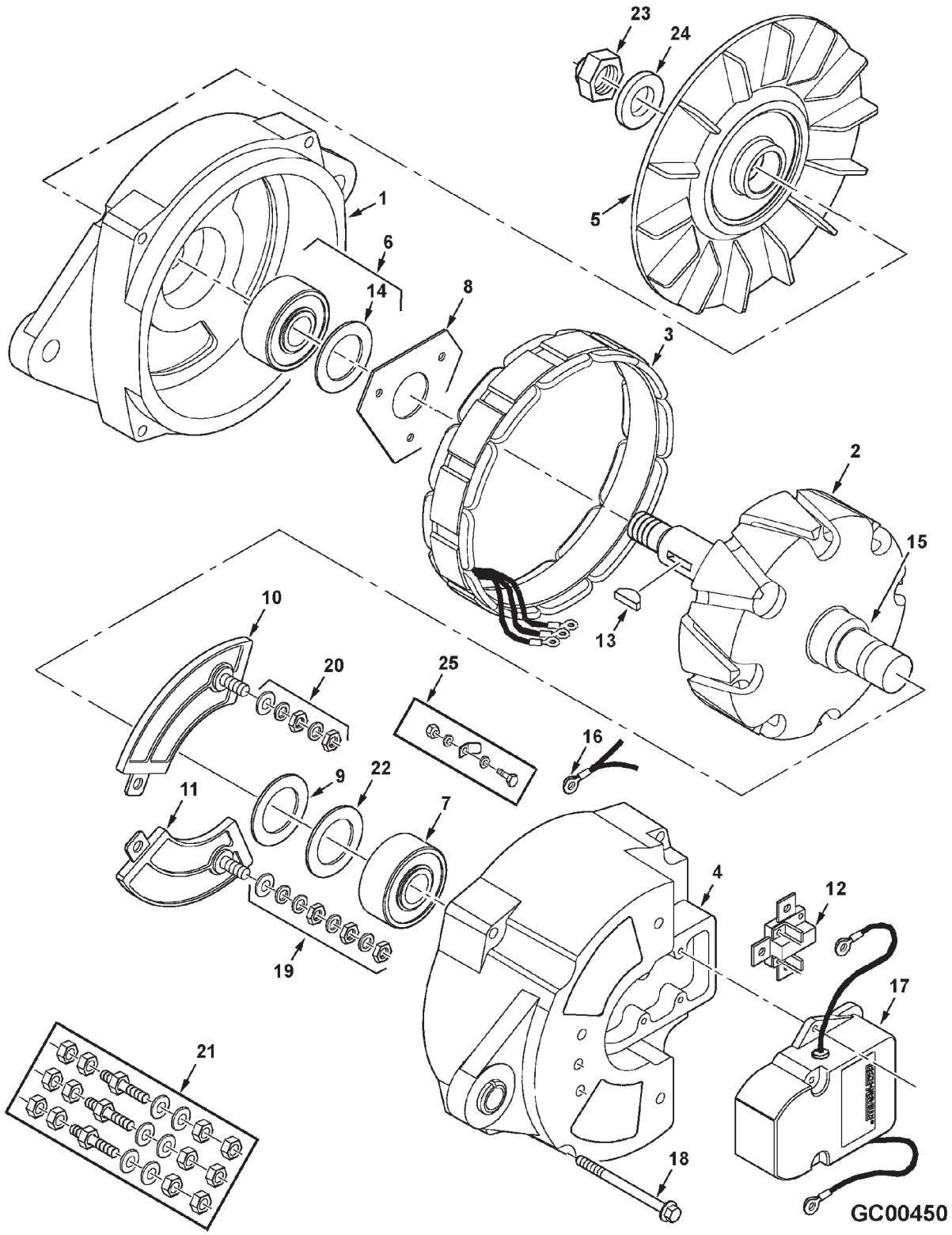

https://truckmanualshub.com/

ALTERNATOR - 150 AMP

ITEM	NUMBER	QTY	DESCRIPTION
-	71396957	1	ALTERNATOR, LEECE NEVILLE, 150 AMP
1	71407431	1	FRONT HOUSING
2	71407436	1	ROTOR ASY
3	71407434	1	STATOR ASY
4	71407446	1	REAR HOUSING
5	71407428	1	FAN
6	71407432	1	FRONT BEARING PKG.
7	71407440	1	REAR BEARING
8	71407429	1	FRONT BEARING RETAINER PKG.
9	71407438	1	REAR BEARING RETAINER
10	71407442	1	DIODE RING ASY, NEGATIVE
11	71407441	1	DIODE RING ASY, POSITIVE
12	71407448	1	BRUSH ASY
13	71407435	1	KEY, WOODRUFF
14	71407433	1	SEAL, FRONT BEARING
15	71407437	1	SLIP RING
16	71407445	1	CABLE ASY, RECT.
17	71407450	1	REGULATOR KIT
18	71407430	1	THRU BOLT PKG.
19	71407443	1	TERMINAL STUD PKG, POSITIVE
20	71407444	1	TERMINAL STUD PKG, NEGATIVE
21	71407449	1	TERMINAL STUD PKG, AC
22	71407439	1	SPACER, REAR BEARING
23	71407426	1	LOCK NUT, PULLEY
24	71407427	1	WASHER, 5/8
25	71407447	1	AC FLAG TERMINAL PKG.

GC00450
PR: t05b08m42d0003

https://truckmanualshub.com/

GRID HEATER
(PRIOR S/N HR36101)

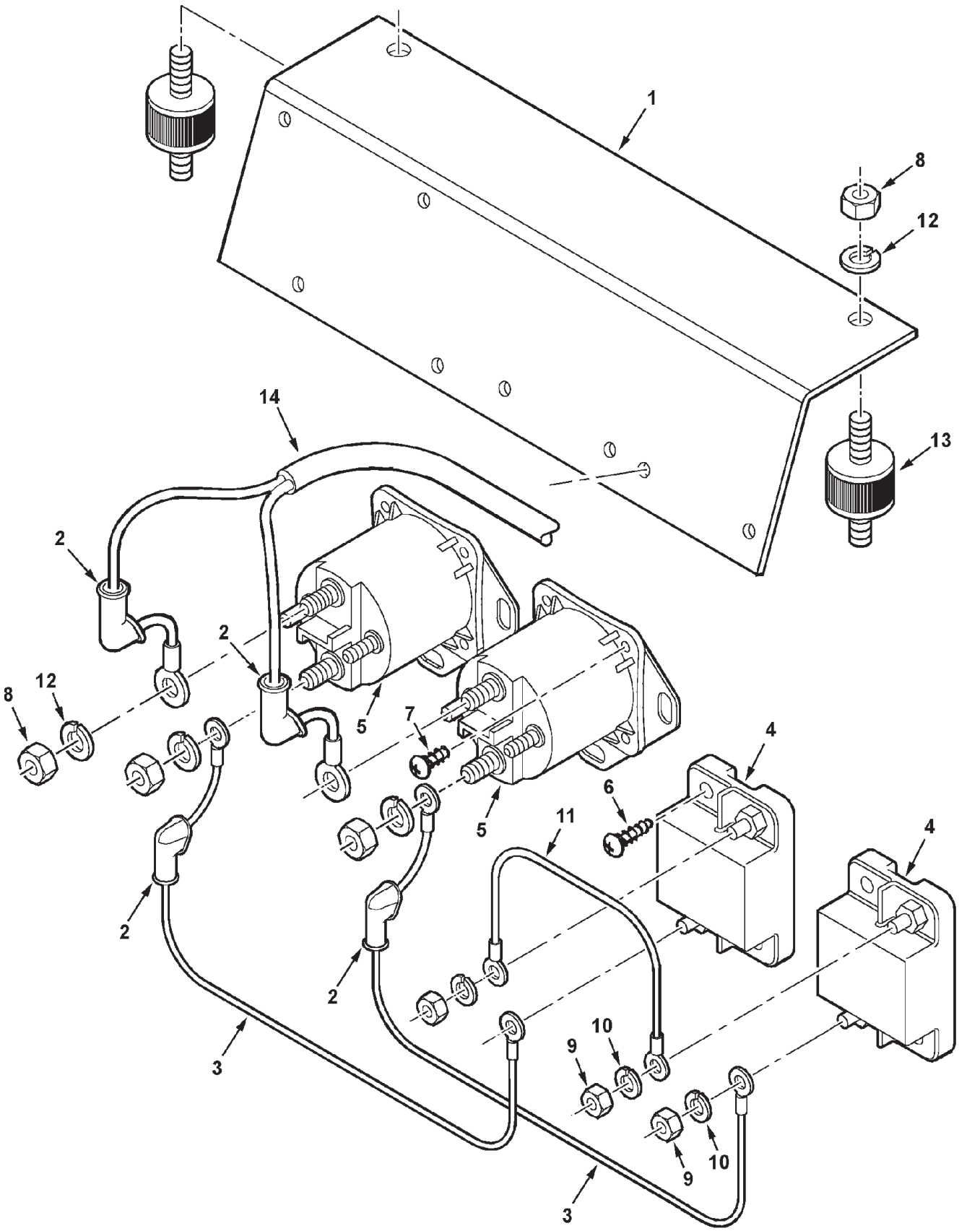

https://truckmanualshub.com/

GRID HEATER
(PRIOR S/N HR36101)

ITEM	NUMBER	QTY	DESCRIPTION
1	71386805	1	BRACKET, RELAY
2	70232758	4	COVER, TERMINAL
3	71386806	2	WIRE ASY, INTERCONNECT RELAYS AND CIRCUIT BREAKERS
4	71387908	2	BREAKER, CIRCUIT (120 AMP)
5	71347910	2	SWITCH, SOLENOID
6	70934728	4	SCREW, 1/4-20 X 3/4, TAPTITE
7	70931833	4	SCREW, 1/4-20 X 1/2, TAPTITE
8	70917372	6	NUT, HEX 5/16-18
9	70917415	4	NUT, HEX #10-32
10	705004	4	WASHER, LOCK #10-32
11	71389310	1	WIRE ASSY, INTERCONNECT CIRCUIT BREAKERS
12	70917356	6	WASHER, LOCK, 5/16
13	71390316	2	ISOLATOR
14	71386807	1	WIRE ASY, GRID HEATER

MC00229
PR: 126

https://truckmanualshub.com/

CAB COMPONENTS
CONTROLS & SWITCHES

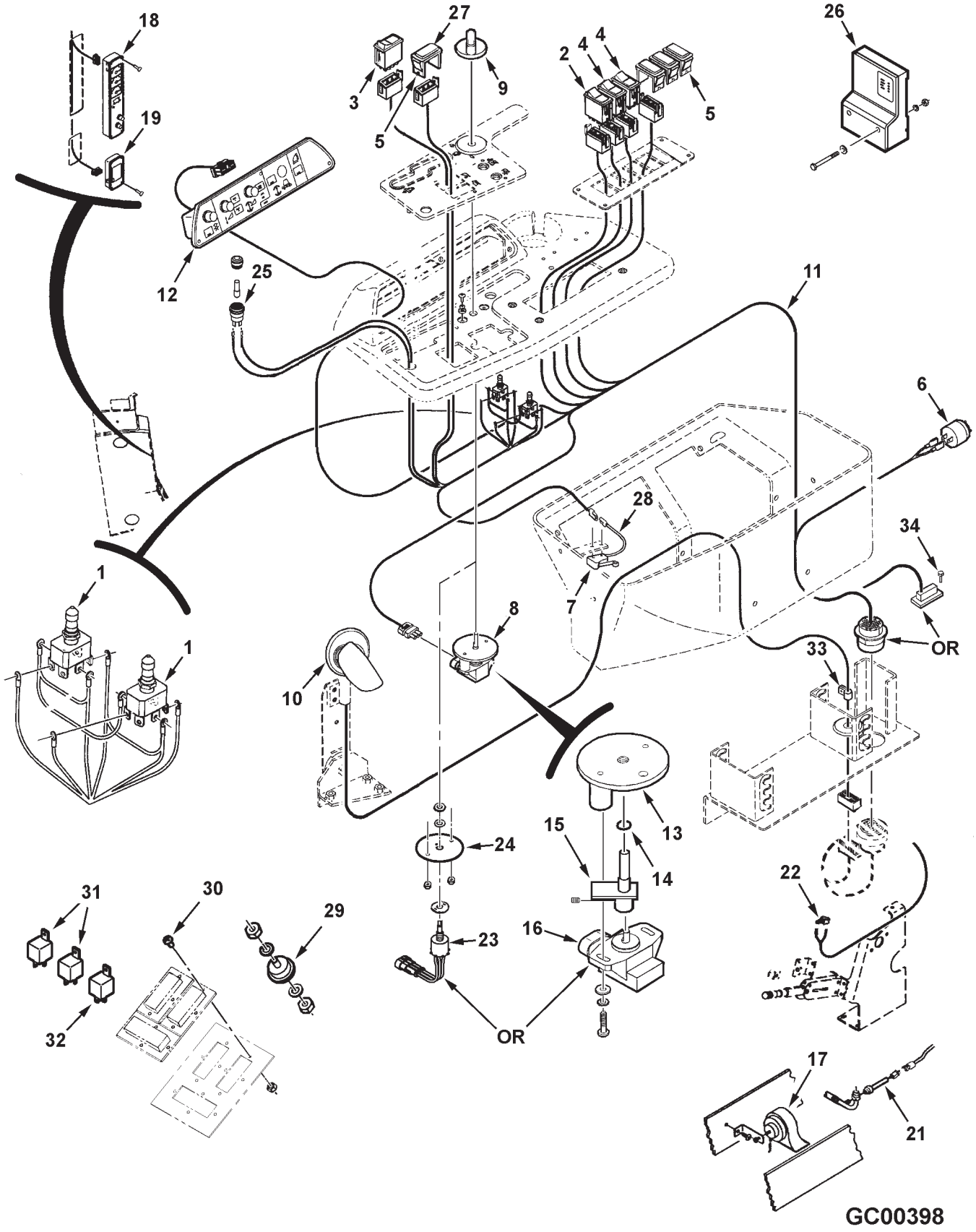

https://truckmanualshub.com/

ITEM	NUMBER	QTY	DESCRIPTION
1	700726696	2	SWITCH, LEVER LOCK
2	71387413	1	SWITCH, SPEED, HARE/TORTOISE
3	71387416	1	SWITCH, HEADER REVERSE
4	71387417	2	SWITCH, INCREASE/DECREASE
5	71390325	4	PLUG, SWITCH
6	112236W1	1	ALARM BUZZER
7	----------	-	SWITCH, PROXIMITY, BACK-UP (SERVICE W/ 107041 & 71385907 WIRE ASY.)
	107041	1	SWITCH, MICRO, BACK-UP (SEE "CAB, SEAT CONSOLE" FOR MOUNTING BRACKET)
	700701772	2	SCR, MACH, PAN HD, #6-32 X 1
	195441M1	2	LOCKWASHER, #6
	704551	2	NUT, #6-32 REG
8	71393931	1	THROTTLE ASY. (INCLUDES COMPONENT ITEMS 13-16)(PRIOR S/N HR36101)
	700710188	2	SCREW, PAN HD, MACH. #6-32 X 3/4
	70917395	2	LOCKWASHER, #8
	70923906	2	WASHER, #8, NARROW
9	71396391	1	KNOB, THROTTLE
10	71388133	1	HANDLE ASY., HYDRO (SEE BREAKDOWN)
	70921332	2	CAPSCREW, 5/16-18 X 3/4
11	71387408	1	HARNESS, CONSOLE (PRIOR S/N HR36101)
	71407298	1	HARNESS, CONSOLE (EFF. S/N HR36101)
12	71393285	1	CONTROLLER - CONSOLE
	108664W1	3	KNOB
	71394716	3	SHAFT, KNOB
	70937280	3	SCREW, PAN HD TAPPING, #8-32 X 3/4
	71393926	3	WELLNUT, #8-32
13	71398169	1	BRACKET, THROTTLE SUPPORT
14	70923559	1	O-RING
15	71393623	1	SHAFT, THROTTLE
	70923520	1	SCREW, SET #8-32 X 1/4
16	71391869	1	SENSOR, ROTARY POSITION
	700710188	2	SCR, PAN HD, MACH. #6-32 X 3/4
	70917395	2	LOCKWASHER, #8
	70923906	2	WASHER, #8, NARROW
17	71406492	1	HORN
	7701501	1	SCR,HX WSHR HD TAPPING, 1/4-14 X 3/4
18	71389811	1	CLUSTER, GAUGE (FUEL, OIL PRESS, TEMP, AND GRAIN LOSS MONITOR)
	108664W1	2	KNOB
	71394716	2	SHAFT, KNOB
	70937280	4	SCREW, PAN HD TAPPING, #8-32 X 3/4
	71393926	4	WELLNUT, #8-32
19	71393277	1	CONTROL, TACHOMETER
	700720863	4	SCREW, PAN HD. MACH. #8-32 X 2.0
	71393926	4	WELLNUT, #8-32
21	71372724	1	SWITCH, LOW PRESSURE
22	71395848	1	SWITCH, PARK BRAKE
23	71406894	1	THROTTLE SWITCH ASY (EFF. S/N HR36101)

CONTINUED

https://truckmanualshub.com/

CAB COMPONENTS
CONTROLS & SWITCHES

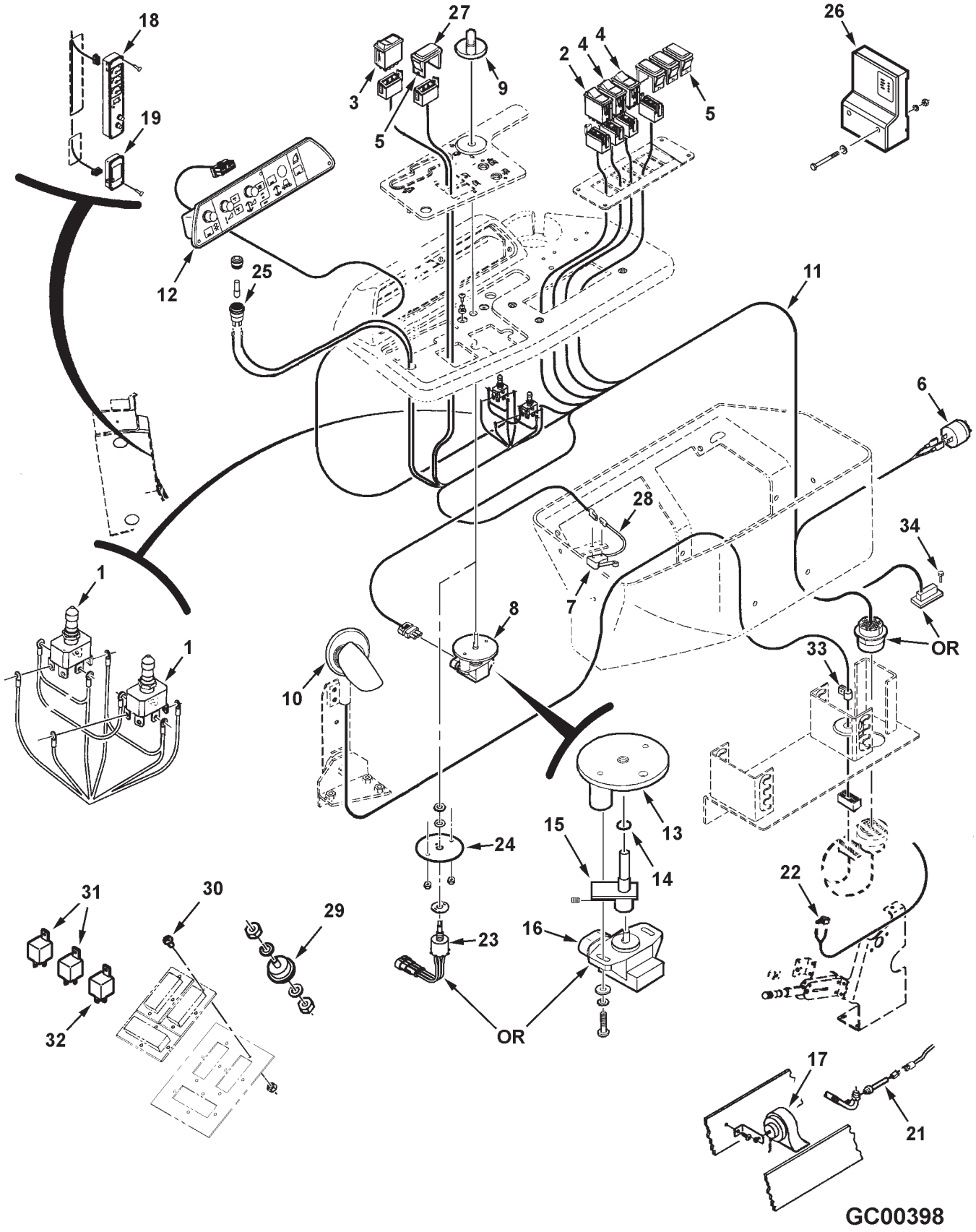

https://truckmanualshub.com/

ITEM	NUMBER	QTY	DESCRIPTION
24	71400505	1	PLATE, THROTTLE MTG (EFF. S/N HR36101)
	700710188	2	SCREW, PAN HD MACH. #6-32 X 3/4
	70917395	2	LOCKWASHER, #8
	70923906	4	WASHER, #8, NARROW
	704551	2	NUT, #6-32 REG
	70917459	2	LOCKWASHER, #6
25	112812W1	1	SOCKET ASY, LAMP
	112811W1	1	LAMP, PILOT
	112814W1	1	LENS, AMBER
26	71379323	1	CONTROL, ROTOR SPEED (PRIOR S/N HR36101)
	7701964	2	CAPSCREW, 1/4-20 X 2-1/2 GR2
	705012	2	LOCKWASHER, 1/4 REG
	70917377	2	WASHER, HARD, 1/4
27	71387414	1	SWITCH, ON/OFF, RWA
28	71385907	1	WIRE ASY, MICRO SWITCH(PRIOR S/N HR36101
29	72500822	2	TERMINAL, FEED THRU, 3/8-16 UNC
30	700711659	12	SCREW, PAN HD MACH, #8-32 X 3/4
	107320M1	12	LOCKNUT, HEX SERR FLANGE, #8-32
31	71390323	2	RELAY, 70 AMP
32	72160919	1	RELAY, 40 AMP
33	70927097	1	CLAMP, LINE, 1/2 DIA X .281 HOLE (EFF. S/N HR36101)
	7883283	1	SCREW, HEX WSHR HD MACH, 1/4-20 X 1
	70931209	1	LOCKNUT, HEX SERR FLANGE, 1/4-20
34	700711659	2	SCREW, PAN HD MACH, #8-32 X 3/4 (EFF. S/N HR36101)
	107320M1	2	LOCKNUT, HEX SERR FLANGE, #8-32

GC00398
PR: 128

https://truckmanualshub.com/

CAB COMPONENTS
FUSE PANEL & HYDRO HANDLE

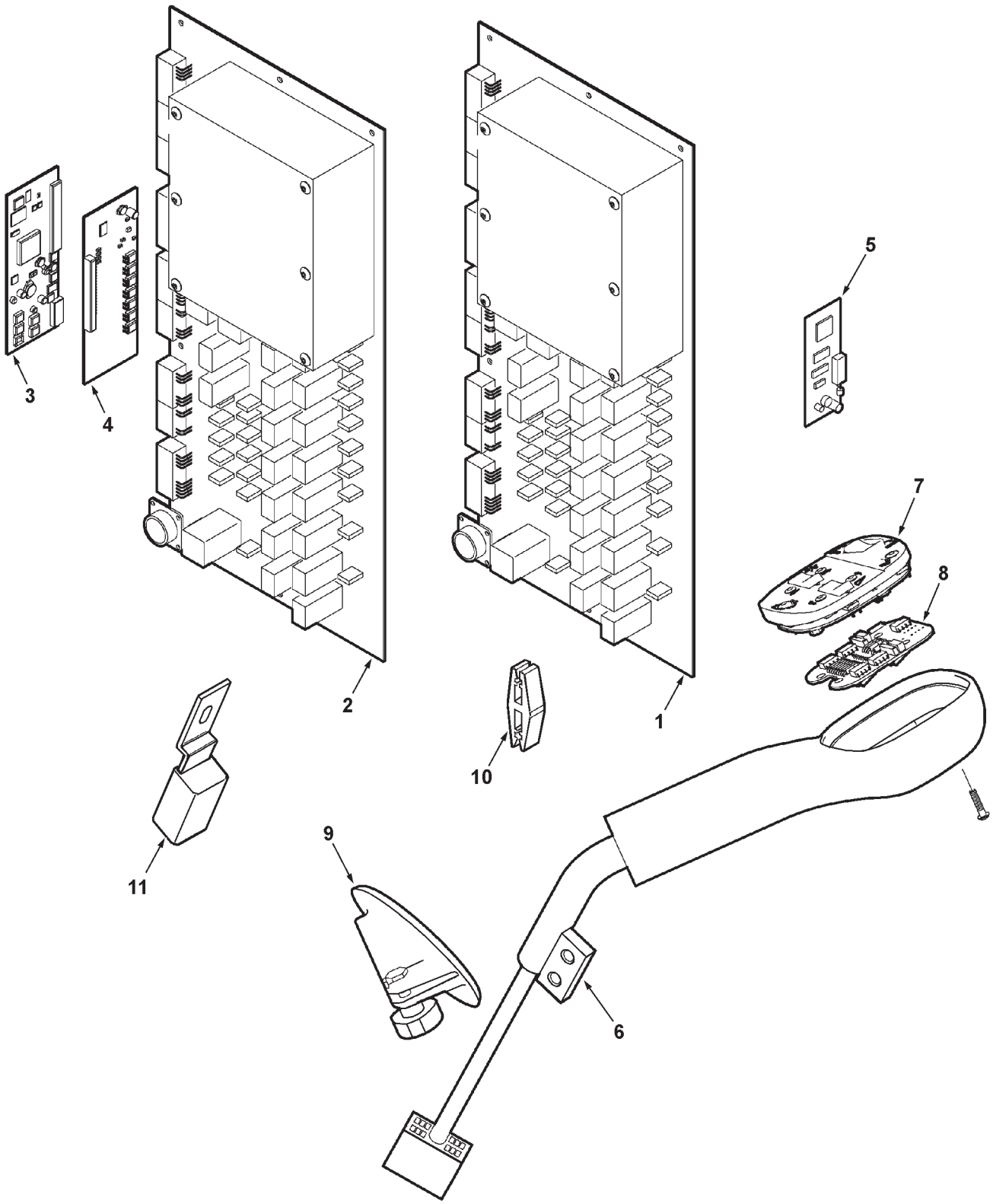

GC00332

https://truckmanualshub.com/

ITEM	NUMBER	QTY	DESCRIPTION
1	71394717	1	PANEL ASY., FUSE (INCL. ITEMS 2,3,4) (PRIOR S/N HR36101)
	71406480	1	PANEL ASY, FUSE (INCL. ITEMS 2,3,4) (EFF. S/N HR36101)
	71389815	10	BOLT, PLASTIC ISOLATOR, #8-32 UNC
	70917395	10	LOCKWASHER, #8
	774745	10	NUT, #8-32 UNC
	7883267	1	SCR, HEX WSHR HD MACH, 1/4-20 X 1/2
	700721620	9	MINI FUSE, 3 AMP
	70937605	8	MINI FUSE, 5 AMP
	70937606	5	MINI FUSE, 10 AMP
	70937607	AR	MINI FUSE, 15 AMP (NOT INCLUDED)
	70937608	AR	MINI FUSE, 20 AMP (NOT INCLUDED)
	70937609	AR	MINI FUSE, 25 AMP (NOT INCLUDED)
	70937610	AR	MINI FUSE, 30 AMP (NOT INCLUDED)
	71396970	3	PCB RELAY, 40 AMP
	71396971	17	PCB RELAY, 20 AMP
	71396972	1	LID, CARD CAGE (NOT ILLUS)
2	71389812	1	PANEL, FUSE
3	71389813	1	CARD, MAIN CONTROL (PRIOR S/N HR36101)
	71406481	1	CARD, MAIN CONTROL (EFF. S/N HR36101)
4	71389814	1	CARD, OUTPUT DRIVER
5	71393350	1	CARD, FIELDSTAR INTERFACE (OPT.)
6	71388133	1	HANDLE ASY, HYDRO (INCLUDES ITEMS 7,8,9)
	-----	1	HANDLE & SUPP'T ASY, HYDRO (ORDER HYDRO HANDLE ASY.)
7	71397940	1	DECK ASY. SWITCHES
	195441M1	4	LOCKWASHER, #6
	-----	4	SCREW, HEX SOCK BUTTON HD, #6-32 X 5/8 (SERVICE W/ 71408201)
	71408201	4	SCREW, TORX HD, #6-32 X 3/4, BLACK
8	71397941	1	CIRCUIT BOARD ASY., HANDLE
9	71397942	1	PALM/WRIST REST KIT, HANDLE
10	71375902	1	FUSE PULLER
11	72160919	1	RELAY, 40 AMP

GC00332
PR: 130

https://truckmanualshub.com/

CAB COMPONENTS
UPPER CONSOLE

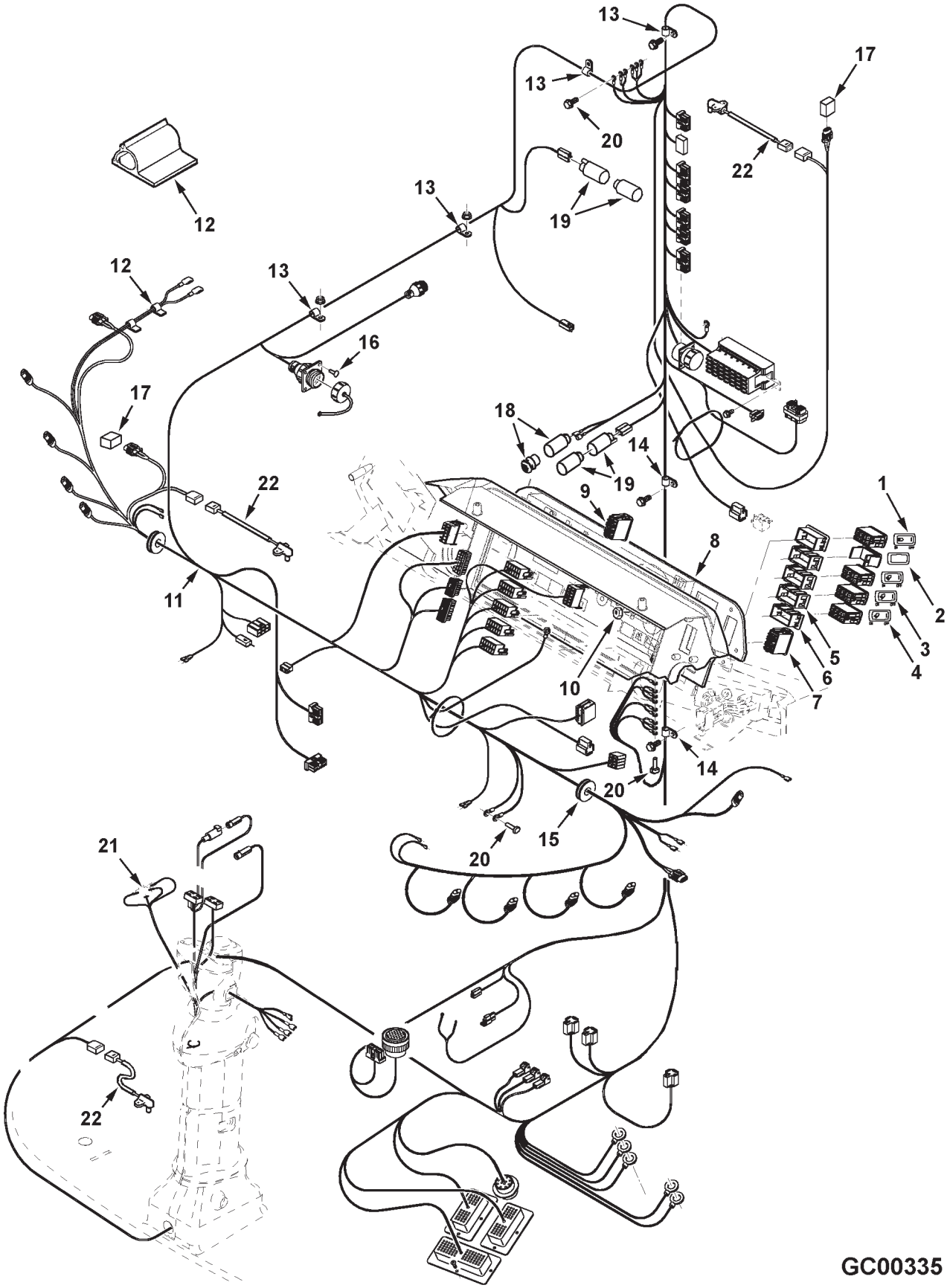

https://truckmanualshub.com/

ITEM	NUMBER	QTY	DESCRIPTION
1	71387423	1	SWITCH, EXIT LIGHT
2	71390325	1	PLUG, SWITCH COVER
3	71387424	2	SWITCH, FIELD LIGHTS
4	71387418	1	SWITCH, HEADLIGHT
5	71391417	3	BEZEL, SWITCH CENTER
6	71391416	2	BEZEL, SWITCH END
7	71387422	1	SWITCH, HAZARD
8	71406478	1	PANEL, ELECTRONIC INSTRUMENT (E.I.P.)
	70935072	4	SCREW, PAN HD. SELF-TAP 1/4-20 X 5/8
9	71387420	1	SWITCH, WIPER, FRONT GLASS
10	Y704445	1	NUT, HEX #10-32
11	71406476	1	HARNESS, CAB (PRIOR S/N HR36101)
	71407297	1	HARNESS, CAB (EFF. S/N HR36101)
	71412358	1	HARNESS, CAB (EFF. S/N HR36221)
	71413325	1	HARNESS, CAB (EFF. S/N HS36---)
12	70569880	2	CLIP, WIRING, SELF-ADHESIVE PLASTIC
13	70926874	4	CLAMP, HARNESS, 1-1/2 X .406 HOLE
	7883325	1	SCREW,HX WSHR HD MACH, 5/16-18 X 3/4
	70931277	2	LOCKNUT, SERR. FLANGE, 5/16-18
14	70936765	2	CLAMP, HARNESS, 1-3/4 X .406 HOLE
	7883325	2	SCREW,HX WSHR HD MACH, 5/16-18 X 3/4
15	70937658	1	GROMMET, RUBBER
16	70937550	4	SCR,PHILLIPS PAN HD,TAPPING, #8-18 X 3/4 (FIELDSTAR PLUG)
17	3714264M1	2	SENSOR, AIR TEMPERATURE
18	71365477	1	ELEMENT, LIGHTER
	71365476	1	HOUSING, LIGHTER
19	107500M1	2	SOCKET, AUX. POWER
	107499M1	2	PLUG, AUX. POWER SOCKET
20	701953	3	SCR, HEX WSHR HD TAPPING, 5/16-18 X 3/4
	70920426	2	LOCKWASHER, EXT TOOTH, 5/16
21	Y704445	4	NUT, #10-32 UNF
	705004	4	LOCKWASHER, #10
22	71413062	3	SENSOR, TEMP, A/C (EFF. S/N HS36---)
	700728339	3	TAPE, ADHESIVE, SENSOR

GC00335
PR: 132

https://truckmanualshub.com/

CAB COMPONENTS
RADIO AND ANTENNA

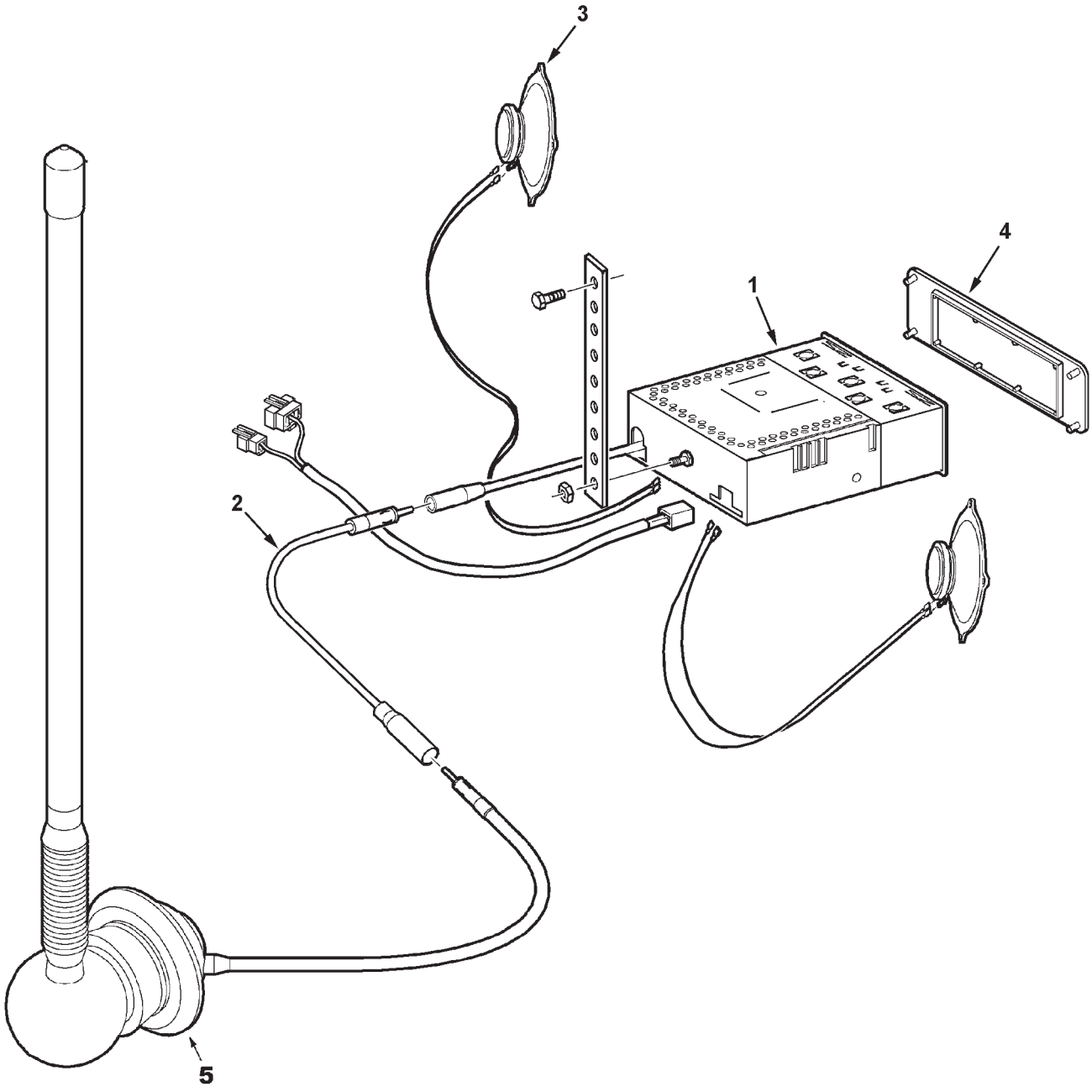

GC00338

https://truckmanualshub.com/

ITEM	NUMBER	QTY	DESCRIPTION
1	RE701169D6	1	* RADIO, AM/FM, CD, WEATHERBAND
	RE701141D6	1	* RADIO, AM/FM, CASSETTE, WEATHERBAND
	RE701128D6	1	* RADIO, AM/FM, CASSETTE
2	RE530013	1	CABLE, ANTENNA EXTENSION
3	71393287	2	SPEAKER, 5-1/4 POLYCONE
	700701772	8	SCREW, PAN HD. MACH. #6-32 X 1.0
	700703830	8	WASHER, FLAT #6
	195441M1	8	LOCKWASHER, #6
	704551	8	HEXNUT, #6-32
4	71362813	1	PANEL, BLANK, W/O RADIO
	70932720	4	NUT, SPEED
5	RE210066	1	ANTENNA ASY., W/CABLE
-	71406069	1	** KIT, RADIO, AM/FM, CD, WEATHERBAND
-	71398028	1	** KIT, RADIO, AM/FM,CASSETTE,WEATHRBAND

* INCL. HARNESS, MTG STRAP & HRDWR
** FIELD INSTALL. ORDER THRU DLR CENTRAL

GC00338
PR: 134

https://truckmanualshub.com/

MONITORING SYSTEMS
DIGITAL TACHOMETER

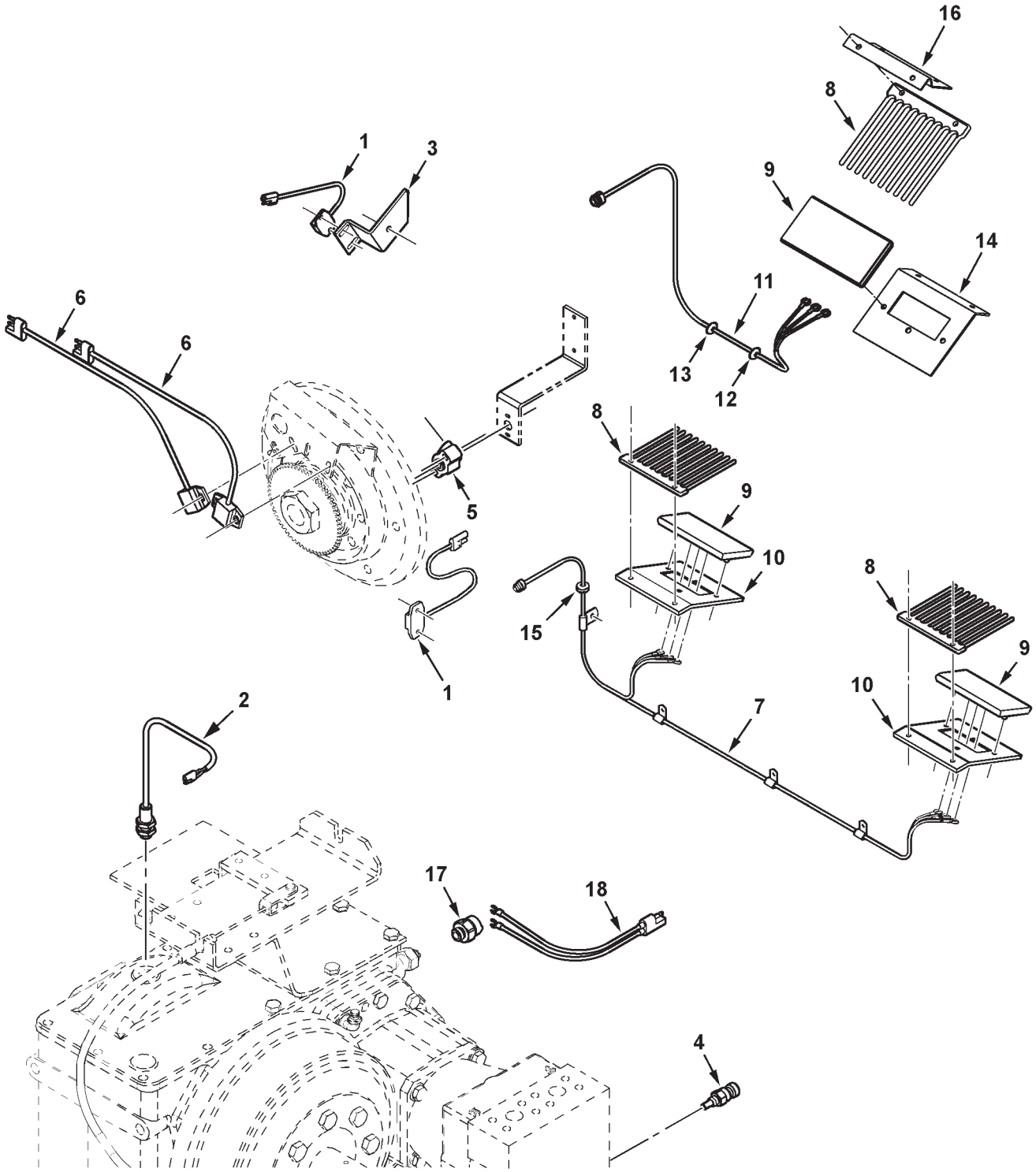

MC00310

https://truckmanualshub.com/

ITEM	NUMBER	QTY	DESCRIPTION
1	71391021	4	SENSOR ASY., TWO WIRE
	70931317	8	BOLT, RD HD,SHT SQ NK, 1/4-20 X 3/4
	705012	8	LOCKWASHER, 1/4
	70916622	8	HEXNUT, 1/4-20
2	71389818	1	SENSOR, GROUND SPEED
3	71385108	1	BRACKET, BEATER SPEED SENSOR
4	71393718	1	SENSOR, HYDRO TEMP
	70936326	1	O-RING, .072 X .414 ID
5	71376825	1	SENSOR, CONCAVE POS'N (SEE "PROCESSOR")
	70918151	2	SCREW, TRUSS HD MACH #10-32 X 1-1/4
	70917380	2	WASHER, #10
	705004	2	LOCKWASHER, #10
	Y704445	2	HEXNUT, #10-32
6	71383914	1	SENSOR,ROTOR SPD(QTY 2 PRIOR S/N HR36101
	70931317	2	BOLT, RD HD,SHT SQ NK, 1/4-20 X 3/4
	705012	2	LOCKWASHER, 1/4
	70916622	2	HEXNUT, 1/4-20
7	71391018	1	HARNESS, SHOE LOSS (TIED TO SHAKER ARM) (PRIOR S/N HP36101)
	71391421	1	HARNESS,SHOE LOSS (THRU TWO GROMMETS IN FRAME)(EFF. S/N HP36101)
	70937685	2	J-CLIP, 3/8 X .406 HOLE
	700725918	9	J-CLIP, 5/16 X .281 HOLE
	70931317	4	BOLT, RD HD,SHT SQ NK, 1/4-20 X 3/4
	70916622	4	HEXNUT, 1/4-20
	705012	4	LOCKWASHER, 1/4
	7703457	1	CAPSCREW, 1/4-20 X 3/4 GR5
	70931209	1	NUT, SERR. FLANGE, 1/4-20
	353769X1	1	WASHER, 1/4, HARD
	70930708	1	CLAMP, 5/16 X .344 HOLE (PRIOR S/N HP36101)
8	71393717	4	FINGER DIFFUSER
	7703457	2	CAPSCREW, 1/4-20 X 3/4 GR5
	70916622	2	NUT, 1/4-20 REG
	705012	2	LOCKWASHER, 1/4
9	71412356	4	SENSOR, GRAIN LOSS
	70916622	8	HEXNUT, 1/4-20
	705012	8	LOCKWASHER, 1/4
10	71393716	3	BRKT, GRN LOSS (QTY 4 PRIOR S/N HN36101)
	7770167	6	BOLT, RH HD SQ NK, 1/4-20 X 1.0
	700709601	6	WASHER, 1/4 WIDE
	705012	6	LOCKWASHER, 1/4
	70916622	6	HEXNUT, 1/4-20
11	71391874	1	HARNESS, ROTOR GRAIN LOSS
12	700701160	1	GROMMET
13	832653M1	1	GROMMET
14	71401333	1	BRKT,ROTOR LOSS SENSOR (EFF S/N HM36101)
	70916622	2	NUT, 1/4-20 REG
	705012	2	LOCKWASHER, 1/4
15	70937658	2	GROMMET, RUBBER (EFF. S/N HP36101)
16	71409405	1	BRACKET, MOUNTING, FINGER DIFFUSER
17	71342216	1	SWITCH, START
18	71385907	1	WIRE ASM., SWITCH

https://truckmanualshub.com/

HARNESSES & LIGHTING
GRAIN BIN

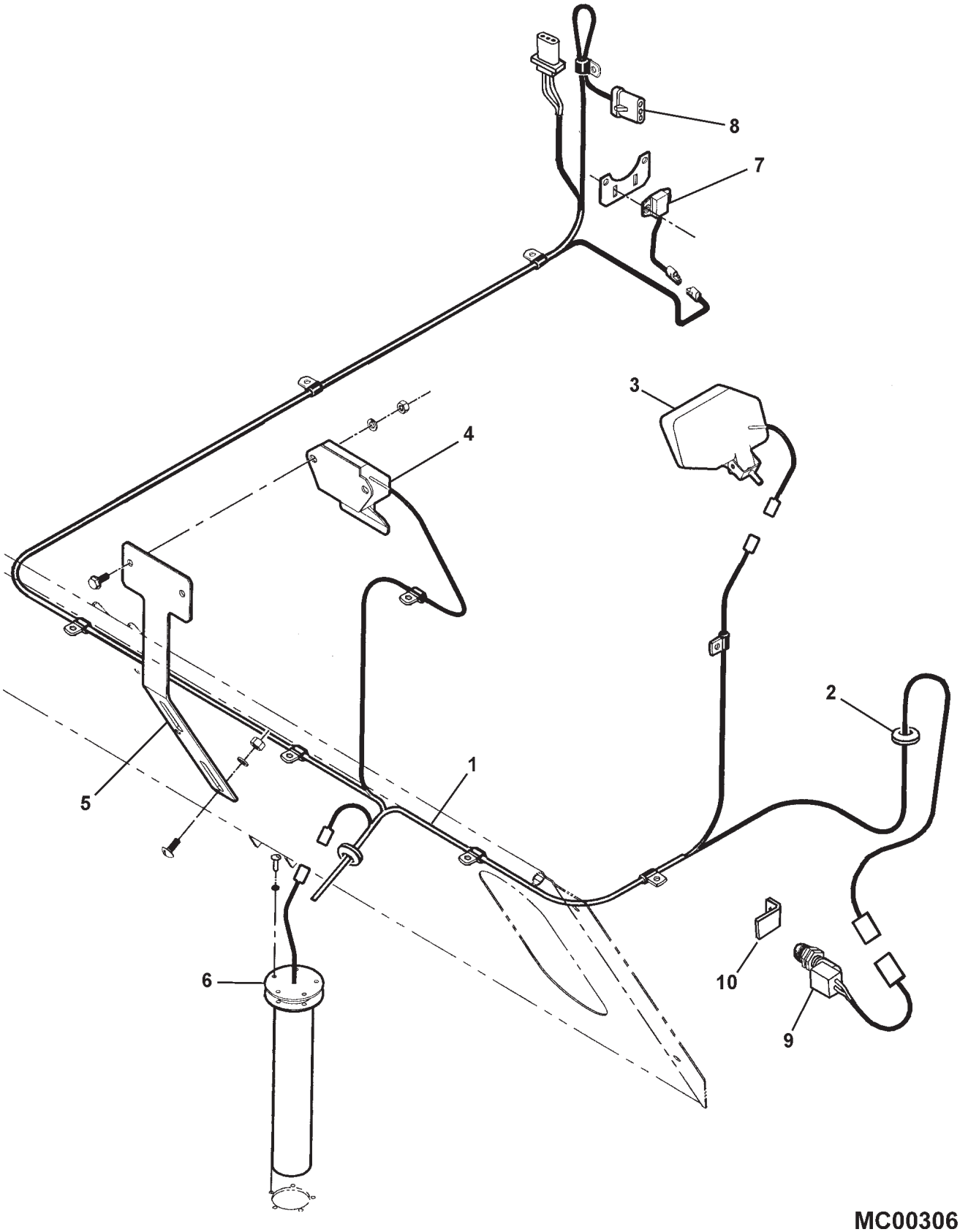

MC00306

https://truckmanualshub.com/

ITEM	NUMBER	QTY	DESCRIPTION
1	71391020	1	HARNESS, GRAIN BIN
	70937685	11	J-CLIP, 3/8 X .406 HOLE
	70936314	5	J-CLIP, 1/2 X .406 HOLE
	70921332	AR	CAPSCREW, 5/16-18 X 3/4
	70917356	AR	LOCKWASHER, 5/16
	70917372	AR	HEXNUT, 5/16-18
	70925094	3	TIE, BLACK NYLON, .184 X 7.31
2	700708340	1	GROMMET, RUBBER
3	71393704	1	LIGHT, GRAIN BIN
4	71375911	1	SENSOR, BIN LEVEL
	7883325	2	SCREW, WSHR HD MACH, 5/16-18 X 3/4
	70917356	2	LOCKWASHER, 5/16
	70917372	2	HEXNUT, 5/16-18
5	71393742	1	BRACKET, BIN LEVEL SENSOR
6	71407293	1	SENDER, FUEL LEVEL W/ GASKET
	3729528M1	5	SCREW, PAN HD MACH, #10-24 X 1-1/4
	705004	5	LOCKWASHER, #10 REG
	70917380	5	WASHER, .219 X .50 X .049 TH
	71398110	1	GASKET, SENDER
7	71391021	1	SENSOR, TWO WIRE
	70931317	2	BOLT, RD HD,SHT SQ NK, 1/4-20 X 3/4
	705012	2	LOCKWASHER, 1/4
	70916622	2	HEXNUT, 1/4-20
8	71188145	1	BRACKET, SHAFT
9	293766M1	1	SWITCH, MOMENTARY
10	2495780W1	1	BRACKET, UNLOADER INDICATOR
	703249	1	CAPSCREW, 3/8-16 X 1.0
	70917378	3	WASHER, WIDE, 3/8
	705038	1	LOCKWASHER, 3/8
	70916950	1	HEXNUT, 3/8-16

MC00306
PR: 138

https://truckmanualshub.com/

ELECTRICAL HARNESSES
REAR

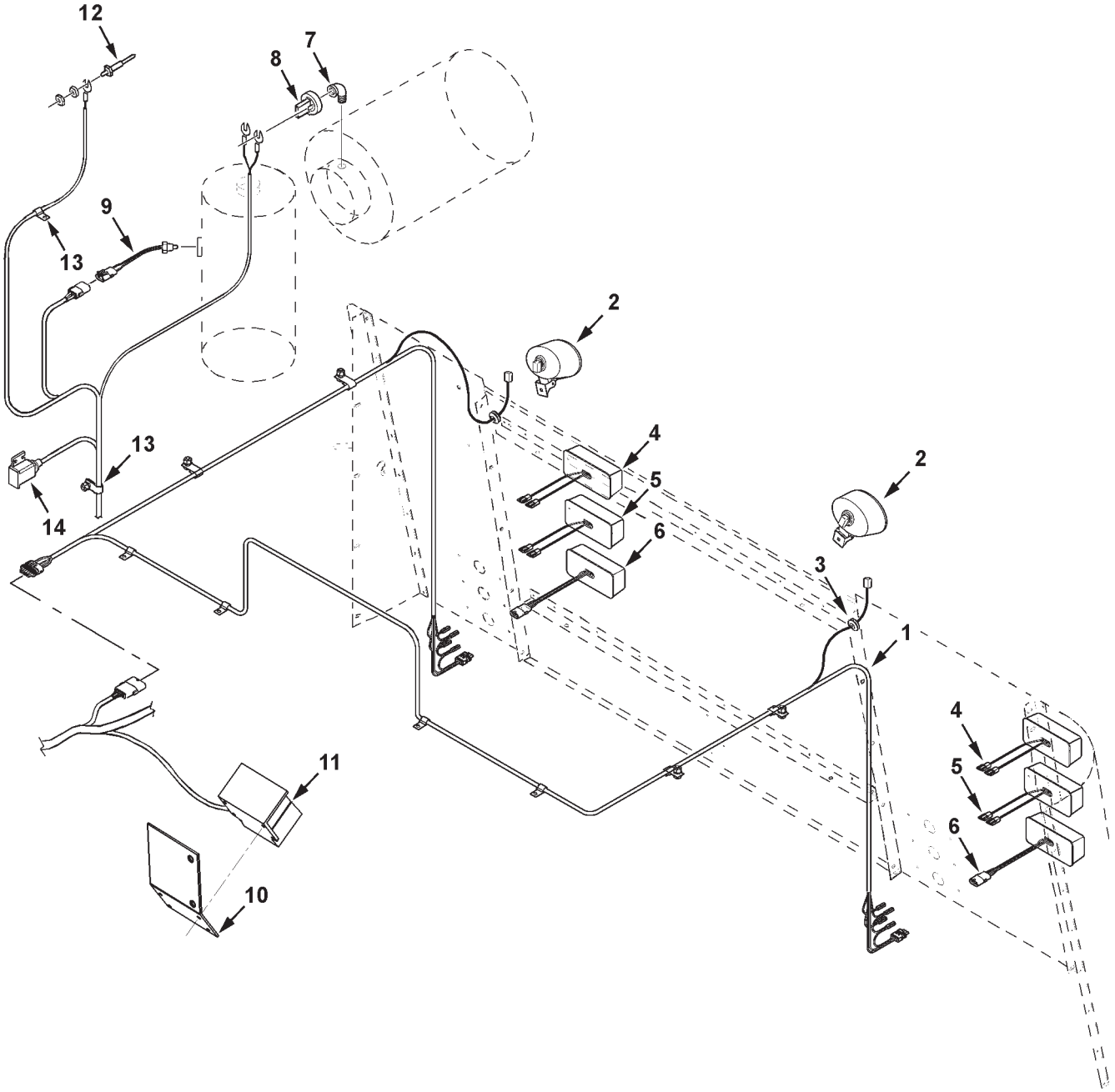

MC00363

https://truckmanualshub.com/

ITEM	NUMBER	QTY	DESCRIPTION
1	71391709	1	HARNESS, TAIL LIGHT
	70937677	1	J-CLIP, 1.0 X .406 HOLE
	70936314	9	J-CLIP, 1/2 X .406 HOLE
	70921965	4	CAPSCREW, 3/8-16 X 3/4
	705038	4	LOCKWASHER, 3/8
	70916950	4	HEXNUT, 3/8-16
	70925094	AR	TIE, SELF-LOCK .184 X 7.31
2	700726172	2	LIGHT, FLOOD
	700722351	2	BULB, HALOGEN, 12V (GE #862)
3	70937691	2	GROMMET
4	72503309	2	LAMP ASY., WARNING (AMBER)
	1018729M1	1	BULB, 1156
	72501110	1	LENS, REPLACMENT
	3729545M1	4	SCREW, PAN HD MACH, #10-24 X 2-1/2
	705004	4	LOCKWASHER, #10
	70916621	4	NUT, #10-24, REG
5	71391871	2	LAMP ASY., BACKUP (CLEAR)
	1018729M1	1	BULB, 1156
	3729545M1	4	SCREW, PAN HD MACH, #10-24 X 2-1/2
	705004	4	LOCKWASHER, #10
	70916621	4	NUT, #10-24, REG
6	700726168	2	LAMP ASY., TURN SIGNAL (RED)
	70928348	1	BULB, 1157
	----------	1	LENS, REPLACMENT (ORDER ASY.)
	700718599	AR	KIT, CONNECTOR REPAIR
	3729545M1	4	SCREW, PAN HD MACH, #10-24 X 2-1/2
	705004	4	LOCKWASHER, #10
	70916621	4	NUT, #10-24, REG
7	70915955	1	ELBOW, 90 DEG FEM. 1/8-27 NPTF
8	31-2530050	1	SWITCH, AIR CLEANER VACUUM
9	71391418	1	SENSOR, OIL LEVEL (PRIOR S/N HS36101)
10	71398850	1	BRKT, BACK-UP ALARM (EFF. S/N HP36101)
11	71389319	1	ALARM, BACK-UP (EFF. S/N HP36101)
	7703457	4	CAPSCREW, 1/4-20 X 3/4 GR5
	705012	4	LOCKWASHER, 1/4
	704007	4	NUT, 1/4-20, REG
12	71193260	1	SENDER, RADIATOR LEVEL
	705004	1	LOCKWASHER, #10
	Y704445	1	HEXNUT, #10-32
13	70937685	2	J-CLIP, 3/8 DIA X .406 HOLE
	70929722	1	J-CLIP, 3/16 DIA X .281 HOLE
14	71391870	1	SERVICE LIGHT, MAGNETIC
	71397725	AR	OUTLET SOCKET, 12V, SERVICE LIGHT
	70936592	4	SCREW, PAN HD TAPPING, #10-16 X 3/4

https://truckmanualshub.com/

BEACON LIGHTS
FIELD KIT

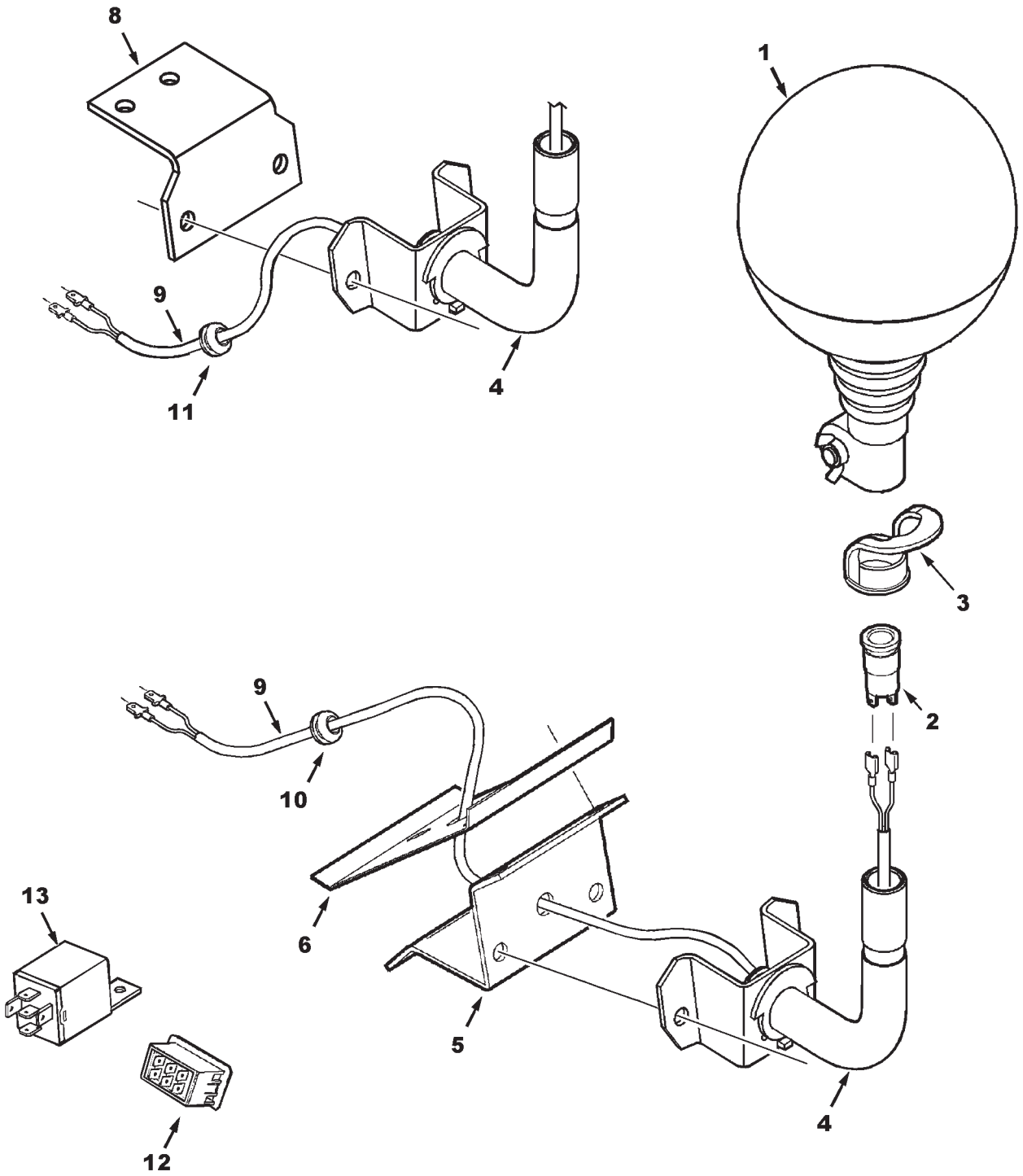

https://truckmanualshub.com/

BEACON LIGHTS
FIELD KIT

ITEM	NUMBER	QTY	DESCRIPTION
-	71395048	1	* KIT, BEACON LIGHT (PRIOR S/N HN36101)
-	71402108	1	* KIT, BEACON LIGHT (EFF. S/N HN36101)
1	3715144M92	2	BEACON
2	3617860M1	2	PLUG, BEACON
3	3617859M1	2	CAP, BEACON
4	3778093M91	2	SUPPORT, BEACON
	7883382	4	SCREW, HEX WSHR HD MACH, 3/8-16 X 1
	704247	4	LOCKNUT, SERRATED FLANGE, 3/8-16
5	71391403	1	BRACKET, BEACON MTG. (FRONT)
	7883382	3	SCREW, HEX WSHR HD MACH, 3/8-16 X 1
	704247	3	LOCKNUT, SERRATED FLANGE, 3/8-16
6	71391404	1	PLATE, BACKUP (FRT)
8	71388391	1	BRACKET, BEACON MTG. (REAR)
9	71395830	2	HARNESS, BEACON LIGHT (FRT & REAR)
10	70923510	1	GROMMET, RUBBER, .375 ID X 3/4 OD (FRT)
11	7827629	1	GROMMET, RUBBER, .375 ID X 5/8 OD (REAR)
12	71387419	1	SWITCH, BEACON (PRIOR S/N HN36101)
	71401336	1	SWITCH, BEACON (EFF. S/N HN36101)
13	72160919	1	RELAY, 40 AMP (EFF. S/N HN36101)
	3619622M1	2	TIE, BLACK NYLON, .165 X 14 LG

* ORDER THRU DEALER CENTRAL

MC00364
PR: 148

https://truckmanualshub.com/

HIGH INTENSITY LIGHTING
FIELD KIT

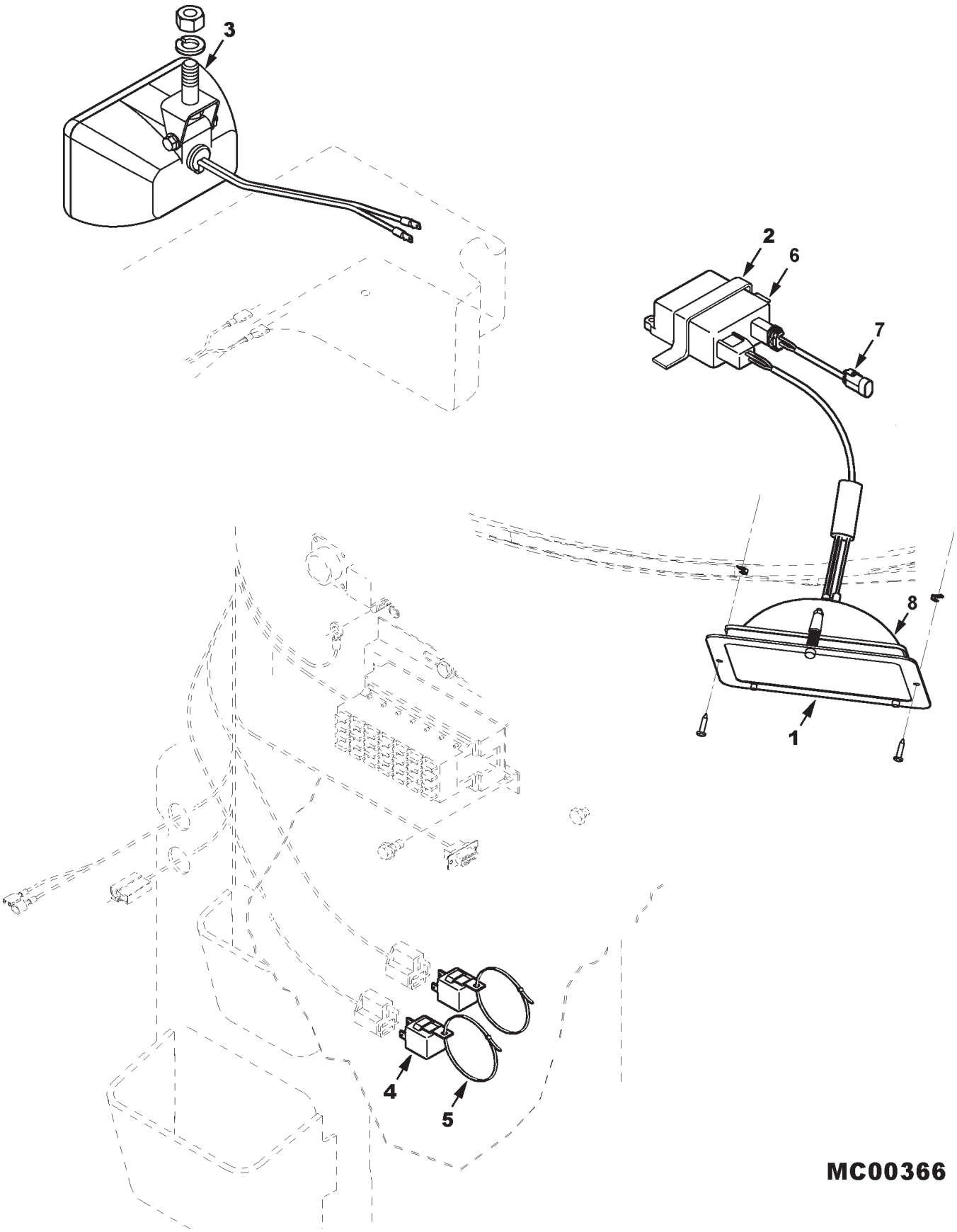

https://truckmanualshub.com/

ITEM	NUMBER	QTY	DESCRIPTION
-	71402111	1	*KIT, H.I.D. LIGHTING(PRIOR S/N HP36101)
-	71406073	1	*KIT, H.I.D. LIGHTING (EFF. S/N HP36101)
1	71401342	2	LAMP ASY, HIGH INTENSITY (INCL IT.6,7,8) (SERVICE W/ 71410912)
	71410912	2	LAMP ASY,HIGH INT'Y (INCL IT.6,7,8,9,10)
	70937550	4	SCREW, PAN HD, TAPPING, #8-18 X 3/4
	700715255	4	NUT, SPEED, #8
2	700719940	2	FASTENER, ADHESIVE BACK
3	71393703	1	LIGHT, CAB (PRIOR S/N HP36101)
4	72160919	2	RELAY, 40 AMP (PRIOR S/N HP36101)
5	70925094	2	TIE, BLACK NYLON (PRIOR S/N HP36101)
6	71408385	1	BALLAST (FOR LAMP 71401342)
	71408393	1	BALLAST (FOR LAMP 71410912)
7	71408386	1	ADAPTER WIRE (FOR LAMP 71401342)
	71408394	1	ADAPTER WIRE (FOR LAMP 71410912)
8	71408387	1	LAMP & STARTER (FOR LAMP 71401342)
	71408397	1	LAMP ASY (FOR LAMP 71410912)
9	71408395	1	WIRE ASY, STARTER (NOT ILLUS.)
10	71408396	1	WIRE ASY, BULB (NOT ILLUS.)

* ORDER THRU DEALER CENTRAL

MC00366
PR: t04c24o27c0002

https://truckmanualshub.com/

STARTER MOTOR

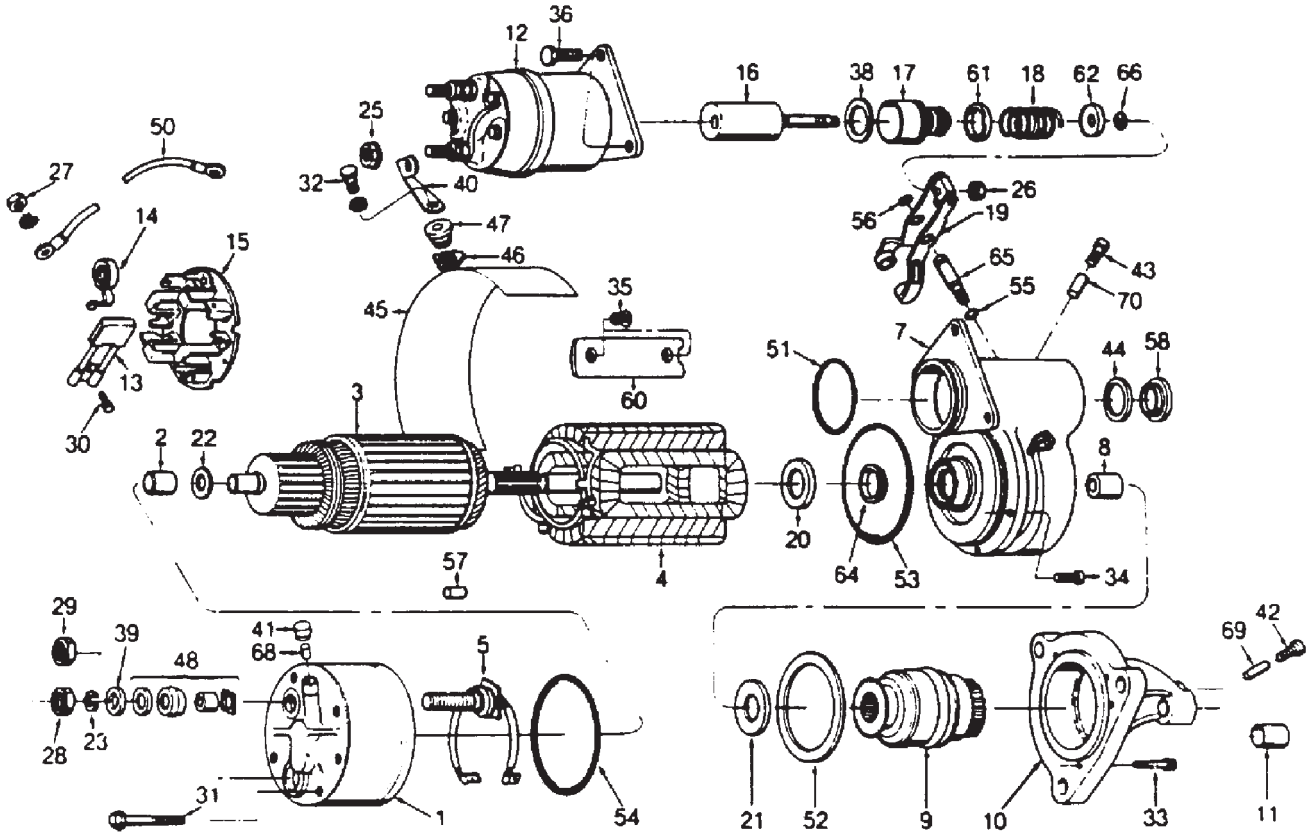

GC00111

https://truckmanualshub.com/

ITEM	NUMBER	QTY	DESCRIPTION
-	71391860	AR	STARTER ASY, 42MT, (DELCO REMY)
1	71360326	1	FRAME
2	70234847	1	BUSHING
3	71360337	1	ARMATURE
4	71360335	1	FIELD COIL
5	1070554M1	1	LEAD, TERMINAL
7	71360338	1	HOUSING, LEVER
8	71360378	1	BUSHING LEVER HOUSING
9	----------	1	DRIVE ASY
10	30-3427978	1	HOUSING, DRIVE INCL. BUSHING
11	71319846	1	BUSHING, DRIVE HOUSING
12	71360341	1	SOLENOID
13	71360350	4	BRUSH
14	1070564M1	4	SPRING, BRUSH
15	71360334	1	BRUSH PLATE ASY
16	72162820	1	PLUNGER
17	72162821	1	BOOT
18	70241344	1	SPRING, PLUNGER
19	71360381	1	LEVER, SHIFT
20	1022645M1	1	WASHER
21	K7873	1	WASHER, BRAKE
22	70276103	1	WASHER, THRUST
23	71360331	1	LOCK WASHER
25	71333276	3	NUT, FIELD COIL CONN.
26	70927029	1	NUT
27	71360342	1	NUT, SHUNT LEAD
28	71360332	1	NUT, TERMINAL
29	375098X1	1	NUT
30	363712X1	4	SCREW
31	71360349	6	SCREW & WASHER ASY.
32	72162819	4	SCREW
33	71370813	6	SCREW, DRIVE HOUSING
34	72162818	5	SCREW, LEVER HOUSING
35	72162815	8	SCREW, POLE SHOE
36	72162819	3	SCREW
38	70241345	1	WASHER
39	71360330	1	WASHER
40	71360336	1	CONNECTOR, FIELD TERMINAL
41	71360348	1	CUP
42	1055753M1	1	CUP
43	71360348	1	CUP
44	1036543M1	1	GASKET
45	72162809	1	INSULATOR, FIELD COIL
46	72162811	1	INSULATOR, FIELD TERMINAL-IN
47	72162812	1	INSULATOR, FIELD TERMINAL-OUT
48	71360328	1	INSULATOR PKG., CE TERMINAL
50	71360333	1	LEAD, CE, TERMINAL
51	1070578M1	1	O-RING
52	71360382	1	O-RING
53	70923588	1	O-RING
54	1070580M1	1	O-RING
55	167550A	1	O-RING
56	71333904	1	O-RING

CONTINUED

https://truckmanualshub.com/

STARTER MOTOR

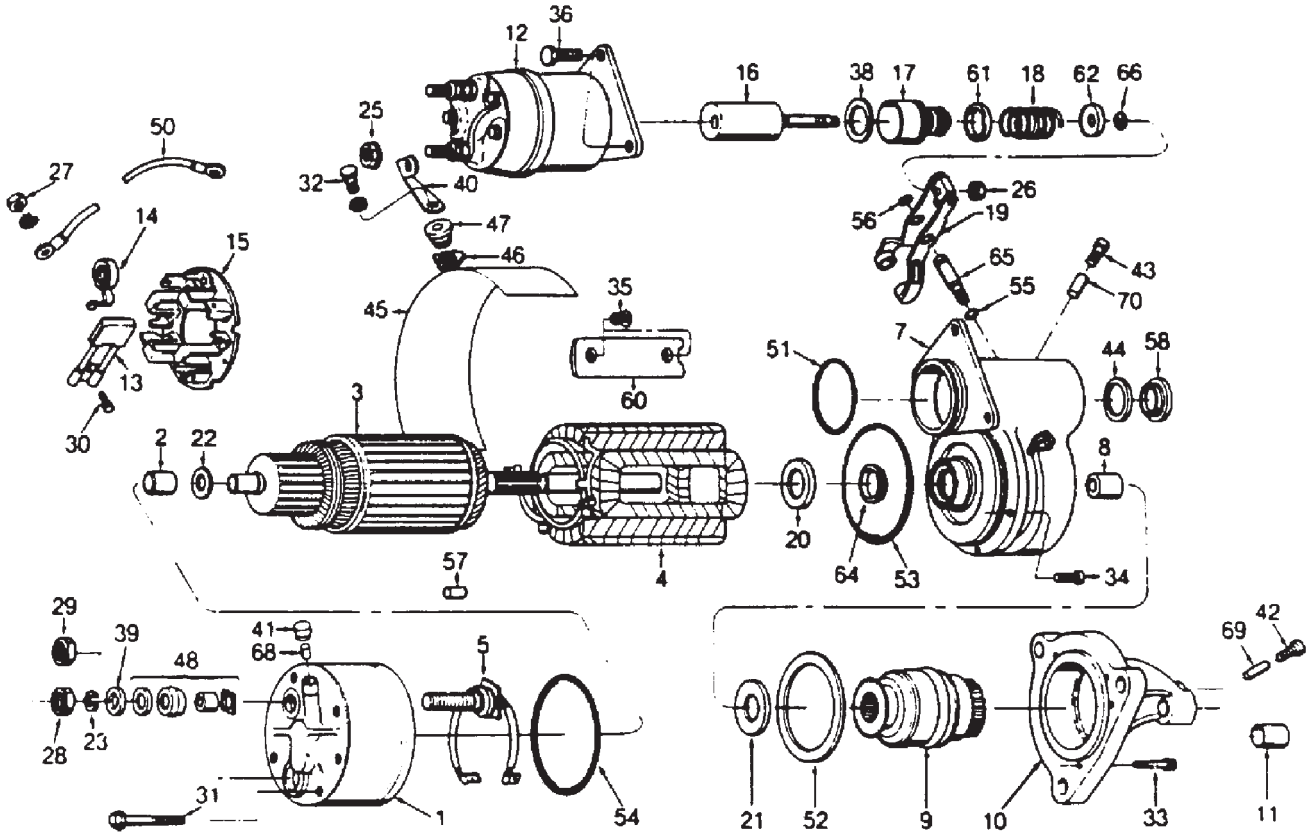

GC00111

https://truckmanualshub.com/

ITEM	NUMBER	QTY	DESCRIPTION
57	70915711	2	PIN, SPRING
58	70241352	1	PLUG, INSPECTION
60	1014575M1	4	POLE, SHOE
61	1042836M1	1	RETAINER, PLUNGER SPRING
62	70268364	1	RETAINER, PLUNGER
64	70241336	1	SEAL
65	1053766M1	1	SHAFT, LEVER
66	W944142	2	SNAP RING, PLUNGER
68	71360379	1	WICK
69	71333299	1	WICK
70	71360379	1	WICK
--	71360343	AR	12-V BRUSH, PKG. (INCL ITEMS 13, 14, 30, & 54)
--	71360344	AR	BUSHING PKG (INCL ITEMS 26, 31, 41-44, 51-54, 64, & 68-70)
--	71360345	AR	SHIFT LEVER PKG (INCL. ITEMS 26, 44, 51, 52, 55, 56, 65, & 67)

GC00111
PR: 142

https://truckmanualshub.com/

ALTERNATOR
DELCO #1117965

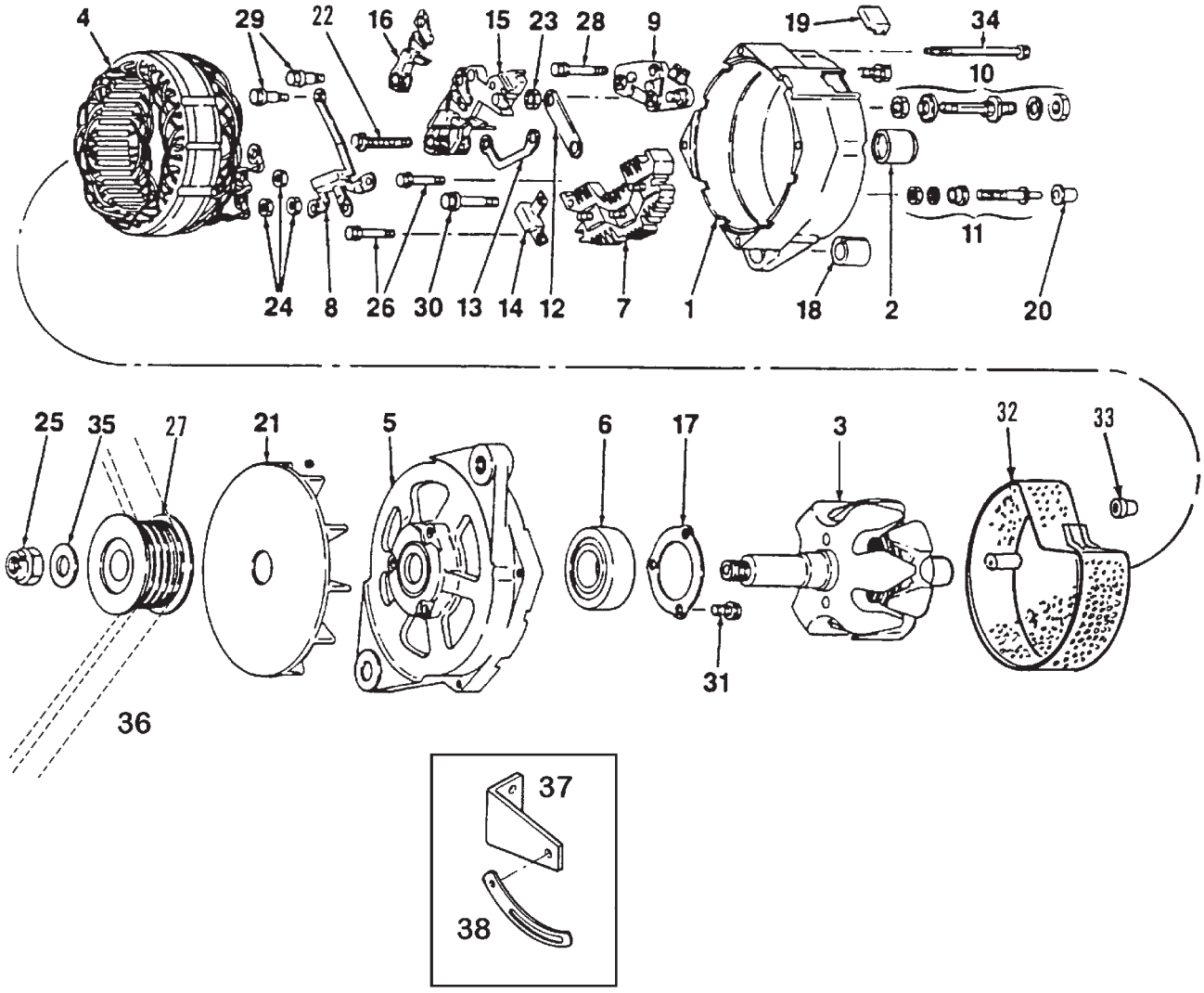

https://truckmanualshub.com/

ALTERNATOR
DELCO #1117965

ITEM	NUMBER	QTY	DESCRIPTION
-	71370306	1	ALTERNATOR, 130 AMP, 12 VOLT
-	81370306	1	ALTERNATOR, 130 AMP, 12 VOLT (REMAN)
1	71370852	1	FRAME
2	70262754	1	BEARING
3	71370854	1	ROTOR ASY
4	71370855	1	STATOR ASY
5	71370856	1	FRAME
6	30-3413837	1	BEARING
7	71370858	1	RECTIFIER BRIDGE ASY
8	71370859	1	DIODE
9	71370860	1	REGULATOR
10	71370861	1	TERMINAL PACKAGE, OUTPUT
11	71370862	1	TERMINAL PACKAGE, RELAY
12	71370863	1	CONNECTOR
13	71370864	1	CONNECTOR, RELAY TERMINAL
14	71370865	1	CAPACITOR
15	71370866	1	BRUSH HOLDER ASSEMBLY
16	71370867	1	BRUSH AND ARM
17	71370868	1	PLATE, RETAINER
18	30-3413918	1	BUSHING
19	71370570	1	COVER, TERMINAL
20	30-3413926	1	CAP, RELAY TERMINAL
21	71370872	1	FAN
22	71327160	1	SCREW, BRUSH HOLDER
23	70916622	1	NUT, REGULATOR 1/2-20
24	70917385	3	NUT #8-32
25	70930986	1	LOCK, HEX NUT 5/8 UNF-2B FINE THD
26	71370874	3	SCREW W/LOCKWASHER, #8-32 X 1
27	3965146	1	PULLEY 27.1 RETAINER 738431.1
28	71370874	1	SCREW, W/LOCKWASHER, #8-32 X 1
29	71173328	2	SCREW/INSULATOR, #8-32 X 1
30	71370877	1	SCREW/INSULATOR, #8-32 X 1-1/8
31	71370878	3	SCREW, TAPTITE, #8 X 1/2
32	71370808	1	COVER ASSEMBLY, DEBRIS
	71370880	1	SCREW, #8-32X 1-3/4
	71370881	1	SCREW, 1/4-20 X 2
	70921880	1	WASHER, LOCK, EXT. TOOTH
33	72506418	2	COVER, TERMINAL
	70232758	1	COVER, TERMINAL
34	71370879	1	SCREW, THRU, 10-24 X 2-1/2
35	70918268	1	WASHER, SHAFT, 5/8 SAE
36	----------	1	BELT, V-RIBBED ALTERNATOR (SEE BELT LISTING)
37	71351392	1	ANCHOR, BRACE
	70921210	2	CAPSCREW, 3/8-16 X 1
	70919312	2	LOCKWASHER, 3/8
38	3907674	1	BRACE, ALTERNATOR (ORDER THRU CUMMINS)
	70921210	1	CAPSCREW, 3/8-16 X 1
	70919312	1	LOCKWASHER, 3/8
	70916950	1	NUT, 5/8-16

71369889
PR: 144

https://truckmanualshub.com/

ILLUSTRATION NOT AVAILABLE

XXXXXXXX

https://truckmanualshub.com/

ITEM	NUMBER	QTY	DESCRIPTION
-			LISTED PARTS USED FOR REPAIR OF WIRE HARNESSES
1	71390804	AR	CONNECTOR, 26 WAY, DEUTSCH, DRC26-50S-05
2	71390806	AR	REMOVAL TOOL, DEUTSCH, 0411-240-2005
3	71390809	AR	PROBE, EXTRTN TOOL, SZ 16, 0411-310-1605
4	71390810	AR	CONNECTOR, 36 WAY, DEUTSCH, HD36-24-23SN
5	71390813	AR	CONNECTOR, 3 WAY, DEUTSCH, DT06-3S-P012
6	71390815	AR	WEDGE CONNECTOR, DEUTSCH, W3S-P012
7	71390816	AR	CONNECTOR,12 WAY,DEUTSCH, DT06-12SA-P012
8	71390817	AR	WEDGE CONNECTOR, DEUTSCH, W12S-P012
9	71390820	AR	PLUG CONNECTOR, 15 WAY, AMP, 1-640523-0
10	71390821	AR	RECEPTACLE CONN, 12 WAY, AMP,1-640512-0
11	71390822	AR	PLUG CONNECTOR, 12 WAY, AMP, 1-640522-0
12	71390823	AR	RECEPTACLE CONN, 9 WAY, AMP, 1-640511-0
13	71390824	AR	PLUG CONNECTOR, 9 WAY, AMP, 1-640521-0
14	71390825	AR	RECEPTACLE CONN, 6 WAY, AMP, 1-640510-0
15	71391001	AR	PLUG CONNECTOR, 6 WAY, AMP, 1-640520-0
16	71391002	AR	PIN TERMINAL, 10 PCS. AMP, 645545-1
17	71391003	AR	RECEPTACLE TERML, 10 PCS, AMP, 641300-1
18	71397676	AR	RECEPT CONN, 9 WAY, DEUTSCH, HD14-9-96P
19	71397677	AR	PLUG CONNECTOR, 9, DEUTSCH, HD16-9-96S
20	71397678	AR	CONNECTOR, 3 WAY, DEUTSCH, DT04-3P-E004
21	71397679	AR	WEDGE LOCK, 3 TERM'L, DEUTSCH, W3P
22	71397680	AR	CONNECTOR, 7 PIN FEM, COLE HERSEE, 12301
23	71397681	AR	RECEPT CONN, 8 PIN, DEUTSCH, DTM04-08PB
24	71397682	AR	PLUG CONNECTOR, DEUTSCH, HDP26-18-14-SE
25	71397683	AR	PLUG CONNECTOR, 40, DEUTSCH, DRC18-40SB
26	71397684	AR	SUPERSEAL CONNECTOR, AMP, 282087-1
27	71397685	AR	TERMINAL, AMP, 183025-1
28	71397686	AR	SEAL-WIRE, AMP, 281934-2
29	71397687	AR	CONNECTOR, 7 PIN, COLE HERSEE, 12300
30	71397688	AR	CONNECTOR, 6 PIN, PACKARD, 12124107
31	71397689	AR	CONNECTOR, 12 PIN, CARLINGSWITCH, LC1-02
32	71397690	AR	CONNECTOR, 3 PIN, PACKARD, 12162280
33	71397691	AR	CONNECTOR, 5 PIN, PACKARD, 12110539
34	71397692	AR	TERM. METRI-PK,10 PCS, PACKARD, 12129409
35	71397693	AR	SEAL, METRI-PK,10 PCS, PACKARD, 12015359
36	71397695	AR	SEAL, METRI-PK,10 PCS, PACKARD, 1201539
37	71397697	AR	SEC LOCK, PACKARD, 12110540
38	71397698	AR	CONNECTOR, 3 PIN, PACKARD, 12162182
39	71397701	AR	SEAL, 3 WAY, PACKARD, 12065285
40	71397702	AR	TERMINAL, 10 PCS, DEUTSCH, 1062-16-0144
41	71397703	AR	RESISTOR, 3 WAY, DEUTSCH, DT04-3P-P006

CONTINUED

https://truckmanualshub.com/

ILLUSTRATION NOT AVAILABLE

XXXXXXXX

https://truckmanualshub.com/

ITEM	NUMBER	QTY	DESCRIPTION
-			LISTED PARTS USED FOR REPAIR OF WIRE HARNESSES
42	71397704	AR	CONNECTOR, 16 PIN, PACKARD, 15326667
43	71397705	AR	TERMINAL, 10 PCS, PACKARD, 15304731
44	71397706	AR	SEAL, 14 GA, PACKARD, 12191222
45	71397707	AR	SEAL, 12 GA, PACKARD, 12191223
46	71397708	AR	PLUG, PACKARD, 15305170
47	71397709	AR	CONNECTOR, 16 PIN, PACKARD, 15326666
48	71397710	AR	TERMINAL-SOCK, 10 PCS, PACKARD, 15304719
49	71397711	AR	CONN, 8 PIN, METRI PAC,PACKARD, 12047931
50	71397712	AR	SEC-LOCK, PACKARD, 12047936
51	71397713	AR	CONNECTOR, METRI PAC, PACKARD, 12129615
52	71397714	AR	CONN.RECEPTCL, 5 PIN, PACKARD, 12034342
53	71397715	AR	CONNECTOR, METRI PAC, PACKARD, 12124819
54	71397716	AR	SEC-LOCK, METRI PACK, PACKARD, 12020807
55	71397717	AR	TERM. METRI-PK,10 PCS, PACKARD, 12077411
56	71397718	AR	SEAL, 10 PCS, PACKARD, 12041351
57	71397719	AR	CONN, 8 PIN, METRI PAC,PACKARD, 12047937
58	71397720	AR	SEC-LOCK, METRI PACK, PACKARD, 12066304
59	71397721	AR	BOOT, COLE HERSEE, 81356
60	71397722	AR	TERMINAL-SOCKET, COLE HERSEE, 31784
61	71397724	AR	SEC-LOCK, METRI PACK, PACKARD, 12052850
62	71397725	AR	ELECT. OUTLET, 12 VOLT, CASCO, 212711
63	71397731	AR	CONNECTOR, FUSE, PACKARD, 12033769
64	71397732	AR	PLUG CONN'R, 70 PIN, DEUTSCH, DRC16-70SA
65	71397733	AR	CONN. RECEPTCL, 4 PIN, DEUTSCH, DT04-4P
66	71397734	AR	SEAL, METRI-PK,10 PCS, PACKARD, 12052924
67	71397735	AR	PLUG CONN'R, 40 PIN, DEUTSCH, DRC18-40SA
68	71397736	AR	PLUG CONN'R, 4 PIN, DEUTSCH, DTM06-4SA
69	71397737	AR	CONN. RECEPTCL, 2 PIN, PACKARD, 08911772
70	71397738	AR	TERM. METRI-PK,10 PCS, PACKARD, 15304730
71	71397739	AR	SEAL-DELPHI, PACKARD, 15366067
72	71397740	AR	CONN, 2 PIN, METRI-PAC,PACKARD, 12162000
73	71397741	AR	TERMINAL-SOCK, 10 PCS, PACKARD, 08911640
74	71397742	AR	HARNESS, 4 PIN, MOLDED, 12" LG
75	71397743	AR	CONNECTOR, 5 PIN, PACKARD, 12065158
76	71398851	AR	SEAL-DELPHI, PACKARD, 12015284
77	71398852	AR	TERMINAL-SOCK, 10 PCS, PACKARD, 12084590
78	71398853	AR	TERM. METRI-PK,10 PCS, PACKARD, 12015870
79	700709919	AR	TERMINAL-PIN, 18-14 AWG, AMP, 66602-2
80	700718792	AR	CONNECTOR, 6 PIN, PACKARD, 12052848
81	71399228	AR	CONTACT PIN, DEUTSCH, 0460-204-12141
82	700721776	AR	CONTACT SOCKET, DEUTSCH, 0462-203-12141

XXXXXXX
PR: t05b08m42d0004

https://truckmanualshub.com/

HOUSING & SHIELDS
(PRIOR S/N HP36101)

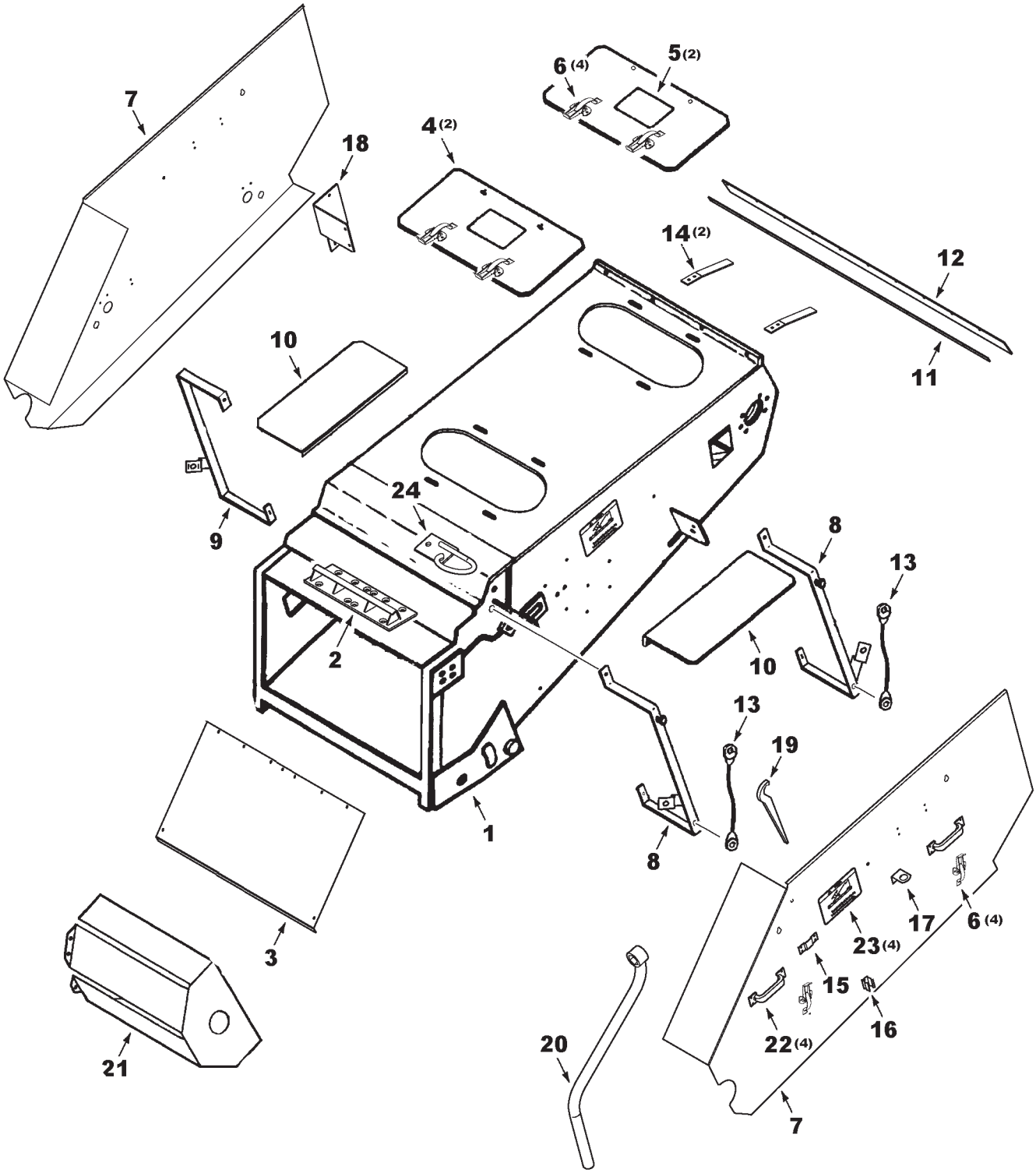

https://truckmanualshub.com/

HOUSING & SHIELDS
(PRIOR S/N HP36101)

ITEM	NUMBER	QTY	DESCRIPTION
1	71400971	1	HOUSING WLDMT, FEEDER
2	71380423	2	HOOKUP WLDMT, HEADER
	355736X1	14	CAPSCREW, HEX SOCKT, 1/2-13 X 1-1/4
	71383783	4	SHIM, HEADER LEVELING
	71402105	-	KIT, HDR HOOKUP GRP(HIGH MOUNT, NON-LTM) (ORDER FROM DEALER CENTRAL)(INCLUDES
	71399829	1	RISER WLDMT, LH (NOT ILLUS.)
	71399830	1	RISER WLDMT, RH (NOT ILLUS.)
	71383783	4	SHIM, HEADER LEVELING
	70919089	14	CAPSCREW, 1/2-13 X 1-3/4 GR5
	Y705046	14	LOCKWASHER, 1/2 REG
3	71388237	1	COVER, FLOOR
	365775X1	2	SCREW, THD FORM., 1/4-20 X 1/2
	70931317	7	BOLT, RD HD,SHT SQ NK, 1/4-20 X 3/4
	70931209	7	NUT, SERR. FLANGE, 1/4-20
4	71383785B	4	DOOR ASY (INCL. CLAMPS & DECAL)
5	71379134	4	DECAL, WARNING
6	762975	8	CLAMP
	700717635	16	RIVET, 3/16 X 13/32
7	71393786	1	SHIELD ASY, LH (INCL IT'S 6,22,23,15-17)
	71393784	1	SHIELD ASY, RH (INCL IT'S 6,22,23)
8	71393776	1	BRACKET WLDMT, FRONT, LH
	70921333	1	CAPSCREW, 5/16-18 X 1.0
	70917356	1	LOCKWASHER, 5/16
	70917372	1	NUT, 5/16-18 REG
	70921965	1	CAPSCREW, 3/8-16 X 3/4 GR5
	705038	1	LOCKWASHER, 3/8 REG
	71393780	1	BRACKET WLDMT, REAR, LH
	703249	2	CAPSCREW, 3/8-16 X 1"
	705038	2	LOCKWASHER, 3/8
	70916950	2	NUT, 3/8-16 REG
	70918266	1	WASHER, 3/8 NARR.
9	71393778	1	BRACKET ASY., FRONT, RH
	70921333	1	CAPSCREW, 5/16-18 X 1.0
	70917356	1	LOCKWASHER, 5/16
	70917372	1	NUT, 5/16-18 REG
	70921965	1	CAPSCREW, 3/8-16 X 3/4 GR5
	705038	1	LOCKWASHER, 3/8 REG
10	71397452B	1	SHIELD, TOP, LH
	70936778	2	J-CLIP, 3/4 X .406 HOLE
	70923683	3	SCREW,HEX HD, TAPPING, 3/8-16 X 3/4
	71393788	1	SHIELD, TOP, RH
	70923683	3	SCREW,HEX HD, TAPPING, 3/8-16 X 3/4
11	71388226	1	RETAINER, PIVOT SEAL
12	71387900	1	SEAL, UPPER PIVOT
	70923341	11	CAPSCREW, 1/4-20 X 3/4 GR5
	70919310	11	LOCKWASHER, 1/4
	70916622	11	NUT, 1/4-20 REG

CONTINUED

https://truckmanualshub.com/

HOUSING & SHIELDS
(PRIOR S/N HP36101)

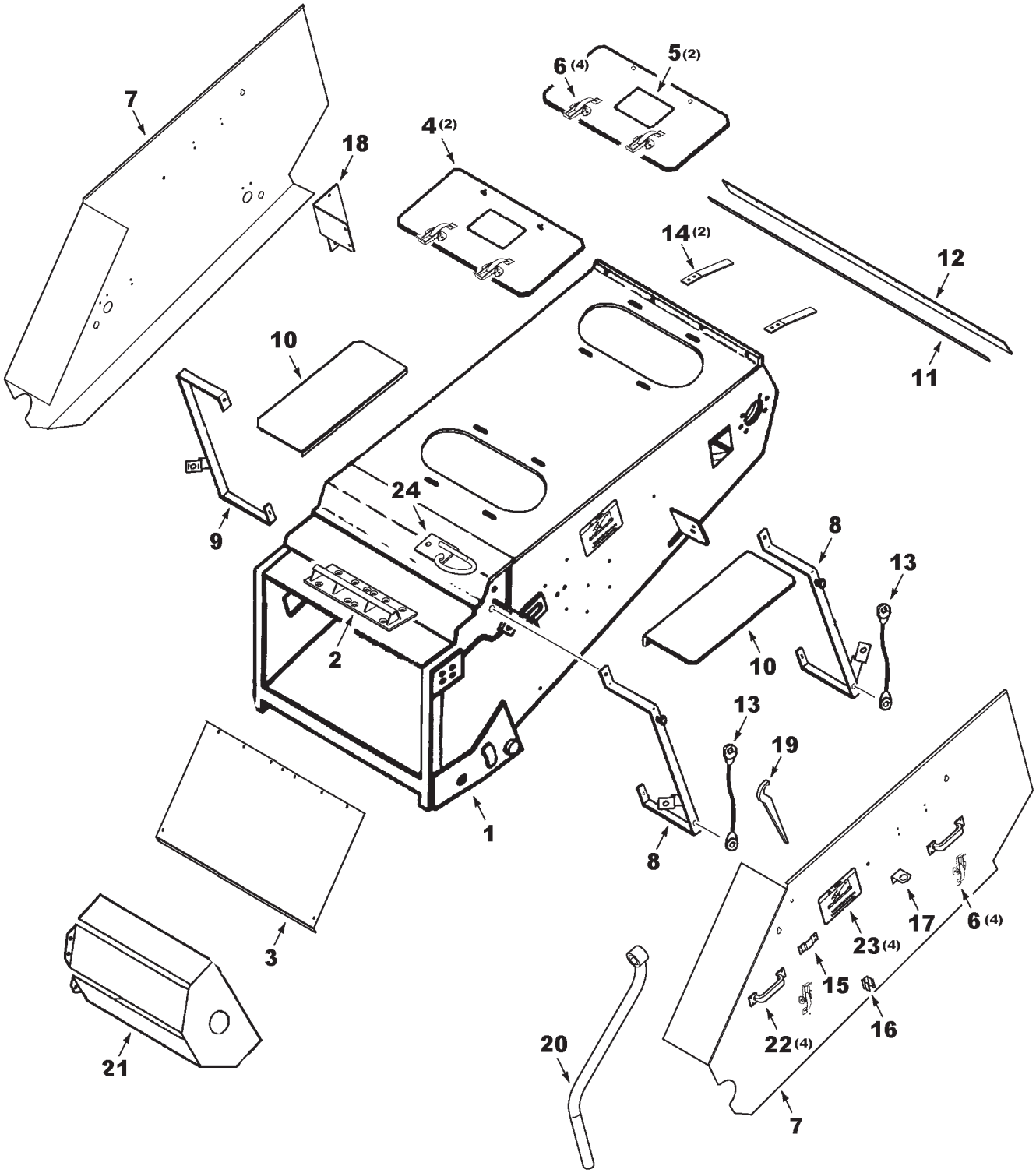

https://truckmanualshub.com/

HOUSING & SHIELDS
(PRIOR S/N HP36101)

ITEM	NUMBER	QTY	DESCRIPTION
13	71374425	2	CABLE, SHIELD RETAINER
	70917356	4	WASHER, LOCK, 5/16
	70917372	4	NUT, HEX, 5/16-18
	70918265	4	WASHER, 5/16 NARR
	70927075	4	BOLT, RHSN, 5/16-18 X 1.0
14	116328W1	2	SUPPORT, PIVOT SLIDE
	70927075	4	BOLT, CARRIAGE, 5/16-18 UNC X 1
	70917356	4	LOCKWASHER 5/16
	70917372	4	NUT, HEX 5/16-18
15	71385633	1	BRACKET, WRENCH
	71394821	1	SPACER, BRKT.
	70924837	4	RIVET, .188 X .277 LG
16	71310976	1	CLIP, WRENCH
	70922928	2	SCREW, #6-32 X 1/2
	70917458	2	WASHER, FLAT #6
	70917459	2	LOCKWASHER #6
	704551	2	NUT, #6-32
17	71352828	1	BRACKET, WRENCH
	70925205	1	BOLT, HEX 5/16-18 X 5/8
	70917356	1	LOCKWASHER, 5/16
	70917372	1	NUT, HEX, 5/16-18
18	71393782	1	BRACKET ASY, REAR, RH
	70921333	2	CAPSCREW, 5/16-18 X 1
	70917356	2	WASHER, LOCK, 5/16
	70917372	2	NUT, 5/16-18
19	28280440	1	WRENCH, C'SHAFT
20	71388248	1	HANDLE WLMT., FEEDER LATCH
21	116518W1	1	SHIELD, COUNTERSHAFT, LH
	116519W1	1	SHIELD, COUNTERSHAFT, RH
	70924856	6	SCREW,HEX HD,TAPPING, 5/16-18 X 1/2
22	71304149	4	HANDLE
	70924837	16	POP RIVET, .188 X .063-.125 GRIP
23	111095W1	4	DECAL, DANGER
24	71375388	1	RETAINER WLDMT, HOSES
	7703432	2	SCREW, HEX FLNG SERR, 3/8-16 X 3/4
	Y704734	2	NUT, HEX FLNG TOP LK, 3/8-16

MC00347
PR: 146

https://truckmanualshub.com/

HOUSING & SHIELDS
(EFF. S/N HP36101)

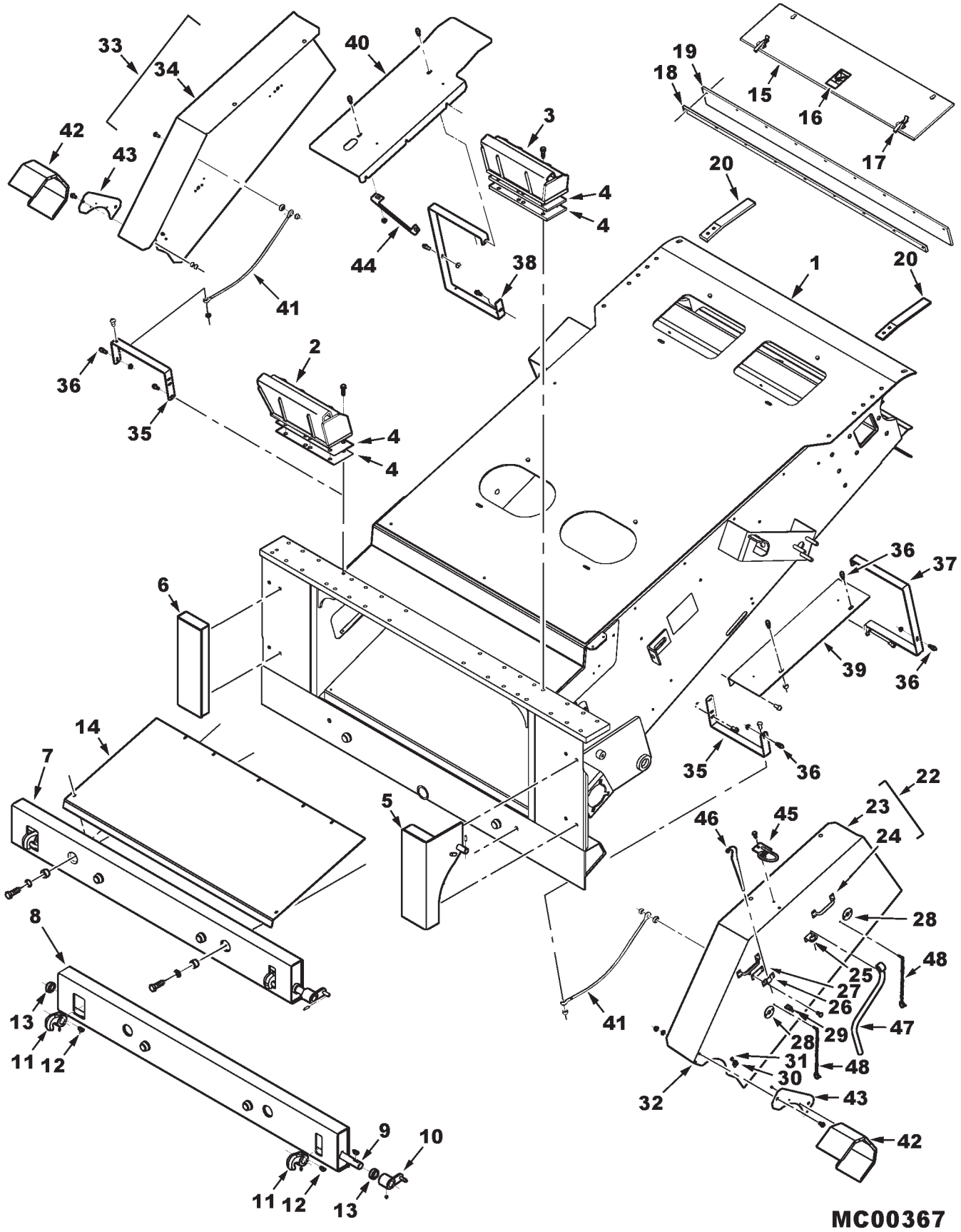

https://truckmanualshub.com/

ITEM	NUMBER	QTY	DESCRIPTION
1	71403669	1	HOUSING WLMT, FEEDER (PRIOR S/N HS36101)
	71409952	1	HOUSING WLMT, FEEDER (EFF. S/N HS36101)
2	71406510	1	HOOKUP WLMT, RH, HEADER
	- - - - -	-	HOOKUP WLMT, HEADER, SHORT (SEE "KIT" AT END OF LIST)
	70919089	7	CAPSCREW, 1/2-13 X 1-3/4
	Y705046	7	LOCKWASHER, 1/2
3	71406504	7	HOOKUP WLMT, LH, HEADER
	70919089	7	CAPSCREW, 1/2-13 X 1-3/4
	Y705046	7	LOCKWASHER, 1/2
4	71383783	4	SHIM, HEADER LEVELING
5	71406518	1	FRAME WLMT, LH, VERTICAL
	70923114	2	CAPSCREW, 1/2-13 X 1 GR5
	Y705046	2	LOCKWASHER, 1/2 REG
6	71406514	1	FRAME WLMT, RH, VERTICAL
	70923114	2	CAPSCREW, 1/2-13 X 1 GR5
	Y705046	2	LOCKWASHER, 1/2
7	71406804	1	FRAME ASY, HDR HOOKUP, LOWER (INCL. ITEMS 8 THRU 13)
	70922664	2	CAPSCREW, 5/8-11 X 2 GR5
	70917373	2	LOCKWASHER, 5/8
	368615X1	2	SPACER, .656 X 1.125 OD X .66 LG
8	71406520	1	FRAME WLMT, HDR HOOKUP, LOWER
9	71406802	1	SHAFT, HEADER LATCH
10	116343W1	1	CRANK WLMT, LATCH, LOWER
	70921263	1	SETSCREW, HEX SOCKET, 5/16-18 X 3/8
11	71317841	2	HOOK
	70903835	2	SETSCREW, HEX SOCKET, 1/4-20 X 3/8
12	70905126	3	KEY, WOODRUFF, .25 X 1 DIA, #808
13	375028X1	2	COLLAR, BRG, 1 DIA, W/SETSCREW
14	71388237	1	COVER, FLOOR
	365775X1	2	SCREW, THD FORM., 1/4-20 X 1/2
	70931317	7	BOLT, RD HD,SHT SQ NK, 1/4-20 X 3/4
	353769X1	7	WASHER, 1/4, HARD
	705012	7	LOCKWASHER, 1/4
	70916622	7	NUT, 1/4-20 REG
15	71383785B	4	DOOR ASY (INCL. CLAMPS & DECAL) (PRIOR S/N HS36101)
	71409955	4	DOOR ASY (INCL. CLAMPS & DECAL) (EFF. S/N HS36101)
16	71379134	4	DECAL, WARNING
17	762975	8	CLAMP
	700717635	16	POP-RIVET, .188 DIA X .126-.250 GRIP
18	71388226	1	RETAINER, PIVOT SEAL
19	71387900	1	SEAL, UPPER PIVOT
	3009183X1	11	BOLT, HEX FLANGE, M6-1.0 X 20 CL10.9
	339375X1	11	LOCKWASHER, M6
	339030X1	11	NUT, M6 X 1.0, REG
20	116328W1	2	SUPPORT, PIVOT SLIDE
	385370X1	4	BOLT,RD HD SQ NK, M8-1.25 X 25 CL8.8
	339374X1	4	LOCKWASHER, M8
	339169X1	4	NUT, M8 X 1.25, REG

CONTINUED

https://truckmanualshub.com/

HOUSING & SHIELDS
(EFF. S/N HP36101)

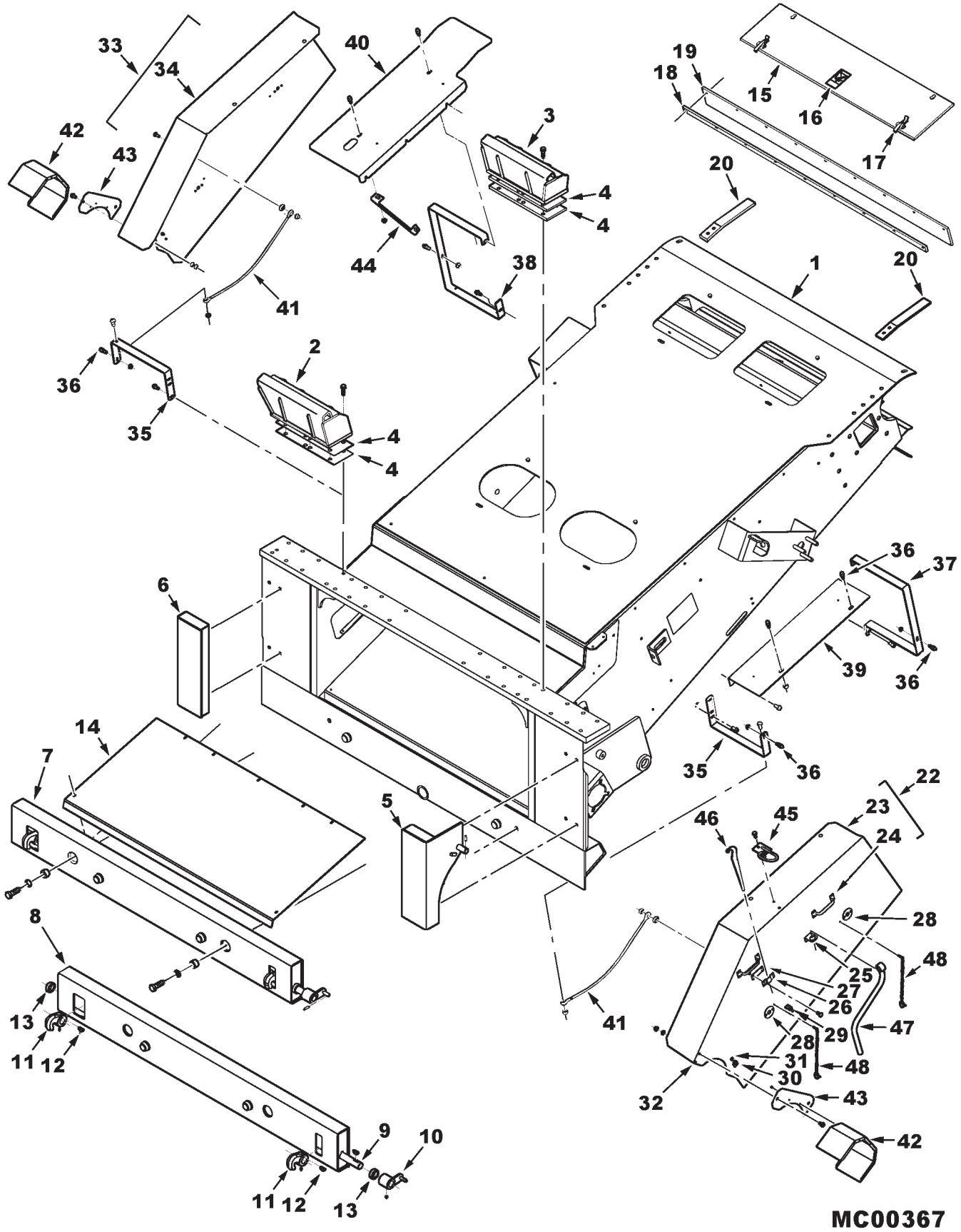

https://truckmanualshub.com/

ITEM	NUMBER	QTY	DESCRIPTION
22	71401636	1	SHIELD ASY,LEFT (INCL. ITEMS 23 THRU 32) (PRIOR S/N HS36101)
	- - - - -	1	SHIELD ASY,LEFT (INCL. ITEMS 23 THRU 32) (PAINT IS ONLY DIFF.)(EFF. HS36101)
23	71401637	1	SHIELD, LEFT
24	71304149	2	HANDLE
	70924837	8	POP RIVET, .188 X .063-.125 GRIP
25	71352828	1	BRACKET, HANDLE MOUNT
	70925205	1	CAPSCREW, 5/16-18 X 5/8
	70917356	1	LOCKWASHER, 5/16
	70917372	1	NUT, 5/16-18 REG
26	71385633	1	BRACKET, WRENCH
27	71394821	1	SPACER, BRKT.
	70924837	4	POP RIVET, .188 X .063-.125 GRIP
28	71400739	2	PLATE, PIN
	70924837	4	POP RIVET, .188 X .063-.125 GRIP
29	71310976	1	CLIP, WRENCH
	70922928	2	SCREW, #6-32 X 1/2
	70917458	2	WASHER, FLAT #6
	70917459	2	LOCKWASHER #6
	704551	2	NUT, #6-32
30	70537291	1	FASTENER, SNAP
	70924837	1	POP RIVET, .188 X .063-.125 GRIP
31	70937660	1	SCREW, PAN HD TAPPING, 1/4-20 X 5/8
	1703354	1	NUT, HEX FLNG TOP LOCK, 1/4-20
32	7883267	1	SCREW, HEX WSHR HD, MACH, 1/4-20 X 1/2
	1703354	1	NUT, HEX FLNG TOP LOCK, 1/4-20
33	71401628	1	SHIELD ASY, FEEDER, RIGHT (INCL. ITEMS 24,28,30,31,32,34)(PRIOR S/N HS36101
	- - - - -	1	SHIELD ASY, FEEDER, RIGHT (INCL. ITEMS 24,28,30,31,32,34)(EFF. S/N HS36101 (PAINT IS ONLY DIFF.)
34	71401627	1	SHIELD, RIGHT
35	71407660	2	SUPPORT, SHIELD, FRONT
	7702012	2	SCR, HEX WSHR HD TAPPING, 3/8-16 X 1
36	1656110W2	8	PIN, SHIELD LOCK
	Y704734	8	NUT, HEX FLNG TOP LOCK, 3/8-16
37	71401633	1	SUPPORT, SHIELD, LEFT
	7702012	1	SCR, HEX WSHR HD TAPPING, 3/8-16 X 1
38	71401632	1	SUPPORT, SHIELD, RIGHT
	7702012	1	SCR, HEX WSHR HD TAPPING, 3/8-16 X 1
39	71401638	1	SHIELD, TOP, LEFT
	70936778	2	J-CLIP, 3/4 X .406 HOLE (NOT ILLUS.)
	7702012	3	SCR, HEX WSHR HD TAPPING, 3/8-16 X 1
40	71401626	1	SHIELD, TOP, RIGHT
	70936778	2	J-CLIP, 3/4 X .406 HOLE (NOT ILLUS.)
41	71374425	2	CABLE, TETHER
	70931350	2	BOLT, RND HD SQ NK, 3/8-16 X 1
	705541	2	WASHER, 1/2 HARD
	Y704734	4	NUT, HEX FLNG TOP LOCK, 3/8-16
	7883382	2	SCREW, HEX WSHR HD MACH, 3/8-16 X 1

CONTINUED

https://truckmanualshub.com/

HOUSING & SHIELDS
(EFF. S/N HP36101)

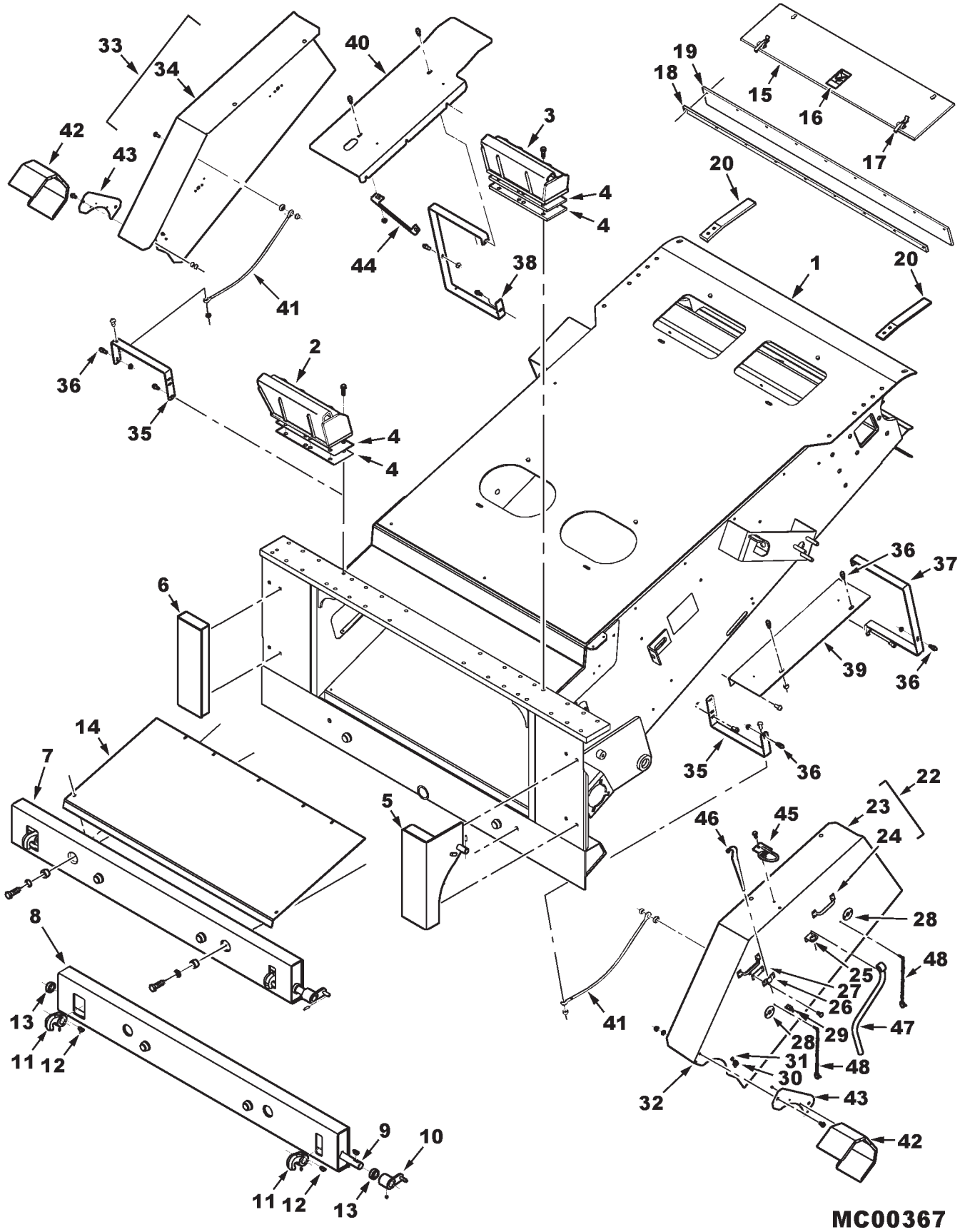

https://truckmanualshub.com/

ITEM	NUMBER	QTY	DESCRIPTION
42	71409461	2	SHIELD, DRIVELINE
43	71401660B	2	PLATE, COVER
	7883374	2	SCR, HEX WSHR HD MACH, 3/8-16 X 3/4
	Y705533	2	WASHER, 3/8 HARD
	Y704734	2	NUT, HEX FLNG TOP LOCK, 3/8-16
	70924837	6	POP RIVET, .188 X .063-.125 GRIP
44	71401658B	1	SUPPORT, TOP SHIELD, RH
	7702012	3	SCR, HEX WSHR HD TAPPING, 3/8-16 X 1
45	71375388	1	RETAINER WLMT, HOSE
	7883382	2	SCREW, HEX WSHR HD MACH, 3/8-16 X 1
	Y704734	2	NUT, HEX FLNG TOP LOCK, 3/8-16
46	28280440	1	WRENCH, C'SHAFT
47	71388248	1	HANDLE WLMT, FEEDER LATCH
48	863415	4	KLIK PIN, W/CHAIN
-	71411647	-	KIT, HEADER HOOKUP LUGS, HIGH, NON-LTM INCL IT'S 2 THRU 13, & LATCH COMP'S. (ORDER THRU DEALER CENTRAL)
-	71411650	-	KIT, HEADER HOOKUP LUGS, LOW, NON-LTM (ORDER THRU DEALER CENTRAL)
	71406512	2	HOOKUP LUG WLDMT, SHORT
	71383783	4	SHIM, HEADER LEVELING
	70924204	14	SCR, HEX SOCK CSK HD, 1/2-13 X 1-1/4

MC00367
PR: t05b08m42d0005

https://truckmanualshub.com/

JACK

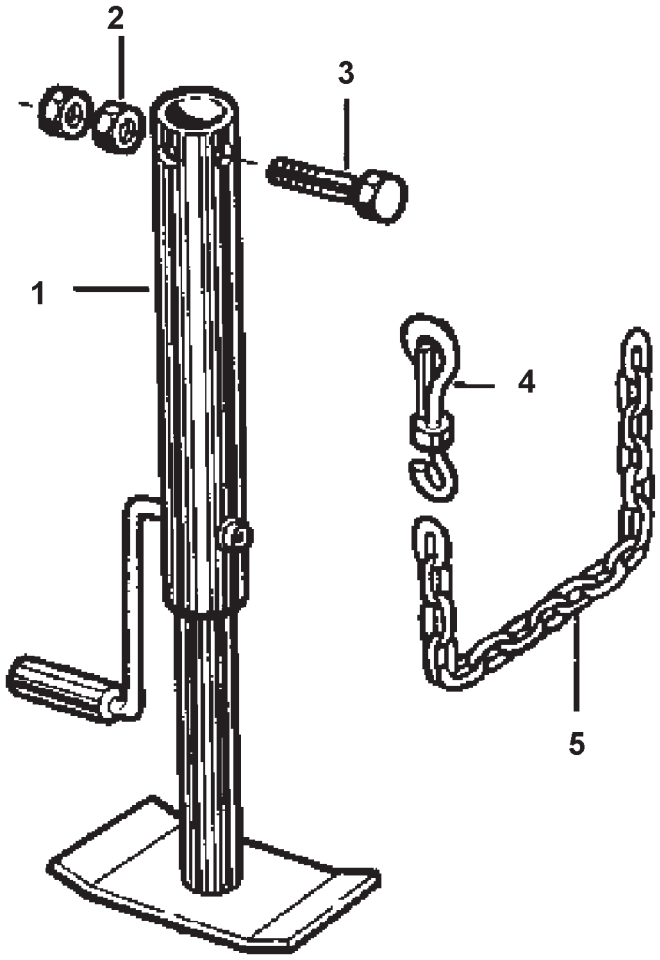

MC00209

https://truckmanualshub.com/

ITEM	NUMBER	QTY	DESCRIPTION
1	1609121W91	1	JACK ASY, FEEDER STAND (ACCESSORY)
2	70913160	2	NUT, 3/4-10 UNC
3	70923126	1	CAPSCREW, 3/4-10 X 5 GR5
4	1611180W1	1	SNAP HOOK, CHAIN
5	1609200W1	1	CHAIN (18 LINKS)
	70921969	1	CAPSCREW, 3/8-16 X 1-1/2
	70917378	2	WASHER, 3/8, WIDE
	70916950	2	NUT, 3/8-16 REG
-	71378016	AR	KIT, FEEDER ELEVATOR JACK (ORDER FROM DEALER CENTRAL)

MC00209
PR: 150

https://truckmanualshub.com/

FEED FLOOR
(PRIOR S/N HS36101)

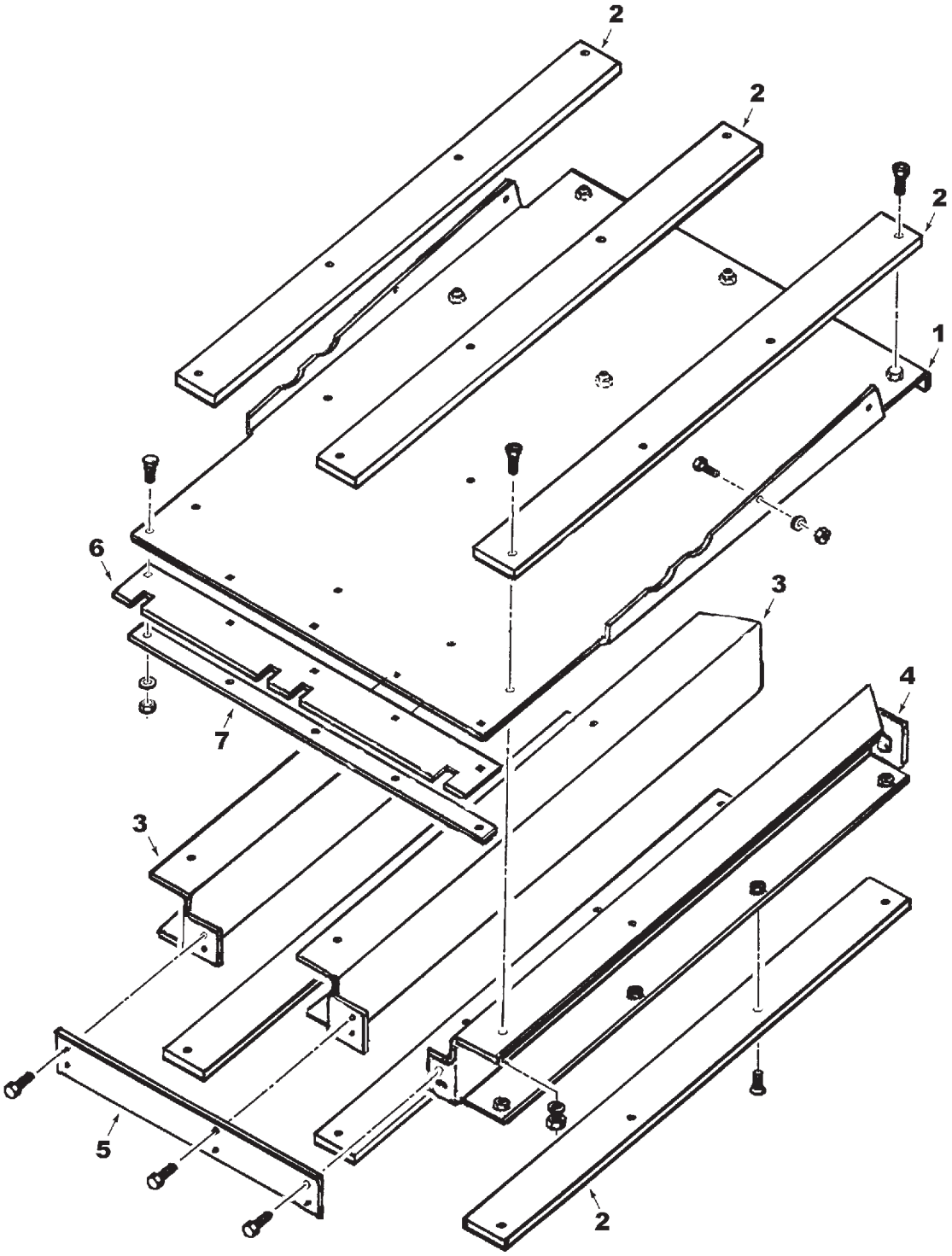

71375170

https://truckmanualshub.com/

FEED FLOOR
(PRIOR S/N HS36101)

ITEM	NUMBER	QTY	DESCRIPTION
1	71388230	1	FLOOR WLMT. FEEDER
	70920415	1	CAPSCREW, 3/8-16 X 1-1/4
	70921965	7	CAPSCREW, 3/8-16 X 3/4
	70916965	8	WASHER, LOCK, 3/8
	70916950	8	NUT, 3/8-16
2	116354W1	6	STRIP, WEAR
	70935275	30	SCREW,HX SOCK CNTRSK HD, 5/16-18 X 1
	70927557	6	LOCKNUT, LG SERR FLG, 5/16-18
3	116362W1	2	SUPPORT WLMT, RAIL RH
4	116363W1	1	SUPPORT WLMT, RAIL LH
5	71388232	1	SUPPORT, FRONT
	70921333	6	CAPSCREW, 5/16-18 X 1
	70917356	6	LOCKWASHER, 5/16
6	71388233	1	SEAL, DRUM
	7700461	7	BOLT, RD HD SQ NK, 5/16-18 X 3/4
	70917356	7	LOCKWASHER, 5/16
	70917372	7	NUT, HEX, 5/16-18
7	71388234	1	RETAINER, SEAL

71375170
PR: 152

https://truckmanualshub.com/

FLOOR, MIDDLE
(EFF. S/N HS36101)

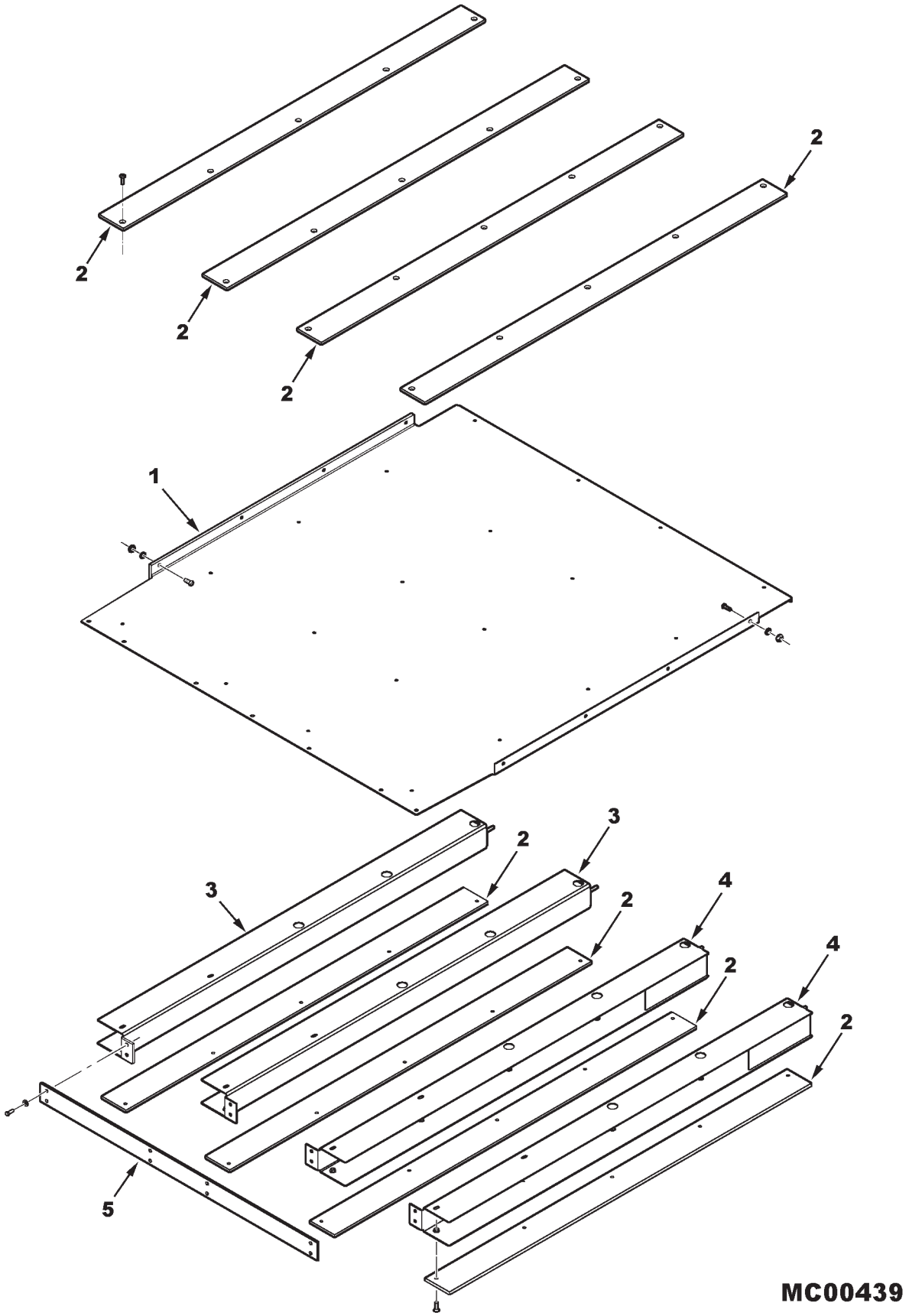

https://truckmanualshub.com/

FLOOR, MIDDLE
(EFF. S/N HS36101)

ITEM	NUMBER	QTY	DESCRIPTION
1	71409618	1	FLOOR SHEET WLMT
	339081X1	7	CAPSCREW, M10-1.5 X 20 CL8.8
	3001429X1	1	CAPSCREW, M10-1.5 X 35 CL8.8
	339376X1	8	LOCKWASHER, M10
	339402X1	8	NUT, M10 X 1.5, REG
2	116354W1	8	STRIP, WEAR
	70935275	40	SCREW,HX SOCK CNTRSK HD, 5/16-18 X 1
	70931277	8	NUT, HEX SERR FLANGE, 5/16-18
3	71409623	2	SUPPORT RAIL WLMT, RH
4	71409615	2	SUPPORT RAIL WLMT, LH
5	71411427	1	SUPPORT BAR, FRONT
	70921333	8	CAPSCREW, 5/16-18 X 1
	70917356	8	LOCKWASHER, 5/16

MC00439
PR: t07a23o20b0005

https://truckmanualshub.com/

PIVOT SHAFT
(PRIOR S/N HP36101)

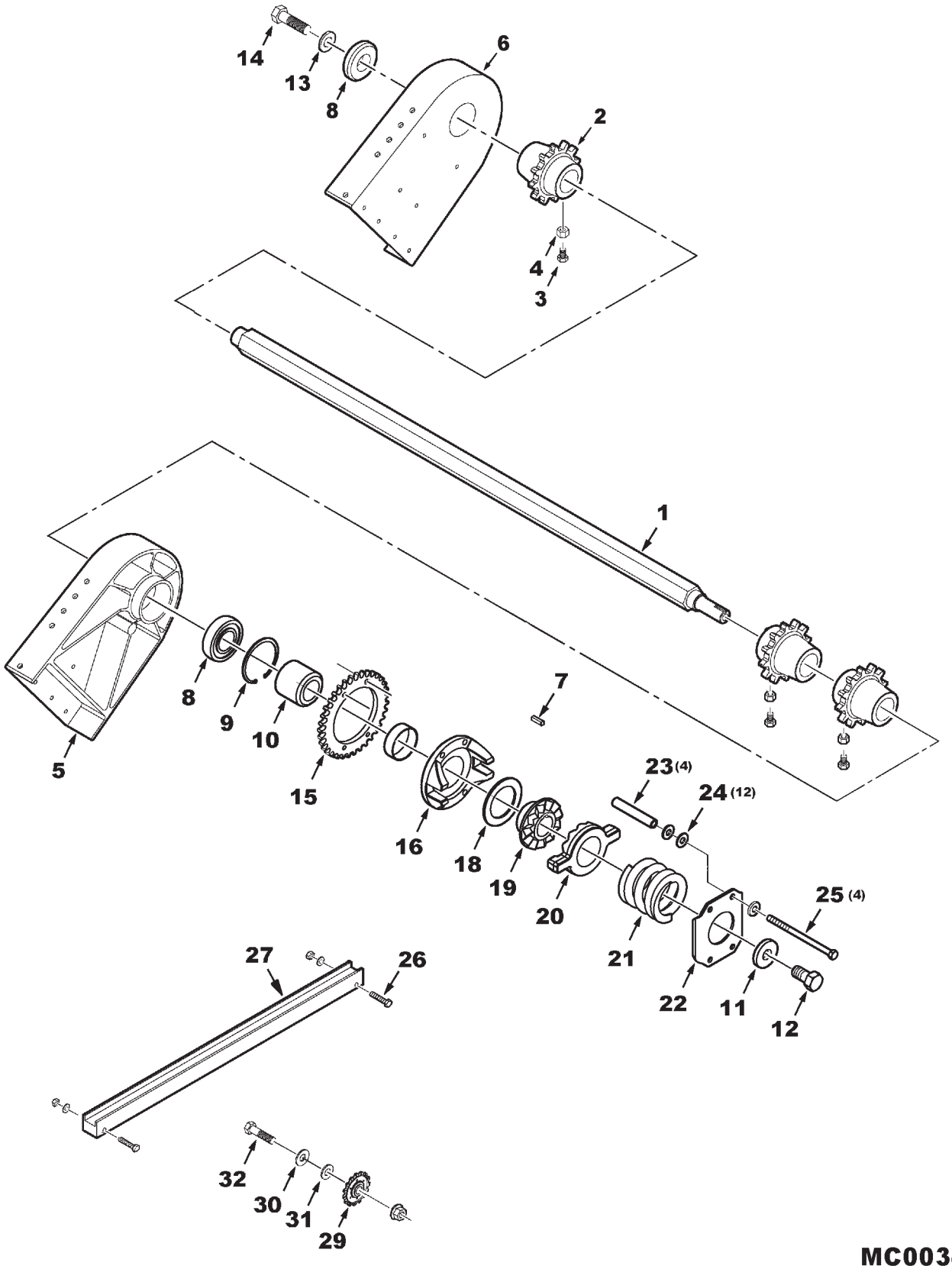

MC00346

https://truckmanualshub.com/

PIVOT SHAFT
(PRIOR S/N HP36101)

ITEM	NUMBER	QTY	DESCRIPTION
1	71387891	1	SHAFT, TOP FEEDER
2	116108W1	3	SPROCKET, PIVOT SHAFT
3	70911255	6	SETSCREW, HEX SOCKET, 1/2-13 X 3/4
4	70913744	6	NUT, HEX JAM, 1/2-13 UNC
5	116106W1	1	CASTING, PIVOT, LH
6	116107W1	1	CASTING, PIVOT, RH
	70926838	2	BOLT, RD HD,SQ NK, 1/2-13 X 1-1/2
	70920328	28	CAPSCREW, 1/2-13 X 1-1/2, GR5
	Y705046	30	LOCKWASHER 1/2 REG
	704031	12	NUT, 1/2-13 REG
7	61770	1	KEY, SQ, 3/8 X 3/8 X 1 1/2
8	71154722	2	BEARING, 1-31/32 X 4-11/32 X 1-1/16
9	355997X1	1	RING, RETAINING, INTERNAL
10	101785M1	1	SPACER
11	103834W1	1	WASHER, FLAT, SPL, .781 X 2.0 X .312
12	367451X1	1	BOLT, HEX LOCK, 3/4-10 X 1-1/2
13	2403610W1	1	WASHER, 29/32 X 2-1/2 X 3/8
14	70928397	1	CAPSCREW, 7/8-9 UNC X 1-1/2 GR8
15	101783M1	1	SPROCKET, 35 TEETH
16	1777403W91	1	DRIVE HSG & BUSHING ASY
	1717650W1	1	BUSHING, DRIVE HSG
18	1717640W1	1	THRUST WASHER
19	2563800W1	1	JAW, FIXED, CLUTCH
20	1659630W1	1	JAW, MOVABLE, CLUTCH
21	1659650W1	1	SPRING, CLUTCH
22	1659660W1	1	RETAINER, SPRING
23	2573180W1	4	SPACER, 31/64 X 5/8 X 3-21/32
24	70917378	12	WASHER, FLAT, 3/8 WIDE
25	70922771	4	CAPSCREW, HEX, 3/8-16 X 6" GR5
	Y704734	4	NUT, HEX FLNG TOP LOCK, 3/8-16
26	702928	2	CAPSCREW, 3/8-16 X 2-3/4 GR5
	70917378	2	WASHER, 3/8 WIDE
	Y704734	2	NUT, HEX FLNG TOP LOCK, 3/8-16
27	71384836	1	GUIDE, FEEDER CHAIN, UPPER
29	71378873	1	SPROCKET, IDLER, 15 TEETH
30	368933X1	2	WASHER, FLAT, .656 SQ. X 1.5 X .190 TH
31	70918268	2	WASHER, 5/8 NARROW
32	70926694	1	BOLT, RD HD,SQ NK, 5/8-11 X 2-1/2 GR5
	700703922	1	NUT, HEX FLNG TOP LOCK, 5/8-11
-	79021676	AR	PRIMER T
-	70930235	AR	LOCTITE 609
-	71389221	-	KIT, PERFORMANCE PKG
	71386668	1	STRIPPER, LH, PIVOT SHAFT SPROCKET
	71386669	1	STRIPPER, RH, PIVOT SHAFT SPROCKET

MC00346
PR: 154

https://truckmanualshub.com/

PIVOT SHAFT
(EFF. S/N HP36101)

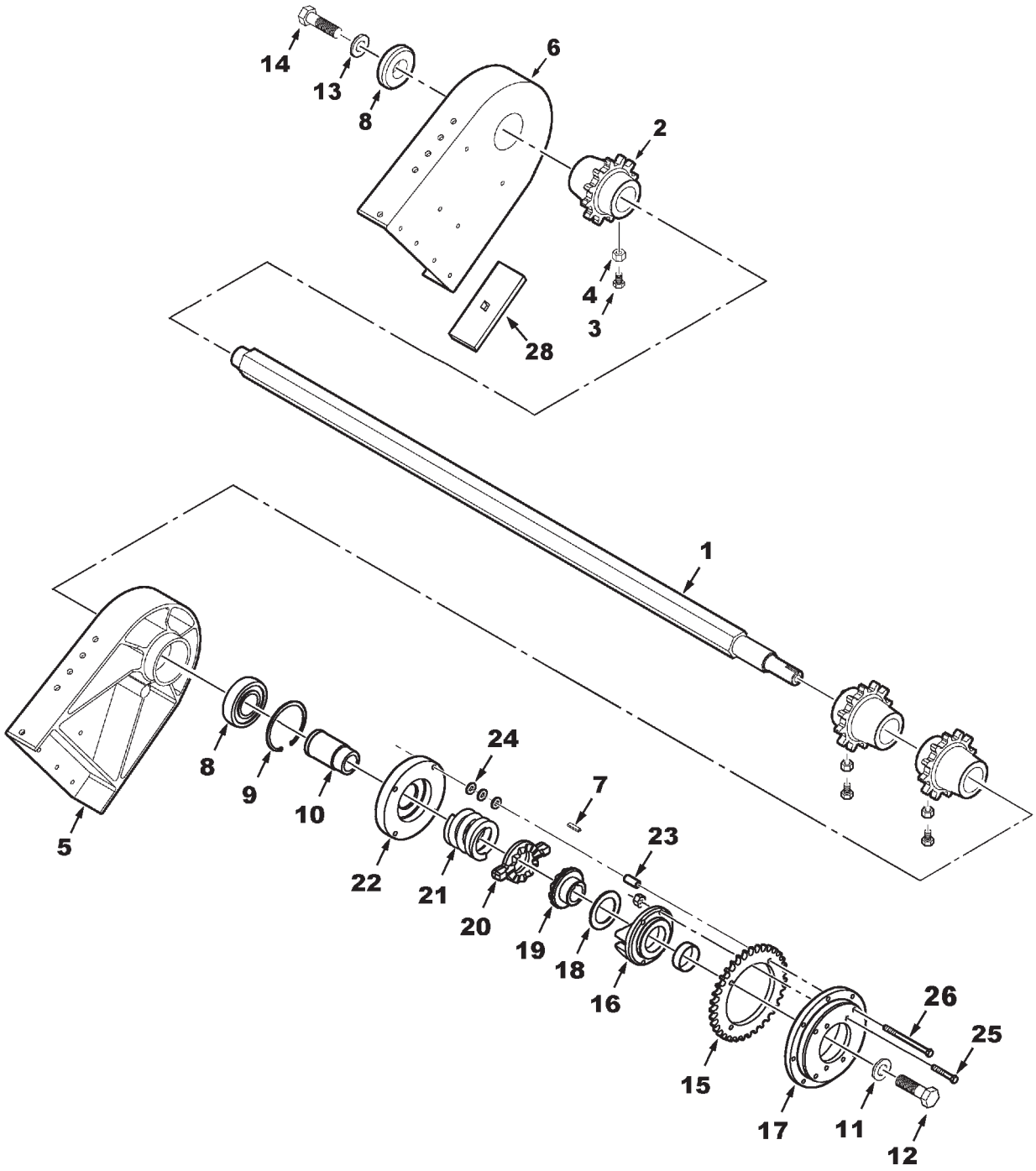

MC00368

https://truckmanualshub.com/

PIVOT SHAFT
(EFF. S/N HP36101)

ITEM	NUMBER	QTY	DESCRIPTION
1	71399509	1	SHAFT, TOP FEEDER
2	116108W1	4	SPROCKET, PIVOT SHFT(QTY 3 PRIOR HS36101
3	70911255	8	SETSCREW, HEX SOCKET, 1/2-13 X 3/4
4	70913744	8	NUT, HEX JAM, 1/2-13 UNC
5	116106W1	1	CASTING, PIVOT, LH
6	116107W1	1	CASTING, PIVOT, RH
	70926838	2	BOLT, RD HD,SQ NK, 1/2-13 X 1-1/2
	70920328	28	CAPSCREW, 1/2-13 X 1-1/2, GR5
	Y705046	30	LOCKWASHER 1/2 REG
	704031	12	NUT, 1/2-13 REG
7	61770	1	KEY, SQ, 3/8 X 3/8 X 1 1/2
8	71154722	2	BEARING, 1-31/32 X 4-11/32 X 1-1/16
9	355997X1	1	RING, RETAINING, INTERNAL
10	71399508	1	PILOT SLEEVE, SPRING
11	103834W1	1	WASHER, FLAT, SPL, .781 X 2.0 X .312
12	367451X1	1	BOLT, HEX LOCK, 3/4-10 X 1-1/2
13	2403610W1	1	WASHER, 29/32 X 2-1/2 X 3/8
14	70928397	1	CAPSCREW, 7/8-9 UNC X 1-1/2 GR8
15	71399511	1	SPROCKET, 35 TEETH
16	1777403W91	1	DRIVE HSG & BUSHING ASY.
	1717650W1	1	BUSHING, DRIVE HSG
17	71403678	1	HUB, FEEDER DRIVE CLUTCH
18	1717640W1	1	THRUST WASHER
19	2563800W1	1	JAW, FIXED, CLUTCH
20	1659630W1	1	JAW, MOVING, CLUTCH
21	1659650W1	1	SPRING, CLUTCH
22	71403677	1	RETAINER, SPRING
23	71403676	4	SPACER, SLIP CLUTCH
24	70917378	12	WASHER, 3/8 WIDE
25	70921969	4	CAPSCREW, 3/8-16 X 1-1/2 GR5
	Y704734	4	NUT, HEX FLNG TOP LOCK, 3/8-16
26	13601	4	CAPSCREW, 3/8-16 X 5-1/4 GR5
	Y705046	4	LOCKWASHER 1/2 REG
28	71404300	1	PLATE, GUIDE, STONE TRAP HANDLE
	70926838	1	BOLT, RD HD,SQ NK, 1/2-13 X 1-1/2
	Y705046	1	LOCKWASHER 1/2 REG
	704031	1	NUT, 1/2-13 REG

MC00368
PR: t05b08m42d0006

https://truckmanualshub.com/

LH PIVOT DRIVE
(EFF. S/N HP36101)

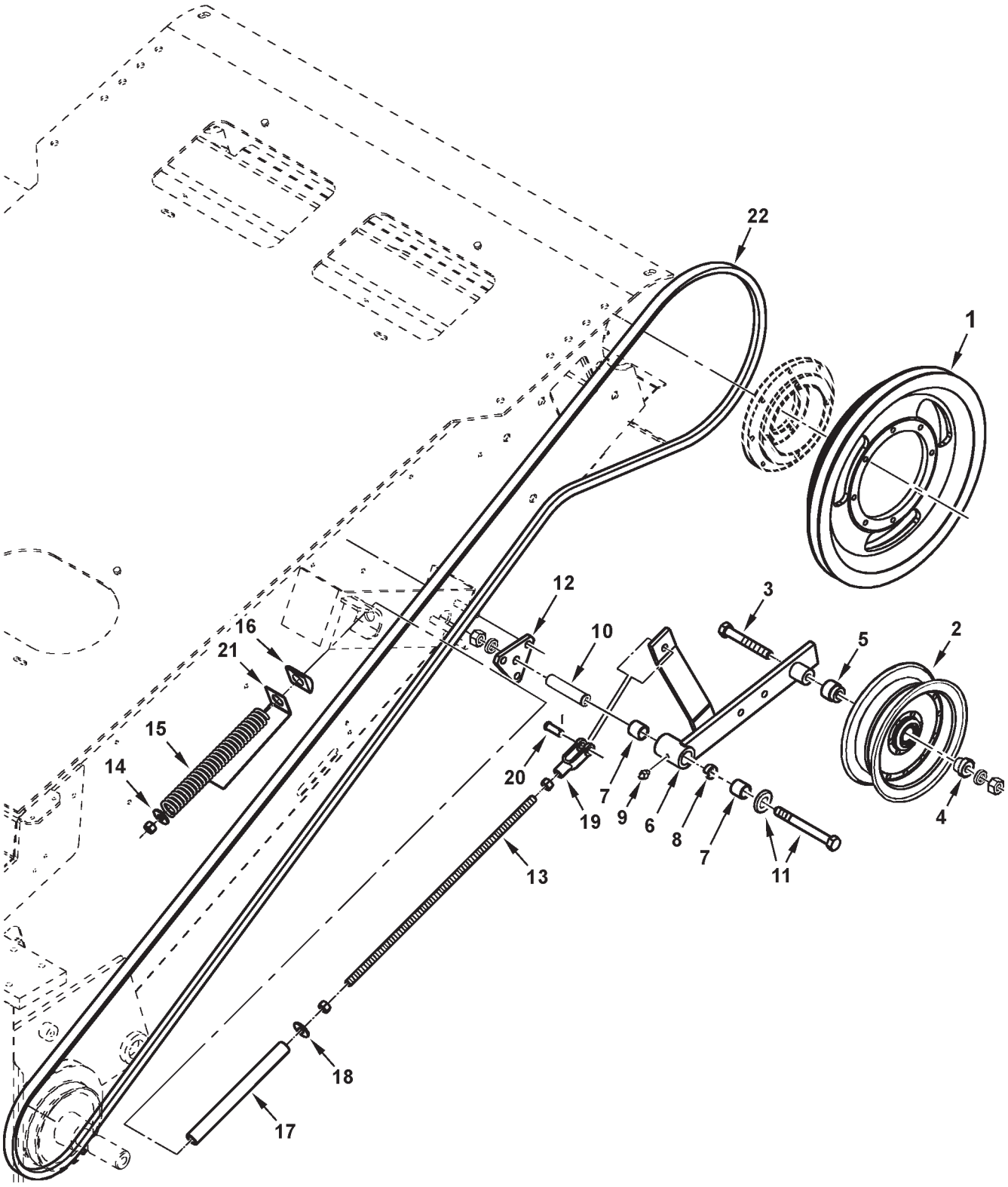

MC00369

https://truckmanualshub.com/

LH PIVOT DRIVE
(EFF. S/N HP36101)

ITEM	NUMBER	QTY	DESCRIPTION
1	71403679	1	SHEAVE, DRIVEN, PIVOT SHAFT
	70920415	8	CAPSCREW, 3/8-16 X 1-1/4, GR5
	705038	8	LOCKWASHER, 3/8 REG
2	71309768	1	IDLER PULLEY
3	70925704	1	CPSCR, 5/8-11 X 4-1/2 GR5(PRIOR HS36101)
	70917373	1	LOCKWASHER, 5/8
	70932665	1	NUT, 5/8-11 REG
	3009247X1	1	SCREW, HEX FLANGE, M16-2.0 X 120 CL10.9
	5000006X1	1	NUT, HEX FLANGE NYL LOCK, M16 X 2.0
4	71312602	1	SPACER, IDLER
5	71353127	1	SPACER, IDLER
6	71398389	1	IDLER ARM ASY (INCL. IT'S 7, 8, 9) (PRIOR S/N HS36101)
	71411886	1	IDLER ARM ASY (INCL. IT'S 7 & 8) (EFF. S/N HS36101)
7	71356060	2	BUSHING, IDLER PIVOT
8	71197117	1	SPACER
9	13811X	1	LUBE FTG, STR, 1/4-28 TPR(PRIOR HS36101)
10	71356061	1	SLEEVE, HARD, IDLER PIVOT
11	70925703	1	CAPSCREW, 5/8-11 X 4 GR5 (PRIOR HS36101)
	70918432	1	WASHER, 5/8, WIDE
	70917373	1	LOCKWASHER, 5/8
	70932665	1	NUT, 5/8-11 REG
	3009245X1	1	SCREW, HEX FLANGE, M16-2.0 X 100 CL10.9
	70918432	1	WASHER, 5/8, WIDE
	5000006X1	1	NUT, HEX FLANGE NYL LOCK, M16 X 2.0
12	71182840	1	PLATE, MOUNTING
	70913744	6	NUT, HEX JAM, 1/2-13
13	71356938	1	ROD, 1/2-13UNC X 21 LG.
	704031	3	NUT, 1/2-13 REG
14	70923094	1	WASHER, .53 X 2.0 X .18 TH.
15	71356067	1	SPRING, IDLER
16	71356058	1	BLOCK, PIVOT
17	71368761	1	SPACER TUBE, SPRING
18	70918431	1	WASHER, 1/2, WIDE
19	70937465	1	YOKE, 1/2-13 THD.
20	70929593	1	PIN, 1/2 X 1.36 LG.
	70918452	1	COTTER PIN, 1/8 X 1
21	71368570	1	STRAP, INDICATOR, IDLER SPRING
22	71398388	1	BELT

MC00369
PR: t05b08m42d0007

https://truckmanualshub.com/

RH DRIVE
(PRIOR S/N HP36101)

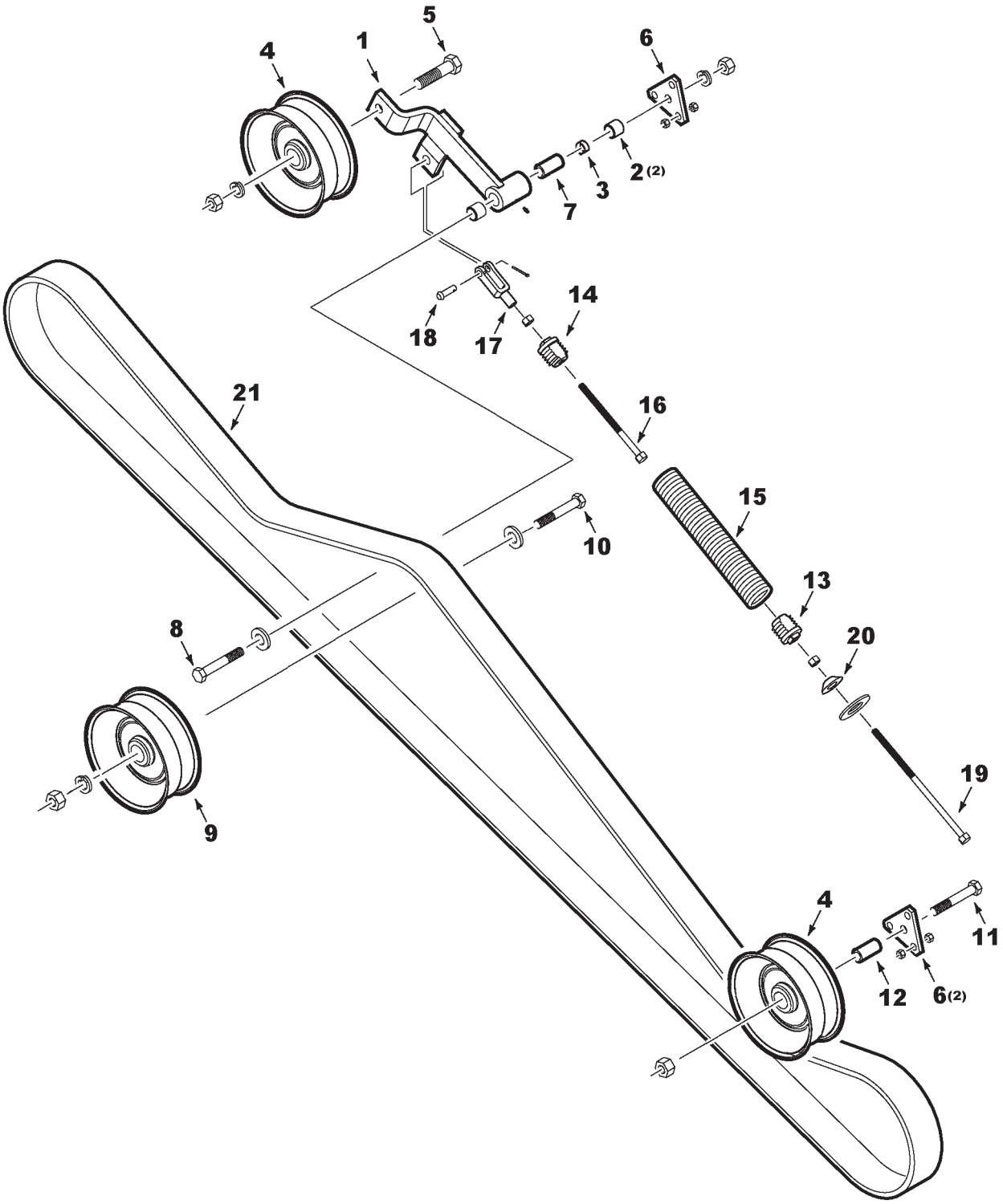

MC00349

https://truckmanualshub.com/

RH DRIVE
(PRIOR S/N HP36101)

ITEM	NUMBER	QTY	DESCRIPTION
1	71389638	1	IDLER ARM WLDMT, W/BUSHINGS
	13811X	1	LUBE FTG, STR, 1/4-28 TAPER THD
2	71356060	2	BUSHING, PIVOT
3	71197117	1	SPACER, BUSHING
4	71308156	2	IDLER, BELT DRIVE
5	70919434	1	CAPSCREW, 5/8-11 X 2-3/4 GR5
	70917373	1	LOCKWASHER, 5/8 REG
	70932665	1	NUT, 5/8-11
6	71182840	2	PLATE, IDLER MNTG (PRIOR S/N HN36101)
	704056	12	JAM NUT, 1/2-13 (PRIOR S/N HN36101)
	71346267	2	PLATE, IDLER MNTG (EFF. S/N HN36101)
	70922037	12	JAM NUT, 3/4-10 (EFF. S/N HN36101)
7	71356061	1	SLEEVE, HARD, IDLER PIVOT
8	70925703	1	CAPSCREW, 5/8-11 X 4 GR5
	70918432	1	WASHER, 5/8 WIDE
	70917373	1	LOCKWASHER, 5/8 REG
	70932665	1	NUT, 5/8-11 REG
9	71388217	1	IDLER, BELT DRIVE
10	70923111	1	CAPSCREW, 5/8-11 X 3 GR5
	70918432	3	WASHER, 5/8 WIDE (USE AS REQUIRED)
	70917373	1	LOCKWASHER, 5/8 REG
	70932665	1	NUT, 5/8-11 REG
11	70925704	1	CAPSCREW, 5/8-11 X 4-1/2 GR5
	70917373	1	LOCKWASHER, 5/8 REG
	70932665	1	NUT, 5/8-11 REG
12	700149006	1	SPACER
13	71344647	1	PLUG ASY, SPRING
	71344649	1	PLUG, SPRING
	704031	1	NUT, 1/2-13 REG
	70937461	1	WASHER, .531 X .812 X .036
14	71344649	1	PLUG, SPRING
15	71197323	1	SPRING
16	70935299	1	CAPSCREW, FULL THD, 1/2-13 X 12" GR5
17	70937465	1	YOKE
	704031	1	NUT, 1/2-13 REG
18	70929593	1	PIN, CLEVIS, 1/2 X 1.36 LG
	70918452	1	COTTER PIN, 1/8 X 1"
19	70935036	1	CAPSCREW, FULL THD, 1/2-13 X 16" GR5
	704031	1	NUT, 1/2-13 REG
20	70301781	1	WASHER, PIVOT
	70918431	1	WASHER, 1/2, WIDE
21	71379105	1	BELT, FEEDER DRIVE

MC00349
PR: 156

https://truckmanualshub.com/

JACKSHAFT DRIVE
R.H. FEEDERHOUSE
(EFF. S/N HP36101)

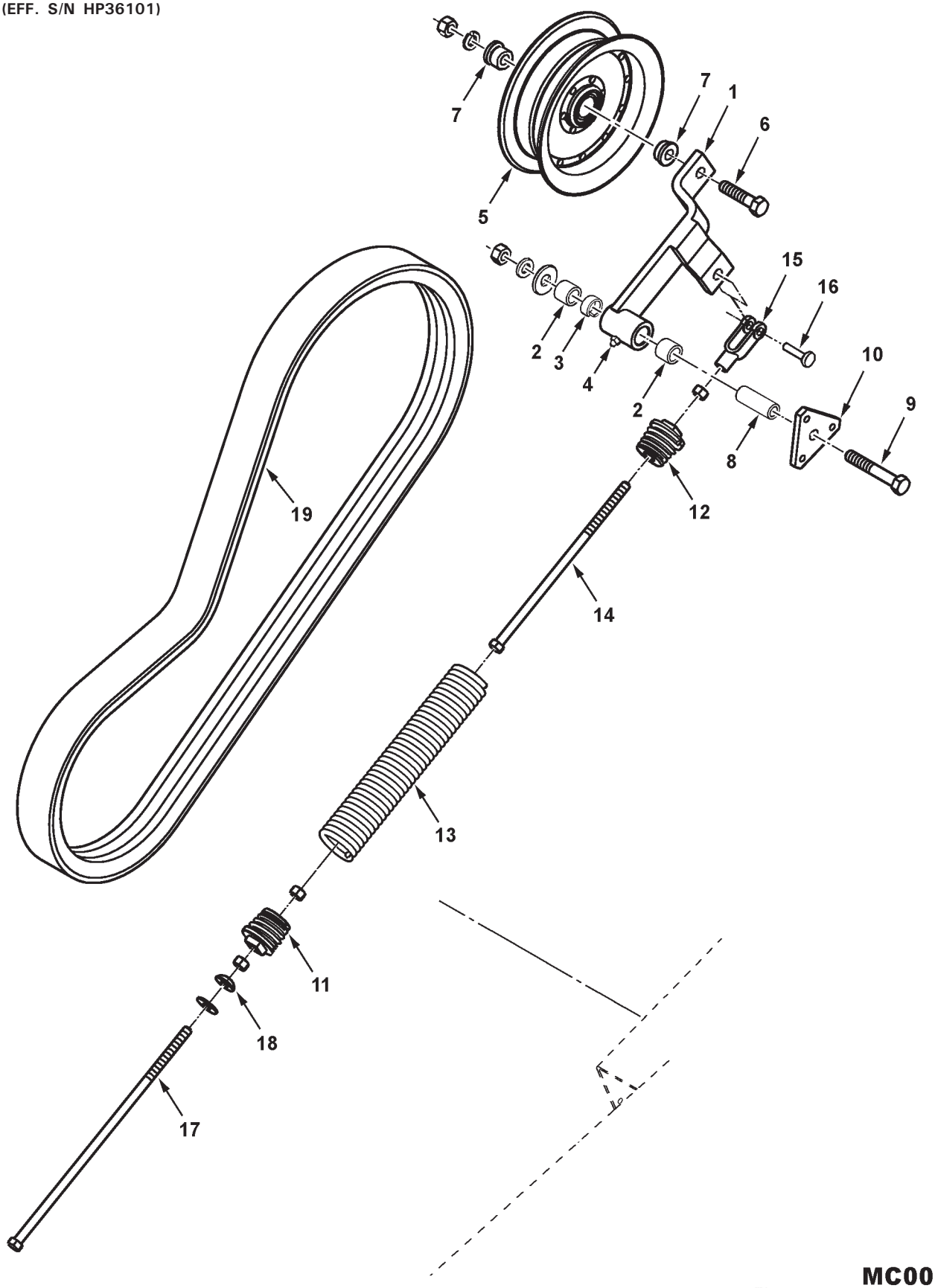

MC00370

https://truckmanualshub.com/

JACKSHAFT DRIVE
R.H. FEEDERHOUSE
(EFF. S/N HP36101)

ITEM	NUMBER	QTY	DESCRIPTION
1	71389638	1	IDLER ARM ASY, JACKSHAFT DR (INCL. ITEMS 2, 3 & 4)
2	71356060	2	BUSHING, PIVOT
3	71197117	1	SPACER, BUSHING
4	13811X	1	LUBE FITTING, STR, 1/4-28 TAPER
5	71309768	1	IDLER, BELT DRIVE
6	70919434	1	CAPSCREW, 5/8-11 X 2-3/4 GR5
	70917373	1	LOCKWASHER, 5/8
	70932665	1	NUT, 5/8-11 REG
7	71312602	2	SPACER, IDLER
8	71356061	1	SLEEVE, HARD, IDLER PIVOT
9	70925703	1	CAPSCREW, 5/8-11 X 4 GR5
	70918432	1	WASHER, 5/8, WIDE
	70917373	1	LOCKWASHER, 5/8
	70932665	1	NUT, 5/8-11 REG
10	71346267	1	PLATE, MOUNTING
	70922037	6	JAM NUT, 3/4-10
11	71349811	1	PLUG ASY, SPRING
	71349813	1	PLUG, SPRING
	704031	1	NUT, 1/2-13 REG
	70937461	1	WASHER, .531 X .812 X .036
12	71349813	1	PLUG, SPRING
13	71349270	1	SPRING
14	70935299	1	CAPSCREW, 1/2-13 X 12", FULL THD, GR5
15	70937465	1	YOKE, 1/2-13 THD.
	704031	1	NUT, 1/2-13 REG
16	70929593	1	PIN, CLEVIS, 1/2 X 1.36 LG
	70918452	1	COTTER PIN, 1/8 X 1"
17	70935036	1	CAPSCREW, 1/2-13 X 16, FULL THD, GR5
	704031	1	NUT, 1/2-13 REG
18	70301781	1	WASHER, PIVOT
	70918431	1	WASHER, 1/2, WIDE
19	71398384	1	BELT, BEATER TO JACKSHAFT

MC00370
PR: t05b08m42d0008

https://truckmanualshub.com/

JACKSHAFT & V.S. IDLER

V.S. HEADER DRIVE
(EFF. S/N HP36101)

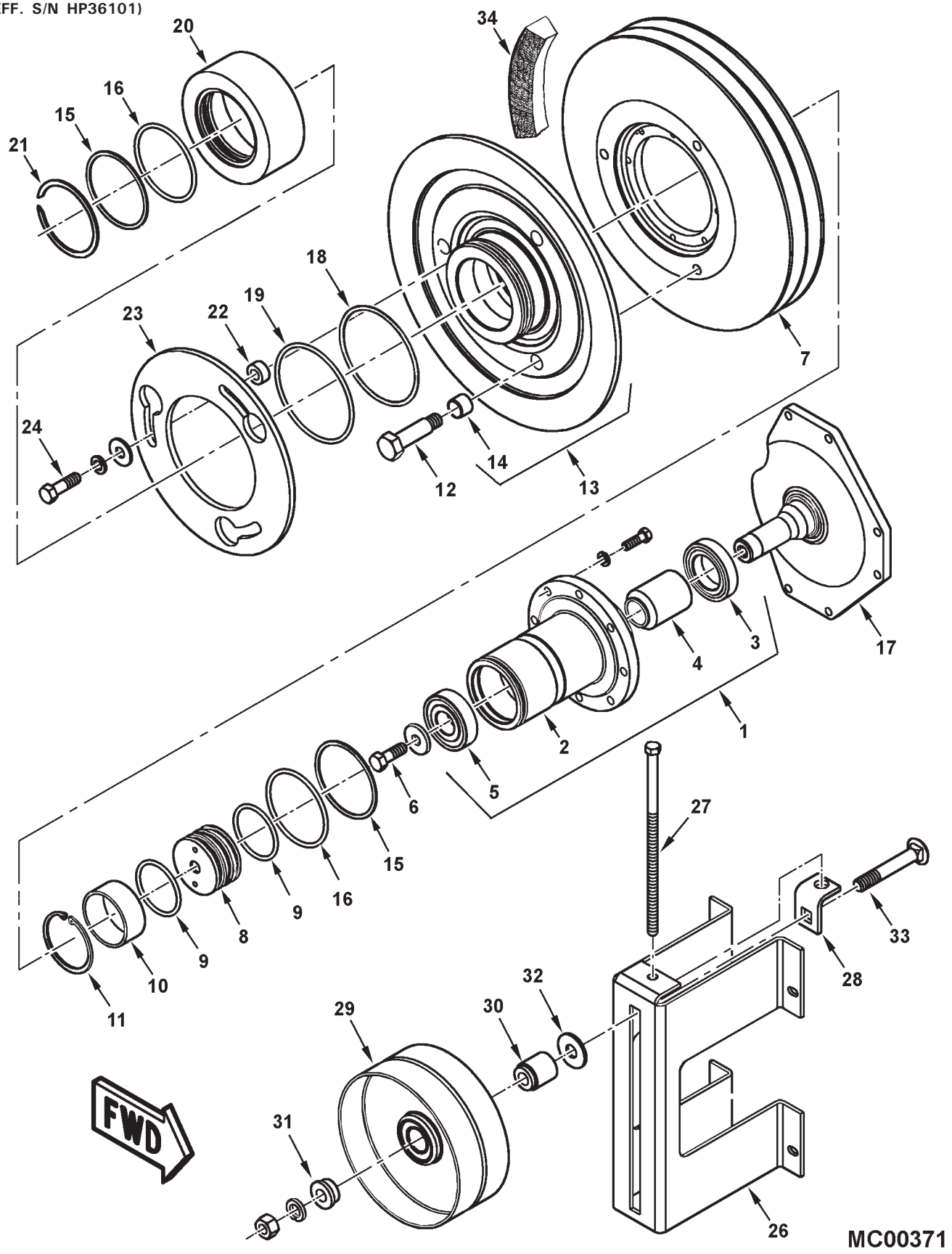

https://truckmanualshub.com/

JACKSHAFT & V.S. IDLER

V.S. HEADER DRIVE
(EFF. S/N HP36101)

ITEM	NUMBER	QTY	DESCRIPTION
1	71399483	1	HUB & BEARING ASY, VS HDR DRIVE (INCL. ITEMS 2, 3, 4, & 5)
2	71398361	1	HUB, VS HEADER DRIVE
3	71382057	1	BEARING, BALL, W/SEALS
4	71399484	1	SPACER, BRG.
5	71382983	1	BEARING, BALL, W/SEALS
6	701235	1	CAPSCREW, 1/2-13 X 1-1/2 GR5
	70917861	1	WASHER, .531 X 1.50 X .180 TH.
7	71398358B	1	SHEAVE, DRIVEN, FEEDER JACKSHAFT
	70920415	8	CAPSCREW, 3/8-16 X 1-1/4 GR5
	70916965	8	LOCKWASHER, 3/8
8	71382985	1	ADAPTER, ROTARY UNION
9	70923828	2	O-RING, .210 X 2.475 ID, 75 DURO.
10	71382055	1	SPACER, ADAPTER
11	353062X1	1	RETAINING RING, INTERNAL
12	71391567	3	GUIDE PIN, HEX HD, VS HDR DRIVE
13	71382053	1	SHEAVE ASY, OUTER HALF, VS HDR (INCL. IT. 14)
14	71380460	3	BUSHING, GUIDE
15	70926647	2	RING, BACKUP
16	70923831	2	O-RING, .210 X 3.60 ID, 75 DURO.
17	71398360	1	JACKSHAFT, SHEAVE SUPPORT
	70920415	6	CAPSCREW, 3/8-16 X 1-1/4 GR5
	Y704734	6	NUT, HEX FLNG TOP LOCK, 3/8-16
18	70937348	1	RING, BACKUP
19	70937347	1	O-RING, .210 X 4.725 ID, 75 DURO.
20	71391792B	1	CAP, VS HDR DRIVE
21	70937646	1	RETAINING RING, EXTERNAL
22	71312819	3	SPACER
23	71312823	1	DISC, LOCKOUT
24	70919089	3	CAPSCREW, 1/2-13 X 1-3/4 GR5
	Y705624	3	WASHER, 1/2, NARROW
	Y705046	3	LOCKWASHER, 1/2
26	71398379B	1	SUPPORT, IDLER, VS HDR DRIVE
	70921210	2	CAPSCREW, 3/8-16 X 1 GR5
	Y704734	4	NUT, HEX FLNG TOP LOCK, 3/8-16
27	70935033	1	CAPSCREW, 7/16-14 X 10.5 GR5
28	71174391	1	BRACKET WLDMT, IDLER ADJUST
29	71309766	1	IDLER, FLAT, W/BRG, 8.0 OD
30	71312603	1	SPACER, IDLER
31	71312602	1	SPACER, IDLER
32	70918432	1	WASHER, 5/8, WIDE
33	70924845	1	BOLT, RND HD SQ NECK, 5/8-11 X 4 GR5
	70917373	1	LOCKWASHER, 5/8
	70932665	1	NUT, 5/8-11 REG
34	71399505	1	BELT, VS HEADER DRIVE

MC00371
PR: t05b08m42d0009

https://truckmanualshub.com/

HYDRAULIC LINES
V.S. HEADER DRIVE
(EFF. S/N HP36101)

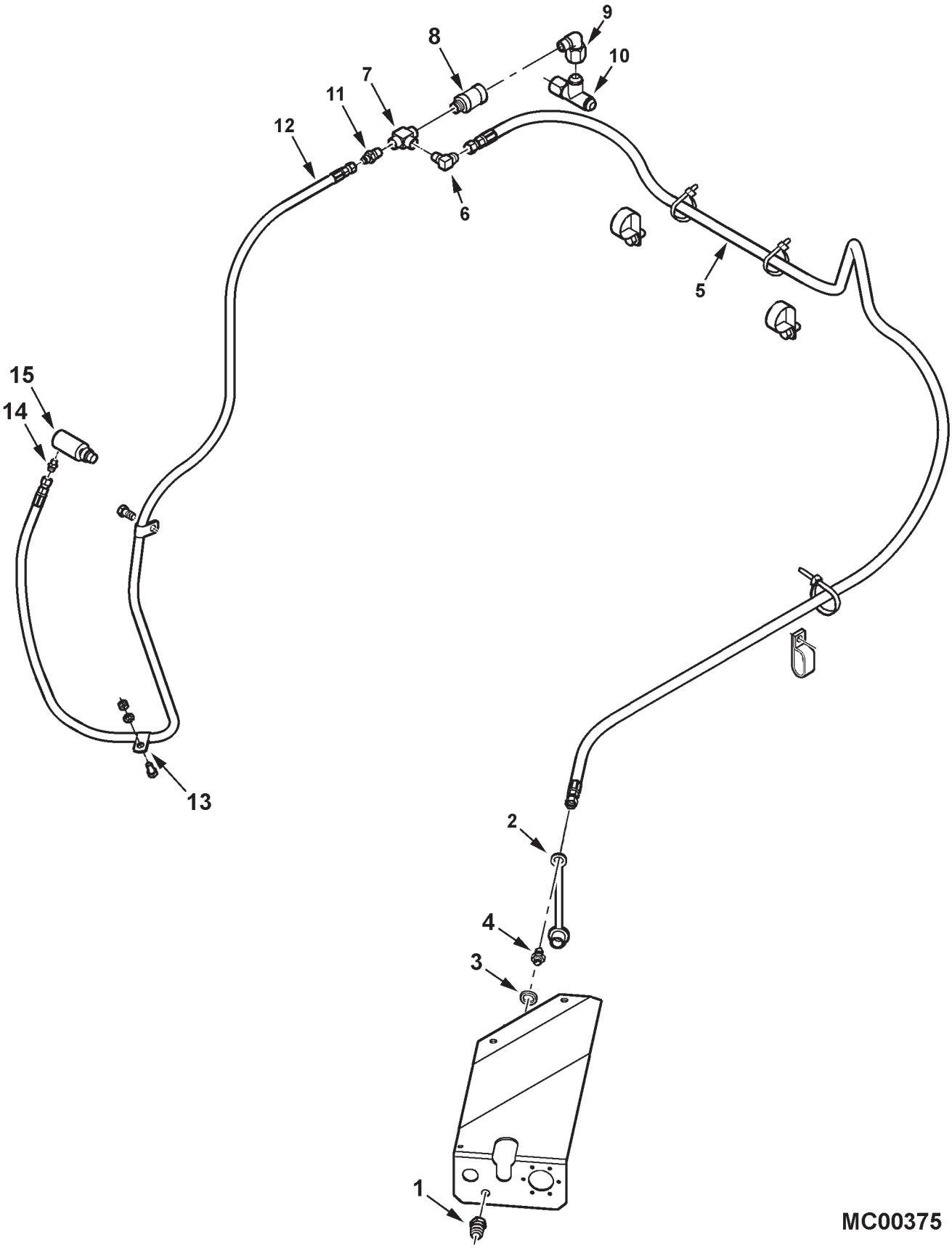

https://truckmanualshub.com/

HYDRAULIC LINES
V.S. HEADER DRIVE
(EFF. S/N HP36101)

ITEM	NUMBER	QTY	DESCRIPTION
1	71328361	1	QUICK COUPLER HALF, MALE, 1/4 NPTF FEM.
2	71328365	1	DUST CAP, FEM. W/TETHER STRAP
3	Y705624	1	WASHER, 1/2, NARROW
4	70919062	1	CONN, STR. MALE, 9/16-18 JIC X 1/4 NPTF
5	71401755	1	HOSE ASY, 3/8 ID X 9/16-18 JIC FEM. (2)
	70925094	8	TIE, NYLON, .184 X 7.3 LG.
6	70919135	1	ELBOW, 90 D MALE, 9/16-18 JIC X 1/4 NPTF
7	846774	1	TEE, FEM. 1/4 NPTF
8	71368991	1	VALVE, RELIEF, IN-LINE, 500 PSI
9	70935416	1	ELBOW, 90 DEG, 3/8 NPTF M X 3/4-16 FEM.
10	70921298	1	TEE, SWIVEL RUN, 3/4-16 JIC
11	70919140	1	CONN, STR. MALE, 7/16-20 JIC X 1/4 NPTF
12	71401756	1	HOSE ASY, 1/4 ID X 7/16-20 JIC FEM. (2)
	70925617	1	CLAMP, 1/2 ID X .406 HOLE
	Y702951	1	SCR, HEX WSHR HD, 3/8-16 X 3/4
13	755785	2	CLAMP, LINE, 9/16 TUBE X .281 HOLE
	70921960	2	CAPSCREW, 1/4-20 X 1 GR5
	705012	2	LOCKWASHER, 1/4
	70916622	2	NUT, 1/4-20, REG
14	70919171	1	CONN, STR. MALE, 7/16-20 JIC X 1/8 NPTF
15	71332011	1	UNION, ROTATING
	70921885	1	O-RING, .078 X .468 ID

MC00375
PR: t05b08m42d0010

https://truckmanualshub.com/

JACKSHAFT & C'SHAFT DRIVE IDLER

FIXED SPEED HEADER DRIVE
(EFF. S/N HP36101)

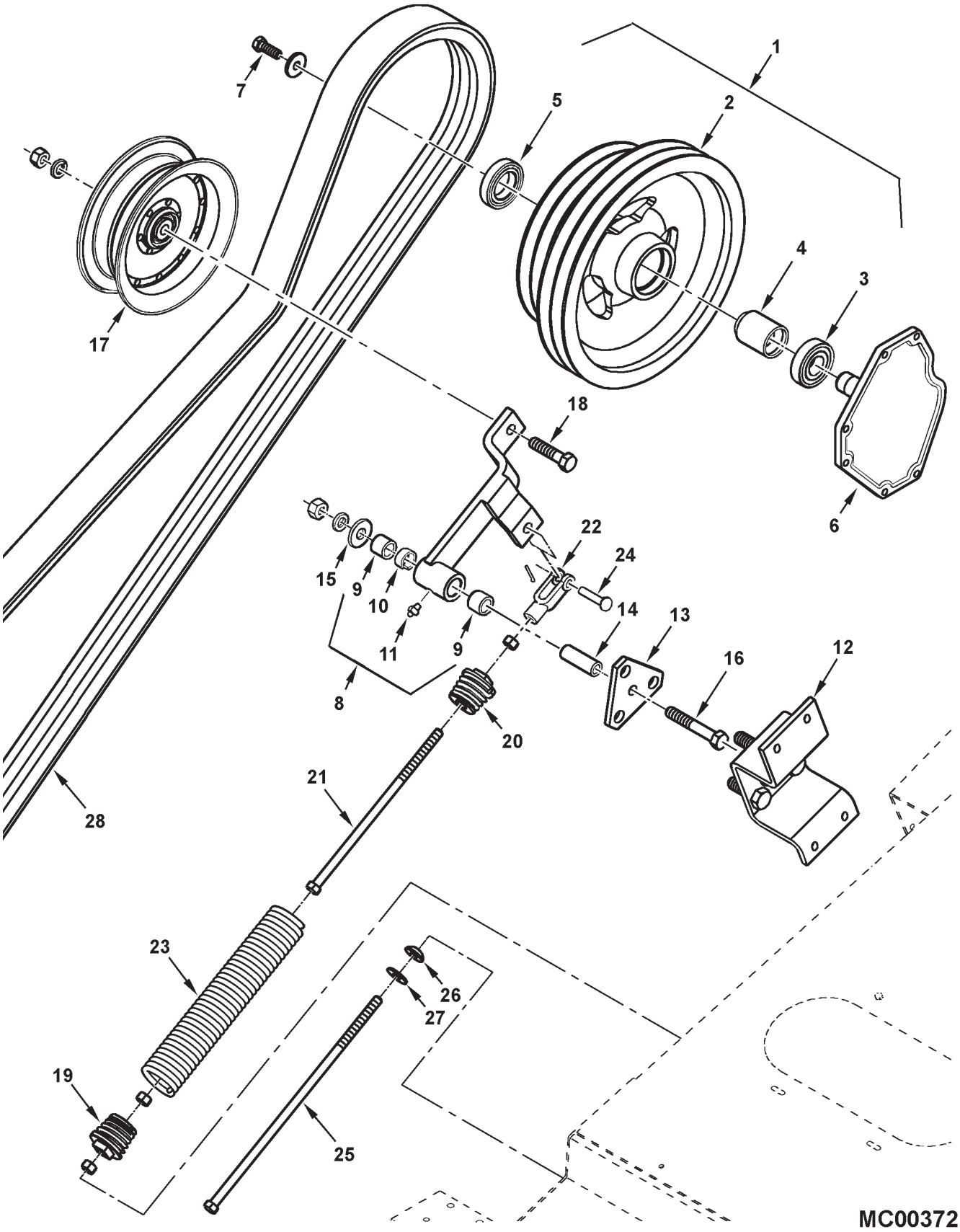

https://truckmanualshub.com/

JACKSHAFT & C'SHAFT DRIVE IDLER

FIXED SPEED HEADER DRIVE
(EFF. S/N HP36101)

ITEM	NUMBER	QTY	DESCRIPTION
1	71399520B	1	SHEAVE ASY, W/BEARINGS (INCL ITEM 2, 3, 4 & 5)
2	71398364	1	SHEAVE, DRIVEN, FEEDER JACKSHAFT
3	71382057	1	BEARING, BALL, W/SEALS
4	71399484	1	SPACER, BEARING
5	71382983	1	BEARING, BALL, W/SEALS
6	71398360	1	JACKSHAFT, SHEAVE SUPPORT
	70920415	6	CAPSCREW, 3/8-16 X 1-1/4 GR5
	Y704734	6	NUT, HEX FLNG TOP LOCK, 3/8-16
7	701235	1	CAPSCREW, 1/2-13 X 1-1/2 GR5
	70917861	1	WASHER, .531 X 1.50 X .180 TH.
8	71389638	1	IDLER ARM ASY, FIXED SPD HDR DRIVE (INCL IT. 9, 10 & 11)
9	71356060	2	BUSHING, PIVOT
10	71197117	1	SPACER, BUSHING
11	13811X	1	LUBE FITTING, STR, 1/4-28 TAPER
12	71398391	1	SUPPORT WLDMT, IDLER, FIXED SPD DRIVE
	70921210	2	CAPSCREW, 3/8-16 X 1 GR5
	Y704734	4	NUT, HEX FLNG TOP LOCK, 3/8-16
13	71346267	1	PLATE, MOUNTING
	70922037	6	JAM NUT, 3/4-10 UNC
14	71356061	1	SLEEVE, HARD, IDLER PIVOT
15	70918432	1	WASHER, 5/8, WIDE
16	70925703	1	CAPSCREW, 5/8-11 X 4 GR5
	70917373	1	LOCKWASHER, 5/8
	70932665	1	NUT, 5/8-11 REG
17	71308156	1	IDLER, FLAT, FLANGED, 8.0 DIA
18	70919434	1	CAPSCREW, 5/8-11 X 2-3/4 GR5
	70917373	1	LOCKWASHER, 5/8
	70932665	1	NUT, 5/8-11 REG
19	71349811	1	PLUG ASY, SPRING
	71349813	1	PLUG, SPRING
	704031	1	NUT, 1/2-13 REG
	70937461	1	WASHER, .531 X .812 X .036
20	71349813	1	PLUG, SPRING
21	70935035	1	CAPSCREW, 1/2-13 X 8-1/2, FULL THD, GR5
22	70937465	1	YOKE, 1/2-13 UNC
	704031	1	NUT, 1/2-13 REG
23	71349270	1	SPRING
24	70929593	1	PIN, CLEVIS, 1/2 X 1.36 LG
	70918452	1	COTTER PIN, 1/8 X 1"
25	70935299	1	BOLT, HEX, 1/2-13 X 12, FULL THD, GR5
	704031	1	NUT, 1/2-13 REG
26	70301781	1	WASHER, PIVOT, CONVEX, 1/2
27	70918431	1	WASHER, 1/2, WIDE
28	71399519	1	BELT, FIXED SPEED C'SHAFT DRIVE

MC00372
PR: t05b08m42d0011

https://truckmanualshub.com/

COUNTERSHAFT
HEADER DRIVE
(PRIOR S/N HP36101)

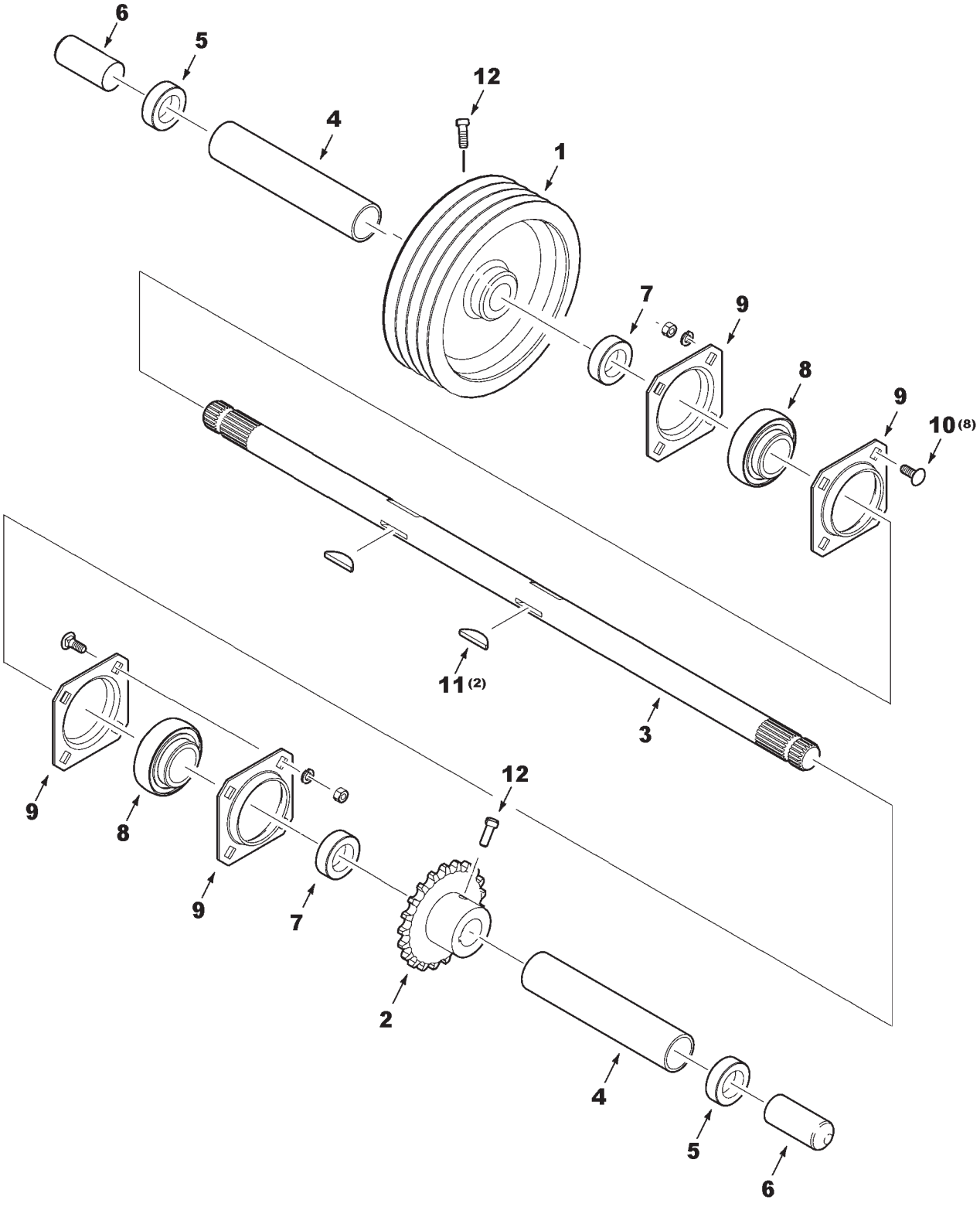

MC00350

https://truckmanualshub.com/

COUNTERSHAFT
HEADER DRIVE
(PRIOR S/N HP36101)

ITEM	NUMBER	QTY	DESCRIPTION
1	71393671	1	SHEAVE, RH
2	71379103	1	SPROCKET, LH
3	71393665	1	COUNTERSHAFT
4	71388239	2	COVER, FEEDER C'SHAFT
5	K3999	2	COLLAR (INCL. SETSCREW)
6	71179395	2	COVER, SHAFT
7	70534931	2	COLLAR, 1.75 (INCL. SETSCREW)
8	71335184	2	BEARING ASY. 1.75 (W/O COLLAR)
9	71130258	4	FLANGE, BEARING
10	68619	8	BOLT, RD HD,SHT SQ NK, 1/2-13 X 1-1/4
	Y705046	8	LOCKWASHER, 1/2 REG
	704031	8	NUT, 1/2-13 REG
11	700707139	2	KEY, WOODRUFF, #27, .250 X 2.125
12	70923306	4	SETSCREW, 1/2-13 X 1.0

MC00350
PR: 158

https://truckmanualshub.com/

COUNTERSHAFT

VARIABLE & FIXED SPEED HEADER DRIVE
(EFF. S/N HP36101)

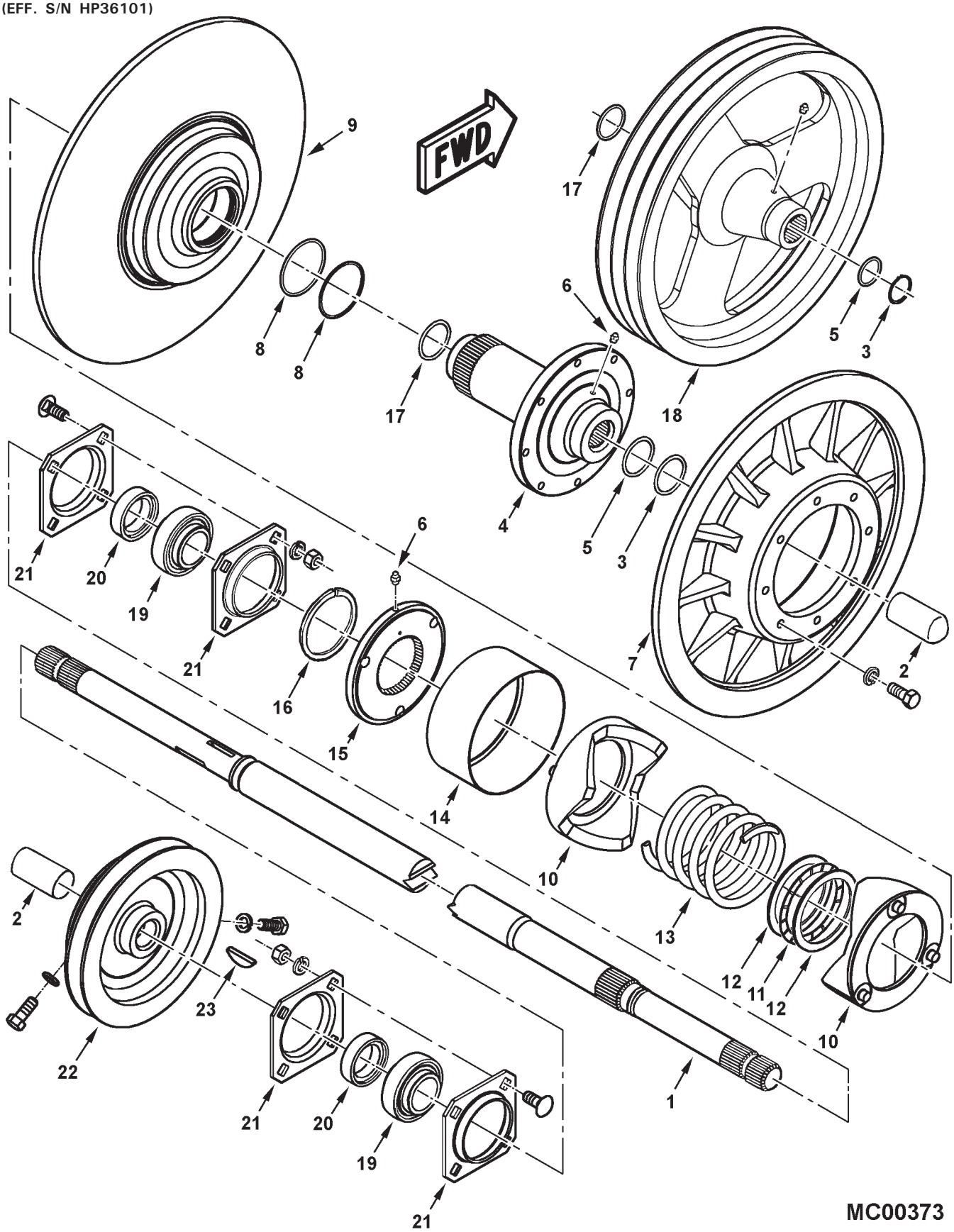

https://truckmanualshub.com/

COUNTERSHAFT
VARIABLE & FIXED SPEED HEADER DRIVE
(EFF. S/N HP36101)

ITEM	NUMBER	QTY	DESCRIPTION
1	71399486	1	COUNTERSHAFT, FEEDER
2	71179395	2	COVER, SHAFT
3	70927745	1	RING, EXTERNAL RETAINING
4	71399485	1	HUB, V.S. COUNTERSHAFT
5	70923813	1	O-RING, .139 X 1.359 ID, 75 DUR
6	13811X	2	LUBE FITTING, STR, 1/4-28 TAPER
7	71380043	1	SHEAVE HALF, OUTER, V.S. HEADER
	70920415	8	CAPSCREW, 3/8-16 X 1-1/4 GR5
	70916965	8	LOCKWASHER, 3/8
8	70923584	1	O-RING, .139 X 2.984 ID, 75 DUR
	70926626	1	RING, BACKUP, .050 TH X 3.0 ID
9	71395799	1	SHEAVE HALF, INNER, V.S. HEADER
10	71399487	2	CAM, ACTUATOR, V.S. HEADER
11	71161396	1	BEARING, THRUST
12	71173857	2	RACE, THRUST BEARING
13	71380028	1	SPRING, V.S. HEADER CAM
14	71380905	1	COVER, CAM
15	71380463	1	PLATE, CAM CARRIER
16	70930415	1	RING, EXTERNAL RETAINING
17	70923577	1	O-RING, .139 X 1.734 ID, 75 DUR
18	71398365B	1	SHEAVE, DRIVEN, FIXED SPEED HEADER
	13887X	1	LUBE FITTING, STR, 1/4 PTF
19	71335184	2	BEARING, W/O COLLAR, 1.75 DIA
20	70534931	2	COLLAR, BRG.
21	71130258	4	FLANGE, BEARING
	68619	8	BOLT, RND HD SQ NECK, 1/2-13 X 1-1/4
	Y705046	8	LOCKWASHER, 1/2
	704031	8	NUT, 1/2-13 REG
22	71398362B	1	SHEAVE, DRIVE, C'SHAFT, LH
	70923306	2	SETSCREW, SQ HD, 1/2-13 X 1
23	700707139	1	KEY, WOODRUFF, #27, .250 X 2.125

MC00373
PR: t05b08m42d0012

https://truckmanualshub.com/

LATCH
HEADER

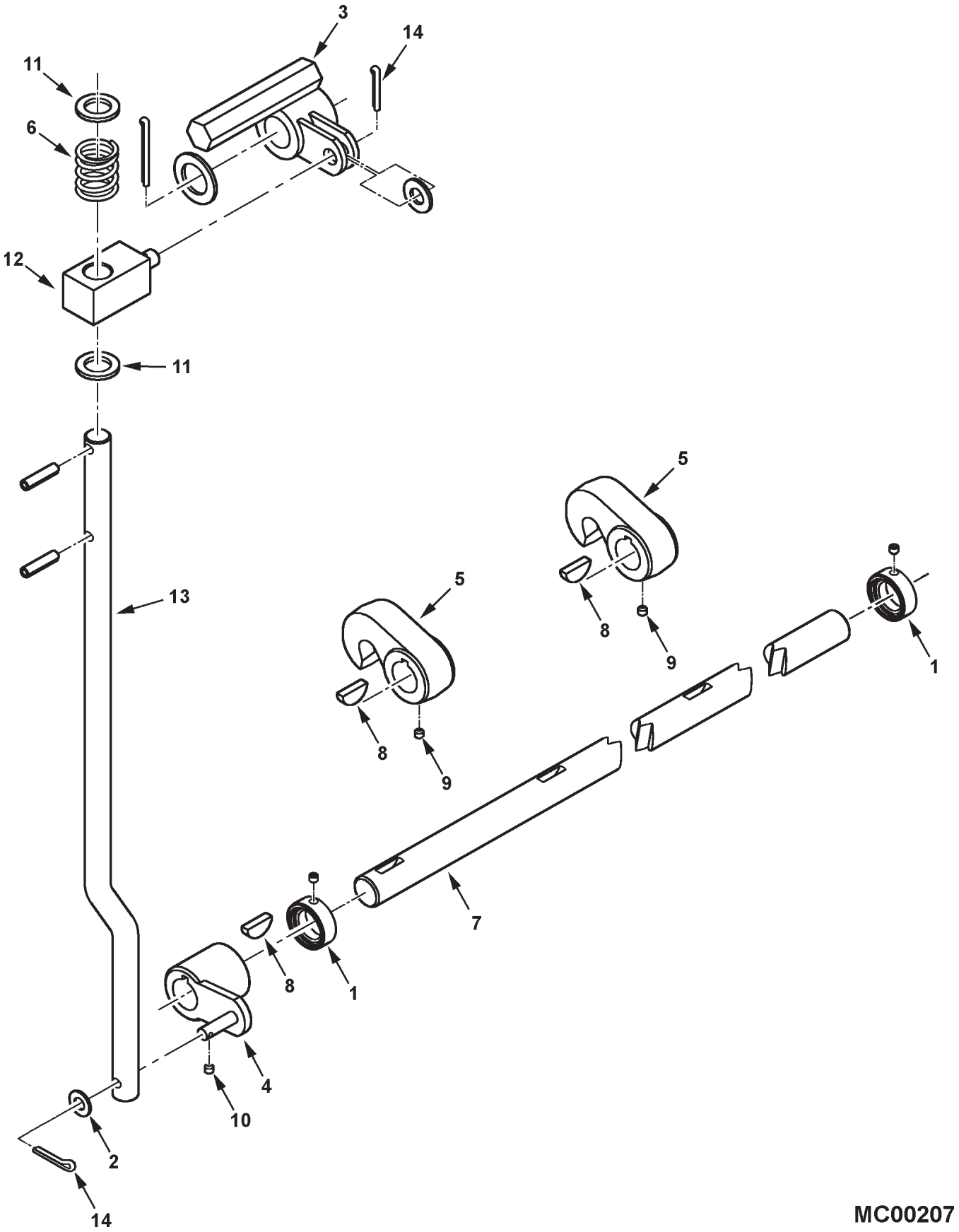

https://truckmanualshub.com/

LATCH
HEADER

ITEM	NUMBER	QTY	DESCRIPTION
1	375028X1	2	COLLAR, LOCK, W/ SETSCREW (QTY 1 PRIOR S/N HP 36101)
	70915794	2	SETSCREW, 1/4-20 X 1/4
2	70917378	1	WASHER, 3/8 WIDE (PRIOR S/N HP36101)
	70918266	3	WASHER, 3/8 NARROW (EFF. S/N HP36101)
3	116346W1	1	CRANK ASSEMBLY, LATCH, UPPER
	70919393	1	WASHER, PLAIN, 1.02 X 1.63 X 12 GA
	70918459	1	PIN, COTTER, 3/16 X 1 1/2
4	116343W1	1	CRANK ASSEMBLY, LATCH, LOWER
5	71317841	2	HOOK
6	116312W1	1	SPRING
	70915935	2	PIN, SPRING, 5/16 X 1-1/4
7	116349W1	1	SHAFT, HEADER LATCH (PRIOR S/N HP36101)
	71406802	1	SHAFT, HEADER LATCH (EFF. S/N HP36101)
8	70905126	3	KEY, WOODRUFF, #808, 1/4 X 1 DIA
9	70903835	2	SETSCREW, 1/4-20 X 3/8
10	70921263	1	SETSCREW, 5/16-18 X 3/8
11	70923427	2	WASHER, 25/32 X 1-1/4 X 11 GA
12	116348W1	1	BLOCK, LATCH PIVOT
	Y705624	1	WASHER, 1/2 NARROW
13	116339W1	1	ROD, LATCH (PRIOR S/N HP36101)
	71406803B	1	ROD, LATCH (EFF. S/N HP36101)
14	70918452	2	PIN, COTTER, 1/8 X 1

MC00207
PR: 160

https://truckmanualshub.com/

CONVEYOR
(PRIOR S/N HP36101)

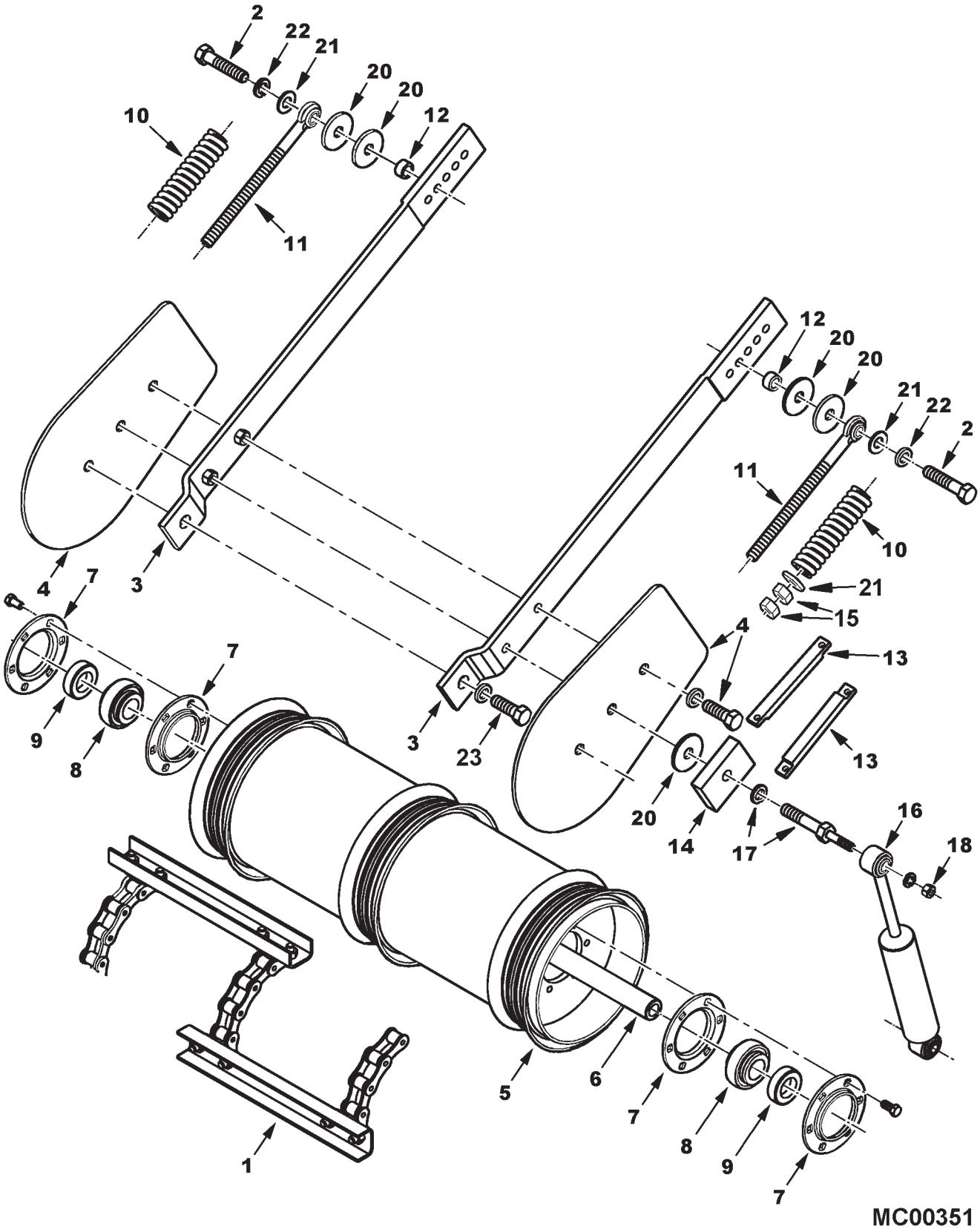

https://truckmanualshub.com/

CONVEYOR
(PRIOR S/N HP36101)

ITEM	NUMBER	QTY	DESCRIPTION
1	71449003	1	CHAIN ASY, FEEDER CONVEYOR, W/SLATS
	71149999	1	CHAIN ASY, CONVEYOR, CENTER
	71449001	2	CHAIN ASY, CONVEYOR, SIDE
	71149894	AR	LINK, ATTACHING
	70937300	AR	LINK, ROLLER
	71149896	AR	LINK, OFFSET (INCL. PIN & LOCKNUT)
	71149895	AR	LINK, COUPLING
	70920397	AR	NUT, NYLON LOCK, 1/4-20
	71387896	28	SLAT, FEEDER CHAIN
	70937603	112	CAPSCREW, LOCKING, 1/2-13 X 3/4 GR8
	70928512	112	NUT, 1/2-13 REG GR8
2	70923111	2	CAPSCREW, 5/8-11 X 3 GR5
3	71381680	2	ARM ASY, FEEDER DRUM
4	71381682	2	SHIELD, DUST
	70923151	2	CAPSCREW 5/8-11 X 1-1/4 GR5
	70917373	2	LOCKWASHER, 5/8 REG
5	71387894	1	DRUM WLMT, 8.625
	71377310	3	WEAR RING, 8.625"
6	71387895	1	SHAFT, CONVEYOR DRUM
7	71370634	4	FLANGE, BEARING, 72MM
	70925625	12	CAPSCREW, 3/8-16 X 7/8, NYLOK GR8
	705038	12	LOCKWASHER, 3/8 REG
8	71309117	2	BEARING, 1-1/4, INCL. COLLAR
9	7710551	2	COLLAR, BEARING
10	71375335	2	SPRING
11	71363526	2	EYEBOLT, 5/8-11 THD.
12	71370121	2	BUSHING, ARM
13	71370496	4	STOP, ARM, FEEDER HOUSING.
	70931317	8	BOLT, RD HD, SHT SQ NK 1/4-20 X 3/4
	70916964	8	LOCKWASHER, 1/4
	70916622	8	NUT, 1/4-20 REG
14	71370120	2	STOP, DRUM POSITION
15	70915726	4	NUT, 5/8-11 REG
16	71315999	2	SHOCK ABSORBER
	70925696	2	CAPSCREW, 7/16-14 X 2 GR5
	70918199	2	LOCKWASHER, 7/16
	70918267	2	WASHER, 7/16 NARROW
17	71376888	2	STUD, DAMPER ATTACH
	70917373	2	LOCKWASHER, 5/8 REG
18	70930757	2	NUT, NYLOCK, 7/16-14
	70918267	2	WASHER, 7/16 NARROW
20	70937480	6	WASHER, HARD, 21/32 X 2-1/4 X 8 GA.
21	70918268	4	WASHER, PLAIN, 5/8 NARROW
22	70917373	2	LOCKWASHER, 5/8 REG
23	70937548	2	CAPSCREW, 3/4-10 X 2, GR 8, NYLOK
	70919332	2	LOCKWASHER, 3/4 REG
-	79021665	AR	LOCTITE, SEALANT, 271

https://truckmanualshub.com/

CONVEYOR
(EFF. S/N HP36101)

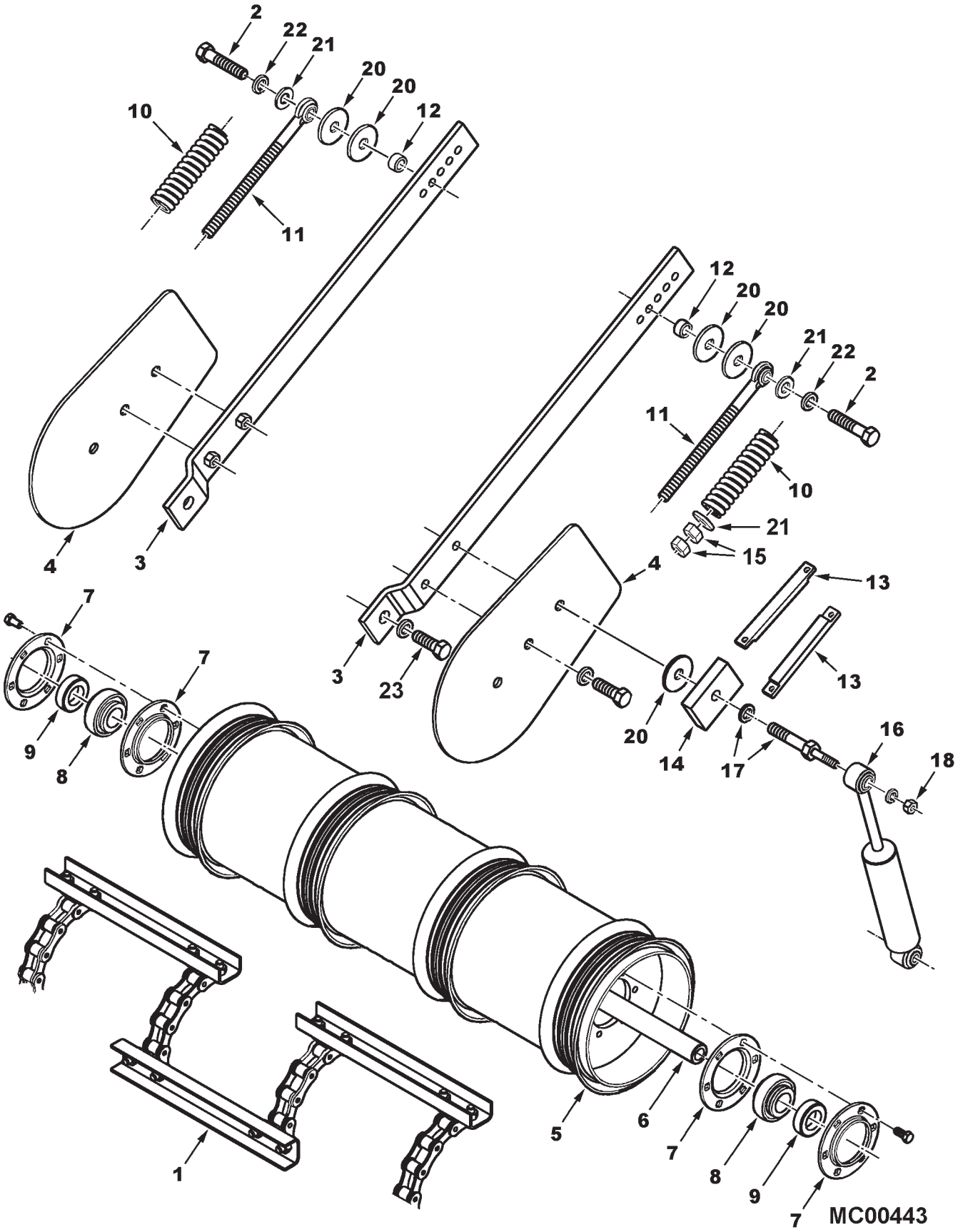

https://truckmanualshub.com/

CONVEYOR
(EFF. S/N HP36101)

ITEM	NUMBER	QTY	DESCRIPTION
1	71449017	1	CHAIN ASY, CONVEYOR, 3-STRAND W/SLATS (PRIOR S/N HS36101)
	71449016	1	CHAIN ASY, CONVEYOR, CENTER
	71449015	2	CHAIN ASY, CONVEYOR, SIDE
	71449025	1	CHAIN ASY, CONVEYOR, 4-STRAND W/SLATS (EFF. S/N HS36101)
	71449016	2	CHAIN ASY, CONVEYOR, CENTER
	71449015	2	CHAIN ASY, CONVEYOR, SIDE
	71149894	AR	LINK, ATTACHING
	70937300	AR	LINK, ROLLER
	71149896	AR	LINK, OFFSET, INCL. PIN & LOCKNUT
	71149895	AR	LINK, COUPLING
	70920397	AR	NUT, NYLON LOCK, 1/4-20
	71387896	28	SLAT, FEEDER CHAIN (3-STRAND)
	71411426	42	SLAT, FEEDER CHAIN (4-STRAND)
	70937603	168	CAPSCREW, LOCKING, 1/2-13 X 3/4 GR8 (QTY 112 ON 3-STRAND CHAIN)
	70928512	168	NUT, 1/2-13 GR8 (QTY 112, 3-STRAND)
2	70923111	2	CAPSCREW, 5/8-11 X 3 GR5
3	71396481	2	ARM, FRONT FEEDER DRUM
4	71381682	2	SHIELD, DUST
	70923113	2	CAPSCREW 5/8-11 X 1 GR5
	70917373	2	LOCKWASHER, 5/8
5	71387894	1	DRUM WLMT, 8.625 (PRIOR S/N HS36101)
	71411425	1	DRUM WLMT, 8.625 (EFF. S/N HS36101)
	71377310	4	WEAR RING, 8.625" (QTY 3 PRIOR HS36101)
6	71387895	1	SHAFT, CONVEYOR DRUM
7	71370634	4	FLANGE, BEARING, 72MM
	70925625	12	CAPSCREW, 3/8-16 X 7/8, NYLOK GR8
	705038	12	LOCKWASHER, 3/8 REG
8	71309117	2	BEARING, 1-1/4, (INCL. COLLAR)
9	7710551	2	COLLAR, BEARING
10	71375335	2	SPRING
11	71363526	2	EYEBOLT, 5/8-11 THD.
12	71370121	2	SPACER, ARM
13	71370496	4	STOP, ARM, FEEDER HOUSING.
	70931317	8	BOLT, CARR, 1/4-20 X 3/4 (PRIOR HS36101)
	70916964	8	LOCKWASHER, 1/4
	70916622	8	NUT, 1/4-20 REG
	3009330X1	8	BOLT, RD HD SQ NK, M6-1.0 X 20 CL8.8 (EFF. S/N HS36101)
	339375X1	8	LOCKWASHER, M6
	339030X1	8	NUT, M6 X 1.0, REG
14	71370120	2	STOP, DRUM POSITION
15	70915726	4	NUT, 5/8-11 REG
16	71315999	2	SHOCK ABSORBER
	70925696	2	CAPSCREW, 7/16-14 X 2 GR5
	70918199	2	LOCKWASHER, 7/16
	70918267	2	WASHER, 7/16 NARROW
17	71406934	2	STUD, DAMPER ATTACH
18	70930757	2	NUT, NYLOCK, 7/16-14
	70918267	2	WASHER, 7/16 NARROW
20	Y705582	6	WASHER, HARD, .688 X 1.28 X .125 TH
21	70918268	4	WASHER, PLAIN, 5/8 NARROW
22	70917373	4	LOCKWASHER, 5/8
23	70937548	2	CAPSCREW, 3/4-10 X 2, GR 8, NYLOK
	70919332	2	LOCKWASHER, 3/4 REG
-	79021665	AR	LOCTITE, SEALANT, 271

https://truckmanualshub.com/

FEEDER REVERSER
LINES & FITTINGS
(PRIOR S/N HP36101)

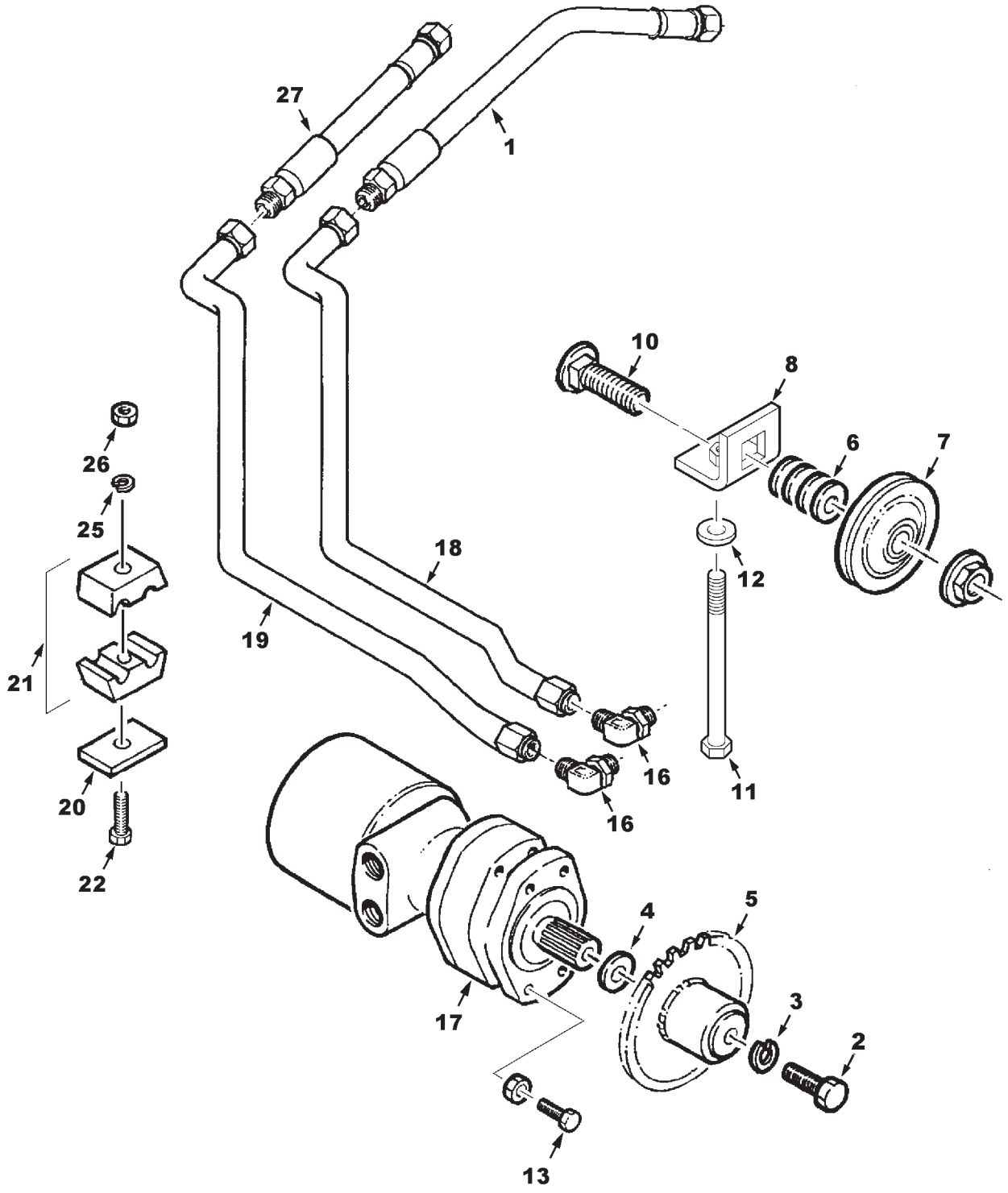

MC00353

https://truckmanualshub.com/

FEEDER REVERSER
LINES & FITTINGS
(PRIOR S/N HP36101)

ITEM	NUMBER	QTY	DESCRIPTION
1	112046W1	1	HOSE ASY, REVERSER RETURN, 3/8 X 32"
2	353609X1	1	CAPSCREW, 5/8-18 UNF X 1-1/4 GR5
3	70917373	1	LOCKWASHER, 5/8 REG
4	363282X1	AR	WASHER, SPCL, FLAT, .688 X 1.0 X .048
5	71379631	1	SPROCKET WLDMT, 15T 3/4 P
6	70918268	6	WASHER, 5/8 NARROW
7	71378873	1	SPROCKET, IDLER, 15 TEETH
8	71174391	1	BRACKET WLDMT, IDLER ADJUST
10	70933955	1	BOLT, RD HD,SQ NK, 5/8-11 X 2-3/4
	700703922	1	NUT, HEX FLNG, TOP LOCK, 5/8-11 UNC
11	70935032	1	CAPSCREW, 7/16-14 X 6 GR5
12	70918267	1	WASHER, 7/16 NARROW
13	701235	4	CAPSCREW, 1/2-13UNC X 1-1/2 GR5
	Y704742	4	NUT, HEX FLANGE TOP LOCK, 1/2-13
16	70924786	2	ELBOW, 90 DEG, 7/8-14 ORB X 3/4-16 JIC
	70921205	2	O-RING, .097 X .755 ID
17	104307W91	1	MOTOR AND CLUTCH ASSEMBLY
			(SEE MOTOR & CLUTCH LISTING)
18	71391087	1	TUBE ASSEMBLY, 1/2
19	71391086	1	TUBE ASSEMBLY, 1/2
20	101646M1	2	COVER PLATE
21	148022M1	2	CLAMP PAIR, DOUBLE, 1/2 X 1/2 DIA
22	7701485	2	CAPSCREW, 1/4-20 X 2" GR5
25	70916964	2	LOCKWASHER, 1/4 REG
26	70916622	1	NUT, 1/4-20 UNC, REG
27	71394137	1	HOSE ASY, REVERSER SUPPLY, 3/8 X 96"

MC00353
PR: 164

https://truckmanualshub.com/

FEEDER REVERSER
DRIVE & HYDRAULICS
(EFF. S/N HP36101)

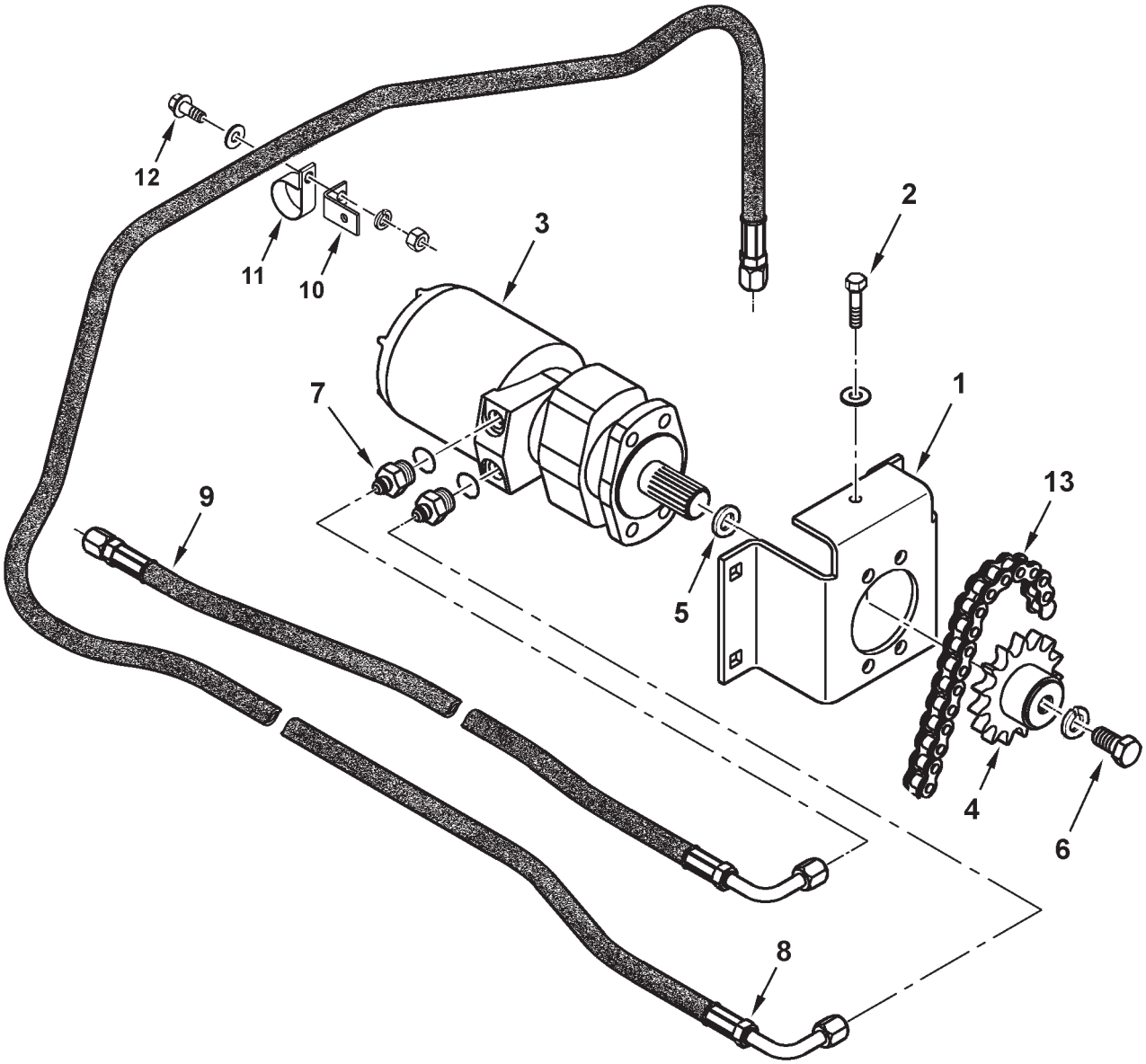

MC00376

https://truckmanualshub.com/

FEEDER REVERSER
DRIVE & HYDRAULICS
(EFF. S/N HP36101)

ITEM	NUMBER	QTY	DESCRIPTION
1	71400852	1	PLATE WLDMT, FEEDER REV'R MOTOR
	68619	1	BOLT, RND HD SQ NK, 1/2-13 X 1-1/4
	Y705046	1	LOCKWASHER, 1/2
	704031	1	NUT, 1/2-13 REG
2	70929116	1	CAPSCREW, 3/8-16 X 2 GR5, FULL THD
	70918266	1	WASHER, 3/8 NARROW
3	71362941	1	MOTOR AND CLUTCH ASY, REVERSER
	701235	4	CAPSCREW, 1/2-13 X 1-1/2 GR5
	Y704742	4	NUT, HEX FLNG TOP LOCK, 1/2-13
4	71379631	1	SPROCKET WLDMT, 15T 3/4 P
5	363282X1	AR	WASHER, SPCL, FLAT, .688 X 1.0 X .048
6	353609X1	1	CAPSCREW, 5/8-18 UNF X 1-1/4 GR5
	70917373	1	LOCKWASHER, 5/8
7	8746018	2	STR CONN. 9/16-18 JIC X 7/8-14 ORB
	70921205	2	O-RING, .097 X .755 ID
8	71401739	1	HOSE ASY, PRES, 115" (PRIOR S/N HS36101)
	71413448	1	HOSE ASY, PRES, 124" (EFF. S/N HS36101)
9	700716510	1	HOSE ASY, RETURN, 59" LG
10	71407962	1	BRACKET, HOSE CLAMP
11	7041015	1	CLAMP, 2-1/4 ID X .531 HOLE
12	70921965	1	CAPSCREW, 3/8-16 X 3/4 GR5
	70918266	1	WASHER, 3/8 NARROW
	70916965	1	LOCKWASHER, 3/8
	70916950	1	NUT, 3/8-16, REG
13	-----	1	CHAIN ASY, REVERSER DRIVE (INCL. FOLLOWING 2 ITEMS)
	71449019	1	CHAIN, #60, 71 PITCHES
	70914584	1	CONNECTOR LINK, #60 CHAIN

MC00376
PR: t05b08m42d0014

https://truckmanualshub.com/

REVERSER MOTOR & CLUTCH
COMPONENTS
(PRIOR S/N HP36101)

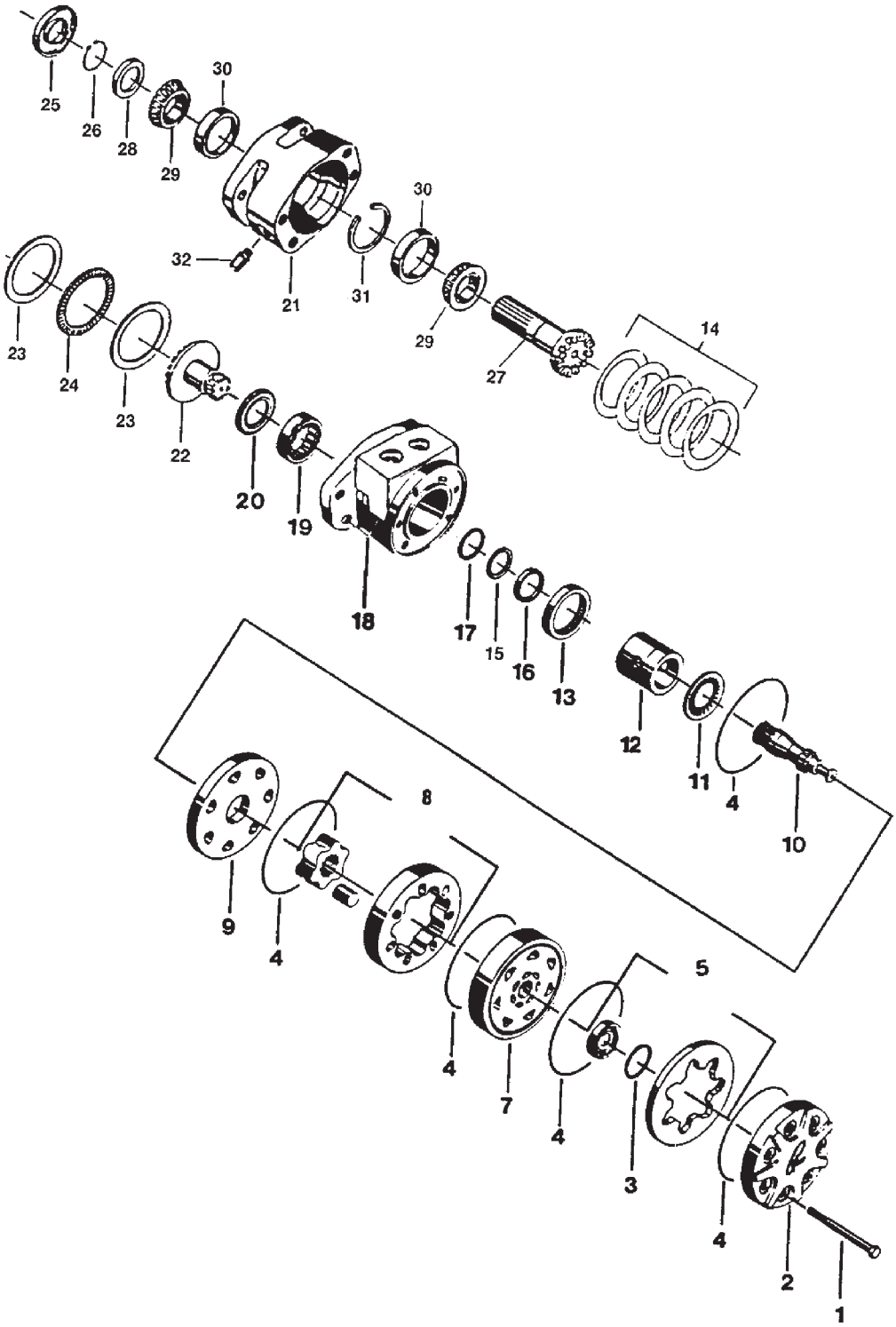

MC00006

https://truckmanualshub.com/

REVERSER MOTOR & CLUTCH
COMPONENTS
(PRIOR S/N HP36101)

ITEM	NUMBER	QTY	DESCRIPTION
-	104307W91	1	MOTOR AND CLUTCH, HYDRAULIC (TRW MB)
1	104482W1	7	BOLT, SPECIAL
2	71367309	1	COVER, END
3	1042752M1	1	* RING, SEAL - COMMUTATOR
4	104475W1	5	* RING, SEAL
5	104480W91	1	COMMUTATOR ASSEMBLY (MATCHED SET)
7	104479W1	1	MANIFOLD
8	104478W91	1	SET ROTOR (MATCHED SET)
9	104476W1	1	PLATE, WEAR
10	104477W1	1	LINK, DRIVE
11	71367317	1	BEARING, THRUST
12	71367528	1	COUPLING & RETAINING RING ASSEMBLY
13	71367320	2	BEARING, INNER
14	71354859	1	DISC SPRING KIT
15	104486W1	1	WASHER, BACKUP
16	104485W1	1	* SEAL
17	104484W1	1	* WASHER, BACKUP
18	71367323	1	HOUSING ASSEMBLY
	353724X1	4	BOLT, HEX, 1/2-13 UNC X 1-1/2
19	71367324	1	BEARING, OUTER
20	104483W1	1	* SEAL
21	104473W91	1	CLUTCH HOUSING ASSEMBLY
			(INCLUDES 2-ITEM 30 & 1-ITEM 31)
22	104468W1	1	DRIVE GEAR, SPLINED
23	103732W1	2	WASHER, THRUST
24	71354855	1	BEARING, THRUST
25	71354861	1	SEAL, DIRT AND WATER
26	71354865	1	RING, RETAINING
27	71354863	1	SHAFT, DRIVE
28	103736W1	1	WASHER, THRUST
29	103737W1	2	CONE, BEARING
30	105733W1	2	CUP, BEARING
31	103738W1	1	RING, RETAINING
32	355547X1	1	PLUG, PIPE
-	700709503	AR	KIT, SEAL (INCL * ITEMS 3,4,16,17,20)

MC00006
PR: 166

https://truckmanualshub.com/

REVERSER MOTOR
CLUTCH HOUSING & SHAFT ASSEMBLY
(EFF. S/N HP36101)

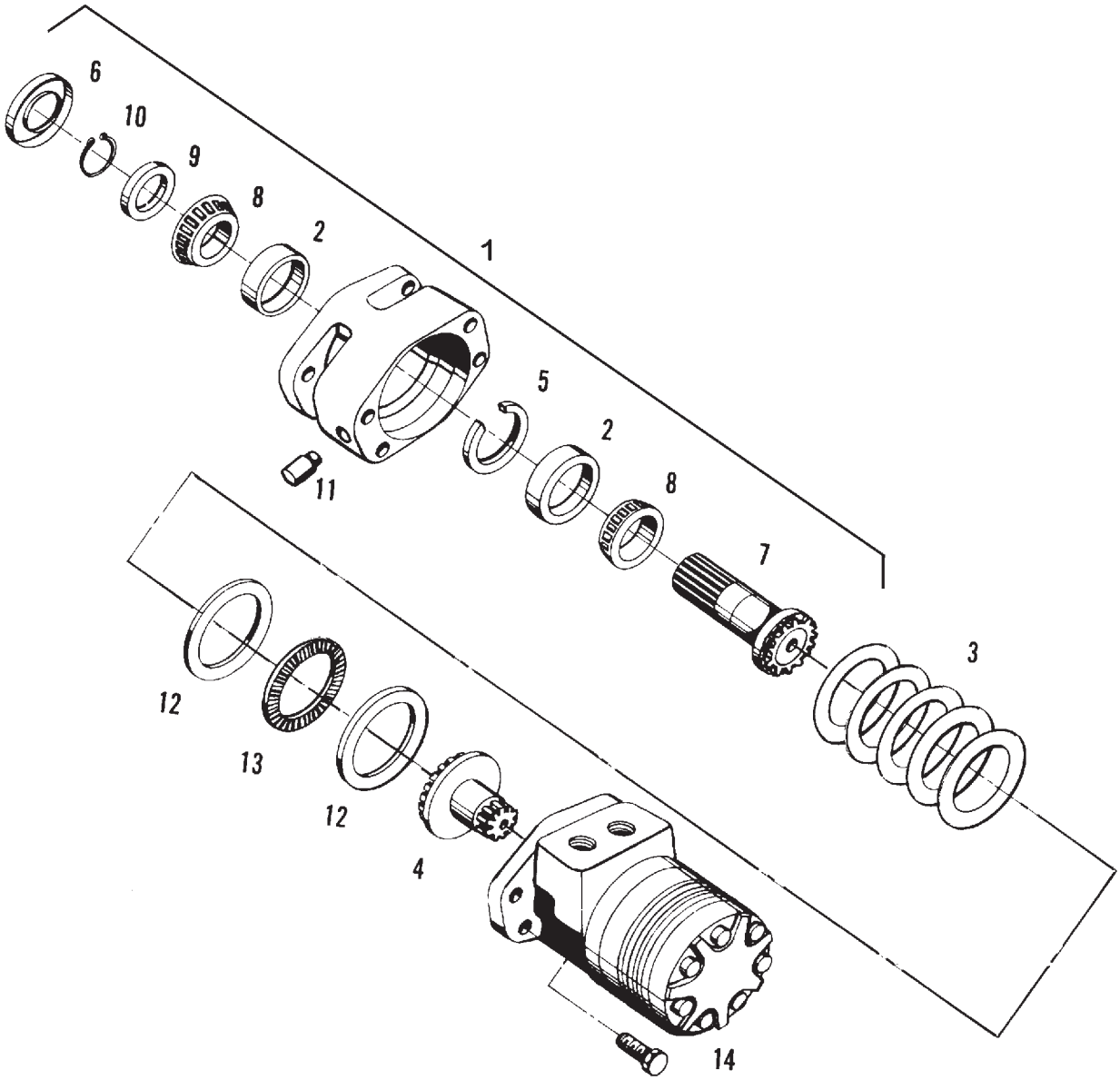

GC00123

https://truckmanualshub.com/

REVERSER MOTOR
CLUTCH HOUSING & SHAFT ASSEMBLY
(EFF. S/N HP36101)

ITEM	NUMBER	QTY	DESCRIPTION
-	71362941	AR	MOTOR ASY, FEEDER REVERSER(INCL. CLUTCH)
	70923154	4	CAPSCREW, 1/2-13 X 1-1/2
1	71367529	1	HOUSING ASY. (INCL. ITEMS 2, 5-10)
2	70327997	2	CUP, BEARING
3	71354859	5	DISC SPRING
4	104468W1	1	DRIVE, SPLINE
5	71355001	1	RING, SNAP
6	71354861	1	SEAL, DIRT/WATER
7	71354863	1	SHAFT, DRIVE
8	70327382	2	CONE, BEARING
9	71354864	1	WASHER, THRUST
10	71354865	1	RING, SNAP
11	70901651	1	PLUG, PIPE, 1/8 NPT
12	71354856	2	WASHER, THRUST
13	71354855	1	BEARING, THRUST
14	----------	--	MOTOR TORQUE (SEE FEED REVERSER - TORQUE MOTOR FOR COMPONENTS)

GC00123
PR: t05b08m42d0015

https://truckmanualshub.com/

REVERSER MOTOR

TORQUE MOTOR ASY.
(EFF. S/N HP36101)

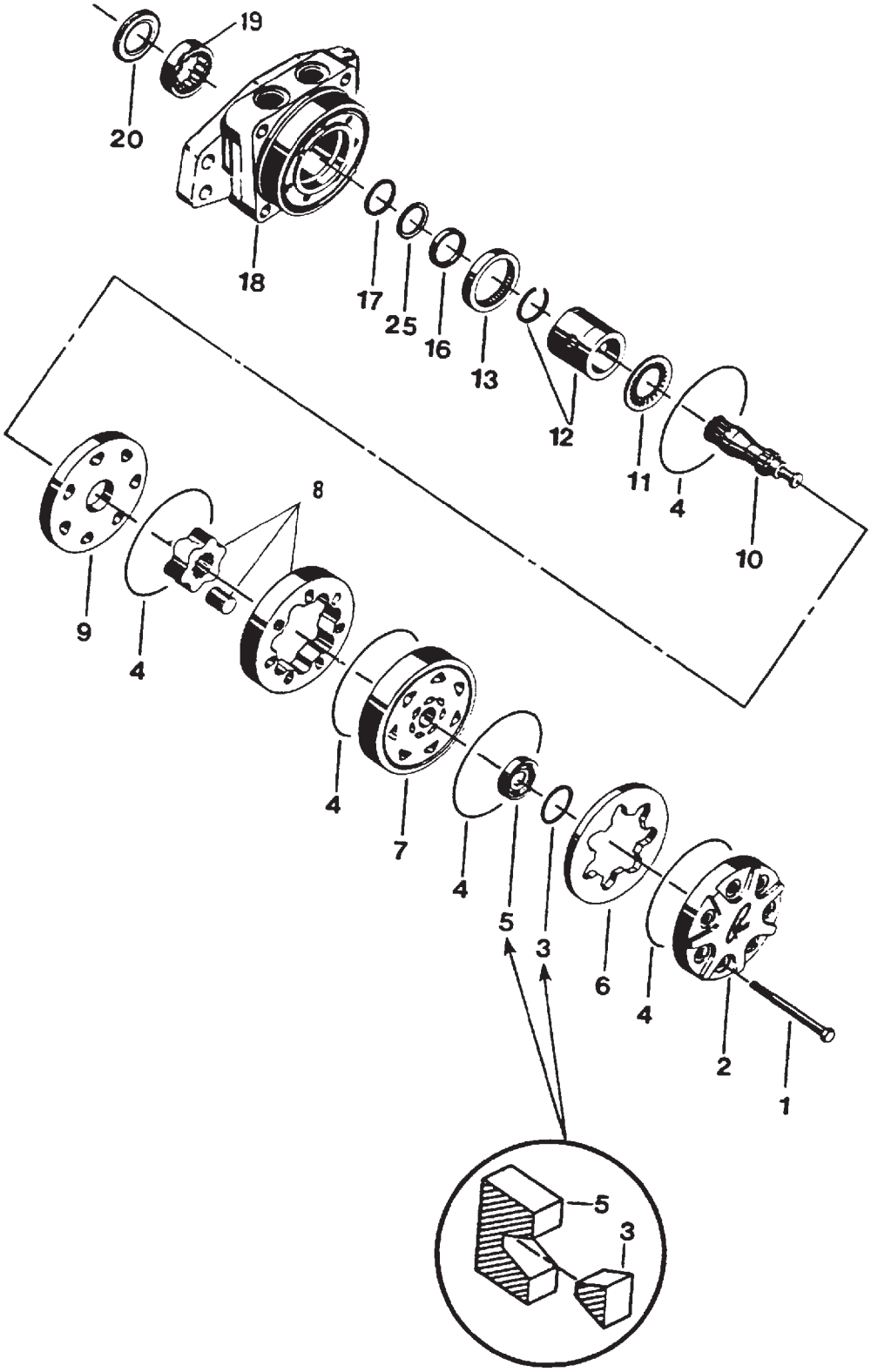

GC00124

https://truckmanualshub.com/

REVERSER MOTOR
TORQUE MOTOR ASY.
(EFF. S/N HP36101)

ITEM	NUMBER	QTY	DESCRIPTION
-	71362941	AR	MOTOR ASY, FEEDER REVERSER(INCL. CLUTCH)
1	71367308	7	BOLT, SPECIAL
2	71367309	1	COVER, END
3	----------	1	RING, BONDEN (ORDER SEAL KIT #71367307)
4	----------	5	SEAL RING (ORDER SEAL KIT)
5	71367312	1	COMMUTATOR ASY. (INCL. ITEM 6)
6	----------	1	RING, COMMUTATOR (ORDER COMMUTATOR ASY.)
7	104479W1	1	MANIFOLD
8	71367314	1	ROTOR ASY.
9	104476W1	1	PLATE, WEAR
10	71367316	1	LINK, DRIVE
11	71367317	1	BEARING, THRUST
12	71367528	1	COUPLING ASY. (INCL. RETAINING RING)
13	71367320	1	BEARING
16	----------	1	SEAL, SHAFT (ORDER SEAL KIT)
17	----------	1	RING, BACK-UP (ORDER SEAL KIT)
18	71367323	1	HOUSING ASY.
19	71367324	1	BEARING
20	----------	1	SEAL (ORDER SEAL KIT)
25	71367526	1	WASHER
-	700709503	1	KIT, SEAL (INCL ITEMS 3, 4, 16, 17 & 20)

GC00124
PR: t05b08m42d0016

https://truckmanualshub.com/

HOUSING

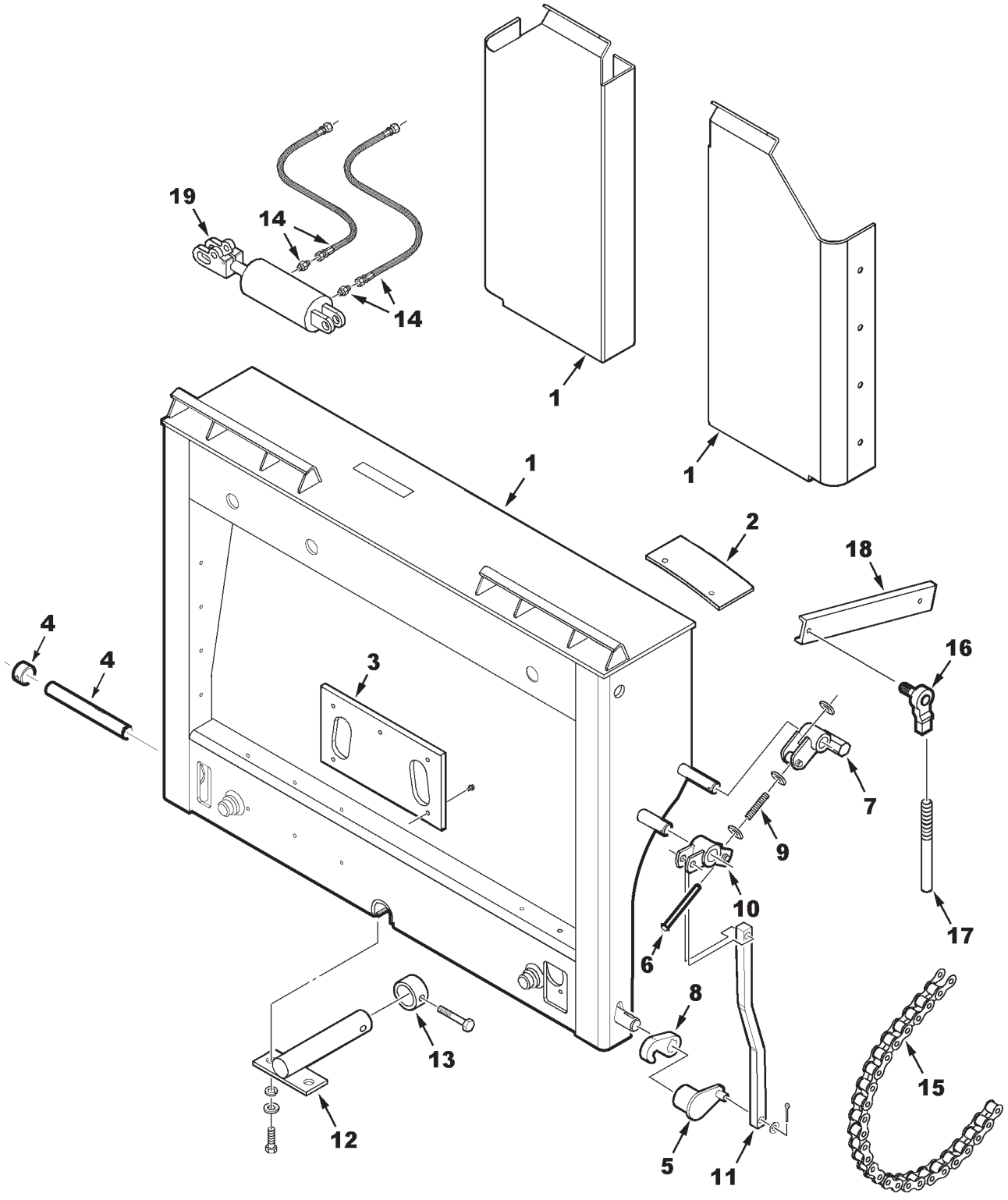

MC00345

https://truckmanualshub.com/

ITEM	NUMBER	QTY	DESCRIPTION
1	71401307B	1	FRAME WLDMT, HDR
	71394222	1	PANEL, FILLER (RH)
	71394223	1	PANEL, FILLER (LH)
	372729X1	4	SCR,HX WSHR HD,TAPPING,5/16-18 X 3/4
2	71374672	2	TRACK, ROLLER
	70927477	4	CAPSCREW 5/16 X 1 THD FORMING
	70917356	4	LOCKWASHER 5/16
3	71374816	2	BEARING, LOWER PLASTIC
	71335690	12	SCREW, TORX,TRUSS HD, 5/16-18 X 7/8
	79021665	AR	LOCTITE #271
	79021676	AR	LOCTITE PRIMER
4	71374796	1	SHAFT, LATCH PIVOT
	375028X1	1	COLLAR, LOCK W/SETSCREW
5	71375564	1	CRANK ASSEMBLY, HOOK
	70905126	1	KEY, WOODRUFF #808, 1/4 X 1" DIA
	70921263	1	SETSCREW, SKT HD, 5/16-18 X 3/8
6	71314842	1	SHAFT ASSEMBLY, SPRING
	70918111	1	PIN, SPRING 1/8 X 1
	70918266	3	WASHER, 3/8 NARR(A/R TO ADJUST SPRG)
7	71375556	1	CRANK ASSEMBLY, LATCH
	62232	1	COTTER PIN, 3/16 X 1-1/4
	70919391	1	WASHER, .906 X 1.5 X #12GA.
8	71317841	2	HOOK
	70905126	2	KEY, WOODRUFF #808, 1/4 X 1" DIA
	70903835	2	SETSCREW, SKT HD, 1/4-20 X 3/8
9	71314833	1	SPRING
10	71375559	1	PIVOT ASSEMBLY
	62232	1	COTTER PIN, 3/16 X 1-1/4
	70918452	1	COTTER PIN, 1/8 X 1"
	705681	1	WASHER, 1" NARROW
	70929593	1	PIN, CLEVIS, 1/2 X 1.36 LG
11	71398477	1	ROD, LATCH
	70918452	1	COTTER PIN, 1/8 X 1"
	Y705624	1	WASHER SAE 1/2
12	71374798	1	PIN WLMT, PIVOT
	70919387	4	WASHER 41/64 X 1-1/4 X .065
	70922664	2	CAPSCREW 5/8 X 2
	70917373	2	LOCKWASHER 5/8
	13811X	1	LUBE FTG, STR, 1/4-28 TAPER THD
	79021665	AR	LOCTITE, #271
	79021648	AR	PRIMER N
13	71374674	1	COLLAR, PIN
	70923240	1	CAPSCREW 1/2 X 2-3/4
	Y704288	1	NUT, HEX CENTER LOCK, 1/2
14	71374932	2	HOSE ASSEMBLY 1/4
	70934923	2	STR CONN, 3/4-16 ORB X 7/16-20 JIC
	70921349	2	O-RING, .087 X .644 ID
	70932619	2	CLAMP, HOSE DBL. 1/2 X .406 HOLE
	3619622M1	8	TIE, PLASTIC
15	71149896	9	LINK, OFFSET, A557 (PRIOR S/N HP36101)

CONTINUED

https://truckmanualshub.com/

HOUSING

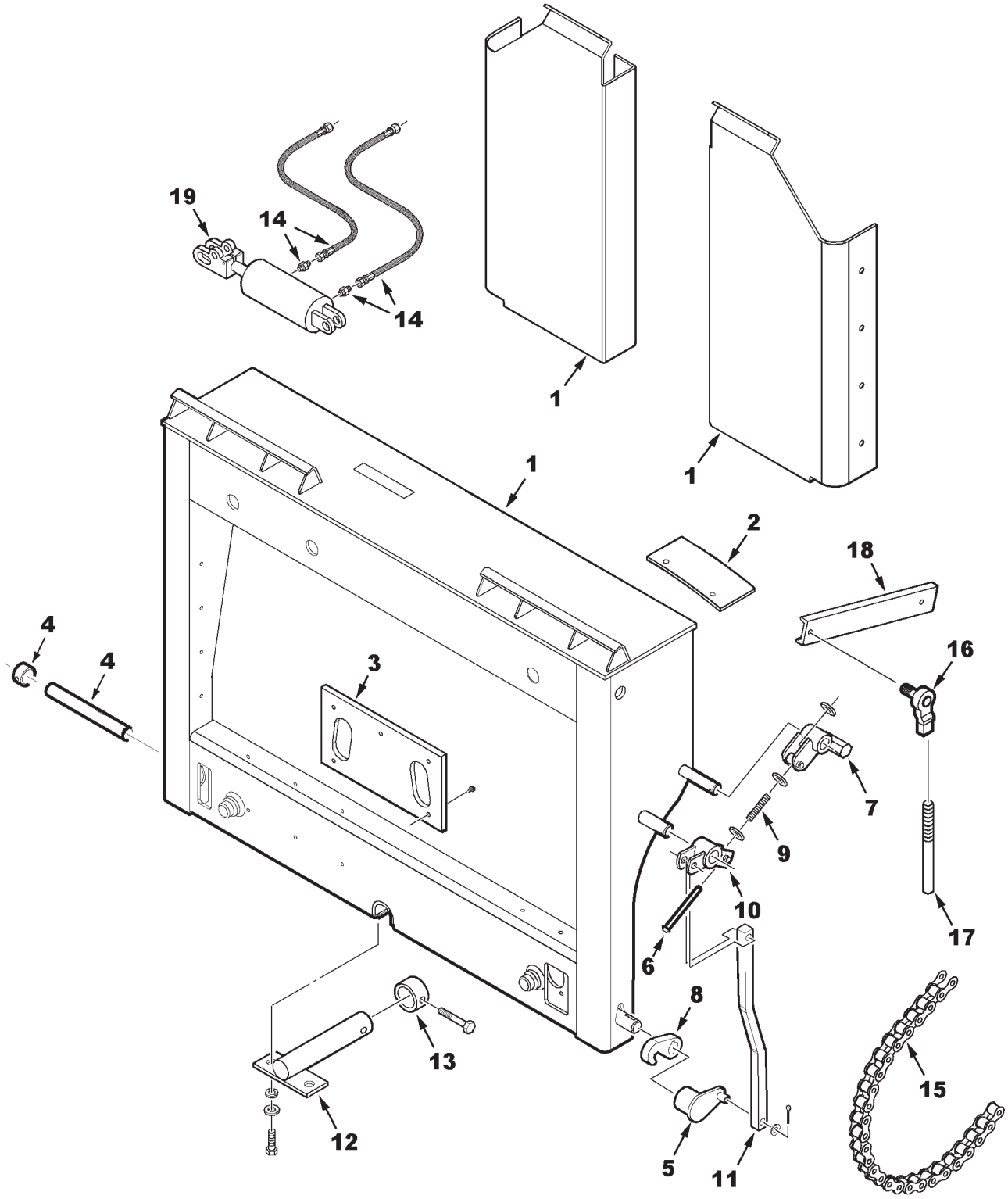

MC00345

https://truckmanualshub.com/

ITEM	NUMBER	QTY	DESCRIPTION
16	71314999	2	JOINT, BALL 1/4-28
	70914192	2	NUT, 1/4-28
	70916964	2	LOCKWASHER 1/4
17	71375122	1	ROD, CONNECTING
	70914192	2	NUT, 1/4-28
18	71389344	1	ARM, FEEDER TILT SWITCH
	70927401	1	CAPSCREW, 1/4-20 X 1"
	704007	1	NUT, 1/4-20 REG
	705012	1	LOCKWASHER, 1/4 REG
19	71398131	1	CYL. ASY, LAT TILT (SEE BREAKDOWN)
-	71399039	AR	KIT, LATERAL TILT, FIELD (ORDER THRU DEALER CENTRAL)(PRIOR S/N HP36101)
-	71406010	AR	KIT, LATERAL TILT, FIELD (ORDER THRU DEALER CENTRAL)(EFF. S/N HP36101)

MC00345
PR: 168

https://truckmanualshub.com/

ANCHORS & SENSOR

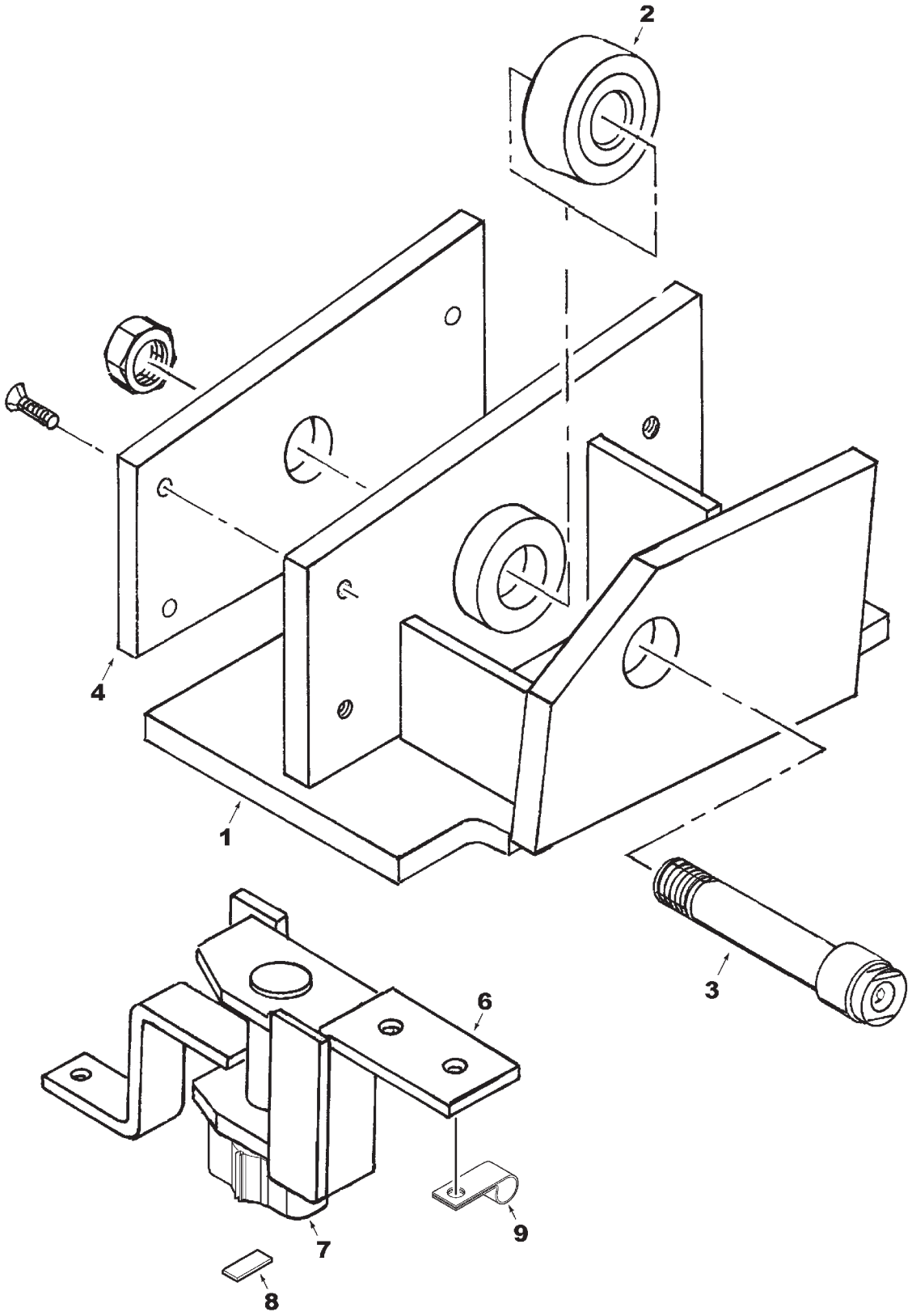

MC00354

https://truckmanualshub.com/

ITEM	NUMBER	QTY	DESCRIPTION
1	71374666	1	ANCHOR WLDMT RH
	71374663	1	ANCHOR WLDMT LH
	70919089	10	CAPSCREW, 1/2-13 X 1-3/4 GR5
	Y705046	10	LOCKWASHER, 1/2
2	71374803	1	BEARING, ROLLER
3	71374667	1	SHAFT, ROLLER
	353436X1	1	JAM NUT, 3/4-16 UNF
	13811X	1	LUBE FTG, STR, 1/4-28 TAPER THD
4	71374670	1	BEARING, PLASTIC RH
	71374669	1	BEARING, PLASTIC LH
	70935275	6	SCREW, FLAT HD HEX SKT, 5/16-18 X 1
	79021665	AR	LOCTITE #271
	79021676	AR	LOCTITE PRIMER
6	71414225	1	SENSOR ACTUATOR WLDMT
	70924856	2	SCREW, HEX HD, TAPPG, 5/16-18 X 1/2
7	71376825	1	POSITION SENSOR, 5K POT.
	70918151	2	SCREW, TRUSS HD, #10-32 X 1-1/4
8	71382607	1	TAB, DRIVE
9	70927134	1	J-CLIP, 5/8 DIA X .406 HOLE

MC00354
PR: 170

https://truckmanualshub.com/

HYDRAULIC CYLINDER
(PRIOR S/N HN36101)

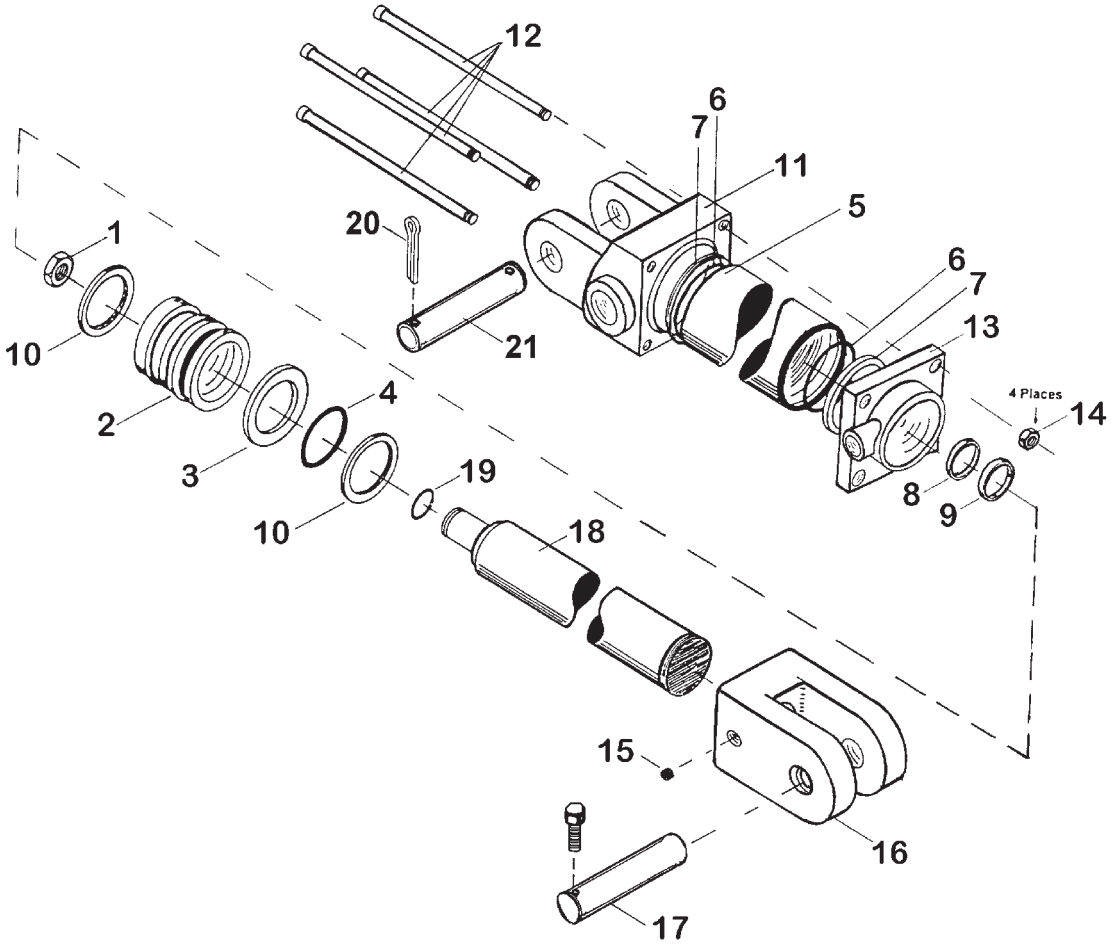

71374671

https://truckmanualshub.com/

HYDRAULIC CYLINDER
(PRIOR S/N HN36101)

ITEM	NUMBER	QTY	DESCRIPTION
-	71374671	1	CYL. ASY, HYDR (INCL. ITEMS 1-16,18,19)
1	70921343	1	NUT, LOCK
2	71374776	1	PISTON
3	-----	1	*SEAL, PISTON
4	-----	1	*O-RING
5	71376907	1	CASE
6	-----	2	*O-RING
7	-----	2	*BACKUP
8	-----	1	*U-CUP
9	-----	1	*WIPER
10	71374778	2	RING, WEAR
11	71374779	1	BASE, CYLINDER
12	71376908	4	ROD, TIE
13	71374781	1	HEAD, CYLINDER
14	70918213	4	NUT, 7/16-14
15	70914383	1	SETSCREW, 3/8-16 X 1/2
16	71374782	1	CLEVIS, CYLINDER
17	71374808	2	PIN, CYLINDER CLEVIS
	70922127	1	CAPSCREW, 5/16-18 X 1-3/4 GR5
	70923362	1	NUT, CENTER LOCK, 5/16-18
18	71376909	1	SHAFT, CYLINDER
19	-----	1	*O-RING
20	70920117	2	PIN, COTTER, 5/32 X 1-1/2
21	71374807	1	PIN, CYLINDER BASE
-	71373962	AR	SEAL KIT (INCLUDES * ITEMS)

71374671
PR: 172

https://truckmanualshub.com/

HYDRAULIC CYLINDER
(EFF. S/N HN36101)

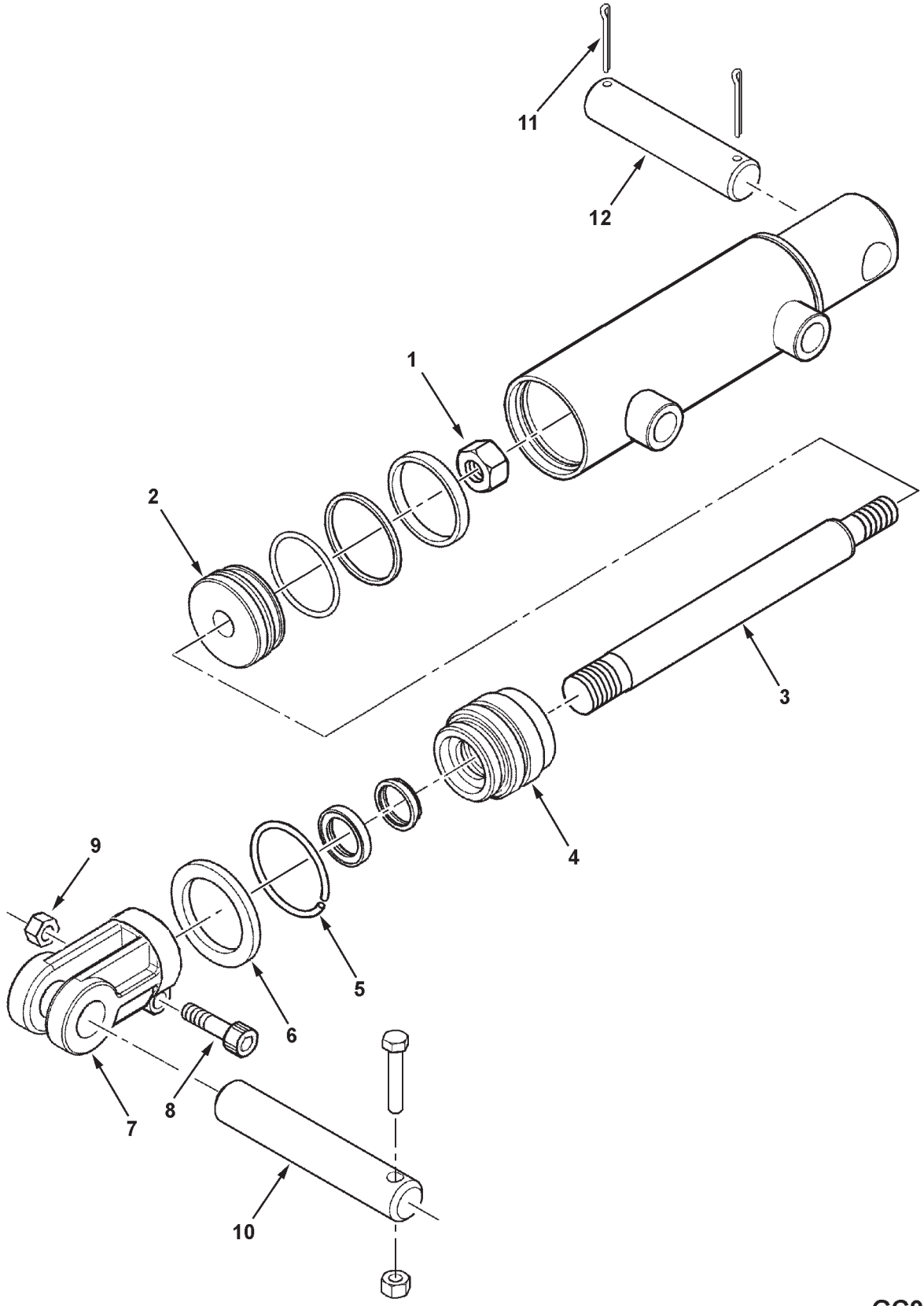

GC00511

https://truckmanualshub.com/

HYDRAULIC CYLINDER
(EFF. S/N HN36101)

ITEM	NUMBER	QTY	DESCRIPTION
-	71398131	1	CYL. ASY, LAT TILT
			(INCL. ITEMS 1 THRU 9)
1	79001879	1	NUT, PISTON
2	1R61628	1	PISTON
3	700729237	1	ROD
4	700729235	1	HEAD, ROD BEARING
5	1064661M1	1	RETAINING RING
6	1064659M1	1	NUT, HEAD RETAINER
7	700729234	1	CLEVIS ASY, ROD END (INCL SCR & NUT)
8	70917467	1	CAPSCREW, SOCK HD, 3/8-16 X 1-3/4
9	70916950	1	NUT, 3/8-16 REG
-	700729238	AR	SEAL KIT
10	71374808	1	PIN, CYLINDER CLEVIS
	70922127	1	CAPSCREW, 5/16-18 X 1-3/4 GR5
	70923362	1	NUT, CENTER LOCK, 5/16-18
11	70920117	2	PIN, COTTER, 5/32 X 1-1/2
12	71374807	1	PIN, CYLINDER BASE

GC00511
PR: 71398131-02-11

https://truckmanualshub.com/

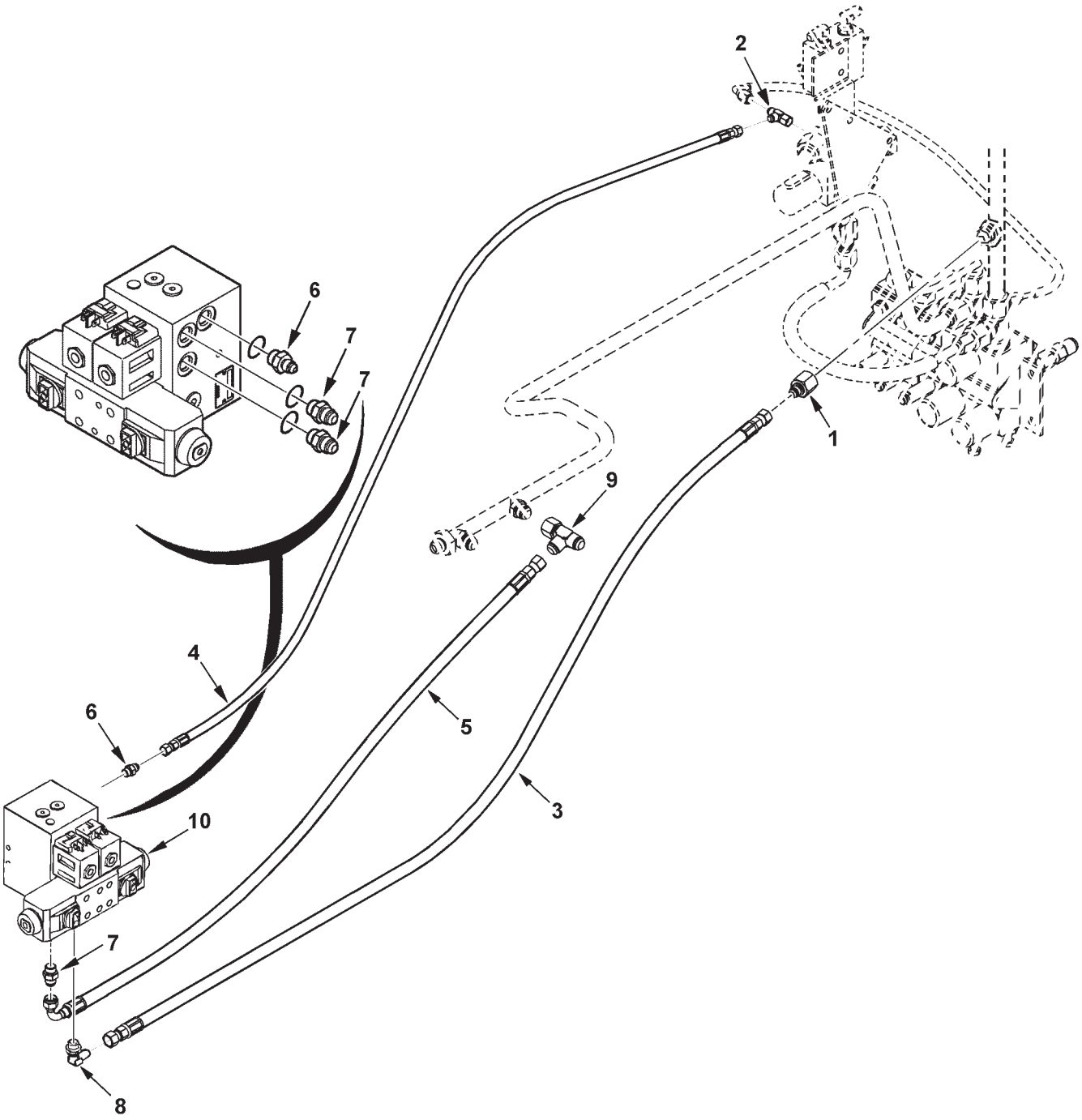

MC00355

https://truckmanualshub.com/

ITEM	NUMBER	QTY	DESCRIPTION
1	70926768	1	REDUCER FTG, 9/16-18 JIC X 3/4-16 JIC
2	700701355	1	TEE, SWIV RUN, 7/16-20 JIC
3	700716462	1	HOSE ASY, 3/8 ID
4	71394169	1	HOSE ASY, 1/4 ID
	70937133	1	TIE, NYLON, .30 X 14.5"
5	71394170	1	HOSE ASY, 3/8 ID
6	70926292	1	CONN, STR, 7/16-20 JIC X 9/16-18 ORB
	70921885	1	O-RING, .078 X .468 ID
7	846634	3	CONN, STR, 9/16-18 JIC X 9/16-18 ORB
	70921885	3	O-RING, .078 X .468 ID
8	70922523	1	ELBOW, 90 DEG, 9/16-18 ADJ ORB X JIC
	70921885	1	O-RING, .078 X .468 ID
9	70921298	1	TEE, SWIV RUN, 3/4-16 JIC
10	71409176	1	VALVE ASY, LATERAL TILT (SEE BREAKDOWN)
	70916965	2	LOCKWASHER, 3/8 REG
	70921210	2	CAPSCREW, 3/8-16 X 1" GR5

MC00355
PR: 174

https://truckmanualshub.com/

VALVE & CONTROL

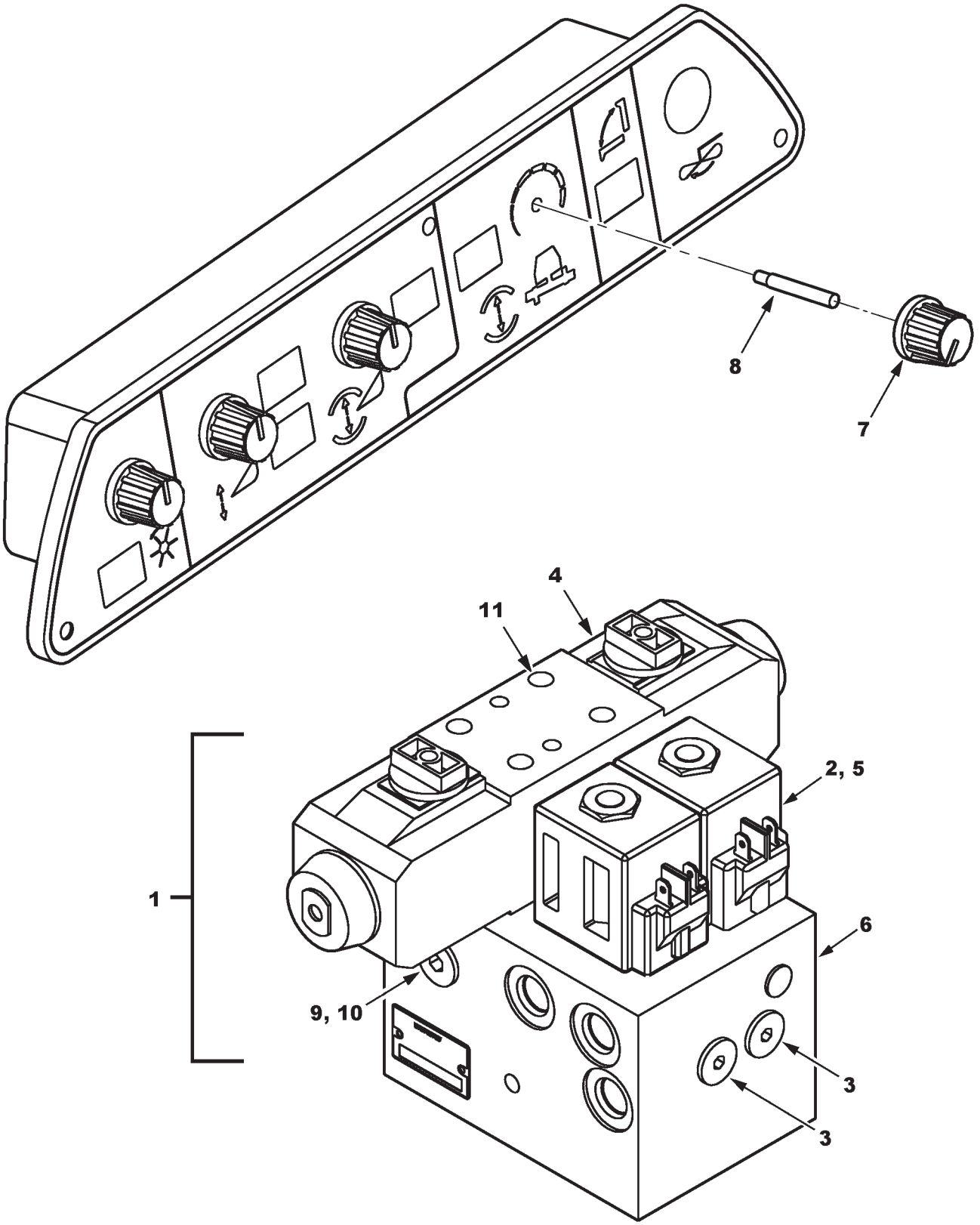

MC00356

https://truckmanualshub.com/

ITEM	NUMBER	QTY	DESCRIPTION
1	71391659	1	VALVE ASY, LATERAL TILT (INCL ITEMS 2-6, 9,10,11)(SERVICED W/ 71409176)
	71409176	1	VALVE ASY, LATERAL TILT (INCL ITEMS 2-6, 9,10,11)(EFF. HP36--- MID-RUN)
2	71398983	2	SOLENOID VALVE ASY
	71398984	2	CARTRIDGE
	71398985	2	COIL
	700706151	2	NUT, COIL
	700715662	AR	KIT, SEAL
3	71398993	2	KIT, SENSE CHECK
4	71398994	1	VALVE ASY, DIRECTIONAL CONTROL
	71398995	2	COIL
	700718869	2	NUT, COIL
	71386129	AR	KIT, SEAL
5	71398988	2	PISTON, PILOT
	71398989	AR	KIT, SEAL
6	-----	1	MANIFOLD (NOT SERVICED)
7	108664W1	1	KNOB, POINTER
8	71394716	1	SHAFT, CONTROL
9	71398134	1	PLUG, HEX SOCKET, SAE ORB
10	71398136	1	ORIFICE PLUG, .053 DIA (USED W/ VALVE ASY, 71391659)
	700713516	1	ORIFICE PLUG, .040 DIA (USED W/ VALVE ASY, 71409176)
11	700714189	1	KIT, BOLT

MC00356
PR: 176

https://truckmanualshub.com/

FRONT BEATER

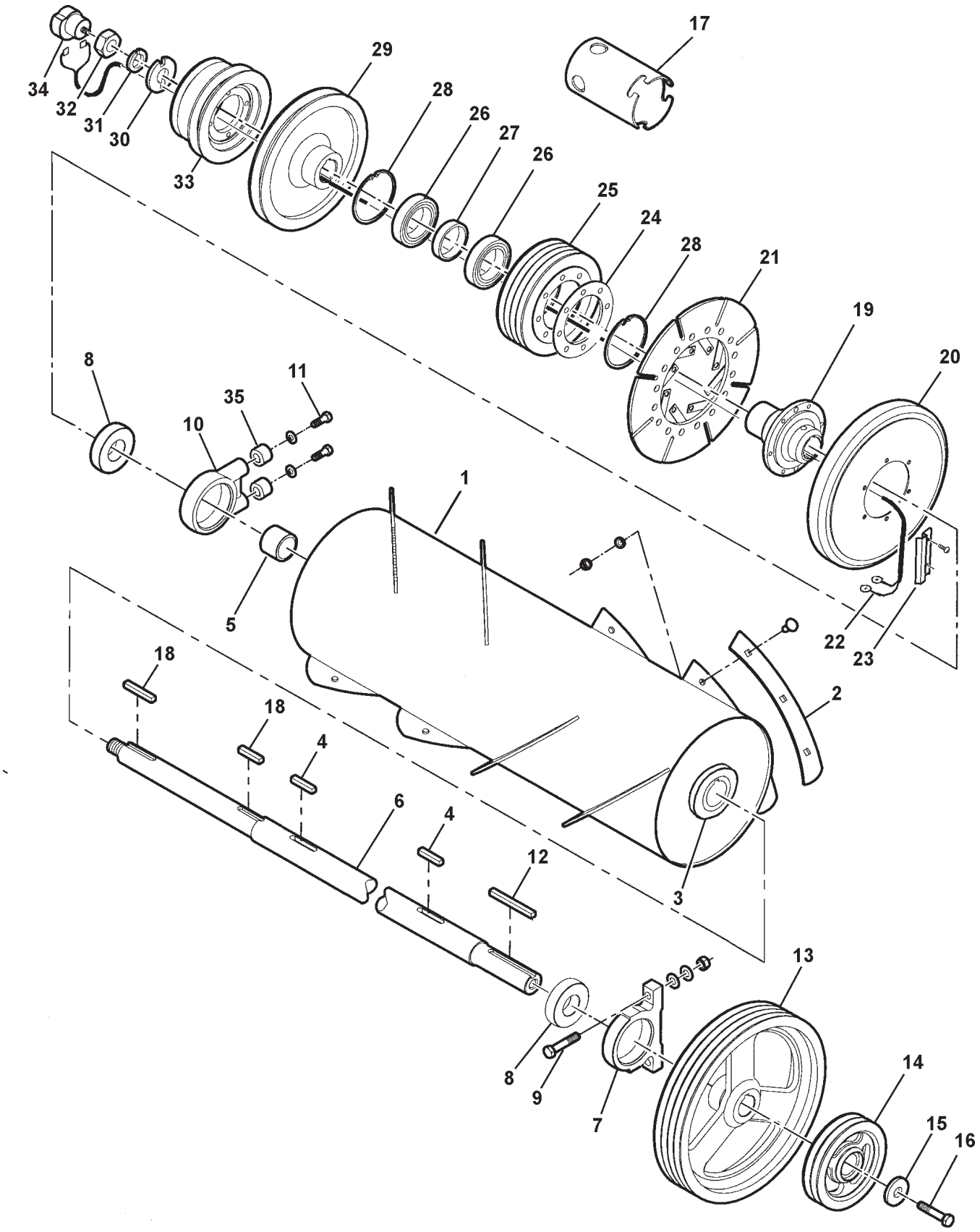

https://truckmanualshub.com/

ITEM	NUMBER	QTY	DESCRIPTION
1	71401416	1	BEATER DRUM ASY (BALANCED)(INCL. ITEM 2)
2	71393101	12	FLIGHT, WEAR
	68619	36	BOLT, RD HD SQ NK, 1/2-13 X 1-1/4
	Y705046	36	LOCKWASHER, 1/2 REG
	704031	36	NUT, 1/2-13 REG
3	101078M1	2	SEAL, BEATER
4	Y61879	2	KEY, SQ, 1/2 X 2-1/2
5	112685W1	1	SPACER, SLEEVE
6	71390575	1	SHAFT, BEATER
7	1706380W1	1	HOUSING, BEARING
8	71154722	2	BEARING
9	70929018	2	CAPSCREW, 5/8-11 X 3-1/4 GR8
	70937005	4	WASHER, HARD, .656 X 1.31 X 9GA
	W915795-4	2	LOCKNUT, HX TOP, 5/8-11
10	2445360W1	1	HOUSING, BEARING (PRIOR S/N HN36101)
	71401419	1	HOUSING, BEARING (EFF. S/N HN36101)
11	8701708	2	CAPSCREW, 1/2-13 X 1-1/4 GR8 (PRIOR S/N HN36101)
	353773X1	2	WASHER, HVY, HARD, 1/2
	70922664	2	CAPSCREW, 5/8-11 X 2 GR5 (EFF. S/N HN36101)
	70917373	2	LOCKWASHER, 5/8
12	2620180W1	1	KEY, HARD, SQ, 1/2 X 5
13	71388202	1	SHEAVE, BEATER DRIVE
14	2620130W1	1	SHEAVE, PITMAN DRIVE
15	104751W1	1	WASHER, .781 X 2.50 X .375
16	70921169	1	CAPSCREW, 3/4-16 X 1-1/2 GR8
17	104500W1	1	TUBE, REVERSER TOOL
18	2588510W1	2	KEY, CLUTCH HUB, 1/2 SQ X 3.62
19	71391220	1	HUB, MAGNETIC CLUTCH
20	71335195	1	MAGNET ASY, CLUTCH
	70916965	6	LOCKWASHER, 3/8 REG
	70921210	6	CAPSCREW, 3/8-16 X 1" GR5
21	71365064	1	ARMATURE ASY
	Y705046	8	LOCKWASHER, 1/2 REG
	70923114	8	CAPSCREW, 1/2-13 X 1" GR5
22	71391219	1	WIRE ASY, CLUTCH
23	71393220	1	DUCT, WIRE
	703082	1	SCREW, HEX HD TAPPING, #8-32 X 3/8
24	71397222	AR	SHIM, ARMATURE, .060 TH
	71400661	AR	SHIM, ARMATURE, .035 TH
25	71391221	1	SHEAVE, FDR DR. 4-GRV(PRIOR S/N HP36101)
	71398357	1	SHEAVE, FDR DR. 2-GRV (EFF. S/N HP36101)
26	71195913	2	BEARING, BALL
27	71391225	1	SPACER, BEARING
28	70933375	2	RING, RETAINING, INT
29	71394353	1	SHEAVE, DR, VARI SPEED FAN
30	71391224	1	WASHER, SPL, 3/8 THK
31	70912299	1	WASHER, 1-1/4 NARROW
32	70923230	1	NUT, JAM, 1-1/4-12 GR2
33	71394354	1	SHEAVE, DRIVE, RETURN ELEV
	70916965	4	LOCKWASHER, 3/8 REG
	70921210	4	CAPSCREW, 3/8-16 X 1" GR5
34	71314321	1	BRUSHHOLDER ASY
	70925094	1	TIE, NYLON, .172 X 7.3
35	368615X1	2	SPACER, .66 LG (EFF. S/N HN36101)

https://truckmanualshub.com/

MAIN COUNTERSHAFT

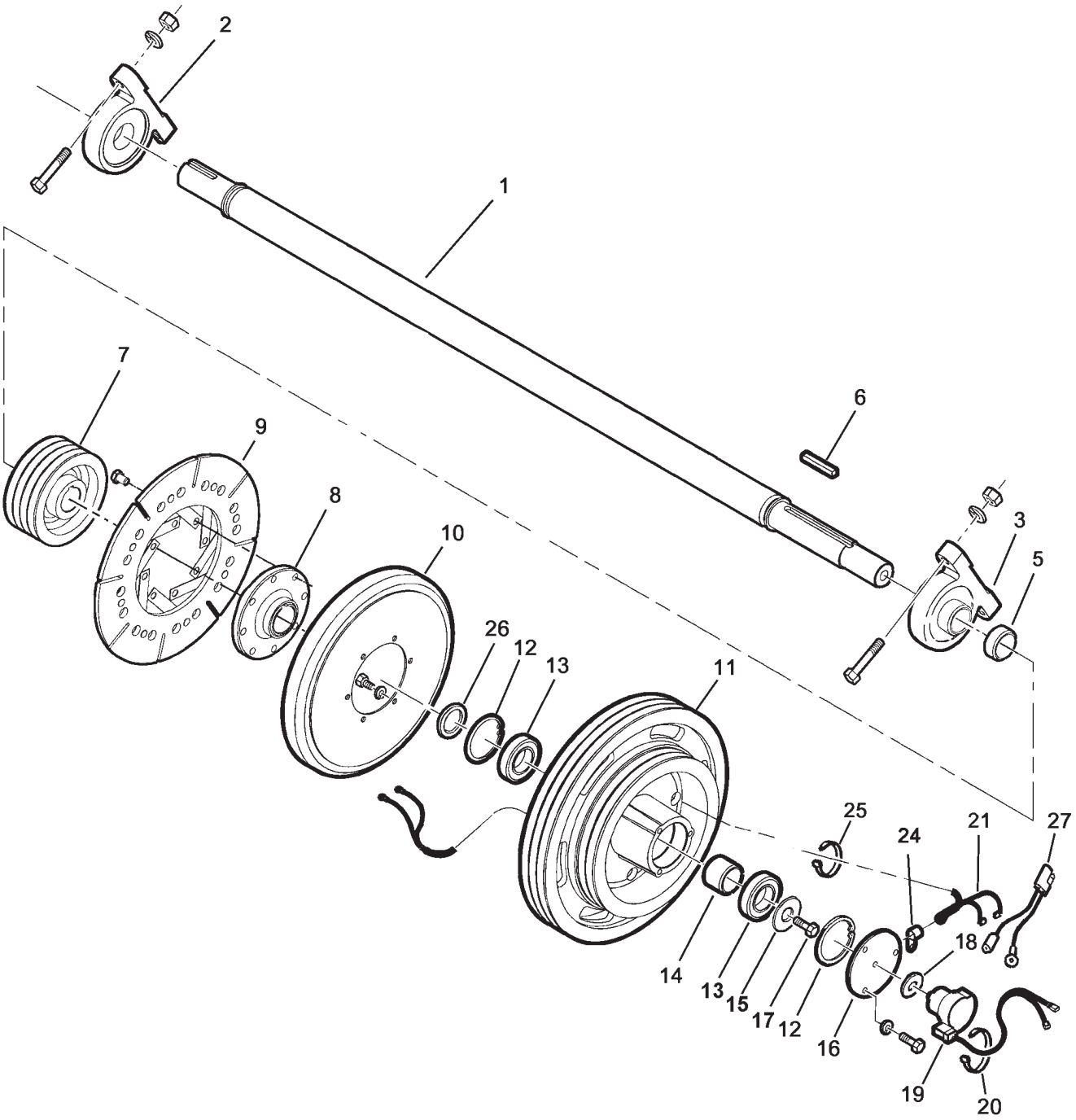

MC00287

https://truckmanualshub.com/

ITEM	NUMBER	QTY	DESCRIPTION
1	71387517	1	COUNTERSHAFT, MAIN
2	1706393W91	1	BEARING & HOUSING ASY
	1706380W1	1	HOUSING, BEARING
	71154722	1	BEARING
	70921360	2	CAPSCREW, 5/8-11 X 2-1/4 GR5
	70918268	2	WASHER, 5/8 NARROW
	700703922	2	NUT, HEX FLG TOP LOCK, 5/8-11 GR G
3	71388206	1	BEARING & HOUSING ASY
	1706380W1	1	HOUSING, BEARING
	71365065	1	BEARING
	70921360	2	CAPSCREW, 5/8-11 X 2-1/4 GR5
	70918268	2	WASHER, 5/8 NARROW
	700703922	2	NUT, HEX FLG TOP LOCK, 5/8-11 GR G
5	-----	-	SPACER, SHEAVE (9690 ONLY)
6	2620180W1	1	KEY, HARD. 1/2 SQ. X 5.0
7	71387523	1	SHEAVE, BEATER DRIVE
8	71390223	1	HUB, CLUTCH ARMATURE
9	71365064	1	ARMATURE ASY.
	70926115	8	CAPSCREW, 1/2-13 X 3/4 GR5
	Y705046	8	LOCKWASHER, 1/2, REG
10	71335195	1	MAGNET ASY.
	70920415	6	CAPSCREW, 3/8-16 X 1-1/4 GR5
	70916965	6	LOCKWASHER, 3/8, REG
11	71389611	1	SHEAVE, DRIVEN, COUNTERSHAFT
12	350392X1	2	RING, INTERNAL SNAP, 3-47/64 OD X 7/64
13	1138480	2	BEARING
14	2619560W1	1	SPACER, BEARING
15	104751W1	1	WASHER, 25/32 X 2-1/2 X 3/8
16	71390178	1	ADAPTOR, BRUSHHOLDER
	70921210	3	CAPSCREW, 3/8-16 X 1" GR5
	70916965	3	LOCKWASHER, 3/8, REG
17	70921169	1	CAPSCREW, 3/4-16 X 1-1/2 GR8
18	70923858	1	WASHER, FLAT, .531 X 1.25 X 7GA
19	71314321	1	BRUSHHOLDER ASY
20	70925094	1	TIE, NYLON, 7"-8" LG
21	71318052	1	WIRE ASY.
24	70925615	1	CLAMP, TUBE, .188 X .406 HOLE
25	3619622M1	1	TIE, NYLON, 14"-15" LG
26	104715W1	AR	SHIM (AS REQUIRED)
27	71394397	1	WIRE ASY. (JUMPER)

https://truckmanualshub.com/

MAIN COUNTERSHAFT
DRIVE AND IDLER

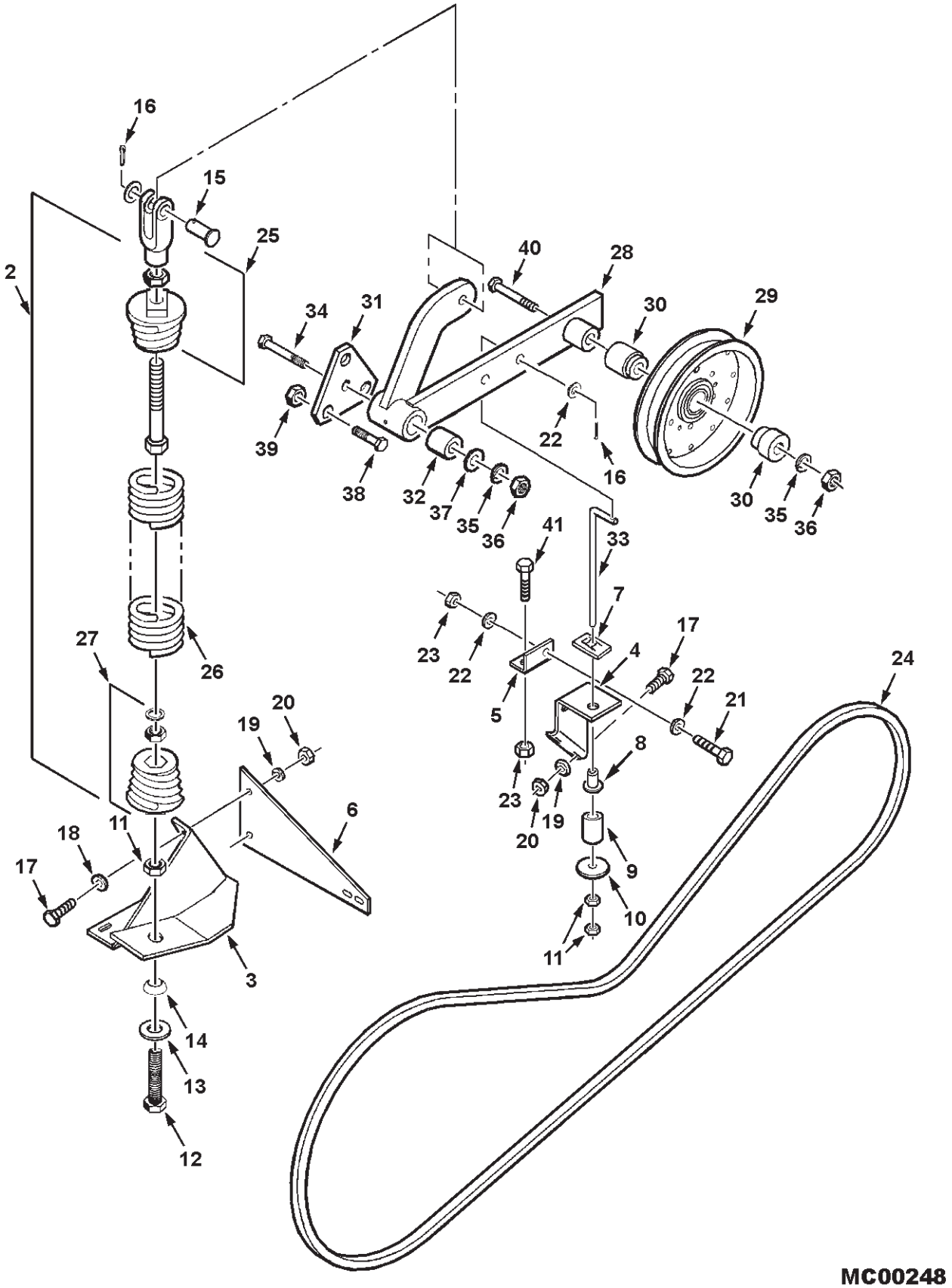

MC00248

https://truckmanualshub.com/

ITEM	NUMBER	QTY	DESCRIPTION
2	71379519	1	SPRING, ASY (INCL ITEMS 25, 26, 27)
3	71390183	1	ANCHOR WLDMT, SPRING
4	71394363	1	ANCHOR WLDMT, SNUBBER
5	71394364	1	ANGLE, SUPPORT
6	71390190	1	SUPPORT, BELT GUIDE
7	71304362	1	BUSHING, NYLON
8	70924095	1	NUT, SPEED
9	71194263	1	BUSHING, RUBBER
10	70923094	1	WASHER, 17/32 X 2 X 7GA
11	704031	3	NUT, 1/2-13 REG
12	70935299	1	CAPSCREW, 1/2-13 X 12" LG
13	70918431	1	WASHER, 1/2 WIDE
14	70301781	1	WASHER, PIVOT
15	70929593	1	PIN, CLEVIS, 1/2 X 1.36
16	70918452	1	PIN, COTTER, 1/8 X 1
17	70920415	6	CAPSCREW, 3/8-16 X 1-1/4 GR5
18	70917378	4	WASHER, 3/8 WIDE
19	70916965	6	LOCKWASHER, 3/8
20	70916950	6	NUT, 3/8-16 REG
21	70921176	1	CAPSCREW, 1/2-13 X 1-1/4 GR5
22	Y705624	3	WASHER, 1/2 NARROW
23	Y704742	2	NUT, HEX FLANGE TOP LOCK, 1/2-13
24	71390188	1	BELT, MAIN C'SHAFT DRIVE
25	71379520	1	YOKE & PLUG ASY.
	70937010	1	CAPSCREW, 1/2-13 X 5 GR5
	71349813	1	PLUG, SPRING
	70913744	1	NUT, JAM 1/2-13
	70937465	1	YOKE, 1/2-13
26	71349270	1	SPRING
27	71349811	1	PLUG & NUT ASY.
28	71391529	1	ARM ASY, IDLER, MAIN C'SHAFT
	71356060	2	BUSHING
	71197117	1	SPACER
29	71309768	1	IDLER, FLAT 8"
30	71312602	2	SPACER, IDLER
31	71346267	1	PLATE, MOUNTING
32	71356061	1	SLEEVE, HARD, IDLER PIVOT
33	71330802	1	ROD, SNUBBER
34	70925703	1	BOLT, 5/8-11 X 4 GR5
35	70917373	2	LOCKWASHER, 5/8
36	70915726	2	NUT, 5/8-11 REG
37	70918432	1	WASHER, 5/8 WIDE
38	70935290	3	CAPSCREW, 3/4-10 X 3, FULL THD. GR5
39	70913160	3	NUT, 3/4-10 REG
40	70915988	1	CAPSCREW, 5/8-11 X 4-1/4 GR5
41	701235	1	CAPSCREW, 1/2-13 X 1-1/2 GR5

https://truckmanualshub.com/

FRONT BEATER
DRIVE BELT & IDLER

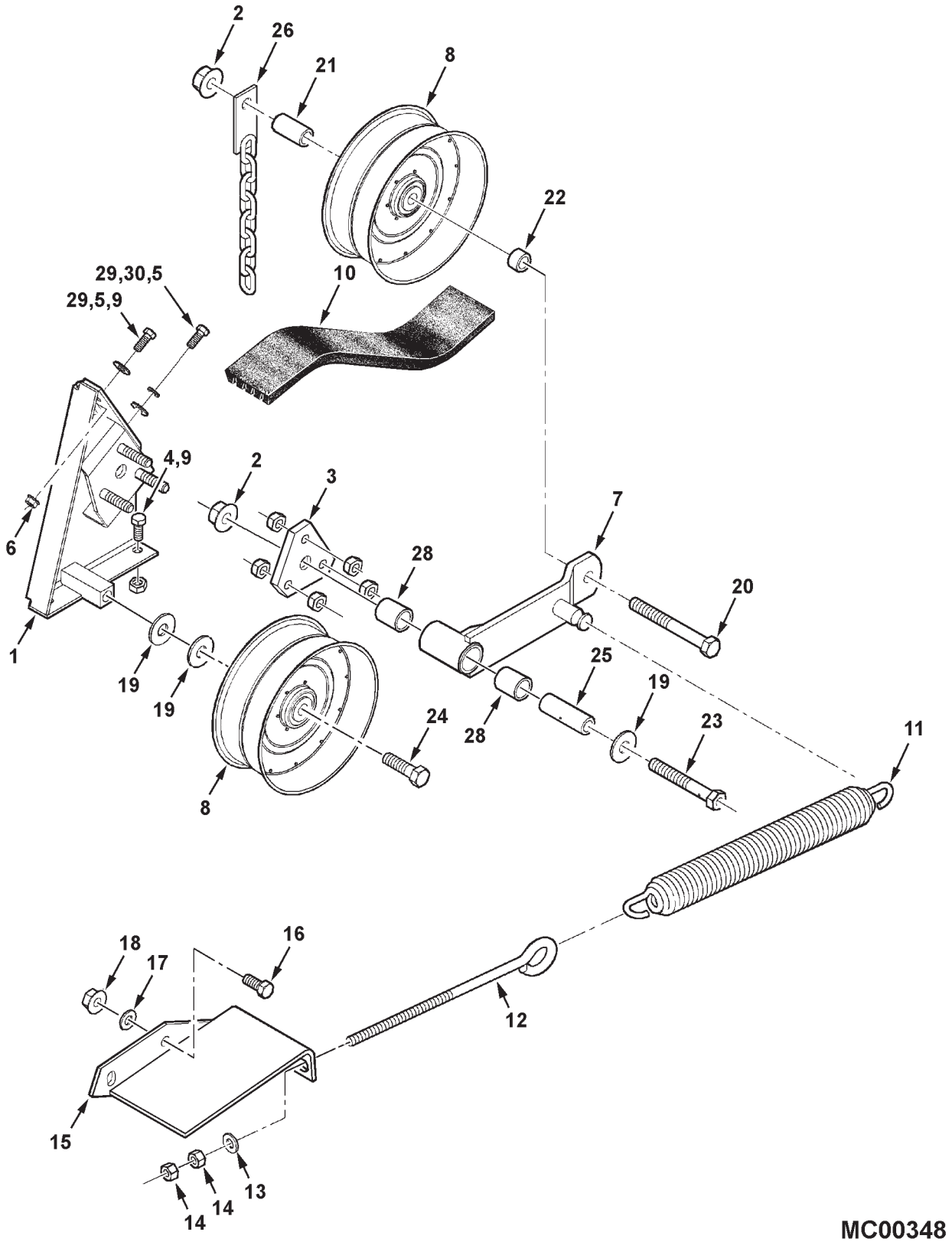

https://truckmanualshub.com/

ITEM	NUMBER	QTY	DESCRIPTION
1	71388209	1	BRACKET, IDLER
2	700703922	2	NUT, HEX FLANGE TOP LOCK, 5/8-11
3	71182840	1	MOUNTING PLATE
	704056	6	JAM NUT, 1/2-13 GR2
4	70920415	2	CAPSCREW, 3/8-16 X 1-1/4 GR5
5	70917378	3	WASHER, 3/8 WIDE
6	70916950	1	NUT, 3/8-16 REG
7	71388213	1	ARM ASSEMBLY (W/BUSHINGS)
8	71388217	2	IDLER PULLEY, FLAT, 8.0" DIA.
9	Y704734	3	NUT, HEX FLNG TOP LOCK, 3/8-16
10	71388216	1	BELT, KEVLAR (SEE BELTS LISTING)
11	2627000W1	1	SPRING, 45-1/2 COILS, 17-1/4 FREE LENGTH
12	2626120W1	1	ROD, PULL, 12.63" LG
13	70301781	1	WASHER, SPHERICAL
14	704031	2	NUT, 1/2-13 REG
15	71388207	1	BRACKET ASSEMBLY, ANCHOR
16	70921176	2	CAPSCREW, 1/2-13 X 1-1/4 GR5
17	70918431	1	WASHER, PLAIN, 1/2 WIDE
18	Y704742	2	NUT, HEX FLNG TOP LOCK, 1/2-13
19	70918432	3	WASHER, PLAIN, 5/8 WIDE
20	70925706	1	BOLT, HEX, 5/8-11 UNC X 5-1/2
21	71388212	1	SPACER, IDLER
22	71181443	1	SPACER, IDLER
23	2636170W1	1	BOLT, IDLER PIVOT, 5/8-11
24	70921360	1	CAPSCREW, 5/8-11 X 2-1/4 GR5
25	2636210W1	1	SLEEVE, PIVOT
26	105086W91	1	CHAIN ASSEMBLY, IDLER STOP
	70921969	1	CAPSCREW, 3/8-16 X 1-1/2 GR5
	70917378	1	WASHER, 3/8 WIDE
	70917642	4	WASHER, 5/16 WIDE
	Y704734	1	NUT, HEX FLANGE TOP LOCK, 3/8-16
28	1689170W1	2	BUSHING, 1.25 OD X .750 LG
29	70921210	2	CAPSCREW, 3/8-16 X 1 GR5
30	70916965	1	LOCKWASHER, 3/8

MC00348
PR: 184

https://truckmanualshub.com/

INLET HOUSING AND STONE TRAP

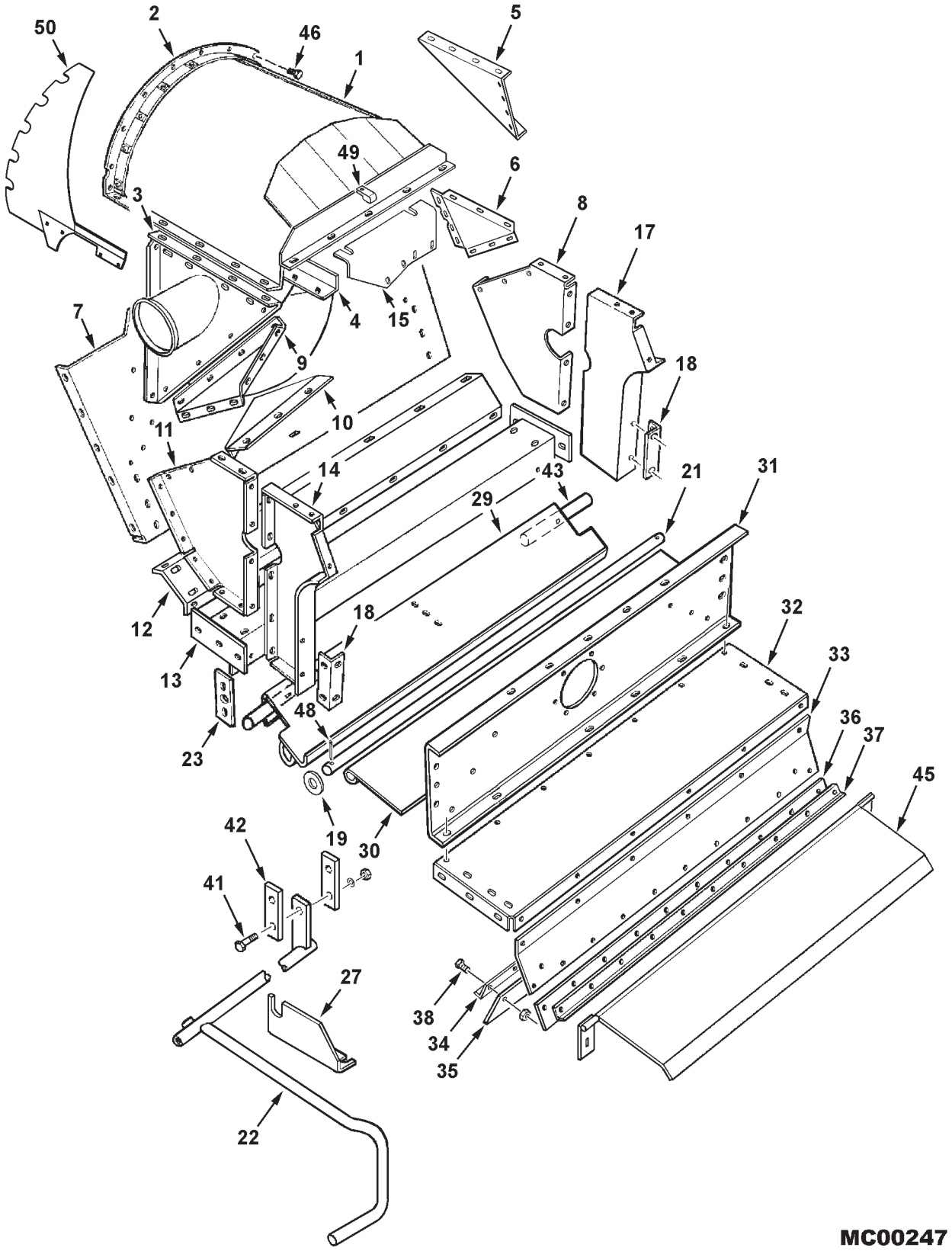

https://truckmanualshub.com/

ITEM	NUMBER	QTY	DESCRIPTION
1	71409987	1	TOP COVER WLMT, INLET HOUSING
	700720958	9	SCR,BUTTON HD,RECESS SOCK,3/8-16 X 1
	70921965	8	CAPSCREW, 3/8-16 X 3/4 GR5
	70921966	4	CAPSCREW, 3/8-16 X 7/8 GR5
	70917378	12	WASHER, 3/8, WIDE
	Y704734	12	NUT, HEX FLANGE TOP LOCK, 3/8-16
2	2612961W91	1	ANGLE WLMT, INLET HOUSING
	70920787	10	CAPSCREW, 5/16-18 X 1/2 GR5
3	71387580	1	PLATE WLMT, RETURN TUBE
4	71410576	1	WEAR PLATE, RETURN INLET
	70931348	4	BOLT, RD HD SHT SQ NK, 3/8-16 X 3/4
	Y704734	4	NUT, HEX FLANGE TOP LOCK, 3/8-16
5	71387578	1	PLATE, LEFT REAR
6	71387576	1	PLATE, LEFT FRONT
7	71409996	1	FEED PLATE WLMT
	70921210	8	CAPSCREW, 3/8-16 X 1
	Y704734	8	NUT, HEX FLANGE TOP LOCK, 3/8-16
	70923325	11	CAPSCREW, 5/16-18 X 7/8 GR5
	Y704726	11	NUT, HEX FLANGE TOP LOCK, 5/16-18
8	2612880W1	1	SIDE SHEET, INLET HSG, LH
9	71387577	1	PLATE, RIGHT
10	71387584	1	PLATE, DEFLECTOR
	70714	7	SCREW,PHILIPS TRUSS HD, 3/8-16 X 7/8
	70917378	AR	WASHER, 3/8 WIDE
	70916965	AR	LOCKWASHER, 3/8
	70916950	17	NUT, 3/8-16 REG
11	2612870W1	1	SIDE SHEET, INLET HSG, RH
12	71409970	1	PANEL WLMT, FLOOR, GR./CORN/ SOYBEAN
	71409280	1	PANEL WLMT, FLOOR, RICE
	70921965	19	CAPSCREW, 3/8-16 X 3/4 GR5
	70921210	9	CAPSCREW, 3/8-16 X 1 GR5
	70917378	9	WASHER, 3/8 WIDE
	705038	9	LOCKWASHER, 3/8
	Y704734	19	NUT, HEX FLANGE TOP LOCK, 3/8-16
13	71411435	1	CHANNEL WLMT
	70921176	6	CAPSCREW, 1/2-13 X 1-1/4 GR5
	Y704742	6	NUT, HEX FLANGE TOP LOCK, 1/2-13
14	2531671W91	1	PANEL WLMT, RIGHT FRONT
15	-----	1	BRKT, SENSOR(S/S BY 71401326)(SEE ROTOR)
17	2531681W91	1	PANEL WLMT, LEFT FRONT
18	2488980W1	2	SUPPORT, ANGLE
	70921210	7	CAPSCREW, 3/8-16 X 1
	70921969	1	CAPSCREW, 3/8-16 X 1-1/2 GR5
	70917378	8	WASHER, 3/8, WIDE
	Y704734	8	NUT, HEX FLANGE TOP LOCK, 3/8-16
19	70922658	2	WASHER, 1", WIDE
21	71387454	1	SHAFT, FEED PLATE
22	71391763	1	HANDLE WLMT, STONE TRAP
23	2522600W1	2	PLATE, ADJUSTABLE
	70920328	4	CAPSCREW, 1/2-13 X 1-1/2 GR5
	Y704742	4	NUT, HEX FLANGE TOP LOCK, 1/2-13

CONTINUED

https://truckmanualshub.com/

INLET HOUSING AND STONE TRAP

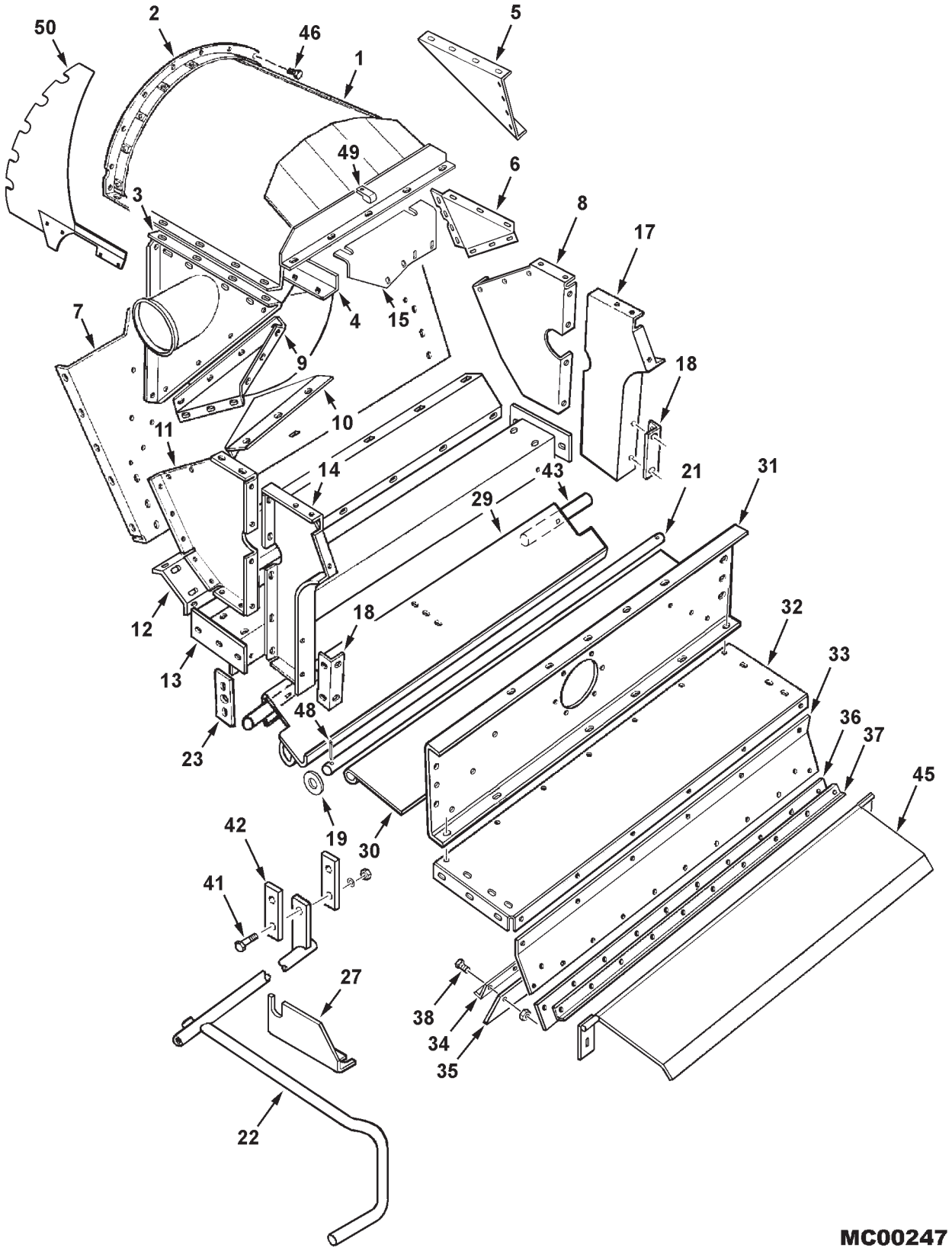

https://truckmanualshub.com/

ITEM	NUMBER	QTY	DESCRIPTION
27	71391762	1	ANGLE, TRAP PIVOT
	701235	2	CAPSCREW, 1/2-13 X 1-1/2 GR5 (PRIOR S/N HN36101)
	390912X1	2	CAPSCREW, M12-1.75 X 40 CL8.8 (EFF. S/N HN36101)
	Y705624	4	WASHER, 1/2 NARROW (QTY VARIES)
29	71389212	1	PLATE WLMT, STONE TRAP
	70923701	4	CAPSCREW, 3/8-16 X 2 GR5
	353771X1	4	WASHER, HEAVY HARD, 3/8
	Y704734	4	NUT, HEX FLANGE TOP LOCK, 3/8-16
30	71387453	1	PLATE, FEED
31	71387587	1	CHANNEL, FRONT
	70921210	14	CAPSCREW, 3/8-16 X 1 GR5
	70917378	13	WASHER, 3/8, WIDE
	70916965	9	LOCKWASHER, 3/8
	Y704734	5	NUT, HEX FLANGE TOP LOCK, 3/8-16
	700703922	4	NUT, HEX FLANGE TOP LOCK, 5/8-11
32	71387455	1	PLATE WLMT, TOP
	70921965	15	CAPSCREW, 3/8-16 X 3/4
	70917378	15	WASHER, 3/8, WIDE
	Y704734	15	NUT, HEX FLANGE TOP LOCK, 3/8-16
33	71387459	1	SHEET WLMT, FRONT INLET HSG
	70916965	9	LOCKWASHER, 3/8
	70921965	9	CAPSCREW, 3/8-16 X 3/4 GR5
34	71387464	1	STRIP, SEAL CLAMPING, INNER
35	71387463	1	SEAL, INNER
36	71387465	1	SEAL, OUTER
37	71387466	1	STRIP, SEAL CLAMPING, OUTER
38	70925160	23	POP-RIVET, .251-.375 GRIP
41	70922645	2	CAPSCREW, 1/2-13 UNC X 2-1/4 GR5
	Y705624	2	WASHER, 1/2 NARROW
	704031	4	NUT, 1/2-13 REG
42	112412W1	2	LINK, LEVER
43	104201W1	2	SHAFT, PIVOT
45	71395422	1	COVER WELDMENT, STONE TRAP
	70921176	2	CAPSCREW, 1/2-13 X 1-1/4 GR5
	Y704742	2	NUT, HEX FLNG TOP LK, 1/2-13
46	70920787	10	CAPSCREW, 5/16-18 UNC X 1/2
48	70918459	2	COTTER PIN, 3/16 X 1-1/2
49	70936314	2	J-CLIP, 1/2 X .406 HOLE
50	71412348	1	PATCH WLMT, RETURN INLET (FIELD INSTALL, IMPROVED WEAR LIFE (PRIOR HR36101)
-	71399002	AR	KIT, STONE TRAP COVER (ORDER THRU DEALER CENTRAL)
-	700704010	AR	SILICONE, BLACK

MC00247
PR: 186

https://truckmanualshub.com/

CONCAVE & CONTROLS

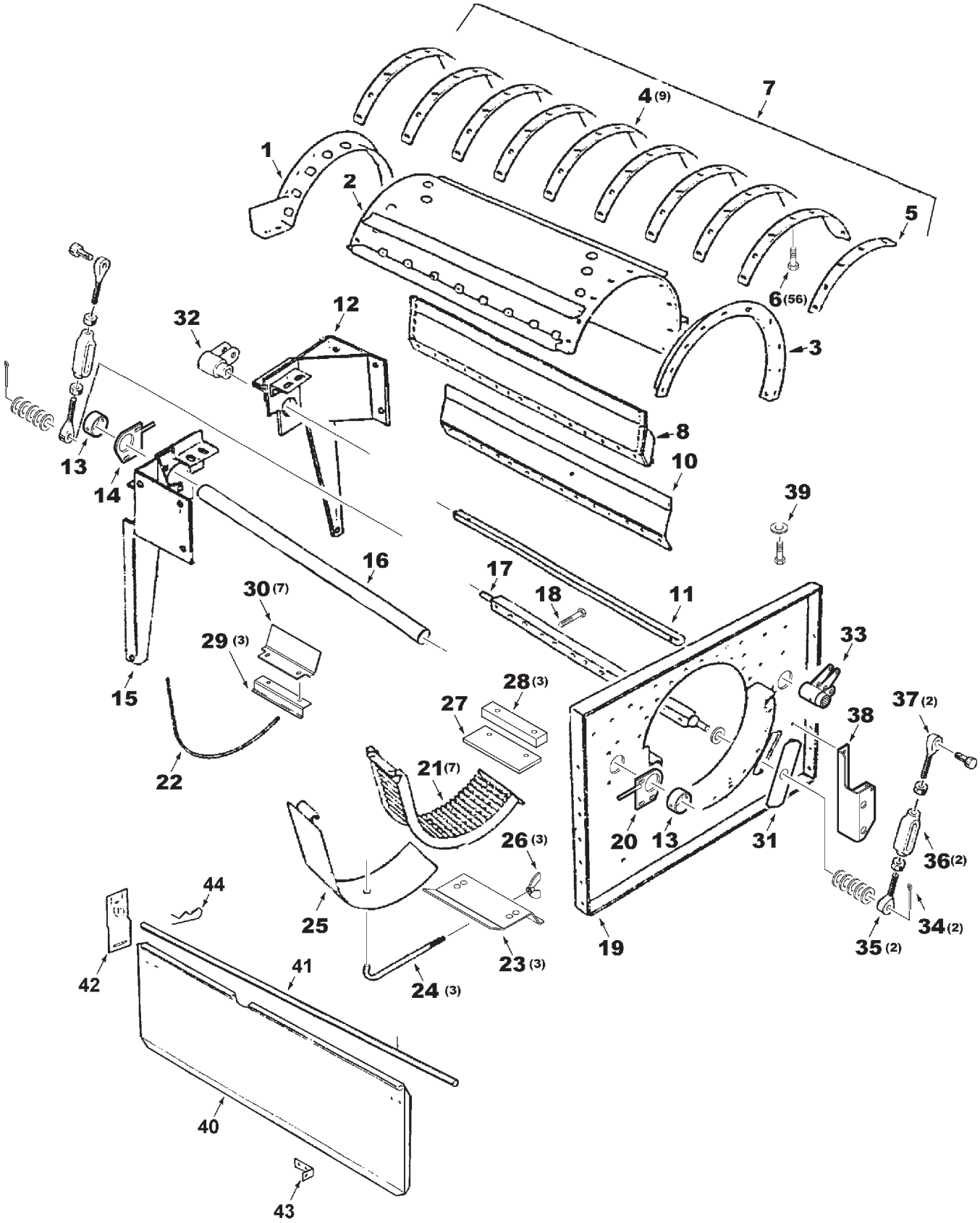

MC00275

https://truckmanualshub.com/

ITEM	NUMBER	QTY	DESCRIPTION
1	71388318	1	ANGLE WLDMT, REAR CONCAVE COVER
	700720958	10	SCR,SKT BTN HD,THD CUT'G, 3/8-16 X 1
2	71388301	1	COVER WLDMT, THRESHER
3	71388315	1	ANGLE WLDMT, FRONT CONCAVE
	700720958	10	SCR,SKT BTN HD,THD CUT'G, 3/8-16 X 1
4	2467220W1	9	VANE, GUIDE, 7 HOLE
5	2467230W1	1	VANE, GUIDE, 5 HOLE
6	700720958	56	SCREW,SKT BTN HD,THD CUT'G, 3/8-16 X 1"
7	71388312	1	COVER ASSEMBLY (INCLUDES ITEMS 1-6)
	703983	5	CAPSCREW, 1/2-13 X 1-3/4 GR5
	Y704742	5	NUT, HEX FLANGE TOP LOCK, 1/2-13
	70923114	1	CAPSCREW, 1/2-13 X 1" GR5
	Y704742	1	NUT, HEX FLANGE TOP LOCK, 1/2-13
	70921966	9	CAPSCREW, 3/8-16 X 7/8 GR5
	Y704734	9	NUT, HEX FLANGE TOP LOCK, 3/8-16
8	102764M91	1	OVERLAP WLDMT, PERFORATED (CORN,SB,RICE)
	71378025	AR	KIT, OVERLAP WLMT, PERFORATED
			(ORDER THRU DEALER CENTRAL)
10	2636870W2	1	OVERLAP, CONCAVE, SOLID (REPLACES
			FOLLOWING 3 OVERLAP PTS S/N HR36101)
	71395334	1	OVERLAP, LT FRONT,(GRAIN, AUST, CE)
	71395335	2	OVERLAP, LT MID,(GRAIN, AUST, CE)
	71395336	1	OVERLAP, LT REAR,(GRAIN, AUST, CE)
	70921210	14	CAPSCREW, 3/8-16 X 1 GR5
	353771X1	14	WASHER, HEAVY, HARD, 3/8
	71398099	AR	KIT, OVERLAP, SOLID SEGMENT (GRAIN)
			(ORDER THRU DEALER CENTRAL)
11	71395339	1	ROD, CONCAVE CONTROL, 1-1/4 SQUARE
12	71388302	1	SUPPORT WLDMT, LH REAR CONCAVE
	70921176	4	CAPSCREW, 1/2-13 X 1-1/4 GR5
	Y704742	4	NUT, HEX FLANGE TOP LOCK, 1/2-13
13	2442960W1	2	HOLDER, PIVOT TUBE
	70921324	2	CAPSCREW, 3/8-16 X 3-3/4 GR5
	Y704734	2	NUT, HEX FLANGE TOP LOCK, 3/8-16
14	71388314	1	PLATE WLDMT, ADJUSTING, RT REAR
	7700156	3	BOLT, RD HD SQ NK, 1/2-13 X 1-1/2
	Y704742	3	NUT, HEX FLANGE TOP LOCK, 1/2-13
	704031	2	NUT, 1/2-13 REG
15	71387872	1	SUPPORT WLDMT, RH REAR CONCAVE
	70921176	4	CAPSCREW, 1/2-13 X 1-1/4 GR5
	Y704742	4	NUT, HEX FLANGE TOP LOCK, 1/2-13
16	2442970W1	1	TUBE, CONCAVE PIVOT
17	71389084	1	HANGER WLDMT, CONCAVE LH
	700709607	11	WASHER, 3/4 WIDE
	70918461	2	COTTER PIN, 1/4 X 1-1/2
18	700702141	14	CAPSCREW, 3/8-16 X 4-1/4 (QTY 8 PRIOR
			S/N HR36101)
	13601	4	CPSCR, 3/8-16 X 5-1/4(PRIOR HR36101)
	70922760	2	CPSCR, 3/8-16 X 5-1/2(PRIOR HR36101)
	70917378	14	WASHER, 3/8, WIDE
	70916965	14	LOCKWASHER, 3/8
	70916950	14	NUT, 3/8-16 REG

CONTINUED

https://truckmanualshub.com/

CONCAVE & CONTROLS

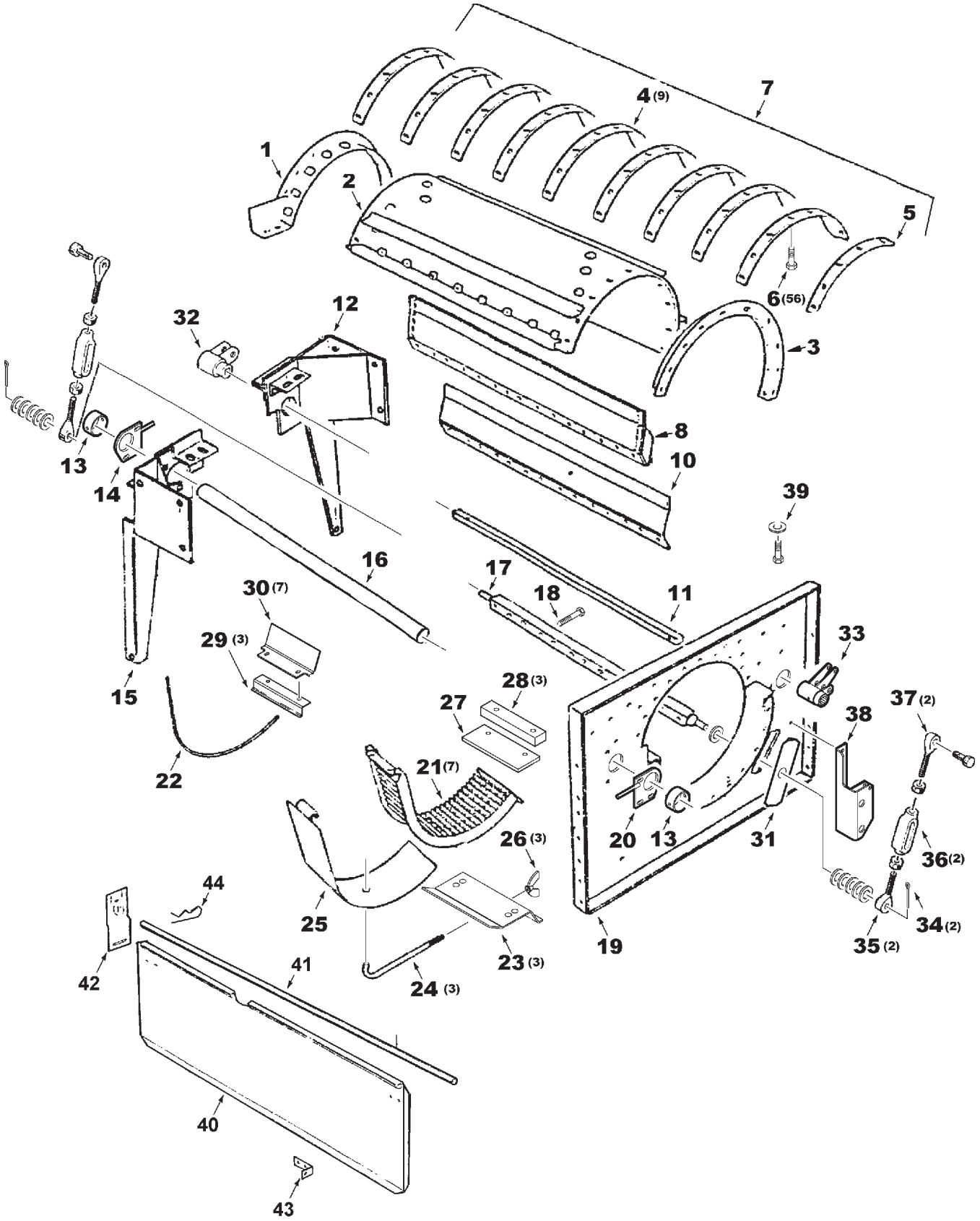

MC00275

https://truckmanualshub.com/

ITEM	NUMBER	QTY	DESCRIPTION
19	71409994	1	BULKHEAD WLMT (PRIOR S/N HS36101)
	71414552	1	BULKHEAD WLMT (EFF. S/N HS36101)
	70921176	12	CAPSCREW, 1/2-13 X 1-1/4
	Y704742	12	NUT, HEX FLANGE TOP LOCK, 1/2-13
20	71388321	1	PLATE WLDMT, ADJUSTING, RT FRONT
	7700156	3	BOLT, RD HD SQ NK, 1/2-13 X 1-1/2
	Y704742	3	NUT, HEX FLANGE TOP LOCK, 1/2-13
	704031	2	NUT, 1/2-13 REG
21	71390005	7	CONCAVE ASY, 3/16 ROD, 13/32 SPCG(GRAIN)
	71398098	--	*KIT, CONCAVE, GRAIN (INCLS 7, 71390005)
	104904W91	7	CONCAVE ASY, 1/4 ROD (CORN, SOYBN, AUST)
	71378022	--	*KIT, CONCAVE, CORN (INCLS 7, 104904W91)
	71398275B	7	CONCAVE ASY,(HT)1/4 ROD,1-1/4 SPCG(RICE)
	71401075	--	*KIT, CONCAVE, RICE (INCLS 7, 71398275)
	70921324	13	CAPSCREW, 3/8-16 X 3-3/4 GR5
	7772767	1	CAPSCREW, 3/8-16 X 3-1/2 GR5
	70916965	14	LOCKWASHER, 3/8 REG
	70916950	14	NUT, 3/8-16 REG
22	2472450W1	AR	ROD, CONCAVE, 3/16 DIA (GRAIN)
	105495W1	AR	ROD, CONCAVE, 5 MM DIA (CORN)
	71378021	--	*KIT,42 RODS,CORN CONCAVE,5 MM(5/8 SPCG)
	105493W1	AR	ROD, CONCAVE, 1/4 DIA (CORN, SOYBEAN, RICE & AUSTRALIA)
23	71391489	3	PLATE, LH BLANK ANCHOR
24	2544120W1	3	ROD, PULL, 5/16 THRDS
	700709602	3	WASHER, 5/16 WIDE
	Y705020	3	LOCKWASHER, 5/16
	70917372	3	NUT, 5/16-18 REG
	Y704726	3	NUT, HEX FLANGE TOP LOCK, 5/16-18
25	2545511W91	3	BLANK ASY, CONCAVE
26	704262	3	NUT, WING, 5/16-18
27	71395338	1	PLATE, STOP, PWR CONCAVE ADJUST (PRIOR S/N HR36101)
28	71395337	3	SHIM, CONCAVE, 1" THICK (PRIOR HR36101)
29	2545471W91	3	HINGE PLATE ASY, CONCAVE BLANK
30	71395407	7	ANGLE, RH OVERLAP
	70920415	14	CAPSCREW, 3/8-16 X 1-1/4 GR5
	70917378	14	WASHER, 3/8 WIDE
	70916965	14	LOCKWASHER, 3/8 REG
	70916950	14	NUT, 3/8-16 REG
31	2466960W2	1	COVER
32	2466861W91	1	LEVER WLDMT, CONCAVE ADJ, REAR
33	71393118	1	LEVER WLDMT, CONCAVE ADJ, FRONT
	7773864	2	CAPSCREW, 1/4-20 X 3" GR5
	704007	4	NUT, 1/4-20 REG

CONTINUED

https://truckmanualshub.com/

CONCAVE & CONTROLS

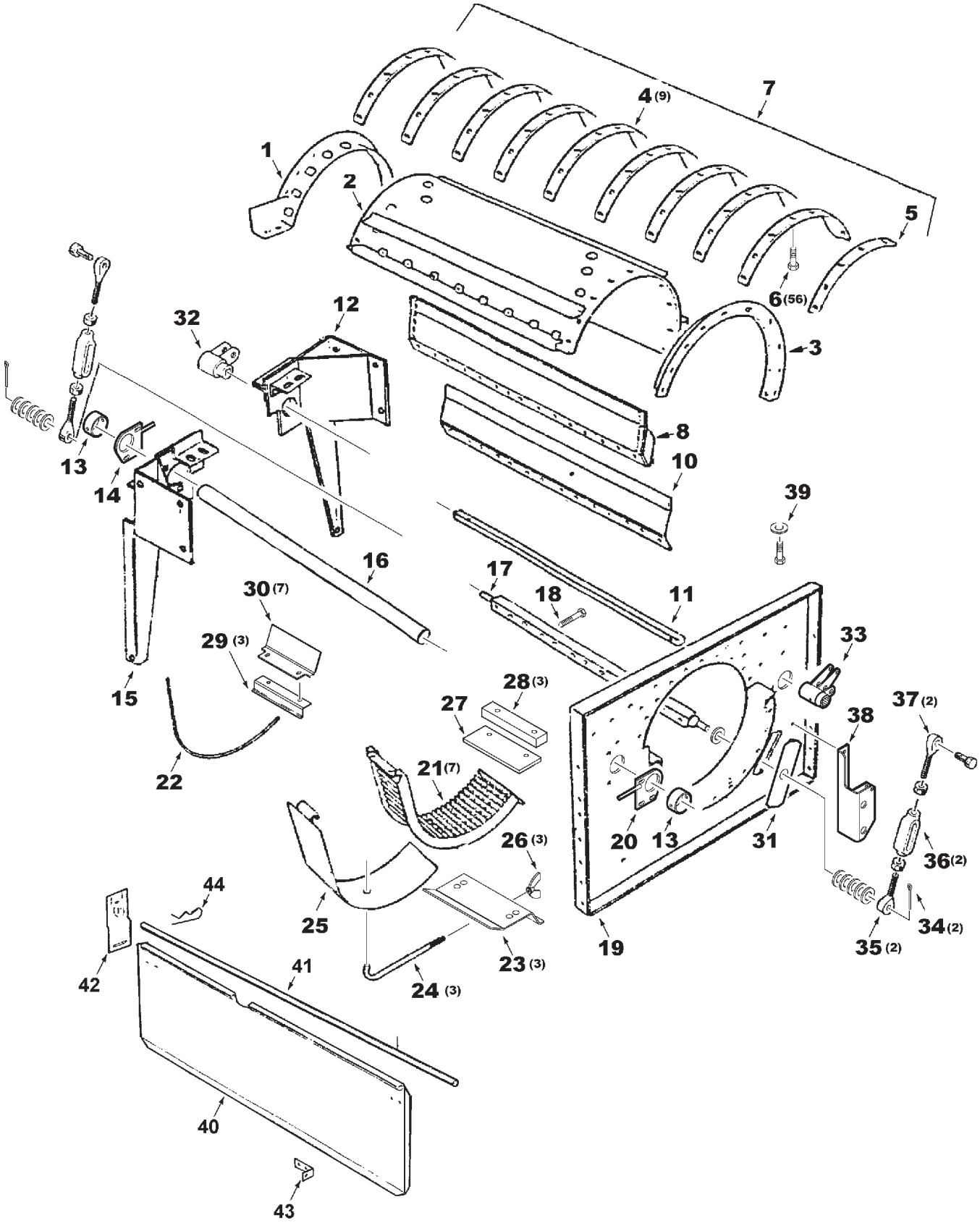

MC00275

https://truckmanualshub.com/

ITEM	NUMBER	QTY	DESCRIPTION
34	70929594	2	PIN, CLEVIS, 3/4 X 1.91
	62190	2	COTTER PIN, 5/32 X 1-1/2
35	103001M91	2	ROD ASY, CONCAVE ADJUST, 3/4-10 RH THD
	70913160	2	NUT, 3/4-10 REG
36	252502M1	2	TURNBUCKLE, 3/4-10
37	103004M91	2	ROD ASY, CONCAVE ADJUST, 3/4-10 LH THD
	254763M1	2	NUT, HEX JAM, 3/4-10 UNC LH THD
38	71393122	1	BASE WLDMT, ACTUATOR
	70923114	3	CAPSCREW, 1/2-13 X 1" GR5
	Y705046	3	LOCKWASHER, 1/2 REG
39	7771504	1	CAPSCREW, 5/8-11 X 3, FULL THD (PRIOR S/N HR36101)
	375112X1	1	JAM NUT, 5/8-11 (PRIOR S/N HR36101)
40	2547540W1	1	PLATE, CONCAVE DEFLECTOR
41	2531340W1	1	ROD, DEFLECTOR HINGE
42	2547531W91	2	MOUNTING PLATE WLDMT, DEFLECTOR
43	2530670W1	2	BRKT, DEFLECTOR ADJUSTING
	70923341	6	CAPSCREW, 1/4-20 X 3/4
	70917377	8	WASHER, 1/4 WIDE
	70916964	4	LOCKWASHER, 1/4 REG
	70916622	6	NUT, 1/4-20 REG
44	70936348	2	PIN, RETAINER, .125 DIA X 2.56 LG

*(ORDER THRU DEALER CENTRAL)

MC00275
PR: 190

https://truckmanualshub.com/

POWER CONCAVE CONTROL

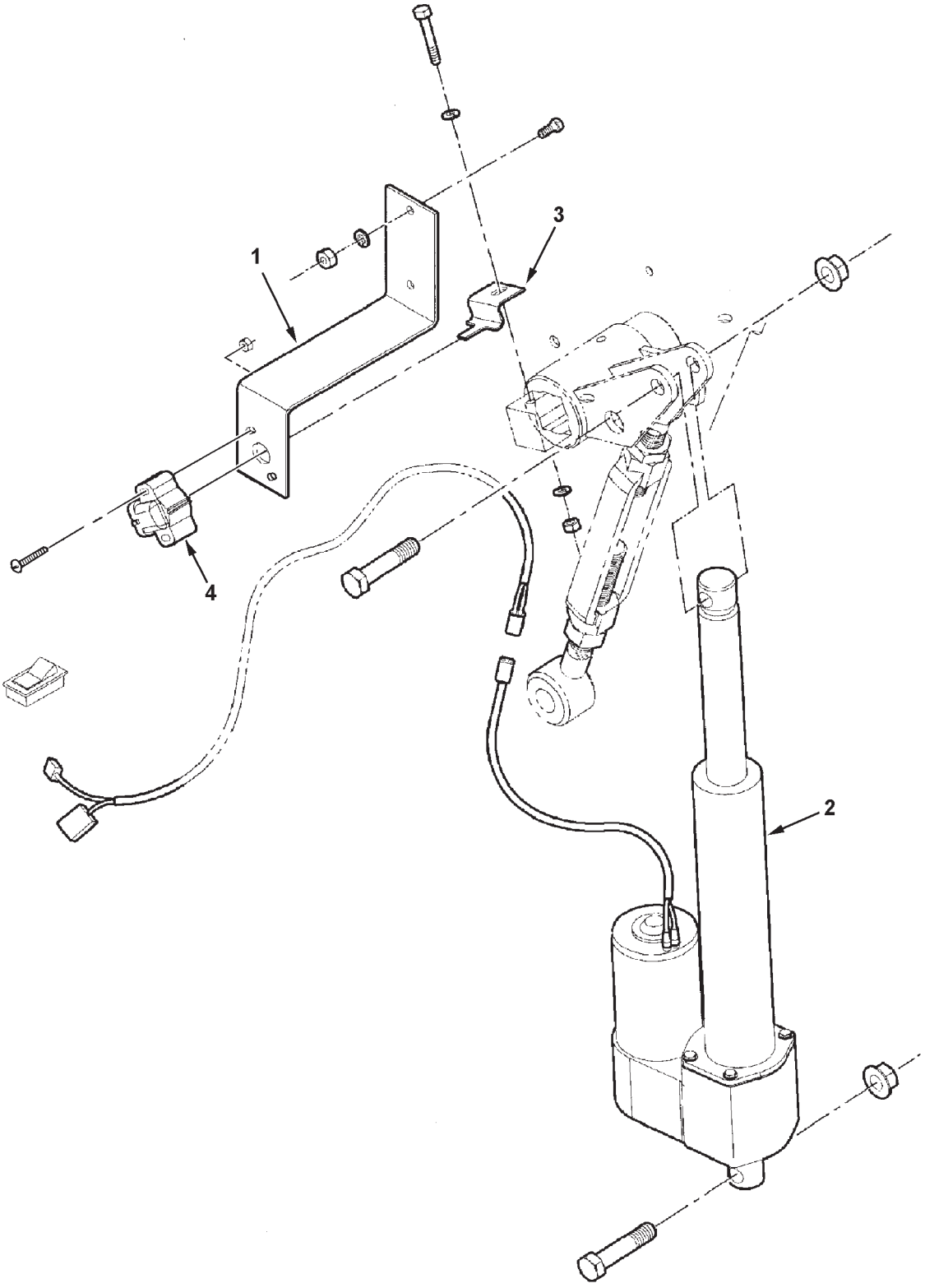

MC00291

https://truckmanualshub.com/

ITEM	NUMBER	QTY	DESCRIPTION
1	71388322	1	BRACKET, SENSOR MOUNTING
	70927401	2	CAPSCREW, 1/4-20 X 1" GR5
	705012	2	LOCKWASHER, 1/4 REG
	704007	2	NUT, 1/4-20 REG
2	71411902	1	ACTUATOR, ELECTRIC
	70922645	2	CAPSCREW, 1/2-13 X 2-1/4 GR5
	Y704742	2	NUT, HEX FLG TOP LOCK, 1/2-13
3	71387329	1	TAB, SENSOR DRIVE
	Y703140	1	CAPSCREW, 1/4-20 X 1-3/4 GR5
	705707	1	WASHER, 1/4 NARROW
	705012	1	LOCKWASHER, 1/4 REG
	704007	1	NUT, 1/4-20 REG
4	71376825	1	SENSOR, CONCAVE POSITION
	70918151	2	SCREW, TRUSS HD, #10-32 X 1-1/4
	70917380	2	WASHER, #10 PLAIN
	705004	2	LOCKWASHER, #10 REG
	Y704445	2	NUT, #10-32 REG

MC00291
PR: 194

https://truckmanualshub.com/

REAR ROTOR HOUSING

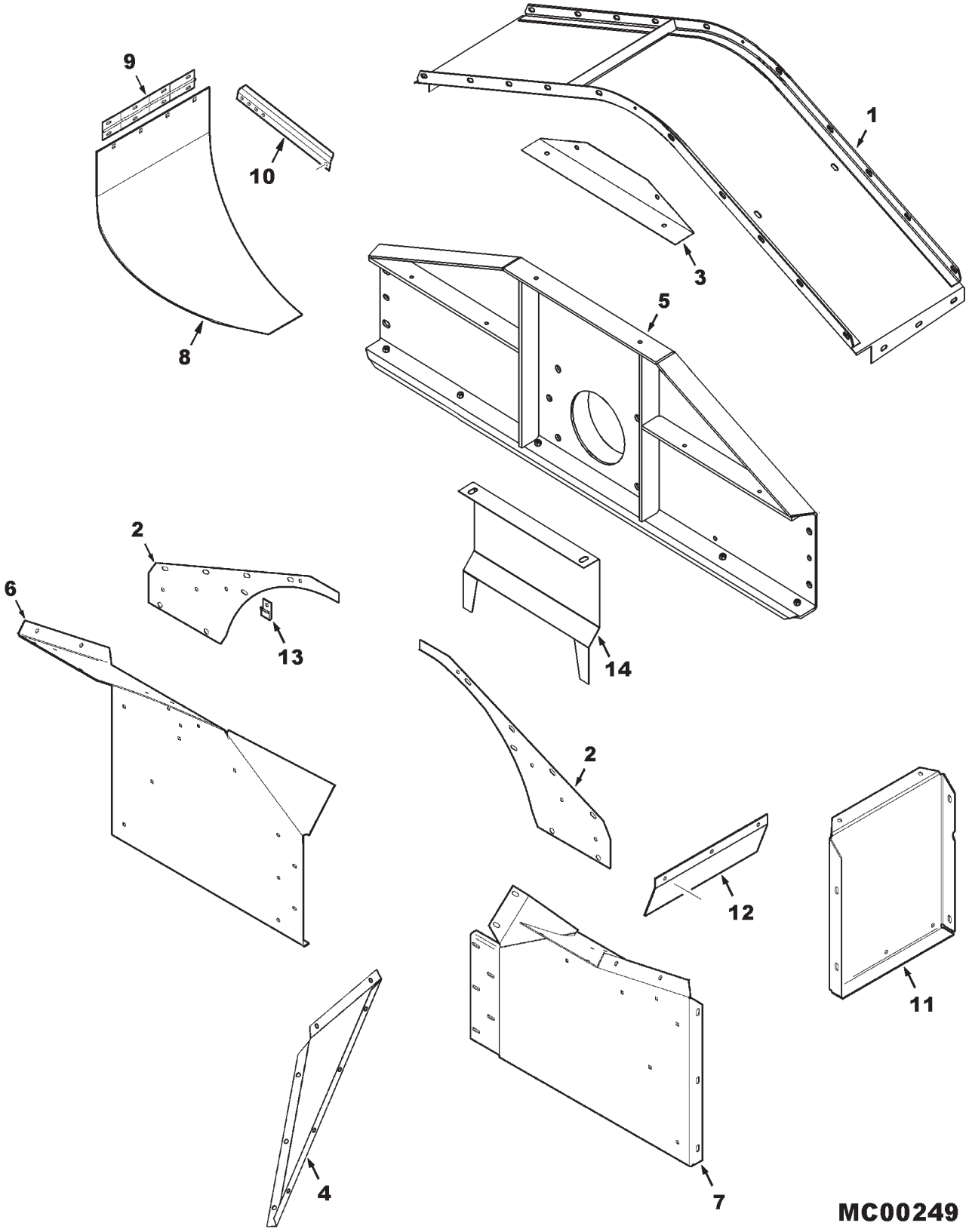

https://truckmanualshub.com/

ITEM	NUMBER	QTY	DESCRIPTION
1	71387803	1	COVER WLDMT, TOP
	70921210	8	CAPSCREW, 3/8-16 X 1 GR5
	70917378	16	WASHER, 3/8
	70916965	8	LOCKWASHER, 3/8
	70916950	8	NUT, 3/8-16
2	71387807	2	BULKHEAD, REAR
	70921332	4	CAPSCREW, 5/16-18 X 3/4 GR5
	70917642	4	WASHER, 5/16
	Y705020	4	LOCKWASHER, 5/16
	70921210	8	CAPSCREW, 3/8-16 X 1 GR5
	70921965	6	CAPSCREW, 3/8-16 X 3/4 GR5
	70917378	22	WASHER, 3/8
	70916965	14	LOCKWASHER, 3/8
	70916950	14	NUT, 3/8-16
3	71395346	1	COVER, BULKHEAD, ROTOR EXHAUST
	70921210	2	CAPSCREW, 3/8-16 X 1 GR5
	70921965	2	CAPSCREW, 3/8-16 X 3/4 GR5
	70917378	4	WASHER, 3/8
	70916965	4	LOCKWASHER, 3/8
	70916950	4	NUT, 3/8-16
4	104928W1	1	PLATE, DEFLECTOR
	70931317	2	BOLT, RD HD SHT SQ NK, 1/4-20 X 3/4
	70937101	2	SPEEDNUT, 1/4-20
	7770456	3	BOLT, RD HD SQ NK, 5/16-18 X 3/4
	70921332	6	CAPSCREW, 5/16-18 X 3/4 GR5
	70917642	7	WASHER, 5/16
	70917356	9	LOCKWASHER, 5/16
	70917372	9	NUT, 5/16-18
5	71394933	1	PLATE WLDMT, ROTOR
	700703922	4	NUT, HEX FLNG TOP LK 5/8-11
6	71389053	1	BULKHEAD ASY., LEFT
	7770456	10	BOLT, RD HD SQ NK, 5/16-18 X 3/4
	70917642	10	WASHER, 5/16
	70917372	10	NUT, 5/16-18
	70921965	4	CAPSCREW, 3/8-16 X 3/4 GR5
	70921210	1	CAPSCREW, 3/8-16 X 1 GR5
	70917378	5	WASHER, 3/8
	70916965	5	LOCKWASHER, 3/8
	70916950	5	NUT, 3/8-16

CONTINUED

https://truckmanualshub.com/

REAR ROTOR HOUSING

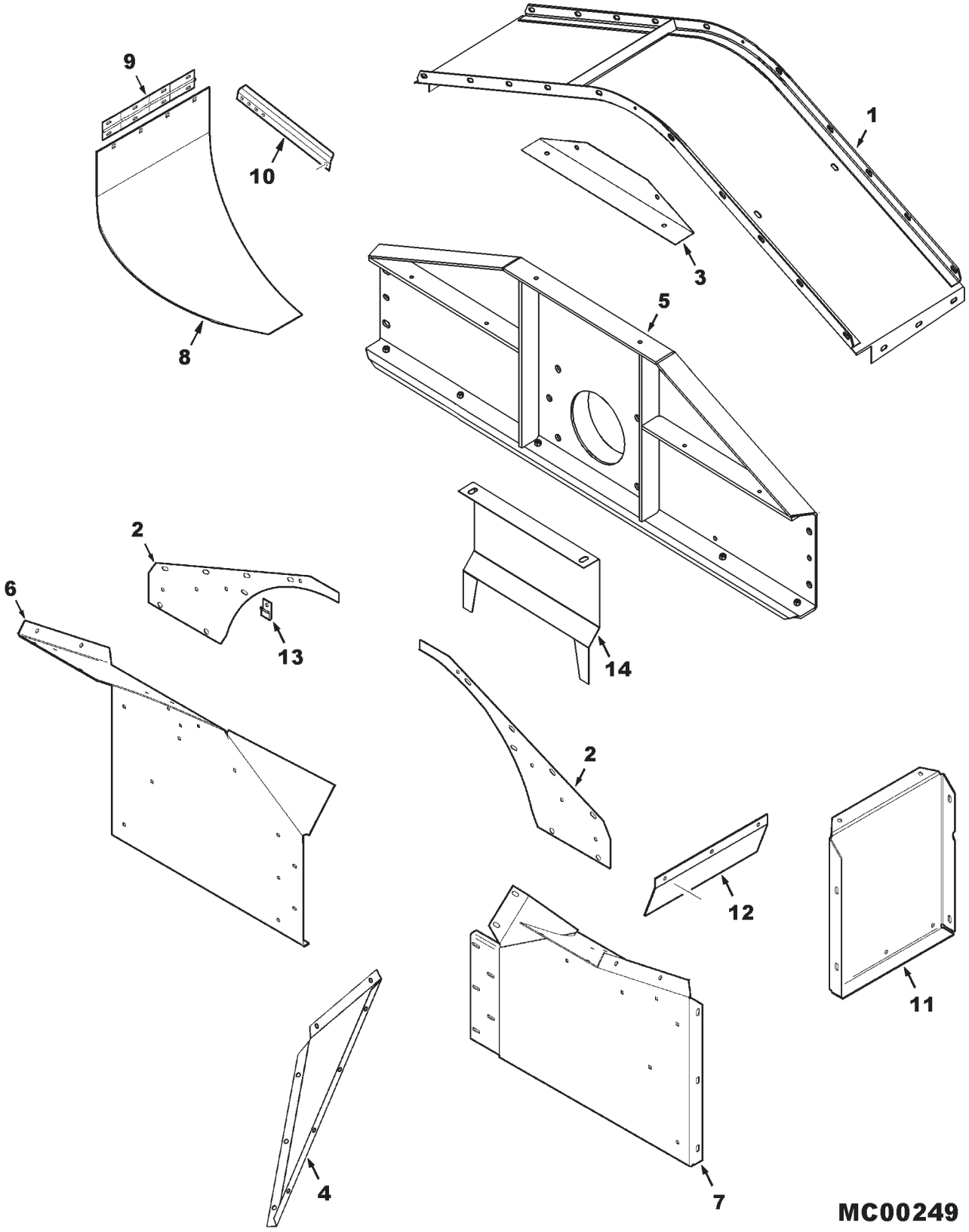

https://truckmanualshub.com/

ITEM	NUMBER	QTY	DESCRIPTION
7	71389055	1	BULKHEAD ASY., RIGHT
	7770456	2	BOLT, RD HD SQ NK, 5/16-18 X 3/4
	70917642	2	WASHER, 5/16
	70917372	2	NUT, 5/16-18
	70921965	4	CAPSCREW, 3/8-16 X 3/4 GR5
	70921210	1	CAPSCREW, 3/8-16 X 1 GR5
	70917378	5	WASHER, 3/8
	70916965	5	LOCKWASHER, 3/8
	70916950	5	NUT, 3/8-16
8	71392690	1	DISCHARGE WLDMT, ROTOR DEFLECTOR
	70931348	4	BOLT, RD HD SQ NK, 3/8-16 X 3/4 GR5
	70916965	4	LOCKWASHER, 3/8
	70916950	4	NUT, 3/8-16
9	71386169	1	HINGE, DEFLECTOR
	70931348	4	BOLT, RD HD SQ NK, 3/8-16 X 3/4 GR5
	70916965	4	LOCKWASHER, 3/8
	70916950	4	NUT, 3/8-16
10	71389057	1	STRAP, DISCHARGE DEFLECTOR
	70921332	2	CAPSCREW, 5/16-18 X 3/4 GR5
	70917356	1	LOCKWASHER, 5/16
	70917372	1	NUT, 5/16-18
	7704117	1	NUT, HEX FLNG TOP LK, 5/16-18
11	71387826	1	PLATE, UPPER RH
	70921210	5	CAPSCREW, 3/8-16 X 1 GR5
	70917378	6	WASHER, 3/8
	70916965	5	LOCKWASHER, 3/8
	70916950	5	NUT, 3/8-16
12	71387700	1	PLATE, DEFLECTOR
	70921210	3	CAPSCREW, 3/8-16 X 1 GR5
	70916965	3	LOCKWASHER, 3/8
	70916950	3	NUT, 3/8-16
13	70936314	4	J-CLIP, 1/2
14	71404326	1	* DEFLECTOR PANEL, ROTOR GEARBOX
	70917378	2	* WASHER, 3/8 WIDE
-	700525382	AR	* KIT, DEFLECTOR, ROTOR GEARBOX (FIELD CAMPAIGN)(EFF. S/N HM36101 THRU HN36300)

MC00249
PR: 196

https://truckmanualshub.com/

SEPARATOR GRATES

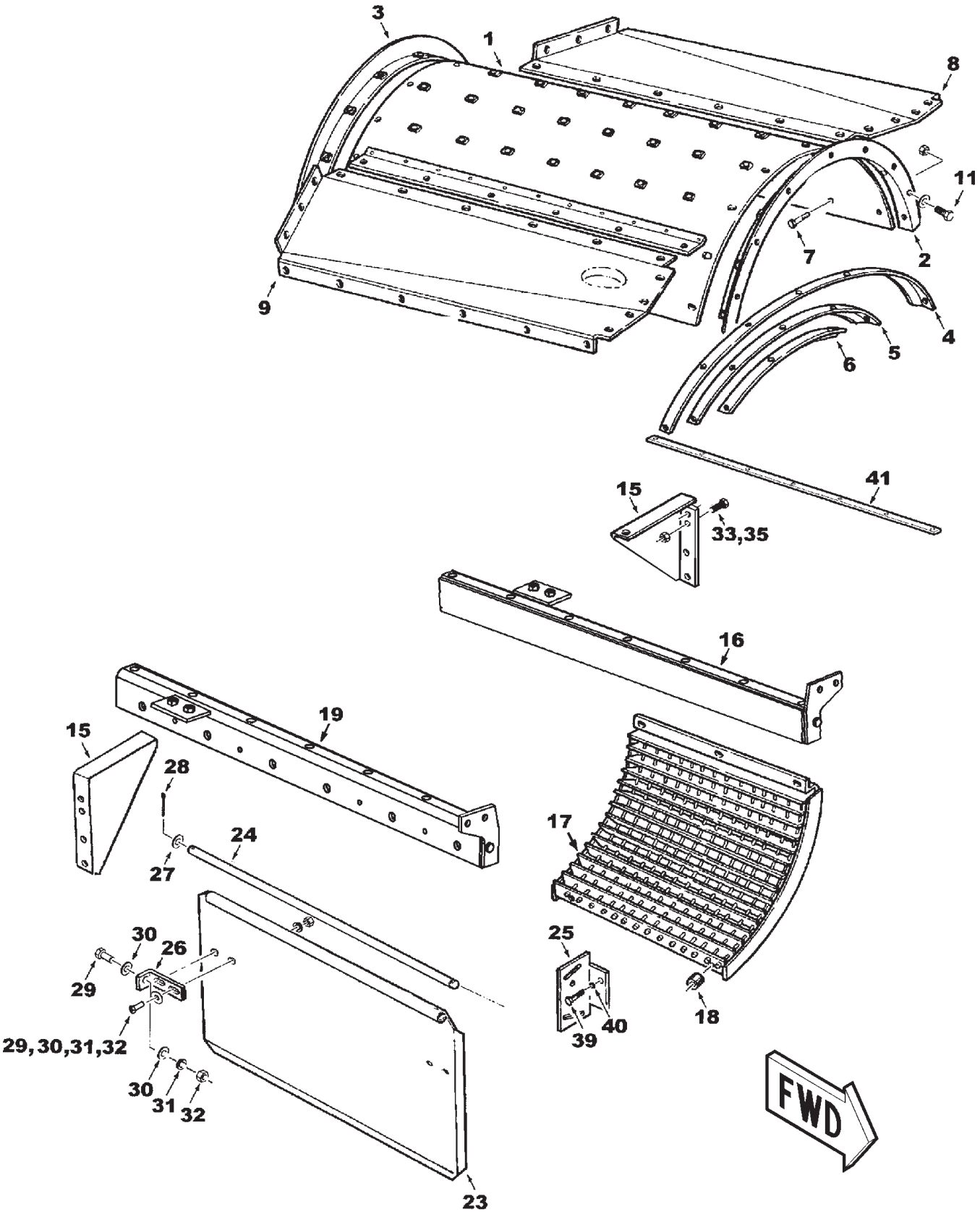

MC00250

https://truckmanualshub.com/

ITEM	NUMBER	QTY	DESCRIPTION
-	71388466	1	GUIDE VANE ASY,SEPARATOR(INCL ITEMS 1-7)
	70919089	14	CAPSCREW, 1/2-13 X 1-3/4 GR5
	Y705046	14	LOCKWASHER, 1/2
1	71388439	1	COVER WLDMT
2	71388441	1	ANGLE WLDMT, FRONT
3	71388442	1	ANGLE WLDMT, REAR
4	2467220W1	5	VANE, GUIDE 7 HOLE
5	2467230W1	1	VANE, GUIDE 5 HOLE
6	2498390W1	1	VANE, GUIDE 3 HOLE
7	71335689	52	SCR, SOCK BUTTON HD,TAPP'G, 3/8-16 X 3/4
	700720958	16	SCR, SOCK BUTTON HD,TAPP'G, 3/8-16 X 1
8	71387334	1	COVER, LEFT REAR
	71387336	1	COVER, LEFT FRONT
	70922586	7	CAPSCREW, 3/8-16 X 5/8
	70921332	4	CAPSCREW, 5/16-18 X 3/4
	70923325	13	CAPSCREW, 5/16-18 X 7/8
	70917378	7	WASHER, 3/8 WIDE
	70917642	15	WASHER, 5/16 WIDE
	70917356	13	LOCKWASHER, 5/16
	70916965	7	LOCKWASHER, 3/8
	353771X1	4	WASHER, HVY HARD, 3/8
	Y704726	4	NUT, HEX FLNG TOP LOCK, 5/16-18
9	71387335	1	COVER, RIGHT REAR
	71387337	1	COVER, RIGHT FRONT
	70923325	32	CAPSCREW, HEX, 5/16-18 X 7/8
	70917642	36	WASHER, 5/16
	70917356	32	LOCKWASHER, 5/16
	70917372	18	NUT, 5/16-18
	7703499	4	CAPSCREW, 5/16-18 X 3/4 GR5
	Y704726	4	NUT, HEX FLNG TOP LOCK, 5/16-18
11	70921210	16	CAPSCREW, 3/8-16 X 1.0
	353771X1	16	WASHER, HEAVY HARDENED FLAT, 3/8
	Y704734	16	LOCKNUT, HEX FLNG 3/8-16
15	71388453	2	BRACKET ASY.
	70921176	8	CAPSCREW, 1/2-13 X 1-1/4 GR5
	Y704742	8	NUT, HEX FLNG TOP LOCK, 1/2-13
16	71388459	1	HANGER ASSEMBLY, LEFT
	70921176	2	CAPSCREW, 1/2-13 X 1-1/4 GR5
	Y704742	2	NUT, HEX FLNG TOP LOCK, 1/2-13

CONTINUED

https://truckmanualshub.com/

SEPARATOR GRATES

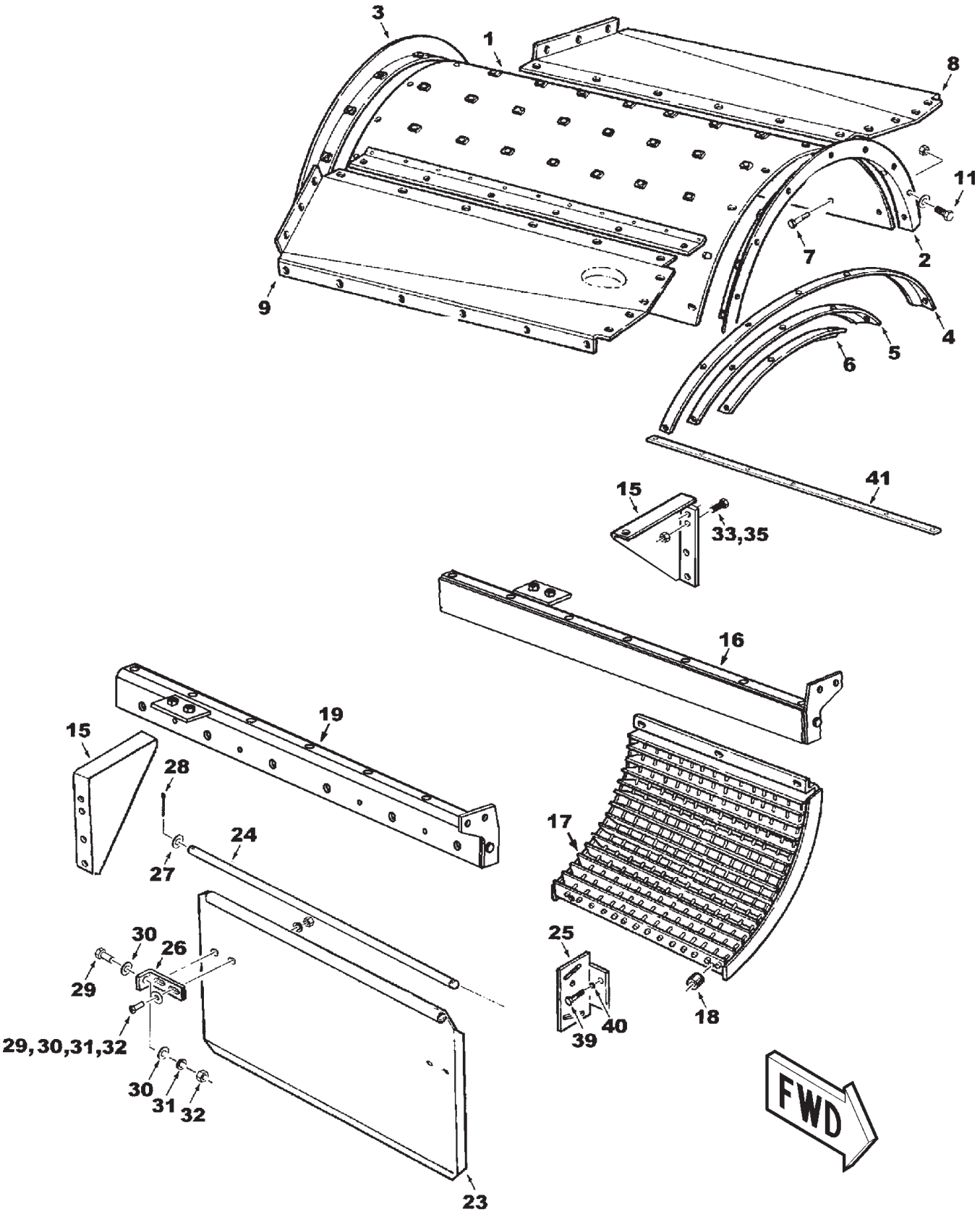

MC00250

https://truckmanualshub.com/

ITEM	NUMBER	QTY	DESCRIPTION
17	71388451	4	GRATE ASSEMBLY, SEPARATOR
	70920037	8	CAPSCREW, HEX SOCK HD, 1/2-13 X 5/8
	70921176	12	CAPSCREW 1/2-13 X 1-1/4
	Y705046	12	LOCKWASHER 1/2
18	151257M1	6	SPACER, 1-1/4 X 11/16 X 1-3/16
	70919434	6	CAPSCREW, 5/8-11 X 2-3/4 GR5
	700703922	6	NUT, HEX FLNGE TOP LOCK, 5/8-11
19	71388458	1	HANGER ASY., RH
	70921176	2	CAPSCREW, 1/2-13 X 1-1/4
	Y704742	2	NUT, HEX FLNG TOP LOCK, 1/2-13
23	2618670W1	2	SHIELD, DEFLECTOR
24	2618680W1	2	ROD, SEPARATOR DEFLECTOR, HINGE
25	2538810W1	4	BRACKET, SEPARATOR DEFLECTOR HINGE
26	2530670W1	4	BRACKET, ADJUSTING
27	70917378	4	WASHER, WIDE FLAT, 3/8
28	70918452	4	PIN, COTTER, 1/8 X 1.0
29	70923341	12	CAPSCREW, 1/4-20 X 3/4
30	70917377	16	WASHER, WIDE FLAT, 1/4
31	70916964	12	WASHER, LOCK, 1/4
32	70916622	12	NUT, HEX, 1/4-20
33	70921176	8	CAPSCREW, 1/2-13 X 1-1/4
35	Y704742	8	NUT, HEX FLNG TOP LOCK, 1/2-13
39	70921210	4	CAPSCREW, 3/8-16 X 1.0
40	70916965	4	WASHER, LOCK, 3/8
41	71388465	2	FLAT STRAP, COVER REINF

MC00250
PR: 200

https://truckmanualshub.com/

SEPARATOR GRATE SUPPORTS
RICE

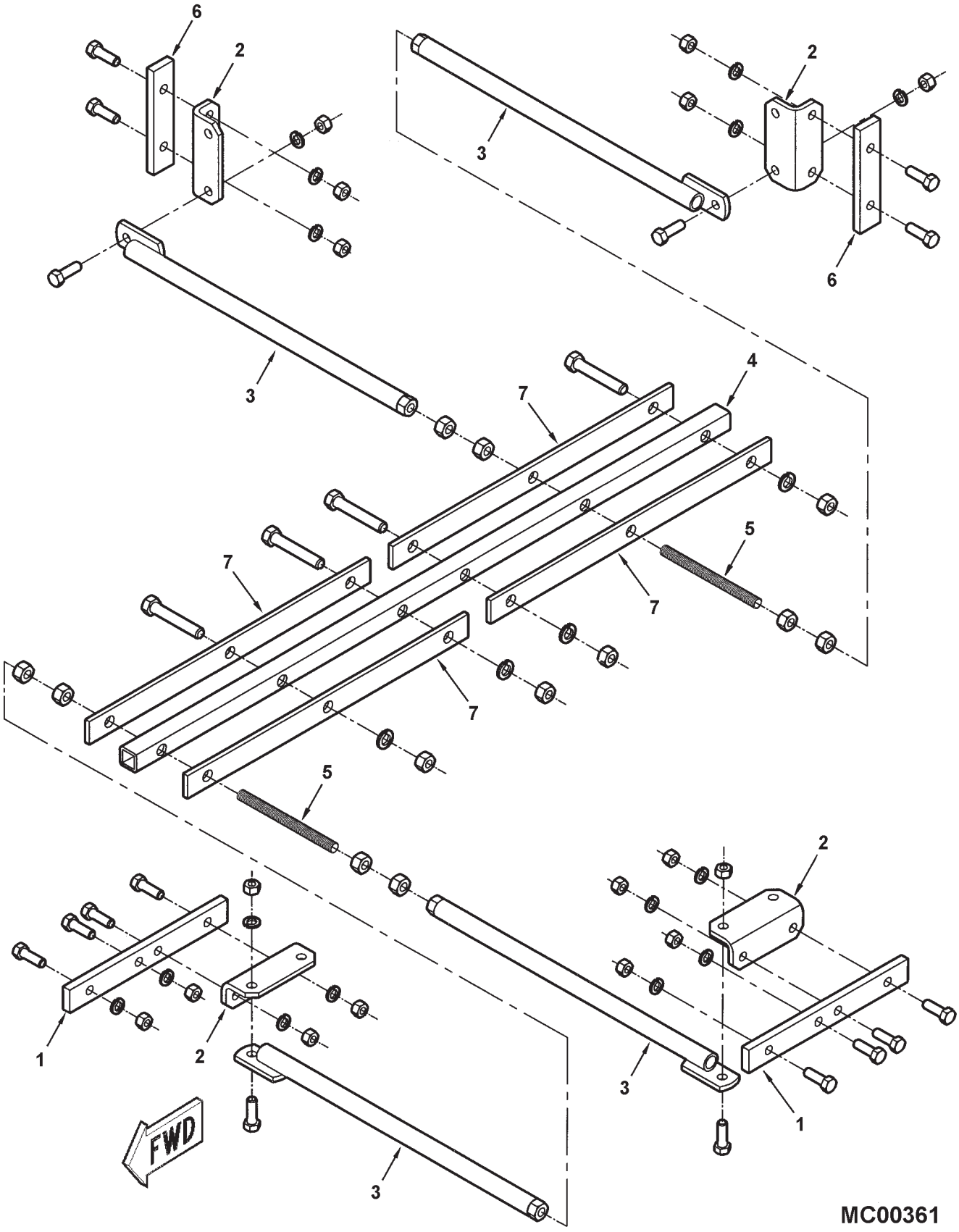

https://truckmanualshub.com/

ITEM	NUMBER	QTY	DESCRIPTION
1	71398761	2	BAR, REINFORCEMENT, FRONT
	703983	4	CAPSCREW, 1/2-13 X 1-3/4
	Y705046	4	LOCKWASHER, 1/2
	704031	4	NUT, HEX, 1/2-13
2	71398762	4	ANGLE, INNER SUPPORT
	703983	8	CAPSCREW, 1/2-13 X 1-3/4
	Y705046	8	LOCKWASHER, 1/2
	704031	8	NUT, HEX, 1/2-13
3	71398764	4	PIPE WLMT, SUPPORT
	701235	4	CAPSCREW, 1/2-13 X 1-1/2
	Y705046	4	LOCKWASHER, 1/2
	704031	4	NUT, HEX, 1/2-13
4	71398771	1	TUBE, STRUCTURAL
5	71398770	2	ROD, THREADED, 5/8-11 X 7.0
	70932665	8	NUT, HEX, 5/8-11
6	71398768	2	BAR, REINFORCEMENT, REAR
7	71398769	4	BAR, REINFORCEMENT
	7701550	4	CAPSCREW, 5/8-11 X 3-1/2
	70917373	4	LOCKWASHER, 5/8
	70932665	4	NUT, HEX, 5/8-11

MC00361
PR: 204

https://truckmanualshub.com/

ROTOR

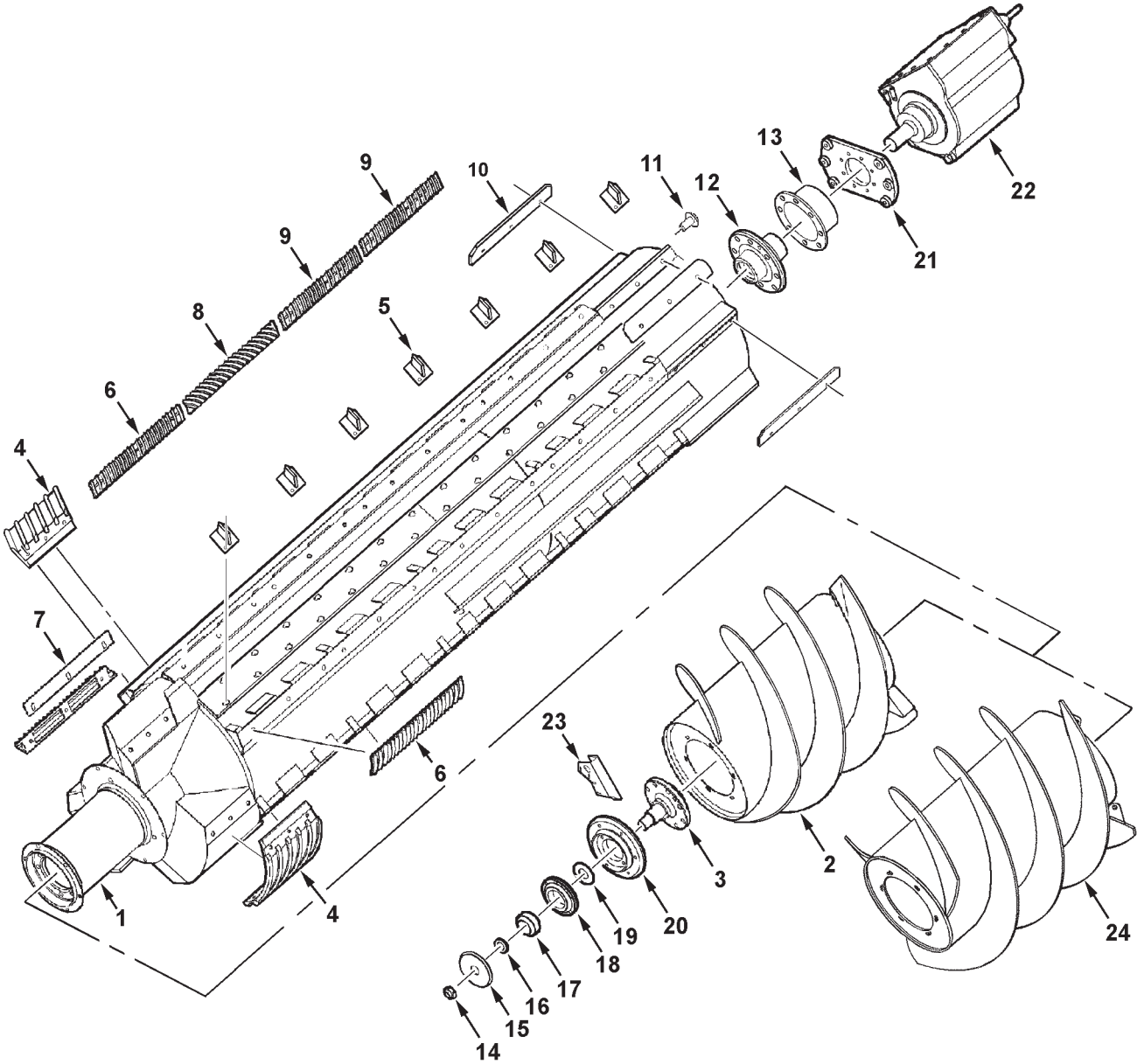

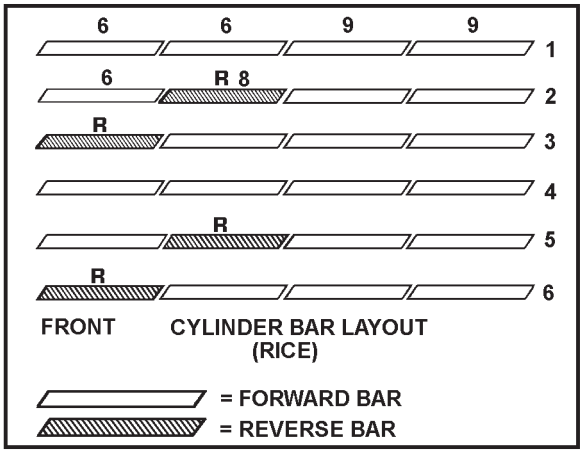

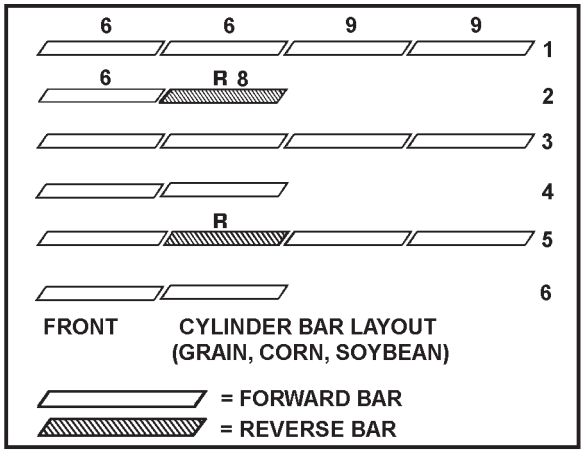

MC00251

https://truckmanualshub.com/

ITEM	NUMBER	QTY	DESCRIPTION
-	71410437	1	ROTOR ASY, REPAIR (GRAIN, CORN, SOYBEAN) (COMPLETE W/ FLIGHTING WLMT IT. 24)
-	71398271	1	KIT, ROTOR ASY (RICE & AUSTRALIA)
1	-----	X	ROTOR WLDMT, (NOT SERVICED)
2	2469711W91	1	FLIGHTING ASY, INLET (PRIOR S/N HN36101) (SERVICE W/71410439 & KIT *71412754)
	2469760W1	AR	FLIGHTING, WELD-ON (NON-HARDENED) (FOR 2469711W91)
	71399637	1	FLIGHTING ASY, INLET (EFF. S/N HN36101 THRU HP36999)(SERVICE W/ 71410439)
	71399641	AR	FLIGHTING, WELD-ON (NON-HARDENED) (FOR 71399637)(SERVICE W/ 71410441)
	70921210	15	CAPSCREW, 3/8-16 X 1 GR5
	70917378	15	WASHER, 3/8 WIDE
	70916965	15	LOCKWASHER, 3/8
	700704010	AR	SEAL, BLACK RTV 1473
3	101930M1	1	SHAFT, FRONT
	70921525	8	CAPSCREW, 1/2-13 X 1-3/4 GR8
4	2497273W91	1	ELEMENT, THRESHING (GR,CN,SBN)(SET OF 3)
	102835M91	1	ELEMENT, THRESHING (RICE, AUS)(SET OF 3)
	700706463	18	CAPSCREW, 3/8-16 X 1 GR8
	353771X1	18	WASHER, HEAVY HARD 3/8
5	2554761W91	21	IMPELLER WLMT
	7700461	42	BOLT, RD HD SHT SQ NK, 5/16-18 X 3/4
	Y704726	42	NUT, HEX FLNG, TOP LOCK, 5/16-18
	71378019	AR	KIT, 21 IMPELLERS, ROTOR (ORDER THRU DEALER CENTRAL)
6	71371520	10	CYLINDER BAR, .75 CHROME (GRN,CRN,SBN) QTY. 8 (RICE, AUSTRALIA)
7	71393107	AR	SHIM .0359
8	71371526	2	CYL BAR, REVERSE, .75 CHROME (GR,CN,SBN) QTY. 4 (RICE, AUSTRALIA)
9	71378577	6	CYL BAR, LONG, FWD .75 CHROME(GN,CN,SBN) QTY. 12 (RICE, AUSTRALIA)
	71378579	AR	CYL BAR, LONG, REVERSE, .75 CHROME (ALT)
	70926154	24	CAPSCREW, 1/2-13 X 1 GR8
	Y705046	24	LOCKWASHER, 1/2 REG
10	71395413	6	PLATE, SEPARATOR DISCHARGE QTY. 15 (RICE, AUST.)
	8701708	18	CAPSCREW, 1/2-13 X 1-1/4 GR8 QTY. 45 (RICE, AUST.)
	Y705046	18	LOCKWASHER, 1/2 QTY. 45 (RICE, AUST.)
	71399003	AR	KIT, SEPARATOR, 9 PADDLES (ORDER THRU DEALER CENTRAL)
11	373124X1	1	SCREW, TRUSS HEAD, 3/8-16 UNC X 3/4
12	71391752	1	HUB WLDMT, ROTOR DRIVE
13	102981M91	1	SHIELD ASSEMBLY
	70921525	8	CAPSCREW, 1/2-13 X 1-3/4 GR8
	353773X1	8	WASHER, HEAVY HARD 1/2

CONTINUED

https://truckmanualshub.com/

ROTOR

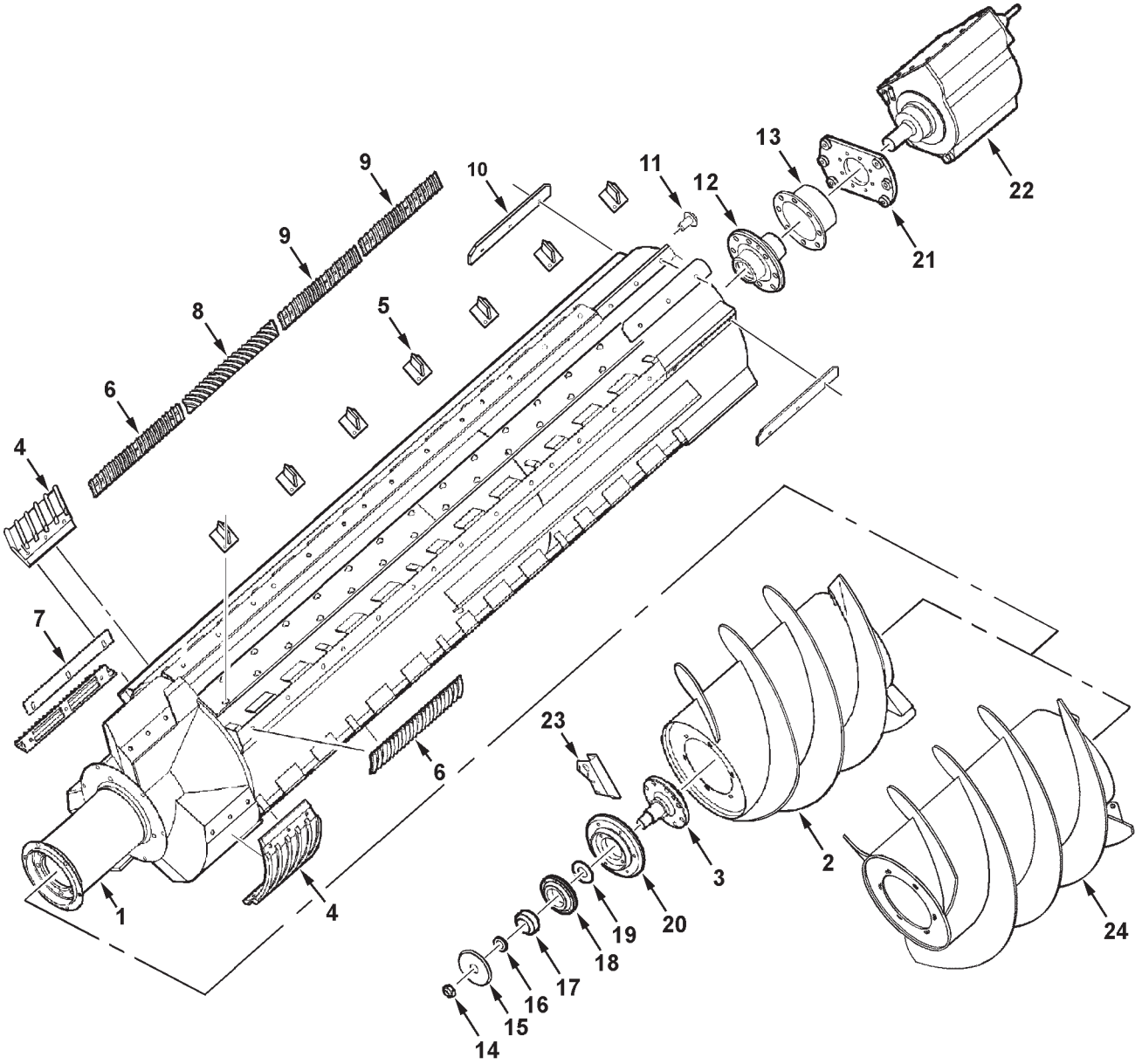

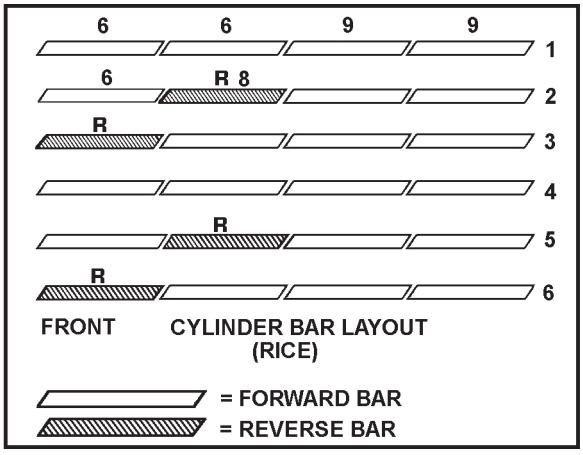

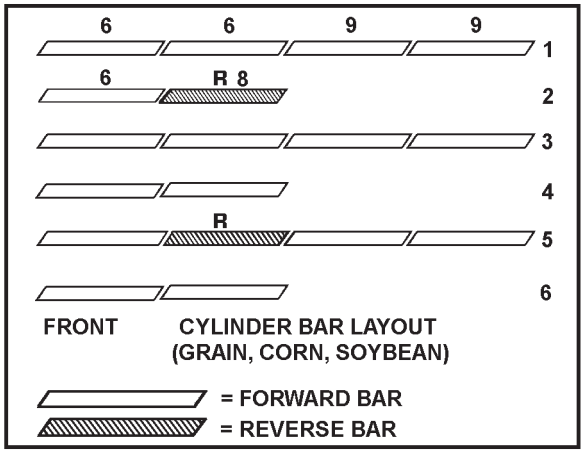

MC00251

https://truckmanualshub.com/

ITEM	NUMBER	QTY	DESCRIPTION
14	832088M1	1	NUT, HEX JAM, SPL, 1-1/2-12
15	112752W1	1	WHEEL, ROTOR SPEED
16	2489940W1	1	WASHER, ROTOR FRONT
17	22602X	1	BEARING, WIDE INNER RACE
18	71387470	1	HOUSING, FRONT BEARING, ROTOR
	701235	4	CAPSCREW, 1/2-13 X 1-1/2 GR5
	Y705046	4	LOCKWASHER, 1/2 REG
19	2489920W1	1	SHIELD, BEARING
20	2489330W1	1	MOUNT, BEARING
	70923114	6	CAPSCREW, 1/2-13 X 1 GR5
	Y705046	6	LOCKWASHER, 1/2 REG
21	71401912	1	PLATE, GEARBOX MOUNTING
	70919434	6	CAPSCREW, 5/8-11 X 2-3/4
	70918432	6	WASHER, 5/8
	700703922	6	NUT, HEX FLG TOP LOCK, 5/8-11
22	71387393	1	GEARBOX, 2-SPEED (PRIOR S/N HP36101)
			(SERVICE W/ 71401731 & 71412594
			KIT, COUPLING LUBE)
	71401731	1	GEARBOX, 2-SPEED (EFF. S/N HP36101)
	7703259	8	CAPSCREW, M12-1.75 X 50
	339369X1	8	LOCKWASHER, M12
23	71401326	1	BRKT, ROTOR SENSORS (EFF. S/N HN87101)
24	71410439	1	FLIGHT WLMT, INLET (EFF. S/N HR36101)
	71410441	AR	FLIGHTING, WELD-ON (NON-HARDENED)
			(FOR 71410439 OR 71399637)
	70923470	3	CAPSCREW, 3/8-16 X 1-1/2, GR8
	353771X1	3	WASHER, HARD, 3/8
-	71412754	AR	*KIT, MOUNTING OF FLIGHT WLMT(TO INSTALL
			FLIGHT WLMT 71410439 ON ALL S/N
			HM36--- & PRIOR GRAIN/CORN ROTORS)
			(NOT REQ'D FOR 9790 RICE ROTORS)
			(ORDER THRU DLR CENTRAL) INCLUDES:
	71401418	1	SPACER DISC
	71412755	3	SPACER, FLIGHT WLMT
	700708848	3	CAPSCREW, 3/8-16 X 1-1/2 GR8
	353771X1	3	WASHER, 3/8, HARD

MC00251
PR: 206

https://truckmanualshub.com/

ROTOR DRIVE
GEARBOX SHIFT LINKAGE

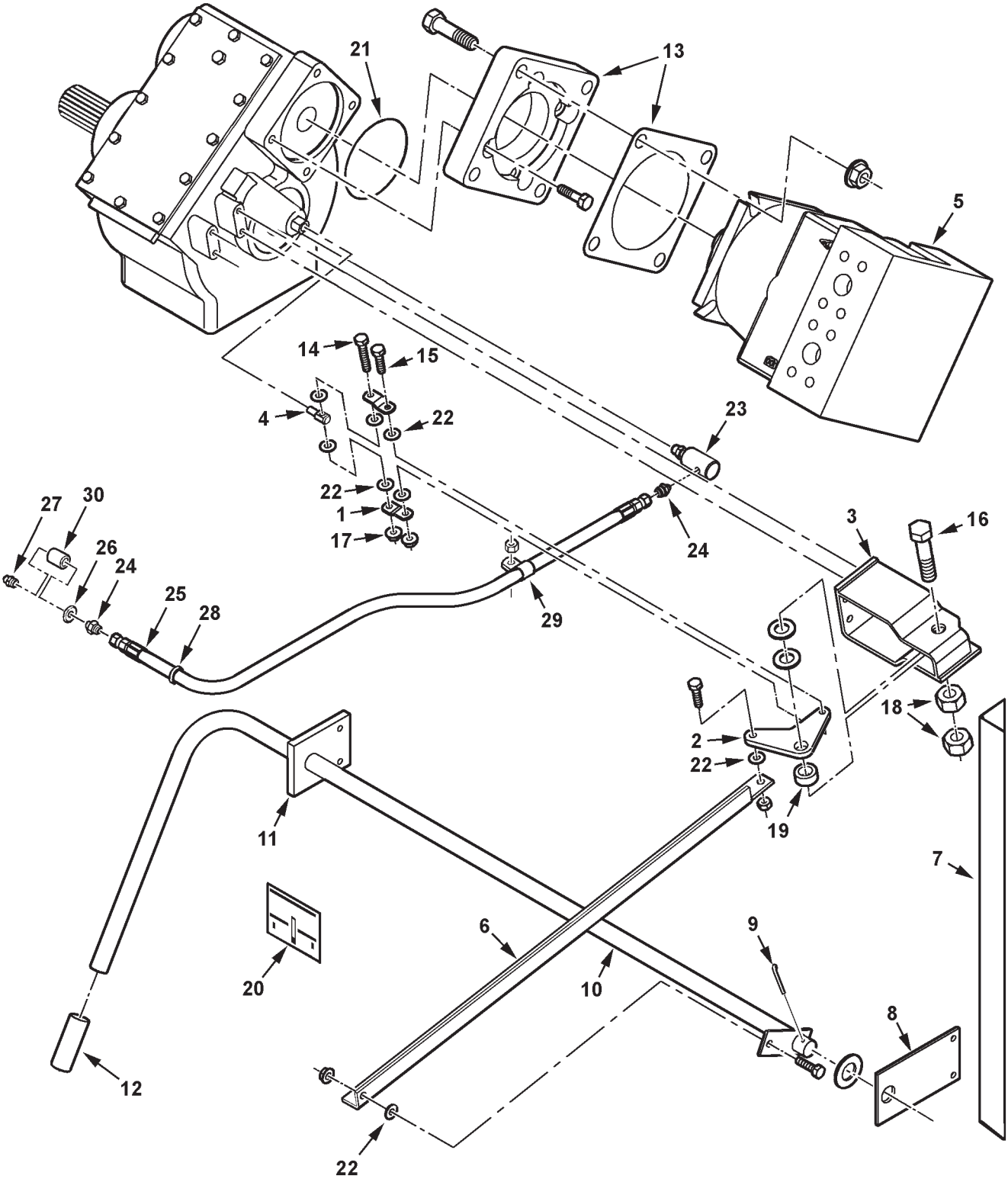

MC00252

https://truckmanualshub.com/

ITEM	NUMBER	QTY	DESCRIPTION
1	71391261	2	LINK, SHIFT
2	71391643	1	BELLCRANK
3	71388829	1	PIVOT BRACKET ASY
	700708349	4	CAPSCREW, M10-1.5 X 25 CL8.8
	70917378	4	WASHER, 3/8 WIDE
4	71391660	1	SCREW, METRIC SPECIAL, M12-1.75
5	71396258	1	MOTOR, HYDRO ROTOR (SEE BREAKDOWN)
	7701766	4	CAPSCREW, 3/4-10 X 3-1/4 GR5
	700703923	4	NUT, HEX FLG TOP LOCK, 3/4-10
6	71391257	1	LINK, GEARSHIFT
	70921210	2	CAPSCREW, 3/8-16 X 1.0 GR5
	Y704734	2	NUT, HEX FLG TOP LOCK, 3/8-16
7	71388843	1	ANGLE, SUPPORT
	70921333	2	CAPSCREW, 5/16-18 X 1.0 GR5
	70917356	2	LOCKWASHER, 5/16 REG
	70917372	2	NUT, 5/16-18 REG
8	71388844	1	PLATE, REAR BEARING
	70921333	2	CAPSCREW, 5/16-18 X 1.0 GR5
	70917356	2	LOCKWASHER, 5/16 REG
	70917372	2	NUT, 5/16-18 REG
9	70922002	1	COTTER PIN, 3/16 X 2 LG
10	71388833	1	CRANK ASSEMBLY
	705681	1	WASHER, FLAT, 1.0 SAE
11	71391270	1	PLATE, FRONT BEARING
	70921977	2	CAPSCREW, 5/16-18 X 1-1/4 GR5
	70917642	2	WASHER, 5/16 WIDE
	70917356	2	LOCKWASHER, 5/16 REG
	70917372	2	NUT, 5/16-18 REG
12	71379254	1	GRIP, HANDLE
13	71388052	1	ADAPTER, ROTOR MOTOR
	71389765	1	GASKET, ROTOR MOTOR
	700708351	4	CAPSCREW, M12-1.75 X 30 CL8.8
14	70922127	1	CAPSCREW, 5/16-18 X 1-3/4 GR5
	70917642	2	WASHER, 5/16 WIDE
15	70921977	1	CAPSCREW, 5/16-18 X 1-1/4 GR5
16	70924763	1	CAPSCREW, 3/4-10 X 3-1/2 GR5
	70918269	2	WASHER, 3/4 NARROW
17	Y704726	2	NUT, HEX FLG TOP LOCK, 5/16-18
18	70913160	2	NUT, 3/4-10 REG
19	51871M1	1	SPACER
20	71407700	1	DECAL, IMPORTANT, ROTOR HI-LO (REPLACES DECAL 71368812)
21	70925785	1	O-RING, 4.987 X .103 (VITON)
22	71391654	6	WASHER, NYLON FRICTION

CONTINUED

https://truckmanualshub.com/

ROTOR DRIVE
GEARBOX SHIFT LINKAGE

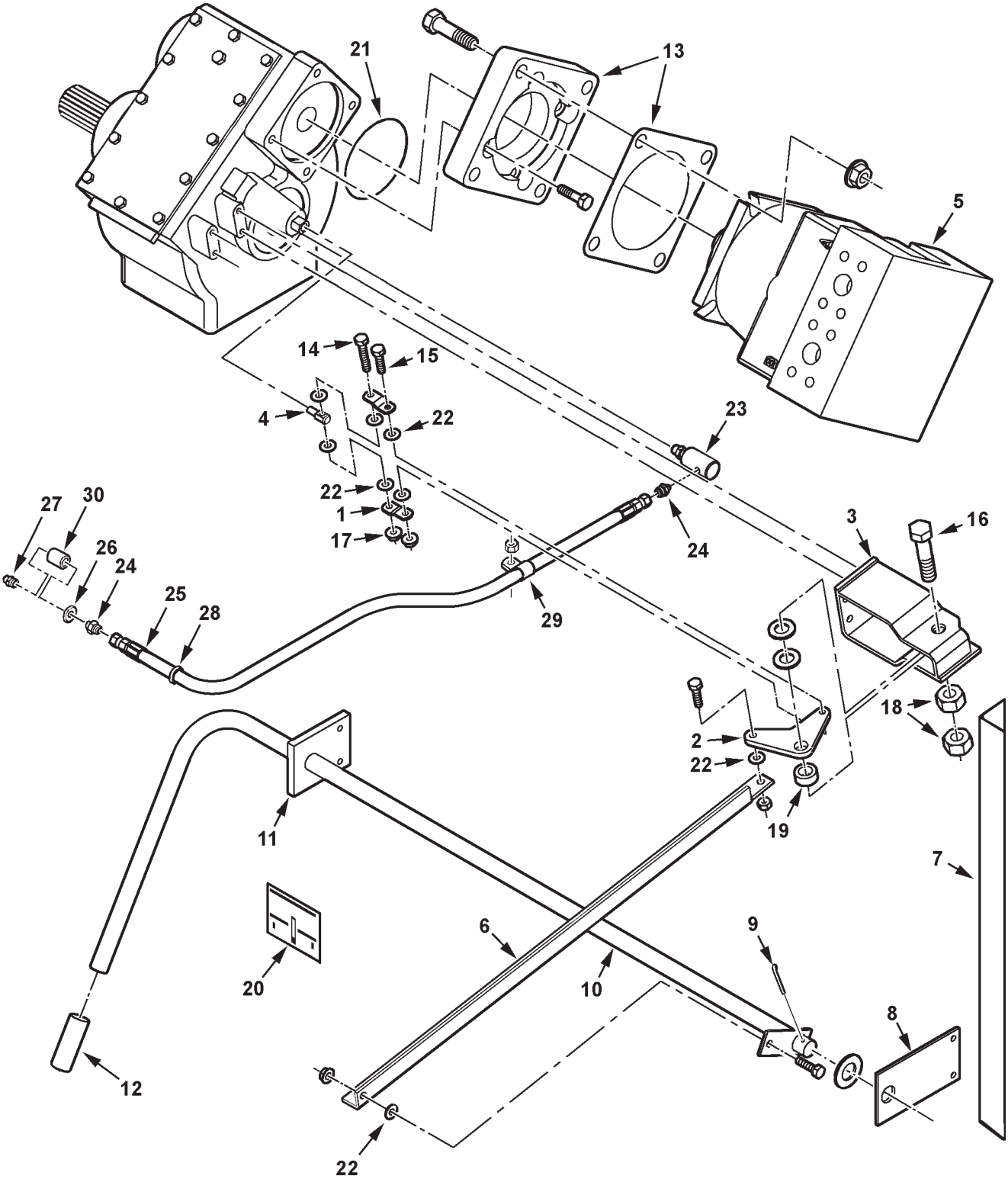

MC00252

https://truckmanualshub.com/

ITEM	NUMBER	QTY	DESCRIPTION
23	71332011	1	* UNION, ROTATING, 9/16-18 ORB X 1/8 NPTF FEM. (EFF. S/N HP36101)
	70921885	1	O-RING, .078 X .468 ID
24	70919171	2	* CONN. STR MALE, 7/16-20 JIC X 1/8 NPTF
25	71401753	1	* HOSE ASY, GEARBOX LUBE
26	Y705533	1	* WASHER, 3/8, HARD
27	70914767	1	LUBE FTG, STRAIGHT, 1/8 NPTF FEM (PRIOR S/N HR36101)
	70915276	1	* LUBE FTG, 90 DEG, 1/8 PTF SPL SHORT (EFF. S/N HR36101)
28	827758	1	GROMMET,RUBBER, 1 ID (PRIOR S/N HR36101)
29	70925617	3	* CLAMP, .50 TUBE X .406 HOLE
	70916950	2	* NUT, 3/8-16 REG
30	70922862	1	* COUPLING, PIPE, 1/8-27 NPTF FEM (EFF. S/N HR36101)
-	71412594	AR	KIT, COUPLING LUBE (INCLUDES * ITEMS)

MC00252
PR: 208

https://truckmanualshub.com/

ROTOR DRIVE
2-SPEED GEARBOX

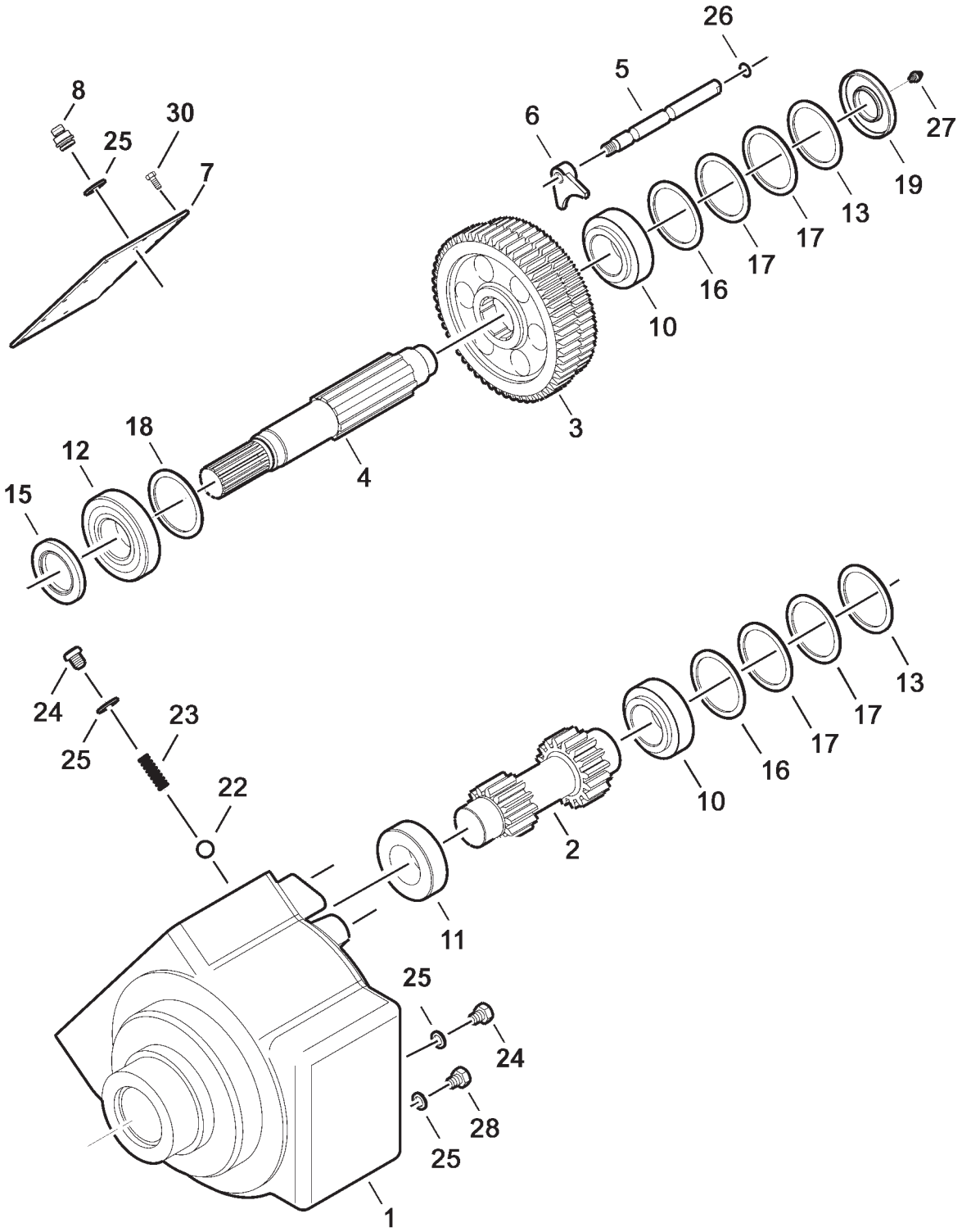

https://truckmanualshub.com/

ITEM	NUMBER	QTY	DESCRIPTION
-	71387393	1	GEARBOX, 2-SPEED (PRIOR S/N HP36101) (SERVICE W/ 71401731 & 71412594 KIT, COUPLING LUBE)
-	71401731	1	GEARBOX, 2-SPEED (EFF. S/N HP36101)
1	71392886	1	GEAR CASE
2	71392887	1	SHAFT, GEAR (13 & 16 TEETH)
3	71392888	1	GEAR (53 & 56 TEETH)
4	71392889	1	SHAFT (LUBE FTG STYLE)(PRIOR S/N HP36101
	71401730	1	SHAFT(REMOTE LUBE STYLE)(EFF S/N HP36101
5	71392890	1	RAIL, SHIFT
6	71392891	1	FORK, SHIFT
7	71392892	1	COVER PLATE
	79021649	AR	SEALANT/GASKET (RTV SILICONE-CLEAR)
8	71391263	1	PLUG, BREATHER M16 X 1.5
10	71392894	2	BEARING, TAPER-ROLLER, CUP & CONE
11	71392895	1	BEARING, TAPER-ROLLER, CUP & CONE
12	71392896	1	BEARING, TAPER-ROLLER, CUP & CONE
13	71392897	2	RING, RETAINING, INTERNAL
15	71392898	1	SEAL (A60 X 95 X 10)
16	71392899	2	SHIM (90 X 100 X 2, 0)
17	71392900	4	SHIM (90 X 100 X 0, 1)
18	71394126	1	WASHER, SPACER
19	71394127	1	SEAL (AS45 X 100 X 10)
22	71394128	1	BALL (12mm)
23	71394129	1	SPRING, COMPRESSION
24	71394130	4	PLUG, HEX SOCKET
25	71394131	5	RING, GASKET (COPPER)
26	71394132	1	O-RING, SEALING
27	71394133	1	LUBE FITTING (M8 X 1)(PRIOR S/N HP36101)
28	71394134	1	PLUG, HEX SOCKET (MAGNETIC)
30	700708359	12	CAPSCREW, HEX (M8-1.25 X 20 CL8.8)

71387393
PR: 210

https://truckmanualshub.com/

MOTOR, HYDROSTATIC ROTOR

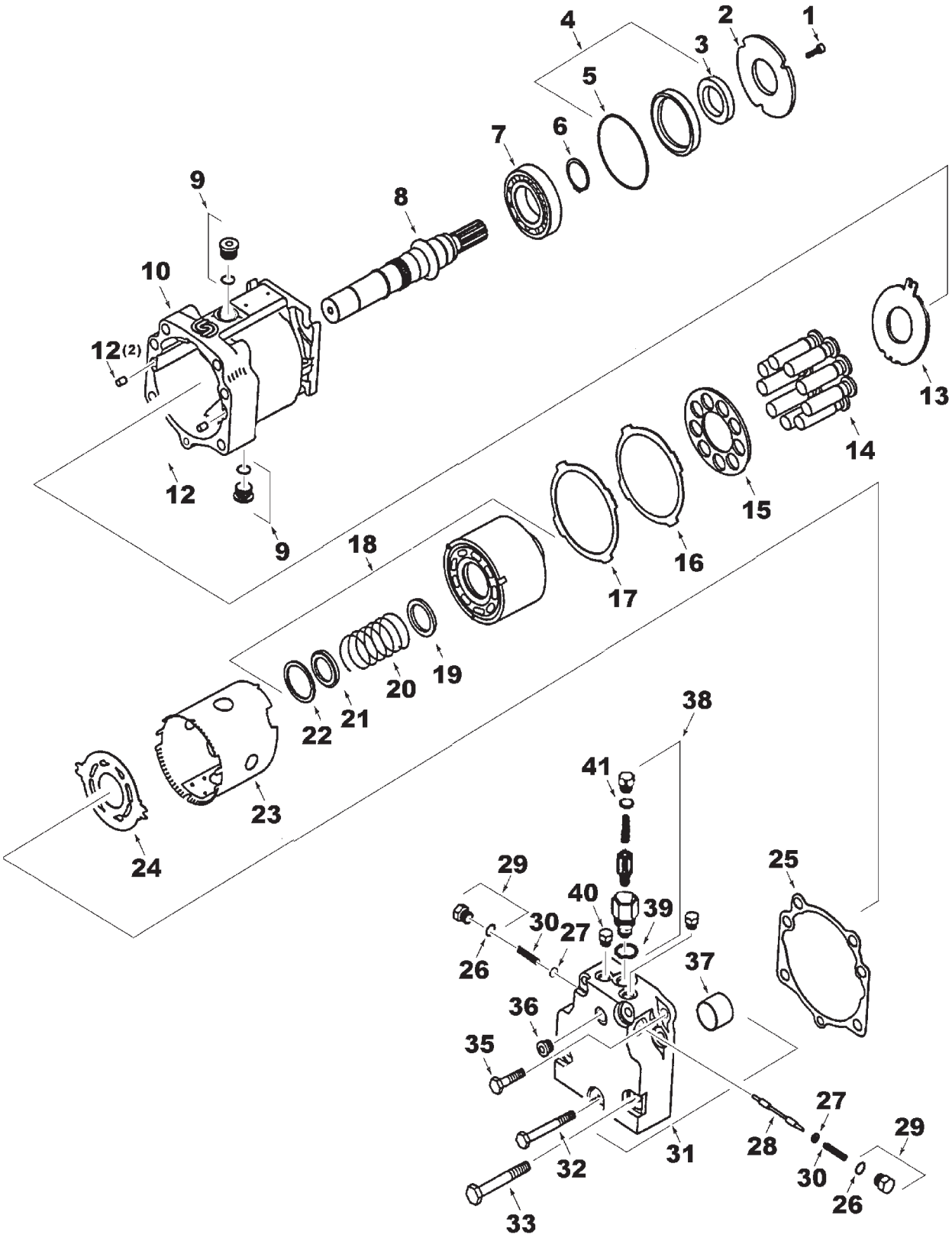

MC00254

https://truckmanualshub.com/

ITEM	NUMBER	QTY	DESCRIPTION
-	71396258	1	MOTOR, FIXED, 130cc
-	71396178	AR	KIT, SEAL OVERHAUL
1	71396177	3	SCREW, SOCKET HEAD, M6 X 20
2	71396176	1	PLATE, RETAINER
3	1077666M1	2	SEAL
4	71396174	1	SEAL CARRIER ASY
5	71396175	1	O-RING
6	71396173	1	RING, RETAINING
7	71396171	1	BEARING, ROLLER
8	71396170	1	SHAFT, 23T SPLINE
9	71396144	2	PLUG
	70921214	2	O-RING, .116 X 1.171 ID, 90 DUR.
10	71396143	1	HOUSING, FIXED
12	700702137	2	PIN
13	71396158	1	PLATE, THRUST
14	71396151	9	PISTON, WELDED
15	71396152	1	RETAINER, SLIPPER
16	71396153	1	GUIDE RETAINER, SLIPPER
17	71396154	1	SHIM, SLIPPER GUIDE RETAINER
18	71396146	1	CYLINDER BLOCK ASY. (INCL ITEMS 19-22)
19	71396147	1	SEAT, SPRING
20	71396148	1	SPRING
21	71396149	1	RETAINER, SPRING
22	71396150	1	RING, RETAINING
23	71396155	1	TUBE, HOLDDOWN
24	71396156	1	VALVE PLATE
25	71396159	2	GASKET, END CAP
26	AG133717	4	O-RING
27	71396166	2	GUIDE, SPRING
28	71396165	1	SPOOL, SHUTTLE
29	71396168	2	PLUG, SPECIAL
30	71396167	2	SPRING
31	71396163	1	END CAP ASY., TWIN PORTS
32	71396162	1	SCREW
33	71396160	4	SCREW
35	71396161	2	SCREW
36	700725864	2	PLUG
	70928488	1	O-RING .078 X .468 ID, 90 DUR, VITON
37	71396164	1	JOURNAL BEARING
38	71396169	1	POPPET ASY., CHARGE RELIEF
39	70928486	1	O-RING .097 X .755 ID, 90 DUR, VITON
40	71374831	2	PLUG
	70928488	1	O-RING .078 X .468 ID, 90 DUR, VITON
41	70928488	1	O-RING .078 X .468 ID, 90 DUR, VITON

MC00254
PR: 212

https://truckmanualshub.com/

JACKSHAFT DRIVE

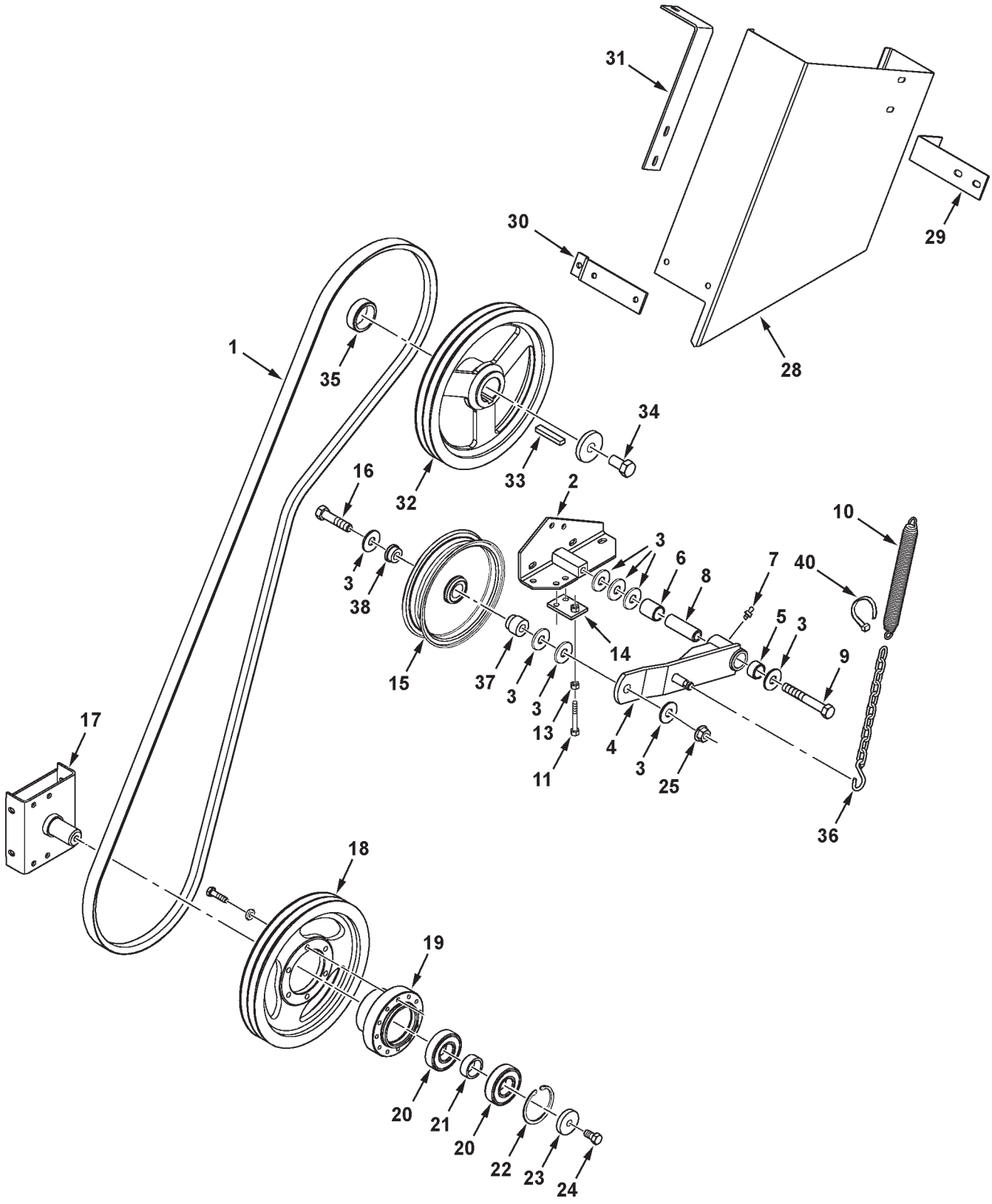

MC00044

https://truckmanualshub.com/

ITEM	NUMBER	QTY	DESCRIPTION
1	227455M1	1	BELT - PRIMARY DR, SPREADER
	71385837	1	BELT-PRIMARY, CHOPPER(PRIOR S/N HR36101)
	71406361	1	BELT-PRIMARY, CHOPPER (EFF. S/N HR36101)
2	101098M91	1	PIVOT STAND WLMT, IDLER
	70920415	4	CAPSCREW, 3/8-16 X 1-1/4
	70917378	4	WASHER, PLAIN, 3/8
	Y704734	5	NUT, HEX FLANGE TOP LOCK, 3/8-16
3	70918432	6	WASHER, 5/8, WIDE (QTY 6, PRIOR S/N HR36101)
4	71406362	1	ARM ASSEMBLY, IDLER JACKSHAFT
5	1689170W1	2	BUSHING, 1 X 1.24 X .75 LG (WAS QTY.1)
6	1742670W1	1	BUSHING, 1 X 1.24 X 1.50 LG (PRIOR S/N HP36---, MID-PROD'N RUN)
7	70914465	1	LUBE FITTING, 1/8-27 NPT, SPL EXT SHORT
8	2441490W1	1	SLEEVE, 41/64 X 63/64 X 3-1/16
9	70925704	1	CAPSCREW, 5/8-11 X 4-1/2
10	101276M2	1	SPRING, IDLER TENSIONER
11	70931643	1	CAPSCREW, 3/8-16 X 3
13	70916950	1	NUT, 3/8-16 REG
14	2628221W91	1	STOP PLATE WLMT
	70921210	2	CAPSCREW, 3/8-16 X 1
	70917378	2	WASHER, WIDE, 3/8
	Y704734	2	NUT, HEX FLANGE TOP LOCK, 3/8-16
15	2553560W1	1	IDLER, FLAT, 8.0 DIA (SPREADER)
	2553560W1	1	IDLER, FLAT, 8.0 DIA (CHOPPER) (PRIOR S/N HR36101)
	71309767	1	IDLER, FLAT, 8.0 DIA (CHOPPER) (EFF. S/N HR36101)
16	70919434	1	CAPSCREW, 5/8-11 UNC X 2 3/4
17	101100M91	1	SUPPORT WLMT, JACKSHAFT
	70921965	4	CAPSCREW, 3/8-16 X 3/4
	70917378	4	WASHER, PLAIN, 3/8
	Y704734	4	NUT, HEX FLNG TOP LOCK, 3/8-16
18	2628310W1	1	SHEAVE, SPREADER DRIVEN, JACKSHAFT
	71388748	1	SHEAVE, CHOPPER DRIVEN, JACKSHAFT (PRIOR S/N HR36101)
	70923701	6	CAPSCREW, 3/8-16 X 2 (SPREADER)
	70921324	6	CAPSCREW, 3/8-16 X 3-3/4 (CHOPPER)
	70916965	6	LOCKWASHER 3/8
	70916950	6	NUT, 3/8-16
	71406328	1	SHEAVE, CHOPPER, DRIVEN(EFF.S/N HR36101)
	339376X1	6	LOCKWASHER, M10
	3009495X1	6	CAPSCREW, M10-1.5 X 40 CL8.8
19	71387515	1	HUB, JACKSHAFT (SPREADER)
	71387515	1	HUB,JACKSHAFT,CHOPPER(PRIOR S/N HR36101)
	71406330	1	HUB,JACKSHAFT,CHOPPER (EFF. S/N HR36101)
20	354920X1	2	BEARING, BALL
21	2619180W1	1	SPACER, BEARING
22	70925997	1	RING, INTERNAL SNAP, 3-17/32 X 7/64
23	2485470W1	1	WASHER, 17/32 X 2 X 3/8
24	70923114	1	CAPSCREW, 1/2-13 UNC X 1
25	700703922	1	NUT, HEX FLANGE TOP LOCK, 5/8-11

CONTINUED

https://truckmanualshub.com/

JACKSHAFT DRIVE

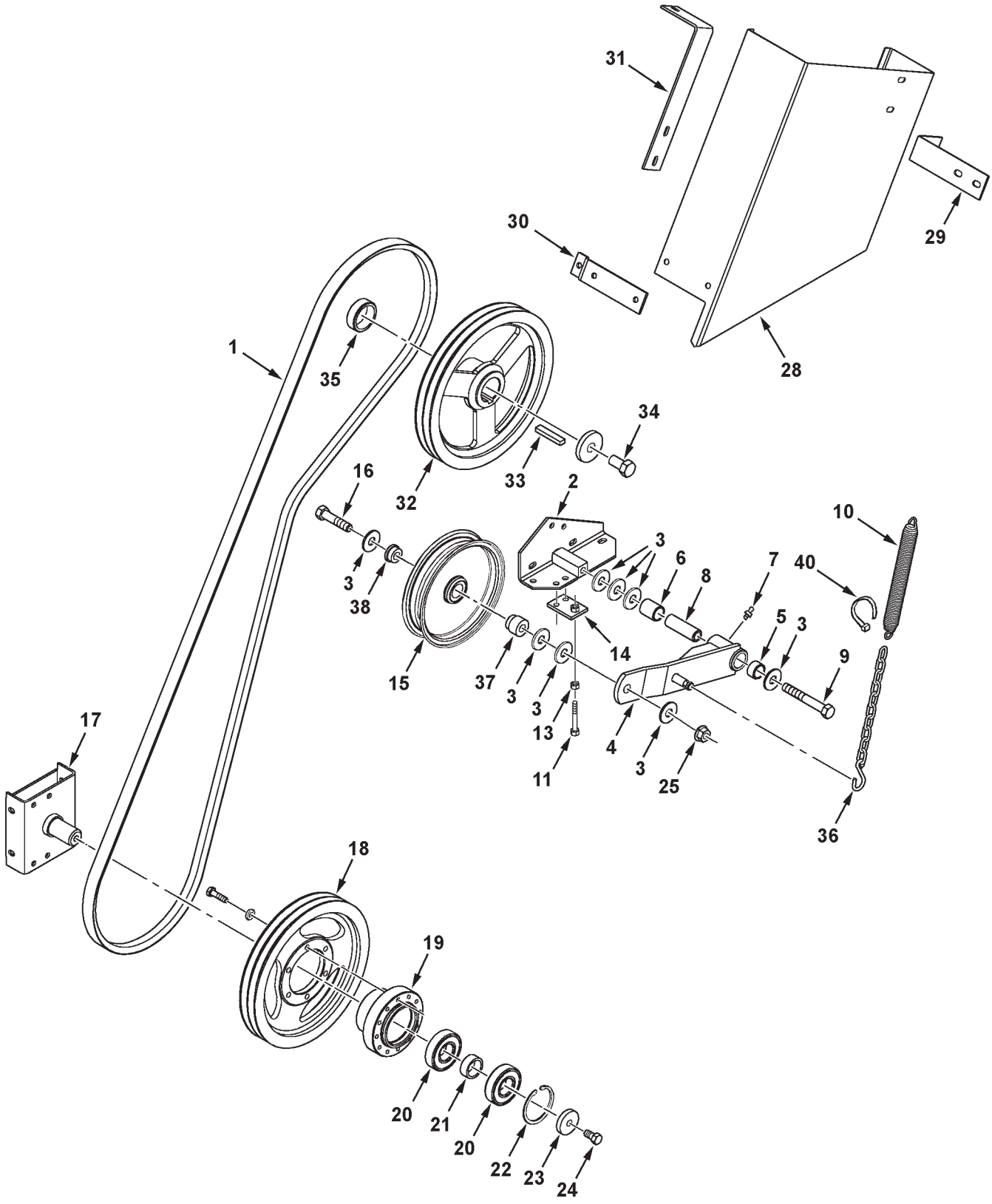

MC00044

https://truckmanualshub.com/

ITEM	NUMBER	QTY	DESCRIPTION
28	101074M2	1	SHIELD WLMT (PRIOR S/N HR36101)
29	101075M1	1	BRACKET, SHIELD SUPPT(PRIOR S/N HR36101)
	70921210	4	CAPSCREW, 3/8-16 X 1
	70917378	4	WASHER, PLAIN, 3/8
	70916965	4	LOCKWASHER, 3/8
	70916950	4	NUT, HEX, 3/8-16
30	102934M1	1	BRACKET (PRIOR S/N HR36101)
31	2637890W1	1	BRACKET, SHIELD (PRIOR S/N HR36101)
32	2503350W1	1	SHEAVE, SPREADER DRIVER, MAIN CNTRSHFT
	71385836	1	SHEAVE, CHOPPER DRIVER, MAIN CNTRSHFT (PRIOR S/N HR36101)
	71406327	1	SHEAVE, CHOPPER DRIVER (EFF S/N HR36101)
33	Y61879	1	KEY, SQUARE, 1/2 X 2-1/2 LG
34	70921169	1	CAPSCREW, 3/4-16 X 1-1/2 GR8
	104751W1	1	WASHER, .78 ID X 2.5 OD X 3/8
35	2619380W1	1	SPACER, MAIN COUNTERSHAFT
36	2630100W2	1	CHAIN, IDLER TENSIONER
37	71353127	1	SPACER, IDLER,CHOPPER (EFF. S/N HR36101) (NOT USED W/ SPREADER)
38	71312602	1	SPACER, IDLER,CHOPPER (EFF. S/N HR36101) (NOT USED W/ SPREADER)
40	70925094	AR	TIE, NYLON LOCKING, .184 X 7 LG

MC00044
PR: 214

https://truckmanualshub.com/

STRAW CHOPPER DRIVE

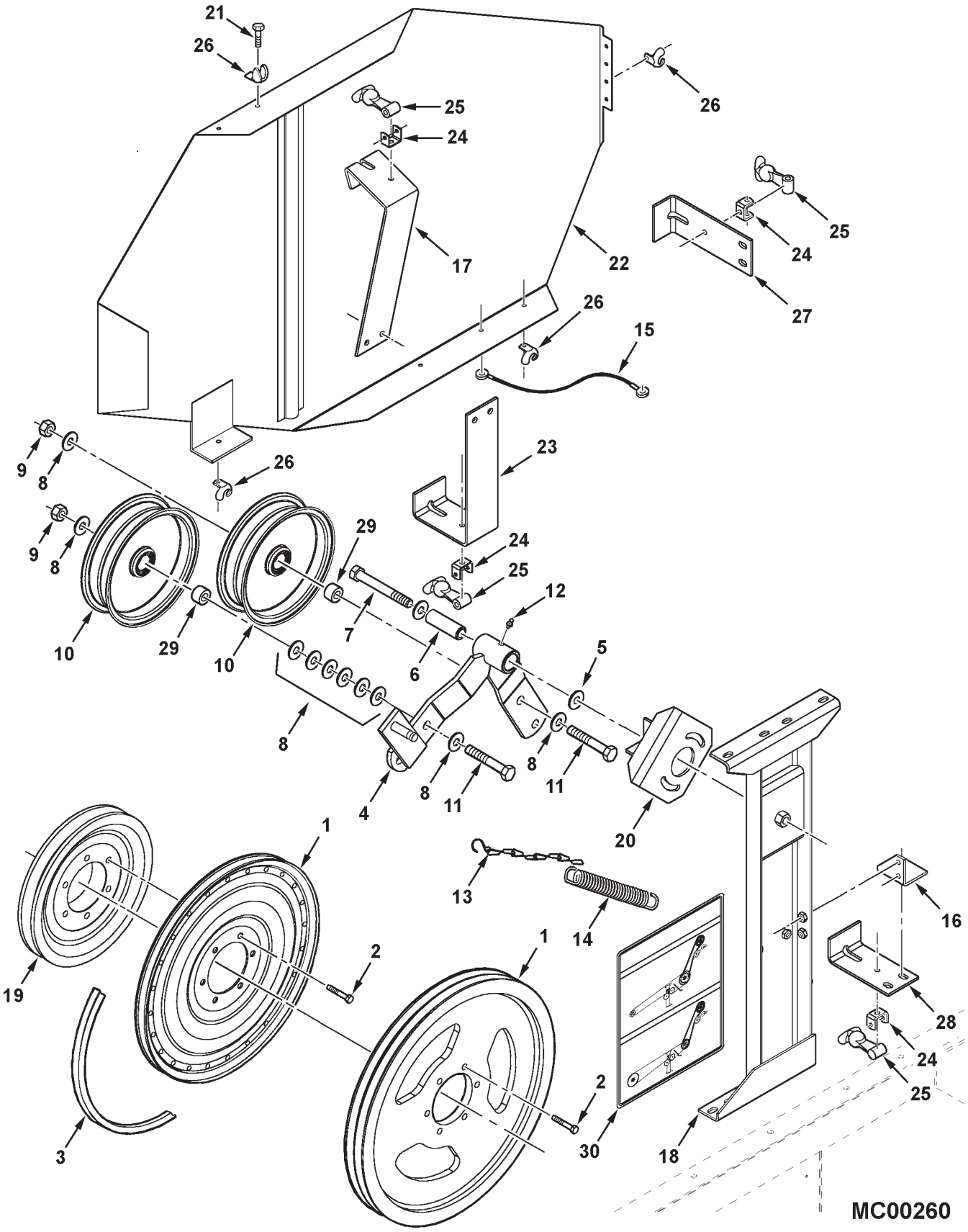

https://truckmanualshub.com/

ITEM	NUMBER	QTY	DESCRIPTION
1	2628340W1	1	SHEAVE, DRIVER, 17.5 DIA (HIGH SPEED) (PRIOR S/N HR36101)
	71406332	1	SHEAVE, DRIVER, 17.5 DIA (HIGH SPEED) (EFF. S/N HR36101)
	339376X1	6	LOCKWASHER, M10
	3009495X1	6	CAPSCREW, M10-1.5 X 40 CL8.8
2	70921324	6	CAPSCREW, 3/8-16 X 3-3/4 (PRIOR HR36101)
3	71388712	1	BELT, SECONDARY DRIVE(PRIOR S/N HR36101)
	71406339	1	BELT, SECONDARY DRIVE (EFF. S/N HR36101)
4	71387307	1	ARM ASY, W/ BUSHINGS
	1689170W1	2	BUSHING, 1 ID X 3/4 LG
5	70923104	1	WASHER, .656 X 2.125 X .180
6	2441490W1	1	SLEEVE, 41/64 X 63/64 X 3-1/16
7	70925705	1	CAPSCREW, 5/8-11 X 5 GR5
	70918432	1	WASHER, WIDE, 5/8
8	70918432	17	WASHER, WIDE, 5/8 (PRIOR S/N HR36101)
9	700703922	2	NUT, HEX FLANGE TOP LOCK, 5/8-11
10	31-2455700	2	IDLER, FLAT, 8 3/4 OD
11	70925702	2	CAPSCREW, 5/8-11 X 3-1/2 GR5
12	70914465	1	LUBE FITTING, 1/8-27 PTF SPL. EXTR SHORT
13	2630100W2	1	CHAIN ASY, CHOPPER SPRING
	70925094	1	TIE, NYLON LOCKING, .184 X 7.3
14	101276M2	1	SPRING
15	112942W1	1	TETHER STRAP, 28IN.
16	71387845	1	BRACKET, SHIELD SUPPORT
	70921210	2	CAPSCREW, 3/8-16 X 1
	70916965	2	LOCKWASHER, 3/8
17	71388256	1	BRACKET, SHIELD SUPPORT
	70921210	2	CAPSCREW, 3/8-16 X 1
	Y704734	2	NUT, HEX FLNG TOP LOCK, 3/8-16
18	71387848	1	STAND WLMT, IDLER (PRIOR S/N HR36101) (SERVICE W/ 71406368)
	71406368	1	STAND WLMT, IDLER (EFF. S/N HR36101) (REQUIRES 71406364 STOP WLMT,IT. 20)
	70921969	2	CAPSCREW, 3/8-16 X 1-1/2
	70921210	2	CAPSCREW, 3/8-16 X 1
	70917378	1	WASHER, WIDE 3/8
	Y704734	4	NUT, HEX FLANGE TOP LOCK, 3/8-16
19	103316M1	1	SHEAVE, DRIVER(LOW SPEED)(PRIOR HR36101)
	71406333	1	SHEAVE, DRIVER, 9.4 DIA (LOW SPEED) (EFF. S/N HR36101)
20	101411M91	1	STOP WLMT, IDLER (PRIOR S/N HR36101)
	70921210	2	CAPSCREW, 3/8-16 X 1
	353771X1	2	WASHER, HEAVY HARD 3/8
	70916965	2	LOCKWASHER, 3/8
	71406364	1	STOP WLMT, IDLER (EFF. S/N HR36101)
	70923114	2	CAPSCREW, 1/2-13 X 1 GR5
	Y705046	2	LOCKWASHER, 1/2
	705541	2	WASHER, HARD, 1/2
21	700705088	4	SCREW, PHILLIPS HD MACH, 10-24 X 3/4
	3725830M1	4	LOCKNUT, HEX SERR FLANGE, 10-24
22	71388736	1	SHIELD ASSEMBLY

CONTINUED

https://truckmanualshub.com/

STRAW CHOPPER DRIVE

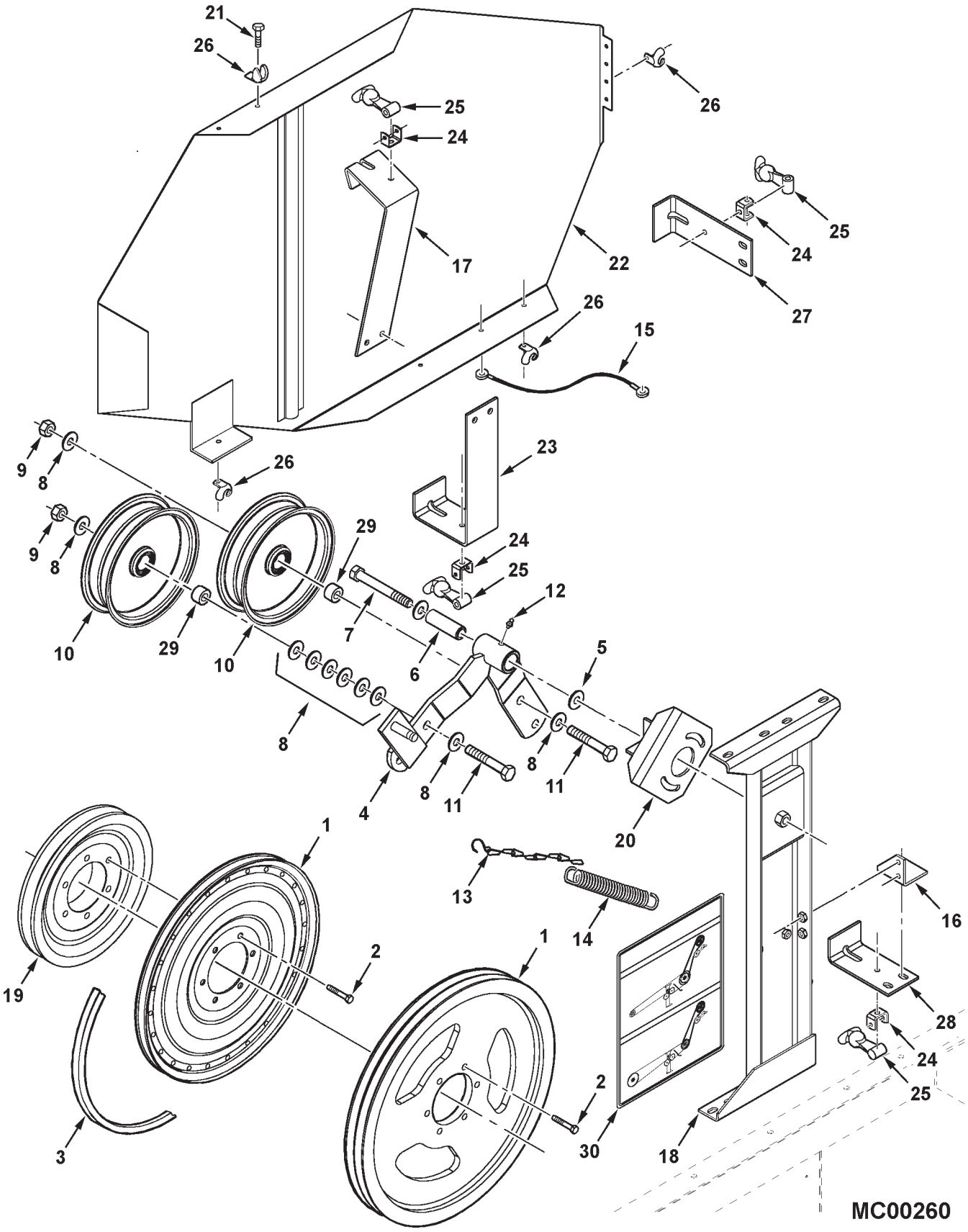

https://truckmanualshub.com/

ITEM	NUMBER	QTY	DESCRIPTION
23	101069M1	2	BRACKET
	70921210	2	CAPSCREW, 3/8-16 X 1
	Y704734	2	NUT, HEX FLANGE TOP LOCK, 3/8-16
24	1787520W1	4	BRACKET, LATCH ANCHOR
	70921332	2	CAPSCREW, 5/16-18 X 3/4 GR5
	Y704726	2	NUT, HEX FLANGE TOP LOCK, 5/16-18
25	776682	4	LATCH, RUBBER
	Y703140	4	CAPSCREW, 1/4-20 X 1-3/4
	1703354	4	NUT, HEX FLANGE TOP LOCK, 1/4-20
26	8722910	4	CATCH, SHIELD
27	101065M1	1	BRACKET, SUPPORT
	70921210	2	CAPSCREW, 3/8-16 X 1
	Y704734	2	NUT, HEX FLANGE TOP LOCK, 3/8-16
28	101066M1	1	BRACKET, SUPPORT
	70921210	2	CAPSCREW, 3/8-16 X 1
	Y704734	2	NUT, HEX FLANGE TOP LOCK, 3/8-16
29	2451440W1	2	SPACER, IDLER (EFF. S/N HR36101)
30	71408765	1	DECAL, CHOPPER DRIVE (EFF. S/N HR36101)
-	71400071	1	KIT, STRAW CHOPPER, REDEKOP (CONVERSION OF SPREADER TO CHOPPER) (FIELD INSTALLED)(PRIOR S/N HR36101)
-	71413221	1	KIT, STRAW CHOPPER, REDEKOP (CONVERSION OF SPREADER TO CHOPPER) (FIELD INSTALLED)(EFF. S/N HR36101) (ORDER THRU DEALER CENTRAL)
-	71413228	1	KIT, DRIVE (NO CHOPPER/SPREADR OPTION ON COMBINE)(FIELD INSTALLED)(EFF. S/N HR36101)(ORDER THRU DEALER CENTRAL)

MC00260
PR: 216

https://truckmanualshub.com/

STRAW CHOPPER DRIVE KIT
HEAVY DUTY

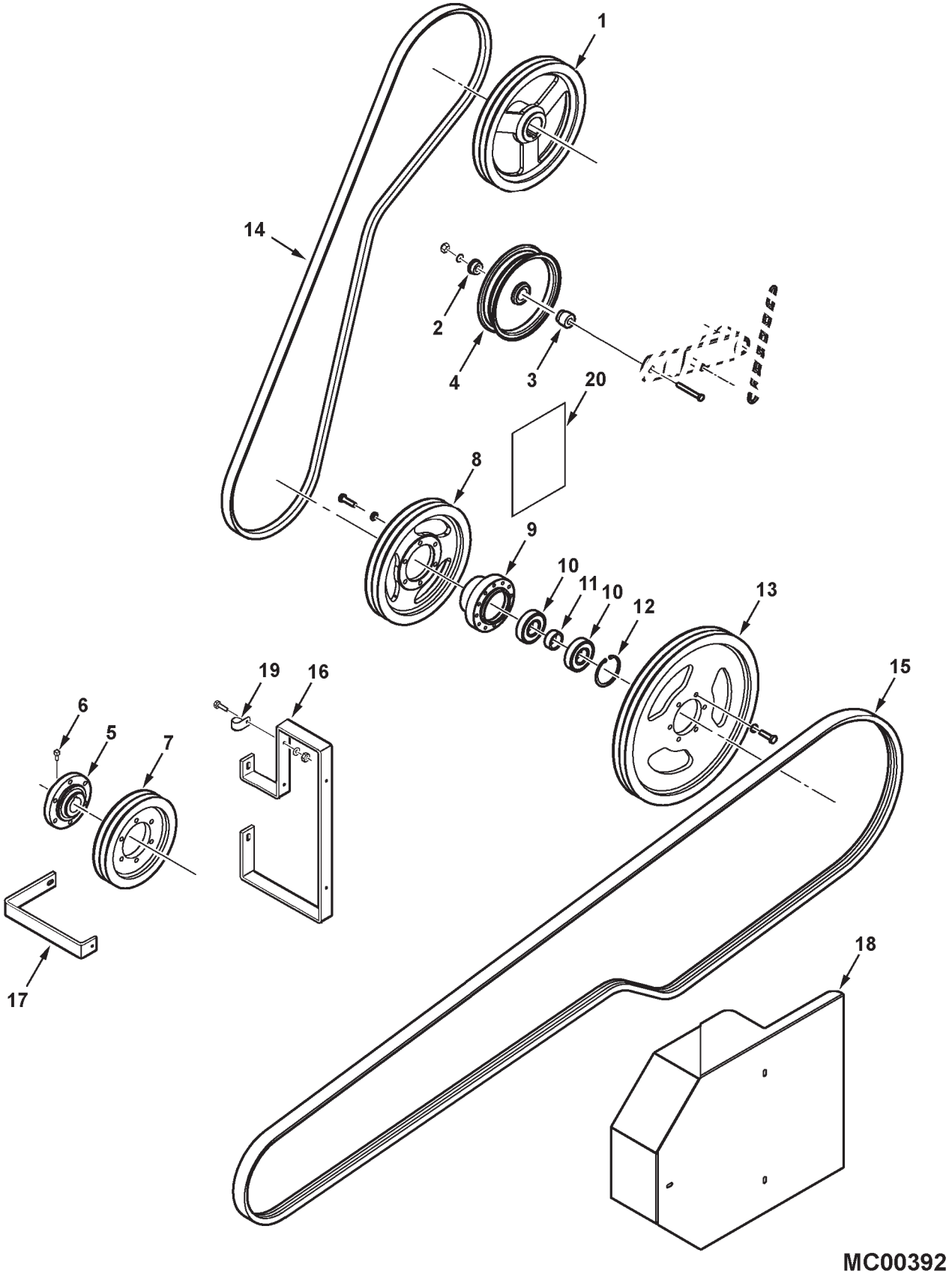

https://truckmanualshub.com/

STRAW CHOPPER DRIVE KIT
HEAVY DUTY

ITEM	NUMBER	QTY	DESCRIPTION
-	700953657	AR	KIT, STRAW CHOPPER DRIVE (PRIOR S/N HR36101)
1	71406327	1	DRIVE SHEAVE, CHOPPER
2	71312602	1	SPACER, IDLER, .60 WIDE
3	71353127	1	SPACER, IDLER, 1.20 WIDE
4	71309767	1	IDLER, FLAT, 8 DIA
	70921671	1	CAPSCREW, 5/8-11 X 3-1/4 GR5
5	71406334	1	HUB, CHOPPER DRIVE
6	3009627X1	3	SETSCREW, SQ HD, M10-1.5 X 20
7	71406333	1	SHEAVE, DRIVEN, 9.4 DIA
	3001429X1	6	CAPSCREW, M10-1.5 X 35 CL8.8
	339376X1	6	LOCKWASHER, M10
8	71406328	1	SHEAVE, DRIVEN, JACKSHAFT
	3009495X1	6	CAPSCREW, M10-1.5 X 40 CL8.8
	339376X1	6	LOCKWASHER, M10
9	71406330	1	HUB, CHOPPER JACKSHAFT
10	354920X1	2	BEARING, BALL
11	2619180W1	1	SPACER, BEARING, JACKSHAFT
12	70925997	1	RING, RETAINING, INTERNAL
13	71406332	1	SHEAVE, DRIVE, 17.5 DIA, JACKSHAFT
	3009495X1	6	CAPSCREW, M10-1.5 X 40 CL8.8
	339376X1	6	LOCKWASHER, M10
14	71406361	1	BELT, PRIMARY CHOPPER DRIVE
15	71406339	1	BELT, SECONDARY CHOPPER DRIVE
16	71411984	1	BRACKET, SHIELD, FRONT
17	71409452	1	BRACKET, SHIELD, REAR
18	71409453	1	SHIELD WLDMT, CHOPPER DR.
	7703457	3	CAPSCREW, 1/4-20 X 3/4 GR5
	70917377	3	WASHER, 1/4, WIDE
	705012	3	LOCKWASHER, 1/4 REG
19	700725918	2	J-CLIP, 5/16 TUBE X .281 HOLE
	7703457	2	CAPSCREW, 1/4-20 X 3/4 GR5
	70917377	2	WASHER, 1/4, WIDE
	705012	2	LOCKWASHER, 1/4 REG
20	71408765	1	DECAL, CHOPPER BELT DRIVE

MC00392
PR: t05e26j58c0002

https://truckmanualshub.com/

STRAW CHOPPER HOUSING
REDEKOP

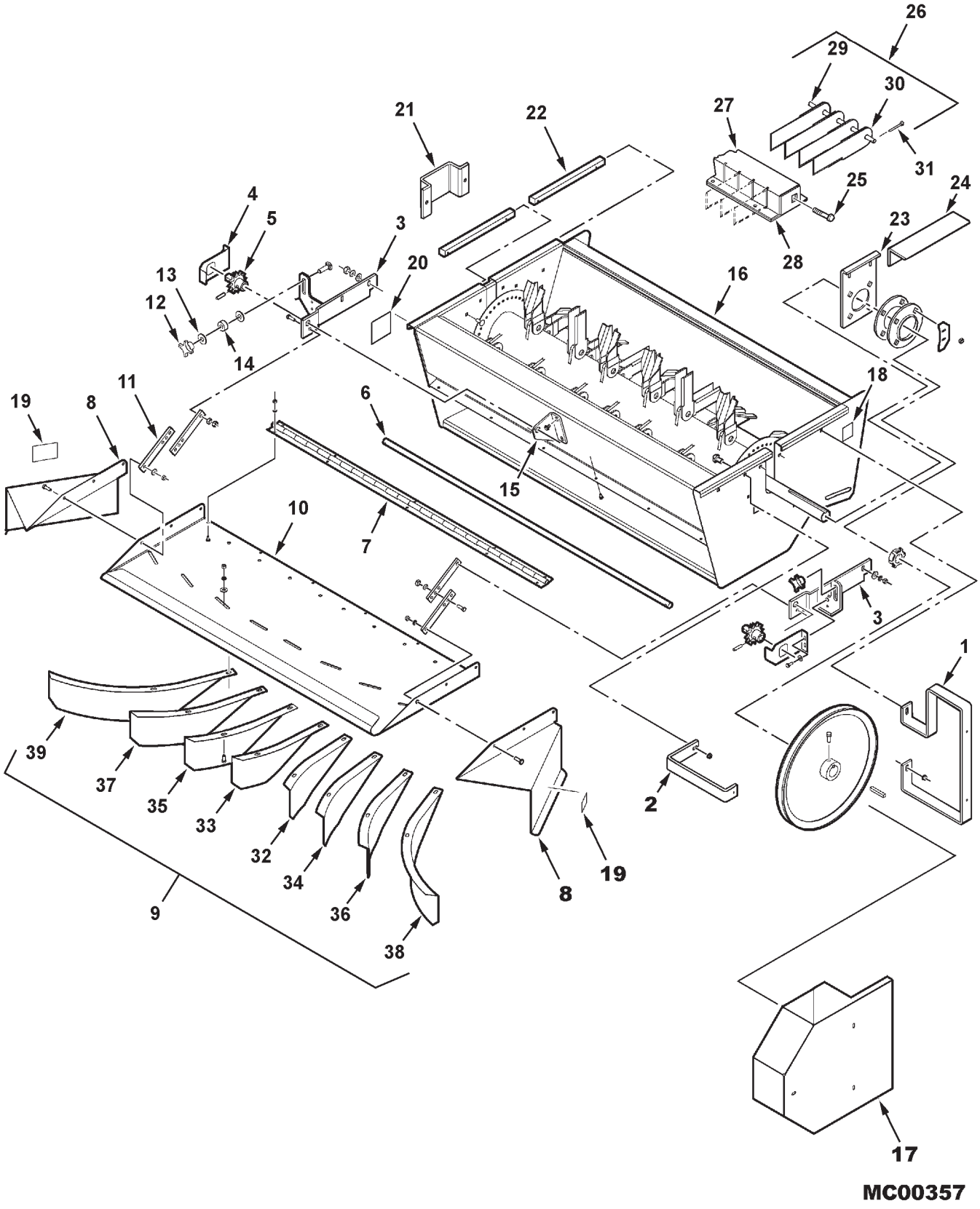

https://truckmanualshub.com/

STRAW CHOPPER HOUSING
REDEKOP

ITEM	NUMBER	QTY	DESCRIPTION
1	116247W91	1	BRACKET, DRIVE SHIELD(PRIOR S/N HR36101)
	71411984	1	BRACKET, DRIVE SHIELD (EFF. S/N HR36101)
	70931350	2	BOLT, RD HD SQ NK, 3/8-16 X 1.0
	704247	2	LOCKNUT, HEX SERR FLANGE, 3/8-16
2	116246W91	1	BRACKET, DRIVE SHIELD(PRIOR S/N HR36101)
	71409452	1	BRACKET, DRIVE SHIELD (EFF. S/N HR36101)
	7700461	1	BOLT, RD HD SHT SQ NK, 5/16-18 X 1
	70931277	1	LOCKNUT, HEX SERR FLANGE, 5/16-18
3	71387842	1	BRACKET WLDMT, CHOP/WINDROW (RH)
	71387846	1	BRACKET WLDMT, CHOP/WINDROW (LH)
	70922786	4	BOLT, RD HD SQ NK, 3/8-16 X 1.0
	70917378	4	WASHER, FLAT 3/8
	705038	4	LOCKWASHER, 3/8
	70916950	4	HEXNUT, 3/8-16
4	71388967	2	SHIELD, SPROCKET
	7703457	4	CAPSCREW, 1/4-20 X 3/4
	700709601	4	WASHER, FLAT 1/4
	705012	4	LOCKWASHER, 1/4
	704007	4	HEXNUT, 1/4-20
5	71386195	2	SPROCKET
	70922080	2	PIN, SPIROL, 5/16 X 1-3/8
6	71389474	1	SHAFT, CHOPPER/WINDROWER
7	71389451	1	HINGE, TAILPLATE
	70921958	14	CAPSCREW, 1/4-20 X 1/2
	705012	14	LOCKWASHER, 1/4
	704007	14	HEXNUT, 1/4-20
8	71383736	1	EXTENSION, TAILPLATE (RH)
	71383737	1	EXTENSION, TAILPLATE (LH)
	70921332	4	CAPSCREW, 5/16-18 X 3/4
	70921333	2	CAPSCREW, 5/16-18 X 1.0
	Y705020	6	LOCKWASHER, 5/16
	70917372	6	HEXNUT, 5/16-18
9	71393439	1	KIT, DEFLECTOR (8 DEFLECTORS)
			(INCLUDES ITEMS 32-39)
	7700461	16	BOLT, RD HD SHT SQ NK, 5/16-18 X 1.0
	700709602	8	WASHER, 5/16 WIDE
	Y705020	16	LOCKWASHER, 5/16
	70917372	16	HEXNUT, 5/16-18
10	71389473	1	TAILPLATE
11	71378250	4	STRAP, TAILPLATE
	70921333	4	CAPSCREW, 5/16-18 X 1.0
	Y705020	4	LOCKWASHER, 5/16
	70917372	4	HEXNUT, 5/16-18
12	71379249	2	KNOB
	768226	2	BOLT, RD HD SQ NK, 1/2-13 X 1-3/4
13	70918431	4	WASHER, PLAIN WIDE 1/2
14	D49080090	2	WASHER, RUBBER
15	71387351	1	BRACKET, CHOP/WINDROW
	70924856	2	SCREW, HX WSH HD TAP'G 5/16-18 X 1/2

CONTINUED

https://truckmanualshub.com/

STRAW CHOPPER HOUSING
REDEKOP

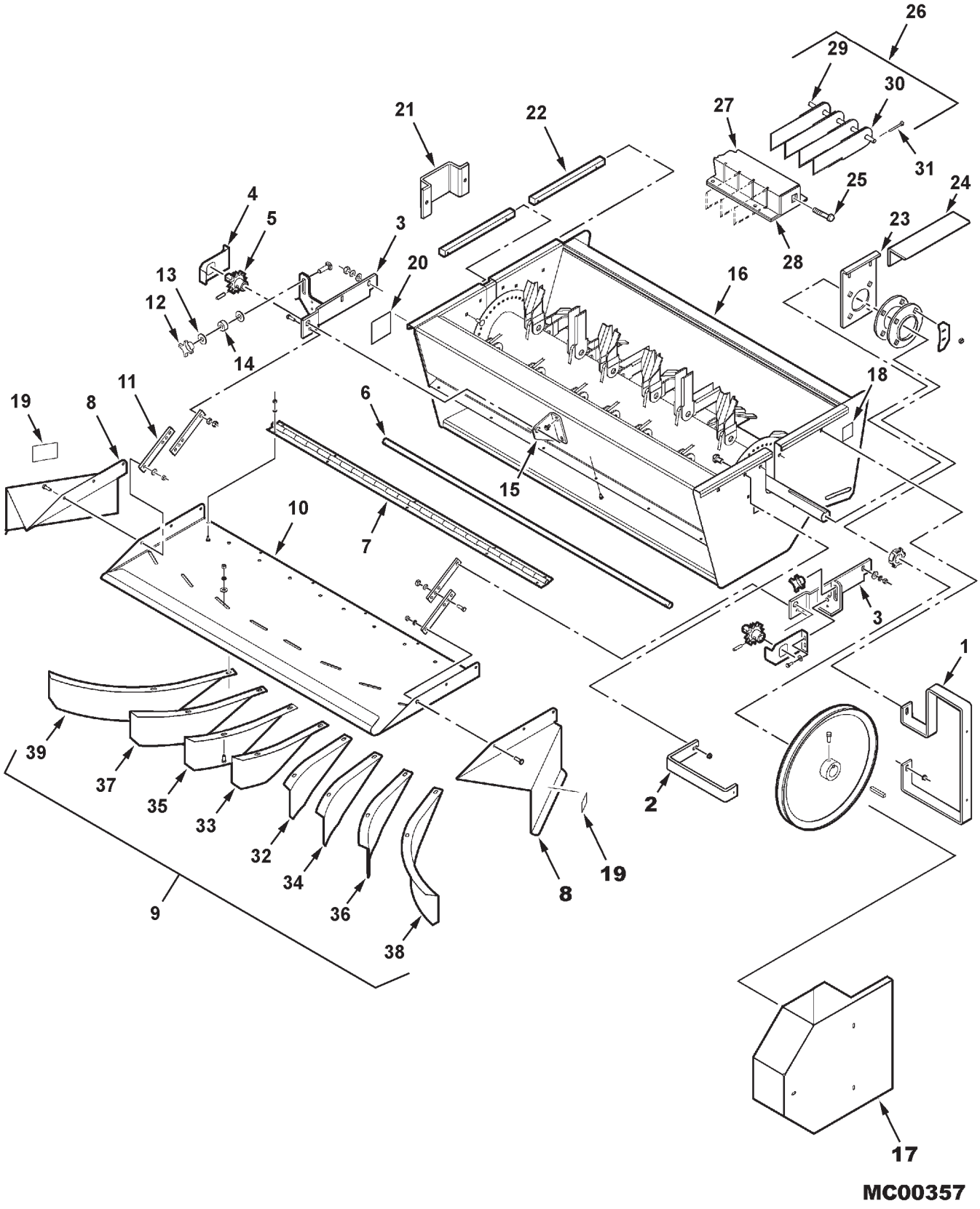

https://truckmanualshub.com/

ITEM	NUMBER	QTY	DESCRIPTION
16	71395245	1	CHOPPER HSG.& ROTOR ASY(INCL. ITS 21-31) (PRIOR S/N HR36101)
	71409833	1	CHOPPER HSG.& ROTOR ASY(INCL. ITS 21-31) (EFF. S/N HR36101)
	71395247	1	HOUSING WLMT, CHOPPER(PRIOR S/N HR36101)
	71409835	1	HOUSING WLMT, CHOPPER (EFF. S/N HR36101)
17	103342W91	1	SHIELD WLMT (PRIOR S/N HR36101)
	71409453	1	SHIELD WLMT (EFF. S/N HR36101)
	7703457	3	CAPSCREW, 1/4-20 X 3/4
	705012	3	LOCKWASHER, 1/4
	700709601	3	WASHER, 1/4, WIDE
18	111091W1	1	LABEL, DANGER
19	111737W1	2	LABEL, WARNING
20	105177W1	1	LABEL, CHOPPER KNIVES
21	116250W1	1	BRACKET, SHAFT COVER
	PZND1041V	2	BOLT, RD HD SQ NK, M8-1.25 X 20
	385361X1	2	WASHER, M8, HARD
	3019124X1	2	NUT, HEX FLANGE, M8-1.25
22	116249W1	4	RUNNER, RAIL
	70937280	8	SCREW, PAN HD TAPPING, #8-32 X 3/4
	3015159X1	8	OR, SCR, PAN HD TAPPING,#8-18 X 3/4
23	116248W91	2	PLATE, BEARING MOUNT
	PZND1041V	4	BOLT, RD HD SQ NK, M8-1.25 X 20
	385361X1	4	WASHER, M8, HARD
	3019124X1	4	NUT, HEX FLANGE, M8-1.25
24	71397989	1	BRACKET, CHOPPER (PRIOR S/N HR36101)
	71400478	1	BRACKET, STOP (EFF. S/N HR36101)
	7770456	2	BOLT, RD HD SHT SQ NK, 3/8-16 X 3/4
	704247	2	LOCKNUT, HEX SERR FLANGE, 3/8-16
	385373X1	2	OR, BOLT, RD HD SQ NK, M10-1.5 X 25
	385362X1	2	WASHER, M10 HARD
	3019125X1	2	NUT, HEX FLANGE, M10-1.5
25	68619	2	BOLT, RD HD SQ NK, 1/2-13 X 1-1/4 (PRIOR S/N HR36101)
	Y705046	2	LOCKWASHER, 1/2
	Y705624	2	WASHER, 1/2 NARROW
	704031	2	HEXNUT, 1/2-13
	385391X1	2	BOLT, RD HD SQ NK, M12-1.75 X 35 (EFF. S/N HR36101)
	3009695X1	2	NUT, HEX FLANGE, M12-1.75
	391212X1	2	WASHER, M12
26	71395249	1	KNIFE BAR ASY, CHOPPER (INCL. 27-31)
27	71398402	1	SUPPORT WLDMT, STATIONARY KNIFE
28	71398401	1	SUPPORT PLATE ASY, STATIONARY KNIFE BAR
	70930594	16	SCREW, HEX FLNG SERR, 1/4-20 X 3/4
	70931209	16	LOCKNUT, HEX FLNG SERR, 1/4-20
29	71398403	1	ROD, KNIFE BAR
30	71382269	31	KNIFE, STATIONARY
31	70918447	2	COTTER PIN, 3/32 X 3/4
32	71406951	1	DEFLECTOR, RH #1
33	71406952	1	DEFLECTOR, LH #1
34	71406953	1	DEFLECTOR, RH #2
35	71406954	1	DEFLECTOR, LH #2
36	71406970	1	DEFLECTOR, RH #3
37	71406971	1	DEFLECTOR, LH #3
38	71406972	1	DEFLECTOR, RH #4
39	71406973	1	DEFLECTOR, LH #4

https://truckmanualshub.com/

STRAW CHOPPER
ROTOR

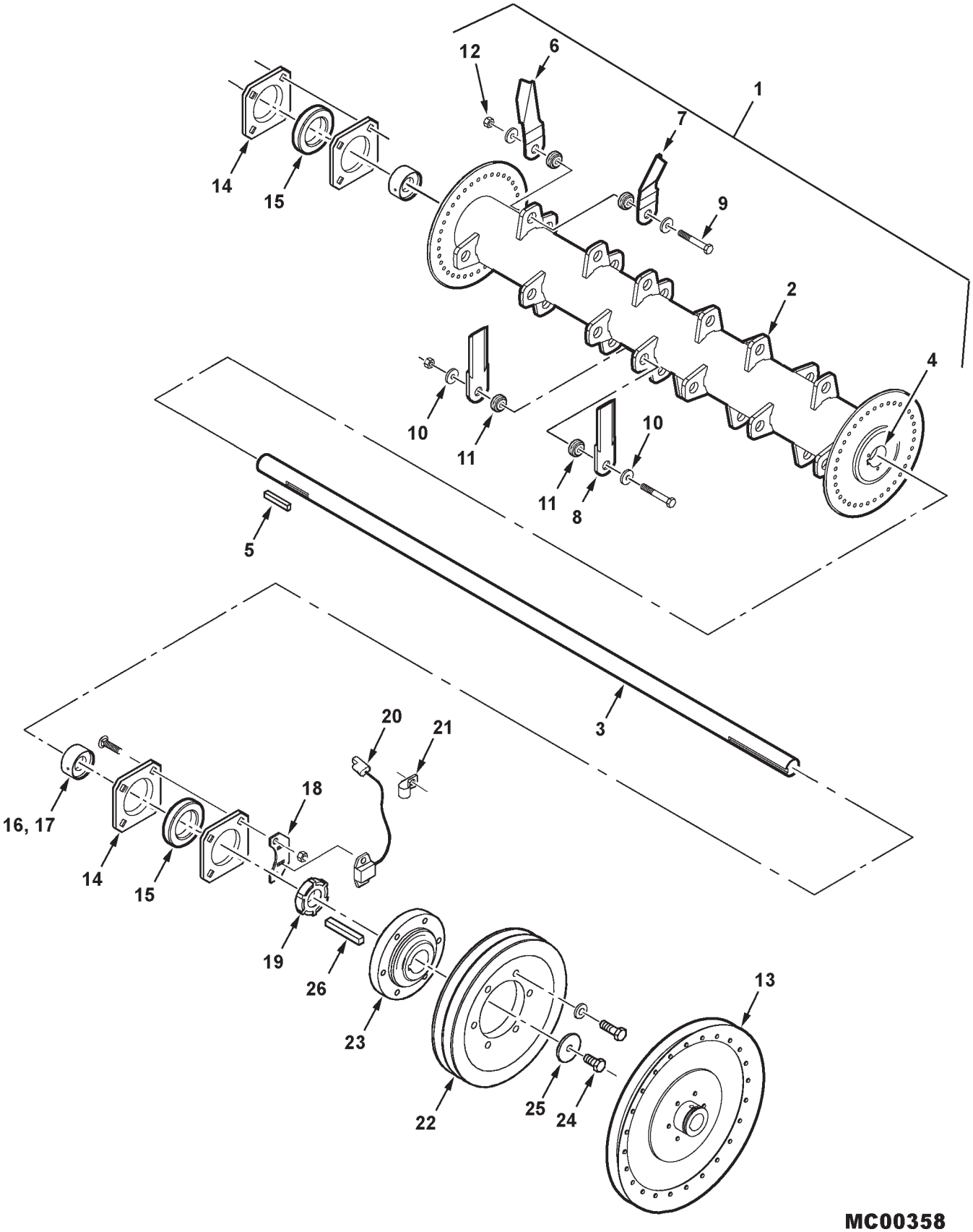

https://truckmanualshub.com/

ITEM	NUMBER	QTY	DESCRIPTION
1	71395246	1	ROTOR ASY, CHOPPER (INCL. IT 2-12) (PRIOR S/N HR36101)
	71409834	1	ROTOR ASY, CHOPPER (INCL. IT 6-12) (EFF. S/N HR36101)
2	-----	1	ROTOR WLDMT, CHOPPER (ORDER ITEM 1)
3	-----	-	SHAFT, (NOT SERVICED)
4	-----	-	HUB, (NOT SERVICED)
5	-----	-	KEY, (NOT SERVICED)
6	71382758	20	BLADE, PADDLE, LEFT
7	71382759	20	BLADE, PADDLE, RIGHT
8	71395250	20	BLADE, STRAIGHT
9	70932612	30	CAPSCREW, 3/8-16 X 2-1/2 GR8 (PRIOR S/N HR36101)
	3010842X1	30	CAPSCREW, M10-1.5 X 60 CL10.9 (EFF. S/N HR36101)
10	71382256	60	WASHER, HARD, CHOPPER BLADE
11	71382257	60	BUSHING, CHOPPER BLADE
12	70919439	30	NUT, NYLON LOCK, 3/8-16 (PRIOR S/N HR36101)
	3008169X1	30	NUT, HEX LOCK, M10-1.5 (EFF.S/N HR36101)
13	116082W1	1	SHEAVE PAIR, DRIVEN (PRIOR S/N HR36101)
	2620190W1	1	KEY, SQUARE, 3/8 X 2.35 LG
	70923326	2	SETSCREW, SQ HD, 3/8 X 1
	70917421	2	JAM NUT, 3/8-16 UNC
14	7711419	2	FLANGETTE, 80MM, W/ GREASE ZERK
	7711401	2	FLANGETTE, 80MM
	70931809	6	BOLT, RD HD SQ NK, 1/2-13 X 1-1/4 (PRIOR S/N HR36101)
	70931810	2	BOLT, RD HD SQ NK, 1/2-13 X 1-3/4 (PRIOR S/N HR36101)
	Y705046	8	LOCKWASHER, 1/2
	704031	8	HEXNUT, 1/2-13
	385391X1	6	BOLT, RD HD SQ NK, M12-1.75 X 35 (EFF. S/N HR36101)
	3009340X1	2	BOLT, RD HD SQ NK, M12-1.75 X 45
	3009695X1	8	NUT, HEX FLANGE, M12-1.75
15	10970	2	BEARING, W/O COLLAR
	1720176	1	COLLAR, BEARING, 1.50 ID
16	116953W91	2	ANTI-WRAP WLDMT
17	70906852	2	SETSCREW, HEX SOCKET, 5/16-18 X 3/4
18	71315785	1	BRACKET, SENSOR
	70913744	2	JAM NUT, 1/2-13 UNC
19	71315780	1	COLLAR WLDMT, SENSING
20	71391021	1	SENSOR, 2 WIRE
	70931317	2	BOLT, RD HD SQ NK, 1/4-20 X 3/4
	705012	2	LOCKWASHER, 1/4
	70916622	2	NUT, 1/4-20 REG

CONTINUED

https://truckmanualshub.com/

STRAW CHOPPER
ROTOR

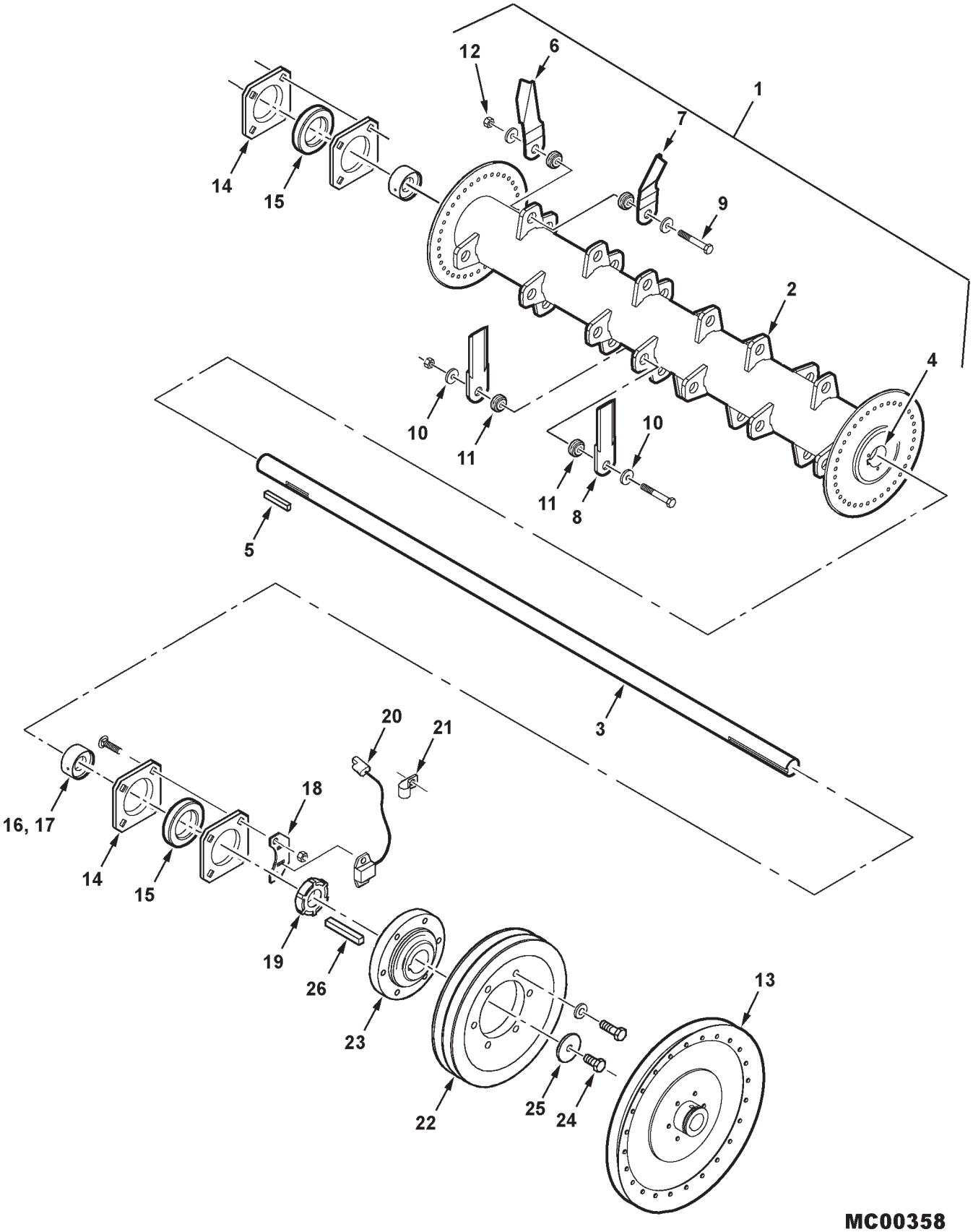

https://truckmanualshub.com/

ITEM	NUMBER	QTY	DESCRIPTION
21	700725918	2	J-CLIP, OPEN, 5/16 X .281 HOLE
	7703457	2	CAPSCREW, 1/4-20 X 3/4
	705012	2	LOCKWASHER, 1/4
	70917377	2	WASHER, 1/4 WIDE
22	71406333	1	SHEAVE, 9.4 DIA (HIGH SPEED) (EFF. S/N HR36101)
	71406332	1	SHEAVE, 17.5 DIA (LOW SPEED) (EFF. S/N HR36101)
	339376X1	6	LOCKWASHER, 10M
	3001429X1	6	CAPSCREW, M10-1.5 X 35 CL8.8
23	71408762	1	HUB, CHOPPER SHEAVE (EFF. S/N HR36101)
	3009627X1	2	SETSCREW, SQ HD, M10-1.5 X 20
24	700708349	1	CAPSCREW, M10-1.5 X 25 CL8.8
25	339768X1	1	WASHER, 11 X 45 X 3.5 THK (METRIC)
26	61234	1	KEY, SQ, 3/8 X 2-3/4 LG
-	71383932	-	KIT, PADDLE BLADE (INCL. 4 PDLS & HDWR) (INCL. ITEMS 6,7,9,10,11,12)
-	71383934	-	KIT, STRAIGHT BLADE(INCL. 4 BLDS & HDWR) (INCL. ITEMS 8-12)

MC00358
PR: 222

https://truckmanualshub.com/

STRAW CHOPPER HOOD & SUPPORTS

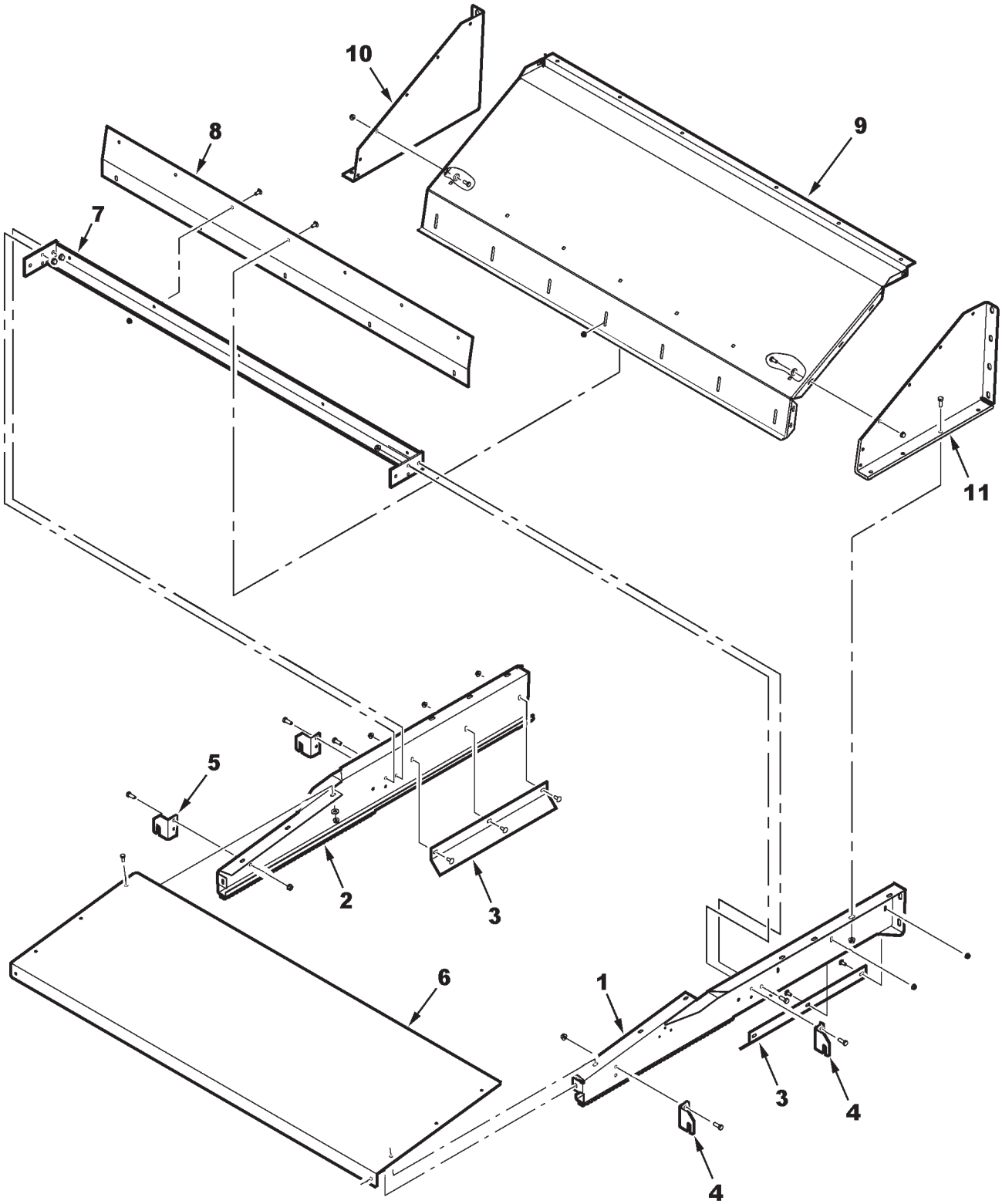

MC00261

https://truckmanualshub.com/

STRAW CHOPPER HOOD & SUPPORTS

ITEM	NUMBER	QTY	DESCRIPTION
1	71387357	1	RAIL ASY, SIDE (RH)
2	71387355	1	RAIL ASY, SIDE (LH)
	70923114	4	CAPSCREW, 1/2-13 X 1 GR5
	Y704742	4	NUT, HEX FLNG TOP LOCK, 1/2-13
3	104035W1	2	DEFLECTOR
4	71379261	2	PLATE, STOP RH
	70921210	4	CAPSCREW, 3/8-16 X 1
	Y704734	4	NUT, HFTLN 3/8-16
5	71379260	2	PLATE, STOP LH
	70921210	4	CAPSCREW, 3/8-16 X 1
	Y704734	4	NUT, HFTLN 3/8-16
6	71387801	1	PANEL, REAR
	70921332	8	CAPSCREW, HEX, 5/16-18 X 3/4
	Y704726	8	NUT, HFTLN 5/16-18
7	71376170	1	ANGLE ASSEMBLY
	70921210	8	CAPSCREW, 3/8-16 X 1
	Y704734	8	NUT, HFTLN 3/8-16
8	71376157	1	PANEL, COVER
	70921332	12	CAPSCREW, HEX, 5/16-18 X 3/4
	70917642	5	WASHER, 5/16
	Y704726	12	NUT, HFTLN 5/16-18
9	71376154	1	HOOD, TOP
	70921210	6	CAPSCREW, 3/8-16 X 1
	Y704734	6	NUT, HEX FLNG TOP LOCK, 3/8-16 (PRIOR S/N HN36101)
	70916965	6	LOCKWASHER, 3/8 (EFF S/N HN36101)
10	103339W1	1	HOOD, SIDE, LH
	70921332	6	CAPSCREW, 5/16-18 X 3/4
	70917642	6	WASHER, 5/16
	Y704726	6	NUT, HEX FLNG TOP LOCK, 5/16-18
	70921210	4	CAPSCREW, 3/8-16 X 1
	Y704734	4	NUT, HEX FLNG TOP LOCK, 3/8-16
	70923114	3	CAPSCREW, 1/2-13 X 1 GR5
	70921176	1	CAPSCREW, 1/2-13 X 1-1/4 GR5
	Y704742	4	NUT, HEX FLNG TOP LOCK, 1/2-13
11	103338W1	1	HOOD, SIDE, RH
	70921332	6	CAPSCREW, 5/16-18 X 3/4
	70917642	6	WASHER, 5/16
	Y704726	6	NUT, HEX FLNG TOP LOCK, 5/16-18
	70921210	4	CAPSCREW, 3/8-16 X 1 GR5
	Y704734	4	NUT, HEX FLNG TOP LOCK, 3/8-16
	70923114	4	CAPSCREW, 1/2-13 X 1 GR5
	Y704742	4	NUT, HEX FLNG TOP LOCK, 1/2-13

https://truckmanualshub.com/

STRAW SPREADER
DRIVE

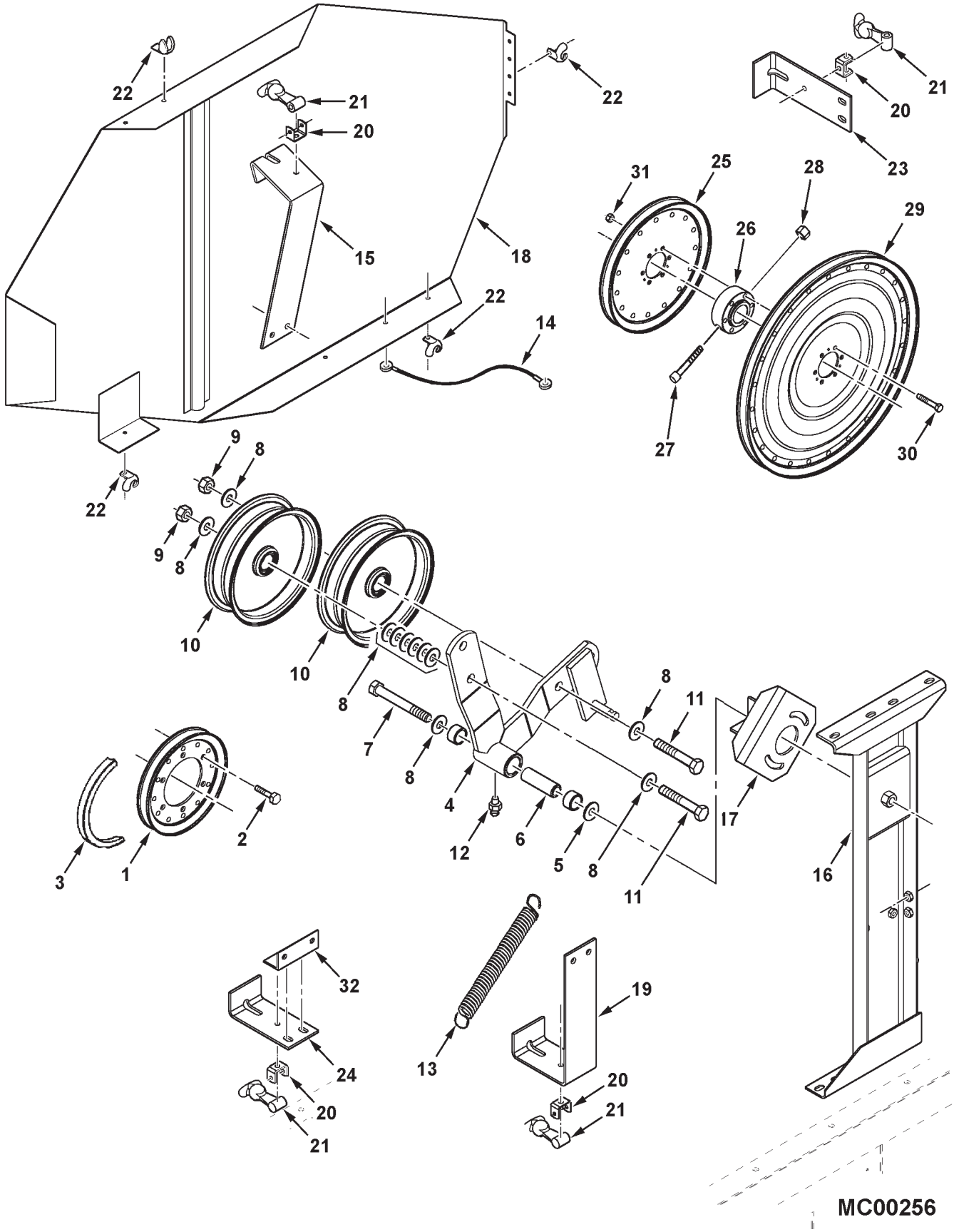

https://truckmanualshub.com/

ITEM	NUMBER	QTY	DESCRIPTION
1	2628321W92	1	PULLEY, DRIVE
2	70923701	6	CAPSCREW, 3/8-16 X 2 GR5
	70916965	6	LOCKWASHER, 3/8
	70916950	6	NUT, 3/8-16, REG
3	1680230W1	1	BELT-SECONDARY DRIVE
4	71387307	1	ARM ASY, IDLER, W/ BUSHINGS
	1689170W1	2	BUSHING, 1 ID X 3/4 LG
5	70937480	1	WASHER, HARD, .66 X 2.25 X .165 TH
6	2441490W1	1	SLEEVE, 41/64 X 63/64 X 3-1/16
7	70925705	1	CAPSCREW, 5/8-11 X 5 GR5
8	70918432	17	WASHER, WIDE, 5/8
9	700703922	2	NUT, HEX FLANGE TOP LOCK, 5/8-11
10	31-2455700	2	IDLER, FLAT, 8-3/4 OD
11	70925702	2	CAPSCREW, 5/8-11 X 3-1/2 GR5
12	70914465	1	LUBE FITTING, 1/8-27 PTF, SPL EXTR SHORT
13	1579720W1	1	SPRING
14	112942W1	1	TETHER STRAP
15	71388256	1	BRACKET, SHIELD SUPPORT
16	71387848	1	STAND WLMT, IDLER (PRIOR S/N HR36101)
			(SERVICE W/ 71406368)
	71406368	1	STAND WLMT, IDLER (EFF. S/N HR36101)
			(REQUIRES 71406364 STOP WLMT IT. 17)
	70921210	2	CAPSCREW, 3/8-16 X 1 GR5
	70921969	2	CAPSCREW, 3/8-16 X 1-1/2 GR5
	70917378	1	WASHER, 3/8, WIDE
	Y704734	4	NUT, HEX FLANGE TOP LOCK, 3/8-16
17	101411M91	1	STOP WLMT, IDLER (PRIOR S/N HR36101)
	70921210	2	CAPSCREW, 3/8-16 X 1 GR5
	70916965	2	LOCKWASHER, 3/8
	353771X1	2	WASHER HEAVY HARD, 3/8
	71406364	1	STOP WLMT, IDLER (EFF. S/N HR36101)
	70923114	2	CAPSCREW, 1/2-13 X 1 GR5
	Y705046	2	LOCKWASHER, 1/2
	705541	2	WASHER, HARD, 1/2
18	71388736	1	SHIELD ASSEMBLY
19	101069M1	1	BRACKET
	70921210	2	CAPSCREW, 3/8-16 X 1 GR5
	Y704734	2	NUT, HEX FLANGE TOP LOCK, 3/8-16
20	1787520W1	4	BRACKET, LATCH ANCHOR
	70921332	4	CAPSCREW, 5/16-18 X 3/4 GR5
	Y704726	4	NUT, HEX FLANGE TOP LOCK, 5/16-18

CONTINUED

https://truckmanualshub.com/

STRAW SPREADER
DRIVE

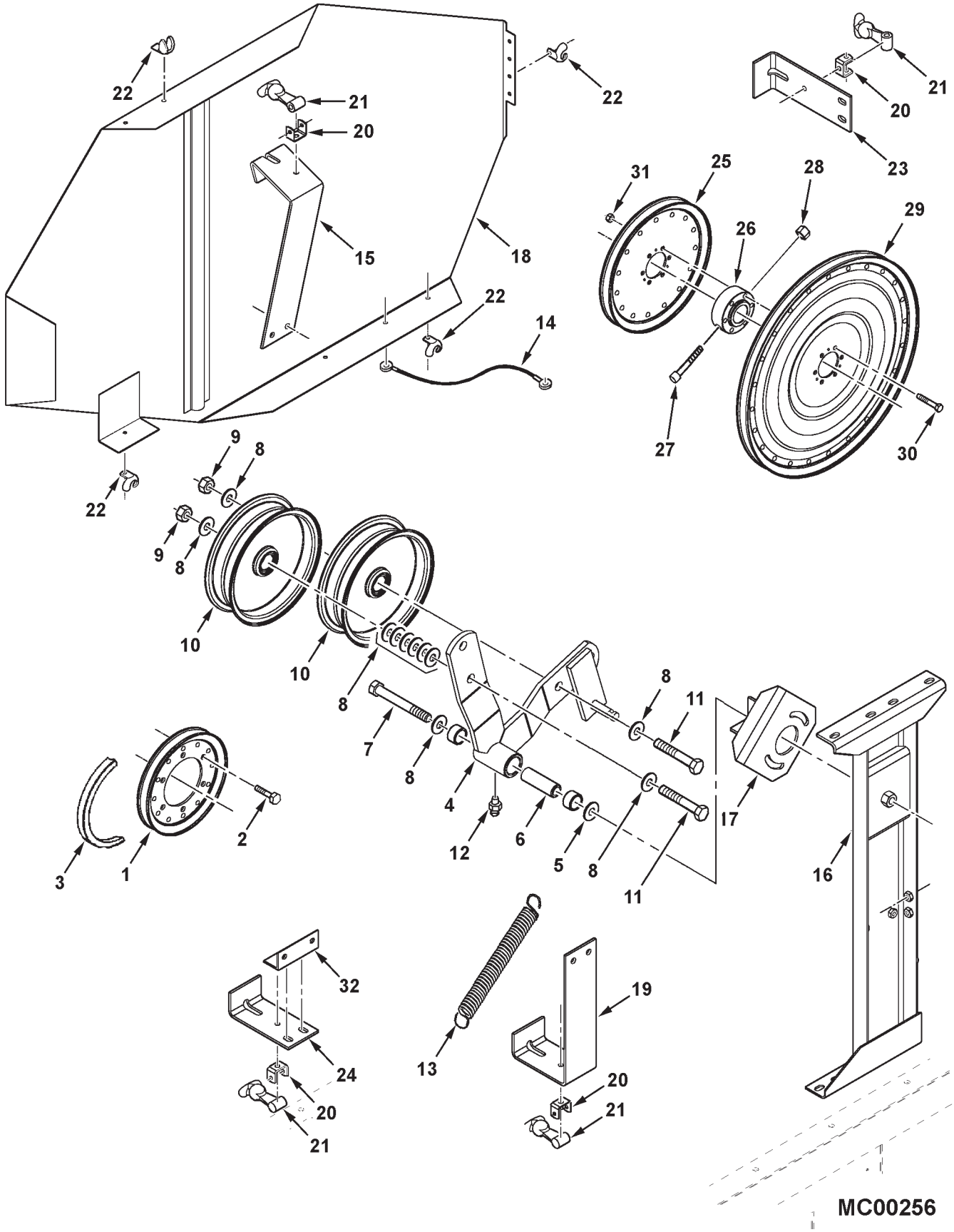

https://truckmanualshub.com/

ITEM	NUMBER	QTY	DESCRIPTION
21	776682	4	LATCH, RUBBER
	70921962	4	CAPSCREW, 1/4-20 X 1-3/4 GR5
	1703354	4	NUT, HEX FLANGE TOP LOCK, 1/4-20
22	8722910	4	CATCH, SHIELD
	700705088	4	SCREW, PHILLIPS HD MACH, #10-24UNC X 3/4
	3725830M1	4	LOCKNUT, HEX SERR FLANGE, #10-24UNC
23	101065M1	1	BRACKET, SHIELD SUPPORT
	70921210	2	CAPSCREW, 3/8-16 X 1 GR5
	Y704734	2	NUT, HEX FLANGE TOP LOCK, 3/8-16
24	101066M1	1	BRACKET, SHIELD SUPPORT
	70921210	2	CAPSCREW, 3/8-16 X 1 GR5
	Y704734	2	NUT, HEX FLANGE TOP LOCK, 3/8-16
25	2631400W1	1	SHEAVE, DRIVEN, 10.00 OD
26	2573610W1	1	HUB
27	702670	1	BOLT, HEX SCKT HD, 3/8-16 X 2-3/4
28	10163	1	NUT, HEX CENTER LOCK, 3/8-16
29	2573370W1	1	SHEAVE, 16.88 OD
30	70921978	6	CAPSCREW, 5/16-18 X 2 GR5
31	Y704726	6	NUT, HEX FLANGE TOP LOCK, 5/16-18
32	71388717	1	ANGLE, SHIELD SUPPORT
	70921210	2	CAPSCREW, 3/8-16 X 1 GR5
	70916965	2	LOCKWASHER, 3/8
-	71400069	1	KIT, STRAW SPRDR, COMPLETE (PRIOR S/N HR36101)(ORDER THRU DEALER CENTRAL)
-	71413219	1	KIT, STRAW SPRDR,(CONVERSION OF CHOPPER TO SPREADER)(EFF. S/N HR36101) (ORDER THRU DEALER CENTRAL)

MC00256
PR: 226

https://truckmanualshub.com/

STRAW SPREADER
COMPONENTS

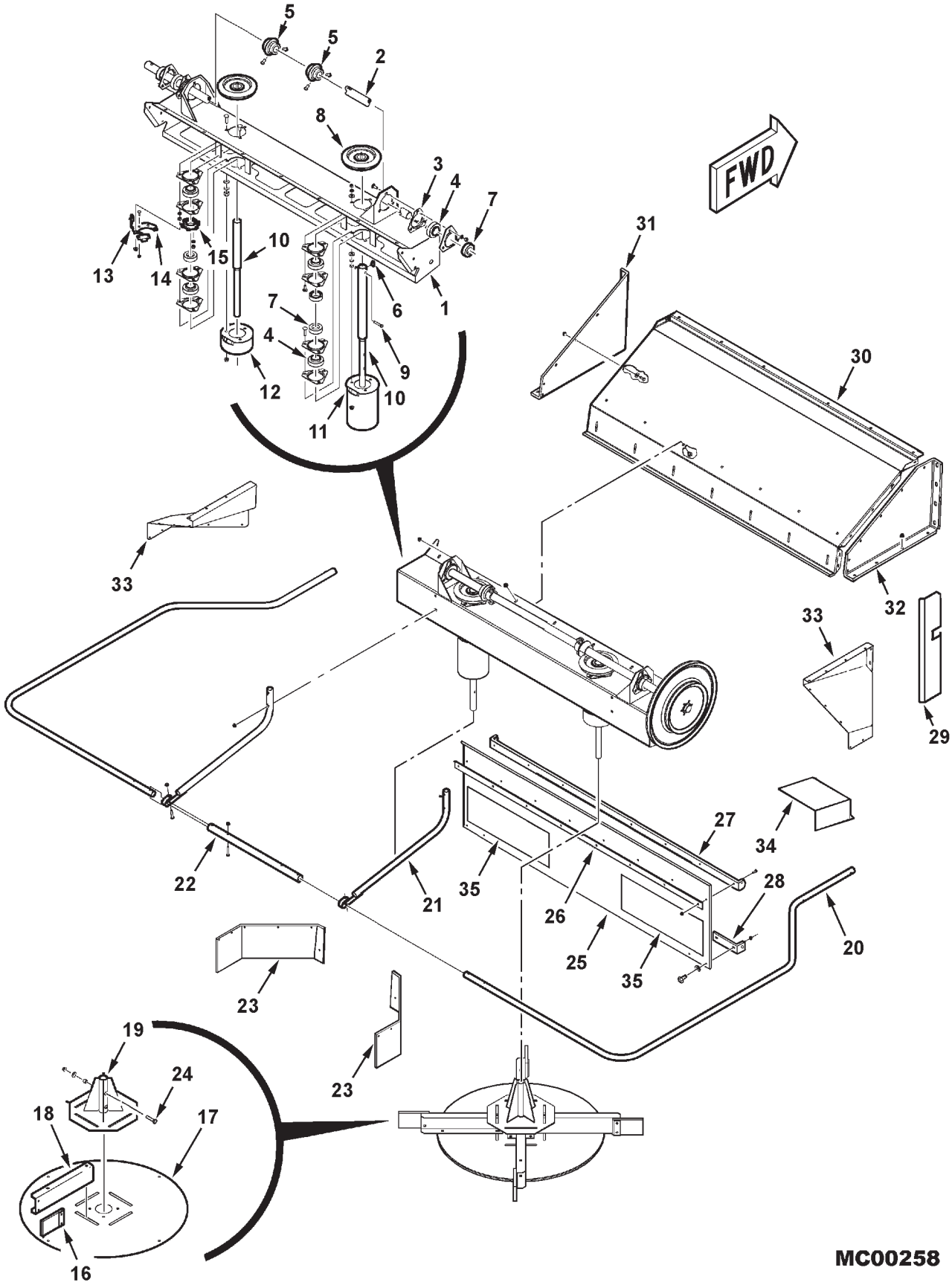

https://truckmanualshub.com/

ITEM	NUMBER	QTY	DESCRIPTION
1	71391343	1	HOUSING
	70937294	1	GROMMET, RUBBER .312 X .750 X .156
	7700461	7	BOLT, RD HD SHT SQ NK, 5/16-18 X 3/4
	70921333	6	CAPSCREW, 5/16-18 X 1 GR5
	70917642	6	WASHER, 5/16 WIDE
	Y704726	13	NUT, HEX FLNG TOP LOCK, 5/16-18
2	71393384	1	SHAFT
3	71192243	12	FLANGE
	68759	10	BOLT, RHSSN, 3/8-16 X 1
	768036	8	BOLT, RHSSN, 3/8-16 X 1-1/2
	70916965	18	LOCKWASHER, 3/8
	70918266	9	WASHER, NARROW 3/8
	70916950	18	NUT, HEX 3/8-16
4	K4037	6	BEARING
5	71396226	2	GEAR, PINION 14T
	70920469	4	SETSCREW, SQ HD CUP PT, 3/8-16 X 3/4
6	70905127	2	KEY, WOODRUFF, 5/16 X 1
7	K3999	5	COLLAR, LOCK
8	71393392	2	GEAR, DRIVEN, 35T
9	7771751	2	CAPSCREW, 5/16-18 X 3
	70923362	2	NUT, HEX CNTR LOCK, 5/16-18
10	71391576	1	SHAFT, SPREADER (LEFT)
	71391577	1	SHAFT, SPREADER (RIGHT)
11	71393389	1	CAN, ANTIWRAP (LEFT)
12	71393387	1	CAN, ANTIWRAP (RIGHT)
13	71391021	1	SENSOR, ASY 2 WIRE
14	71325553	1	BRACKET, MAGNETIC PICKUP
	70931317	2	BOLT, RD HD SHT SQ NK, 1/4-20 X 3/4
	70931209	2	LOCKNUT, HEX FLNG SERR, 1/4-20
	70931209	2	LOCKNUT, HEX FLNG SERR, 3/8-16
15	71393391	1	COLLAR, SENSING
16	71341450	8	PADDLE
	71341448	8	PLATE, BACKUP
	7700578	16	BOLT, RHSN, 5/16-18 X 1
	70923362	16	LOCKNUT, HEX CTR, 5/16-18
17	71351200	2	DISK, LOWER
	70921965	8	CAPSCREW, 3/8-16 X 3/4
	70916965	8	LOCKWASHER, 3/8
	70916950	8	NUT, 3/8-16
18	71391579	8	BLADE
	7770456	16	BOLT, RHSSN, 3/8-16 X 3/4
	70917378	8	WASHER, WIDE 3/8
	70916965	8	LOCKWASHER, 3/8
	70916950	8	NUT, 3/8-16

CONTINUED

https://truckmanualshub.com/

STRAW SPREADER
COMPONENTS

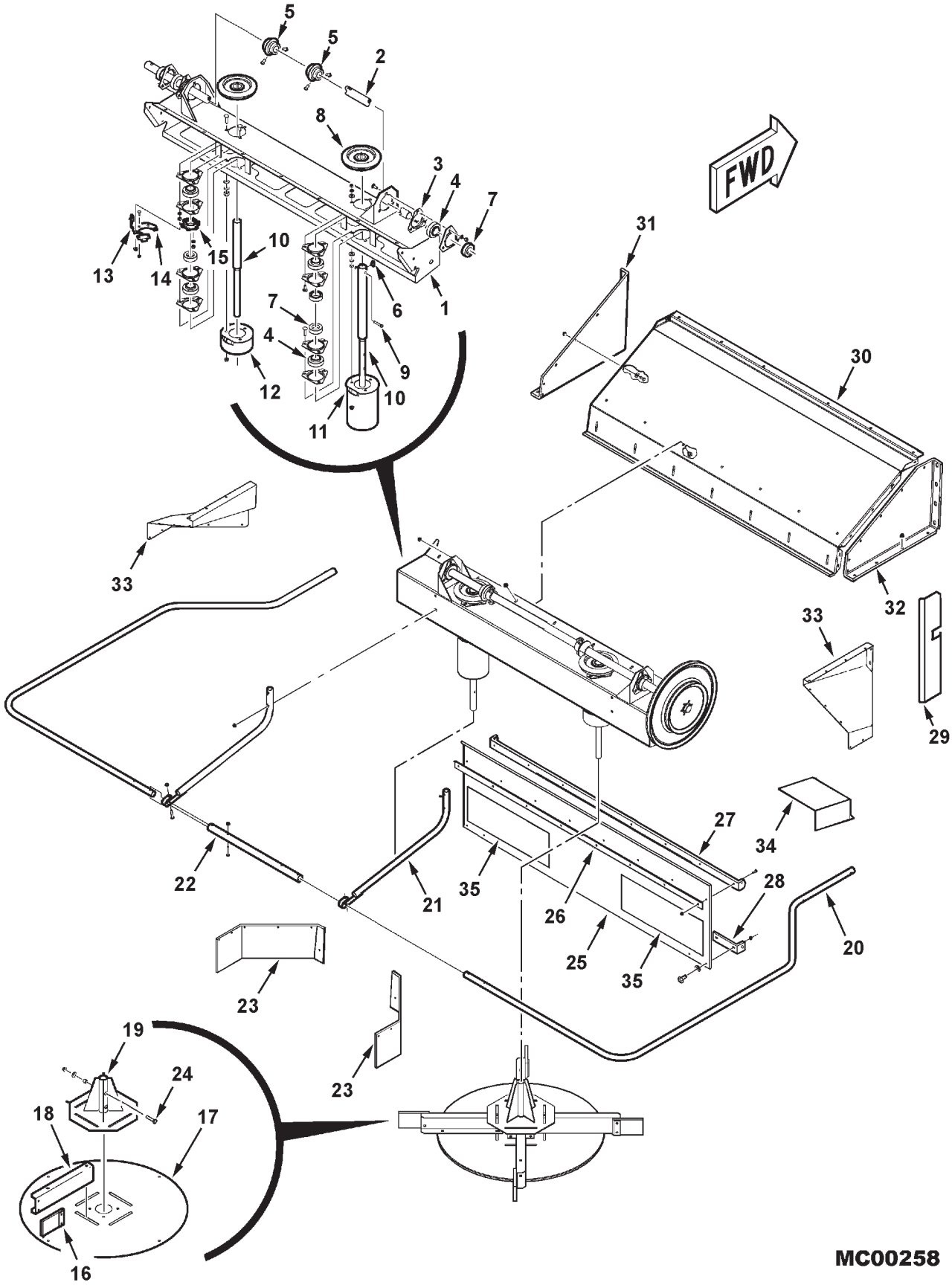

https://truckmanualshub.com/

ITEM	NUMBER	QTY	DESCRIPTION
19	71407574	2	HUB WLMT, SPRDR
	7770456	8	BOLT, RHSSN, 3/8-16 X 3/4
	70917378	8	WASHER, WIDE 3/8
	70916965	8	LOCKWASHER, 3/8
	70916950	8	NUT, 3/8-16
20	2636890W1	2	PIPE, GUARD
	70922127	4	CAPSCREW, 5/16-18 X 1-3/4
	76695	8	WASHER, LARGE FENDER, 5/16
	Y704726	4	NUT, HEX FLNG TOP LK, 5/16-18
21	71391592	2	SUPPORT, GUARD
	70922127	6	CAPSCREW, 5/16-18 X 1-3/4
	Y704726	6	NUT, HEX FLNG TOP LK, 5/16-18
22	71376158	1	TUBE, GUARD CONNECTOR
	70922127	4	CAPSCREW, 5/16-18 X 1-3/4
	Y704726	4	NUT, HEX FLNG TOP LK, 5/16-18
23	71398421	2	CURTAIN, SIDE
	70921332	12	CAPSCREW, 5/16-18 X 3/4
	70917642	12	WASHER, 5/16
	Y704726	12	NUT, HEX FLNG TOP LOCK, 5/16-18
24	7701634	4	CAPSCREW, 3/8-16 X 2
	71345898	4	SPACER, HUB
	70917378	4	WASHER, 3/8
	Y704734	4	NUT, HEX FLANGE TOP LOCK, 3/8-16
25	71395236	1	CURTAIN, CNTR
26	71395233	1	CURTAIN, ANGLE CNTR
27	71393394	1	HANGER, CURTAIN CNTR
	7703457	8	CAPSCREW, 1/4-20 X 3/4
	1703354	8	NUT, HEX FLNG TOP LK, 1/4-20
	70921333	4	CAPSCREW, 5/16-18 X 1
	Y705608	8	WASHER, NARROW, 5/16
	Y704726	4	NUT, HEX FLNG TOP LK, 5/16-18
28	71395234	2	BRACKET, LOWER CURTAIN
	7703457	4	CAPSCREW, 1/4-20 X 3/4
	70917377	4	WASHER, WIDE 1/4
	1703354	4	NUT, HEX FLNG TOP LK, 1/4-20
	98-2107	2	PIN, COTTER .148
29	71398424	1	SHIELD, BELT
30	71376154	1	HOOD, TOP
	70921210	6	CAPSCREW, 3/8-16 X 1 GR5
	Y704734	6	NUT, HEX FLNG TOP LOCK, 3/8-16 (PRIOR S/N HN36101)
	70916965	6	LOCKWASHER, 3/8 (EFF. S/N HN36101)

CONTINUED

https://truckmanualshub.com/

STRAW SPREADER
COMPONENTS

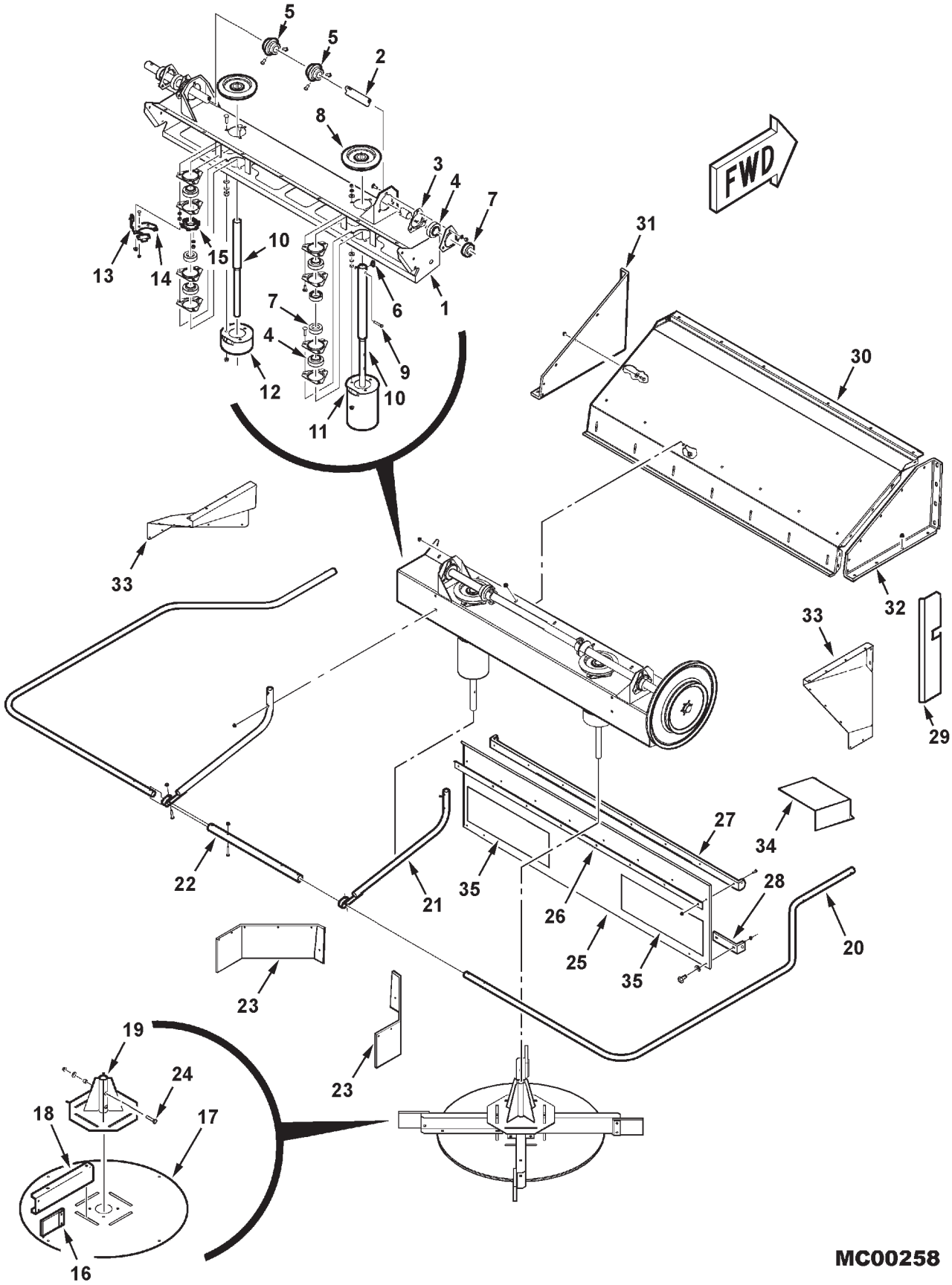

https://truckmanualshub.com/

ITEM	NUMBER	QTY	DESCRIPTION
31	103339W1	1	HOOD SIDE, LEFT (REKORD)
	70921210	4	CAPSCREW, HEX, 3/8-16 X 1
	Y704734	4	NUT, HFTLN 3/8-16
	70921332	3	CAPSCREW 5/16-18 X 3/4
	70917642	3	WASHER, 5/16 WIDE
	Y704726	3	NUT, HEX FLNG TOP LOCK, 5/16-18
	70923114	3	CAPSCREW, 1/2-13 X 1 GR5
	70921176	1	CAPSCREW, 1/2-13 X 1-1/4 GR5
	Y704742	4	NUT, HEX FLNG TOP LOCK, 1/2-13
32	103338W1	1	HOOD SIDE, RIGHT (REKORD)
	70921210	4	CAPSCREW, 3/8-16 X 1
	Y704734	4	NUT, HFTL, 3/8-16
	70921332	3	CAPSCREW, 5/16-18 X 3/4
	70917642	3	WASHER, 5/16 WIDE
	Y704726	3	NUT, HEX FLNG TOP LOCK, 5/16-18
	70923114	4	CAPSCREW, 1/2-13 X 1 GR5
	Y704742	4	NUT, HEX FLNG TOP LOCK, 1/2-13
33	71397350	1	EXTENSION, CURTAIN (RH) (REVISED)
	71397349	1	EXTENSION, CURTAIN (LH) (REVISED)
	70921210	4	CAPSCREW, HEX, 3/8-16 X 1
	70917378	4	WASHER, WIDE PLAIN 3/8
	Y704734	4	NUT, HEX FLNG TOP LOCK, 3/8-16
34	71398420	1	SHIELD, SPREADER DRIVE SHEAVE
	70921210	2	CAPSCREW, HEX, 3/8-16 X 1
	Y704734	2	NUT, HEX FLANGE TOP LOCK, 3/8-16
35	71409848	2	SHEET, WEAR (EFF. S/N HR36101)
	7703457	16	CAPSCREW, 1/4-20 X 3/4
	1703354	16	NUT, HEX FLANGE TOP LOCK, 1/4-20
-	2631700W1	1	DECAL, FAST (NOT SHOWN)
-	2631690W1	1	DECAL, SLOW (NOT SHOWN)

MC00258
PR: 230

https://truckmanualshub.com/

CHAFF SPREADER
HYDRAULIC DRIVE
(PRIOR S/N HS36101)

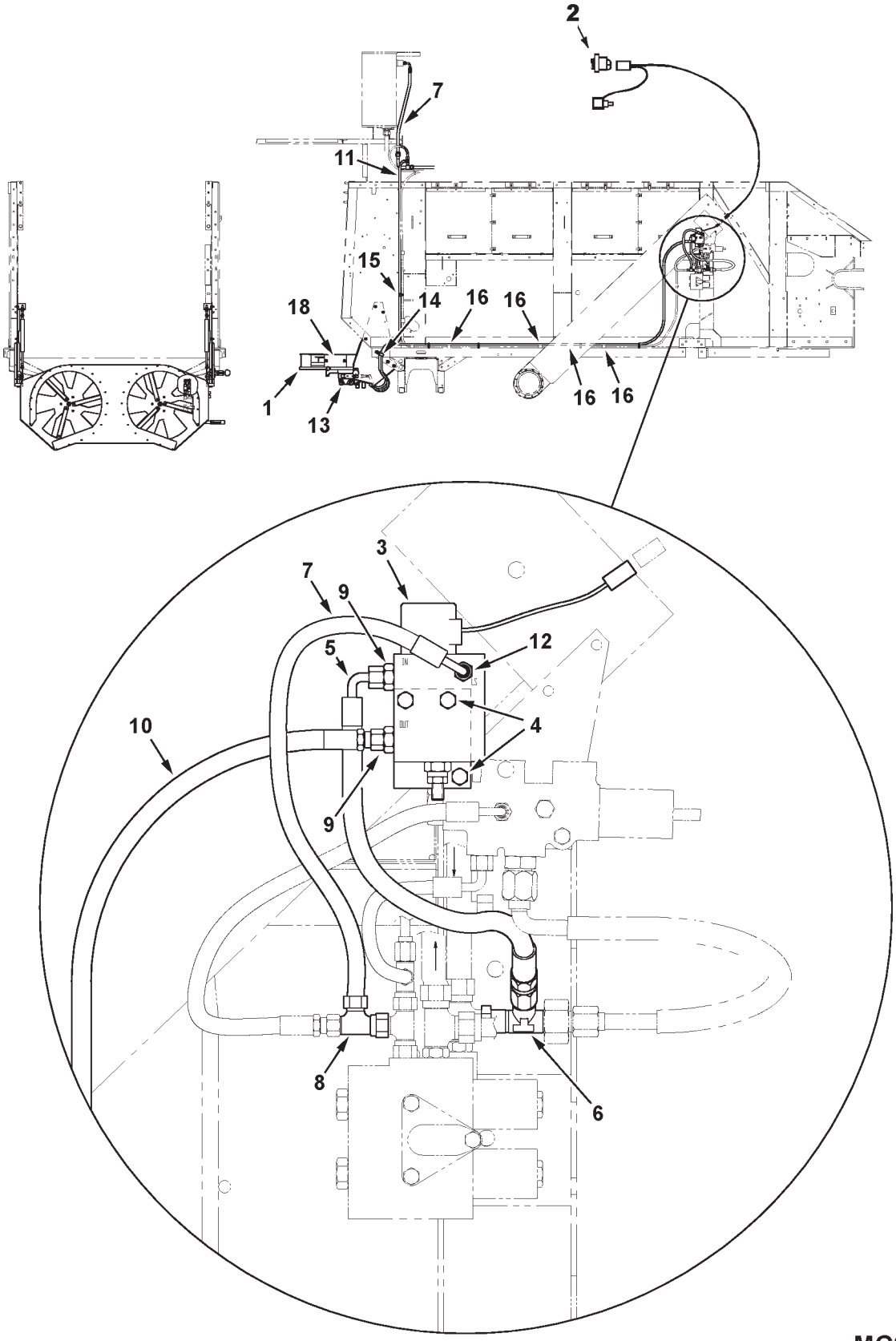

MC00263

https://truckmanualshub.com/

CHAFF SPREADER
HYDRAULIC DRIVE
(PRIOR S/N HS36101)

ITEM	NUMBER	QTY	DESCRIPTION
1	-----	1	CHAFF SPREADER ASSEMBLY (REKORD)
			(SERVICE WITH COMPONENTS)
2	71390101	1	SWITCH
3	71387798	1	VALVE, FLOW CONTROL (INCL. FOLLOWING)
	71389740	1	VALVE ASY., SOLENOID CARTRIDGE
	700726978	AR	SEAL KIT (FOR 71389740)
	71389741	1	COIL, 12V DC, W/DIODE
	71389742	1	VALVE CARTRIDGE, FLOW REGULATOR
	700724693	AR	SEAL KIT (FOR 71389742)
	71389743	1	CHECK VALVE
	700726979	AR	SEAL KIT (FOR 71389743)
	71397493	1	LOCK KIT, VALVE, W/ SCREW
4	71388098	1	PLATE, MOUNTING
	70921978	2	CAPSCREW, HEX 5/16-18 X 2
	70917372	2	NUT, HEX 5/16-18
	70917356	2	LOCKWASHER 5/16
5	71388099	1	HOSE ASSEMBLY, SUPPLY
6	70921298	1	TEE, SWIVEL RUN, 3/4-16 JIC
7	101590M1	1	HOSE ASSEMBLY
8	700701355	1	TEE, SWIVEL RUN
9	70922522	2	CONNECTOR, STR, 9/16-18 JIC X ORB
	70921885	2	O-RING, .078 X .468 ID
10	71388100	1	HOSE ASY, PRESSURE
11	71388826	1	HOSE ASY, RETURN
12	70923163	1	CONNECTOR, STR, 7/16-20 JIC X ORB
	70921883	1	O-RING, .072 X .351 ID
13	71388056	2	CONN, STR, 1/4 BSPP X 9/16-18 JIC MALE
14	700717627	1	CLAMP, DOUBLE LINE, 11/16 X .406 HOLE
	70921210	1	CAPSCREW, 3/8-16 X 1
	70916950	1	NUT, HEX 3/8-16
	70916965	1	LOCKWASHER, 3/8
15	70928656	1	CLAMP, LINE, 5/8 DIA X .406 HOLE
	70921210	1	CAPSCREW, 3/8-16 X 1
	70916950	1	NUT, HEX 3/8-16
	70916965	1	LOCKWASHER, 3/8
16	70937133	4	NYLON TIE, .30 X 15 LG
18	111737W1	3	LABEL, WARNING, CHOPPER
-	71399027	1	KIT, CHAFF SPREADER (FIELD INSTALL)
			(ORDER THRU DEALER CENTRAL)

MC00263
PR: 234

https://truckmanualshub.com/

CHAFF SPREADER
HYDRAULIC DRIVE
(EFF. S/N HS36101)

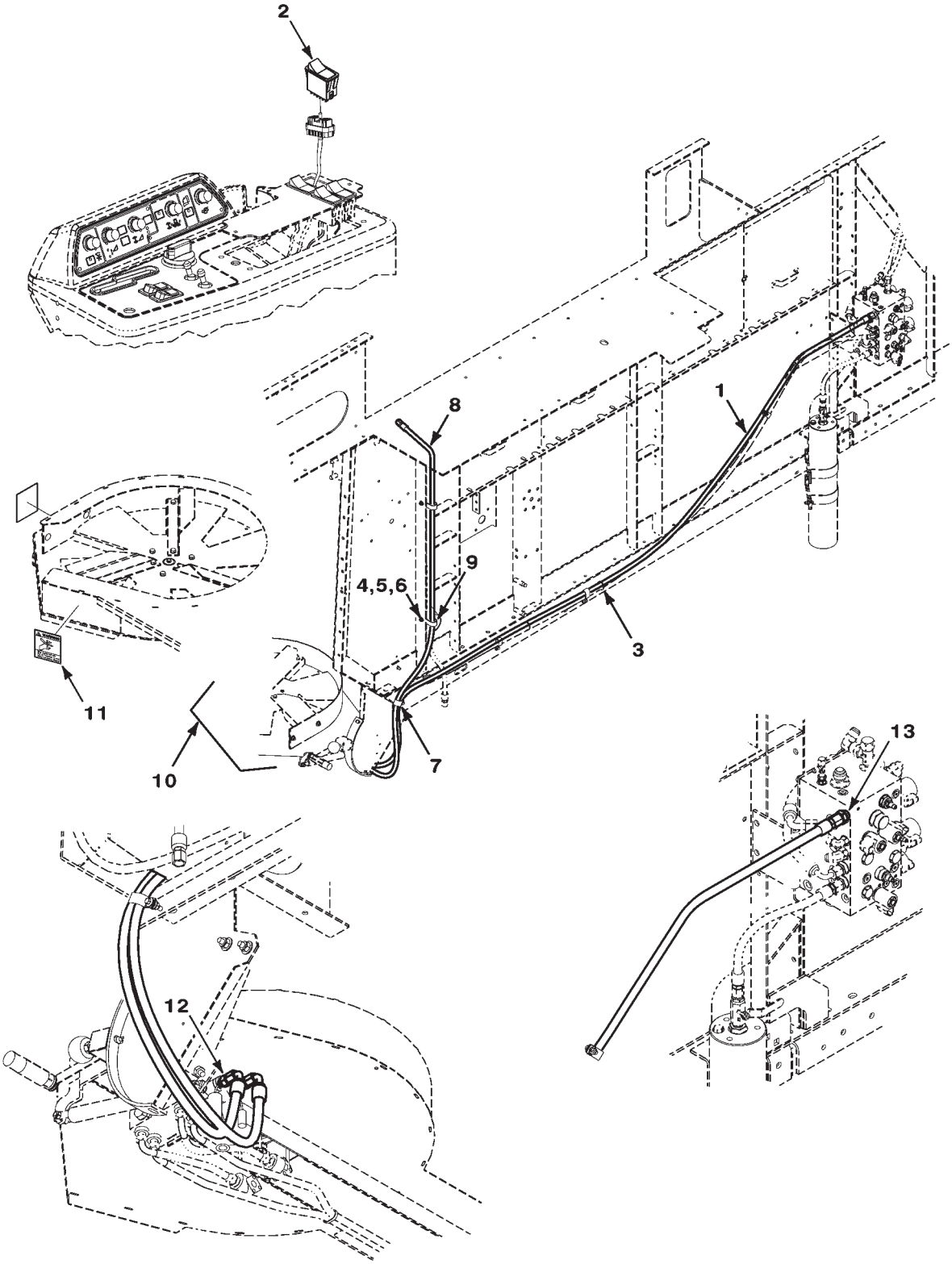

https://truckmanualshub.com/

CHAFF SPREADER
HYDRAULIC DRIVE
(EFF. S/N HS36101)

ITEM	NUMBER	QTY	DESCRIPTION
1	71388100	1	HOSE ASY, SUPPLY PRESSURE
2	71390101	1	SWITCH, ON/OFF
3	70937133	4	TIE, NYLON LOCKING, .30 X 14.5 LG
4	70921210	2	CAPSCREW, 3/8-16 X 1.0
5	70916965	2	LOCKWASHER, 3/8
6	70916950	2	NUT, 3/8-16 REG
7	700717627	1	CLAMP, DOUBLE LINE, 11/16 X .406 HOLE
8	71388826	1	HOSE ASY, RETURN
9	70928656	1	CLAMP, LINE, 5/8 DIA X .406 HOLE
10	- - - - -	1	CHAFF SPREADER ASSEMBLY (REKORD) (SERVICE WITH COMPONENTS)
11	111737W1	3	LABEL, WARNING, CHOPPER
12	71388056	2	CONN, STR, 1/4 BSPP X 9/16-18 JIC MALE
13	360202X91	1	CONN, STR, 9/16-18 JIC X 3/4-16 ORB M
	70921349	1	O-RING, .087 X .644 ID
-	71413223	AR	KIT, CHAFF SPREADER (FIELD INSTALL) (ORDER THRU DEALER CENTRAL)

MC00573
PR: 71413222-01-11

https://truckmanualshub.com/

CHAFF SPREADER
FAN HOUSING, REKORD
(PRIOR S/N HS36101)

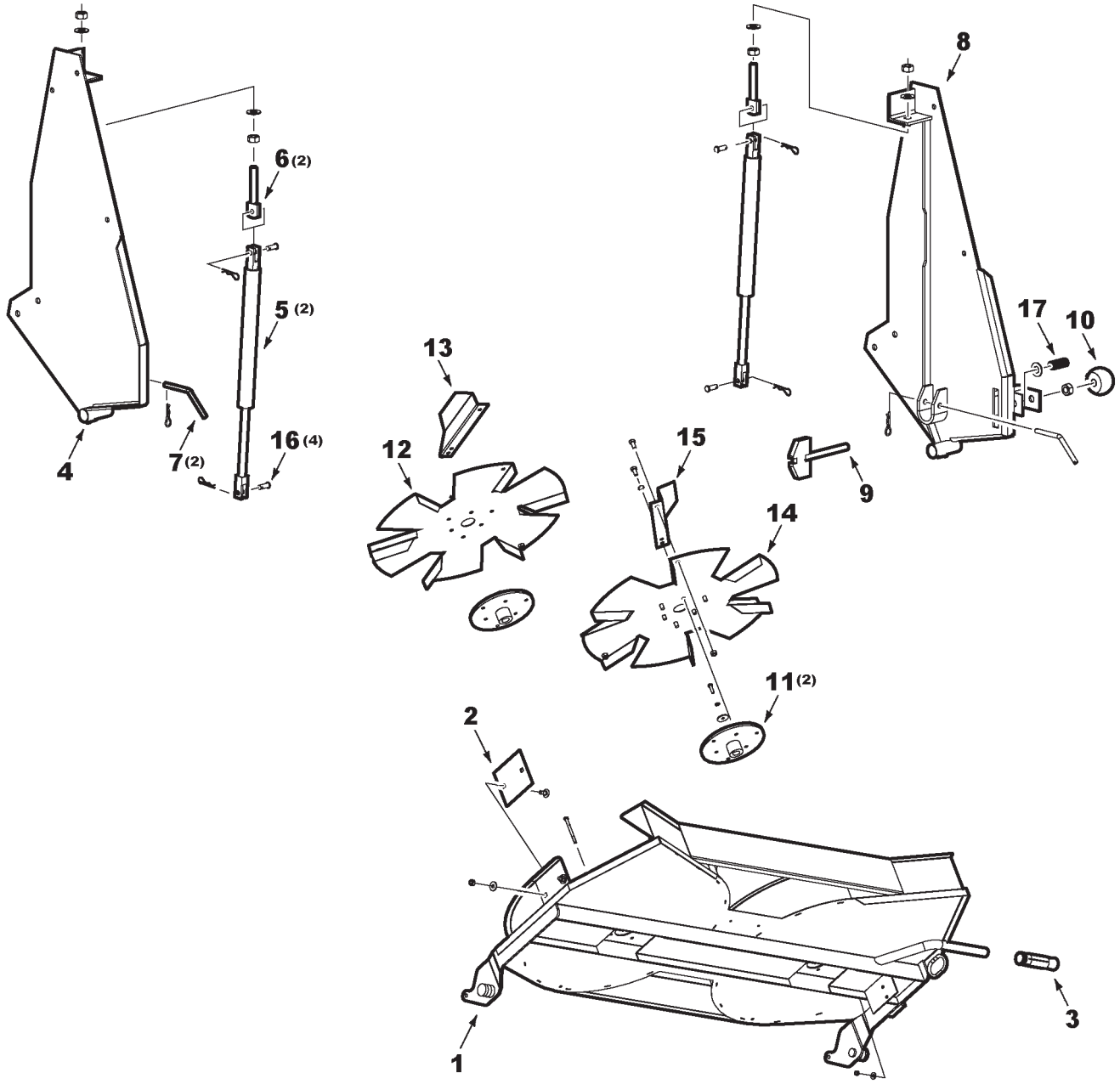

MC00262

https://truckmanualshub.com/

CHAFF SPREADER
FAN HOUSING, REKORD
(PRIOR S/N HS36101)

ITEM	NUMBER	QTY	DESCRIPTION
-	71397992	1	FAN HSG. ASY (INCL ITEMS 1,2,3,11,12,13 14,15 & HYD COMPNTS ON FOLL'NG PAGE)
1	71397174	1	HOUSING WLMT, SPREADER
2	71397167	2	WEAR PLATE
	385368X1	4	BOLT,RHSN, M8-1.25 X 16 CL8.8
	1440921X1	4	WASHER, M8
	3000193X1	4	NUT, HEX NYLON LOCK, M8 X 1.25
3	71389997	1	GRIP, PLASTIC
4	71397394	1	SUPPORT PLATE WLMT, LH
	7772197	3	CAPSCREW, M8 X 25 LG
	1440921X1	6	WASHER, 8 MM
	3019124X1	3	LOCKNUT, M8
	700708349	2	CAPSCREW, M10 X 25 LG
	339025X1	4	WASHER, 10 MM
	1441932X1	2	LOCKNUT, M10
5	71390260	2	GAS STRUT
6	D49080047	2	YOKE, ADJUSTMENT
	390735X1	4	WASHER, M12, STD
	3009695X1	4	NUT, M12
7	71390259	2	PIN, BENT, SPECIAL
	70933339	2	RETAINER PIN, .094 X 1.62 LG
8	71397393	1	SUPPORT PLATE WLMT, RH
	7772197	3	CAPSCREW, M8 X 25 LG
	1440921X1	6	WASHER, 8 MM
	3019124X1	3	LOCKNUT, M8
	700708349	2	CAPSCREW, M10 X 25 LG
	339025X1	4	WASHER, 10 MM
	1441932X1	2	LOCKNUT, M10
9	71397391	1	LOCK
	391290X1	1	PIN, SPRING, 5 MM X 30 LG
	3009695X1	1	NUT, M12-1.75
	390735X1	1	WASHER, M12, STD
10	71397390	1	KNOB
11	D49070008	2	HUB
	70950002	2	CAPSCREW, M6-1.0 X 20
	339375X1	2	LOCKWASHER, M6
	391038X1	2	WASHER, M6, LARGE
12	71397171	1	DISC, LH
	339124X1	6	CAPSCREW, M8-1.25 X 16 CL8.8
	353446X1	5	LOCKWASHER
	3019124X1	5	NUT, LOCK M8
13	71397376	3	BLADE, SPREADER LH
	339124X1	3	CAPSCREW, M8-1.25 X 16 CL8.8
	3019124X1	3	NUT, LOCK M8
14	71397172	1	DISC, RH
	339124X1	6	CAPSCREW, M8-1.25 X 16 CL8.8
	353446X1	5	LOCKWASHER
	3019124X1	5	NUT, LOCK M8
15	71397377	3	BLADE, SPREADER RH
	339124X1	3	CAPSCREW, M8-1.25 X 16 CL8.8
	3019124X1	3	NUT, LOCK M8
16	70923093	4	PIN, CLEVIS, 5/16 X 15/16 LG
	70923086	4	RETAINER PIN, .072 X 1.09 LG
17	71397392	1	SPRING
-	71379811	2	DECAL, WARNING (NOT ILLUSTRATED)
-	D49100159	2	DECAL, STOP (NOT ILLUSTRATED)

https://truckmanualshub.com/

CHAFF SPREADER
FAN HOUSING, REKORD
(EFF. S/N HS36101)

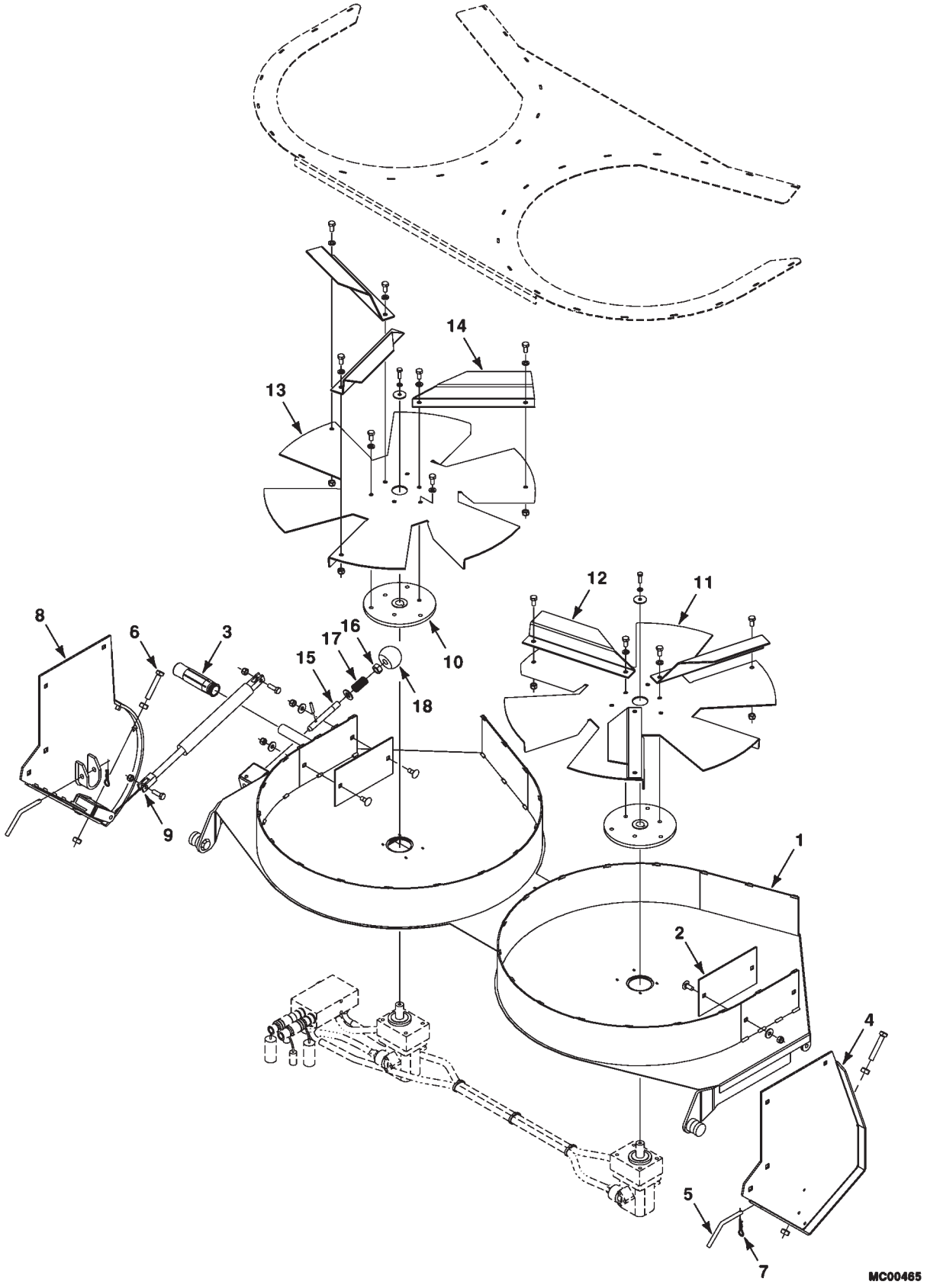

https://truckmanualshub.com/

CHAFF SPREADER
FAN HOUSING, REKORD
(EFF. S/N HS36101)

ITEM	NUMBER	QTY	DESCRIPTION
-	71411972	1	FAN HSG ASY, CHAFF SPRDR, W/ MOTORS (INCL IT. 1,2,3,10 THRU 18 AND HYD. COMPONENTS ON FOLLOWING PAGE.
1	71411983	1	FAN HSG. WLMT, SPREADER
2	71397167	2	WEAR PLATE
	385368X1	4	BOLT,RHSN, M8-1.25 X 16 CL8.8
	353770X1	4	WASHER, M8
	3000193X1	4	NUT, HEX NYLON LOCK, M8 X 1.25
3	71389997	1	GRIP, PLASTIC
4	71411974	1	SUPPORT PLATE WLMT, LH
5	71390259	2	PIN, BENT, SPECIAL
6	339679X1	2	CAPSCREW, M10-1.5 X 60 CL8.8(CHOPPR)
	339402X1	4	NUT, M10 X 1.5, REG
7	70933339	2	RETAINER PIN, .094 X 1.62 LG
8	71411981	1	SUPPORT PLATE WLMT, RH
9	71411982	1	GAS STRUT
	7772197	2	CAPSCREW, M8-1.25 X 25 CL8.8
	3000193X1	2	NUT, HEX NYLON LOCK, M8 X 1.25
10	D49070008	2	HUB
	339666X1	2	CAPSCREW, M6-1.0 X 20
	339375X1	2	LOCKWASHER, M6
	391038X1	2	WASHER, M6, LARGE
11	71397171	1	DISC, LH
	339124X1	6	CAPSCREW, M8-1.25 X 16 CL8.8
	339374X1	6	LOCKWASHER, M8
12	71397376	3	BLADE, SPREADER LH
	339124X1	3	CAPSCREW, M8-1.25 X 16 CL8.8
	3000193X1	4	NUT, HEX NYLON LOCK, M8 X 1.25
13	71397172	1	DISC, RH
	339124X1	6	CAPSCREW, M8-1.25 X 16 CL8.8
	339374X1	6	LOCKWASHER, M8
14	71397377	3	BLADE, SPREADER RH
	339124X1	3	CAPSCREW, M8-1.25 X 16 CL8.8
	3000193X1	4	NUT, HEX NYLON LOCK, M8 X 1.25
15	71411976	1	ROD, LOCK
	391290X1	1	PIN, SPRING, 5 MM X 30 LG
16	3009695X1	1	NUT, M12 X 1.75, REG
	390735X1	1	WASHER, M12, STD
17	71397392	1	SPRING
18	71397390	1	KNOB

MC00465
PR: t06g24h33d0099

https://truckmanualshub.com/

CHAFF SPREADER
HYDRAULICS, REKORD

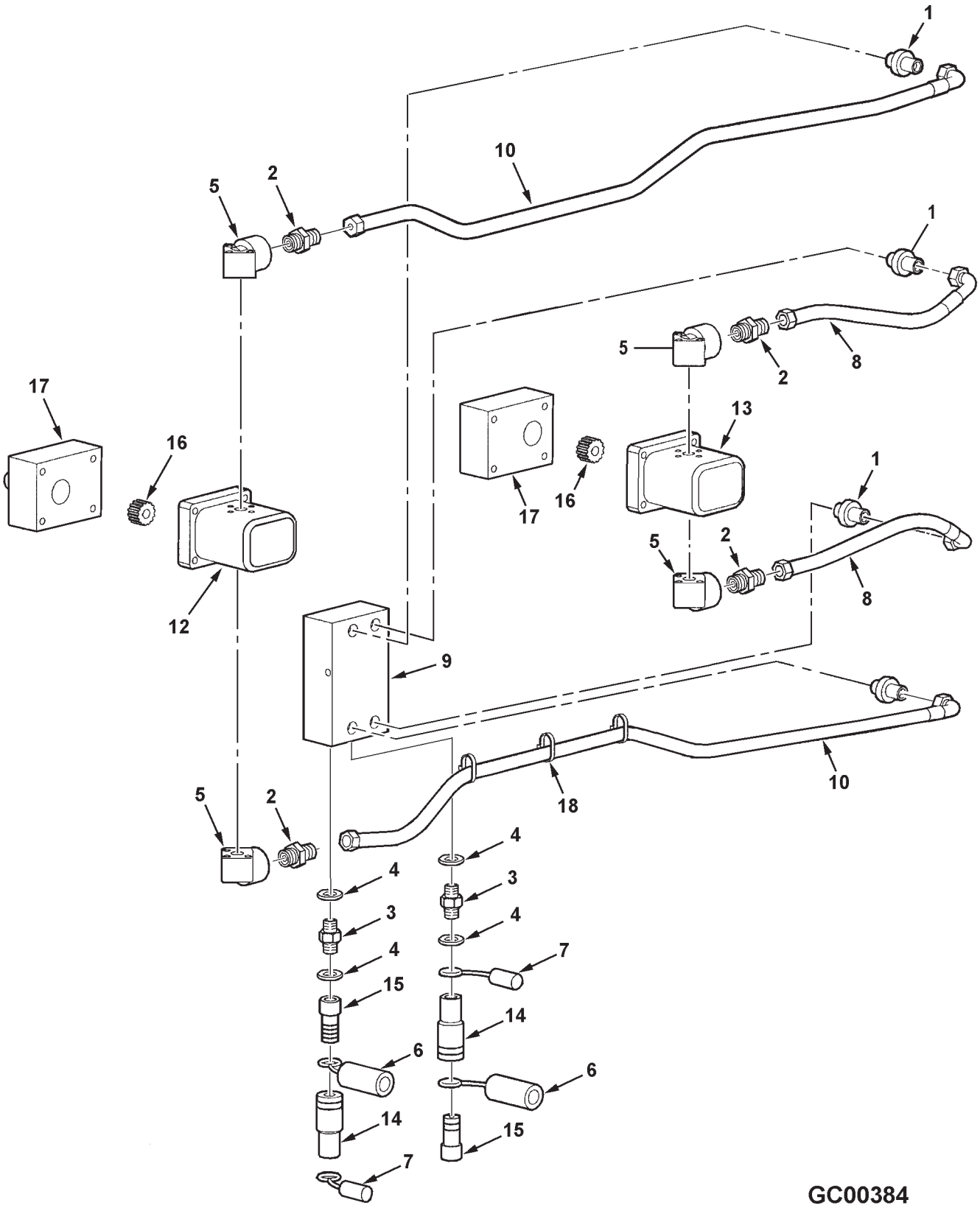

https://truckmanualshub.com/

ITEM	NUMBER	QTY	DESCRIPTION
1	71397381	4	ADAPTER
2	71397382	4	ADAPTER
3	D49070031	2	COUPLER, FEM.
4	D49070022	4	SEAL RING
5	D49070026	4	ELBOW, 90 DEG FLANGE
6	71397383	2	DUST COVER
7	71397384	2	DUST COVER
8	71397385	2	HOSE ASY.
9	71412991	1	VALVE ASY.
	71411980	1	SEAL KIT (NOT SHOWN)
	71411979	1	DIVIDER, FLOW (NOT SHOWN)
	71411978	1	VALVE, CHECK (NOT SHOWN)
	3019894X1	2	CAPSCREW, M6-1.0 X 100
	391038X1	2	WASHER, LARGE, M6
	1441500X1	2	NUT, HEX NYL LOCK, M6 X 1.0
10	71397386	2	HOSE ASY.
12	71397388	1	MOTOR, HYDRAULIC, LH
	71390284	1	SEAL KIT (NOT SHOWN)
	3010639X1	4	CAPSCREW, M6-1.0 X 70
	1441500X1	4	NUT, HEX NYL LOCK, M6 X 1.0
13	71397389	1	MOTOR, HYDRAULIC, RH
	71390284	1	SEAL KIT (NOT SHOWN)
	3010639X1	4	CAPSCREW, M6-1.0 X 70
	1441500X1	4	NUT, HEX NYL LOCK, M6 X 1.0
14	71390267	2	COUPLING, QUICK DISCONNECT, FEM.
15	71390268	2	COUPLING, QUICK DISCONNECT, MALE
16	71390279	2	HUB, SPLINED
17	D49070025	2	SUPPORT BEARING
18	70925094	AR	TIE STRAP

GC00384
PR: 238

https://truckmanualshub.com/

LOWER AUGER HOUSING AND FANNING MILL

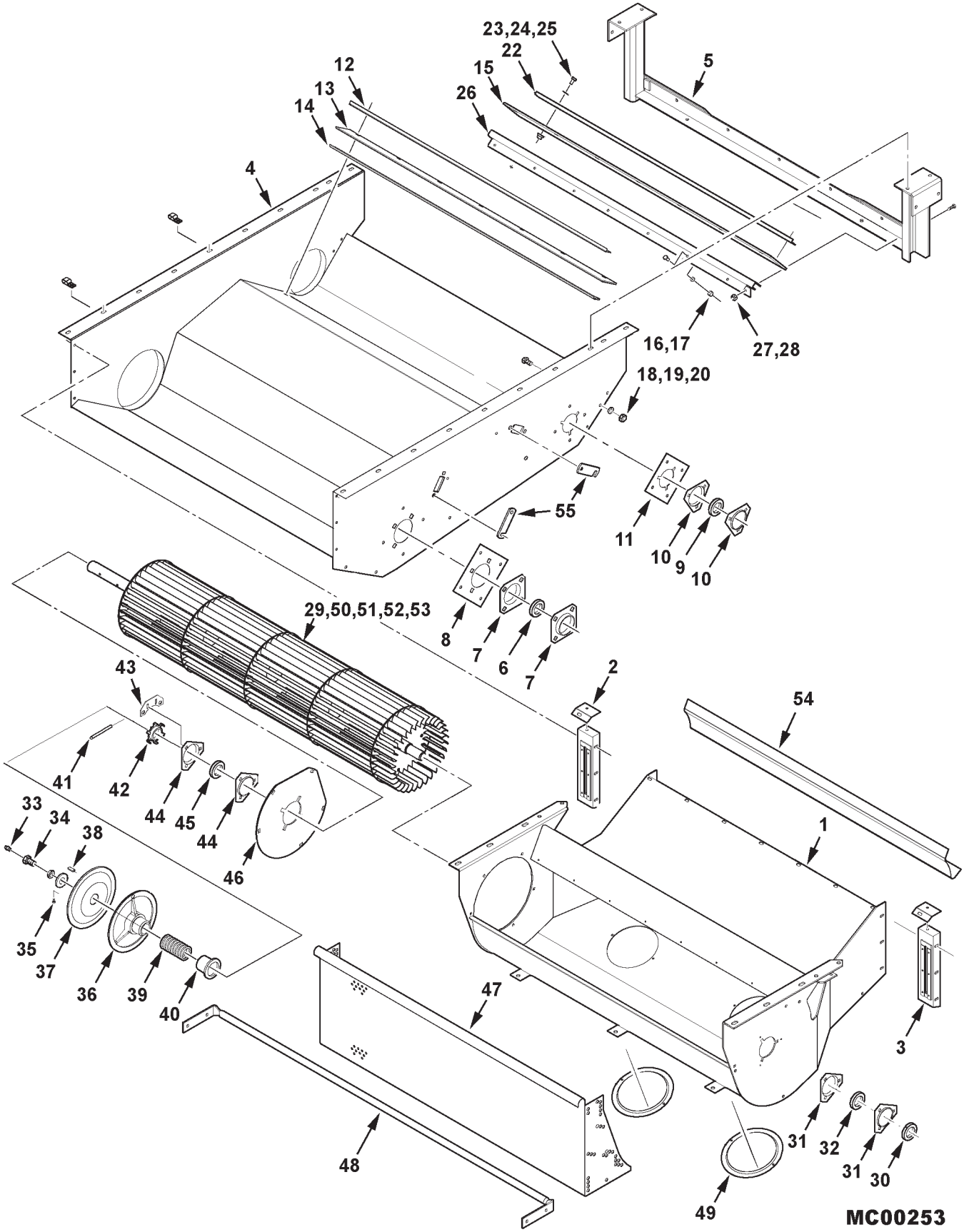

https://truckmanualshub.com/

LOWER AUGER HOUSING AND FANNING MILL

ITEM	NUMBER	QTY	DESCRIPTION
1	71390000	1	HOUSING ASY., FAN (INCL. ITEM 54)
	71186166	3	RETAINER STRIP, CARR BOLT (NOT ILL.)
	70925160	3	POP-RIVET, 3/16 X .251-.375 GRIP
	701235	12	CAPSCREW, 1/2-13 X 1-1/2
	70918431	6	WASHER, FLAT, 1/2
	Y704742	12	NUT, HEX FLNG TOP LOCK, 1/2-13
	70921332	22	CAPSCREW, 5/16-18 X 3/4
	70917642	22	WASHER, FLAT, 5/16
	Y704726	22	NUT, HEX FLNG TOP LOCK, 5/16-18
2	2446920W1	1	PLATE, FILLER (RH)
	2446930W1	1	PLATE, FILLER (LH)
	70921332	2	CAPSCREW, 5/16-18 X 3/4
	70917642	2	WASHER, FLAT, 5/16
	Y704726	2	NUT, HEX FLNG TOP LOCK, 5/16-18
3	2446893W91	1	PANEL, FILLER (LH)
	2446903W91	1	PANEL, FILLER (RH)
4	71395252	1	HOUSING WLDMT, AUGER (PRIOR S/N HP36101)
	71399999	1	HOUSING WLDMT, AUGER (EFF. S/N HP36101)
	70927134	2	J-CLIP, 5/8 DIA X .406 HOLE
	70921969	20	CAPSCREW, 3/8-16 X 1-1/2
	Y704734	20	NUT, HEX FLNG TOP LOCK, 3/8-16
5	71387546	1	FRAME ASY.
	70921210	4	CAPSCREW, 3/8-16 X 1.0
	70917378	4	WASHER, FLAT, 3/8
	Y704734	4	NUT, HEX FLNG TOP LOCK, 3/8-16
6	50468	1	BEARING, 1.50"
7	17789	2	FLANGE, BEARING
	68619	4	BOLT, RD HD SQ NECK, 1/2-13 X 1-1/4
	Y705046	4	LOCKWASHER, 1/2
	704031	4	HEXNUT, 1/2-13
8	2636000W1	1	PLATE (PRIOR S/N HP36101)(NOT USED EFF. S/N HP36101)
	70921965	4	CAPSCREW, 3/8-16 X 3/4
	Y704734	4	NUT, HEX FLNG TOP LOCK, 3/8-16
9	70590704	1	BEARING, 1.125" W/O COLLAR
10	71127313	2	FLANGE, BEARING
	68759	1	BOLT, RD HD SQ NECK, 3/8-16 X 1
	768036	2	BOLT, RD HD SQ NECK, 3/8-16 X 1-1/2
	70916965	3	LOCKWASHER, 3/8
	70916950	3	NUT, 3/8-16 REG
11	2636010W1	1	PLATE (PRIOR S/N HP36101)(NOT USED EFF. S/N HP36101)
	70921965	4	CAPSCREW, 3/8-16 X 3/4
	Y704734	4	NUT, HEX FLNG TOP LOCK, 3/8-16
12	71387703	1	ANGLE, SEAL CLAMPING (PRIOR S/N HP36101)
13	71387704	1	SEAL, REAR AUGER HSG.(PRIOR S/N HP36101)
14	71387710	1	RETAINER, SEAL (PRIOR S/N HP36101)
	70921333	8	CAPSCREW, HEX HD, 5/16-18 X 1
	70917642	8	WASHER, 5/16
	Y704726	8	NUT, HEX FLNG TOP LOCK, 5/16-18
15	71396452	1	SEAL, REAR AUGER HSG.
16	Y704734	8	NUT, HEX FLNG TOP LOCK, 3/8-16
17	70921965	8	CAPSCREW, 3/8-16 X 3/4
	70917378	8	WASHER, 3/8 WIDE

CONTINUED

https://truckmanualshub.com/

LOWER AUGER HOUSING AND FANNING MILL

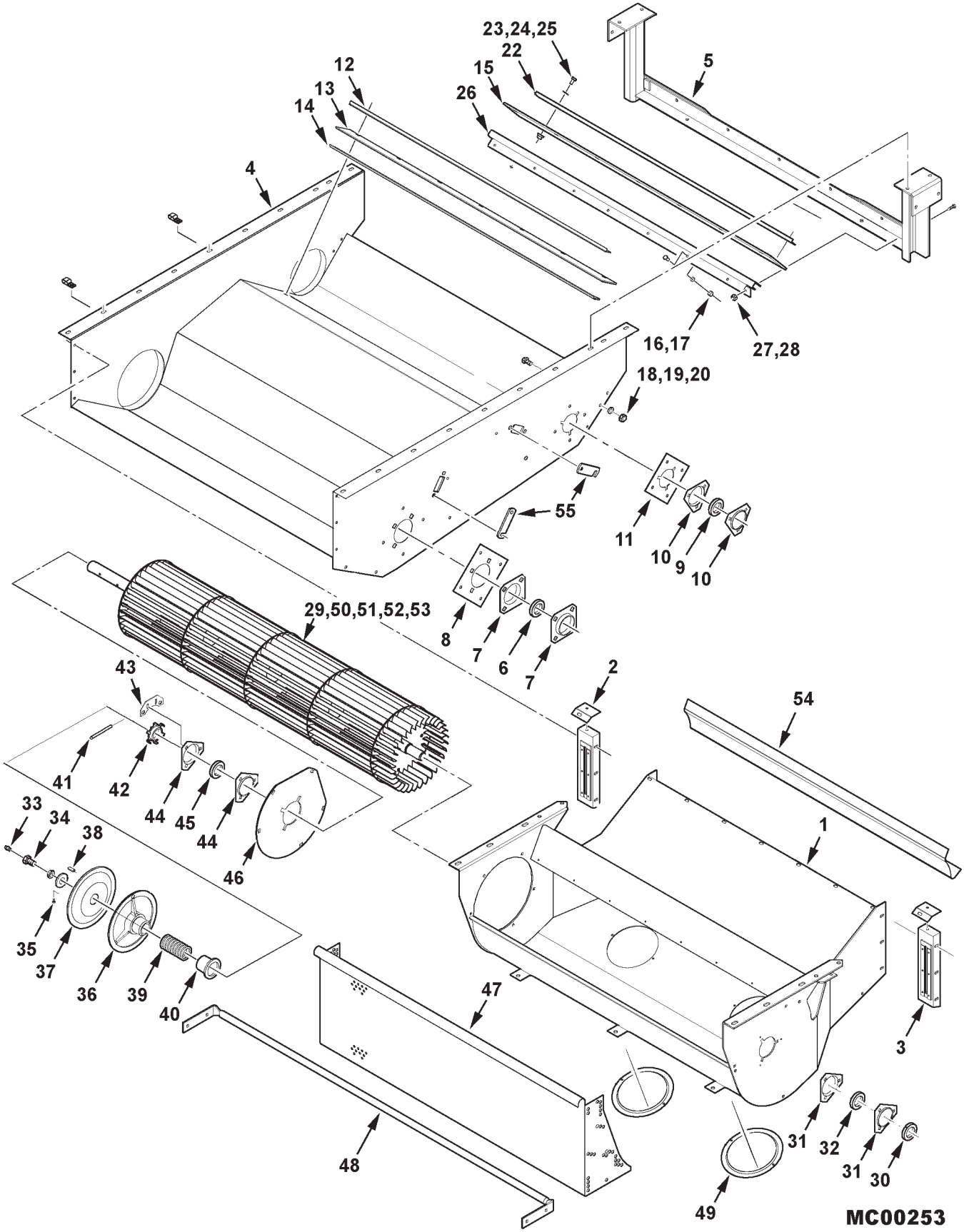

https://truckmanualshub.com/

ITEM	NUMBER	QTY	DESCRIPTION
18	70917372	4	NUT, 5/16-18 REG (PRIOR S/N HP36101)
19	Y705020	4	LOCKWASHER, 5/16 (PRIOR S/N HP36101)
20	70921332	4	CPSCR, 5/16-18 X 3/4 (PRIOR S/N HP36101)
22	71387703	2	ANGLE, SEAL CLAMPING
23	70921332	8	CAPSCREW, 5/16-18 X 3/4
24	70917642	8	WASHER, 5/16
25	Y704726	16	NUT, HEX FLNG TOP LOCK, 5/16-18
26	71395853	1	REINFORCEMENT WLMT, SEAL
27	70921210	6	CAPSCREW, 3/8-16 X 1.0
28	Y704734	6	NUT, HEX FLNG TOP LOCK, 3/8-16
29	71412136	1	FAN ASY, SEPARATOR (INCL. ITEMS 50-53)
30	7710551	1	COLLAR, LOCK
31	71192243	2	FLANGE
	68759	3	BOLT, RD HD SH SQ NECK 3/8-16 X 1.0
	70916965	3	LOCKWASHER, 3/8
	70916950	3	HEXNUT, 3/8-16
32	71309117	1	BEARING, W/COLLAR, 1.250
33	70923219	1	FITTING, LUBE, 1/4-28 SPL. TAPER
34	71395571	1	CAPSCREW, SPECIAL, 5/8-11 X 1-1/4
	70917373	1	LOCKWASHER, 5/8
	6555346	1	WASHER, 21/32 X 2.0 X .250 TH
35	791319	1	PLUG, HX HD, 1/8-27
36	2442480W2	1	SHEAVE, OUTER
37	71395572	1	SHEAVE, INNER
38	71395573	1	KEY, 5/16 SQ. X 7-1/2
39	2440720W1	1	SPRING
40	71387375	1	BUSHING, FAN DRIVE
41	63834	1	PIN, SPIROL, 1/4 X 2-1/4
42	71315780	1	COLLAR, SENSING
43	71315785	1	BRACKET, SHAFT MONITOR
	70926838	2	SCREW, RD HD SQ NECK 1/2-13 X 1-1/2
	Y705046	2	LOCKWASHER, 1/2
	704056	4	NUT, HEX JAM, 1/2-13 GR2
44	17789	2	FLANGE, BEARING
	68619	2	SCREW, RD HD SQ NECK 1/2-13 X 1-1/4
	Y705046	2	LOCKWASHER, 1/2
	704031	2	HEXNUT, 1/2-13
45	71122510	1	BEARING, FLANGE W/COLLAR
46	71386400	1	PLATE, COVER
	70917642	6	WASHER, 5/16 WIDE
	Y705020	6	LOCKWASHER, 5/16
	70917372	6	HEXNUT, 5/16-18
47	71390939	1	SCREEN, LEAF
	70921965	3	CAPSCREW, 3/8-16 X 3/4
	Y705533	3	WASHER, FLAT 3/8 HARD
48	71390673	1	SUPPORT, LEAF SCREEN
	70923114	4	CAPSCREW, 1/2-13 X 1.0
	705541	4	WASHER, FLAT 1/2 HARD
	Y704742	4	NUT, HEX FLNG TOP LOCK, 1/2-13
49	71376758P	2	COVER, INSPECTION
	705012	4	LOCKWASHER, 1/4
	70916622	4	HEXNUT, 1/4-20

CONTINUED

https://truckmanualshub.com/

LOWER AUGER HOUSING AND FANNING MILL

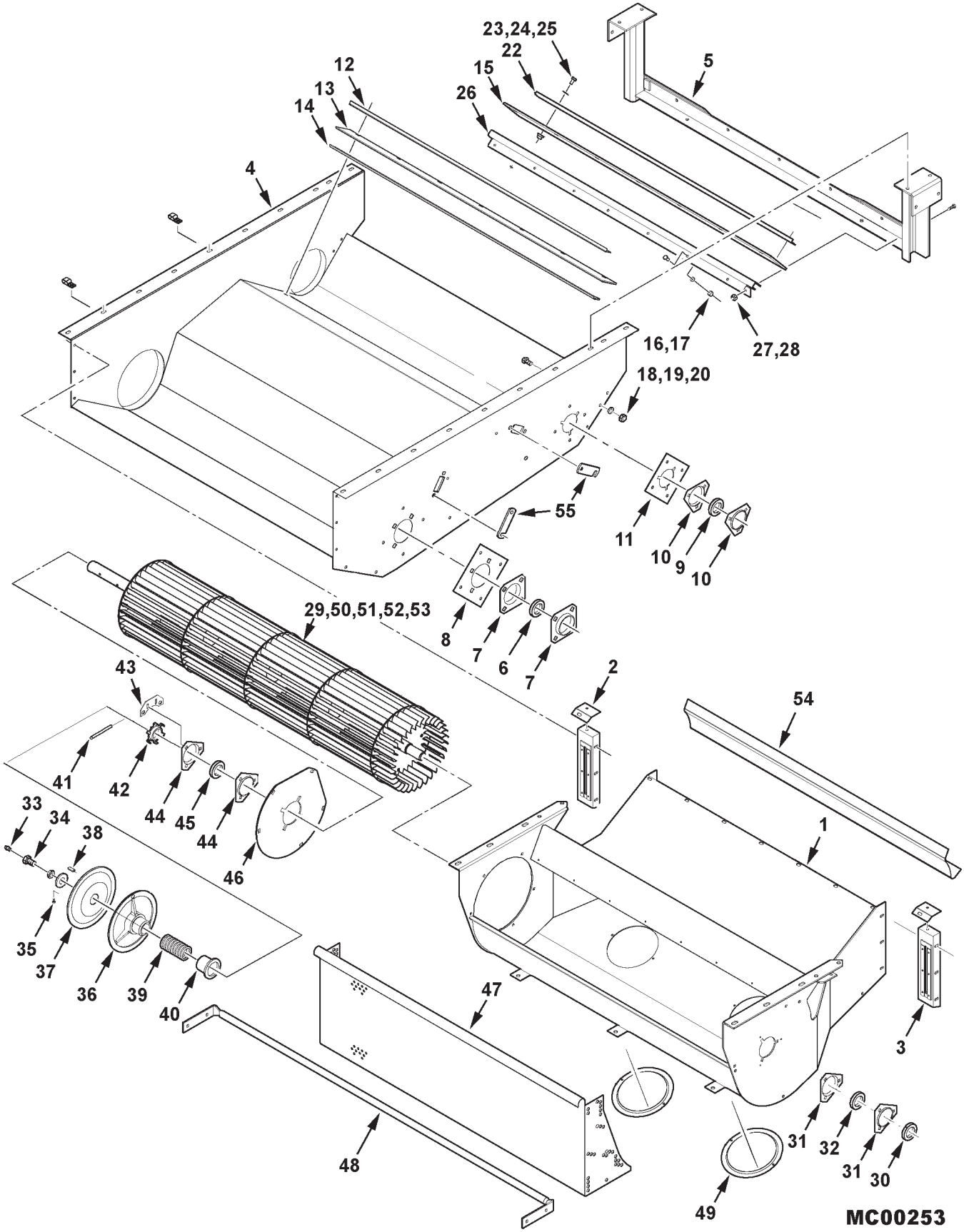

https://truckmanualshub.com/

ITEM	NUMBER	QTY	DESCRIPTION
50	71390654	1	SHAFT, FAN (NOT ILLUST'D)
51	71354636	4	HEAD ASY, FAN
	71373684	1	HEAD ASY, FAN LH
	7703838	12	CAPSCREW, 5/16-18 X 1-3/4
	Y705608	24	WASHER, 5/16 NARROW
	Y705020	12	LOCKWASHER, 5/16
	70917372	12	NUT, 5/16-18 REG
52	71412132	32	BLADE, FAN
53	71348314	3	RING, BLADE RETAINING
54	71400604	1	VORTEX PLATE, TRANSVERSE FAN
	70925160	20	POP-RIVET, 3/16 X .251-.375 GRIP
55	108202W1	2	STRAP (EFF. S/N HP36101)
	70917642	4	WASHER, 5/16, WIDE
	Y705020	4	LOCKWASHER, 5/16
	70917372	4	NUT, 5/16-18 REG
-	71411658	AR	KIT, SLOW SPEED FAN DRIVE (ORDER THRU DEALER CENTRAL)
	71396326	1	SHEAVE HALF, INNER, SLOW SPEED
	2537670W2	1	SHEAVE HALF, OUTER

MC00253
PR: 240

https://truckmanualshub.com/

VARIABLE SPEED FAN DRIVE

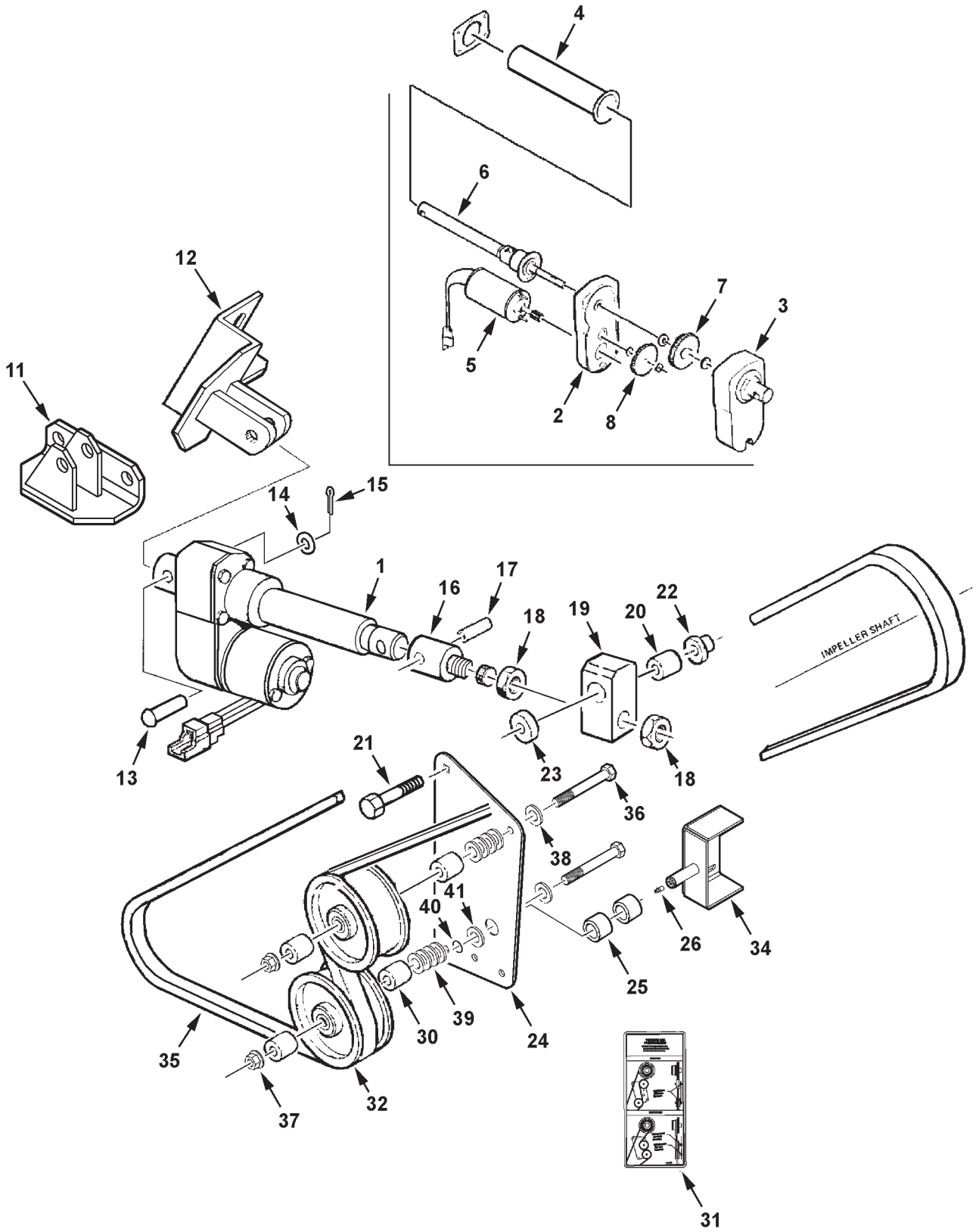

MC00255

https://truckmanualshub.com/

ITEM	NUMBER	QTY	DESCRIPTION
1	293817M91	1	ACTUATOR MOTOR ASY (INCL. ITEMS 2-8)
2	1068614M91	1	HOUSING ASSEMBLY, FRONT
3	700704854	1	HOUSING ASSEMBLY, REAR
4	1068617M1	1	COVER
5	103657W91	1	MOTOR
6	1068620M91	1	SCREW ASSEMBLY
7	700704927	1	CLUTCH ASSEMBLY
8	700711357	1	GEAR ASSEMBLY, INTERMEDIATE
	----------	1	*GASKET, COVER TUBE
	----------	1	*GASKET, HOUSING
	----------	1	*SEAL, MOTOR
	----------	1	*O-RING
	----------	1	*LIP, SEAL
-	700704856	-	KIT, SEAL (INCLUDES * ITEMS)
11	71399477B	1	BRKT. WLDMT, ANCHOR (EFF. S/N HP36101)
	70921176	2	CAPSCREW, 1/2-13 X 1-1/4 GR5
	Y704742	2	NUT, HEX FLNG TOP LOCK, 1/2-13 UNC
12	2588071W92	1	BRKT. WLDMT, ANCHOR (PRIOR S/N HP36101)
	70921210	2	CAPSCREW, 3/8-16 X 1 GR5
	Y704734	2	NUT, HEX FLANGE TOP LOCK, 3/8-16
13	195412M1	1	PIN, CLEVIS, 1/2 X 2
14	Y705624	1	WASHER, NARROW, 1/2
15	70918455	1	COTTER PIN, 5/32 X 1
16	71390093	1	ROD WLMT, CONTROL
17	70922770	1	PIN, SPRING, 1/2 X 1-3/4
18	70913160	2	NUT, 3/4-10 UNC
19	2537720W1	1	BLOCK, PIVOT
20	2446310W1	1	SPACER, .68 ID X .998 X 1.55 LG
21	70923111	1	CAPSCREW, 5/8-11 X 3 GR5
22	700703922	1	NUT, HEX FLNG TOP LOCK, 5/8-11 UNC
23	2464250W1	1	SPACER, 21/32 X 1-1/2 X 3/8
24	71394356B	1	PLATE WLMT W/BUSH'S (PRIOR S/N HP36101)
	71399481B	1	PLATE WLMT W/BUSH'S (EFF. S/N HP36101)
25	831268M1	2	BUSHING, 3/4 X 7/8 X 3/4
26	70914687	1	LUBE FITTING, STR, 1/4-28 UNF
30	365098X1	4	SPACER, IDLER FAN DRIVE
31	71392776	1	DECAL, V-S FAN DRIVE
32	2545270W1	2	PULLEY, IDLER
34	71391526	1	BRACKET WLMT, PIVOT
	70921210	2	CAPSCREW, 3/8-16 X 1 GR5
	Y704734	2	NUT, HEX FLNG TOP LOCK, 3/8-16
35	71394352	1	BELT (SEE BELT LISTING)
36	70925705	2	CAPSCREW, 5/8-11 X 5 GR5
37	700703922	2	NUT, HEX FLNG TOP LOCK, 5/8-11 UNC
38	70918433	2	WASHER, 3/4, WIDE
39	70918432	8	WASHER, 5/8, WIDE
40	70927732	1	RETAINING RING, EXTERNAL
41	70923427	1	WASHER, .78 ID X 1.25 X .12 TH.

MC00255
PR: 244

https://truckmanualshub.com/

SEPARATOR PAN
(PRIOR S/N HS36101)

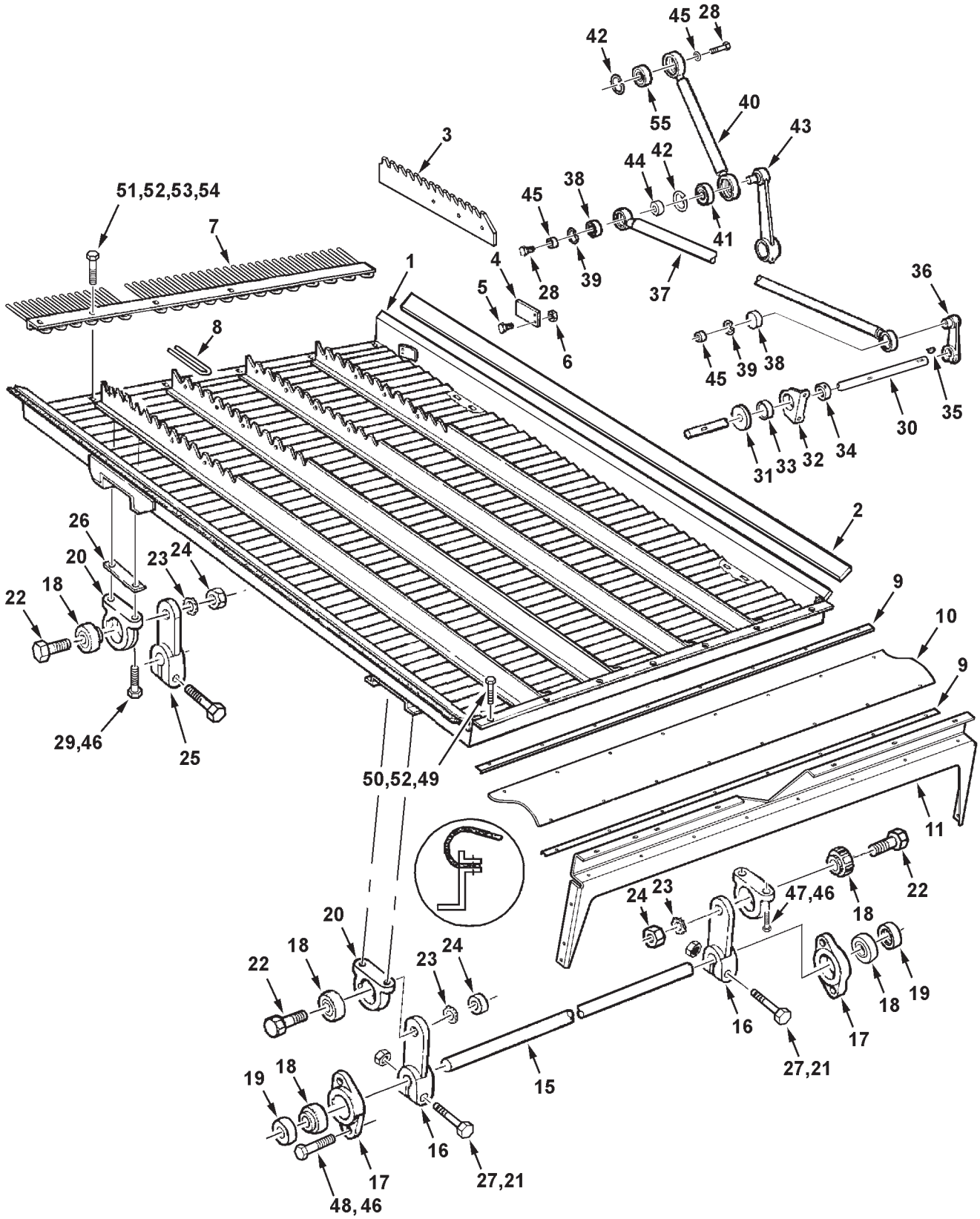

MC00257

https://truckmanualshub.com/

SEPARATOR PAN
(PRIOR S/N HS36101)

ITEM	NUMBER	QTY	DESCRIPTION
1	71388483	1	PAN ASSEMBLY, GRAIN
2	1817730W1	2	SEAL, RUBBER, 1-3/4" X 71-1/4" X 1/8"
	70937253	54	POP-RIVET .188 X .063-.25 LG DOME HD
3	71393440	4	EXTENSION, SEPARATOR PAN (ACCESSORY)
			(SEE SHOE SHAKER & SIEVES)
4	1157990W1	2	DEFLECTOR, SEPARATOR PAN
5	70921958	16	BOLT, HEX, 1/4-20 UNC X 1/2
6	70916622	16	NUT, HEX, 1/4-20 UNC
7	71388490	1	COMB ASSEMBLY
8	1114720W1	28	ROD, COMB
9	71389862	2	STRIP, CLAMPING
10	71389863	1	SEAL, SEPARATOR PAN, REAR
11	71388351	1	PANEL, SUPPORT
	70923114	6	CPSCR, 1/2-13 X 1 (EFF. S/N HR36101)
	Y704742	6	NUT, HEX FLANGE TOP LOCK, 1/2-13
	70921966	6	CPSCR, 3/8-16 X 7/8 (PRIOR HR36101)
	Y704734	6	LOCKNUT, HEX FLANGE, 3/8-16
15	71389428	1	SHAFT, REAR
16	2443420W1	2	ARM, REAR
17	1501060W1	2	HOUSING
18	71308770	6	BEARING, BALL
19	70522328	2	COLLAR, BEARING
20	2551250W1	4	HOUSING
21	Y704742	AR	NUT, HEX FLANGE LOCK, 1/2-13 UNC
22	1564540W1	4	BOLT, HEX SPECIAL, 7/8-9 UNC X 2
23	70929356	4	LOCKWASHER, EXTERNAL TOOTH, 7/8
24	375114X1	4	NUT, HEX JAM, 7/8-9 UNC
25	2443410W1	2	ARM, FRONT
26	1588480W1	2	PLATE, REINF.
27	70921211	AR	CAPSCREW, 1/2-13 UNC X 2-1/2
28	70923473	AR	CAPSCREW, 1/2-13 X 1-1/4 GR8
29	70921971	AR	CAPSCREW, 3/8-16 UNC X 1-3/4
30	71389429	1	SHAFT, FRONT
31	2555310W1	2	SEAL, 1 X 2-1/2 X 1/4
32	W1207843	2	HOUSING & BEARING ASY (INCL. ITEM 33)
	1130100W1	2	HOUSING
33	70590709	2	BEARING, BALL, W/COLLAR
34	K3518	2	COLLAR, BEARING, 1-1/8 ID
35	29780X	3	KEY, WOODRUFF, 1/4 X 1, HARD
36	2615140W2	1	ARM
37	2615094W91	1	PITMAN ASY (INCL ITEMS 38 & 39)
	2615101W92	1	PITMAN WLMT
38	1109055	2	BEARING, BALL
39	22289X	2	RING, INTERNAL RETAINING

CONTINUED

https://truckmanualshub.com/

SEPARATOR PAN
(PRIOR S/N HS36101)

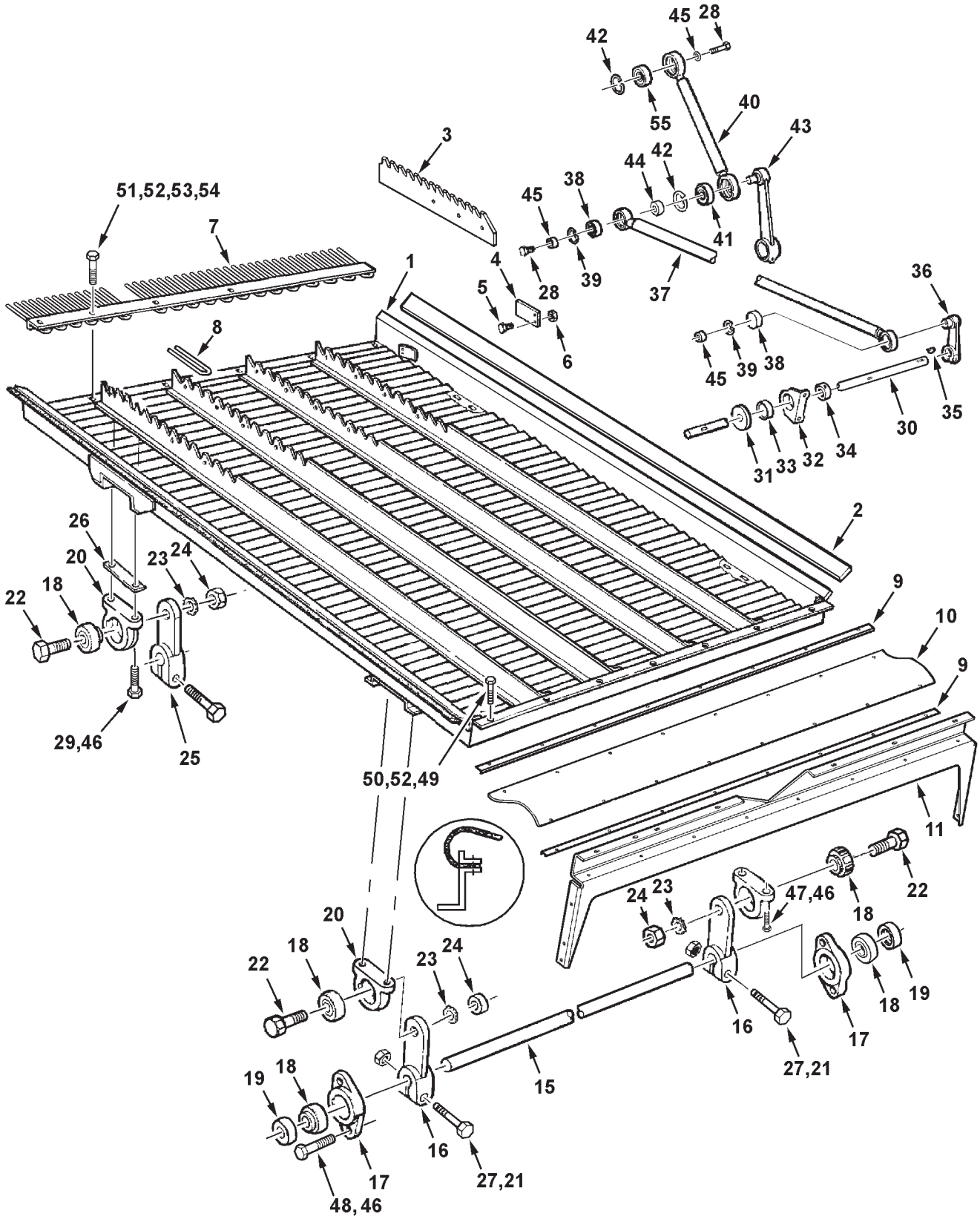

MC00257

https://truckmanualshub.com/

SEPARATOR PAN
(PRIOR S/N HS36101)

ITEM	NUMBER	QTY	DESCRIPTION
40	71396470	1	ARM WLDMT, PITMAN
41	1139003	1	BEARING, ARM (LOWER)
42	70927708	2	RING, INTERNAL SNAP
43	-----	1	ARM WLMT, SHOE SHAKER (SEE "SHAKER SHOE & SIEVES")
44	2615120W1	1	SPACER
45	60049M1	3	SPACER
46	Y704734	AR	NUT, HEX FLANGE TOP LOCK, 3/8-16
47	70923220	AR	BOLT, CARRIAGE, 3/8-16 X 1-1/4
48	70920415	AR	CAPSCREW, 3/8-16 X 1-1/4 GR5
49	Y704726	AR	NUT, HEX FLANGE TOP LOCK, 5/16-18
50	70921332	16	CAPSCREW, 5/16-18 X 3/4 GR5
51	7700461	AR	BOLT, CARRIAGE, 5/16-18 X 3/4
52	70917642	AR	WASHER, WIDE FLAT, 5/16
53	70917356	AR	LOCKWASHER, 5/16
54	70917372	AR	NUT, 5/16-18 UNC
55	71396472	1	BEARING, ARM (UPPER)
56	71409415	AR	GAUGE, PITMAN ARM ASSEMBLY (ORDER THRU DEALER CENTRAL)(NOT ILLUSTRATED)

MC00257
PR: 246

https://truckmanualshub.com/

SEPARATOR PAN
(EFF. S/N HS36101)

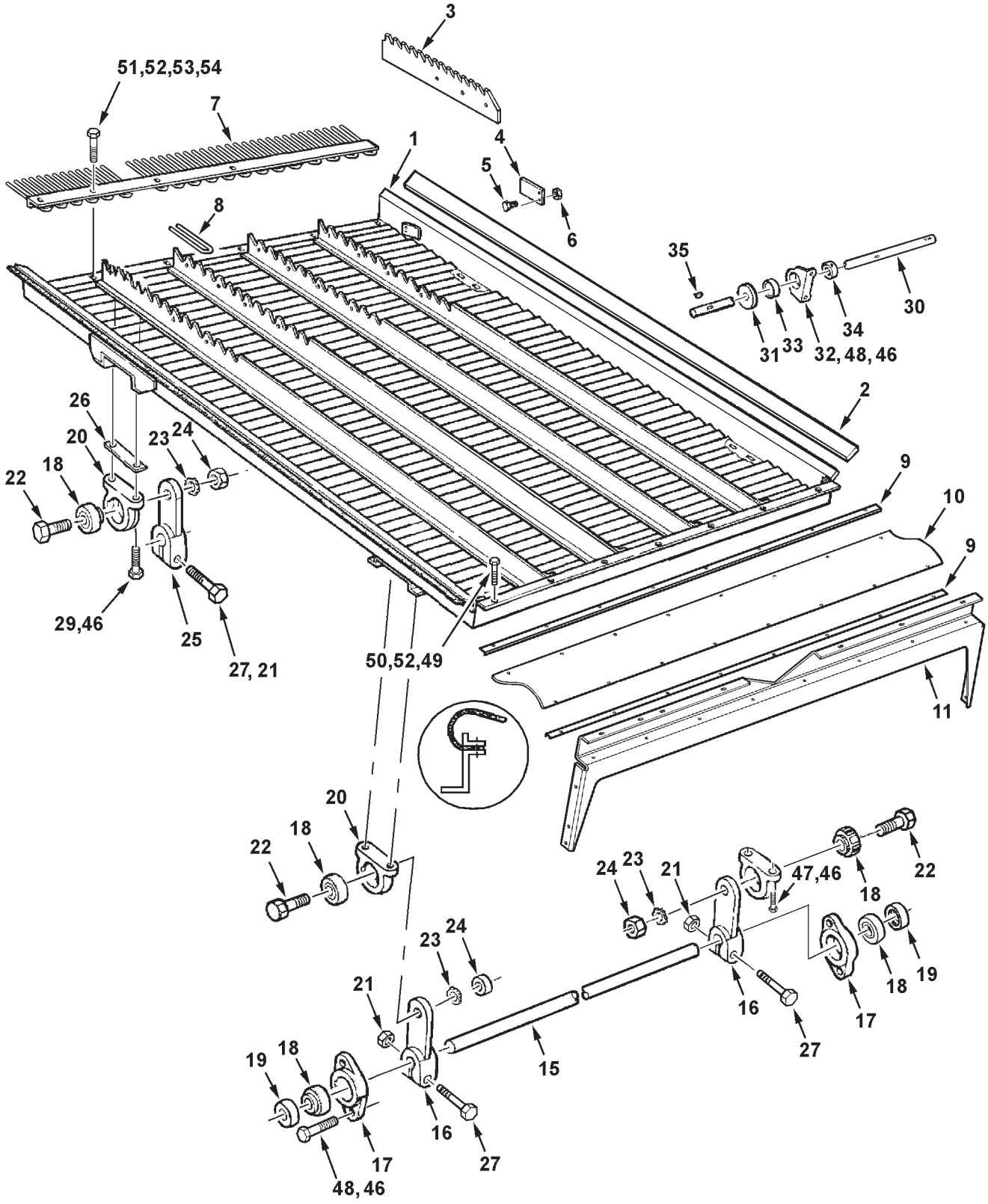

MC00558

https://truckmanualshub.com/

SEPARATOR PAN
(EFF. S/N HS36101)

ITEM	NUMBER	QTY	DESCRIPTION
1	71388483	1	PAN ASSEMBLY, GRAIN
2	1817730W1	2	SEAL, RUBBER, 1-3/4" X 71-1/4" X 1/8"
	70937253	54	POP-RIVET .188 X .063-.25 LG DOME HD
3	71393440	4	EXTENSION, SEPARATOR PAN (ACCESSORY) (SEE SHOE SHAKER & SIEVES)
4	1157990W1	2	DEFLECTOR, SEPARATOR PAN
5	70921958	16	BOLT, HEX, 1/4-20 UNC X 1/2
6	70916622	16	NUT, HEX, 1/4-20 UNC
7	71388490	1	COMB ASSEMBLY
8	1114720W1	28	ROD, COMB
9	71389862	2	STRIP, CLAMPING
10	71389863	1	SEAL, SEPARATOR PAN, REAR
11	71388351	1	PANEL, SUPPORT
	70923114	6	CPSCR, 1/2-13 X 1 (EFF. S/N HR36101)
	Y704742	6	NUT, HEX FLANGE TOP LOCK, 1/2-13
	70921966	6	CPSCR, 3/8-16 X 7/8 (PRIOR HR36101)
	Y704734	6	LOCKNUT, HEX FLANGE, 3/8-16
15	71389428	1	SHAFT, REAR
16	2443420W1	2	ARM, REAR
17	1501060W1	2	HOUSING
18	71308770	6	BEARING, BALL
19	70522328	2	COLLAR, BEARING
20	2551250W1	4	HOUSING
21	Y704742	4	NUT, HEX FLANGE LOCK, 1/2-13 UNC
22	1564540W1	4	BOLT, HEX SPECIAL, 7/8-9 UNC X 2
23	70929356	4	LOCKWASHER, EXTERNAL TOOTH, 7/8
24	375114X1	4	NUT, HEX JAM, 7/8-9 UNC
25	2443410W1	2	ARM, FRONT
26	1588480W1	2	PLATE, REINF.
27	70921211	4	CAPSCREW, 1/2-13 UNC X 2-1/2
29	70921971	4	CAPSCREW, 3/8-16 UNC X 1-3/4
30	71389429	1	SHAFT, FRONT
31	2555310W1	2	SEAL, 1 X 2-1/2 X 1/4
32	W1207843	2	HOUSING & BEARING ASY (INCL. ITEM 33)
	1130100W1	2	HOUSING
33	70590704	2	BEARING, BALL, W/COLLAR
34	K3518	2	COLLAR, BEARING, 1-1/8 ID
35	29780X	2	KEY, WOODRUFF, 1/4 X 1, HARD
46	Y704734	16	NUT, HEX FLANGE TOP LOCK, 3/8-16
47	70923220	4	BOLT, CARRIAGE, 3/8-16 X 1-1/4
48	70920415	8	CAPSCREW, 3/8-16 X 1-1/4 GR5
49	Y704726	16	NUT, HEX FLANGE TOP LOCK, 5/16-18
50	70921332	16	CAPSCREW, 5/16-18 X 3/4 GR5
51	7700461	6	BOLT, CARRIAGE, 5/16-18 X 3/4
52	70917642	14	WASHER, WIDE FLAT, 5/16
53	70917356	6	LOCKWASHER, 5/16
54	70917372	6	NUT, 5/16-18 UNC

https://truckmanualshub.com/

PITMAN SHAFT
(EFF. S/N HS36101)

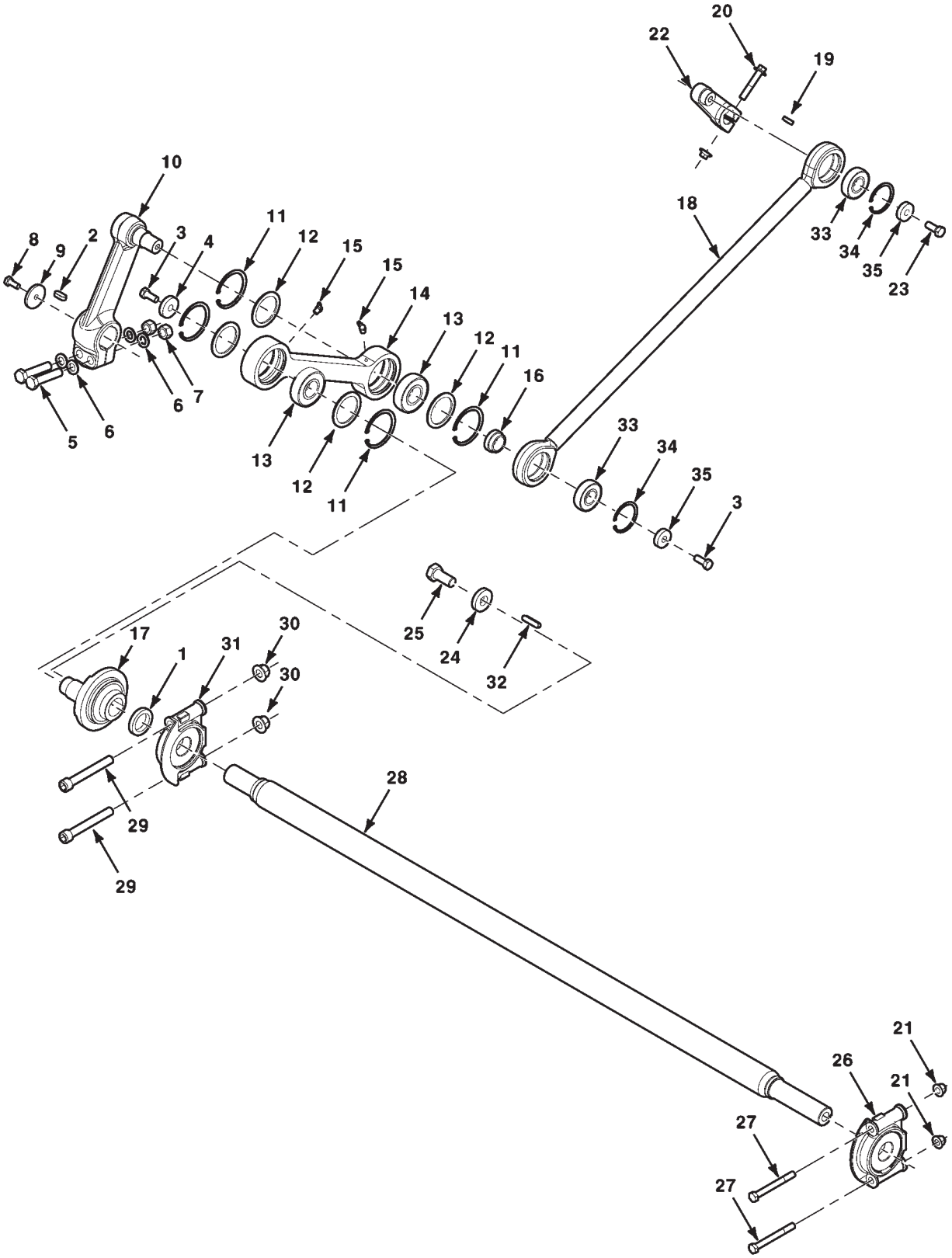

https://truckmanualshub.com/

PITMAN SHAFT
(EFF. S/N HS36101)

ITEM	NUMBER	QTY	DESCRIPTION
1	71412437	1	SPACER-PITMAN SHAFT
2	3019168X1	1	KEY-PARALLEL, 8 X 12 X 28 MM
3	1440716X1	2	CAPSCREW, M12-1.75 X 30 CL8.8
4	71413456	1	WASHER, .532 ID X 1.75 X .375 TH
5	3019865X1	2	CAPSCREW, M16-2.0 X 75 CL10.9
6	11538	4	WASHER, HARD, .66 ID X 1.13 X .125 TH.
7	3019871X1	2	NUT, M16-2.0, CLASS 10, PH
8	700708349	1	CAPSCREW, M10-1.5 X 25 CL8.8
9	6875314	1	WASHER-PITMAN SHAFT
10	71413028	1	ARM WA-SHOE SHAKER
11	339437X1	4	RING-RETAINING
12	71413047	4	WASHER ASSEMBLY
13	831861M1	2	BEARING-SPHERICAL, BALL
14	71413040	1	LINK-PITMAN
15	70923014	2	LUBE FTG, 1/8 PIPE SPL, 45 DEG
16	71413050	1	SPACER
17	71412441	1	DRIVE HUB-PITMAN
18	2615094W91	1	PITMAN ASY (INCL. ITEMS 33,34)
	2615101W92	1	PITMAN WLMT
19	29780X	1	KEY-WOODRUFF, 1/4 X 1
20	3009227X1	1	BOLT, FLANGE, M12-1.75 X 65 CL10.9
21	5000005X1	3	NUT, HEX FLANGE NYL LOCK, M12 X 1.75
22	2615140W2	1	ARM - WALKER PAN DRIVE
23	8701708	1	CAPSCREW, 1/2-13 X 1-1/4 GR8
24	71412438	1	WASHER, .827 X 1.875 X .375 TH
25	3011004X1	1	CAPSCREW, M20-2.5 X 45 CLASS 10.9
26	- - - -	1	BEARING ASM
	2590650W1	1	HOUSING-BEARING
	31-1588410	1	BEARING-BALL
27	391904X1	2	CAPSCREW, M12-1.75 X 110 CL10.9
28	71412446	1	SHAFT-DRIVE, PITMAN
29	3009316X1	2	CAPSCREW, HEX SOCK, M16X2.0X120 CL 10.9
30	5000006X1	2	NUT, HEX FLANGE NYL LOCK, M16 X 2.0
31	- - - -	1	BRG ASM-PITMAN SHAFT
	71414290	1	HOUSING-BEARING, PITMAN SHAFT
	31-1588410	1	BEARING-BALL
32	339474X1	1	KEY-PARALLEL, 8 X 10 X 45
33	339583X1	2	BEARING, BALL
34	22289X	2	RING, INTERNAL RETAINING
35	60049M1	2	SPACER .532 ID X 1.50 X .394 TH

MC00554
PR: t07a23o20b0007

https://truckmanualshub.com/

SHAKER SHOE AND SIEVES
(PRIOR S/N HS36101)

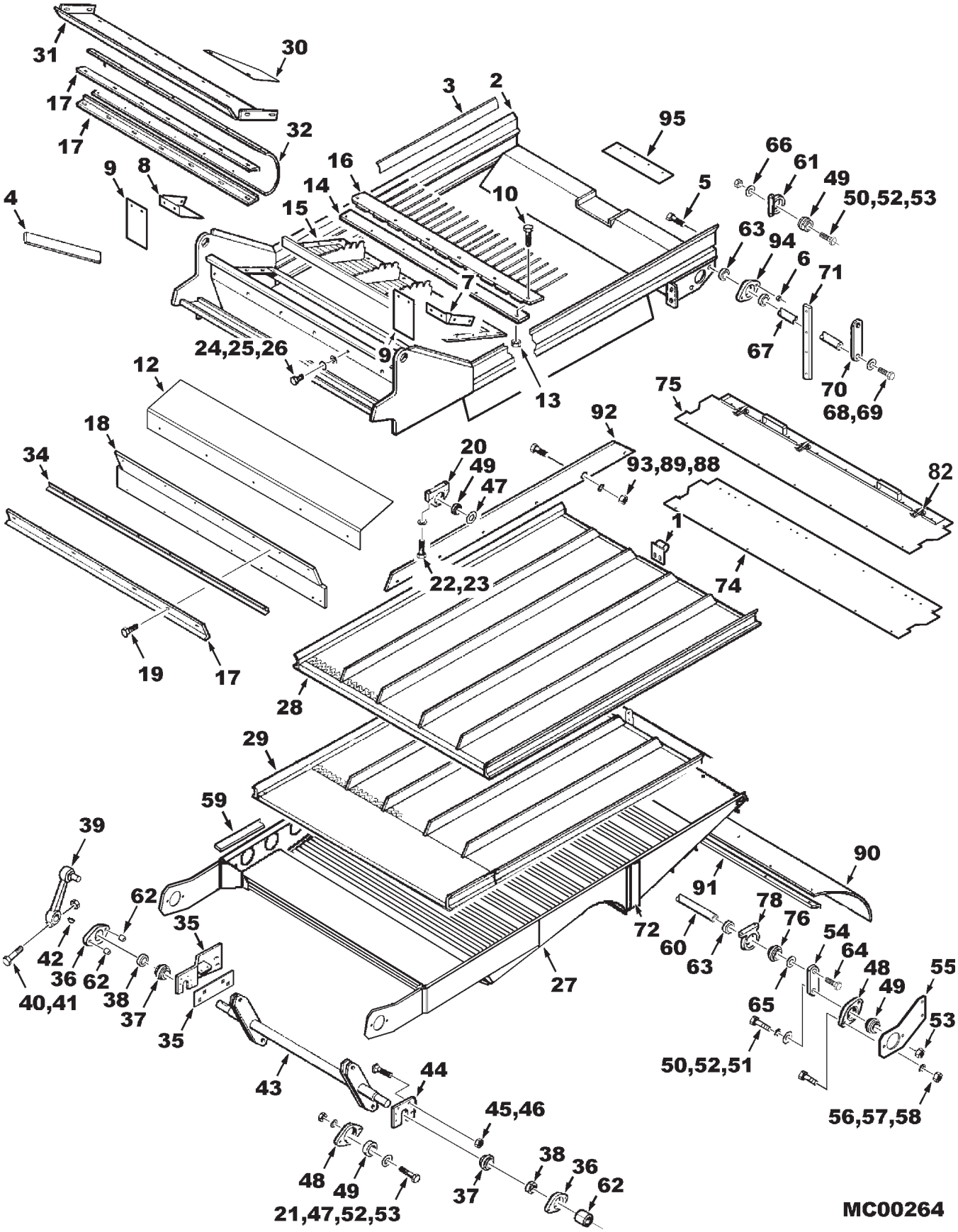

https://truckmanualshub.com/

SHAKER SHOE AND SIEVES
(PRIOR S/N HS36101)

ITEM	NUMBER	QTY	DESCRIPTION
1	71397168	1	BUSHING, TIE ROD
	70922786	2	BOLT, RD HD SQ NECK, 3/8-16 X 1.0
	70918266	2	WASHER, PLAIN FLAT, 3/8
	70916965	2	LOCKWASHER, 3/8
	70916950	2	HEXNUT, 3/8-16
2	71401850B	1	FRAME WLDMT, CHAFFER & SIEVE
	70937253	48	RIVET, 3/16 X 7/16
3	71386394	2	SEAL, RUBBER, 1-19/64 X 71-45/64 X 1/8
	70937253	38	RIVET, 3/16 X 7/16
4	71394833	2	SEAL, RUBBER
	70937253	10	RIVET, 3/16 X 7/16
5	70920415	4	CAPSCREW, 3/8-16 UNC X 1-1/4
6	Y704734	4	NUT, HEX FLANGE TOP LOCK, 3/8-16
7	71395582	1	DEFLECTOR, LEFT
	70921332	2	CAPSCREW, 5/16-18 X 3/4
	70921333	1	CAPSCREW, 5/16-18 X 1.0
	7700578	2	BOLT, RD SQ NECK 5/16-18 X 1.0
	Y704726	5	NUT, HEX FLANGE TOP LOCK, 5/16-18
8	71395583	1	DEFLECTOR, RIGHT
	70921332	2	CAPSCREW, 5/16-18 X 3/4
	70921333	1	CAPSCREW, 5/16-18 X 1.0
	7700578	2	BOLT, RD SQ NECK 5/16-18 X 1.0
	Y704726	5	NUT, HEX FLANGE TOP LOCK, 5/16-18
9	71395589	2	EXTENSION, DEFLECTOR
10	70921333	6	BOLT, HEX, 5/16-18 UNC X 1-1/4
12	71395263	1	DAMPER, SEPARATOR PLATE
13	Y704726	12	NUT, HEX FLG TOP LOCK, 5/16-18
14	71388968	1	STRIP, RUBBER
15	71388265	1	PAN ASSEMBLY, CASCADE
16	71388476	1	COMB ASSEMBLY, CASCADE PAN
17	71387703	3	ANGLE, SEAL CLAMPING
18	71388494	1	SEAL, CHAFFER FRAME TO FAN HOUSING
19	70921332	8	BOLT, HEX, 5/16-18 UNC X 3/4
	70917642	8	WASHER, 5/16, WIDE
20	71401429	2	HOUSING, BEARING (USES 1/2" CAPSCREWS)
21	1564540W1	4	BOLT, HEX SPECIAL, 7/8-9 UNC X 2
22	70912278	4	CAPSCREW, HEX SOCK HD, 1/2-13 X 1-1/2 (EFF S/N HM36101 W/INST OF MOD. KIT)
23	71406957	4	SPACER, .53 ID X 1.0 (EFF. S/N HM36101 W/ INSTALLATION OF MOD. KIT)
24	70921332	5	CAPSCREW, 5/16-18 X 3/4
25	70917356	5	LOCKWASHER, 5/16
26	70917642	5	WASHER, 5/16, WIDE
27	71394965	1	PAN ASY, LOWER SEPARATOR
28	71387678	1	CHAFFER, GRAIN UPPER (1-1/8 SPACING)
	71392680	1	CHAFFER, RICE UPPER (1-5/8 SPACING)
	71397998	1	CHAFFER, CORN UPPER (1-5/8 SPACING)
	71399015	1	KIT, AIRFOIL CHAFFER (ORD. DEALER CNTRL)
	71395866	1	CHAFFER, AIRFOIL
	7703416	4	CAPSCREW, 3/8-16 X 1-1/4 GR8
	Y704734	4	NUT, HEX FLANGE TOP LOCK, 3/8-16
	70918266	4	WASHER, 3/8 NARROW

CONTINUED

https://truckmanualshub.com/

SHAKER SHOE AND SIEVES
(PRIOR S/N HS36101)

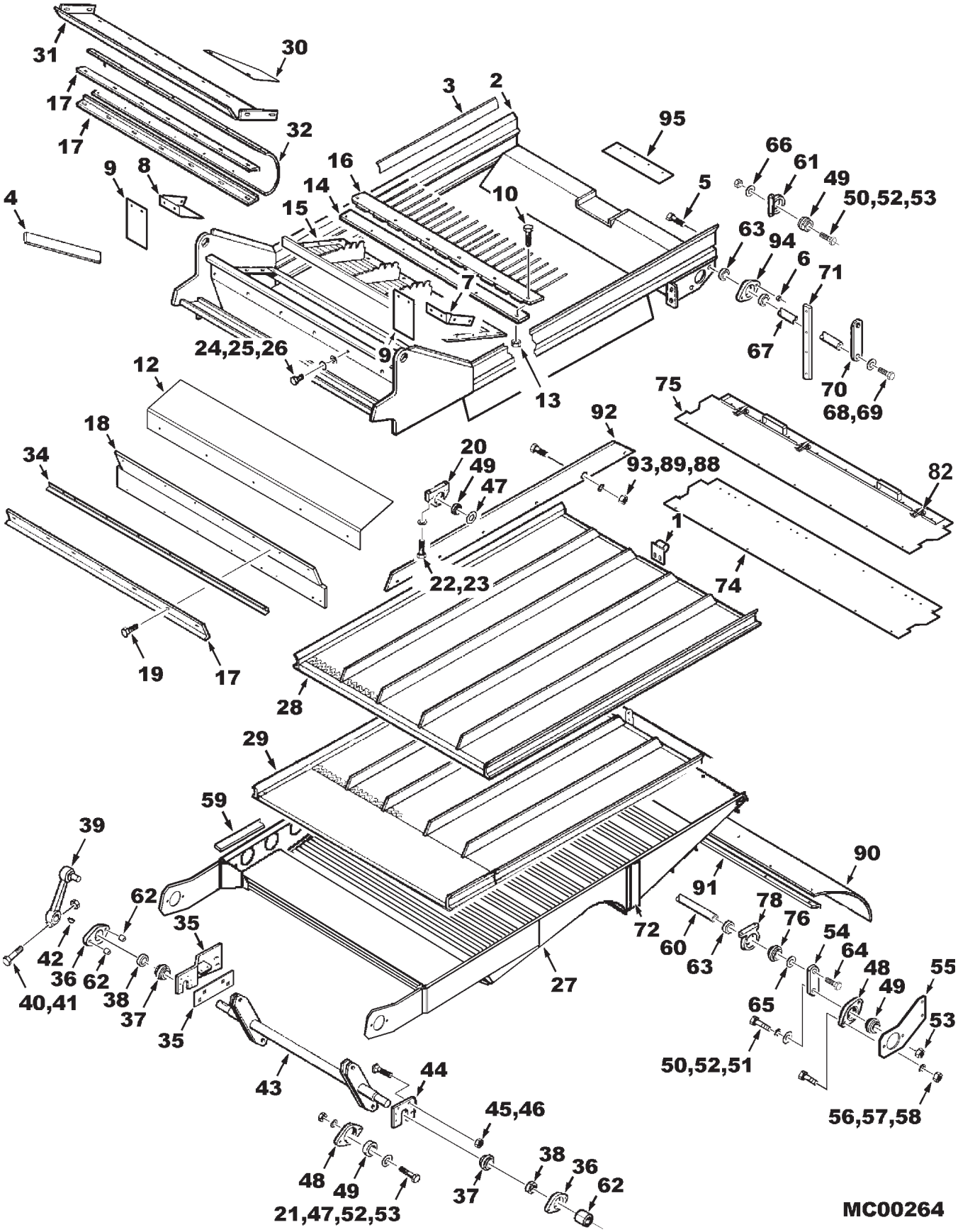

https://truckmanualshub.com/

SHAKER SHOE AND SIEVES
(PRIOR S/N HS36101)

ITEM	NUMBER	QTY	DESCRIPTION
29	71387676	1	SIEVE, GRAIN/RICE, LOWER
	71387677	1	SIEVE, CORN LOWER
	702514	4	CAPSCREW, 3/8-16 X 2-1/4 GR8
	Y704734	4	NUT, HEX FLANGE TOP LOCK, 3/8-16
	70918266	4	WASHER, 3/8 NARROW
30	101126M1	2	SEAL, CORNER (PRIOR S/N HP36101)
	71406454	2	SEAL, CORNER (EFF. S/N HP36101)
	70921332	4	CAPSCREW, 5/16-18 X 3/4
	700709602	4	WASHER, 5/16, WIDE
	Y704726	4	NUT, HEX FLANGE TOP LOCK, 5/16-18
31	71388972	1	SHEET, DEFLECTOR
	70921965	4	CAPSCREW, 3/8-16 X 3/4
	70918266	4	WASHER, 3/8 NARROW
	Y704734	4	NUT, HEX FLANGE TOP LOCK, 3/8-16
32	71388974	1	SEAL, DEFLECTOR TO CASCADE PAN
	70921332	8	CAPSCREW, 5/16-18 X 3/4
	70923325	8	CAPSCREW, 5/16-18 X 7/8
	Y705608	16	WASHER, 5/16, NARROW
	Y704726	16	NUT, HEX FLANGE TOP LOCK, 5/16-18
34	71388973	1	ANGLE, STIFFENER
	70921332	10	CAPSCREW, 5/16-18 X 3/4 GR5
	Y704726	10	NUT, HEX FLANGE TOP LOCK, 5/16-18
35	71393529	1	SUPPORT ASSEMBLY, GRAIN ELEVATOR
	71400549	1	SPACER PLATE, ELEVATOR SUPPORT
	70926838	4	BOLT, RD HD SQ NECK, 1/2-13 X 1-1/2
	Y704742	4	NUT, HEX FLANGE TOP LOCK, 1/2-13
36	2492063W91	2	BEARING & HOUSING ASY, SHAKER SHAFT
	2403570W1	2	HOUSING, BEARING
	70921024	4	CAPSCREW, 1/2-13 X 2.0 GR5
	Y704742	4	NUT, HEX FLANGE TOP LOCK, 1/2-13
	70923014	2	LUBE FITTING, 1/8 NPT, 45 DEG
37	22602X	2	BEARING, WIDE INNER RACE W/COLLAR
38	14987	2	COLLAR, BEARING
39	2615181W91	1	ARM WLMT, SHOE SHAKER (SERVICE WITH 71409403 & 5/8 HRDWR)
	71409403	1	ARM WLMT, SHOE SHAKER (EFF. S/N HR36101)
	70921210	1	CAPSCREW, 3/8-16 X 1.0 GR5
	6875314	1	WASHER, SPECIAL
40	70926155	1	CPSCR, 1/2-13 X 3 GR8(W/ 2615181W91 ARM)
	700708270	1	CPSCR, 5/8-11 X 3 GR8 (W/ 71409403 ARM)
41	368384X1	1	NUT, 1/2-13 REG (W/ 2615181W91 ARM)
	700702198	1	NUT, 5/8-11 GR8 (W/ 71409403 ARM)
	11538	1	WASHER, .66 ID X 1.125 X .120 TH
42	70924906	1	KEY, WOODRUFF
43	71394544	1	SHAFT ASSEMBLY
44	2446400W1	1	PLATE, BEARING MOUNTING, LEFT
45	70931809	4	BOLT, CARRIAGE, 1/2-13 UNC X 1-1/4
46	Y704742	4	NUT, HEX FLNG TOP LOCK, 1/2-13 UNC
47	364578X1	4	WASHER, .906 ID X 1.53 OD X .106
48	1501060W1	4	HOUSING, BEARING
49	71308770	12	BEARING, BALL, W/COLLAR
50	1564540W1	4	CAPSCREW, SPECIAL, 7/8-9 UNC X 2

CONTINUED

https://truckmanualshub.com/

SHAKER SHOE AND SIEVES
(PRIOR S/N HS36101)

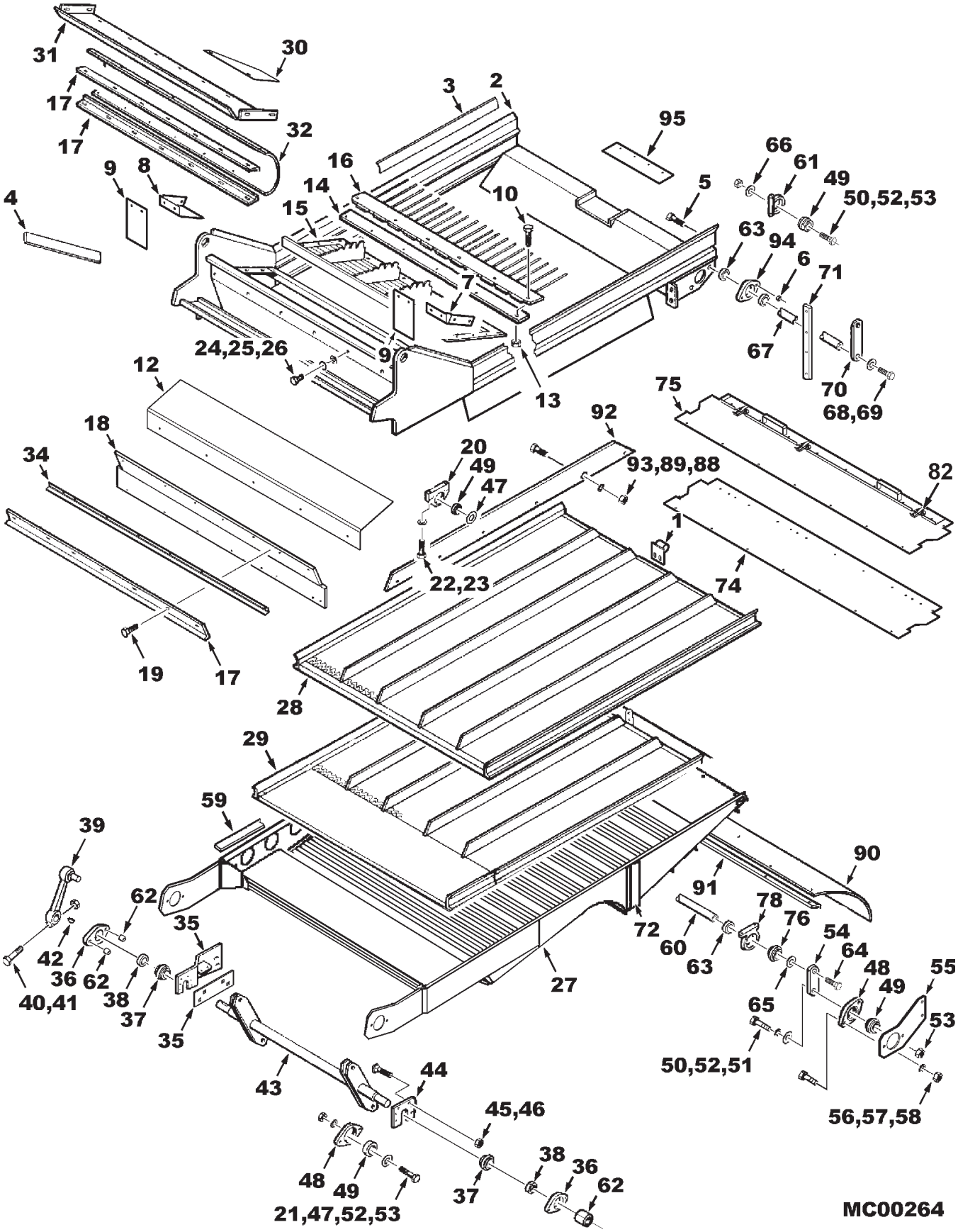

https://truckmanualshub.com/

SHAKER SHOE AND SIEVES
(PRIOR S/N HS36101)

ITEM	NUMBER	QTY	DESCRIPTION
51	70922285	2	WASHER, WIDE FLAT, 7/8
52	70929356	8	LOCKWASHER, EXTERNAL TOOTH, 7/8
53	375114X1	8	NUT, HEX JAM, 7/8-9 UNC
54	2400540W1	2	HANGER, BEARING
55	71394540	2	SUPPORT, REAR SIEVE
56	70920415	4	CAPSCREW, 3/8-16 X 1-1/4 GR5
57	70916965	4	LOCKWASHER, 3/8
58	70916950	4	NUT, 3/8-16 UNC
59	71394119	2	SEAL, RUBBER, LOWER PAN
	70937253	30	RIVET, BLIND
60	71388975	1	ROD, TIE, REAR SHOE, 1.0 DIA
61	2551250W1	2	HOUSING, BEARING (SHALLOW)
	7701055	4	CAPSCREW, 3/8-16 X 1-3/4 GR5
	70917378	4	WASHER, 3/8 WIDE
	Y704734	4	NUT, HEX FLANGE TOP LOCK, 3/8-16
62	71381213	4	SPACER, .622 OD X .510 ID
63	375028X1	4	COLLAR, BEARING, 1.0 ID
64	70923151	2	CAPSCREW, 5/8-11 X 1-1/4 GR5
65	70918432	2	WASHER, 5/8, WIDE
66	70923544	2	WASHER, 7/8, NARROW
67	71391805	1	ROD TIE, REAR CHAFFER, 1.0 DIA
68	70918268	8	WASHER, NARROW FLAT, 5/8
69	70926161	2	CAPSCREW, 5/8-11 X 1-1/2 GR8
70	71395266	2	BAR, BEARING MOUNTING
	116616W1	1	BRKT, SHOE SENSOR, RH ONLY
71	2629570W1	2	STRAP, REINFORCING
72	71394841	2	SEAL, RUBBER
74	71393812	2	SEAL, SEPARATOR DOOR
	Y764126	10	POP RIVET, 3/16 X 1/4
75	71393813	1	DOOR ASY, SEPARATOR (INCL. ITEM 74 & 82)
	71396457	1	ANGLE WLDMT, SEPARATOR DOOR
	71393815	1	STRIP, REINF.
76	71308951	2	BEARING, BALL, W/COLLAR
78	71392691	2	BEARING & HOUSING ASY, (SHALLOW)
	2551250W1	2	HOUSING, BEARING (SHALLOW)
	70920415	4	CAPSCREW, 3/8-16 X 1-1/4 GR5
	70917378	4	WASHER, 3/8 WIDE
	Y704734	4	NUT, HEX FLANGE TOP LOCK, 3/8-16
82	762975	3	CLAMP, LATCH
	64642	6	RIVET, 3/16 X 1/2
88	70916622	24	NUT, 1/4-20 UNC (ACCESSORY)
89	70916964	24	LOCKWASHER, 1/4 (ACCESSORY)
90	71389185	1	SEAL, SHOE
91	71389184	1	STRIP, SIEVE CLAMP
92	71392677	4	EXTENSION, CHAFFER RISER (ACCESSORY)
93	70921959	24	CAPSCREW, 1/4-20 X 5/8 GR5 (ACCESSORY)

CONTINUED

https://truckmanualshub.com/

SHAKER SHOE AND SIEVES
(PRIOR S/N HS36101)

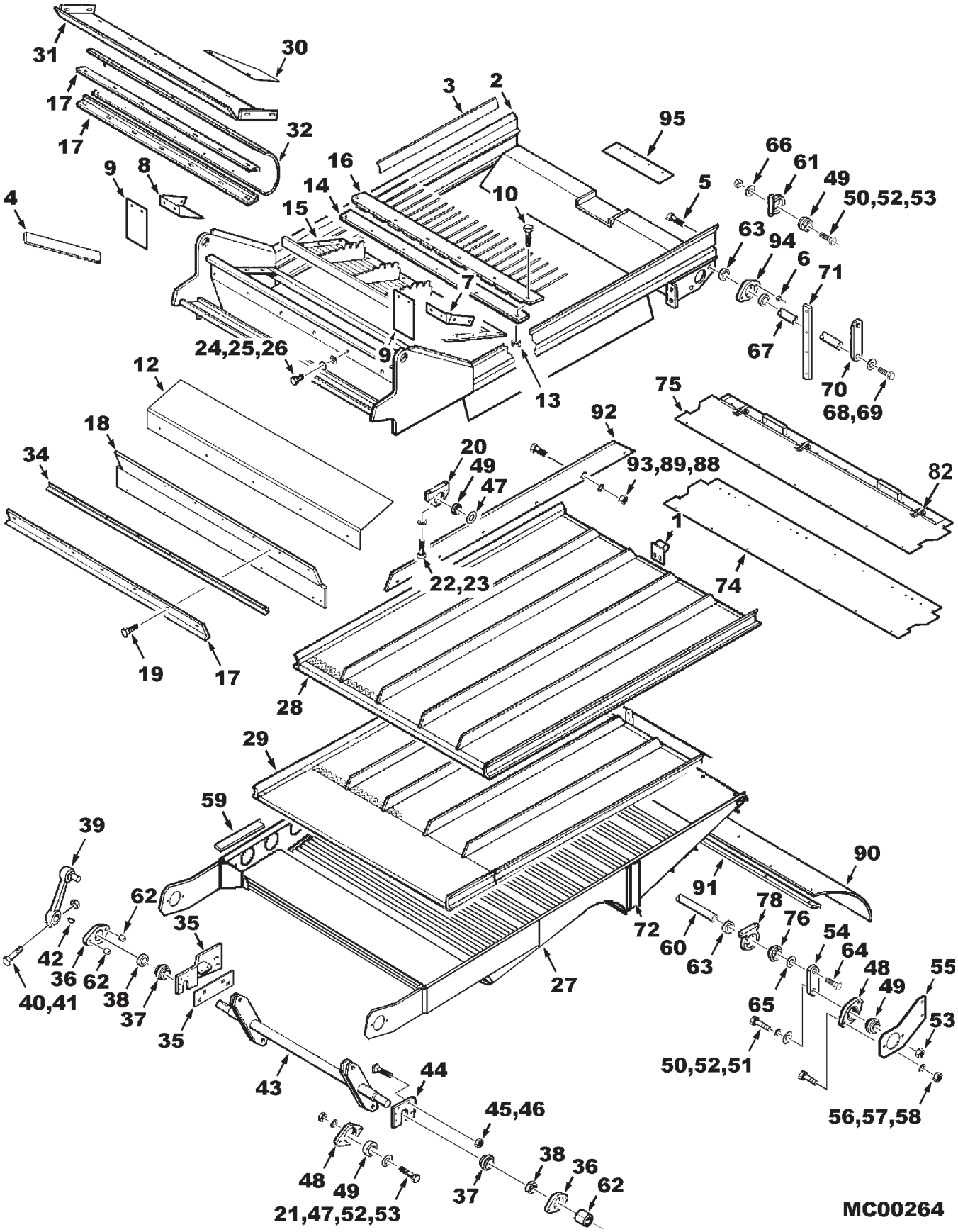

https://truckmanualshub.com/

SHAKER SHOE AND SIEVES
(PRIOR S/N HS36101)

ITEM	NUMBER	QTY	DESCRIPTION
94	71392693	2	BEARING & HOUSING ASY.
	1501060W1	2	HOUSING, BEARING
	71308951	2	BEARING, W/COLLAR
95	71393818	1	SEAL, REAR CHAFFER FRAME
	70937253	4	RIVET, BLIND
-	71399009	-	*KIT, SIDE HILL CHAFFER RISERS
	71393440	4	EXTNSN, SEPARATOR PAN (SEE SEPARATOR PAN)
	71396462	4	EXTENSION, CASCADE PAN
	1157990W1	2	DEFLECTOR
	71392677	4	EXTENSION, CHAFFER RISER
-	71378013	-	*KIT, RISER, AIR FOIL CHAFFER DIVIDER
-	71399011	-	*KIT, CHAFFER/SIEVE GRAIN (INCL ITEMS IN 28,29)
-	71399013	-	*KIT, CHAFFER/SIEVE CORN (INCL ITEMS IN 28,29)
-	71399015	-	*KIT, AIRFOIL CHAFFER (GRAIN & RICE)
-	71409409	-	KIT, SHOE FRAME & SHAKER ARM CAMPAIGN (S/N HM36101 THRU HP36999)(INCL. FOLLOWING)
	71407928	1	CENTER CHANNEL
	700708270	1	CAPSCREW, 5/8-11 X 3 GR8
	11538	1	WASHER, .660 X 1.13 X .120 TH
	70936296	1	NUT, 5/8-11 GR8
-	700525379	-	KIT, CLEANING SHOE, UPGRADE MODIFICAT'NS (S/N HM36101)

*ORDER THRU DEALER CENTRAL

MC00264
PR: 248

https://truckmanualshub.com/

SHOE SHAKER
(EFF. S/N HS36101)

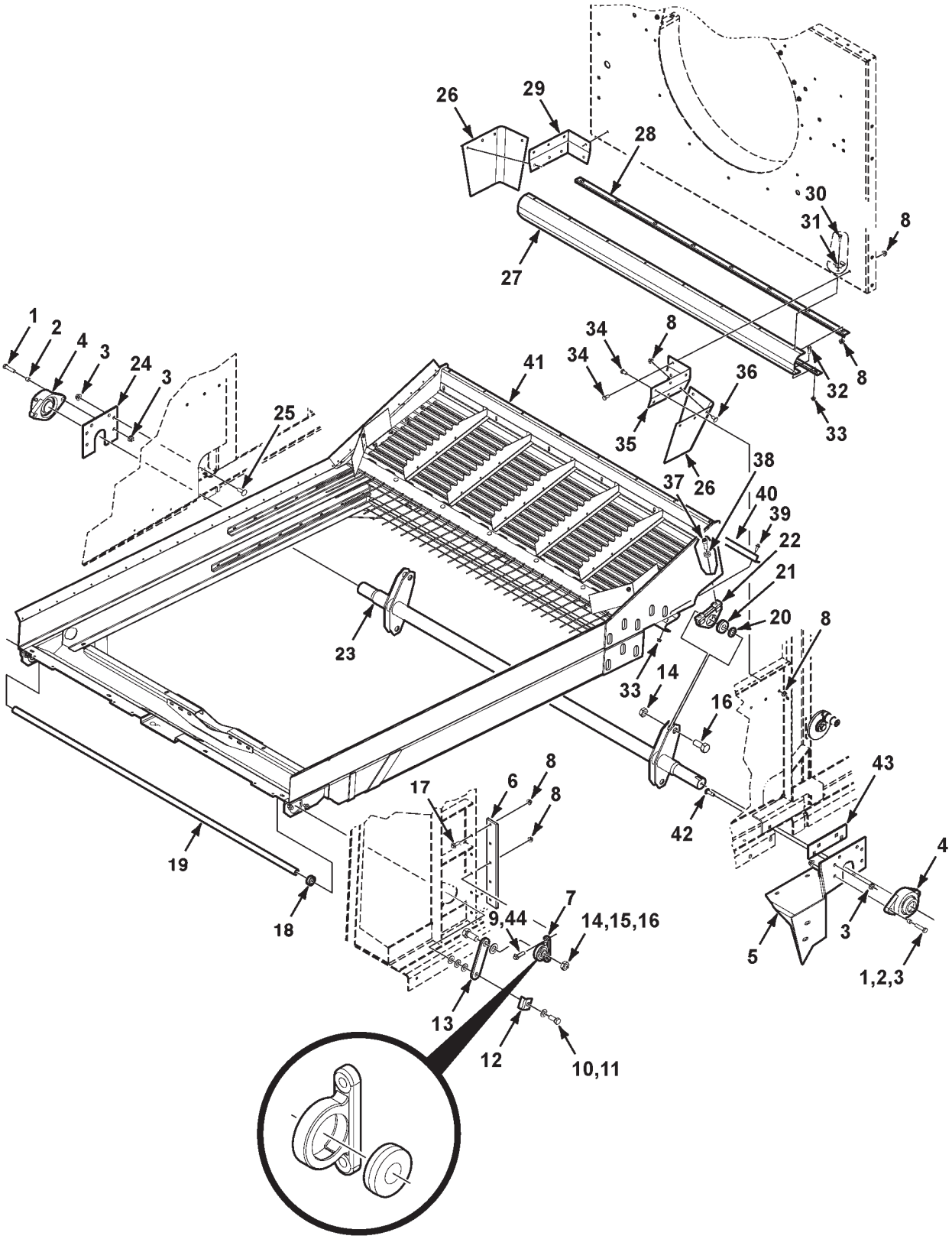

MC00560

https://truckmanualshub.com/

SHOE SHAKER
(EFF. S/N HS36101)

ITEM	NUMBER	QTY	DESCRIPTION
1	70921024	4	CAPSCREW, 1/2-13 X 2.0 GR5
2	71413494	4	SLEEVE, IDLER BEARING
3	Y704742	12	NUT, HEX FLANGE TOP LOCK, 1/2-13 UNC
4	2492063W91	2	BRG. & HSG. ASY
	2403570W1	1	HOUSING, BEARING
	14987	1	COLLAR, BEARING
	22602X	1	BEARING, WIDE INNER RACE
	70923014	1	LUBE FTG, 1/8 PIPE SPL, 45 DEG
5	71393529	1	SUPPORT WA, GRAIN ELEVATOR
6	2629570W1	2	STRAP, REINFORCING
7	---------	2	BEARING ASSEMBLY (NOT SERVICED)
	2551250W1	1	HOUSING-BEARING
	71308770	1	BEARING, BALL
8	Y704734	32	NUT, HEX FLANGE TOP LOCK, 3/8-16
9	70921971	4	CAPSCREW, 3/8-16 X 1-3/4 GR5
10	70926161	2	CAPSCREW, 5/8-11 X 1-1/2 GR8
11	70918268	8	WASHER, 5/8 NARROW
12	116616W1	2	BRACKET-SHOE SPEED SENSOR
13	71414291	2	ARM-SHOE HANGER
14	7774383	4	JAM NUT, 7/8-9 UNC
15	70923544	2	WASHER, 7/8, NARROW
16	1564540W1	4	CAPSCREW, 7/8-9 UNC X 2 GR5, SPECIAL
17	70921210	4	CAPSCREW, 3/8-16 X 1.0 GR5
18	375028X1	2	COLLAR, BEARING, W/ SETSCREW
19	71391805	1	TIE ROD-SEPARATOR FRAME
20	364578X1	2	WASHER, .906 X 1.5 X .106 TH
21	71308770	2	BEARING-SPHERICAL, W/O COLLAR
22	71401429	2	HOUSING-BEARING, CHAFFER FRAME
23	71412141	1	SHAFT WA-SHAKER
24	2446400W1	1	PLT.-BRG.MOUNT-SHOE SHAKER SHAFT
25	70931809	4	BOLT, RND HD SQ NK, 1/2-13 X 1-1/4
26	71408494	2	SEAL-CORNER
27	71408477	1	SEAL-TOP
28	71387703	2	ANGLE-SEAL CLAMPING
29	71408493	1	BRACKET, LH CORNER
30	70923325	16	CAPSCREW, 5/16-18 X 7/8 GR5
31	70937685	4	J-CLIP, 3/8 DIA X .406 HOLE
32	Y705608	16	WASHER, 5/16 NARROW
33	Y704726	26	NUT, HEX FLANGE TOP LOCK, 5/16-18
34	70921965	8	CAPSCREW, 5/16-18 X 3/4 GR5
35	71408492	1	BRACKET, RH CORNER
36	7770456	8	BOLT, RND HD SQ NK, 3/8-16 X 3/4 GR5
37	70912278	4	CAPSCREW, HEX SCKT HD, 1/2-13 X 1-1/2
38	71406957	4	SPACER-SHOE BRG
39	70921332	10	CAPSCREW, 5/16-18 X 3/4 GR5
40	71388973	1	ANGLE-STIFFENER, FAN HSG

CONTINUED

MC00560
PR: t07a23o20b0008

https://truckmanualshub.com/

SHOE SHAKER
(EFF. S/N HS36101)

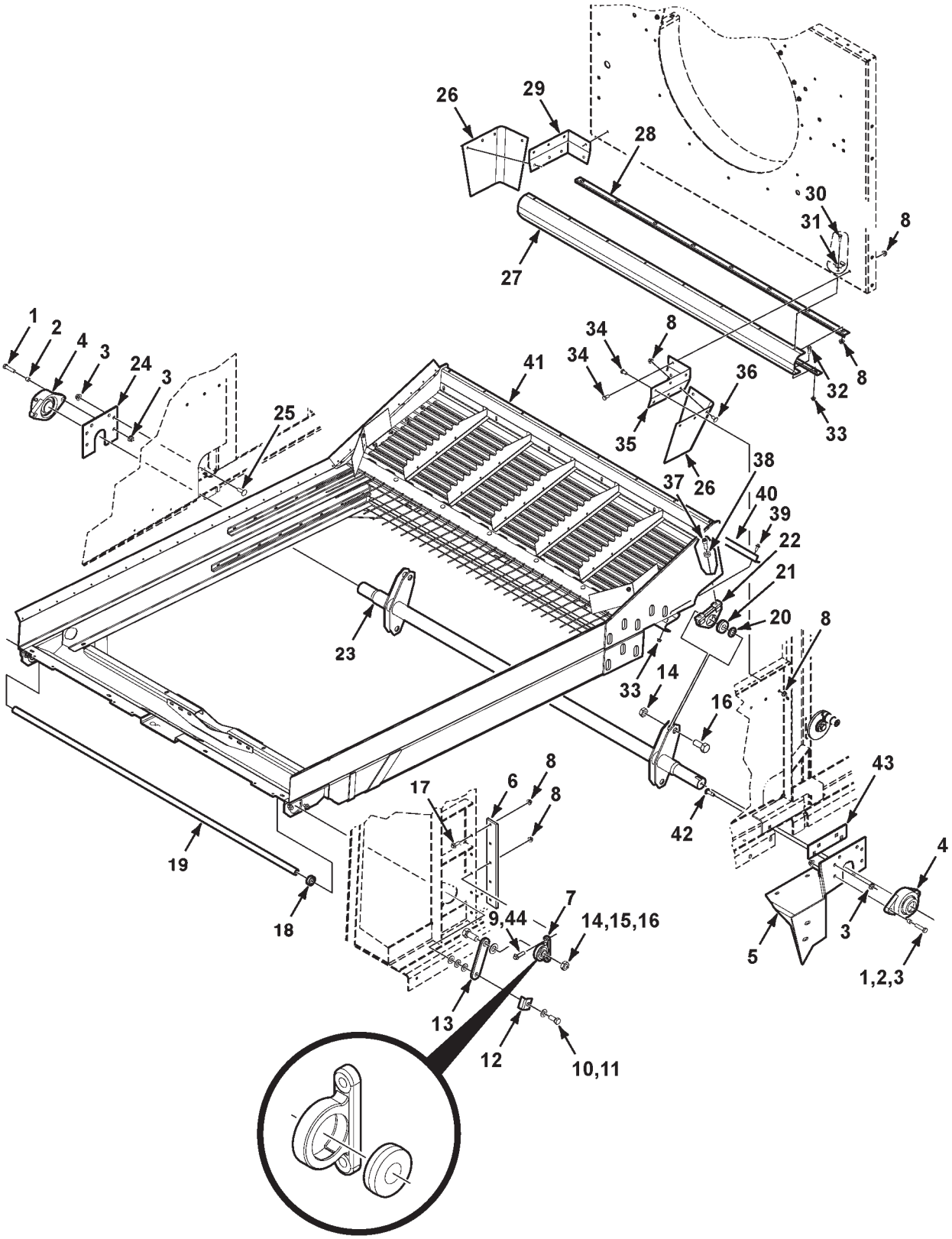

MC00560

https://truckmanualshub.com/

SHOE SHAKER
(EFF. S/N HS36101)

ITEM	NUMBER	QTY	DESCRIPTION
41	71413548	1	UPPER FRAME & SIEVES ASY (SEE BREAKDOWN)
42	70926838	4	BOLT, RND HD,SQ NK, 1/2-13 X 1-1/2
43	71400549	1	SPACER-ELEVATOR SUPPORT
44	70917378	4	WASHER, 3/8 WIDE
45	71387678	1	CHAFFER, GRAIN UPPER (1-1/8 SPACING)
	71397998	1	CHAFFER, CORN UPPER (1-5/8 SPACING) (NOT ILLUSTRATED)
	71399015	1	KIT, AIRFOIL CHAFFER (ORD. DEALER CNTRL)
	71395866	1	CHAFFER, AIRFOIL
	7703416	4	CAPSCREW, 3/8-16 X 1-1/4 GR8
	Y704734	4	NUT, HEX FLANGE TOP LOCK, 3/8-16
	70918266	4	WASHER, 3/8 NARROW
46	71387676	1	SIEVE, GRAIN/RICE, LWR (NOT ILLUSTRATED)
	71387677	1	SIEVE, CORN LOWER (NOT ILLUSTRATED)
-	71399011	AR	*KIT, CHAFFER & SIEVE, GRAIN/RICE
-	71399013	AR	*KIT, CHAFFER & SIEVE, CORN

*ORDER THRU DEALER CENTRAL

MC00560
PR: t07a23o20b0008

https://truckmanualshub.com/

CLEANING SHOE
UPPER FRAME & SIEVES

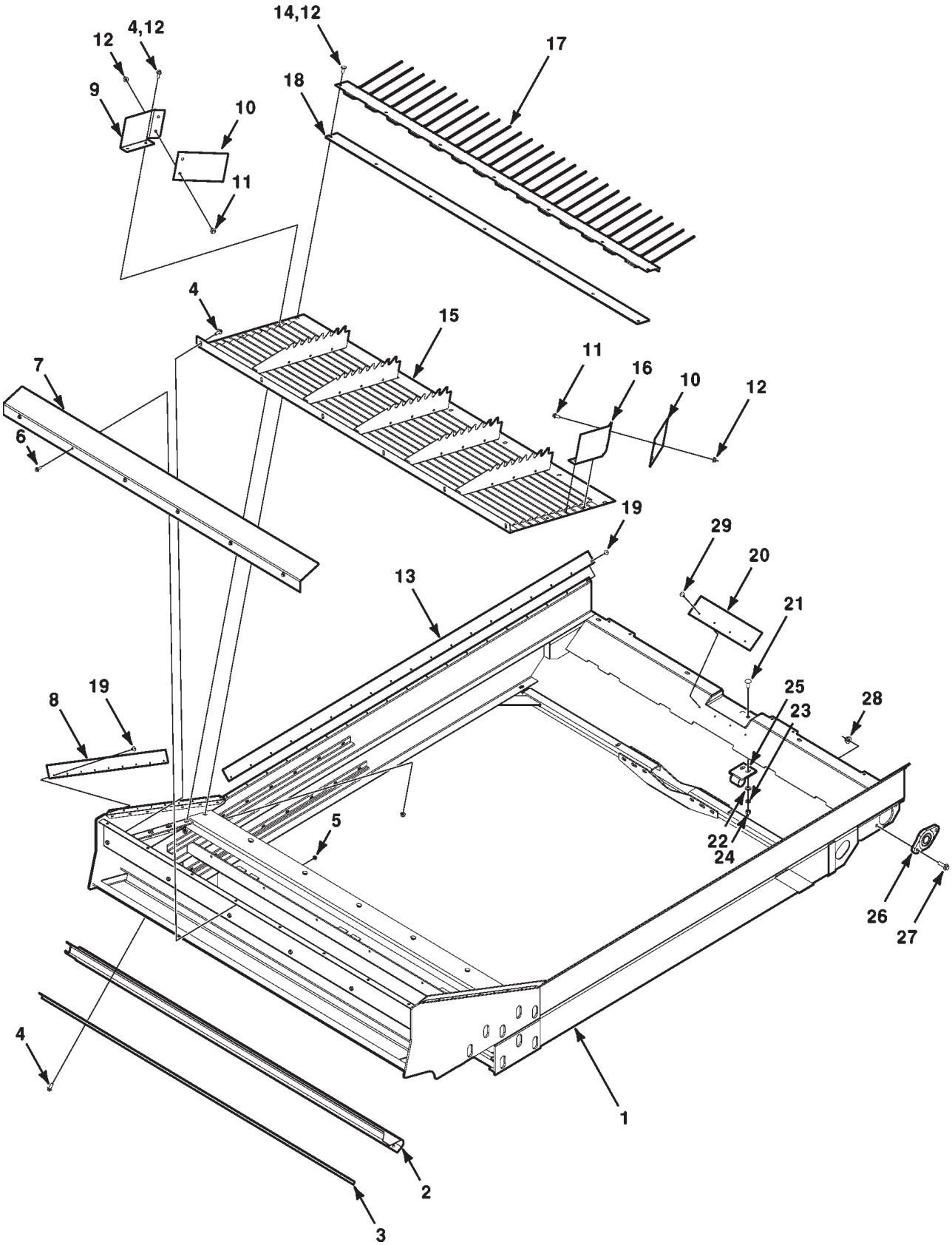

https://truckmanualshub.com/

ITEM	NUMBER	QTY	DESCRIPTION
-	71413548	1	UPPER FRAME & SIEVES ASY
1	---	1	FRAME WA-CLEANING SHOE (NOT SERVICED)
2	71388494	1	SEAL, SEPARATOR FRAME TO FAN HOUSING
3	71387703	1	ANGLE, SEAL CLAMPING
4	339123X1	22	BOLT, FLANGE, M8-1.25 X 20 CL10.9
5	5000002X1	6	NUT, HEX FLANGE NYL LOCK, M6 X 1.0
6	3009183X1	6	BOLT, FLANGE, M6-1.0 X 20 CL10.9
7	71395263	1	PLATE, DAMPER, SEPARATOR
8	71407946	2	SEAL, SHORT
9	71395583	1	DEFLECTOR, RH CASCADE PAN
10	71395589	3	EXTENSION, DEFLECTOR, CASCADE PAN
11	3009920X1	2	BOLT, FLANGE, M8-1.25 X 16 CL10.9
12	5000003X1	10	NUT, HEX FLANGE NYL LOCK, M8 X 1.25
13	71386394	2	SEAL-REAR CHAFFER
14	PZND1041V	7	BOLT,RD HD SQ NK, M8-1.25 X 20 CL8.8
15	71407942	1	PAN WA, CASCADE
16	71395582	1	DEFLECTOR, LH CASCADE PAN
17	71388476	1	COMB ASY, CASCADE PAN
18	71388968	1	STRIP, RUBBER,SEPARATOR FRAME
19	70937253	56	POP-RIVET .188 X .063-.25 LG DOME HD
20	71393818	1	SEAL, REAR, SEPARATOR FRAME
21	390809X1	2	BOLT,RD HD SQ NK, M10-1.5 X 25 CL8.8
22	390734X1	2	WASHER, M10, NARROW
23	339376X1	2	LOCKWASHER, M10
24	339402X1	2	NUT, M10 X 1.5, REG
25	71397168	1	BUSHING ASY, TIE ROD
26	71392693	2	BEARING ASSEMBLY
	1501060W1	1	HOUSING
	71308951	1	BEARING, W/COLLAR
27	3009208X1	4	BOLT, FLANGE, M10-1.5 X 35 CL10.9
28	5000004X1	4	NUT, HEX FLANGE NYL LOCK, M10 X 1.5
29	70937254	4	POP-RIVET .188 X .25-.375 LG DOME HD

MC00472
PR: t06g24h33d0106

https://truckmanualshub.com/

CLEANING SHOE
LOWER PAN
(EFF. S/N HS36101)

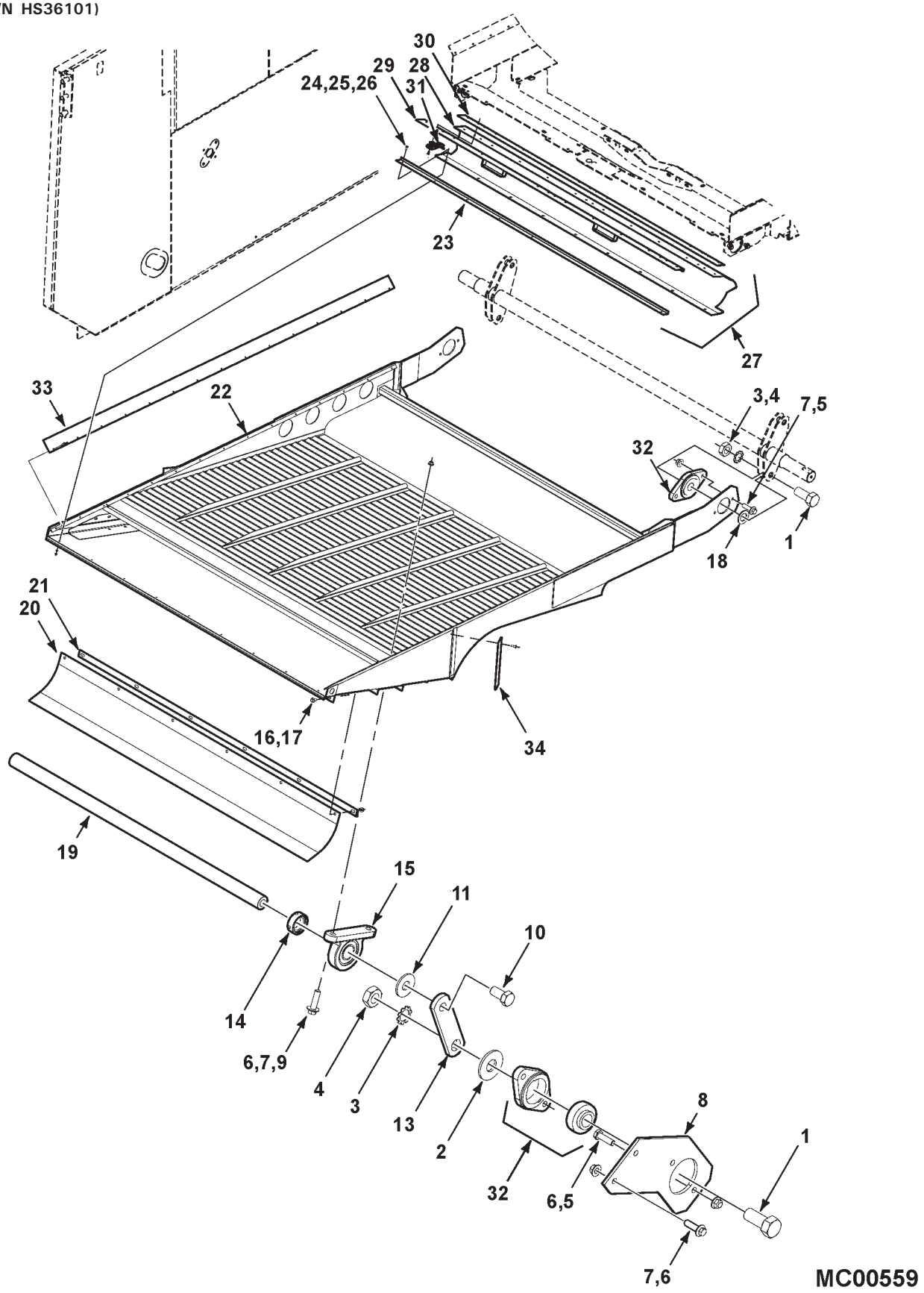

https://truckmanualshub.com/

CLEANING SHOE
LOWER PAN
(EFF. S/N HS36101)

ITEM	NUMBER	QTY	DESCRIPTION
1	1564540W1	4	CAPSCREW, 7/8-9 UNC X 2 GR5, SPECIAL
2	700709608	2	WASHER, 7/8, WIDE
3	70929356	4	LOCKWASHER, EXT. TOOTH, 7/8
4	7774383	4	JAM NUT, 7/8-9 UNC
5	70916965	4	LOCKWASHER, 3/8
	70916950	4	NUT, 3/8-16 REG
6	70920415	16	CAPSCREW, 3/8-16 X 1-1/4 GR5
7	Y704734	4	NUT, HEX FLANGE TOP LOCK, 3/8-16
8	71394540	2	SUPPORT, BEARING, REAR
9	70917378	4	WASHER, 3/8 WIDE
10	70923151	2	CAPSCREW, 5/8-11 X 1-1/4 GR5
11	70918432	2	WASHER, 5/8, WIDE
13	2400540W1	2	BAR-REAR HANGER
14	375028X1	2	COLLAR, BEARING
15	71392691	2	BEARING ASY, SHALLOW
	71308951	1	BEARING
	2551250W1	1	HOUSING
16	70921332	2	CAPSCREW, 5/16-18 X 3/4 GR5
17	Y704726	2	NUT, HEX FLANGE TOP LOCK, 5/16-18
18	364578X1	2	WASHER, .906 X 1.5 X .106 TH
19	71388975	1	ROD, TIE, LOWER PAN
20	71389185	1	SEAL-REAR
21	71389184	1	STRIP-CLAMPING,REAR SEPARATOR FRAME
22	71409926	1	PAN ASY, LOWER, W/ SIDE SEALS
23	71389182	1	STRIP-CLAMPING, SEPARATOR
24	373115X1	9	SCREW, PAN HD. MACH, #10-24 X 5/8
25	705004	9	LOCKWASHER, #10
26	70916621	9	NUT, #10-24, REG
27	71409932	1	DOOR ASY, REAR SHOE (INCL. ITEMS 28-31)
28	71393812	1	SEAL, RUBBER, SHOE DOOR
29	71396457	1	ANGLE WLMT, SHOE DOOR
30	71393815	1	REINF. STRIP, SHOE DOOR
	Y764126	10	POP RIVET, 3/16 X .125-.250 GRIP
31	762975	3	CLAMP, OVER-CENTER
	64642	6	POP RIVET, 3/16 X .250-.375 GRIP
32	1501043W91	4	BEARING & HOUSING ASY
	71308770	1	BEARING, W/O COLLAR
	1501060W1	1	HOUSING, BEARING
33	71394119	2	SEAL, RUBBER, LOWER PAN
	70937253	15	POP-RIVET .188 X .063-.25 LG DOME HD
34	71394841	2	SEAL, RUBBER, PAN SIDE
	70937253	10	POP-RIVET .188 X .063-.25 LG DOME HD

MC00559
PR: t07a23o20b0009

https://truckmanualshub.com/

PITMAN DRIVE
(PRIOR S/N HS36101)

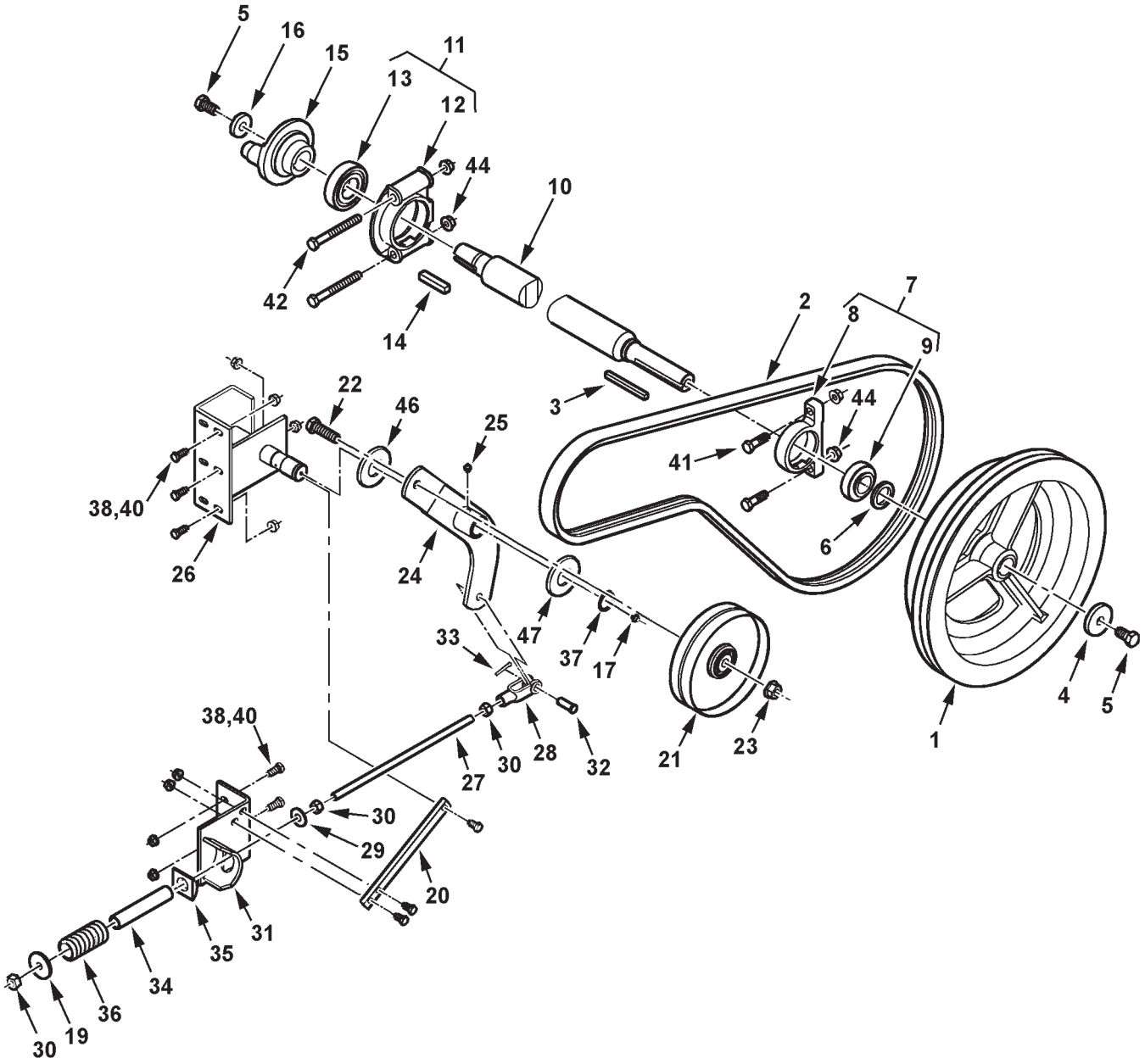

https://truckmanualshub.com/

PITMAN DRIVE
(PRIOR S/N HS36101)

ITEM	NUMBER	QTY	DESCRIPTION
1	2449760W1	1	PULLEY, DRIVE
2	71390199	1	BELT (SEE BELT LISTING)
3	61523	1	KEY, SQ, 3/8 X 4
4	2407570W1	1	WASHER, 21/32 X 2-3/8 X 3/8
5	70923151	2	CAPSCREW, 5/8-11 X 1-1/4 GR5
6	2619570W1	1	SPACER, PITMAN SHEAVE
7	----------	1	BEARING & HSG ASY (ORDER ITEMS 8 & 9)
8	1605510W1	1	HOUSING
9	50021	1	BEARING BALL
10	71412434	1	SHAFT, PITMAN DRIVE
11	----------	1	BEARING & HSG ASY. (ORDER ITEMS 12 & 13)
12	2590650W1	1	HOUSING
13	31-1588410	1	BEARING
14	70918168	1	KEY, 3/8 X 3/8 X 1-3/4
15	71396469	1	HUB, PITMAN DRIVE
16	2476070W1	1	WASHER, 21/32 X 1-3/4 X 3/8
17	13811X	1	LUBE FITTING, STR, 1/4-28 TAPER THD
19	70923094	1	WASHER, FLAT, .531 X 2.0 X .180
20	71390853	1	STRAP, REINFORCEMENT
	70921210	3	CAPSCREW, 3/8-16 X 1.0 GR5
	Y704734	3	NUT, HEX FLANGE LOCK, 3/8-16 UNC
21	2614090W1	1	IDLER PULLEY, FLAT
22	70921360	1	CAPSCREW, 5/8-11 X 2-1/4 GR5
23	700703922	1	NUT, HEX FLANGE TOP LOCK, 5/8-11
24	2613771W91	1	IDLER ARM WLDMT, PITMAN
25	70914465	1	LUBE FITTING, 1/8-27 NPTF
26	71390851	1	BRACKET ASY, PIVOT
27	71382871	1	ROD, ALL THD, 1/2-13 X 14" LG
28	70937465	1	YOKE
29	70918431	1	WASHER, 1/2 WIDE
30	704031	3	NUT, 1/2-13 UNC, REG
31	71390196	1	BRACKET, PULLEY ROD ANCHOR
32	70929593	1	PIN, CLEVIS, 1/2 X 1-13/64
33	70918452	1	PIN, COTTER, 1/8 X 1.0
34	71382868	1	SPACER, SPRING
35	71356058	1	BLOCK, PIVOT
36	71382716	1	SPRING
37	70926957	1	RING, RETAINING
38	70921210	5	CAPSCREW, 3/8-16 X 1.0 GR5
40	Y704734	5	NUT, HEX FLANGE TOP LOCK, 3/8-16 UNC
41	70919089	2	CAPSCREW, 1/2-13 X 1-3/4 GR5
42	70925974	2	CAPSCREW, 1/2-13 X 4-1/2 GR8
44	Y704742	4	NUT, HEX FLANGE TOP LOCK, 1/2-13 UNC
46	104207W1	1	WASHER, SHIM, 1-1/4 X 1-3/4 X .030 TH
47	70937716	1	WASHER, 1-5/16 X 2-1/2 X .150 TH

MC00378
PR: 254

https://truckmanualshub.com/

PITMAN DRIVE
(EFF. S/N HS36101)

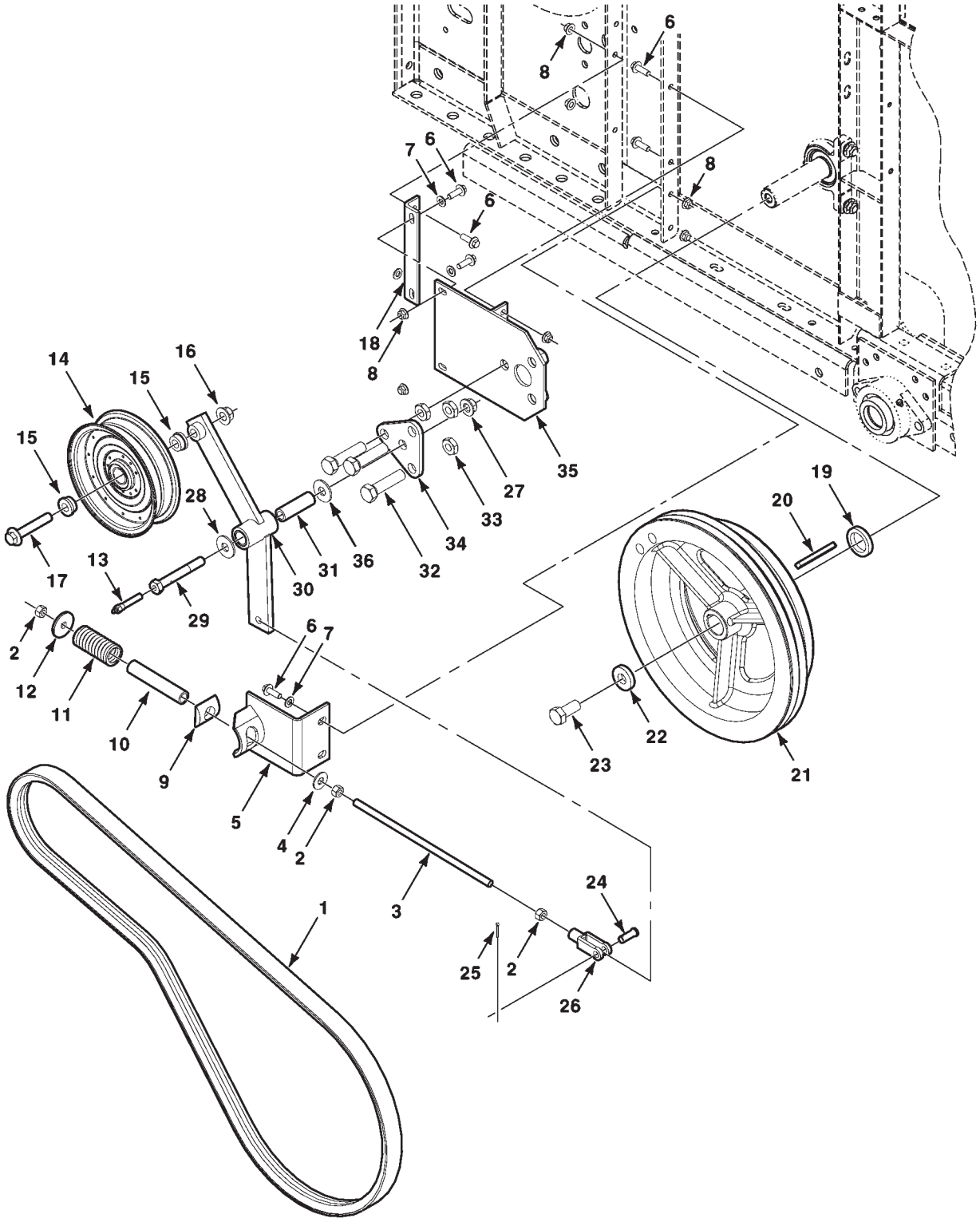

https://truckmanualshub.com/

PITMAN DRIVE
(EFF. S/N HS36101)

ITEM	NUMBER	QTY	DESCRIPTION
1	71390199	1	BELT-PITMAN DRIVE
2	704031	3	NUT, 1/2-13 REG
3	71382871	1	ROD-ALL THREAD
4	70918431	1	WASHER, 1/2 WIDE
5	71390196	1	ANCHOR WA-SPRING
6	3009207X1	9	BOLT, FLANGE, M10-1.5 X 30 CL10.9
7	390734X1	4	WASHER, M10, NARROW
8	5000004X1	8	NUT, HEX FLANGE NYL LOCK, M10 X 1.5
9	71356058	1	BLOCK-PIVOT
10	71382868	1	SPACER-SPRING
11	71382716	1	SPRING-IDLER
12	70923094	1	WASHER, .53 X 2.0 X .18 TH.
13	70914767	1	LUBE FTG 1/8 PIPE THREAD FEM, 1.0 LG
	7792922	1	PIPE NIPPLE, 1/8-27 X 2.0 LG
14	71309767	1	IDLER
15	71312602	2	SPACER, IDLER
16	5000006X1	1	NUT, HEX FLANGE NYL LOCK, M16 X 2.0
17	3009244X1	1	BOLT, FLANGE, M16-2.0 X 90 CL10.9
18	71406344	1	ANGLE-SUPPORT
19	2619570W1	1	SPACER, PITMAN SHAFT
20	61523	1	KEY, 3/8 SQ X 4"
21	2449760W1	1	SHEAVE, PITMAN DRIVEN
22	2407570W1	1	WASHER, .66 ID X 2.38 X .38 TH
23	70923151	1	CAPSCREW, 5/8-11 X 1-1/4 GR5
24	70929593	1	PIN, CLEVIS, 1/2 X 1.36 LG.
25	70918452	1	COTTER PIN, 1/8 X 1
26	70937465	1	YOKE, ROD END, 1/2-13
27	700703922	1	NUT, HEX FLANGE TOP LOCK, 5/8-11
28	70918432	1	WASHER, 5/8, WIDE
29	2636170W1	1	CAPSCREW, 5/8-11 X 4-1/2, SPECIAL
30	71406345	1	IDLER ARM ASY, PITMAN DRIVE
	1689170W1	2	BUSHING, 1.25 OD X .750 LG
31	2636210W1	1	SLEEVE, PIVOT
32	5000018X1	3	CAPSCREW, M20-2.5 X 80 FULL THD, CL8.8
33	3009747X1	3	JAM NUT, M20 X 2.5
34	71400686	1	PLATE-MOUNTING
35	71406341	1	SUPPORT WA-PIVOT
36	70937005	1	WASHER, 5/8, NARROW, HARD

MC00474
PR: t07a23o20b0010

https://truckmanualshub.com/

GRAIN ELEVATOR DRIVE
(PRIOR S/N HP36101)

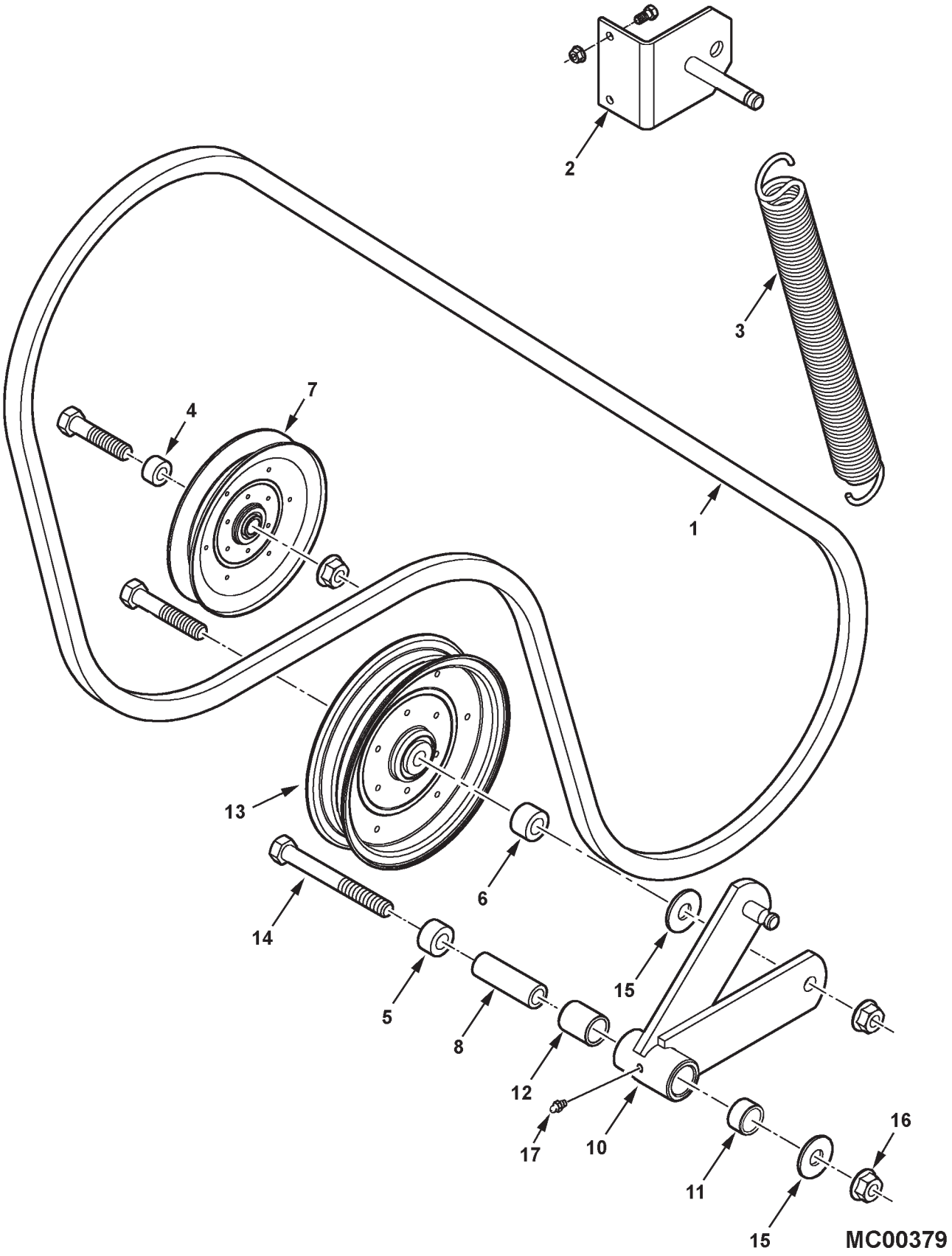

https://truckmanualshub.com/

GRAIN ELEVATOR DRIVE
(PRIOR S/N HP36101)

ITEM	NUMBER	QTY	DESCRIPTION
1	227455M1	1	BELT, GRAIN ELEVATOR DRIVE
2	2620871W91	1	ANCHOR WLDMT, SPRING
	70921332	2	CAPSCREW, 5/16-18 X 3/4
	Y704726	2	NUT, HEX FLANGE TOP LOCK, 5/16-18
3	2620920W1	1	SPRING, GRAIN ELEVATOR DRIVE
4	360555X1	1	SPACER, 21/32 X 1-1/4 X 11/16 LG
5	151257M1	1	SPACER, 11/16 X 1-1/4 X 1-3/16 LG
6	2451440W1	1	SPACER, 11/16 X 1-1/4 X 13/16 LG
7	31-2446490	1	IDLER PULLEY, 7-5/16 OD
	70919434	1	CAPSCREW, 5/8-11 X 2-3/4
	70918432	1	WASHER, WIDE FLAT, 5/8
	700703922	1	NUT, HEX FLANGE TOP LOCK, 5/8-11
8	2441490W1	1	SLEEVE, .640 ID X .992 X 3.06 LG
10	2620853W91	1	ARM ASSEMBLY (INCL. ITEMS 11 & 12)
11	1689170W1	1	BUSHING, 1 X 1-1/4 X 3/4
12	1742670W1	1	BUSHING, 1 X 1-1/4 X 1-1/2
13	2553560W1	1	IDLER, FLAT, 8-3/4 OD
	70925702	1	CAPSCREW, 5/8-11 X 3-1/2
	70918432	1	WASHER, WIDE FLAT, 5/8
	700703922	1	NUT, HEX FLANGE TOP LOCK, 5/8-11
14	70925706	1	CAPSCREW, 5/8-11 X 5-1/2 GR5
15	70918432	2	WASHER, WIDE FLAT, 5/8
16	700703922	1	NUT, HEX FLANGE TOP LOCK, 5/8-11
17	70914465	1	LUBE FITTING, 1/8-27 NPTF
-	71406309	AR	DRIVE KIT, CLEAN GRAIN (UPGRADE TO ELEV. DRIVE EFF. S/N HP36101)(INCLUDES STRAP 71407326, QTY 1, FOR STEP) (SERVICE COMP'TS ON FOLLOWING PAGE)

MC00379
PR: t05b08m42d0017

https://truckmanualshub.com/

GRAIN ELEVATOR DRIVE
(EFF. S/N HP36101)

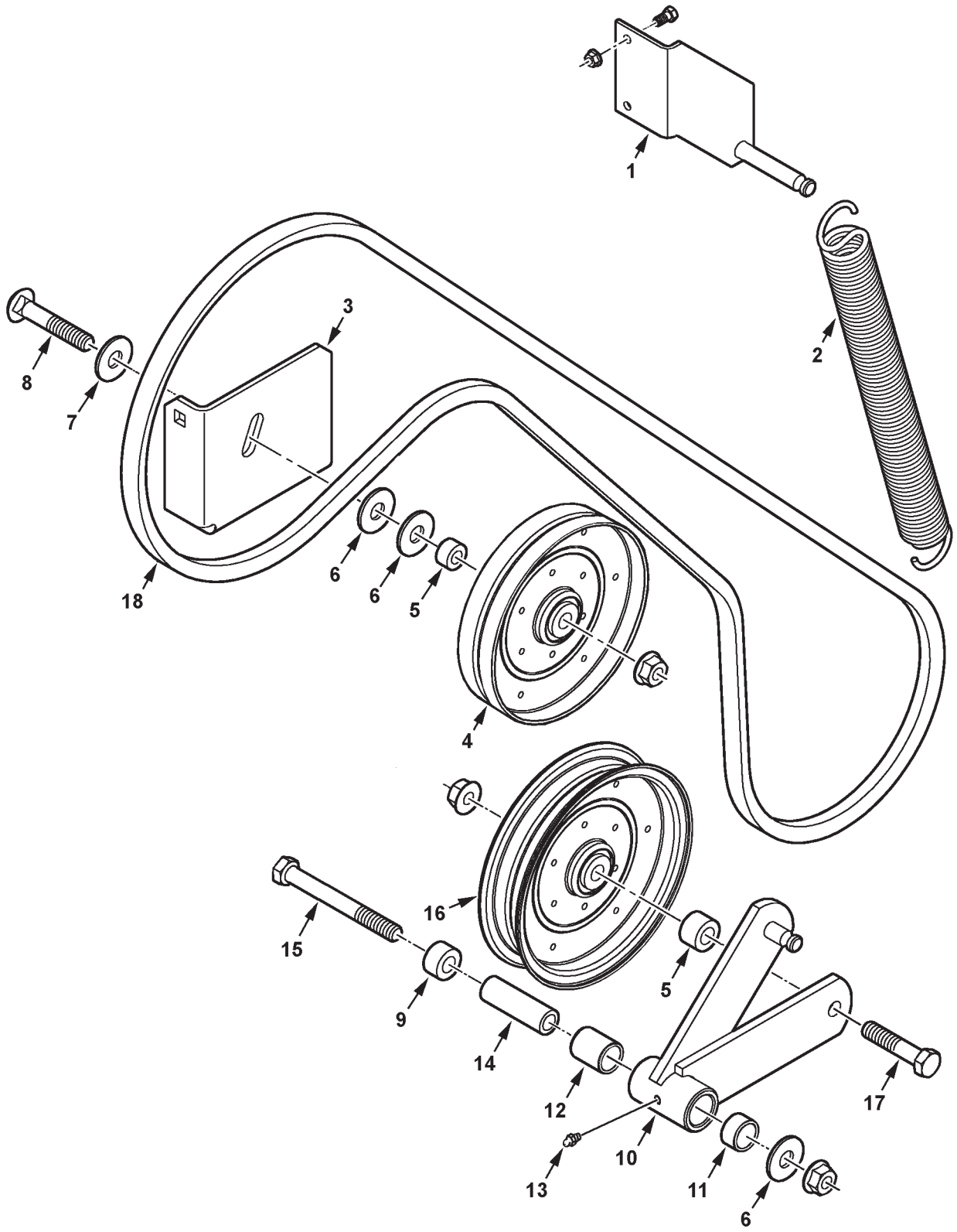

MC00380

https://truckmanualshub.com/

GRAIN ELEVATOR DRIVE
(EFF. S/N HP36101)

ITEM	NUMBER	QTY	DESCRIPTION
1	71403684	1	ANCHOR WLDMT, SPRING
	70921332	2	CAPSCREW, 5/16-18 X 3/4 GR5
	Y704726	2	NUT, HEX FLANGE TOP LOCK, 5/16-18
2	1579720W1	1	SPRING, TENSION
3	71403680	1	SUPPORT BRACKET, IDLER
	68619	2	BOLT, RND HD SQ NECK, 1/2-13 X 1-1/4
	70928367	1	BOLT, RND HD SQ NECK, 1/2-13 X 1
	Y704742	3	NUT, HEX FLANGE TOP LOCK, 1/2-13
4	2614090W1	1	IDLER ASY, FLAT
5	2451440W1	2	SPACER, IDLER
6	70918432	3	WASHER, 5/8, WIDE
7	700709608	1	WASHER, 7/8, WIDE
8	364988X1	1	BOLT, RND HD SQ NECK, 5/8-11 X 3-1/2
	700703922	1	NUT, HEX FLANGE TOP LOCK, 5/8-11
9	151257M1	1	SPACER, .688 X 1.188 LG
10	2620853W91	1	ARM ASSEMBLY (INCL. ITEMS 11 & 12)
11	1689170W1	2	BUSHING, 1 X 1.24 X .75 LG (WAS QTY.1)
12	1742670W1	1	BUSHING, 1 X 1.24 X 1.50 LG (PRIOR S/N HP36---, MID-PROD'N RUN)
13	70914465	1	LUBE FITTING, 1/8-27 NPTF
14	2441490W1	1	SLEEVE, .640 ID X .992 X 3.06 LG
15	70925706	1	CAPSCREW, 5/8-11 X 5-1/2 GR5
	700703922	1	NUT, HEX FLANGE TOP LOCK, 5/8-11
16	2553560W1	1	IDLER, FLAT, 8-3/4 OD
17	70921671	1	CAPSCREW, 5/8-11 X 3-1/4 GR5
	700703922	1	NUT, HEX FLANGE TOP LOCK, 5/8-11
18	71403685	1	BELT, GRAIN ELEVATOR DRIVE

MC00380
PR: t05b08m42d0018

https://truckmanualshub.com/

GRAIN ELEVATOR
LOWER

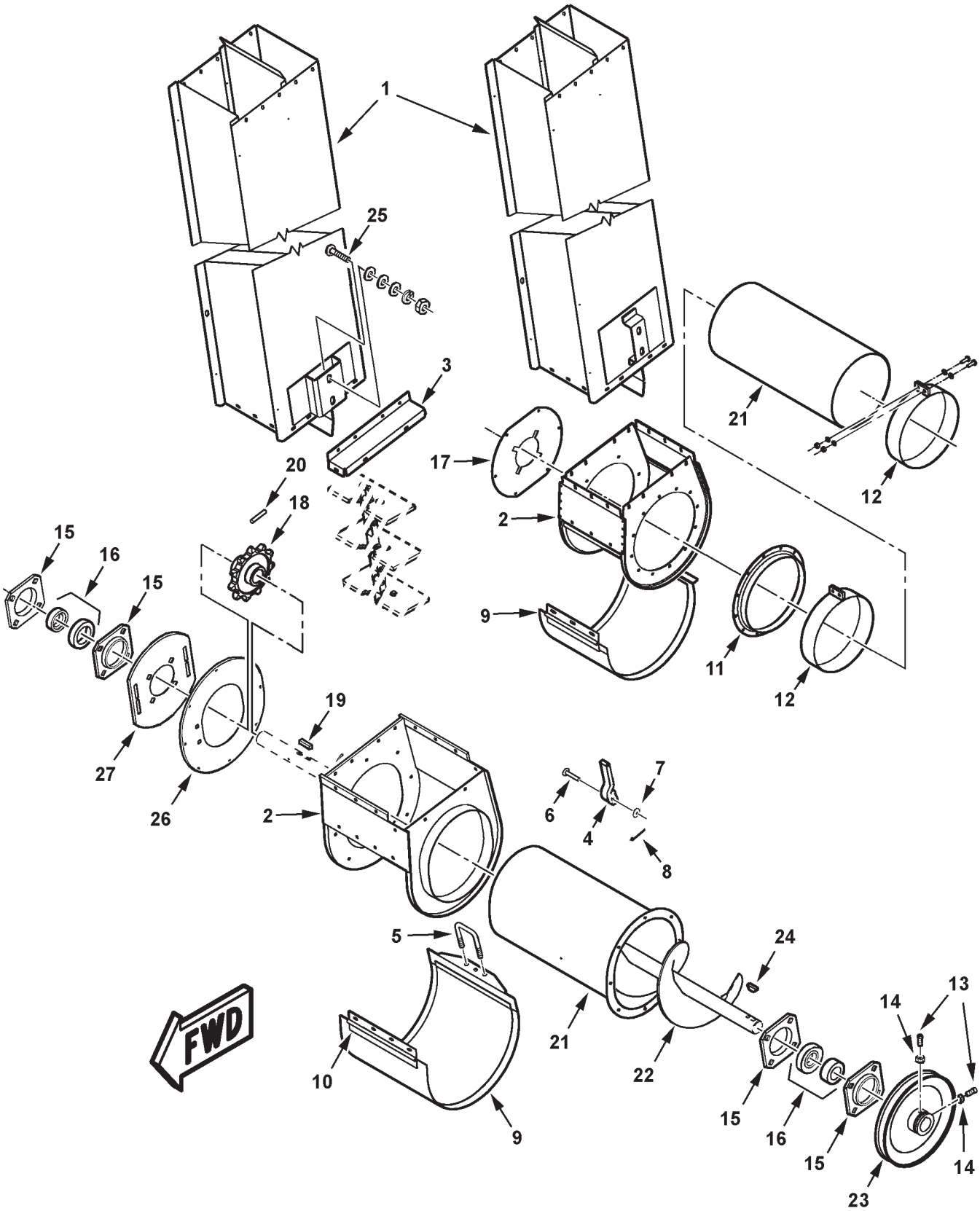

MC00267

https://truckmanualshub.com/

GRAIN ELEVATOR
LOWER

ITEM	NUMBER	QTY	DESCRIPTION
1	71393547	1	BODY & DECALS ASY (PRIOR S/N HP36101) (DECALS- SEE "LABELS" SECTION)
	71400435	1	BODY WLMT, GR ELEV. (EFF. S/N HP36101)
	71409271	1	BODY WLMT,GR ELEV.RICE (EFF.S/N HP36101)
	71396458	1	BODY & DECALS ASY (EUROPE)
	70931316	10	BOLT, RD HD SQ NECK 1/4-20 X 5/8
	705012	10	LOCKWASHER, 1/4 (PRIOR S/N HP36101)
	70917377	10	WASHER, 1/4, WIDE(PRIOR S/N HP36101)
	70916622	10	NUT, 1/4-20, REG (PRIOR S/N HP36101)
	70931209	10	LOCKNUT, HEX SERR FLANGE, 1/4-20 (EFF. S/N HP36101)
2	71393429	1	BOOT ASY. GR ELEV. (PRIOR S/N HP36101)
	71399994	1	BOOT WLMT, GR ELEV. (EFF. S/N HP36101)
	71409268	1	BOOT WLMT,GR ELEV. RICE(EFF.S/N HP36101)
	70931316	14	BOLT, RD HD SQ NECK, 1/4-20 X 5/8
	705012	14	LOCKWASHER, 1/4
	70917377	14	WASHER, 1/4 WIDE (PRIOR S/N HP36101)
	70916622	14	NUT, 1/4-20, REG
3	71399807	1	FILLER WLMT, GR ELEV. (EFF. S/N HP36101)
	71409269	1	FILLER WLMT, GR ELEV. RICE (S/N HP36101)
	70931316	4	BOLT, RD HD SHT SQ NK, 1/4-20 X 5/8
	70931317	4	BOLT, RD HD SHT SQ NK, 1/4-20 X 3/4
	705012	8	LOCKWASHER, 1/4
	70916622	8	NUT, 1/4-20, REG
4	1799410W1	1	LATCH, DOOR
5	71197376	1	U-BOLT, LATCH (PRIOR S/N HP36101)
	70916622	4	NUT, 1/4-20, REG (PRIOR S/N HP36101)
	2476240W1	1	LATCH BOLT, DOOR (EFF. S/N HP36101)
	70916950	4	NUT, 3/8-16 (EFF. S/N HP36101)
6	70927523	1	PIN, CLEVIS, 5/16 X 1-1/2
7	70918265	1	WASHER, WIDE FLAT, 5/16
8	70918447	1	PIN, COTTER, 3/32 X 3/4
9	71393526	1	DOOR WLMT, LOWER (PRIOR S/N HP36101)
	71396467	-	DOOR WLMT, PERFORATED (ACCESSORY)(PRIOR S/N HP36101)
	71400431	1	DOOR WLMT, LOWER (EFF. S/N HP36101)
	71410456	1	* DOOR WLMT,PERFORATED(EFF. S/N HP36101)
	71409265	1	DOOR WLMT, LOWER, RICE (EFF.S/N HP36101)
	70931317	4	BOLT, RD HD,SHT SQ NK, 1/4-20 X 3/4
	353769X1	4	WASHER, HARDENED, 1/4
	705012	4	LOCKWASHER, 1/4
	70916622	4	NUT, 1/4-20, REG
10	2412670W1	1	HINGE, DOOR (PRIOR S/N HP36101)
	71400432	1	HINGE, DOOR (EFF. S/N HP36101)
11	2554680W1	1	FLANGE, ELEVATOR (PRIOR S/N HP36101)
	70931316	12	BOLT, RD HD SQ NECK, 1/4-20 X 5/8
	70916964	12	LOCKWASHER, 1/4
	70916622	12	NUT, 1/4-20, REG
12	2555401W91	2	CLAMP ASY, TUBE (PRIOR S/N HP36101)
	700705614	4	CAPSCREW, 5/16-18 X 1-1/2 FULL THD
	70917642	4	WASHER, 5/16, WIDE
	70917356	4	LOCKWASHER, 5/16
	70917372	4	NUT, 5/16-18, REG

CONTINUED

https://truckmanualshub.com/

GRAIN ELEVATOR
LOWER

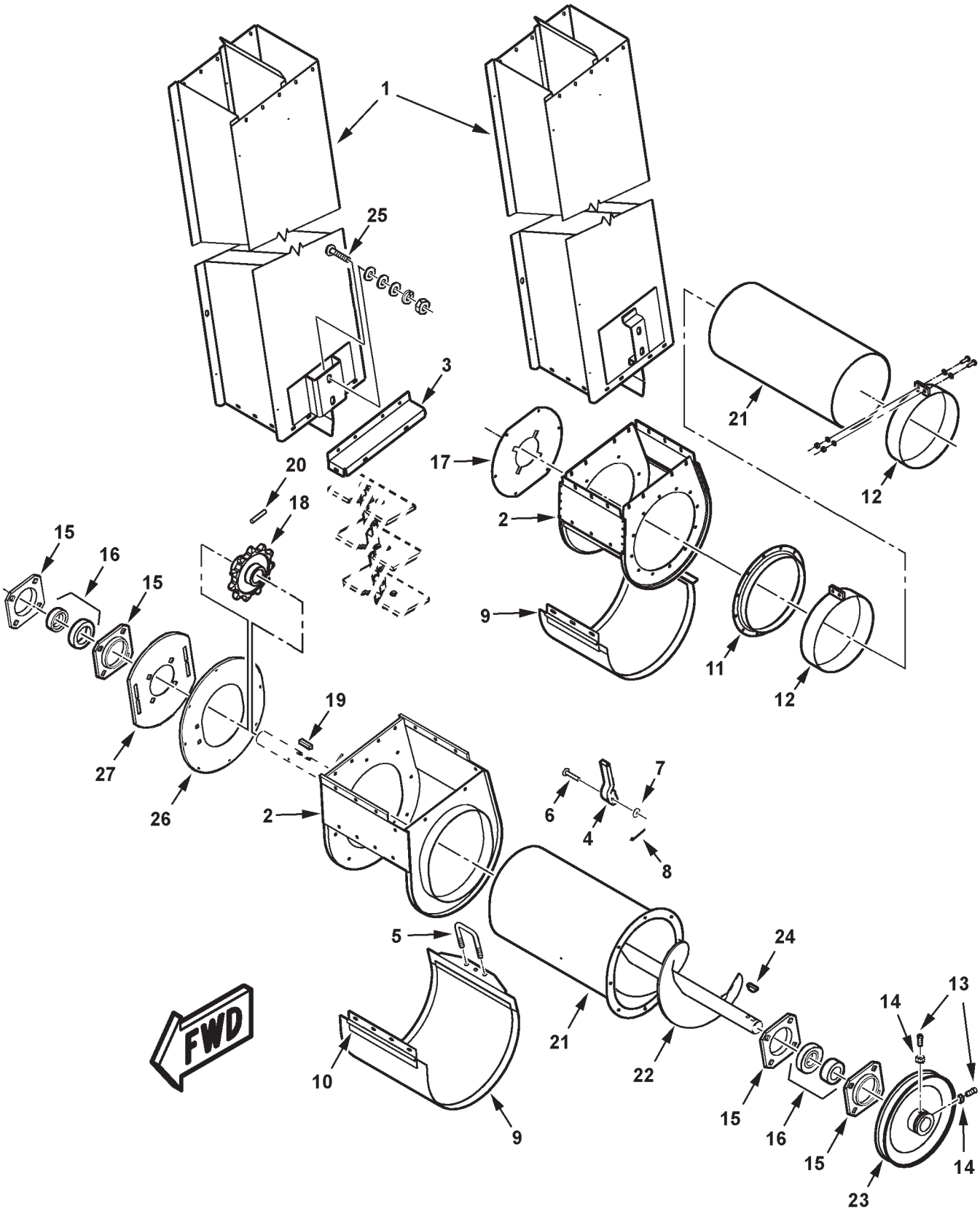

MC00267

https://truckmanualshub.com/

ITEM	NUMBER	QTY	DESCRIPTION
13	70923326	1	SETSCREW,SQ HD, 3/8-16 X 1 (QTY 2, PRIOR S/N HP36101)
	70920469	1	SETSCREW, SQ HD CUP PT, 3/8-16 X 3/4 (EFF. S/N HP36101)
14	70916950	2	NUT, 3/8-16, REG (PRIOR S/N HP36101)
15	17789	4	FLANGE, BEARING
	70931809	8	BOLT, RND HD SQ NK, 1/2-13 X 1-1/4 (WAS QTY 7, PRIOR S/N HP36101)
	70931810	1	BOLT, RND HD SQ NK, 1/2-13 X 1-3/4 (PRIOR S/N HP36101)
	Y705046	8	LOCKWASHER, 1/2
	704031	8	NUT, 1/2-13, REG
16	50468	2	BEARING, BALL, W/COLLAR
	1720176	2	COLLAR
17	2571520W1	1	PLATE, BEARING MOUNT (PRIOR S/N HP36101)
	70931316	6	BOLT, RD HD SQ NECK, 1/4-20 X 5/8
	70916964	6	LOCKWASHER, 1/4
	70916622	6	NUT, 1/4-20, REG
18	2571510W1	1	SPROCKET, GRAIN ELEVATOR
19	61101	1	SQ. KEY, 1/4 X 1/4 X 1-3/4
20	70926977	1	PIN, COILED SPRING, 3/16 X 2-1/4
21	71393532	1	TUBE, BOTTOM,GR ELEV.(PRIOR S/N HP36101)
	71401204	1	TUBE WLMT,BTM,GR ELEV.(EFF. S/N HP36101)
	71409270	1	TUBE, BTM,GR ELEV. RICE(EFF.S/N HP36101)
	7700461	8	BOLT, RD HD SQ NK, 5/16-18 X 3/4
	70917356	8	LOCKWASHER, 5/16
	70917372	8	NUT, 5/16-18, REG
	70933988	8	SPEED NUT, THREAD GRIP, 5/16
22	71392700	1	AUGER ASY, (PRIOR S/N HP36101)
	71394534	1	AUGER ASY (CHROME)
23	108843W1	1	PULLEY, DRIVEN (PRIOR S/N HP36101)
	71403682	1	PULLEY, DRIVEN (EFF. S/N HP36101)
24	70911201	1	KEY, WOODRUFF, 3/8 X 1-1/4 DIA
25	701235	1	CPSCR, 1/2-13 X 1-1/2 (WAS QTY.2 PRIOR S/N HP36101)
	70921176	1	CPSCR, 1/2-13 X 1-1/4 (EFF. S/N HP36101)
	70931187	1	NUT, HEX SERR FLANGE, 1/2-13
	70936525	1	SPEED NUT, THREAD GRIP, 1/2
	705541	2	WASHER, HARD, 1/2 (WAS QTY.4)
	Y705046	1	LOCKWASHER, 1/2 (WAS QTY.2)
	704031	1	NUT, 1/2-13, REG (WAS QTY.2)
26	71400429	1	PLATE, BOOT COVER (EFF. S/N HP36101)
	71409267	1	PLATE, BOOT COVER, RICE(EFF.S/N HP36101)
	70931317	8	BOLT, RD HD SQ NK, 1/4-20 X 3/4
	705012	8	LOCKWASHER, 1/4
	70916622	8	NUT, 1/4-20, REG
27	71400430	1	PLATE, BRG (EFF. S/N HP36101)
	71409266	1	PLATE, BRG, RICE (EFF. S/N HP36101)
	70922786	4	BOLT, RD HD SQ NK, 3/8-16 X 1 GR5
	Y705533	4	WASHER, HARD, 3/8
	70916965	4	LOCKWASHER, 3/8
	70916950	4	NUT, 3/8-16, REG
-	71393534	1	CHAIN ASY. (NOT ILL)(SEE CHAINS, DRIVE)
-	700704010	AR	SILICONE, RUBBER SEALANT
-	71407047	AR	* KIT,PERF. ELEV DOORS(EFF. S/N HP36101) (ORDER THRU DEALER CENTRAL)

https://truckmanualshub.com/

GRAIN ELEVATOR
HEAD ASSEMBLY

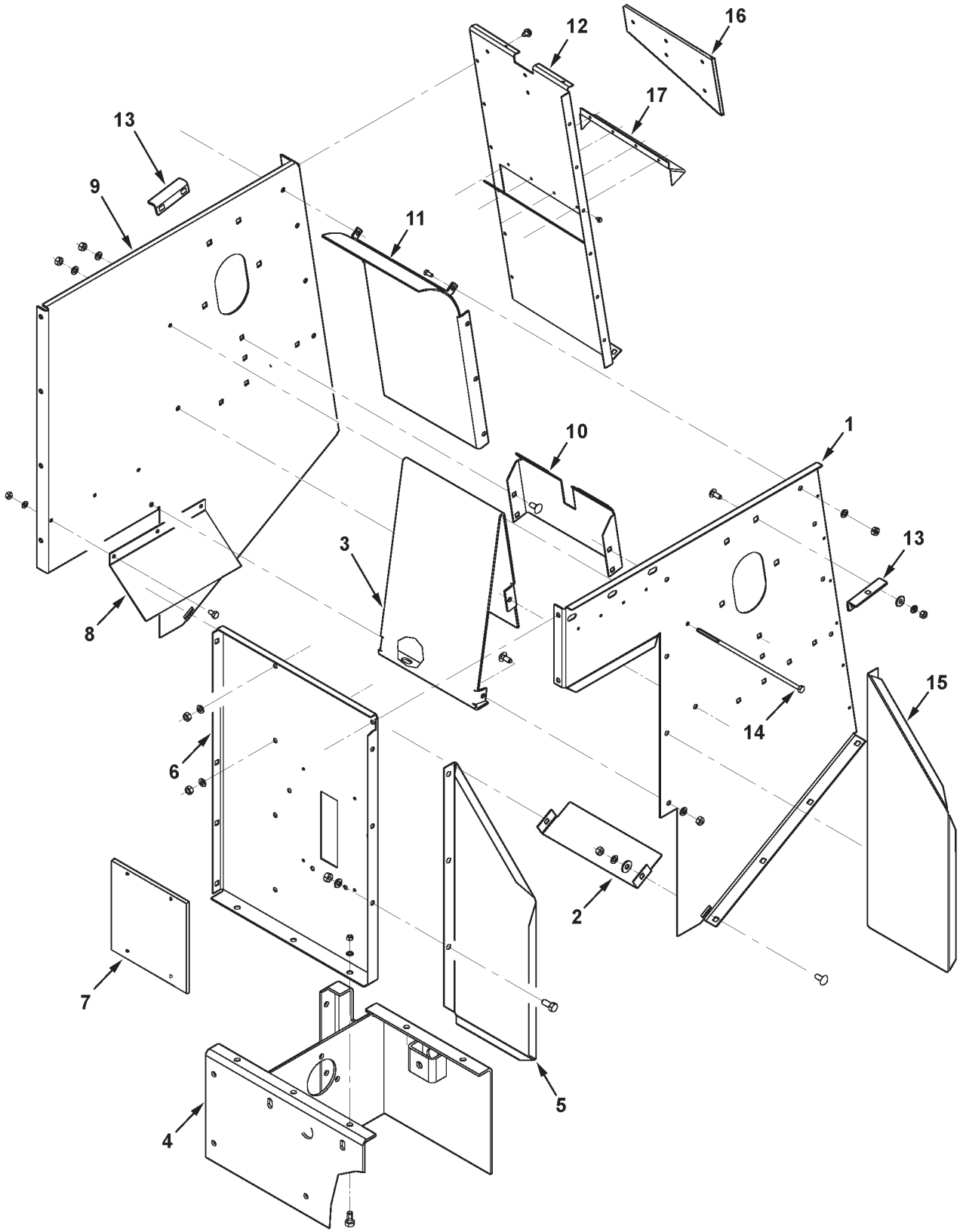

MC00270

https://truckmanualshub.com/

GRAIN ELEVATOR
HEAD ASSEMBLY

ITEM	NUMBER	QTY	DESCRIPTION
1	71393268	1	PANEL, GRAIN HEAD SIDE (LH)
	7700461	6	BOLT, RD HD SQ NECK 5/16-18 X 3/4
	70917642	2	WASHER, FLAT 5/16
	Y705020	6	LOCKWASHER, 5/16
	70917372	6	HEXNUT, 5/16-18
2	71393273	1	SEAL, ELEVATOR
3	71393274	1	DIVIDER, GRAIN HEAD
4	71393269	1	SUPPORT ASY., BIN LOADER DRIVE
	70921965	5	CAPSCREW, 5/16-18 X 3/4 GR5
	70916965	5	LOCKWASHER, 3/8
	70916950	5	HEXNUT, 3/8
5	71393264	1	EXTENSION, FRONT
	70921332	6	CAPSCREW, 5/16-18 X 3/4
	Y705020	6	LOCKWASHER, 5/16
	70917372	6	HEXNUT, 5/16-18
6	71393263	1	PANEL, GRAIN HEAD FRONT
	70921333	1	CAPSCREW, 5/16-18 X 1.0
	70921332	5	CAPSCREW, 5/16-18 X 3/4
	Y705020	6	LOCKWASHER, 5/16
	70917372	6	HEXNUT, 5/16-18
7	71389842	1	COVER PLATE, ELEV. HEAD, FRONT (NON-FIELDSTAR)
	70924837	4	RIVET
8	71368598	1	DEFLECTOR, BIN LOADER
	70921958	3	CAPSCREW, 1/4-20 X 1/2
	705012	3	LOCKWASHER, 1/4
	70916622	3	HEXNUT, 1/4-20
9	71393265	1	PANEL, GRAIN HEAD (RH)
10	71393405	1	EXTENSION, CENTERBOARD
	7700461	4	BOLT, RD HD SQ NECK 5/16-18 X 3/4
	Y705020	4	LOCKWASHER, 5/16
	70917372	4	HEXNUT, 5/16-18
11	71400915	1	BACK WLMT, ELEV. HEAD(PRIOR S/N HR36101)
	71408514	1	BACK WLMT, ELEV. HEAD (EFF. S/N HR36101)
	70921332	8	CAPSCREW, 5/16-18 X 3/4
	Y705020	8	LOCKWASHER, 5/16
	70917372	8	HEXNUT, 5/16-18
12	71393401	1	REAR PANEL, BIN LDR (PRIOR S/N HN36101)
	71401452	1	REAR PANEL, BIN LDR (EFF. S/N HN36101 - HN36999)
	71406849	1	REAR PANEL, BIN LDR (EFF. S/N HP36101)
	70925991	12	SCR,HX WSHR HD,TAPPING, 1/4-14 X 1/2
13	71327984	2	BRACKET, DRAW BOLT
	70922786	4	BOLT, RD HD SQ NECK 3/8-16 X 1.0
	70916965	4	LOCKWASHER, 3/8
	70916950	4	HEXNUT, 3/8
14	354273X1	1	SCREW, CAP, 1/4-20 X 10.0
	705012	1	LOCKWASHER, 1/4
	70916622	1	HEXNUT, 1/4
15	71393402	1	EXTENSION, REAR
16	71401381	1	PLATE, FILLER (NON-FIELDSTAR)(EFF. S/N HN36101)
	7703457	5	CAPSCREW, 1/4-20 X 3/4
	70937101	5	NUT, PUSH-ON, 1/4
	700709601	5	WASHER, 1/4 WIDE
	705012	5	LOCKWASHER, 1/4
	704007	5	NUT, 1/4-20
17	71408501	1	HOOD, RECIRCULATION (EFF. S/N HP36101)
	700717635	4	POP-RIVET, 3/16 X .126-.250 GRIP

https://truckmanualshub.com/

GRAIN ELEVATOR
BIN FILL AUGER

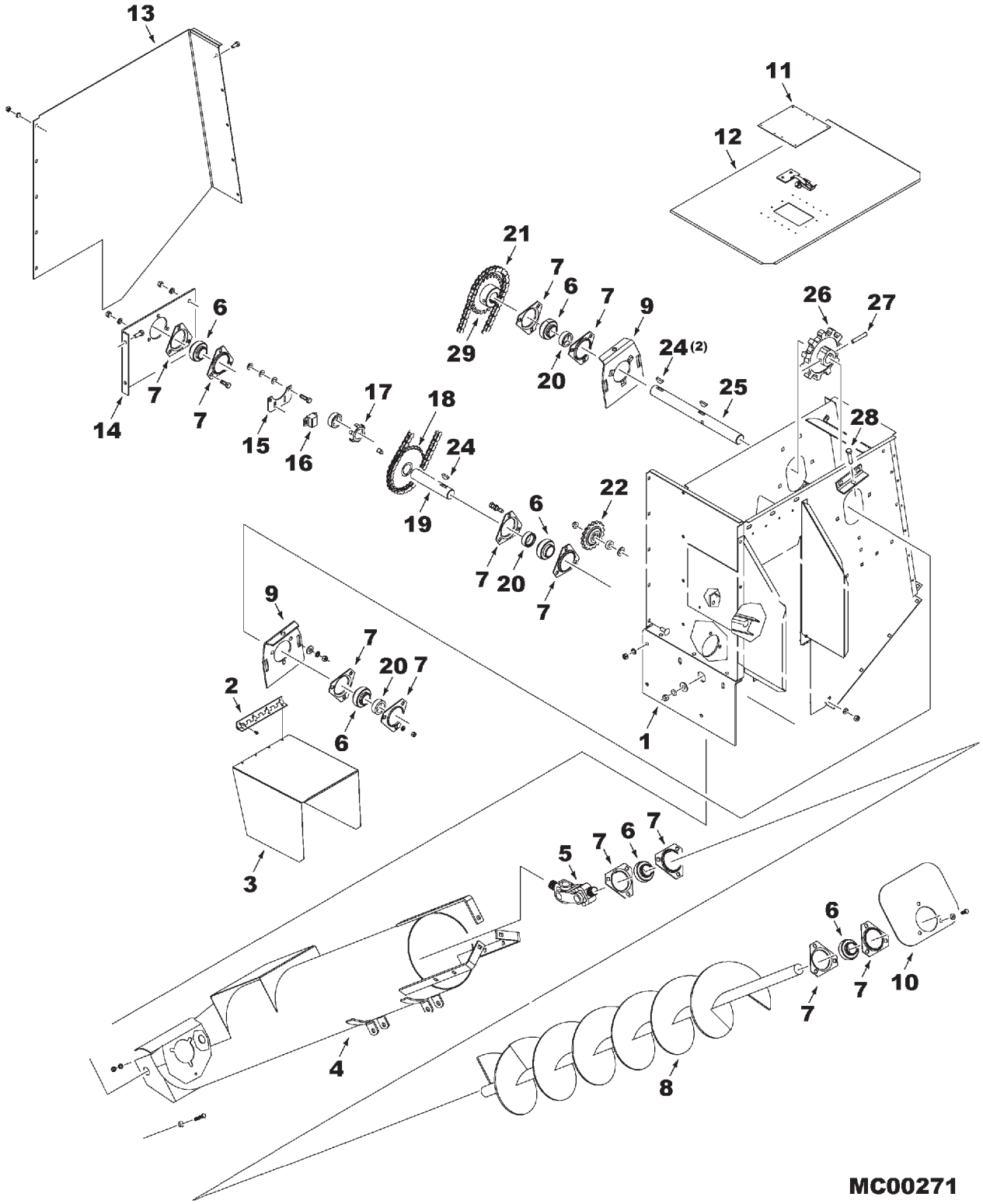

https://truckmanualshub.com/

ITEM	NUMBER	QTY	DESCRIPTION
1	----------	1	HEAD ASY, CLEAN GRAIN ELEVATOR (REFERENCE ONLY, SEE BREAKDOWN)
2	71373693	1	HINGE, ELEVATOR BOOT
	70924837	4	RIVET, 3/16 X .277
	700717635	4	RIVET, 3/16 X .402
3	71376042	1	COVER, HINGED
4	71362970	1	TUBE WLDMT, BIN LOADER
	70921176	2	CAPSCREW, 1/2-13 X 1-1/4
	70918431	4	WASHER, 1/2 WIDE
	71188949	2	SPACER
	Y705046	2	LOCKWASHER, 1/2
	704031	2	NUT, 1/2-13 REG
5	71395998	1	U-JOINT ASY., DOUBLE PIVOT
	71124448	2	YOKE
	71396653	2	JOURNAL ASY, U-JOINT
6	71308995	6	BEARING, W/ COLLAR
7	71127313	12	FLANGE
	Y707042	6	BOLT, PLOW 3/8-16 X 1.0
	70922786	7	BOLT, RHSN 3/8-16 X 1.0
	70916965	7	LOCKWASHER, 3/8
	70916950	7	NUT, 3/8-16 REG
8	71388940	1	AUGER, BIN LOADER (CHROME)
9	71393419	2	SUPPORT, BEARING
	70922786	4	BOLT, RHSN 3/8-16 X 1.0
	70917378	4	WASHER, FLAT 3/8
	70916965	4	LOCKWASHER, 3/8
	70916950	4	NUT, 3/8-16 REG
10	71393403B	1	PLATE, DEFLECTOR
	70923220	3	BOLT, RHSN 3/8-16 X 1-1/4
	70916965	3	LOCKWASHER, 3/8
	70917378	3	WASHER, FLAT 3/8
	70916950	3	NUT, 3/8-16 REG
11	71393404	1	PLATE, COVER (NON-FIELDSTAR)(PRIOR S/N HN36101)
	70924799	8	RIVET, 1/8 X .250
12	71395976	1	TOP COVER ASY,BIN LDR(PRIOR S/N HN36101)
	71401453	1	TOP COVER ASY, BIN LDR (EFF. S/N HN36101 TO HP36999)
	71409402	1	TOP COVER ASY, BIN LDR(EFF. S/N HR36101)
	-----	1	TOP COVER, BIN LDR (ORDER COVER ASY)
	762975	1	CLAMP, OVER-CENTER LATCH
	71344833	1	SEAL, RUBBER
	700717635	4	POP-RIVET, 3/16 X .126-.250 GRIP
	70917380	2	WASHER, .219 ID X .50 OD X 18 GA
13	71393258	1	SHIELD, DRIVE CHAIN, BIN LOADER
	7883317	5	SCREW, HEX WSHR HD, 5/16-18 X 1/2
	7700461	5	BOLT, RND HD SQ NK, 5/16-18 X 3/4
	70917642	5	WASHER, FLAT 5/16
	Y705020	5	LOCKWASHER, 5/16
	70917372	5	NUT, 5/16-18 REG
	70933988	5	NUT, SPEED 5/16
14	71393259	1	SUPPORT, LOADER END
	703249	4	CAPSCREW, 3/8-16 X 1.0
	70916965	4	LOCKWASHER, 3/8
	70916950	4	NUT, 3/8-16 REG

CONTINUED

https://truckmanualshub.com/

GRAIN ELEVATOR
BIN FILL AUGER

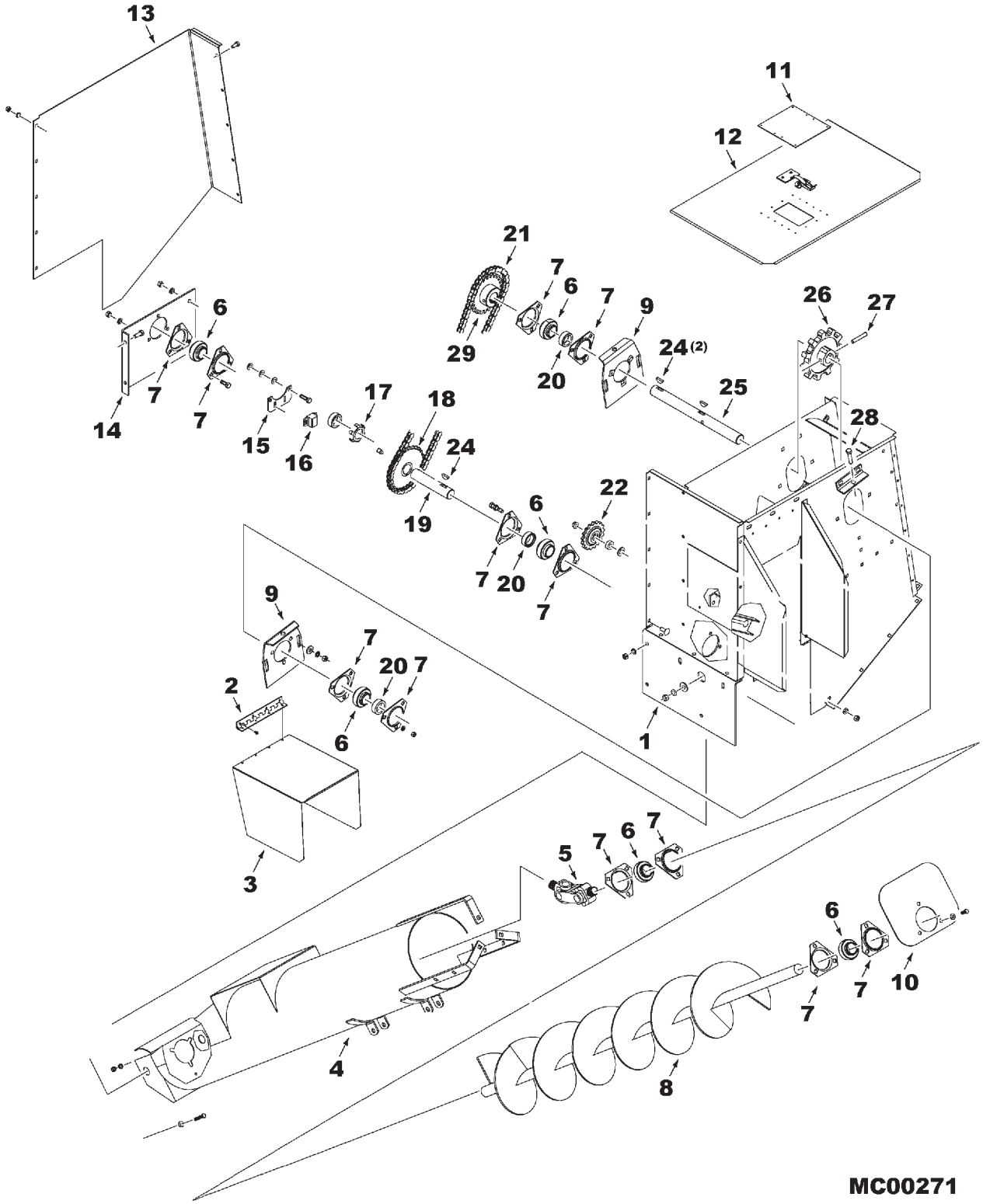

https://truckmanualshub.com/

ITEM	NUMBER	QTY	DESCRIPTION
15	71188145	1	BRACKET, SHAFT
	70923220	2	BOLT, RHSN 3/8-16 X 1-1/4
	Y705533	6	WASHER, FLAT 3/8
	70916965	2	LOCKWASHER, 3/8
	70916950	2	NUT, 3/8-16 REG
16	71391021	1	SENSOR
	70931317	2	BOLT, RD HD,SHT SQ NK, 1/4-20 X 3/4
	705012	2	LOCKWASHER, 1/4
	70916622	2	NUT, 1/4-20 REG
17	71194367	1	COLLAR WLDMT, SENSING
18	71393260	1	SPROCKET WLDMT, 28 TEETH (QTY 2, PRIOR S/N HN36101)
	70920469	2	SETSCREW, SQ HD CUP PT, 3/8-16 X 3/4
19	71393262	1	SHAFT, DRIVE
20	700717212	3	COLLAR, 1-1/4 ID
21	-----	1	CHAIN,BIN LOADER,#50 (SEE"CHAINS,DRIVE")
22	7087398	1	SPROCKET, IDLER
	70929095	1	BOLT, RDHD, SQNK 1/2-13 X 2-1/4
	70924113	1	WASHER, FLAT SQ HOLE
	6522940	1	SPACER
	Y704742	1	LOCKNUT, 1/2-13
24	29780X	3	KEY, WOODRUFF, 1/4 X 1.0
25	71393261	1	SHAFT, UPPER ELEVATOR
26	2412960W1	1	SPROCKET, DRIVE
27	70916767	1	ROLL PIN, 3/8 X 2 LG
28	70937727	2	CAPSCREW, 3/8-16 X 3-1/4
	70916950	2	NUT, 3/8-16 REG
29	71401462	1	SPROCKET, WLDMT, 38 TEETH
	70920469	2	SETSCREW, SQ HD CUP PT, 3/8-16 X 3/4

MC00271
PR: 264

https://truckmanualshub.com/

RETURN ELEVATOR
LOWER
(PRIOR S/N HP36101)

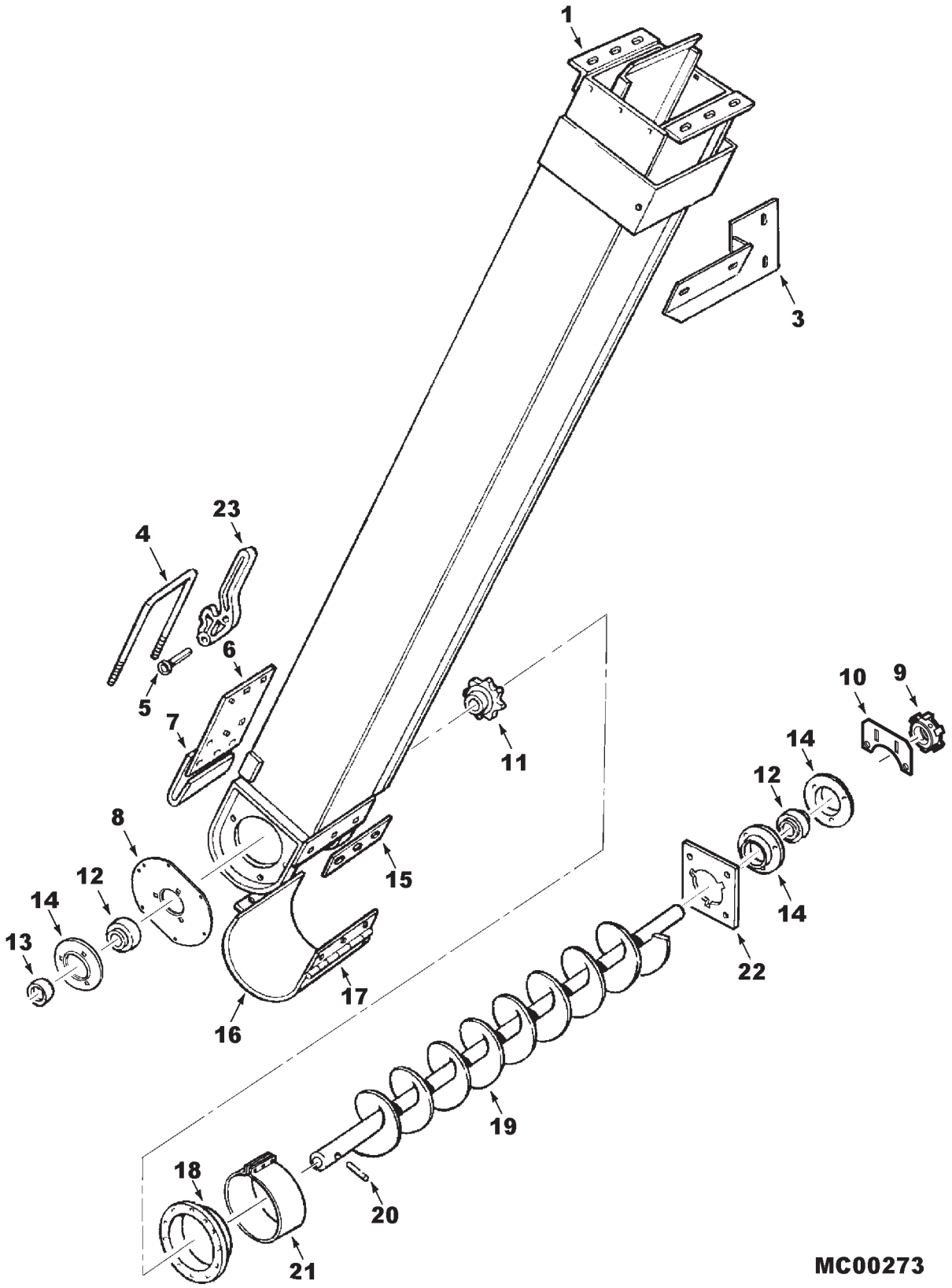

https://truckmanualshub.com/

RETURN ELEVATOR
LOWER
(PRIOR S/N HP36101)

ITEM	NUMBER	QTY	DESCRIPTION
1	71396124	1	BODY ASSEMBLY, RETURN ELEVATOR
	70921210	2	CAPSCREW, 3/8-16 X 1 GR5
	70917378	2	WASHER, 3/8, WIDE
	Y704742	2	NUT, HEX FLANGE TOP LOCK, 3/8-16
3	2620021W91	1	SUPPORT ASSEMBLY, RETURN ELEVATOR
	70921210	2	CAPSCREW, 3/8-16 X 1 GR5
	70923114	2	CAPSCREW, 1/2-13 X 1 GR5
	70917378	2	WASHER, 3/8, WIDE
	Y704734	2	NUT, HEX FLANGE TOP LOCK, 3/8-16
	Y704742	2	NUT, HEX FLANGE TOP LOCK, 1/2-13
4	1651910W1	1	U BOLT, LATCH
	70916950	4	NUT, 3/8-16, REG
5	70927523	1	PIN, CLEVIS, 5/16 X 1-1/2
6	2555180W1	1	PLATE, WEAR
	70931316	8	BOLT, RD HD SQ NECK, 1/4-20 X 5/8
	70916964	8	LOCKWASHER, 1/4
	70916622	8	NUT, 1/4-20, REG
7	2555170W1	1	STRIP, SUPPORT
8	1510740W1	1	PLATE, BEARING
9	71390672	1	WHEEL, SENSOR (W/COLLAR)
10	71188145	1	BRACKET, SHAFT MONITOR
	70916950	2	HEXNUT, 3/8-16
11	W9863030	1	SPROCKET, AUGER, 8 TEETH
12	70590704	2	BEARING, BALL, W/O COLLAR
13	K3518	1	COLLAR, 1.125
14	71127313	3	FLANGE, BEARING
	70931350	3	BOLT, RD HD SQ NECK, 3/8-16 X 1
	70931348	3	BOLT, RD HD SQ NECK, 3/8-16 X 3/4
	70916965	3	LOCKWASHER, 3/8
	70916950	6	NUT, 3/8-16, REG
15	2555190W1	1	STRIP, FILLER
	70931317	3	BOLT, RD HD SQ NECK, 1/4-20 X 3/4
	70917377	3	WASHER, 1/4, WIDE
	70916964	3	LOCKWASHER, 1/4
	70916622	3	NUT, 1/4-20 REG
16	2555211B91	1	DOOR ASSEMBLY, AUGER (PLAIN)
	2555231W91	1	DOOR ASSEMBLY, AUGER (PERF.)(ACCESSORY)
17	2555200W1	1	HINGE, DOOR
18	2555130W1	1	FLANGE
	70931316	12	BOLT, RD HD SQ NECK, 1/4-20 X 5/8
	70916964	12	LOCKWASHER, 1/4
	70916622	12	NUT, 1/4-20, REG

CONTINUED

https://truckmanualshub.com/

RETURN ELEVATOR
LOWER
(PRIOR S/N HP36101)

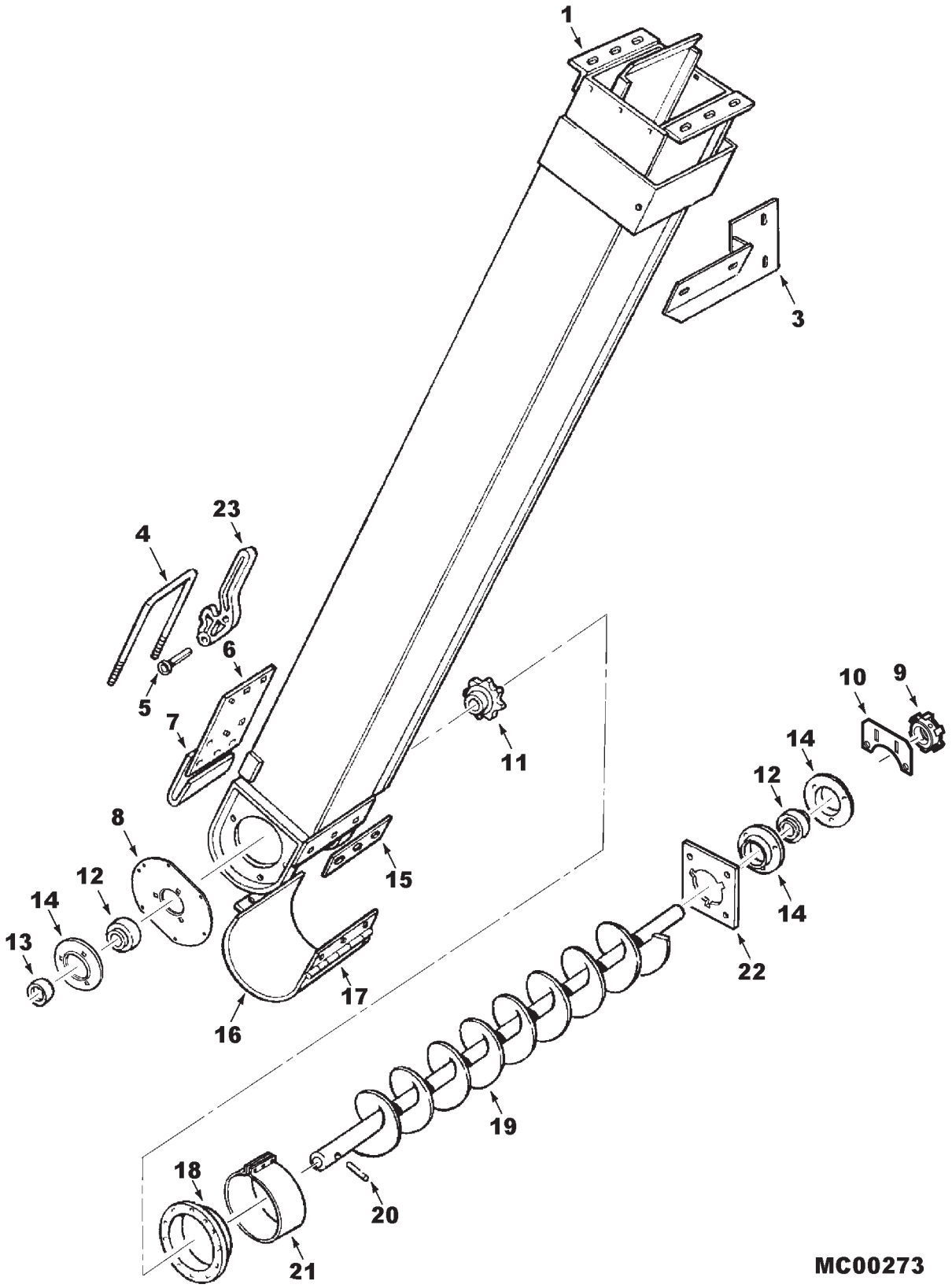

https://truckmanualshub.com/

RETURN ELEVATOR
LOWER
(PRIOR S/N HP36101)

ITEM	NUMBER	QTY	DESCRIPTION
19	71387538	1	AUGER WLDMT, BOTTOM (STD)
	71394535	1	AUGER WLDMT, BOTTOM (CHROME)
20	70915500	1	PIN, ROLL, 3/8 X 1-3/4
21	2591531W91	1	CLAMP ASSEMBLY, RETURN ELEVATOR
	373159X1	3	SCREW, PAN HEAD, 5/16-18 X 1-1/2
	70917642	3	WASHER, 5/16, WIDE
	70917356	3	LOCKWASHER, 5/16
	70917372	3	NUT, 5/16-18, REG
22	2636010W1	1	PLATE, RETURN ELEVATOR
	70921965	4	CAPSCREW, 3/8-16 X 3/4 GR5
	Y704734	4	NUT, HEX FLANGE TOP LOCK, 3/8-16
23	1799410W1	1	LATCH, DOOR
	Y705608	1	WASHER, 5/16, NARROW
	70918447	1	PIN, COTTER, 3/32 X 3/4
24	2615233W92	1	CHAIN ASY.(NOT ILL.)(SEE "CHAINS,DRIVE")

MC00273
PR: 268

https://truckmanualshub.com/

RETURN ELEVATOR
LOWER
(EFF. S/N HP36101)

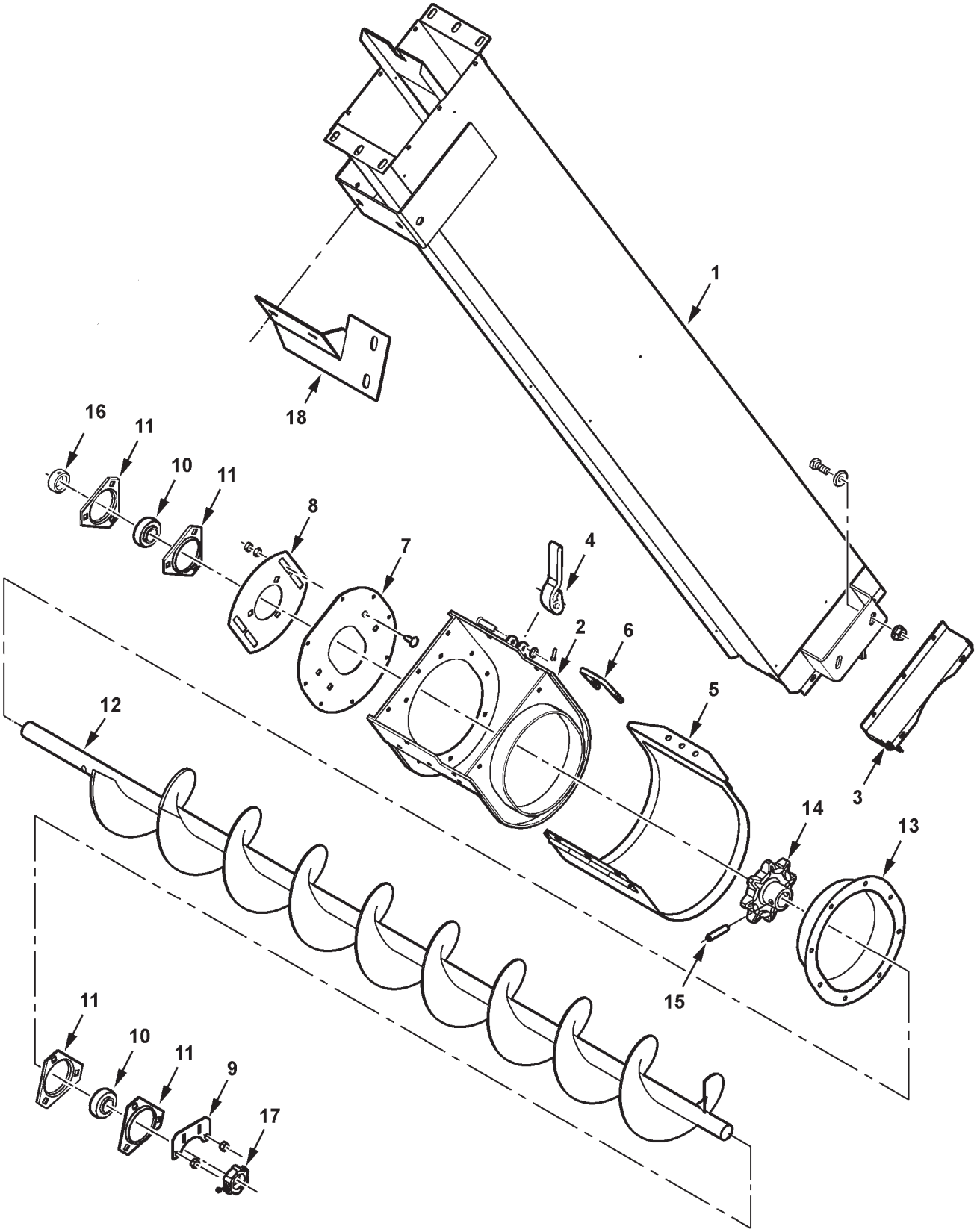

MC00381

https://truckmanualshub.com/

RETURN ELEVATOR
LOWER
(EFF. S/N HP36101)

ITEM	NUMBER	QTY	DESCRIPTION
1	71401212	1	BODY WLMT, RETURN ELEV.
	71409374	1	BODY WLMT, RETURN, RICE(EFF.S/N HP36101)
	70921966	2	CAPSCREW, 3/8-16 X 7/8 GR5
	Y705533	2	WASHER, 3/8, HARDENED
	70928352	2	LOCKNUT, LARGE SERR FLANGE, 3/8-16
2	71399985	1	BOOT WLMT, LOWER RETURNS
	71409380	1	BOOT WLMT, LOWER RET, RICE (S/N HP36101)
	70931316	5	BOLT, RD HD SQ NECK, 1/4-20 X 5/8
	70916964	5	LOCKWASHER, 1/4
	70916622	5	NUT, 1/4-20, REG
3	71399802	1	FILLER WLMT, BOOT, RETURN ELEV.
	71409384	1	FILLER WLMT, BOOT, RICE(EFF.S/N HP36101)
	70931316	3	BOLT, RD HD SQ NECK, 1/4-20 X 5/8
	70931317	4	BOLT, RD HD SQ NECK, 1/4-20 X 3/4
	70916964	7	LOCKWASHER, 1/4
	70916622	7	NUT, 1/4-20, REG
4	1799410W1	1	LATCH, DOOR
	70927523	1	PIN, CLEVIS, 5/16 X 1-1/2
	Y705608	1	WASHER, 5/16, NARROW
	70918447	1	PIN, COTTER, 3/32 X 3/4
5	71401224	1	DOOR WLMT, BOTTOM, W/HINGE
	71410458	1	* DOOR WLMT,PERFORATED(EFF. S/N HP36101)
	71409382	1	DOOR WLMT, BTM, RICE (EFF. S/N HP36101)
	2412670W1	1	HINGE, ELEV. DOOR
	70931317	3	BOLT, RD HD SQ NECK, 1/4-20 X 3/4
	353769X1	3	WASHER, 1/4, HARDENED
	70916964	3	LOCKWASHER, 1/4
	70916622	3	NUT, 1/4-20, REG
6	2476240W1	1	LATCH BOLT, DOOR
	70916950	4	NUT, 3/8-16, REG
7	71401220	1	PLATE, COVER, RETURN BOOT
	71409379	1	PLATE, COVER, BOOT,RICE(EFF.S/N HP36101)
	70931317	8	BOLT, RD HD SQ NECK, 1/4-20 X 3/4
	70916964	8	LOCKWASHER, 1/4
	70916622	8	NUT, 1/4-20, REG
8	71401221	1	PLATE, BRG, RETURN BOOT
	71409370	1	PLATE, BRG, BOOT, RICE (EFF.S/N HP36101)
	70931350	4	BOLT, RD HD SQ NECK, 3/8-16 X 1
	Y705533	4	WASHER, 3/8, HARDENED
	70916965	4	LOCKWASHER, 3/8
	70916950	4	NUT, 3/8-16, REG
9	71188145	1	BRACKET, SHAFT MONITOR
	70916950	2	NUT, 3/8-16, REG
10	70590704	2	BEARING, BALL, 1.125, W/O COLLAR

CONTINUED

https://truckmanualshub.com/

RETURN ELEVATOR
LOWER
(EFF. S/N HP36101)

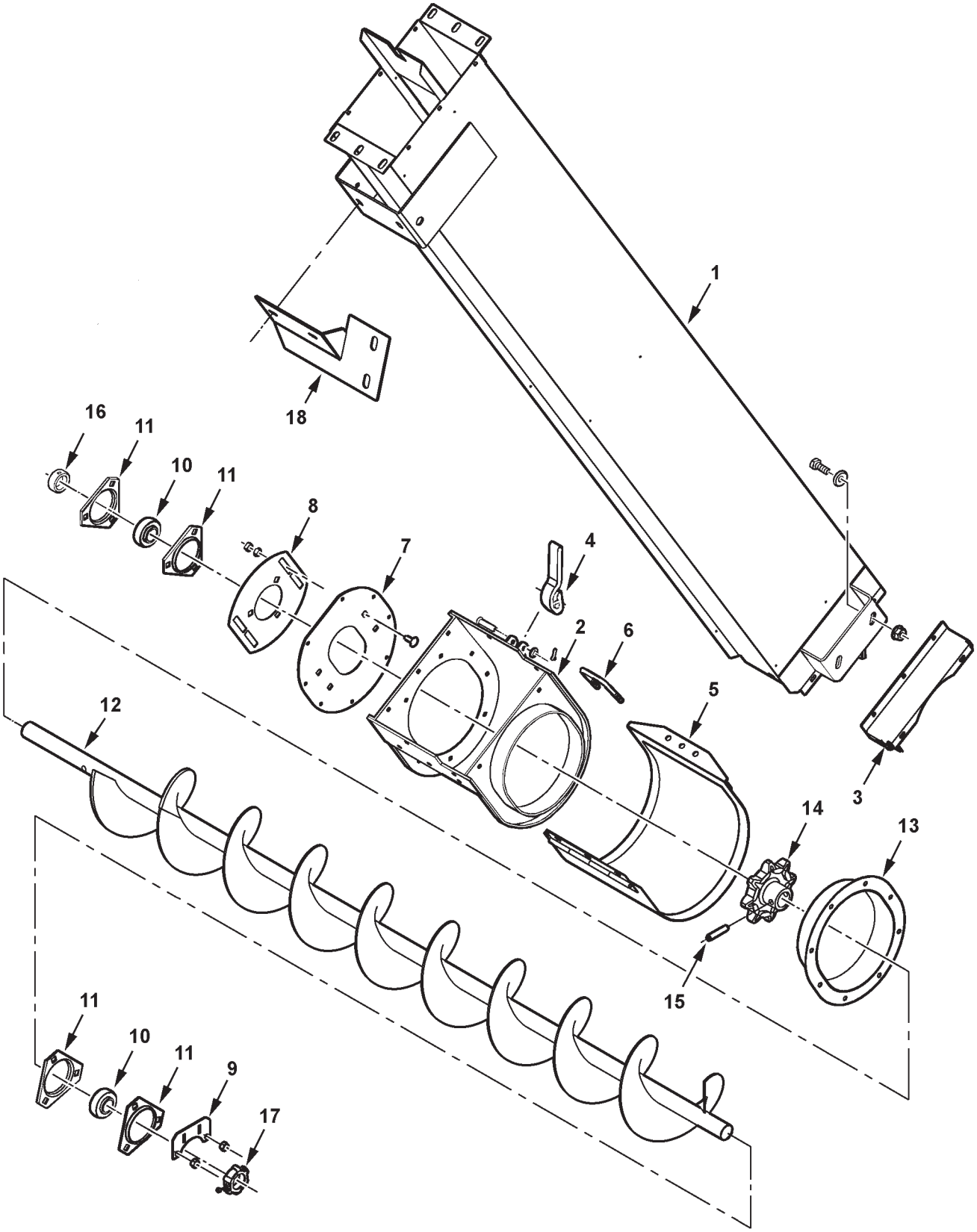

MC00381

https://truckmanualshub.com/

RETURN ELEVATOR
LOWER
(EFF. S/N HP36101)

ITEM	NUMBER	QTY	DESCRIPTION
11	71127313	4	FLANGETTE, BEARING
	Y707042	3	PLOW BOLT, 3/8-16 X 1 GR5 (RH SIDE)
	70916965	3	LOCKWASHER, 3/8
	70916950	3	NUT, 3/8-16, REG
12	71394535	1	AUGER WLDMT, CHROME, BOTTOM RETURN
13	71401208	1	EXTENSION WLMT, RH AUGER TROUGH
	71409371	1	EXT'N WLMT, RH TROUGH, RICE(S/N HP36101)
	7700461	8	BOLT, RD HD SQ NECK, 5/16-18 X 3/4
	70917356	8	LOCKWASHER, 5/16
	70917372	8	NUT, 5/16-18, REG
14	W9863030	1	SPROCKET, BOTTOM AUGER
15	70915500	1	ROLL PIN, 3/8 X 1-3/4
16	K3518	1	COLLAR, 1.125
17	71390672	1	COLLAR WLDMT, SENSING
18	2620021W91	1	SUPPORT ASSEMBLY, RETURN ELEVATOR
	70921210	2	CAPSCREW, 3/8-16 X 1 GR5
	70923114	2	CAPSCREW, 1/2-13 X 1 GR5
	Y705533	2	WASHER, HARD, .406 X .81 X .065 TH
	705541	2	WASHER, HARD, .53 X 1.06 X .13 TH
	Y704734	2	NUT, HEX FLANGE TOP LOCK, 3/8-16
	Y704742	2	NUT, HEX FLANGE TOP LOCK, 1/2-13
19	71406795	1	CHAIN ASY.(NOT ILL.)(SEE "CHAINS,DRIVE")
-	700704010	AR	SILICONE SEALANT, BLACK, 10.2 OZ
-	71407047	AR	* KIT,PERF. ELEV DOORS(EFF. S/N HP36101)
			(ORDER THRU DEALER CENTRAL)

MC00381
PR: t05b08m42d0019

https://truckmanualshub.com/

RETURN ELEVATOR
UPPER

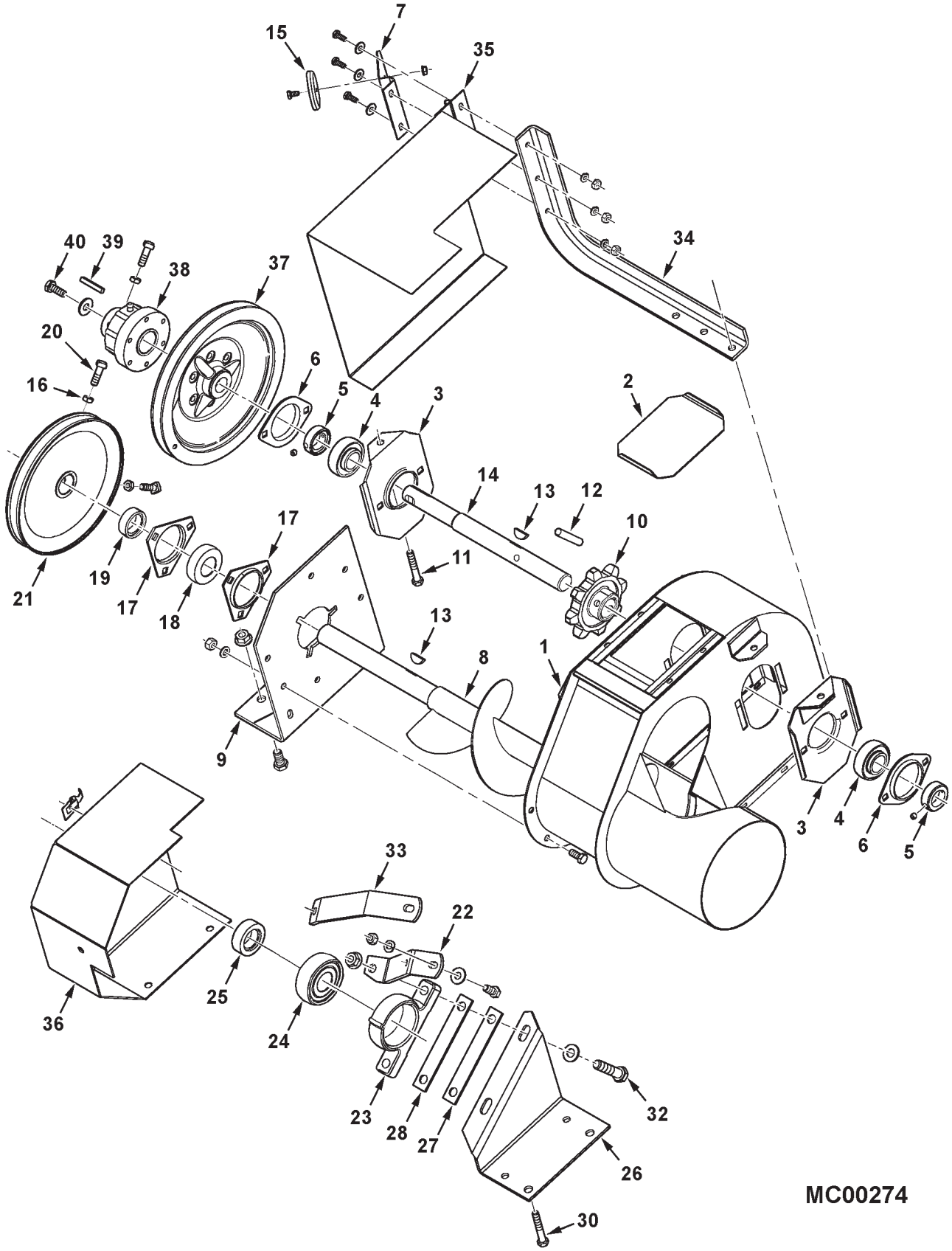

https://truckmanualshub.com/

RETURN ELEVATOR
UPPER

ITEM	NUMBER	QTY	DESCRIPTION
1	71396110	1	HEAD ASY., RETURN
	70931317	6	BOLT, RD HD,SHT SQ NK, 1/4-20 X 3/4
	705012	6	LOCKWASHER, 1/4
	70917377	6	WASHER, 1/4, WIDE
	70916622	6	NUT, 1/4-20, REG
	70921210	6	CAPSCREW, 3/8-16 x 1 GR5
	Y705533	6	WASHER, 3/8, HARDENED
	Y704734	6	NUT, HEX FLANGE TOP LOCK, 3/8-16
2	2441970W1	1	DOOR, INSPECTION
3	1510831W91	2	PLATE ASSEMBLY, SUPPORT
4	70590704	2	BEARING, BALL, W/O COLLAR
5	K3518	2	COLLAR, BEARING
6	Y710293	2	FLANGE, BEARING
	70931350	4	BOLT, RD HD,SHT SQ NK, 3/8-16 X 1
	70916965	4	LOCKWASHER, 3/8
	70916950	4	NUT, 3/8-16, REG
7	71397152	1	BRACKET, MAGNET
8	71390517	1	TOP AUGER ASSEMBLY
9	2553251W91	1	SUPPORT ASSEMBLY, BEARING
	70921966	6	CAPSCREW, 3/8-16 x 7/8 GR5
	70916965	6	LOCKWASHER, 3/8
	70916950	6	NUT, 3/8-16, REG
10	9863040W1B	1	SPROCKET, CONVEYOR DRIVE, 8 TEETH
11	873141	2	CAPSCREW, FULL THRD, 3/8-16 X 2-1/2
	70916950	2	NUT, 3/8-16, REG
	Y704734	2	NUT, HEX FLANGE TOP LOCK, 3/8-16
12	70915500	1	PIN, ROLL, 3/8 X 1-3/4
13	29780X	2	KEY, WOODRUFF, 1/4 X 1
14	71390185	1	SHAFT, HEAD, 11 1/2
15	71397153	1	CUP ASY., MAGNETIC
	70921958	1	CAPSCREW, 1/4-20 X 1/2
	70934479	1	NUT, HEX TOP LOCK, 1/4-20
16	70917421	2	JAM NUT, HEX, 3/8-16
17	71127313	2	FLANGETTE, BEARING
	768432	3	BOLT, RD HD SQ NECK, 3/8-16 X 7/8
	70916965	3	LOCKWASHER, 3/8
	70916950	3	NUT, 3/8-16, REG
18	71308984	1	BEARING, BALL W/COLLAR
19	700717212	AR	COLLAR, BEARING
20	70923530	2	SETSCREW, SQ HEAD, 3/8-16 X 1-1/4
21	2553320W1	1	PULLEY, DRIVEN, 9.0 DIA
22	71384922	1	STRAP, BEARING
	70921966	1	CAPSCREW, 3/8-16 X 7/8 GR5
	70917378	1	WASHER, 3/8, WIDE
	70916965	1	LOCKWASHER, 3/8
	70916950	1	NUT, 3/8-16, REG
23	1605510W1	1	HOUSING, BEARING
24	10033	1	BEARING, BALL (W/O COLLAR)
25	7710551	1	COLLAR

CONTINUED

https://truckmanualshub.com/

RETURN ELEVATOR
UPPER

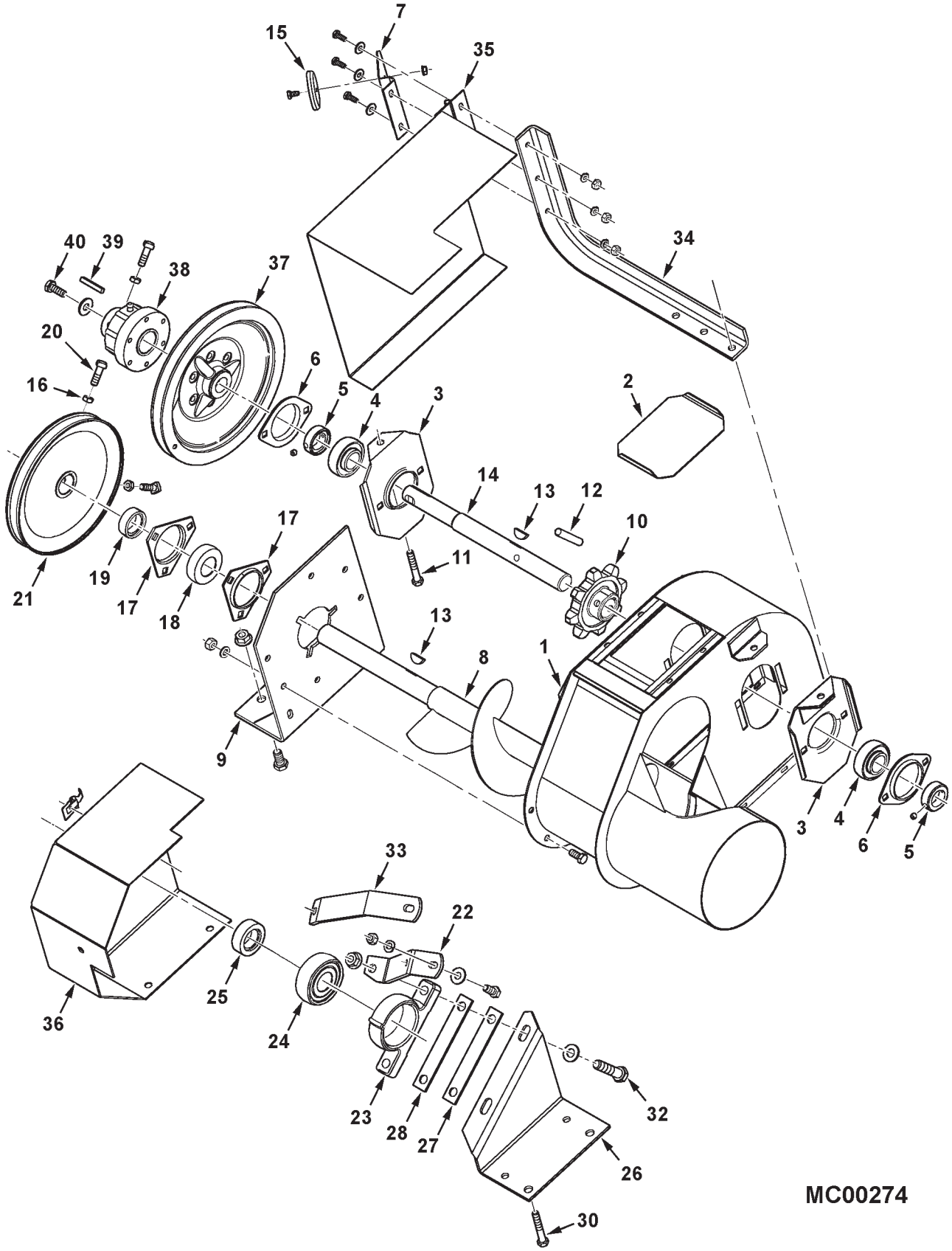

https://truckmanualshub.com/

ITEM	NUMBER	QTY	DESCRIPTION
26	2553271W92	1	PLATE ASSEMBLY
27	2553300W1	AR	SHIM, .060 TH
28	2553290W1	AR	SHIM, .125 TH
30	70923114	2	CAPSCREW, 1/2-13 X 1 GR5
	Y704742	2	NUT, HEX FLANGE TOP LOCK, 1/2-13
32	70922645	2	CAPSCREW, 1/2-13 X 2-1/4 GR5
	Y705624	2	WASHER, 1/2 NARROW
	Y704742	2	NUT, HEX FLANGE TOP LOCK, 1/2-13
33	71410879	1	BRACE STRAP, TOP (EFF. S/N HR36101)
	70920415	1	CAPSCREW, 3/8-16 X 1-1/4 GR5
	Y705533	1	WASHER, 3/8, HARDENED
	Y704734	1	NUT, HEX FLANGE TOP LOCK, 3/8-16
34	101158M1	1	ANGLE, SHIELD
35	71385690	1	UPPER SHIELD ASY.
	70923341	3	CAPSCREW, 1/4-20 X 3/4
	353769X1	3	WASHER, 1/4, HARDENED
	70916964	3	LOCKWASHER, 1/4
	70916622	3	NUT, 1/4, REG
36	71387325	1	LOWER SHIELD ASY.
	70921210	2	CAPSCREW, 3/8-16 X 1 GR5
	Y704734	2	NUT, HEX FLANGE TOP LOCK, 3/8-16
	70537291	1	SNAP, FASTENER
	700717635	1	RIVET
37	71385802	1	SHEAVE ASY.(INCL. BUSHING & LUBE FTG)
	70921332	6	CAPSCREW, 5/16-18 X 3/4 GR5
	70917356	6	LOCKWASHER, 5/16
	71157144	1	BUSHING
	13811X	1	LUBE FTG, STR, 1/4-28 TAPER THD
38	71380994	1	LIMITER, TORQUE
	71350535	AR	KIT, REPAIR, 8 CAMS & SPRINGS
	71350536	AR	KIT, REPAIR, RINGS & LUBE FITTINGS
	70923326	2	SETSCREW, SQ HD, 3/8-16 X 1
	70917421	2	JAM NUT, 3/8-16
39	61085	1	KEY, SQUARE, 1/4 X 1-1/2
40	70921965	1	CAPSCREW, 3/8-16 X 3/4 GR5
	Y705533	1	WASHER, 3/8, HARDENED

MC00274
PR: 272

https://truckmanualshub.com/

STAINLESS STEEL ELEVATOR PACKAGE
RICE

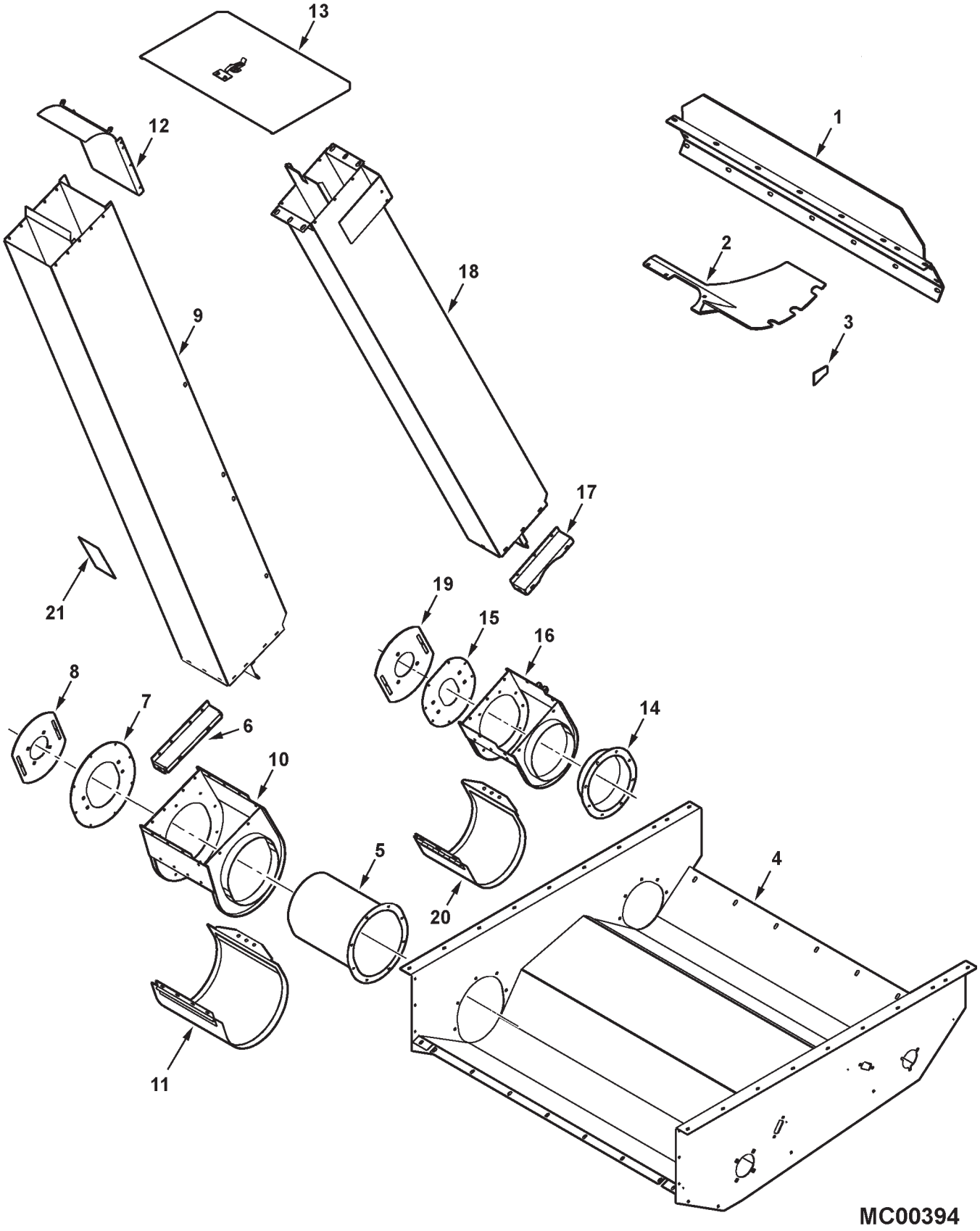

https://truckmanualshub.com/

STAINLESS STEEL ELEVATOR PACKAGE
RICE

ITEM	NUMBER	QTY	DESCRIPTION
-	71409419	AR	PACKAGE, STAINLESS STEEL ELEVATOR (INCLUDES FOLLOWING)
1	71409280	1	FLOOR WLMT, INLET
2	71414409	1	PATCH WLMT, RETURN INLET
3	71409284	6	CAP PLATE, CYL. BAR END
4	71399999	1	AUGER HOUSING WLMT (PRIOR S/N HR36101)
5	71409270	1	EXTENSION WLDMT, RH GRAIN AUGER TROUGH
6	71409269	1	FILLER WLDMT, BOOT, GRAIN ELEV.
7	71409267	1	COVER PLATE, GRAIN ELEV. BOOT
8	71409266	1	PLATE, BEARING, GRAIN ELEV. BOOT
9	71409271	1	BODY WLDMT, GRAIN ELEV.
10	71409268	1	BOOT WLDMT, GRAIN ELEV.
11	71409265	1	LOWER DOOR WLMT, GRAIN ELEV.
12	71408514	1	BACK PLATE WLMT, ELEV. HEAD
13	71409402	1	COVER ASY, GRAIN BIN LOADER
14	71409371	1	EXTENSION WLMT, RETURN AUGER TROUGH
15	71409379	1	COVER PLATE, RETURN ELEV. BOOT
16	71409380	1	BOOT WLMT, RETURN ELEV.
17	71409384	1	FILLER WLMT, RETURN ELEV. BOOT
18	71409374	1	BODY WLMT, RETURN ELEV., RICE
19	71409370	1	PLATE, BEARING, RETURN ELEV. BOOT
20	71409382	1	DOOR WLMT, RETURN ELEV.
21	111743W1	2	DECAL, WARNING, ELEVATOR
22	71379129	2	DECAL, WARNING, FALLING OFF (NOT ILLUS.)
23	71379126	1	DECAL, WARNING, HIGH PRESSURE FLUID (NOT ILLUS.)
24	71394175	1	DECAL, VALVE STACK (NOT ILLUS.)

MC00394
PR: t05e26j58c0003

https://truckmanualshub.com/

RETURN ELEVATOR DRIVE

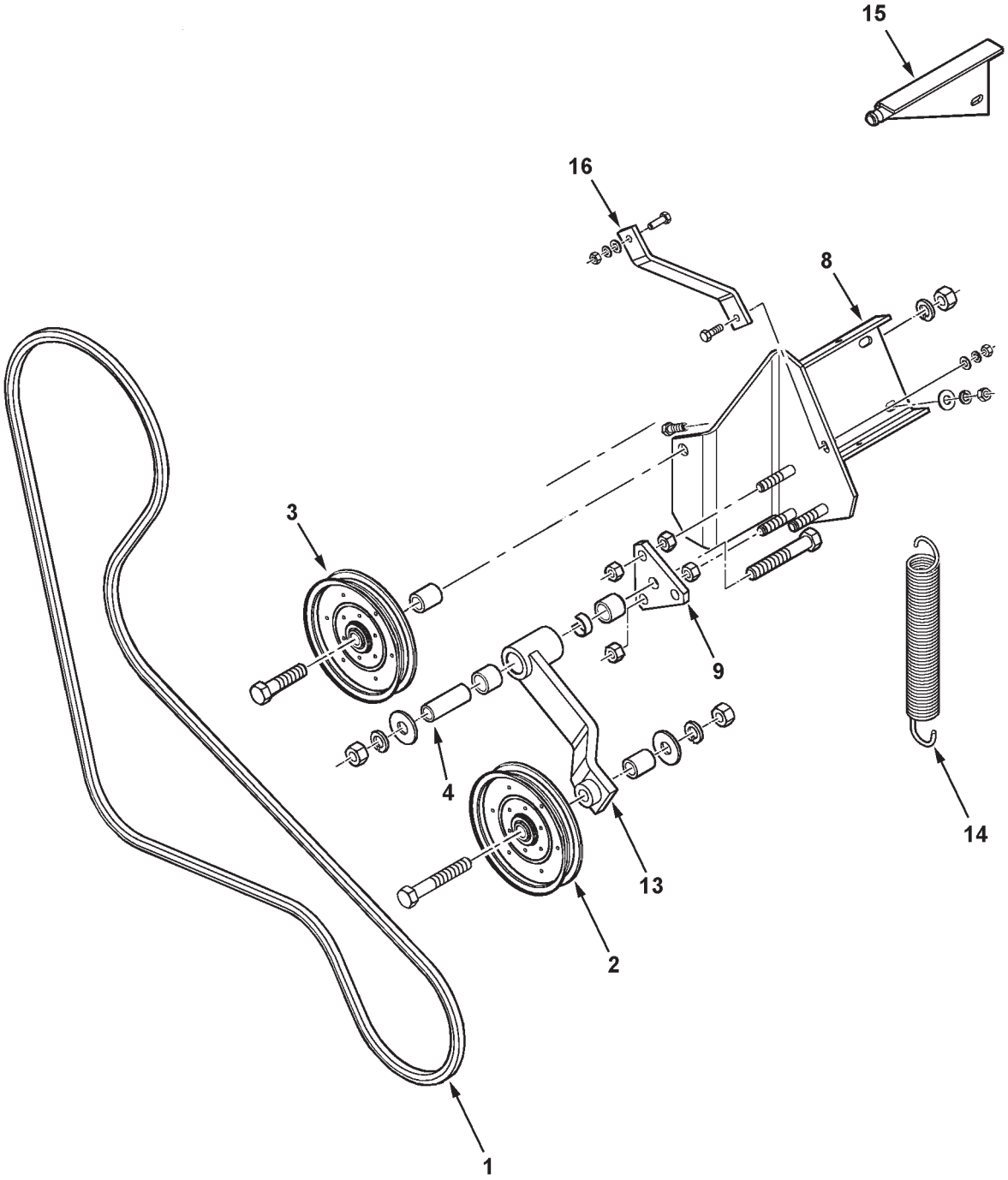

https://truckmanualshub.com/

ITEM	NUMBER	QTY	DESCRIPTION
1	71385801	1	BELT, RETURN ELEVATOR DRIVE
2	2447080W1	1	SHEAVE IDLER
	70925703	1	CAPSCREW, 5/8 X 4.0
	70918432	1	WASHER, 5/8 NOM - 10 GA
	6136964	1	SPACER
	70917373	1	LOCKWASHER, 5/8
	70932665	1	NUT, 5/8-11
3	2447080W1	1	SHEAVE IDLER
	7701683	1	CAPSCREW, 5/8-11 X 3
	6136964	1	SPACER
	70932665	2	NUT, 5/8-11
	70917373	2	LOCKWASHER, 5/8
4	71356061	1	SLEEVE, HARD, IDLER PIVOT
	70925703	1	CAPSCREW, 5/8 X 4.0
	70918432	2	WASHER, 5/8 NOM - 10 GA
	70917373	1	LOCKWASHER, 5/8
	70932665	1	NUT, 5/8-11
8	71385694	1	SUPPORT WELDMENT
	70920415	2	CAPSCREW, 3/8-16 X 1-1/4
	70917378	2	WASHER, 3/8
	70916965	2	LOCKWASHER, 3/8
	70916950	2	NUT, 3/8-16
9	71182840	1	PLATE, MOUNTING
	70913744	6	NUT, JAM 1/2-13
13	71385697	1	IDLER ARM ASY, W/BUSHINGS
	71356060	2	BUSHING
	71197117	1	SPACER
	70915019	1	FITTING LUBE 1/4-28 X 90 DEG.
	2634840W1	1	DECAL, GREASE (10HR)(PRIOR HR36101)
14	1579720W1	1	SPRING
15	2636631W91	1	ANCHOR WLMT, SPRING
	70920415	2	CAPSCREW, 3/8-16 X 1-1/4
	70917378	2	WASHER, 3/8
	70916965	2	LOCKWASHER, 3/8
	70916950	2	NUT, 3/8-16
16	71384912	1	BRACE
	70921333	2	CAPSCREW, 5/16-18 X 1.0
	700709602	2	WASHER, 5/16
	70917356	2	LOCKWASHER, 5/16
	70917372	2	NUT, 5/16-18

71385700
PR: 276

https://truckmanualshub.com/

UNLOADING AUGER
LOWER

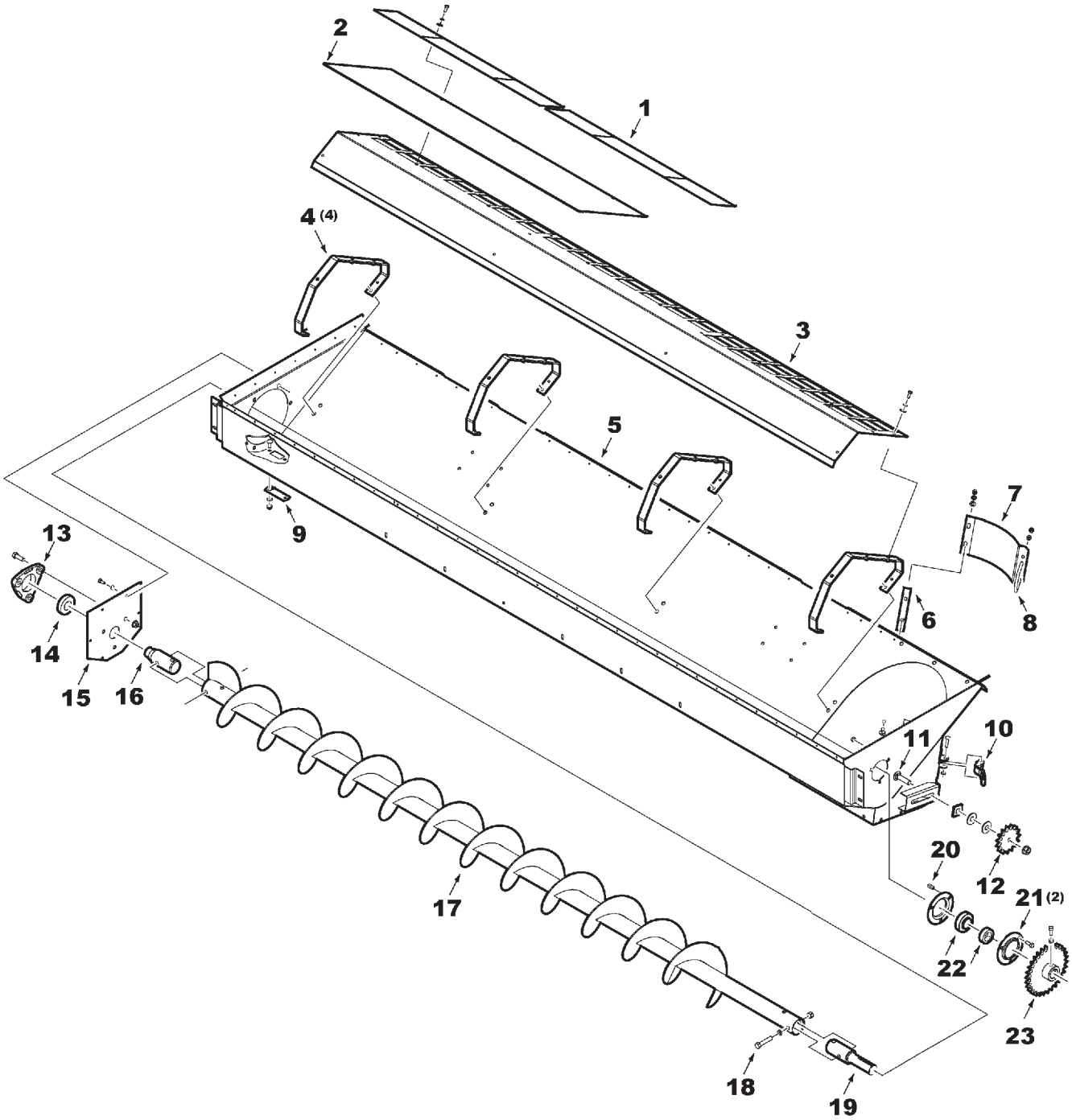

MC00276

https://truckmanualshub.com/

UNLOADING AUGER
LOWER

ITEM	NUMBER	QTY	DESCRIPTION
1	71391975	2	PLATE, SLIDING COVER
	372729X1	4	SCREW, SELF-TAP 5/16-18 X 3/4
	70917356	4	LOCKWASHER, 5/16
	70917642	4	WASHER, FLAT 5/16
2	71396662R	1	THROTTLE, CROSS AUGER
3	71391974	1	COVER, AUGER
	372729X1	12	SCREW, SELF-TAP 5/16-18 X 3/4
	70917356	12	LOCKWASHER, 5/16
4	71390364	4	BRACKET, COVER
	70927477	12	SCREW, SELF-TAP 5/16-18 X 1.0
5	71400922R	1	TROUGH & BOOT WLDMT
6	2476230W1	1	SPACER
7	2476203W1R	1	DOOR ASY
	68759	2	SCREW, RHSSN 3/8-16 X 1.0
	70917378	2	WASHER, FLAT 3/8
	70916965	2	LOCKWASHER, 3/8
	70916950	2	HEXNUT, 3/8-16
8	2476240W1	1	LATCH, BOLT
	70916950	4	HEXNUT, 3/8-16
9	108202W1	1	STRAP
	360503X1	2	SCREW, RHSSN 5/16-18 X 1.0
	70917642	2	WASHER, FLAT 5/16
	70917356	2	LOCKWASHER, 5/16
	70917372	2	HEXNUT, 5/16-18
10	1799410W1	1	LATCH
	70927523	1	PIN, OVAL HD, 5/16 X 1-1/2
	70918265	1	WASHER, FLAT 5/16
	70918447	1	PIN, COTTER 3/32 X 3/4
11	70926694	1	BOLT, RD HD SQ NK, 5/8-11 X 2-1/2
	510060W1	1	SPACER
	70918432	2	WASHER, FLAT 5/8
	700703922	1	LOCKNUT, 5/8-11
12	71378873	1	SPROCKET, IDLER 15T
13	1508070W1P	1	HOUSING, BEARING
	701235	3	CAPSCREW, 1/2-13 X 1-1/2
	Y704742	3	LOCKNUT, 1/2-13
14	831822M1	1	BEARING
15	71391135	1	PLATE, BEARING
	372729X1	6	SCREW, SELF-TAP 5/16-18 X 3/4
	70917356	6	LOCKWASHER, 5/16
16	71391140	1	SHAFT, STUB (RH)
17	71392675	1	AUGER, CROSS (STD)
	71394318	1	AUGER, CROSS (CHROME)
18	70923320	4	CAPSCREW, 1/2-13 X 3.0
	71354345	4	SPACER
	Y704742	4	LOCKNUT, 1/2-13
19	71391141	1	SHAFT, STUB (LH)
20	Y761312	1	KEY, 5/16 X 2-1/2

CONTINUED

https://truckmanualshub.com/

UNLOADING AUGER
LOWER

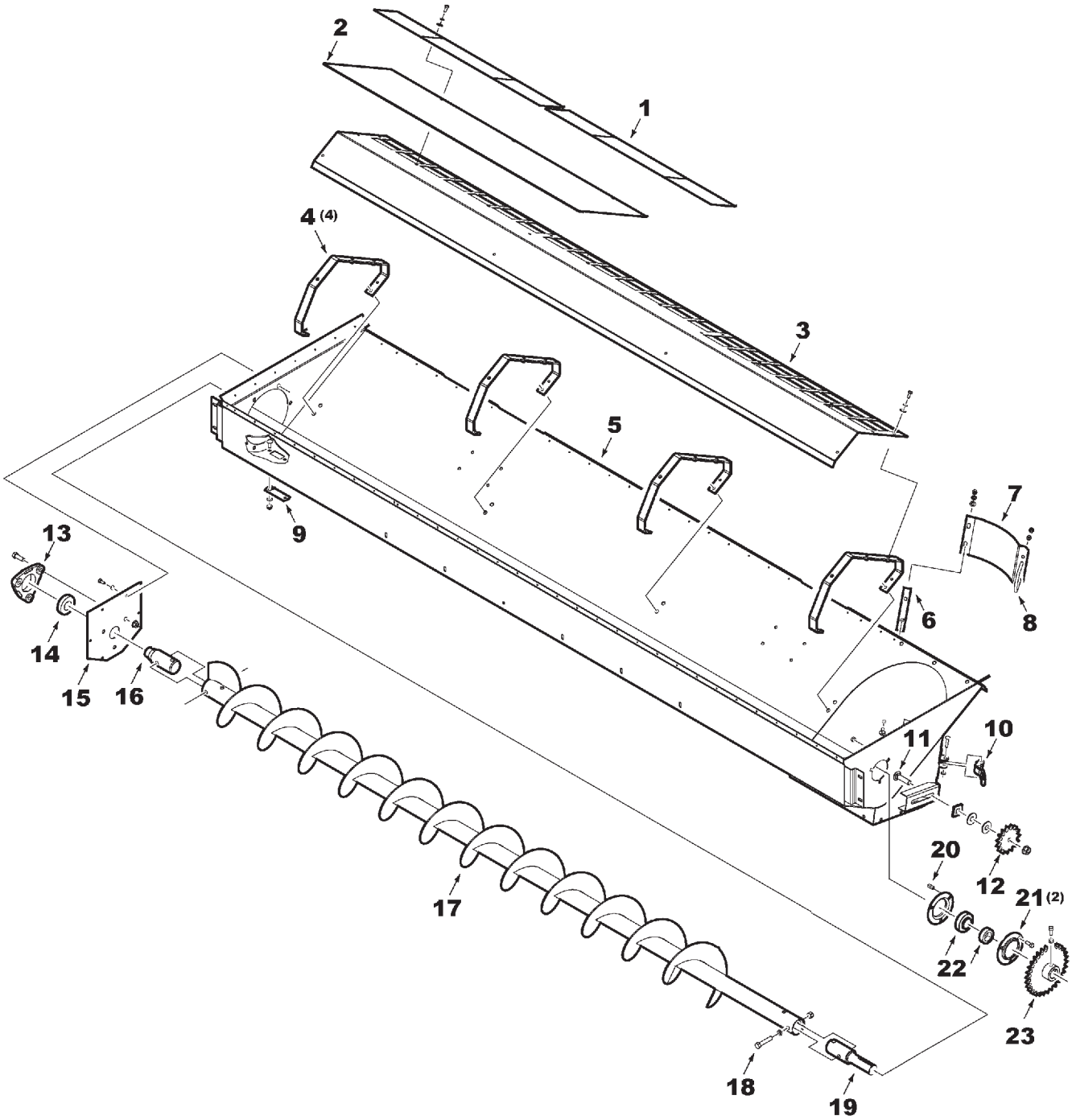

MC00276

https://truckmanualshub.com/

UNLOADING AUGER
LOWER

ITEM	NUMBER	QTY	DESCRIPTION
21	700717509	2	FLANGE, BEARING
	68759	3	BOLT, RD HD SQ NK, 3/8-16 X 1
	70916950	3	NUT, 3/8-16 REG
	70916965	3	LOCKWASHER, 3/8
22	50021	1	BEARING, BALL W/COLLAR
	K3999	1	COLLAR, BRG., 1-3/8 ID X 2-3/16 OD
23	71391133	1	SPROCKET, 42T
	70923326	2	SETSCREW, 3/8-16 X 1.0
	70917421	2	JAMNUT, 3/8-16
-	71414301	AR	KIT, RICE UNLOADING AUGER PADDLES (EFF. S/N HN36101)(INCLUDES FOLLOWING) (ORDER THRU BATAVIA PARTS)
	71412973	1	DEFLECTOR PANEL
	71412972	2	PADDLE, CROSS AUGER

NOTE:FOR CHAIN SEE DRIVE CHAINS LISTING

MC00276
PR: 278

https://truckmanualshub.com/

UNLOADING AUGER
VERTICAL
PRIOR S/N HN36101

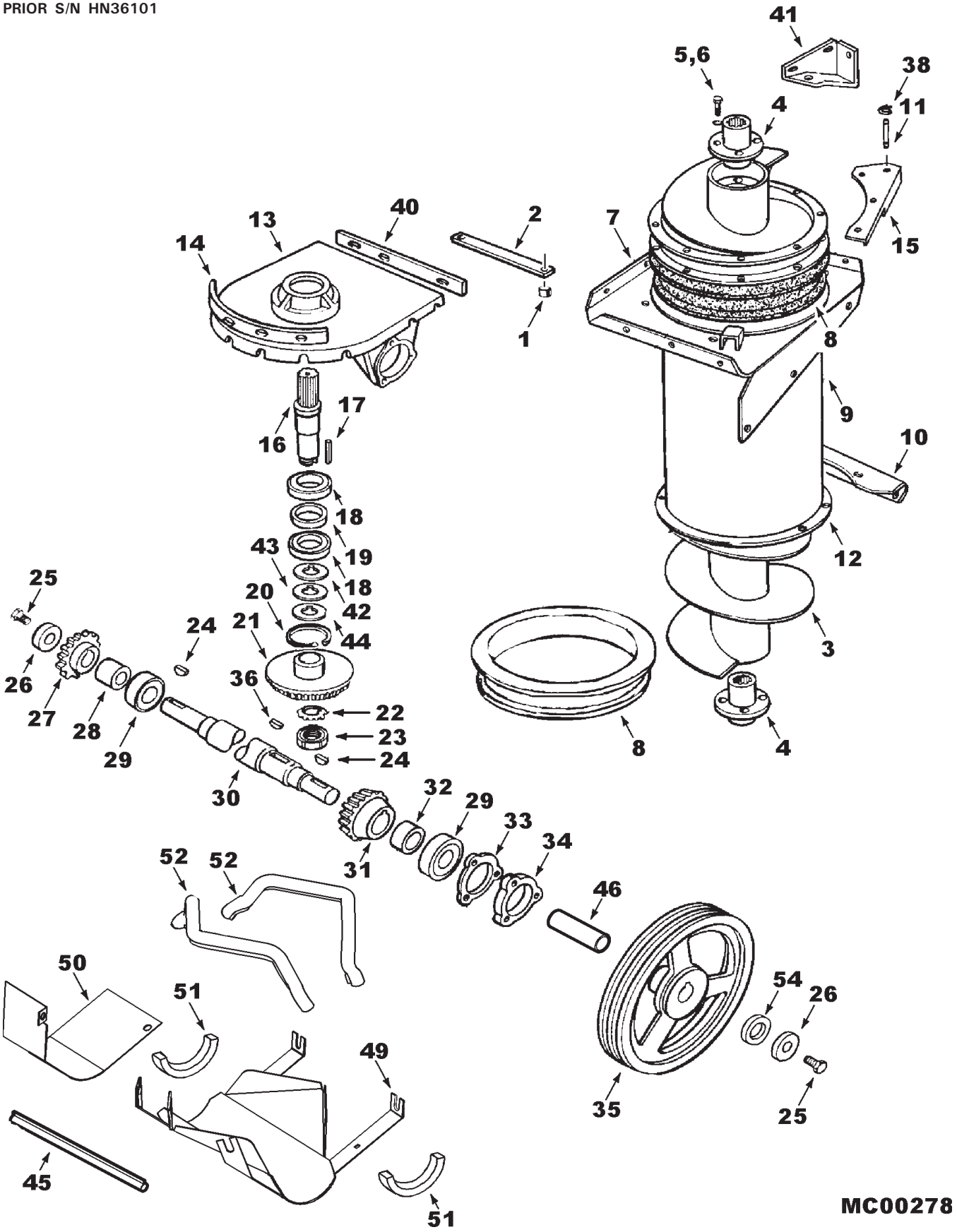

https://truckmanualshub.com/

UNLOADING AUGER
VERTICAL
PRIOR S/N HN36101

ITEM	NUMBER	QTY	DESCRIPTION
1	1786320W1	4	SPACER, .49 X .68 OD X .59 LG
2	2493000W1	2	STRAP, HOLD DOWN, 1 X 12 X 3/8
	70921971	4	CAPSCREW, 3/8-16 X 1-3/4
	70918431	4	WASHER, 1/2 WIDE
	Y704734	4	NUT, HEX FLNG TOP LOCK, 3/8-16
3	71390926	1	AUGER ASSEMBLY, UNLOADER
	71391336	1	AUGER ASSEMBLY, UNLOADER (CHROME)
4	2526120W1	2	HUB, VERTICAL AUGER
5	70920328	8	CAPSCREW, 1/2-13 X 1-1/2 GR5
6	Y705046	8	LOCKWASHER, 1/2
7	71390360	1	GUIDE ASSEMBLY
	70921333	6	CAPSCREW, 5/16-18 X 1 GR5
	Y704726	6	NUT, HEX FLNG TOP LOCK, 5/16-18
	70921210	6	CAPSCREW, 3/8-16 X 1 GR5
	Y704734	6	NUT, HEX FLNG TOP LOCK, 3/8-16
8	104021W1	2	STRIP, WEAR
9	112977W92R	1	TUBE WLDMT, VERTICAL, UNLOADER
10	2601260W1	1	BRACKET, TUBE SUPPORT
	70923220	3	BOLT, RD HD SQ NK, 3/8-16 X 1-1/4
	70917378	3	WASHER, 3/8 WIDE
	Y704734	3	NUT, HEX FLNG TOP LOCK, 3/8-16
11	108575W1	2	PIN, 5/8 X 2 3/4
12	2438160W1	1	RING, LOWER GUIDE
	70931350	2	BOLT, RD HD SQ NK, 3/8-16 X 1 GR5
	70931942	2	SPEED NUT, 3/8 THD.
	Y704734	2	NUT, HEX FLNG TOP LOCK, 3/8-16
13	2486140W1	1	HOUSING, VERTICAL AUGER
14	71379825	AR	SHIM, RADIUS, .060 TH (QTY 2 AVE.)
	7701055	2	CAPSCREW, 3/8-16 X 1-3/4
	70921969	12	CAPSCREW, 3/8-16 X 1-1/2
	70917378	28	WASHER, 3/8 WIDE
	Y704734	14	NUT, HEX FLNG TOP LOCK, 3/8-16
15	112716W92	1	BRACKET ASY, CYLINDER PIVOT
	70921176	4	CAPSCREW, 1/2-13 X 1-1/4
	Y704742	4	NUT, HEX FLNG TOP LOCK, 1/2-13
16	2486150W1	1	SHAFT, OUTPUT
17	70903082	1	KEY, SQUARE, 3/8 X 3/8 X 2
18	833059M1	2	BEARING, BALL
19	2486160W1	1	SPACER, 1.59 X 2.0 X .67 LG
20	70925997	1	RING, INTERNAL SNAP
21	2486170W2	1	GEAR, UNLOADER, 35T
22	70932997	1	LOCKWASHER, EXTERNAL TOOTH, 1-3/8
23	70932996	1	LOCKNUT, BALL BEARING, 1-3/8-18UNEF
24	355485X1	2	KEY, WOODRUFF, 5/16 X 2-1/8
25	70921176	2	CAPSCREW, 1/2-13 X 1-1/4 GR5
26	2485470W1	2	WASHER, 17/32 X 2 X 3/8 TH
27	71391131	1	SPROCKET WLDMT, DRIVE, 15 TEETH

CONTINUED

https://truckmanualshub.com/

UNLOADING AUGER
VERTICAL
PRIOR S/N HN36101

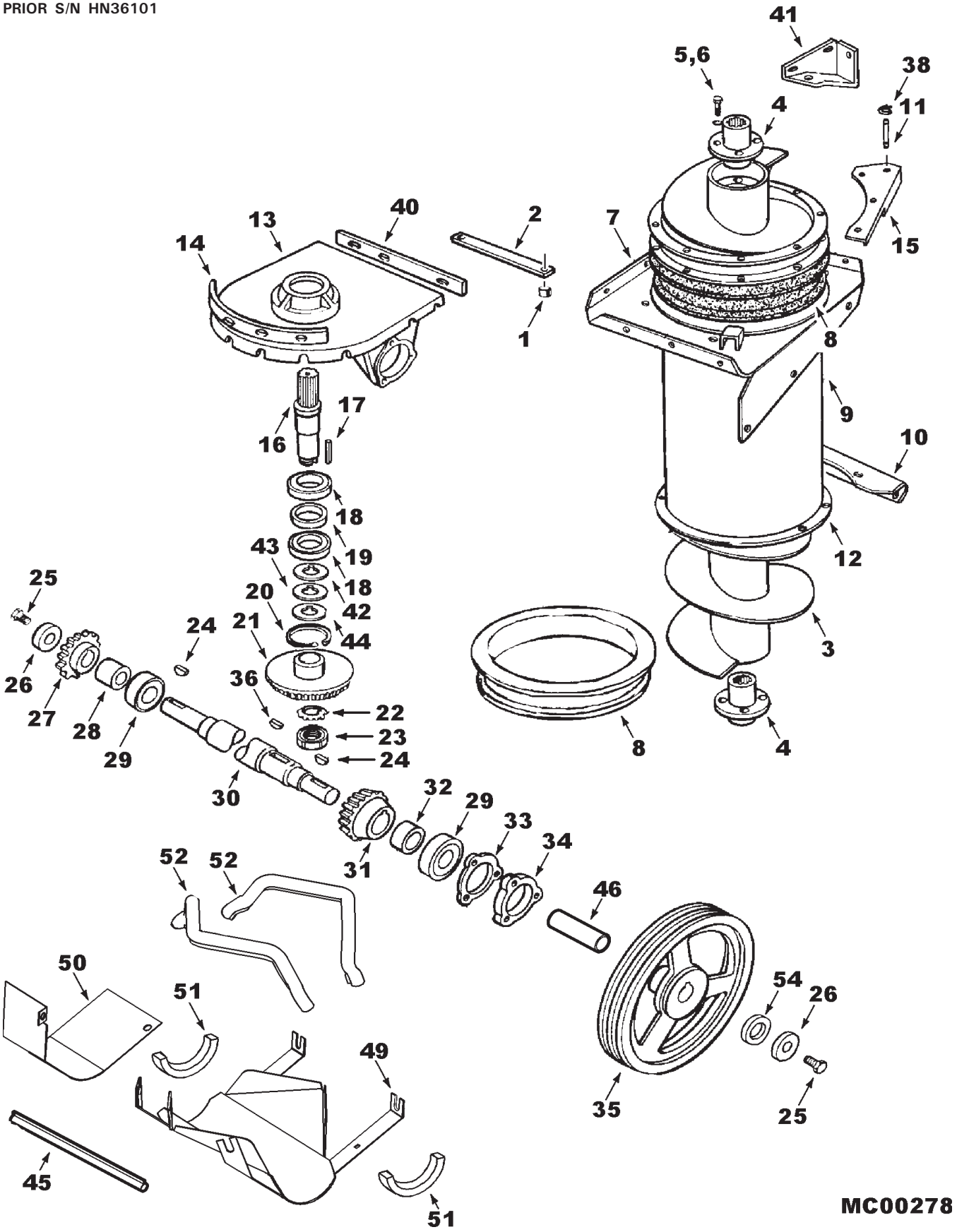

https://truckmanualshub.com/

UNLOADING AUGER
VERTICAL
PRIOR S/N HN36101

ITEM	NUMBER	QTY	DESCRIPTION
28	71397246	1	SPACER, 1.44 ID X 1.75 OD X 1.82 LG
29	354920X1	2	BEARING, BALL
30	2597740W1	1	SHAFT, INPUT - UNLOADER
31	2460840W2	1	GEAR, PINION, 16T
32	2493870W1	1	SPACER, 1.52 ID X 1.88 OD X .763 LG
33	1500050W1	AR	SHIM, RED, PLASTIC, .002
33	1500060W1	AR	SHIM, BLUE, PLASTIC, .005
33	1500070W1	AR	SHIM, BROWN, PLASTIC, .010
34	2452270W1	1	CAP, BEARING
	70923701	1	CAPSCREW, 3/8-16 X 2
	70922130	2	CAPSCREW, 3/8-16 X 2-1/4
	Y704734	3	NUT, HEX FLNG TOP LOCK, 3/8-16
35	71390860	1	PULLEY, VERTICAL AUGER
36	W937119	1	KEY, WOODRUFF, 3/8 X 2 1/8
38	377690X1	4	RING, RETAINING
40	71379824	AR	SHIM, SIDE, UNLDR BOOT, .060 (2 AVE.)
41	112720W91	1	BRACKET WLMT,CYL.(PRIOR MID S/N HN36---)
	71403919	1	BRACKET WLMT, CYL.(EFF. MID S/N HN36---)
	70921210	1	CAPSCREW, 3/8-16 X 1 GR5
	70921969	1	CAPSCREW, 3/8-16 X 1-1/2 GR5 (PRIOR MID S/N HN36---)
	70920415	1	CPSCR, 3/6-16 X 1-1/4 GR5 (EFF. MID S/N HN36---)
	70917378	2	WASHER, 3/8 WIDE
	Y704734	2	NUT, HEX FLANGE TOP LOCK, 3/8-16
	701235	1	CAPSCREW, 1/2-13 X 1-1/2 GR5
	70923114	1	CAPSCREW, 1/2-13 X 1 GR5
	Y704742	2	NUT, HEX FLANGE TOP LOCK, 1/2-13
42	104740W1	AR	SHIM, .005
43	104741W1	AR	SHIM, .010
44	104742W1	AR	SHIM, .020
45	71395983	1	SEAL, CHAIN COVER
46	-----	1	SPACER, SLEEVE (9690 ONLY)
49	71391435	1	COVER WLDMT, UNLOADER GEARS
50	71393854	1	COVER, CHAIN
	7700461	3	BOLT, RD HD SQ NK, 5/16-18 X 3/4
	70917372	3	NUT, 5/16-18 REG
	70917356	3	LOCKWASHER, 5/16
	700709602	3	WASHER, 5/16 WIDE
51	71391441	2	FOAM STRIP-ADHESIVE BACK
52	71393916	2	SEAL, GEAR COVER
54	2619570W1	1	SPACER
-	79014728	AR	GREASE
-	70937715	AR	LUBE, DRY FILM, 3M-TFE, SPRAYON

https://truckmanualshub.com/

UNLOADING AUGER
VERTICAL
EFFECTIVE S/N HN36101

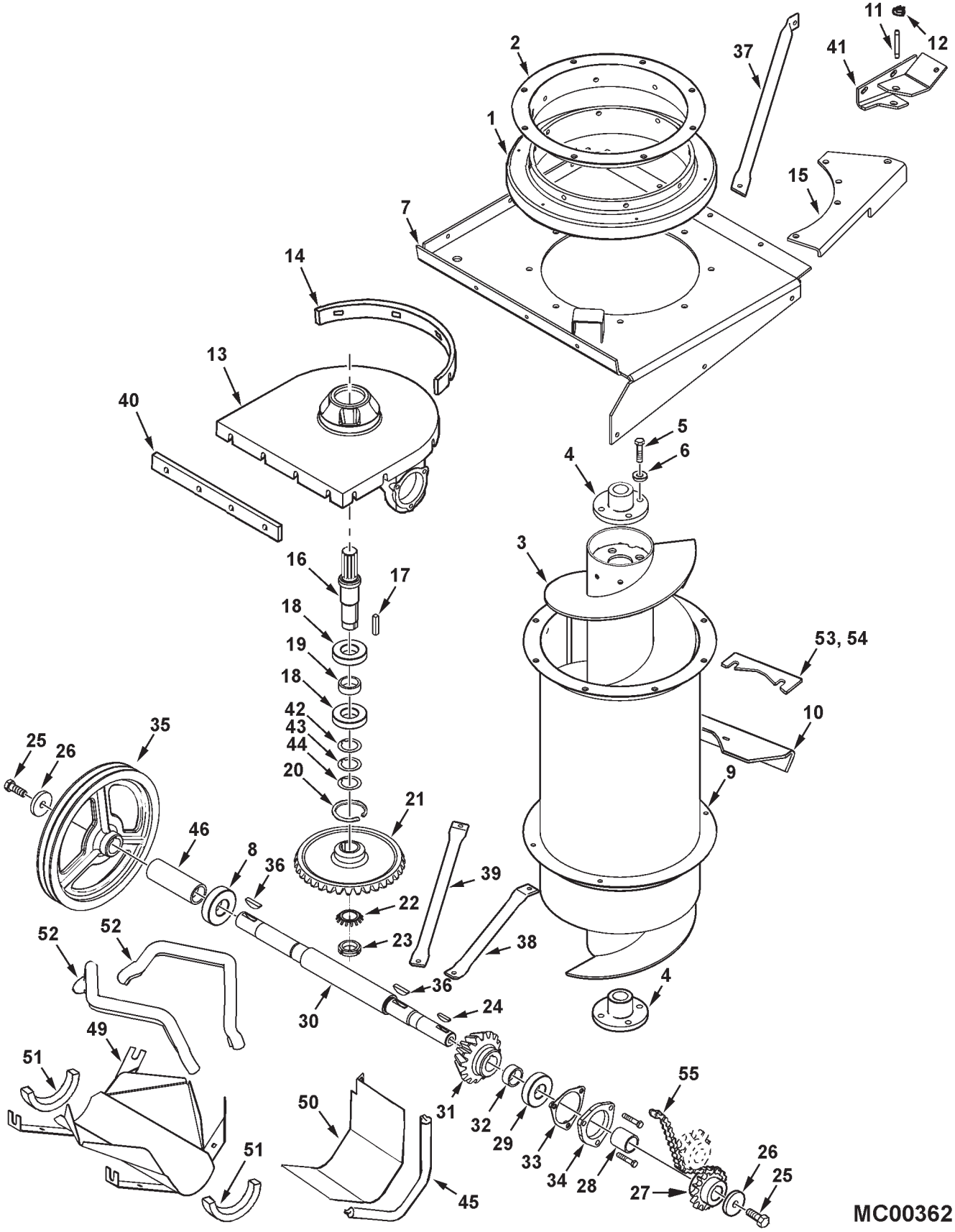

https://truckmanualshub.com/

UNLOADING AUGER
VERTICAL
EFFECTIVE S/N HN36101

ITEM	NUMBER	QTY	DESCRIPTION
1	71399662	1	SWIVEL ASY, UNLOADER
	-----	1	RACE, SWVL, OUTER (ORDER SWIVEL ASY)
	71382933	1	RACE, SWIVEL, INNER
	70917580	AR	BALL, 1/2" (FULL QTY 112)
	77057	5	LUBE FTG, 90 DEG ELB, 1/4-28 TAPER
	70921176	8	CAPSCREW, 1/2-13 X 1-1/4 GR5
	Y705046	8	LOCKWASHER, 1/2
2	71399661	1	RING, ELBOW ADAPTER
	70934842	9	SCR,HEX SCKT FLAT HD, 3/8-16 X 1-1/4
	70916950	9	NUT, 3/8-16 REG
3	71399858	1	AUGER ASY, UNLOADER, W/HUBS
	71399861	1	AUGER ASY, CHROME, UNLOADER, W/HUBS
4	2526120W1	2	HUB, VERTICAL AUGER
5	70920328	8	CAPSCREW, 1/2-13 X 1-1/2 GR5
6	Y705046	8	LOCKWASHER, 1/2
7	71399656	1	GUIDE WLDMT, UNLOADER, UPPER
	70921333	6	CAPSCREW, 5/16-18 X 1 GR5
	Y704726	6	NUT, HEX FLNG TOP LOCK, 5/16-18
	70921210	6	CAPSCREW, 3/8-16 X 1 GR5
	Y704734	6	NUT, HEX FLNG TOP LOCK, 3/8-16
8	832982M1	1	BEARING, BALL, CYLINDRICAL
9	71399654	1	TUBE WLDMT, VERTICAL, UNLOADER
	70921176	8	CAPSCREW, 1/2-13 X 1-1/4 GR5
	Y705046	8	LOCKWASHER, 1/2
	768036	2	BOLT, RHSN, 3/8-16 X 1-1/2(FULL THD)
	70931942	2	SPEED NUT, 3/8
	Y704734	2	NUT, HEX FLANGE TOP LOCK, 3/8-16
10	71399675	1	BRACKET, TUBE SUPPORT
	70923220	3	BOLT, RD HD SQ NK, 3/8-16 X 1-1/4
	70917378	3	WASHER, 3/8 WIDE
	Y704734	3	NUT, HEX FLNG TOP LOCK, 3/8-16
11	108575W1	2	PIN, 5/8 X 2-3/4
12	377690X1	4	RETAINING RING, EXTERNAL
13	71397248	1	HOUSING, GEAR, UNLOADER
14	71379825	AR	SHIM, RADIUS, .060 TH (QTY 2 AVE.)
	7701055	2	CAPSCREW, 3/8-16 X 1-3/4 GR5
	70921969	12	CAPSCREW, 3/8-16 X 1-1/2 GR5
	70917378	28	WASHER, 3/8 WIDE
	Y704734	14	NUT, HEX FLNG TOP LOCK, 3/8-16
15	112716W92	1	BRACKET ASY, CYLINDER PIVOT
	70921176	4	CAPSCREW, 1/2-13 X 1-1/4
	Y704742	4	NUT, HEX FLNG TOP LOCK, 1/2-13
16	2486150W1	1	SHAFT, OUTPUT, 8-7/16 LG
17	70903082	1	KEY, GEAR, 3/8 X 3/8 X 2
18	833059M1	2	BEARING, BALL
19	2486160W1	1	SPACER, 1-39/64 X 2 X 21/32 LG
20	70925997	1	RING, INTERNAL SNAP, 3-17/32 X 7/64
21	2486170W2	1	GEAR, UNLOADER, 35T
22	70932997	1	LOCKWASHER, EXTERNAL TOOTH, 1-3/8
23	70932996	1	LOCKNUT, BALL BEARING, 1-3/8-18UNEF

CONTINUED

https://truckmanualshub.com/

UNLOADING AUGER
VERTICAL
EFFECTIVE S/N HN36101

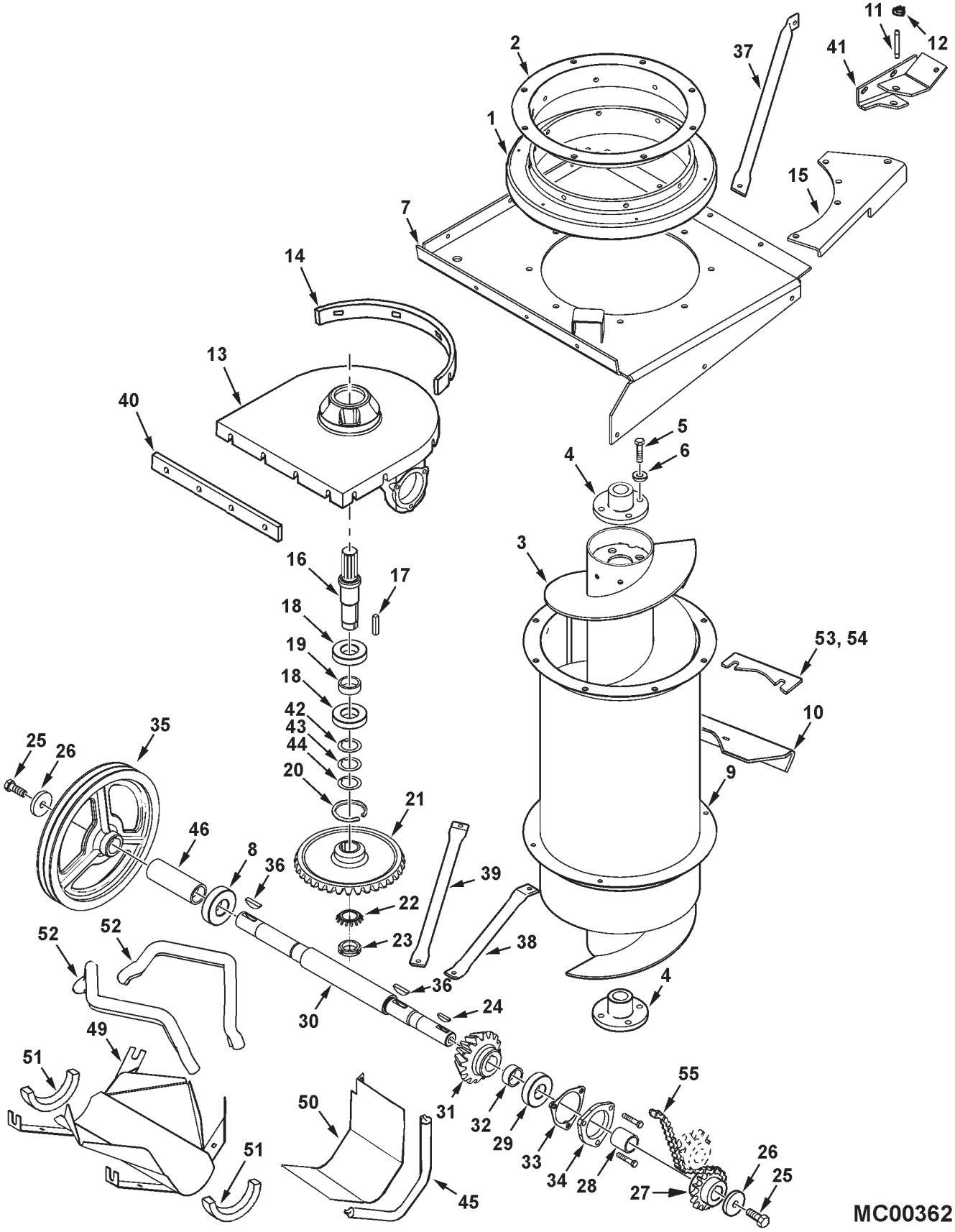

https://truckmanualshub.com/

UNLOADING AUGER
VERTICAL
EFFECTIVE S/N HN36101

ITEM	NUMBER	QTY	DESCRIPTION
24	355485X1	1	KEY, WOODRUFF, 5/16 X 2-1/8
25	70923112	2	CAPSCREW, 5/8-11 X 1-3/4 GR5
26	2407570W1	2	WASHER, .656 X 2.37 OD X .375 TH
27	71391131	1	SPROCKET ASY, DRIVE, 20 TEETH
28	71397246	1	SPACER, 1.44 ID X 1.75 OD X 1.82 LG
29	354920X1	1	BEARING, BALL
30	71398399	1	SHAFT, INPUT
31	2460840W2	1	GEAR, PINION, 16T
32	2493870W1	1	SPACER, 1.52 ID X 1.88 OD X .763 LG
33	1500050W1	AR	SHIM, RED, PLASTIC, .002
33	1500060W1	AR	SHIM, BLUE, PLASTIC, .005
33	1500070W1	AR	SHIM, BROWN, PLASTIC, .010
34	2452270W1	1	CAP, BEARING
	70920415	3	CAPSCREW, 3/8-16 X 1-1/4
35	71397244	1	SHEAVE, DRIVEN, UNLOADER
36	W937119	2	KEY, WOODRUFF, 3/8 X 2 1/8
37	71399674	1	BRACE, SWING CYLINDER
38	71399665	1	BRACE,VERT AUGER TUBE(PRIOR S/N HR36101)
	71408989	1	* STRAP, BRACE
	71408990	1	* STRAP, BRACE
	70920415	3	* CAPSCREW, 3/8-16 X 1-1/4 GR5
	70917378	3	* WASHER, 3/8 WIDE
	Y704734	3	* NUT, HEX FLANGE TOP LOCK, 3/8-16
	70921210	2	CAPSCREW, 3/8-16 X 1 GR5
	Y704734	2	NUT, HEX FLNG TOP LOCK, 3/8-16
39	71399666	1	BRACE, VERTICAL AUGER TUBE
	70921210	2	CAPSCREW, 3/8-16 X 1 GR5
	Y704734	2	NUT, HEX FLNG TOP LOCK, 3/8-16
40	71379824	AR	SHIM, SIDE, UNLDR BOOT, .060 (2 AVE.)
41	112720W91	1	BRACKET WLDMT, CYLINDER ANCHOR
	70921210	2	CAPSCREW, 3/8-16 X 1 GR5
	70921969	1	CAPSCREW, 3/8-16 X 1-1/2 GR5
	70917378	2	WASHER, 3/8 WIDE
	705038	3	LOCKWASHER, 3/8
	70916950	3	NUT, 3/8-16 REG
42	104740W1	AR	SHIM, .005
43	104741W1	AR	SHIM, .010
44	104742W1	AR	SHIM, .020
45	71395983	1	SEAL, CHAIN COVER
46	-----	1	SPACER, SLEEVE (9690 ONLY)
49	71391435	1	COVER WLDMT.-UNLOADER GEARS
50	71393854	1	COVER, CHAIN
	7700461	3	BOLT, RD HD SQ NK, 5/16-18 X 3/4
	70917372	3	NUT, 5/16-18 REG
	70917356	3	LOCKWASHER, 5/16 REG
	700709602	3	WASHER, 5/16 WIDE
51	71391441	2	FOAM STRIP-ADHESIVE BACK
52	71393916	2	SEAL, GEAR COVER
53	71411452	AR	SHIM, .127 TH (EFF. S/N HR36101)
54	71411453	AR	SHIM, .071 TH (EFF. S/N HR36101)
55	-----	1	CHAIN, UNL DRIVE (SEE "CHAINS DRIVE")
-	79014728	AR	GREASE

* EFF. S/N HR36101

MC00362
PR: t04c24o27c0003

https://truckmanualshub.com/

UNLOADING AUGER
UPPER

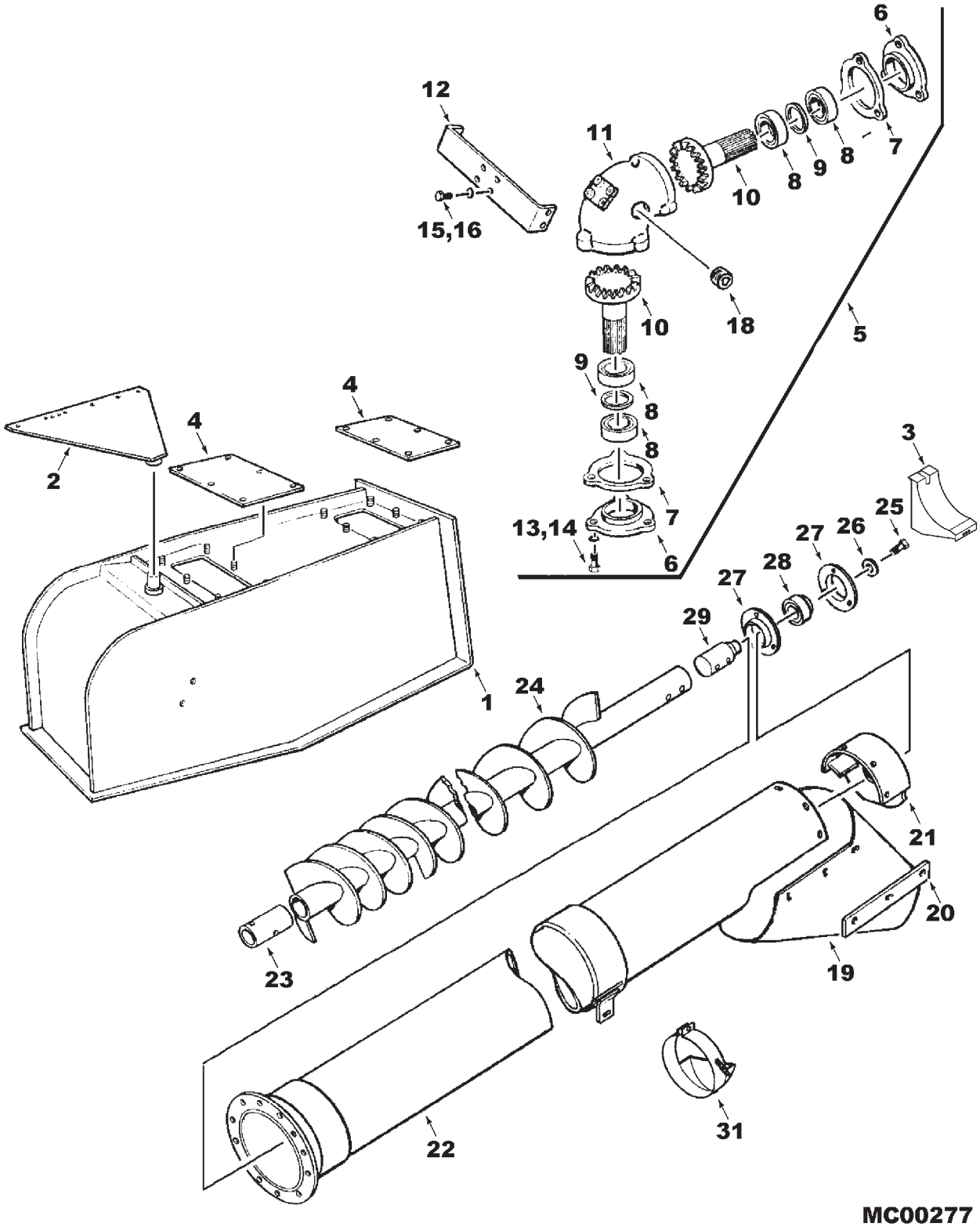

MC00277

https://truckmanualshub.com/

UNLOADING AUGER
UPPER

ITEM	NUMBER	QTY	DESCRIPTION
1	2450441W4	1	ELBOW WLDMT, UNLDR (PRIOR S/N HN36101)
	71399658	1	ELBOW WLDMT, UNLDR (EFF. S/N HN36101)
	70921210	4	CAPSCREW, 3/8-16 X 1
	70918830	1	SCREW, HEX SOCKET FLAT HD, 3/8 X 1
	Y704734	5	NUT, HEX FLANGE TOP LOCK, 3/8-16
2	71390357	1	PLATE ASSEMBLY, PIVOT
	832563M1	1	BEARING, SLEEVE
	70921210	5	CAPSCREW, 3/8-16 X 1
	70916950	5	NUT, 3/8-16, REG
3	71390756	1	SADDLE WLDMT, UNLOADER TUBE
4	1736870W1	1	PLATE, COVER (QTY 2, PRIOR S/N HN36101)
	71400919	1	PLATE, COVER (EFF. S/N HN36101)
	Y704734	14	NUT, HEX FLANGE TOP LOCK, 3/8-16
5	2414623W1	1	GEARBOX ASSEMBLY
	79017915	AR	GREASE, MOBILE HP, 14 OZ.
	79021671	AR	PIPE SEALANT
6	1737620W1	2	CAP, GEAR BOX
7	1714410W1	AR	SHIM, .005
	1714400W1	AR	SHIM, .010
	1712530W1	AR	SHIM, .020
8	354920X1	4	BEARING, BALL
9	1714430W1	2	SPACER, BEARING
10	2414640W1	2	GEAR, BEVEL, 18T
11	2414630W2	1	HOUSING, GEAR BOX
	70920328	4	CAPSCREW, 1/2 X 1-1/2
	353773X1	4	WASHER, HEAVY HARD, 1/2
	Y704742	4	NUT, HEX FLG TOP LOCK, 1/2-13
12	2450500W1	1	SUPPORT, GEAR BOX
13	70923325	6	CAPSCREW, 5/16-18 X 7/8
14	70917356	6	WASHER, LOCK, 5/16
15	70921210	4	CAPSCREW, 3/8-16 X 1
16	70916965	4	WASHER, LOCK, 3/8
18	356044X1	1	PLUG, PIPE HEX SOCKET, 1"
19	71400385	1	SPOUT, RUBBER
	70921333	2	CAPSCREW, 5/16-18 X 1
	70917642	4	WASHER, 5/16
	Y704726	2	NUT, HEX FLNG TOP LOCK, 5/16-18
20	1599410W1	2	STRAP, REINFORCEMENT
	70921210	6	CAPSCREW, 3/8-16 X 1
	70917378	6	WASHER, 3/8 WIDE
	Y704734	6	NUT, HEX FLNG TOP LOCK, 3/8-16
21	1721491W2R	1	CAP ASSEMBLY, END
	70921965	3	CAPSCREW, 3/8-16 X 3/4
	70917378	2	WASHER, 3/8 WIDE
	Y704734	3	NUT, HEX FLNG TOP LOCK, 3/8-16
22	71396414	1	TUBE WLDMT, HORIZ. (PRIOR S/N HN36101)
	71399669	1	TUBE WLDMT, HORIZ. (EFF. S/N HN36101)
	70921210	12	CAPSCREW, 3/8-16 X 1
	70916965	6	LOCKWASHER, 3/8
	Y704734	6	NUT, HEX FLNG TOP LOCK, 3/8-16

CONTINUED

https://truckmanualshub.com/

UNLOADING AUGER
UPPER

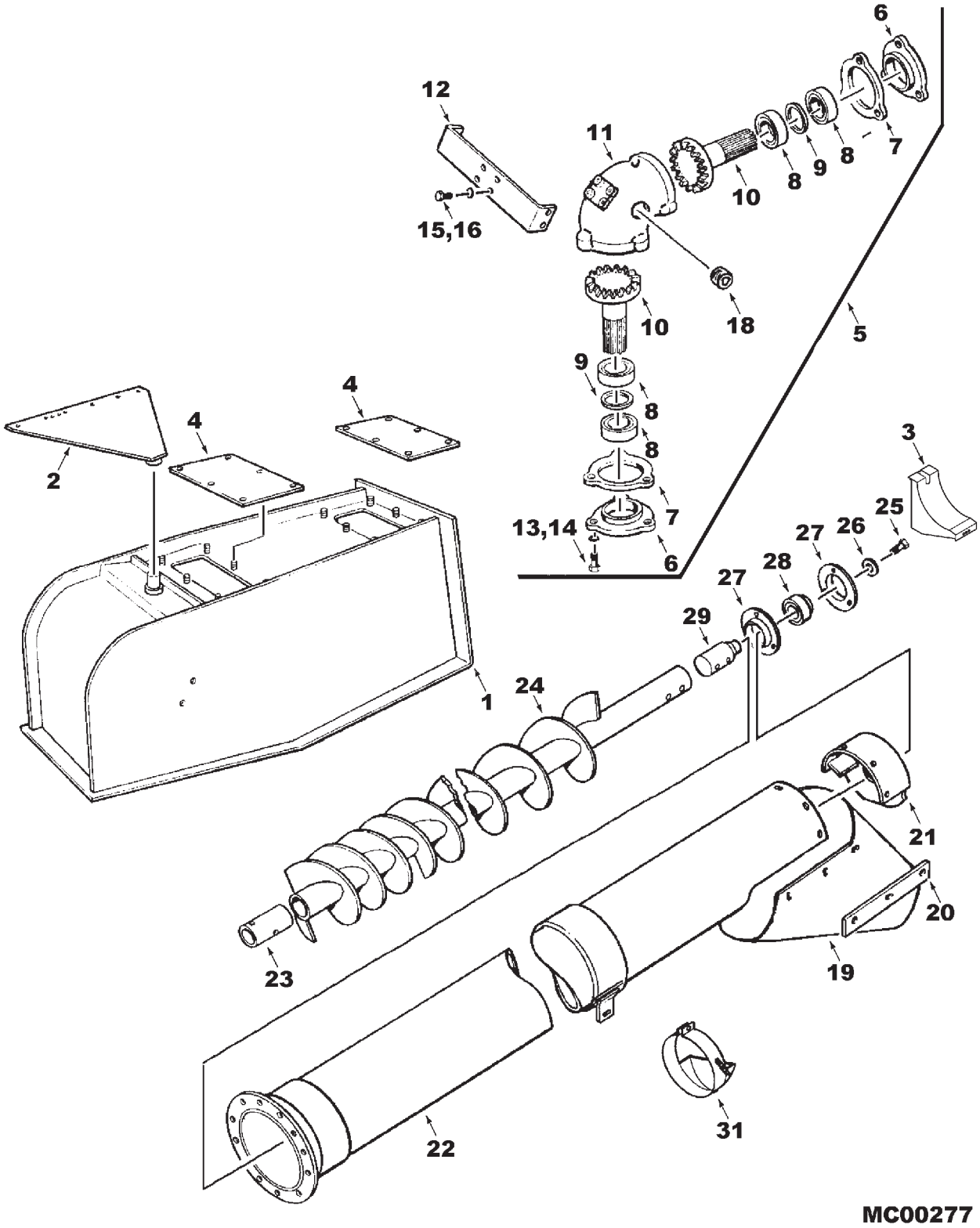

https://truckmanualshub.com/

UNLOADING AUGER
UPPER

ITEM	NUMBER	QTY	DESCRIPTION
23	1736510W1	1	COUPLER, DRIVE
	70920990	2	CAPSCREW, 1/2-13 X 3-1/2
	Y705046	2	LOCKWASHER, 1/2
	704031	2	NUT, 1/2-13
24	71390929	1	AUGER ASY, (INCL ITEMS 23 & 29) (PRIOR S/N HN36101)
	71399854	1	AUGER ASY, (INCL ITEMS 23 & 29) (EFF. S/N HN36101)
25	70926126	1	CAPSCREW, 3/4-10 X 1-1/4
	70919332	1	LOCKWASHER, 3/4
26	1716190W1	1	SPACER, 25/32 X 1-5/8 X 1/4 TH
27	700717509	2	FLANGETTE
	70931350	3	BOLT, RHSN, 3/8-16 X 1
	Y704734	3	NUT, HEX FLNG TOP LOCK, 3/8-16
28	831822M1	1	BEARING, BALL
29	1737660W1	1	SHAFT, STUB
	70920990	2	CAPSCREW, 1/2-13 X 3-1/2
	Y705046	2	LOCKWASHER, 1/2
	704031	2	NUT, 1/2-13
31	294148M91	1	SPILL SAVER
	79019067	2	SPRINGS
	70936104	1	CAPSCREW, 5/16-18 X 2-3/4 FULL THD
	70917642	1	WASHER, FLAT, 5/16
	70923362	1	NUT, HEX CNTR LOCK, 5/16-18
	71378014	1	KIT, SPILL SAVER (ORDER THRU DEALER CENTRAL)
-	700707823	AR	SILICONE

MC00277
PR: 284

https://truckmanualshub.com/

UNLOADER DRIVE

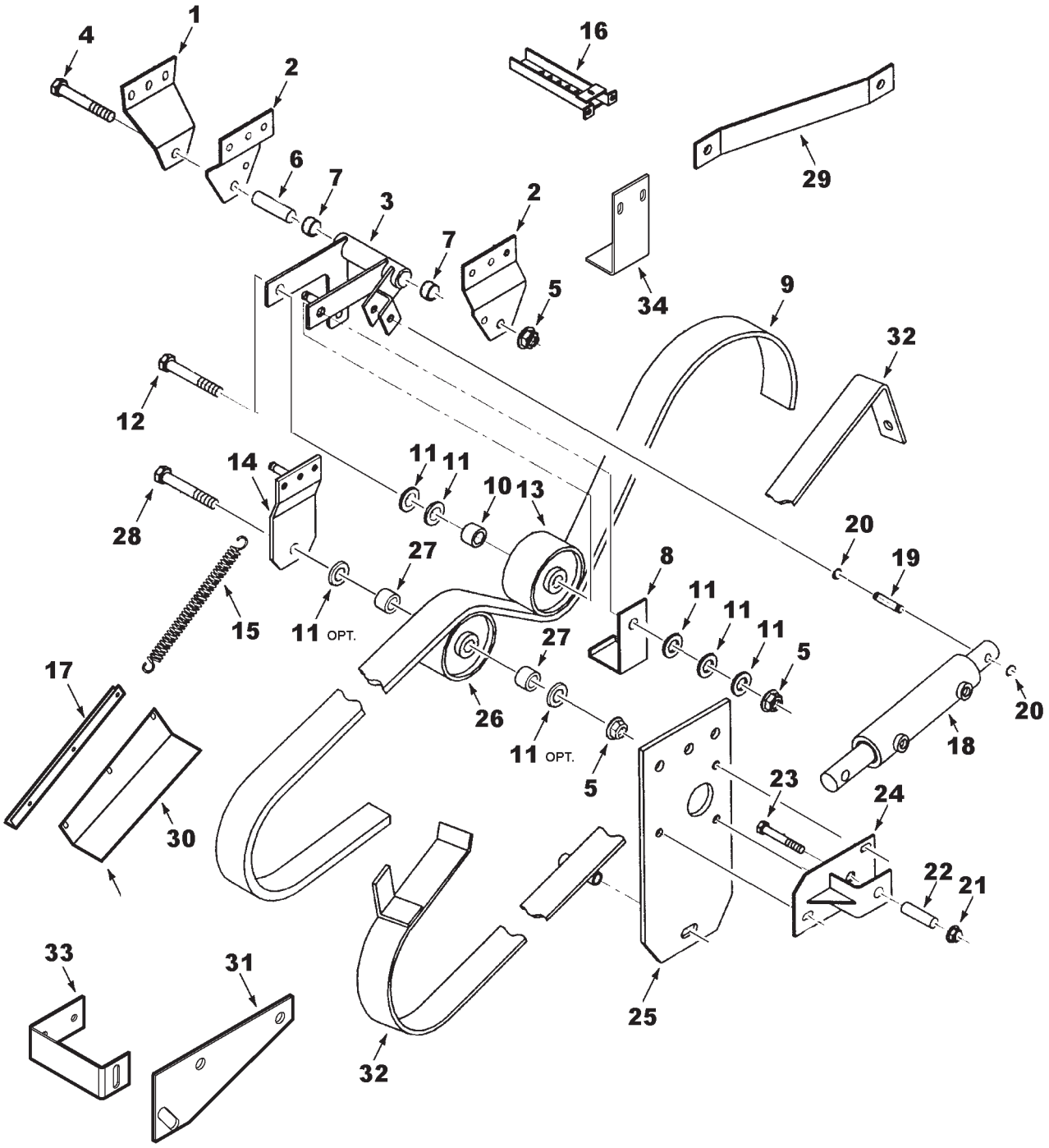

https://truckmanualshub.com/

ITEM	NUMBER	QTY	DESCRIPTION
1	71388739	1	PLATE
2	108592W1	2	PLATE
	703249	6	CAPSCREW, 3/8-16 X 1 GR5
	Y704734	6	NUT, HEX FLNG TOP LOCK, 3/8-16
3	108586W91	1	IDLER ARM ASY (PRIOR S/N HP36101)
			(SERVICE W/ 71403710)
	71403710	1	IDLER ARM ASY
4	112774W1	1	BOLT, HEX SPECIAL, 5/8-11 X 7
5	915891W1	3	NUT, HEX FLNG TOP LOCK, 5/8-11
6	2624230W1	1	SLEEVE, IDLER PIVOT
7	1689170W1	2	BUSHING, STEEL
8	108602W1	1	STRAP, BELT GUIDE (PRIOR S/N HP36101)
	71403712B	1	STRAP, BELT GUIDE (EFF. S/N HP36101)
9	101102M1	1	BELT (SEE BELT LISTING)
10	368615X1	1	SPACER
11	70918432	6	WASHER, 5/8 WIDE
12	70923501	1	CAPSCREW, 5/8-11 X 3-3/4 GR5
13	1797450W1	1	IDLER, FLAT, 6.5 DIA (PRIOR S/N HP36101)
	2545270W1	1	IDLER, FLAT, 6.5 DIA (EFF. S/N HP36101)
14	108597W91	1	PLATE ASSEMBLY, INNER IDLER SUPPORT
15	101276M2	1	SPRING
16	2629511W93	1	CHANNEL ASSEMBLY
	703249	9	CAPSCREW, 3/8-16 X 1 GR5
	Y704734	9	NUT, HEX FLNG TOP LOCK, 3/8-16
	70917378	7	WASHER, 3/8 WIDE
17	----------	1	SUPPORT, UPPER GUIDE (9690 ONLY)
18	108275W91	1	HYDRAULIC CYLINDER
	71389522	AR	SEAL KIT
19	108575W1	1	PIN, 5/8 X 2.28
20	377690X1	2	RING, RETAINING
21	Y704742	1	NUT, HEX FLNG TOP LOCK, 1/2-13
22	108601W1	1	SPACER
23	70923240	1	CAPSCREW, 1/2-13 X 2-3/4 GR5
24	108593W91	1	ANCHOR BRACKET
	703249	3	CAPSCREW, 3/8-16 X 1 GR5
	Y704734	3	NUT, HEX FLNG TOP LOCK, 3/8-16
25	108599W1	1	PLATE, OUTER IDLER SUPPORT
	703249	3	CAPSCREW, 3/8-16 X 1 GR5
	Y704734	3	NUT, HEX FLNG TOP LOCK, 3/8-16
26	2545270W1	1	IDLER PULLEY
27	365098X1	2	SPACER
28	70926165	1	CAPSCREW, 5/8-11 X 4-1/2 GR5
29	108600W1	1	STRAP
30	2635460W1	1	GUIDE, BELT
	70921965	3	CAPSCREW, 3/8-16 X 3/4
	70916965	3	LOCKWASHER, 3/8
	70916950	3	HEX NUT, 3/8-16
	70917378	3	WASHER, 3/8, WIDE
31	101575M1	1	PLATE
	70921210	1	CAPSCREW, HEX HEAD, 3/8-16 X 1
	70917378	1	WASHER, 3/8, WIDE
	70916965	1	LOCKWASHER, 3/8
	70916950	1	HEX NUT, 3/8-16

CONTINUED

https://truckmanualshub.com/

UNLOADER DRIVE

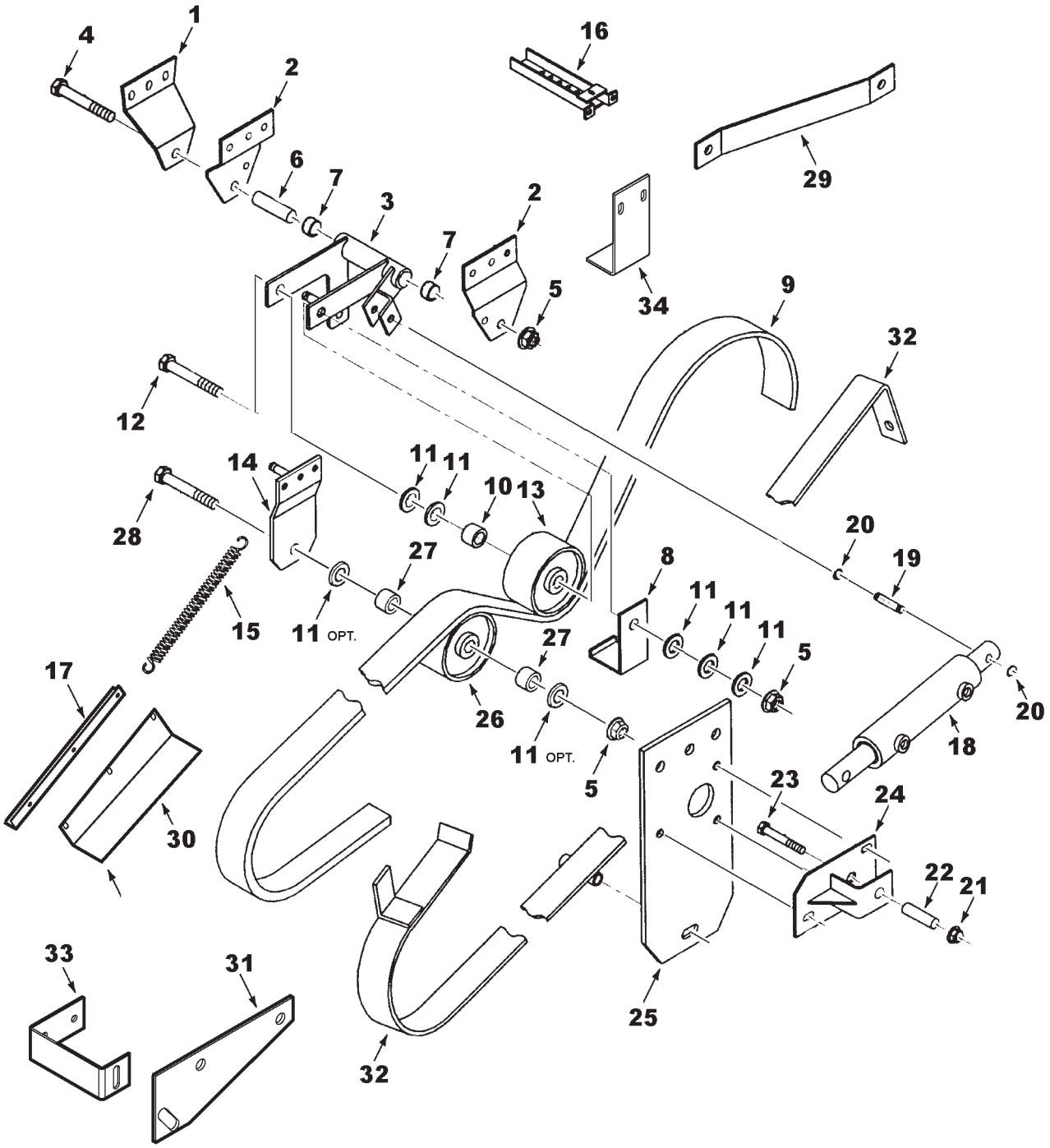

https://truckmanualshub.com/

ITEM	NUMBER	QTY	DESCRIPTION
32	71390191	1	GUIDE, BELT
	70921332	2	CAPSCREW, 5/16-18 X 3/4
	70917642	2	WASHER, 5/16, WIDE
	Y704726	2	NUT, HEX FLNG TOP LOCK, 5/16-18
	70923504	1	CAPSCREW, 3/8-16 X 4-1/2 GR5
	70917378	AR	WASHER, 3/8 WIDE
	Y704734	1	NUT, HEX FLNG TOP LOCK, 3/8-16
33	----------	1	SUPPORT, LOWER GUIDE (9690 ONLY)
34	2635230W1	1	GUIDE BRKT, TOP, BELT(PRIOR S/N HN36101)
	71400669	1	GUIDE PLATE, BELT (EFF. S/N HN36101)
	703249	2	CAPSCREW, 3/8-16 X 1 GR5
	Y704734	2	NUT, HEX FLNG TOP LOCK, 3/8-16

MC00279
PR: 288

https://truckmanualshub.com/

GRAIN BIN
LOWER STRUCTURE

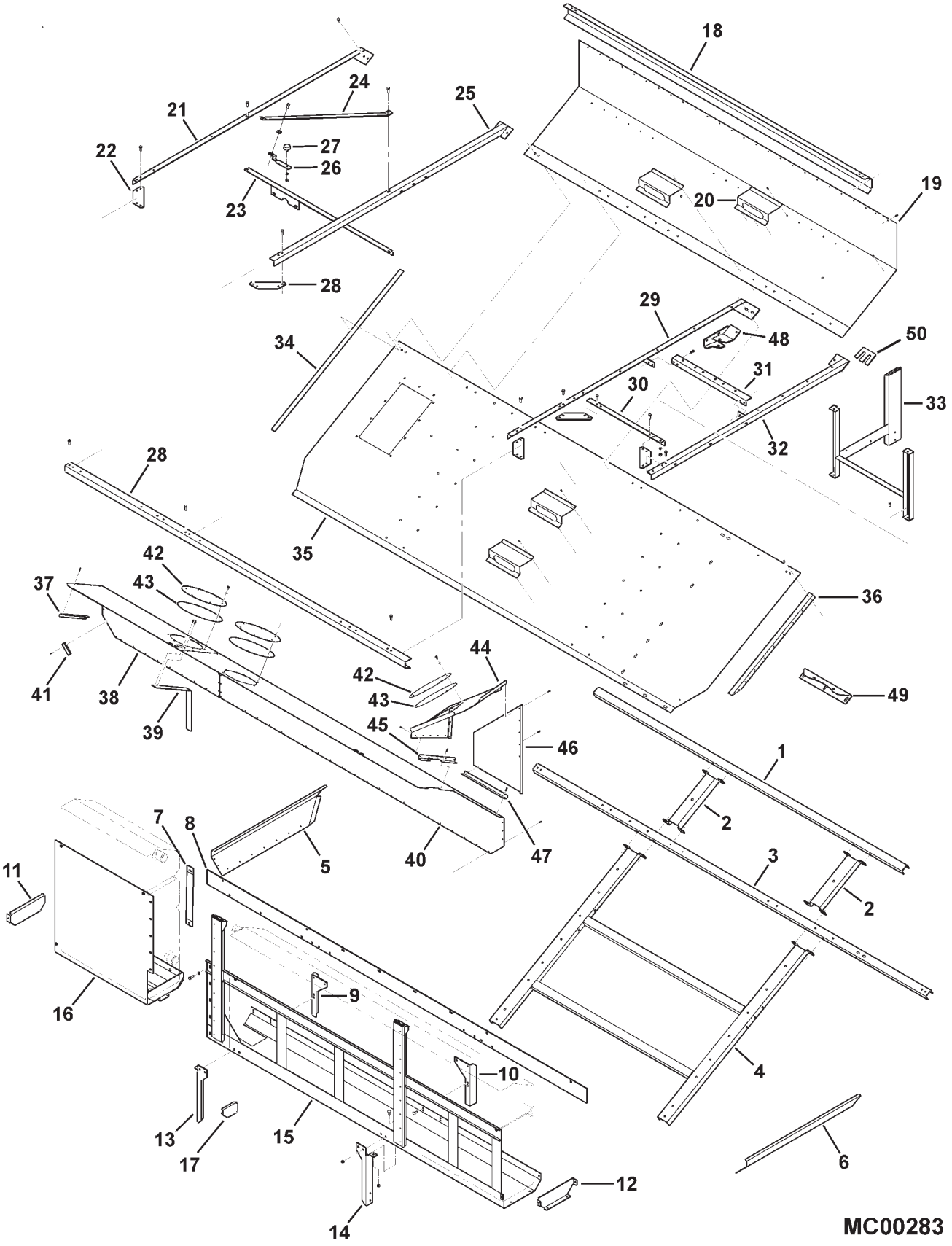

https://truckmanualshub.com/

ITEM	NUMBER	QTY	DESCRIPTION
1	71391143	1	CHANNEL, FLOOR UPPER
2	71407327P	2	EXTENSION, UPPER FLOOR CHANNEL
	703249	8	CAPSCREW, 3/8-16 X 1.0
	70917378	8	WASHER, FLAT 3/8
	705038	8	LOCKWASHER, 3/8
	70916950	8	HEXNUT, 3/8-16
3	71403918	1	CHANNEL, BIN FLOOR
4	71389710	1	CHANNEL WLDMT, FLOOR
	703249	6	CAPSCREW, 3/8-16 X 1.0
	70917378	6	WASHER, FLAT 3/8
	705038	6	LOCKWASHER, 3/8
	70916950	6	HEXNUT, 3/8-16
5	71391951	1	SHEET, RH, GRAIN BIN
	700717635	7	RIVET, 3/16 X 13/32
6	71391850	1	SHEET, LH, GRAIN BIN
	700717635	7	RIVET, 3/16 X 13/32
7	71393414	2	STRAP, TANK HANGER (RH)
	70922786	4	BOLT, RHSN 3/8-16 X 1.0
	70917378	4	WASHER, FLAT 3/8
	705038	4	LOCKWASHER, 3/8
	70916950	4	HEXNUT, 3/8-16
8	71393413	1	PLATE, SUPPORT
	70922786	10	BOLT, RHSN 3/8-16 X 1.0
	70917378	10	WASHER, FLAT 3/8
	705038	10	LOCKWASHER, 3/8
	70916950	10	HEXNUT, 3/8-16
9	71391939	1	SUPPORT, TANK, RH REAR
	7700461	1	BOLT, RHSN 5/16-18 X 3/4
	Y704726	1	LOCKNUT, HEX FLANGE 5/16-18
10	71391938	1	SUPPORT, TANK, LH REAR
	7700461	1	BOLT, RHSN 5/16-18 X 3/4
	Y704726	1	LOCKNUT, HEX FLANGE 5/16-18
11	71391946	1	END PLATE, RH FUEL TANK
	Y702951	4	SCREW, SELF-TAP 3/8-16 X 3/4
12	71391947	1	END PLATE, LH FUEL TANK
	Y702951	4	SCREW, SELF-TAP 3/8-16 X 3/4
13	71393918	1	POST, TANK, RH FRONT
	7700461	1	BOLT, RHSN 5/16-18 X 3/4
	Y704726	1	LOCKNUT, HEX FLANGE 5/16-18
	70922784	2	BOLT, RHSN 3/8-16 X 3/4
	Y704734	2	LOCKNUT, HEX FLANGE 3/8-16
14	71393917	1	POST, TANK, LH FRONT
	7700461	1	BOLT, RHSN 5/16-18 X 3/4
	Y704726	1	LOCKNUT, HEX FLANGE 5/16-18
	70922784	2	BOLT, RHSN 3/8-16 X 3/4
	Y704734	2	LOCKNUT, HEX FLANGE 3/8-16
15	71406761B	1	SUPPORT WLDMT, LH FUEL TANK
16	71391935	1	SUPPORT WLDMT, RH FUEL TANK
	703249	5	CAPSCREW, 3/8-16 X 1.0
	705038	5	LOCKWASHER, 3/8
	70917378	5	WASHER, FLAT 3/8

CONTINUED

https://truckmanualshub.com/

GRAIN BIN
LOWER STRUCTURE

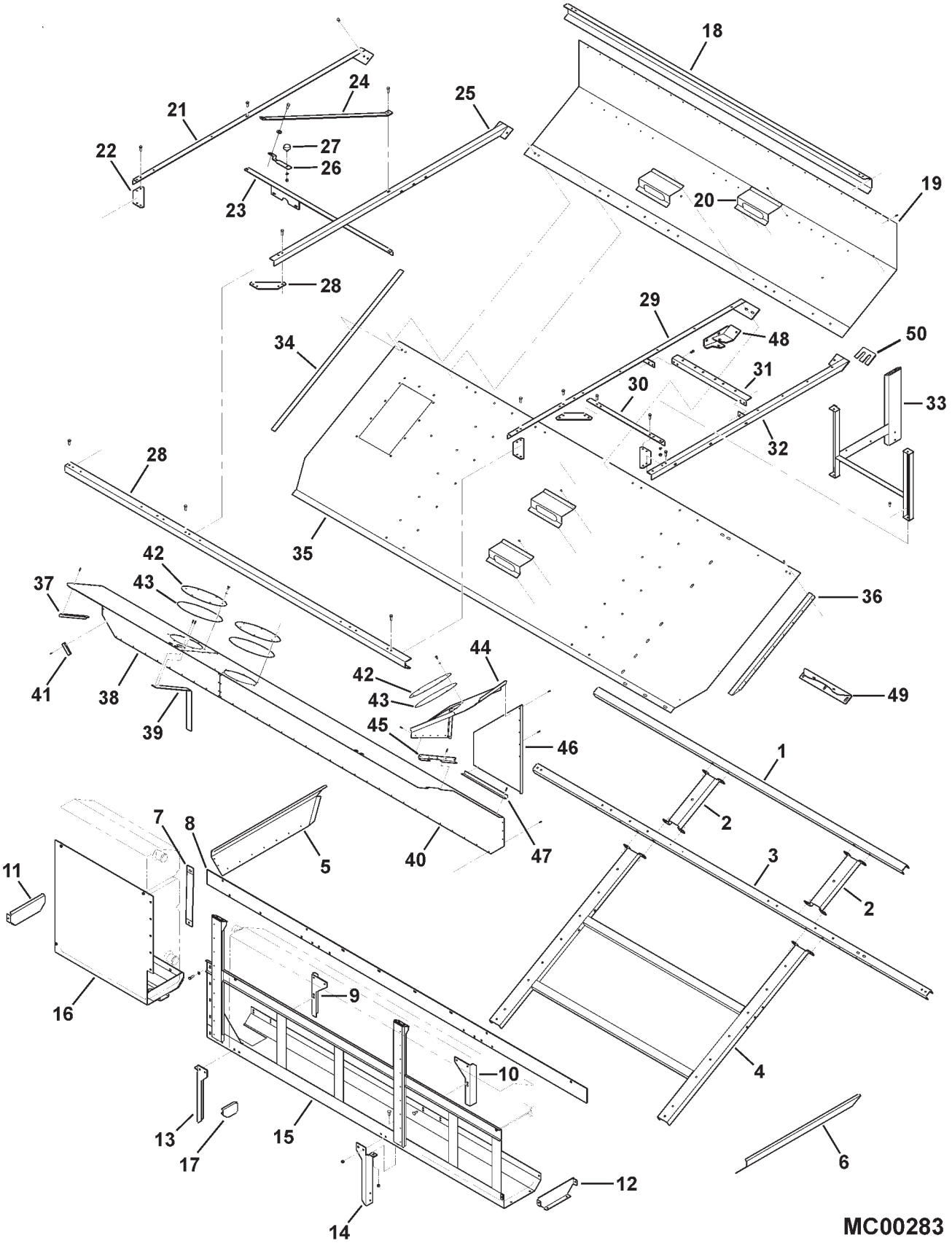

https://truckmanualshub.com/

ITEM	NUMBER	QTY	DESCRIPTION
17	71391948	1	END BRKT, LH TANK INSIDE
	Y702951	2	SCREW, SELF-TAP 3/8-16 X 3/4
18	71392620	1	CHANNEL, UPPER FRAME, REAR
	70925160	26	RIVET, 3/16 X .527
19	71391849	1	PANEL, UPPER REAR FLOOR
	700717635	AR	RIVET, 3/16 X .402
	703249	2	CAPSCREW, 3/8-16 X 1.0
	705038	2	LOCKWASHER, 3/8
	70916950	2	HEXNUT, 3/8-16
	70923114	1	CAPSCREW, 1/2-13 X 1 GR5 (EFF. S/N HP36101)
20	71394681	4	STEP
	70925160	12	RIVET, 3/16 X .527
	700717635	12	RIVET, 3/16 X .402
	71394321	AR	TAPE, ANTI-SKID
21	71392657	1	ANGLE, MID-FRAME
	703249	AR	CAPSCREW, 3/8-16 X 1.0
	70917378	AR	WASHER, FLAT 3/8
	705038	AR	LOCKWASHER, 3/8
	70916950	AR	HEXNUT, 3/8-16
22	71392616	5	GUSSET, FRAME
23	71391147	1	ANGLE, TOP HEAD SUPPORT
24	71394322	1	STRAP
25	71392656	1	ANGLE, CENTER
	703249	AR	CAPSCREW, 3/8-16 X 1.0
	70917378	AR	WASHER, FLAT 3/8
	705038	AR	LOCKWASHER, 3/8
	70916950	AR	HEXNUT, 3/8-16
26	71394323	1	STRAP, WINDOW HOOK
	70921965	1	CAPSCREW, 3/8-16 X 3/4
	71391654	1	WASHER, NYLON
	Y704734	1	LOCKNUT, FLANGE 3/8-16
27	70547934	1	STOP, RUBBER
	705038	1	LOCKWASHER, 3/8
	70916950	1	HEXNUT, 3/8-16
28	71391956	1	CHANNEL, MID-FRAME FRONT
	703249	20	CAPSCREW, 3/8-16 X 1.0
	705038	20	LOCKWASHER, 3/8
	70916950	20	HEXNUT, 3/8-16
29	71403922	1	ANGLE WLDMT, LEFT INNER, MID-FRAME
	70923114	1	CAPSCREW, 1/2-13 X 1 GR5
	Y704742	1	NUT, HEX FLNG TOP LOCK, 1/2-13
30	71392611	1	ANGLE, FRONT SUPPORT
	703249	AR	CAPSCREW, 3/8-16 X 1.0
	703603	AR	CAPSCREW, 3/8-16 X 1-1/2
	70917378	AR	WASHER, FLAT 3/8
	705038	AR	LOCKWASHER, 3/8
	70916950	AR	HEXNUT, 3/8-16

CONTINUED

https://truckmanualshub.com/

GRAIN BIN
LOWER STRUCTURE

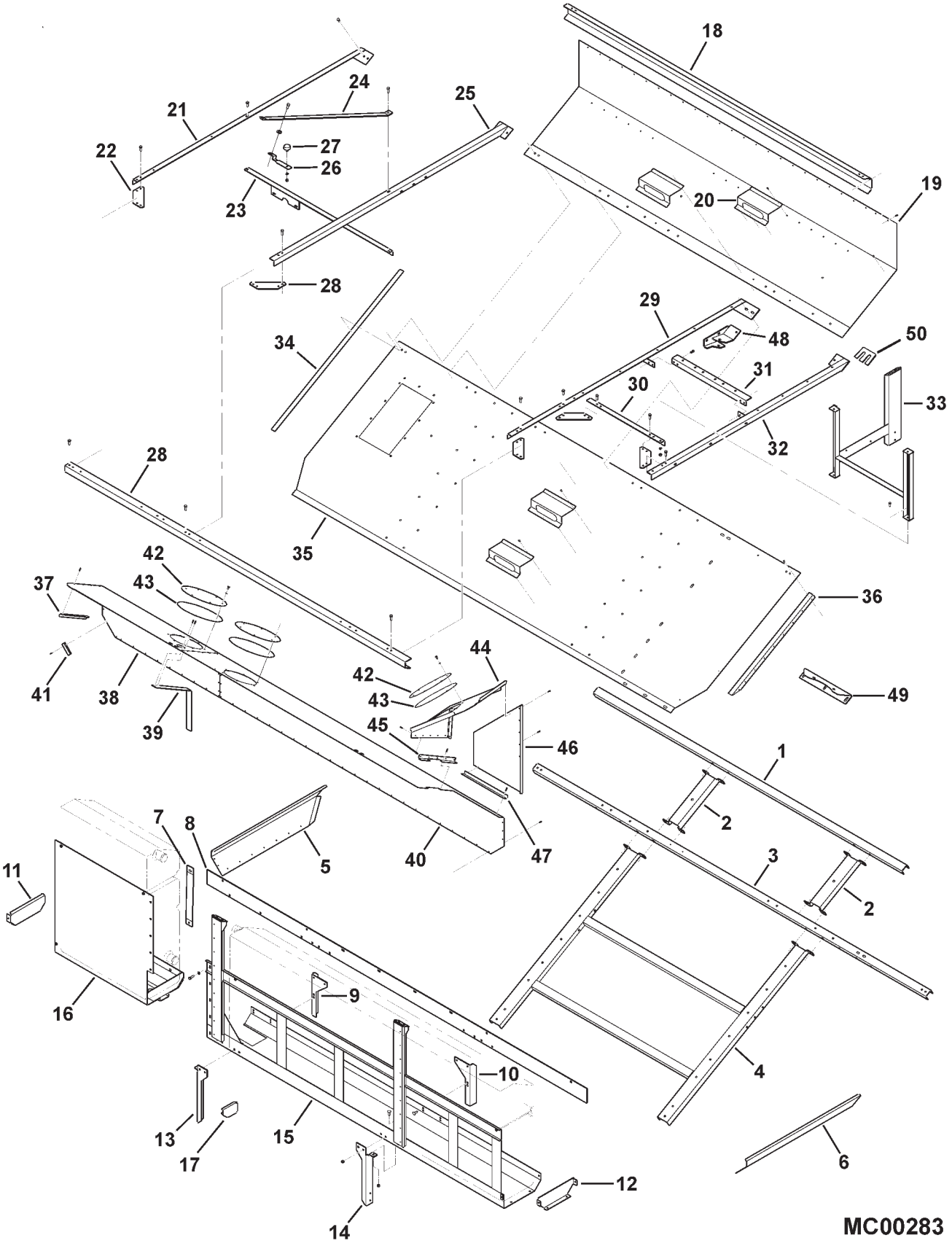

https://truckmanualshub.com/

ITEM	NUMBER	QTY	DESCRIPTION
31	71392610	1	ANGLE, REAR SUPPORT
	703249	4	CAPSCREW, 3/8-16 X 1.0
	705038	4	LOCKWASHER, 3/8
	70916950	4	HEXNUT, 3/8-16
32	71392654	1	ANGLE, MID-FRAME OUTER
33	71391957	1	SUPPORT WLDMT, CORNER (LH)
	703249	3	CAPSCREW, 3/8-16 X 1.0
	705038	3	LOCKWASHER, 3/8
	70916950	3	HEXNUT, 3/8-16
34	71390157	1	ANGLE, UPPER MOUNTING (RH)
35	71391848	1	PANEL, FLOOR LOWER
36	71390152	1	ANGLE, MID-PANEL MOUNTING (LH)
	70924837	9	RIVET, 3/16 X .277
37	71391954	1	ANGLE, SIDE, GRAIN BIN
	700717635	4	RIVET, 3/16 X .402
38	71391968	1	COVER, F/TANK (RH)
39	71392605	1	SUPPORT STRAP, FUEL TANK COVER
	700717635	AR	RIVET, 3/16 X .402
40	71391967	1	COVER, LH F/TANK
	70925160	28	RIVET, 3/16 X .527
41	71391146	2	ANGLE, SHEET TIE
	700717635	8	RIVET, 3/16 X .402
42	71376312	3	COVER, ACCESS
	7703457	18	CAPSCREW, 1/4-20 X 3/4
	705012	18	LOCKWASHER, 1/4
	70928705	18	NUT, RETAINER 1/4-20 TYPE J
43	71323575	3	SEAL, COVER
44	71391970	1	TOP COVER, FILLER NECK
45	71391972	1	ANGLE, TOP FILLER NECK
46	71391969	1	COVER, SIDE FILLER NECK
	700717635	13	RIVET, 3/16 X .402
47	71391971	1	ANGLE, SIDE FILLER NECK
	700717635	9	RIVET, 3/16 X .402
48	71403919	1	BRACKET WLDMT, UNLDR CYL
	70921210	1	CAPSCREW, 3/8-16 X 1 GR5
	70920415	1	CAPSCREW, 3/8-16 X 1-1/4 GR5
	70917378	2	WASHER, 3/8 WIDE
	Y704734	2	NUT, HEX FLNG TOP LOCK, 3/8-16
	701235	1	CAPSCREW, 1/2-13 X 1-1/2 GR5
	Y704742	1	NUT, HEX FLNG TOP LOCK, 1/2-13
49	2601260W1	1	BRKT,LOWER TUBE SUPPT(PRIOR S/N HN36101)
	71399675	1	BRKT,LOWER TUBE SUPPT (EFF. S/N HN36101)
	70923220	3	BOLT, RD HD SQ NK, 3/8-16 X 1-1/4
	70917378	3	WASHER, 3/8 WIDE
	Y704734	3	NUT, HEX FLNG TOP LK, 3/8-16
50	71401461	AR	SHIM (QTY 2 AVE.)

MC00283
PR: 290

https://truckmanualshub.com/

GRAIN BIN
UPPER STRUCTURE & MOUNTS

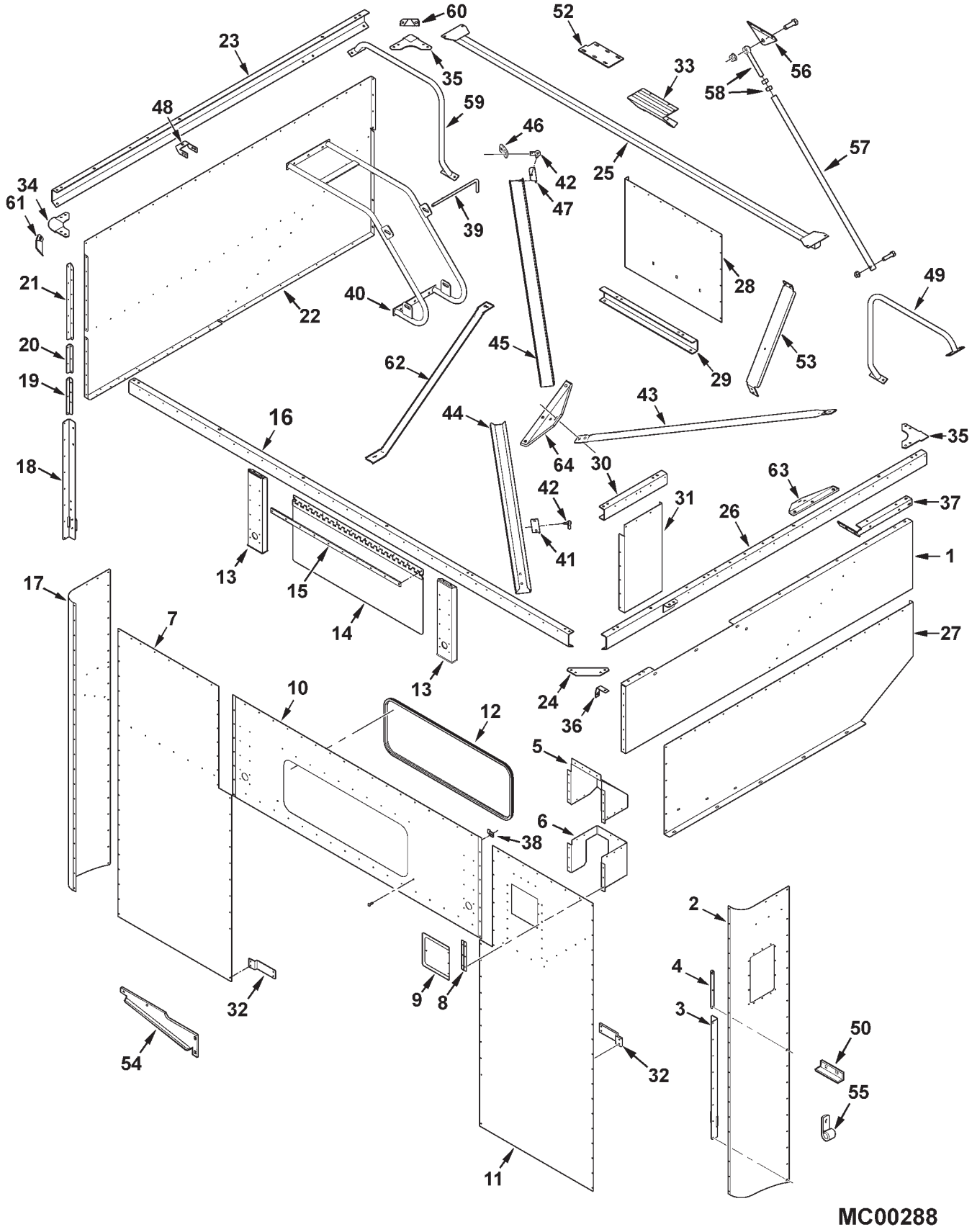

MC00288

https://truckmanualshub.com/

ITEM	NUMBER	QTY	DESCRIPTION
1	71391960	1	PANEL, MID (LH)
	70924837	AR	RIVET, 3/16 X .277
	703249	5	CAPSCREW, 3/8-16 X 1.0
	70917378	2	WASHER, 3/8 WIDE
	705038	4	LOCKWASHER, 3/8
	70916950	4	NUT, 3/8-16 REG
2	71392664	1	PANEL, CORNER (LH)
	700717635	AR	RIVET, 3/16 X .402
	70924837	AR	RIVET, 3/16 X .277
	706176	4	SCREW, TRUSS HD MACH, 5/16-18 X 3/4
	70917642	4	WASHER, 5/16 WIDE
	Y705020	4	LOCKWASHER, 5/16 REG
	70917372	4	NUT, 5/16-18 REG
3	71395996	1	ANGLE, FLANGE LOWER (LH)
	70922786	4	BOLT, RHSN 3/8-16 X 1.0
	70917378	4	WASHER, 3/8 WIDE
	705038	4	LOCKWASHER, 3/8
	70916950	4	NUT, 3/8-16 REG
4	71391150	1	ANGLE, FLANGE UPPER (LH)
	700717635	AR	RIVET, 3/16 X .402
5	71376324	1	SHIELD, BIN SAMPLE, UPPER
	700717635	AR	RIVET, 3/16 X .402
6	71391966	1	SHIELD, BIN SAMPLE, LOWER
	700717635	AR	RIVET, 3/16 X .402
7	71392602	1	PANEL, FRONT (RH)
	700717635	AR	RIVET, 3/16 X .402
8	71373513	1	HINGE, DOOR
9	71376349R	1	DOOR
	700717635	3	RIVET, 3/16 X .402
	71190960	1	KNOB, DOOR
10	71391953	1	PANEL, GRAIN BIN FRONT
11	71392601	1	PANEL, FRONT (LH)
	700717635	AR	RIVET, 3/16 X .402
	70924837	AR	RIVET, 3/16 X .277
12	71393257	1	SEAL, WINDOW TRIM
13	71390148	2	SUPPORT, FRT BIN VERTICAL
	703249	8	CAPSCREW, 3/8-16 X 1.0
	705038	8	LOCKWASHER, 3/8
	70916950	8	HEXNUT, 3/8-16
14	71393411	1	GLASS ASY., GRAIN BIN
	70924283	10	RIVET
	71393410	1	PIN, HINGE
15	71390764	1	SPACER, HINGE
16	71392618	1	CHANNEL, UPPER FRAME FRONT
	703249	29	CAPSCREW, 3/8-16 X 1.0
	705038	29	LOCKWASHER, 3/8
	70916950	29	HEXNUT, 3/8-16
17	71392663	1	PANEL, CORNER (RH)
	700717635	AR	RIVET, 3/16 X .402
18	71395997	1	ANGLE, FLANGE LOWER (RH)
19	71393253	1	ANGLE, FLANGE MID-LOWER (RH)
	700717635	3	RIVET, 3/16 X .402
20	71393252	1	ANGLE, FLANGE MID-UPPER (RH)

CONTINUED

https://truckmanualshub.com/

GRAIN BIN
UPPER STRUCTURE & MOUNTS

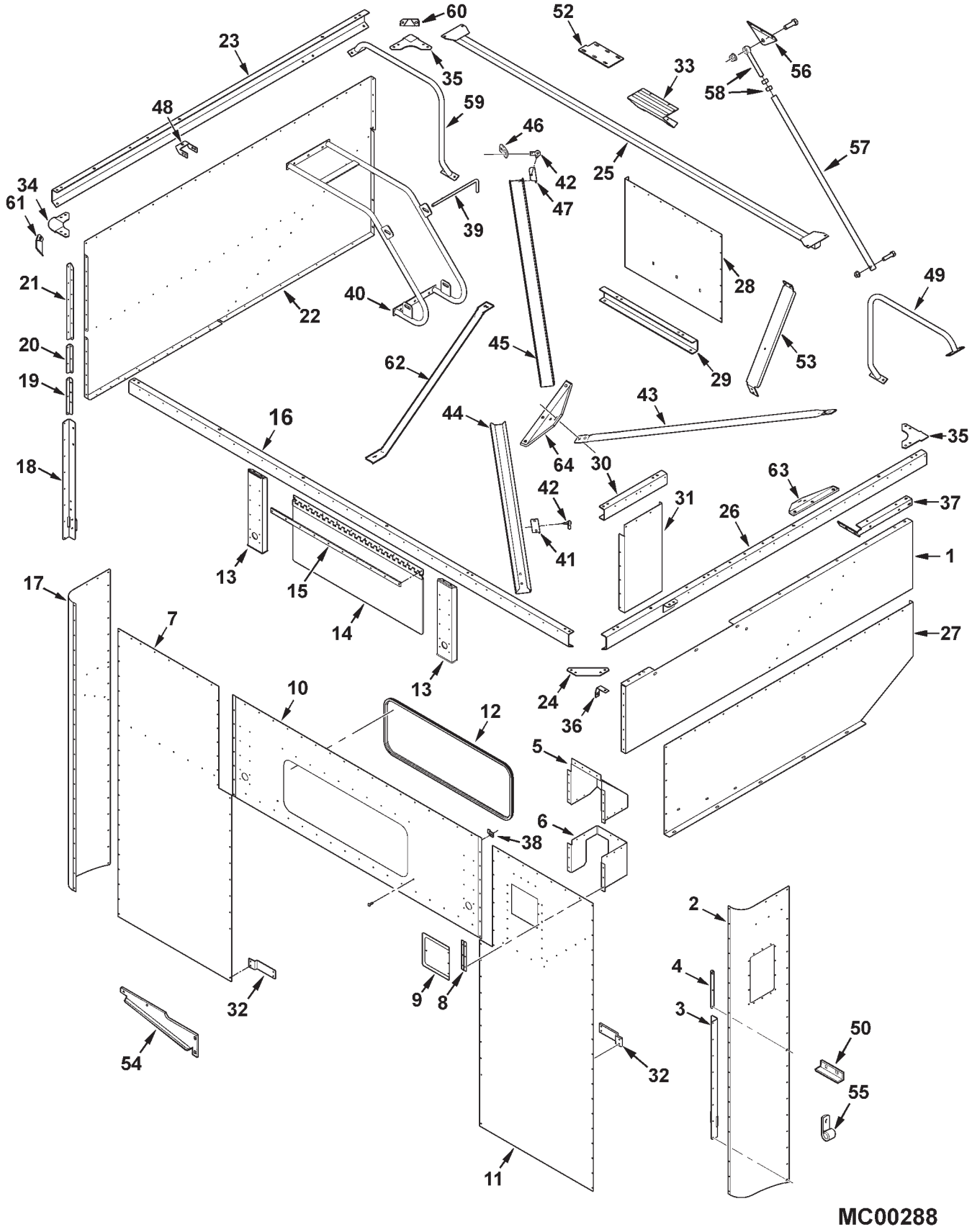

MC00288

https://truckmanualshub.com/

ITEM	NUMBER	QTY	DESCRIPTION
21	71393251	1	ANGLE, FLANGE UPPER (RH)
	700717635	6	RIVET, 3/16 X .402
22	71391964	1	PANEL, UPPER GRAIN BIN (RH)
	700717635	AR	RIVET, 3/16 X .402
	70924837	AR	RIVET, 3/16 X .277
23	71392624	1	CHANNEL, UPPER FRAME OUTER (RH)
24	71392616	4	GUSSET, FRAME
25	71396664	1	BRACE
26	71392658	1	CHANNEL, UPPER FRAME INNER (LH)
27	71391961	1	PANEL, UPPER REAR (LH)
	700717635	AR	RIVET, 3/16 X .402
	70924837	AR	RIVET, 3/16 X .277
	70921965	5	CAPSCREW, 3/8-16 X 3/4
	70917378	5	WASHER, 3/8 WIDE
	705038	5	LOCKWASHER, 3/8
	70916950	5	HEXNUT, 3/8-16
28	71391962	1	PANEL, DIVISION (LH)
	700717635	AR	RIVET, 3/16 X .402
29	71392621	1	CHANNEL, UPPER FRAME SUPPORT
	703249	2	CAPSCREW, 3/8-16 X 1.0
	705038	2	LOCKWASHER, 3/8
	70916950	2	HEXNUT, 3/8-16
30	71392622	1	CHANNEL, UPPER FRAME OUTER (LH)
31	71391963	1	PANEL, FRONT UPPER (LH)
	700717635	AR	RIVET, 3/16 X .402
	70924837	AR	RIVET, 3/16 X .277
	703249	1	CAPSCREW, 3/8-16 X 1.0
	705038	1	LOCKWASHER, 3/8
	70916950	1	HEXNUT, 3/8-16
32	71394325	2	SUPPORT, FRONT PANEL (9690 ONLY)
	700129058	2	SPACER (9790 ONLY)
	7703457	AR	CAPSCREW, 1/4-20 X 3/4
	1703354	AR	NUT, HEX FLANGE TOP LOCK, 1/4-20
33	71394688	1	STEP ASY., GRAIN BIN
	7703457	4	CAPSCREW, 1/4-20 X 3/4
	1703354	4	HEXNUT, 1/4-20
	71394321	AR	TAPE, ANTI-SKID
34	71394420	1	BRACE, CORNER ROUND
35	71394419	2	BRACE, CORNER SQUARE
36	71395992R	1	BRACKET, FUEL TANK VENT
37	2633681W2	1	SUPPORT
	70921332	5	CAPSCREW, 5/16-18 X 3/4
	70917642	2	WASHER, 5/16 WIDE
	Y705020	5	LOCKWASHER, 5/16
	70917372	5	HEXNUT, 5/16-18
38	108610W1	2	CLIP, GLASS RETAINER
	70931449	2	WASHER, 13/32 ID X 1-1/8 OD 7GA
	70937101	2	SPEEDNUT, THRD GRIP 1/4
	7770167	2	BOLT, RD HD SQ NK 1/4-20 X 1.0
	705707	2	WASHER, FLAT 1/4
	705012	2	LOCKWASHER, 1/4
	70916952	2	NUT, WING 1/4-20

CONTINUED

https://truckmanualshub.com/

GRAIN BIN
UPPER STRUCTURE & MOUNTS

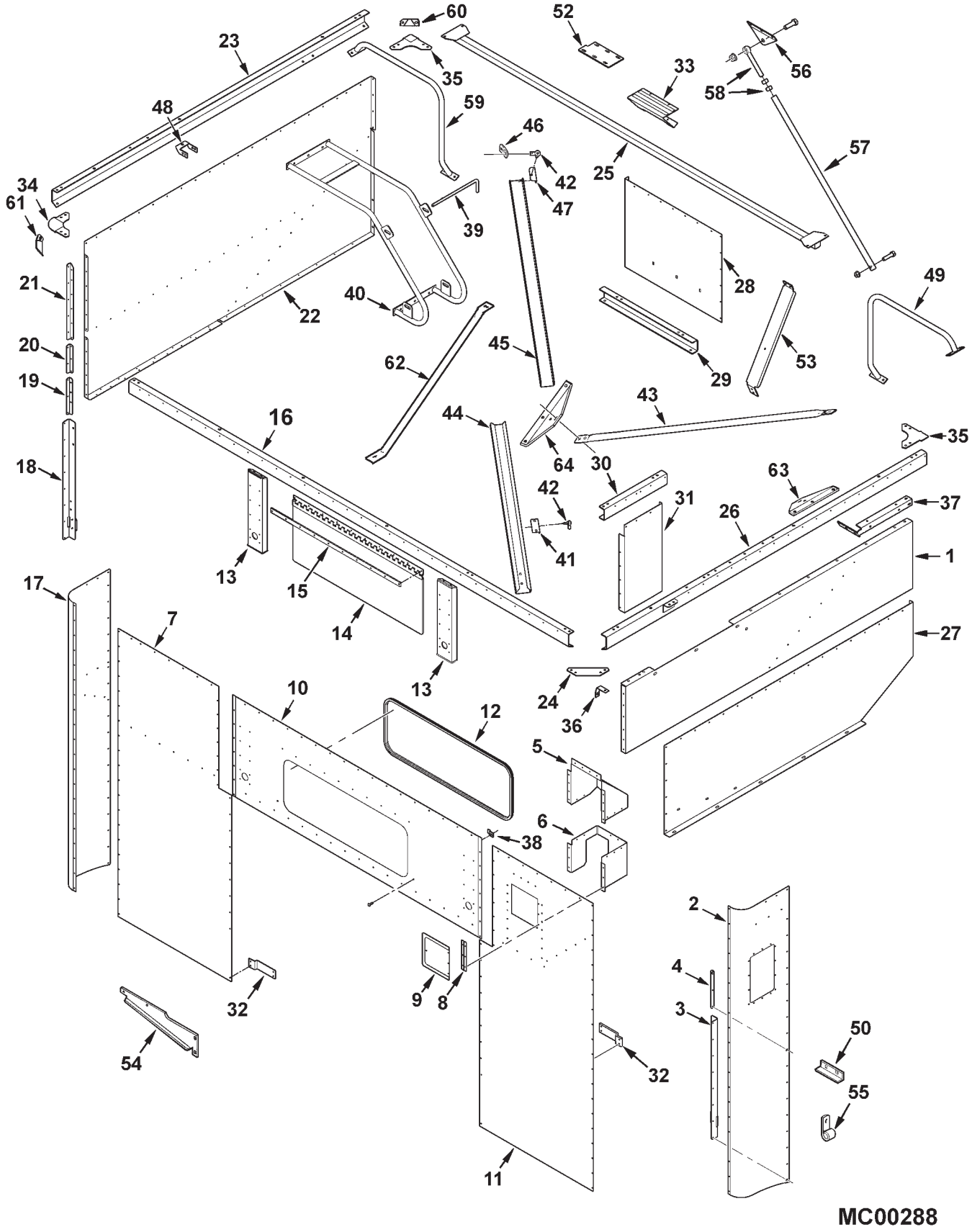

https://truckmanualshub.com/

ITEM	NUMBER	QTY	DESCRIPTION
39	71390384	1	ROD, BIN FILL AUGER
	70918431	1	WASHER, FLAT 1/2
	70936348	1	PIN, RETAINER, .125 X 2.56 LG
40	71393901	1	RETAINER, AUGER
	703249	6	CAPSCREW, 3/8-16 X 1.0
	70917378	6	WASHER, 3/8 WIDE
	705038	6	LOCKWASHER, 3/8
	70916950	6	NUT, 3/8-16 REG
41	71393907	1	SUPPORT ANGLE, LOWER CHANNEL
42	71326336	2	JOINT, BALL
43	71408826	1	CROSS BRACE (YR 2005 FIELD CAMPAIGN)
	70921210	4	CAPSCREW, 3/8-16 X 1 GR5
	70917378	4	WASHER, 3/8 WIDE
	Y704734	4	NUT, HEX FLANGE TOP LOCK, 3/8-16
44	71393425P	1	TRAY, LOWER SAMPLE
45	71393424B	1	TRAY, UPPER SAMPLE
46	71393908	1	ANCHOR, SAMPLE TRAY
47	71393909	1	SUPPORT ANGLE, UPPER
48	102903M91	12	HINGE ASY.
	7771769	12	CAPSCREW, 1/2-13 X 3/4
49	71393873	1	RAIL WLDMT, LEFT BIN EXT'N SUPPORT
	703249	4	CAPSCREW, 3/8-16 X 1.0
	705038	4	LOCKWASHER, 3/8
	70916950	4	NUT, 3/8-16 REG
50	71397111	1	ANGLE
52	71394920	1	PLATE, ENG. COVER
	7883408	3	SCREW, HX FLANGE, 3/8-16 X 1-1/4 GR8
	704247	3	LOCKNUT, HEX SERR FLANGE, 3/8-16
53	71393913	2	SUPPORT, REAR GRAIN BIN
	703249	8	CAPSCREW, 3/8-16 X 1.0
	Y704734	8	LOCKNUT, HX FLANGE 3/8-16
54	71405934B	1	PLATE, RT TANK SUPPORT
	703249	4	CAPSCREW, 3/8-16 X 1.0
	Y704734	4	NUT, HEX FLANGE TOP LOCK, 3/8-16
55	70936314	1	J-CLIP, 1/2 DIA X .406 MTG. HOLE
	70937685	1	J-CLIP, 3/8 DIA X .406 MTG HOLE
56	71397122	1	ANCHOR
	703249	3	CAPSCREW, 3/8-16 X 1.0
	Y704734	3	NUT, HEX FLANGE TOP LOCK, 3/8-16
57	71397124	1	BRACE
	7701659	1	CAPSCREW, 5/8-11 X 2-1/2
	70918432	3	WASHER, 5/8, WIDE (QTY 1 PRIOR S/N HR36101)
	700703922	1	NUT, HEX FLANGE TOP LOCK, 5/8-11
58	71343344	1	EYEBOLT
	7702145	1	CAPSCREW, 3/4-10 X 2-1/2
	70918433	3	WASHER, 3/4, WIDE (EFF. S/N HR87101)
	700703923	1	NUT, HEX FLANGE TOP LOCK, 3/4-10
	70913160	2	NUT, 3/4-10 REG

CONTINUED

https://truckmanualshub.com/

GRAIN BIN
UPPER STRUCTURE & MOUNTS

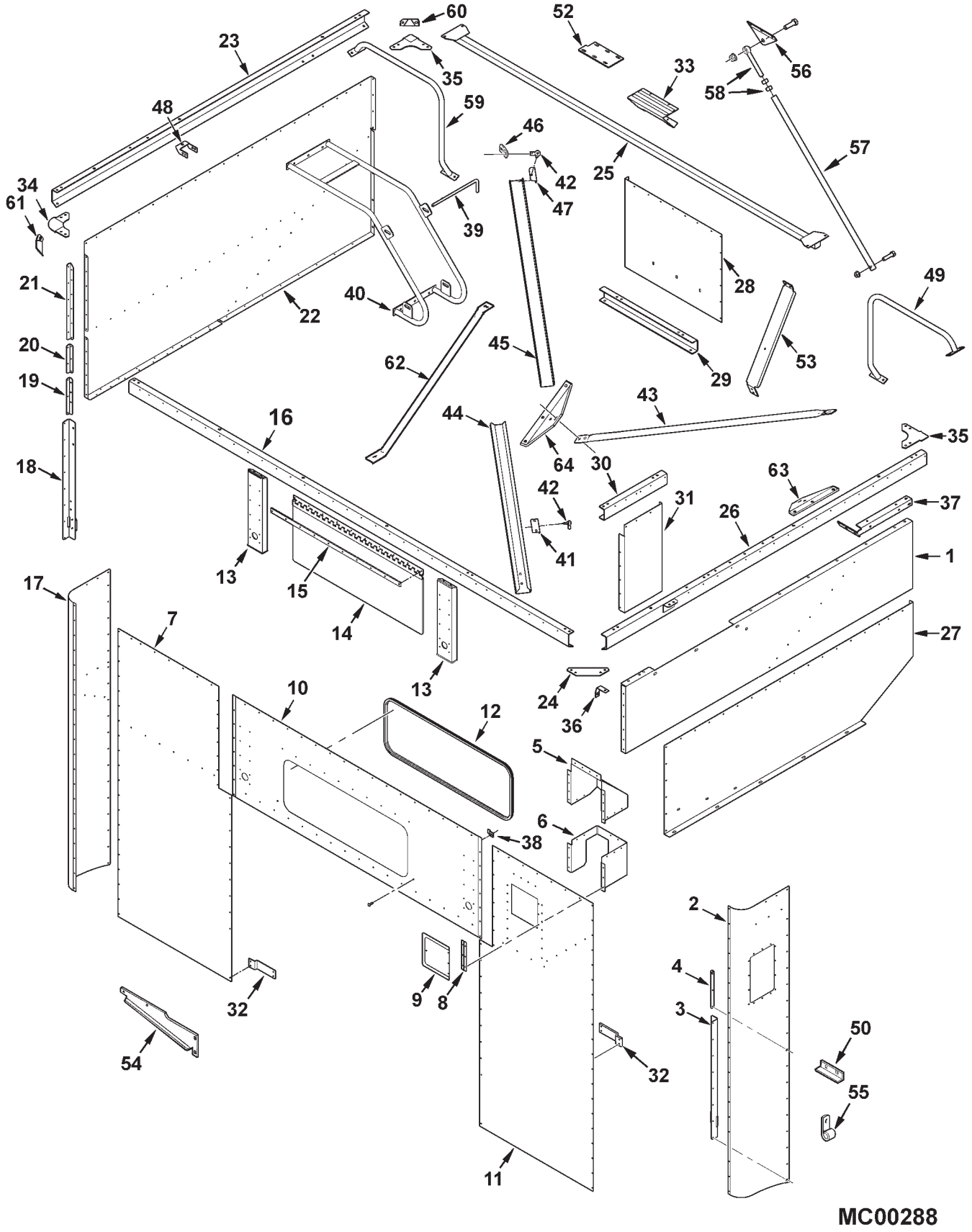

https://truckmanualshub.com/

ITEM	NUMBER	QTY	DESCRIPTION
59	71393875	1	RAIL WLDMT, RT BIN EXT'N SUPPORT
	703249	4	CAPSCREW, 3/8-16 X 1.0
	705038	4	LOCKWASHER, 3/8
	70916950	4	NUT, 3/8-16 REG
60	71399270P	3	GUSSET, CORNER (EFF. S/N HN36101)
61	71399271P	1	GUSSET, CORNER (EFF. S/N HN36101)
	703249	8	CAPSCREW, 3/8-16 X 1.0
	Y704734	8	NUT, HEX FLANGE TOP LOCK, 3/8-16
	70917378	4	WASHER, 3/8 WIDE
62	71403618B	1	BRACE, UNLOADER (EFF. S/N HN36101)
	70920415	2	CAPSCREW, 3/8-16 X 1-1/4
	705038	2	LOCKWASHER, 3/8
	70916950	2	NUT, 3/8-16 REG
63	71408827	1	BRACKET, X-BRACE, UPPER (YR 2005 FIELD CAMPAIGN)
	70920415	3	CAPSCREW, 3/8-16 X 1-1/4 GR5
	70917378	3	WASHER, 3/8 WIDE
	Y704734	3	NUT, HEX FLANGE TOP LOCK, 3/8-16
64	71408828	1	BRACKET, X-BRACE, LOWER (YR 2005 FIELD CAMPAIGN)
	70928635	3	SCR,HEX WSHR HD TAPPING, 3/8-16 X 1-1/4

MC00288
PR: 296

https://truckmanualshub.com/

BIN EXTENSIONS

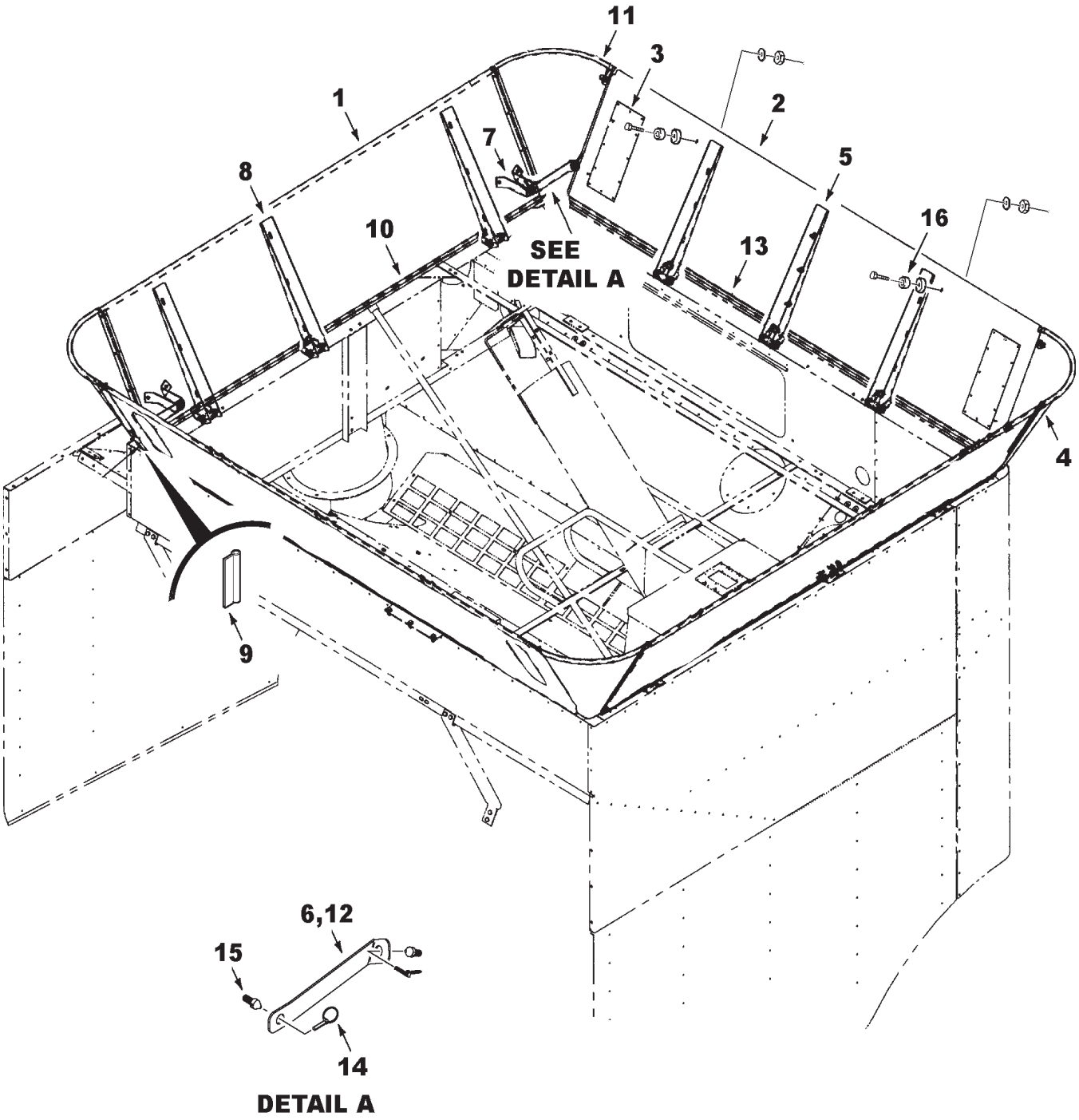

MC00290

https://truckmanualshub.com/

ITEM	NUMBER	QTY	DESCRIPTION
1	71396404R	2	PANEL ASY., SIDE (W/HINGES)
	71393870	4	HINGE
	700717635	16	RIVET, 3/16 DIA X .25
2	71396403	2	PANEL ASY., END (INCL. ITEM 3)
3	71376350	4	PANEL, WINDOW
	70924837	48	RIVET, 3/16 X 9/32
4	71393867	2	CORNER WLDMT, RF AND LR
	70937650	8	RIVET, 3/16 X .402, RED HEAD
5	71393868	6	CHANNEL, HINGE, FRONT & REAR
	7772767	6	CAPSCREW, 3/8-16 X 3-1/2
	700129071	6	SPACER, .531 OD X .875 ID
	Y704734	6	LOCKNUT, HEX FLANGE, 3/8-16
	112845W1	18	SCREW, TRUSS HD, 5/16-18 X 1.0, RED
	70917378	18	WASHER, FLAT 3/8
	70917356	18	LOCKWASHER, 5/16
	70917372	18	HEXNUT, 5/16-18
6	71395386P	2	STRAP, CORNER SUPPORT, RF & LR
7	71393871R	4	BRACKET, HINGE MOUNTING
	112845W1	8	SCREW, TRUSS 5/16-18 X 1.0, RED HEAD
	Y705020	8	LOCKWASHER, 5/16 REG
	70917372	8	NUT, 5/16-18 REG
8	71393869	6	CHANNEL, HINGE, SIDES
	7772767	6	CAPSCREW, 3/8-16 X 3-1/2
	700129071	6	SPACER, .531 OD X .875 ID
	Y704734	6	LOCKNUT, HEX FLANGE, 3/8-16
	112845W1	18	SCREW, TRUSS HD, 5/16-18 X 1.0, RED
	70917378	18	WASHER, FLAT 3/8
	70917356	18	LOCKWASHER, 5/16
	70917372	18	HEXNUT, 5/16-18
9	71395390	4	SEAL, CORNER
10	71395388	2	SEAL, SIDE
11	71394418	2	CORNER WLDMT, LF & RR
	70937650	8	RIVET, 3/16 X .402, RED HEAD
12	71395387P	2	STRAP, CORNER SUPPORT, LF & RR
13	71395389	2	SEAL, FRONT & REAR PANEL
14	863415	12	PIN, KLIK, W/ CHAIN
	705632	8	WASHER, FLAT 5/8
15	1656110W2	12	PIN, SHIELD LOCK
	70916950	12	NUT, 3/8-16 REG
	705038	12	LOCKWASHER, 3/8
	70917378	12	WASHER, FLAT 3/8 WIDE
16	72509675	4	BUMPER, RUBBER
	7703473	4	CAPSCREW, 1/4-20 X 1-1/4
	700134393	4	SPACER, .47 TH
	705012	4	LOCKWASHER, 1/4
	704007	4	NUT, 1/4-20 REG

https://truckmanualshub.com/

FUEL TANKS

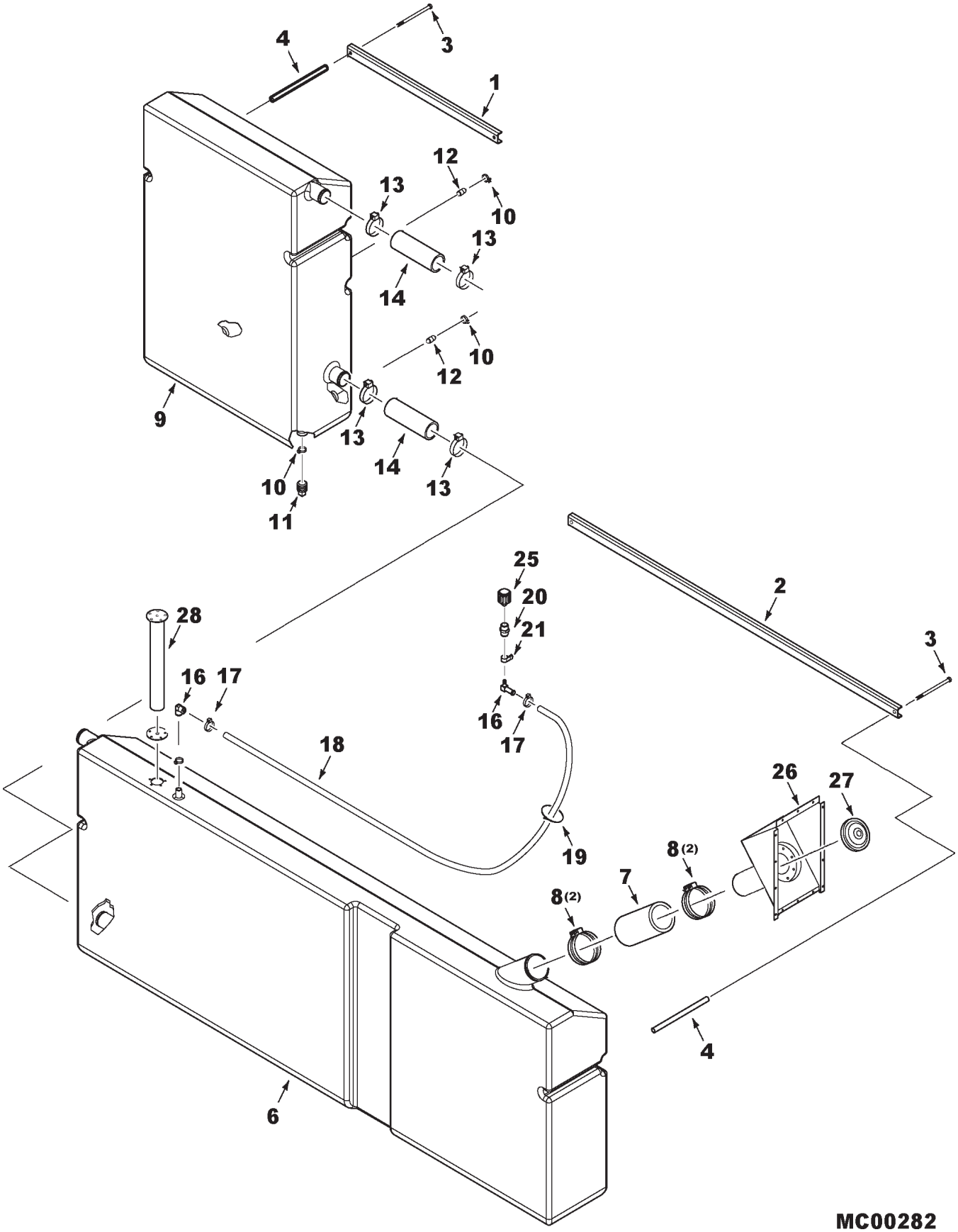

https://truckmanualshub.com/

ITEM	NUMBER	QTY	DESCRIPTION
1	71389785	1	CHANNEL, TANK RETAINING (RH)
2	71389784	1	CHANNEL, TANK RETAINING (LH)
3	70937179	4	SCREW, CAP, 3/8-16 X 11.0
	705038	4	LOCKWASHER, 3/8
4	71390914	4	SPACER
6	71388751	1	TANK, FUEL (LH)
7	71390241	1	HOSE, FILLER NECK COUPLER
8	3725988M1	4	CLAMP, #60, 3-3/8 TO 4-1/4
9	71388752	1	TANK, FUEL (RH)
10	7020027	3	CLAMP, HOSE, WORM DR, .81-1.50
11	70905262	1	PLUG, SQ HD, 3/4 NPT
12	70901828	2	BUSHING, 3/4 X 1/2 NPT
	700704010	1	SEALANT
13	720649	4	CLAMP, HOSE, WORM DR, 2.0-3.0
14	71390242	2	HOSE, COUPLER
16	70931226	2	FITTING, 90DEG. PUSH-ON HOSE
	7020027	1	CLAMP, HOSE, WORM DR, .81-1.50
17	70921910	2	CLAMP, HOSE, WORM DR, .44-.78
18	71390248	1	HOSE, VENT
19	3619622M1	1	TIE, SELF-LOCK .184 X 14.0
20	70922863	1	COUPLER, 1/4-18 NPTF
21	70936747	1	CLAMP, .750 TUBE X .281
	7703457	1	CAPSCREW, 1/4-20 X 3/4
	705012	1	LOCKWASHER, 1/4
	704007	1	NUT, 1/4-20 REG
25	71186814	1	BREATHER
26	71391932	1	INLET, FUEL
27	71391625	1	CAP, FUEL FILLER
28	71407293	1	SENDER, FUEL LEVEL W/ GASKET (SEE "ELECTRICAL, GRAIN BIN"

MC00282
PR: 304

https://truckmanualshub.com/

ENGINE COVERS

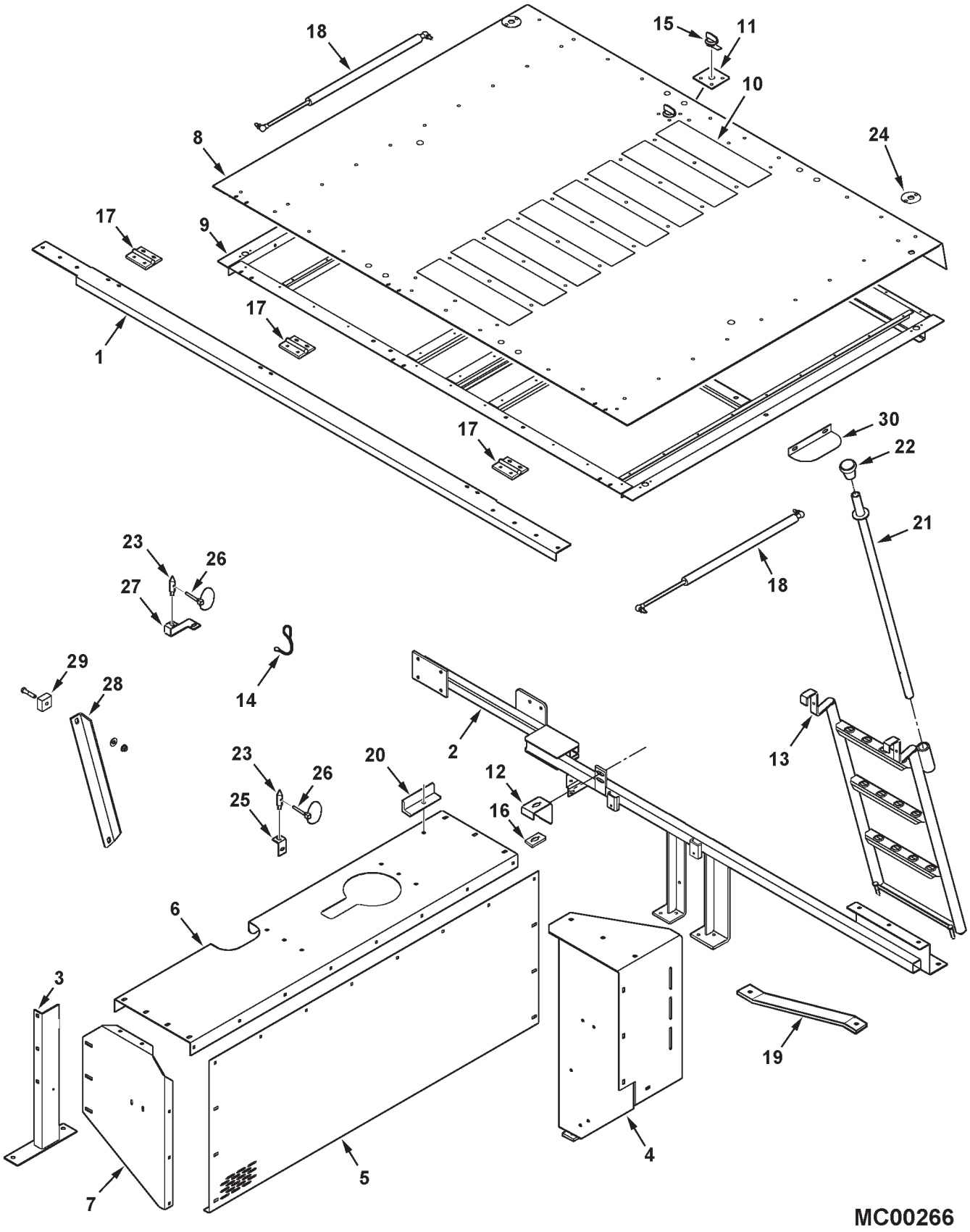

https://truckmanualshub.com/

ITEM	NUMBER	QTY	DESCRIPTION
1	71390755	1	CROSS MEMBER, FRONT ENGINE
	7700461	3	BOLT, RHSN 5/16-18 X 3/4
	70917642	3	WASHER, 5/16 WIDE
	70917356	3	LOCKWASHER, 5/16
	70917372	3	NUT, 5/16-18
2	71392843	1	CROSS MMBR WLDMT,REAR(PRIOR S/N HN36101)
	71400914	1	CROSS MMBR WLDMT,REAR (EFF. S/N HN36101 TO HN36999)
	71406409	1	CROSS MMBR WLDMT,REAR (EFF. S/N HP36101)
	70921210	2	CAPSCREW, 3/8-16 X 1 GR5
	70917378	2	WASHER, 3/8 WIDE
	70916965	2	LOCKWASHER, 3/8
	70916950	2	NUT, 3/8-16
3	71391114	1	SUPPORT WLDMT., LH FRONT ENGINE
	70921176	2	CAPSCREW, 1/2-13 X 1-1/4
	Y705046	2	LOCKWASHER 1/2
	704031	2	NUT, 1/2-13
4	71395372	1	SUPPORT WLDMT., LH REAR ENGINE
	70921333	2	CAPSCREW, 5/16-18 X 1
	70917642	2	WASHER, 5/16 WIDE
	70917356	2	LOCKWASHER 5/16
	70917372	2	NUT, 5/16-18
	68759	3	BOLT, RHSN 3/8-16 X 1
	70916965	3	LOCKWASHER 3/8
	70916950	3	NUT, 3/8-16
5	71387759	1	PANEL, LH ENGINE ENCLOSURE
	7700461	14	BOLT, RD HD SQ NK, 5/16-18 X 3/4
	70917642	14	WASHER, 5/16 WIDE
	70917356	14	LOCKWASHER, 5/16
	70917372	14	NUT, 5/16-18
6	71390762	1	TOP PANEL, LH ENGINE (PRIOR S/N HR36101)
	71412895	1	TOP PANEL, LH ENGINE (EFF. S/N HR36101)
	7700461	7	BOLT, RD HD SQ NK, 5/16-18 X 3/4
	7700578	2	BOLT, RD HD SQ NK, 5/16-18 X 1
	70917642	9	WASHER, 5/16 WIDE
	70917356	9	LOCKWASHER, 5/16
	70917372	9	NUT, 5/16-18
7	71387761	1	FRONT, LH ENGINE ENCLOSURE
	68759	3	BOLT, RD HD SQ NK, 3/8-16 X 1
	70917378	3	WASHER, 3/8 WIDE
	70916965	3	LOCKWASHER, 3/8
	70916950	3	NUT, 3/8-16
8	71392846	1	SHEET ASY, W/DECALS (PRIOR S/N HN36101)
	71400911R	1	SHEET ASY, W/DECALS (EFF. S/N HN36101 TO HN36999)
	71405950R	1	SHEET ASY, W/DECALS (EFF. S/N HP36101 TO HP36999)
	71410657	1	SHEET ASY, W/DECALS (EFF. S/N HR36101)
	71379132	2	DECAL, WARNING ENGINE
	70937649	65	POP-RIVET, 3/16 X .063-.125 GRIP,RED
	70937650	12	POP-RIVET, 3/16 X .126-.250 GRIP,RED
	7700461	8	BOLT, RD HD SQ NK, 5/16-18 X 3/4
	70917642	8	WASHER, 5/16 WIDE
	70917356	8	LOCKWASHER, 5/16
	70917372	8	NUT, 5/16-18

CONTINUED

https://truckmanualshub.com/

ENGINE COVERS

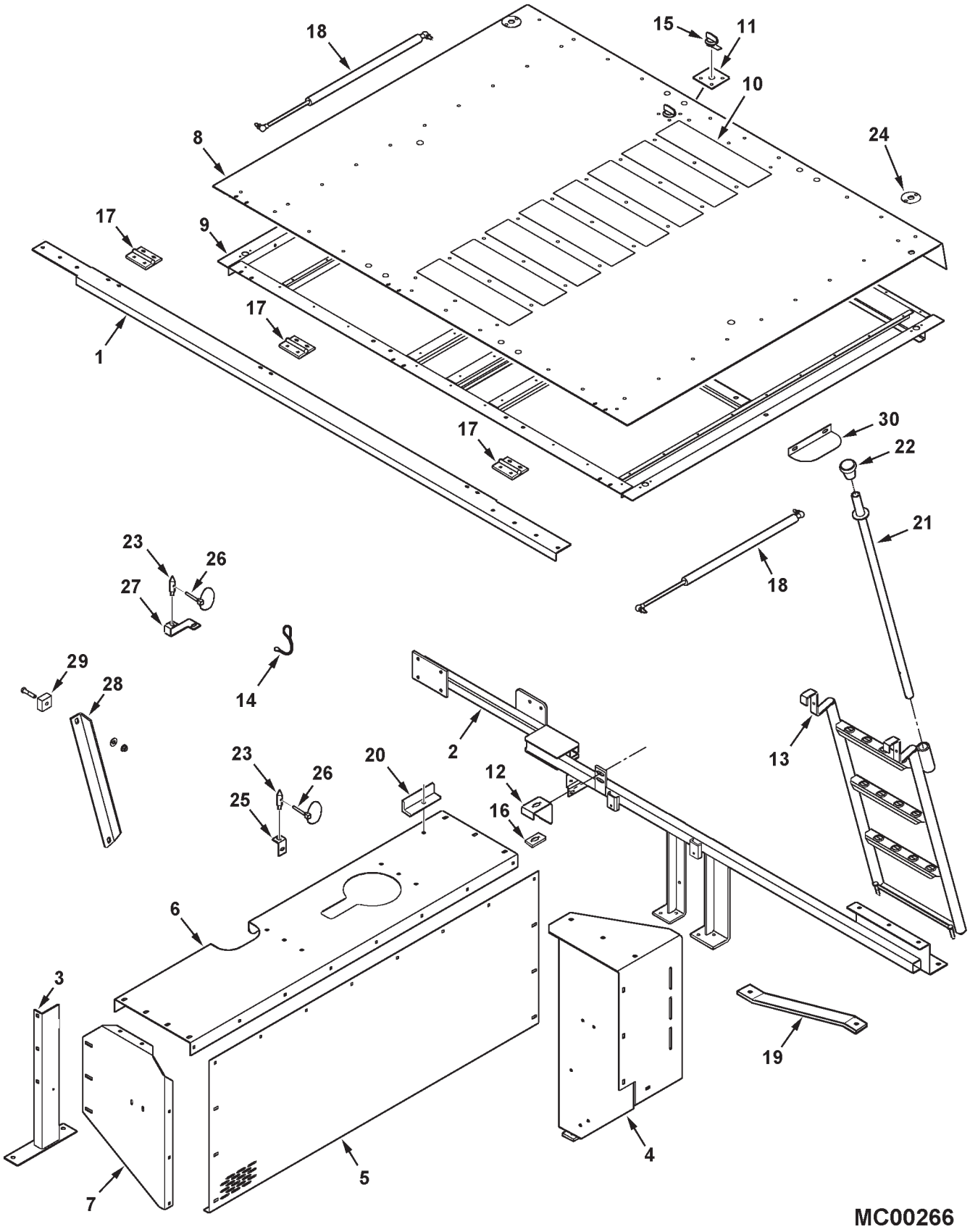

https://truckmanualshub.com/

ITEM	NUMBER	QTY	DESCRIPTION
9	71392847	1	FRAME WLMT, ENG COVER(PRIOR S/N HP36101)
	71405945	1	FRAME WLMT, ENG COVER (EFF. S/N HP36101 TO HP36999)
	71410658	1	FRAME WLMT, ENG COVER (EFF. S/N HR36101)
	68759	2	BOLT, RD HD SQ NK, 3/8-16 X 1
	70917378	2	WASHER, 3/8, WIDE
	70916965	2	LOCKWASHER, 3/8
	70916950	2	NUT, 3/8-16 REG
10	71388938	8	TAPE, ANTI-SKID
11	71388942	1	REINF PLATE, LATCH
	70937650	4	POP-RIVET, 3/16 X .126-.250 GRIP,RED
12	71388944	1	RECEIVER BRKT WLMT, ENG COVER (PRIOR S/N HR36101)
	71410659	1	RECEIVER BRKT WLMT, ENG COVER (EFF. S/N HR36101)
	70931350	2	BOLT, RD HD SQ NK, 3/8-16 X 1
	70917378	2	WASHER, 3/8 WIDE
	70916965	2	LOCKWASHER, 3/8
	70916950	2	NUT, 3/8-16
13	71393476	1	LADDER WLMT (PRIOR S/N HN36101)(SERVICE WITH 71400913)
	71400913	1	LADDER WLMT (EFF.S/N HN36101 TO HP36999)
	71410375	1	LADDER WLMT (EFF. S/N HR36101)
	70937714	2	PIN, CLEVIS RETNR, W/RING .25 X 2.5
14	71390770	2	CABLE, LANYARD, 6 LG (PRIOR S/N HN36101)
	70934892	2	PIN, CLEVIS RETNR, W/RING .19 X 1.3 (PRIOR S/N HN36101)
	70931820	2	SCREW, TAPPING #10-16 X 1/2
15	700714706	1	LATCH, QUARTER TURN
16	700714529	1	RECEIVER, LATCH
	70924837	2	RIVET, 3/16 X .063-.125 GRIP
17	71345822	3	HINGE
	7703457	12	CAPSCREW, 1/4-20 X 3/4 (PRIOR S/N HR36101)
	70931317	12	BOLT, RD HD SQ NK, 1/4-20 X 3/4 (EFF. S/N HR36101)
	70937101	6	NUT, PUSH-ON, 1/4 (EFF. S/N HR36101)
	70917377	12	WASHER, 1/4 WIDE
	705012	12	LOCKWASHER, 1/4
	70916622	12	NUT, 1/4-20
18	71305916	2	GAS SPRING
	71307131	2	STUD/BALL
	71307132	2	CLIP/BALL STUD
	70917356	4	LOCKWASHER, 5/16
	70917372	4	NUT, 5/16-18
19	-----	1	STRAP, BRACE (9690 ONLY)
20	71390759R	2	HOLD DOWN ASY (PRIOR S/N HN36101)
	70921210	2	CAPSCREW, 3/8-16 X 1 GR5
21	71400736	1	HANDLE WLDMT, ASSIST (EFF. S/N HN36101)
	70937714	1	PIN, CLEVIS RETNR, W/RING, .25 X 2.5
	70916937	1	PIN, SPRING, 1/4 X 1-1/4
22	71379254	1	TIP, CRUTCH (EFF. S/N HN87101)
23	1656110W2	2	PIN, SHIELD LOCK (EFF. S/N HN36101)
	70917378	2	WASHER, 3/8, WIDE
	70916965	2	LOCKWASHER, 3/8
	70916950	2	NUT, 3/8-16 REG

CONTINUED

https://truckmanualshub.com/

ENGINE COVERS

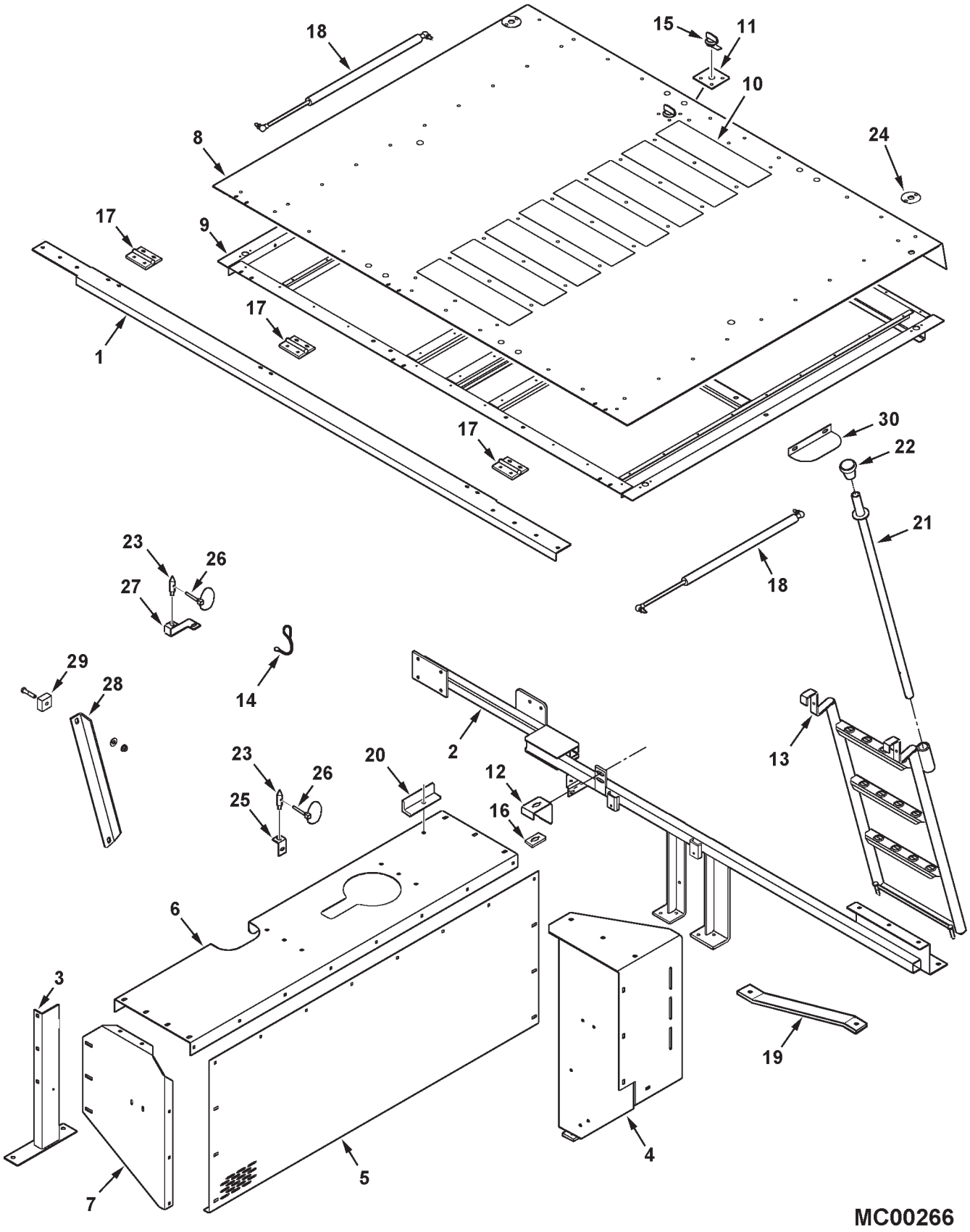

https://truckmanualshub.com/

ITEM	NUMBER	QTY	DESCRIPTION
24	71400739	2	PLATE, PIN RECEIVER (EFF. S/N HN36101)
	700717635	4	RIVET, .188 X .126-.250 GRIP
25	71400738	1	ANGLE, ENGINE COVER (EFF. S/N HN36101 TO HN36999)
	71410424	1	ANGLE, ENGINE COVER (EFF. S/N HR36101)
	70921965	1	CAPSCREW, 3/8-16 X 3/4
	70917378	1	WASHER, 3/8, WIDE
	70916965	1	LOCKWASHER, 3/8
	70916950	1	NUT, 3/8-16 REG
26	863415	2	PIN, KLIK 3/16 X 1 W/CHAIN & COTTER (EFF. S/N HN36101)
27	71406414	1	BRKT, ENG COVER HOLD DOWN (EFF. S/N HP36101 TO HP36999)
	71410423	1	BRKT, COVER HOLD DOWN (EFF. S/N HR36101)
28	71412896	1	BRACE ANGLE (EFF. S/N HR36101)
	70921971	1	CAPSCREW, 3/8-16 X 1-3/4 GR5
	70917378	1	WASHER, 3/8 WIDE
	Y704734	1	NUT, FLANGE TOP LOCK, 3/8-16
29	71392705	1	SPACER PLATE
30	71412894	1	COVER (EFF. S/N HR36101)
	70921332	2	CAPSCREW, 5/16-18 X 3/4
	Y705525	2	WASHER, 5/16, HARD
	70917356	2	LOCKWASHER, 5/16
	70917372	2	NUT, 5/16-18

MC00266
PR: 306

https://truckmanualshub.com/

REAR DECK AND LADDER

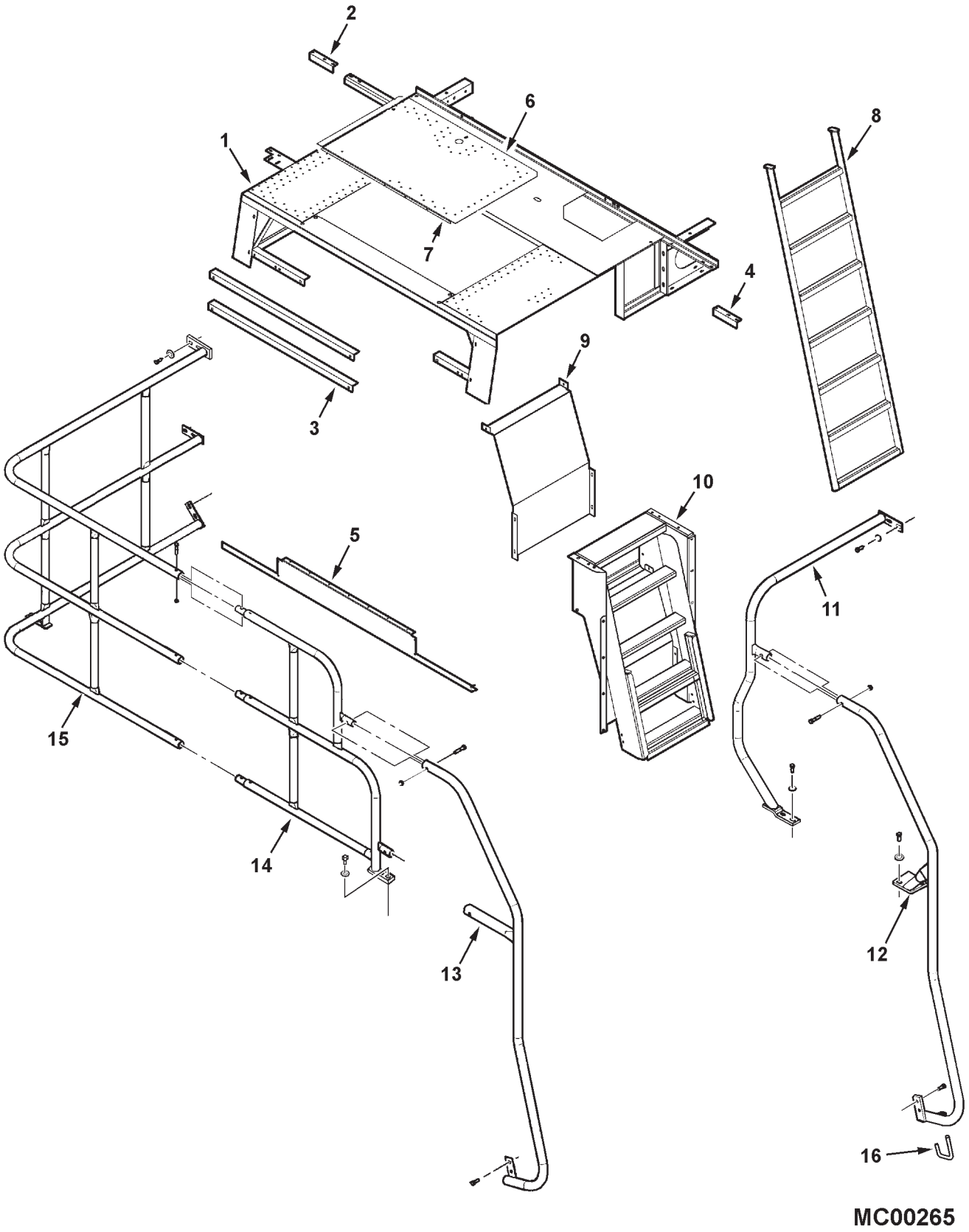

https://truckmanualshub.com/

ITEM	NUMBER	QTY	DESCRIPTION
1	71395358	1	DECK & FLOOR WLMT, RR(PRIOR S/N HP36101)
	71406922	1	DECK & FLOOR WLMT, RR (EFF. S/N HP36101 TO HP36999)
	71410990	1	DECK & FLOOR WLMT, RR (EFF. S/N HR36101)
	70921210	5	CAPSCREW, 3/8-16 X 1
	70917378	5	WASHER, 3/8 WIDE
	70916965	5	LOCKWASHER, 3/8
	70916950	5	NUT, 3/8-16
	701235	6	CAPSCREW, 1/2-13 X 1-1/2
	70918431	12	WASHER, WIDE 1/2
	Y705046	6	LOCKWASHER, 1/2
	704031	6	NUT, 1/2-13
2	2630430W1R	2	BRACKET, SHIELD ADJUSTMENT
3	2635250W1R	2	ANGLE, REAR DECK
	706432	2	TRUSS SCREW, 5/16-18 X 1
	70921332	2	CAPSCREW, 5/16-18 X 3/4
	70917356	4	LOCKWASHER, 5/16
	70917372	4	NUT, 5/16-18
4	2630420W1R	1	BRACKET, SHIELD, ADJUSTMENT
	70921210	6	CAPSCREW, HEX, 5/16-18 X 1
	70917642	6	WASHER, FLAT, 5/16
	Y704726	6	NUT, FLANGE TOP LOCK, 5/16-18
5	71393494	1	TRIM REAR, REAR DECK
	70918249	2	MACHINE SCREW, CRTH, 5/16-18 X 3/4
	Y705020	2	LOCKWASHER, 5/16
	70917372	2	NUT, HEX 5/16-18
6	71393492	1	DOOR, ROTOR DRIVE ACCESS
	70918249	1	MACHINE SCREW, CRTH, 5/16-18 X 3/4
7	71393493	1	HINGE, PIANO 34"
	70937253	14	RIVET, BLIND
8	71386773	1	LADDER, REAR WLDMT
9	71391831	1	SHIELD, REAR LADDER
	71379129	1	DECAL, WARNING FALLING
	71379127	1	DECAL, WARNING SPREADER
	70921332	4	BOLT, 5/16-18 X 3/4
	70917642	4	WASHER, WIDE 5/16
	Y705020	4	LOCKWASHER, 5/16
10	71391835	1	SUPPORT, REAR LADDER
	70921210	6	CAPSCREW, 3/8-16 X 1
	70916965	6	LOCKWASHER, 3/8
	70916950	6	NUT, HEX 3/8-16
	70921332	6	CAPSCREW, 5/16-18 X 3/4
	Y705020	6	LOCKWASHER, 5/16
	70917372	6	NUT, HEX 5/16-18

CONTINUED

https://truckmanualshub.com/

REAR DECK AND LADDER

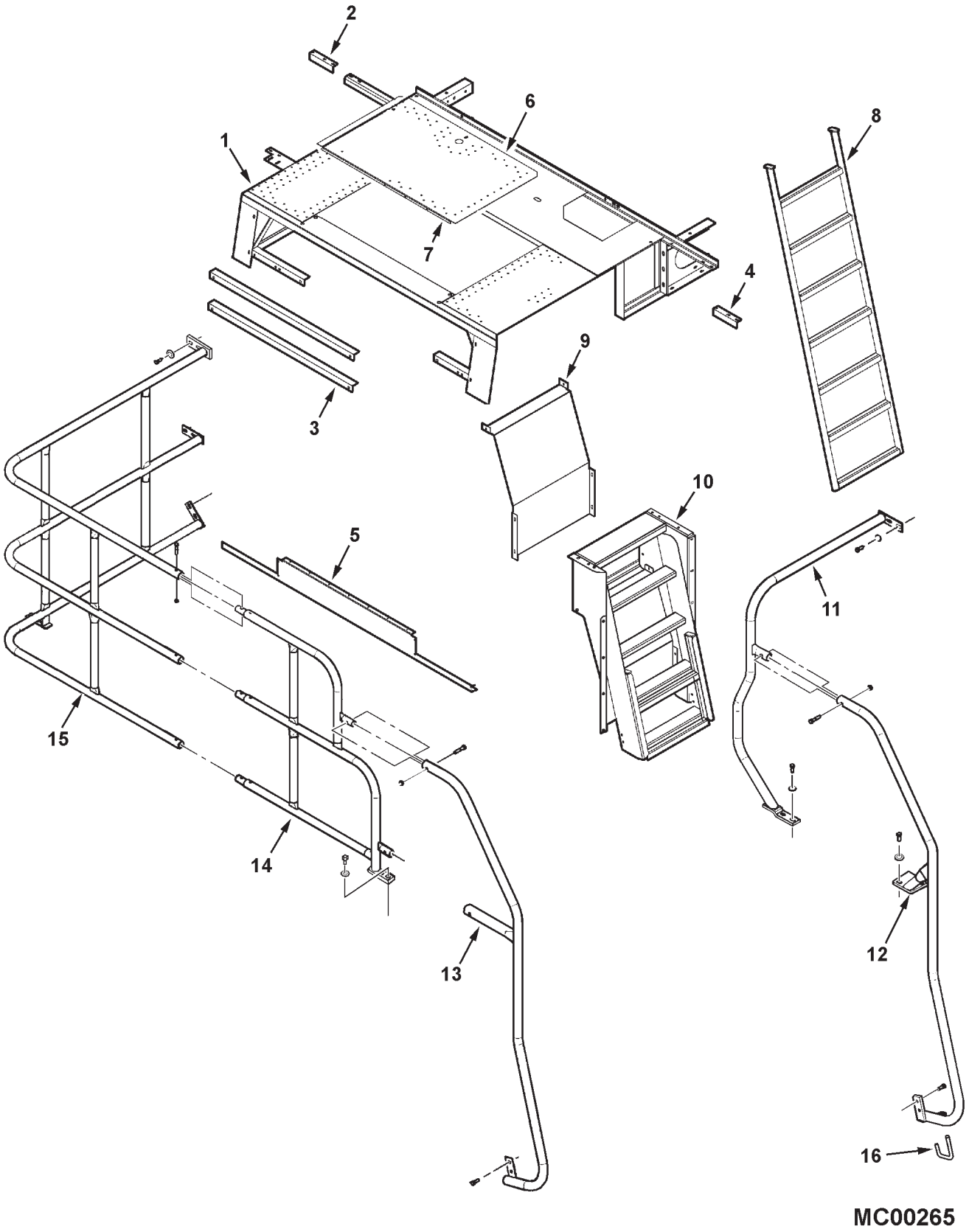

https://truckmanualshub.com/

ITEM	NUMBER	QTY	DESCRIPTION
11	71393992	1	RAIL WLMT, RH RR DECK(PRIOR S/N HP36101)
	71406772	1	RAIL WLMT, RH RR DECK (EFF. S/N HP36101)
	70921210	4	CAPSCREW, 3/8-16 X 1
	70916965	4	LOCKWASHER, 3/8
	70916950	4	NUT, HEX 3/8-16
	70917378	4	WASHER, WIDE 3/8
12	71393995	1	GRAB RAIL, RIGHT
	70921210	4	CAPSCREW, 3/8-16 X 1
	70921971	1	CAPSCREW, 3/8-16 X 1-3/4
	70916965	4	LOCKWASHER, 3/8
	70916950	4	NUT, HEX 3/8-16
	70917378	2	WASHER, WIDE 3/8
	7704141	1	NUT, HTLN 3/8-16
13	71393994	1	GRAB RAIL, LEFT
	70921210	2	CAPSCREW, 3/8-16 X 1
	70921971	2	CAPSCREW, 3/8-16 X 1-3/4
	70916965	2	LOCKWASHER, 3/8
	70916950	2	NUT, HEX 3/8-16
	7704141	2	NUT, HTLN 3/8-16
14	71393984	1	HANDRAIL, CENTER REAR DECK
	70921210	2	CAPSCREW, 3/8-16 X 1
	70917378	2	WASHER, WIDE 3/8
15	71390789	1	HANDRAIL, LEFT REAR DECK
	70921210	8	CAPSCREW, 3/8-16 X 1
	70921971	3	CAPSCREW, 3/8-16 X 1-3/4
	70916965	8	LOCKWASHER, 3/8
	70916950	8	NUT, HEX 3/8-16
	70917378	8	WASHER, WIDE 3/8
	7704141	3	NUT, HTLN 3/8-16
16	2632690W1	1	ROD, LADDER SUPPORT
	70918431	1	WASHER, 1/2
	62182	1	COTTER PIN

MC00265
PR: 310

https://truckmanualshub.com/

SIDE SHIELDS
LEFT SIDE

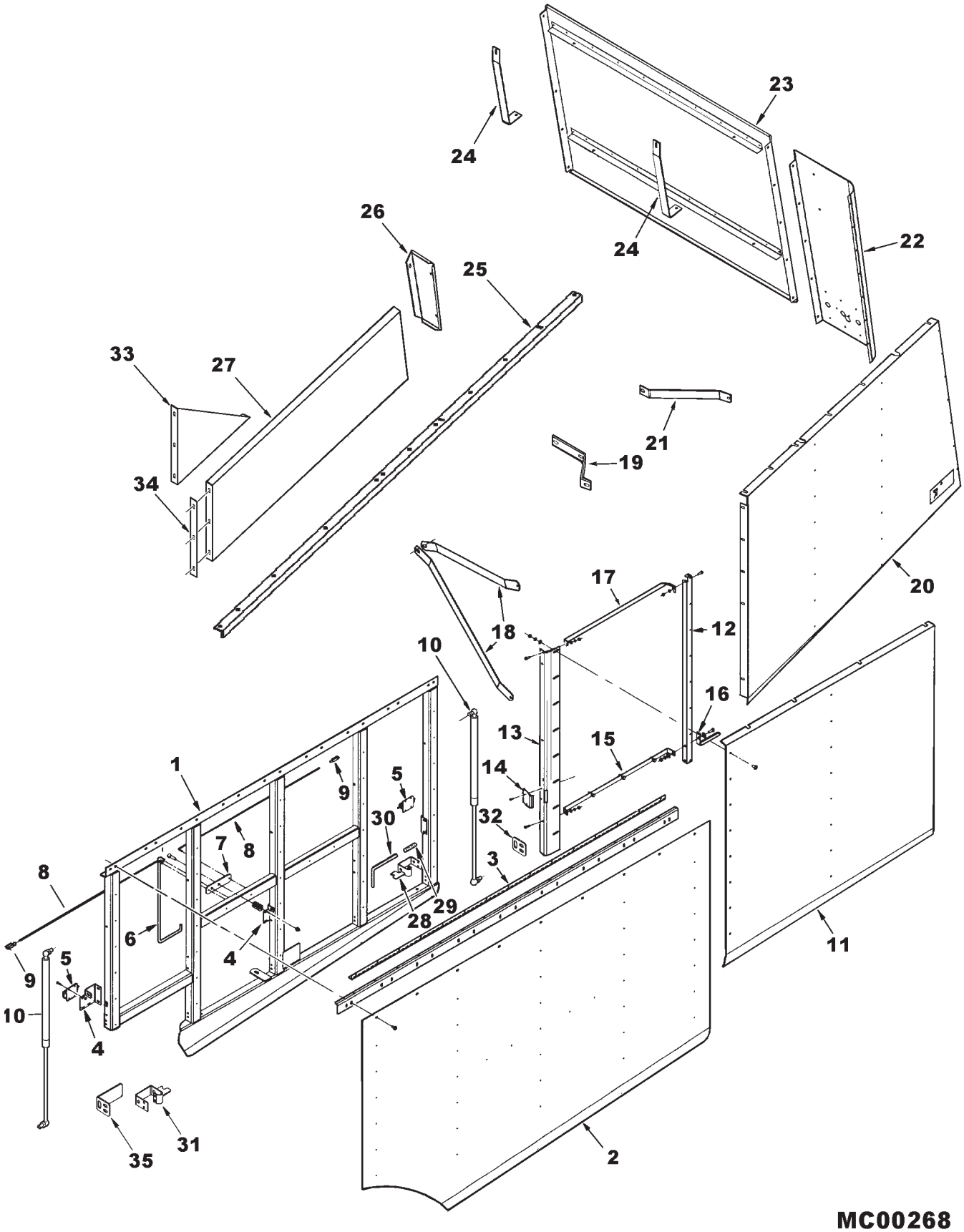

https://truckmanualshub.com/

SIDE SHIELDS
LEFT SIDE

ITEM	NUMBER	QTY	DESCRIPTION
-	71398451	1	SHIELD ASY, LEFT FRONT (INCL ITEMS 1-9 & 28-31)
1	71398452	1	FRAME, SHIELD FRONT
2	71398454	1	SHIELD, FRONT
	71379128	1	DECAL, WARNING
	700721602	9	SCREW, TRUSS HD, RED, 5/16-18 X 5/8
	70931277	9	NUT, HEX SERR FLNG, 5/16-18
	700717635	57	RIVET, .188 X .125-.250
3	71349763	1	HINGE, PIANO
	71398453	1	ANGLE, SHIELD HANGER
	700717635	15	RIVET, .188 X .125-.250
4	71394874	3	MOUNT, LATCH
	7883267	9	SCREW, HEX WSHR HD, 1/4-20 X 1/2
	1703354	9	NUT, HEX FLANGE TOP LOCK, 1/4-20
5	71395354	2	LATCH ASY.
	700705088	8	SCREW, PAN #10-24 X 3/4
	70917380	8	WASHER
	705004	8	LOCKWASHER
	Y704072	8	NUT, #10-24 GR2
6	71395352	1	HANDLE, SHIELD LATCH
	62026	1	COTTER PIN, 1/16 X 3/4
	70917378	1	WASHER, 3/8 WIDE
7	71395353	1	PIVOT, LATCH
	70920415	1	CAPSCREW, 3/8-16 X 1-1/4
	70917378	4	WASHER, 3/8 WIDE
	Y704635	1	NUT, HEX CENTER LOCK, 3/8-16
8	71396401	2	ROD, LATCH
	62026	2	COTTER PIN, 1/16 X 3/4
	70917380	2	WASHER, #10
9	70929595	2	YOKE
	70929591	2	PIN, CLEVIS
	62026	2	COTTER PIN, 1/16 X 3/4
	Y704445	2	NUT, 10-32 GR2
10	71396402	2	SPRING, GAS
	71339847	2	STUD, BALL 10MM
	Y705020	2	LOCKWASHER, 5/16
	70917372	2	NUT, HEX 5/16-18
11	71392831R	1	SHIELD ASY, MIDDLE (INCL ITEMS 12-17)
	71392832R	1	SHIELD, LEFT MIDDLE
	70921210	2	CAPSCREW, 3/8-16 X 1
	70916965	2	LOCKWASHER, 3/8
	70916950	2	NUT, HEX 3/8
12	71392837	1	ANGLE, STIFFENER
	70937649	5	RIVET, 3/16 X 9/32 RED
13	71393982	1	STIFFENER, STOP
	112845W1	7	SCREW, TRUSS HD, RED, 5/16-18 X 1
	700721916	2	SCREW, TRUSS HD, BLACK, 5/16-18 X 1
	70917642	9	WASHER, WIDE 5/16
	Y705020	9	LOCKWASHER, 5/16
	70917372	9	NUT, HEX 5/16-18
14	71395351	1	PLATE, STRIKER
	700717635	2	RIVET

CONTINUED

https://truckmanualshub.com/

SIDE SHIELDS
LEFT SIDE

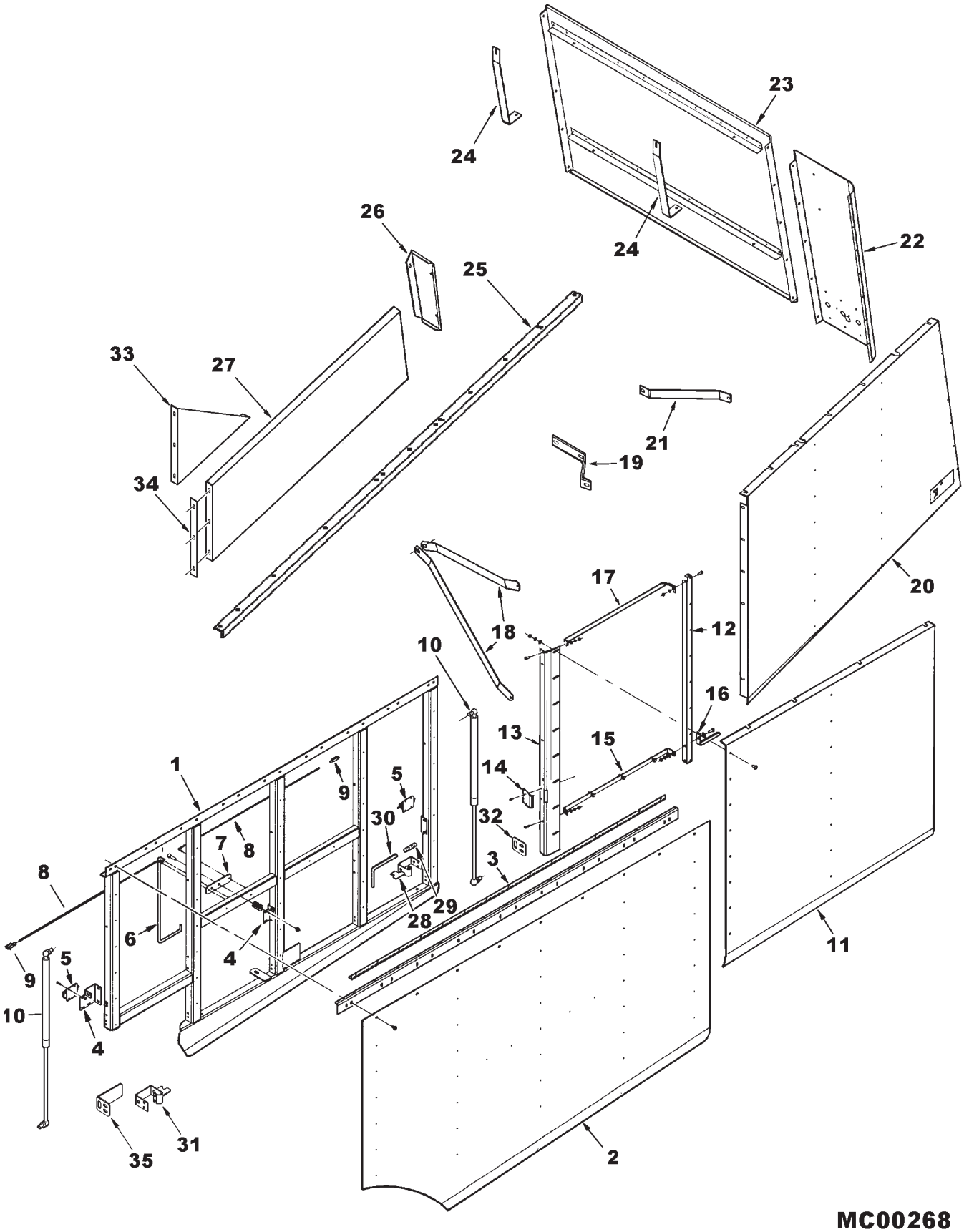

https://truckmanualshub.com/

SIDE SHIELDS
LEFT SIDE

ITEM	NUMBER	QTY	DESCRIPTION
15	71393978R	1	STRAP, CATCH
	7703457	1	CAPSCREW, 1/4-20 X 3/4
	70917377	1	WASHER, WIDE 1/4
	705012	1	LOCKWASHER, 1/4
	70916622	1	NUT, HEX 1/4-20
	112845W1	1	SCREW, TRUSS 5/16-18 X 1
	70917642	2	WASHER, WIDE 5/16
	Y705020	1	LOCKWASHER, 5/16
	70917372	1	NUT, HEX 5/16-18
16	71393977R	1	BRACKET, HANGER
17	71394405R	1	BRACKET
	7703457	2	CAPSCREW, 1/4-20 X 3/4
	70917377	1	WASHER, WIDE 1/4
	705012	2	LOCKWASHER, 1/4
	70916622	2	NUT, HEX 1/4-20
18	71393983R	2	STRAP, SHIELD SUPPORT
	70921333	2	CAPSCREW, 5/16-18 X 1
	70917642	2	WASHER, WIDE 5/16
	Y705020	2	LOCKWASHER, 5/16
	70917372	2	NUT, HEX 5/16-18
	70921210	2	CAPSCREW, 3/8-16 X 1
	70916965	2	LOCKWASHER, 3/8
	70916950	2	NUT, HEX 3/8
19	71394873R	1	STRAP, SHIELD SUPPORT BTRY.
	70921333	1	CAPSCREW, 5/16-18 X 1
	70917642	1	WASHER, WIDE 5/16
	Y705020	1	LOCKWASHER, 5/16
	70917372	1	NUT, HEX 5/16-18
	70921210	1	CAPSCREW, 3/8-16 X 1
	70916965	1	LOCKWASHER, 3/8
	70916950	1	NUT, HEX 3/8
20	71392833R	1	SHIELD ASY., LEFT REAR
	71379127	1	DECAL, WARNING
	70921333	12	CAPSCREW, 5/16-18 X 1
	70917642	12	WASHER, WIDE 5/16
	Y705020	12	LOCKWASHER, 5/16
	70917372	12	NUT, HEX 5/16-18
	7703424	3	SCREW, HEX SERR FLANGE, 3/8-16 X 1
	704247	3	NUT, HEX SERR FLANGE, 3/8-16
21	71395384R	1	STRAP, SHIELD SUPPORT
	70921333	1	CAPSCREW, 5/16-18 X 1
	70917642	1	WASHER, WIDE 5/16
	Y705020	1	LOCKWASHER, 5/16
	70917372	1	NUT, HEX 5/16-18
	70921210	1	CAPSCREW, 3/8-16 X 1
	70916965	1	LOCKWASHER, 3/8
	70916950	1	NUT, HEX 3/8

CONTINUED

https://truckmanualshub.com/

SIDE SHIELDS
LEFT SIDE

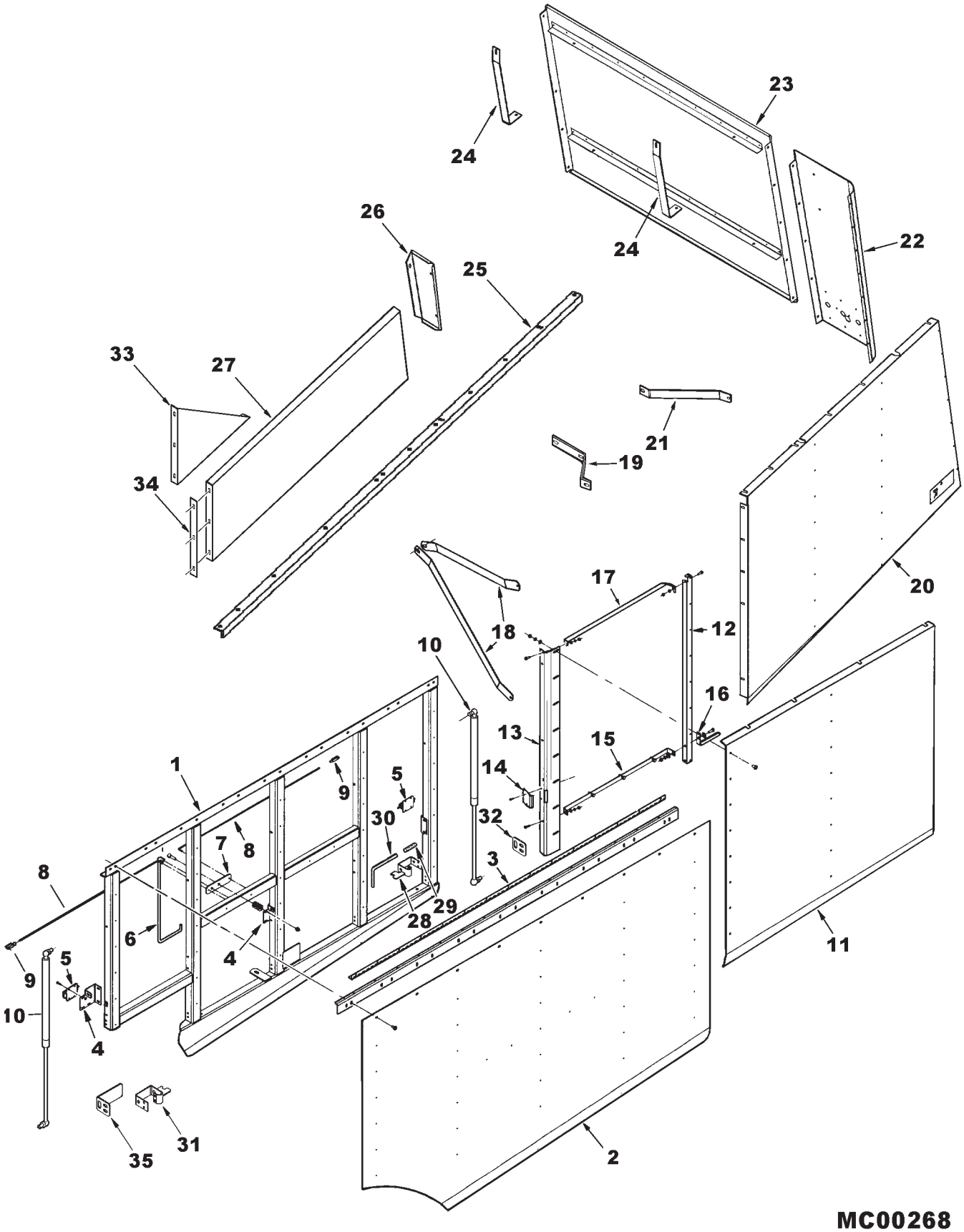

https://truckmanualshub.com/

SIDE SHIELDS
LEFT SIDE

ITEM	NUMBER	QTY	DESCRIPTION
22	71392838P	1	SHIELD ASY., LEFT REAR CORNER
	70937649	8	RIVET, 3/16 X 9/32 RED
	112845W1	2	SCREW, TRUSS 5/16-18 X 1
	70917642	2	WASHER, WIDE 5/16
	Y705020	2	LOCKWASHER, 5/16
	70917372	2	NUT, HEX 5/16-18
	70921965	5	CAPSCREW, 3/8-16 X 3/4
	70916965	5	LOCKWASHER, 3/8
	70916950	5	NUT, HEX 3/8
23	71392835R	1	SHIELD, REAR
	71379127	1	DECAL, WARNING
24	71394867	2	STRAP, SHIELD SUPPORT REAR
	70921965	2	CAPSCREW, 3/8-16 X 3/4
	70916965	2	LOCKWASHER, 3/8
	70916950	2	NUT, HEX 3/8
25	71393985R	1	SUPPORT, LEFT REAR SHIELD
	703249	2	CAPSCREW, 3/8-16 X 1
	70917378	4	WASHER, WIDE, 3/8
	70916965	2	LOCKWASHER, 3/8
	70916950	2	NUT, HEX, 3/8-16
26	71394407R	1	PANEL, END LEFT
	703249	3	CAPSCREW, 3/8-16 X 1
	70917378	4	WASHER, WIDE, 3/8
	70916965	3	LOCKWASHER, 3/8
	70916950	3	NUT, HEX, 3/8-16
27	71395378R	1	PANEL, TOP LEFT
	7703424	5	SCREW, HEX SERR FLANGE, 3/8-16 X 1
	704247	5	NUT, HEX SERR FLANGE, 3/8-16
	70920415	3	CAPSCREW, 3/8-16 X 1-1/4 GR5
	70917378	3	WASHER, WIDE, 3/8
	70916965	3	LOCKWASHER, 3/8
	70916950	3	NUT, 3/8-16 REG
28	71399198	1	BRACKET WLDMT, RH [A]
	7703457	4	CAPSCREW, 1/4-20 X 3/4
	1703354	4	NUT, HEX FLANGE TOP LOCK, 1/4-20
29	Y58040	2	SPRING [A]
30	71399326	2	PIN, LATCH [A]
	70924764	2	PIN, SPRING, 1/8 X 3/4
31	71399199	1	BRACKET WLDMT, LH [A]
	7703457	4	CAPSCREW, 1/4-20 X 3/4
	1703354	4	NUT, HEX FLNG TOP LK, 1/4-20
32	71399329	1	PLATE, LATCH [A]
	7700461	2	BOLT, CARRIAGE, 5/16-18 X 3/4
	Y704726	2	NUT, HEX FLNG TOP LK, 5/16-18
33	71400729	1	GUSSET, SHIELD [A]
34	71400461	1	STRAP [A]
35	71399341	1	SUPPORT ANGLE, DOOR STOP [A]
	7700461	2	BOLT, RND HD SQ NK, 5/16-18 X 3/4
	Y704726	2	NUT, HEX FLNG TOP LOCK, 5/16-18

[A] EFF. S/N HN36101

MC00268
PR: 314

https://truckmanualshub.com/

SIDE SHIELDS
RIGHT SIDE

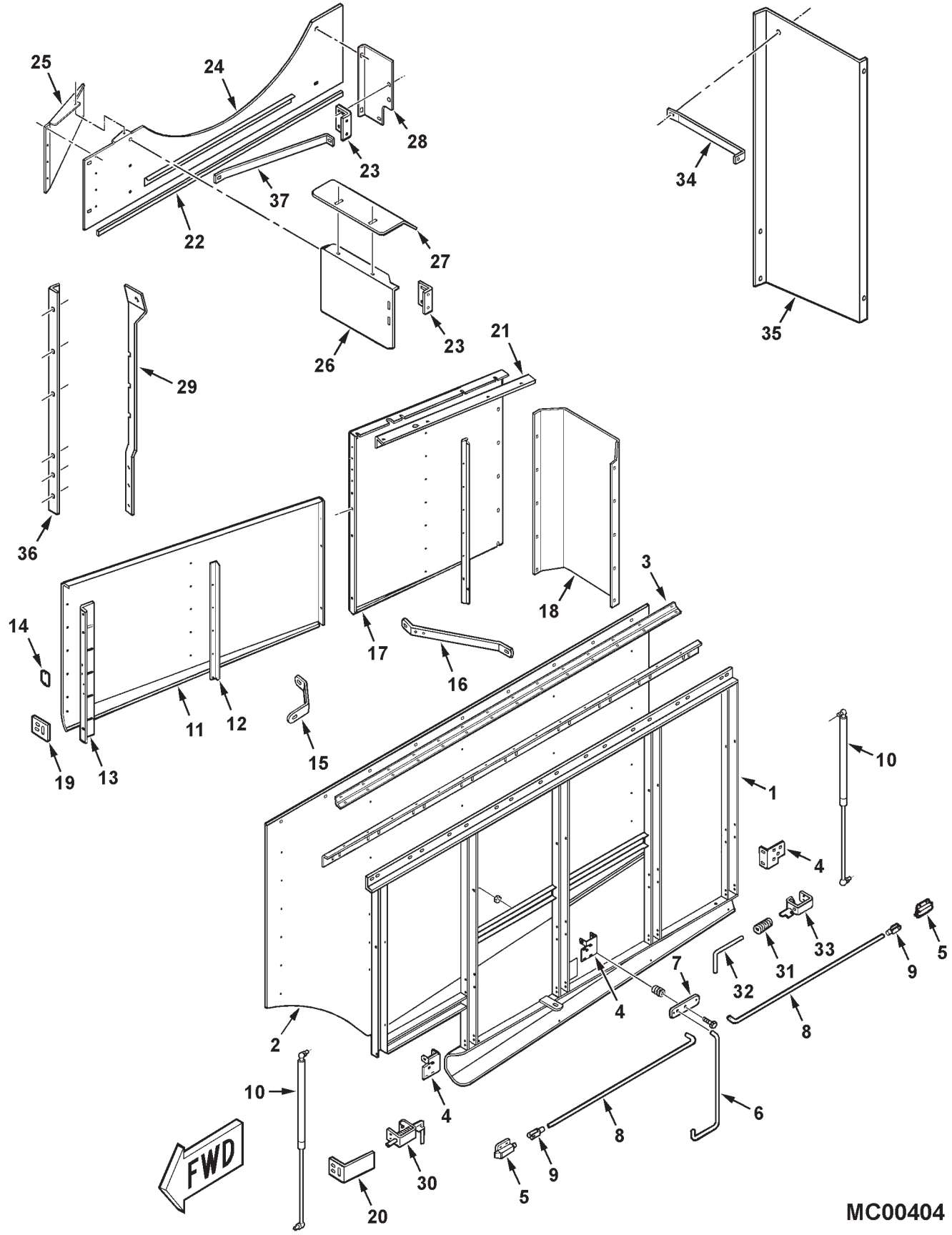

https://truckmanualshub.com/

SIDE SHIELDS
RIGHT SIDE

ITEM	NUMBER	QTY	DESCRIPTION
-	71398473	1	SHIELD ASY, RIGHT FRONT (INCL ITEMS 1-9 & 30-33)
1	71398474R	1	FRAME, SHIELD FRONT
2	71398475R	1	SHIELD, FRONT
	71379128	1	DECAL, WARNING
	700721602	9	SCREW, TRUSS HD, RED, 5/16-18 X 5/8
	70931277	9	NUT, HEX SERR FLNG, 5/16-18
	700717635	57	RIVET, .188 X .125-.250
3	71349763	1	HINGE, PIANO
	71398453	1	ANGLE, SHIELD HANGER
	700717635	15	RIVET, .188 X .125-.250
4	71394874	3	MOUNT, LATCH
	7883267	9	SCREW, HEX WSHR HD, 1/4-20 X 1/2
	70931209	9	NUT, HEX FLNG, 1/4-20
5	71395354	2	LATCH ASY.
	700705088	8	SCREW, PAN HD, #10-24 X 3/4
	70917380	8	WASHER
	705004	8	LOCKWASHER
	Y704072	8	NUT, #10-24 GR2
6	71395352	1	HANDLE, SHIELD LATCH
	62026	1	COTTER PIN, 1/16 X 3/4
	70917378	1	WASHER, 3/8 WIDE
7	71395353	1	PIVOT, LATCH
	70920415	1	CAPSCREW, 3/8-16 X 1-1/4
	70917378	4	WASHER, 3/8 WIDE
	Y704635	1	NUT, HEX CENTER LOCK, 3/8-16
8	71396401	2	ROD, LATCH
	62026	2	COTTER PIN, 1/16 X 3/4
	70917380	2	WASHER, 10
9	70929595	2	YOKE
	70929591	2	PIN, CLEVIS
	62026	2	COTTER PIN, 1/16 X 3/4
	Y704445	2	NUT, #10-32 GR2
10	71396402	2	SPRING, GAS
	71339847	2	STUD, BALL 10MM
	Y705020	2	LOCKWASHER, 5/16
	70917372	2	NUT, HEX 5/16-18
11	71393497R	1	SHIELD ASY, MIDDLE (INCL ITEMS 12-14)
	71392842	1	SHIELD, RIGHT MIDDLE
	70921210	2	CAPSCREW, 3/8-16 X 1
	70916965	2	LOCKWASHER, 3/8
	70916950	2	NUT, HEX 3/8
12	71392830	1	ANGLE, STIFFENER
	70937649	5	RIVET, 3/16 X 9/32 RED
13	71394406	1	STIFFENER, STOP
	112845W1	5	SCREW, TRUSS HD, RED, 5/16-18 X 1
	700721916	2	SCREW, TRUSS HD, BLACK, 5/16-18 X 1
	70917642	7	WASHER, WIDE 5/16
	Y705020	7	LOCKWASHER, 5/16
	70917372	7	NUT, HEX 5/16-18
14	71395351	1	PLATE, STRIKER
	70937650	2	RIVET, .188 X .125-.250

CONTINUED

https://truckmanualshub.com/

SIDE SHIELDS
RIGHT SIDE

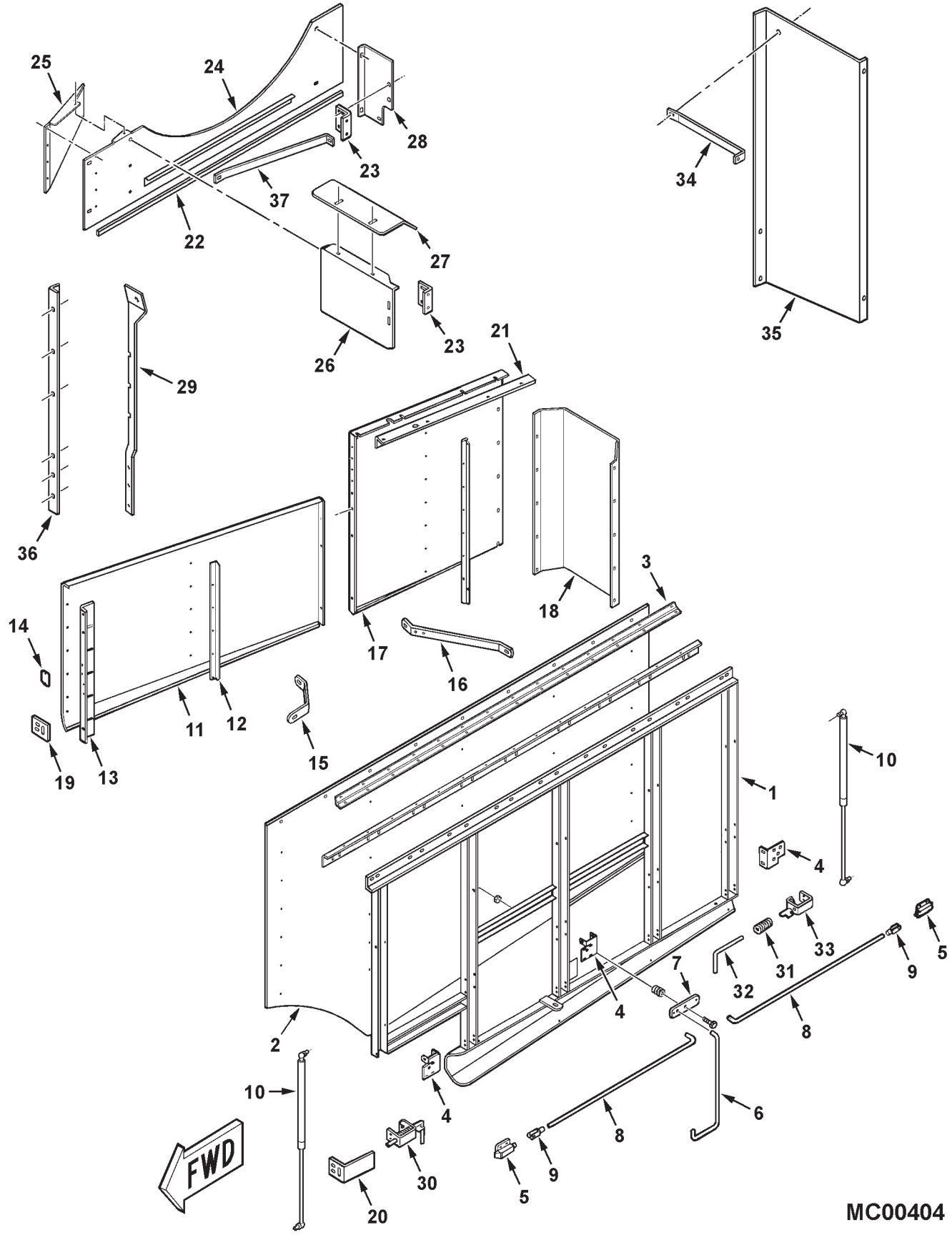

https://truckmanualshub.com/

ITEM	NUMBER	QTY	DESCRIPTION
15	71394413R	1	SUPPORT, MIDDLE SHIELD
	70921332	2	CAPSCREW, 5/16-18 X 3/4
	70917642	4	WASHER, WIDE 5/16
	Y705020	2	LOCKWASHER, 5/16
	70917372	2	NUT, HEX 5/16-18
16	71394868R	1	STRAP, SHIELD SUPPORT
	70921333	1	CAPSCREW, 5/16-18 X 1
	70917642	1	WASHER, WIDE 5/16
	Y705020	1	LOCKWASHER, 5/16
	70917372	1	NUT, HEX 5/16-18
	70921210	1	CAPSCREW, 3/8-16 X 1
	70916965	1	LOCKWASHER, 3/8
	70916950	1	NUT, HEX 3/8
17	71392841R	1	SHIELD ASY, RIGHT RR (PRIOR S/N HR36101)
	71410630	1	SHIELD ASY, RIGHT RR (EFF. S/N HR36101)
	112845W1	6	SCREW, TRUSS 5/16-18 X 1
	70921332	3	CAPSCREW, 5/16-18 X 3/4
	70921333	2	CAPSCREW, 5/16-18 X 1
	70917642	10	WASHER, WIDE 5/16
	Y705020	11	LOCKWASHER, 5/16
	70917372	11	NUT, HEX 5/16-18
18	71392836R	1	SHIELD, RIGHT REAR CORNER
	70921333	2	CAPSCREW, 5/16-18 X 1
	70917642	2	WASHER, WIDE 5/16
	Y705020	2	LOCKWASHER, 5/16
	70917372	2	NUT, HEX 5/16-18
19	71399329	1	PLATE, LATCH [A]
	7700461	2	BOLT, RND HD SQ NK, 5/16-18 X 3/4
	Y704726	2	NUT, HEX FLNG TOP LOCK, 5/16-18
20	71399341	1	SUPPORT ANGLE, DOOR STOP [A]
	7700461	2	BOLT, RND HD SQ NK, 5/16-18 X 3/4
	Y704726	2	NUT, HEX FLNG TOP LOCK, 5/16-18
21	71394414	1	ANGLE, SHIELD SUPPORT(PRIOR S/N HR36101)
	71410633	1	ANGLE, SHIELD SUPPORT (EFF. S/N HR36101)
	70921210	1	CAPSCREW, 3/8-16 X 1
	70917378	1	WASHER, 3/8 NOM
	70916965	1	LOCKWASHER, 3/8
	70916950	1	NUT, HEX 3/8
	70921333	1	CAPSCREW, 5/16-18 X 1
	70917642	1	WASHER, WIDE 5/16
	Y705020	1	LOCKWASHER, 5/16
	70917372	1	NUT, HEX 5/16-18
22	71394415	1	EDGE TRIM, 44.0 LG (PRIOR S/N HR36101)
	71410637	1	EDGE TRIM, 53.1 LG (EFF. S/N HR36101)
23	71393987	2	BRACKET, ANGLE
	70921332	4	CAPSCREW, 5/16-18 X 3/4
	70931277	4	LOCKNUT, SERR FLANGE, 5/16-18
24	71394402	1	SHIELD ASY, 40" (PRIOR S/N HR36101)
	7700461	2	BOLT, RD HD SQ NK, 5/16-18 X 3/4
	70931277	2	LOCKNUT, SERR FLANGE, 5/16-18
	71410030	1	SHIELD ASY, 40" (EFF. S/N HR36101)
	7700461	4	BOLT, RD HD SQ NK, 5/16-18 X 3/4
	70921332	3	CAPSCREW, 5/16-18 X 3/4
	70931277	7	LOCKNUT, SERR FLANGE, 5/16-18

CONTINUED

https://truckmanualshub.com/

SIDE SHIELDS
RIGHT SIDE

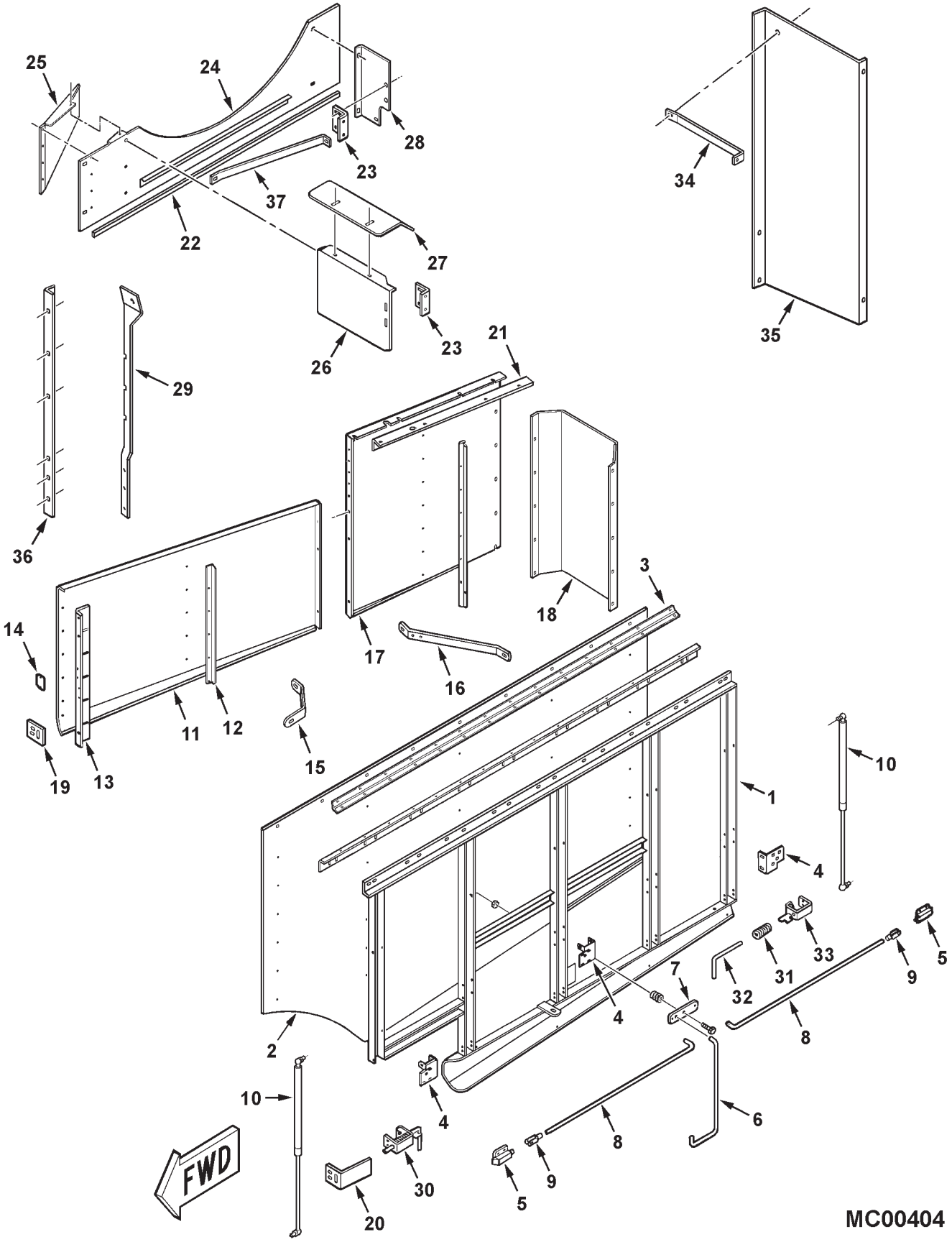

https://truckmanualshub.com/

SIDE SHIELDS
RIGHT SIDE

ITEM	NUMBER	QTY	DESCRIPTION
25	71397311R	1	CUTOFF, ROTARY SCREEN(PRIOR S/N HR36101)
	71410032	1	CUTOFF, ROTARY SCREEN (EFF. S/N HR36101)
	70937649	5	RIVET, 3/16 X .277 RED
26	71397313	1	MOUNT PANEL, DEFLCTR (PRIOR S/N HR36101)
	71410033	1	MOUNT PANEL, DEFLCTR (EFF. S/N HR36101)
	70921332	3	CAPSCREW, 5/16-18 X 3/4
	7700461	2	BOLT, RND HD SQ NK, 5/16-18 X 3/4
	70931277	5	LOCKNUT, SERR FLANGE, 5/16-18
27	71394425R	1	DEFLECTOR, ROT SCREEN(PRIOR S/N HR36101)
	71410031	1	DEFLECTOR, ROT SCREEN (EFF. S/N HR36101)
	7700461	2	BOLT, RD HD SQ NK, 5/16-18 X 3/4
	70931277	2	LOCKNUT, SERR FLANGE, 5/16-18
28	71410038	1	BRACE, SHIELD (EFF. S/N HR36101)
	7700461	2	BOLT, RD HD SQ NK, 5/16-18 X 3/4
	70931277	2	LOCKNUT, SERR FLANGE, 5/16-18
29	71394865R	1	STRAP, SHIELD SUPPORT
	70921965	4	CAPSCREW, 3/8-16 X 3/4
	70917378	4	WASHER, 3/8 NOM
	70916965	4	LOCKWASHER, 3/8
	70916950	4	NUT, HEX 3/8
30	71399198	1	BRACKET WLDMT, RH [A]
	7703457	4	CAPSCREW, 1/4-20 X 3/4
	1703354	4	NUT, HEX FLANGE TOP LOCK, 1/4-20
31	Y58040	2	SPRING [A]
32	71399326	2	PIN, LATCH [A]
	70924764	2	PIN, SPRING, 1/8 X 3/4
33	71399199	1	BRACKET WLDMT, LH [A]
	7703457	4	CAPSCREW, 1/4-20 X 3/4
	1703354	4	NUT, HEX FLANGE TOP LOCK, 1/4-20
34	71410037	1	BRACE STRAP (EFF. S/N HR36101)
	70921332	1	CAPSCREW, 5/16-18 X 3/4
	70917642	1	WASHER, 5/16, WIDE
	70917356	1	LOCKWASHER, 5/16
35	71410035	1	SHIELD, BIN (EFF. S/N HR36101)
	7700461	1	BOLT, RND HD SQ NK, 5/16-18 X 3/4
	70931277	1	LOCKNUT, SERR FLANGE, 5/16-18
	70921332	2	CAPSCREW, 5/16-18 X 3/4
	70917642	2	WASHER, 5/16, WIDE
	70917356	2	LOCKWASHER, 5/16
36	71410036	1	ANGLE, ROTARY SCREEN (EFF. S/N HR36101)
37	71397312	1	BRACE STRAP (EFF. S/N HR36101)
	70931317	1	BOLT, RND HD SQ NK, 1/4-20 X 3/4
	70931209	1	LOCKNUT, SERR FLANGE, 1/4-20

[A] ITEMS 30,31,32,33, EFF. S/N HN36101

MC00404
PR: 320

https://truckmanualshub.com/

MUD SHIELDS
RIGHT SIDE
(PRIOR S/N HS36101)

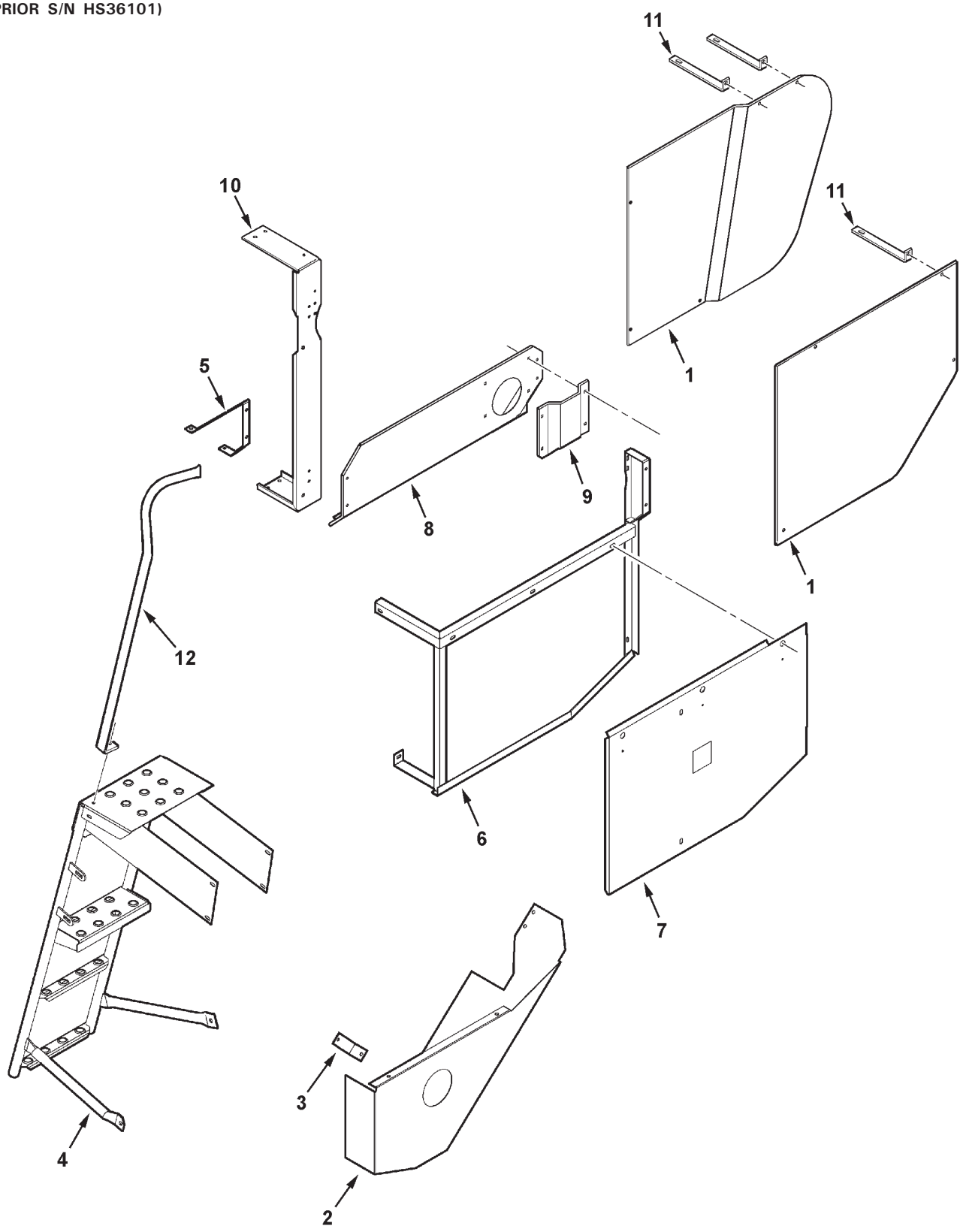

MC00272

https://truckmanualshub.com/

MUD SHIELDS
RIGHT SIDE
(PRIOR S/N HS36101)

ITEM	NUMBER	QTY	DESCRIPTION
1	71390910	1	SHIELD, RIGHT FRONT (PRIOR S/N HP36101)
	71401643	1	SHIELD, MUD, RIGHT (EFF. S/N HP36101)
	70921210	4	CAPSCREW, 3/8-16 X 1 GR5
	70917378	4	WASHER, 3/8, WIDE
	70916965	4	LOCKWASHER, 3/8
	70916950	4	NUT, 3/8-16 REG
2	71391112	1	SHIELD, RIGHT, LOWER FAN
	70921210	2	CAPSCREW, 3/8-16 X 1 GR5
	70917378	2	WASHER, 3/8, WIDE
	70916965	2	LOCKWASHER, 3/8
	70916950	2	NUT, 3/8-16 REG
3	71395991	1	ANGLE BRACKET, R.H. FAN SHIELD
	70921210	2	CAPSCREW, 3/8-16 X 1 GR5
	70917378	2	WASHER, 3/8, WIDE
	Y704734	2	NUT, HEX FLANGE TOP LOCK, 3/8-16
4	71403624B	1	LADDER WLMT, INSPECTION
	70921210	4	CAPSCREW, 3/8-16 X 1 GR5
	70917378	8	WASHER, 3/8, WIDE
	70916965	4	LOCKWASHER, 3/8
	70916950	4	NUT, 3/8-16 REG
5	71395984	1	BRACKET WLDMT
	70921210	2	CAPSCREW, 3/8-16 X 1 GR5
	70916965	2	LOCKWASHER, 3/8
	70916950	2	NUT, 3/8-16 REG
6	71393924	1	FRAME WLDMT, RIGHT SHIELD
	701235	1	CAPSCREW, 1/2-13 X 1-1/2
	70918431	1	WASHER, 1/2 NOM
	Y705046	1	LOCKWASHER, 1/2
	704031	1	NUT, 1/2-13
7	71391620	1	MUD SHIELD WLDMT, RIGHT REAR
	111670W1	1	DECAL, WARNING
	863415	3	PIN, KLIK
	1656110W2	3	PIN, SHIELD LOCK
	70921333	2	CAPSCREW, 5/16-18 X 1 GR5
	70917642	2	WASHER, 5/16
	70917356	2	LOCKWASHER, 5/16
	70917372	2	NUT, 5/16-18
	70921210	4	CAPSCREW, 3/8-16 X 1 GR5
	70917378	4	WASHER, 3/8, WIDE
	70916965	4	LOCKWASHER, 3/8
	70916950	4	NUT, 3/8-16 REG
8	71397303	1	SHIELD WLDMT, RIGHT UPPER
	7883325	5	SCR, HEX WSHR HD MACH, 5/16-18 X 3/4

CONTINUED

https://truckmanualshub.com/

MUD SHIELDS
RIGHT SIDE
(PRIOR S/N HS36101)

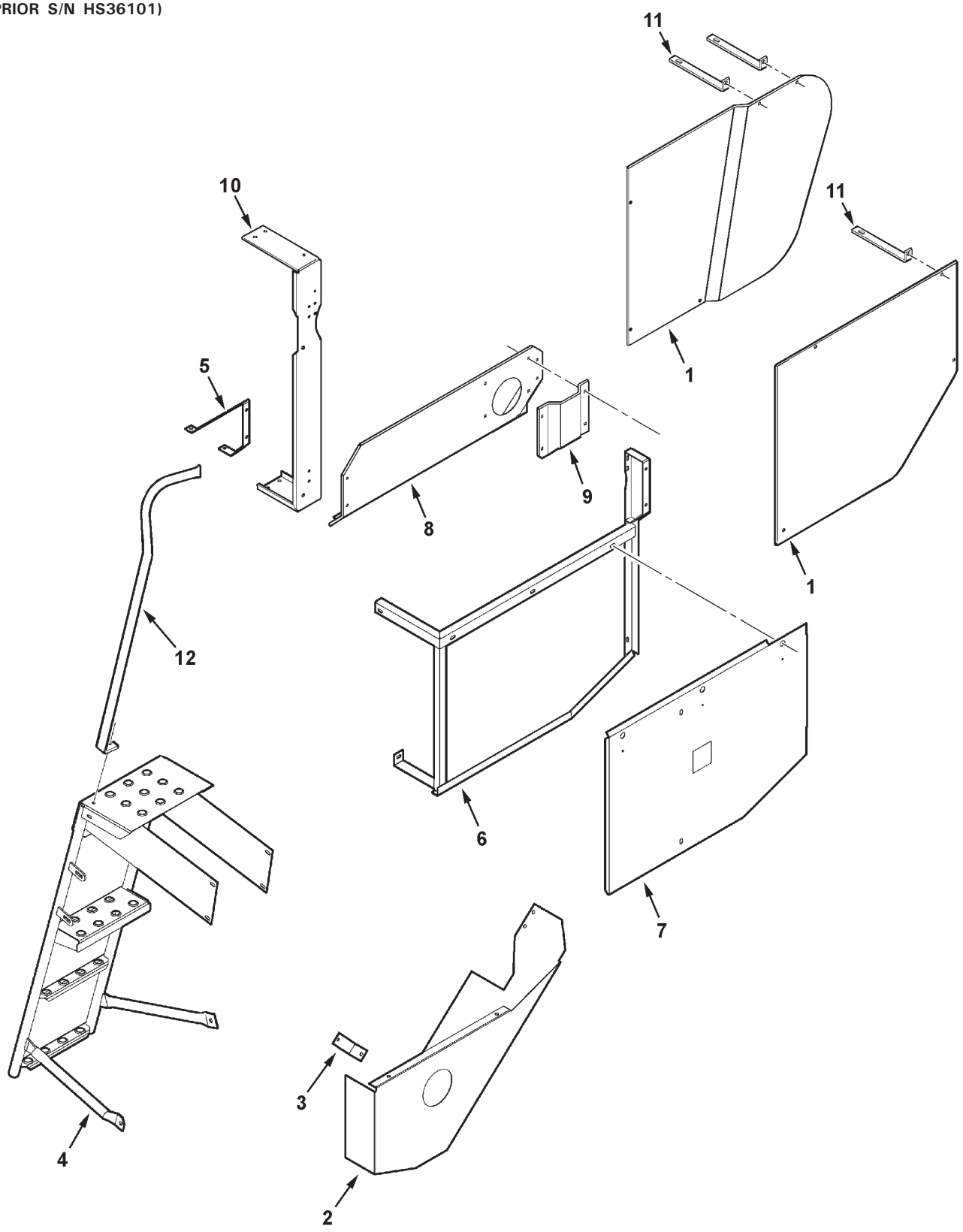

MC00272

https://truckmanualshub.com/

MUD SHIELDS
RIGHT SIDE
(PRIOR S/N HS36101)

ITEM	NUMBER	QTY	DESCRIPTION
9	71395993	1	SHIELD, RH, BEATER SHAFT
	360503X1	4	BOLT, RD HD SQ NECK,- 5/16-18 X 1
	Y705020	4	LOCKWASHER, 5/16
	70917372	4	NUT, 5/16-18
	70933988	4	SPEED NUT, 5/16
10	71391113	1	CHANNEL, RH MUDSHIELD(PRIOR S/N HP36101)
	71401661	1	CHANNEL, RH MUDSHIELD (EFF. S/N HP36101)
	70921210	4	CAPSCREW, 3/8-16 X 1 GR5
	70917378	2	WASHER, 3/8, WIDE
	70916965	4	LOCKWASHER, 3/8
	70916950	4	NUT, 3/8-16 REG
11	71390911	1	STRAP, STANDOFF, FRT (PRIOR S/N HP36101)
	71401645	2	STRAP, STANDOFF, FRT (EFF. S/N HP36101)
	70921210	2	CAPSCREW, 3/8-16 X 1 GR5
	70916965	2	LOCKWASHER, 3/8
	70916950	2	NUT, 3/8-16 REG
12	71398721	1	HANDRAIL (EFF. S/N HN87101)
	7701634	2	CAPSCREW, 3/8-16 X 2 GR5
	70921210	1	CAPSCREW, 3/8-16 X 1 GR5
	Y704734	3	NUT, HEX FLANGE TOP LOCK, 3/8-16

MC00272
PR: 324

https://truckmanualshub.com/

MUD SHIELDS
RIGHT SIDE
(EFF. S/N HS36101)

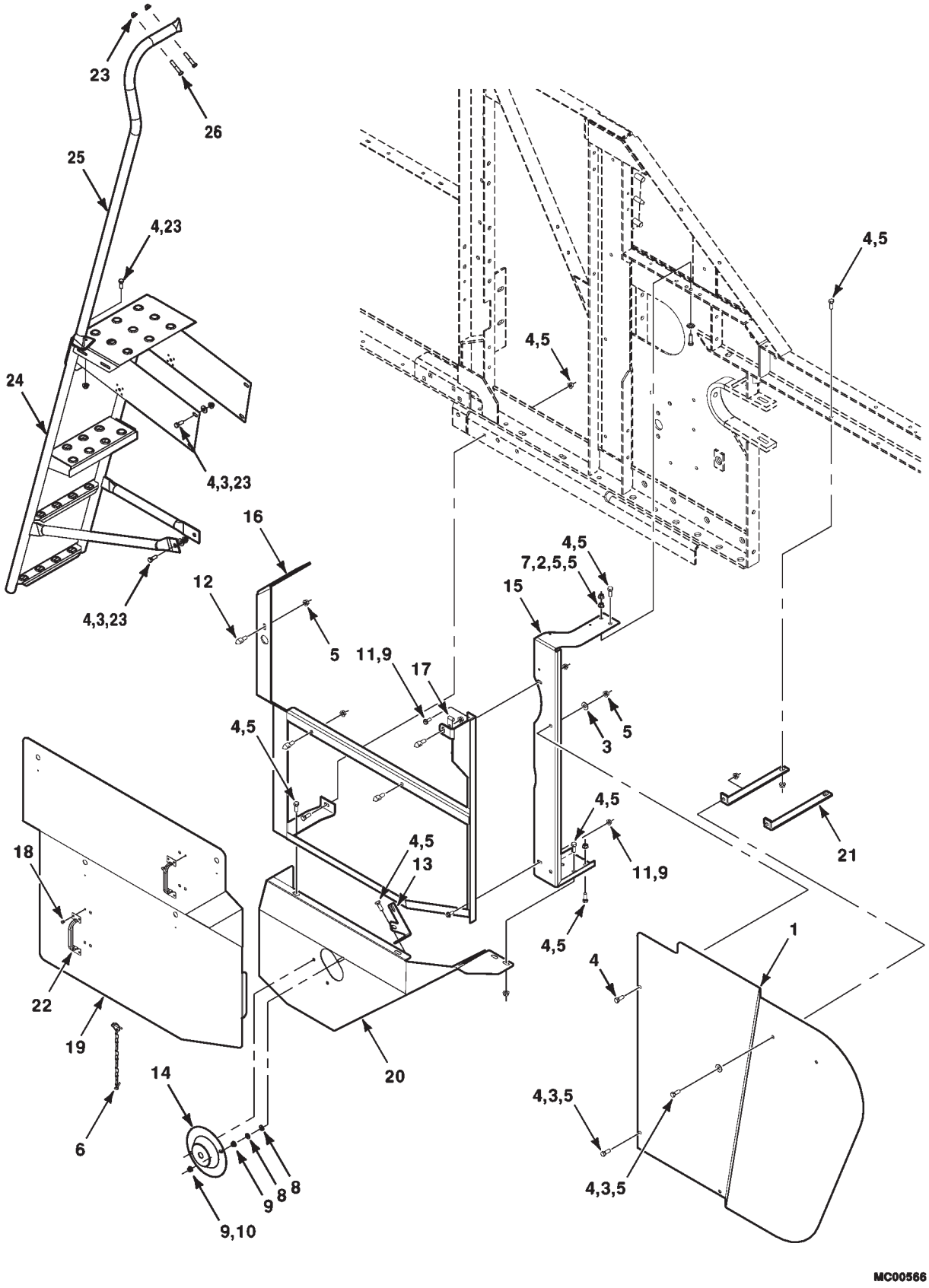

https://truckmanualshub.com/

MUD SHIELDS
RIGHT SIDE
(EFF. S/N HS36101)

ITEM	NUMBER	QTY	DESCRIPTION
1	71410976	1	SHIELD-MUD, R
2	7705205	1	LOCKWASHER, 3/8 INT/EXT TOOTH
3	70917378	7	WASHER, 3/8 WIDE
4	70921210	15	CAPSCREW, 3/8-16 X 1.0
5	704247	21	NUT, HEX SERR FLANGE, 3/8-16
6	863415	4	KLIK PIN, 3/16, W/ CHAIN & COTTER
7	70920415	1	CAPSCREW, 3/8-16 X 1-1/4
8	Y705525	4	WASHER, 5/16, HARD
9	70931277	6	LOCKNUT, SERR FLANGE, 5/16-18
10	7883333	2	SCREW, HEX WSHR HD MACH, 5/16-18 X 1
11	7883325	2	SCREW, HEX WSHR HD MACH, 5/16-18 X 3/4
12	1656110W2	4	PIN-CENTER, SHIELD LOCK
13	71410115	1	BRACKET-MUDSHIELD
14	71411373	1	CAP
15	71410075	1	CHANNEL-MUD SHIELD, R
16	71410998	1	FRAME WLMT
17	70937685	1	J-CLIP, 3/8 DIA X .406 HOLE
18	70924837	8	POP-RIVET, .188 X .063-.125 GRIP
19	71418128	1	SHIELD WLMT
20	71411372	1	SHIELD-LOWER
21	71401645	2	STRAP, STANDOFF
22	71304149	2	HANDLE
23	Y704734	8	NUT, HEX FLANGE TOP LOCK, 3/8-16
24	71403624B	1	LADDER WA, INSPECTION
25	71398721	1	HANDLE-INSPECTION LADDER
26	70923701	2	CAPSCREW, 3/8-16 X 2 GR5

MC00566
PR: t07a23o20b0011

https://truckmanualshub.com/

MUD SHIELDS
LEFT SIDE
(PRIOR S/N HP36101)

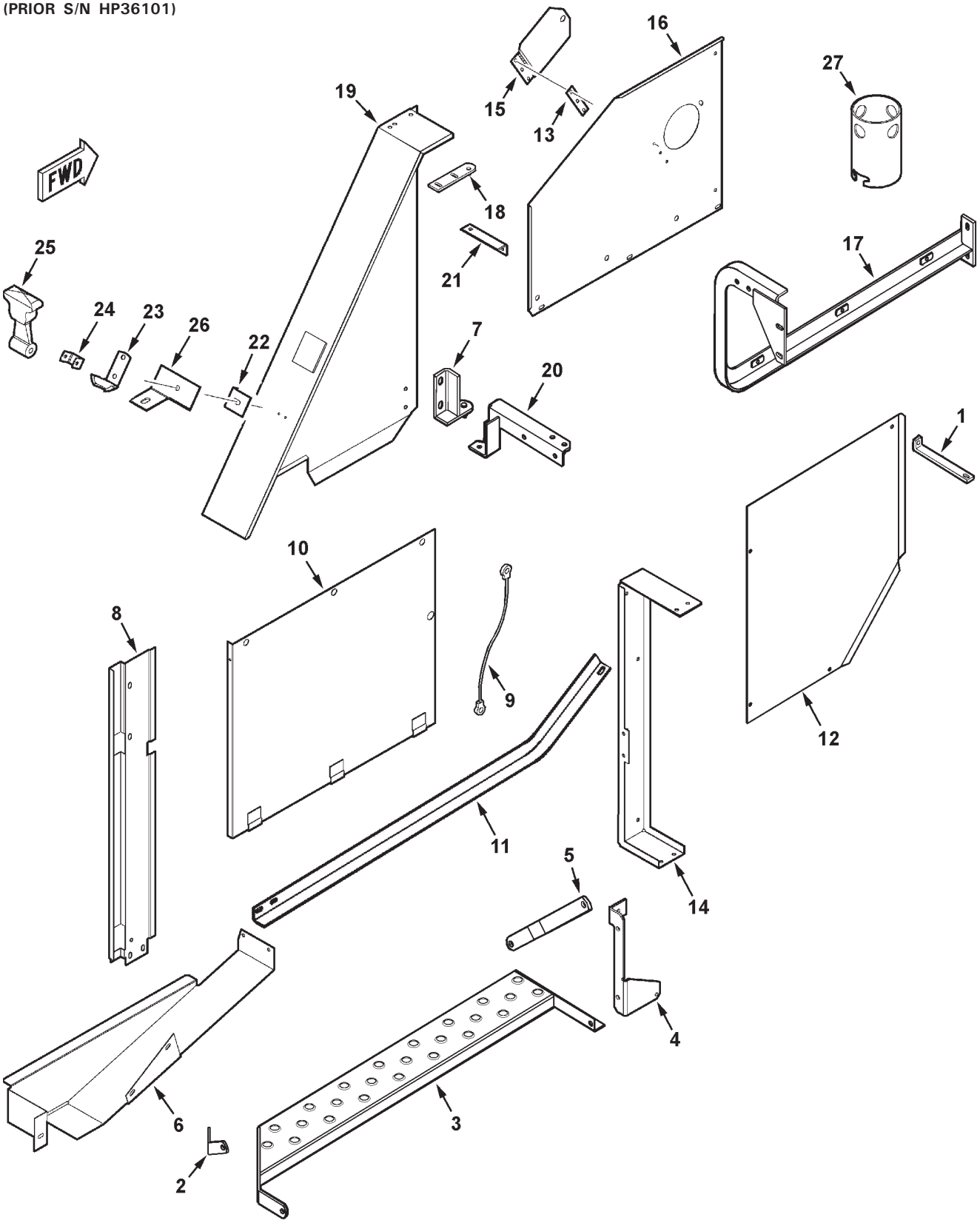

MC00359

https://truckmanualshub.com/

MUD SHIELDS
LEFT SIDE
(PRIOR S/N HP36101)

ITEM	NUMBER	QTY	DESCRIPTION
1	71390911	1	STRAP, STANDOFF, FRONT SHIELD
	70920415	2	CAPSCREW, 3/8-16 X 1-1/4
	70916965	2	LOCKWASHER, 3/8
	70916950	2	NUT, 3/8-16
2	71393919	1	STRAP, STEP SUPPORT, PROCESSOR
3	----------	1	STEP WLDMT, LEFT, PROCESSOR (SERVICE W/ 71399870)
	71399870	1	STEP WLDMT, LEFT, PROCESSOR (MUST USE 71400383 STRAP, ITEM 5)
	70921176	3	CAPSCREW, 1/2-13 X 1-1/4
	Y705046	3	LOCKWASHER, 1/2
	704031	3	NUT, 1/2-13
	70921965	2	CAPSCREW, 3/8-16 X 3/4 GR5
	70917378	2	WASHER, 3/8 NOM
	70916965	2	LOCKWASHER, 3/8
	70916950	2	NUT, 3/8-16
4	71391181	1	SUPPORT, FRONT, PROCESSOR STEP
5	71400383	1	STRAP, PROCESSOR STEP
	70921176	4	CAPSCREW, 1/2-13 X 1-1/4
	Y705046	4	LOCKWASHER, 1/2
	704031	4	NUT, 1/2-13
6	71390913	1	SHIELD, ELEVATOR DRIVE, LEFT
	70921210	2	CAPSCREW, 3/8-16 X 1 GR5
	70917378	2	WASHER, 3/8 NOM
	70916965	2	LOCKWASHER, 3/8
	70916950	2	NUT, 3/8-16
7	101218M91	1	HINGE BRKT WLDMT, LOWER
	70918452	1	PIN, COTTER, 3/32 X 3/4
	70921210	2	CAPSCREW, 3/8-16 X 1 GR5
	70917378	2	WASHER, 3/8 NOM
	70916965	2	LOCKWASHER, 3/8
	70916950	2	NUT, 3/8-16
8	71388912	1	SUPPORT, LEFT SHIELD
	70921210	2	CAPSCREW, HEX, 3/8-16 X 1
	70917378	2	WASHER, WIDE FLAT, 3/8
	70916965	2	LOCKWASHER, 3/8
	70916950	2	NUT, HEX, 3/8-16 UNC

CONTINUED

https://truckmanualshub.com/

MUD SHIELDS
LEFT SIDE
(PRIOR S/N HP36101)

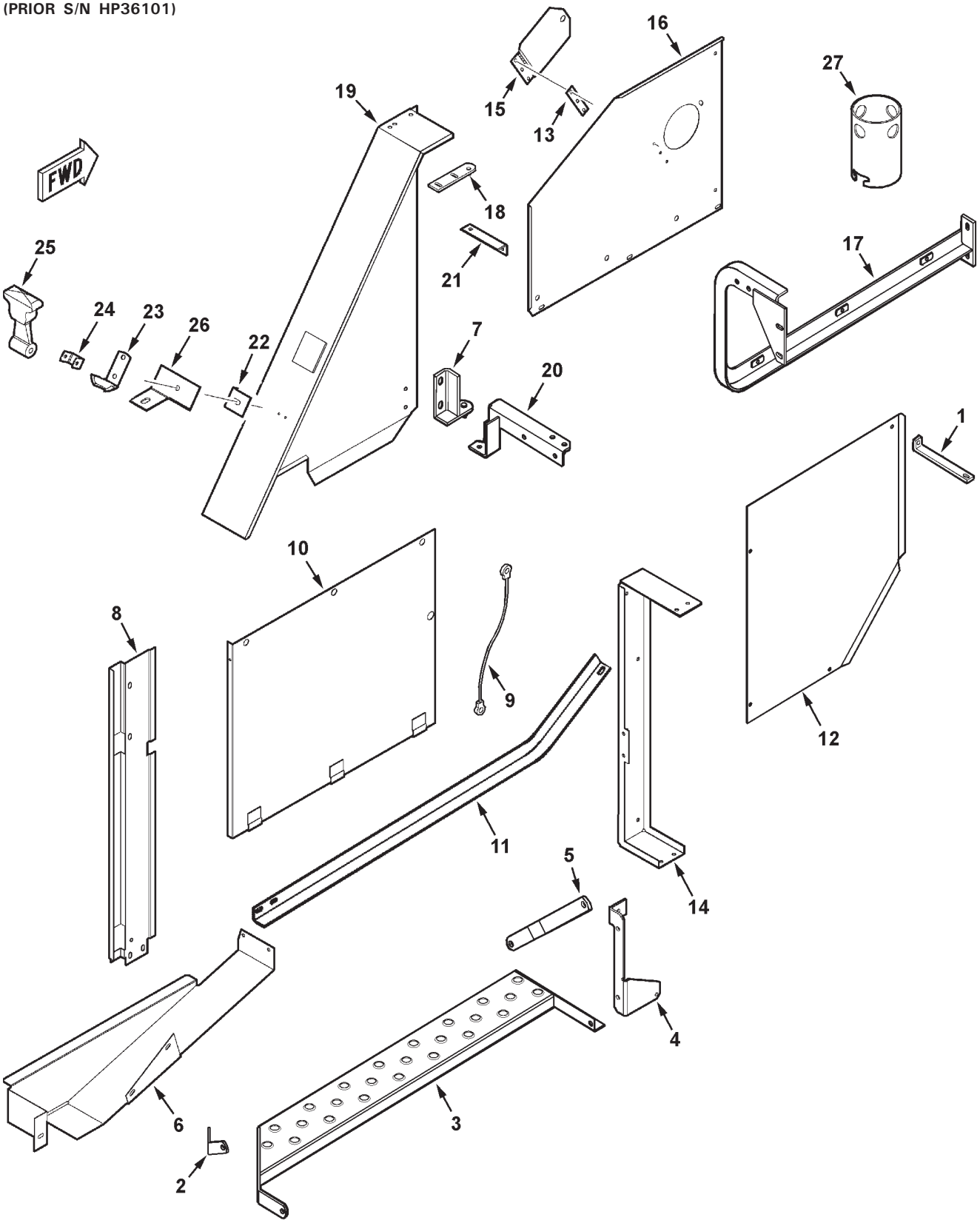

MC00359

https://truckmanualshub.com/

MUD SHIELDS
LEFT SIDE
(PRIOR S/N HP36101)

ITEM	NUMBER	QTY	DESCRIPTION
9	112942W1	1	TETHER STRAP, 28IN.
	7703457	1	CAPSCREW, 1/4-20 X 3/4
	70917377	1	WASHER, 1/4 NOM
	1703354	1	FLANGE NUT, 1/4-20
10	71394303	1	SHIELD WLDMT, LEFT
	111670W1	1	DECAL, WARNING
	70921210	4	CAPSCREW, 3/8-16 X 1 GR5
	70917378	4	WASHER, 3/8 NOM
	70916965	4	LOCKWASHER, 3/8
	70916950	4	NUT, 3/8-16
11	102158M1	1	ANGLE, SHIELD SUPPORT
	70921210	1	CAPSCREW, HEX, 3/8-16 X 1
	70917378	1	WASHER, WIDE FLAT, 3/8
	70916965	1	LOCKWASHER, 3/8
	70916950	1	NUT, HEX, 3/8-16 UNC
12	71390909	1	SHIELD, LEFT FRONT
	70921965	1	CAPSCREW, 3/8-16 X 3/4 GR5
	70921210	2	CAPSCREW, HEX, 3/8-16 X 1
	70916965	3	LOCKWASHER, 3/8
	70916950	2	NUT, HEX, 3/8-16 UNC
13	2555190W1	1	SPACER, DOOR
14	71404306B	1	CHANNEL, LEFT MUD SHIELD
	70921210	4	CAPSCREW, 3/8-16 X 1 GR5
	70916965	4	LOCKWASHER, 3/8
	70916950	4	NUT, 3/8-16
15	104916W91	1	COVER WLDMT, LEFT SHIELD
	1656110W2	1	PIN, SHIELD LOCK
	863415	1	PIN, KLIK
	70917378	1	WASHER, WIDE FLAT, 3/8
	70916965	1	LOCKWASHER, 3/8
	70916950	1	NUT, HEX, 3/8-16 UNC
	7703457	3	CAPSCREW, 1/4-20 X 3/4
	70917377	3	WASHER, 1/4 NOM
	705012	3	LOCKWASHER, 1/4
	70916622	3	NUT, 1/4-20
16	71391624	1	SHIELD, UPPER LEFT
	863415	3	PIN, KLIK
	1656110W2	3	PIN, SHIELD LOCK
	70921965	3	CAPSCREW, 3/8-16 X 3/4 GR5
	70921210	4	CAPSCREW, 3/8-16 X 1 GR5
	70917378	8	WASHER, 3/8 NOM
	70916965	10	LOCKWASHER, 3/8
	70916950	10	NUT, 3/8-16

CONTINUED

https://truckmanualshub.com/

MUD SHIELDS
LEFT SIDE
(PRIOR S/N HP36101)

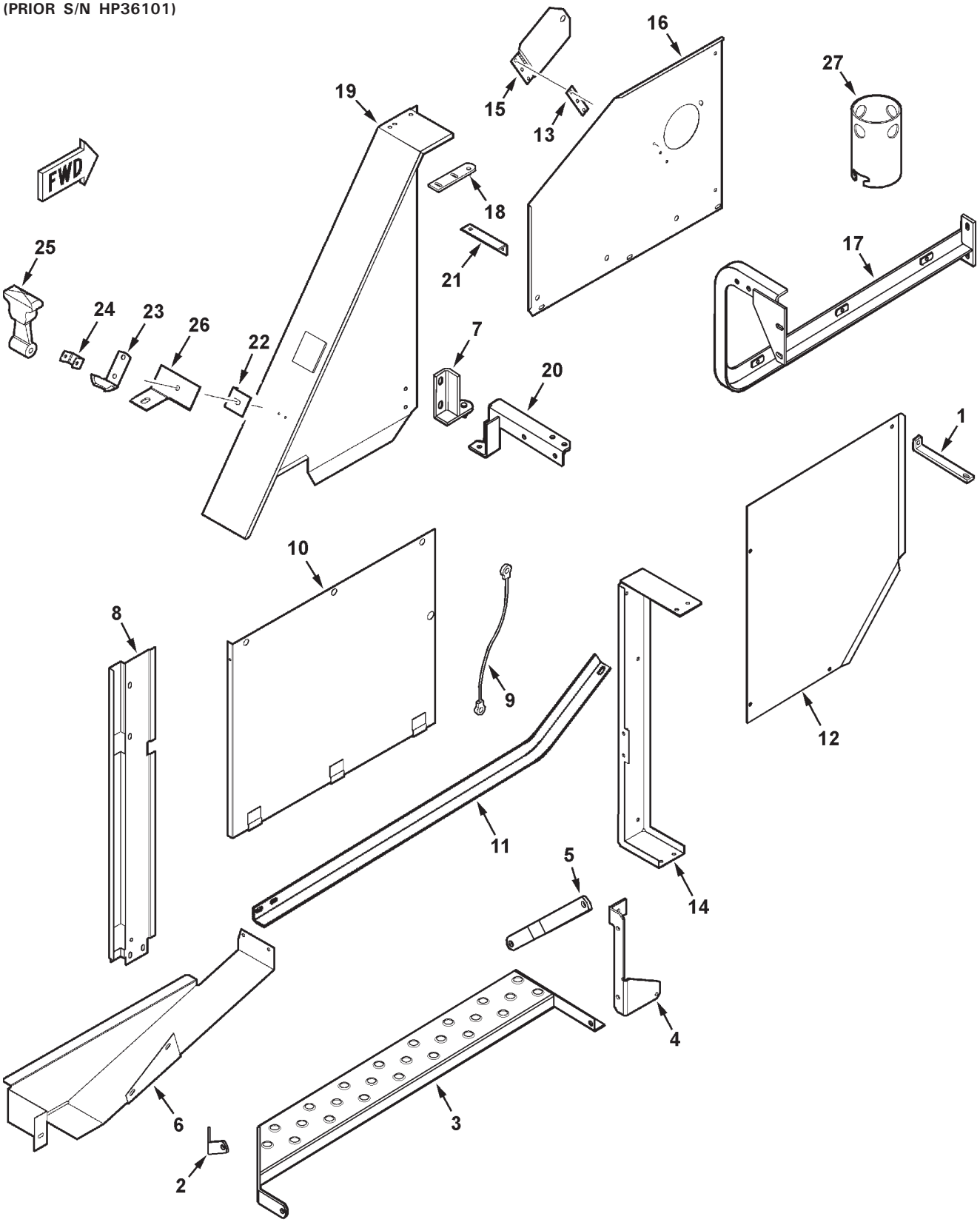

MC00359

https://truckmanualshub.com/

MUD SHIELDS
LEFT SIDE
(PRIOR S/N HP36101)

ITEM	NUMBER	QTY	DESCRIPTION
17	71393923	1	ANGLE WLDMT, LEFT MUD SHIELD
	70921210	2	CAPSCREW, 3/8-16 X 1 GR5
	70917378	2	WASHER, 3/8 NOM
	70916965	2	LOCKWASHER, 3/8
	70916950	2	NUT, 3/8-16
18	101221M92	1	HINGE WLDMT, UPPER
	70918452	1	COTTER PIN
19	71394306	1	GUARD WLDMT, DRIVE
	70921210	2	CAPSCREW, 3/8-16 X 1 GR5
	70917378	2	WASHER, 3/8 NOM
	70916965	2	LOCKWASHER, 3/8
	70916950	2	NUT, 3/8-16
20	71393921	1	SUPPORT WLDMT, LH SHIELD
21	102237M1	1	ANGLE, LH SHIELD
	70921210	2	CAPSCREW, HEX, 3/8-16 X 1
	70917378	2	WASHER, WIDE FLAT, 3/8
	70916965	2	LOCKWASHER, 3/8
	70916950	2	NUT, HEX, 3/8-16 UNC
22	101232M1	1	STOP BRACKET, GUARD
23	7025075	1	BRACKET, CATCH
	70916079	2	SCREW, RND HD MACH, #10-24 X 3/8
	705004	2	LOCKWASHER, #10
	70916621	2	NUT, HEX, #10-24 UNC
24	1787520W1	1	ANCHOR BRACKET, RUBBER LATCH
	70921332	1	CAPSCREW, 5/16-18 X 3/4
	Y705020	1	LOCKWASHER, 5/16
	70917372	1	NUT, 5/16-18 REG
25	776682	1	HOOK, RUBBER
	70921962	1	CAPSCREW, 1/4-20 X 1-3/4
	1703354	1	NUT, HEX FLANGE TOP LOCK, 1/4-20
26	101231M1	1	BRACKET, LATCH
	70920415	1	CAPSCREW, 3/8-16 X 1-1/4 GR5
	70919378	1	WASHER, 3/8, WIDE
	Y704734	1	NUT, 3/8-16 REG
27	104500W1	1	TUBE, BEATER UNPLUG

MC00359
PR: 328

https://truckmanualshub.com/

MUD SHIELDS
LEFT SIDE
(EFF. S/N HP36101)

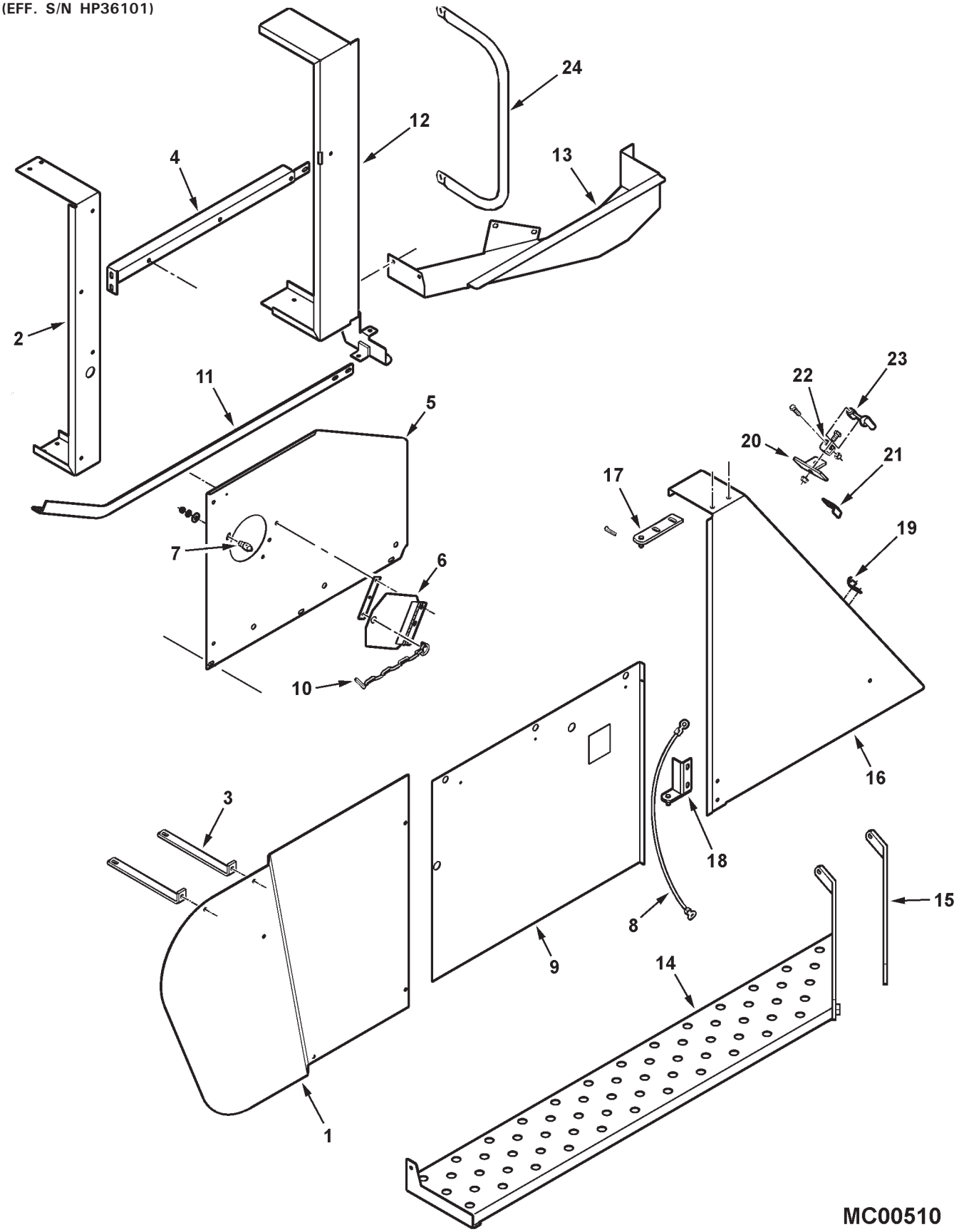

https://truckmanualshub.com/

MUD SHIELDS
LEFT SIDE
(EFF. S/N HP36101)

ITEM	NUMBER	QTY	DESCRIPTION
1	71408217	1	MUD SHIELD, LEFT FRT (PRIOR S/N HS36101)
	71409457	1	MUD SHIELD, LEFT FRT (EFF. S/N HS36101)
	70921210	2	CAPSCREW, 3/8-16 X 1 GR5
	70921332	2	CAPSCREW, 5/16-18 X 3/4 GR5
	70917642	2	WASHER, 5/16, WIDE
	70917378	2	WASHER, 3/8, WIDE
	Y704726	2	NUT, HEX FLANGE TOP LOCK, 5/16-18
	Y704734	2	NUT, HEX FLANGE TOP LOCK, 3/8-16
2	71404306	1	CHANNEL, LEFT MUD SHIELD
	70921210	4	CAPSCREW, 3/8-16 X 1 GR5
	Y704734	4	NUT, HEX FLANGE TOP LOCK, 3/8-16
3	71401645	2	STRAP, STANDOFF, MUD SHIELD
	70921210	2	CAPSCREW, 3/8-16 X 1 GR5
	70917378	2	WASHER, 3/8, WIDE
	Y704734	2	NUT, HEX FLANGE TOP LOCK, 3/8-16
4	71401470	1	ANGLE WLDMT, LEFT MUD SHIELD
	70921210	2	CAPSCREW, 3/8-16 X 1 GR5
	70921965	1	CAPSCREW, 3/8-16 X 3/4 GR5
	70917378	1	WASHER, 3/8, WIDE
	Y704734	3	NUT, HEX FLANGE TOP LOCK, 3/8-16
5	71391624	1	SHIELD, UPPER LEFT
	70921210	2	CAPSCREW, 3/8-16 X 1 GR5
	70921965	3	CAPSCREW, 3/8-16 X 3/4 GR5
	705038	3	LOCKWASHER, 3/8
	70917378	3	WASHER, 3/8, WIDE
	Y704734	2	NUT, HEX FLANGE TOP LOCK, 3/8-16
6	104916W91	1	COVER WLDMT, LEFT SHIELD
	2555190W1	1	SPACER, DOOR
	7703457	3	CAPSCREW, 1/4-20 X 3/4
	70917377	3	WASHER, 1/4, WIDE
	1703354	3	NUT, HEX FLANGE TOP LOCK, 1/4-20
7	1656110W2	4	PIN, SHIELD LOCK
	70917378	4	WASHER, 3/8, WIDE
	705038	4	LOCKWASHER, 3/8
	70916950	4	NUT, 3/8-16 REG
8	112942W1	1	TETHER STRAP, 28IN.
	7703457	1	CAPSCREW, 1/4-20 X 3/4 GR5
	70917377	1	WASHER, 1/4, WIDE
	1703354	1	NUT, HEX FLANGE TOP LOCK, 1/4-20
9	71394303	1	SHEET WLMT, LEFT, W/ DECAL
10	863415	4	PIN-KLIK, W/ CHAIN
11	71404305	1	ANGLE, BOTTOM SUPPORT, LH
	70921210	1	CAPSCREW, 3/8-16 X 1 GR5
	70921965	1	CAPSCREW, 3/8-16 X 3/4 GR5
	70917378	1	WASHER, 3/8, WIDE
	Y704734	2	NUT, HEX FLANGE TOP LOCK, 3/8-16

CONTINUED

https://truckmanualshub.com/

MUD SHIELDS
LEFT SIDE
(EFF. S/N HP36101)

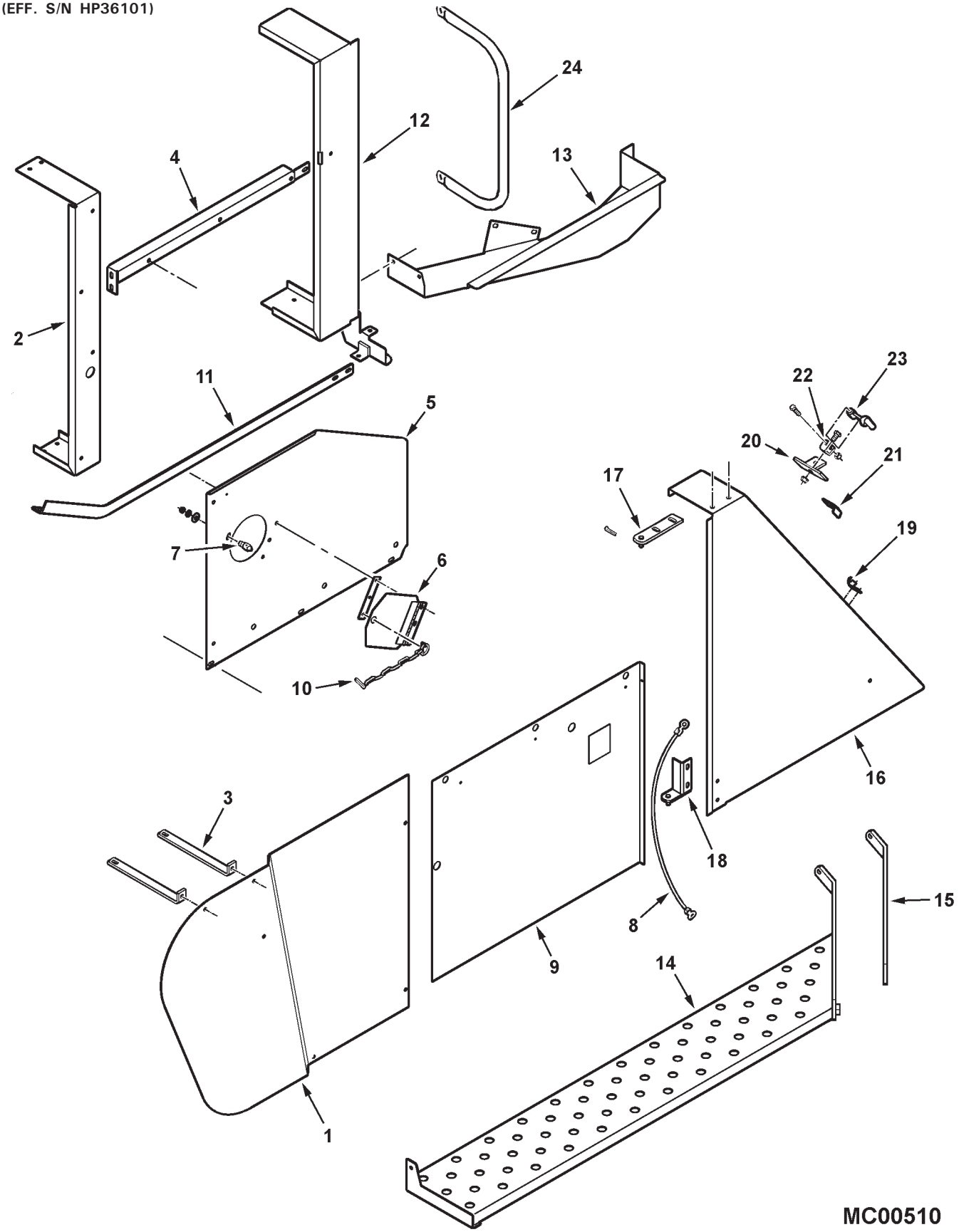

https://truckmanualshub.com/

MUD SHIELDS
LEFT SIDE
(EFF. S/N HP36101)

ITEM	NUMBER	QTY	DESCRIPTION
12	71401468	1	CHANNEL WLDMT, LEFT
	70921210	2	CAPSCREW, 3/8-16 X 1 GR5
	70921965	1	CAPSCREW, 3/8-16 X 3/4 GR5
	70917378	2	WASHER, 3/8, WIDE
	Y704734	3	NUT, HEX FLANGE TOP LOCK, 3/8-16
13	71390913	1	SHIELD, ELEVATOR DRIVE, LEFT
	70921210	2	CAPSCREW, 3/8-16 X 1 GR5
	70921965	3	CAPSCREW, 3/8-16 X 3/4 GR5
	70917378	3	WASHER, 3/8, WIDE
	Y704734	5	NUT, HEX FLANGE TOP LOCK, 3/8-16
14	71401463	1	STEP WLDMT, LEFT, PROCESSOR
	70921965	3	CAPSCREW, 3/8-16 X 3/4 GR5
	Y704734	3	NUT, HEX FLANGE TOP LOCK, 3/8-16
	70921176	1	CAPSCREW, 1/2-13 X 1-1/4 GR5
	Y704742	1	NUT, HEX FLANGE TOP LOCK, 1/2-13
15	71393919	1	STRAP, STEP SUPPORT, PROCESSOR
	70921176	2	CAPSCREW, 1/2-13 X 1-1/4 GR5
	Y704742	2	NUT, HEX FLANGE TOP LOCK, 1/2-13
16	71404303	1	GUARD, DRIVES, W/ DECAL
17	101221M92	1	HINGE WLDMT, UPPER GUARD
18	101218M91	1	HINGE WLDMT, LOWER GUARD
	70921210	4	CAPSCREW, 3/8-16 X 1 GR5
	70917378	4	WASHER, 3/8, WIDE
	Y704734	4	NUT, HEX FLANGE TOP LOCK, 3/8-16
19	7025075	1	BRACKET, CATCH
	70916080	2	SCREW, RND HD MACH, #10-24 X 1/2
	705004	2	LOCKWASHER, #10
	70916621	2	NUT, HEX, #10-24 UNC
20	101231M1	1	BRACKET, LATCH
	70920415	1	CAPSCREW, 3/8-16 X 1-1/4 GR5
	70917378	1	WASHER, 3/8, WIDE
	Y704734	1	NUT, HEX FLANGE TOP LOCK, 3/8-16
21	101232M1	1	STOP BRACKET, GUARD
22	1787520W1	1	ANCHOR BRACKET, RUBBER LATCH
	70921332	1	CAPSCREW, 5/16-18 X 3/4 GR5
	Y704726	1	NUT, HEX FLANGE TOP LOCK, 5/16-18
23	776682	1	HOOK, RUBBER
	70921962	1	CAPSCREW, 1/4-20 X 1-3/4
	1703354	1	NUT, HEX FLANGE TOP LOCK, 1/4-20
24	71397286	1	HANDLE, ASSIST
	70921210	2	CAPSCREW, 3/8-16 X 1 GR5
	70917378	2	WASHER, 3/8, WIDE
	Y704734	2	NUT, HEX FLANGE TOP LOCK, 3/8-16

https://truckmanualshub.com/

HYDRAULIC PUMP & LINES
(PRIOR S/N HR36101)

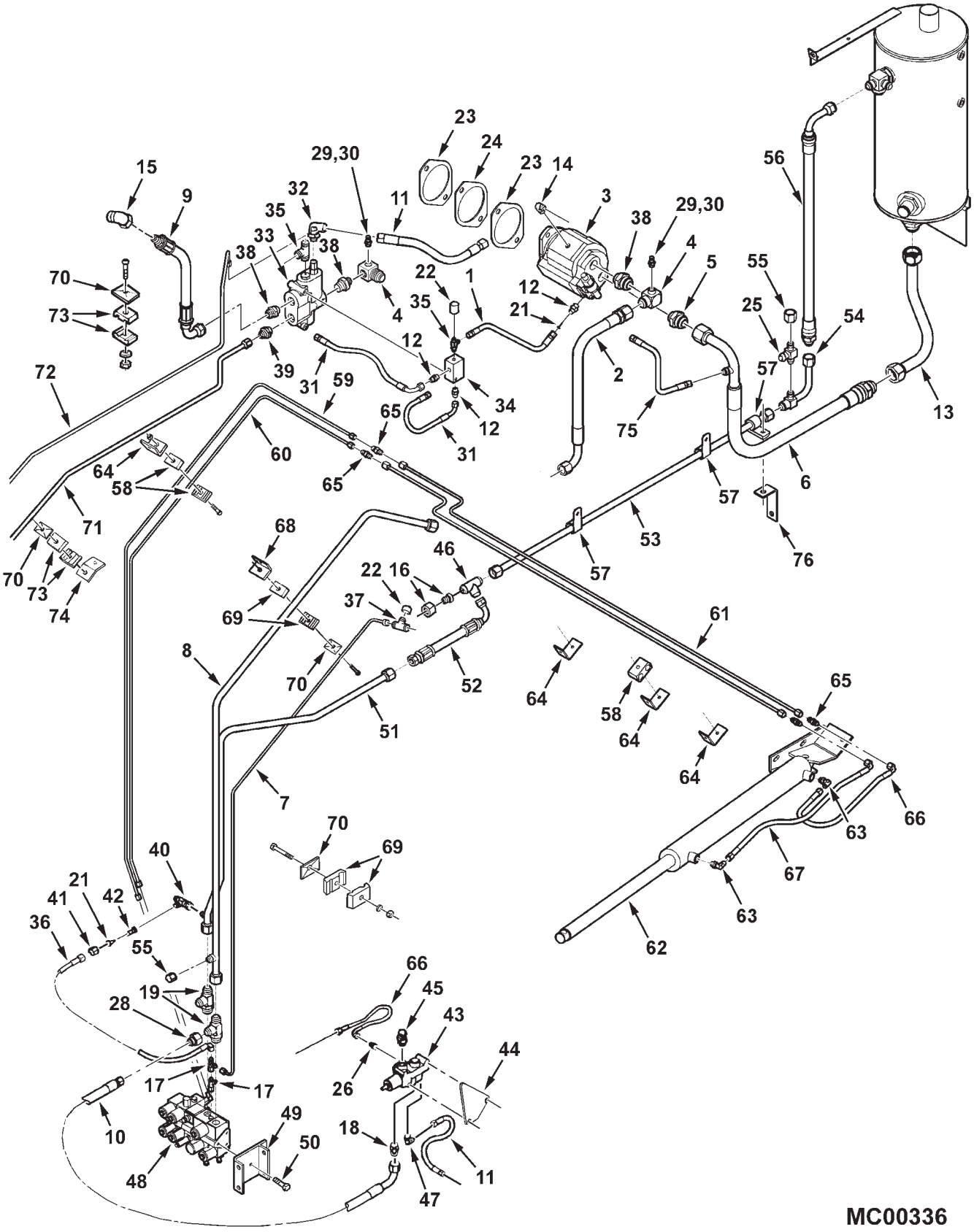

MC00336

https://truckmanualshub.com/

HYDRAULIC PUMP & LINES
(PRIOR S/N HR36101)

ITEM	NUMBER	QTY	DESCRIPTION
1	71392879	1	HOSE ASY, PUMP LS, 1/4
2	71392882	1	HOSE ASY, PUMP PRESSURE
3	71388864	1	PUMP, HYDRAULIC PISTON
	70950453	2	CAPSCREW, M12-1.75 X 35 CL8.8
	Y705624	2	WASHER, 1/2 NARROW
4	72526244	1	ELBOW, 90 DEG SPL, 1-5/16-12 JIC X ORB (VARIABLE LOCATION. ON PUMP PRIOR S/N HP36101)
	70921214	1	O-RING, .116 X 1.17 ID
5	70923343	1	STR CONN, 1-5/8-12 JIC X 1-5/8-12 ORB
	70921235	1	O-RING, .118 X 1.475 ID
6	71394139	1	HOSE ASY, PUMP SUCTION
7	112041W1	1	TUBE ASY, VALVE, LS (PRIOR MID. S/N HN36)(SERVICE W/71399150)
	71399150	1	TUBE ASY,VALVE,LS (EFF. MID S/N HN36...)
8	71394168	1	TUBE ASY, PRESS TO VALVE (PRIOR MID. S/N HN36)(SERVICE W/71399149)
	71399149	1	TUBE ASY, VALVE (EFF. MID. S/N HN36)
9	101588M1	1	HOSE ASY, PRIORITY VALVE OUT, 5/8
10	112050W1	1	HOSE ASY, PRESS TO REEL DRIVE VALVE
11	101650M1	2	HOSE ASY, PRIORITY VALVE RETURN
12	700701356	3	STR CONN, 7/16-20 JIC X 7/16-20 ORB
	70921883	1	O-RING, .072 X .35 ID
13	71394140	1	TUBE ASY, PUMP SUCTION
14	70922523	1	ELBOW,90 DEG, 9/16-18 JIC X 9/16-18 ORB
	70921885	1	O-RING, .078 X .468 ID
15	70919624	1	ELBOW,90 DEG, 1-1/16-12, MALE X SWIV FEM (PRIOR MID. S/N HN36)(USED W/TUBE ASY. 71394168)
16	70925852	1	REDUCER, 1-1/16-12 JIC X 9/16-18 MALE
	70919197	1	TUBE NUT, 1-1/16-12
17	700701355	2	TEE, SWIVEL RUN, 7/16-20 JIC
18	70921326	1	STR CONN, 7/8-14 JIC X ORB
	70921205	1	O-RING, .097 X .755 ID
19	70922181	2	TEE, ADJ ORB RUN, 1-1/16-12 JIC X ORB
	70921206	2	O-RING, .116 X .924 ID
21	286501M1	2	CONE FILTER, 1/4
22	700715848	2	CAP, 7/16-20 JIC
23	3929751	2	GASKET, ENGINE FACE & PUMP FACE
24	3902603	1	SPACER, PUMP (ORDER FROM CUMMINS)
25	70921298	1	TEE, SWIVEL RUN, 3/4-16 JIC (SEE ROTARY SCREEN MOTOR LINES)
26	70926292	1	STR CONN, 7/16-20 JIC X 9/16-18 ORB
	70921885	1	O-RING, .078 X .468 ID
28	700701744	1	REDUCER, 1-1/16-12 JIC X 3/4-16 MALE
29	71379303	1	COUPLER, DIAGNOSTIC, 9/16-18 ORB MALE
	70921885	1	O-RING, .078 X .468 ID
30	71379304	1	DUST CAP, HYD COUPLER
31	116640W1	2	HOSE ASY, SHUTTLE VALVE
32	70930510	1	ELBOW,90 DEG, 9/16-18 JIC X 7/16-20 ORB
	70921883	1	O-RING, .072 X .35 ID
33	71391453	1	VALVE, PRIORITY FLOW DIVIDER
	772418	1	CAPSCREW, 5/16-18 X 3-1/2 GR5
	873026	1	CAPSCREW, 5/16-18 X 4-1/2 GR5
	70917372	1	NUT, 5/16-18 REG
	70917356	1	LOCKWASHER, 5/16 REG

CONTINUED

https://truckmanualshub.com/

HYDRAULIC PUMP & LINES
(PRIOR S/N HR36101)

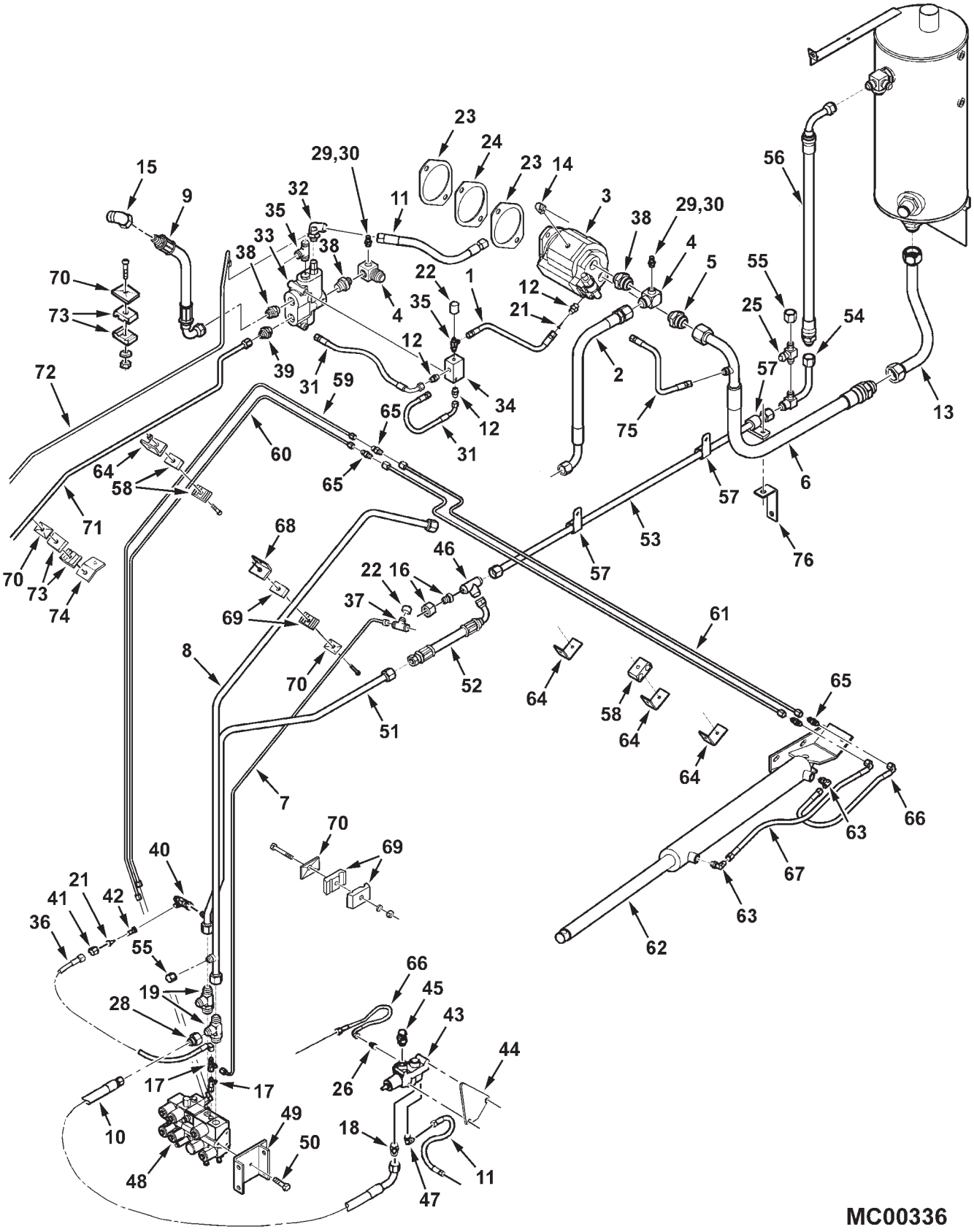

MC00336

https://truckmanualshub.com/

HYDRAULIC PUMP & LINES
(PRIOR S/N HR36101)

ITEM	NUMBER	QTY	DESCRIPTION
34	72525468	1	VALVE, SHUTTLE
35	70924783	2	TEE, ADJ ORB RUN, 7/16-20 JIC X ORB
	70921883	1	O-RING, .072 X .35 ID
36	71373538	1	HOSE ASY, LS DRAIN, 1/4
37	700701350	1	TEE, UNION, 7/16-20 JIC
38	70935768	2	STR CONN, 1-1/16-12 JIC X 1-5/16-12 ORB (VARIABLE LOCATION. QTY 2 ON VALVE PRIOR S/N HP36101)
	70921214	2	O-RING, .116 X 1.17 ID
39	700701753	1	STR CONN, 3/4-16 JIC X 1-1/16-12 ORB
	70921206	1	O-RING, .116 X .924 ID
40	70921297	1	TEE, SWIVEL RUN, 9/16-18 JIC
41	846204	1	TUBE NUT, 9/16-18
42	116644W1	1	FITTING, ORIFICE, 7/16-20 JIC
43	104135W91	1	VALVE, REEL DRIVE
	70921719	2	CAPSCREW, 5/16-18 X 2-1/2 GR5
	70917372	2	NUT, 5/16-18 REG
	Y705020	2	LOCKWASHER, 5/16 REG
44	71386414	1	PLATE, VALVE MTG
	70921332	2	CAPSCREW, 5/16-18 X 3/4 GR5
	70917372	2	NUT, 5/16-18 REG
	Y705020	2	LOCKWASHER, 5/16 REG
45	70921327	1	ELBOW, 90 DEG, 7/8-14 JIC X ORB
	70921205	1	O-RING, .097 X .755 ID
46	700701814	1	TEE, UNION, 1-1/16-12 JIC
47	70922523	1	ELBOW, 90 DEG, 9/16-18 JIC X 9/16-18 ORB
	70921885	1	O-RING, .078 X .468 ID
48	-----	1	VALVE STACK ASY (SEE BREAKDOWN)
49	108910W91	1	BRACKET WLDMT, VALVE
	70921176	4	CAPSCREW, 1/2-13 X 1-1/4 GR5
	Y705046	4	LOCKWASHER, 1/2 REG
	704031	4	NUT, 1/2-13 REG
50	70927340	3	CAPSCREW, 1/4-20 X 3/4 GR8
	353769X1	3	WASHER, 1/4, HARDENED
51	112174W1	1	TUBE ASY, RETURN
52	71394161	1	HOSE ASY, RETURN, 3/4
53	2629720W1	1	TUBE ASY,RTRN TO TANK(PRIOR S/N HP36101)
	71398138	1	TUBE ASY,RTRN TO TANK (EFF. S/N HP36101)
54	71388085	1	TUBE ASY,RTRN TO TANK(PRIOR S/N HP36101)
	71398142	1	TUBE ASY,RTRN TO TANK (EFF. S/N HP36101)
55	70923737	2	CAP, 3/4-16 JIC
56	71388086	1	HOSE ASY, RETURN TO TANK, 3/4
57	70926049	3	CLAMP, 3/4 DIA X .406 HOLE
	Y702951	2	SCR,HX WSHR HD,TAPPING, 3/8-16 X 3/4
	70921977	1	CAPSCREW, 5/16-18 X 1-1/4 GR5
	Y705608	1	WASHER, 5/16 NARROW
	Y704726	1	NUT, HEX FLANGE TOP LOCK, 5/16-18
58	148039M1	5	CLAMP PAIR, DOUBLE, 1/4 X 1/4 DIA
	70922837	5	CAPSCREW, 1/4-20 X 1-1/2
	70917377	6	WASHER, WIDE, 1/4
	70916622	5	NUT, 1/4-20 REG
	705012	5	LOCKWASHER, 1/4 REG

CONTINUED

https://truckmanualshub.com/

HYDRAULIC PUMP & LINES
(PRIOR S/N HR36101)

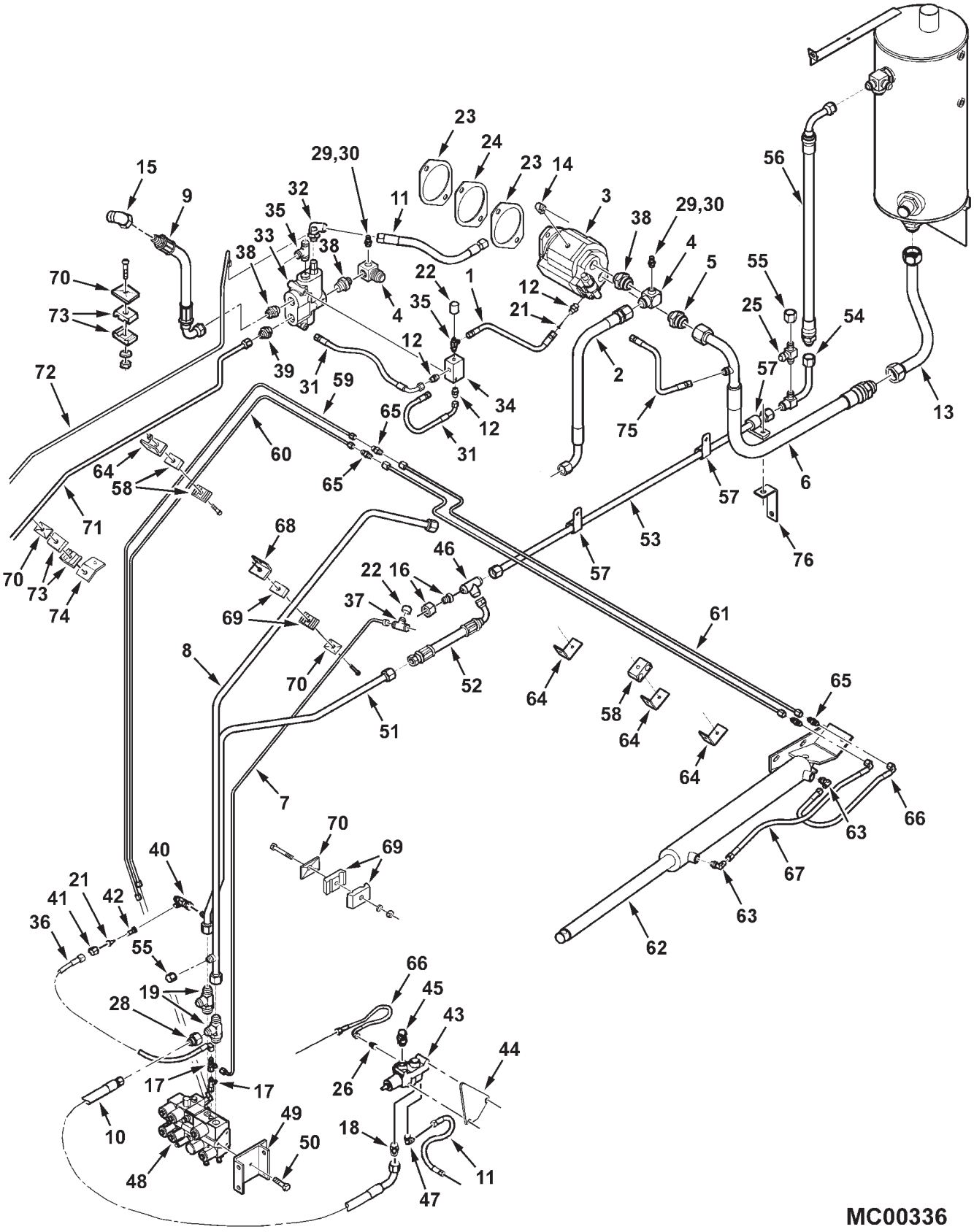

https://truckmanualshub.com/

HYDRAULIC PUMP & LINES
(PRIOR S/N HR36101)

ITEM	NUMBER	QTY	DESCRIPTION
59	112043W1	1	TUBE ASY, UNLDR SWING, VALVE LOWER, 1/4 (PRIOR MID. S/N HN36...)(SERVICE W/71401728)
	71401728	1	TUBE ASY, UNLDR SWING, VALVE LOWER, 1/4 (EFF. MID. S/N HN36...)
60	112044W1	1	TUBE ASY, UNLDR SWING, VALVE UPPER, 1/4 (PRIOR MID. S/N HN36...)(SERVICE W/71401727)
	71401727	1	TUBE ASY, UNLDR SWING, VALVE UPPER, 1/4 (EFF. MID. S/N HN36)
61	71401726	2	TUBE ASY, UNLOADER SWING
62	112785W92	1	HYD CYLINDER, UNLDR SWING (SEE BREAKDWN) (PRIOR S/N HN36101)
	71399143	1	HYD CYLINDER, UNLDR SWING (SEE BREAKDWN) (EFF. S/N HN36101)
63	700701834	2	ELBOW,90 DEG, 7/16-20 JIC X 9/16-18 ORB
	70921885	2	O-RING, .078 X .468 ID
64	101618M1	4	ANGLE BRACKET
	7703457	4	CAPSCREW, 1/4-20 X 3/4 GR5
	705012	4	LOCKWASHER, 1/4 REG
	70916622	4	NUT, 1/4-20 REG
65	70919214	4	UNION CONN, 7/16-20 JIC
66	101590M1	1	HOSE ASY, 1/4
67	101598M1	1	HOSE ASY, 1/4
68	101643M91	1	ANGLE BRACKET
	70921332	1	CAPSCREW, 5/16-18 X 3/4 GR5
	70917372	1	NUT, 5/16-18 REG
	Y705020	1	LOCKWASHER, 5/16 REG
69	101752M1	2	CLAMP PAIR, DOUBLE, 3/4 X 1/4 DIA
	70921159	1	CAPSCREW, 1/4-20 X 2-1/4 GR5
	7701485	1	CAPSCREW, 1/4-20 X 2 GR5
	705012	2	LOCKWASHER, 1/4 REG
	70916622	1	NUT, 1/4-20 REG
70	101646M1	4	COVER PLATE
71	71391246	1	TUBE ASY, STEERING SUPPLY, 1/2
72	71391252	1	TUBE ASY, STRG LS, 1/4
73	101751M1	2	CLAMP PAIR, DOUBLE, 1/2 X 1/4 DIA
	7701485	2	CAPSCREW, 1/4-20 X 2 GR5
	705012	2	LOCKWASHER, 1/4 REG
	70916622	2	NUT, 1/4-20 REG
74	112972W1	1	STRAP, TUBE SUPPORT
	70921332	1	CAPSCREW, 5/16-18 X 3/4 GR5
	70917372	1	NUT, 5/16-18 REG
	Y705020	1	LOCKWASHER, 5/16 REG
75	71388081	1	HOSE ASY, DRAIN
76	71398139	1	ANGLE BRKT, TUBE SUPP'T(EFF S/N HP36101)

https://truckmanualshub.com/

HYDRAULIC PUMP

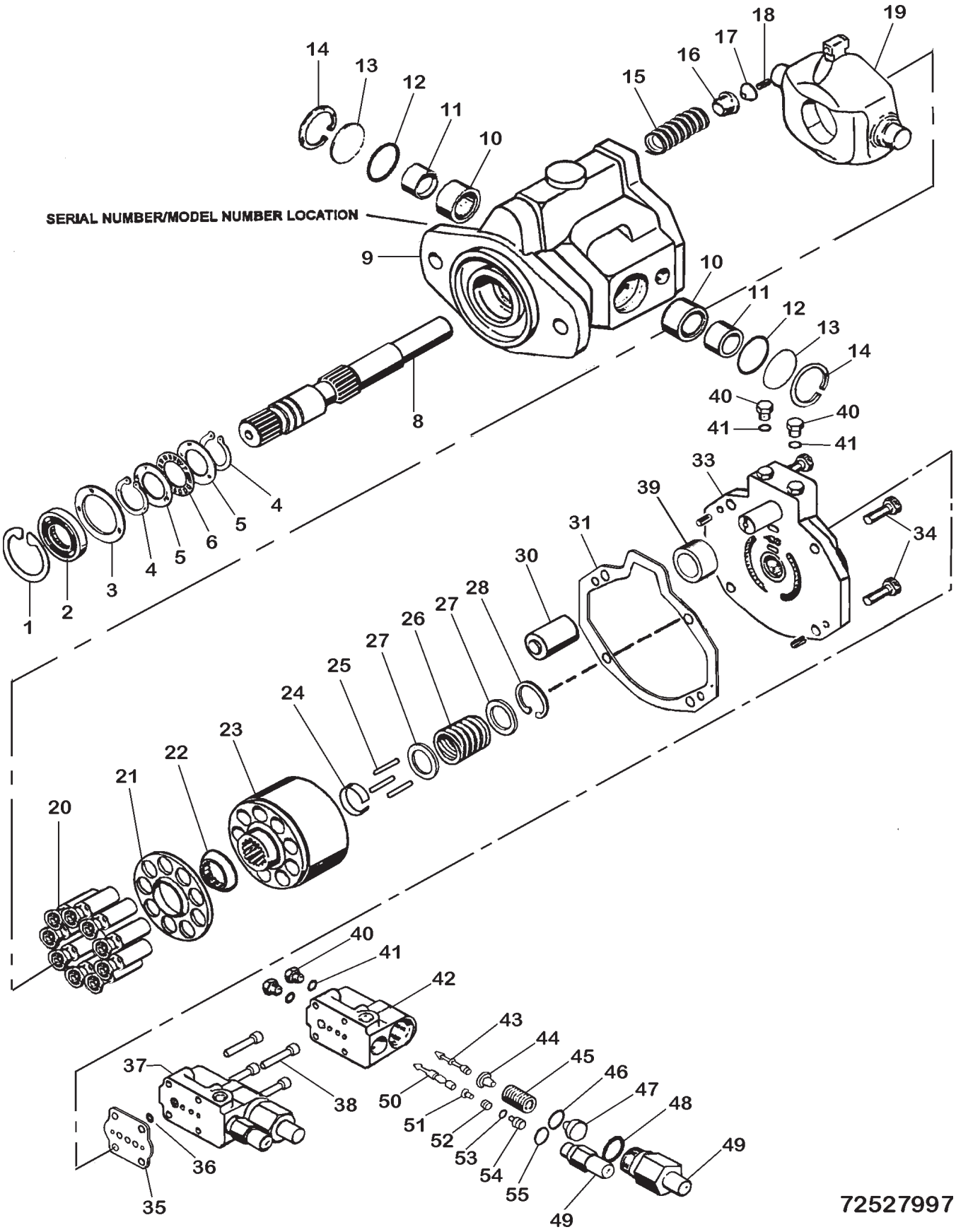

72527997

https://truckmanualshub.com/

ITEM	NUMBER	QTY	DESCRIPTION
-	71388864	1	PUMP, SYSTEM HYDRAULIC
1	70927700	1	* RING, RETAINING
2	70269723	1	* SEAL, SHAFT
3	70269722	1	WASHER
4	72528008	2	* RING, RETAINING
5	70933255	2	RACE, THRUST BEARING
6	70930441	1	BEARING, THRUST
8	104456W1	1	SHAFT, DRIVE
9	72528022	1	HOUSING
10	71012174	2	BEARING, THRUST
11	700719785	2	RACE, INNER
12	70924791	2	* O-RING, .103 X 1.424 ID, 75 DUR.
13	700719782	2	COVER, TRUNNION
14	7035983	2	* RING, RETAINING
15	700719780	1	SPRING
16	700719784	1	COLLAR, SPRING
17	700719783	1	BUTTON, PIVOT
18	72528006	1	PIN, ROLL
19	72528024	1	CAMPLATE
20	----------	1	*KIT, PISTON (INCL. 9 PISTONS)
21	----------	1	*SPIDER
22	----------	1	*PIVOT, SPIDER
-	----------	-	*(SERVICE WITH #700706490 KIT ASY.)
23	700706490	1	KIT ASY., ROTATING
24	70267150	1	KEEPER, PIN
25	70267148	3	PIN, LOADING
26	70267155	1	SPRING
27	70261383	2	WASHER
28	355602X1	1	RING, RETAINING
30	72528025	1	PISTON
31	70267132	1	* GASKET
33	104458W91	1	BACKPLATE
34	70920415	4	CAPSCREW, 3/8-16 X 1-1/4
35	70270210	1	* GASKET
36	72528012	1	* O-RING
37	72528004	1	COMPENSATOR ASY.
38	103714W1	4	CAPSCREW
39	----------	1	SPACER (NOT USED)
40	70935836	1	PLUG
41	70921882	1	O-RING, .064 X .301 ID, 90 DUR.
42	----------	1	BODY (NOT SERVICED)
43	----------	1	SPOOL, PRESSURE (NOT SERVICED)
44	70272357	1	CAP, SPRING PIVOT
45	70267167	1	SPRING
46	70935118	1	O-RING, VITON, .103 X .549 ID, 75 DUR.
47	70272358	1	FOLLOWER, FLOW SPRING
48	70935847	1	O-RING, VITON, .103 X .862 ID, 75 DUR.
49	72528014	1	ADJUSTMENT CAP, PRESSURE
50	70272355	1	SPOOL, FLOW
51	70272361	1	PIVOT, SPRING
52	70272365	1	SPRING
53	70936498	1	O-RING, VITON, .070 X .208 ID, 90 DUR.
54	70272360	1	FOLLOWER, FLOW SPRING
55	70928488	1	O-RING, VITON, .078 X .468 ID, 90 DUR.
-	71352945	AR	SEAL REPAIR KIT (INCL. ITEMS MARKED *)

72527997
PR: 370

https://truckmanualshub.com/

HYDRAULIC PUMP & LINES

SISU ENGINE
(EFF. S/N HR36101)

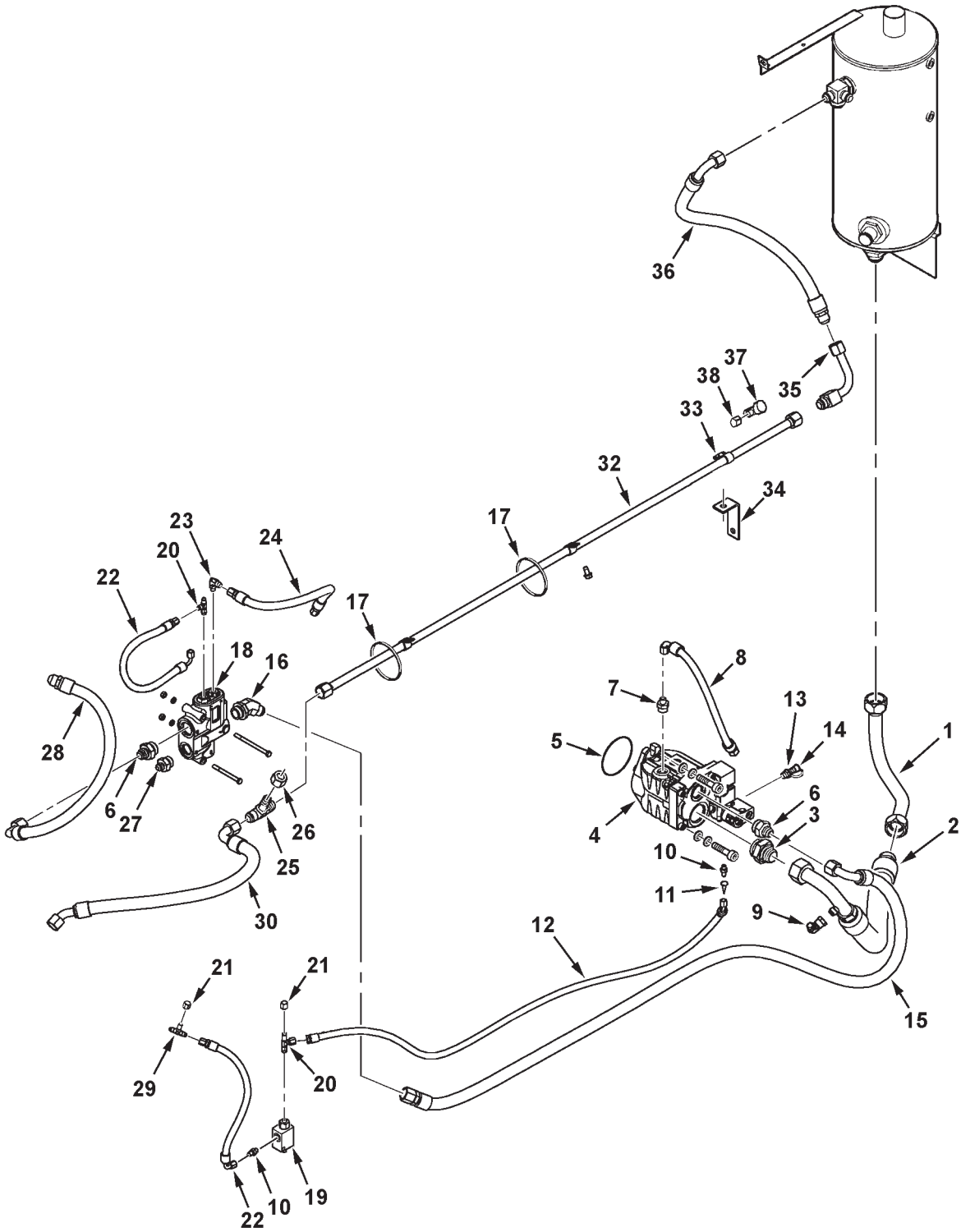

MC00401

https://truckmanualshub.com/

HYDRAULIC PUMP & LINES

SISU ENGINE
(EFF. S/N HR36101)

ITEM	NUMBER	QTY	DESCRIPTION
1	71394140	1	TUBE ASY
2	71411839	1	HOSE ASY, PUMP SUCTION
3	112890W91	1	STR CONN, 1-7/8-12 ORB X 1-5/8-12 JIC
	70921887	1	O-RING, .118 X 1.720 ID
4	71406627	1	PUMP ASY, HYD PISTON (SEE BREAKDOWN)
	3010013X1	2	CPSCR,HX SKT HD, M14-2.0 X 60 CL12.9
	70934063	2	LOCKWASHER, M14
	700101804	2	WASHER, .562 ID X 1.0 X .127 TH
5	70925310	1	O-RING, .070 X 3.99 ID, 75 DUR
6	70935768	2	STR CONN, 1-1/16-12 JIC X 1-5/16-12 ORB
	70921214	2	O-RING, .116 X 1.17 ID
7	8746018	2	CONNECTOR, STR, 9/16-18 JIC X 7/8-14 ORB
	70921205	2	O-RING, .097 X .755 ID
8	71410484	1	HOSE ASY, PUMP CASE DRAIN
9	70921279	1	ELBOW, 90 DEG, SWIVEL, 3/4-16 JIC
10	700701356	3	STR CONN, 7/16-20 JIC X 7/16-20 ORB
	70921883	3	O-RING, .072 X .35 ID
11	286501M1	1	CONE FILTER, 1/4
12	71410485	1	HOSE ASY, LOAD SENSE
13	71379303	1	COUPLER, DIAGNOSTIC
14	71379304	1	DUST CAP, HYD COUPLER
15	71410486	1	HOSE ASY, PUMP TO PRIORITY VALVE
16	70935989	1	ELB, 45 D, 1-1/16-12 JIC X 1-5/16-12 ORB
	70921214	1	O-RING, .116 X 1.171 ID
17	3619622M1	2	TIE, BLACK NYLON, .184 X 14.2 LG
18	71391453	1	VALVE ASY, PRIORITY FLOW DIVIDER
	772418	1	CAPSCREW, 5/16-18 X 3-1/2 GR5
	873026	1	CAPSCREW, 5/16-18 X 4-1/2 GR5
	70917372	2	NUT, 5/16-18 REG
	70917356	2	LOCKWASHER, 5/16 REG
19	72525468	1	VALVE, SHUTTLE
20	70924783	2	TEE, ADJ ORB, RUN, 7/16-20 JIC X ORB
	70921883	1	O-RING, .072 X .35 ID
21	700715848	2	CAP, 7/16-20 JIC
22	116640W1	1	HOSE ASY,SHUTTL VAL(QTY 2 PRIOR HS36101)
23	70930510	1	ELBOW,90 DEG, 9/16-18 JIC X 7/16-20 ORB
	70921883	1	O-RING, .072 X .35 ID
24	101650M1	1	HOSE ASY, PRIORITY VALVE RETURN
25	700701814	1	TEE, UNION, 1-1/16-12 JIC
26	70925852	1	REDUCER, 1-1/16-12 JIC X 9/16-18 MALE
	70919197	1	TUBE NUT, 1-1/16-12
27	700701753	1	STR CONN, 3/4-16 JIC X 1-1/16-12 ORB
	70921206	1	O-RING, .116 X .924 ID
28	101588M1	1	HOSE ASY, PRIORITY VALVE OUT, 5/8 ID (PRIOR S/N HS36101)
29	700701350	1	TEE, UNION, 7/16-20 JIC (PRIOR HS36101)
30	700727621	1	HOSE ASY, RETURN (PRIOR S/N HS36101)
32	71398138	1	TUBE ASY, RETURN TO TANK
33	70926049	3	CLAMP, LINE, 3/4 DIA X .406 HOLE
	Y702951	2	SCR,HX WSHR HD,TAPPING, 3/8-16 X 3/4
	70921977	1	CAPSCREW, 5/16-18 X 1-1/4 GR5
	Y705608	1	WASHER, 5/16 NARROW
	Y704726	1	NUT, HEX FLANGE TOP LOCK, 5/16-18
34	71398139	1	ANGLE BRKT, TUBE SUPPORT
35	71398142	1	TUBE ASY, RETURN TO TANK
36	71388086	1	HOSE ASY, RETURN TO TANK, 3/4
37	70921298	1	TEE, SWIVEL RUN, 3/4-16 JIC
38	70923737	1	CAP, 3/4-16 JIC

https://truckmanualshub.com/

SYSTEM PUMP
(EFF. S/N HR36101)

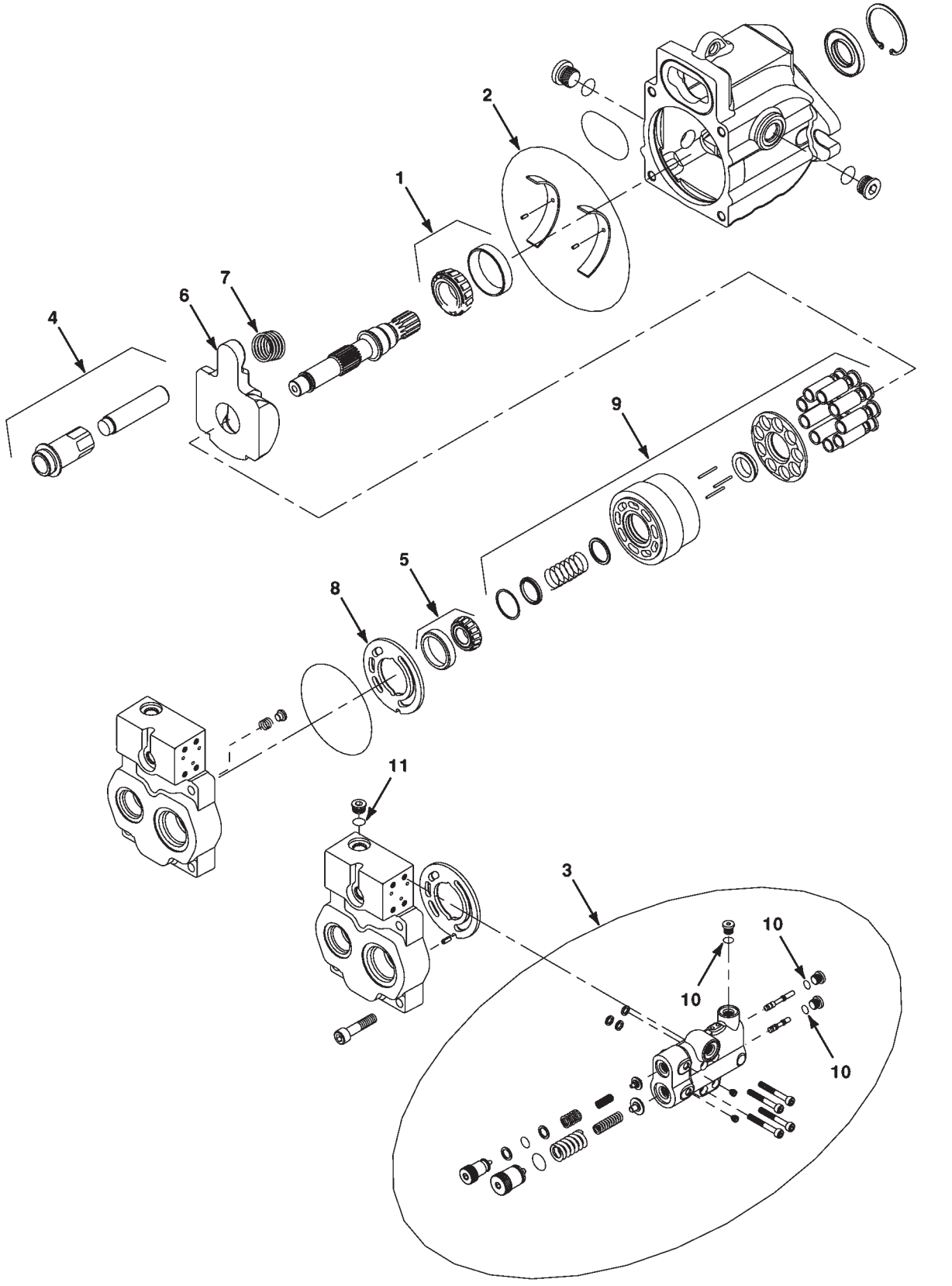

https://truckmanualshub.com/

SYSTEM PUMP
(EFF. S/N HR36101)

ITEM	NUMBER	QTY	DESCRIPTION
-	71406627	1	PISTON PUMP ASY, HYDRAULIC
1	71414689	1	BEARING KIT, FRONT
2	71414688	1	SWASHPLATE BEARING KIT
3	71414687	1	CONTROL KIT
4	700725471	1	KIT-SERVO PISTON
5	71414681	1	BEARING KIT, REAR
6	71414690	1	SWASHPLATE
7	700725468	1	BIAS SPRING
8	71414682	1	VALVE PLATE, CCW, KRL
9	700725475	1	CYLINDER BLOCK KIT 41/45 CC
10	727281	3	O-RING
11	70928488	1	O-RING

GC00505
PR: t07a23o20b0012

https://truckmanualshub.com/

CONTROL VALVE & LINES

SISU ENGINE
(EFF. S/N HR36101-HR36999)

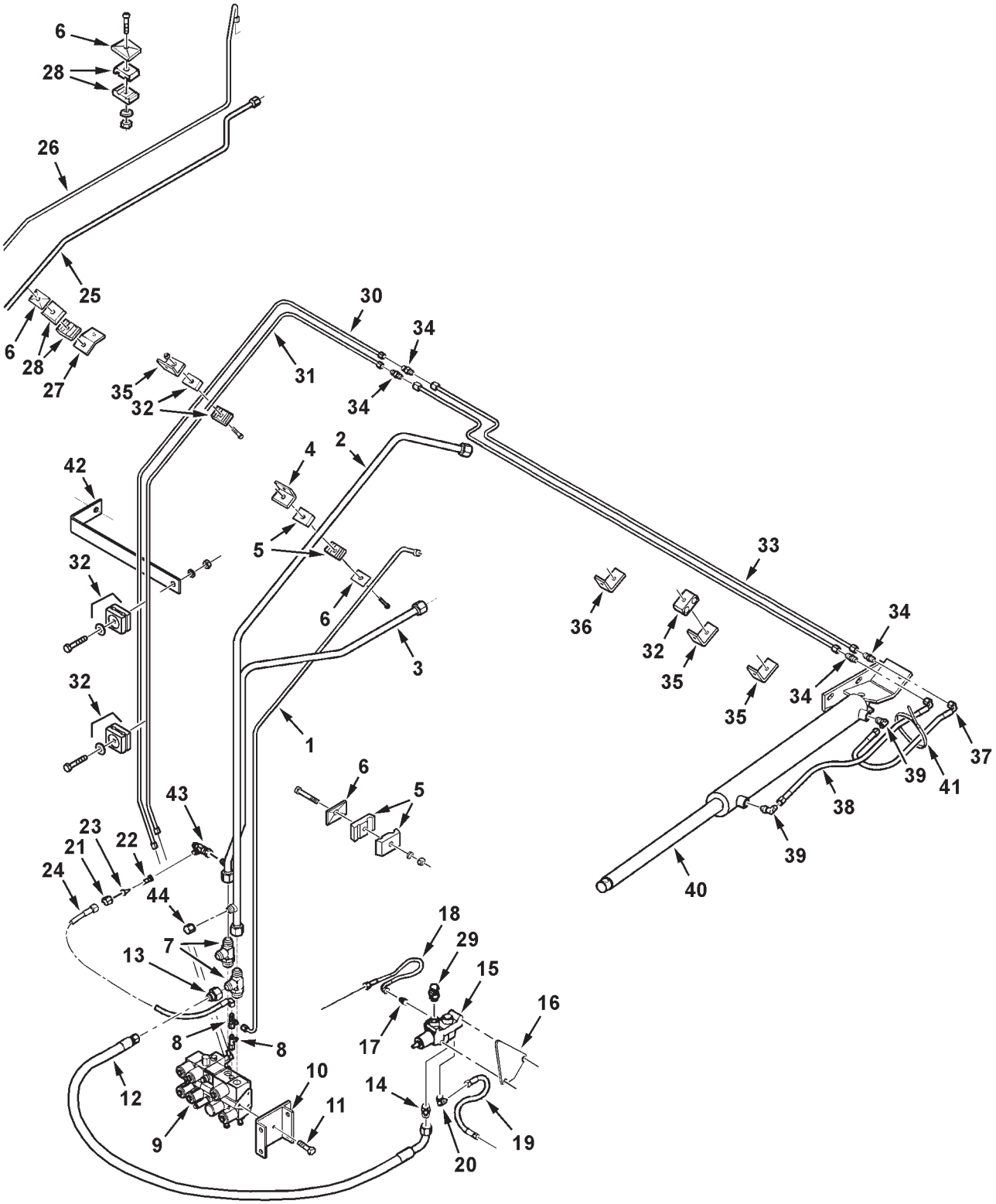

MC00402

https://truckmanualshub.com/

CONTROL VALVE & LINES

SISU ENGINE
(EFF. S/N HR36101-HR36999)

ITEM	NUMBER	QTY	DESCRIPTION
1	71399150	1	TUBE ASY, CONTROL VALVE, L.S.
2	71399149	1	TUBE ASY, FLOW DIVIDER TO CONTROL VALVE
3	700727622	1	TUBE ASY, CONTROL VALVE, RETURN
4	101643M91	1	ANGLE BRACKET WLMT
	70921332	1	CAPSCREW, 5/16-18 X 3/4 GR5
	70917356	1	LOCKWASHER, 5/16
	70917372	1	NUT, 5/16-18 REG
5	101752M1	2	CLAMP PAIR, DOUBLE, 3/4 & 1/4 DIA
	70921159	1	CAPSCREW, 1/4-20 X 2-1/4 GR5
	7701485	1	CAPSCREW, 1/4-20 X 2 GR5
	705012	2	LOCKWASHER, 1/4
	70916622	1	NUT, 1/4-20 REG
6	101646M1	4	COVER PLATE
7	70922181	2	TEE, ADJ ORB RUN, 1-1/16-12 JIC X ORB
	70921206	2	O-RING, .116 X .924 ID
8	700701355	2	TEE, SWIVEL RUN, 7/16-20 JIC
9	-----	1	VALVE STACK ASY (SEE BREAKDOWN)
10	108910W91	1	BRACKET WLDMT, VALVE
	7701188	4	CAPSCREW, 1/2-13 X 1-1/4 GR5
	Y705046	4	LOCKWASHER, 1/2
	704031	4	NUT, 1/2-13 REG
11	70927340	3	CAPSCREW, 1/4-20 X 3/4 GR8
	353769X1	3	WASHER, HARD, 1/4
12	112050W1	1	HOSE ASY, PRESS TO REEL DRIVE VALVE
13	700701744	1	REDUCER, 1-1/16-12 JIC X 3/4-16 MALE
14	70921326	1	STR CONN, 7/8-14 JIC X ORB
	70921205	1	O-RING, .097 X .755 ID
15	104135W91	1	VALVE, REEL DRIVE
	70921719	2	CAPSCREW, 5/16-18 X 2-1/2 GR5
	70917372	2	NUT, 5/16-18 REG
	70917356	2	LOCKWASHER, 5/16
16	71386414	1	PLATE, VALVE MOUNTING
	70921333	2	CAPSCREW, 5/16-18 X 1" GR5
	70917372	2	NUT, 5/16-18 REG
	70917356	2	LOCKWASHER, 5/16
17	70926292	1	STR CONN, 7/16-20 JIC X 9/16-18 ORB
	70921885	1	O-RING, .078 X .468 ID
18	101590M1	1	HOSE ASY, 1/4
19	101650M1	1	HOSE ASY, VALVE DRAIN
20	70922523	1	ELBOW, 90 DEG, 9/16-18 JIC X 9/16-18 ORB
	70921885	1	O-RING, .078 X .468 ID
21	846204	1	TUBE NUT, 9/16-18
22	116644W1	1	FITTING, ORIFICE, 7/16-20 JIC
23	286501M1	2	CONE FILTER, 1/4
24	71373538	1	HOSE ASY, L.S. DRAIN, 1/4

CONTINUED

https://truckmanualshub.com/

CONTROL VALVE & LINES

SISU ENGINE
(EFF. S/N HR36101-HR36999)

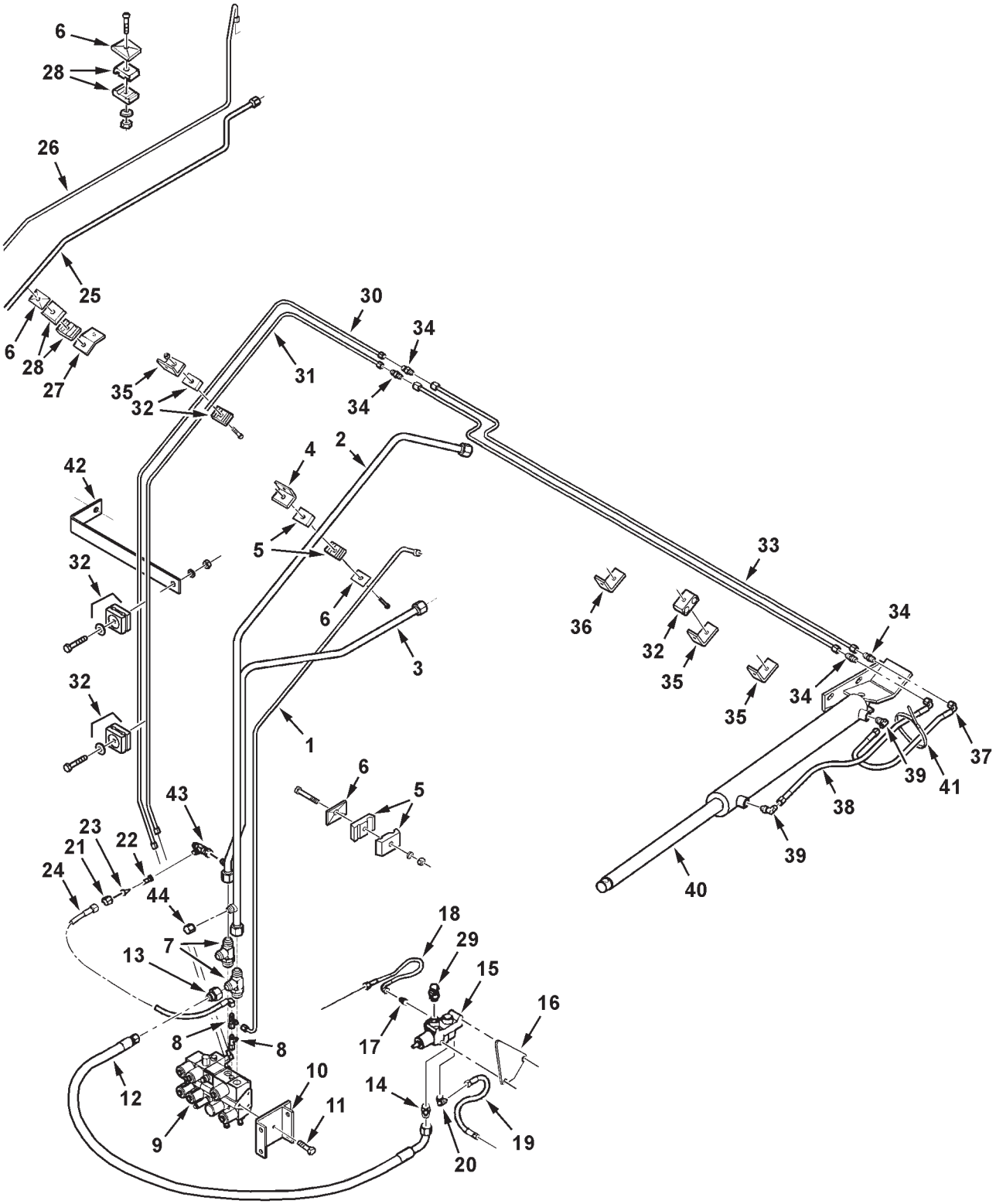

MC00402

https://truckmanualshub.com/

CONTROL VALVE & LINES
SISU ENGINE
(EFF. S/N HR36101-HR36999)

ITEM	NUMBER	QTY	DESCRIPTION
25	71391246	1	TUBE ASY, STEERING SUPPLY, 1/2
26	71391252	1	TUBE ASY, STEERING L.S., 1/4
27	112972W1	1	STRAP, TUBE SUPPORT
	70921332	1	CAPSCREW, 5/16-18 X 3/4 GR5
	70917372	1	NUT, 5/16-18 REG
	70917356	1	LOCKWASHER, 5/16
28	101751M1	2	CLAMP PAIR, DOUBLE, 1/2 & 1/4 DIA
	7701485	2	CAPSCREW, 1/4-20 X 2 GR5
	705012	2	LOCKWASHER, 1/4
	70916622	2	NUT, 1/4-20 REG
29	70921327	1	ELBOW, 90 DEG, 7/8-14 JIC X ORB
	70921205	1	O-RING, .097 X .755 ID
30	71401728	1	TUBE ASY, UNLDR SWING, VALVE LOWER, 1/4
31	71401727	1	TUBE ASY, UNLDR SWING, VALVE UPPER, 1/4
32	148039M1	6	CLAMP PAIR, DOUBLE, 1/4 & 1/4 DIA
	70922837	6	CAPSCREW, 1/4-20 X 1-1/2
	70917377	6	WASHER, WIDE, 1/4
	70916622	6	NUT, 1/4-20 REG
	705012	6	LOCKWASHER, 1/4
33	71401729	2	TUBE ASY, UNLDR SWING
34	70919214	4	UNION CONNECTOR, 7/16-20 JIC
35	101618M1	3	ANGLE BRACKET
	7703457	3	CAPSCREW, 1/4-20 X 3/4 GR5
	705012	3	LOCKWASHER, 1/4
	70916622	3	NUT, 1/4-20 REG
36	71398203	1	ANGLE BRACKET, LONG
	7703457	1	CAPSCREW, 1/4-20 X 3/4 GR5
	705012	1	LOCKWASHER, 1/4
	70916622	1	NUT, 1/4-20 REG
37	101590M1	1	HOSE ASY, 1/4
38	101598M1	1	HOSE ASY, 1/4
39	700701834	2	ELBOW,90 DEG, 7/16-20 JIC X 9/16-18 ORB
	70921885	2	O-RING, .078 X .468 ID
40	71399143	1	HYD CYLINDER, UNLDR SWING(SEE BREAKDOWN)
41	3619622M1	1	TIE, BLACK NYLON, .184 X 14.2 LG
42	71407464	1	STRAP, TUBE SUPPORT
	70921333	1	CAPSCREW, 5/16-18 X 1 GR5
	70917642	1	WASHER, 5/16, WIDE
	Y704726	1	NUT, HEX FLANGE TOP LOCK, 5/16-18
43	70921297	1	TEE, SWIVEL RUN, 9/16-18 JIC
44	70923737	1	CAP, 3/4-16 JIC

MC00402
PR: t05l09o11c0024

https://truckmanualshub.com/

HYDRAULIC VALVE ASSEMBLY
(EFF. S/N HS36101)

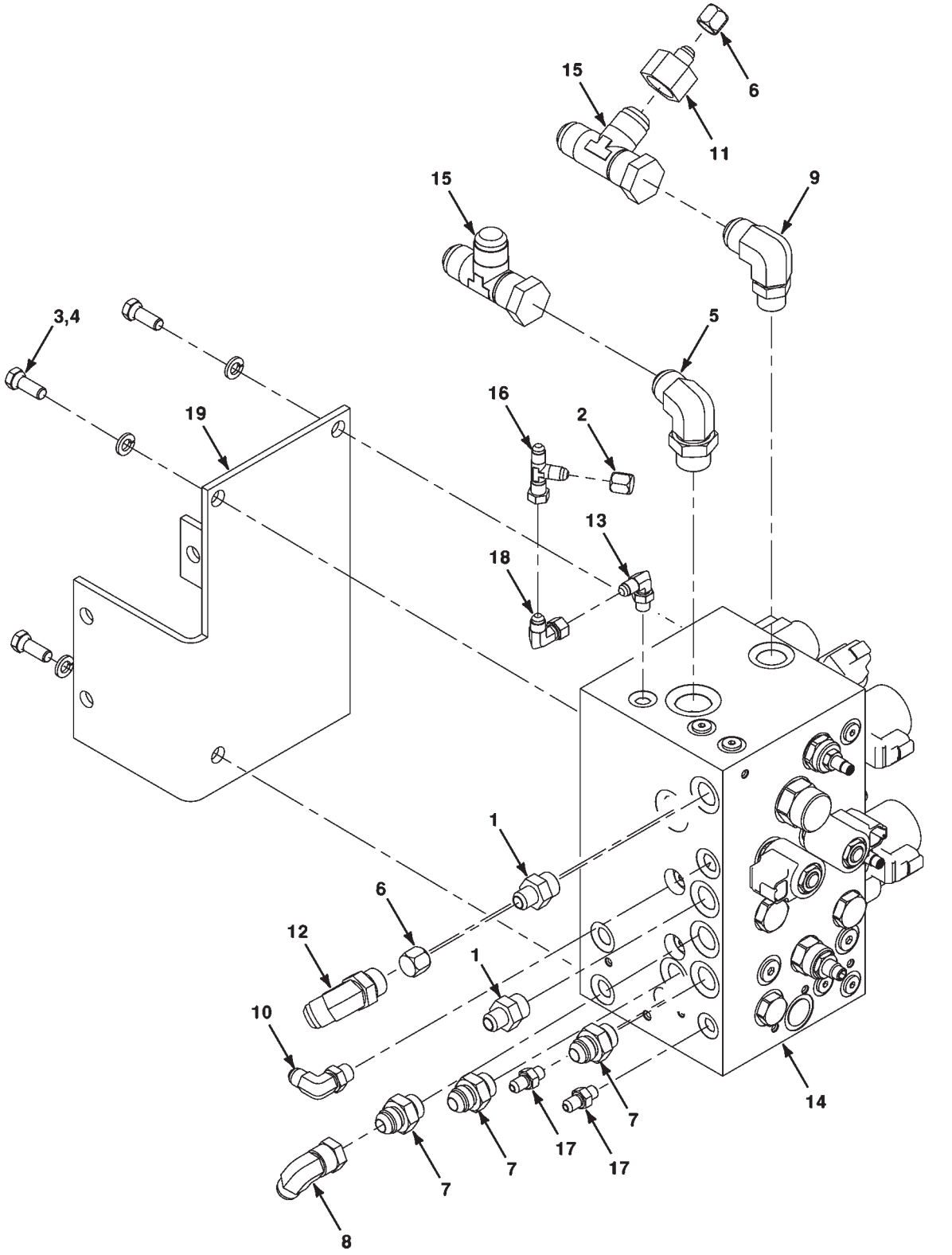

https://truckmanualshub.com/

HYDRAULIC VALVE ASSEMBLY
(EFF. S/N HS36101)

ITEM	NUMBER	QTY	DESCRIPTION
1	360202X91	2	CONNECTOR, STR, 9/16-18 JIC X 3/4-16 ORB
	70921349	1	O-RING, .087 X .644 ID
2	700715848	1	CAP, 7/16-20 JIC
3	70921210	3	CAPSCREW, 3/8-16 X 1.0 GR5
4	70916965	3	LOCKWASHER, 3/8
5	70921203	1	ELBOW, 90 DEG, 1-1/16-12 ORB X JIC
	70921206	1	O-RING, .116 X .924 ID
6	791541	2	CAP, 9/16-18
7	846337	3	CONNECTOR, STR, 3/4-16 JIC X ORB
	70921349	1	O-RING, .087 X .644 ID
8	70921279	1	ELBOW, 90 DEG SWIVEL, 3/4-16 JIC
9	70922974	1	ELBOW,90 DEG, 7/8-14 ORB X 1-1/16-12 JIC
	70921205	1	O-RING, .097 X .755 ID
10	70922523	1	ELBOW, 90 DEG, 9/16-18 ADJ ORB X JIC
	70921885	1	O-RING, .078 X .468 ID
11	7791361	1	REDUCER, 9/16-18 JIC M X 1-1/16-12 FEM
12	70921328	1	ELBOW, 45 DEG, 7/8-14 JIC X ORB
	70921205	1	O-RING, .097 X .755 ID
13	70922571	1	ELBOW, 90 DEG, 7/16-20 JIC X ORB
	70921883	1	O-RING, .072 X .351 ID
14	71409181	1	VALVE ASY-HYDRAULIC (SEE BREAKDOWN)
15	70921691	2	TEE, SWIVEL RUN, 1-1/16-12 JIC
16	700701355	1	TEE, SWIVEL RUN, 7/16-20 JIC
17	700701356	2	CONNECTOR, STR, 7/16-20 JIC X ORB
	70921883	1	O-RING, .072 X .351 ID
18	700719027	1	ELBOW, 90 DEG SWIVEL, 7/16-20 JIC
19	71406990	1	SUPPORT WA-VALVE

MC00565
PR: t07a23o20b0013

https://truckmanualshub.com/

MAIN CONTROL VALVE
(EFF. S/N HS36101)

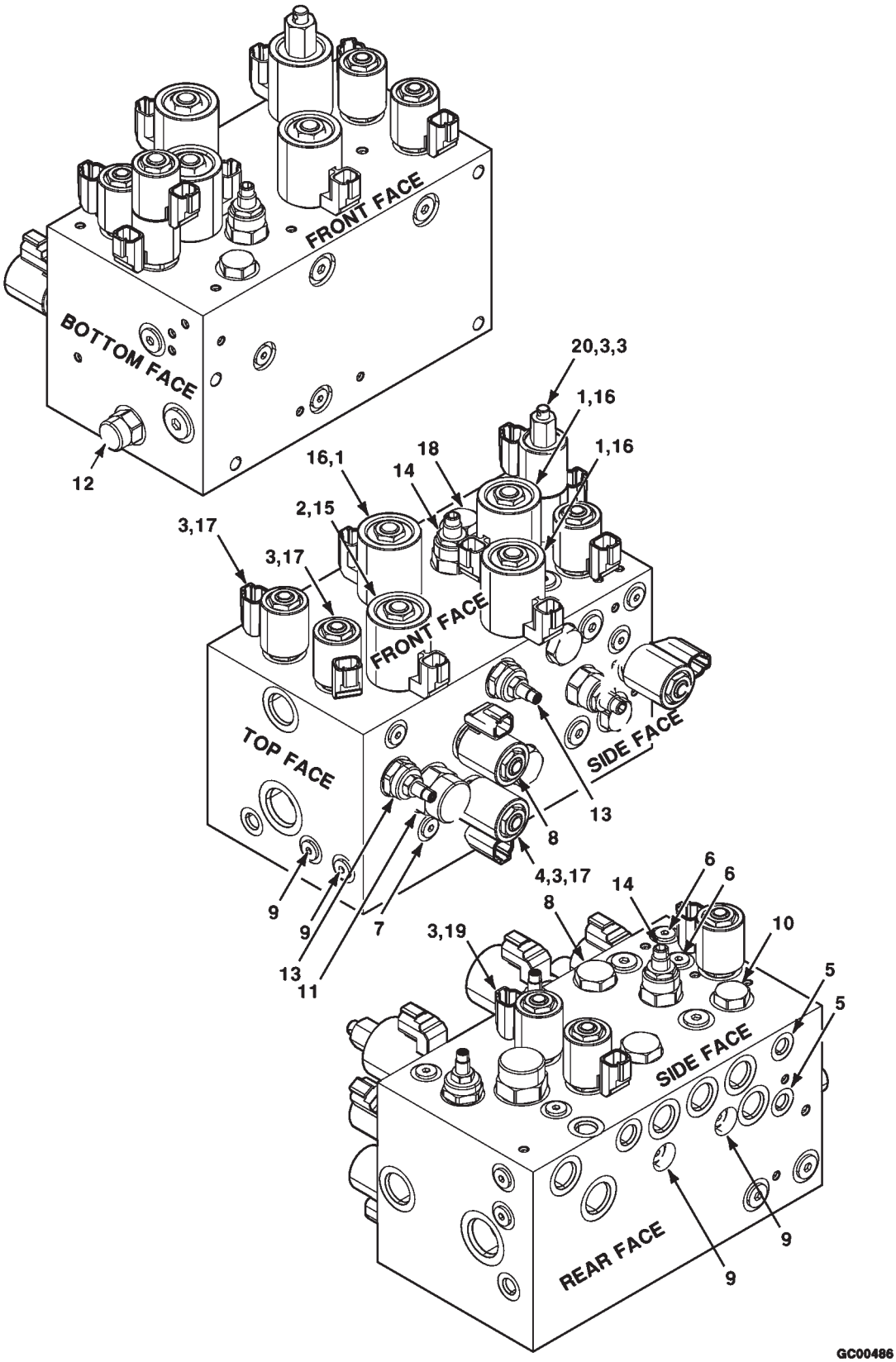

https://truckmanualshub.com/

MAIN CONTROL VALVE
(EFF. S/N HS36101)

ITEM	NUMBER	QTY	DESCRIPTION
-	71409181	1	VALVE ASY, MAIN CONTROL
1	700728892	3	COIL
2	700728893	1	COIL
3	700728894	6	COIL
4	700728895	1	ORIFICE
5	700728896	2	ORIFICE
6	700728897	2	ORIFICE
7	700728898	1	ORIFICE
8	700728900	2	CHECK VALVE
9	700728901	4	CHECK VALVE
10	700728902	1	DUAL CHECK
11	700728903	1	COMPENSATOR
12	700728904	1	FLOW REGULATOR
13	700728905	2	FLOW REGULATOR
14	700728906	2	NEEDLE VALVE
15	700728908	1	SOLENOID PROPORTIONAL
16	700728909	3	COIL
17	700728910	3	SOLENOID VALVE
18	700728911	1	CAVITY PLUG
19	700728912	1	SOLENOID VALVE
20	700728913	1	SOLENOID VALVE

GC00486
PR: t06j04m20c0019

https://truckmanualshub.com/

STEERING & HEADER FUNCTIONS
(PRIOR S/N HS36101)

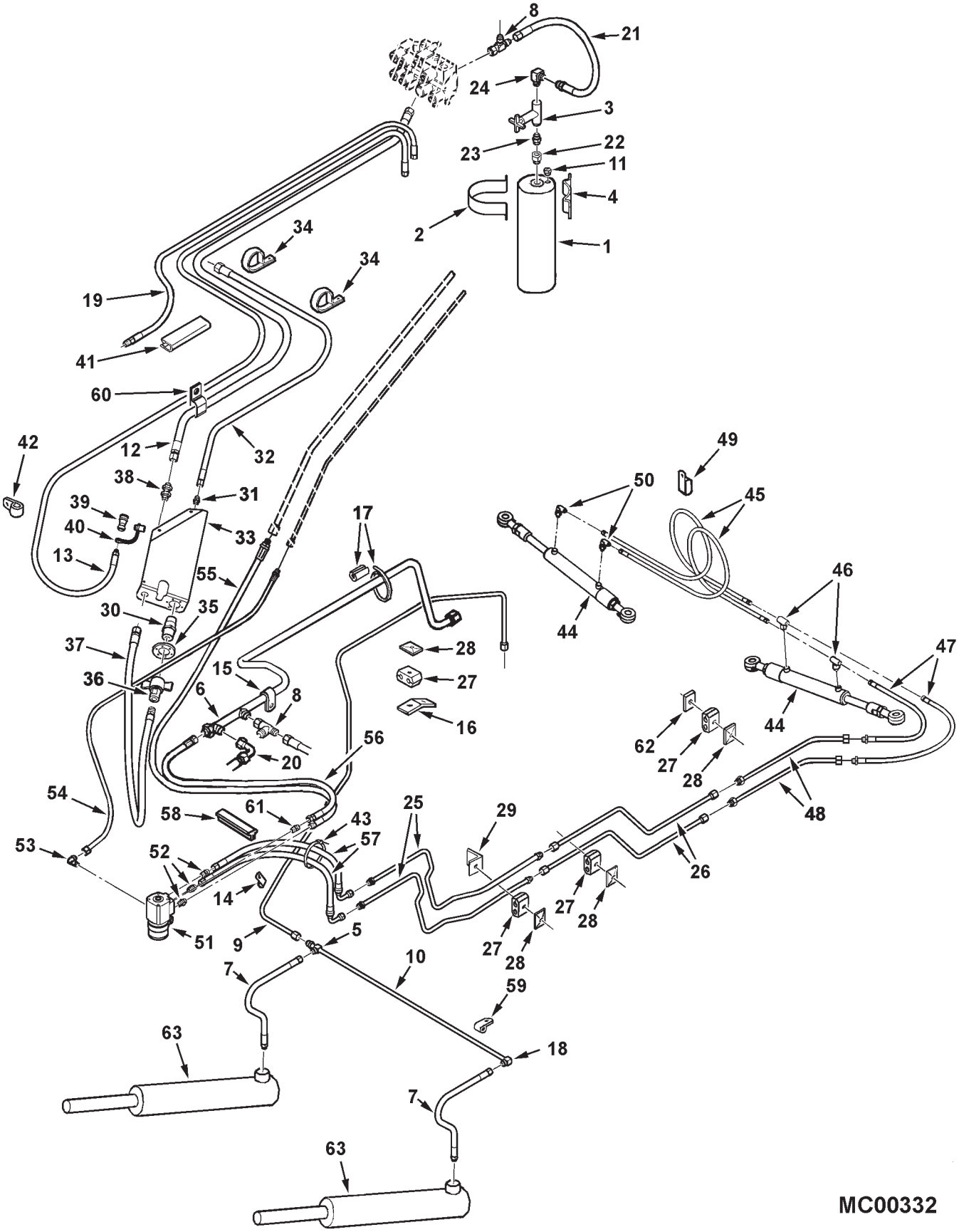

https://truckmanualshub.com/

STEERING & HEADER FUNCTIONS
(PRIOR S/N HS36101)

ITEM	NUMBER	QTY	DESCRIPTION
1	700712632	1	ACCUMULATOR
2	101705M1	2	BRACKET, ACCUMULATOR
	70921977	4	CAPSCREW, 5/16-18 X 1-1/4
	700709602	4	WASHER, PLAIN WIDE, 5/16
	Y705046	4	LOCKWASHER, 5/16
	70917372	4	NUT, HEX 5/16-18
3	71334329	1	VALVE ASY, BALL
4	101698M1	2	PAD, ACCUMULATOR
5	70921472	1	TEE-UNION, MALE, 3/4-16
6	71399144	1	TUBE ASY, VALVE RETURN
7	101589M91	2	HOSE ASY., HEADER & ACCUMULATOR
	70921349	2	O-RING, .087 X .644 ID
8	70921298	2	TEE, SWIVEL RUN, 3/4-16 JIC
9	71391236	1	TUBE ASY., HEADER LIFT (PRIOR MID. S/N HN36---)(SERVICE W/71400691)
	71400691	1	TUBE ASY,HDR LIFT (EFF. MID S/N HN36---)
10	71394138	1	TUBE ASY., HEADER LIFT FRT.
11	357194X1	1	PLUG, HEX HD, 9/16-18 ORB
	70921885	1	O-RING, .078 X .468 ID
12	71394173	1	HOSE ASY., REEL DRIVE, 1/2 ID
13	116482W1	1	HOSE ASY., REEL LIFT, 3/8 ID
14	70925617	2	CLAMP, 1/2 DIA X .406 HOLE (QTY 1 PRIOR S/N HP36101)
	70921333	1	CAPSCREW, 5/16-18 X 1
	700709602	1	WASHER, PLAIN WIDE, 5/16
	Y705046	1	LOCKWASHER, 5/16
	70917372	1	NUT, HEX 5/16-18
15	70926049	1	CLAMP, .750 TUBE X .406 HOLE
	70921333	1	CAPSCREW, 5/16-18 X 1
	700709602	1	WASHER, PLAIN WIDE, 5/16
16	112972W1	1	STRAP, TUBE SUPPORT
	70921332	1	CAPSCREW, 5/16-18 X 3/4
	Y705046	1	LOCKWASHER, 5/16
	70917372	1	NUT, HEX 5/16-18
17	103600W1	1	SLEEVE, SPLIT
	70937133	1	TIE, SELF LOCKING, .300 X 14.5
18	70921364	1	ELBOW, 90 DEG, 3/4-16 JIC X 3/4-16 JIC
19	- - - - -	1	HOSE ASY, SUPPLY (SEE "HEADER REVERSER")
20	- - - - -	1	HOSE ASY, RETURN (SEE "HEADER REVERSER")
21	71393843	1	HOSE ASY., ACCUMULATOR
22	700705119	1	REDUCER, 1-1/16-12 ORB X 3/4-16 ORB FEM
	70921206	1	O-RING, .116 X .924 ID
23	70933454	1	CONNECTOR, STR. 3/4-16 ORB X 1/2 NPTF
	70921349	1	O-RING, .087 X .644 ID
24	70919195	1	ELBOW, 90 DEG, 3/4-16 JIC X 1/2 NPTF
25	71398227	2	TUBE ASY., STEERING FRT.
26	101596M92	2	TUBE ASY., STEERING, 1/2 ID
27	148022M1	8	CLAMP PAIR, DOUBLE, 1/2 X 1/2 DIA
28	101646M1	8	COVER PLATE
	7701485	6	CAPSCREW, 1/4-20 X 2
	70921159	2	CAPSCREW, 1/4-20 X 2-1/4
	705012	8	LOCKWASHER, 1/4
	704007	8	NUT, HEX 1/4-20

CONTINUED

https://truckmanualshub.com/

STEERING & HEADER FUNCTIONS
(PRIOR S/N HS36101)

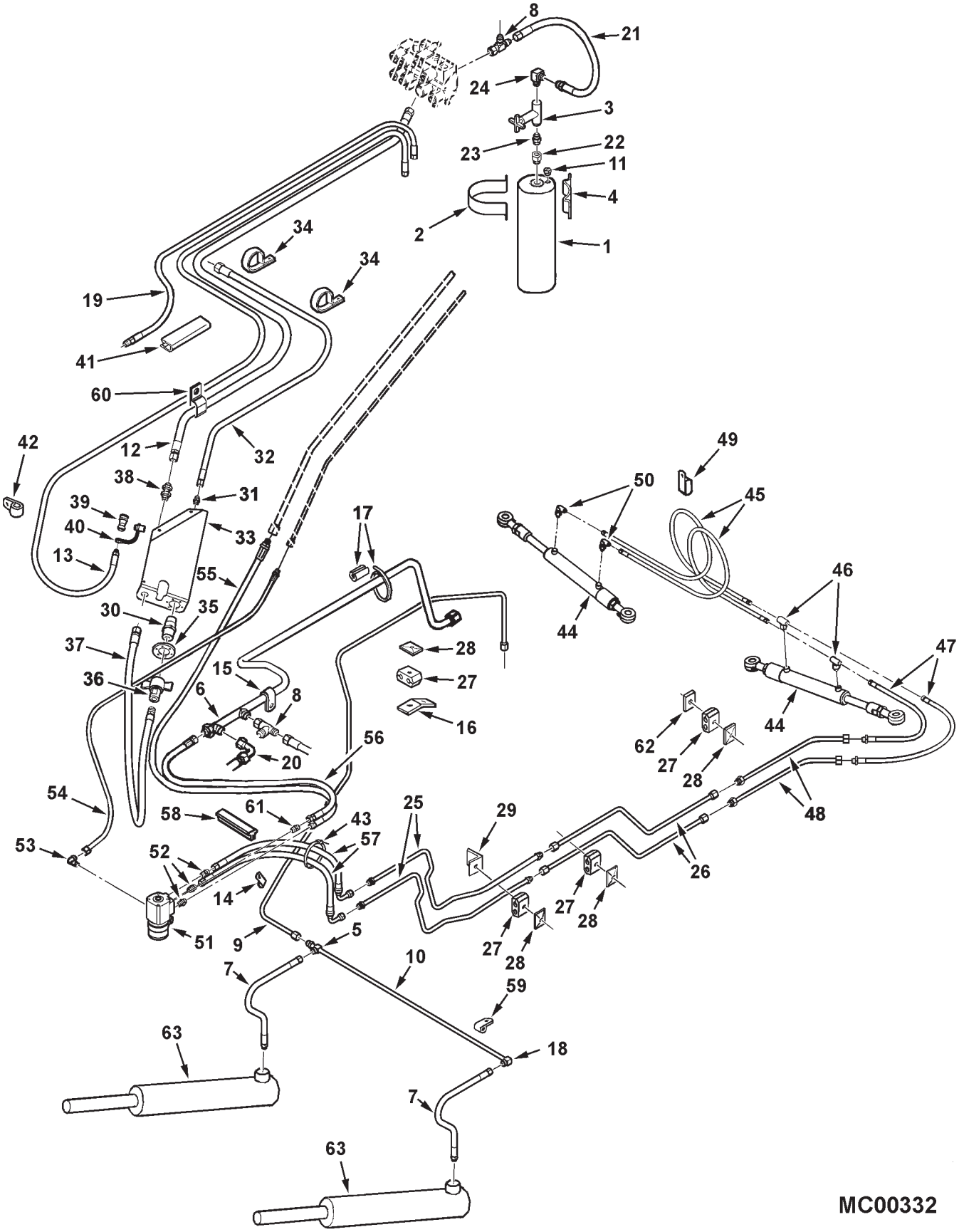

https://truckmanualshub.com/

ITEM	NUMBER	QTY	DESCRIPTION
29	101832M1	2	BRACKET, ANGLE
	703249	2	CAPSCREW, 3/8-16 X 1
	705038	2	LOCKWASHER, 3/8
	70916950	2	NUT, HEX 3/8
30	71365883	1	COUPLING, HYDRAULIC
31	70919128	1	CONNECTION, 3/4-16 JIC X 1/2 NPTF
32	71392881	1	HOSE ASY., REEL RETURN
33	71399119	1	BRACKET, HYD. HOSE DISCONNECT
	703249	2	CAPSCREW, 3/8-16 X 1
	705038	2	LOCKWASHER, 3/8
	70916950	2	NUT, HEX 3/8-16
34	70936467	2	CLAMP, 1-5/8 TUBE X .406 HOLE (PRIOR S/N HP36101)
	7041015	2	CLAMP, 2-1/4 X .531 HOLE(EFF S/N HP36101
35	71365880	1	FLANGE, HYD. COUPLER
	70925160	6	RIVET
36	71358564	1	COUPLER, HYDRAULIC
37	71362149	1	HOSE ASY, REEL SPEED
38	7846777	1	BULKHEAD UNION, 7/8-14 JIC
39	71328362	1	COUPLING, HALF
40	71328365	1	DUSTCAP, FEMALE
41	71389754	1	MOULDING, EDGE (PRIOR S/N HP36101)
42	70926850	1	CLAMP, .625 TUBE X .281 HOLE
	7703457	1	CAPSCREW, 1/4-20 X 3/4
	705012	1	LOCKWASHER, 1/4
	704007	1	NUT, HEX 1/4-20
43	70937133	3	TIE, SELF LOCKING, .300 X 14.5
44	71365245	2	CYL ASY, STRG (STD AXLE)(PRIOR HP36101)
45	71394146	2	HOSE ASY (STD AXLE)(PRIOR S/N HP36101)
	3619622M1	2	CABLE TIE
46	70923894	2	TEE, 9/16-18 ORB BRANCH X 9/16-18 JIC
	70921885	2	O-RING, .078 X .468
47	71394151	2	HOSE ASY, 3/8 (STD AXLE)(PRIOR HP36101)
48	71394150	2	TUBE ASY, STEERING, REAR (STD AXLE)
49	70928148	1	CLAMP,3/4 DBL TUBE X .406 HOLE(STD AXLE)
	372729X1	1	SCR,HEX WSHR HD,TAPPG, 5/16-18 X 3/4
50	70922523	2	ELBOW, 90 DEG, 9/16-18 JIC X 9/16-18 ORB
	70921885	2	O-RING, .078 X .468
51	71392876	1	STEERING CONTROL UNIT
			(NOTE: INDIVIDUAL COMPONENTS NOT SERVICED EXCEPT FOR SEAL KIT)
-	71391083	AR	SEAL KIT, STEERING CONTROL UNIT
52	360202X91	3	CONNECTOR, 9/16-18 JIC X 3/4-16 ORB
	70921349	2	O-RING, .087 X .644
53	70922571	1	ELBOW, 90 DEG, 7/16-20 JIC X 7/16-20 ORB
	70921883	1	O-RING, .072 X .351
54	71392872	1	HOSE ASY., LOAD SENSE TO SCU
	70937133	3	TIE, SELF LOCKING, .300 X 14.5
55	71398981	1	HOSE ASY., PRESSURE TO SCU
56	71398980	1	HOSE ASY., RETURN, SCU TO TANK
57	71392875	2	HOSE ASY., SCU FRONT

CONTINUED

https://truckmanualshub.com/

STEERING & HEADER FUNCTIONS
(PRIOR S/N HS36101)

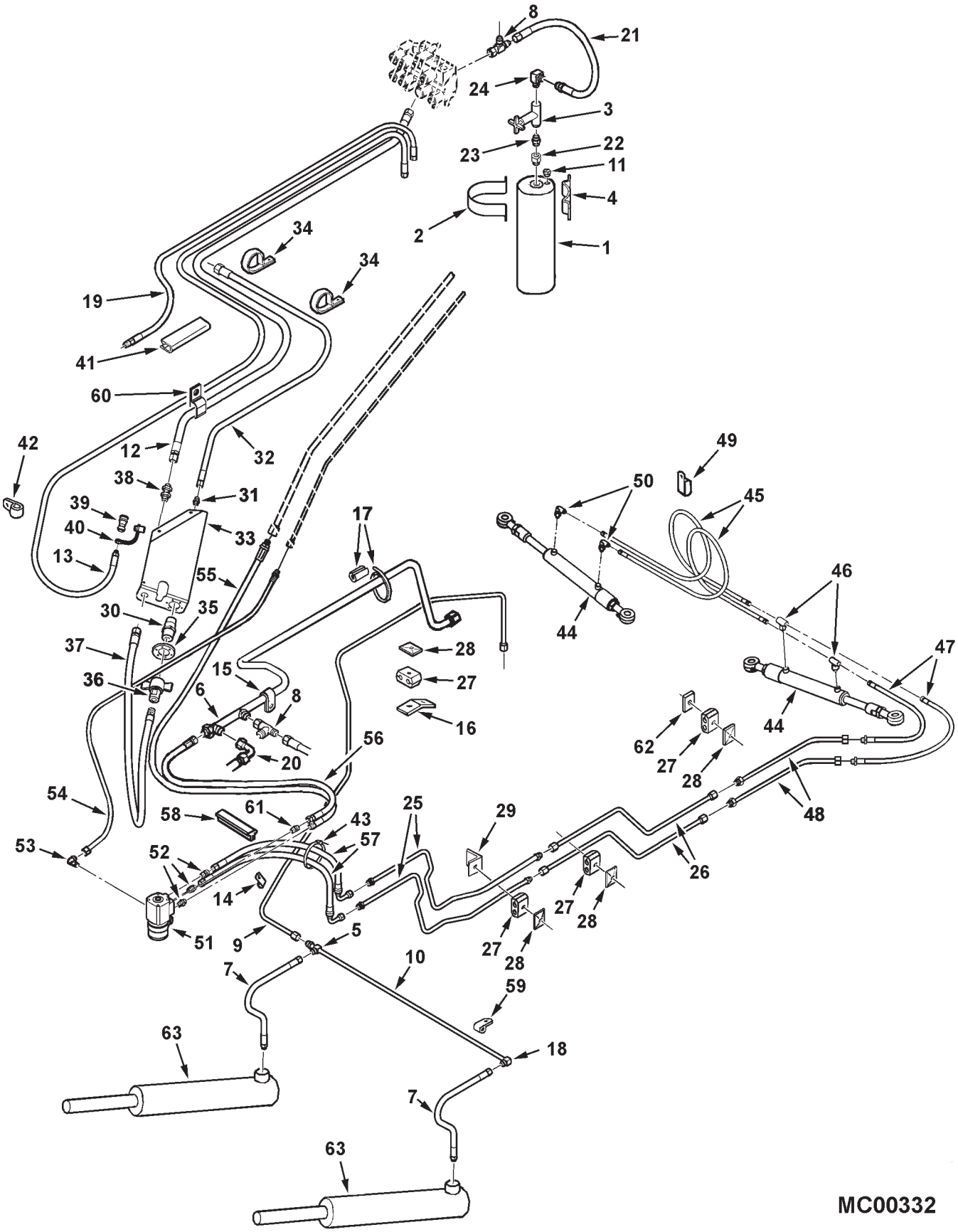

https://truckmanualshub.com/

ITEM	NUMBER	QTY	DESCRIPTION
58	71387797	2	EDGE PROTECTOR
59	70925617	4	CLAMP, .500 TUBE X .406 HOLE
	7703457	4	CAPSCREW, 1/4-20 X 3/4
	700709601	4	WASHER, WIDE PLATED, 1/4
	705012	4	LOCKWASHER, 1/4
	704007	4	NUT, HEX 1/4-20
60	70936473	2	CLAMP, DOUBLE, 7/8 DIA X .406 HOLE (PRIOR S/N HP36101)
	7041015	3	CLAMP, 2-1/4 X .531 HOLE(EFF S/N HP36101
	703249	1	CAPSCREW, 3/8-16 X 1
	705038	1	LOCKWASHER, 3/8
	70916950	1	NUT, HEX 3/8-16
61	846337	1	CONNECTOR, MALE, 3/4-16 JIC X ORB
62	71404450	2	SPACER (EFF. S/N HP36101)
63	- - - - -	2	CYLINDER, HEADER LIFT (SEE BREAKDOWN)

MC00332
PR: 334

https://truckmanualshub.com/

CONTROL VALVE & LINES
(EFF. S/N HS36101)

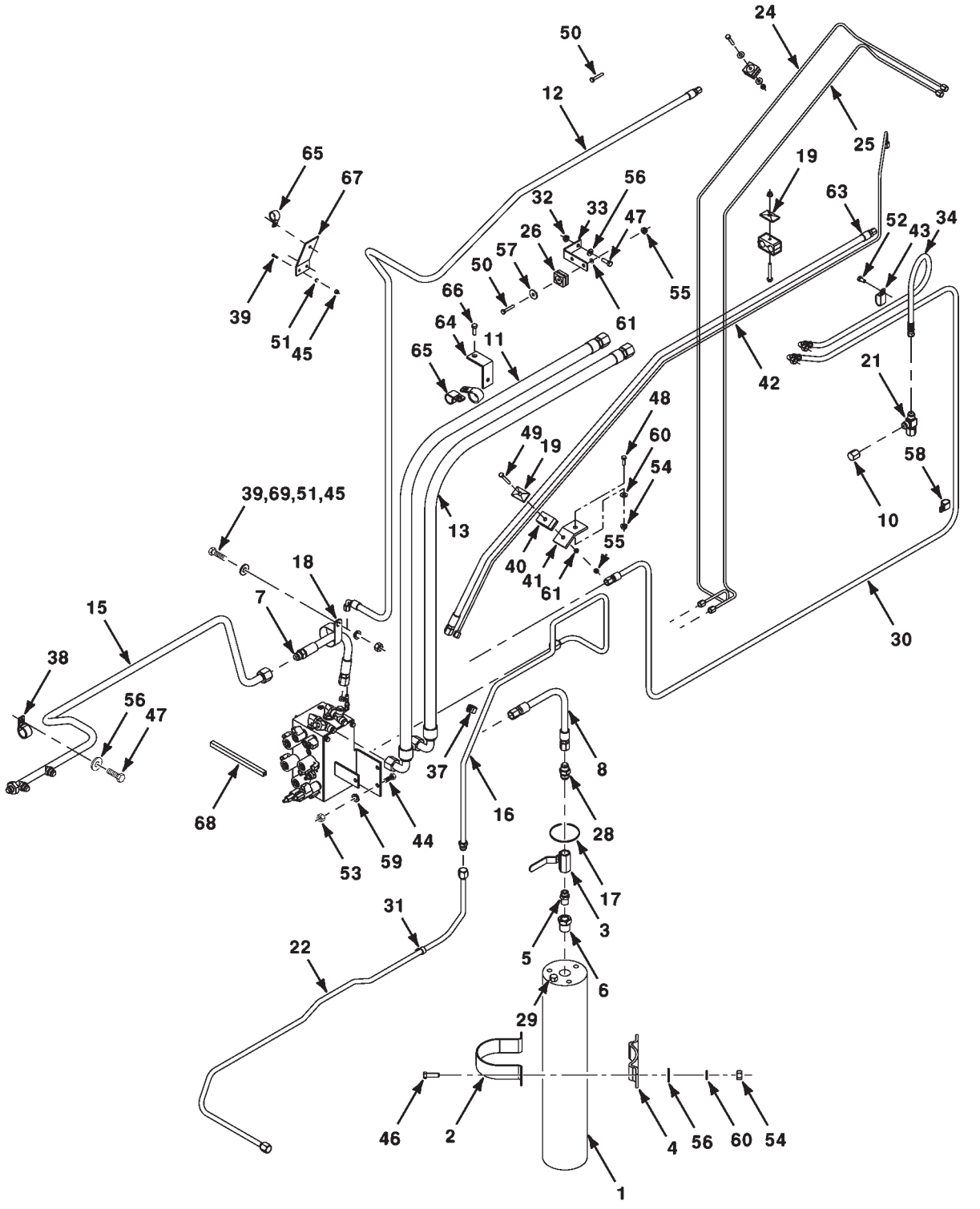

MC00562

https://truckmanualshub.com/

CONTROL VALVE & LINES
(EFF. S/N HS36101)

ITEM	NUMBER	QTY	DESCRIPTION
1	700712632	1	ACCUMULATOR
2	101705M1	2	BRACKET-ACCUMULATOR
3	71334329	1	VALVE ASM-BALL
4	101698M1	2	PAD-ACCUMULATOR
5	70933454	1	CONNECTOR, STR. 3/4-16 ORB X 1/2 NPTF
	70921349	1	O-RING, .087 X .644 ID
6	700705119	1	REDUCER, 1-1/16-12 ORB X 3/4-16 ORB FEM
	70921206	1	O-RING, .116 X .924 ID
7	71413427	1	HOSE ASM
8	71411204	1	HOSE ASM, ACCUM
10	70923737	1	CAP, 3/4-16 JIC
11	71413429	1	HOSE ASM
12	71411208	1	HOSE ASM, LS
13	71413428	1	HOSE ASM
15	71413434	1	TUBE ASM, RETURN
16	71410489	1	TUBE ASM, HDR LIFT
17	70937133	6	TIE-CABLE, 15-1/4
18	7041015	1	CLAMP, TUBE, 2-1/4 DIA X .531 HOLE
19	101646M1	2	COVER PLATE
21	70921298	1	TEE, SWIVEL RUN, 3/4-16 JIC
22	71411826	1	TUBE ASM, HEADER LIFT
24	71413432	1	TUBE ASM-UNLOADER SWING OUT
25	71414223	1	TUBE ASM-UNLOADER SWING IN
26	148039M1	2	CLAMP PAIR, DOUBLE, 1/4 X 1/4 DIA
28	70919128	1	STR CONNECTOR, 1/2 NPTF X 3/4-16 JIC M
29	357194X1	1	PLUG, HEX HD, 9/16-18 ORB
	70921885	1	O-RING, .078 X .468 ID
30	71398238	1	HOSE ASM, ROTARY SCREEN
31	70936314	1	J-CLIP, 1/2 DIA X .406 HOLE
32	Y704726	1	NUT, HEX FLANGE TOP LOCK, 5/16-18
33	71407464	1	BRACKET-TUBE SUPPORT
34	71396266	1	HOSE ASM, ROT SCREEN RETURN
37	70925617	1	CLAMP, LINE, 1/2 DIA X .406 HOLE
38	70926049	1	CLAMP, LINE, 3/4 DIA X .406 HOLE
39	70920415	4	CAPSCREW, 3/8-16 X 1-1/4 GR5
40	101751M1	2	CLAMP PAIR, DOUBLE, 1/2 X 1/4 DIA
41	112972W1	1	STRAP-TUBE SUPPORT
42	71391252	1	TUBE ASM, STRG LOAD SENSE
43	70928148	2	CLAMP, DOUBLE, 3/4 TUBE X .406 HOLE
44	70921176	3	CAPSCREW, 1/2-13 X 1-1/4 GR5
45	70916950	6	NUT, 3/8-16
46	70921977	4	CAPSCREW, 5/16-18 X 1-1/4
47	70921333	2	CAPSCREW, 5/16-18 X 1
48	70921332	1	CAPSCREW, 5/16-18 X 3/4
49	70921963	1	CAPSCREW, 1/4-20 X 2
50	70922837	2	CAPSCREW, 1/4-20 X 1-1/2
51	70916965	6	LOCKWASHER, 3/8
52	Y702951	3	SCREW,HX WSHR HD TAPPG, 3/8-16 X 3/4

CONTINUED

https://truckmanualshub.com/

CONTROL VALVE & LINES
(EFF. S/N HS36101)

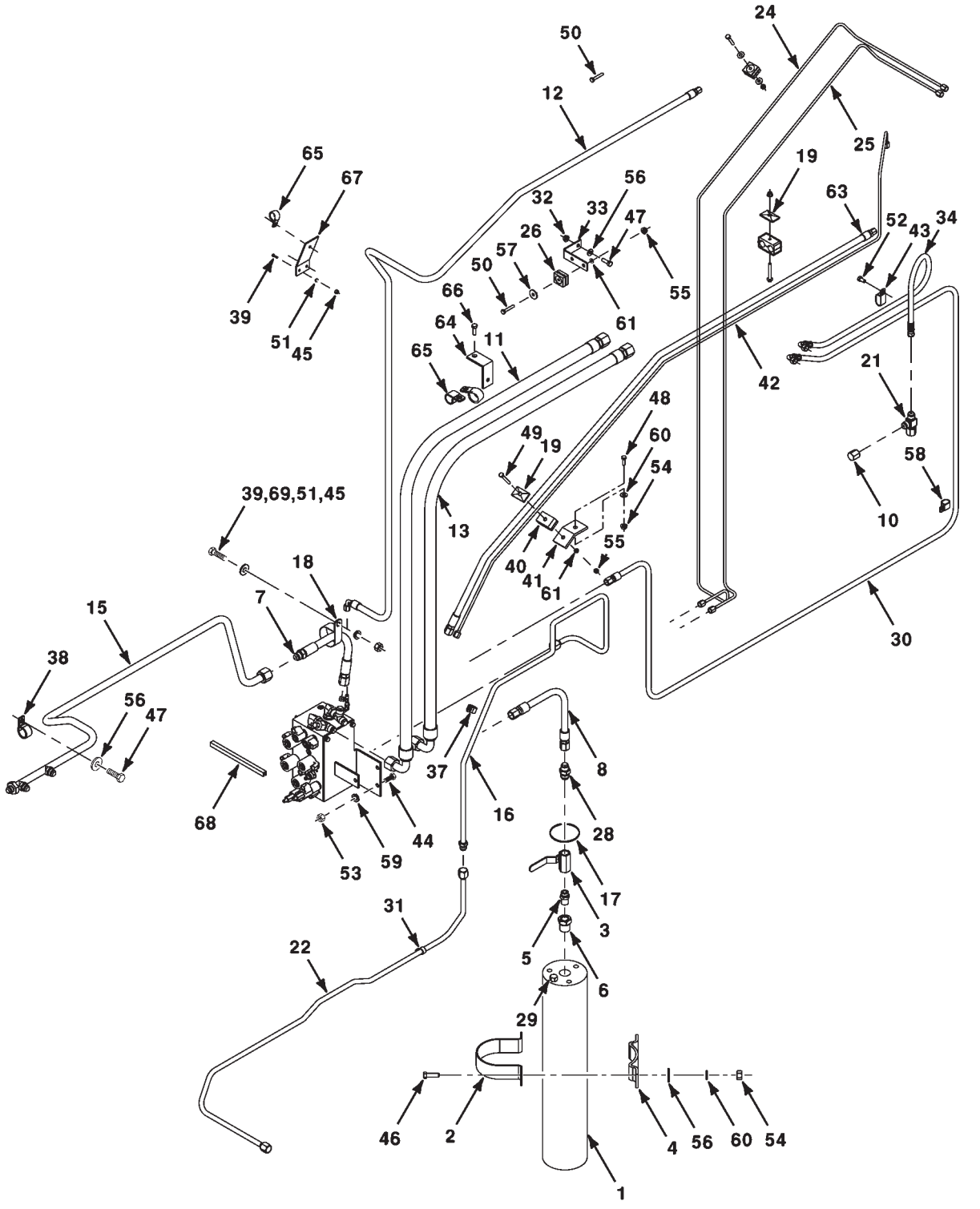

MC00562

https://truckmanualshub.com/

CONTROL VALVE & LINES
(EFF. S/N HS36101)

ITEM	NUMBER	QTY	DESCRIPTION
53	704031	3	NUT, 1/2-13 REG
54	70917372	5	NUT, 5/16-18 REG
55	70916622	5	NUT, 1/4-20 REG
56	70917642	6	WASHER, 5/16 WIDE
57	70917377	2	WASHER, 1/4 WIDE
58	70925619	2	CLAMP, LINE, 11/16 DIA X .406 HOLE
59	Y705046	3	LOCKWASHER, 1/2
60	70917356	5	LOCKWASHER, 5/16
61	705012	5	LOCKWASHER, 1/4
63	71391246	1	TUBE ASY, STEERING SUPPLY
64	71352670	1	BRACKET, TUBE SUPPORT
65	700725832	4	CLAMP, LINE, 1-1/8 DIA X .406 HOLE
66	70921961	1	CAPSCREW, 1/4-20 X 1-1/4
67	71413447	1	BRACKET
68	700715944	2	TRIM-PUSH ON
69	70917378	1	WASHER, 3/8 WIDE

MC00562
PR: 71412063-04-12

https://truckmanualshub.com/

STEERING & HEADER FUNCTIONS
(EFF. S/N HS36101)

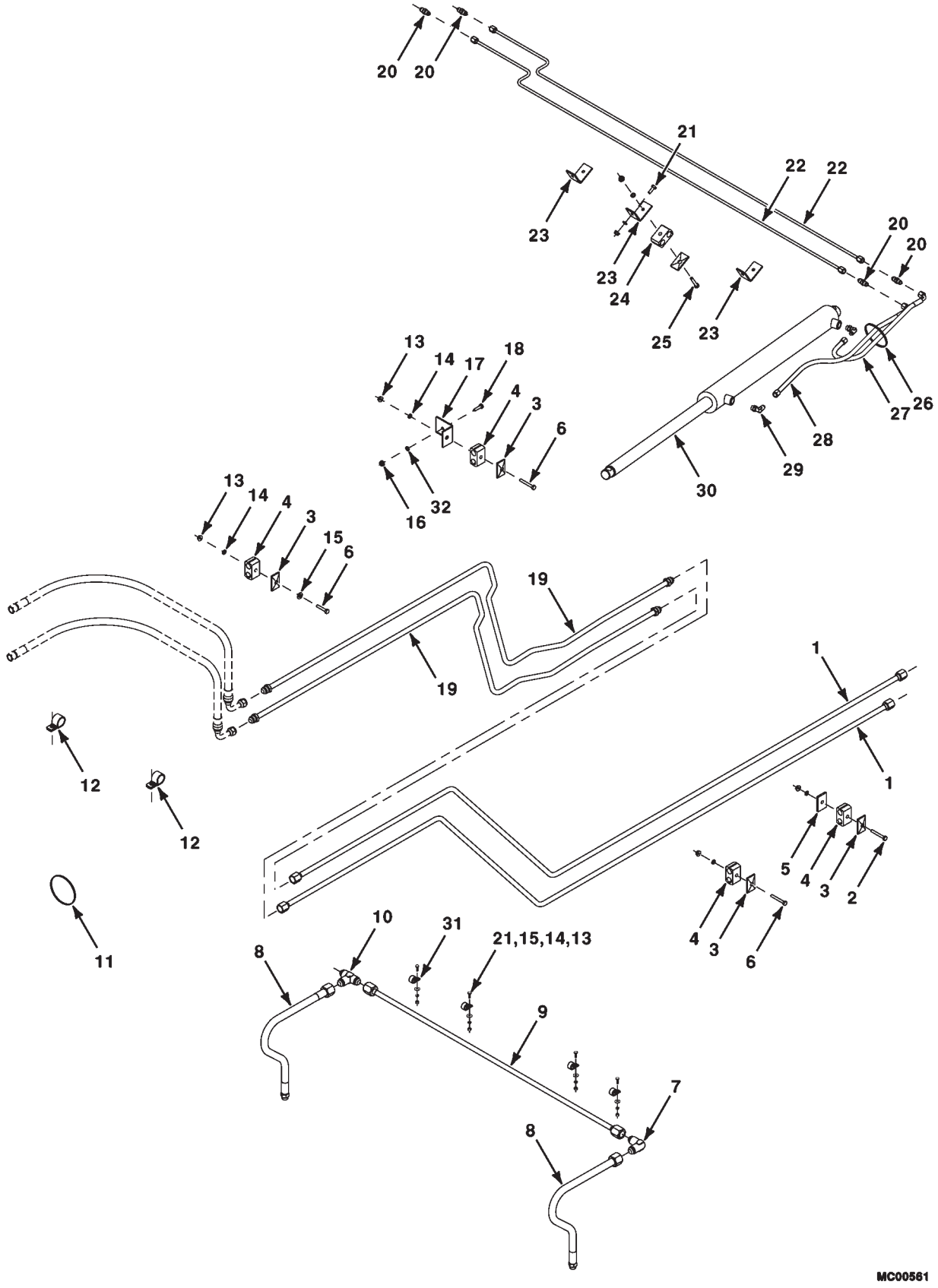

https://truckmanualshub.com/

STEERING & HEADER FUNCTIONS
(EFF. S/N HS36101)

ITEM	NUMBER	QTY	DESCRIPTION
1	101596M92	2	TUBE-1/2 STEERING ASM
2	70921159	2	CAPSCREW, 1/4-20 X 2-1/4
3	101646M1	7	COVER PLATE
4	148022M1	7	CLAMP PAIR, DOUBLE, 1/2 X 1/2 DIA
5	71404450	2	SPACER, 3/16 TH
6	70921963	4	CAPSCREW, 1/4-20 X 2 GR5
7	70921364	1	ELBOW, 90 DEG, 3/4-16 JIC MALE
8	101589M91	2	HOSE ASM, HEADER LIFT CYL.
9	71394138	1	TUBE ASM, HEADER LIFT
10	70921472	1	TEE, UNION, 3/4-16 JIC MALE
11	70937133	1	TIE-CABLE, .30 X 14.5 LG
12	70926850	2	CLAMP, LINE, 5/8 X .281 HOLE
13	70916622	17	NUT, 1/4-20 REG
14	705012	17	LOCKWASHER, 1/4
15	70917377	9	WASHER, 1/4 WIDE
16	70916950	2	NUT, 3/8-16 REG
17	101832M1	2	BRACKET-ANGLE
18	70921210	2	CAPSCREW, 3/8-16 X 1.0
19	71398227	2	TUBE-STEERING FRONT ASM
20	70919214	4	UNION, MALE, 7/16-20 JIC
21	7703457	7	CAPSCREW, 1/4-20 X 3/4
22	71401726	2	TUBE ASM. UNLOADER SWING
23	101618M1	3	BRACKET-ANGLE
24	148039M1	3	CLAMP PAIR, DOUBLE, 1/4 X 1/4 DIA
25	70922837	3	CAPSCREW, 1/4-20 X 1-1/2 GR5
26	3619622M1	1	TIE, CABLE, .184 X 14.2 LG
27	101590M1	1	HOSE ASM, UNLOADER
28	101598M1	1	HOSE ASM, UNLOADER
29	700701834	2	ELBOW, 7/16 JIC X 9/16-18 ORB MALE
	70921885	2	O-RING, .078 X .468 ID
30	71399143	1	HYDRAULIC CYL ASY (SEE BREAKDOWN)
31	70925617	4	CLAMP, LINE, 1/2 DIA X .406 HOLE
32	70916965	2	LOCKWASHER, 3/8

MC00561
PR: 71412075-04-12

https://truckmanualshub.com/

HEADER SUPPLY PLUMBING
(EFF. S/N HS36101)

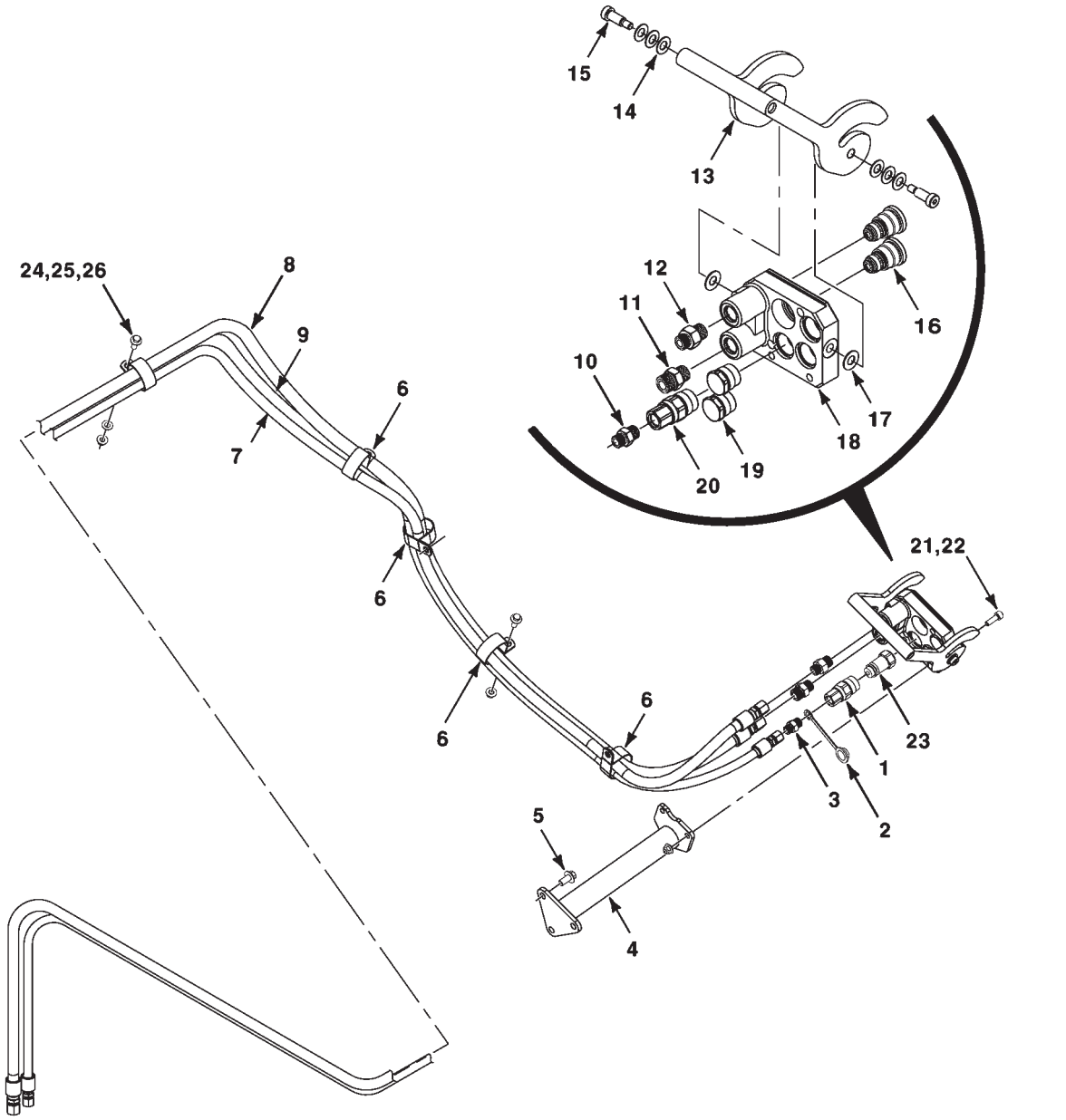

https://truckmanualshub.com/

HEADER SUPPLY PLUMBING
(EFF. S/N HS36101)

ITEM	NUMBER	QTY	DESCRIPTION
1	71328362	1	COUPLING HALF, FEM, 1/4 NPTF
2	71328365	1	DUST COVER
3	70919062	1	STR CONNECTOR, 1/4 NPTF X 9/16-18 JIC M
4	71410543	1	MOUNT WA-COUPLER
5	3009219X1	3	BOLT, FLANGE, M12-1.75 X 25 CL10.9
6	7041015	6	CLAMP, TUBE, 2/1/4 DIA X .531 HOLE
7	71413431	1	HOSE ASM-REEL DRIVE RETURN
8	71412057	1	HOSE ASM-REEL DRIVE
9	71413440	1	HOSE ASM-REEL LIFT
10	700728245	1	STR CONNECTOR, 1/4 NPTF X 3/4-16 ORB
	70921349	1	O-RING, .087 X .644 ID
11	71411295	1	CONN. 1-14 ORS X 7/8-14 ORB, MALE
	70930357	1	O-RING, .070 X .614 ID
	70921205	1	O-RING, .097 X .755 ID
12	71411843	1	CONN. 13/16-16 ORS X 7/8-14 ORB, MALE
	70923841	1	O-RING, .070 X .489 I.D.
	70921205	1	O-RING, .097 X .755 ID
13	71411849	1	LEVER-PARKER COUPLER
14	71411848	6	WASHER-SPRING, PARKER CPLR
15	71411846	2	SCREW-PARKER CPLR HANDLE
16	71418944	2	COUPLER CARTRIDGE, PARKER 1/2
17	71411847	2	WASHER, PARKER CPLR
18	71411315	1	PLATE-PARKER CPLR FIXED
19	71411300	2	PLUG-PARKER CPLR
20	71411296	1	CPLR-PARKER 3/8 CARTR FIXED
21	3000258X1	2	SCREW, HEX SOCK, M10-1.5 X 40 CL10.9
22	700711876	2	NUT, FLANGE LOCK, M10 X 1.5
23	71328361	1	COUPLER HALF, MALE, 1/4 NPTF FEM
24	70921210	1	CAPSCREW, 3/8-16 X 1.0 GR5
25	70916965	1	LOCKWASHER, 3/8
26	70916950	1	NUT, 3/8-16 REG

MC00563
PR: t07a23o20b0014

https://truckmanualshub.com/

STEERING UNIT PLUMBING
(EFF. S/N HS36101)

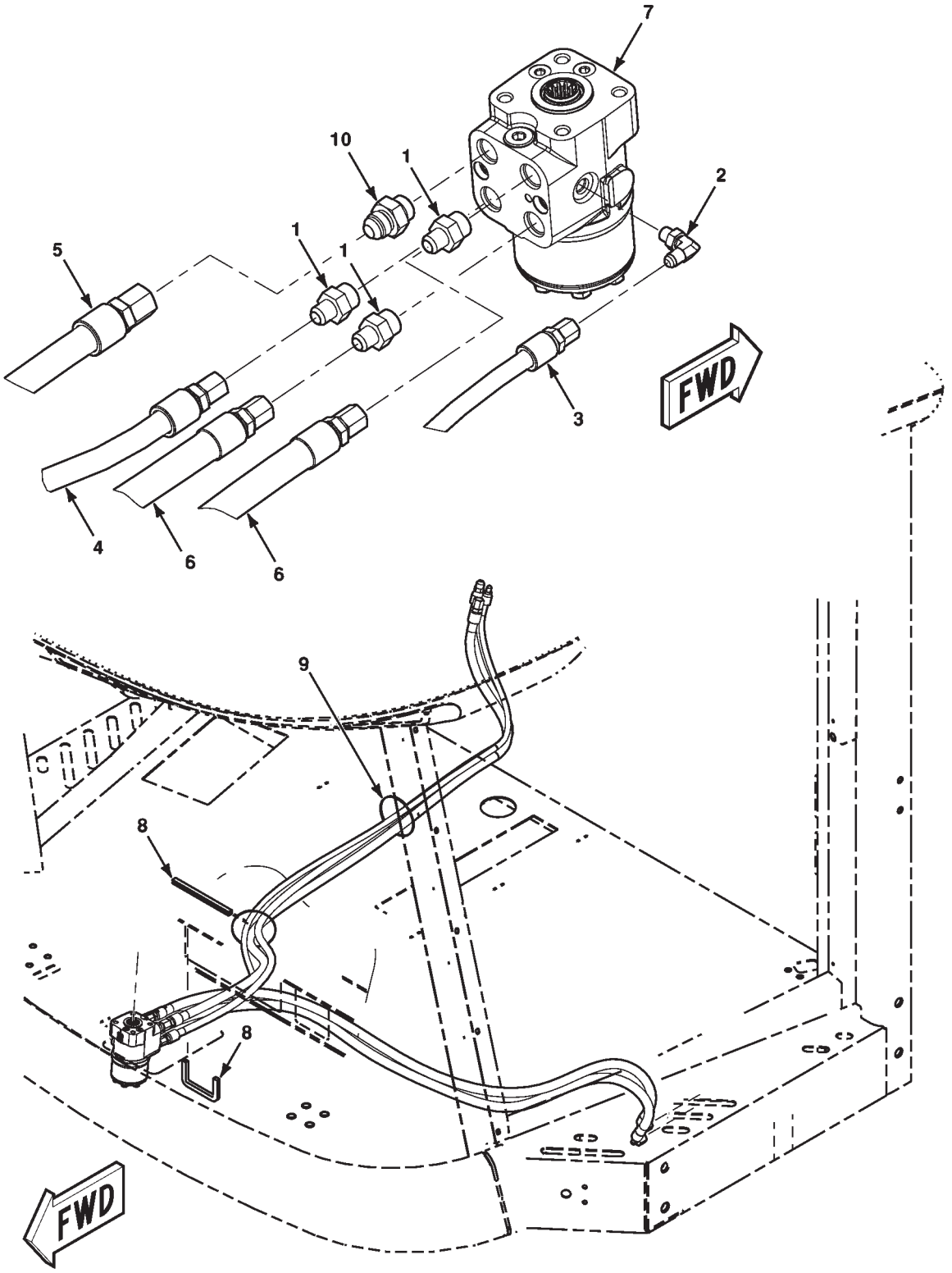

MC00564

https://truckmanualshub.com/

STEERING UNIT PLUMBING
(EFF. S/N HS36101)

ITEM	NUMBER	QTY	DESCRIPTION
1	360202X91	3	CONNECTOR, 9/16-18 JIC X 3/4-16 ORB
	70921349	1	O-RING, .087 X .644 ID
2	70922571	1	ELBOW, 90 DEG, 7/16-20 JIC X ORB
	70921883	1	O-RING .072 X .351 ID
3	71392872	1	HOSE, ASM-LS TO SCU
4	71398981	1	HOSE ASM-PRESS. TO SCU
5	71398980	1	HOSE ASM-RETURN, SCU
6	71392875	2	HOSE ASM-SCU TO STRG. CYL.
7	71392876	1	STEERING CONTROL UNIT
	71391083	1	SEAL KIT, SCU
8	71387797	2	EDGE PROTECTOR
9	70937133	3	TIE, SELF-LOCKING .300 X 14.5 LG.
10	846337	1	CONNECTOR, STR, 3/4-16 JIC X ORB
	70921349	1	O-RING, .087 X .644 ID

MC00564
PR: t07a23o20b0015

https://truckmanualshub.com/

STEERING CYLINDER
STD. ADJUSTABLE AXLE
(PRIOR S/N HP36101)

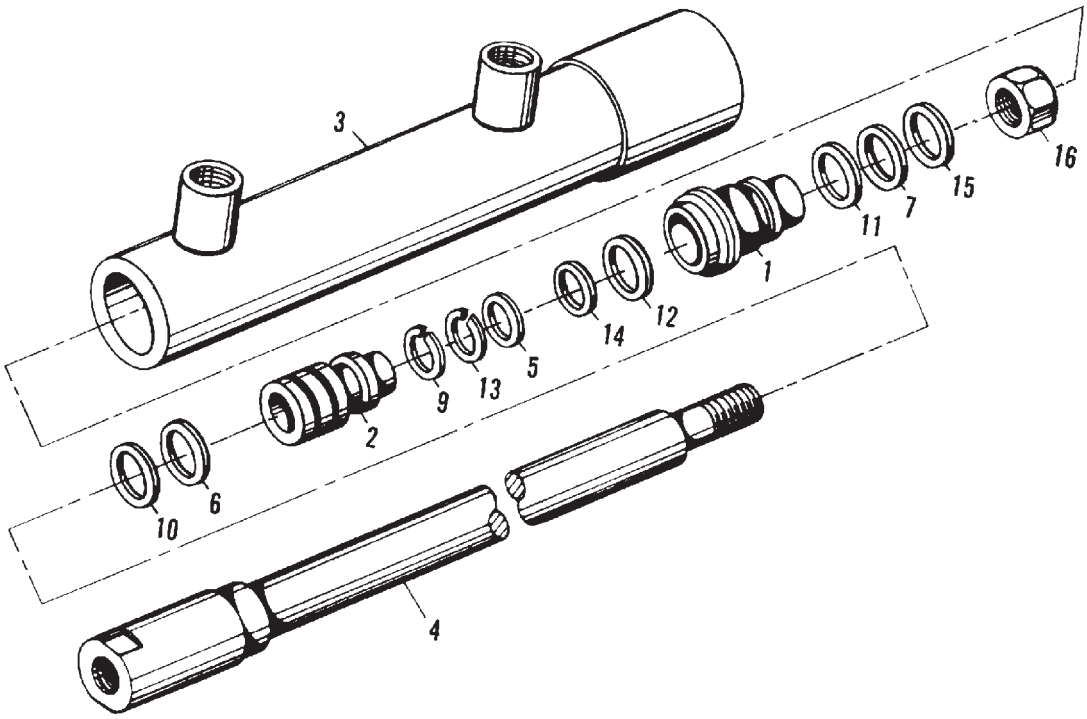

https://truckmanualshub.com/

STEERING CYLINDER
STD. ADJUSTABLE AXLE
(PRIOR S/N HP36101)

ITEM	NUMBER	QTY	DESCRIPTION
-	71365245	AR	CYLINDER ASY., POWER STEERING (COMPLETE)
1	71366126	1	PISTON
2	71365102	1	BEARING
3	----------	1	BARREL ASY. (NOT SERVICED, ORDER COMPLETE ASY.)
4	71366127	1	ROD ASY., PISTON
5	----------	1	* WASHER, BACK UP
6	----------	1	* SEAL
7	----------	1	* RING, SLIPPER
9	----------	1	* RING, RETAINING
10	----------	1	* SEAL, WIPER
11	----------	1	* O-RING
12	----------	1	* O-RING
13	----------	1	* RING, LOCK
14	----------	1	* O-RING
15	----------	1	* RING, WEAR
16	10171	1	NUT
-	71365114	AR	KIT, SEAL (INCLS. * ITEMS)

* SERVICED ONLY IN SEAL KIT

71365245
PR: 338

https://truckmanualshub.com/

STEERING CYLINDER

STD. ADJUSTABLE AXLE
(EFF. S/N HP36101)

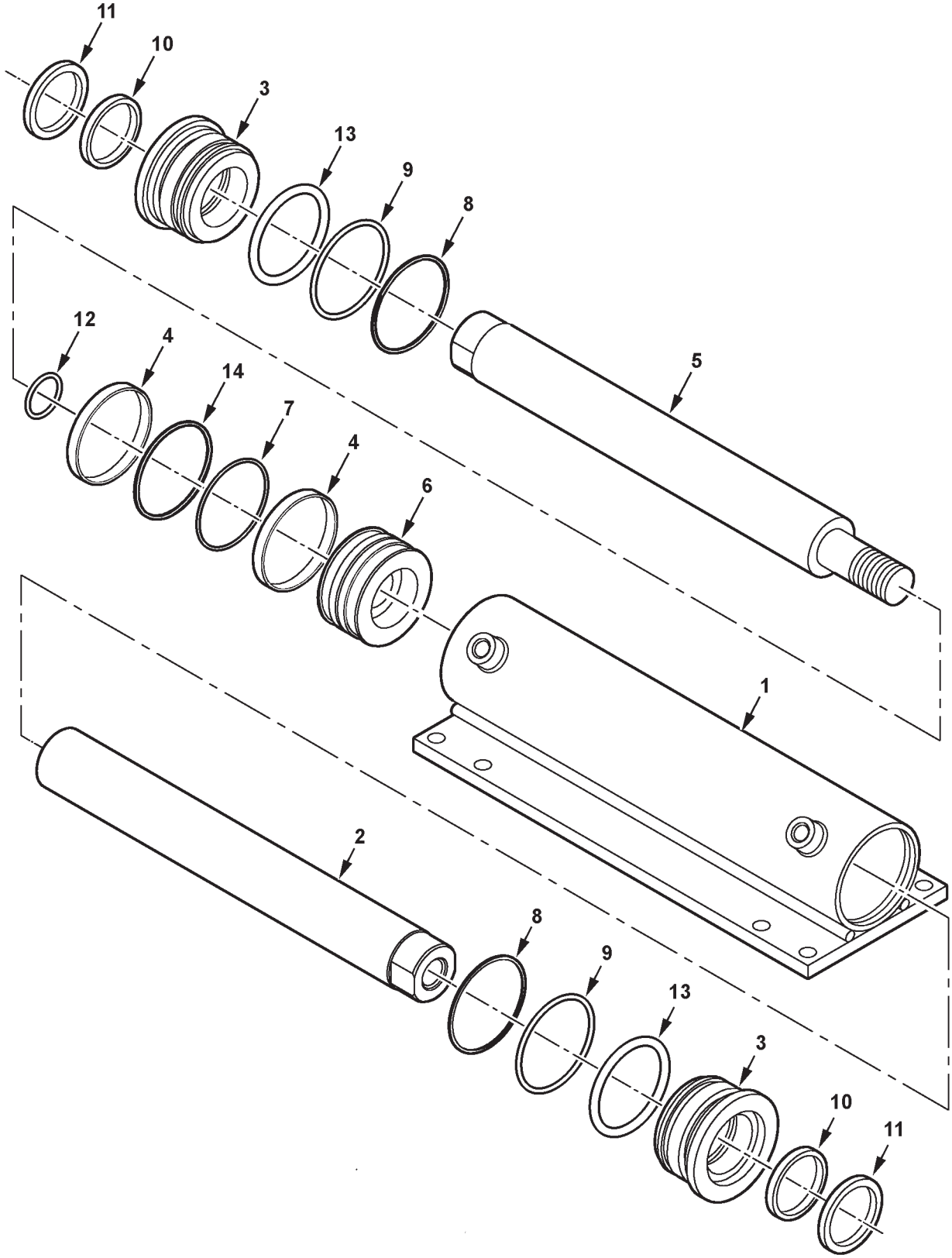

MC00360

https://truckmanualshub.com/

STEERING CYLINDER
STD. ADJUSTABLE AXLE
(EFF. S/N HP36101)

ITEM	NUMBER	QTY	DESCRIPTION
-	71400719	AR	CYLINDER ASY, STRG (INCLUDES FOLLOWING) (SERVICE COMPLETE CYL. W/ 71406366)
1	71396618	1	HOUSING, CYL.
2	71406296	1	ROD, CYL. INT'L THD
3	71396620	2	HEAD
4	71396621	2	RING, WEAR
5	71406297	1	ROD, CYL. EXT'L THD
6	71396623	1	PISTON
7	----	1	* O-RING
8	----	2	* O-RING
9	----	2	* RING, BACKUP
10	----	2	* U-CUP SEAL
11	----	2	* WIPER SEAL
12	----	1	* O-RING
13	----	2	* RETAINING WIRE
14	----	1	* SEAL, PISTON
-	71396624	AR	SEAL KIT (* ITEMS, SERVICED IN KIT ONLY)
-	71406366	AR	CYLINDER ASY, STRG (INCLUDES FOLLOWING)
-	71412169	AR	SEAL KIT (SOLE SERVICE ITEM)

MC00360
PR: t05b08m42d0021

https://truckmanualshub.com/

STEERING CYLINDER
RWA AXLE

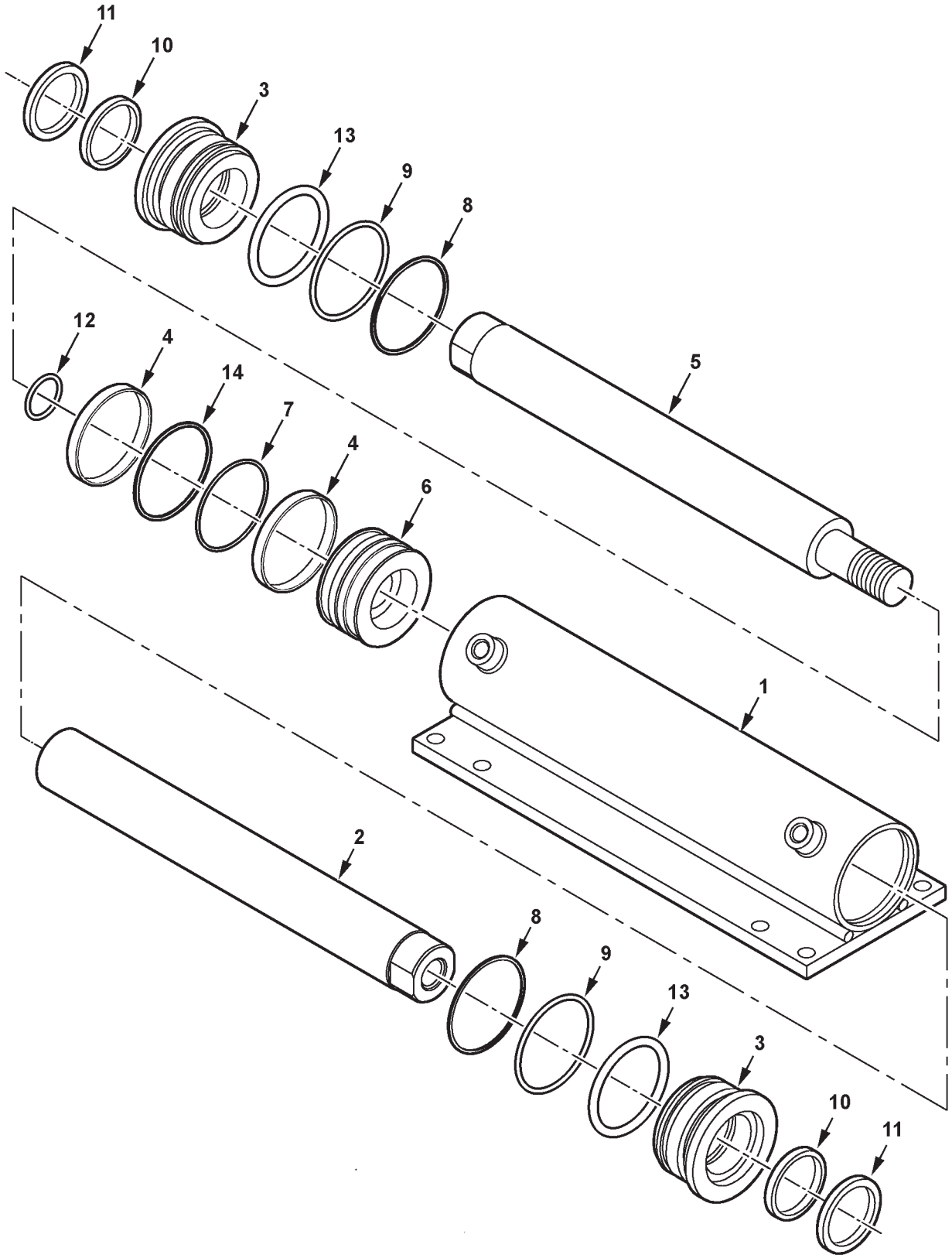

MC00360

https://truckmanualshub.com/

STEERING CYLINDER
RWA AXLE

ITEM	NUMBER	QTY	DESCRIPTION
-	71396617	AR	CYLINDER ASY, RWA STEERING (COMPLETE)
1	71396618	1	HOUSING, CYL.
2	71396619	1	ROD, CYL. INT'L THD
3	71396620	2	HEAD
4	71396621	2	RING, WEAR
5	71396622	1	ROD, CYL. EXT'L THD
6	71396623	1	PISTON
7	----	1	* O-RING
8	----	2	* O-RING
9	----	2	* RING, BACKUP
10	----	2	* U-CUP SEAL
11	----	2	* WIPER SEAL
12	----	1	* O-RING
13	----	2	* RETAINING WIRE
14	----	1	* SEAL, PISTON
-	71396624	AR	SEAL KIT (INCL. * ITEMS)

* SERVICED ONLY IN SEAL KIT

MC00360
PR: 340

https://truckmanualshub.com/

ACCUMULATOR
PARKER

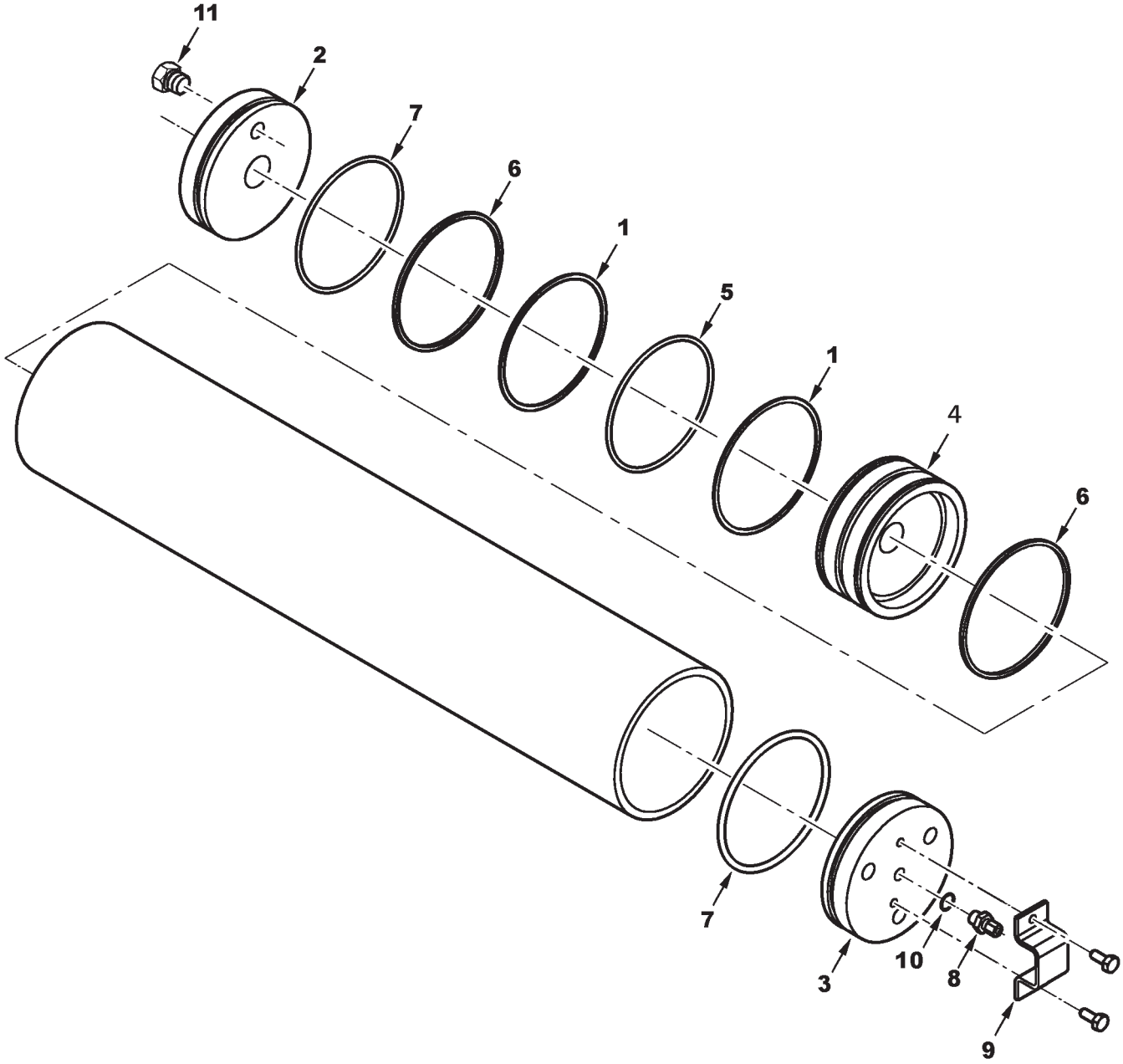

71370918

https://truckmanualshub.com/

ACCUMULATOR
PARKER

ITEM	NUMBER	QTY	DESCRIPTION
-	700712632	AR	ACCUMULATOR ASY. (INCL. DECALS & ITEMS 1-10)
1	----------	2	RING, TEFLON (BACKUP)
2	700712651	1	CAP, HYDRAULIC
3	700712652	1	CAP, GAS
4	700710957	1	PISTON
5	----------	1	V, O-RING
6	----------	2	RING, TEFLON, PISTON
7	----------	2	SEAL, BODY END
8	72507231	1	VALVE, GAS
	700710959	1	CORE, GAS VALVE
9	700710960	1	PROTECTOR, VALVE
10	----------	1	O-RING, VALVE
11	357194X1	1	PLUG ASY, 9/16-18 ORB
	70921885	1	O-RING, .078 X .468 ID
-	700710961	AR	KIT, SEAL (INCL. ITEMS 1, 5-8 & 10)

71370918
PR: t04g19h02a0001

https://truckmanualshub.com/

HEADER LIFT CYLINDERS

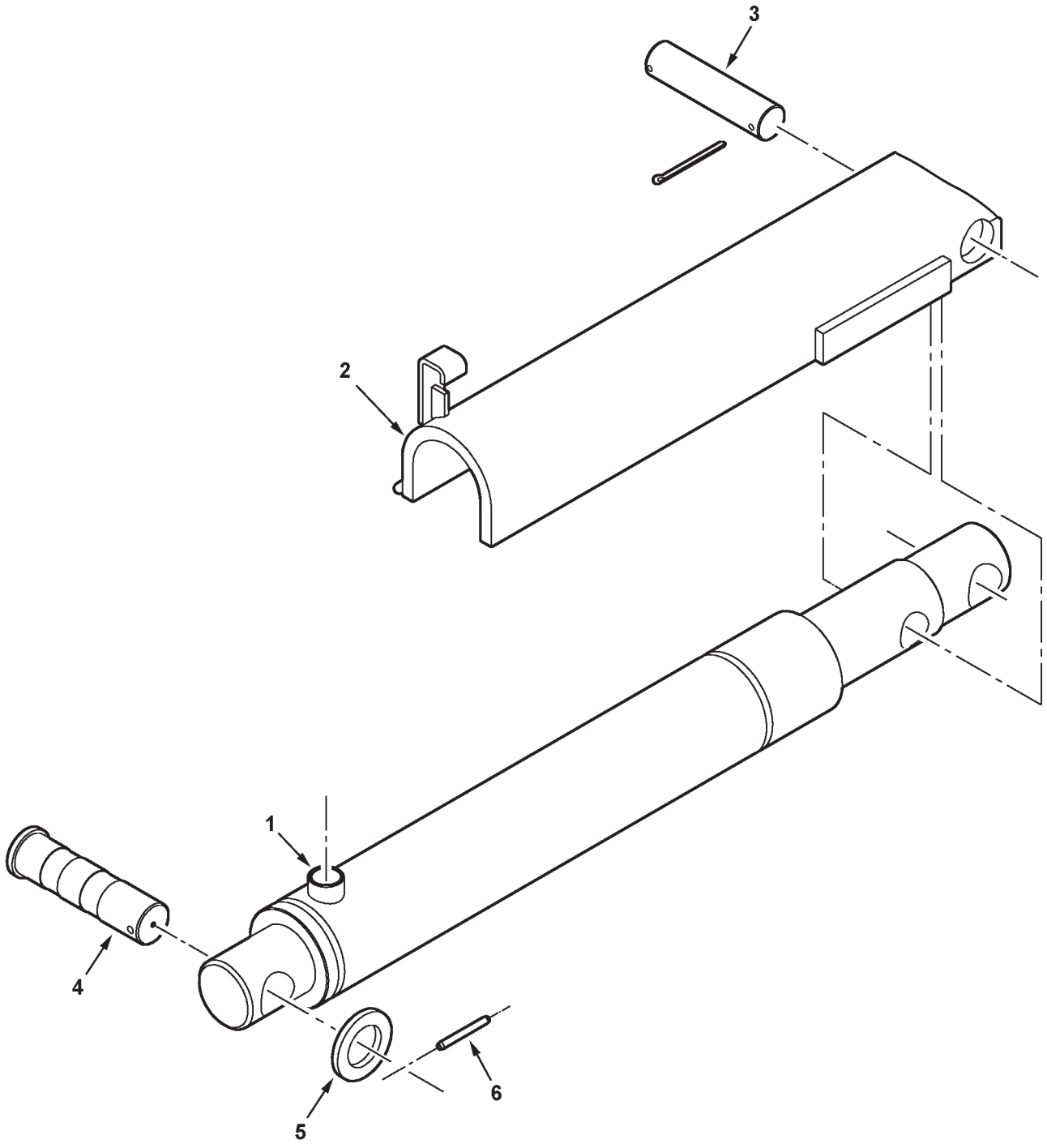

MC00105

https://truckmanualshub.com/

HEADER LIFT CYLINDERS

ITEM	NUMBER	QTY	DESCRIPTION
1	116626W1	2	HYDRAULIC CYLINDER, 3"
	71384407	1	PISTON ROD
	71384406	1	BARREL ASSEMBLY
	71384414	1	SEAL KIT
	116627W1	2	HYDRAULIC CYLINDER, 2-3/4"
	71384412	1	PISTON ROD
	71384411	1	BARREL ASSEMBLY
	71384413	1	SEAL KIT
2	116757W1	1	STOP WLDMT, 2-3/4 DIA CYL.
	116759W1	1	STOP WLDMT, 3 DIA CYL.
3	71364024	1	PIN, SAFETY STOP
	70919431	2	COTTER PIN, 3/16 X 2-1/2
4	71364016	4	PIN, HYD. CYLINDER
5	70933818	4	WASHER, 1.53 ID X 2.5 X .25
6	63834	4	PIN, SPIROL, .25 X 2.25
	70910815	AR	WIRE, 16 GA. (CUT TO LENGTH)

MC00105
PR: 342

https://truckmanualshub.com/

UNLOADER SWING CYLINDER

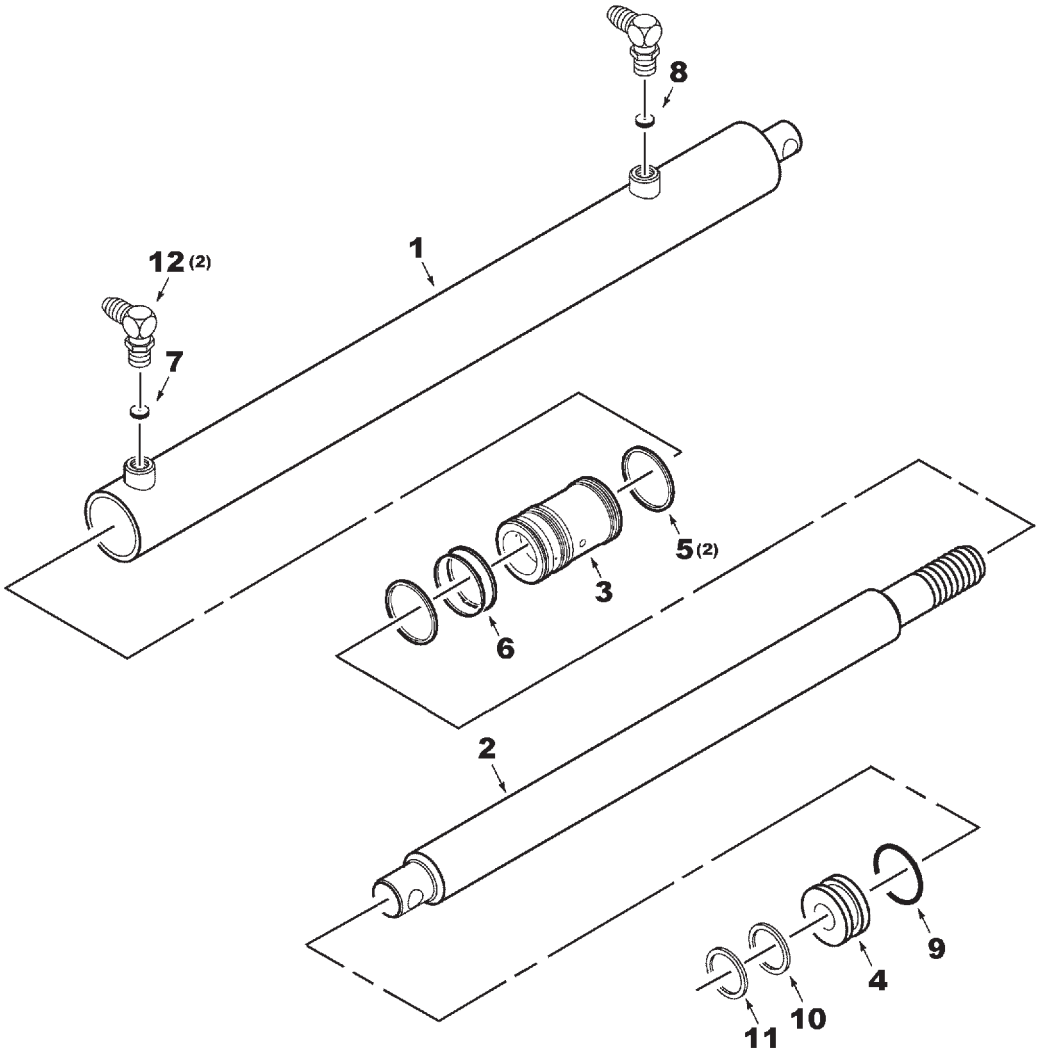

MC00106A

https://truckmanualshub.com/

UNLOADER SWING CYLINDER

ITEM	NUMBER	QTY	DESCRIPTION
-	112785W92	1	CYLINDER ASY, UNLDR SWING (PRIOR S/N HN36101)
-	71399143	1	CYLINDER ASY, UNLDR SWING (EFF. S/N HN36101)
-	71377945	1	SEAL PKG. (INCL. ITEMS 5,6,9,10,11)
1	116147W91	1	BARREL ASSEMBLY
2	116146W1	1	PISTON ROD
3	116145W1	1	PISTON
4	116143W1	1	HEAD PLATE
5	-----	2	RING, PISTON CAST
6	-----	1	SEAL RING W/ EXPANDER RING, PISTON
7	116149W1	1	ORIFICE PL, THREADED, .0469 DIA. (PRIOR S/N HN36101)
	71401738	1	ORIFICE PL, THREADED, .040 DIA. (EFF. S/N HN36101)
8	116148W1	1	ORIFICE PL, THREADED, .0595 DIA. (PRIOR S/N HN36101)
	71401738	1	ORIFICE PL, THREADED, .040 DIA. (EFF. S/N HN36101)
9	70924114	1	O-RING, .139 X 1.734 ID
10	----------	1	ROD SEAL
11	----------	1	WIPER SEAL
12	70925011	2	ELBOW, 9/16-18 ORB X 7/16-20, 37 DEG FLR
	70921885	2	O-RING, .078 X .468 ID

MC00106A
PR: 344

https://truckmanualshub.com/

PRIORITY VALVE

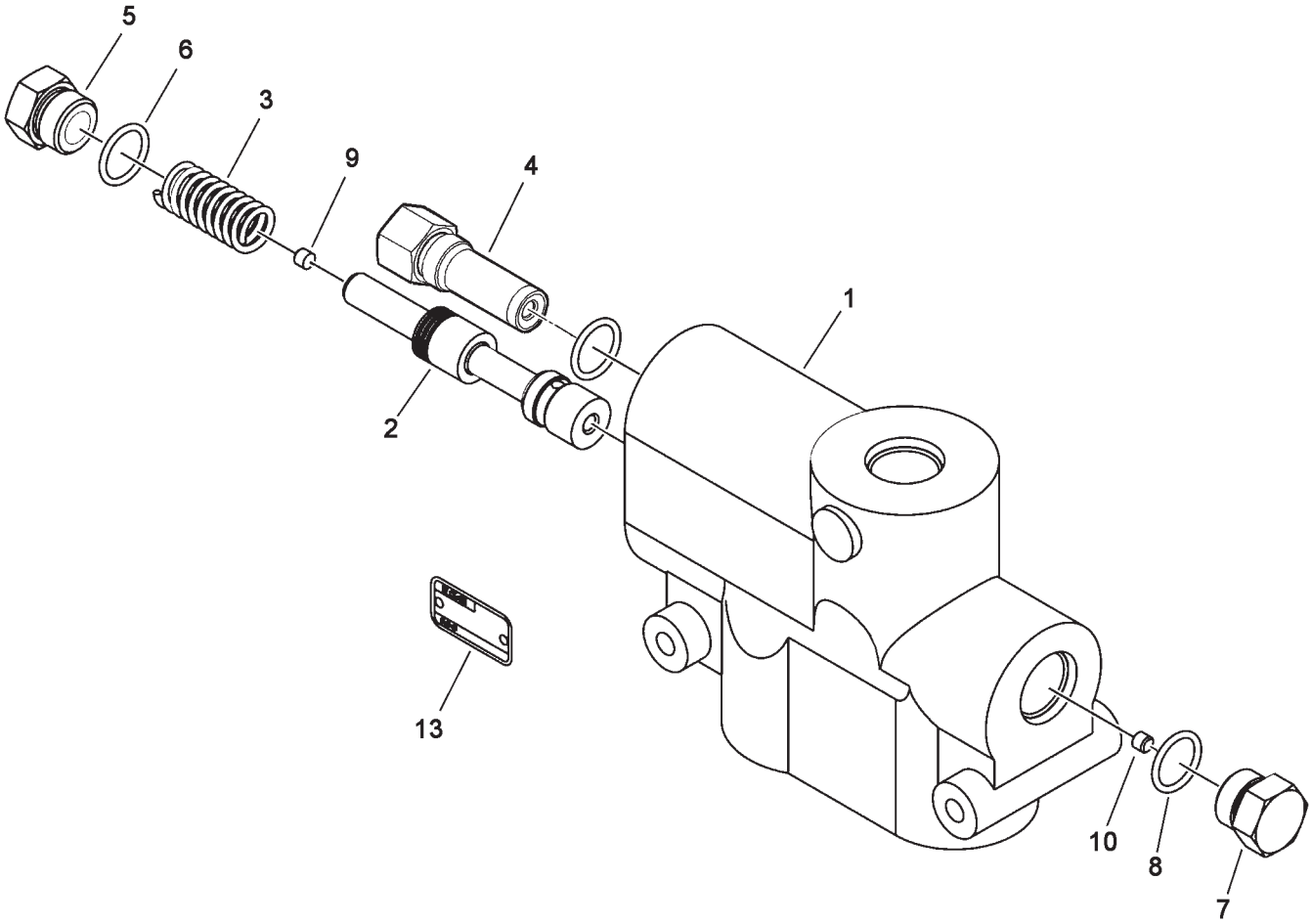

https://truckmanualshub.com/

ITEM	NUMBER	QTY	DESCRIPTION
-	71391453	1	PRIORITY VALVE ASY
1	----------	1	BODY (NOT SERVICED)
2	71392852	1	SPOOL
3	71392853	1	SPRING (150 PSI)
4	71414221	1	VALVE ASY, RELIEF
5	71392854	1	PLUG, ORIFICE
6	70913719	1	O-RING
7	71392855	1	PLUG
8	70913719	1	O-RING
9	71392856	1	SCREW, ORIFICE
10	71392857	1	SCREW, ORIFICE
13	----------	1	NAME PLATE (NOT SERVICED)

71391453
PR: 346

https://truckmanualshub.com/

CONTROL VALVE STACK
(PRIOR S/N HS36101)

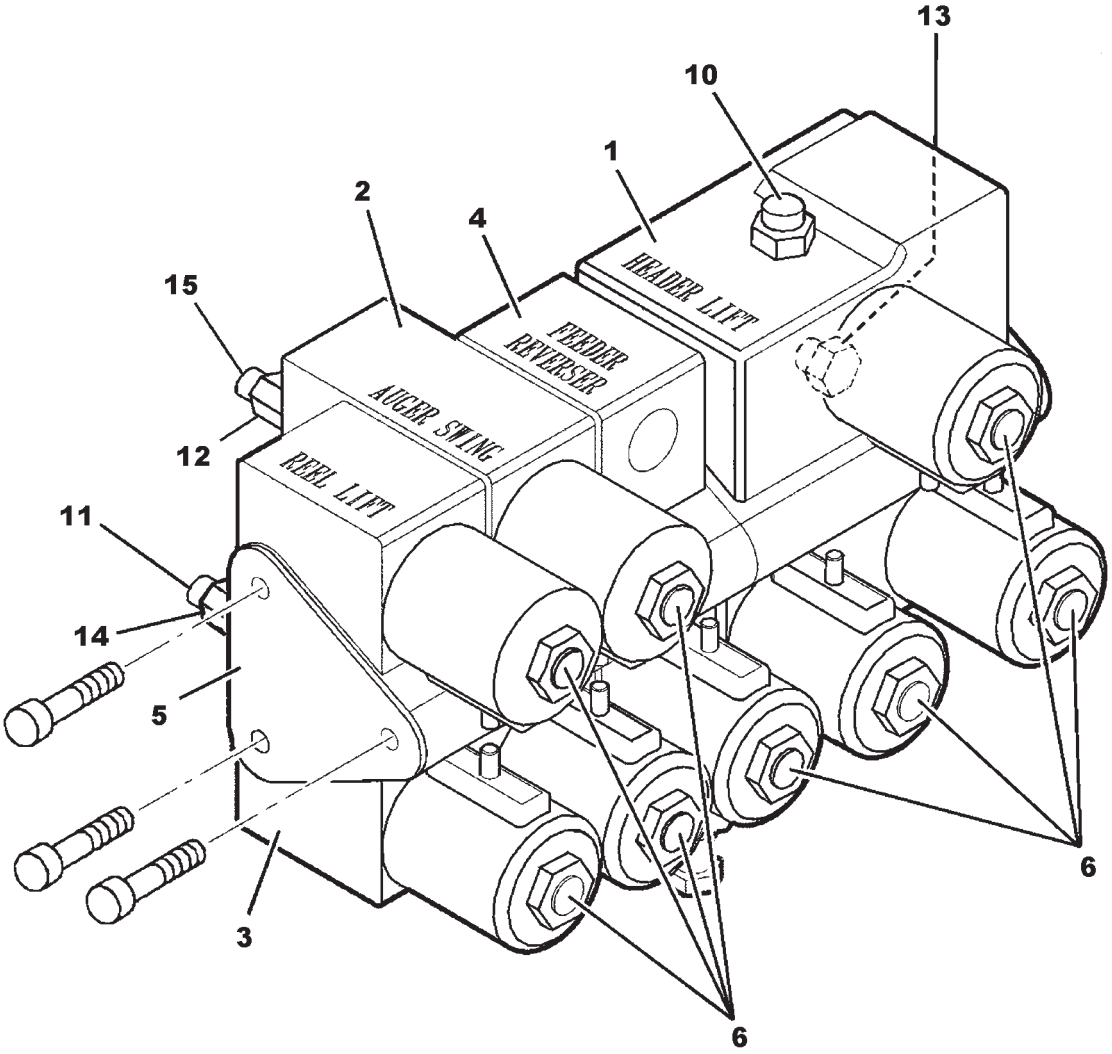

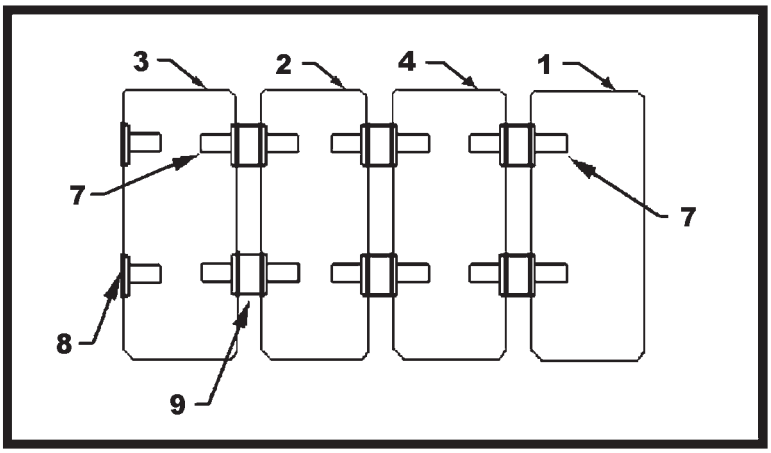

TUBE & PLUG ASSEMBLY

MC00210A

https://truckmanualshub.com/

CONTROL VALVE STACK
(PRIOR S/N HS36101)

ITEM	NUMBER	QTY	DESCRIPTION
-	71389737	1	VALVE STACK ASSEMBLY
1	71379325	1	VALVE ASSEMBLY, HEADER CLOSED CTR.
2	116465W91	1	VALVE ASSEMBLY, UNLOADER SWING
3	103766W92	1	VALVE ASSEMBLY, REEL LIFT
4	71386557	1	VALVE ASY, FEEDER REVERSER
	70935781	1	ELBOW, 90 DEG, 3/4-16 JIC X ORB, M
	70921349	1	O-RING, .087 X .644 ID
5	103764W1	1	END PLATE
	71379306	3	BOLT, HEX 1/4-20 X 5-13/16 LG
	70921880	3	WASHER, LOCK EXT. TOOTH 1/4
6	71188504	AR	COIL, 6VDC W/DIODE
	71188503	AR	COVER, COIL
	70915314	AR	NUT, STAMPED 1/2-20
7	1052370M91	6	THRU TUBE ASSEMBLY
	70924048	2	O-RING, .070 X .364 ID
8	103759W91	2	PLUG TUBE ASSEMBLY
	70924048	2	O-RING, .070 X .364 ID
9	104145W91	1	PLUG TUBE ASSEMBLY
	70927903	2	O-RING, .070 X .176 ID
10	70923163	1	STR. CONNECTOR, 7/16-20 JIC X ORB, MALE
	70921883	1	O-RING, .072 X .351 ID
11	70922523	1	ELBOW, 90 DEG, 9/16-18 JIC X ORB, MALE
	70921885	1	O-RING, .078 X .468 ID
12	70930777	2	REDUCER, 3/4-16 ORB X 9/16-18 ORB, FEM
	70921349	2	O-RING, .087 X .644 ID
13	70923717	2	CONNECTOR, STR, 3/4-16 JIC X 7/8-14 ORB
	70921205	2	O-RING, .097 X .755 ID
14	103778W91	1	EXPANDER, 7/16-20 ORB X 9/16-18 ORB, FEM
	70921883	1	O-RING, .072 X .351 ID
15	70925011	2	ELBOW, 90 DEG, 7/16-20 JIC X 9/16-18 ORB
	70921885	2	O-RING, .078 X .468 ID

MC00210A
PR: 348

https://truckmanualshub.com/

HEADER LIFT VALVE

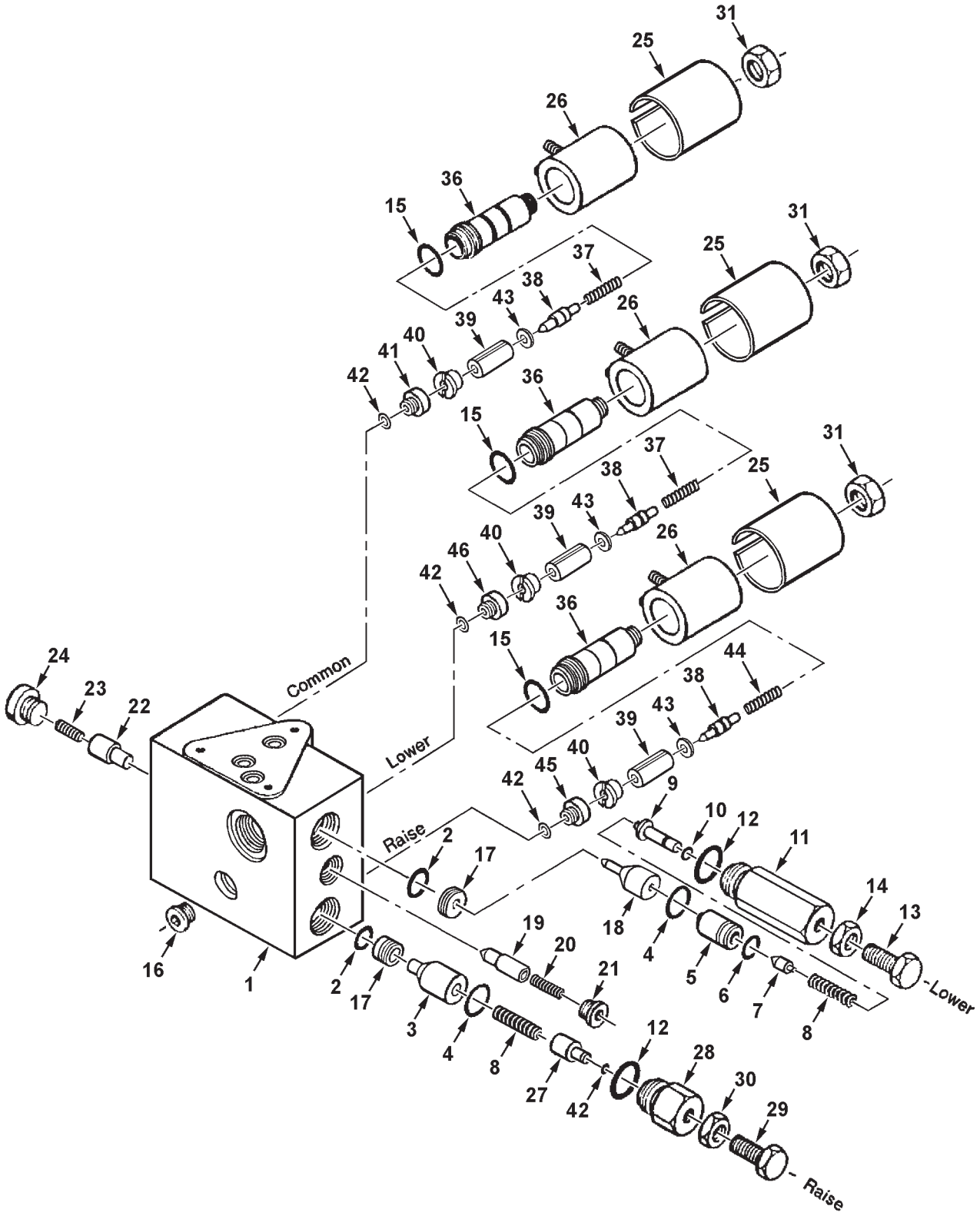

MC00233

https://truckmanualshub.com/

ITEM	NUMBER	QTY	DESCRIPTION
-	71379325	1	VALVE ASSEMBLY, HEADER LIFT
1	----------	1	BODY (ORDER VALVE ASY, HEADER LIFT)
	1052370M91	2	TUBE/SPACER ASY.
	70924048	4	O-RING, .070 X .364 ID
	104145W91	1	PLUG
	70927903	2	O-RING, .070 X .176 ID
2	70926542	2	O-RING, .070 X .551 ID
3	103745W1	1	POPPET, RAISE
4	70923945	2	O-RING, .070 X .739 ID
5	103746W1	1	RETAINER, DASHPOT
6	70923846	1	O-RING, .070 X .489 ID
7	103797W1	1	POPPET, DASHPOT
8	1052337M1	2	SPRING
9	111089W1	1	STOP, ADJUSTABLE
10	70923943	1	O-RING, .070 X .114 ID
11	1052351M1	1	PLUG, ADJUSTING
12	70921205	2	O-RING, 90 DUR, .097 X .755 ID
13	353538X1	1	BOLT, HEX, 3/8-24 X 1
14	70916602	1	NUT, HEX, 3/8-24
15	70935902	3	O-RING (VITON) .070 X .801 ID
16	70935830	1	PLUG, INT. HEX, 9/16-18 ORB
	70921885	1	O-RING, .078 X .468 ID
17	1052349M1	2	ORIFICE, FLOW
18	103747W1	1	POPPET, LOWER
19	103753W1	1	POPPET
20	1052394M1	1	SPRING, PLUG
21	70928605	1	PLUG, HEX SOCKET, 7/16-20 ORB
	70921883	1	O-RING, .072 X .351 ID
22	104128W1	1	POPPET
23	103789W1	1	SPRING
24	104130W91	1	PLUG ASSEMBLY
	70921881	1	O-RING, .064 X .239 ID
25	71188503	3	COVER, COIL
26	71188504	3	COIL
27	103796W1	1	ADJUSTABLE VALVE STOP
28	103754W1	1	CAP, END
29	70921333	1	BOLT, HEX, 5/16-18 UNC X 1
30	70917372	1	NUT, HEX 5/16-18 UNC
31	70915314	3	NUT, STAMPED, 1/2-20
36	104139W91	3	SLEEVE ASSEMBLY
37	71174718	2	SPRING, PLUG
38	71176951	3	POPPET
39	71365101	3	ARMATURE
40	71176964	3	POLE PIECE
41	1052341M1	1	ORIFICE, .104
42	70926356	4	O-RING, .070 X .239 ID
43	71176962	3	WASHER
44	1073032M1	1	SPRING, PLUG (RAISE ONLY)
45	71184415	1	ORIFICE, .055 (RAISE ONLY)
46	71184418	1	ORIFICE, .040 (LOWER ONLY)

MC00233
PR: 350

https://truckmanualshub.com/

REEL LIFT VALVE

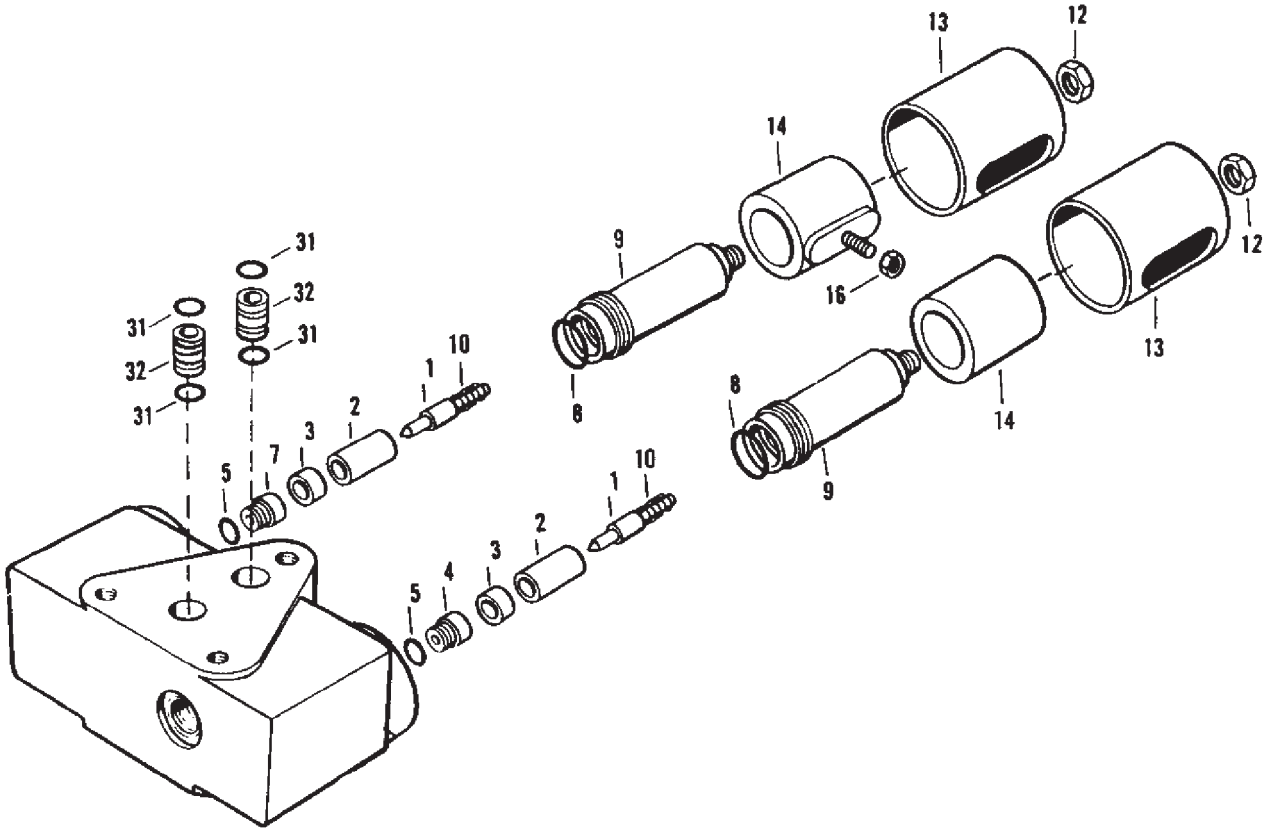

MC00112

https://truckmanualshub.com/

ITEM	NUMBER	QTY	DESCRIPTION
-	103766W92	2	REEL LIFT VALVE ASSEMBLY
1	71176951	2	POPPET, ORIFICE
2	71176963	2	POPPET, ARMATURE
3	71176964	2	RETAINER
4	71184418	1	ORIFICE, .040, RAISE
5	70926356	2	O-RING, .070 X .239 ID
7	1052384M1	1	ORIFICE, .048, LOWER
8	70930897	2	O-RING, .070 X .801 ID
9	1052359M91	2	SLEEVE ASSEMBLY
10	1073032M1	2	SPRING
12	70915314	2	PALNUT, 1/2-20
13	71188503	2	COVER, COIL
14	71188504	2	COIL, W/DIODE
16	358990X1	2	NUT, HEX BRASS, #10-32 UNF
31	70924048	4	O-RING, .070 X .364 ID
32	1052370M91	2	THRU-TUBE ASSEMBLY (INCL. 2 OF ITEM 31)

MC00112
PR: 352

https://truckmanualshub.com/

FEEDER REVERSER VALVE

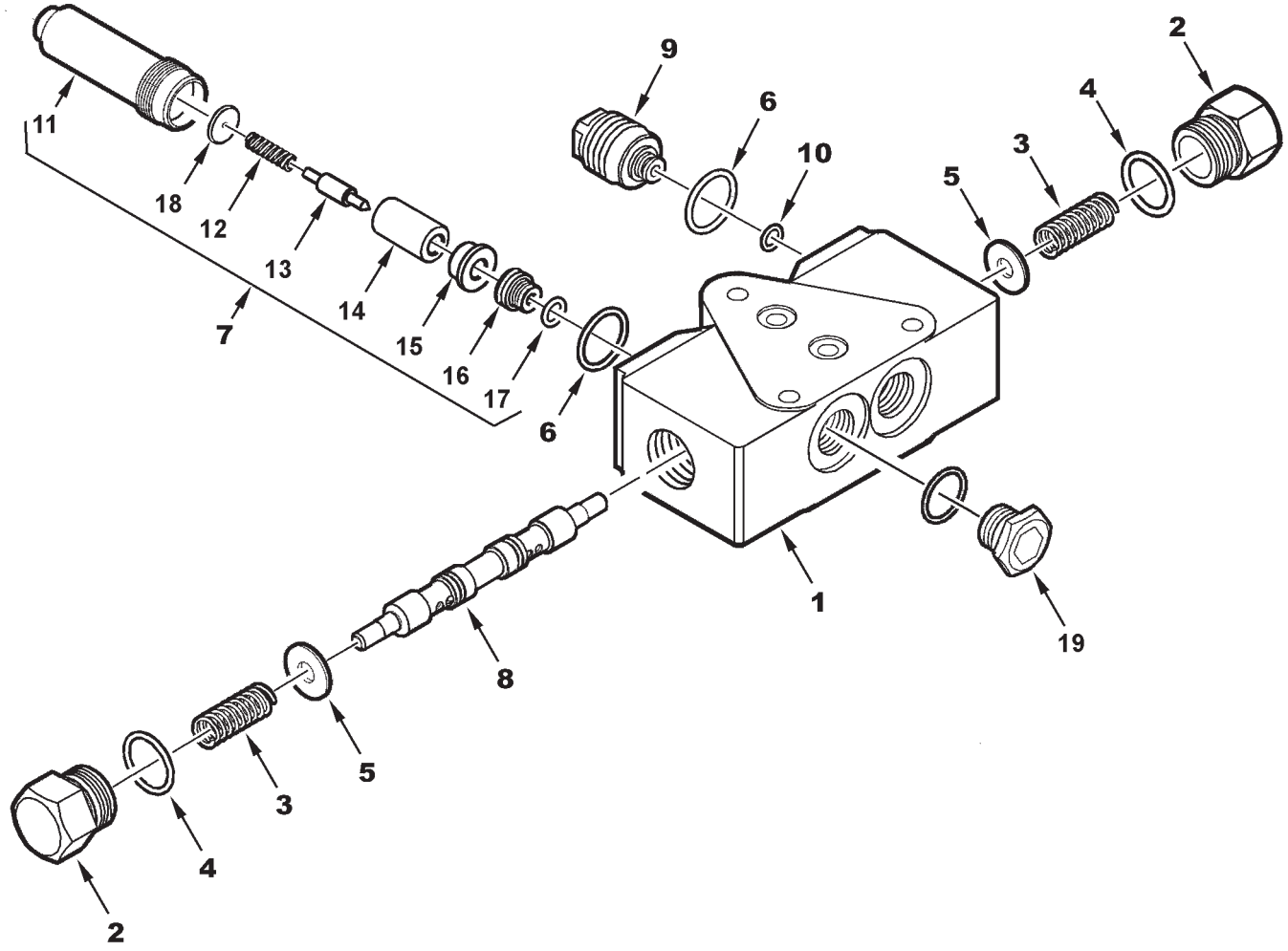

https://truckmanualshub.com/

ITEM	NUMBER	QTY	DESCRIPTION
-	71389747	-	VALVE ASY. FEEDER REVERSER, W/COIL (INCL. FOLLOWING 4 ITEMS)
-	71188504	1	COIL, 6V, W/DIODE
-	71188503	1	COVER, COIL
-	70915314	1	NUT, STAMPED, 1/2-20
-	71386557	1	VALVE ASY. FEEDER REVERSER, W/O COIL (INCL. ITEMS 1-10)
1	-----	-	BODY, VALVE (ORDER COMPLETE ASSEMBLY)
2	71184401	2	END CAP, HEX
3	71184409	2	SPRING
4	70921205	2	O-RING, .097 X .755 ID
5	71300327	2	RETAINER, SPRING
6	70935902	2	* O-RING, VITON, .070 X .801 ID
7	71374785	1	PILOT ASY, NORMALLY CLOSED (INCL. ITEMS 11-18)
8	71502674	1	SPOOL
9	71386572	1	PLUG, STACK
10	70926356	1	O-RING, .070 X .239 ID
11	104139W91	1	SLEEVE ASY, THREADED
12	71174718	1	SPRING
13	71361243	1	* POPPET, NORM. CLOSED
14	71365101	1	ARMATURE
15	71176964	1	POLE PIECE
16	71184418	1	* ORIFICE, .040 DIA
17	70926356	1	* O-RING, .070 X .239 ID
18	71176962	1	WASHER
19	70927999	1	PLUG, HEX SOCKET HD, 3/4-16 ORB
	70921349	1	O-RING, .087 X .644 ID
-	71361312	AR	POPPET KIT, PILOT ASY (INCL ITEMS W/ *)

71386557
PR: 354

https://truckmanualshub.com/

UNLOADER SWING VALVE

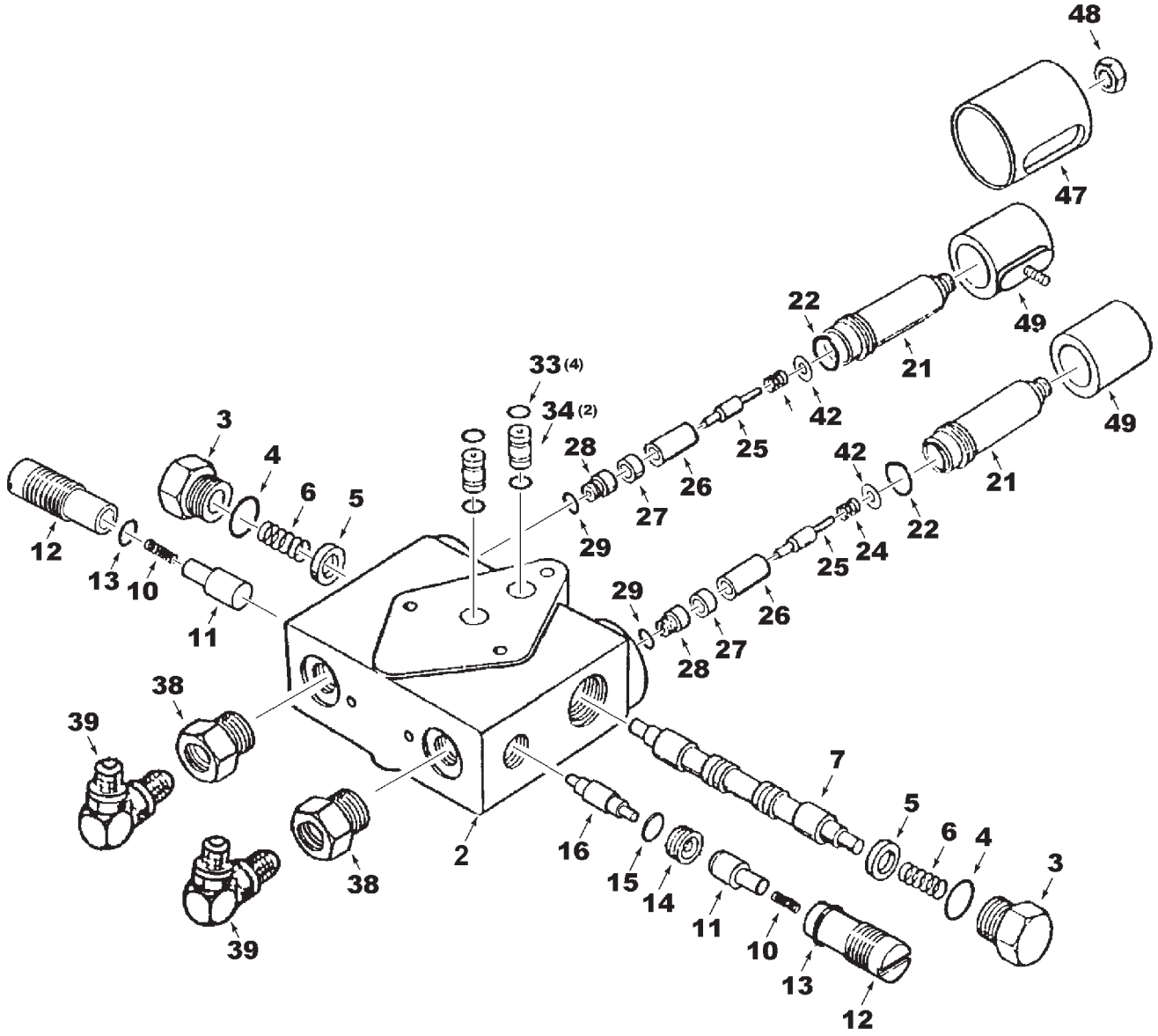

https://truckmanualshub.com/

ITEM	NUMBER	QTY	DESCRIPTION
-	116465W91	1	VALVE, MODULE ASSEMBLY
2	----------	1	BODY, VALVE (ORDER VALVE, MODULE ASY.)
3	105068W1	2	PLUG, VALVE CAP
4	70921205	2	O-RING, .097 X .755 ID
5	71300327	2	RETAINER, SPRING
6	71374794	2	SPRING, SPOOL
7	105076W1	1	SPOOL, VALVE
10	71374790	2	SPRING
11	105085W1	2	POPPET
12	105084W1	2	END CAP, RETAINER
13	70927974	2	O-RING, .103 X .612 ID
14	1055944M1	2	SEAT
15	70923841	2	O-RING, .070 X .489 ID
16	71374793	1	SPOOL, SHUTTLE
21	105077W1	2	SLEEVE ASSEMBLY
22	70935902	2	O-RING, .070 X .801 ID, VITON
24	1052358M1	2	SPRING, POPPET
25	1052393M1	2	POPPET
26	105078W1	2	ARMATURE
27	71176964	2	POLE PIECE
28	71184418	2	ORIFICE, .040
29	70926356	2	O-RING, .070 X .239 ID
33	70924048	6	O-RING, .070 X .364 ID
34	1052370M91	2	THRU-TUBE ASSEMBLY (INCL. 2 OF ITEM 33)
38	70930777	2	REDUCER, 3/4-16 ORB M X 9/16-18 ORB FEM
	70921349	2	O-RING, .087 X .644 ID
39	70925011	2	ELBOW, 90 DEG, 9/16-18 ORB X 7/16-20 JIC
	70921885	2	O-RING, .078 X .468 ID
42	1052408M1	2	WASHER, BRASS
47	71188503	2	COVER, COIL
48	70915314	2	PALNUT, 1/2-20
49	71188504	2	COIL, W/DIODE
50	364076X1	1	BOLT, HEX, 1/4-20 UNC X 3-1/2
			(NOT ILLUSTRATED)

MC00114
PR: 356

https://truckmanualshub.com/

REEL DRIVE VALVE
(PRIOR S/N HS36101)

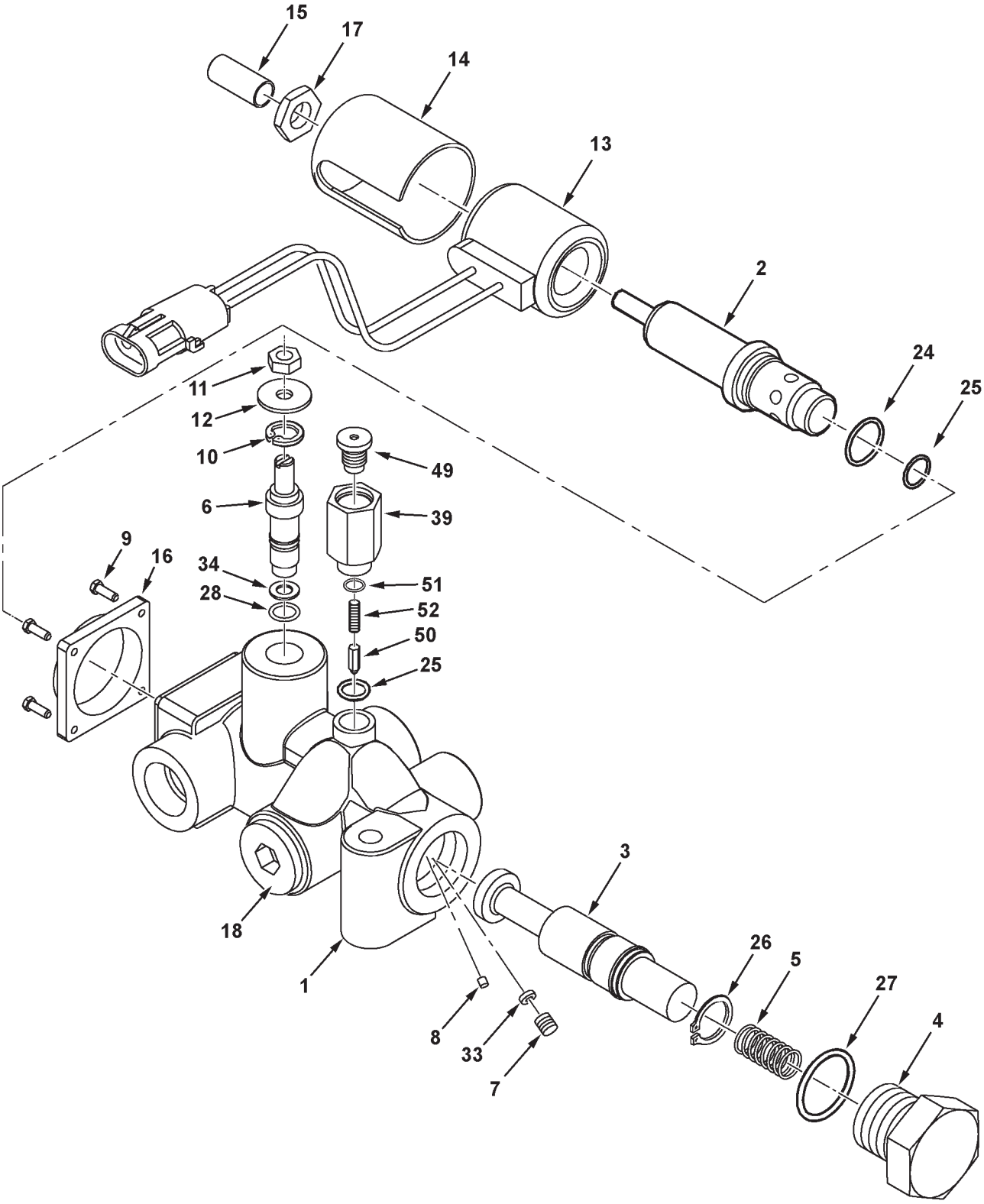

MC00111A

https://truckmanualshub.com/

REEL DRIVE VALVE
(PRIOR S/N HS36101)

ITEM	NUMBER	QTY	DESCRIPTION
-	104135W91	1	VALVE ASSEMBLY, REEL DRIVE
1	----------	1	BODY (ORDER VALVE ASY, REEL DRIVE)
2	71361368	1	BODY/BUSHING ASSEMBLY
3	104502W1	1	SPOOL
4	104503W1	1	CAP, SPRING
5	71361357	1	SPRING
6	104505W1	1	PINTEL, MANUAL OVERRIDE
7	71361361	1	ORIFICE ASSEMBLY.025
8	71302422	1	ORIFICE .031
9	71361355	4	BOLT, HEX SOCKET #10-32 UNF X 1/2
10	104512W1	1	RING, RETAINING
11	353919X1	1	NUT, HEX JAM 1/4-28 UNF
12	70917377	1	WASHER, WIDE FLAT 1/4
13	71361358	1	COIL, CONNECTOR ASSEMBLY
14	71188503	1	COVER
15	71362539	1	CAP, PROTECTOR
16	71361359	1	PLATE, MOUNTING
17	353438X1	1	PALNUT
18	70924622	1	PLUG, HEX SOCKET HD, 7/8-14 ORB
	70921205	1	O-RING, .097 X .755 ID
24	70921205	1	O-RING, .097 X .755 ID
25	70921885	2	O-RING, .078 X .468 ID
26	71361367	1	RING, RETAINING
27	70921206	1	O-RING, .116 X .924 ID
28	70923558	1	O-RING, .070 X .239, 75 DURO
33	104510W1	1	SCREEN
34	71361364	1	RING, BACK-UP
39	104508W1	1	CAP, LOAD SENSE END
49	104509W1	1	CAP, END
50	104128W1	1	POPPET
51	70921881	1	O-RING, .064 X .239 ID
52	103789W1	1	SPRING

MC00111A
PR: 358

https://truckmanualshub.com/

ROTARY SCREEN VALVE & MOTOR

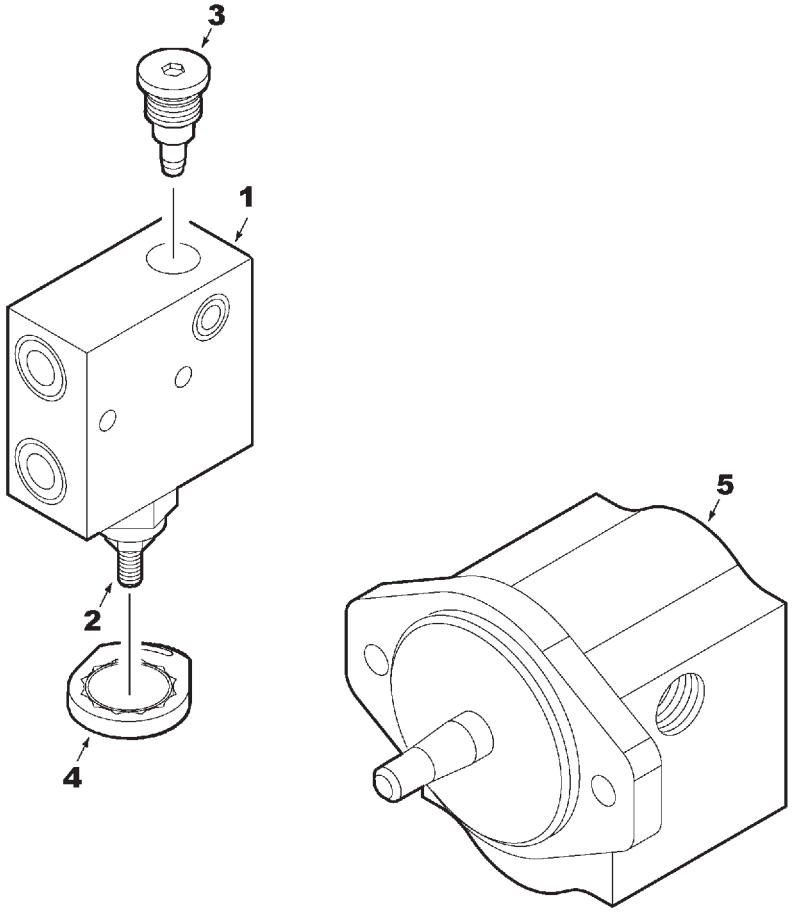

MC00337

https://truckmanualshub.com/

ROTARY SCREEN VALVE & MOTOR

ITEM	NUMBER	QTY	DESCRIPTION
1	71396267	1	VALVE, ROTARY SCREEN (INCL ITEMS 2,3,4)
2	71397492	1	CARTRIDGE ASY., FLOW REGULATOR
-	700724693	AR	SEAL KIT, FOR ITEM 2
3	71389743	1	CARTRIDGE ASY., CHECK VALVE
-	700726979	AR	SEAL KIT, FOR ITEM 3
4	71397493	1	LOCK KIT, VALVE, W/ SCREW
5	71396755	1	HYDRAULIC MOTOR(INCL. KEY, NUT & LKWSHR) (NOTE: INDIVIDUAL COMPONENTS ARE NOT SERVICED EXCEPT FOR SEAL KIT.)
-	71396758	1	SEAL KIT, HYDRAULIC MOTOR

MC00337
PR: 360

https://truckmanualshub.com/

ROTARY SCREEN MOTOR LINES
(PRIOR S/N HS36101)

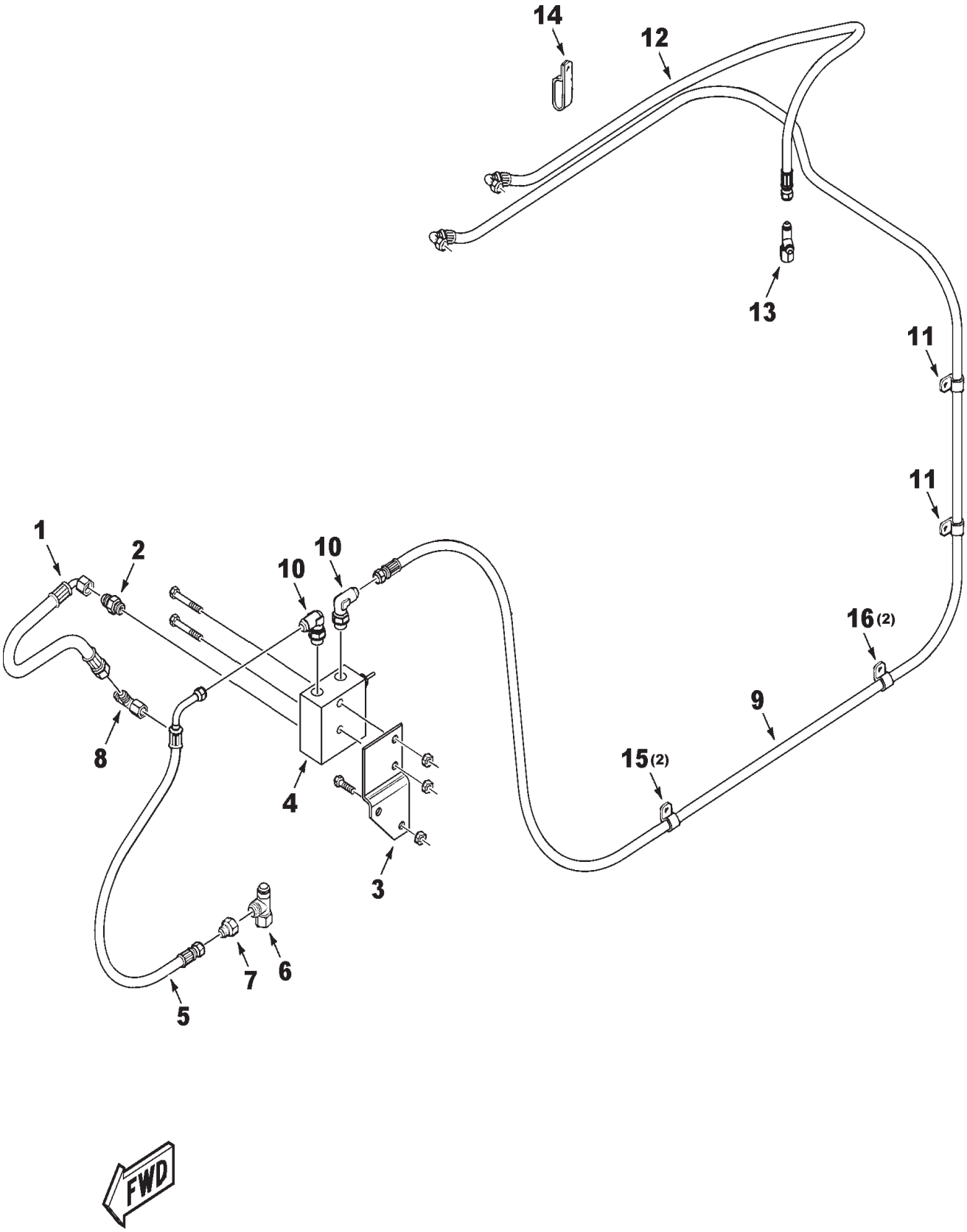

MC00335

https://truckmanualshub.com/

ROTARY SCREEN MOTOR LINES
(PRIOR S/N HS36101)

ITEM	NUMBER	QTY	DESCRIPTION
1	71373538	1	HOSE ASY., LOAD SENSE
2	700701356	1	STR CONNECTOR, 7/16-20, JIC X ORB
	70921883	1	O-RING, .072 X .351 ID
3	71396264	1	BRACKET, ROTARY SCREEN VALVE
	70921333	2	CAPSCREW, 5/16-18 X 1
	70917356	2	LOCKWASHER, 5/16
	70917372	2	NUT, HEX 5/16-18
4	71396267	1	VALVE, ROTARY SCREEN
	70921978	2	CAPSCREW, 5/16-18 X 2 GR5
	70917356	2	LOCKWASHER, 5/16
	70917372	2	NUT, HEX 5/16-18
5	700719105	1	HOSE ASY., ROTARY SCREEN SUPPLY
6	70925468	1	TEE, SWIVEL RUN, 7/8-14 JIC
7	70930224	1	REDUCER FTG., 7/8-14 JIC X 9/16-18 JIC
8	700701355	1	TEE, SWIVEL RUN, 7/16-20 JIC
9	71396265	1	HOSE ASY., PRESS. TO ROTARY SCR BLKHD
10	70922523	2	ELBOW, 90 DEG 9/16-18, JIC X ORB
	70921884	2	O-RING, .078 X .468 ID
11	70925619	2	CLAMP, .69 DIA X .406 HOLE
	Y702951	2	CAPSCREW, 3/8-16 X 3/4 LG
	705038	2	LOCKWASHER, 3/8
	70916950	2	NUT, HEX 3/8-16
12	71396266	1	HOSE ASY., BLKHD TO ROTARY SCR. TANK
	70937133	2	TIE, SELF LOCKING, .300 X 14.5
13	70921298	1	TEE, SWIVEL RUN, 3/4-16 JIC
14	70928148	1	CLAMP, DOUBLE, 3/4 TUBE X .406 HOLE
	Y702951	1	CAPSCREW, 3/8-16 X 3/4 LG
15	70927134	2	J-CLIP, .62 X .406 HOLE
16	70937682	2	J-CLIP, .75 X .656 HOLE

MC00335
PR: 362

https://truckmanualshub.com/

UNLOADER ENGAGE LINES
(PRIOR S/N HP36101)

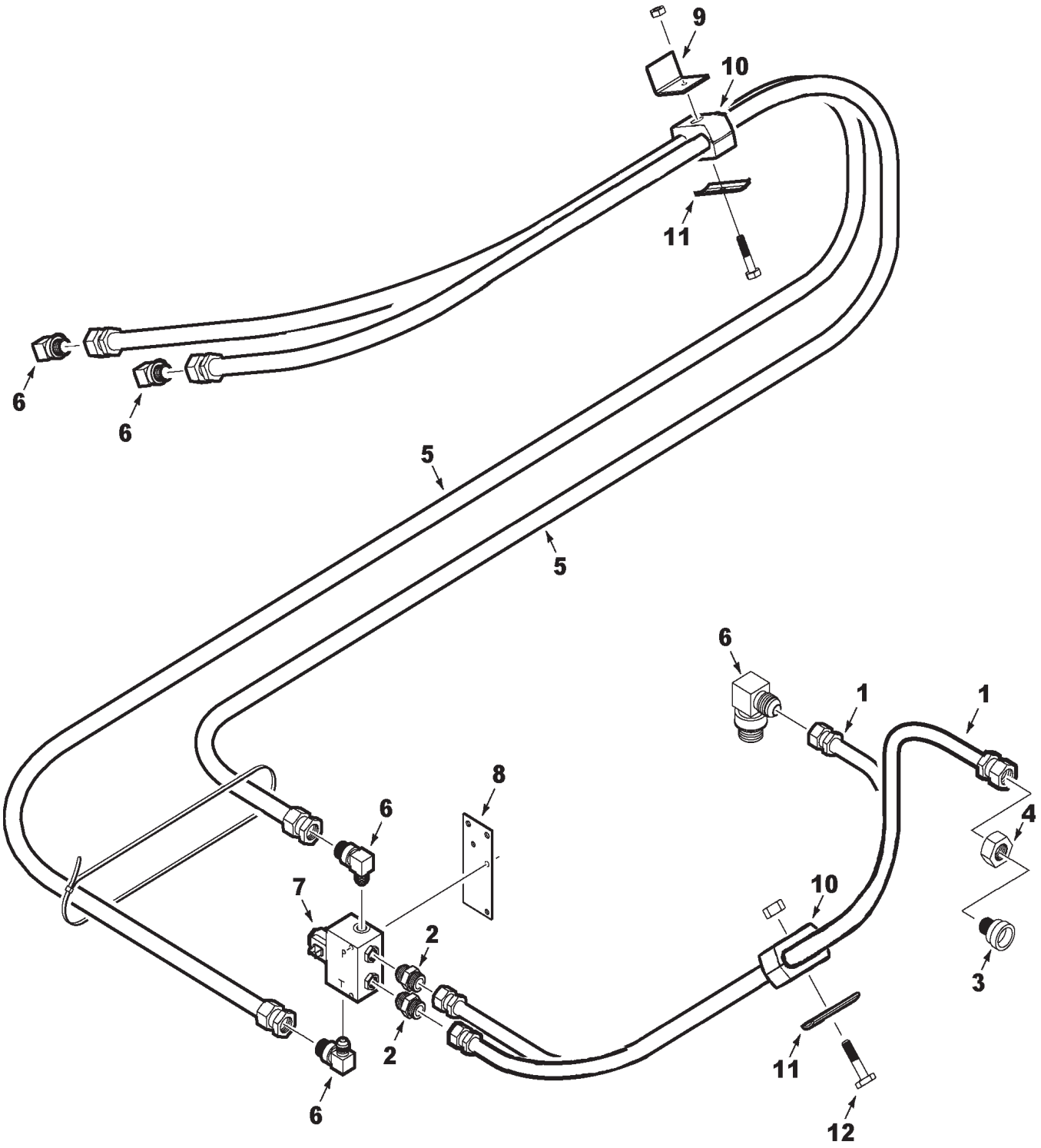

MC00342

https://truckmanualshub.com/

UNLOADER ENGAGE LINES
(PRIOR S/N HP36101)

ITEM	NUMBER	QTY	DESCRIPTION
1	112027W1	2	HOSE ASY., 3/8 X 45"
2	846634	2	CONNECTOR, STRAIGHT, 9/16-18, JIC X ORB
	70921885	AR	O-RING, .078 X .468 ID
3	70925852	1	REDUCER FTG., 1-1/16-12 X 9/16-18 JIC
4	70919197	1	TUBE NUT, 1-1/16-12
5	71373403	2	HOSE ASY., 3/8 X 90"
	70937133	1	TIE STRAP, NYLON
6	70922523	5	ELBOW, 90 DEG, 9/16-18, JIC X ORB
	70921885	AR	O-RING, .078 X .468 ID
7	108531W91	1	VALVE ASY. (SERVICE WITH 71407956)
	71407956	1	VALVE ASY.
	7701964	2	CAPSCREW, 1/4-20 X 2-1/2
	705012	2	LOCKWASHER, 1/4
	70916622	2	NUT, 1/4, REG
8	108925W1	1	PLATE, VALVE MOUNT
	70921332	2	CAPSCREW, 5/16-18 X 3/4
	Y704726	2	NUT, HEX FLANGE TOP LOCK, 5/16-18
9	101832M1	1	ANGLE BRACKET
	70921965	1	CAPSCREW, 3/8-16 X 3/4 GR5
	70916965	1	LOCKWASHER, 3/8
	70916950	1	NUT, 3/8-16, REG
10	148203M1	2	CLAMP PAIR, DOUBLE, 5/8 X 5/8 DIA
11	101646M1	2	COVER PLATE
	70921963	1	CAPSCREW, 1/4-20 X 2 GR5
	705012	1	LOCKWASHER, 1/4
	70916622	1	NUT, 1/4, REG
12	7703507	1	CAPSCREW, 5/16-18 X 2 GR5
	Y705020	1	LOCKWASHER, 5/16
	70917372	1	NUT, HEX, 5/16

MC00342
PR: 372

https://truckmanualshub.com/

UNLOADER ENGAGE LINES
(EFF. S/N HP36101)

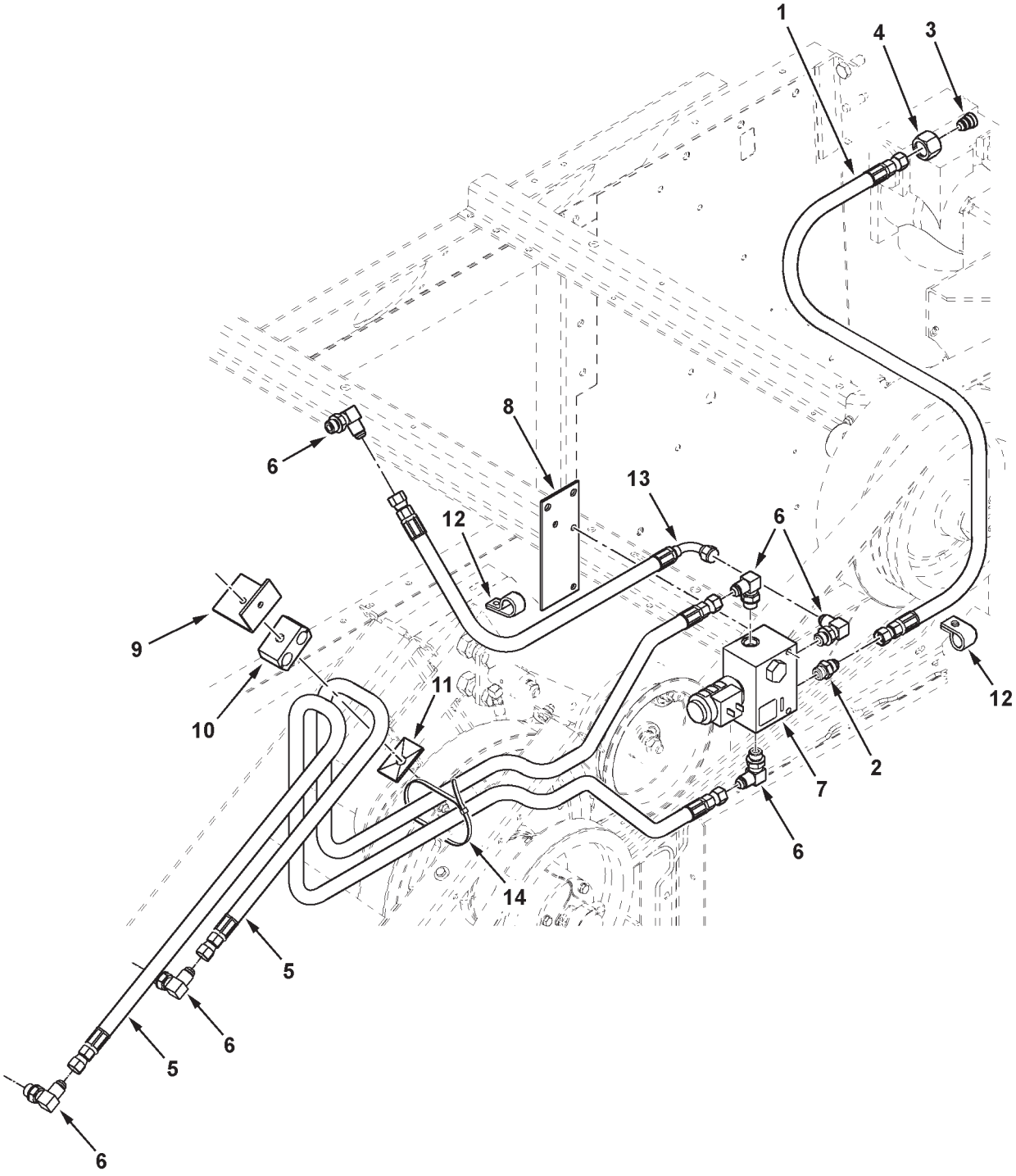

MC00387

https://truckmanualshub.com/

UNLOADER ENGAGE LINES
(EFF. S/N HP36101)

ITEM	NUMBER	QTY	DESCRIPTION
1	112027W1	1	HOSE ASY., 3/8 X 45"
2	846634	1	CONNECTOR, STRAIGHT, 9/16-18, JIC X ORB
	70921885	1	O-RING, .078 X .468 ID
3	70925852	1	REDUCER FTG., 1-1/16-12 X 9/16-18 JIC
4	70919197	1	TUBE NUT, 1-1/16-12
5	71373403	2	HOSE ASY., 3/8 X 90"
6	70922523	6	ELBOW, 90 DEG, 9/16-18, JIC X ORB
	70921885	6	O-RING, .078 X .468 ID
7	108531W91	1	VALVE ASY. (SERVICE WITH 71407956)
	71407956	1	VALVE ASY.
	7701964	2	CAPSCREW, 1/4-20 X 2-1/2
	705012	2	LOCKWASHER, 1/4
	70916622	2	NUT, 1/4, REG
8	108925W1	1	PLATE, VALVE MOUNT
	70921332	2	CAPSCREW, 5/16-18 X 3/4
	Y704726	2	NUT, HEX FLANGE TOP LOCK, 5/16-18
9	101832M1	1	ANGLE BRACKET
	70921965	1	CAPSCREW, 3/8-16 X 3/4 GR5
	70916965	1	LOCKWASHER, 3/8
	70916950	1	NUT, 3/8-16, REG
10	148203M1	1	CLAMP PAIR, DOUBLE, 5/8 X 5/8 DIA
11	101646M1	1	COVER PLATE
	70921963	1	CAPSCREW, 1/4-20 X 2 GR5
	705012	1	LOCKWASHER, 1/4
	70916622	1	NUT, 1/4, REG
12	70925097	2	CLAMP, LINE, 9/16 X .406 HOLE
	70921210	2	CAPSCREW, 3/8-16 X 1 GR5
	70916965	2	LOCKWASHER, 3/8
	70916950	2	NUT, 3/8-16, REG
13	700707391	1	HOSE ASY., 3/8 ID X 32.3"
14	70937133	2	TIE STRAP, NYLON, .30 X 14.5 LG

MC00387
PR: t05b08m42d0022

https://truckmanualshub.com/

UNLOADER ENGAGE VALVE

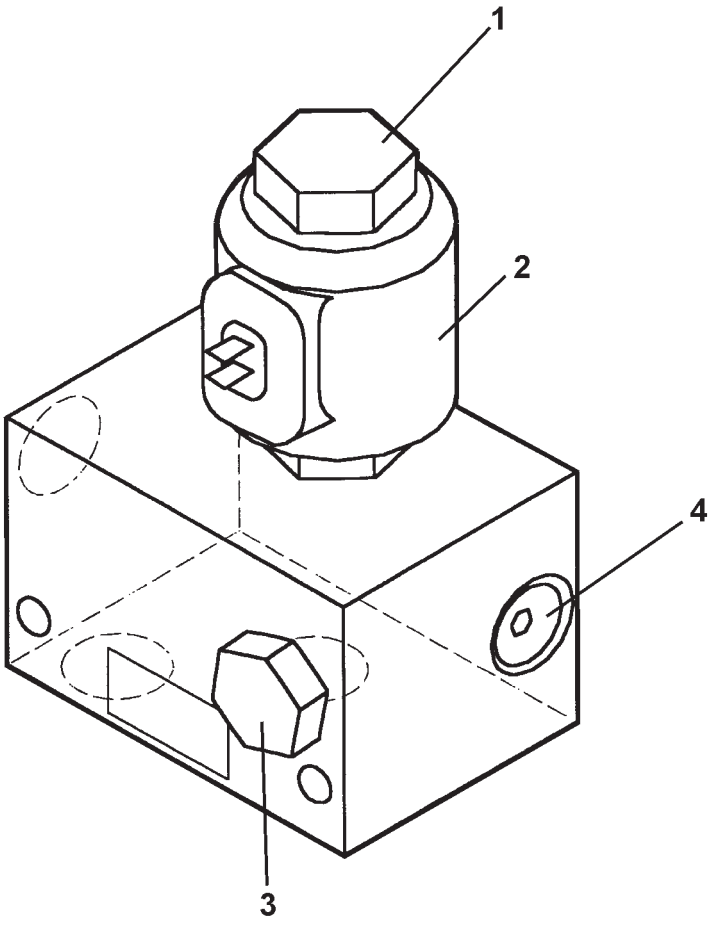

MC00061

https://truckmanualshub.com/

UNLOADER ENGAGE VALVE

ITEM	NUMBER	QTY	DESCRIPTION
-	108531W91	1	VALVE ASSEMBLY
1	71389729	1	CARTRIDGE, SOLENOID
2	853288	1	COIL, 12V DC
3	71389731	1	VALVE, CHECK
4	71389732	1	PLUG, ORIFICE, .052
-	71389733	1	KIT, SEAL REPAIR
-	71407956	1	VALVE ASSEMBLY
1	700720621	1	CARTRIDGE, VALVE
2	71407957	1	COIL, 12V DC
3	700720917	1	VALVE, CHECK
4	71407958	1	PLUG, ORIFICE, .052

MC00061
PR: 374

https://truckmanualshub.com/

RESERVOIR & FILTER

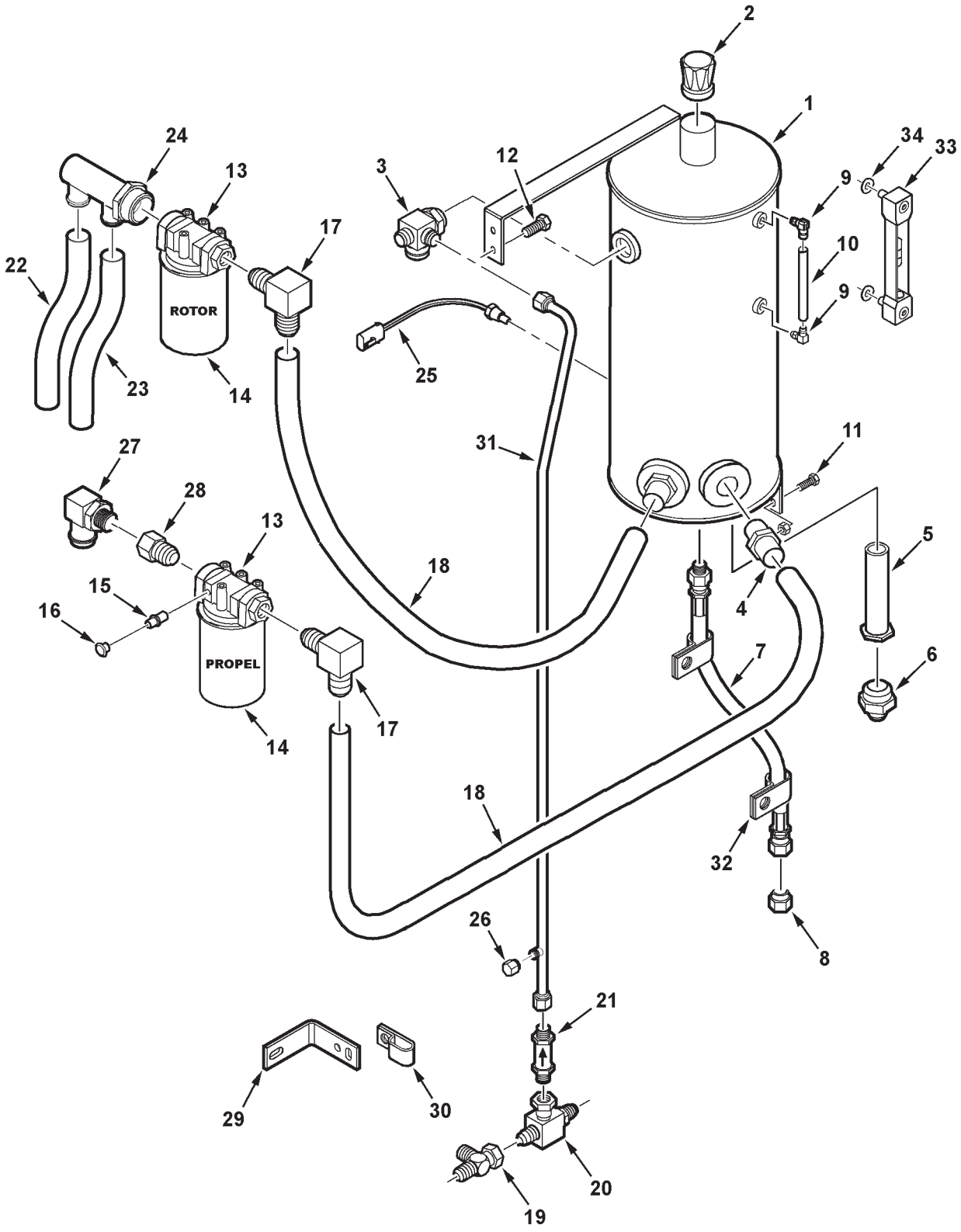

MC00331

https://truckmanualshub.com/

ITEM	NUMBER	QTY	DESCRIPTION
1	71391230	1	RESERVOIR WLMT, HYD (PRIOR S/N HP36101)
	71404409	1	RESERVOIR WLMT, HYD (EFF. S/N HP36101 THRU HR36999)
	71411311	1	RESERVOIR WLMT, HYD (EFF. S/N HS36101)
2	112887W1	1	CAP, BREATHER
3	2629073W91	1	FITTING, MANIFOLD RETURN
	70921235	1	O-RING, .118 X 1.475 ID
4	70929257	2	CONNECTOR, 1-7/8-12 ORB X 1-1/2 DIA STEM
	70921887	2	O-RING, .118 X 1.720 ID
5	112858W91	1	STRAINER ASY.
	70921888	1	O-RING, .118 X 2.337 ID
6	112890W91	1	STR CONN, 1-7/8-12 ORB X 1-5/8-12 JIC
	70921887	1	O-RING, .118 X 1.720 ID
7	108541W1	1	HOSE ASY., OIL DRAIN
8	700712973	1	PLUG, 1/2 JIC
9	133828M91	2	ELBOW, 90 DEG. 3/8 NPTF X 1/2 TUBE (PRIOR S/N HS36101)
	70920333	3	PLUG, HEX HD, 3/8 NPTF
10	133827M1	1	TUBE, NYLON 1/2" (PRIOR S/N HS36101)
11	703249	2	CAPSCREW, 3/8-16 X 1.0 GR5
	Y704734	2	NUT, HEX FLANGE TOP LOCK, 3/8-16
12	70921332	2	CPSCRW, 5/16-18 X 3/4(PRIOR S/N HP36101)
	70917356	2	LOCKWASHER, 5/16
	70917642	2	WASHER, 5/16, WIDE
13	104308W1	2	HEAD, FILTER
	70921332	3	CAPSCREW, 5/16-18 X 3/4
	70921333	1	CAPSCREW, 5/16-18 X 1
	70917642	1	WASHER, 5/16, WIDE
	70917356	4	LOCKWASHER, 5/16
14	104309W91	2	ELEMENT, FILTER
15	70919171	2	CONNECTOR, 1/8-27 NPTF X 7/16-20 JIC
16	700715848	2	CAP, 7/16-20 JIC
17	70930879	2	ELBOW,90 DEG, 1-7/8-12 ORB X 1-1/2 STEM
	70921887	2	O-RING, .118 X 1.720 ID
18	71392194	2	HOSE, SUCTION, 1.50 ID
	720656	4	CLAMP, HOSE 1.31-2.25
19	70921691	1	TEE, 1-1/16-12 SWIVEL RUN
20	2629080W1	1	FITTING, SPECIAL BYPASS
21	71391238	1	VALVE, CHECK
22	112016W1	1	HOSE, ROTOR SUCTION (41" LG.)
	70921912	2	CLAMP, HOSE, 1.06-2.0 RANGE
	3619622M1	1	TIE, SELF-LOCKING .184 X 14.19
23	71392195	1	HOSE, SUCTION, 1.25 ID (29" LG.)
	70921912	2	CLAMP, HOSE, 1.06-2.0 RANGE
24	104156W91	1	FITTING, MANIFOLD, 1-7/8-12 X 1-1/4 STEM
	70921887	1	O-RING, .118 X 1.720 ID
25	71391418	1	SENSOR, OIL LEVEL (PRIOR S/N HS36101)
26	70923737	1	CAP, 3/4-16 JIC
27	8046955	1	ELBOW,90 DEG, 1-5/8-12 ORB X 1-1/4 STEM
	70921235	1	O-RING, .118 X 1.475 ID
28	70930368	1	REDUCER, 1-7/8-12 ORB X 1-5/8-12 ORB FEM
	70921887	1	O-RING, .118 X 1.720 ID

CONTINUED

https://truckmanualshub.com/

RESERVOIR & FILTER

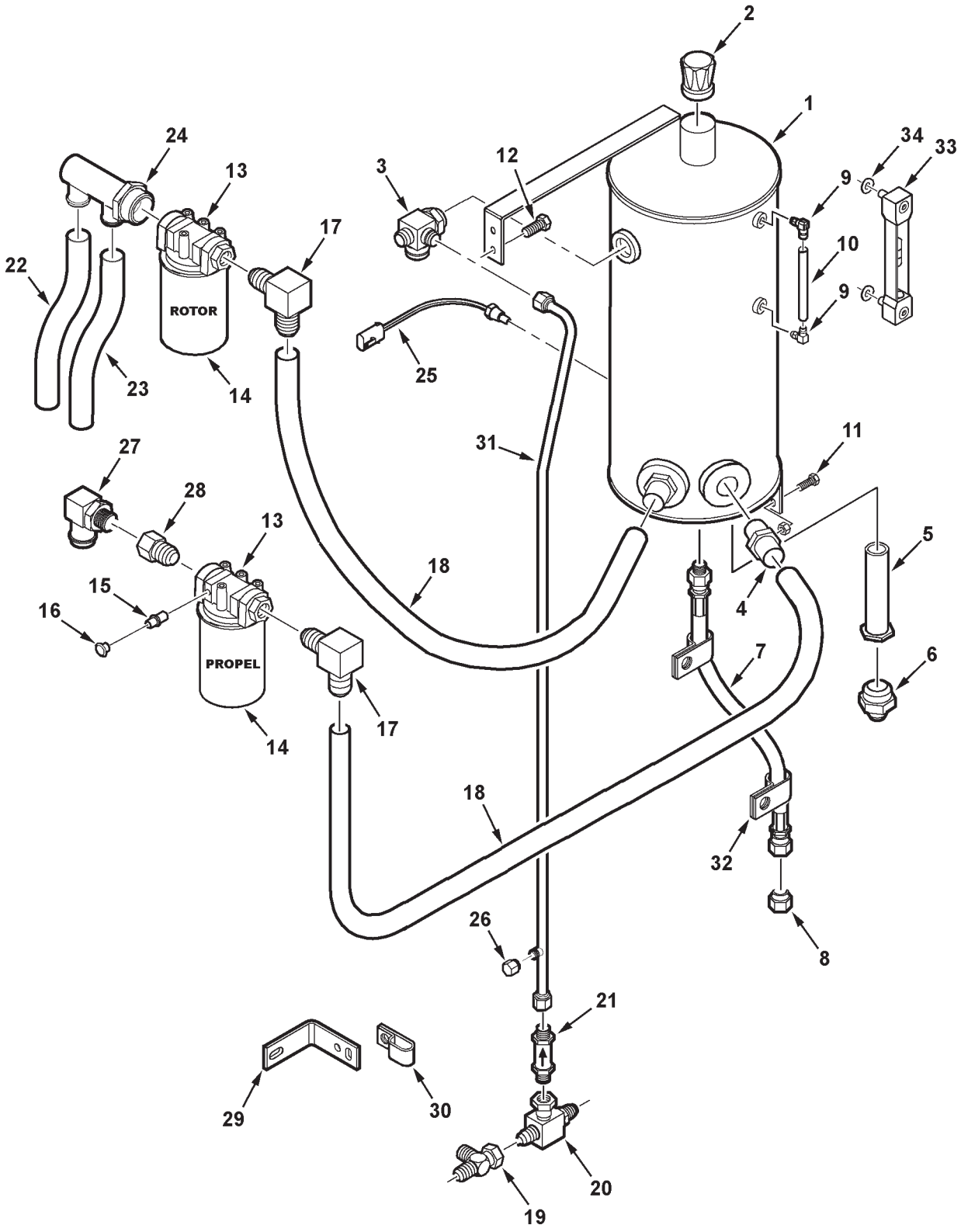

MC00331

https://truckmanualshub.com/

ITEM	NUMBER	QTY	DESCRIPTION
29	71388093	1	STRAP, SUPPORT
	703249	1	CAPSCREW, 3/8-16 X 1
	705038	1	LOCKWASHER, 3/8
	70917378	2	WASHER, 3/8
	70916950	1	NUT, 3/8-16 REG
30	AG519751	1	CLAMP, 1.38 TUBE X .406 HOLE
	70921332	1	CAPSCREW, 5/16-18 X 3/4
	Y705020	1	LOCKWASHER, 5/16
	700709602	1	WASHER, FLAT 5/16
	70917372	1	NUT, 5/16-18 REG
31	71391656	1	TUBE ASY, RETURN
32	70926049	2	CLAMP, TUBE, 3/4 X .406 HOLE
	703249	2	CAPSCREW, 3/8-16 X 1
	705038	2	LOCKWASHER, 3/8 REG
	70917372	2	NUT, 5/16-18 REG
33	45080021	1	SIGHT GAUGE ASY (EFF. S/N HS36101) (INCL. FOLLOWING 2 SERVICE ITEMS)
	700929239	1	MOUNT KIT, SIGHT GAUGE (INCL. SCREWS NUTS, O-RINGS & SPACERS)
	700729240	1	TUBE, GLASS
34	700726076	2	WASHER, RUBBER

MC00331
PR: 376

https://truckmanualshub.com/

ROTOR PUMP AND MOTOR LINES

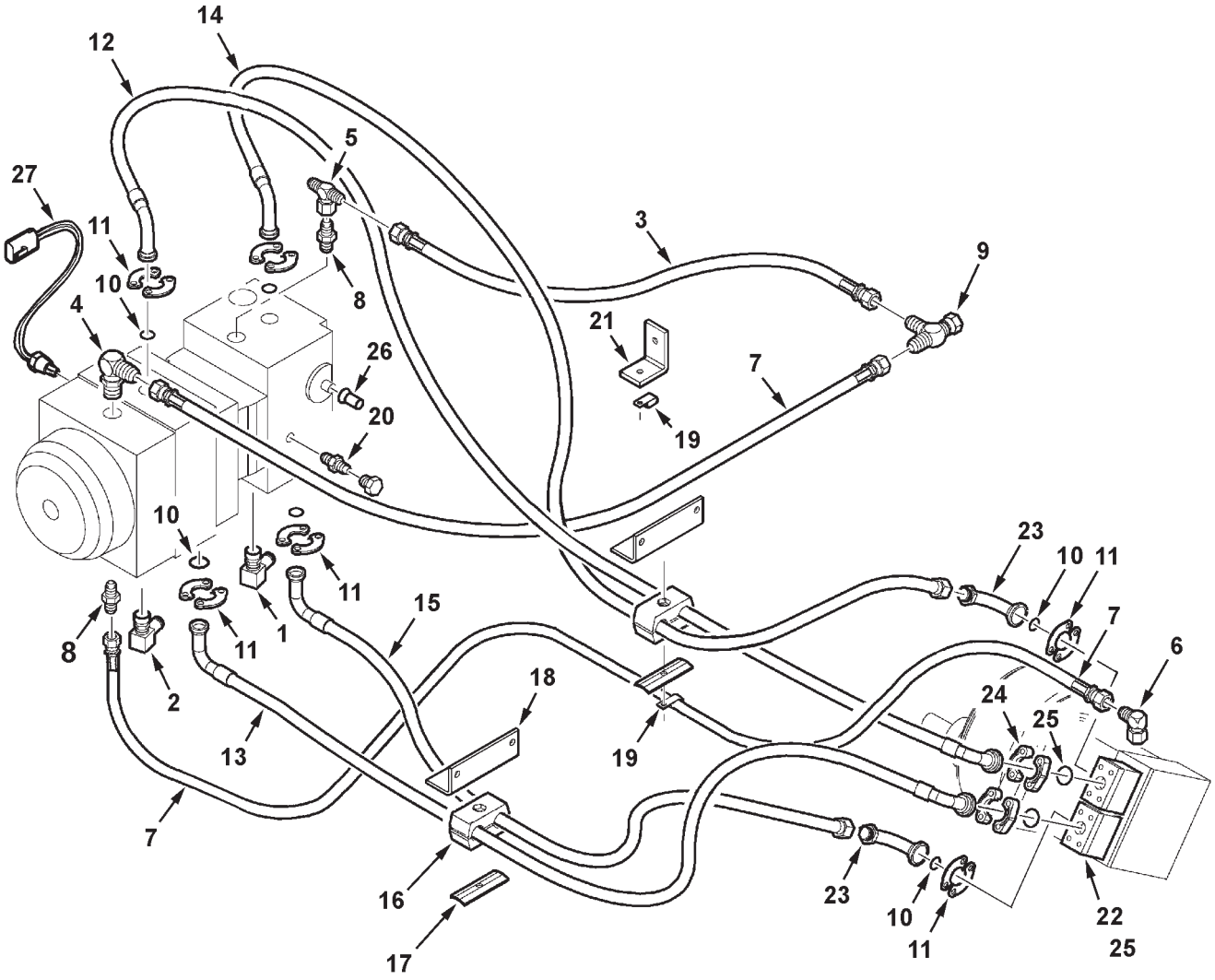

MC00338

https://truckmanualshub.com/

ROTOR PUMP AND MOTOR LINES

ITEM	NUMBER	QTY	DESCRIPTION
1	70931240	1	ELBOW, 1-1/4 HOSE STEM X 1-5/16-12 ORB
	70921214	1	O-RING, .116 X 1.171 ID
2	8046955	1	ELBOW, 1-1/4 HOSE STEM X 1-5/8-12 ORB
	70921235	1	O-RING, .118 X 1.475 ID
3	112020W1	1	HOSE ASY., ROTOR PUMP TO COOLER
4	70921203	1	ELBOW, 90 DEG, 1-1/16-12 ORB X JIC MALE
	70921206	1	O-RING, .116 X .924 ID
5	70925834	1	TEE, SWIVEL NUT BRANCH, 1-1/16-12 JIC
6	70922632	1	ELBOW,90D, 1-1/16-12 JIC X 1-5/16-12 ORB
	70921214	1	O-RING, .116 X 1.171 ID
7	71392198	2	HOSE ASY., ROTOR CASE DRAIN
8	70921217	2	CONNECTOR, STR, 1-1/16-12 JIC X ORB
	70921206	2	O-RING, .116 X .924 ID
9	70921691	1	TEE, SWIVEL NUT RUN, 1-1/16-12 JIC
10	70926533	6	O-RING, .139 X 1.296 ID, 90 DUR.
11	700701354	12	CLAMP HALF, SPLIT FLANGE, 1"
	70923027	24	CAPSCREW, 7/16-14 X 1-3/4
12	71391240	1	HOSE ASY., PUMP FRONT (TOP)
13	71391241	1	HOSE ASY., PUMP FRONT (BTM)
14	71391242	1	HOSE ASY., PUMP REAR (TOP)
15	71391243	1	HOSE ASY., PUMP REAR (BTM)
16	101841M1	2	CLAMP PAIR, DOUBLE, 1-1/2 DIA
17	101842M1	2	COVER PLATE
	772418	2	CAPSCREW, 5/16-18 X 3.50
	Y705020	2	LOCKWASHER, 5/16
	700709602	2	WASHER, 5/16 WIDE
	70917372	2	NUT, 5/16 REG
18	2630960W1	2	SUPPORT, ANGLE
	703249	4	CAPSCREW, 3/8-16 X 1.0
	705038	4	LOCKWASHER, 3/8
	70916950	4	NUT, 3/8-16 REG
19	293888M1	2	J-CLIP, 1.0 X .344 HOLE
20	70926292	2	CONNECTOR,STR, 7/16-20 JIC X 9/16-18 ORB
	70921885	2	O-RING, .078 X .468 ID
	700715848	2	CAP, 7/16-20 JIC
21	101618M1	1	BRACKET, ANGLE
	7703457	2	CAPSCREW, 1/4-20 X 3/4
	705012	2	LOCKWASHER, 1/4
	700709601	2	WASHER, 1/4 WIDE
	704007	2	NUT, 1/4-20 REG
22	71389769	2	BLOCK, TEE
23	112022W1	2	ELBOW, 90 DEG, 1" O-RING FLNG X ORFS
	70931640	2	O-RING, .070 X .926 ID
24	71391244	4	CLAMP HALF, SPLIT FLANGE, 1-1/4"
	702217	8	CAPSCREW, 1/2-13 X 4.0
25	70924192	4	O-RING, .139 X 1.484 ID
26	71398126	1	COVER, TAMPER PROOF
27	71389746	1	SWITCH, ROTOR PRESSURE
	70921885	1	O-RING, .078 X .468 ID

MC00338
PR: 380

https://truckmanualshub.com/

PROPEL PUMP AND MOTOR LINES

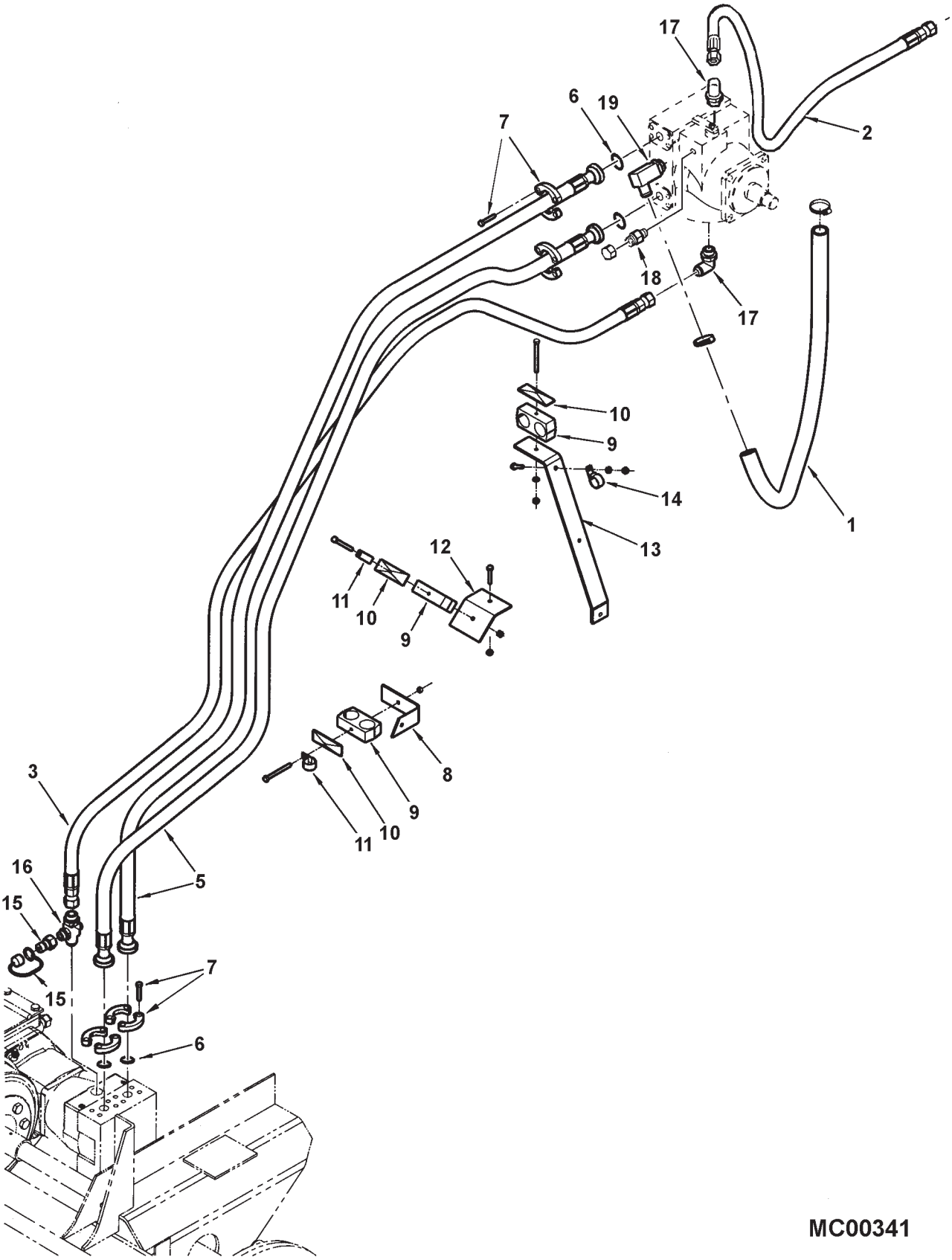

https://truckmanualshub.com/

PROPEL PUMP AND MOTOR LINES

ITEM	NUMBER	QTY	DESCRIPTION
1	71392196	1	HOSE, SUCTION 1-1/4
	70921912	2	CLAMP, HOSE 1.06 - 2.0 RANGE
2	71392199	1	HOSE ASY., PUMP CASE
3	71392197	1	HOSE ASY., MOTOR CASE
5	71391239	2	HOSE ASY., PUMP
6	70926533	4	O-RING, .139 X 1.296 ID, 90 DUR.
7	700701354	8	CLAMP HALF, SPLIT FLANGE, 1"
	70923027	16	CAPSCREW, 7/16-14 X 1-3/4
8	101844M1	1	BRACKET
9	101841M1	3	CLAMP PAIR, DOUBLE, 1-1/2 DIA
10	101842M1	3	COVER PLATE
	70925690	3	CAPSCREW 5/16 X 3-1/2
	70917356	3	LOCKWASHER 5/16
	70917372	3	NUT, HEX 5/16-18
11	293888M1	2	J-CLIP
12	101843M1	1	BRACKET
	70921333	1	CAPSCREW, 5/16-18 X 1
	70917356	1	LOCKWASHER, 5/16
	70917372	1	HEXNUT, 5/16-18
13	71391260	1	STRAP, HOSE SUPPORT
14	70929748	1	CLAMP, 1.25 TUBE X .406 HOLE
	703249	1	CAPSCREW, 3/8-16 X 1.0
	705038	1	LOCKWASHER, 3/8
	70916950	1	HEXNUT, 3/8-16
15	71377941	1	COUPLER, MALE
	1905376M1	1	CAP, DUST
16	71391657	1	FITTING, CROSS, CASE DRAIN
	70921205	1	O-RING, .097 X .755 ID
	70921206	1	O-RING, .116 X .924 ID
17	70921203	2	ELBOW, 90DEG, 1-1/16 JIC X 1-1/16-12 ORB
	70921206	2	O-RING, .116 X .924 ID
18	70926292	1	CONNECTOR,STR, 7/16-20 JIC X 9/16-18 ORB
	70921885	1	O-RING, .078 X .468 ID
	700715848	1	CAP, 7/16-20 JIC
19	71391653	1	ELB,90 DEG,SPL. 1-5/8-12 ORB X 1-1/4 STM
	70921235	1	O-RING, .118 X 1.475 ID

MC00341
PR: 382

https://truckmanualshub.com/

GREASE LINES

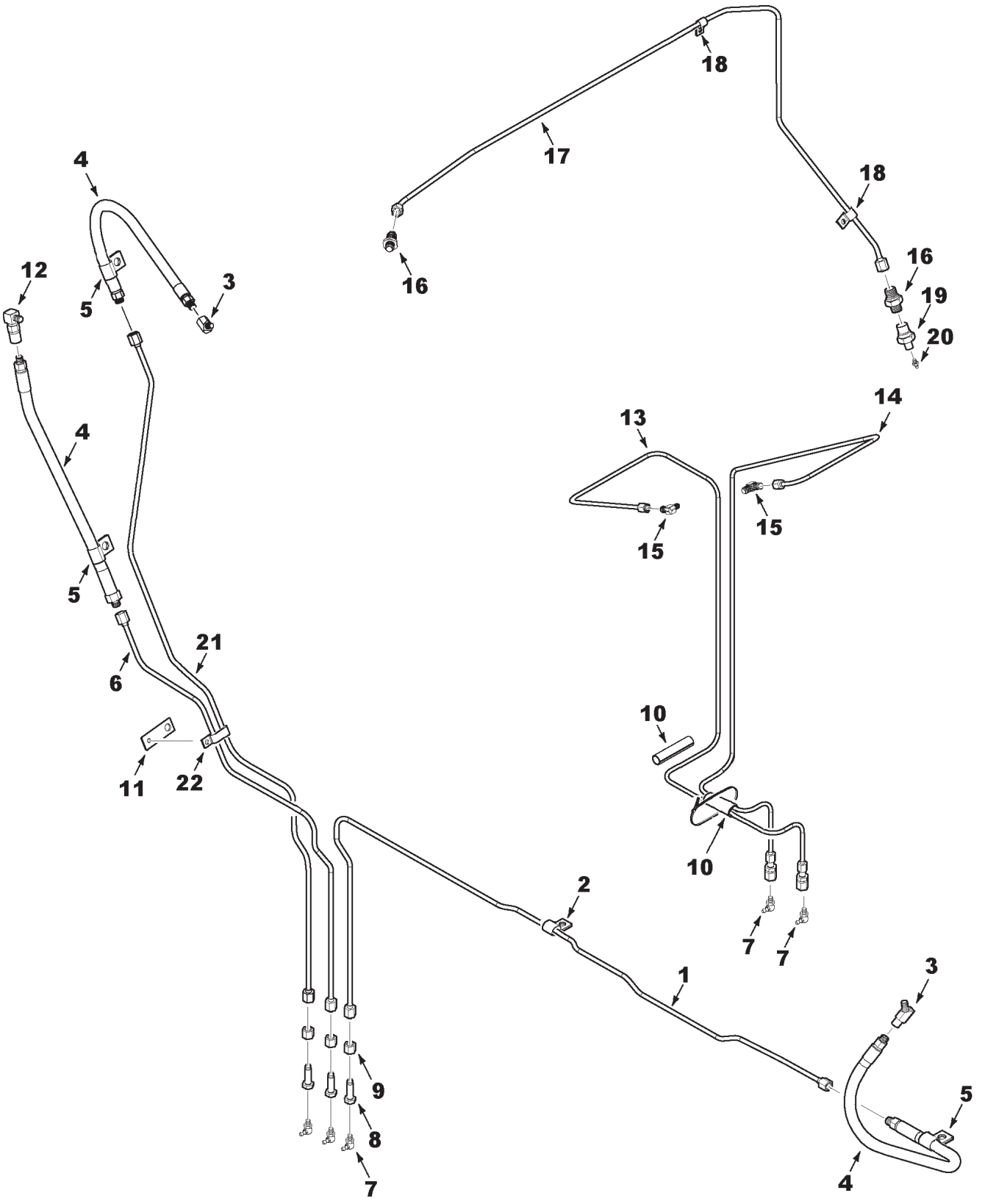

MC00340

https://truckmanualshub.com/

ITEM	NUMBER	QTY	DESCRIPTION
1	71390866	1	TUBE ASY, ROTOR DRIVE IDLER
2	70928654	1	CLAMP, 1/4 TUBE X .406 HOLE
3	70920655	2	ELBOW, 45 DEG, 1/8 NPTF M X 1/8 NTPF FEM
4	71390863	3	HOSE ASY, LUBE
5	70928656	3	CLAMP, 5/8 TUBE X .406 HOLE
	70921965	2	CAPSCREW, 3/8-16 X 3/4
	Y704734	2	NUT, HEX FLNG TOP LOCK, 3/8-16
6	71392766	1	TUBE ASY, C'SHAFT DRIVE IDLER
7	70915276	5	LUBE FITTING, 90 DEG, 1/8 NPTF
8	940134W1	5	BLKHD CONN, 7/16-20 JIC M X 1/8 NPT FEM
9	356612X1	5	NUT, LARGE HEX, 7/16-20
10	2556880W1	2	BOOT, TUBE PROTECTOR
	3619622M1	2	TIE, SELF LOCKING .184 X 14.19
11	71390867	1	SUPPORT, TUBE CLAMP
12	70923690	1	ELBOW, 90 DEG. 1/8-27 NPTF MALE X FEM.
13	71386353	1	TUBE ASY, BEATER IDLER
14	71398337	1	TUBE ASY, UNLOADER IDLER
15	70919173	2	ELBOW, 90 DEG, 1/8-27 NPTF X 7/16-20 JIC
16	70919171	2	STR CONN, 1/8-27 NPTF X 7/16-20 JIC
17	71389766	1	TUBE ASY, FRONT ROTOR(PRIOR S/N HP36101)
	71400653	1	TUBE ASY, FRONT ROTOR (EFF. S/N HP36101)
18	70926919	3	CLAMP, 1/4 TUBE X .281 HOLE (PRIOR S/N HP36101)
	7703457	3	CAPSCREW, 1/4-20 X 3/4
	704007	3	NUT, 1/4-20
	705012	3	LOCKWASHER, 1/4
	70928654	1	CLAMP, 1/4 TUBE X .406 HOLE (EFF. S/N HP36101)
	70921210	1	CAPSCREW, 3/8-16 X 1 GR5
	70917378	2	WASHER, 3/8 WIDE
	705038	1	LOCKWASHER, 3/8
	70916950	1	NUT, 3/8-16 REG
19	70922862	1	COUPLING, FEM, 1/8-27 NPTF
20	70914465	1	LUBE FITTING, 1/8-27 NPT, SPL XTRA SHORT
21	71392767	1	TUBE ASY, GROUND DRIVE IDLER
22	70930999	1	CLAMP, DOUBLE, 1/4 TUBE X .281 HOLE
	7703457	1	CAPSCREW, 1/4-20 X 3/4
	704007	1	NUT, 1/4-20 REG
	705012	1	LOCKWASHER, 1/4

MC00340
PR: 384

https://truckmanualshub.com/

PROPEL PUMP
COMPONENTS, 1 OF 4

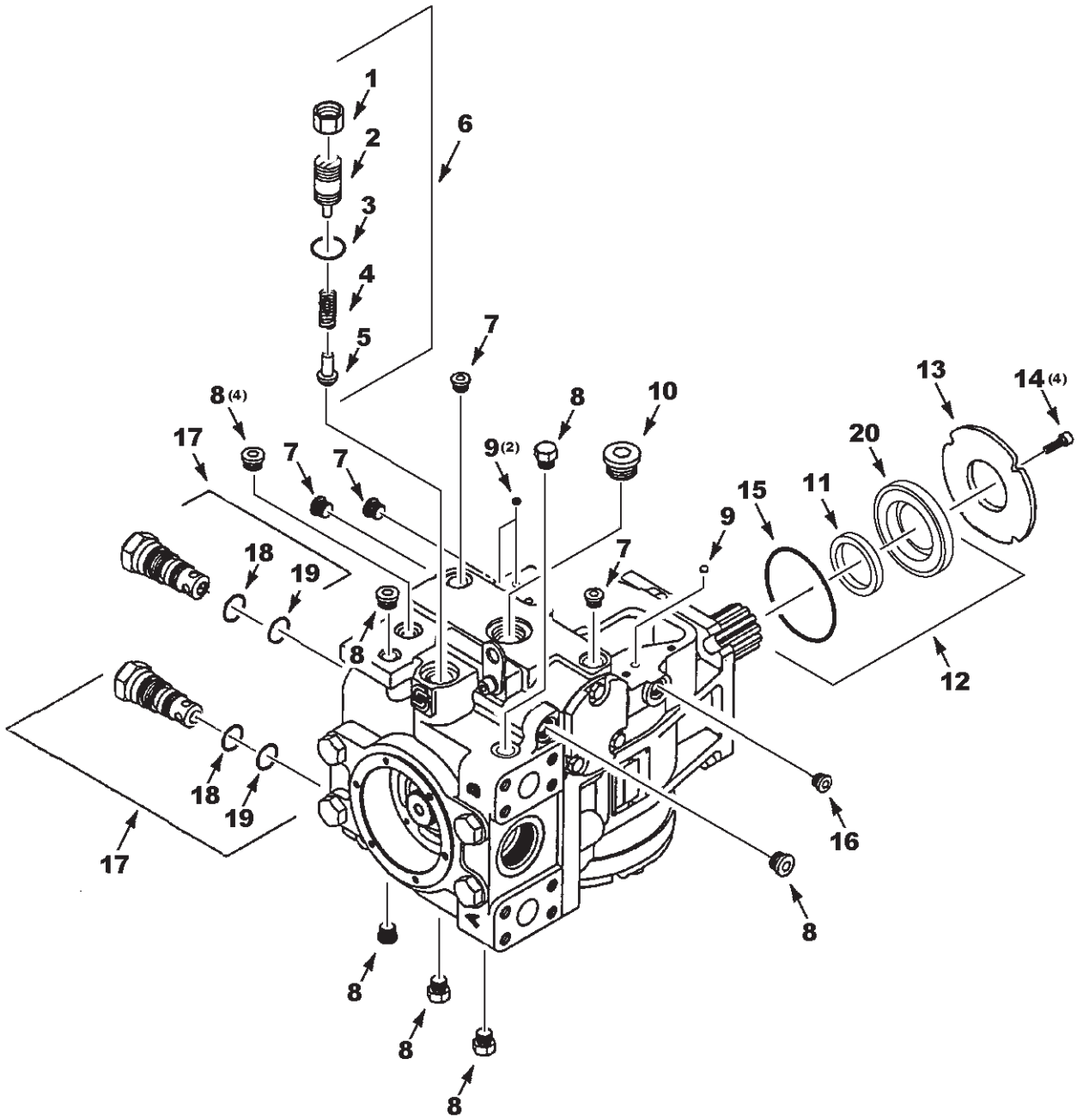

MC00311

https://truckmanualshub.com/

PROPEL PUMP
COMPONENTS, 1 OF 4

ITEM	NUMBER	QTY	DESCRIPTION
-	71388873	1	PROPEL PUMP (100CC DISPL.)
1	1077651M1	1	NUT
2	1077631M91	1	PLUG, CHARGE RELIEF VALVE
3	70928486	1	*O-RING
4	71374859	1	SPRING
5	71374836	1	POPPET, CHARGE RELIEF
6	71374918	1	KIT, CHARGE RELIEF VALVE
7	700725864	4	PLUG
8	71374831	7	PLUG
9	71355339	3	SCREEN, CONTROL FILTER
10	1077605M1	1	PLUG
11	1077666M1	1	*LIP SEAL
12	71374967	1	SHAFT SEAL ASY
13	1081733M1	1	PLATE, RETAINING
14	71374840	4	SCREW, SOCKET HD, M6
15	942253	1	*O-RING
16	700702119	1	PLUG
17	71374868	2	KIT, MULTI-FUNCTION VALVE
18	70923808	2	*O-RING, .070 X .864 ID
19	70930897	2	*O-RING, .070 X .801 ID
20	----	1	CARRIER, SEAL (ORDER SEAL ASY. ITEM 12)
-	71374915	AR	PACKAGE, OVERHAUL SEAL (INCL. * ITEMS)

MC00311
PR: 386

https://truckmanualshub.com/

PROPEL PUMP
COMPONENTS, 2 OF 4

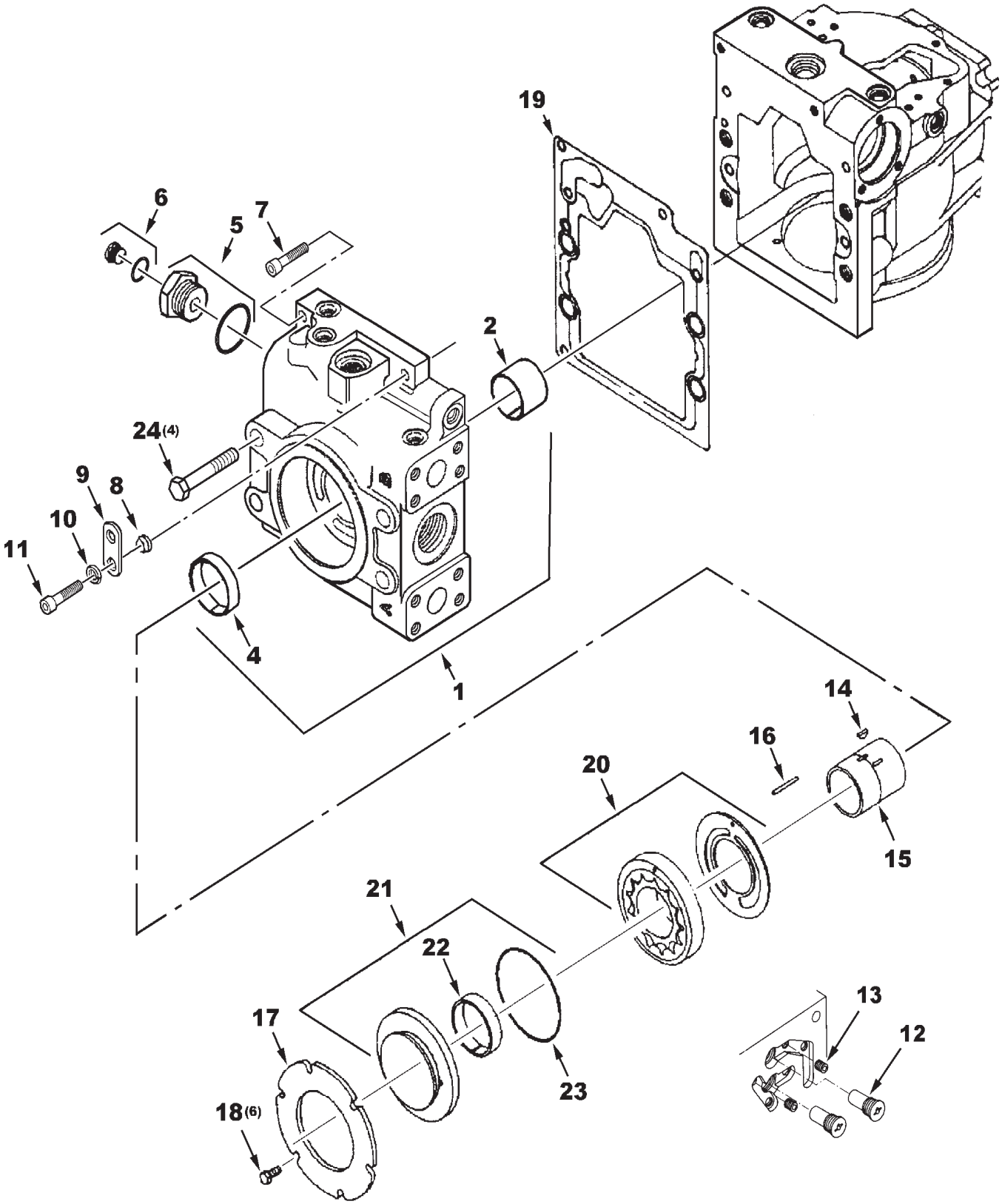

MC00313

https://truckmanualshub.com/

PROPEL PUMP
COMPONENTS, 2 OF 4

ITEM	NUMBER	QTY	DESCRIPTION
1	71374963	1	END CAP ASSEMBLY, TWIN PORTS
2	71374834	1	JOURNAL BEARING
4	71374894	1	BUSHING
5	1081706M1	1	REDUCER
	70921214	1	O-RING
6	71374831	1	PLUG
	70921885	1	O-RING
7	71374900	1	SCREW
8	71374895	1	LIFTING BRACKET SPACER
9	71374896	1	LIFTING BRACKET
10	71374897	1	WASHER
11	71374900	1	SCREW
12	71374870	2	CHECK VALVE
13	1077684M1	2	PLUG
14	1077656M1	1	KEY
15	71396136	1	CHARGE PUMP SHAFT
16	1077654M1	1	PIN
17	71374853	1	RETAINING PLATE
18	1077658M1	6	SCREW
19	71374898	1	END CAP GASKET
20	71396134	1	CHARGE PUMP SET
21	71374855	1	CHARGE PUMP COVER ASSEMBLY
22	71374894	1	BUSHING
23	1077661M1	1	O-RING
24	71374857	4	SCREW

MC00313
PR: 388

https://truckmanualshub.com/

PROPEL PUMP
COMPONENTS, 3 OF 4

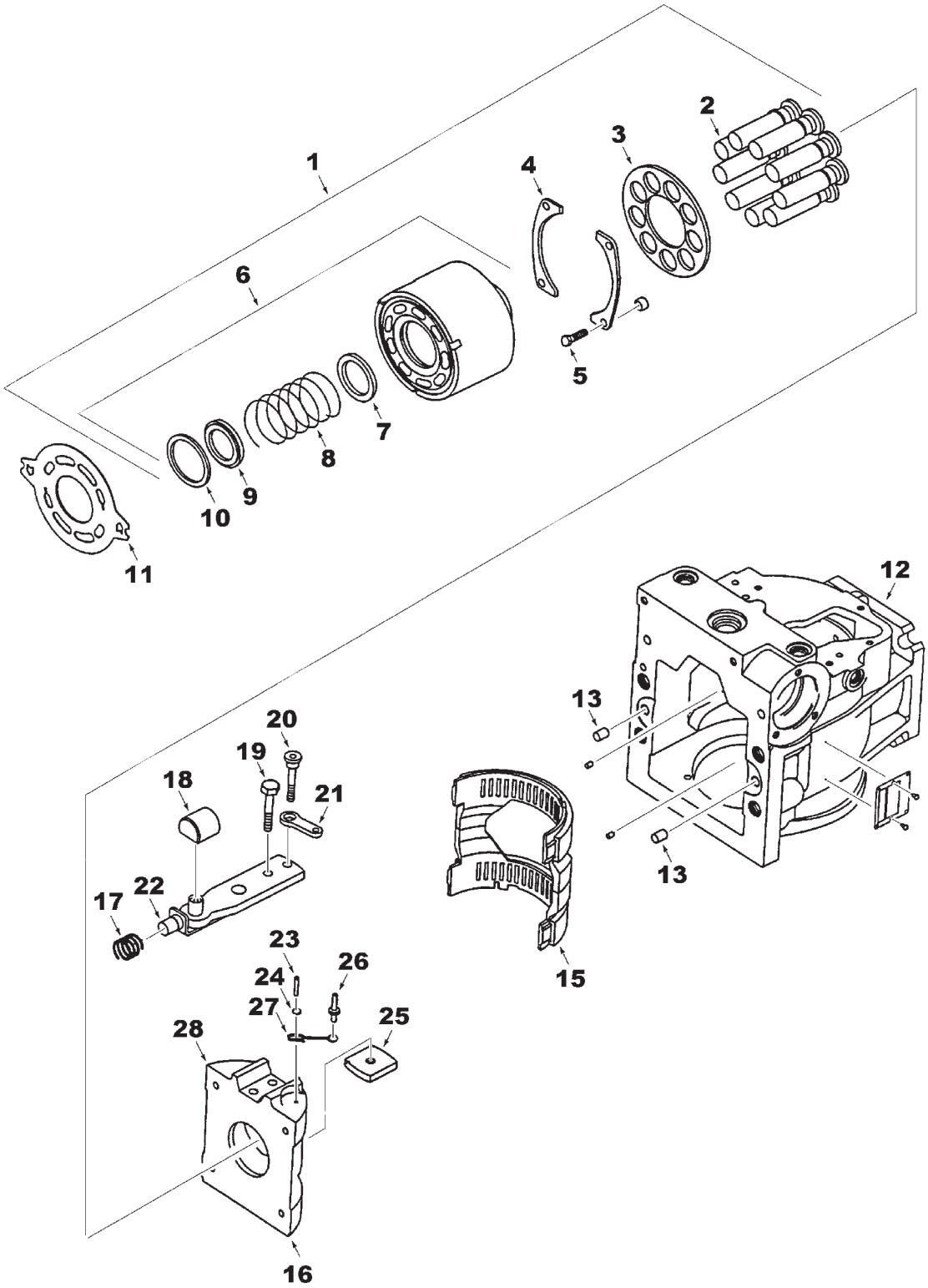

MC00314

https://truckmanualshub.com/

PROPEL PUMP
COMPONENTS, 3 OF 4

ITEM	NUMBER	QTY	DESCRIPTION
1	71396140	1	KIT, CYLINDER BLOCK
2	71374846	9	PISTON ASY., WELDED
3	71374847	1	GUIDE, SLIPPER
4	71374904	2	BEARING, SLIPPER GUIDE
5	71396142	4	*SCREW
	71396141	4	SPACER
6	71374842	1	CYLINDER BLOCK ASY.
7	71374843	1	SEAT, SPRING
8	71374844	1	SPRING
9	71374845	1	RETAINER, SPRING
10	1077611M1	1	RING, RETAINING
11	71396126	1	PLATE, VALVE
12	71374958	1	HOUSING, VARIABLE
13	700702137	2	PIN
15	71374872	1	BEARING
16	71374876	1	VARIABLE, SWASHPLATE ASY. (INCL. ITEMS 19-25)
17	71374886	1	SPRING
18	1077635M2	1	BLOCK, SLIDER
19	71374880	1	SCREW
20	71374882	1	SCREW
21	71396127	1	LINK, FEEDBACK
22	71374877	1	SERVO ARM ASY.
23	71374884	1	PIN, SPIRAL
24	71374883	1	WASHER
25	71374881	1	GUIDE, SWASHPLATE
26	71396128	1	PIN
27	71374875	1	LINK, CAGE LOCATOR
28	71374879	1	SWASHPLATE, VARIABLE
--	71374915	AR	PACKAGE, OVERHAUL SEAL (INCL. * ITEMS)

MC00314
PR: 390

https://truckmanualshub.com/

PROPEL PUMP
COMPONENTS, 4 OF 4

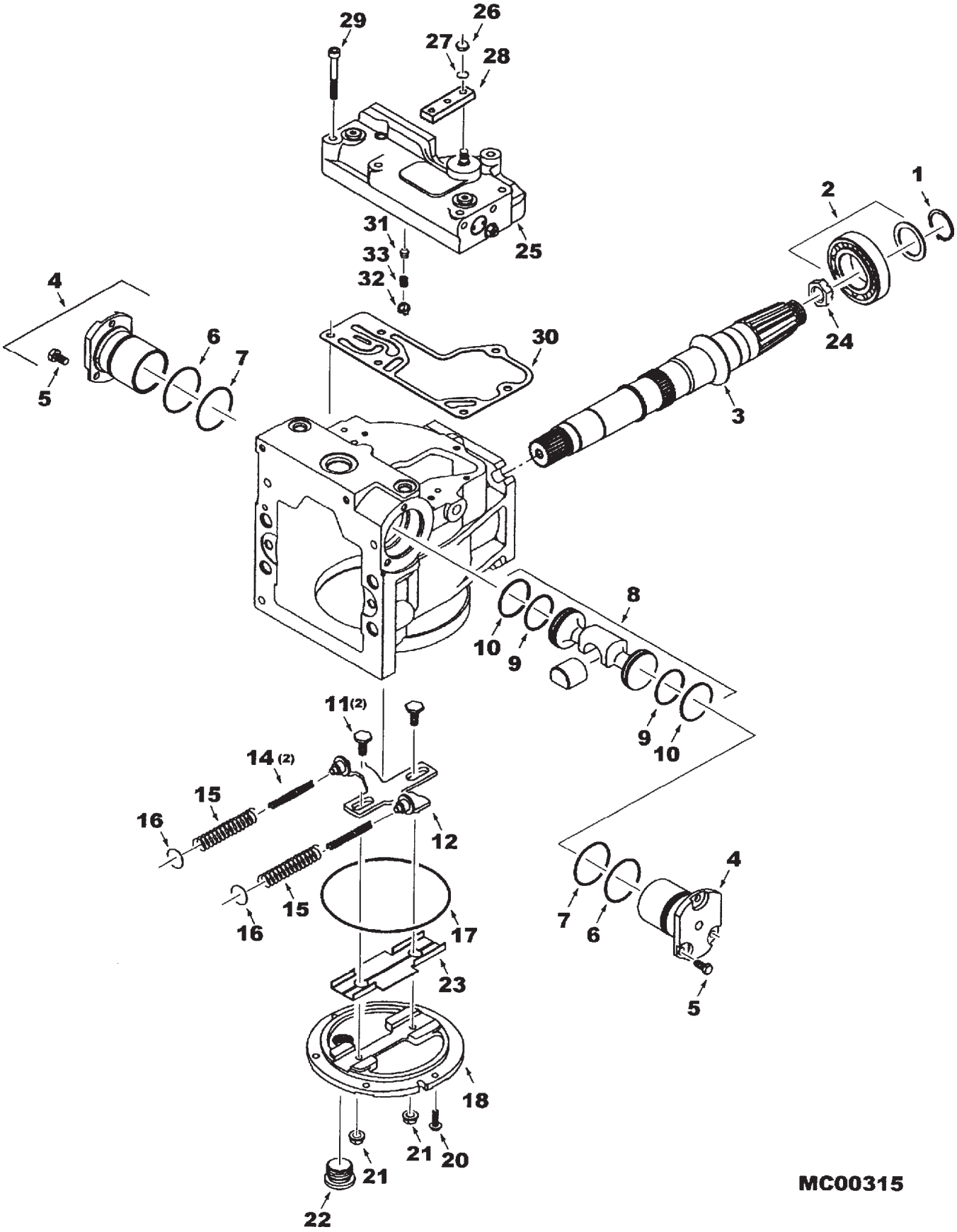

https://truckmanualshub.com/

PROPEL PUMP
COMPONENTS, 4 OF 4

ITEM	NUMBER	QTY	DESCRIPTION
1	1077664M1	1	RING, RETAINING
2	71396137	1	BEARING, ROLLER
3	71374860	1	SHAFT, TAPERED SPLINE
4	71374901	2	SERVO CYLINDER KIT (INCL. ITEMS 5-7)
5	1077638M1	6	SCREW
6	70931589	2	*O-RING
7	1077637M1	2	*O-RING
8	71396133	1	SERVO PISTON KIT
9	70923865	2	*O-RING
10	71358545	2	*RING, PISTON
11	71396131	2	POST, GUIDE
12	71396129	1	LEVELER ASY.
14	71374892	2	SPRING
15	71374891	2	SPRING, COMPRESSION, HELICAL
16	71396130	2	SHIM
17	1077628M1	1	O-RING
18	71374960	1	COVER, SIDE (ALSO NEED TO ORDER 1 EA ITEM 23, 2 EA ITEM 11)
20	71374890	6	SCREW
21	1077627M1	2	*NUT
22	1077605M1	1	PLUG
23	71396132	1	SIDECOVER INSERT ASY
24	71356529	1	NUT, SLOTTED
	1081731M1	1	PIN, COTTER
25	71396138	1	KIT, CONTROL VALVE (INCL. ITEMS 26-30)
26	71374867	1	NUT
27	71374866	1	WASHER, TOOTHLOCK
28	71374865	1	HANDLE, CONTROL
29	1077673M1	6	SCREW
30	1081699M1	1	*GASKET, CONTROL
31	71374907	1	KIT, ORIFICE, CONTROL (INCL ITEMS 32,33)
32	71374909	1	RETAINER, SPRING
33	71374908	1	SPRING
-	71374915	AR	PACKAGE, OVERHAUL SEAL (INCL. * ITEMS)

MC00315
PR: 392

https://truckmanualshub.com/

MOTOR, HYDRO PROPEL
COMPONENTS

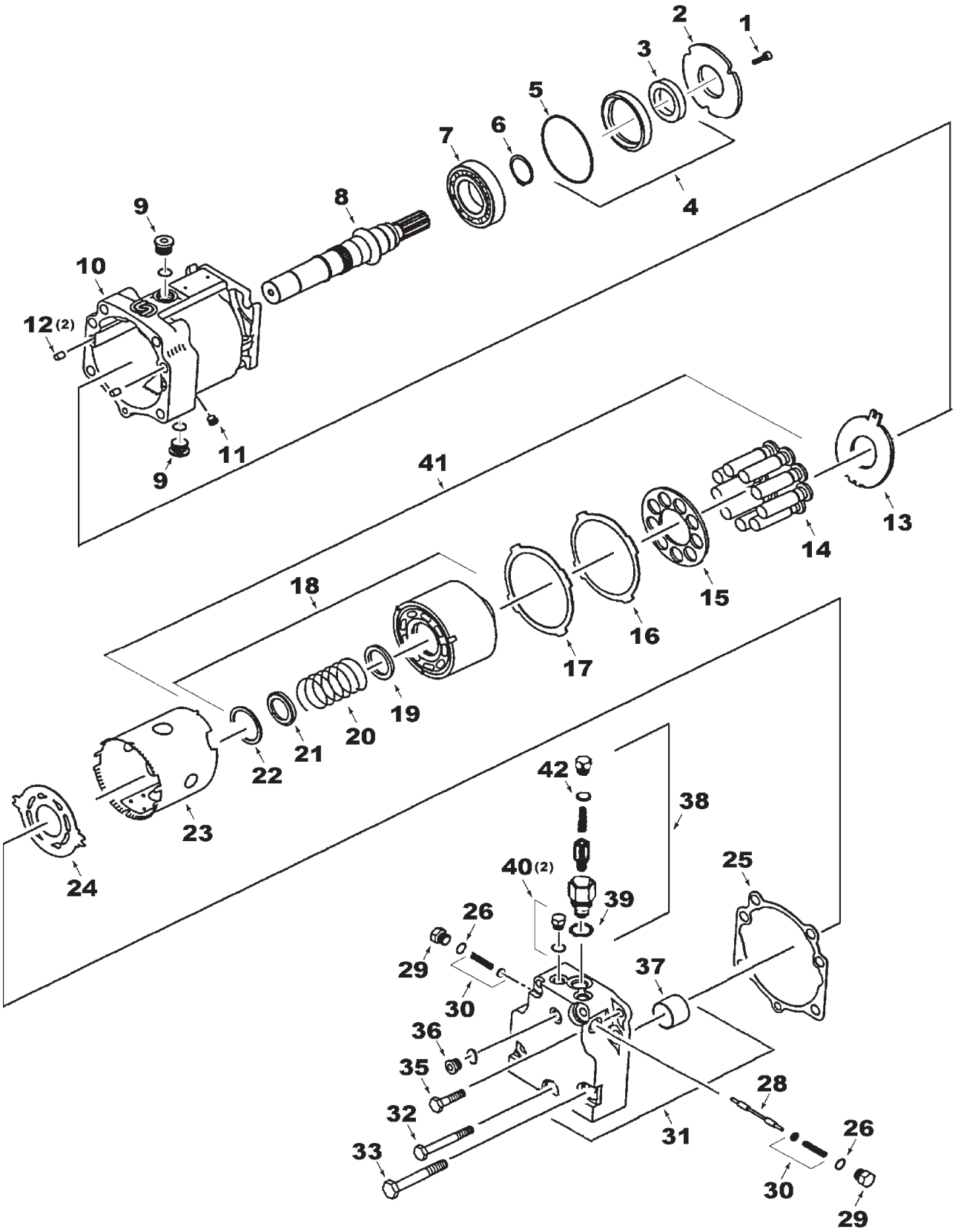

GC00377

https://truckmanualshub.com/

ITEM	NUMBER	QTY	DESCRIPTION
-	71392870	1	MOTOR, FIXED DISPL, 100cc
-	71374968	AR	OVERHAUL SEAL KIT (INCL ITEMS 3,5,25,39)
1	71374840	4	SCREW, SOCKET HEAD, M6 X 20
2	71397487	1	PLATE, RETAINER
3	1077666M1	1	SEAL
4	71374967	1	CARRIER & SEAL ASY.(INCL. ITEMS 3 & 5)
5	942253	1	O-RING
6	1077664M1	1	RING
7	71396137	1	BEARING, ROLLER
8	71397486	1	SHAFT, 23T
9	1077605M1	2	PLUG
	71397479	2	O-RING
10	71397478	1	HOUSING, FIXED
11	700725864	1	PLUG
	70928488	1	O-RING, .078 X .468 ID, VITON
12	71355340	2	PIN
13	71374970	1	PLATE, THRUST
14	71374846	9	PISTON, WELDED
15	71374847	1	RETAINER, SLIPPER
16	71374848	1	RETAINER, SLIPPER GUIDE
17	71374849	1	RETAINER, SLIPPER GUIDE SHIM
18	71374842	1	CYLINDER BLOCK ASY. (INCL ITEMS 19-22)
19	71374843	1	SEAT, SPRING
20	71374844	1	SPRING
21	71374845	1	RETAINER, SPRING
22	1077611M1	1	RING, RETAINING
23	71374827	1	TUBE, HOLDDOWN
24	71374828	1	PLATE, VALVE
25	71397481	1	GASKET, END CAP
26	70928488	2	O-RING
28	1077960M1	1	SPOOL, SHUTTLE
29	71397485	2	PLUG, SPECIAL
30	71397484	2	SPRING GUIDE ASY
31	71397480	1	END CAP ASY., TWIN PORTS
32	71397483	1	SCREW
33	1077695M1	4	SCREW
35	1077696M1	2	SCREW
36	700725864	1	PLUG
	71397482	1	O-RING
37	71374834	1	BEARING, JOURNAL
38	71396169	1	CARTRIDGE ASY, CHARGE RELIEF
39	70928486	1	O-RING
40	71374831	2	PLUG
	71397482	1	O-RING
41	71374841	1	KIT, ROTATING GROUP W/WELDED PISTON (INCL. ITEMS 14-18)
42	70928488	1	O-RING, .078 X .468 ID, VITON

GC00377
PR: 394

https://truckmanualshub.com/

ROTOR PUMPS
TANDEM PUMP

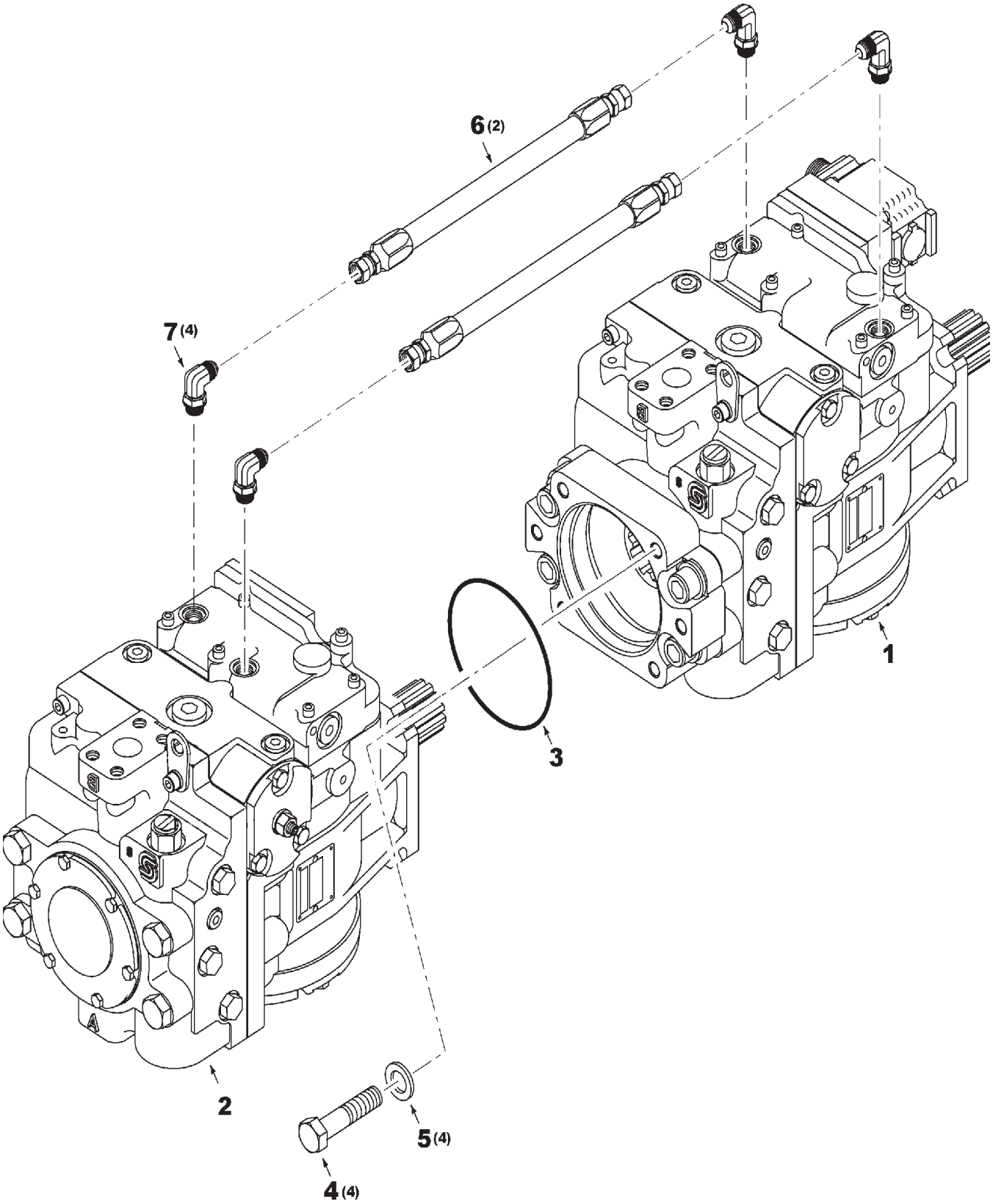

MC00318

https://truckmanualshub.com/

ITEM	NUMBER	QTY	DESCRIPTION
-	71388852	1	PUMP ASY., TANDEM
1	71386574	1	PUMP, FRONT ROTOR (100cc DISPL.)
2	71397490	1	PUMP, REAR ROTOR (55cc DISPL.)
3	1081727M1	1	O-RING
4	116281W1	4	SCREW
5	116282W1	4	WASHER
6	71396251	2	HOSE, PUMP
7	71395325	4	ELBOW

MC00318
PR: 396

https://truckmanualshub.com/

ROTOR PUMP
FRONT, 1 OF 4

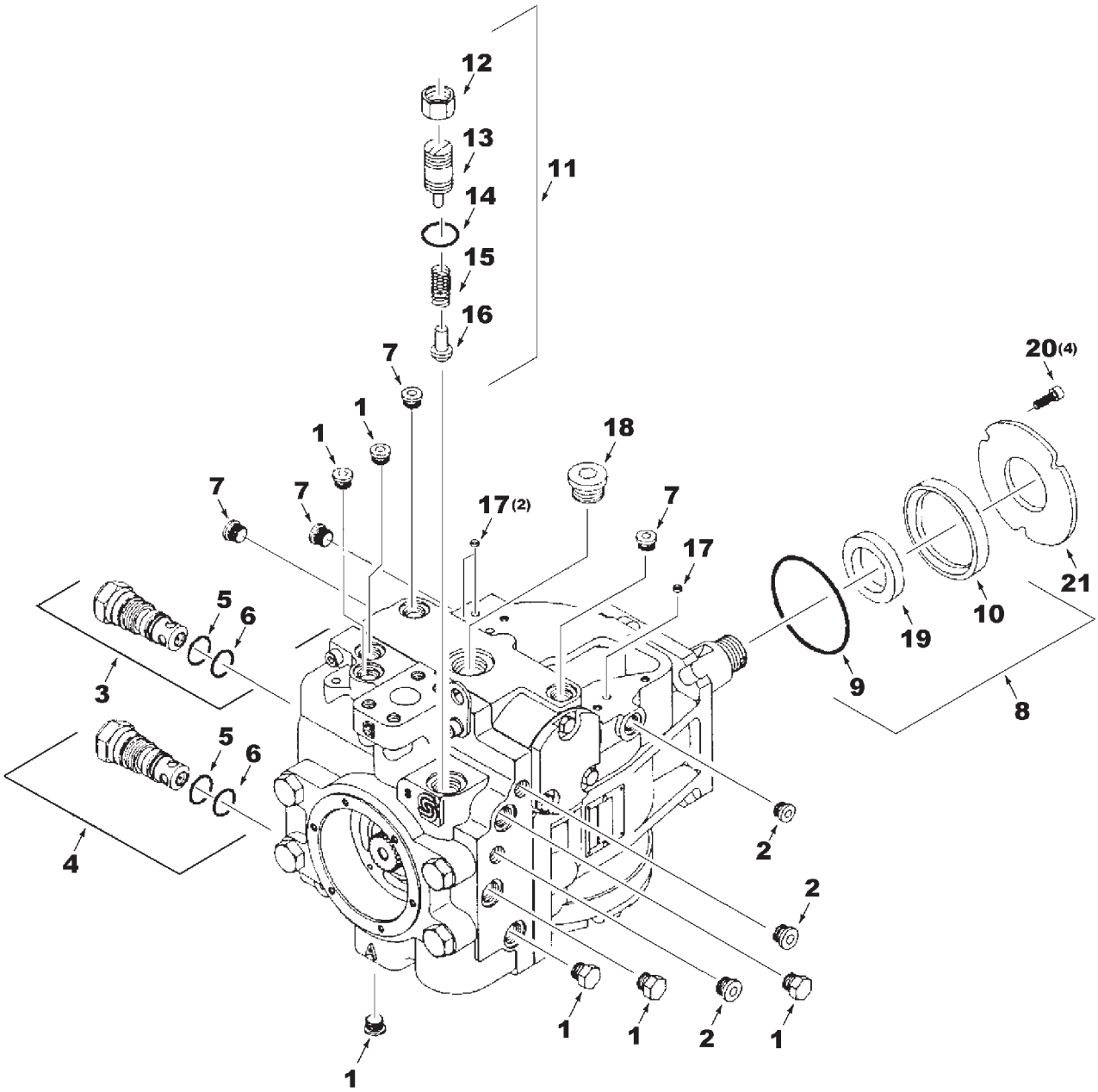

MC00057

https://truckmanualshub.com/

ROTOR PUMP
FRONT, 1 OF 4

ITEM	NUMBER	QTY	DESCRIPTION
-	71386574	-	PUMP, ROTOR (100CC DISPL.)
1	71374831	6	PLUG
2	70928605	3	PLUG
3	1081707M91	1	KIT, MULTI-FUNCTION VALVE
4	1081707M91	1	KIT, MULTI-FUNCTION VALVE
5	70923808	2	O-RING
6	70930897	2	O-RING
7	1077604M1	4	PLUG
8	71374967	1	SHAFT SEAL ASSEMBLY
9	942253	1	O-RING
10	-----	1	CARRIER, SEAL (ORDER SEAL ASY, IT.8)
11	71374918	1	KIT, CHARGE RELIEF VALVE (INCL IT.12-16)
12	1077651M1	1	NUT
13	1077631M91	1	CHARGE RELIEF VALVE PLUG
14	70928486	1	O-RING
15	71374859	1	SPRING
16	71374836	1	CHARGE RELIEF POPPET
17	71355339	3	CONTROL FILTER SCREEN
18	1077605M1	1	PLUG
19	1077666M1	1	LIP SEAL
20	71374840	4	SCREW, SOCKET HD, M6
21	1081733M1	1	PLATE, RETAINING
-	71374915	-	KIT, OVERHAUL, GASKET & SEAL

MC00057
PR: 398

https://truckmanualshub.com/

ROTOR PUMP
FRONT, 2 OF 4

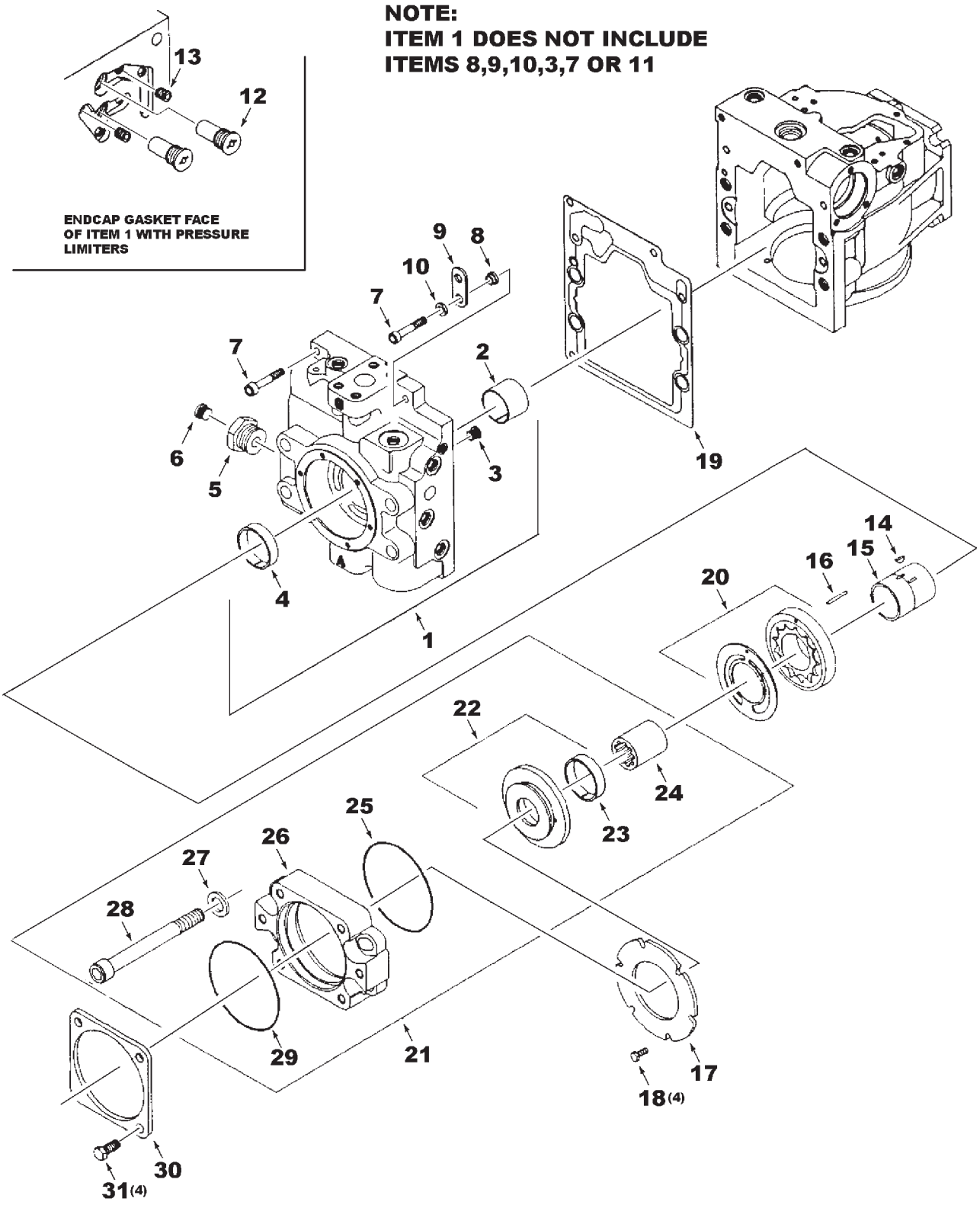

MC00058

https://truckmanualshub.com/

ROTOR PUMP
FRONT, 2 OF 4

ITEM	NUMBER	QTY	DESCRIPTION
1	1077639M92	1	END CAP ASY, SIDE PORTS (INCL. ITEMS 2,4,5,6)
2	71374834	1	JOURNAL BEARING
3	70928605	1	PLUG ASY
4	71374894	1	BUSHING
5	1081706M1	1	PLUG ASY
	71396139	1	O-RING
6	1077604M1	1	PLUG ASY
	70928488	1	O-RING
7	71374900	2	SCREW
8	71374895	1	LIFTING BRACKET SPACER
9	71374896	1	LIFTING BRACKET
10	71374897	1	WASHER
12	71374870	2	CHECK VALVE
13	1077684M1	2	PLUG, PIPE
14	1077656M1	1	KEY
15	71396136	1	SHAFT, CHARGE PUMP
16	1077654M1	1	PIN
17	71374853	1	RETAINING PLATE
18	1077658M1	6	SCREW
19	71374898	1	END CAP GASKET
20	1081720M91	1	CHARGE PUMP SET
21	1081721M1	1	AUX. MOUNTING FLANGE, 'C' 14T
22	1081723M1	1	CHARGE PUMP COVER ASSEMBLY, LH
23	71374894	1	BUSHING
24	71396252	1	COUPLING
25	70926762	1	O-RING
26	1081724M1	1	FLANGE ADAPTOR
27	1081725M1	4	WASHER
28	1081726	4	SOCKET HEAD SCREW
29	1081727M1	1	O-RING
30	1081728M1	1	FLANGE COVER
31	1081729M1	4	SCREW

MC00058
PR: 400

https://truckmanualshub.com/

ROTOR PUMP
FRONT, 3 OF 4

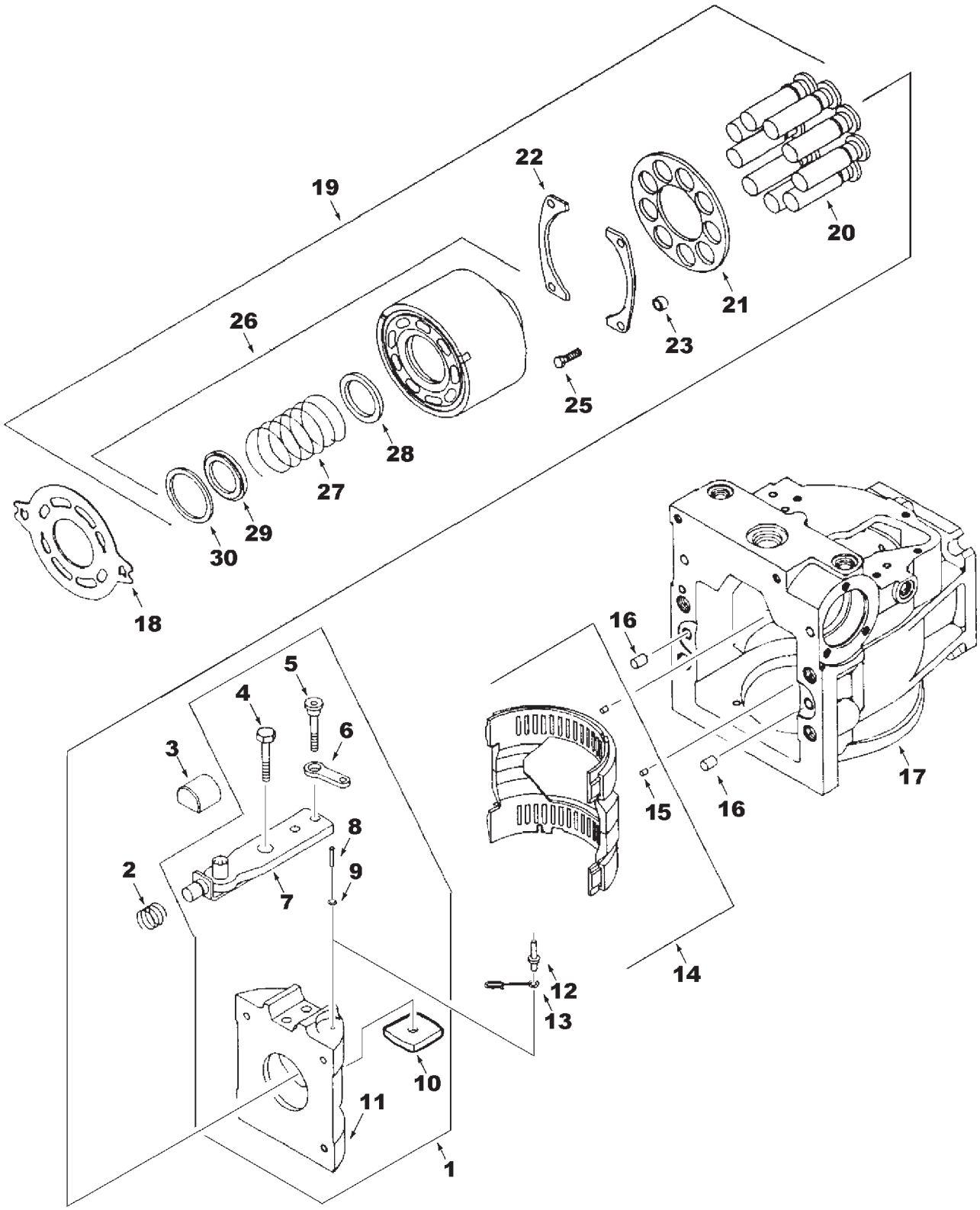

MC00055

https://truckmanualshub.com/

ROTOR PUMP
FRONT, 3 OF 4

ITEM	NUMBER	QTY	DESCRIPTION
1	71374876	1	VARIABLE SWASHPLATE ASY (INCL. ITEMS 4 - 11 INCLUSIVE)
2	71374886	1	SPRING
3	1077635M2	1	SLIDER BLOCK
4	71374880	1	SCREW
5	71374882	1	SCREW
6	71396127	1	FEEDBACK LINK
7	71374877	1	SERVO ARM ASY
8	71374884	1	SPIRAL PIN
9	71374883	1	WASHER
10	71374881	1	SWASHPLATE GUIDE
11	71374879	1	VARIABLE SWASHPLATE
12	71396128	1	PIN
13	71374875	1	CAGE LOCATOR LINK
14	71374872	1	BEARING ASY
15	1077602M1	2	PIN
16	71355340	2	PIN
17	71374958	1	VARIABLE HOUSING
18	71374959	1	VALVE PLATE, 0.5 DEG.
19	71396140	1	CYLINDER BLOCK KIT
20	71374846	9	WELDED PISTON ASY
21	71374847	1	SLIPPER GUIDE
22	71374904	2	SLIPPER GUIDE BEARING
23	71396141	4	SPACER
25	71396142	4	SCREW
26	71374842	1	CYLINDER BLOCK ASY
27	71374844	1	SPRING
28	71374843	1	SPRING SEAT
29	71374845	1	SPRING RETAINER
30	1077611M1	1	RETAINING RING

MC00055
PR: 402

https://truckmanualshub.com/

ROTOR PUMP
FRONT, 4 OF 4

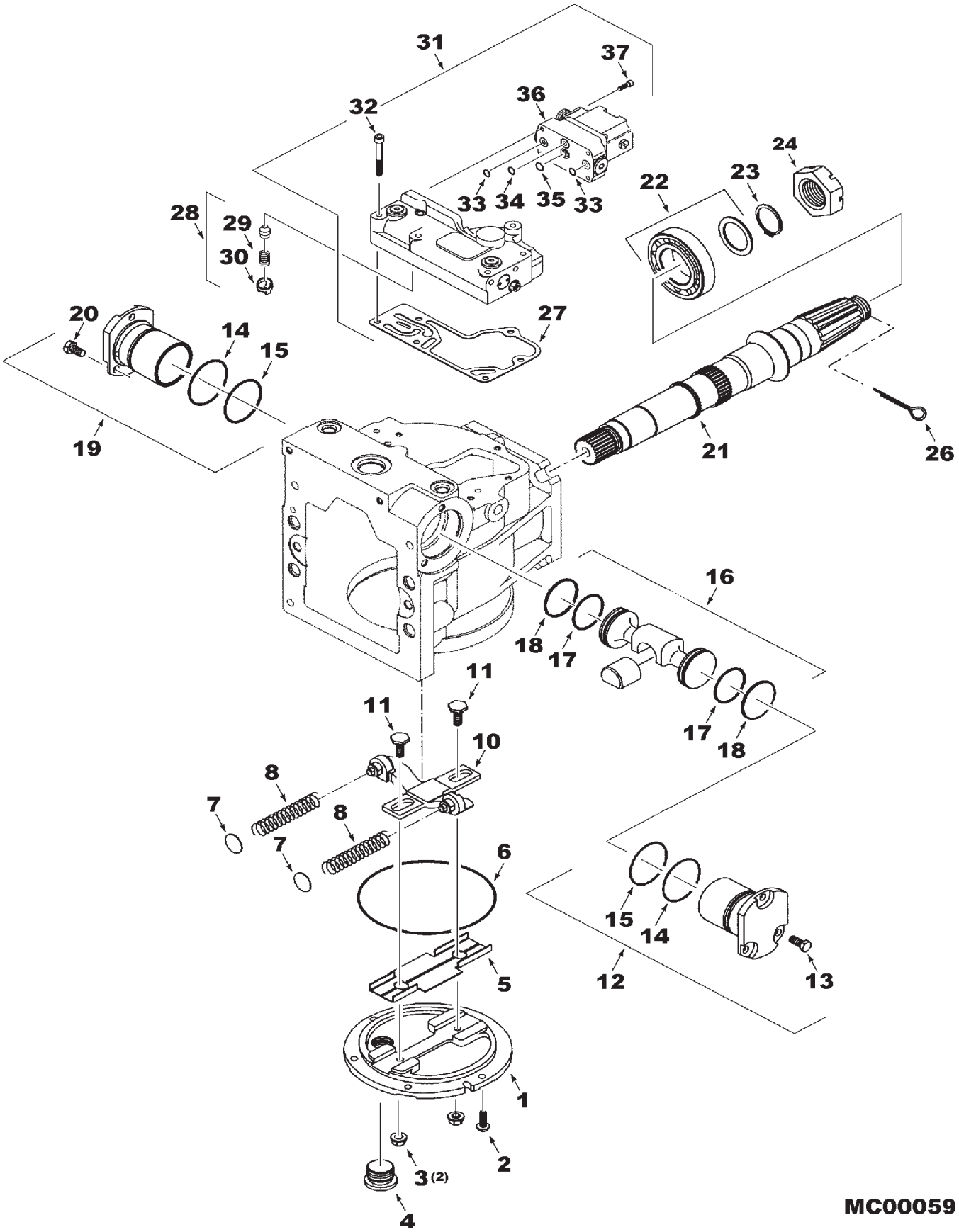

https://truckmanualshub.com/

ROTOR PUMP
FRONT, 4 OF 4

ITEM	NUMBER	QTY	DESCRIPTION
1	71374960	1	SIDE COVER
2	71374890	6	SCREW
3	1077627M1	2	NUT
4	1077605M1	1	PLUG
5	71396132	1	INSERT ASY, SIDE COVER
6	1077628M1	1	O-RING
7	71396130	2	SHIM
8	71374891	2	HELICAL COMPRESSION SPRING
10	71396129	1	LEVELER ASSEMBLY
11	71396131	2	GUIDE POST
12	71374901	1	SERVO CYLINDER KIT
13	1077638M1	3	SCREW
14	70931589	2	O-RING
15	1077637M1	2	O-RING
16	71396133	1	SERVO PISTON KIT
17	70923865	2	O-RING
18	71358545	2	PISTON RING
19	71374901	1	SERVO CYLINDER KIT
20	1077638M1	3	SCREW
21	71374860	1	SHAFT, TAPERED SPLINE
22	71396137	1	ROLLER BEARING
23	1077664M1	1	RETAINING RING
24	71356529	1	SLOTTED HEX NUT
26	1081731M1	1	COTTER PIN
27	1081699M1	1	GASKET, CONTROL
28	837853M91	1	CONTROL ORIFICE KIT .026
29	71374908	1	SPRING
30	71374909	1	SPRING RETAINER
31	1081734M91	1	EDC
32	1077673M1	6	SCREW
33	1077675M1	2	O-RING
34	71396254	1	O-RING
35	71396255	1	O-RING
36	71396253	1	PCP (INCL. ITEMS 33,34,35)
37	1077678M1	4	SCREW

MC00059
PR: 404

https://truckmanualshub.com/

ROTOR PUMP
REAR, 1 OF 4

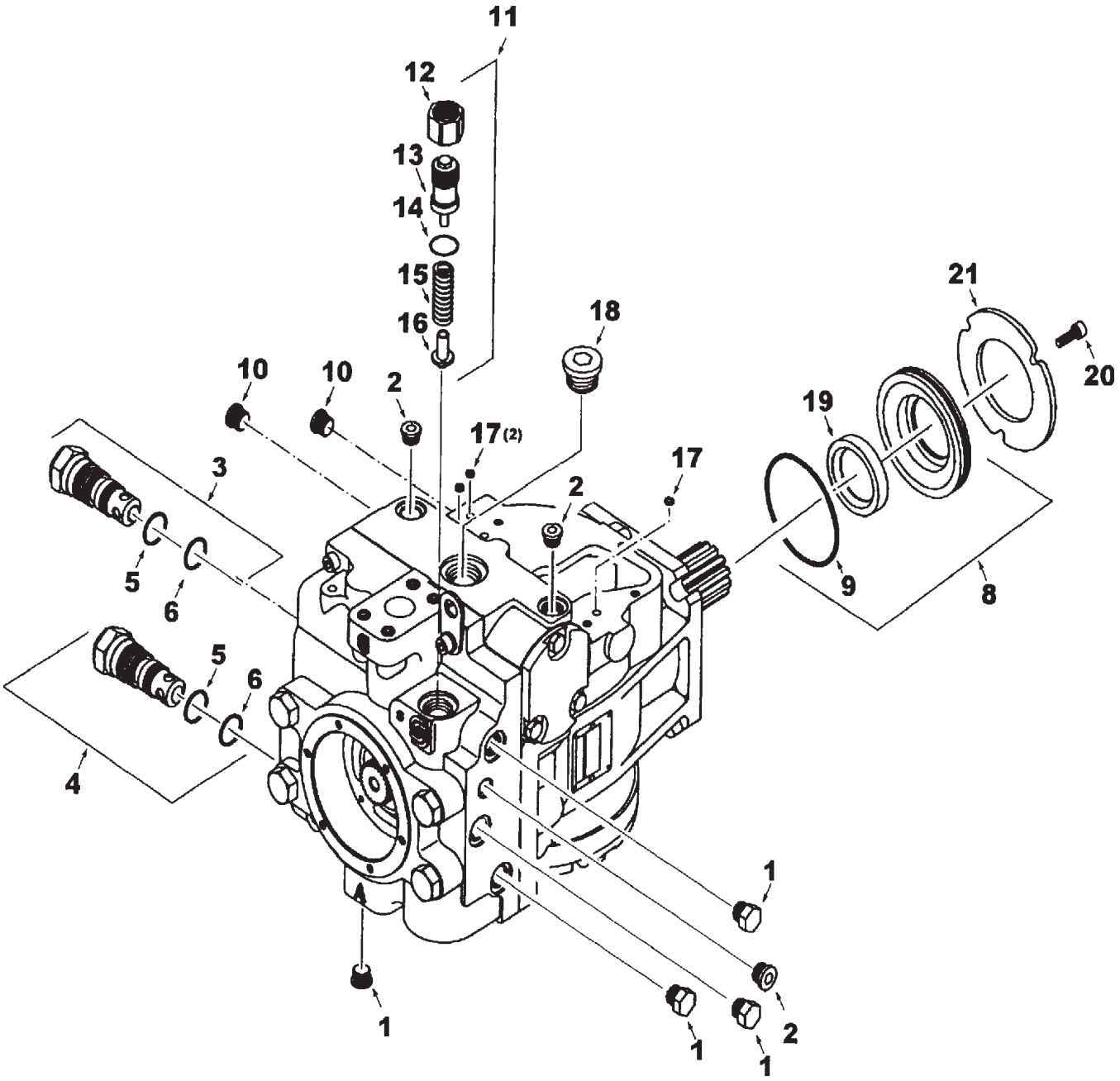

MC00327

https://truckmanualshub.com/

ROTOR PUMP
REAR, 1 OF 4

ITEM	NUMBER	QTY	DESCRIPTION
-	71397490	-	PUMP, ROTOR (55CC DISPL.)
-	71396225	-	KIT, OVERHAUL, GASKET & SEAL
1	71374831	4	PLUG
2	70928605	3	PLUG
3	1081707M91	1	MULTI-FUNCTION VALVE KIT
4	1081707M91	1	MULTI-FUNCTION VALVE KIT
5	70923808	2	O-RING
6	70930897	2	O-RING
8	71396209	1	SHAFT SEAL ASSEMBLY
9	71396211	1	O-RING
10	1077604M1	2	PLUG
11	71374918	1	CHARGE RELIEF VALVE KIT
12	1077651M1	1	NUT
13	1077631M91	1	CHARGE RELIEF VALVE PLUG
14	70928486	1	O-RING
15	71374859	1	SPRING
16	71374886	1	POPPET, CHARGE RELIEF
17	71355339	3	FILTER SCREEN, CONTROL
18	1077605M1	1	PLUG
19	71396210	1	LIP SEAL
20	71374840	3	METRIC SCREW
21	71396212	1	RETAINING PLATE

MC00327
PR: 406

https://truckmanualshub.com/

ROTOR PUMP
REAR, 2 OF 4

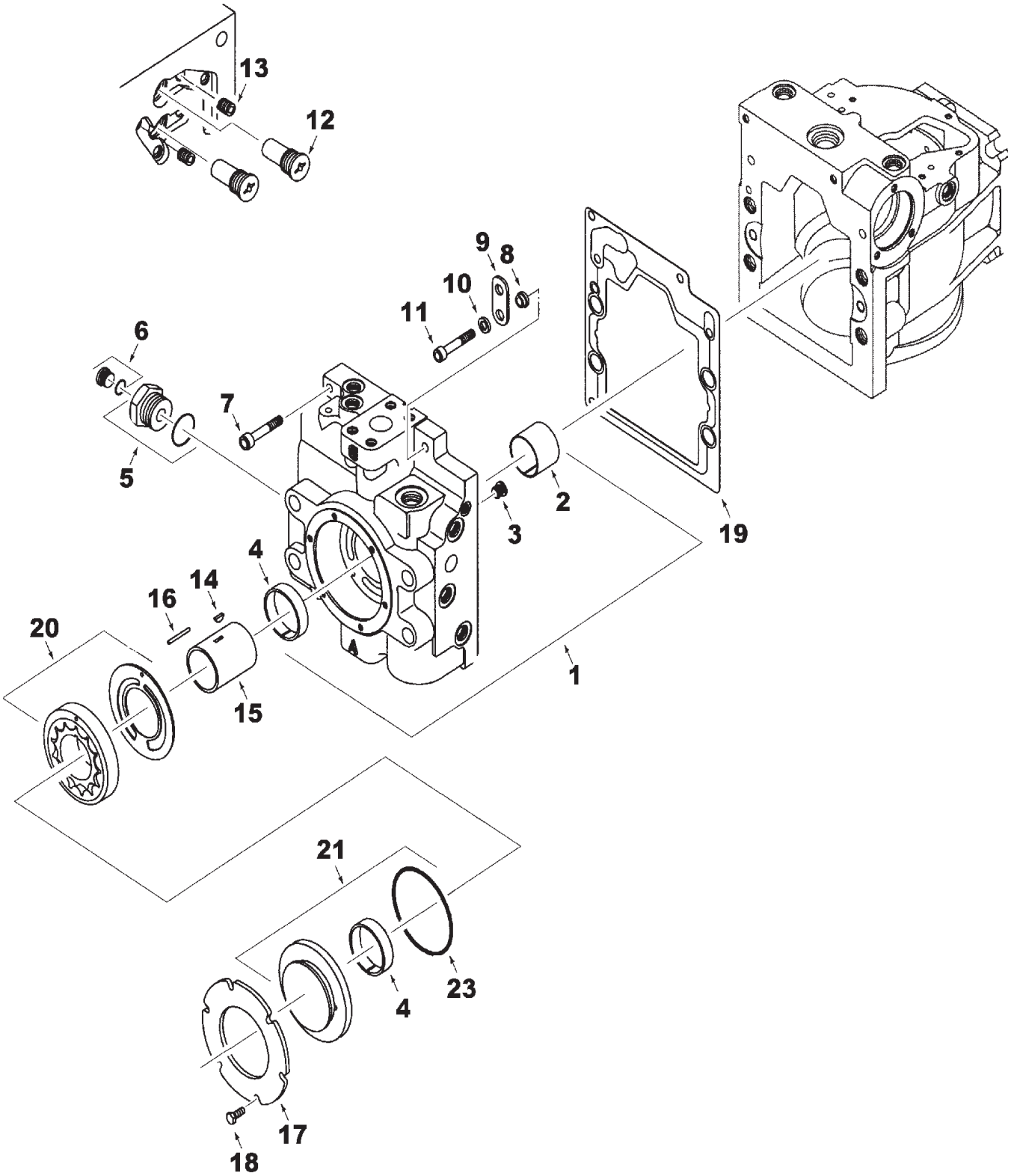

MC00328

https://truckmanualshub.com/

ROTOR PUMP
REAR, 2 OF 4

ITEM	NUMBER	QTY	DESCRIPTION
1	71396198	1	END CAP ASSEMBLY, SIDE PORTS (INCL. ITEMS 2 & 4)
2	71396199	1	JOURNAL BEARING
3	70928605	1	PLUG
4	71374894	2	BUSHING
5	1081706M1	1	REDUCER
	71396139	1	O-RING
6	1077604M1	1	PLUG
	70921885	1	O-RING
7	71396201	1	SCREW
8	71374895	1	LIFTING BRACKET SPACER
9	71374896	1	LIFTING BRACKET
10	71374897	1	WASHER
11	71374900	1	SCREW
12	71374870	2	CHECK VALVE
13	1077684M1	2	PLUG
14	71396205	1	KEY
15	71396204	1	CHARGE PUMP SHAFT
16	71396203	1	PIN
17	71374853	1	RETAINING PLATE
18	1077658M1	6	SCREW
19	71396200	1	END CAP GASKET
20	71396202	1	CHARGE PUMP SET
21	71374855	1	CHARGE PUMP COVER ASSEMBLY
23	1077661M1	1	O-RING

MC00328
PR: 408

https://truckmanualshub.com/

ROTOR PUMP
REAR, 3 OF 4

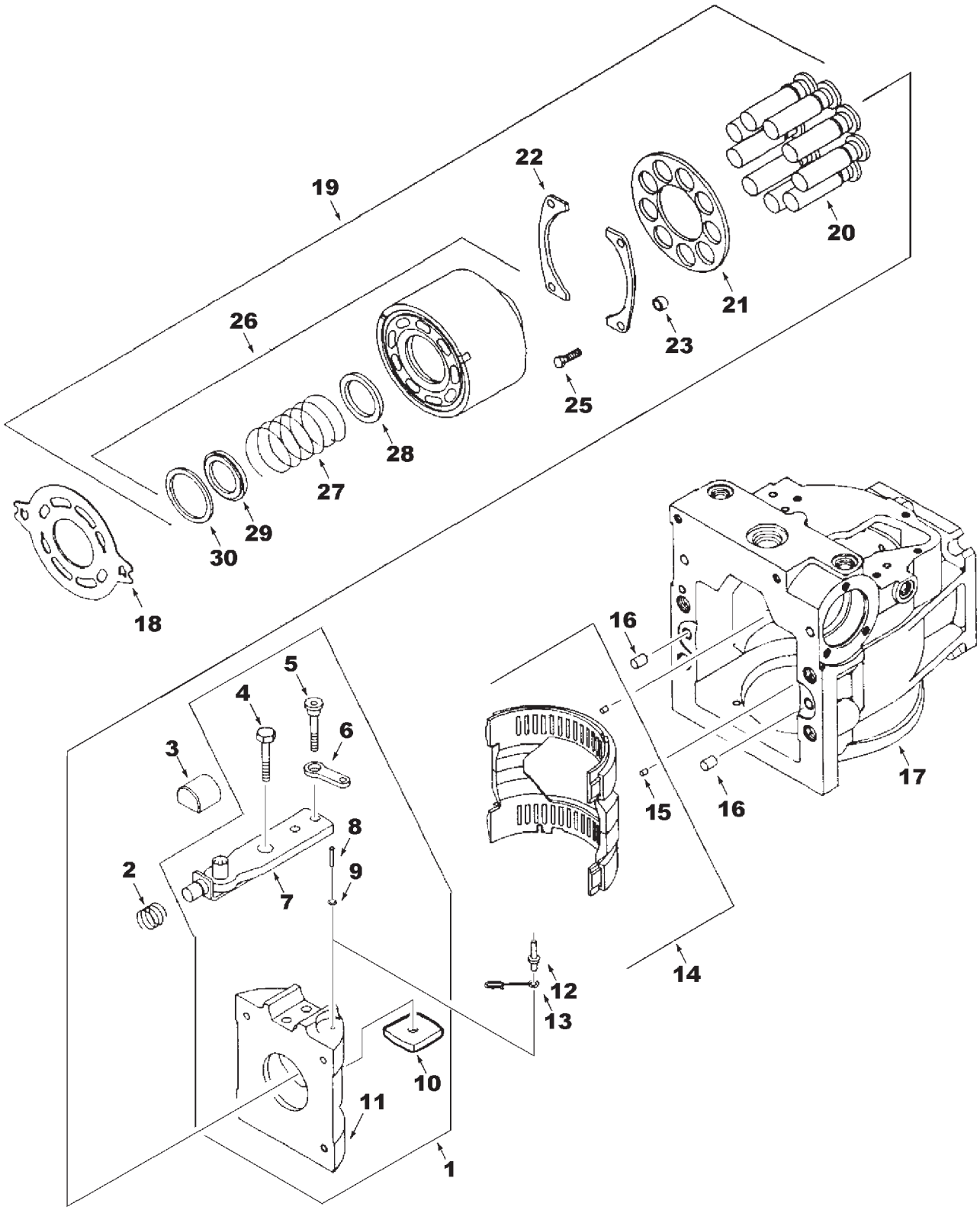

MC00055

https://truckmanualshub.com/

ROTOR PUMP
REAR, 3 OF 4

ITEM	NUMBER	QTY	DESCRIPTION
1	71396182	1	VARIABLE SWASHPLATE ASSEMBLY (INCL. ITEMS 4-11)
2	71396187	1	SPRING
3	1081684M1	1	SLIDER BLOCK
4	1081670M1	1	SCREW
5	1081671M1	1	SCREW
6	71396185	1	FEEDBACK LINK
7	71396183	1	SERVO ARM ASSEMBLY
8	71374884	1	SPIRAL PIN
9	71374883	1	WASHER
10	71374881	1	SWASHPLATE GUIDE
11	71396184	1	VARIABLE SWASHPLATE
12	71396186	1	PIN
13	1081673M1	1	CAGE LOCATOR LINK
14	71396180	1	BEARING ASY
15	1077602M1	2	PIN
16	700702137	2	PIN
17	71396179	1	VARIABLE HOUSING
18	71396181	1	VALVE PLATE
19	71396257	1	ROTATING GROUP KIT
20	71396220	9	WELDED PISTON
21	71396221	1	SLIPPER GUIDE
22	71396222	2	SLIPPER GUIDE BEARING
23	71396223	4	SPACER
25	71396224	4	SCREW
26	71396215	1	CYLINDER BLOCK ASSEMBLY
27	71396216	1	SPRING
28	71396217	1	SPRING SEAT
29	71396218	1	SPRING RETAINER
30	71396219	1	RETAINING RING

MC00055
PR: 410

https://truckmanualshub.com/

ROTOR PUMP
REAR, 4 OF 4

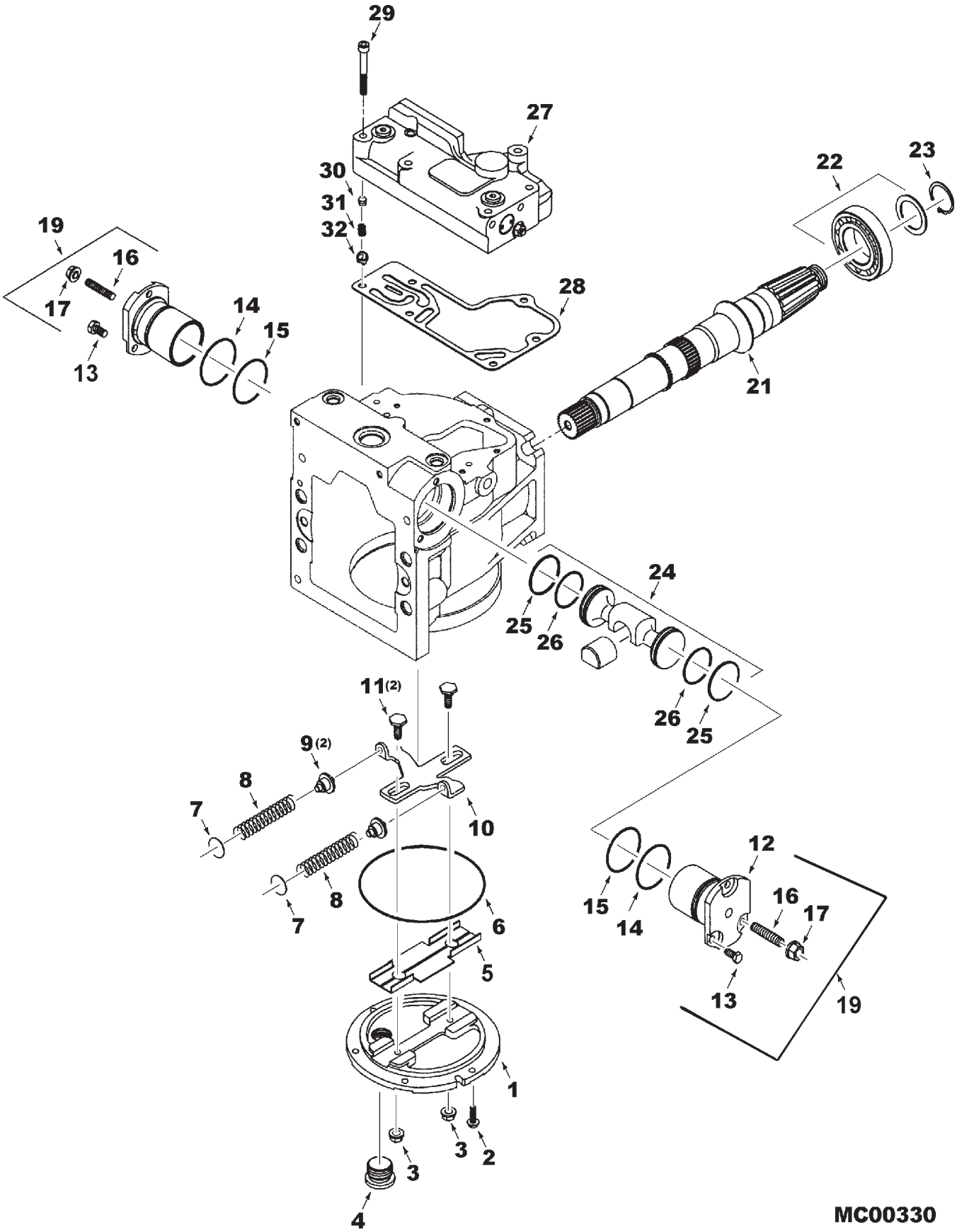

https://truckmanualshub.com/

ROTOR PUMP
REAR, 4 OF 4

ITEM	NUMBER	QTY	DESCRIPTION
1	71396188	1	SIDE COVER
2	71374890	6	SCREW
3	1077627M1	4	NUT
4	1077605M1	1	PLUG
5	71396192	1	INSERT ASY, SIDE COVER
6	70926762	1	O-RING
7	71396130	2	SHIM
8	71396191	2	HELICAL COMPRESSION SPRING
9	71396190	2	SEAT, SPRING
10	71396189	1	LEVELER ASSEMBLY (INCLS ITEM 9)
11	71374961	2	GUIDE POST
12	71397491	2	SERVO CYLINDER KIT
13	1077638M1	6	SCREW
14	71396193	2	O-RING
15	71396194	2	O-RING
16	1081711M1	2	SET SCREW
17	1077627M1	2	NUT, SEAL
19	71397491	2	KIT, SERVO CYLINDER
21	71396207	1	SHAFT, 14 TOOTH SPLINE
22	71396208	1	ROLLER BEARING
23	71355384	1	RETAINING RING
24	71396195	1	SERVO PISTON KIT
25	71396197	2	PISTON RING
26	71395322	2	O-RING
27	71396213	1	HDC KIT (INCL. ITEMS 28,29)
28	71396214	1	CONTROL GASKET
29	1077673M1	6	SCREW
30	837853M91	1	KIT, CONTROL ORIFICE .026
31	71374908	1	SPRING
32	71374909	1	SPRING RETAINER

MC00330
PR: 412

https://truckmanualshub.com/

FINAL DRIVE, S39
(PRIOR S/N HS36101)

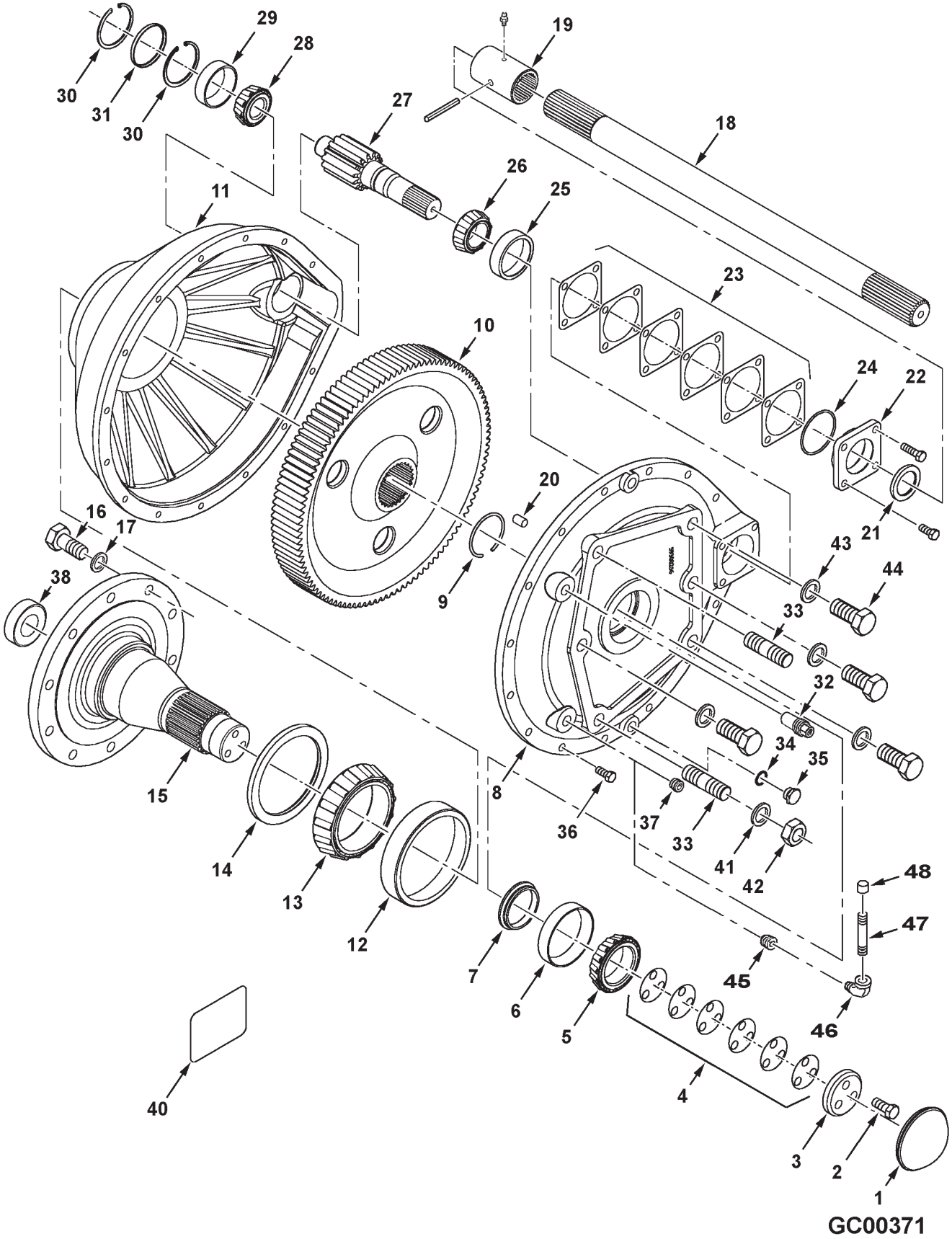

https://truckmanualshub.com/

FINAL DRIVE, S39
(PRIOR S/N HS36101)

ITEM	NUMBER	QTY	DESCRIPTION
-	71400420	2	FINAL DRIVE ASY. S39 (INCL. 1 PINT OIL)
1	71304261	2	CAP, BEARING
2	70950388	6	CAPSCREW, M16-2.0 X 40; C10.9, PHOS.
3	71391572	2	WASHER - AXLE (HARDENED)
4	71304262	2	SHIM, .005
	71304263	2	SHIM, .007
	71304264	2	SHIM, .010
5	70930884	2	CONE, BEARING
6	70930883	2	CUP, BEARING
7	71304266	2	SPACER, AXLE
8	- - - - -	2	HOUSING, INNER (PRIOR S/N HR36101) (ORDER HOUSING ASY ITEM 11)
	79021649	AR	SILMATE, RTV, (13 OZ. TUBE)
9	71304267	2	RING, SNAP, ROUND
10	71389647	2	GEAR, FINAL DRIVE
11	- - - - -	2	HOUSING, OUTER (PRIOR S/N HR36101)
	71406280	2	HOUSING ASY, S39H (EFF. S/N HR36101) (INCL. ITEMS 8, 20, 36)
12	7713860	2	CUP, BEARING
13	71314481	2	CONE, BEARING
14	7744477	2	SEAL, OIL
15	71327595	2	AXLE
16	70925806	20	CAPSCREW 7/8-9 NC X 3 GR8
17	705665	20	WASHER, HARD .94 ID X 1.75 OD
18	71309514	1	SHAFT, DRIVE, LH
	71309515	1	SHAFT, DRIVE, RH
19	71310379	4	COUPLING (2 REQD W/AXLE RISERS)
	71395825	2	COUPLING, OUTER, (W/AXLE RISERS)
	13811X	4	LUBE FTG, STR, 1/4-28 TAPER THD
	Y763318	4	PIN, SPIROL (2 REQD W/AXLE RISERS)
	70925459	2	PIN, SPIROL (W/AXLE RISERS)
	70923219	4	ZERK, GREASE
	----------	4	WIRE, LOCK (CAN USE 70910815; CUT TO LENGTH)

CONTINUED

GC00371
PR: 414

https://truckmanualshub.com/

FINAL DRIVE, S39
(PRIOR S/N HS36101)

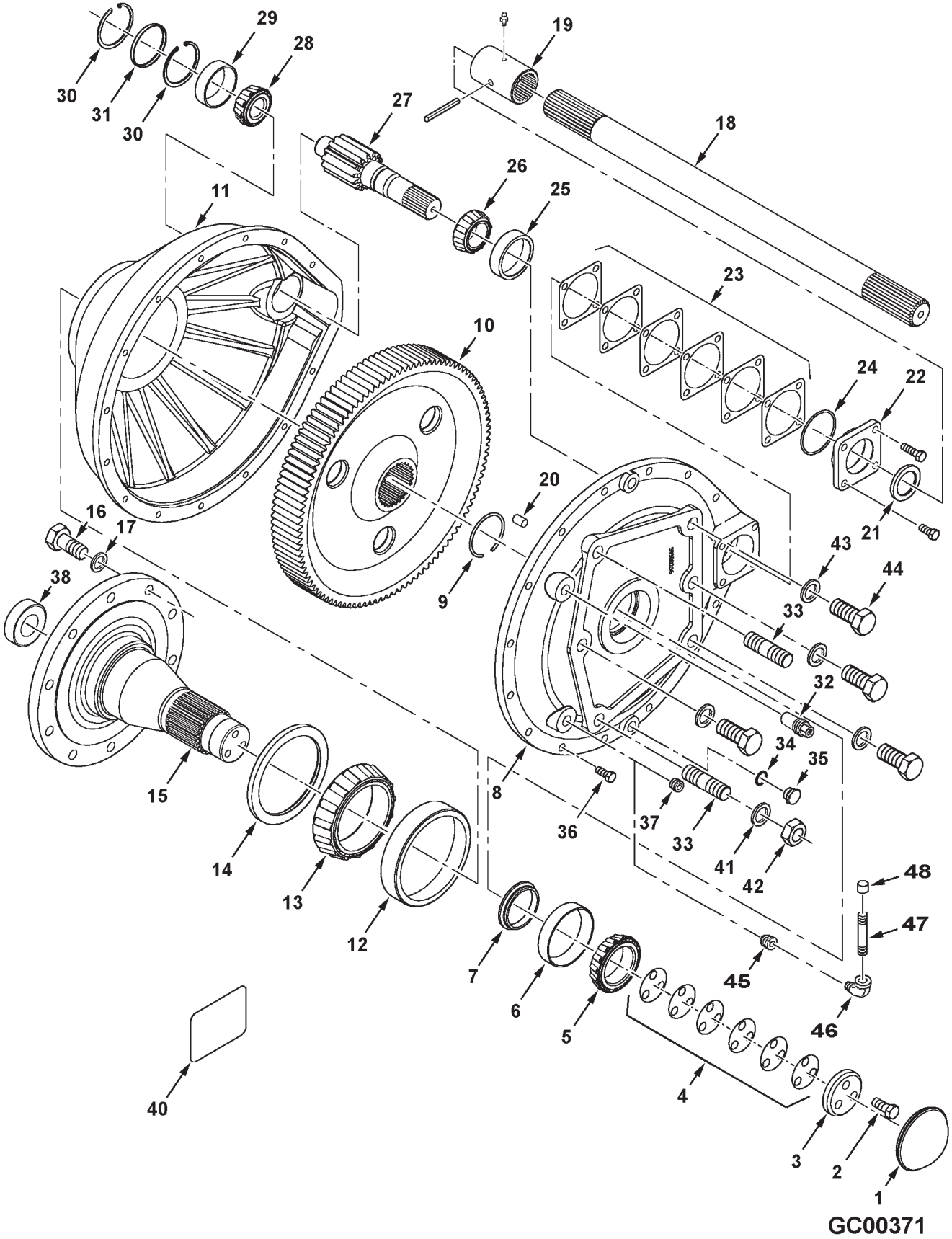

https://truckmanualshub.com/

FINAL DRIVE, S39
(PRIOR S/N HS36101)

ITEM	NUMBER	QTY	DESCRIPTION
20	70926551	6	PIN, DOWEL, 1/2 X 1
21	700717365	2	SEAL, OIL
22	71304292	2	RETAINER, BEARING
	70950377	4	CAPSCREW M12-1.75 X 30 LG C10.9
	70950417	4	CAPSCREW M12-1.75 X 80 LG C10.9
23	71166170	4	SHIM, .005
	71166171	4	SHIM, .007
	71166172	4	SHIM, .010
24	70923816	2	O-RING, .139 X 3.23 ID
25	71162782	2	CUP, BEARING
26	71162781	2	CONE, BEARING
27	71400418	2	PINION, FINAL DRIVE, 14T
28	70210011	2	CONE, BEARING
29	70210012	2	CUP, BEARING
30	Y52894	4	RING, RETAINING, INT.
31	71304271	2	PLUG, HOLE
32	71340437	2	VENT ASY, W/ FILTER
33	71311456	4	STUD, 1-1/8-7
34	71183757	4	GASKET, PLUG
35	71369299	4	PLUG, MAGNETIC DRAIN
36	5000017X1	28	CAPSCREW, M14-2.0 X 40, C10.9, BLK PHOS.
37	3008469	2	PLUG,PIPE, 3/4 NPTF (PRIOR S/N HR36101)
38	71370926	20	SPACER, WHEEL BOLT .91 ID X 2.0 X 1.0
40	71348455	2	DECAL - TORQUE, 600 FT.LB.
41	71339238	4	WASHER, SPECIAL
42	7704778	4	NUT, 1-1/8-7 REG. GR5
43	70933817	8	CAPSCREW, 1-1/8-7 X 2-1/2 GR 8
44	71339238	8	WASHER, SPECIAL
45	70901840	2	* BUSHING, PIPE, 3/4 NPT X 1/4
46	Y46086	2	* ELBOW, 90 DEG STREET, 1/4 NPT
47	70901480	2	* PIPE NIPPLE, 1/4 NPT X 2" LG
48	71312323	2	* CAP, 1/4 NPT
			*(EFF. S/N HR36101)
-	79021676	AR	LOCTITE, PRIMER N (6 OZ)
-	79021669	AR	LOCTITE, THREADLOCKER (10 ML)

GC00371
PR: 414

https://truckmanualshub.com/

FRONT AXLE AND FINAL DRIVES
(EFF. S/N HS36101)

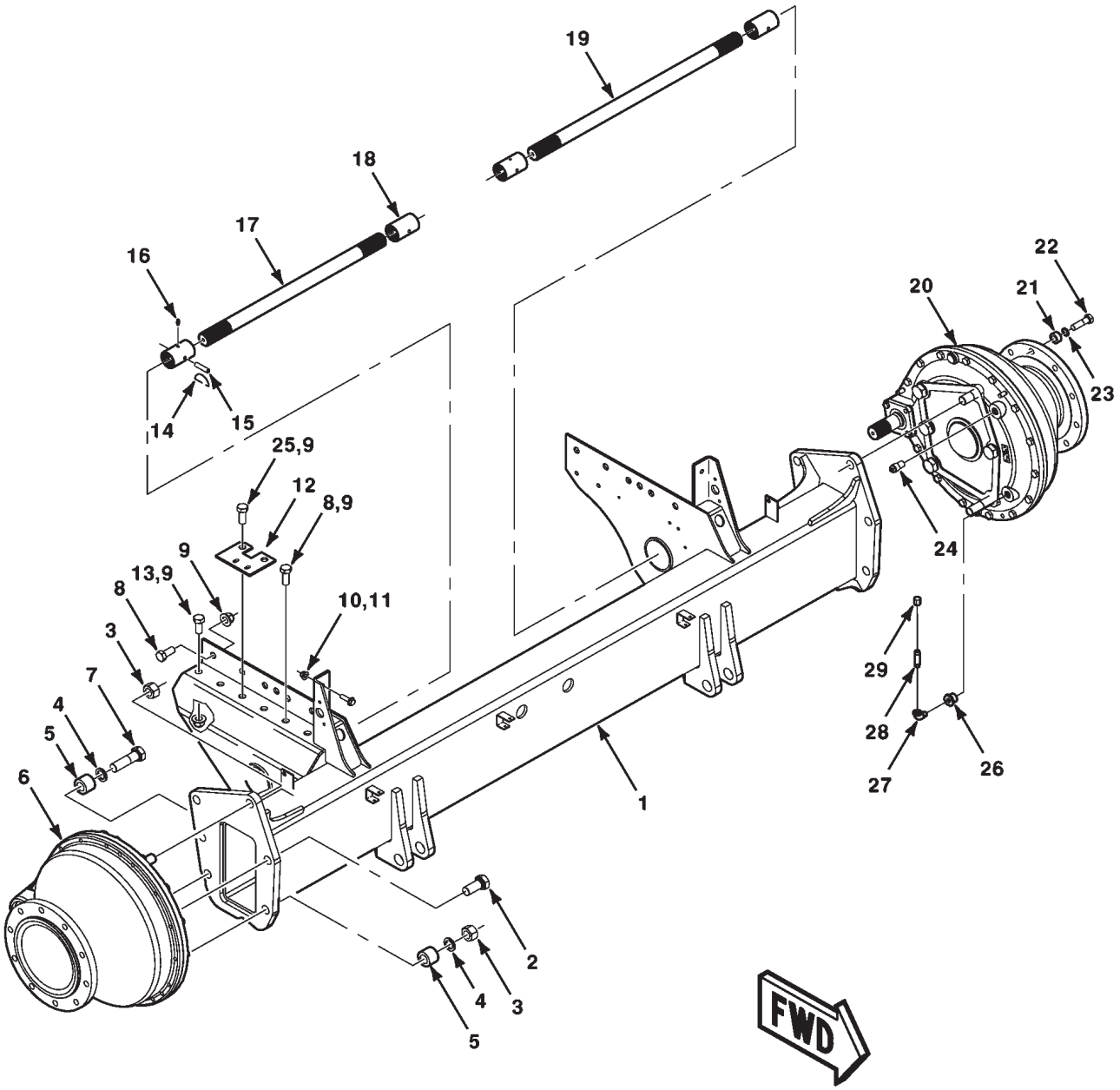

MC00529

https://truckmanualshub.com/

FRONT AXLE AND FINAL DRIVES
(EFF. S/N HS36101)

ITEM	NUMBER	QTY	DESCRIPTION
1	71408709	1	FRONT AXLE-MACHINED
2	70934417	6	CAPSCREW, 1-1/8-12 X 2-1/2 GR8
3	704627	4	NUT, 1-1/8-12
4	71339238	4	WASHER-SPECIAL
5	71408772	4	SPACER
6	71400422	1	FINAL DRIVE ASY-S40, RH
7	70934422	2	CAPSCREW, 1-1/8-12 X 4 GR8
8	3011004X1	12	CAPSCREW, M20-2.5 X 45 CL8.8
9	5000007X1	20	NUT, HEX FLANGE NYL LOCK, M20 X 2.5
10	3009222X1	4	BOLT, FLANGE, M12-1.75 X 40 CL10.9
11	5000005X1	4	NUT, HEX FLANGE NYL LOCK, M12 X 1.75
12	71408711	2	PLATE-MUDSHIELD
13	1441590X1	4	CAPSCREW-FULL THD, M20-2.5 X 50 CL 8.8
14	8022691	4	WIRE TIE
15	Y763318	4	PIN, COILED SPRING, 3/8 X 2-1/4 LG
16	70923219	4	LUBE FTG, 1/4-28 TAPER DRIVE
17	71309514	1	SHAFT-DRIVE
18	71310379	4	COUPLING
19	71309515	1	SHAFT-DRIVE
20	71400421	1	FINAL DRIVE ASY-S40, LH
21	71370926	20	SPACER
22	700729503	20	CAPSCREW, SPL, 7/8-9 X 3 L9
23	705665	20	WASHER-PLAIN, 7/8
24	71340437	2	VENT W/FILTER
25	3001968X1	4	CAPSCREW, M20-2.5 X 60 CL8.8
26	70901840	2	BUSHING, PIPE, 3/4 NPT X 1/4
27	Y46086	2	ELBOW, 90 DEG STREET, 1/4 NPT
28	70901480	2	PIPE NIPPLE, 1/4-18 NPT X 2" LG
29	71312323	2	CAP, 1/4 NPT

MC00529
PR: t07a23o20b0016

https://truckmanualshub.com/

FINAL DRIVE, S40
(EFF. S/N HS36101)

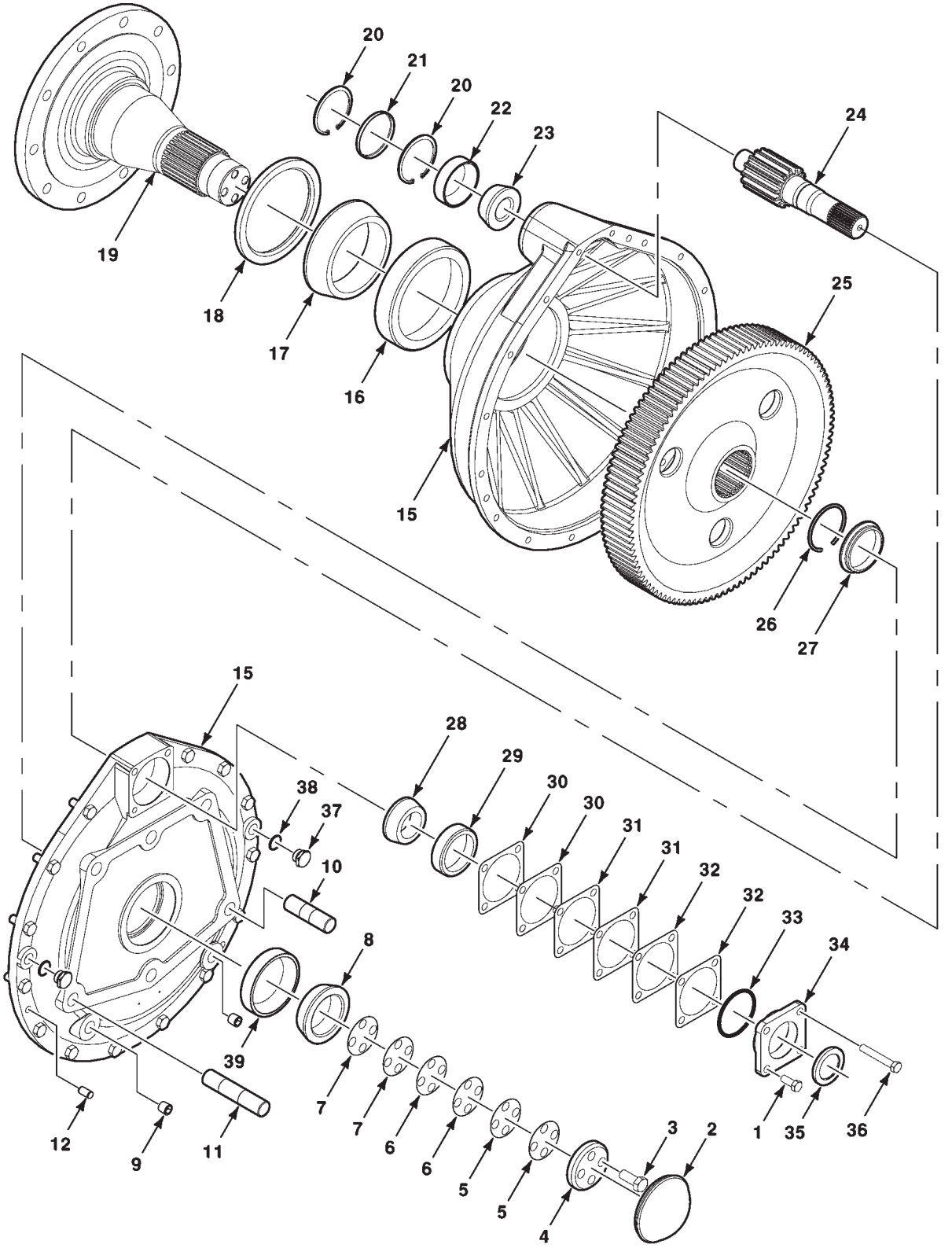

https://truckmanualshub.com/

FINAL DRIVE, S40
(EFF. S/N HS36101)

ITEM	NUMBER	QTY	DESCRIPTION
-	71400421	1	FINAL DR ASY, LH, S40 (SHOWN) (INCL. 1 PINT OIL)
-	71400422	1	FINAL DR ASY, RH, S40 (INCL. 1 PINT OIL) (SAME AS 71408775 EXCEPT ITEM 10&11)
1	3010492X1	2	CPSR-FL THD,M12-1.75X30 PHOS COAT,CL10.9
2	71304261	1	CAP BEARING S35
3	3010783X1	4	CAPSCREW,M16-2.0X40 PHOS COAT,CLASS 10.9
4	71408769	1	WASHER-AXLE
5	71408768	2	SHIM-.254/.010
6	71408766	2	SHIM-.127/.005"
7	71408767	2	SHIM-.178/.007
8	70930884	1	CONE-BEARING
9	3008469	2	PIPE PLUG PIPE THREAD
10	71409768	1	STUD 1-1/8-12 (LH ASY SHOWN)
	71408773	1	STUD 1-1/8-12 (RH ASY)
11	71408773	1	STUD 1-1/8-12 (LH ASY SHOWN)
	71409768	1	STUD 1-1/8-12 (RH ASY)
12	700718109	3	DOWEL 1/2 X 1
15	71408771	1	HOUSE ASM-FINAL DRIVE
	5000017X1	14	CAPSCREW, M14-2.0 X 40 CL10.9
16	7713860	1	CUP-BEARING
17	71314481	1	CONE-BEARING
18	7744477	1	OIL SEAL
19	71408770	1	AXLE
20	Y52894	2	RING-RETAINING
21	71304271	1	PLUG-HOLE
22	70210012	1	CUP-BEARING
23	70210011	1	CONE-BEARING
24	71400418	1	PINION-14 T FINAL DRIVE
25	71389647	1	GEAR-107T FINAL DRIVE
26	71304267	1	SPAP RING, ROUND SECT.
27	71304266	1	SPACER-AXLE
28	71162781	1	CONE-BEARING
29	71162782	1	CUP-BEARING
30	71166170	2	SHIM .005
31	71166171	2	SHIM .007
32	71166172	2	SHIM .010
33	70923816	1	O-RING 3.53x82.14
34	71304292	1	RETAINER-BRG
35	700717365	1	SEAL-RING
36	3019856X1	2	CAPSCREW, M12-1.75X80 PHOS COAT, CL 10.9
37	71369299	2	PLUG-MAGNETIC DRAIN
38	71183757	2	GASKET
39	70930883	1	CUP-BEARING

https://truckmanualshub.com/

4" AXLE RISERS

FINAL DRIVE, S39
(PRIOR S/N HS36101)

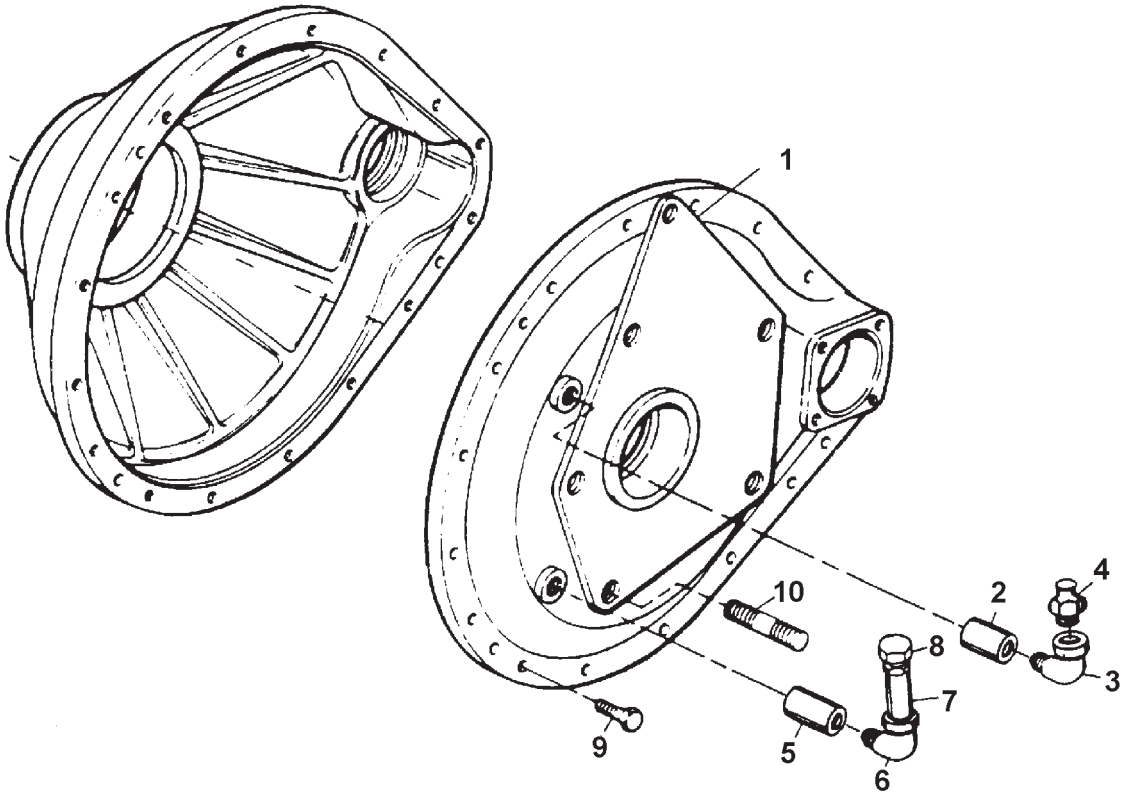

GC00160

https://truckmanualshub.com/

4" AXLE RISERS

FINAL DRIVE, S39
(PRIOR S/N HS36101)

ITEM	NUMBER	QTY	DESCRIPTION
1	71375751	1	RISER,FINAL DRIVE, LH
	71375752	1	RISER,FINAL DRIVE, RH
	71369307	2	BREATHER PLUG
2	803783	2	BUSHING, PIPE, 3/4 X 1/8
3	70923690	2	ELBOW, 90 DEG STREET, 1/8 NPT
4	7751605	2	VENT, BREATHER
5	70901840	2	BUSHING, PIPE, 3/4 X 1/4
6	Y46086	2	ELBOW, 90 DEG STREET, 1/4 NPT
7	70901480	2	PIPE NIPPLE, 1/4 X 2" LG (PRIOR S/N HR36101)
	70919889	2	PIPE NIPPLE, 1/4 X 5" LG (EFF. S/N HR36101)
8	71312323	2	CAP, 1/4 NPT
9	70933817	12	CAPSCREW, 1-1/8-7 X 2-1/2 GR8
10	71311456	4	STUD,1.125-7
-	79021676	AR	LOCTITE, PRIMER N (6 OZ)
-	79021669	AR	LOCTITE, THREADLOCKER (10 ML)
-	71399049	-	KIT, 4" AXLE RISER (ORDER THRU DEALER CENTRAL)

GC00160
PR: 418

https://truckmanualshub.com/

4" AXLE RISERS

FINAL DRIVE, S40
(EFF. S/N HS36101)

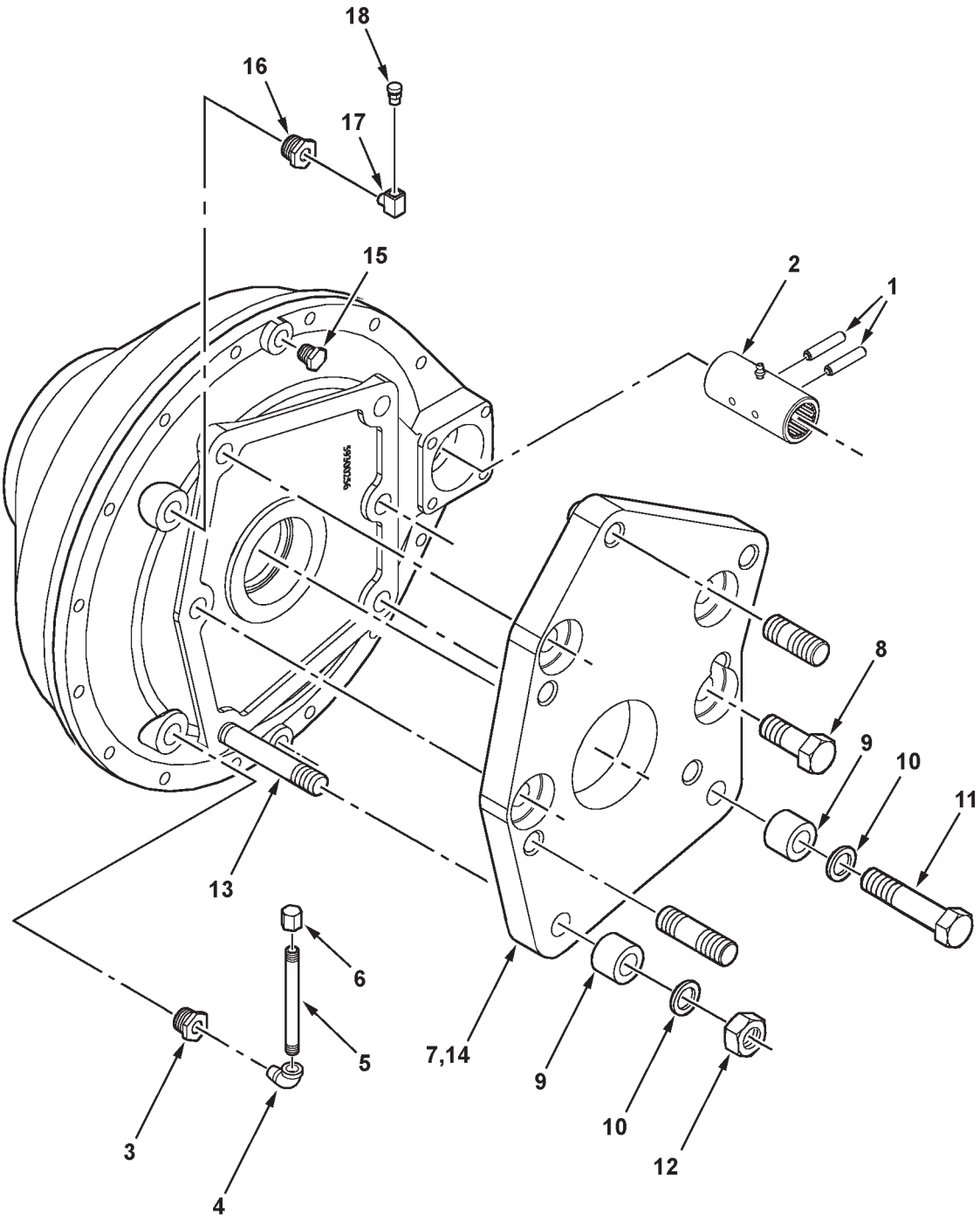

GC00503

https://truckmanualshub.com/

4" AXLE RISERS

FINAL DRIVE, S40
(EFF. S/N HS36101)

ITEM	NUMBER	QTY	DESCRIPTION
1	70925459	4	PIN, SPIROL, 3/8 X 2-1/2 LG
2	71395825	2	COUPLING, OUTER, 2.50 DIA
3	70901840	2	PIPE BUSHING, 3/4 X 1/4 NPTF
4	Y46086	2	ELBOW, 90 DEG STREET, 1/4 NPTF
5	70919889	2	PIPE NIPPLE, 1/4 NPT X 5" LG
6	71312323	2	CAP, STANDPIPE, 1/4 NPTF
7	71409911	1	RISER PLATE, FINAL DR, RH (SHOWN)
8	70934417	8	CAPSCREW, 1-1/8-12 X 2-1/2 GR8
9	71408772	4	SPACER
10	71339238	4	WASHER, SPECIAL (BOTTOM 2 POS'NS ONLY)
11	70934424	2	CAPSCREW, 1-1/8-12 X 5-1/2 GR8
12	70929602	2	NUT, 1-1/8-12 REG.
13	71412596	2	STUD, 1-1/8-12 X 6.3 LG
14	71409910	1	RISER PLATE, FINAL DR, LH (NOT SHOWN)
15	71369307	2	BREATHER PLUG
16	803783	2	PIPE BUSHING, 3/4 X 1/8 NPTF
17	70923690	2	ELBOW, STREET 1/8 NPT
18	7751605	2	VENT, BREATHER
-	71407139	AR	KIT, 4" AXLE RISER (ORDER THRU DEALER CENTRAL)

GC00503
PR: 71409913-01-11

https://truckmanualshub.com/

TRANSMISSION, GEAR
PRESSURE LUBE & HYDRO MOTOR

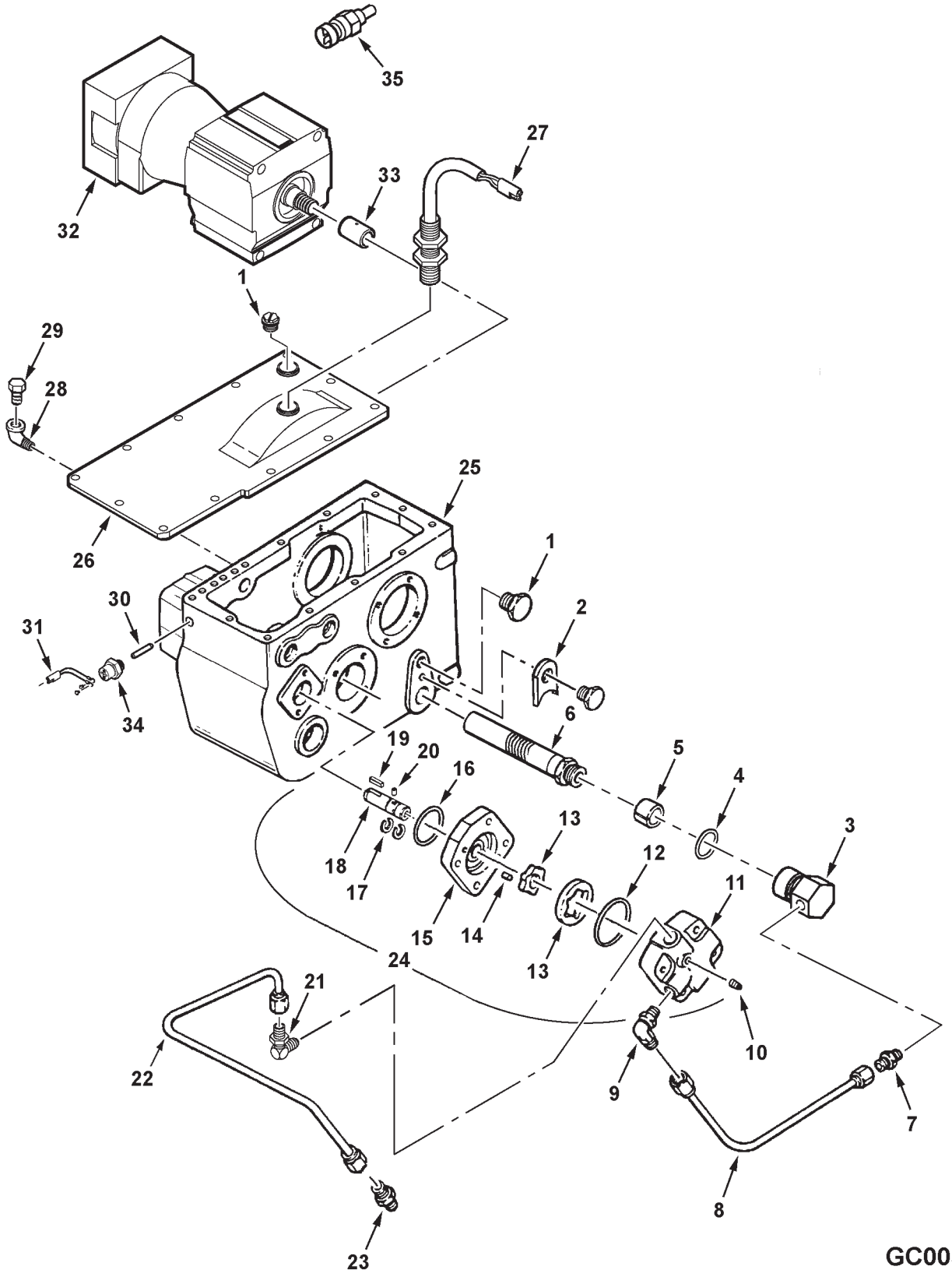

GC00372

https://truckmanualshub.com/

ITEM	NUMBER	QTY	DESCRIPTION
-	71377420	-	TRANS. ASY (W/O BRAKES. W/BUILT-IN MOTOR ADAPTER)(SERVICE W/ 71406300)
-	71398354	-	TRANS. ASY (W/O BRAKES)(EFF S/N HM36101 MID-YEAR)(SERVICE W/ 71406300)
-	71406300	-	TRANS. ASY (W/O BRAKES)(EFF S/N HP36101)
	7701659	2	CAPSCREW, 5/8-11 X 2-1/2 GR5
	7701683	2	CAPSCREW, 5/8-11 X 3 GR5
	70924272	4	WASHER, .656 X 1 X 12 GA.
1	70225441	2	PLUG, OIL LEVEL
	70226012	2	GASKET
2	71183535	1	RETAINER, FILTER
	7884570	1	CAPSCREW, M12-1.75 X 20
	339369X1	1	LOCKWASHER, M12
3	71183746	1	MANIFOLD, LUBE SCREEN
4	70925919	1	O-RING, VITON, .139 X 1.484 ID, 75 DUR.
5	71183828	1	MAGNET, PARTICAL
6	71183747	1	SCREEN ASY.
7	846337	1	CONNECTOR, STR, 3/4-16 JIC X ORB
	70921349	1	O-RING, .087 X .644 ID
8	71183750	1	TUBE ASY., FILTER TO PUMP
9	70935781	1	ELBOW, 90 DEG, 3/4-16 JIC X ORB
	70921349	1	O-RING, .087 X .644 ID
10	70901651	1	PLUG, PIPE
11	71184147	1	HOUSING, PUMP
12	70924186	1	O-RING, 75 DURO, .070 X 2.61 ID, UDN -38
13	71335782	1	GEROTOR, INNER & OUTER
14	Y730804	2	PIN, DOWEL, 1/4 X 1/2
15	71184148	1	COVER, REAR
16	70930911	1	O-RING, 75 DURO .103 X 2.30 ID, UDN -141
17	1026105M1	2	RING, RETAINING
18	71335783	1	SHAFT ASY. DRIVE
19	71184145	1	KEY
20	71335784	1	PIN
21	70922523	1	ELBOW, 90 DEG, 9/16-18 ORB X JIC
	70921885	1	O-RING, .078 X .468 ID
22	71377419	1	TUBE ASY., PUMP TO SHAFT
23	70919062	1	CONNECTOR, 9/16-18 JIC X 1/4 NPT
24	71406298	1	PUMP ASY.
	700721684	2	CAPSCREW, SPL HD, M10-1.50 X 45
25	71377709	1	HOUSING, TRANS.
26	71377531	1	COVER, TRANS.
	70950052	12	CAPSCREW, FULL THD, M12-1.75 X 30
27	71389818	1	SENSOR, GND SPEED
28	70923690	1	ELBOW, STREET 1/8 NPT
29	7751605	1	VENT, BREATHER
30	71342217	1	PIN, SWITCH
31	71385907	1	WIRE, START SWITCH
32	71392870	1	MOTOR, FIXED
	701235	4	CAPSCREW, 1/2-13 X 1-1/2 GR5
	70923858	4	WASHER, .53 X 1.25 X .180
33	71390855	1	COUPLER, MOTOR TO INPUT
	7773856	1	CAPSCREW, 1/4-20 X 2-3/4 GR5
	31752	1	LOCKNUT, 1/4-20
34	71342216	1	SWITCH, START
35	71393718	1	SENSOR, HYDRO MOTOR TEMPERATURE
	70936326	1	O-RING, .072 X .414 ID, VITON

https://truckmanualshub.com/

TRANSMISSION, GEAR
INPUT SHAFT & GEARS

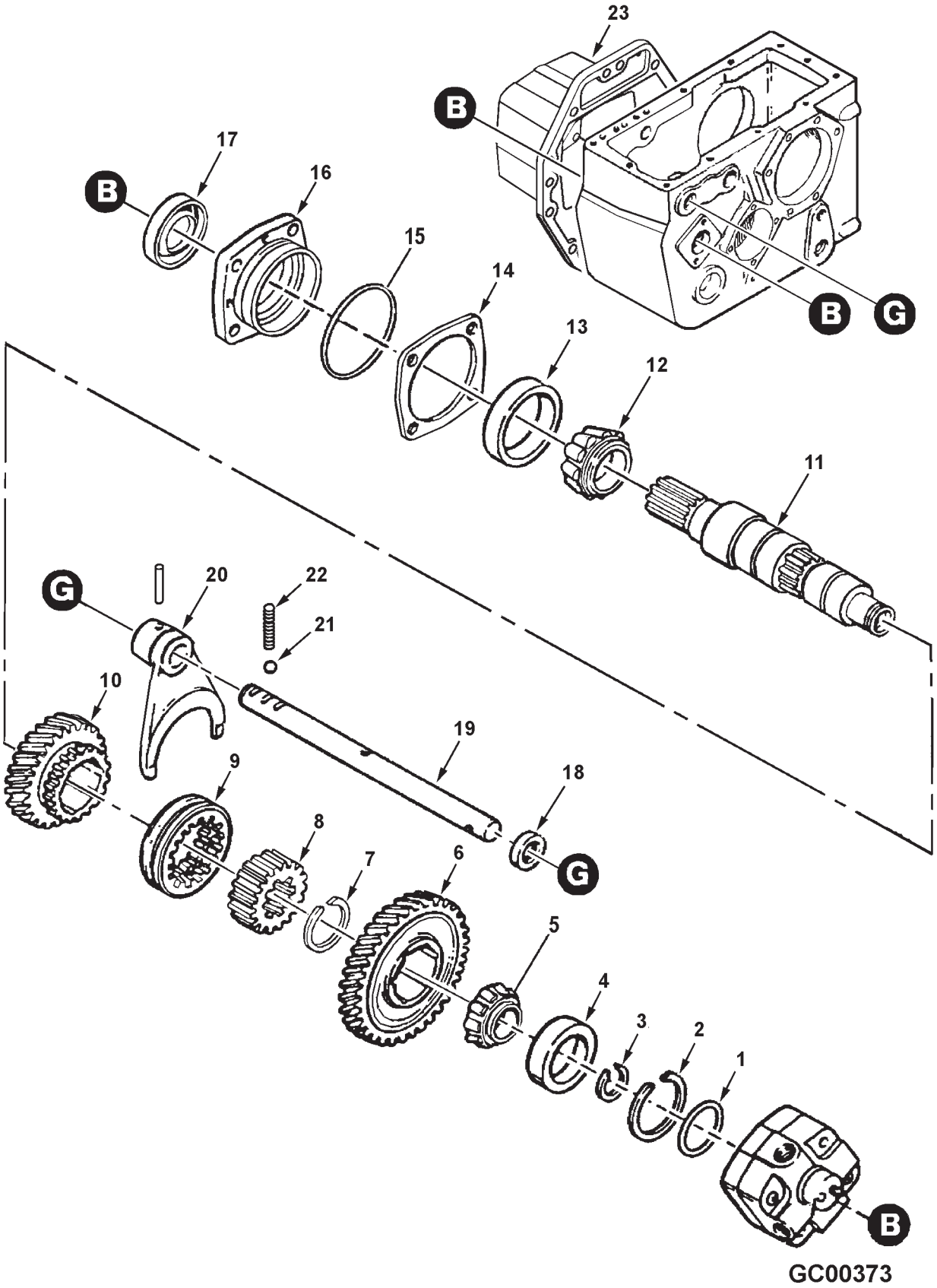

https://truckmanualshub.com/

ITEM	NUMBER	QTY	DESCRIPTION
1	70930911	1	O-RING, 75 DURO .103 X 2.30, UDN -141
2	71184144	1	SNAP RING
3	71184133	AR	SNAP RING, .071 THICK
	71302467	AR	SNAP RING, .072 THICK
	71302468	AR	SNAP RING, .073 THICK
	71184134	AR	SNAP RING, .074 THICK
	71302469	AR	SNAP RING, .075 THICK
	71302470	AR	SNAP RING, .076 THICK
	71184135	AR	SNAP RING, .077 THICK
	71302471	AR	SNAP RING, .078 THICK
4	834581M1	1	CUP, BEARING
5	834580M1	1	CONE, BEARING
6	71377408	1	GEAR, DRIVE, 39 T
7	71183839	1	RING, RETAINING
8	71160040	1	COLLAR
9	71195328	1	COUPLING
10	71377407	1	GEAR, DRIVE, 27 T
11	71399521	1	SHAFT, INPUT
12	74254700	1	CONE, BEARING
13	74254699	1	CUP, BEARING
14	71186745	AR	SHIM, .002 THICK
	71186746	AR	SHIM, .003 THICK
	71175961	AR	SHIM, .005 THICK
	71175962	AR	SHIM, .007 THICK
	71175963	AR	SHIM, .010 THICK
15	70923816	1	O-RING, 75 DURO .139 X 3.234, UDN -236
16	71190292	1	CARRIER, BEARING
	700708349	4	CAPSCREW, M10-1.5 X 25 C8.8
17	71162565	1	SEAL, OIL
18	71160303	1	SEAL, OIL
19	71377548	1	RAIL, SHIFT, 1,2,3 & 4
20	71300509	1	FORK, 1,2,3 & 4
	70923404	1	PIN, COILED SPRING, 5/16 X 1-1/2
21	70917579	1	BALL .4375 DIA
22	71160067	1	SPRING, DETENT
23	71377710	1	HOUSING, MOTOR ADAPTER
	70926551	3	PIN, DOWEL, 1/2 X 1
	70950052	10	CAPSCREW, ,M12-1.75 X 30 C8.8
-	79021676	AR	LOCTITE, PRIMER N (6 OZ)
-	79021669	AR	LOCTITE, THREADLOCKER (10 ML)

GC00373
PR: 422

https://truckmanualshub.com/

TRANSMISSION, GEAR
INTERMEDIATE & MAIN SHAFT

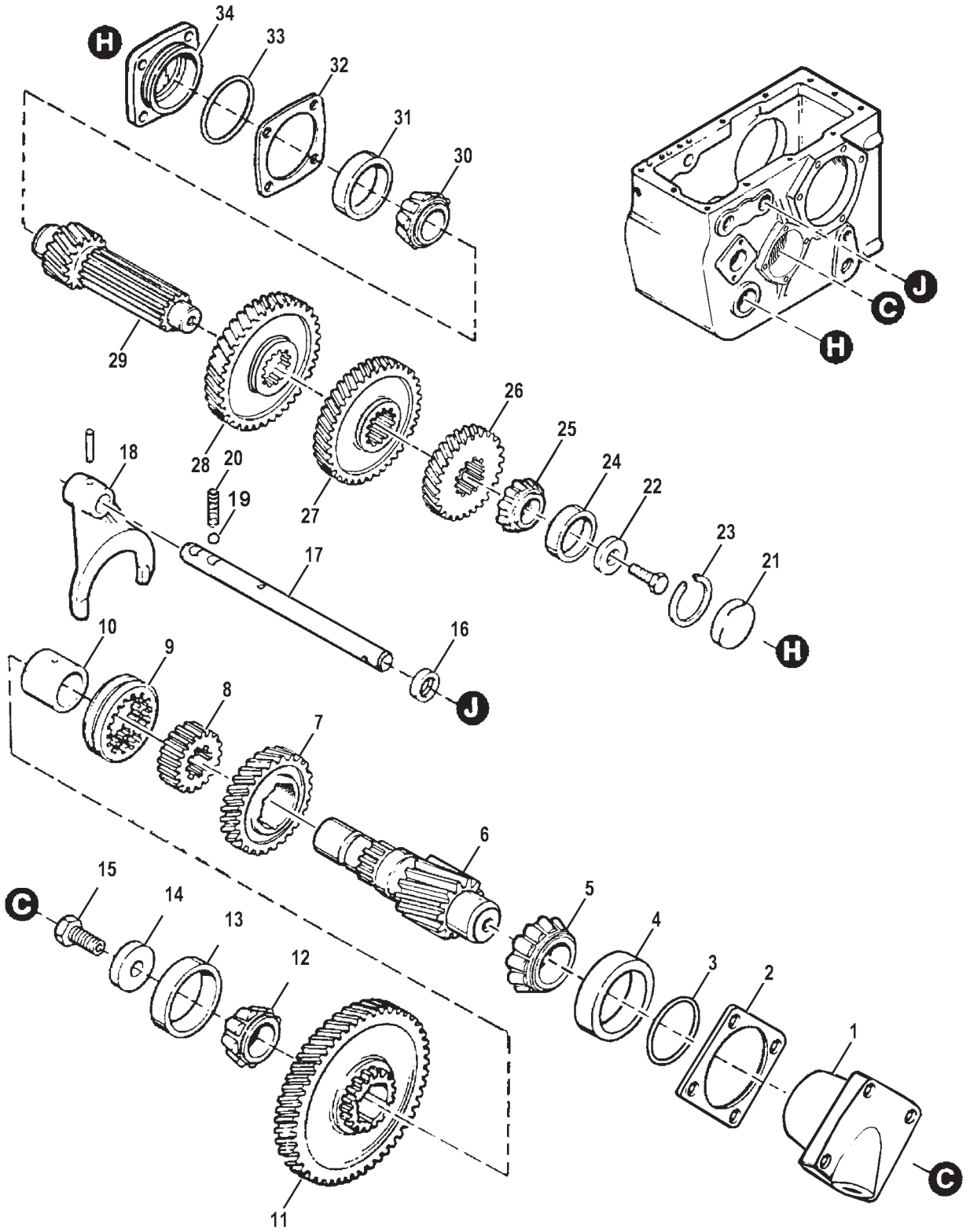

GC00374

https://truckmanualshub.com/

TRANSMISSION, GEAR
INTERMEDIATE & MAIN SHAFT

ITEM	NUMBER	QTY	DESCRIPTION
1	71377415	1	CARRIER, BEARING, MAIN SHAFT
	70950052	4	CAPSCREW, M12-1.75 X 30 C8.8
2	71377712	AR	SHIM, MAIN SHAFT .002
	71377713	AR	SHIM, MAIN SHAFT .003
	71377714	AR	SHIM, MAIN SHAFT .005
	71377715	AR	SHIM, MAIN SHAFT .007
	71377716	AR	SHIM, MAIN SHAFT .010
3	70923818	1	O-RING, 75 DURO .139 X 3.98, UDN -242
4	71377722	1	CUP, BEARING
5	71377723	1	CONE, BEARING
6	71377418	1	SHAFT, MAIN
7	71377416	1	GEAR, DRIVEN 40T
8	71160040	1	COLLAR
9	71195328	1	COUPLING
10	71377711	1	BUSHING, GEAR
11	71377417	1	GEAR, DRIVEN 62T
12	71377535	1	CONE, BEARING
13	71377534	1	CUP, BEARING
14	71177386	1	WASHER, MAINSHAFT
15	7772312	1	CAPSCREW, M16-2.0 X 40 C8.8
16	71160303	1	SEAL, OIL
17	71377549	1	RAIL, SHIFT, HI, LO RANGE
18	71300507	1	FORK, HI, LO RANGE
	70923404	1	PIN, COILED SPRING, 5/16 X 1-1/2
19	70917579	1	BALL .4375 DIA
20	71160067	1	SPRING, DETENT
21	71317628	1	PLUG
22	71177385	1	WASHER
	70950052	1	CAPSCREW, M12-1.75 X 30 C8.8
23	71184144	1	RING, SNAP
24	834581M1	1	CUP, BEARING
25	834580M1	1	CONE, BEARING
26	71377411	1	GEAR, DRIVEN 32T
27	71377412	1	GEAR, DRIVE 42T
28	71377413	1	GEAR, DRIVEN 45T
29	71377414	1	COUNTERSHAFT W/ GEAR 20T
30	70228509	1	CONE, BEARING
31	712208	1	CUP, BEARING
32	71186745	AR	SHIM, .002 THICK
	71186746	AR	SHIM, .003 THICK
	71175961	AR	SHIM, .005 THICK
	71175962	AR	SHIM, .007 THICK
	71175963	AR	SHIM, .010 THICK
33	70923816	1	O-RING, 75 DURO .139 X 3.234, UDN -236
34	71377410	1	CARRIER, BEARING
	700708349	4	CAPSCREW, M10-1.50 X 25 C8.8
-	79021676	AR	LOCTITE, PRIMER N (6 OZ)
-	79021669	AR	LOCTITE, THREADLOCKER (10 ML)

GC00374
PR: 424

https://truckmanualshub.com/

TRANSMISSION, GEAR
DIFFERENTIAL

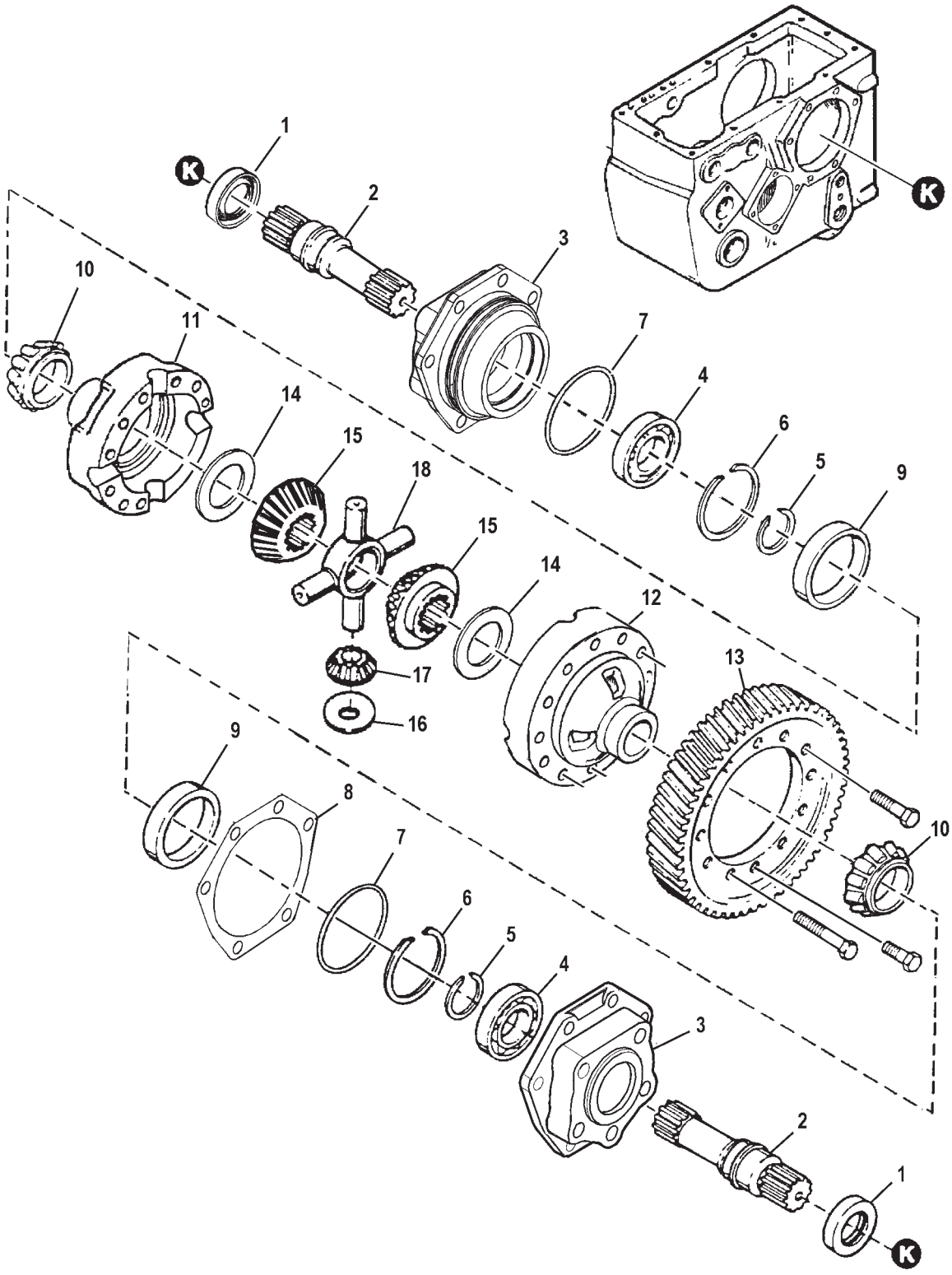

GC00375

https://truckmanualshub.com/

ITEM	NUMBER	QTY	DESCRIPTION
1	71359538	2	SEAL, OIL
2	71390887	2	SHAFT, DIFF OUTPUT
3	71390888	2	CARRIER, BEARING
	7772312	12	CAPSCREW, M16-2 X 40 C8.8
4	1109070	2	BEARING, BALL
5	71160055	2	RING, RETAINING
6	70927321	2	RING, RETAINING
7	70923594	2	O-RING, 75 DURO .139 X 5.98, UDN -258
8	71377717	AR	SHIM, DIFF .002
	71377718	AR	SHIM, DIFF .003
	71377719	AR	SHIM, DIFF .005
	71377720	AR	SHIM, DIFF .007
	71377721	AR	SHIM, DIFF .010
9	70930426	2	CUP, BEARING
10	70930424	2	CONE, BEARING
11	71386867	1	HOUSING, DIFF, PLAIN HALF (1/2" CPSCRWS) (SERVICED W/71398356 HOUSG ASY, BOTH HALVES)(MUST USE 71398330 RING GEAR)
	71398328	1	HOUSING, DIFF, PLAIN HALF (M14 CPSCRWS) (SERVICED W/71398356 HSG ASY, BOTH HLVS)
12	71386866	1	HOUSING, DIFF, GEAR HALF (1/2" CPSCRWS) (SERVICED W/71398356 HOUSG ASY, BOTH HALVES)(MUST USE 71398330 RING GEAR)
	71398329	1	HOUSING, DIFF, GEAR HALF (M14 CPSCRWS) (SERVICED W/71398356 HSG ASY, BOTH HLVS)
13	71347780	1	GEAR, RING, 70T (PRIOR S/N HM36101, MID-YEAR)(SERVICE W/ 71398330)
	70927469	4	CAPSCREW, 1/2-13 X 2-1/4 GR8
	70923154	4	CAPSCREW, 1/2-13 X 1-1/2 GR8
	70926157	8	CAPSCREW, 1/2-13 X 3-3/4 GR8
	70928178	16	WASHER, HARD, .531 X 1.0 X .109
	71398330	1	GEAR, RING, 70T (EFF S/N HM36101, MID-YEAR)
	70950490	12	CAPSCREW, M14-2.0 X 100, CL10.9
	70950382	4	CAPSCREW, M14-2.0 X 35, CL10.9
	70926192	16	WASHER, HARD, .562 ID X 1.25 X .120
	79021676	AR	LOCTITE, PRIMER N (6 OZ)
	79021669	AR	LOCTITE, THREAD LOCKER (10 ML)
14	71160085	2	WASHER, THRUST, SIDE GEAR
15	71344598	2	GEAR, SIDE
16	71347782	4	WASHER, THRUST, PINION
17	71344597	4	PINION
18	71347777	1	SPIDER, DIFFERENTIAL
-	71398327	-	DIFFERENTIAL ASY. (INCLS. ITEMS 10-18)
-	71398356	-	HOUSING ASY. (NOT ILL.)(INCL. ITEM 11, 71398328 & ITEM 12, 71398329)

https://truckmanualshub.com/

DRUM BRAKES
SERVICE & PARKING

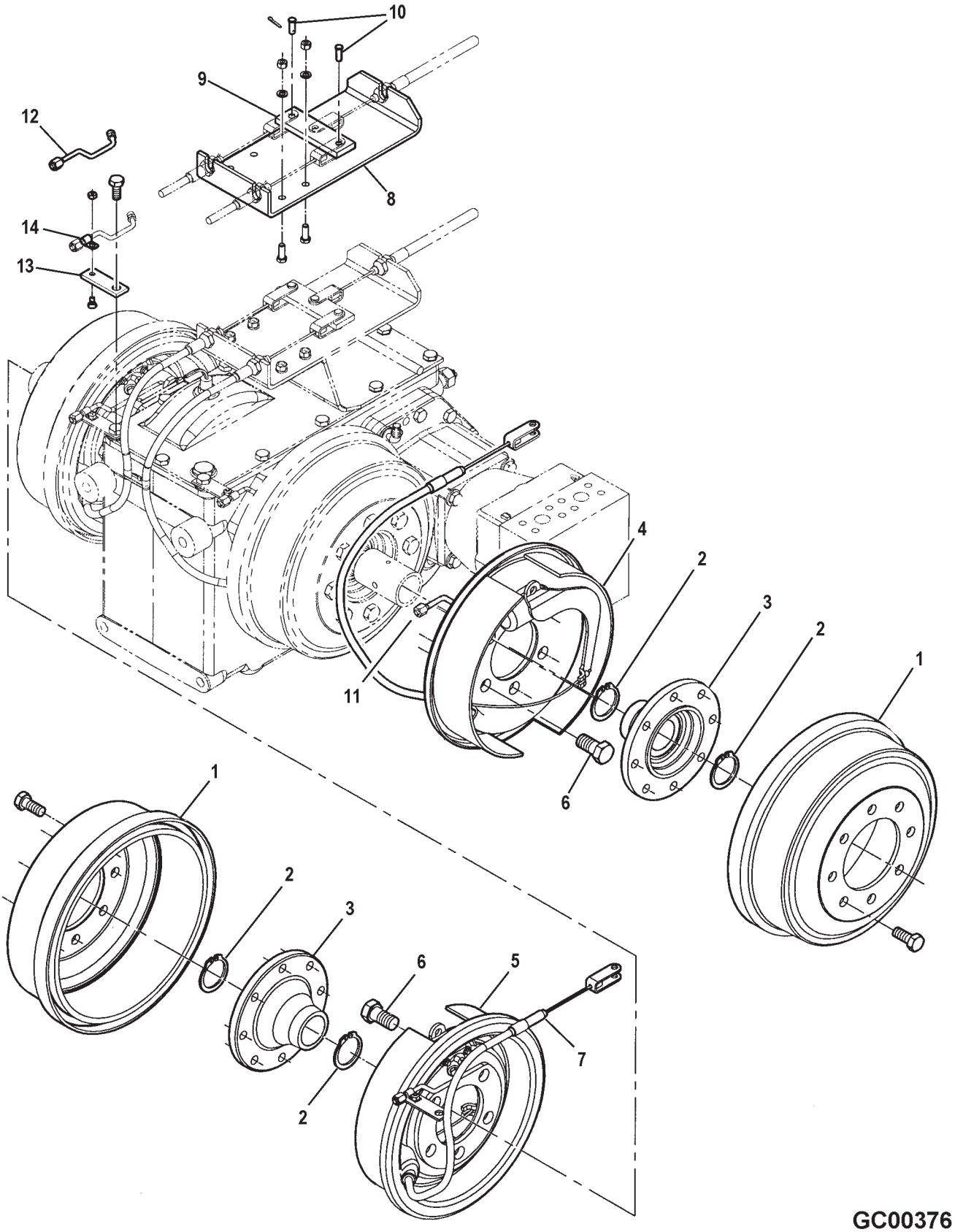

GC00376

https://truckmanualshub.com/

ITEM	NUMBER	QTY	DESCRIPTION
1	71392787	2	DRUM, BRAKE
	7771785	16	CAPSCREW, 5/8-11 X 1 GR5
2	70937676	4	RING, RETAINING, INTERNAL
3	71392788	2	HUB, BRAKE DRUM
4	71389232	1	BRAKE ASY. LH (INCL COMPONENTS OF IT 5)
5	71389233	1	BRAKE ASY. RH (INCL COMPONENTS BELOW)
	71395151	1	WHEEL CYL. KIT LH
	71395160	1	WHEEL CYL. KIT RH
	71395157	4	BOLT, WHEEL CYL. MOUNTING
	71395158	2	BRAKE SHOE KIT (1 PER SIDE)
	71395159	2	BACKING PLATE WELD ASY
	71395163	4	LINK, CONNECTING, WHEEL CYL.
	71395152	2	SPRING KIT
	71395153	1	ADJUSTER KIT, LH
	71395161	1	ADJUSTER KIT, RH
	71395154	1	PARK BRAKE KIT, LH
	71395162	1	PARK BRAKE KIT, RH
	71395155	2	WASHER, SPRING
	71376446	2	NUT
6	70950394	10	CAPSCREW, M20-2.5 X 45, C10.9
	79021676	AR	LOCTITE, PRIMER N (6 OZ)
	79021669	AR	LOCTITE, THREAD LOCKER (10 ML)
7	71389230	2	CABLE ASY, PARK BRAKE
8	71389229	1	BRACKET, PARK BRAKE CABLES
	703249	4	CAPSCREW, 3/8/16 X 1 GR5
	705038	4	LOCKWASHER, 3/8
	70916950	4	NUT, REG 3/8-16
9	71389235	1	BAR, EQUALIZER
10	763300	3	PIN, CLEVIS 5/16 X 1 LG
	70918452	2	PIN, COTTER 1/8 X 1
11	71396558	1	TUBE ASY, BRAKE, LH
12	71389230	1	TUBE ASY, BRAKE, RH
13	71390867	2	STRAP, TUBE SUPPORT
	70950453	2	CAPSCREW, M12 X 1.75 X 35
	Y705624	8	WASHER, NARROW 1/2
14	70926919	2	CLAMP, 1/4 X .281 HOLE
	70921958	2	CAPSCREW, 1/4-20 X 1/2 LG GR5
	70916622	2	NUT, REG, 1/4-20

GC00376
PR: 428

https://truckmanualshub.com/

DRUM BRAKES
LINES & FITTINGS

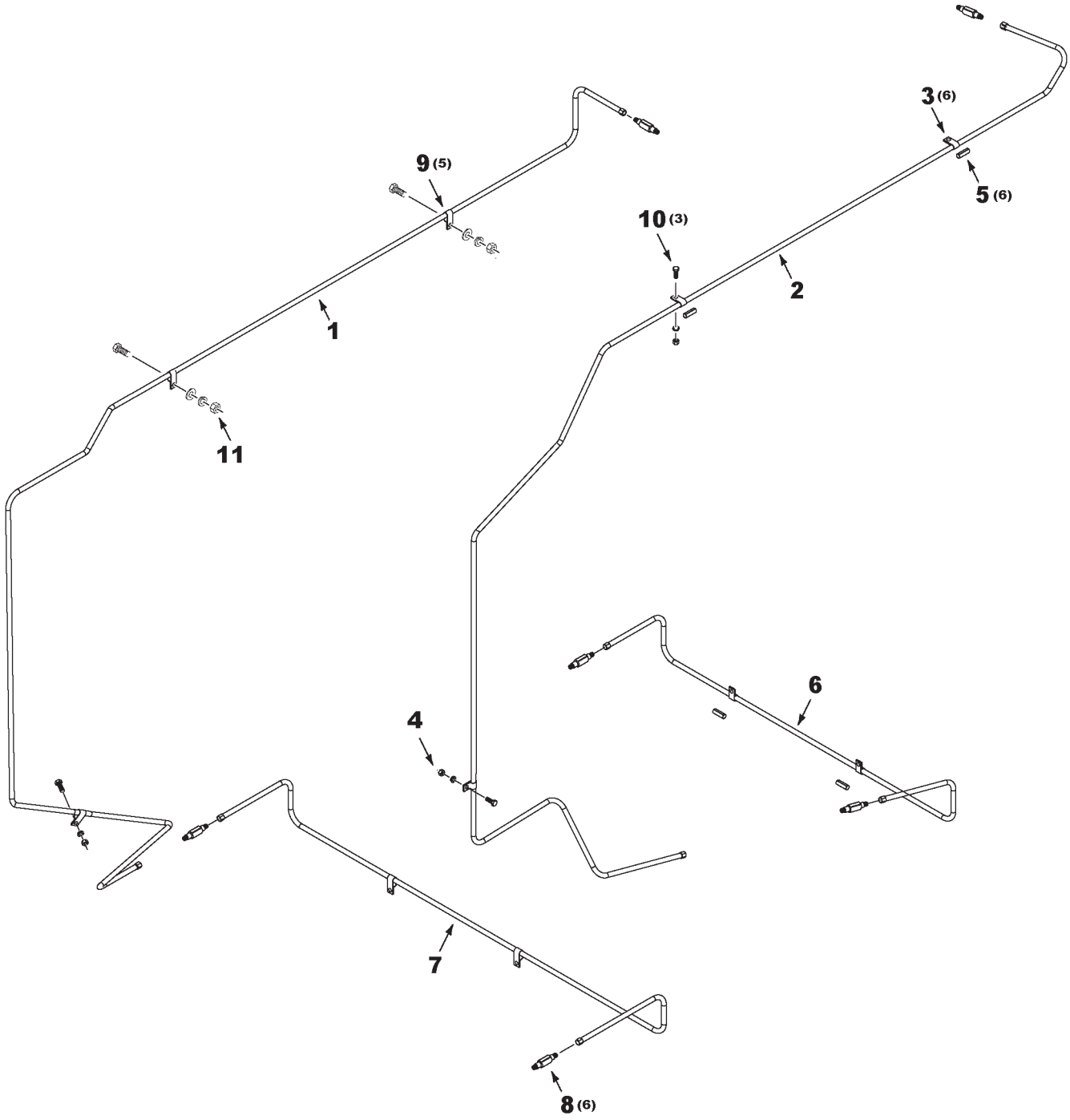

MC00344

https://truckmanualshub.com/

ITEM	NUMBER	QTY	DESCRIPTION
1	71398223	1	TUBE ASY, UPPER LEFT BRAKE
2	71398224	1	TUBE ASY, UPPER RIGHT BRAKE
3	70925617	6	CLAMP, 1/2 X .406 HOLE
4	703249	2	CAPSCREW, 3/8-16 X 1 GR5
	705038	2	LOCKWASHER, 3/8
	70916950	2	NUT, 3/8-16 REG
5	2556880W1	6	RUBBER SLEEVE, 1/4 ID
6	71398225	1	TUBE ASY, LOWER RIGHT BRAKE
7	71389775	1	TUBE ASY, LOWER LEFT BRAKE
8	70919214	6	CONN, UNION, 1/4 JIC
9	70926919	5	CLAMP, 1/4 X .281 HOLE
10	7703457	3	CAPSCREW, 1/4-20 X 3/4 GR5
	705012	3	LOCKWASHER, 1/4
	700709601	3	WASHER, 1/4 WIDE
	704007	3	NUT, 1/4 REG
11	7703473	1	CAPSCREW, 1/4-20 X 1-1/4 GR5
	705012	1	LOCKWASHER, 1/4
	700709601	1	WASHER, 1/4 WIDE
	704007	1	NUT, 1/4 REG

MC00344
PR: 430

https://truckmanualshub.com/

MAIN FRAME AND AXLE SUPPORTS

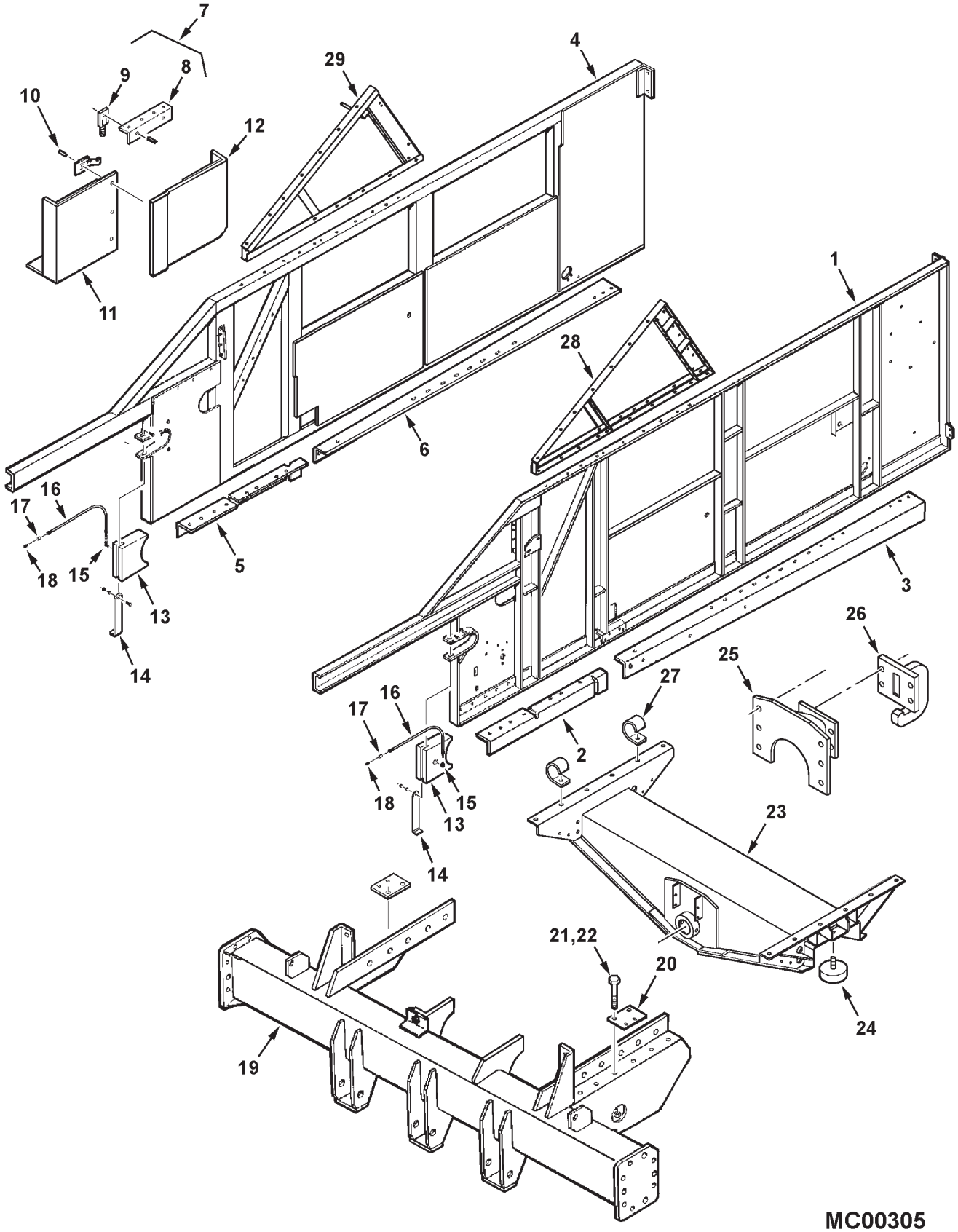

https://truckmanualshub.com/

MAIN FRAME AND AXLE SUPPORTS

ITEM	NUMBER	QTY	DESCRIPTION
1	71390292	1	FRAME & SHEET WLMT,LH(PRIOR S/N HP36101)
	71414556	1	FRAME & SHEET WLMT,LH (EFF. S/N HP36101)
2	71409947	1	SUPPORT WLDMT, LH FRONT FRAME
3	71395585	1	ANGLE, LH FRAME SUPPORT
4	71390502	1	FRAME & SHEET WA, RH (PRIOR S/N HS36101)
	71414554	1	FRAME & SHEET WA, RH (EFF. S/N HS36101)
5	71409942	1	SUPPORT WLDMT, RH FRONT FRAME
6	71395586	1	ANGLE, RH FRAME SUPPORT
7	2580593W91	4	ANGLE ASY., ACCESS DOOR
			(INCL. ITEMS 8-10)
8	2580580W1	8	ANGLE, DOOR FRAME
9	70537291	16	FASTENER
10	70924837	16	RIVET
11	2631433W91	4	DOOR ASY, SIDE FRAME, W/FASTENERS(IT. 9)
	2616141W91	4	DOOR WLDMT, SIDE FRAME
12	2616131W91	4	DOOR WLDMT, SIDE FRAME
13	71395332	2	BLOCK, PIVOT FEEDER LOCK
14	2513840W1	2	PIN, PIVOT LOCK BRACKET
	703249	2	CAPSCREW, 3/8-16 X 1 GR5
	705038	2	LOCKWASHER, 3/8
	70916950	2	NUT, REG, 3/8-16 G2
15	70923690	2	ELBOW, STREET, 1/8
16	71365312	2	HOSE, GREASE
	70925097	2	CLAMP, .562 TUBE X .406 HOLE
17	70901763	2	PIPE COUPLING, 1/8 NPT FEM
18	70922887	2	FITTING, GREASE, 1/8
19	71389268	1	FRONT AXLE ASY, MACHINED (PRIOR HS36101)
			(SEE FRT AXLE & FNL DRVS,EFF.HS36101
	70923111	2	CAPSCREW, 5/8-11 X 3 GR5
	7701659	2	CAPSCREW, 5/8-11 X 2-1/2 GR5
	70924272	4	WASHER, 21/32 X 1 X 12GA.
20	102038M1	2	PLATE (PRIOR S/N HS36101)
	700706419	4	CPSCR, 3/4-10 X 2 GR8(PRIOR HS36101)
	700703923	4	NUT, HEX FLANGE TOP LOCK, 3/4-10
21	70926127	16	CPSCR, 3/4-10 X 1-3/4 GR5(PRIOR HS36101)
22	700703923	16	NUT, HEX FLANGE TOP LOCK, 3/4-10
23	71389602	1	SUPPORT WLMT, RR AXLE(PRIOR S/N HP36101)
	71403895	1	SUPPORT WLMT, RR AXLE (EFF. S/N HP36101)
	70923112	12	BOLT, 5/8-11 X 1-3/4
	700703922	12	NUT, HEX FLNG. TOP LOCK, 5/8-11
	70937682	1	J-CLIP
24	71355063	2	STOP, STEERING AXLE
	Y705046	2	WASHER, LOCK, 1/2
	704031	2	NUT, 1/2-13
25	71404357	1	HITCH WLDMT (EFF. S/N HP36101)
	70921360	6	CAPSCREW, 5/8-11 X 2-1/4 GR5
26	71404359	1	HOOK WLDMT (EFF. S/N HP36101)
	70921360	4	CAPSCREW, 5/8-11 X 2-1/4 GR5
	700703922	4	NUT, HEX FLNG. TOP LOCK, 5/8-11
27	70937682	2	J-CLIP, 3/4 DIA X .656 HOLE
28	71390179	1	FRAME WLMT, LH BIN SUPPORT
	70920415	6	CAPSCREW, 3/8-16 X 1-1/4 GR5
	70921965	6	CAPSCREW, 3/8-16 X 3/4 GR5
	70917378	11	WASHER, WIDE, 3/8
	Y704734	12	NUT, HEX FLANGE TOP LOCK, 3/8-16
29	71393236	1	FRAME WLMT, RH BIN SUPPORT
	70920415	10	CAPSCREW, 3/8-16 X 1-1/4 GR5
	70921965	6	CAPSCREW, 3/8-16 X 3/4 GR5
	70917378	15	WASHER, WIDE, 3/8
	Y704734	16	NUT, HEX FLANGE TOP LOCK, 3/8-16

https://truckmanualshub.com/

REAR AXLE & WHEELS
ADJUSTABLE TREAD
(PRIOR S/N HP36101)

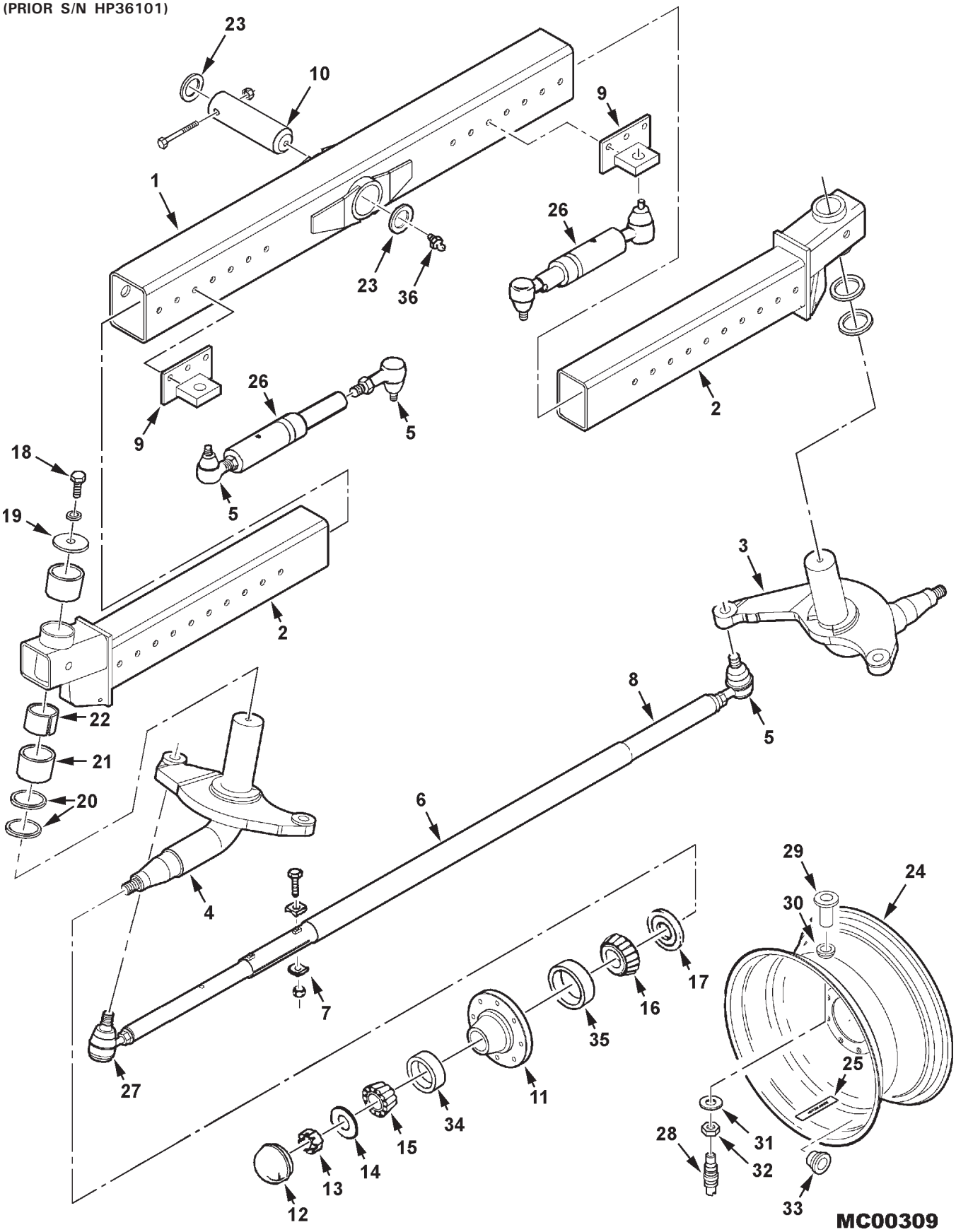

https://truckmanualshub.com/

REAR AXLE & WHEELS
ADJUSTABLE TREAD
(PRIOR S/N HP36101)

ITEM	NUMBER	QTY	DESCRIPTION
1	71389394	1	AXLE ASY, CENTER SECTION, W/BUSHINGS (PRIOR S/N HP36101)
	2441250W1	2	BUSHING
2	71389381	2	EXTENSION ASY., ADJUSTABLE AXLE (INCL. ITEMS 21 & 22)
	13811X	2	LUBE FTG, STR, 1/4-28 TAPER THD
	70922890	4	CAPSCREW, 3/4-10 X 7 GR5
	71359841	4	SPACER, BOLT
	7774466	4	NUT, HEX FLNG SERR LOCK, 3/4-10
3	71389386	1	SPINDLE ASY., RH
4	71389385	1	SPINDLE ASY., LH
5	71307626	5	SOCKET ASY, RH W/RH THREADS (INCL. SLOTTED NUT, BOOT & LUBE FTG)
	71403681	5	BOOT, RUBBER
	70925731	2	LUBE FTG, 45 DEG, 1/4-28 TAPER
	13811X	3	LUBE FTG, STR, 1/4-28 TAPER THD
	70921295	5	NUT, SLOTTED HEX, 7/8-14UNF
	70925719	5	PIN, COTTER, 1/8 X 2
	70923356	5	NUT, JAM, 1-1/8-12UNF
6	71389356	1	TIE ROD ASY, ADJUSTABLE
7	6661624	4	WASHER, CLAMP
	70929019	2	CAPSCREW, 3/8-16 X 3
	7704141	2	NUT, TOP LOCK, 3/8-16
8	71359772	1	ROD, ADJUSTABLE
9	71389362	2	ANCHOR ASY.
	70936419	6	CAP, 3/4-10 X 7-1/2 GR 5
	71359841	6	SPACER, BOLT
	7774466	6	NUT, HEX FLNG SERR LOCK, 3/4-10
10	2625050W1	1	PIN, REAR AXLE PIVOT
	70920272	1	CAPSCREW, 1/2-13 X 5 GR5
	704858	1	NUT, HEX TOP LOCK, 1/2-13
11	71338308	2	HUB ASY. (INCL. ITEMS 34 & 35)
	70927529	16	CAPSCREW, 5/8-18 X 1-3/4 GR5
	70937005	16	WASHER, HARD, .66 X 1.31 X .095
12	26674	2	CAP, HUB
13	704692	2	NUT, SLOTTED, 1-14 GR2
	70922002	2	PIN, COTTER, 3/16 X 2
14	70936306	2	WASHER, HARD, 1.062 X 2.25 X .25
15	850182M1	2	CONE, BEARING, OUTER
16	71334989	2	CONE, BEARING, INNER
17	71334988	2	SEAL

CONTINUED

https://truckmanualshub.com/

REAR AXLE & WHEELS
ADJUSTABLE TREAD
(PRIOR S/N HP36101)

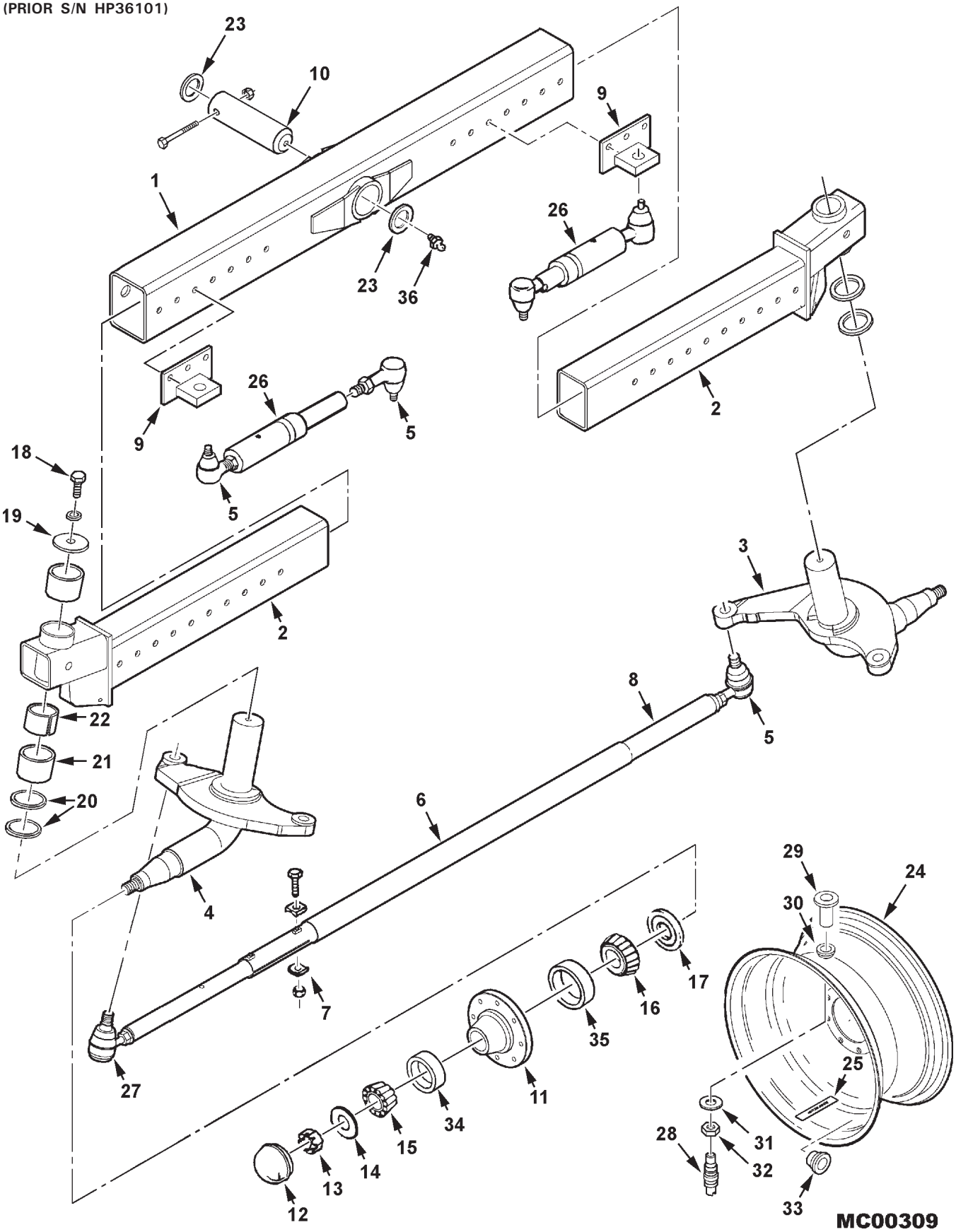

https://truckmanualshub.com/

ITEM	NUMBER	QTY	DESCRIPTION
18	70923114	2	CAPSCREW, 1/2-13 X 1 GR5
	Y705046	2	WASHER, LOCK, 1/2
19	71338789	2	WASHER
20	71334986	4	WASHER, THRUST
21	71354306	4	BUSHING
22	71338799	2	SPACER
23	2441340W1	2	WASHER, THRUST
24	71372132	2	WHEEL RIM, 14.9 X 24 TIRE
	71372133	2	WHEEL RIM, 16.9 X 24 TIRE
	71399115	2	WHEEL RIM, 16.9 X 26 TIRE
25	71338651	2	DECAL, 150 FT LB TORQUE
26	71365245	2	CLYINDER ASY., STEERING
27	71359545	1	SOCKET ASY, W/LH THREADS (INCL. SLOTTED NUT, BOOT & LUBE FTG)
	71403681	1	BOOT, RUBBER
	13811X	1	LUBE FTG, STR, 1/4-28 TAPER THD
	70921295	1	NUT, SLOTTED NUT, 7/8-14UNF
	70925719	1	PIN, COTTER, 1/8 X 2
	70937534	1	NUT, JAM, 1-1/8-12UNF LH
28	71170388	2	VALVE HOUSING & CORE ASY, W/ CAP
29	7027469	2	VALVE ASY, CLAMP-IN (COMPLETE)(INCL
30	71170390	2	GROMMET, TUBELESS TIRE
31	71175919	2	WASHER, TUBELESS TIRE
32	71175918	2	NUT, TUBELESS TIRE
33	539651M1	2	PLUG, RIM HOLE, TUBELESS TIRE
34	850181M1	1	CUP, BEARING, OUTER
35	195160M1	1	CUP, BEARING, INNER
36	13887X	1	LUBE FITTING, STR, 1/4-18 PTF

MC00309
PR: 434

https://truckmanualshub.com/

REAR AXLE & WHEELS

ADJUSTABLE TREAD
(EFF. S/N HP36101)

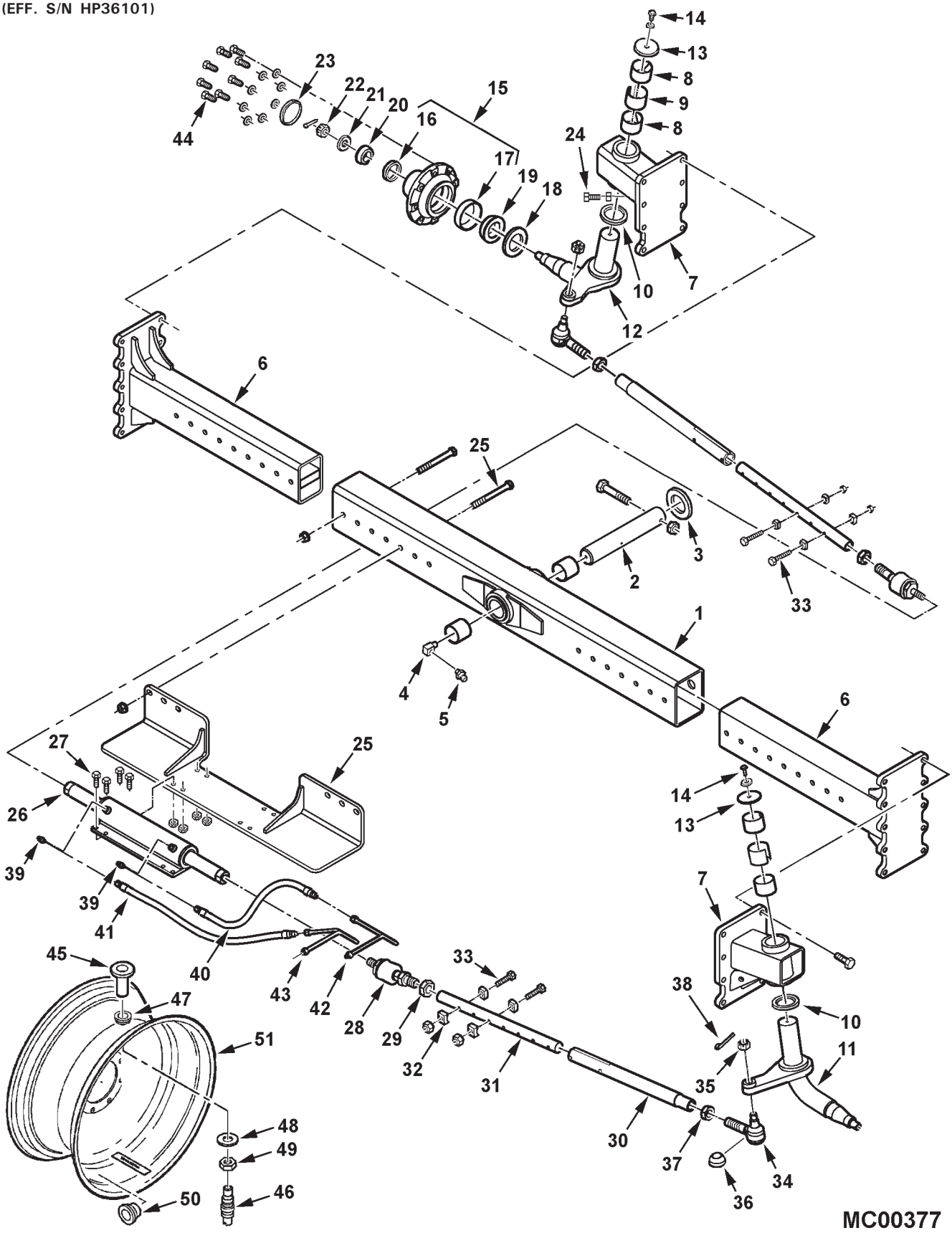

https://truckmanualshub.com/

REAR AXLE & WHEELS
ADJUSTABLE TREAD
(EFF. S/N HP36101)

ITEM	NUMBER	QTY	DESCRIPTION
1	71412150	1	AXLE ASY, CENTER SECTION, W/BUSHINGS
	2441250W1	2	BUSHING, PIVOT
2	2625050W1	1	PIN, REAR AXLE PIVOT
	70920272	1	CAPSCREW, 1/2-13 X 5 GR5
	704858	1	NUT, HEX TOP LOCK, 1/2-13
3	2441340W1	2	WASHER, THRUST
4	70925863	1	ELBOW,90 DEG, 1/4 NPTF X 1/4-18 NPTF FEM
5	13887X	1	LUBE FITTING, STR, 1/4-18 PTF
6	71400705B	2	EXTENSION WLDMT, ADJUSTABLE AXLE
	70922890	8	CAPSCREW, 3/4-10 X 7 GR5
	71359841	8	SPACER, HARD
	7774466	8	NUT, HEX FLNG SERR LOCK, 3/4-10
7	71400701B	2	HOUSING WLDMT, SPINDLE, W/BUSHINGS
	13811X	2	LUBE FTG, STR, 1/4-28 TAPER THD
	70925872	16	CAPSCREW, 3/4-10 X 2-1/4 GR5
8	71354306	4	BUSHING, SPINDLE
9	71338799	2	SPACER, BUSHING
10	71334986	4	WASHER, THRUST
11	71400698	1	SPINDLE, WLDMT, LEFT
12	71400693	1	SPINDLE, WLDMT, RIGHT
13	71338789	2	WASHER, .531 ID X 3.4 X .229 TH.
14	70923114	2	CAPSCREW, 1/2-13 X 1 GR5
	Y705046	2	LOCKWASHER, 1/2
15	71338308	2	HUB ASY. (INCL. ITEMS 16 & 17)
16	850181M1	1	CUP, BEARING, OUTER
17	195160M1	1	CUP, BEARING, INNER
18	71334988	2	SEAL, HUB
19	71334989	2	CONE, BEARING, INNER
20	850182M1	2	CONE, BEARING, OUTER
21	70936306	2	WASHER, HARD, 1.062 X 2.25 X .25 TH
22	704692	2	NUT, SLOTTED, 1-14 UNF GR2
	70922002	2	PIN, COTTER, 3/16 X 2
23	26674	2	CAP, HUB
24	70926127	2	CAPSCREW, 3/4-10 X 1-3/4 GR5
	70913160	2	NUT, 3/4-10 REG

CONTINUED

MC00377
PR: t05b08m42d0023

https://truckmanualshub.com/

REAR AXLE & WHEELS

ADJUSTABLE TREAD
(EFF. S/N HP36101)

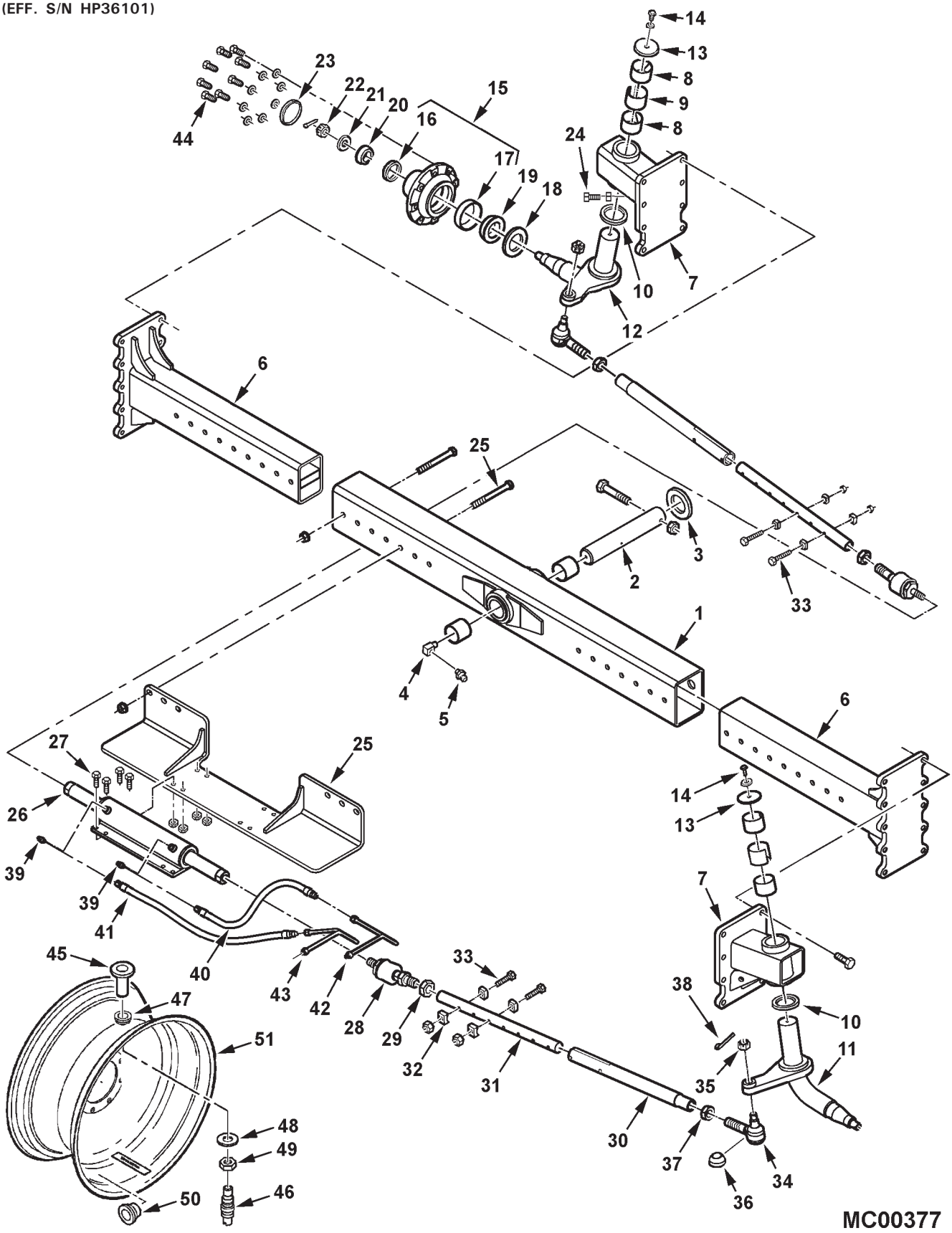

https://truckmanualshub.com/

ITEM	NUMBER	QTY	DESCRIPTION
25	71400716B	1	SUPPORT WLDMT, CYLINDER
	70936419	6	CAPSCREW, 3/4-10 X 7-1/2 GR5
	7774466	6	NUT, HEX FLNG SERR LOCK, 3/4-10
26	71400719	1	CYLINDER ASY, STEERING (SEE BREAKDOWN) (SERVICE ASY W/ 71406366)
	71406366	1	CYLINDER ASY, STEERING (SEE BREAKDOWN) (EFF. S/N HR36101 MID-PROD'N RUN)
27	70919089	8	CAPSCREW, 1/2-13 X 1-3/4 GR5
	Y704742	8	NUT, HEX FLANGE TOP LOCK, 1/2-13
28	71403691	2	BALL JOINT, IN-LINE (INCLUDES BOOT)
	71406302	AR	BOOT KIT, BALL JOINT
29	70923230	2	NUT, HEX JAM, 1-1/4-12 UNF
30	71400711	2	TUBE WLDMT, ADJUSTABLE TIE ROD
31	71400710B	2	ROD, ADJUSTABLE TIE
32	6661624	8	WASHER, CLAMP, .390 HOLE
33	70922918	4	CAPSCREW, 3/8-16 X 3-1/4 GR5
	7704141	4	NUT, HEX TOP LOCK, 3/8-16
34	71403690	2	SOCKET ASY, LH THREAD (INCL. IT 35 & 36)
35	70921295	2	NUT, SLOTTED HEX, 7/8-14 UNF
36	71406301	2	SEAL, DIRT
37	70930889	2	NUT, HEX JAM, 1-1/4-12 UNF, LH THD.
38	70925721	2	COTTER PIN, 5/32 X 2
39	70922523	2	ELBOW, 90 DEG, 9/16-18 JIC X ORB MALE
	70921885	2	O-RING, .078 X .468 ID
40	71395172	1	HOSE ASY, STRG CYL.
41	71395173	1	HOSE ASY, STRG CYL.
42	71398228	1	TUBE ASY, STEERING, UPPER
43	71395789	1	TUBE ASY, STEERING, LOWER
44	353613X1	16	CAPSCREW, 5/8-18 X 1-3/4 GR5
	70937005	16	WASHER, HARD, .656 X 1.31 X .095 TH
45	7027469	2	VALVE ASY, CLAMP-IN (TUBELESS)(COMPLETE) (INCL. ITEMS 46, 47, 48, 49)
46	71170388	2	VALVE HOUSING & CORE ASY, W/ CAP
47	71170390	2	GROMMET, TUBELESS TIRE
48	71175919	2	WASHER, TUBELESS TIRE
49	71175918	2	NUT, TUBELESS TIRE
50	539651M1	2	PLUG, RIM HOLE, TUBELESS TIRE
51	71372132	2	WHEEL RIM, 14.9 X 24 TIRE
	71372133	2	WHEEL RIM, 16.9 X 24 TIRE
	71399115	2	WHEEL RIM, 16.9 X 26 TIRE

MC00377
PR: t05b08m42d0023

https://truckmanualshub.com/

REAR AXLE & WHEELS
REAR WHEEL ASSIST

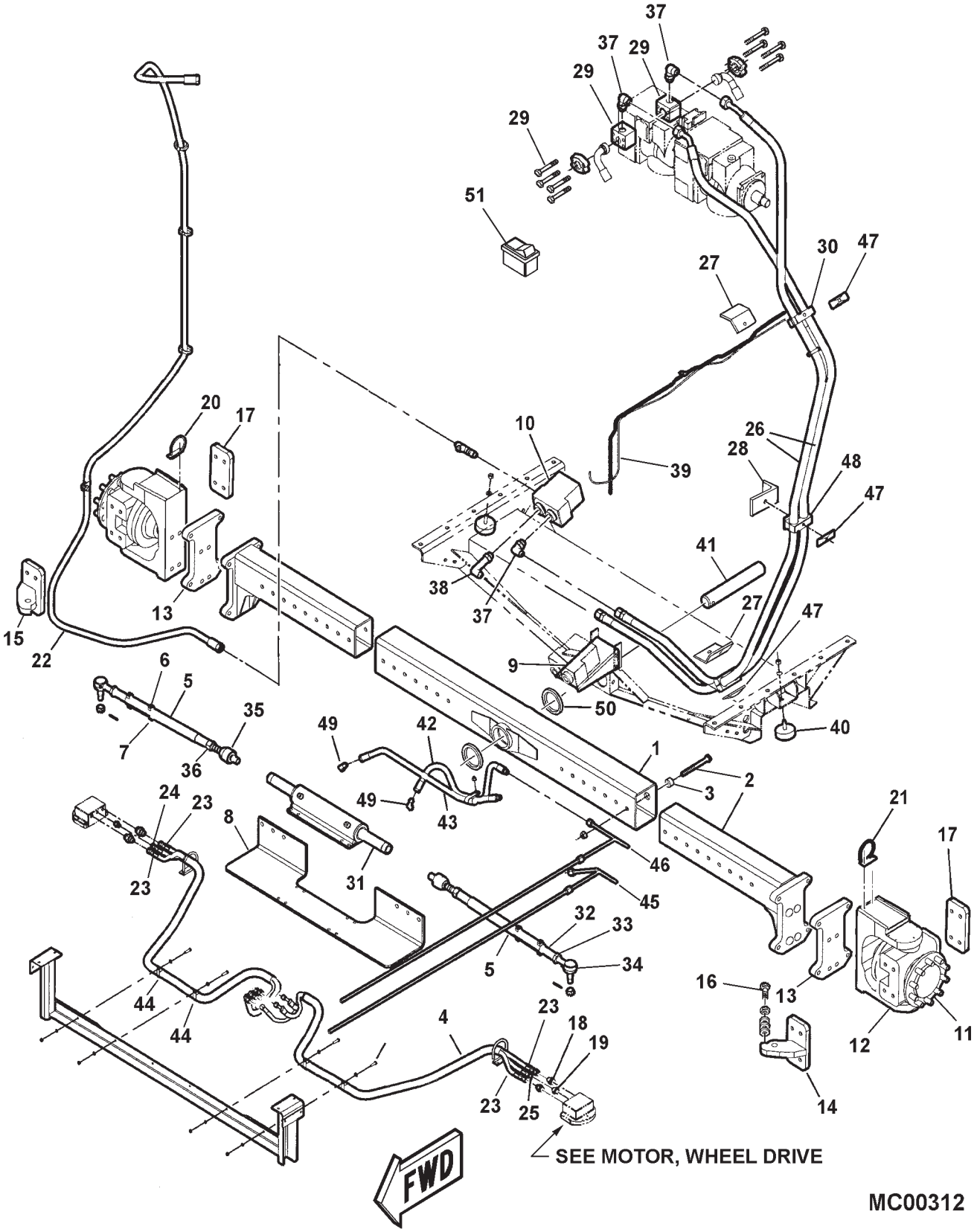

https://truckmanualshub.com/

ITEM	NUMBER	QTY	DESCRIPTION
1	71389394	1	CENTER BEAM ASY, W/ BUSHING
	2441250W1	2	BUSHING
2	71397196	2	EXTENSION ASY.
	100801	8	CAPSCREW, 3/4-10 X 7 GR 8
	70927879	6	CAPSCREW, 3/4-10 X 7-1/2 GR 8
	71397179	14	NUT, HEX FLNG SERR LOCK, 3/4-10
3	112253W1	8	SPACER SLEEVE, HARDENED
4	71397181	2	SLEEVE, CORDURA-PROTECTIVE
5	71397199	2	TIE ROD WLDMT, OUTER
	70924746	4	CAPSCREW, 1/2-13 X 3-1/2 GR8
	71397205	4	NUT, LOCK, 1/2-13
6	71359864	4	CLAMP HALF, TIE ROD
7	71359865	4	SPACER, TIE ROD BOLT, 7/8 OD X .53 ID
8	71397198	1	MOUNT WLDMT, CYLINDER
9	71397204	1	BRACKET, VALVE
	703249	4	CAPSCREW, 3/8-16 X 1 GR5
	Y704734	4	NUT, HEX FLNG. TOP LOCK 3/8-16
10	71396625	1	VALVE ASY.
	70923470	2	CAPSCREW, 3/8-16 X 1-1/2 GR8
	705038	2	LOCKWASHER, 3/8 REG
11	71396580	2	MOTOR, WHEEL DRIVE, 1250CC
			(SEE WHEEL MOTOR UNIT FOR BREAKDOWN)
12	71397193	2	C-FRAME
	70950420	16	CAPSCREW, M20-2.5 X 80
	70934704	16	WASHER, 3/4 HARD
	71397186	8	DOWEL PIN
13	71397197	2	ENDPLATE
14	71397202	1	EAR WLDMT, TIE ROD (LH)
	71397187	4	CAPSCREW, M20-2.5 X 40, CL 10.9
	70934704	4	WASHER, 3/4 HARD
	71397186	2	DOWEL PIN
15	71397203	1	EAR WLDMT, TIE ROD (RH)
	71397187	4	CAPSCREW, M20-2.5 X 40, CL 10.9
	70934704	4	WASHER, 3/4 HARD
	71397186	2	DOWEL PIN
16	7771629	2	CAPSCREW, 5/8-11 X 2 GR8
	71397180	12	WASHER, HEAVY FLAT, 5/8
	364377X1	2	NUT, JAM 5/8-11 GR5
17	71397185	2	PLATE, MOUNT
	71397187	8	CAPSCREW, M20-2.5 X 40, CL 10.9
	70934704	8	WASHER, 3/4 HARD

CONTINUED

https://truckmanualshub.com/

REAR AXLE & WHEELS
REAR WHEEL ASSIST

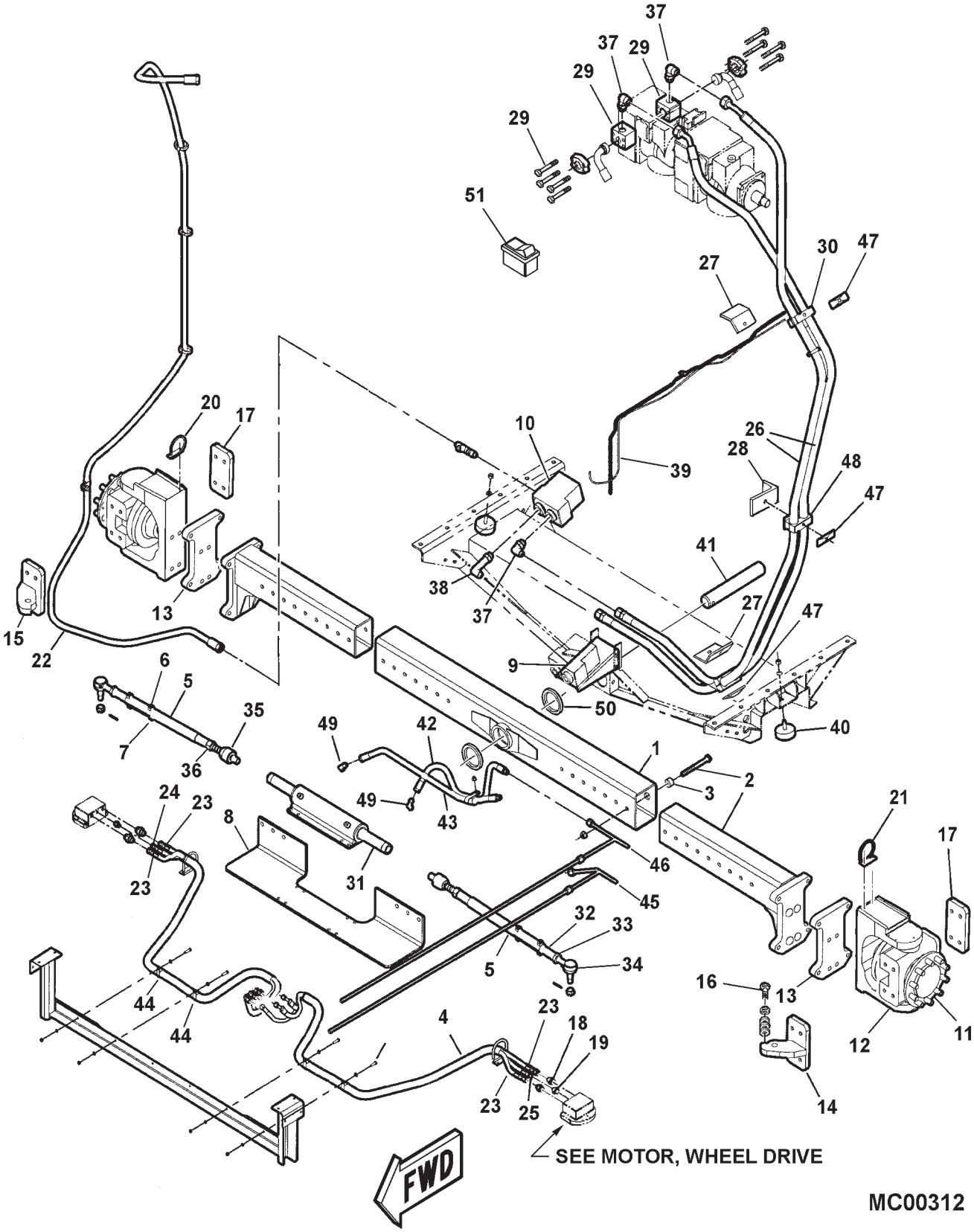

https://truckmanualshub.com/

ITEM	NUMBER	QTY	DESCRIPTION
18	70924296	4	ADAPTER, 1-1/16-12 ORB X 3/4-16 JIC
	70921206	1	O-RING, .116 X .924 ID
19	360202X91	2	ADAPTER, 3/4-16 ORB X 9/16-18 JIC
	70921349	1	O-RING, .087 X .644 ID
20	71397190	1	GUIDE, HOSE (RH)
21	71397191	1	GUIDE, HOSE (LH)
	71396601	4	CAPSCREW, SOCKET HD, M10-1.5 X 25
22	71395787	1	HOSE ASY., RWA TO RESERVIOR, 180" LONG
	3619622M1	5	TIE, SELF LOCKING
	70925621	1	CLAMP, 1.0 TUBE X .406 HOLE
	703249	1	CAPSCREW, 3/8-16 X 1 GR5
	705038	1	LOCKWASHER, 3/8
	70916950	1	NUT, REG 3/8-16
23	1077183M91	4	HOSE ASY. (HI-PRESSURE) (O.L. 69")
24	112283W1	1	HOSE ASY., DRAIN (O.L. 71") (RH)
25	71397189	1	HOSE ASY., DRAIN (O.L. 67") (LH)
26	71395781	2	HOSE ASY, PUMP PRESSURE (O.L. 140")
27	101843M1	2	BRACKET, STEERING HOSE
	703249	2	CAPSCREW, 3/8-16 X 1 GR5
	705038	2	LOCKWASHER, 3/8
	70916950	2	NUT, REG 3/8-16
28	71384284	1	BRACKET, CLAMP
	703249	1	CAPSCREW, 3/8-16 X 1 GR5
	705038	1	LOCKWASHER, 3/8
	70916950	1	NUT, REG 3/8-16
29	71395167	2	ADAPTOR, MANIFOLD BLOCK
	70926533	2	O-RING .139 X 1.296 ID, VITON
	773697	8	CAPSCREW, 7/16-14 X 4
30	102028M1	2	CLAMP, DOUBLE, 1-1/4 DIA
31	71396617	1	CYLINDER ASY, STEERING (SEE BREAKDOWN)
	70921898	8	CAPSCREW, 1/2-13 X 2 GR8
	Y705624	8	WASHER, 1/2 NARROW
	Y704742	8	NUT, HEX FLNG TOP LOCK, 1/2-13
32	71397201	2	TUBE, INNER TIE ROD
33	71397184	2	NUT, JAM 1-1/4-12 LH
34	71397195	2	END, TIE ROD LH
	----------	2	NUT, SLOTTED HEX
	70925719	2	PIN, COTTER, 1/8 X 2
35	71397192	2	SOCKET, INLINE
36	71397194	2	NUT, JAM M30-1.5
37	71355395	3	ELBOW, 90 DEG. -12 ORB X -12 ORFS
	70923843	3	O-RING, .070 X .739 ID
	70921206	3	O-RING, .116 X .924 ID

CONTINUED

https://truckmanualshub.com/

REAR AXLE & WHEELS
REAR WHEEL ASSIST

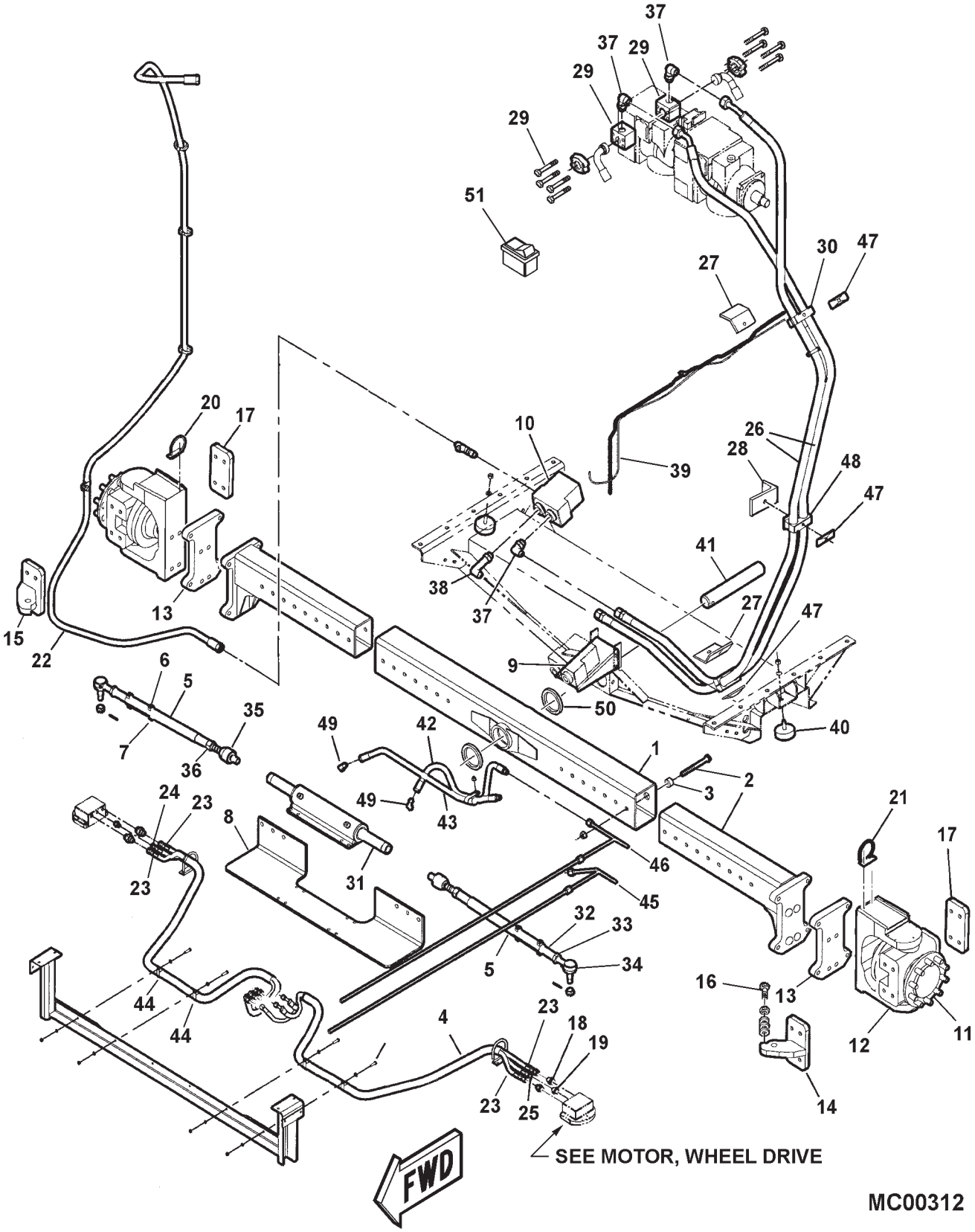

https://truckmanualshub.com/

ITEM	NUMBER	QTY	DESCRIPTION
38	71359897	1	ELBOW, 90 DEG., LONG
	70923843	1	O-RING, .070 X .739 ID
	70921206	1	O-RING, .116 X .924 ID
39	102367M1	1	WIRE ASY, 147" LONG
	3619622M1	6	TIE, SELF LOCKING
40	71355063	2	STOP, PIVOT
	Y705046	2	WASHER, LOCK, 1/2
	704031	2	NUT, 1/2-13
41	2625050W1	1	PIN, REAR AXLE PIVOT
	70920272	1	CAPSCREW, 1/2-13 X 5 GR5
	704858	1	NUT, HEX TOP LOCK, 1/2-13
42	71395173	1	HOSE ASY., STEERING CYL. 41.5" (LH)
43	71395172	1	HOSE ASY., STEERING CYL. 29.4" (RH)
44	70929785	4	CLAMP, 2.00 TUBE X .531 HOLE
	703249	2	CAPSCREW, 3/8-16 X 1 GR5
	70920415	2	CAPSCREW, 3/8-16 X 1-1/4 GR5
	705038	4	LOCKWASHER, 3/8
	70916950	4	NUT, REG 3/8-16
45	71395789	1	TUBE ASY., STEERING (RH)
46	71398228	1	TUBE ASY., STEERING (LH)
	70929872	1	CLAMP, .875 TUBE X .406 HOLE
	703249	1	CAPSCREW, 3/8-16 X 1 GR5
	705038	1	LOCKWASHER, 3/8
	70916950	1	NUT, REG 3/8-16
47	101842M1	3	COVER PLATE, DOUBLE HYD HOSE
	70926106	3	CAPSCREW, 5/16-18 X 3-1/4
	7704117	3	NUT, HEX TOP LOCK, 5/16-18
48	101841M1	1	CLAMP PAIR, DOUBLE, 1-1/2 DIA
49	70922523	2	ELBOW, 90 DEG, 9/16-18 JIC X 9/16-18 ORB
	70921885	AR	O-RING, .078 X .468 ID
50	2441340W1	2	WASHER, THRUST
51	71387414	1	SWITCH, RWA, ON/OFF
-	71395065	AR	KIT, RWA AXLE ASY. (FIELD INSTALLED)
			(ORDER THRU DEALER CENTRAL)

MC00312
PR: 438

https://truckmanualshub.com/

REAR WHEEL ASSIST
WHEEL MOTOR UNIT

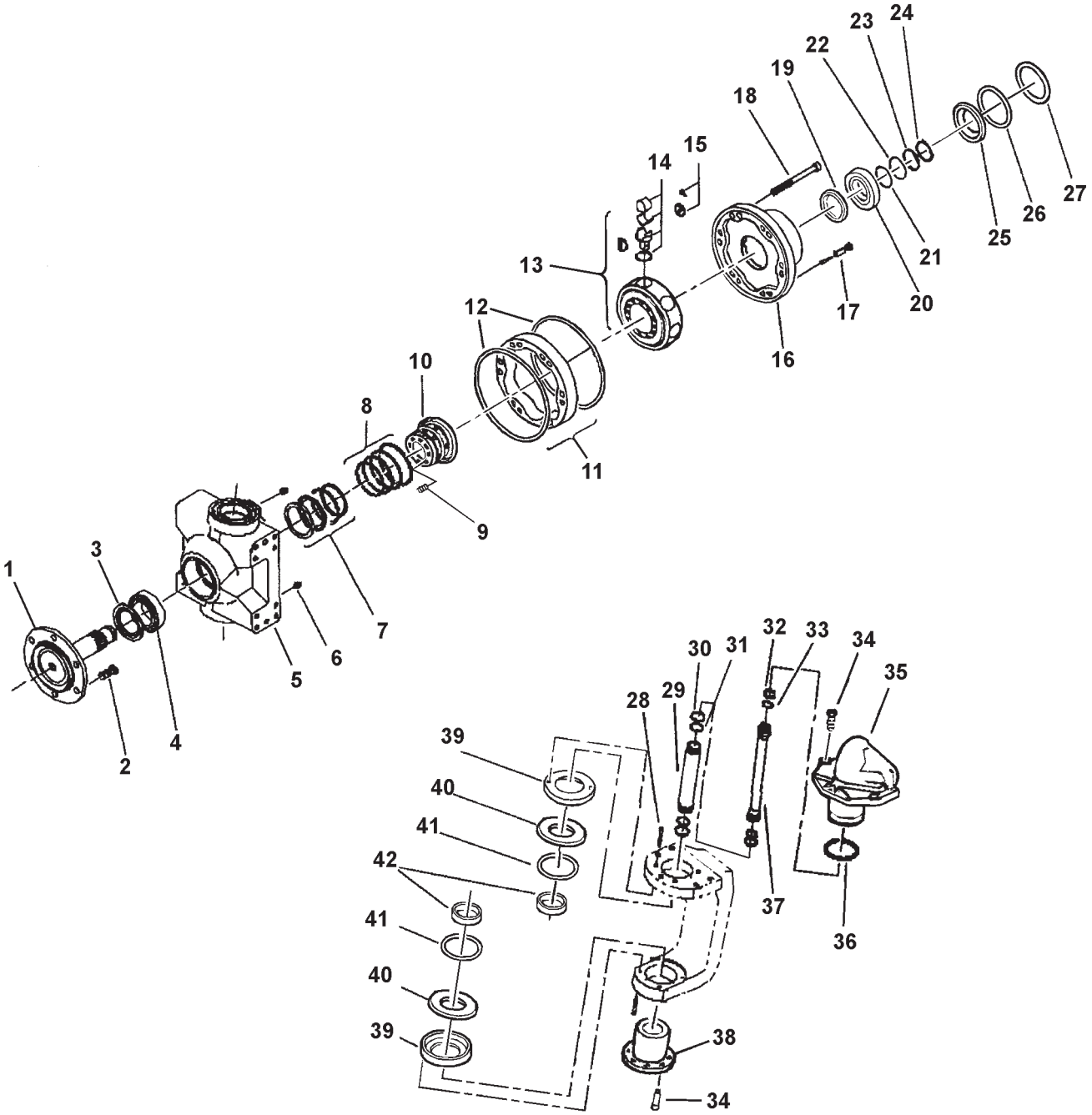

https://truckmanualshub.com/

ITEM	NUMBER	QTY	DESCRIPTION
-	71396580	AR	MOTOR, RWA, 1250 CC
1	71396597	1	SHAFT, WHEEL HUB
2	71359912	10	STUD, M20
3	71396590	1	DEFLECTOR, GREASE SEAL
4	71359946	1	BEARING, OUTER
5	71396584	1	SUPPORT, BEARING
6	71396596	2	FITTING, GREASE
7	71396585	1	SEAL, SHAFT, INNER
8	1081158M91	1	SEAL KIT, DISTRIBUTOR
9	71359923	8	SPRING
10	71359922	1	DISTRIBUTOR, VALVE BLOCK
11	1081151M1	1	CAM RING, (INCL. ITEM 12)
12	71359927	2	O-RING
13	112202W91	1	CYLINDER BLOCK ASY.
14	71396614	10	PISTON KIT
15	112204W91	1	PISTON RETAINER KIT (SERVICES 10 PISTONS)
16	71396598	2	SAFETY PIN
17	71396593	1	HOUSING BACK
18	71396595	14	CAPSCREW, SOCKET HEAD, M12 X 75
19	71396592	1	SPACER
20	71396586	1	BEARING, INNER
21	71396587	1	SHIM PACK
22	71396591	1	SPACER, BEARING
23	71396588	2	RETAINING RING, SPLIT
24	71396589	1	SNAP RING
25	71396581	1	COVER PLATE
26	71396583	1	O-RING
27	71396582	1	SNAP RING
28	71396605	8	CAPSCREW, SOCKET HEAD, M6 X 35
29	71396606	1	PIPE, OUTER
30	71396611	2	RING, BACK-UP, OUTER PIPE
31	71396610	2	O-RING, OUTER PIPE
32	71396613	2	RING, BACK-UP, INNER PIPE
33	71396612	2	O-RING, INNER PIPE
34	71396601	9	CAPSCREW, SOCKET HEAD, M10 X 25
35	71396599	1	PIN, TOP
36	71396608	1	SEAL, TOP PIN
37	71396607	1	PIPE, INNER
38	71396600	1	PIN, BOTTOM
39	71396604	2	SEAL, COVER, PROTECTOR
40	71396603	2	WASHER, THRUST
41	71396609	2	SEAL
42	71396602	2	BUSHING
-	71396594	1	SHIM (NOT ILLUSTRATED)
-	71396615	AR	SEAL KIT (INCL. ITEMS 3, 7, 8, 12 21, 26)
-	71396616	AR	BEARING KIT, KING PIN (INCL. ITEMS 36, 40, 41, 42)

MC00316
PR: 444

https://truckmanualshub.com/

REAR WHEEL ASSIST
SELECTOR VALVE & FLOW DIVIDER

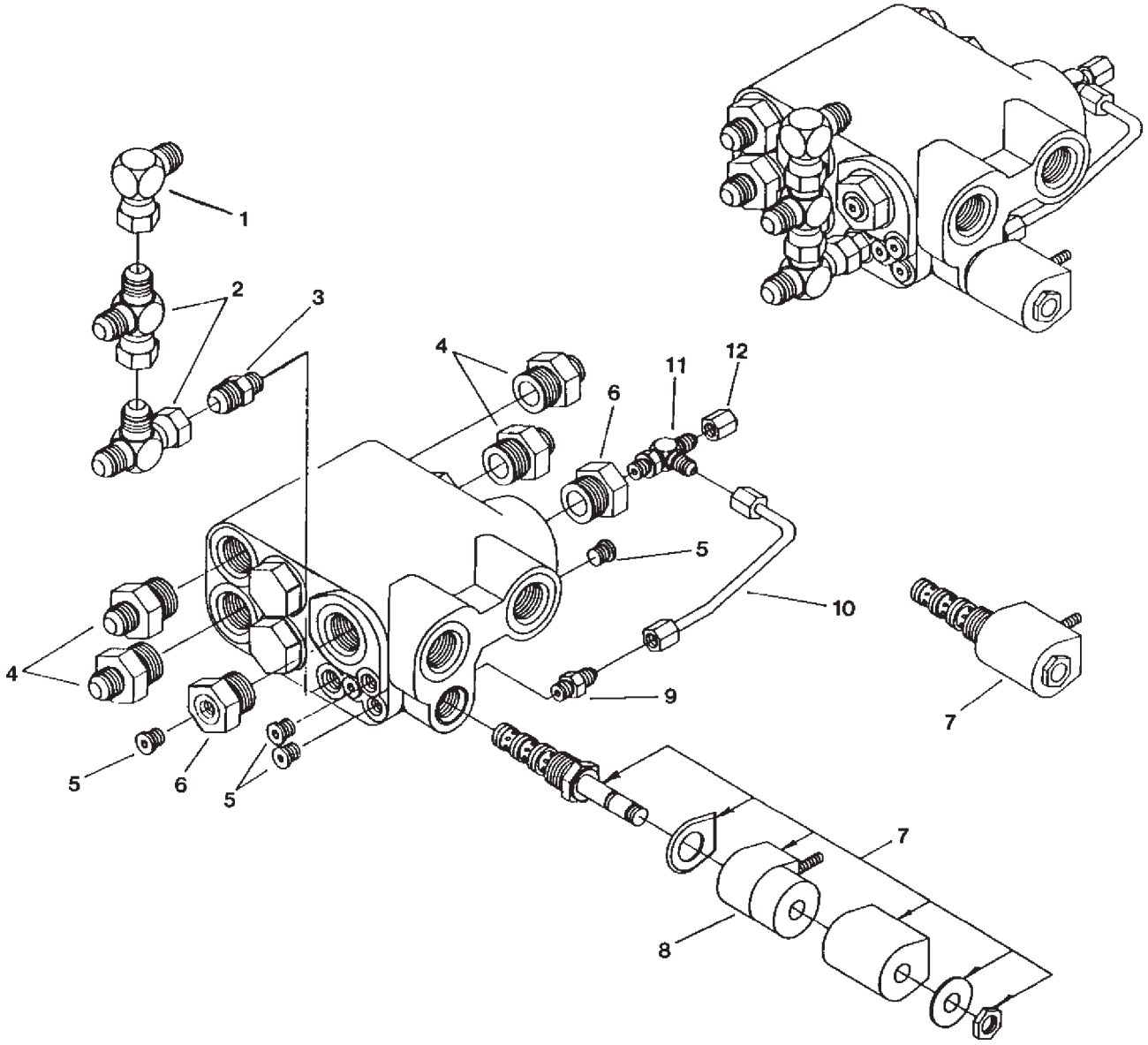

MC00074

https://truckmanualshub.com/

ITEM	NUMBER	QTY	DESCRIPTION
-	71396625	1	VALVE ASSEMBLY
1	70921279	1	ELBOW, SWIVEL, 3/4-16 37 DEG. FLARE
2	70921298	2	TEE, SWIVEL RUN, 3/4-16 37 DEG. FLARE
3	70924403	1	CONN, STR. 9/16-18 ORB X 3/4-16 JIC
	70921885	1	O-RING, .078 X .468 ID
4	70924296	4	CONN. STR. 1-1/16-12 ORB X 3/4-16 JIC
	70921206	4	O-RING, .116 X .924 ID
5	70928605	4	PLUG, HEX SOCKET, 7/16-20 ORB-M
	70921883	4	O-RING, .072 X .351 ID
6	1077239M91	2	REDUCER, ORB, 1-1/16-12 M X 7/16-20 FEM.
	70921206	2	O-RING, .116 X .924 ID
7	71359890	1	SOLENOID CARTRIDGE VALVE
8	71359891	1	SOLENOID COIL
9	70923163	1	CONN. STR. 7/16-20 JIC X ORB MALE
	70921883	1	O-RING, .072 X .351 ID
10	71359889	1	TUBE ASY, PILOT PRESSURE
11	70924783	1	TEE, ADJ. RUN, 7/16-20 JIC X ORB
	70921883	1	O-RING, .072 X .351 ID
12	70921467	1	CAP, HEX, 7/16-20 JIC FEM.
	1077240M91	1	PLUG, HEX SOCKET, 7/16-20 ORB
	1077238M91	AR	PLUG, MODIFIED, 3/4-16 ORB
	70922874	AR	PLUG, HEX SOCKET, 5/16-24 ORB
-	112235W91	-	KIT, SEAL, ET-II ORB O-RINGS

MC00074
PR: 446

https://truckmanualshub.com/

WHEELS
DRIVE

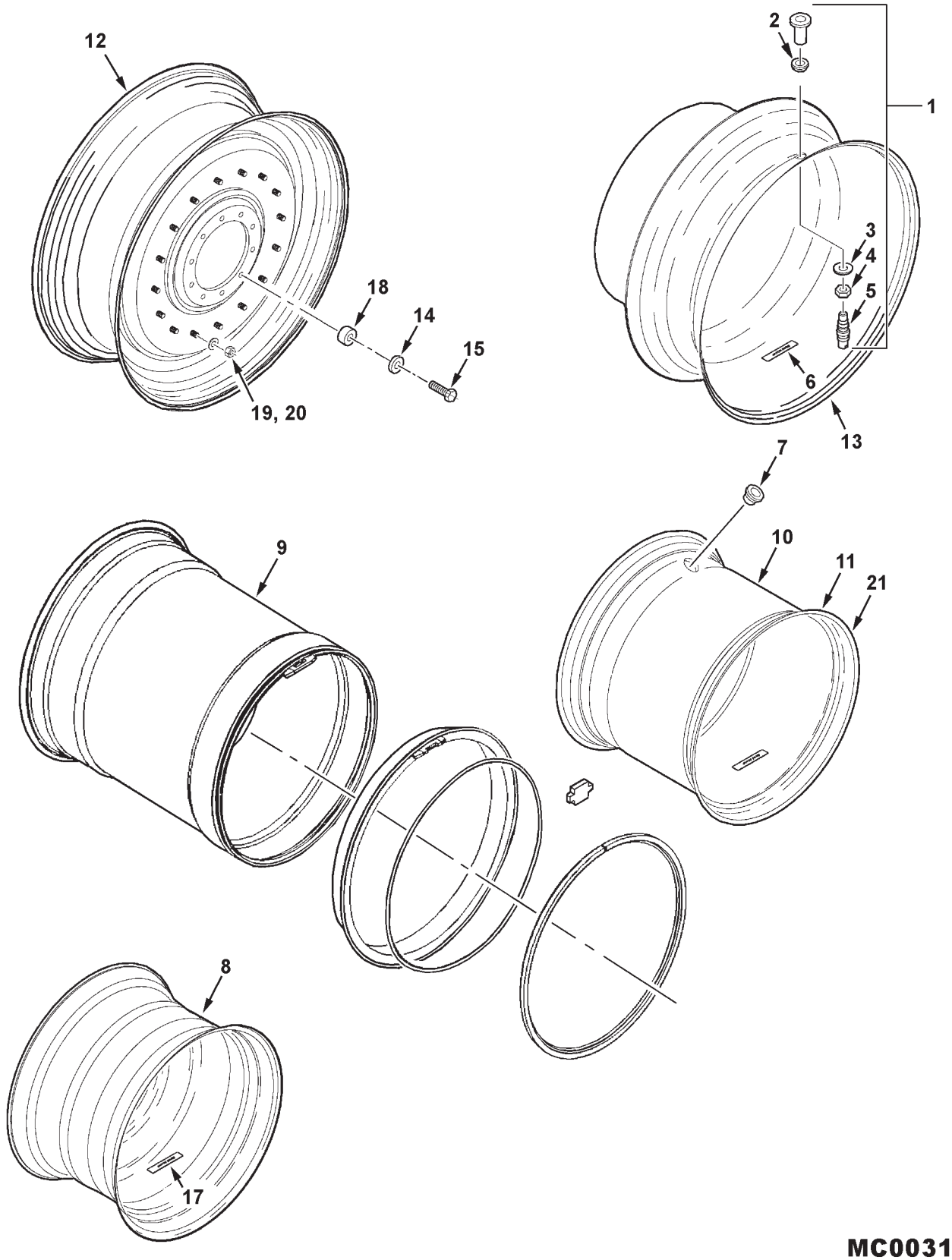

MC00317

https://truckmanualshub.com/

ITEM	NUMBER	QTY	DESCRIPTION
1	7027469	2	VALVE ASY, CLAMP-IN (COMPLETE)(INCL ITEMS 2, 3, 4, 5)(TUBELESS TIRE)
	71169204	AR	PLUG ASY (USED IN PLACE OF ITEM 5)
2	71170390	2	GROMMET, RIM
3	71175919	2	WASHER, ADAPTER HSG
4	71175918	2	NUT, ADAPTER HSG
5	71170388	2	VALVE HOUSING & CORE ASY, W/ CAP
6	71184188	2	DECAL, TORQUE (400 FT. LBS.)
7	539651M1	1	PLUG, RIM HOLE (FOR TUBELESS TIRE)
8	71328912	2	WHEEL - FOR 16.9 X 34 TIRE
9	71396374	2	WHEEL ASY, 32 X 36DWW -FOR 73X44X32 TIRE & 1050/50R-32 TIRE. (INCL. FOLLOWING, LESS VALVE ASY)
	71398241	2	WHEEL, LESS COMPONENTS
	71398242	2	RING, DRIVER, 32"
	71398243	2	LOCKRING, 32"
	71398244	2	O-RING, 32"
	71398245	2	DRIVER KEY
	71401733	2	VALVE STEM ASY, CLAMP-IN
10	71361406	2	WHEEL - FOR 30.5L X 32 TIRE
11	71361406	2	WHEEL - FOR 800/65R-32 TIRE (120" TREAD)
	71401766	2	WHEEL - FOR 800/65R-32 TIRE (123" TREAD)
	71401735	2	WHEEL - FOR 900/60R-32 TIRE
12	71384878	2	WHEEL, INNER DUAL - FOR 18.4R-42 TIRE (INCLS STUD, PRESS-IN, 16 PER WHEEL)
	71398211	2	WHEEL, INNER DUAL - FOR 20.8R-38 TIRE (INCLS STUD, PRESS-IN, 16 PER WHEEL)
	71396348	2	WHEEL, INNER DUAL - FOR 20.8R-42 TIRE (INCLS STUD, PRESS-IN, 16 PER WHEEL)
	71388713	32	STUD, WHEEL (PRESS-IN) 3/4-16 UNF
13	71384879	2	WHEEL, OUTER DUAL - FOR 18.4R-42 TIRE
	71398212	2	WHEEL, OUTER DUAL - FOR 20.8R-38 TIRE
	71396349	2	WHEEL, OUTER DUAL - FOR 20.8R-42 TIRE
14	705665	20	WASHER, HARD, 7/8 WIDE
15	70925806	20	CAPSCREW, 7/8-9 X 3" GR8
17	71348455	2	DECAL, TORQUE, INNER WHEEL (600FT.-LBS)
18	71370926	20	SPACER, WHEEL BOLT (INNER WHEEL)
19	70936298	32	NUT, HVY HEX, 3/4-16UNF GR8
20	Y705566	32	WASHER, HARD, .812 X 1.50 X 9 GA
21	71370934	4	WHEEL, DUAL - FOR 24.5-32 TIRES
	71404432	2	SPACER SPOOL, 19.5" WIDE (NOT ILLUST'D)
	700724394	20	CAPSCREW, 7/8-9 X 3-3/4 GR8
	700724395	20	CAPSCREW, M22 X 2.25 X 65 MM CL 10.9
	71404430B	1	PLATE,SPACER, 1" (DECK EXT'N)(NOT ILLUS)

https://truckmanualshub.com/

BELTS
LEFT

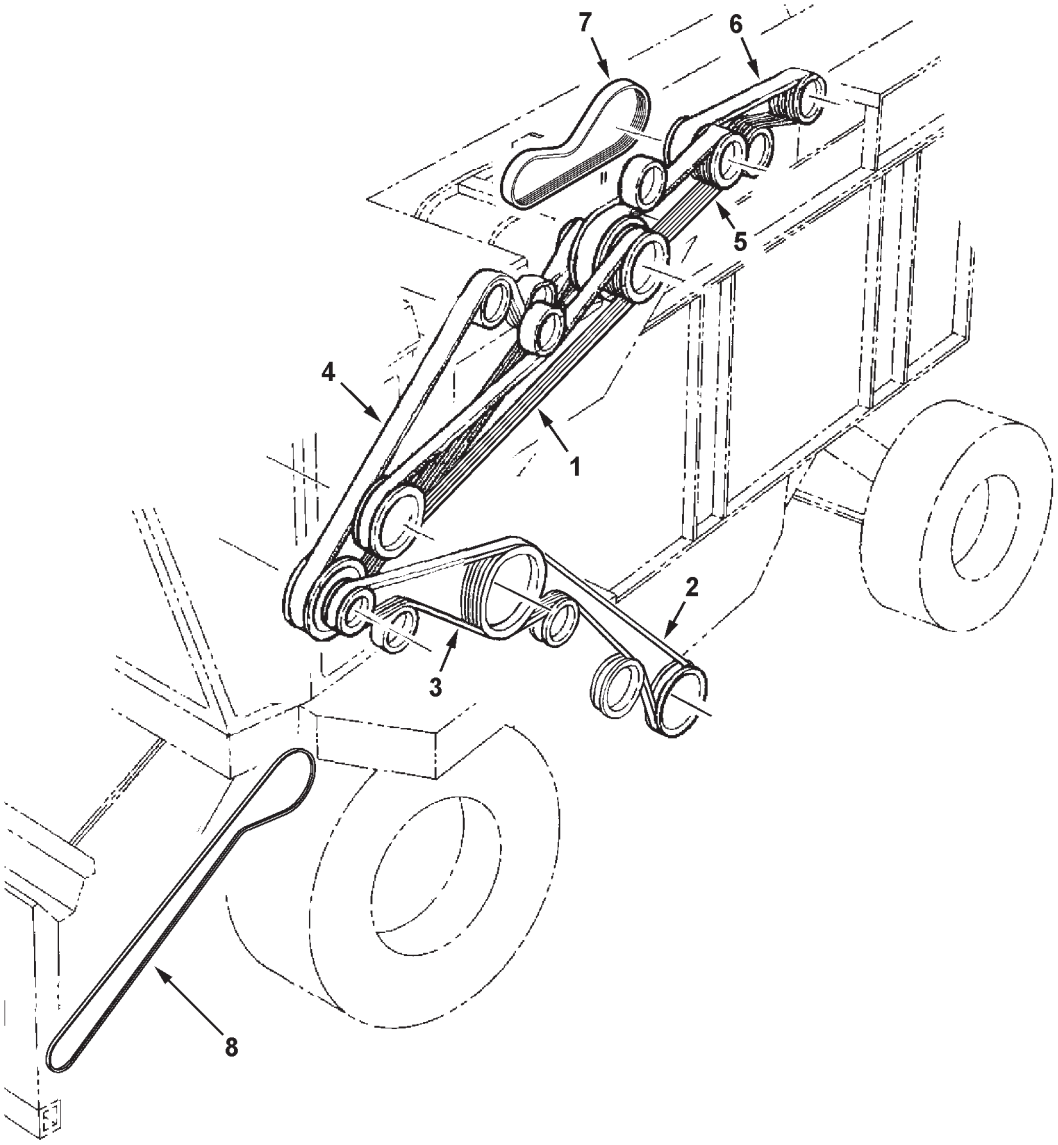

MC00390

https://truckmanualshub.com/

ITEM	NUMBER	QTY	DESCRIPTION
1	101102M1	1	BELT, UNLOADER, 149.3"
2	227455M1	1	BELT,GRAIN ELEV, 130"(PRIOR S/N HP36101)
	71403685	1	BELT,GRAIN ELEV,129.5"(EFF. S/N HP36101)
3	71390199	1	BELT, SHAKER SHOE PITMAN, 100.8"
4	71388216	1	BELT, BEATER, 175.3"
5	71390188	1	BELT, MAIN COUNTERSHAFT, 143.0"
6	71390210	1	BELT, ROTOR PUMP DRIVE, 90.2"
7	71390209	1	BELT, PROPEL PUMP DRIVE, 92.1" (PRIOR S/N HR36101)
	71406620	1	BELT, PROPEL PUMP DRIVE, 93.3" (EFF. S/N HR36101)
8	71398388	1	BELT, HDR C'SHAFT TO PIVOT SHAFT, 195.5" (EFF. S/N HP36101)

MC00390
PR: 450

https://truckmanualshub.com/

BELTS
RIGHT

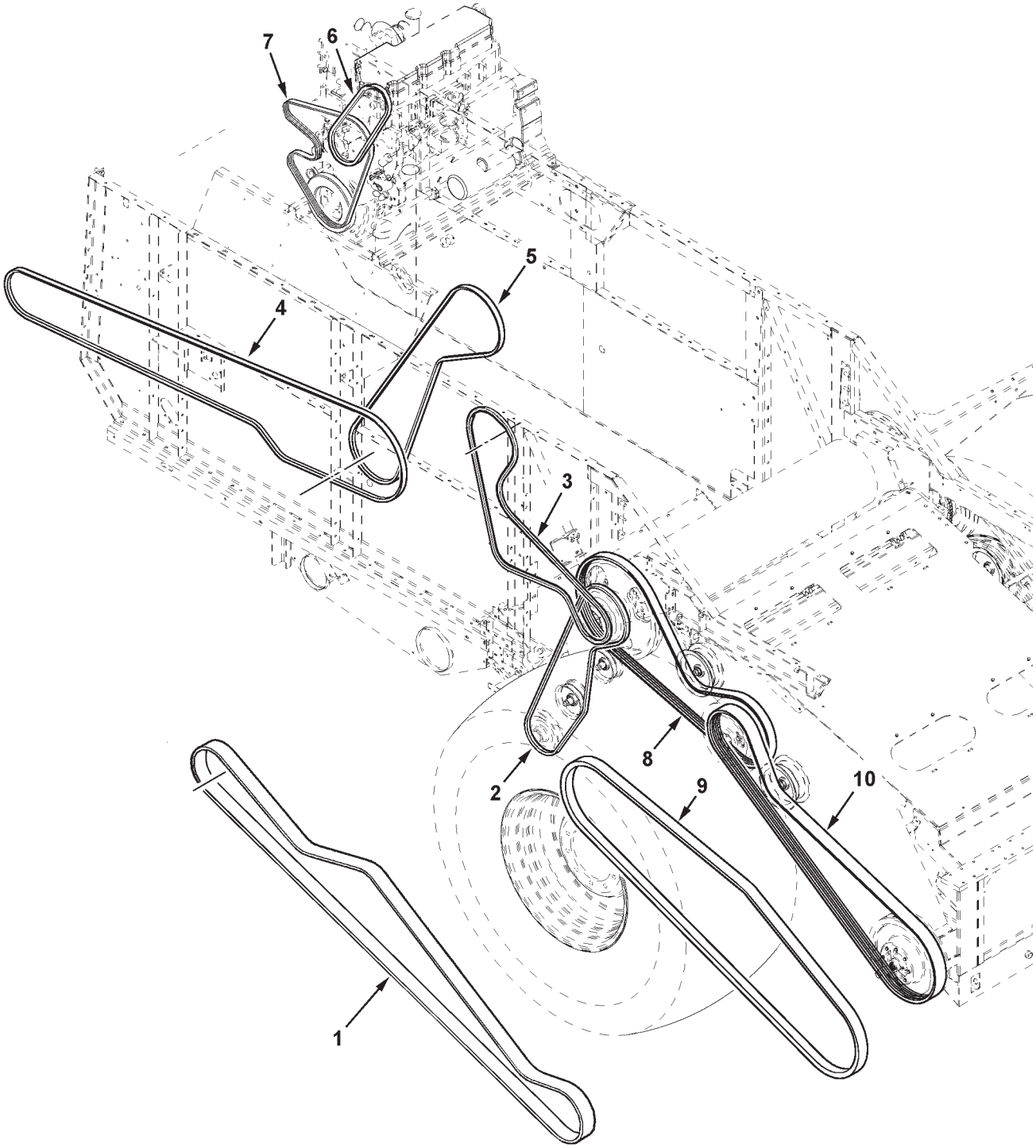

MC00388

https://truckmanualshub.com/

BELTS
RIGHT

ITEM	NUMBER	QTY	DESCRIPTION
1	71379105	1	BELT, BEATER TO HDR C'SHAFT, 4-V, 217.0" (PRIOR S/N HP36101)
2	71394352	1	BELT, V/S FAN, 115"
3	71385801	1	BELT, RETURN ELEVATOR, 109.6"
4	71388712	1	BELT, CHOPPER SECONDARY, 213.75" (PRIOR S/N HR36101)
	71406339	1	BELT, CHOPPER SECONDARY, 214.2" (EFF. S/N HR36101)
	1680230W1	1	BELT, SPREADER, 233.2"
5	227455M1	1	BELT, SPREADER JACKSHAFT, 130"
	71385837	1	BELT, CHOPPER PRIMARY, 123.75" (PRIOR S/N HR36101)
	71406361	1	BELT, CHOPPER PRIMARY, 136.5" (EFF. S/N HR36101)
6	71148120	1	BELT, A/C COMPRESSOR
7	3289213V	1	BELT, FAN/ALTERNATOR (68.5"LG)
	71410501V	1	BELT, FAN/ALT. (KIT, PRIOR S/N HR36101)
	V685121585	1	BELT, FAN/ALT., SISU
8	71398384	1	BELT,BEATER TO FEEDR HOUSE JKSHAFT, 136" (EFF. S/N HP36101)
9	71399505	1	BELT, V.S. TO HEADER C'SHAFT, HM, 157.5" (EFF. S/N HP36101)
10	71399519	1	BELT,JCKSHAFT TO HDR C'SHAFT, 3-V,160.5" (EFF. S/N HP36101)

MC00388
PR: 452

https://truckmanualshub.com/

CHAINS
DRIVE

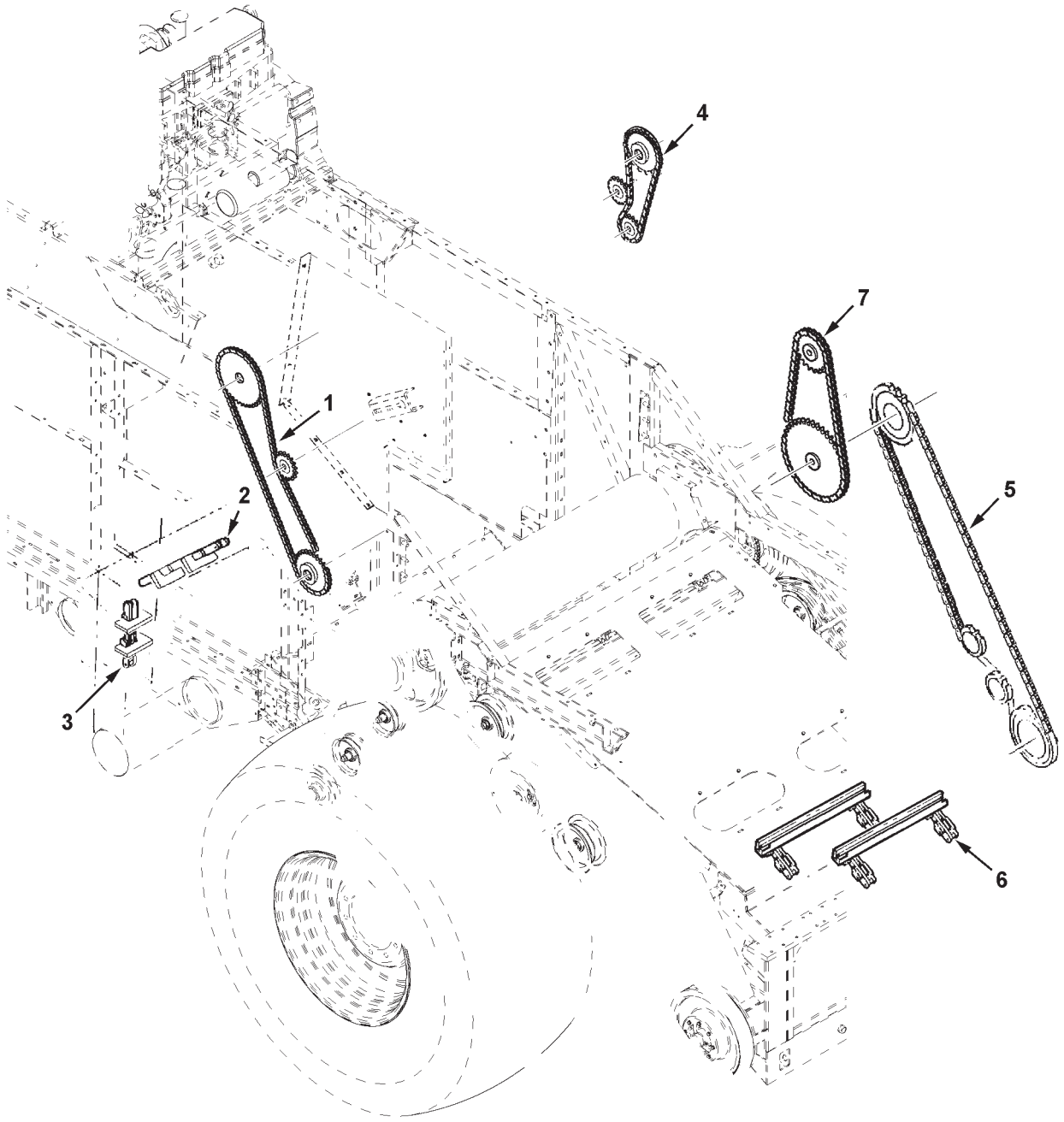

MC00322

https://truckmanualshub.com/

ITEM	NUMBER	QTY	DESCRIPTION
1	Y851774	1	CHAIN ASY, BIN FILL, #50, 101 PITCHES, (PLUS 1 CONNECTR)(PRIOR S/N HN36101)
	-----	1	CHAIN #50, 109 PITCHES (USE 107 LINKS OF BULK CHAIN, PLUS 1 CONNECTOR #50 & 1 OFFSET LINK #50 (EFF. S/N HN36101)
	840327M91	1	CHAIN #50, 5/8 PITCH, BULK (10 FT)
	70913682	1	LINK, CONNECTOR, #50
	70913680	1	LINK, OFFSET, #50
2	2615233W92	1	CHAIN ASY, RETURN ELEV. (119 LINKS) (PRIOR S/N HP36101)
	71406795	1	CHAIN ASY, RETURN ELEV. (118 LINKS) (EFF. S/N HP36101)
	70927035	AR	LINK, OFFSET
	70927034	AR	LINK, ROLLER
	329951M91	AR	LINK, CONNECTOR
	2605880W91	29	LINK, ATTACHING, PAIR
	W1511670	29	CUP, FLIGHT
	70921333	58	CAPSCREW, 5/16-18 X 1
	70923362	58	NUT, CENTER LOCK, 5/16-18
	70917642	58	WASHER, 5/16, WIDE
	2635690W1	58	SPACER SLEEVE
3	71393534	1	CHAIN ASY., GRAIN ELEVATOR
	71393533	1	CHAIN ASY, LESS SCRAPERS
	71149388	AR	LINK, ATTACHING
	70927034	AR	LINK, ROLLER
	70927035	AR	LINK, OFFSET
	71364946	37	SCRAPER
	70927401	74	CAPSCREW, 1/4-20 X 1.0
	700709601	74	WASHER, FLAT 1/4
	Y704395	74	LOCKNUT, 1/4-20
4	-----	1	CHAIN, UNLOADER DR, #60, 70 PITCHES (USE 69 LINKS OF BULK CHAIN AND 1 CONNECTOR)
	70921050	AR	CHAIN, #60, 3/4 PITCH, BULK (10 FT)
	70914584	AR	LINK, CONNECTOR, #60
5	71149992	1	CHAIN ASY., FEEDER DRIVE, # 60 (PRIOR S/N HP36101)
	70914584	AR	LINK, CONNECTOR, #60
6	71449003	1	CHAIN ASY, FEEDER CONVEYOR, W/SLATS (PRIOR S/N HP36101)
	71149999	1	CHAIN ASY, CENTER(PRIOR S/N HP36101)
	71449001	2	CHAIN ASY, SIDE (PRIOR S/N HP36101)
	71449017	1	CHAIN ASY, FEEDER CONVEYOR, W/SLATS (EFF. S/N HP36101)
	71449016	1	CHAIN ASY, CENTER (EFF. S/N HP36101)
	71449015	2	CHAIN ASY., SIDE (EFF. S/N HP36101)
	71149894	AR	LINK, ATTACHING
	70937300	AR	LINK, ROLLER
	71149896	AR	LINK, OFFSET (INCL. PIN & LOCKNUT)
	71149895	AR	LINK, COUPLING
	70920397	AR	NUT, NYLON LOCK, 1/4-20
	71387896	28	SLAT, FEEDER CHAIN
	70937603	112	CAPSCREW, LOCKING, 1/2-13 X 3/4 GR8
	70928512	112	NUT, 1/2-13 REG GR8
7	- - - - -	1	CHAIN ASY, FEEDER REVERSER, #60 (EFF. S/N HP36101)
	71449019	1	CHAIN, #60, 71 PITCHES
	70914584	1	CONNECTOR LINK, #60 CHAIN

https://truckmanualshub.com/

YIELD MONITOR SYSTEM W/ 1 HZ WAAS DGPS

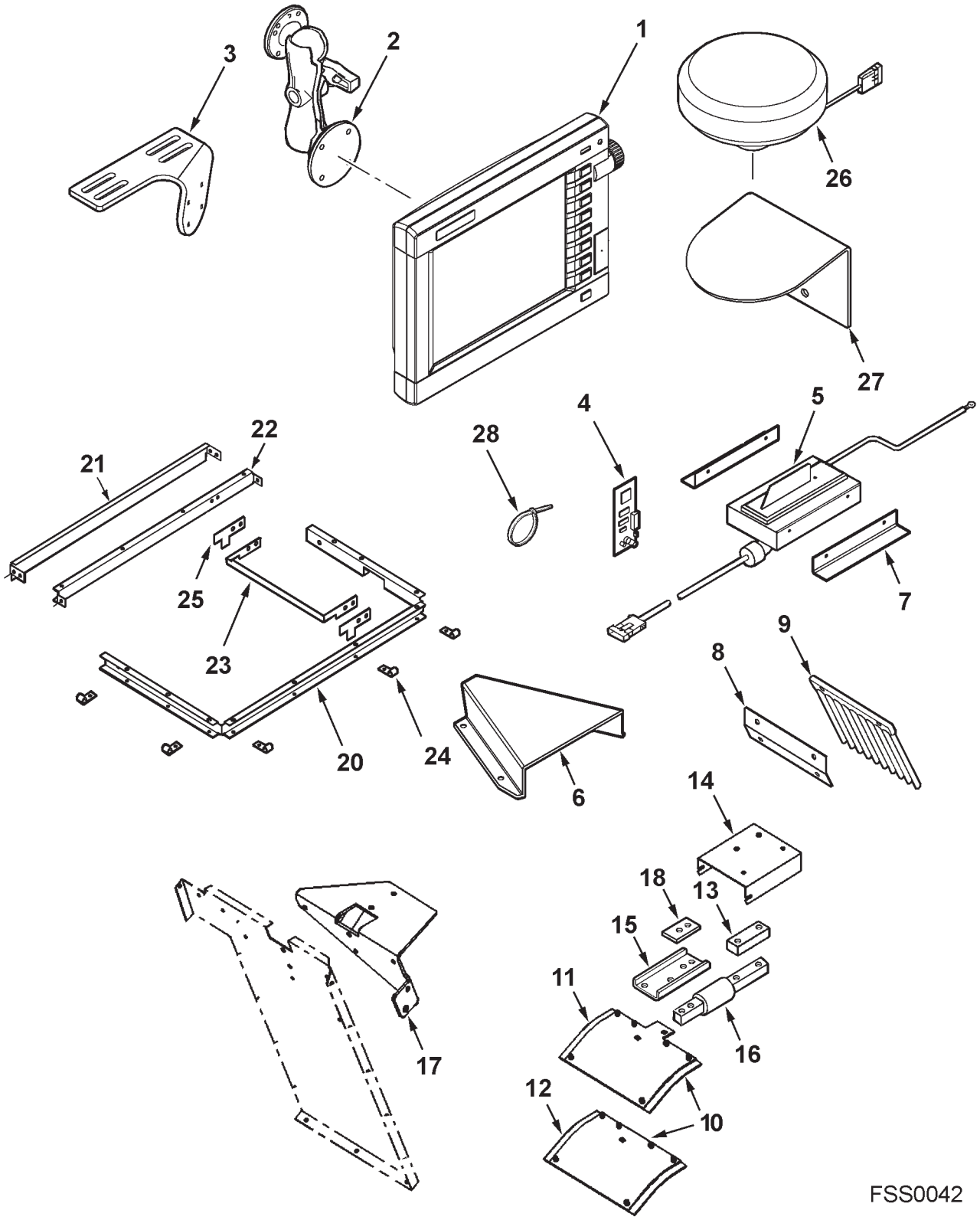

https://truckmanualshub.com/

YIELD MONITOR SYSTEM W/ 1 HZ WAAS DGPS

ITEM	NUMBER	QTY	DESCRIPTION
-	72570023	AR	KIT, YIELD MONITOR SYSTEM W/ 1 HZ WAAS DGPS
-	71387554	AR	KIT, MOISTURE SENSOR/FUNNEL (INCL. ITEMS 5-9)
1	72571014	1	CONSOLE II, FIELDSTAR (GTA)
	Y705269	4	LOCKWASHER, M6
	7883978	4	CAPSCREW, M6 X 1 X 12
2	71409820	1	BRACKET, CONSOLE MOUNTING
	700705088	4	SCREW, #10-24 X 3/4
	373197X1	4	SCREW, #10-24 X 5/8 (USED W/FLAT BASE PLATE)
	70916621	4	NUT, #10-24
	705004	4	LOCKWASHER, #10
	70917380	4	WASHER, #10
3	71410962	1	PLATE, BASE
	71408376	1	PLATE, BASE, FLAT (USED ON EARLY PROD.) (NOT SHOWN)
4	72571032	1	CARD, INTERFACE
5	71378711	1	SENSOR, MOISTURE
	72516412	AR	CONNECTOR
	72516411	AR	LOCK, SECTION
	72515775	AR	TERMINAL, MALE
	72515771	AR	SEAL
	70937685	3	J-CLIP, 3/8 X .406 HOLE
	Y704015	2	NUT, 5/16-18
6	71387552	1	FUNNEL, MOISTURE SENSOR
	70921332	4	CAPSCREW, 5/16-18 X 3/4
	Y705608	4	WASHER, 5/16
	70917356	4	LOCKWASHER, 5/16
	Y704015	4	NUT, 5/16-18
7	71387553	2	BRACKET, MOISTURE SENSOR
	70931832	4	SCREW, #8-32 X 3/8
	70537291	4	FASTENER, SNAP
	70924837	4	RIVET, 3/16 X 9/32
8	71400588	1	BRACKET, MOISTURE SENSOR FINGERS
9	71393717	1	EXTENSION, FINGERS DIFFUSE
	700711167	2	SCREW, 1/4-20 X 3/4
	70918264	2	WASHER, 1/4
	705012	2	LOCKWASHER, 1/4
	70916622	2	NUT, 1/4-20
10	71401399	1	TARGET ASY., YLD SENSOR (INCLUDE ITEMS 11 & 12)
	W900194-4	2	BOLT, CARRIAGE, 1/4-20 X 1/2
	705012	2	LOCKWASHER, 1/4
	70916622	2	NUT, 1/4-20
11	71401398	1	PLATE, YLD SENSOR TARGET
12	71401390	1	TARGET, UHMW PLASTIC
	70937253	6	RIVET, POP
13	71400581	1	BAR, CLAMP, YIELD SENSOR
14	71400585	1	COVER, YIELD SENSOR
	70921963	2	CAPSCREW, 1/4-20 X 2
	705012	2	LOCKWASHER, 1/4
	70916622	2	NUT, 1/4-20

CONTINUED

https://truckmanualshub.com/

YIELD MONITOR SYSTEM W/ 1 HZ WAAS DGPS

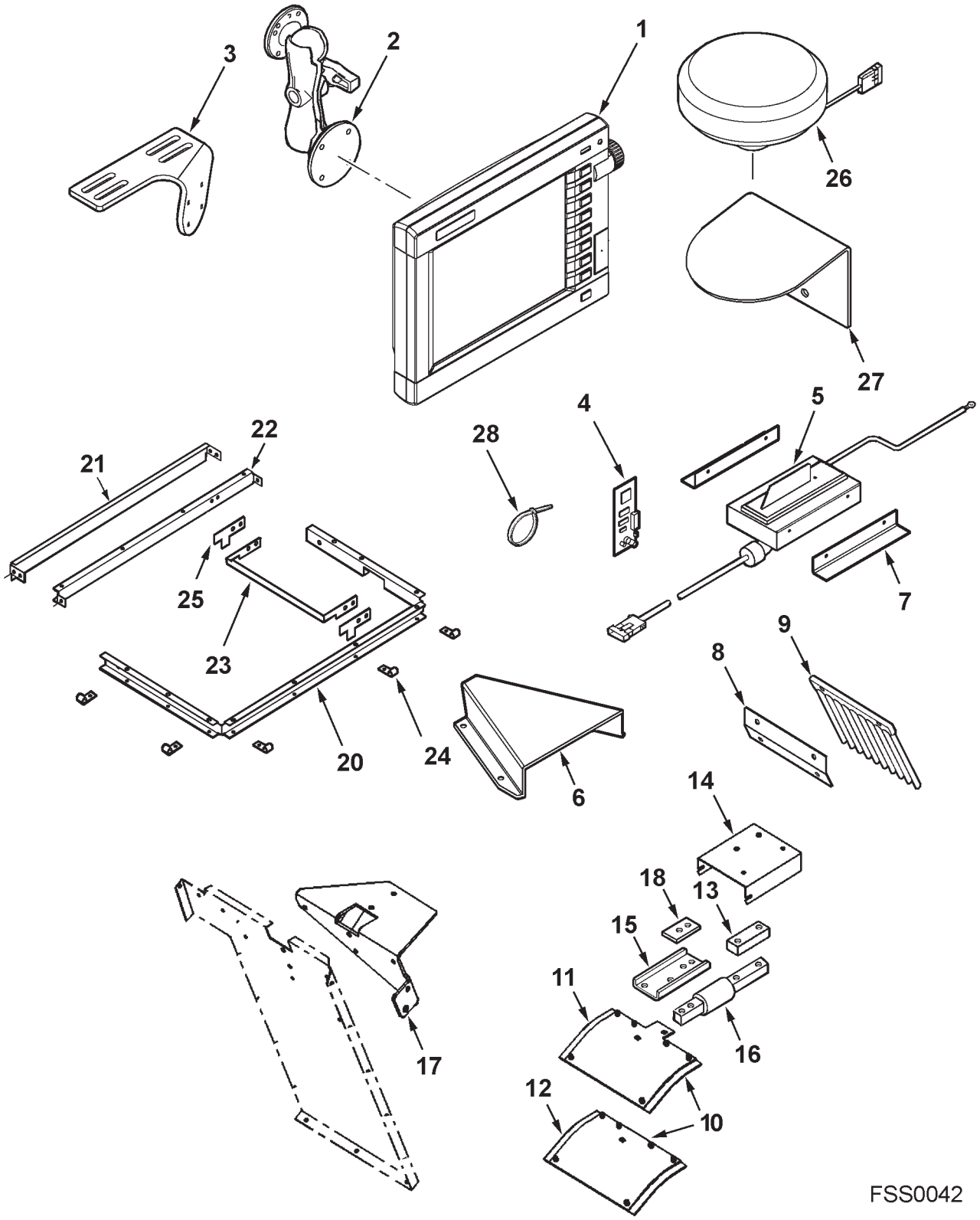

https://truckmanualshub.com/

ITEM	NUMBER	QTY	DESCRIPTION
15	71406842	1	MOUNT, BAR, YIELD SENSOR
16	71399237	1	LOAD BAR, YIELD SENSOR(W/ELECTRICAL BOX)
	700700628	2	MACHINE SCREW, #10-24 X 1/2
	705004	2	LOCKWASHER, #10
	Y704072	2	NUT, 10-24
17	71399241	1	MOUNTING WLDMT., YIELD SENSOR
	7703457	6	CAPSCREW, 1/4-20 X 3/4
	70917377	6	WASHER, WIDE PLAIN 1/4
	705012	6	LOCKWASHER, 1/4
	70916622	6	NUT, 1/4-20
18	71406844	1	PLATE, TARGET CLAMPING
	7703473	2	CAPSCREW, 1/4-20 X 1-1/4
	70917377	2	WASHER, WIDE PLAIN 1/4
	70931209	2	NUT, HEX FLNG SER LK, 1/4-20
19	72571068	1	TAPE, POLYETHYLENE (NOT SHOWN)
20	71399242	1	RISER, 1", ELEV. HEAD
	700704837	10	MACHINE SCREW, #10-24 X 3/8
	705004	10	LOCKWASHER, #10
	Y704072	10	NUT, #10-24
21	71399243	1	RISER, 1", ELEV. HEAD
	700704837	4	MACHINE SCREW, #10-24 X 3/8
	705004	4	LOCKWASHER, #10
	Y704072	4	NUT, #10-24
	70921958	2	CAPSCREW, 1/4-20 X 1/2
	70918264	2	WASHER, 1/4
	705012	2	LOCKWASHER, 1/4
	70916622	2	NUT, 1/4-20
22	71399246	1	RISER PLATE, ELEV. HEAD
	70921958	4	CAPSCREW, 1/4-20 X 1/2
	70918264	4	WASHER, 1/4
	705012	4	LOCKWASHER, 1/4
	70916622	4	NUT, 1/4-20
23	71410927	1	SEAL, YIELD SENSOR
	70921958	4	CAPSCREW, 1/4-20 X 1/2
	705012	4	LOCKWASHER, 1/4
	70916622	4	NUT, 1/4-20
24	71151362	5	CLIP
25	71410926	2	SNUBBER, YIELD SENSOR
26	71395205	1	RECEIVER, 1 HZ WAAS GARMIN
27	71395218	1	BRACKET, ANTENNA
	70921332	2	CAPSCREW, 5/16-18 X 3/4
	Y705608	2	WASHER, 5/16
	70917356	2	LOCKWASHER, 5/16
	Y704015	2	NUT, 5/16-18
	70937685	1	J-CLIP, 3/8
28	70925094	AR	TIE, SELF
29	72571081	1	HARNESS, ADAPTER FIELDSTAR II (CONNECTS CONSOLE II TO COMBINE HARNESS) (NOT SHOWN)
30	71400915	1	BACK, GRAIN ELEVATOR HEAD (NOT SHOWN)
-	71410563C	1	MANUAL, FIELDSTAR OPERATION
-	71410562	1	FORM, WARRANTY

https://truckmanualshub.com/

SOFTWARE/DATA CARD

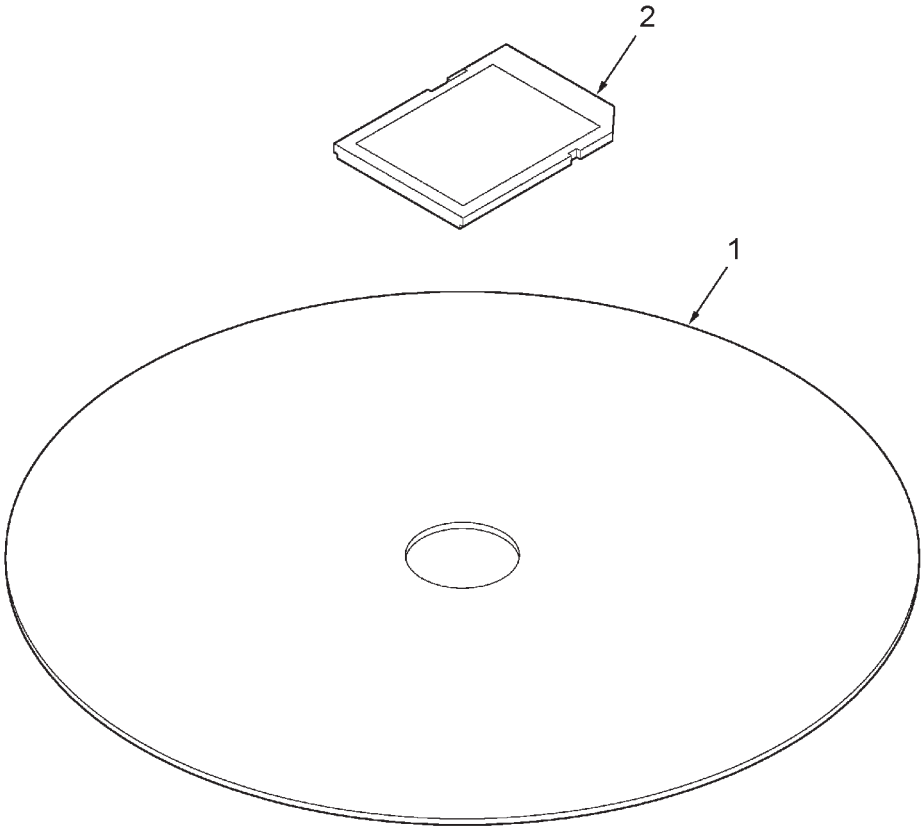

FSS0043

https://truckmanualshub.com/

ITEM	NUMBER	QTY	DESCRIPTION
-	72570030	AR	KIT, SOFTWARE PACKAGE, GTA 100/200/300
1	72570001	1	SOFTWARE, GTA 100
	72570002	AR	SOFTWARE, GTA 200 (REQUIRES GTA 100)
	72570003	AR	SOFTWARE, GTA 300 (REQUIRES GTA 100/200)
	72570004	AR	SOFTWARE, GTA 400 (REQUIRES GTA 100/200/300)
2	72571070	AR	CARD, SD (DATA), 256 MB
-	72571136	AR	CARD, FIELDSTAR II PROGRAM [A] (TASK CONTROLLER 1.3.1 & COMBINE SW 2.00)

[A] CAN BE REUSED AS DATA CARD

FSS0043
PR: t06e31j25c0003

https://truckmanualshub.com/

RECOMMENDED DEALER STOCK

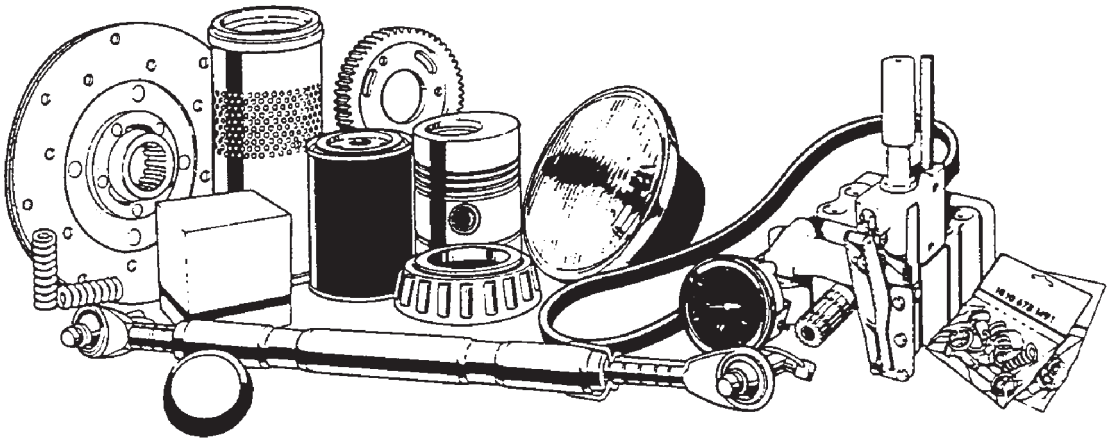

https://truckmanualshub.com/

ITEM	NUMBER	QTY	DESCRIPTION
-	71379601	1	A/C COMPRESSOR & CLUTCH ASY
-	71315999	1	ABSORBER, SHOCK
-	81370306	1	ALTERNATOR, 130 AMP, 12 VOLT (REMAN)
-	1907162M1	4	BATTERY
-	112887W1	2	CAP, RESERVOIR BREATHER
-	71371520	4	CYLINDER BAR, .75 CHROME (GRN,CRN,SBN)
-	71371526	1	CYL BAR, REVERSE, .75 CHROME (GR,CN,SBN)
-	711770	2	BEARING
-	831822M1	2	BEARING
-	K4037	2	BEARING
-	31-1588410	2	BEARING
-	50468	1	BEARING
-	50021	2	BEARING
-	354920X1	1	BEARING
-	71308951	2	BEARING KIT
-	71308770	2	BEARING KIT
-	71154722	1	BEARING, BALL
-	71195913	1	BEARING, BALL
-	1109055	1	BEARING, BALL
-	1138480	1	BEARING, BALL
-	1139003	1	BEARING, BALL
-	10033	1	BEARING, BALL
-	71396472	1	BEARING, BALL
-	71308984	2	BEARING, FLANGE
-	71122510	1	BEARING, FLANGE
-	71309117	1	BEARING, FLANGE
-	71335184	1	BEARING, FLANGE
-	71396208	1	BEARING, ROLLER
-	70590709	1	BEARING, BALL
-	71392693	1	BEARING ASM
-	71396180	1	BEARING ASM
-	8050866	1	BEARING, CAM FOLLOWER
-	7710551	1	COLLAR, BEARING
-	70590704	1	BEARING, BALL, W/O COLLAR
-	101102M1	1	BELT, UNLOADER
-	227455M1	2	BELT, SPRDR JACKSHAFT/GRAIN ELEV
-	71390199	1	BELT, SHAKER SHOE PITMAN
-	71388216	1	BELT, BEATER
-	71390188	1	BELT, COUNTERSHAFT
-	71390210	1	BELT, ROTOR PUMP (REAR)
-	71390209	1	BELT, PROPEL PUMP (PRIOR S/N HR36101)
-	71406620	1	BELT, PROPEL PUMP (EFF. S/N HR36101)
-	71379105	1	BELT, FEEDER
-	71394352	1	BELT, V/S FAN
-	71385801	1	BELT, RETURN ELEVATOR
-	71388712	1	BELT, CHOPPER SECONDARY (PRIOR HR36101)
-	71406339	1	BELT, CHOPPER SECONDARY (EFF. HR36101)
-	1680230W1	1	BELT, SPREADER
-	71385837	1	BELT, CHOPPER PRIMARY (PRIOR HR36101)
-	71406361	1	BELT, CHOPPER PRIMARY (EFF. S/R HR36101)
-	3289213V	1	BELT, FAN/ALT. DRIVE (CUMMINS)

CONTINUED

https://truckmanualshub.com/

RECOMMENDED DEALER STOCK

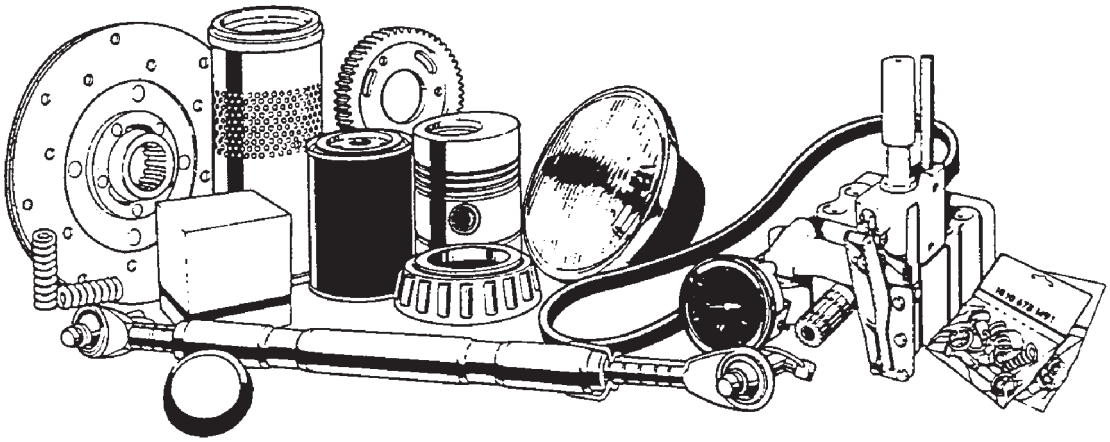

https://truckmanualshub.com/

ITEM	NUMBER	QTY	DESCRIPTION
-	V685121585	1	BELT, FAN/ALT. DRIVE (SISU)
-	71148120	1	BELT, A/C COMPRESSOR
-	71396754	1	BELT, ROTARY SCREEN
-	71382758	6	BLADE, LEFT PADDLE, CHOPPER
-	71382759	6	BLADE, RIGHT PADDLE, CHOPPER
-	71387297	1	BLADE, WIPER
-	7751605	1	BREATHER VENT
-	700725576	4	BULB, FRONT LAMP
-	70928348	10	BULB, 1157
-	1018729M1	10	BULB, 1156
-	71397443	5	BULB
-	700722351	2	BULB, HALOGEN, 12V (GE #862)
-	71356060	3	BUSHING
-	71370121	1	BUSHING, ARM
-	71157144	2	BUSHING, BRONZE
-	71400413	1	CAP, RADIATOR
-	112887W1	2	CAP, RESERVOIR BREATHER
-	W1511670	12	CUP, CONVEYOR FLIGHT
-	Y851774	1	CHAIN ASY, BIN LOADER, #50
-	71393534	1	CHAIN ASY, GRAIN ELEVATOR
-	2615233W92	1	CHAIN ASY, RETURN ELEVATOR
-	71149992	1	CHAIN ASY, FEEDER DRIVE #60
-	71449003	1	CHAIN ASY, FEEDER CONVEYOR, W/SLATS
-	71449017	1	CHAIN ASY, FEEDER CONVEYOR, W/SLATS
-	70921050	2	CHAIN, BULK, #60, 3/4 PITCH, (10 FT)
-	71188504	1	COIL, W/DIODE
-	375028X1	2	COLLAR
-	K3518	2	COLLAR, BEARING
-	K3999	1	COLLAR, BEARING
-	834580M1	1	CONE
-	74254700	2	CONE, BEARING
-	70228509	2	CONE, BEARING
-	74254699	2	CUP
-	850181M1	1	CUP
-	834581M1	1	CUP
-	195160M1	1	CUP
-	1070229M1	2	ELEMENT, PRIMARY
-	1070230M1	1	ELEMENT, SAFETY
-	71393893	6	ELEMENT, AIR FILTER
-	104309W91	4	ELEMENT, HYD. OIL FILTER
-	71391153	2	FILTER ASY, CAB AIR
-	72511906	4	FUEL FILTER/WATER SEPARATOR
-	V836867595	5	FILTER ELEMENT, FUEL, SISU
-	V836867591	5	PRE-FILTER, FUEL, SISU
-	72516560	12	OIL FILTER, CUMMINS ENGINE
-	V836362567	12	OIL FILTER, SISU ENGINE
-	71372880	2	FILTER, COOLANT (FULL FILL)
-	71127313	3	FLANGE, BEARING
-	71133361	3	FLANGE, BEARING
-	71192243	1	FLANGE, BEARING
-	71130258	2	FLANGE, BEARING
-	71370634	1	FLANGETTE, 72MM
-	70934740	2	FUSE
-	70934739	2	FUSE

CONTINUED

https://truckmanualshub.com/

RECOMMENDED DEALER STOCK

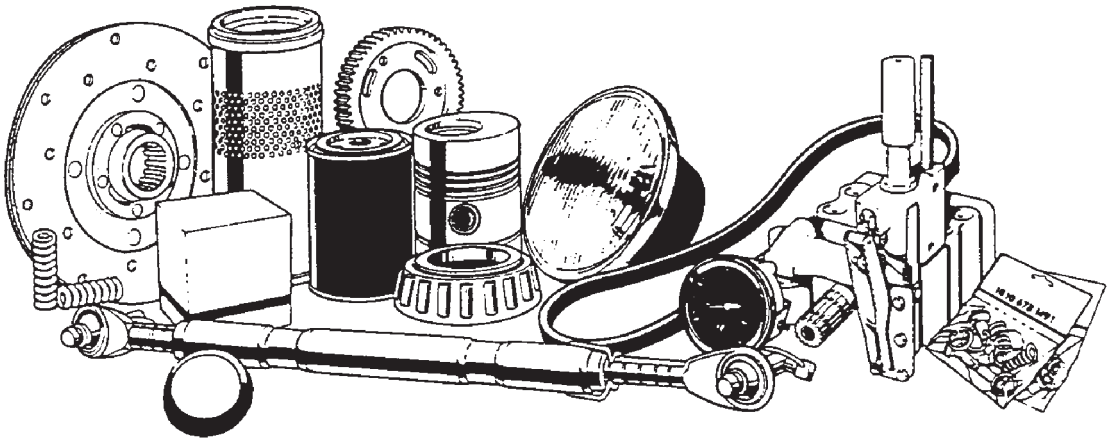

https://truckmanualshub.com/

ITEM	NUMBER	QTY	DESCRIPTION
-	70935426	2	FUSE, 7.5 AMP
-	700721620	5	FUSE, MINI 3AMP
-	70937605	5	FUSE, MINI 5AMP
-	70937606	5	FUSE, MINI 10AMP
-	70937607	5	FUSE, MINI 15AMP
-	70937608	5	FUSE, MINI 20AMP
-	70937609	5	FUSE, MINI 25AMP
-	70937610	5	FUSE, MINI 30AMP
-	70226012	4	GASKET, DRAIN PLUG
-	71314321	1	HOLDER, BRUSH
-	71309768	1	IDLER, PURCHASE
-	71308156	1	IDLER, PURCHASE
-	2554761W91	2	IMPELLER WLMT
-	71396653	2	JOURNAL ASY, U-JOINT
-	71377109	2	KEY, IGNITION X2
-	2605880W91	1	LINK ASY, ATTACHING
-	71149388	6	LINK ASY, ATTACHING
-	71149894	6	LINK, CHAIN ATTACHING
-	71149895	6	LINK, CHAIN COUPLING
-	70914584	6	LINK, CHAIN CONNECTOR
-	329951M91	2	LINK, CHAIN CONNECTOR
-	70927035	2	LINK, CHAIN OFFSET
-	71149896	2	LINK, CHAIN OFFSET
-	70927034	6	LINK, CHAIN ROLLER
-	70937300	1	LINK, CHAIN ROLLER
-	71341450	4	PADDLE, SPREADER
-	71383932	6	PADDLE BLADE KIT, CHOPPER
-	71306949	1	PLUG
-	71369761	1	RECEIVER DRYER
-	700714529	1	RECEPTACLE
-	71396971	1	RELAY, 20 AMP
-	71396970	1	RELAY, 40 AMP
-	72160919	1	RELAY, DIFFERENTIAL
-	70927738	1	RING, RETAINING
-	70927103	1	RING, RETAINING
-	70925160	10	RIVET
-	70937253	10	RIVET, BLIND
-	70924837	10	RIVET, BLIND
-	71364946	1	SCRAPER
-	79021649	4	SEALANT
-	79021676	1	SEALANT, PRIMER
-	79021668	2	SEALANT, THREAD
-	79021669	1	SEALANT, THREAD
-	71407293	1	SENDER, FUEL
-	71376825	1	SENSOR, POSITION
-	71391869	1	SENSOR, ROTARY POSITION
-	71356061	1	SLEEVE, HARD, IDLER PIVOT
-	71387896	12	SLAT, FEEDER CHAIN

CONTINUED

https://truckmanualshub.com/

RECOMMENDED DEALER STOCK

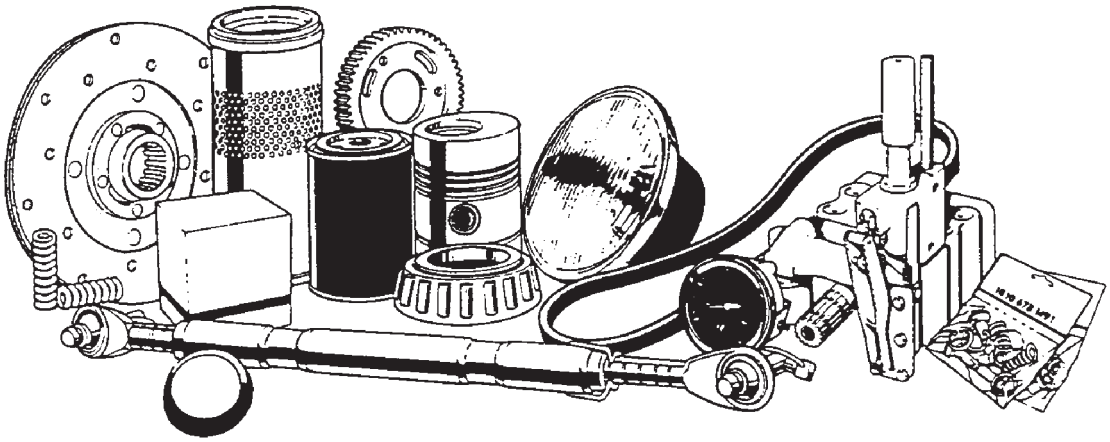

https://truckmanualshub.com/

ITEM	NUMBER	QTY	DESCRIPTION
-	71345898	1	SPACER, HUB
-	71370926	1	SPACER, WHEEL B
-	7087398	1	SPROCKET, 17T-5
-	71391860	1	STARTER MOTOR (DELCO)
-	71370496	4	STOP, ARM
-	71395250	6	STRAIGHT BLADE, CHOPPER
-	71383934	6	STRAIGHT BLADE KIT, CHOPPER
-	71325523	1	SWITCH
-	72509305	1	SWITCH, AC HI PRESSURE
-	71372724	1	SWITCH, AC LOW PRESSURE
-	71351816	1	SWITCH, PRESSURE
-	71397929	1	THERMOSTAT
-	71395998	1	U-JOINT ASY, DOUBLE PIVOT
-	30-3076830	1	VALVE
-	2498390W1	1	VANE, 3-HOLE
-	2467230W1	1	VANE, 5-HOLE
-	2467220W1	3	VANE, 7-HOLE
-	72571032	1	CARD, INTERFACE, FIELDSTAR
-	72571014	1	[A] CONSOLE II, FIELDSTAR (GTA)
-	72571081	1	[A] HARNESS, ADAPTER FIELDSTAR II
-	71399237	2	[A] LOAD BAR, YIELD SENSOR (W/ELECT BOX)
-	71406842	1	[A] MOUNT, BAR, YIELD SENSOR
-	71406844	1	[A] PLATE, TARGET CLAMPING
-	71395205	1	[A] RECEIVER, 1 HZ WAAS GARMIN
-	71378711	1	[A] SENSOR, MOISTURE
-	71410926	4	[A] SNUBBER, YIELD SENSOR
-	71401399	1	[A] TARGET ASY., YLD SENSOR

[A] FIELDSTAR
NOTE: THIS PARTS STOCK LIST
INDICATES THOSE ITEMS RECOMMENDED
TO SERVICE FIVE UNITS.

RDL
PR: 460

https://truckmanualshub.com/

https://truckmanualshub.com/

©AGCO Corporation, 2007. All rights reserved.
Printed in U.S.A.

Publication No. 651801M92 (English)
January, 2007