Menzi Muck **M5**20
Menzi Muck **M5**25
Menzi Muck **M5**30
Menzi Muck **M5**35
Menzi Muck **M5**40
Menzi Muck **M5**45

https://truckmanualshub.com/

M5

The Menzi Muck M5.
Powerful, efficient and the technology leader.

menzi muck

https://truckmanualshub.com/

The approved Menzi M5-series.
The overview of the models.

M520

- Hydrostatic two wheel drive over the two big wheels
- Two removable shafts with two small steering wheels
- Hydraulic telescopic stabilization

M525

Same as Menzi Muck M520 with

- drive by two big steering wheels (hydraulic rear steering)

M530

- Hydrostatic four wheel drive over two big and two small wheels
- Hydraulic telescopic stabilization

M535

Same as Menzi Muck M530 with

- drive by two big steering wheels (hydraulic rear steering)
- Option: mecanical or hydraulic lifting axle

M540

- Hydrostactic all wheel drive over four big wheels
- P-Matic parallel-stabilization 2017
- Option: mountain steel pads mecanically or hydraulically telescopable

M545

Same as Menzi Muck M540 with

- sensor steered all wheel drive

https://truckmanualshub.com/

Economical. Powerful. Efficient. Engine, hydraulic, electric and cooling system.

APM - up to 30% fuel savings
The APM controller (Anticipating Power Management) creates a new, fast and harmonic interplay between the engine and the hydraulics. Overloading is thereby reduced to an absolute minimum. Power, Eco and Fine mode provide extra help in efficient operation of the machines. Power-lift function for maximum forces.

Engine
The powerful Deutz 4-cylinder turbo diesel engine with 115 kW/157 hp has been ideally adapted to the overall system and guarantees minimum fuel and overall operating costs.

Deutz T4F
With this EU IV standard engine, Deutz is relying on selective catalytic reduction, consisting of SCR catalytic converter and additional components, such as injector and AdBlue® supply. Protecting the environment by effectively minimising nitrogen oxide while maintaining the output.

Deutz T3A
Engines with emission standard IIIA are suitable for exports to unregulated countries. Please do not hesitate to contact your customer advisor for more information.
www.menzimuck.com/en/service-and-sales/

Cooling
A generously dimensioned, naturally aspirated cooling system for hydraulic oil, charge air and water, three adapted radiator elements, maximum cooling output thanks to side-by-side cooling element arrangement, variable fan motor featuring demand-based drive control and optionally a swivelling condenser element for the air conditioning as well as reversible fan.

Swiveling with big slewing ring
An radial piston motor with automatic multi-disc stop brake acts via a planetary gear on the internal gearing of the large-dimensioned, double-row slewing ring (Ø 1200 mm, hardened tooth flank). The large volume swing motor operates extremely quietly and is completely maintenance free. The maximum slewing force is available over the entire speed range.

Tank contents
Operating tank: 205 liters / 54.2 US-gall.
Additional fuel tank in the chassis:
230 liters / 60.8 US-gall.
AdBlue tank: 20 liters / 5.28 US-gall.
Content of hydraulic system:
220 liters / 58.1 US-gall.

Hydraulic system
Sensitive Load Sensing hydraulic system by Bosch-Rexroth. The harmonious operating cycle is geared towards smooth and optimised performance.

Hydraulic cylinders
All cylinders on the chassis are equipped with check valves for safety. All cylinders on the boom are equipped with cushioning.

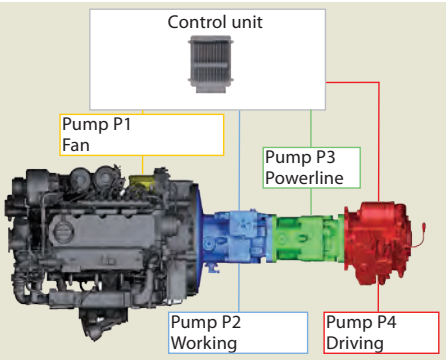

Options
- automatic central lubrication system
- biodegradable hydraulic oil
- Powerline with higher engine output
- hydraulic affluent filter
- heavy lifting and road equipment
- hydraulic preparation for winch
- leakage line and lifting limiter
- electrically switchable check valves
- additional safety valves on the dipper cylinder

Hydraulic circuits
The required liter /gallons quantities of the hydraulic auxiliary circuits can be selected on the color display.

Circuit 1 (on the boom)
up to 200 l/min. - 52.8 US-gall./min. through proportional foot pedal - double acting
Circuit 2 (on the boom)
up to 100 l/min. - 26.4 US-gall./min. through proportional-rocker switch on the right joystick – double acting
Circuit 3 (on the boom)
up to 50 l/min. - 13.2 US-gall./min. over s/w-circuit on the left joystick – double acting option)
Circuit 4 (on the boom)
for hydraulic quick changer from pilot pressure – double acting (option)
Hydraulic winch preparation (chassis)
up to 120 l/min. - 31.7 US-gall/min. through proportional-rocker switch on the left joystick – double acting (option)
Return line (on the boom)
for hydraulic hammer
Powerline (view options)
Simple or double acting auxiliary circuit up to 220 l/min - 58.1 US.gall./min.; with priority supply by a separate pump
Leakage line (option)

https://truckmanualshub.com/

Menzi Muck the technology leader. Innovations that make us number one.

The new Powerline 2017 with increased litre output
A separate pump optionally supplies the additional connection with up to 220 liters per minute, thus significantly boosting the efficiency of attachments thanks to a permanently high oil supply. The system enables individual configurations for liter quantities and pressure values.

World innovation: Menzi powerboom
There is a lot of innovation in the proven and unique boom of the M-series. Unique to Menzi Muck, the boom cylinder is mounted horizontally in the center part. Collisions at the boom cylinder are therefore impossible.

Wide-angle kinematics with power booster
The kinematics of Menzi Muck opens new dimensions: optimum work in the close-up range at the minimum possible swivel radius is contrasted with maximum stretching of the boom. The Menzi power booster thereby supplies the highest possible forces over the whole working range.

Unrivaled forces

Lifting capacity @ 3.0 m	9200 kg / 20283 lb
Lifting capacity @ 4.5 m	6000 kg / 13228 lb
Lifting capacity @ 6.0 m	4100 kg / 9039 lb
Breakout force	102 kN / 10401 kp
Ripping force	69 kN / 7036 kp
Thrust force telescope	191 kN
Swing torque	52 kNm

Tool management
The required liter/US-gall. volumes can be stored at the display for up to 15 accessories. Simply select the corresponding preprogramming to change the tool.

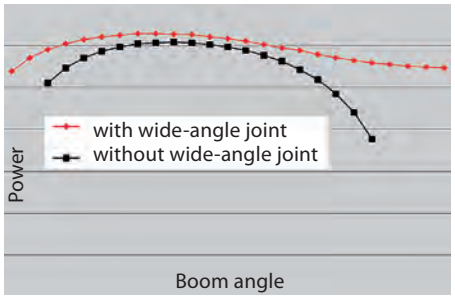

Digging arc comparison
The new arm kinematics results in more working area.

https://truckmanualshub.com/

The panorama cockpit.
The operator is most important.

Panorama cockpit
A free view of the entire working environment, the support and the wheels, provide the operator with safety and complete control in all situations. The spacious cab provides a perfect sense of space and many practical details for relaxed working.

Comfort and safety
From the ergonomic joystick with proportional rocker and hand support to the air-suspended operator's seat right up to adjustable armrests and foot pedals, no stone has been left unturned to provide the operator with a maximum of comfort.

Dashboard with LCD-Display
Clear and ergonomic arranged instrument panel. Analog controls with integrated color display to show the most important indicators. Various control elements with LED-illuminated toggles switches.

Extensive standard equipment
"Roll-Over Protection System" – ROPS as per (DIN ISO 3471), cast parts on the upper structure as impact protection, side and rear panels featuring gas shocks to facilitate opening, reversing camera, diesel input pump including limit stop, cyclone air filter, integrated tool compartment, DAB+ radio including CD/MP3 player, powerful heating with seven individually adjustable air vents, pollen and air recirculation filter, five LED headlights (three facing forwards, two facing towards the rear), etc.

Numerous cab options
- air-conditioning
- Grammer Evolution operator's seat
- heater with time clock
- rotating beacon
- lighting system on the roof with up to 10 LED- or Xenon-spotlights
- four point safety harness
- FOPS security grid roof
- protective grid on the windshield
- security glazing (polycarbonate/ lexan)
- LED-additional light on the boom
- additional external tool box
- special color
- telediagnostic service / lock out switch

https://truckmanualshub.com/

The Menzi Muck M520 and M525. The original.

	M520		M525	
Turning radius	7300 mm	23’11”	5000 mm	16’4”
Weight without accessories	10700 kg	23589 lb	11000 kg	24250 lb
Speed	15 km/h	9.3 mph	15 km/h	9.3 mph

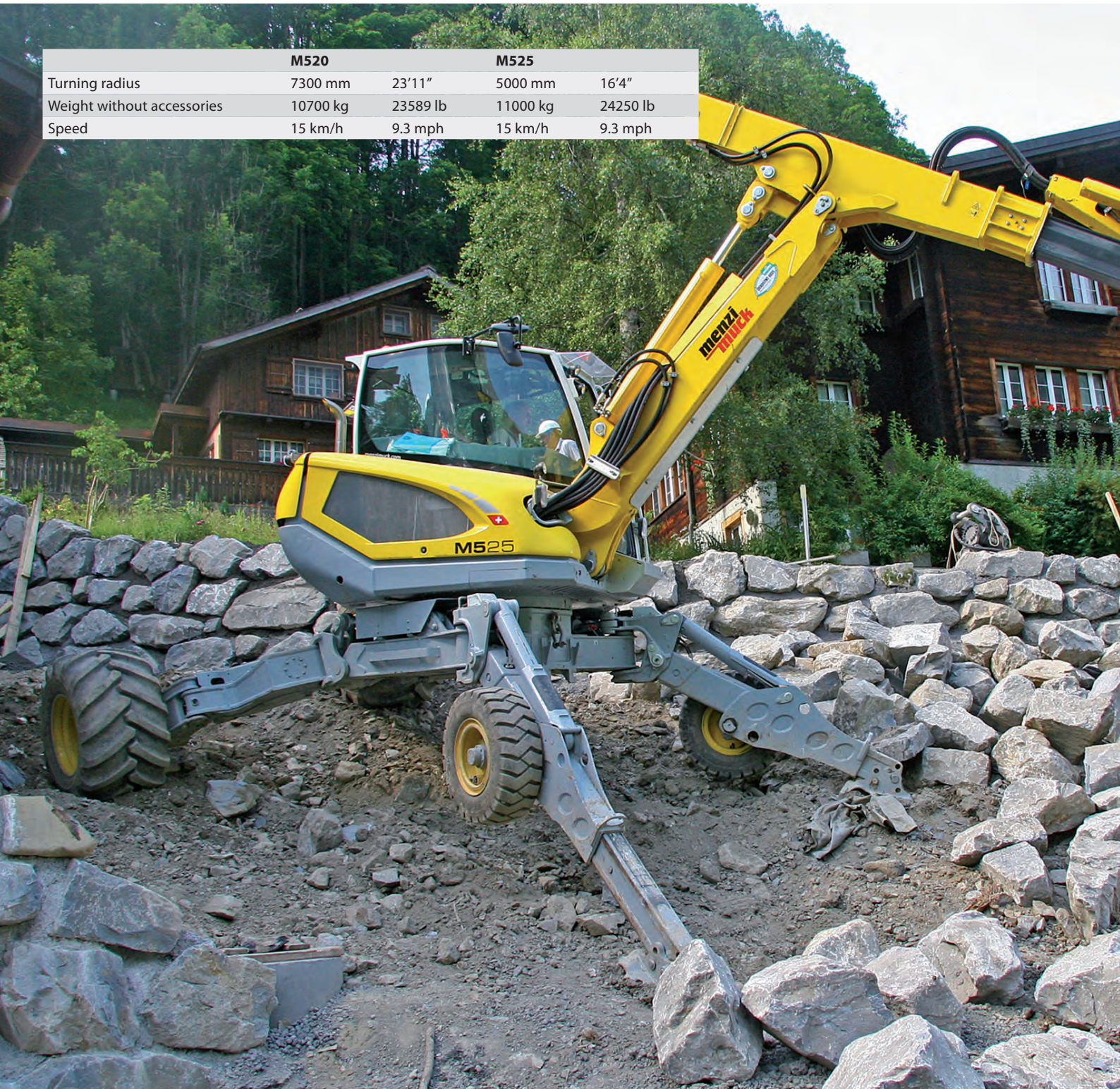

https://truckmanualshub.com/

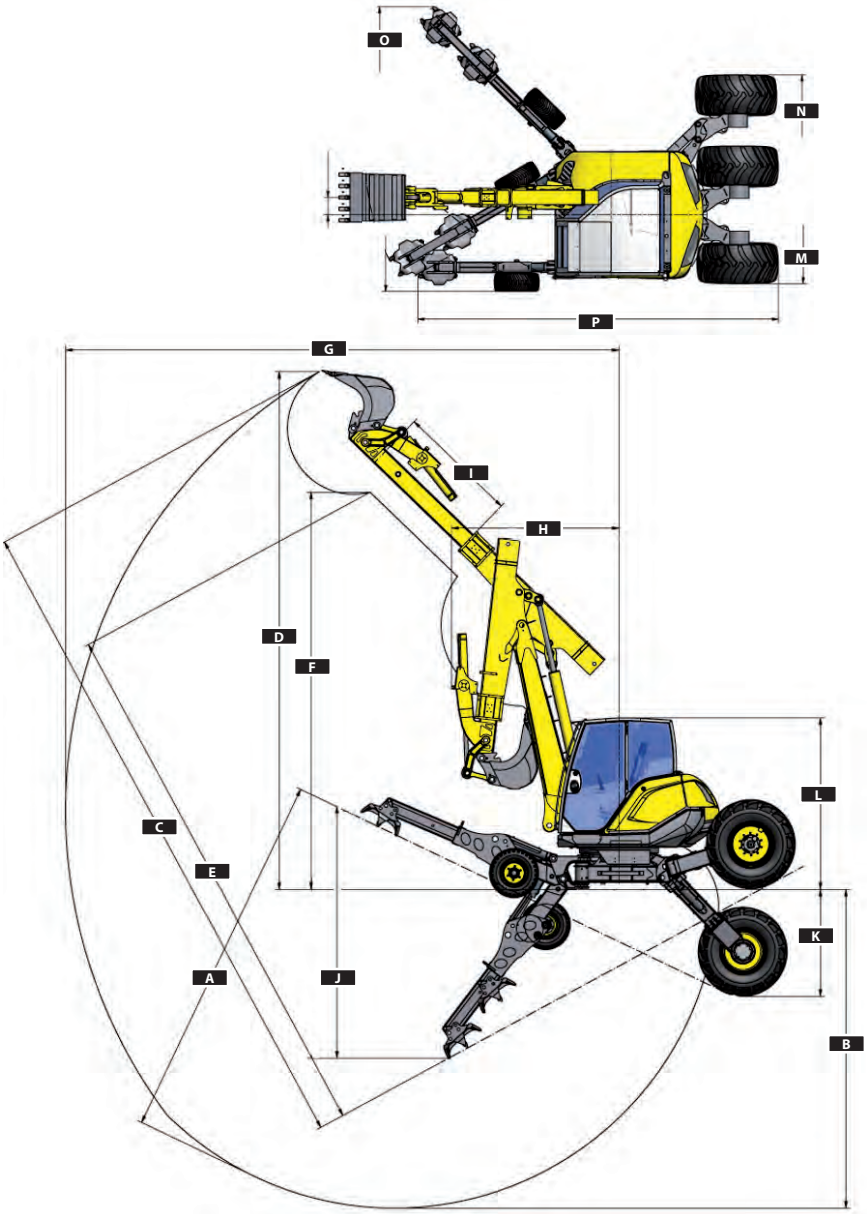

Dimensions without Powertilt. Technical data vary upon tyre/tool

	Dimensionen in mm	M520		M525	
A	Max. Excavation depth with adjusted chassis	5470	17'11"	5470	17'11"
B	Max. Excavation depth chassis horizontal	4730	15'6"	4730	15'6"
C	Max. Excavation height with adjusted chassis	9870	32'4"	9910	32'4"
D	Max. Excavation height chassis horizontal	7700	25'3"	7700	25'3"
E	Max. Discharge height with adjusted chassis	7940	26'	7970	26'1"
F	Max. Discharge height chassis horizontal	5890	19'3"	5890	19'3"
G	Max. Jib Range	8210	26'11"	8210	26'11"
H	Min. Swivelling radius	2480	8'1"	2480	8'1"
I	Dipper length	1800	5'10"	1800	5'10"
J	Positioning range stabilizers	3660	11'10"	3660	11'10"
K	Positioning range hub drive	1580	5'2"	1650	5'5"
L	Transport height	2550	8'4"	2550	8'4"
M	Minimum width hub drive, transport width	2230	7'3"	2370	7'9"
N	Max. positioning width hub drive / rear wheels	4530	14'10"	4680	15'4"
O	Max. positioning width stabilizers / front wheels	6730	22'1"	6720	22'
P	Chassis length	5830	19'1"	5960	19'6"

https://truckmanualshub.com/

The Menzi Muck M530 and M535. For even more traction.

	M530		M535	
Turning radius	9400 mm	30’10”	7800 mm	25’7”
Weight without accessories	11300 kg	24912 lb	11600 kg	25574 lb
Speed	12 km/h	7.5 mph	12 km/h	7.5 mph

https://truckmanualshub.com/

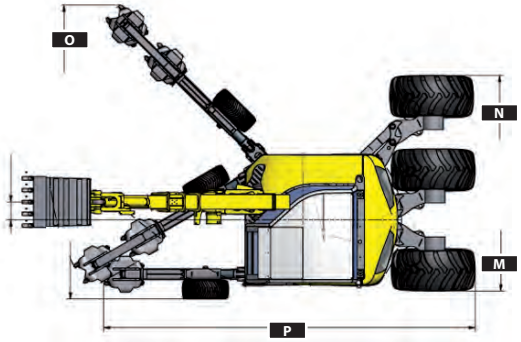

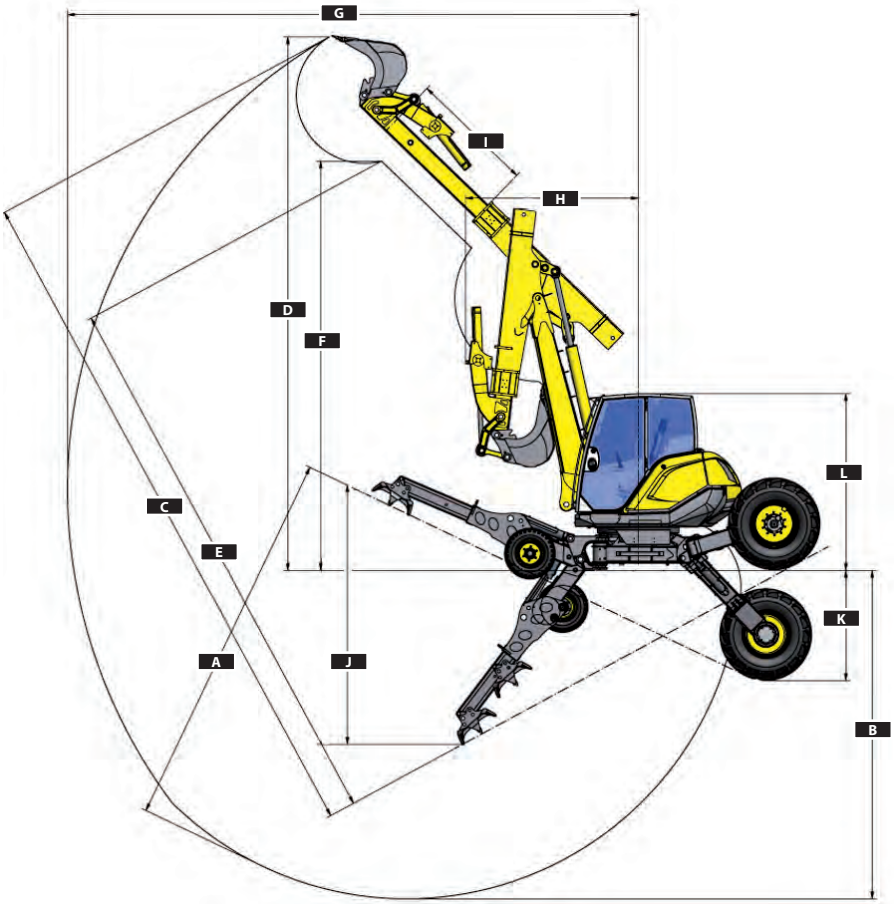

Dimensions without Powertilt. Technical data vary upon tyre/tool

	Dimensionen in mm	M530		M535	
A	Max. Excavation depth with adjusted chassis	5460	17'11"	5460	17'11"
B	Max. Excavation depth chassis horizontal	4730	15'6"	4730	15'6"
C	Max. Excavation height with adjusted chassis	9870	32'4"	9900	32'5"
D	Max. Excavation height chassis horizontal	7700	25'3"	7700	25'3"
E	Max. Discharge height with adjusted chassis	7940	26'	7970	26'1"
F	Max. Discharge height chassis horizontal	5890	19'3"	5890	19'3"
G	Max. Jib Range	8210	26'11"	8210	26'11"
H	Min. Swivelling radius	2480	8'1"	2480	8'1"
I	Dipper length	1800	5'10"	1800	5'10"
J	Positioning range stabilizers	2510	8'2"	2510	8'2"
K	Positioning range hub drive	1570	5'1"	1650	5'5"
L	Transport height	2550	8'4"	2550	8'4"
M	Minimum width hub drive, transport width	2230	7'3"	2370	7'9"
N	Max. positioning width hub drive	4530	14'10"	4680	15'4"
O	Max. positioning width stabilizers	6730	22'1"	6730	22'1"
P	Chassis length	5800	19'2"	5940	19'5"

https://truckmanualshub.com/

The Menzi Muck M540 and M545. Unlimited mobility.

	M540		M545	
Turning radius	8300 mm	27′2″	7440 mm	24′5″
Weight without accessories	12000 kg	26455 lb	12300 kg	27117 lb
Speed	10 km/h	6.2 mph	10 km/h	6.2 mph

https://truckmanualshub.com/

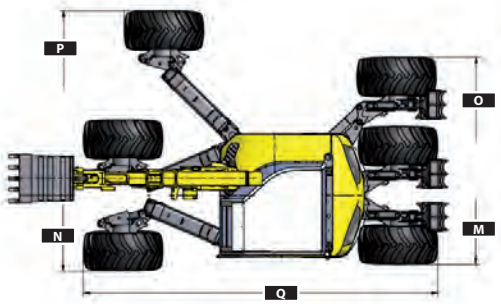

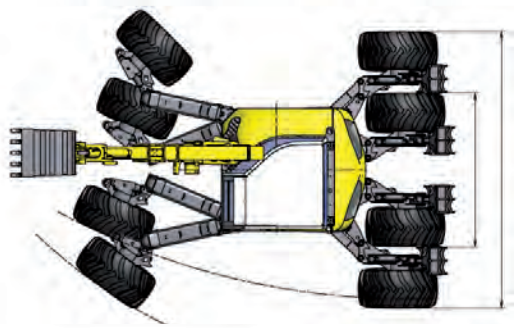

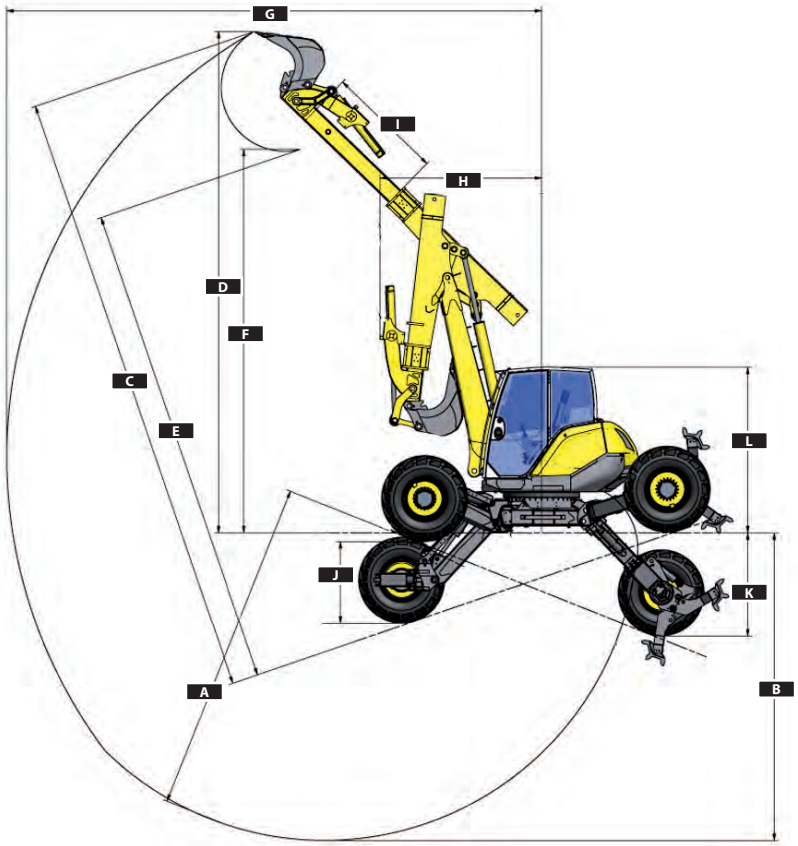

Dimensions without Powertilt. Technical data vary upon tyre/tool

	Dimensionen in mm	M540		M545	
A	Max. Excavation depth with adjusted chassis	5120	16'9"	5140	16'10"
B	Max. Excavation depth chassis horizontal	4730	15'6"	4730	15'6"
C	Max. Excavation height with adjusted chassis	9360	30'8"	9370	30'8"
D	Max. Excavation height chassis horizontal	7700	25'3"	7700	25'3"
E	Max. Discharge height with adjusted chassis	7420	24'4"	7430	24'4"
F	Max. Discharge height chassis horizontal	5890	19'3"	5890	19'3"
G	Max. Jib Range	8210	26'11"	8210	26'11"
H	Min. Swivelling radius	2480	8'1"	2480	8'1"
I	Dipper length	1800	5'10"	1800	5'10"
J	Positioning range front wheels	1250	4'1"	1250	4'1"
K	Positioning range rear wheels	1580	5'2"	1650	5'5"
L	Transport height	2550	8'4"	2550	8'4"
M	Minimum width hub drive, transport width	2300	7'6"	2380	7'9"
N	Minimum width front drive, transport width	2510	8'2"	2430	7'2"
O	Max. positioning width hub drive / rear wheels	4600	15'1"	4690	15'4"
P	Max. positioning width stabilizers / front wheels	6140	20'1"	6140	20'1"
Q	Chassis length	5880	19'3"	6190	20'3"

https://truckmanualshub.com/

More information.

www.menzimuck.com
- entire product range
- distributors, service network and event calendar
- company infos
- calendar of trade fairs and open doors
- multimedia (brochures, guides, photographs, videos, ...)
- multilingual
- and much more

www.facebook.com/menzimuckcom
- the history of the Menzi Muck
- product and company news
- discussions over the Menzi Muck
- events
- contributions from other Menzi Muck operators and fans

www.youtube.com/menzimuckcom
- events and special reports
- TV-reports
- Menzi Muck working
- accessories in action

https://www.menzimuck.com/gebrauchtmarkt/
- several used machines/accessories with foto
- free ads for private offers and requests

Technical data subject to change / 1017

Menzi Muck AG · 9451 Kriessern/Switzerland
T +41 71 727 12 12 · info@menzimuck.com · menzimuck.com
A Menzi Muck Group company.