Table of Contents

Main Body Section

Specifications

OVERALL

1. Main Data 1
2. Performance 1
3. Main Body Dimensions 1
4. Engine 2
5. Cooling System 2
6. Upper Side Work System 3
7. Operating Device 3
8. Swing Units 4
9. Travel Lower Body 5

Hydraulic equipment

1. Hydraulic Device 6
2. Control Valve, Cylinder 6

Capacities, filters

1. Water and Oil Capacities 6
2. Hydraulic Oil Filters 7
3. Fuel Filter 7

Overall View

Overall View (210X2)

1. Standard Arm 3.2 yd (2.94 m) 8
2. Short Arm 2.6 yd (2.40 m) 8

Overall View (240X2)

1. Standard Arm 3.3 yd (3.00 m) 9
2. Short Arm 2.7 yd (2.50 m) 9
3. Long Arm 3.8 yd (3.52 m) 9

Work Range Diagram

Work Range Diagram (210X2)

1. Standard Arm 3.2 yd (2.94 m) 10
2. Short Arm 2.6 yd (2.40 m) 11

Work Range Diagram (240X2)

1. Standard Arm 3.3 yd (3.00 m) 12
2. Short Arm 2.7 yd (2.50 m) 13
3. Long Arm 3.8 yd (3.52 m) 14

Table of Contents

Summary Section

Main Equipment Table

Lower Mechanism

1. Travel Unit 1
2. Take-Up Roller 1
3. Upper-Roller 1
4. Lower Roller 1
5. Recoil Spring 2
6. Shoes 2

Upper Mechanism

1. Swing Unit 3

Engine-Related

1. Engine 4
2. Muffler 5
3. Air Cleaner (double element) 5
4. Radiator 5

Hydraulic Device

1. Hydraulic Pump 6
2. Pump P - Q Diagram 7

Control-Related

1. Control Valve 9
2. Solenoid Valve (5 way) 9
3. Remote Control Valve (left / right, travel operations) 10
4. Remote Control Valve Characteristic Diagram 11
5. Cushion Valve (heat circuit, with shuttle valve) 12
6. Selector Valve (option) 12
7. Center Joint 13

Backhoe Attachment

1. Cylinder 14
2. Attachment 15

Equipment Layout Diagram

Main Equipment Layout 16

Consumable Part Layout 17

Table of Contents

Hydraulics Section

Hydraulic Equipment Layout

Overall View 1
Pump Chamber Hydraulic Equipment Layout 2
Swing Body Center Section Hydraulic Equipment Layout 3
Housing Left Side Hydraulic Equipment Layout 4
Layout of Hydraulic Equipment in Cab 5

Port Diagram

Pump

1. Hydraulic Pump (standard model) 6

Valves

1. Control Valve 7
2. 5-way Solenoid Valve 10
3. 2-way Solenoid Valve 11
4. Remote Control Valves (upper side, travel) 12
5. Cushion Valve 13
6. 4-way Multi-valve 14
7. 2-way Multi-valve 15
8. Direction Valve / Shut-off Valve 16
9. HBCV 17

Manifolds

1. Manifold Under Cab 18
2. Manifold (accumulator section) 18
3. Manifold (hydraulic oil tank section) 19

Motors

1. Swing Motor 20
2. Travel Motor 22
3. Center Joint 23

Pilot Hose Connection Diagram

Pilot P and T Lines 24
Pilot Control Line 26
Pilot Control Line (2-way selector valve) 28
Pilot Control Line (4-way selector valve) 30

Table of Contents

Function List

Function Table 32

Explanation of New Functions

1. Swing Relief Cut Control 34
2. Swing Speed Limit Control 36
3. Negative Control Power Save Control 37
4. Option Line Flow Adjustment Control 38
5. Compatible Circuit (breaker ⇔ pulverizer) One-Touch Switching Control 39
6. Bucket Close Regenerative Circuit 40

Explanation of Hydraulic Circuit and Operations (standard model)

Travel Circuits

1. Low Speed Travel Circuit 41
2. High-Speed Travel Circuit 43
3. Straight Travel Circuit 45

Swing Circuits

1. Swing Speed Limit Control Circuit 47
2. Swing Relief Cut-off Control Circuit 49
3. Swing Priority Circuit 51
4. Swing Brake Circuit 53
5. Swing Parking Circuit (lever in neutral) 55
6. Swing Parking Circuit (brake release) 57
7. Swing Parking Circuit (machine stop) 59

Boom Circuits

1. Boom-Up Circuit (single operation) 61
2. Boom-Up Circuit (compound boom-up + arm-in) 63
3. Boom Down Regenerative Circuit 65
4. Boom Down Tilting Prevention Circuit 67
5. Boom Down Load Hold Valve Circuit 69

Arm Circuits

1. Arm-Out Circuit 71
2. Arm-In Forced Regenerative Circuit 73
3. Arm-in Load Hold Valve Circuit 75

Bucket Circuit

1. Bucket Open Circuit 77
2. Bucket Close Regenerative Circuit 79

Negative Control Circuit

1. Negative Control Circuit (power save solenoid OFF) 81
2. Negative Control Power Save Circuit (power save solenoid ON) 83
3. Negative Control Circuit (bucket close, power save solenoid OFF) 85

Table of Contents

Increased Horsepower Circuits
1. Arm-In Increased Horsepower Circuit 87
2. Travel Increased Horsepower Circuit 89

Other Circuits
1. Cushion Circuit
(1) Arm-out operation 91
(2) When arm-out operation stopped 93
(3) Arm-out Arm-in operation 95
2. Heat Circuit (lever in neutral) 97
3. Auto Power Boost Circuit (bucket close) 99

Explanation of Hydraulic Circuit and Operations (option)

Option Circuit
1. Breaker Circuit (single operation) 101
2. Shuttle Circuit (hydraulic thumb) 103
3. Compatible Circuit
(1) Breaker Q control 105
(2) 2nd crusher 107
4. Second Option Circuit (hydraulic rotation fork) 109

Main Equipment Structure and Operation Explanation

Pump
1. Hydraulic Pump 111
2. Regulator 113
3. Gear Pump 119

Motor
1. Travel Motor 120
2. Swing Motor 139

Valve
1. Control Valve 149
2. 5-way Solenoid Valve Operation Explanation 182
3. Upper Side Pilot Valve (remote control valve) 184
4. Travel Pilot Valve (remote control valve) 189
5. Cushion Valve 193
6. Selector Valve (4-way) (Not used by LBX) 197
7. Selector Valve (3-way) 201

Table of Contents

Electrical Section

Explanation of New Functions

Work Mode Select Switch 1
Controller Connection Method 4
Monitor Changes 5
Pilot Pressure Switch Changed to Pressure Sensor 8
Pump Proportional Valve 10
1. Horsepower Control Proportional Valve 10
2. P1 Flow Control Proportional Valve 10

System Control for Energy Saving 11
1. Reduced Fuel Consumption Through Transient Load Reduction Control 11
2. Reduced Fuel Consumption Through Swing Relief Cut Control 13
3. Reduced Fuel Consumption Through Power Save Control 15

Swing Speed Limit Control 17

Electrical Equipment Layout Diagram

Overall View 19
1. Main Unit Right Side Layout Diagram (radiator compartment) 20
2. Engine Section Layout Diagram 21
3. Main Unit Left Side Layout Diagram (pump compartment) 22
4. Main Unit Center Section Layout Diagram 23
5. Cab Layout Diagram 1 24
6. Layout Around Operator Seat 26

Stand-Alone Parts Diagram 27

Main Equipment Structural Diagrams

Connection Connector Pin Layout
1. Computer 45
2. Monitor 46

Table of Contents

Electrical Circuit Diagram

Overall View

1. Sequence Circuit Diagram (A3) 47

Block Diagrams

1. Computer 48
2. Computer S (Not used by LBX) 49
3. ECM 50
4. Monitor Display 51
5. Air Conditioner 52
6. Lever Lock 53
7. Horn 53
8. Working Light 54
9. Option 54
10. Others 55
11. Electrical Symbol List 56

Electrical Connector Wiring Diagram

Main Frame

1. Main Frame 57

Cab

1. Cab Main Harness 58
2. Cab Sub Harness 59
3. In Cab 60

Console

1. Console Right Harness 61
2. Console Left Harness 61

Electrical Parts and Wiring Assembly Diagram

Main Frame 62

Cab 63

Explanation of Functions and Operations

Explanation of Electrical Functions 64

Engine Speed Control

1. Throttle Control 66
2. Idling Control (auto / one-touch) 70
3. Idling Start 71
4. Idle Up 72
5. Auto Warm Up 72

Table of Contents

Engine Start / Stop Control
1. Engine Start / Stop Judgment 74
2. Power-Cut Delay 75
3. Engine Emergency Stop 77
4. Neutral Start 78

Pump Control
1. Work Mode Control 79
2. Pump Added Horsepower Control 80
3. Pump Horsepower Cut Control 81
4. Power save control 82

Swing
1. Swing Brake 84
2. Swing Free Swing (option for North America) 85
3. Swing Lock (for maintenance) 86
4. Swing Relief Cut 87
5. Swing Speed Limit 88

Travel
1. Travel Speed Switchover 90
2. Travel Alarm 91

Valve Control
1. Lever Lock 93
2. Solenoid Sticking Prevention 94
3. Pressure Boost Control 95

Monitor Control
1. Bar Graph
   (coolant temperature gauge, oil temperature gauge, fuel gauge) 97

Accessories
1. Horn 104
2. Working Light 105
3. Wiper & Washer 106
4. Room Lamp 108
5. Radio Mute 110

Others
1. Anti-Theft Protection 111
2. Battery Save Function 112
3. Alternator Power Generation Detection 113
4. Overload Alarm (Not used by LBX) 114

Options
1. Option Line Control 116
2. Option Line Control 119
3. Feed Pump Automatic Stop (Fuel Feed Pump not used on LBX machines . 121
4. Return Filter Restriction Detected 124
5. Beacon 125

Service Support
Screen Operations
1. Screen Shift 128

Screen Display List
1. CHK (status display) Screen List 129
2. DIAG (trouble diagnosis) Screen 140
3. HR (usage log) Screen List 142
4. CFG (setting change) Screen 149
5. CAL (troubleshooting support) Screen 152
6. Check the Monitor Switch (monitor switch check screen) 155
7. Option Flow Setting 157
8. Anti-Theft Protection Setting 159
9. Model Setting 160
10. Engine Screen Information 162

Screen Display Details
1. Message Display List 163

Abnormality Display
1. Diagnostic Trouble Code Display 165
2. Main Unit Error Code Table 166
3. Diagnostic Trouble Code (Monitor display) 169
4. Sensor Trouble Operation Table 174
5. EPF (Engine Protection Feature) 176

Table of Contents

Engine Section

Engine Summary

Main Data Table (changes from LX) 1
Overall Appearance Diagram 2
Sensor and Auxiliary Equipment Layout (left) 3
Sensor and Auxiliary Equipment Layout (rear) 4
Engine System Diagram 4
Fuel System Diagram 5
Detailed Parts Diagrams
1. ECM (engine control module) 6
2. Supply Pump / SCV (suction control valve) 7
3. Common Rail / Flow Damper 7
4. Common Rail Pressure Sensor / Pressure Limiter 8
5. Injector 8
6. Engine Coolant Temperature Sensor 9
7. Engine Oil Pressure Sensor 9
8. Cam Position Sensor (CMP sensor) 10
9. Crank Position Sensor (CKP sensor) 10
10. Atmospheric Pressure Sensor 11
11. Suction Air Temperature Sensor 11
12. Boost Pressure Sensor 12
13. Boost Temperature Sensor 12
14. Electromagnetic Pump 13
15. EGR Cooler 13
16. Lead Valve (check valve) 14
17. EGR Valve 14

Engine Control Summary 15

Explanation of Engine Terms

Function Explanation Table 16

Explanation of Engine Structure

Technology for Exhaust Gases
1. Common Rail System 18
2. Multi-Stage Fuel Injection (multiple injection) 19
3. Inter Cooler 21
4. EGR (exhaust gas recirculation) 22

Explanation of Engine Operation

Engine Overall
1. Comparison of 6BG1 and 4HK1 24

Fuel Unit
1. Common Rail System Summary 25

2. Change Points for Injection Method (governor, common rail) 26
3. Explanation of Injector Operation 27
4. Explanation of Supply Pump Operation 30
5. Supply Pump Disassembly Diagram 31
6. Explanation of Flow Damper Operation 32
7. Pressure Limiter 33
8. Cautions for Maintenance 34

Explanation of Engine Control

1. Fuel Injection Quantity Correction 37
2. Starting Q Correction 37
3. Pre-Heat Control (QOS quick on start) 37
4. Atmospheric Pressure Correction (high altitude correction) 37
5. Control for Overheating 38
6. Control for Boost Temperature Rise 39
7. Control for Engine Oil Pressure Drop 39
8. Start Control (coolant temperature monitoring) 39
9. Long Cranking Control 40
10. Starting Control for Reduced Number of Cylinders 40
11. Normal Stop (key switch OFF operation) 40
12. Engine Start / Stop Judgment 41

Engine Maintenance Standards

Engine Information Screen 42
Monitor Operation Method 43
Engine Information (Q adjustment, QR code, engine serial number) Copying Method 44
Rewriting Injector QR Codes 45
When Replacing Controller A at the Same Time 47
Engine Information Acquisition Timing 47
Trouble Display 47

Engine Equipment Table

Exhaust Gas Third Regulation Accessory Electrical Parts Compatibility (ISUZU part number) 48

Exhaust Gas Regulations

Features of Materials Subject to Exhaust Gas Regulation 49
Exhaust Gas Regulation Values 49

Cautions for Fuel Used

Engine Fuel and Maintenance of Fuel Filters 51

1. Fuel to be applied 51
2. Maintenance of fuel filters 52

Table of Contents

Air Conditioner Section

Changes from LX

Change List 1

Layout Diagram

Air Conditioner Overall Diagram

1. Frame 2
2. Cab 3

Equipment Layout Diagram 5

Explanation of Functions

Explanation of Control 7

1. Air Mix Motor Actuator Control 8
2. Blow Mode Motor Actuator Control 8
3. Refresh / Recirculate Switch Motor Actuator Control 9
4. Blower Amp Control 10
5. Compressor Clutch Control 13
6. COOLMAX Control and HOTMAX Control 14
7. Trouble Detection and Control after Trouble Detected 15
8. Monitor Mode 17
9. Door Switch Control 18
10. Inside Air Filter Clogging Detection Control 19

Actuator Inspection

Air Mix Motor Actuator Inspection 21

Refresh / Recirculate Motor Actuator Inspection 23

Mode Motor Actuator Inspection 25

Self-Diagnosis Function With Panel Display

Trouble Display and Self-Check Procedure

1. Trouble Display Position 27
2. Explanation of Trouble Display 27
3. Explanation of Monitor Mode 29

Part Function and OK / NG Judgment

Control Panel and Control Unit 38

Blower Amp 38

Relay 39

Air Mix Actuator 39

Refresh / Recirculate Actuator 40

Blow Mode Actuator 40

Evaporator Sensor 41

Dual Pressure Switch 41

Solar Radiation Sensor 41

Table of Contents

Maintenance Section

Pressure Measurement and Adjustment Procedures

Procedures for pressure measurement from the monitor display 1

Monitor and switch panel

1. Pressure Measurement Method 1
2. Operating Method 1

Procedures for measuring hydraulic oil temperature from the monitor display

1. Hydraulic Oil Temperature Measurement Method 2
2. Operating Method 2

Procedures for pressure measurement by installing pressure gauge

1. Preparations 3
2. Items to Prepare 3

Pressure measuring ports 4

Control valve 5

Pressure measurement preparations 6

Pressure measurement and adjustment procedures

1. Main Pressure Measurement 9
2. Pilot Pressure Measurement 13
3. Negative Control Pressure Measurement 14

Pressure adjustment

1. Main Pressure Adjustment 15
2. Pilot Pressure Adjustment 18

Hydraulic Pump Flow Measurement Procedure

Preparations 19

1. Items to Prepare 19

Work preparations 20

Flow measurement 23

Drain Volume Measurement Procedure

Preparations 24

Travel motor drain volume measurement 24

Swing motor drain volume measurement 27

Air Bleed Procedure

Hydraulic pump 28

Travel motor 29

Swing motor 30

HBCV 31

1. Boom Cylinder HBCV 31
2. Arm Cylinder HBCV 31

Table of Contents

Procedures for Replacing Consumable Parts

Air conditioner belt, fan belt replacement

1. Air Conditioner Belt Replacement 32
2. Fan Belt Replacement 34

Fuel filter replacement

1. Filter Replacement 37
2. Air Bleeding 39

Engine oil filter and engine oil replacement

1. Engine Oil Replacement 40
2. Engine Oil Filter Replacement 41

Radiator coolant replacement 43

Air cleaner cleaning and replacement 44

Hydraulic oil filter replacement 45

1. Return Filter Replacement 46
2. Suction Filter Replacement 47
3. Air Breather Element Replacement 48
4. Pilot Oil Filter Replacement 48
5. Hydraulic Oil Replacement 49

Others

1. Coolant Filling 52
2. Washer Fluid Filling 52

Lever Pattern Change Procedure

Items to prepare

ISO type 53

ISO type ⇒ SUMITOMO type 54

ISO type ⇒ MITSUBISHI type 54

ISO type ⇒ SHINKO type 55

Periodic Maintenance Procedures

Maintenance every 250 hours 56

1. Battery Inspection and Replacement 56

Maintenance after first 250 hours for new machine / every 1000 hours from then ON

1. Swing Reduction Gear Oil Replacement 57
2. Gear Oil Filling 58
3. Replace the Flange Packing at the Bottom of the Fuel Tank. 59

Bolt Size and Torque Table

Bolt and nut tightening 60

Retightening torque table 61

Table of Contents

Data Section

Main Unit Weight

Major Component Weight (standard specifications) 1

Individual Part Weight 2

Dry weight for each part is shown in the table below 2

Shoe Weight (per side) 2

Arm Weight 2

Bucket Weight 3

Compatibility

Compatibility 4

1. Main Part Interchangeability Table (210X2) 4
2. Main Part Interchangeability Table (240X2) 5

Attachment Installation Methods

Attachment Dimensions 8

Paint Colors

Paint Colors 9

Unit Conversion Ratio

Unit Conversion Ratio 10

Overall

1. Main Data

Model name	210X2	240X2
Operating weight	47,399 lbs (21500 kg)	54,895 lbs (24900 kg)
Engine output	117.3 kW / 1800 min^{-1}	132.1 kW / 2000 min^{-1}
Bucket capacity	Heaped .98 yd^3 (0.90 m^3)	Heaped 1.2 yd^3 (1.10 m^3)
	Leveled 0.71 yd^3 (0.65 m^3)	Leveled 0.83 yd^3 (0.76 m^3)

2. Performance

	210X2	240X2
Swing speed	11.5 min^{-1}	10.7 min^{-1}
Travel speed	Low speed 2.1 mi / h (3.4 km / h) High speed 3.5 mi / h (5.6 km / h)	Low speed 3.3 mi / h (3.5 km / h) High speed 3.4 mi / h (5.5 km / h)
Maximum pulling force	42534 lbf (189.2 kN)	45187 lbf (201 kN)
Grade ability	70 % (35°)	
Ground pressure	6.1 PSI (42 kPa) 23.6 in.(600 mm grouser shoe)	7.0 PSI (48 kPa) 23.6 in. (600 mm grouser shoe)
	5.4 PSI (37 kPa) 27.6 in. (700 mm grouser shoe)	6.1 PSI (42 kPa) (27.6 in. (700 mm grouser shoe)
	5.2 PSI (36 kPa) 31.5 PSI (800 mm grouser shoe)	5.4 PSI (37 kPa) 31.5 in. (800 mm grouser shoe)

3. Main Body Dimensions

	210X2	240X2
Main body length	195 in. (4955 mm)	207.5 in. (5270 mm)
Main body width	125.6 in. (3190 mm)	133.5 in. (3390 mm)
Upper side swing body width	110.6 in. (2810 mm)	
Cab width	39.4 in. (1000 mm)	
Main body height	116.5 in. (2960 mm)	118.9 in. (3020 mm)
Engine displacement	108.3 in. (2750 mm)	116 in. (2950 mm)
Swing body tail distance	107.1 in. (2720 mm)	115.7 in. (2940 mm)
Swing body rear section bottom height	41 in. (1040 mm)	43.3 in. (1100 mm)
Distance between tumblers	132.7 in. (3370 mm)	151 in. (3840 mm)
Overall track length	164.6 in. (4180 mm)	183 in. (4650 mm)
Overall track width	110 in. (2800 mm)	125.6 in. (3190 mm)
Distance between tracks	86.6 in. (2200 mm)	102 in. (2590 mm)
Track shoe width	23.6 in. (600 mm) (options 27.6 in. (700 mm), 31.5 in. (800 mm))	
Minimum ground clearance	18.1 in. (460 mm) (to bottom of lower frame)	

4. Engine

	210X2	240X2
Name	ISUZU 4HK1X diesel engine	
Model	4-cycle, water cooled, overhead camshaft, vertical in-line, direct injection type (electronic control), with turbocharger	
Number of cylinders - bore X stroke	4 - ϕ 115 mm X 125 mm	
Engine displacement	1.37 Gal. (5.193 L)	
Maximum torque	463 lbf• f (628 N•m) / 1500 min^{-1}	469 lbf• f (636 N•m)/ 1500 min^{-1}
Fuel consumption rate	229.3 g / kW•h max.	229 g / kW•h max.
Starter	24 V 5.0 kW Reduction type	
Charging generator	24 V 50 A AC type	
Battery	12 V 92 Ah / 5 Hr X 2	

5. Cooling System

	210X2 / 240X2
Fan type	ϕ650 mm X 7 Intake
Radiator	
Fin type	Wavy
Fin pitch	0.08 in. (2.0 mm)
Oil cooler	
Fin type	Wavy
Fin pitch	0.07 in. (1.75 mm)
Inter cooler	
Fin type	Triangular straight
Fin pitch	0.07 in. (1.75 mm)
Fuel cooler	
Fin type	Wavy
Fin pitch	0.08 in. (2.0 mm)

6. Upper Side Work System

	210X2		240X2		
Model	Backhoe attachment				
Components, dimensions, working dimensions					
Bucket capacity	Heaped 0.98 yd^3 (0.90 m^3) (Leveled 0.71 yd^3 (0.65 m^3))		Heaped 1.2 $yd^3$1(.10 m^3) (Leveled 0.83 yd^3 (0.76 m^3))		
Bucket width	45.3 in. (1150 mm)		49.6 in. (1260 mm)		
Bucket width with side cutter	49.2 in. (1250 mm)		53.5 in. (1360 mm)		
Bucket weight with side cutter	1,477 lb (670 kg)		1,922 lb (872 kg)		
Boom length	224 in. (5700 mm)		230 in. (5850 mm)		
Arm type	Standard 3.2 yd (2.94 m)	Short 2.6 yd (2.40 m)	Standard 2.5 yd (3.00 m)	Short 2.7 yd (2.50 m)	Long 3.9 yd (3.52 m)
Arm length	116 in. (2940 mm)	94.5 in. (2400 mm)	118 in. (3000 mm)	98.4 in. (2500 mm)	138.6 in. (3520 mm)
Bucket radius	57.1 in. (1450 mm)		61.8 in. (1570 mm)		
Bucket wrist angle	177°		175°		
Maximum digging radius	390 in. (9900 mm)	371 in. (9420 mm)	405 in. (10280 mm)	387 in. (9820 mm)	245 in. (10790 mm)
Maximum digging radius at ground line	383 in. (9730 mm)	363 in. (9240 mm)	398 in. (10100 mm)	379 in. (9630 mm)	418 in. (10620 mm)
Maximum digging depth	262 in. (6650 mm)	241 in. (6110 mm)	272 in. (6900 mm)	252 in. (6400 mm)	292 in. (7420 mm)
Maximum vertical straight wall digging depth	234 in. (5960 mm)	216 in. (5500 mm)	242 in. (6140 mm)	224 in. (5700 mm)	263 in. (6680 mm)
Maximum digging height	378 in. (9610 mm)	370 in. (9410 mm)	384 in. (9760 mm)	376 in. (9560 mm)	396 in. (10070 mm)
Maximum dump height	268 in. (6810 mm)	259 in. (6590 mm)	266 in. (6760 mm)	258 in. (6550 mm)	278 in. (7060 mm)
Minimum swing radius at front	142 in. (3600 mm)		156 in. (3950 mm)	157 in. (3980 mm)	156 in. (3950 mm)
Height for minimum swing radius at front	301 in. (7640 mm)	303 in. (7690 mm)	305 in. (7750 mm)	308 in. (7820 mm)	305 in. (7740 mm)

7. Operating Device

	210X2 / 240X2
Operator's seat	
Position	Left side
Structure	Adjustable forward and back and up and down, reclining mechanism, with seat suspension
Cab	Sealed steel type, all reinforced glass
Levers and pedals	
For travel use	Lever and pedal type (hydraulic pilot type) X 2
For operating machine use	Lever type (hydraulic pilot type) X 2
Instruments and switches	

	210X2 / 240X2
Work mode select switch	3 modes (SP / super power, H / dig mode, A / auto mode)
Travel mode select switch	Low-speed / high-speed switch type
One-touch idle	Knob switch type
Engine emergency stop	Switch type
Monitor device	
Machine status display (full dot liquid crystal)	
Work mode select status	SP / H / A
Instrument (full dot liquid crystal except for hour meter)	
Fuel gauge	Bar graph indicator
Engine coolant temperature gauge	Bar graph indicator
Hydraulic oil temperature gauge	Bar graph indicator
Hour meter	Digital type
Machine status and warning alarms (full dot liquid crystal and warning alarm)	*has warning alarm
Overheat * / Refill fuel * / Engine preheat / Anti-theft device triggered	Battery charge * / Engine oil pressure * / Auto warm up / Faulty engine system	Faulty electrical system * / Refill coolant * / Air cleaner clogged / Engine emergency stop
Illumination equipment	
Working light	Cab top: 24 V 70 W X 1
	Boom up: 24 V 70 W X 1
Interior light	24 V 10 W X 1
Horn	Electric horn X 2
Others	Wiper with intermittent function, window washer, air conditioner, clock, rear view mirrors (left and right) 1 each

8. Swing Units

	210X2 / 240X2
Swing circle	Swing bearing type (with inner gear)
Swing hydraulic motor	Fixed displacement piston motor X 1
Reduction gear	Planetary gear two-stage reduction gear
Swing parking brake	Mechanical lock (operational lever linkage type)

9. Travel Lower Body

	210X2	240X2
Travel hydraulic motor	Variable displacement piston motor X 2	
Reduction gear	Planetary gear two-stage reduction gear	
Travel brake	Hydraulic lock	
Parking brake	Mechanical lock (travel lever linkage type)	
Track shoe		
Model	Assembly type triple grouser shoe	
Number of shoes (per side)	49	51
Shoe width	23.6 in. (600 mm) (options 27.6 in. (700 mm), 31.5 in. (800 mm))	
Grouser height	1 in. (26 mm)	
Link pitch	7.5 in. (190 mm)	
Roller		
Number of upper rollers (per side)	2	
Number of lower rollers (per side)	8	9
Track belt tension adjuster	Grease cylinder type (with cushion spring)	

Hydraulic equipment

1. Hydraulic Device

	210X2	240X2
Hydraulic pump drive type	Direct engine link (no transmission)	
Hydraulic pump		
Model	Double variable displacement piston pump X 1	
	Gear pump X 1	
Discharge	Piston pump 2 X 55.7 Gal. / min (2 X 211 L / min)	Piston pump 2 X 62 Gal. / min (2 X 234 L / min)
	Gear pump 4.8 Gal. / min (18 L / min)	Gear pump 5.3 Gal. / min (20 L / min)
Pump control method	Simultaneous output full-horsepower control	
Set pressure of main relief valve	4975 PSI (34.3 MPa) 5337 PSI ((36.8 MPa) for boost)	
Set pressure of overload relief valve	4264 PSI (29.4 MPa) (boom down)	
	5613 PSI (38.7 MPa) (other)	

2. Control Valve, Cylinder

	210X2	240X2
Control valve		
Model	Quadruple spool Quintuple spool One-piece type X 1	
Operating type	Hydraulic pilot type: travel, swing, and operating machine	
Cylinder	Number of cylinders × Tube bore - Rod diameter - Stroke	
Boom cylinder	2 ×ϕ 4.7 in.(120 mm)- ϕ3.3 in. (85 mm)-49.4 in. (1255 mm)	2 × ϕ 5.1 in. (130 mm)- ϕ 3.5 in. (90 mm)- 52.6 in. (1335 mm)
Arm cylinder	1 ×ϕ 5.5 in. (140 mm)- ϕ 3.9 in. (100 mm)-57 in. (1460 mm)	1 × ϕ 5.7 in. (145 mm)- ϕ 4.1 in. 105 mm-65.3 in. (1660 mm)
Bucket cylinder	1 ×ϕ 4.7 in. (120 mm)- ϕ 3.3 in. (85 mm)-39.8 in. (1010 mm)	1 × ϕ 5.1 in. (130 mm)- ϕ 3.5 in. (90 mm)-42.1 in. (1070 mm)

Capacities, filters

1. Water and Oil Capacities

	210X2	240X2
Coolant	6.8 Gal. (25.6 L)	6.7 Gal. (25.2 L)
Fuel	108 Gal. (410 L)	108 Gal. (410 L)
Engine lubricating oil	6.1 Gal. (23.1 L)	6.1 Gal. (23.1 L)
Travel reduction gear lubricating oil (one side)	1.2 Gal. (4.5 L)	1.2 Gal. (4.5 L)
Swing reduction gear lubricating oil	1.3 Gal. (5 L)	2.6 Gal. (9.7 L)
Hydraulic oil	63.4 Gal. (240 L)	66 Gal. (250 L)
Hydraulic oil tank regulation amount	38.8 Gal. (147 L)	38.8 Gal. (147 L)

2. Hydraulic Oil Filters

	210X2 / 240X2
Suction filter (in tank)	0.006 in. (155 μm)
Return filter (in tank)	(6 μm)
Pilot line filter (inside housing)	(8 μm)

3. Fuel Filter

	210X2 / 240X2
Main filter	(4 μm)
Pre-filter	(10 μm)

B

Overall View (210X2)

1. Standard Arm 3.2 yd (2.94 m)

   Note: 1. Numbers are subject to change without notice due to design change or other reason.

   Note: 2. The figures give values that include the shoe lug height 1 in. (26 mm).

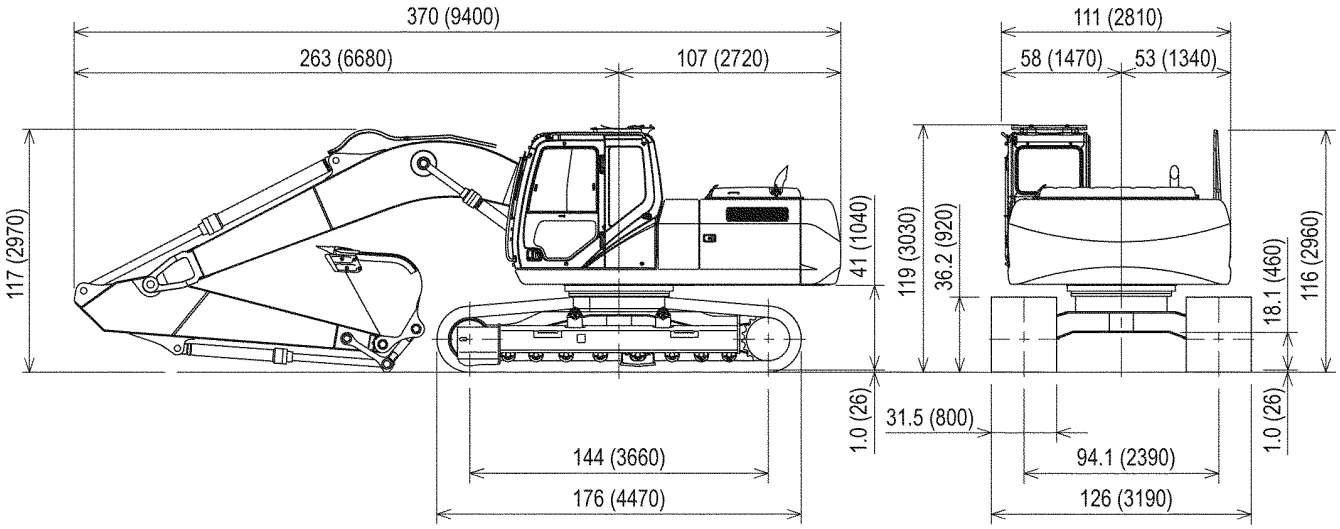

RB030001-001LBX

2. Short Arm 2.6 yd (2.40 m)

   Note: 1. Numbers are subject to change without notice due to design change or other reason.

   Note: 2. The figures give values that include the shoe lug height 1 in. (26 mm).

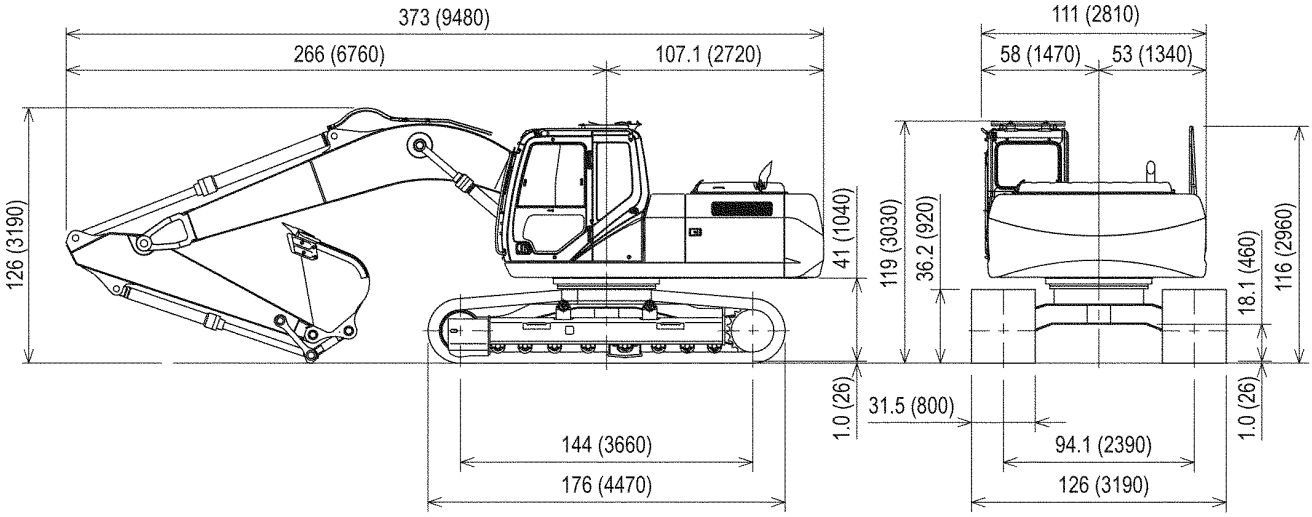

RB030001-002LBX

Overall View (240X2)

1. Standard Arm 3.2 yd (3.00 m)

   Note: 1. Numbers are subject to change without notice due to design change or other reason.

   Note: 2. The figures give values that include the shoe lug height 1 in. (26 mm).

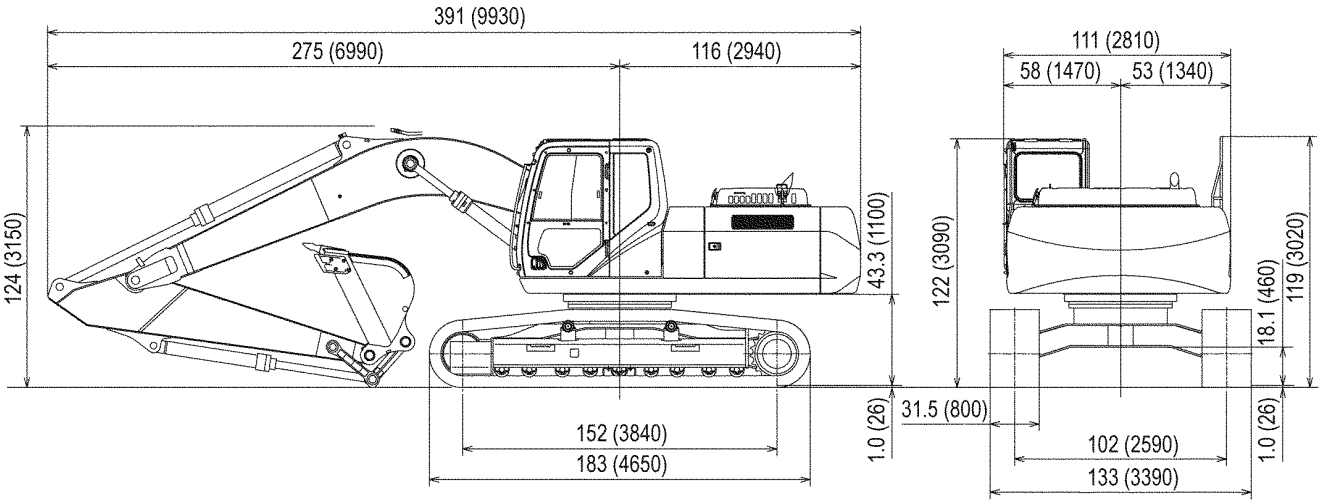

RB03001-003LBX

2. Short Arm 2.7 yd. (2.50 m)

   Note: 1. Numbers are subject to change without notice due to design change or other reason.

   Note: 2. The figures give values that include the shoe lug height 1 in. (26 mm).

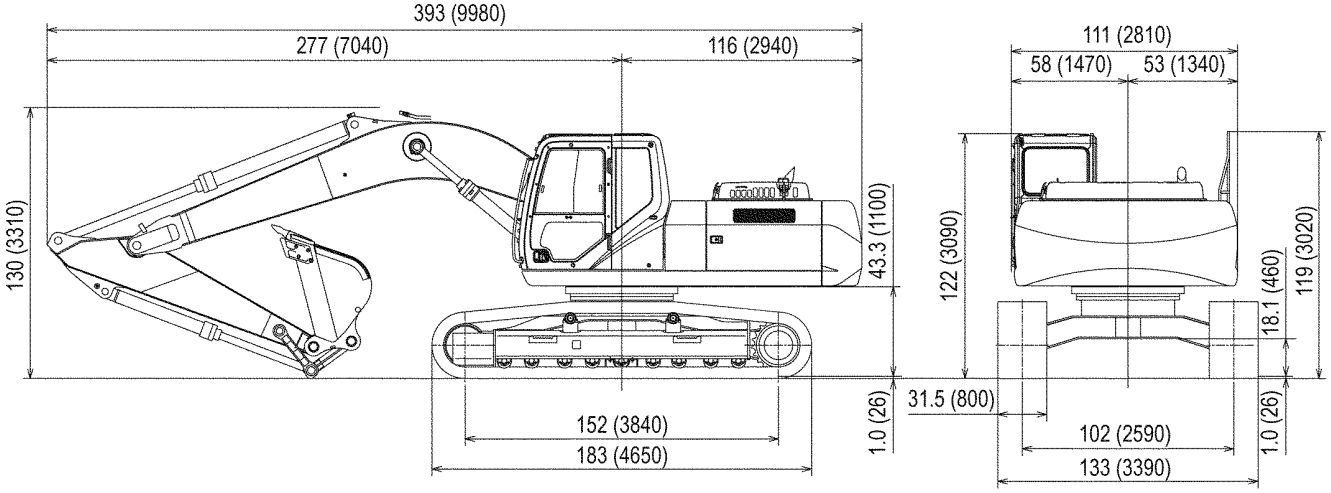

RB03001-004LBX

B

3. Long Arm 3.8 yd (3.52 m)

Note: 1. Numbers are subject to change without notice due to design change or other reason.

Note: 2. The figures give values that include the shoe lug height 1 in. (26 mm).

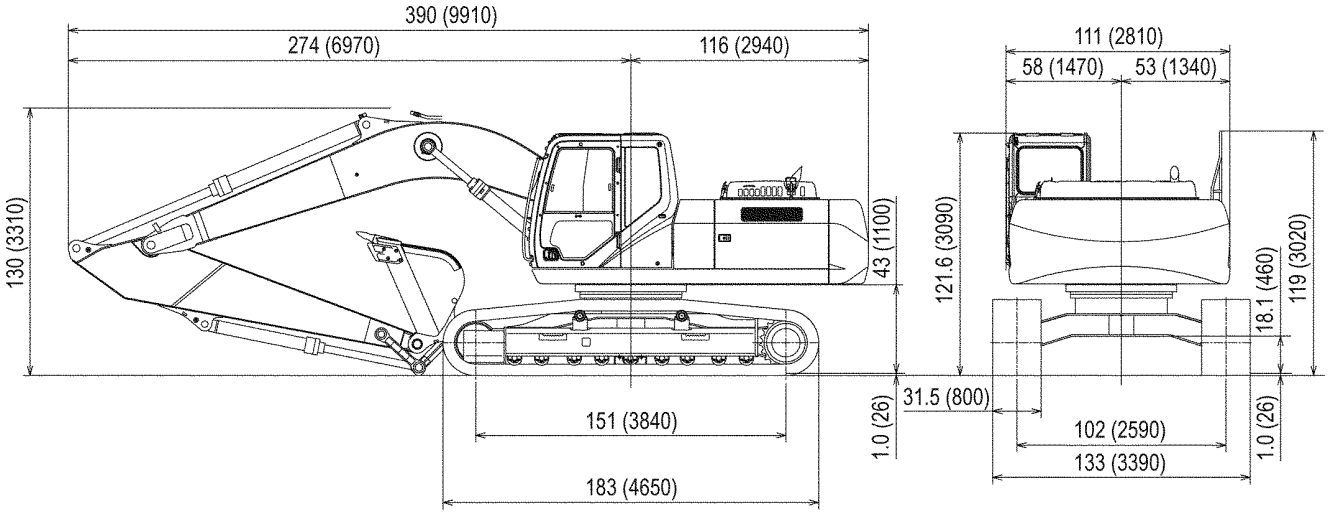

RB03004-005LBX

Work Range Diagram (210X2)

1. Standard Arm 3.2 yd (2.94 m)

   Note: 1. Numbers are subject to change without notice due to design change or other reason.

   Note: 2. The figures give values that exclude the shoe lug height 1 in. (26 mm).

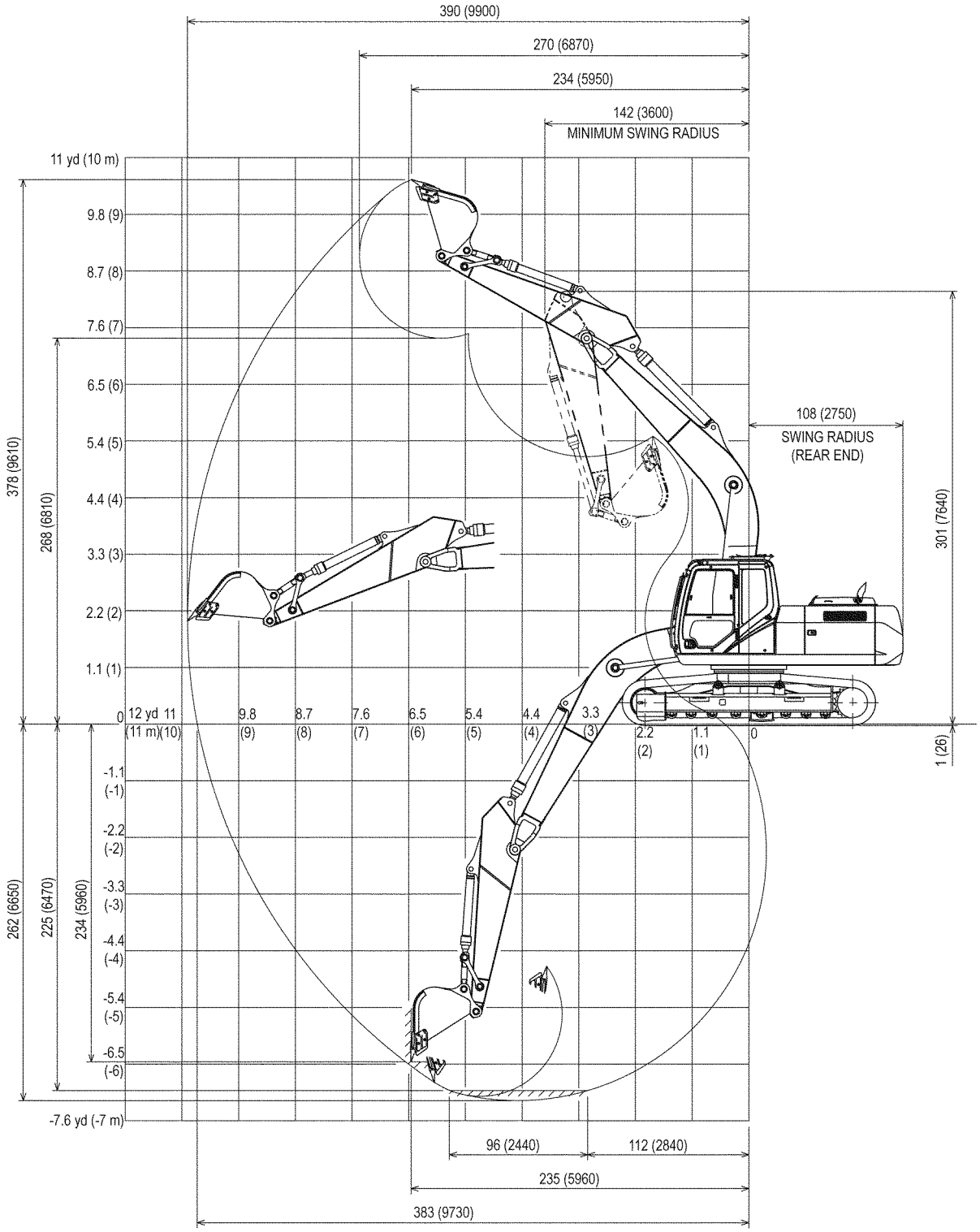

RB04001-001LBX

2. Short Arm 2.6 yd (2.40 m)

Note: 1. Numbers are subject to change without notice due to design change or other reason.

Note: 2. The figures give values that exclude the shoe lug height 1 in. (26 mm).

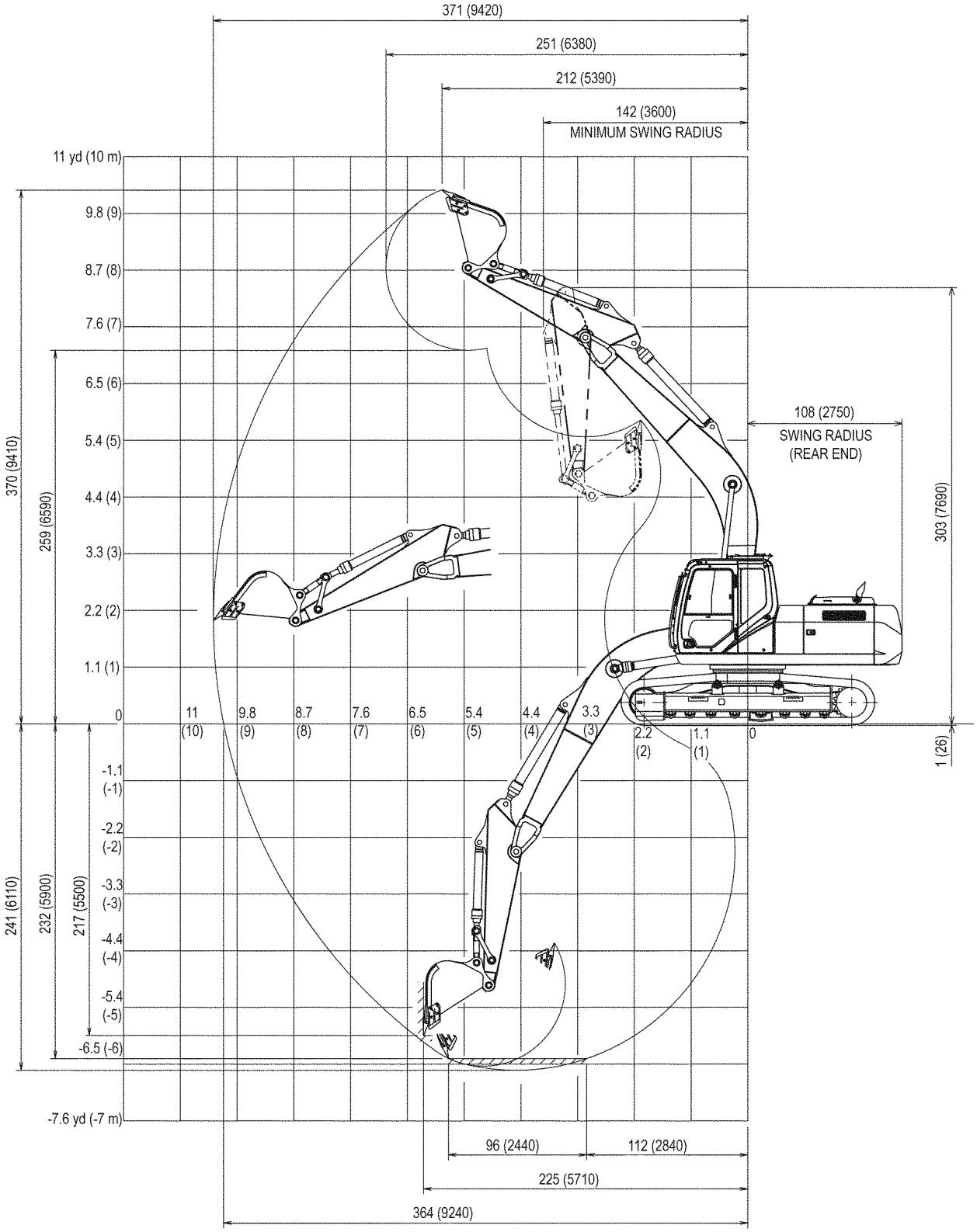

RB04001-002LBX

Work Range Diagram (240X2)

1. Standard Arm 3.2 yd (3.00 m)

   Note: 1. Numbers are subject to change without notice due to design change or other reason.

   Note: 2. The figures give values that exclude the shoe lug height 1 in. (26 mm).

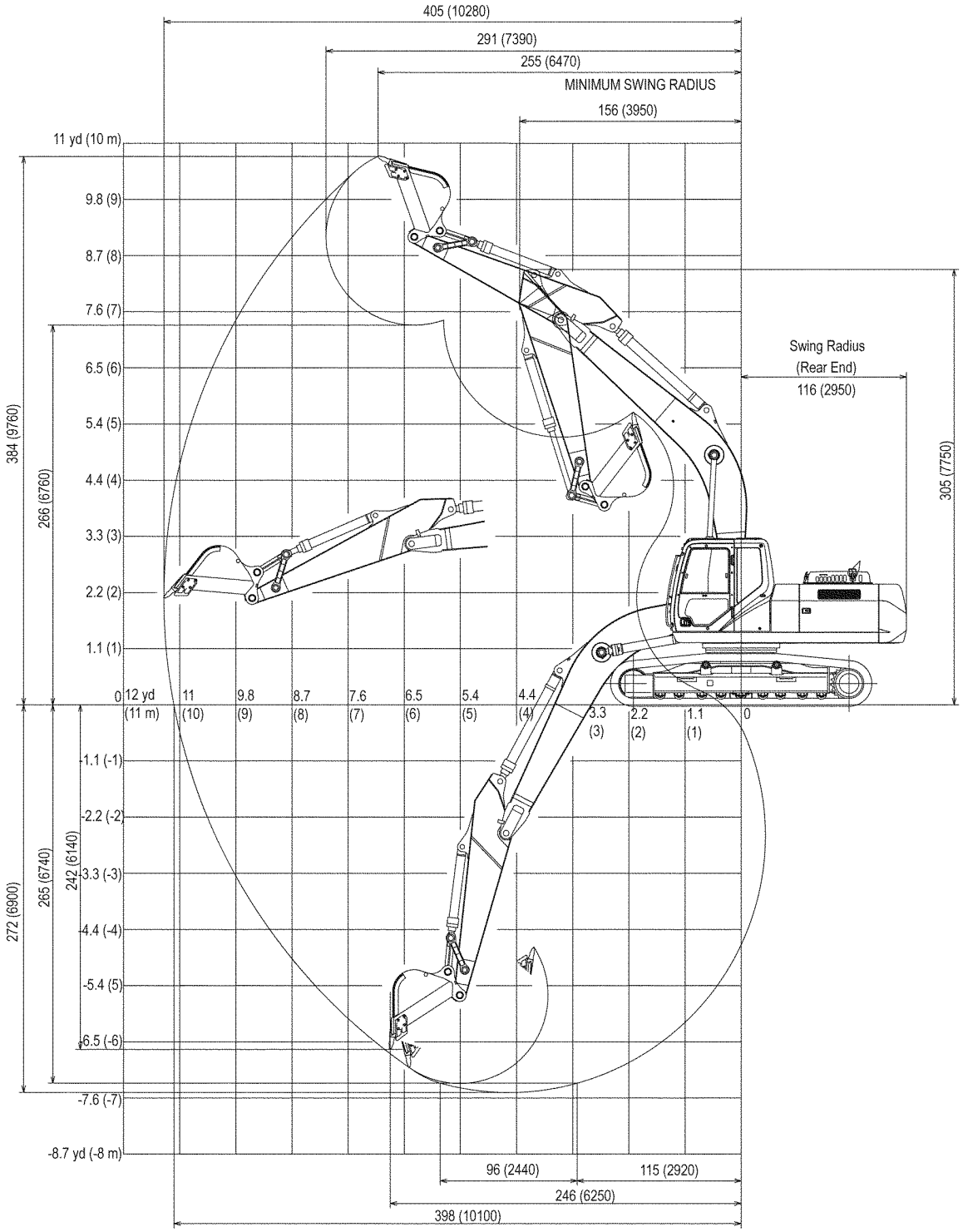

2. Short Arm 2.7 yd (2.50 m)

Note: 1. Numbers are subject to change without notice due to design change or other reason.

Note: 2. The figures give values that exclude the shoe lug height 1 in. (26 mm).

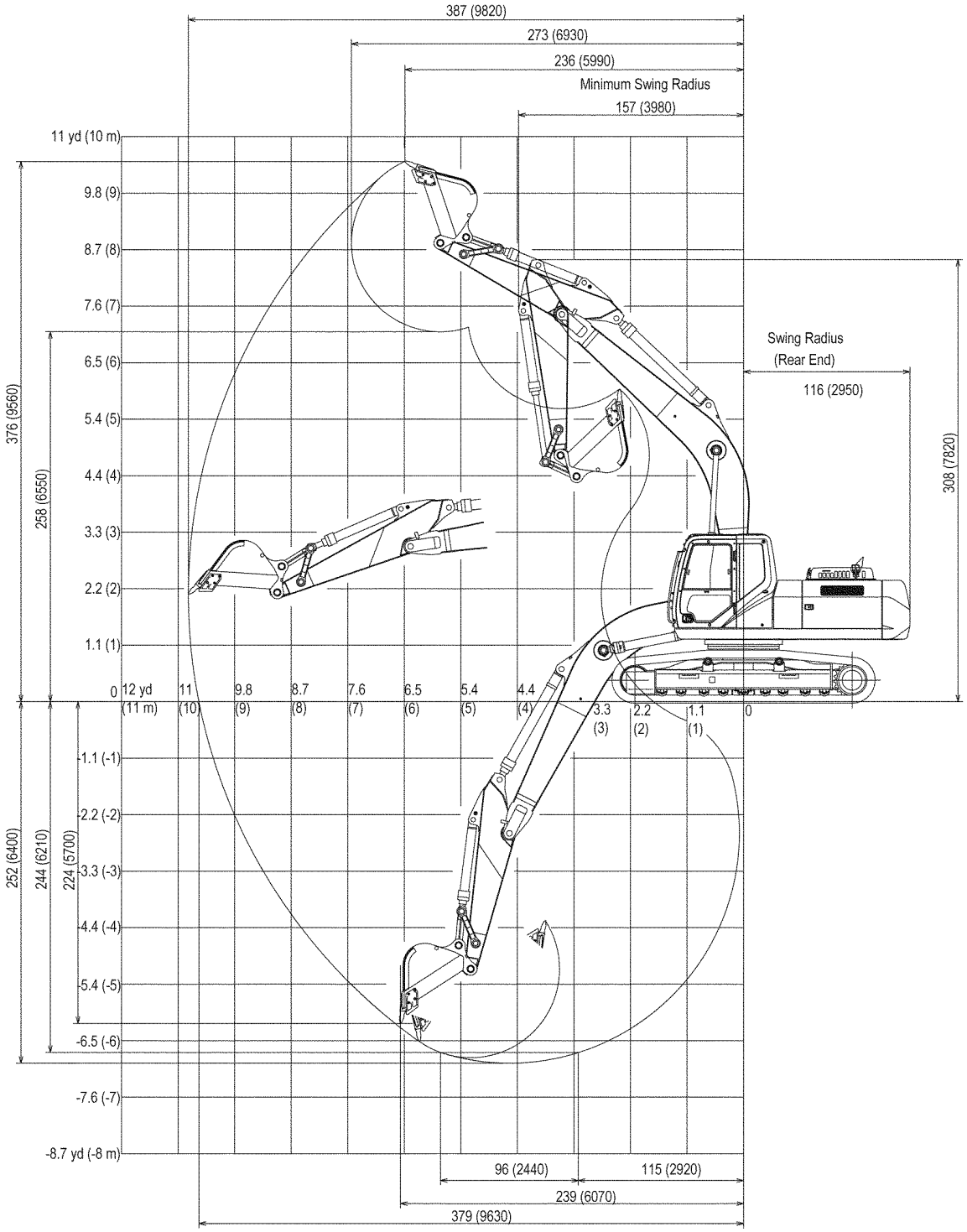

RB04001-004LBX

3. Long Arm 3.8 yd (3.52 m)

Note: 1. Numbers are subject to change without notice due to design change or other reason.

Note: 2. The figures give values that exclude the shoe lug height 1 in. (26 mm).

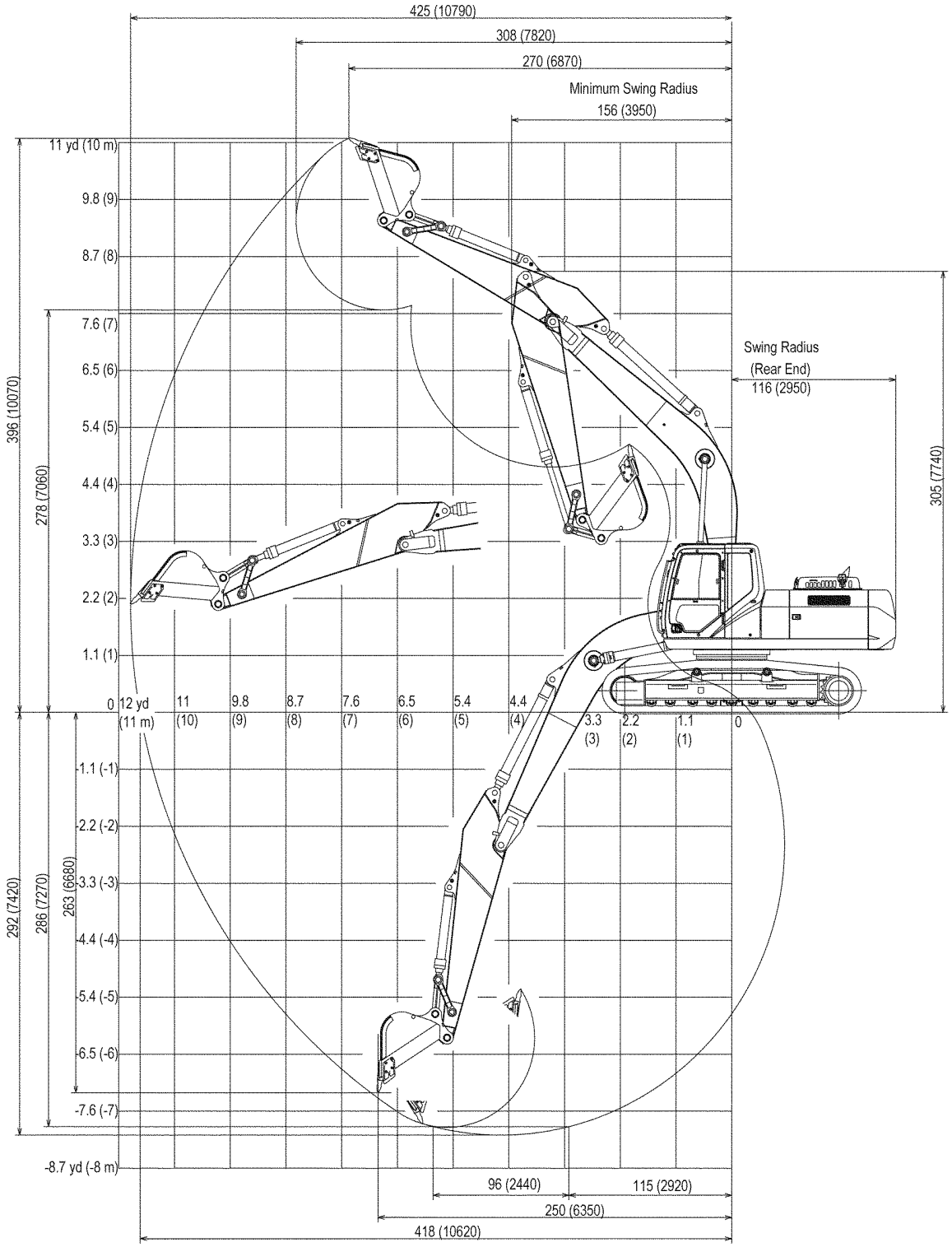

RB04001-005LBX

B

Lower Mechanism

1. Travel Unit

	210X2	240X2
Sumitomo Part No.	KRA10150	KBA10290
Manufacturer	Kayaba Industry Co., Ltd.	Kayaba Industry Co., Ltd.
Motor type	Variable displacement piston motor Automatic 2-speed switchover with parking brake	Variable displacement piston motor Automatic 2-speed switchover with parking brake
Intake amount	168.9 / 100.3 cm^3 / rev	181.3 / 112.6 cm^3 / rev
Operating pressure	4975 PSI (34.3 MPa)	4975 PSI (34.3 MPa)
Operating flow	46.3 Gal. (210.6 L) / min	51.5 Gal. (234.0 L)/ min
Brake torque	15415 lbf•ft (20.9 kN•m) min. (including reduction gear)	15415 lbf•ft (20.9 kN•m min. (including reduction gear)
Relief valve set pressure	5120 PSI (35.3 MPa)	5120 PSI (35.3 MPa)
Automatic 2-speed switchover pressure	3698 PSI (25.5 MPa)	3698 PSI (25.5 MPa)
Reduction gear		
Reduction gear type	Planetary gear two-stage reduction gear	Planetary gear two-stage reduction gear
Reduction ratio	43.246	43.246
Dry weight	578 lb (262 kg)	578 lb (262 kg)

2. Take-Up Roller

	210X2 / 240X2
Sumitomo Part No.	KRA1767
Weight	191 lb (86.8 kg)

3. Upper-Roller

	210X2 / 240X2
Sumitomo Part No.	KRA1717
Weight	38 lb (17.2 kg)

4. Lower Roller

	210X2	240X2
Sumitomo Part No.	KRA10360	KBA10310
Weight	76 lb (34.4 kg)	79 lb (35.8 kg)

https://truckmanualshub.com/

5. Recoil Spring

	210X2		240X2	
Item	Sumitomo Part No.	Weight lb (kg)	Sumitomo Part No.	Weight lb (kg)
Yoke	KRA10230	56 (25.6)	KRA10230	56 (25.6)
Sems B M16 X 50	105R016Y050R	1.1 (0.5)	105R016Y050R	1.1 (0.5)
Threaded rod	KRA10240	65 (29.7)	KRA10240	65.5 (29.7)
Groove height N M56	165R056HSN	3.5 (1.6)	165R056HSN	2.2 (1.0)
SP pin 8 X 80	338W080Z080B	0.22 (0.1)	338W080Z080B	0.2 (0.1)
Recoil spring	KRA10170	149 (67.6)	KRA10170	149 (67.6)
Grease cylinder assembly	KBA1118	67 (30.4)	KBA10400	78 (35.4)
Sems B	105R016Y055R (M16 X 55)	0.66 (0.3)	105R016Y060R (M16 X 60)	0.66 (0.3)
Assembly	Total	342 (155)	Total	353 (160)
	Mounting length of spring	22 in. (556 mm)	Mounting length of spring	22 in. (556 mm)

6. Shoes

	210X2		240X2	
Item	Sumitomo Part No.	Weight or quantity	Sumitomo Part No.	Weight or quantity
600 grouser	KRA11370	2,952 lb (1339 kg)	KBA11230	3,254 lb (1476kg)
Link	KRA11500	1 set	KBA11280	1 set
Shoes	KRA1005	49	KBA0839	51
Bolt	KRA1006	196	KRA1006	204
Nut	KRA1007	196	KRA1007	204
700 grouser	KRA11380	3,448 lb (1564 kg)	KBA11240	3567 lb (1618kg)
Link	KRA11500	1 set	KBA11280	1 set
Shoes	KBA0883	49	KBA0883	51
Bolt	KRA1006	196	KRA1006	204
Nut	KRA1007	196	KRA1007	204
800 grouser	KRA11390	3,702 lb (1697kg)	KBA11250	3,893 lb (1766 kg)
Link	KRA11500	1 set	KBA11280	1 set
Shoes	KBA0776	49	KBA0776	51
Bolt	KRA1006	196	KRA1006	204
Nut	KRA1007	196	KRA1007	204
900 triangular shoes	KRA11420	3,655 lb (1658 kg)	-	-
Link	KRA11500	1 set	-	-
Shoes	KRA1212	49	-	-
Bolt	KRA1006	196	-	-
Nut	KRA1007	196	-	-
900 grouser	-	-	KBA11260	4,242 lb (1924 kg)
Link	-	-	KBA11280	1 set
Shoes	-	-	KRA1366	51
Bolt	-	-	KRA1006	204
Nut	-	-	KRA1007	204

B

Upper Mechanism

1. Swing Unit

	210X2	240X2
Swing motor assembly		
Sumitomo Part No.	KRC10010	KBC10010
Swing motor		
Sumitomo Part No.	-	KBC10020
Manufacturer	TOSHIBA MACHINE CO., LTD	Kawasaki Precision Machinery Ltd.
Motor type	Fixed displacement piston motor With parking brake	Fixed displacement piston motor With parking brake
Intake amount	5.1 in.^{3} (151 cm$^{3)}$ / rev	5 in.^{3} (148.5 cm$^{3)}$ / rev
Operating pressure	4264 PSI (29.4 MPa)	4192 PSI (28.9 MPa)
Operating flow	55.6 Gal. (210.6 L) / min	56.5 Gal (214 L) / min
Mechanical brake torque	606 lbf•f (821.5 N•m) min.	624 lbf•f (846.0 N•m) min.
Brake off pressure	464 PSI (3.2 MPa) max.	421 PSI (2.9 MPa) max.
Relief valve set pressure	4264 PSI (29.4 MPa)	4192 PSI (28.9 MPa)
Swing reduction gear		
Sumitomo Part No.	-	KBC10030
Manufacturer	TOSHIBA MACHINE CO., LTD	Hitachi Construction Machinery Co., Ltd.
Reduction gear type	Planetary gear two-stage reduction gear	Planetary gear two-stage reduction gear
Reduction ratio	16.757	21.75
Dry weight	518 lb (235 kg)	646 lb (293 kg)
Turntable bearing		
Sumitomo Part No.	KRB11710	KBB11350
Number of teeth	92	92
Weight	538 lb (244 kg)	822 lb (373 kg)
Counterweight		
Sumitomo Part No.	KRB12620	KBB11610
Weight	8,378 lb (3800 kg)	11,574 (5250 kg)

Main Equipment Table

https://truckmanualshub.com/

Engine-Related

1. Engine

	210X2	240X2
Sumitomo Part No.	KRH11180	KBH10780
Engine model name	ISUZU 4HK1X diesel engine	ISUZU 4HK1X diesel engine
Engine type	4-cycle, water cooled, overhead camshaft type straight cylinder, direct fuel injection type (electronically controlled)	4-cycle, water cooled, overhead camshaft type straight cylinder, direct fuel injection type (electronically controlled)
Number of cylinders - bore - stroke	4 - ϕ 4.5 in. (115 mm) - 4.9 in. (125 mm)	4 - ϕ 4.5 in. (115 mm) - 4.9 in. (125 mm)
Total exhaust amount	1.37 Gal. (5.193 L)	1.37 Gal. (5.193 L)
Compression ratio	17.5	17.5
Rated output	132.1 kW / 2000 min^{-1}	132.1 kW / 2000 min^{-1}
Maximum torque	469 lbf•ft (636 N•m) / approx. 1500 min^{-1}	469 lbf•ft (636 N•m) / approx. 1500 min^{-1}
Fuel consumption ratio	228.6 g / kW•h max.	228.6 g / kW•h max.
Engine dry weight	About 1,058 lb (480 kg)	About 1,058 lb (480 kg)
Engine dimensions	L 40.2 in. (1020.4 mm) - W 32.6 in. (829 mm) - H 39.8 in. (1011.8 mm)	L 40.2 in. (1020.4 mm) - W 32.6 in. (829 mm) - H 39.8 in. (1011.8 mm)
Oil pan	All direction 35°, inclinable	All direction 35°, inclinable
Cooling fan	ϕ 26 in. (650 mm) - suction type - 7 vanes, plastic	ϕ 26 in. (650 mm) - suction type - 7 vanes, plastic
	With bell mouth type fan guide	With bell mouth type fan guide
Pulley ratio	0.85 (reduction)	0.85 (reduction)
Charging generator	24 V 50 A AC type	24 V 50 A AC type
Starter motor	24 V 5 kW reduction type	24 V 5 kW reduction type
Coolant capacity	3.7 Gal. (14.0 L)	3.7 Gal. (14.0 L)
Oil pan capacity	Max : 3.7 Gal.(20.5 L) Min : 3.4 Gal. (13 L) (not including oil filter)	Max : 3.7 Gal.(20.5 L) Min : 3.4 Gal. (13 L) (not including oil filter)
Direction of rotation	Clockwise (as seen from fan)	Clockwise (as seen from fan)

2. Muffler

	210X2 / 240X2
Sumitomo Part No.	KRH10880
Manufacturer	SANKEI GIKEN KOGYO CO., LTD
Model	ϕ280 X 700 L
Weight	35 lb (15.9 kg)

3. Air Cleaner (double element)

	210X2 / 240X2
Sumitomo Part No.	KRH10050
Manufacturer	Nippon Donaldson , Ltd.
Element (outer)	KBH0921
Element (inner)	KBH0922
Weight	16.8 lb (7.6 kg)

4. Radiator

		210X2	240X2
Sumitomo Part No.		KRH10810	KBH10800
Manufacturer		T.RAD Co., Ltd	T.RAD Co., Ltd
Oil cooler	Weight	60.6 lb (27.5 kg)	66 lb (30.0 kg)
	Oil capacity	3 Gal. (11.4 L)	3.4 Gal. (12.9 L)
Radiator	Weight	34.4 lb (15.6 kg)	34 lb (15.2 kg)
	Water capacity	2 Gal. (7.5 L)	1.8 Gal (7.0 L)
Air cooler	Weight	15.4 lb (7.0 kg)	17.6 lb (8.0 kg)
	Capacity	-	-
Fuel cooler	Weight	2.6 lb (1.2 kg)	2.6 lb (1.2 kg)
	Capacity	0.11 Gal. (0.44 L)	0.11 Gal. (0.44 L)
Total weight		258 lb (117 kg)	251 lb (114 kg)

https://truckmanualshub.com/

Hydraulic Device

1. Hydraulic Pump

		210X2	240X2
Sumitomo Part No.		KRJ10290	KBJ10510
Manufacturer		Kawasaki Precision Machinery Ltd.	Kawasaki Precision Machinery Ltd.
Main pump			
Pump type		Double variable displacement piston pump	Double variable displacement piston pump
Displacement		7.2 X 2 in.^{3} (118.5 X 2 cm^3)/ rev	7.2 X 2 in.^{3} (118.5 X 2 cm^3)/ rev
Operating pressure	Rated	4975 PSI (34.3 MPa)	4975 PSI (34.3 MPa)
	Maximum	5337 PSI (36.8 MPa)	5337 PSI (36.8 MPa)
Input revolution speed		2000 min^{-1}	1800 min^{-1}
Maximum discharge flow		61.8 X 2 Gal. / min (at 2000 min^{-1}) (234 X 2 L) / min (at 2000 min^{-1})	55.7 X 2 Gal. / (min at 1800 min^{-1}) (211X 2 L) / (min at 1800 min^{-1})
Pilot pump			
Pump type		Gear pump	Gear pump
Displacement		0.6 in.^{3} (10 cm^3) / rev	0.6 in.^{3} (10 cm^3) / rev
Operating pressure		569 PSI (3.92 MPa)	569 PSI (3.92 MPa)
Maximum discharge flow		5.3 Gal. (20 L) / min (at 2000 min^{-1})	4.8 Gal. (18 L) / min (at 1800 min^{-1})
Control method		Hydraulic simultaneous constant output control	Hydraulic simultaneous constant output control
		Maximum flow adjustment control through external commands (negative control)	Maximum flow adjustment control through external commands (negative control)
		Setting through external command curreHorsepower adjustment control	Setting through external command curreHorsepower adjustment control
Dry weight		280 lb (127 kg)	280 lb (127 kg)

B

2. Pump P - Q Diagram

(210X2)

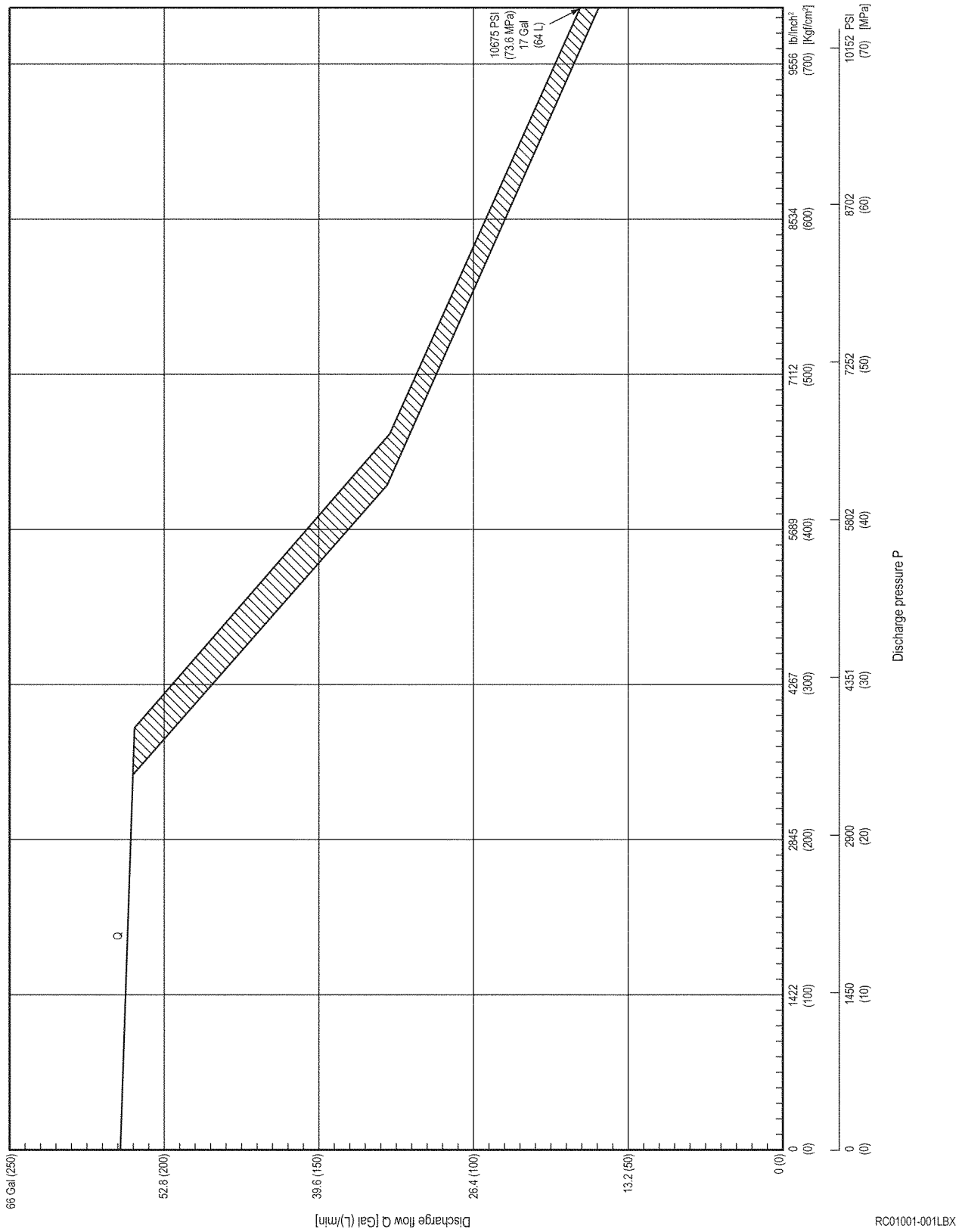

(240X2)

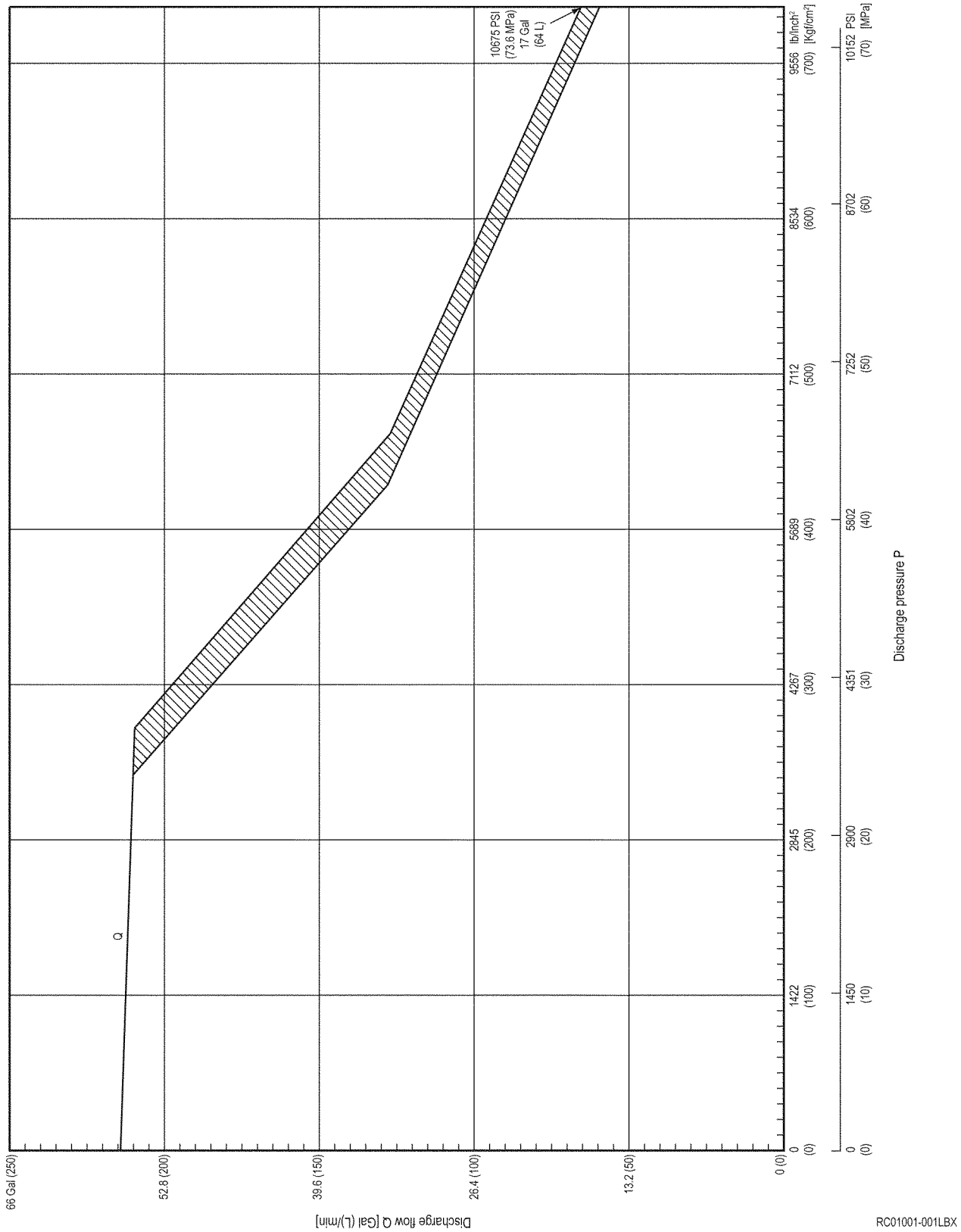
66 Gal (250)
52.8 (200)
39.6 (150)
26.4 (100)
13.2 (50)
0 (0)
Discharge flow Q [Gal (L)/min]
Q
10675 PSI
(73.6 MPa)
17 Gal
(64 L)
0 (0)
1422 (100)
2845 (200)
4267 (300)
5689 (400)
7112 (500)
8534 (600)
9556 (700)
lb/inch²
[Kgf/cm²]
0 (0)
1450 (10)
2900 (20)
4351 (30)
5802 (40)
7252 (50)
8702 (60)
10152 (70)
PSI
[MPa]
Discharge pressure P
RC01001-001LBX

Control-Related

1. Control Valve

	210X2	240X2
Sumitomo Part No.	KRJ10310	KBJ10390
Manufacturer	KYB Corporation	KYB Corporation
Maximum flow	56.3 Gal. (213 L)/min (at 1800 min^{-1})	62.6 Gal. (237 L)/min (at 2000 min^{-1})
Overload set pressure	4264 PSI (29.4 MPa) boom down	4264 PSI (29.4 MPa) boom down
	5613 PSI (38.7 MPa) other	5613 PSI (38.7 MPa) other
Main relief set pressure	4975 PSI (34.3 MPa)	4975 PSI (34.3 MPa)
(at boosting)	5337 PSI (36.8 MPa)	5337 PSI (36.8 MPa)
Foot relief set pressure	370 PSI (2.55 MPa)	370 PSI (2.55 MPa)
Function	Straight travel circuit	Straight travel circuit
	Boom up / arm 2nd speed internal merge	Boom up / arm 2nd speed internal merge
	Boom / arm load holding circuit	Boom / arm load holding circuit
	Boom down regenerative circuit	Boom down regenerative circuit
	Bucket close regenerative circuit	Bucket close regenerative circuit
	Arm-in forced regenerative circuit	Arm-in forced regenerative circuit
	Swing priority variable metering valve (for arm operation)	Swing priority variable metering valve (for arm operation)
	Option 2nd speed merge	Option 2nd speed merge
	Variable foot relief	Variable foot relief
Weight	423 lb (192 kg)	423 lb (192 kg)

2. Solenoid Valve (5 way)

	210LX2 / 240LX2
Sumitomo Part No.	KHJ14520
Manufacturer	YUKEN KOGYO CO., LTD.
Valve specifications	
Maximum flow	P →B 6.6 Gal. (25 L) / min other 1.3 Gal. (5 L) / min
Rated pressure	653 PSI (4.5 MPa)
Port size	P.T.B. port G 3 / 8
	C1, C2, C3, C4, C5 ports G 1 / 4
Solenoid specifications	
Operating voltage	20 to 32 V DC
Power consumption	17 W max.
Weight	14.8 lb (6.7kg)

https://truckmanualshub.com/

3. Remote Control Valve (left / right, travel operations)

(1) Valve for left / right operations

		210X2 / 240X2
Sumitomo Part No.		KHJ13270
Manufacturer		Kawasaki Precision Machinery Ltd.
Operating pressure		569 PSI (3.92 MPa)
Secondary pressure		92.8 to 355 PSI (0.64 to 2.45 MPa) primary short type
Operating angle	1, 3 ports	19 °
	2, 4 ports	25 °
Weight		4.2 lb (1.9 kg)

(2) Valve for travel operation

	210X2 / 240X2
Sumitomo Part No.	KRJ5803
Manufacturer	Kawasaki Precision Machinery Ltd.
Operating pressure	569 PSI (3.92 MPa)
Secondary pressure	92.8 to 355 PSI (0.64 to 2.45 MPa) primary short type
Operating angle	12.4 °
Weight	17.2 lb (7.8 kg)

B

4. Remote Control Valve Characteristic Diagram

(1) Operation remote control valve control diagram

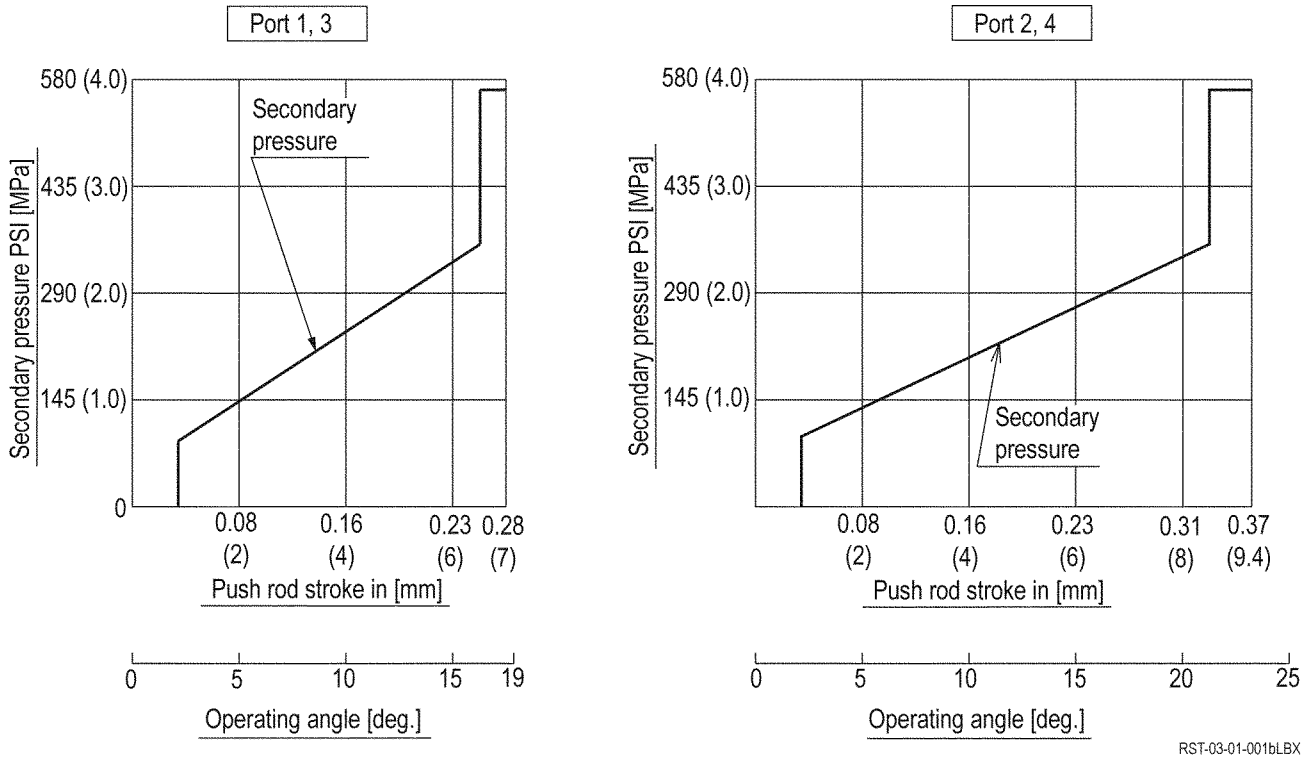

(2) Travel remote control valve control diagram

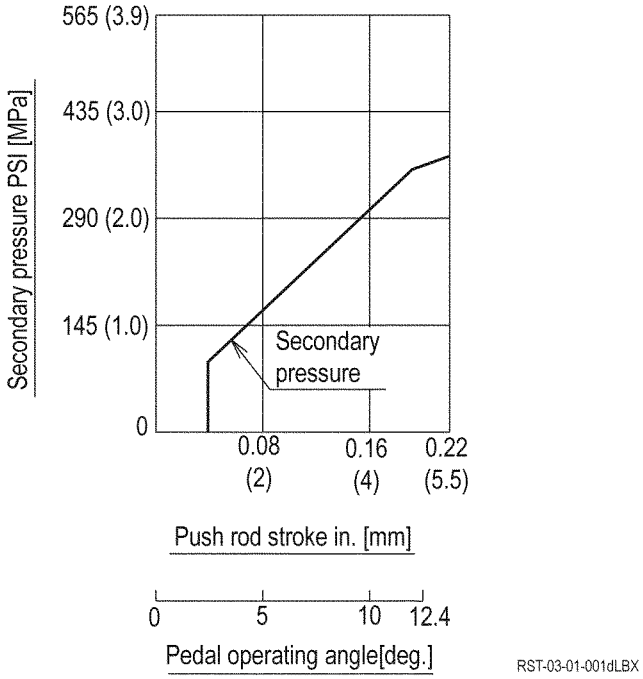

https://truckmanualshub.com/

5. Cushion Valve (heat circuit, with shuttle valve)

	210X2 / 240X2
Sumitomo Part No.	KBJ12430
Manufacturer	Yanagisawa Seiki Mfg. Co.,Ltd.
Port size	G 3 / 8 (A to P ports)
	G 1 / 4 (Q to V ports)
Weight	27.6 lb (12.5 kg)

6. Selector Valve (option)

	210X2 / 240X2
2WAY	
Sumitomo Part No.	KHJ12050
Manufacturer	Nishina Industrial Co., Ltd.
Rated flow	6.6 Gal. (25 L) / min
Operating type	I : ISO
	S : Sumitomo (old)
Port size	G3 / 8
Weight	8.8 lb (4 kg)
4WAY	
Sumitomo Part No.	KHJ10470
Manufacturer	Nishina Industrial Co., Ltd.
Rated flow	6.6 Gal. (25 L) / min
Operating type	ISO, Mitsubishi (old), Sumitomo (old), Kobelco (old)
Port size	G1 / 4
Weight	25 lb (11.3 kg)

7. Center Joint

	210X2 / 240X2	
Sumitomo Part No.	KRA11190	
Operating pressure	High pressure passage (ABCD)	4975 PSI (34.3 MPa)
	Drain port (E)	72.5 PSI (0.5 MPa)
	Pilot port (F)	565.6 PSI (3.9 MPa)
Flow	High pressure passage (ABCD)	61.8 Gal. (234 L) / min
	Drain port (E)	2.6 Gal. (10 L) / min
	Pilot port (F)	5.5 Gal. (21 L) / min
Port A	Forward right	G 3 / 4
Port B	Forward left	G 3 / 4
Port C	Backward right	G 3 / 4
Port D	Backward left	G 3 / 4
Port E	Drain port	G 1 / 2
Port F	Pilot port	G 1 / 4
Weight	65 lb (29.5 kg)	

https://truckmanualshub.com/

Backhoe Attachment

1. Cylinder

Boom cylinder	210X2	240X2
Sumitomo Part No.	KRV19520 (right)	KBV11060 (right)
	KRV19540(left)	KBV11080 (left)
Manufacturer	KYB Corporation	KYB Corporation
Cylinder bore	ϕ 4.7 in. (120 mm)	ϕ 5.1 in. (130 mm)
Rod diameter	ϕ 3.3 in. (85 mm)	ϕ 3.5 in. (90 mm)
Maximum retracted length	69 in. (1753 mm)	73 in. (1855 mm)
Stroke	49.4 in. (1255 mm)	52.6 in. (1335 mm)
Weight	362 lb (164 kg)	450 lb (204 kg)

Arm cylinder	210X2	240X2
Sumitomo Part No.	KRV19600	KBV11100
Manufacturer	KYB Corporation	KYB Corporation
Cylinder bore	ϕ 5.5 in. (140 mm)	ϕ 5.7 in. (145 mm)
Rod diameter	ϕ 3.9 in. (100 mm)	ϕ 4.1 in. (105 mm)
Maximum retracted length	80 in. (2020 mm)	88.2 in. (2240 mm)
Stroke	57.5 in. (1460 mm)	65.3 in. (1660 mm)
Weight	580 lb (263 kg)	714 lb (324 kg)

Bucket cylinder	210X2	240X2
Sumitomo Part No.	KRV19640	KBV11040
Manufacturer	KYB Corporation	KYB Corporation
Cylinder bore	ϕ 4.7 in. (120 mm)	ϕ 5.1 in. (130 mm)
Rod diameter	ϕ 3.3 in. (85 mm)	ϕ 3.5 in. (90 mm)
Maximum retracted length	61.6 in. (1565 mm)	64.4 in. (1635 mm)
Stroke	40 in. (1010 mm)	42.1 in. (1070 mm)
Weight	330.7 lb (150 kg)	419 in. (190 kg)

2. Attachment

(1) 210X2 / 240X2 bucket type

● Standard bucket

◎ General digging (specific gravity 2.0 ton / m^3 max.)

○ Light digging (specific gravity 1.6 ton / m^3 max.)

△ For loading only (specific gravity 1.2 ton / m^3 max.)

× Do not use

Bucket capacity yd^3 (m^3)		0.65(0.5)	1.0 (0.8)	1.2 (0.9)	1.3 (1.0)	1.4 (1.1)	1.7 (1.3)
Number of claws		-	-	-	-	-	-
Width (mm)		-	-	-	-	-	-
210X2	Standard arm 3.2 yd (2.94 m)	◎	●	○	△	△	×
	Short arm 2.6 yd (2.40 m)	◎	◎	●	○	△	×
240X2	Standard arm 3.3 yd (3.00 m)	×	◎	×	◎	●	○
	Short arm 2.7 yd (2.50 m)	×	◎	×	◎	◎	●
	Long arm 3.8 yd (3.52 m)	×	◎	×	●	○	○

The figures in ( ) are dimensions excluding the side cutter.

Main Equipment Layout

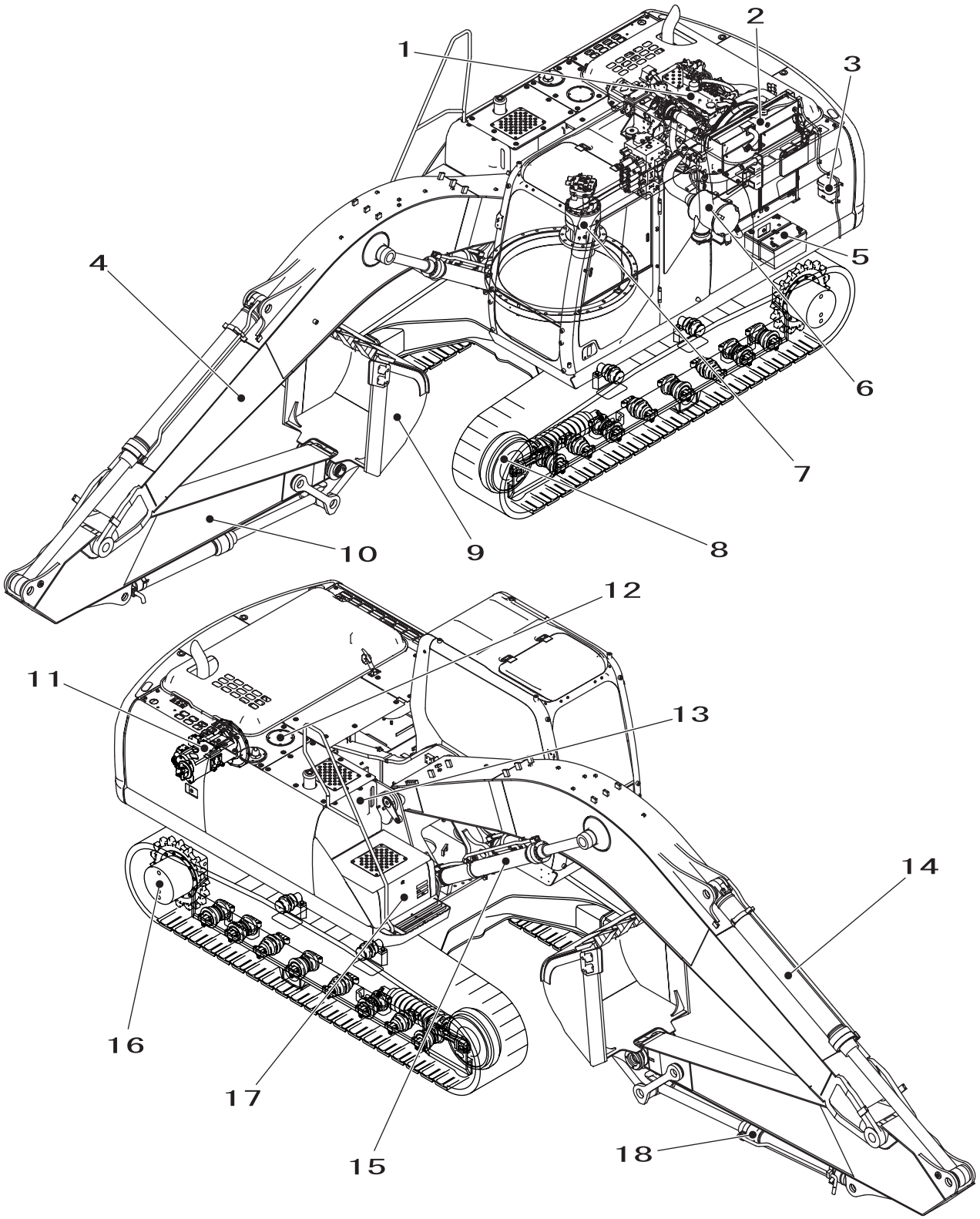

RST-03-02-001a

1	Engine	7	Swing motor	13	Fuel tank
2	Radiator	8	Front idler	14	Arm cylinder
3	Reserve tank	9	Bucket	15	Boom cylinder
4	Boom	10	Arm	16	Travel motor
5	Battery	11	Hydraulic pump	17	Tool box
6	Air cleaner	12	Hydraulic oil tank	18	Bucket cylinder

https://truckmanualshub.com/

Consumable Part Layout

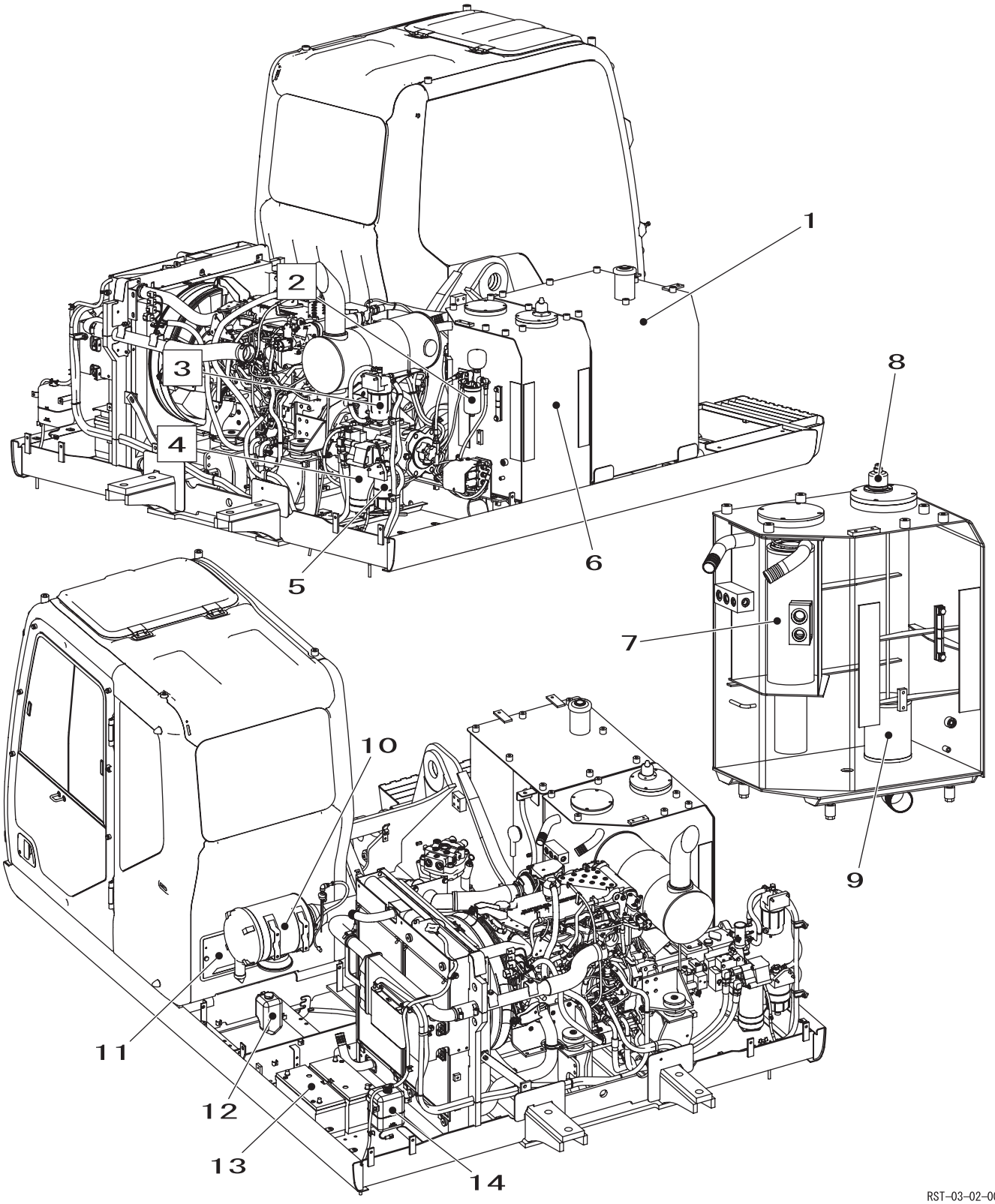

1	Fuel tank	6	Hydraulic oil tank	11	Air conditioner outside air filter
2	Pilot filter	7	Return filter	12	Washer tank
3	Fuel prefilter	8	Tank air breather	13	Battery
4	Engine oil filter	9	Suction filter	14	Reserve tank
5	Fuel filter	10	Air cleaner		

https://truckmanualshub.com

Hydraulic Equipment Layout

Overall View

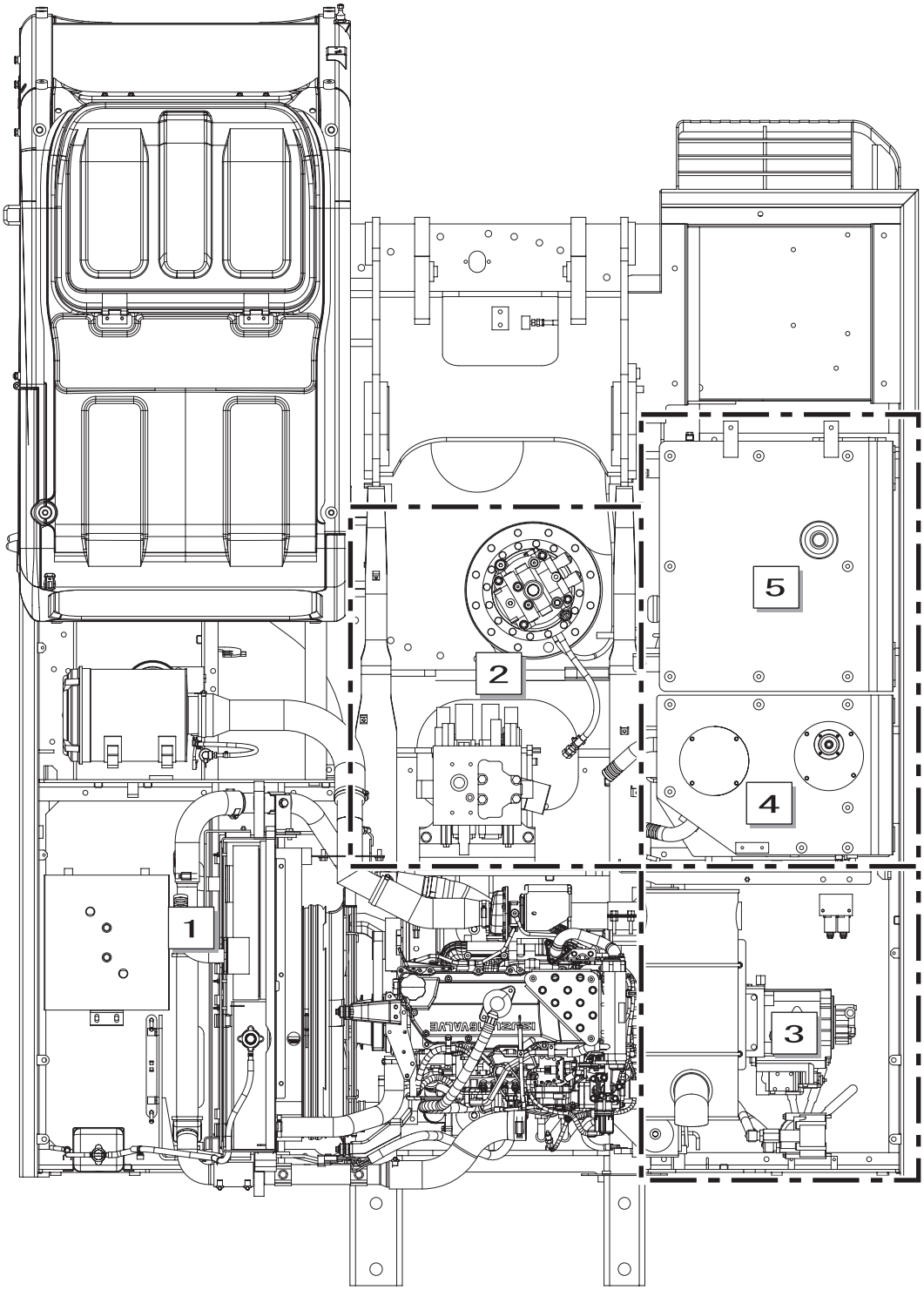

1	Left side housing
2	Swing body center section
3	Pump compartment
4	Hydraulic oil tank
5	Fuel tank

https://manualshub.com/

Pump Chamber Hydraulic Equipment Layout

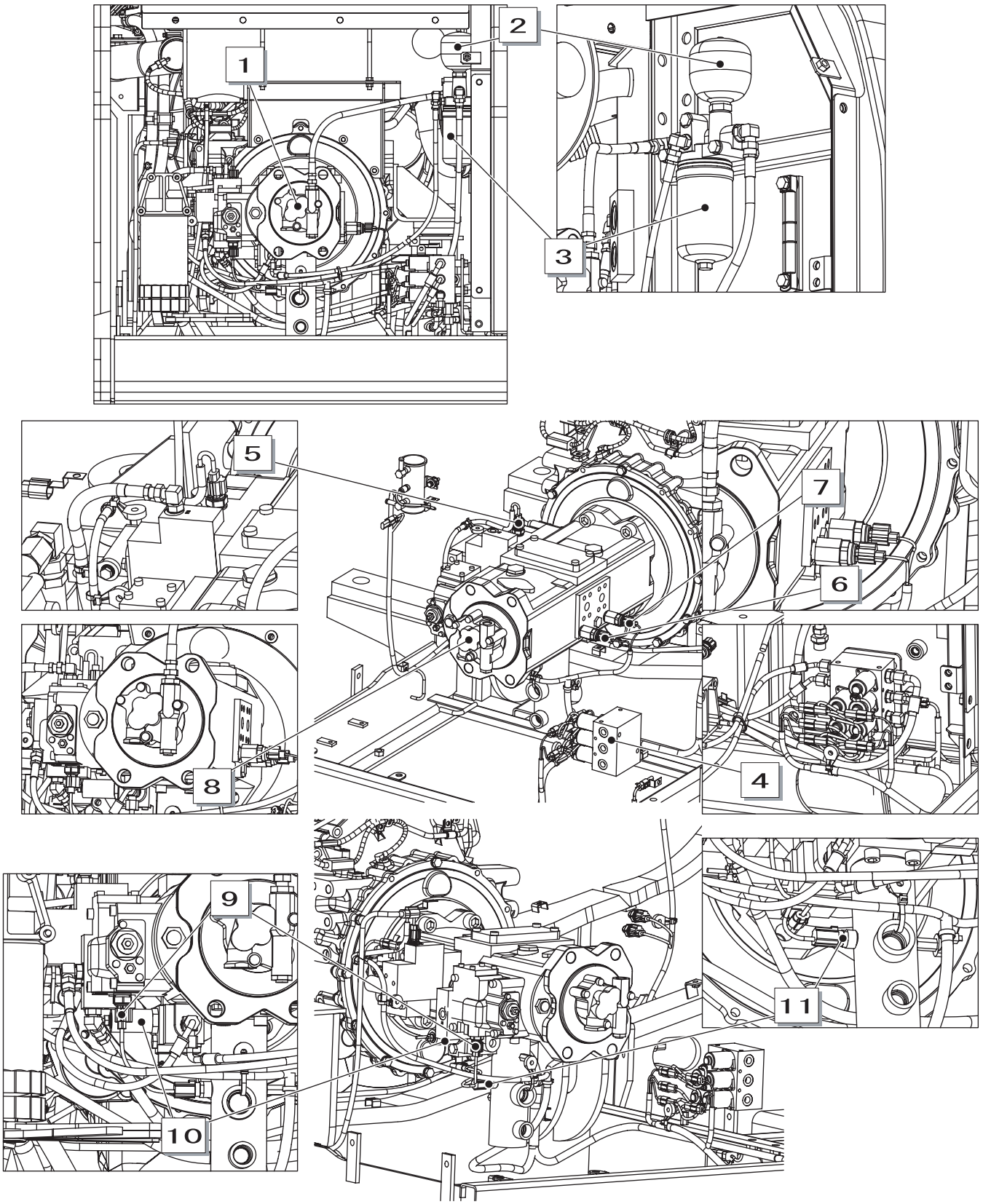

1	Hydraulic pump	7	P1 pressure sensor
2	Accumulator	8	Pilot pump
3	Pilot filter	9	N2 sensor
4	5 stack solenoid valve	10	Horsepower control electromagnetic proportional valve
5	N1 sensor	11	Hydraulic oil temperature sensor
6	P2 pressure sensor		

https://truckmanualshub.com

Swing Body Center Section Hydraulic Equipment Layout

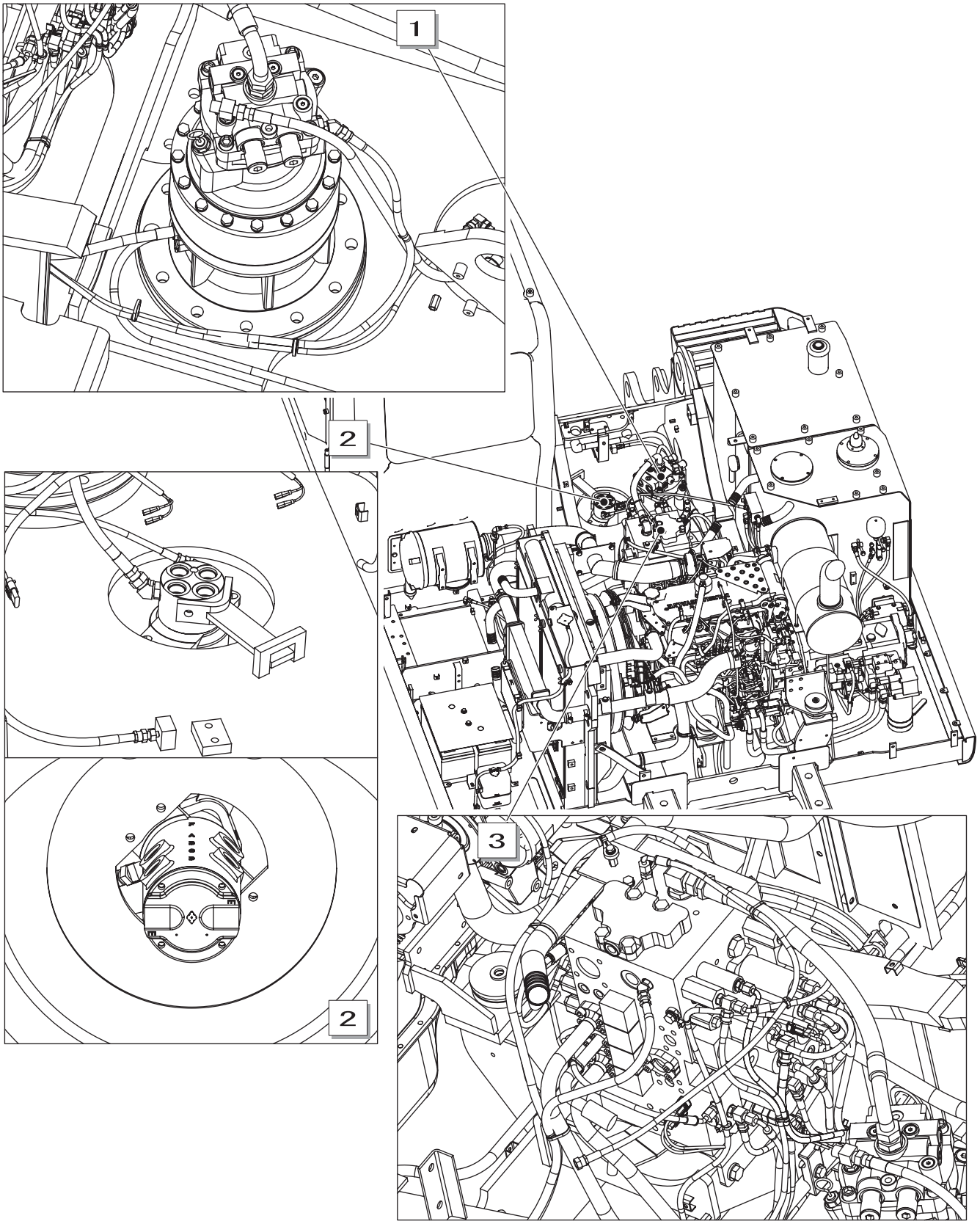

1	Swing motor
2	Center joint
3	Control valve

https://truckmanualshub.com/

Housing Left Side Hydraulic Equipment Layout

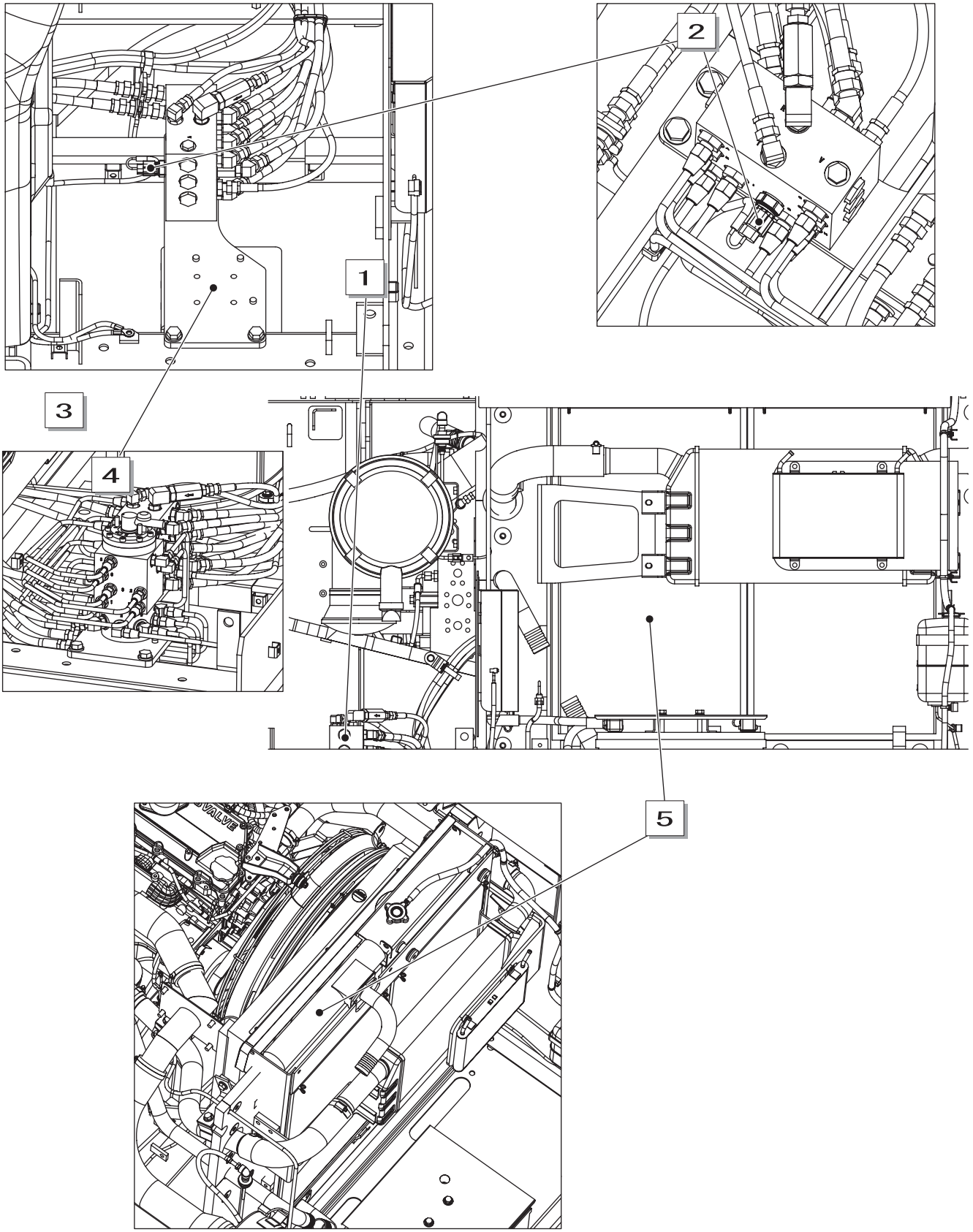

1	Cushion valve (with heat circuit)
2	Swing pilot pressure sensor
3	Not used by LBX 4-way selector valve installation seating
4	Not used by LBX 4-way selector valve
5	Oil cooler

https://truckmanualshub.com

Layout of Hydraulic Equipment in Cab

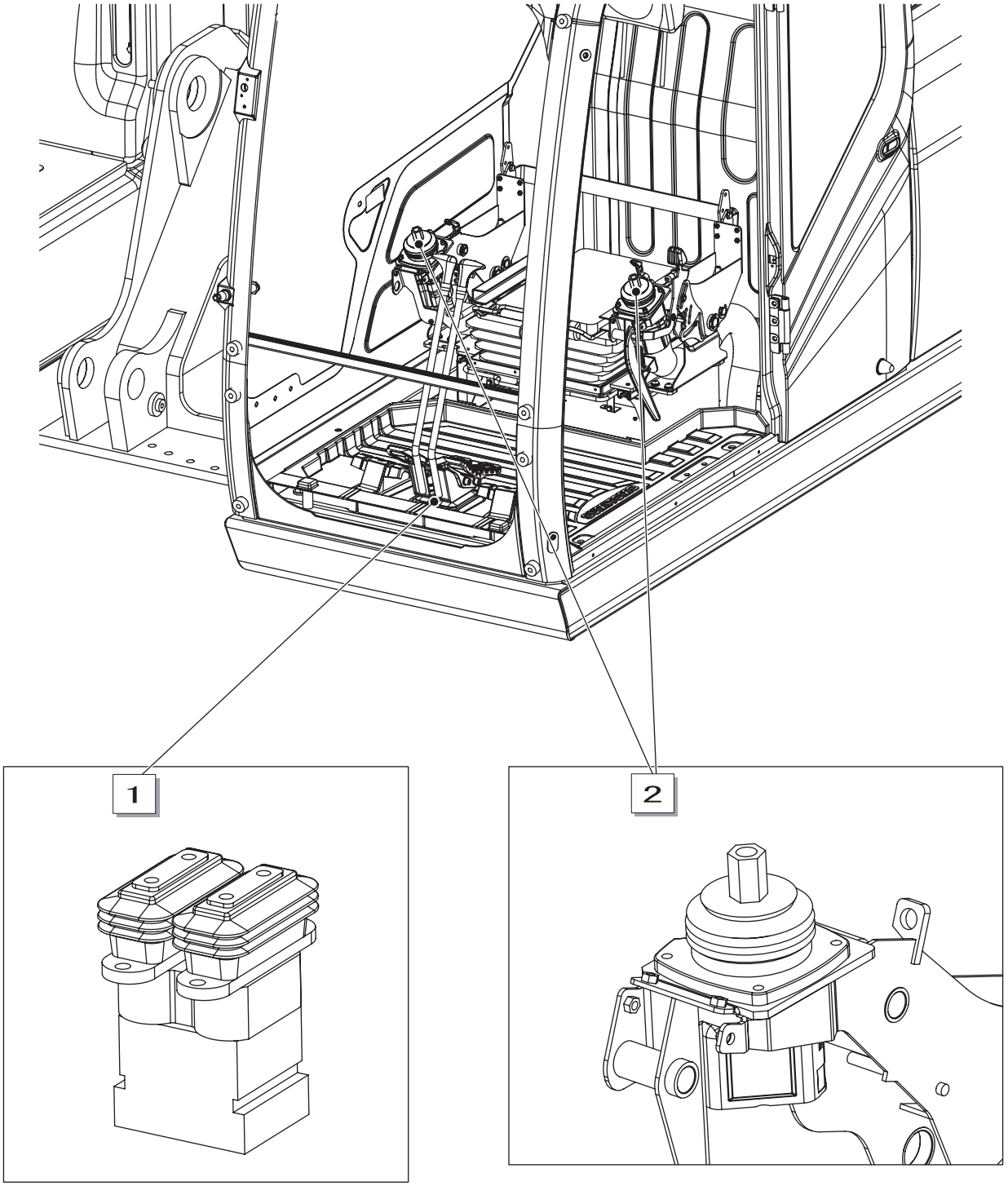

1	Travel remote control valve
2	Upper operation remote control valve

Pump

1. Hydraulic Pump (standard model)

Port	Port name	Port size
A1, A2	Discharge port	SAE6000psi 3/4
B1	Suction port	SAE2500psi 2-1/2
Dr	Drain port	G 3/4-20
P1	Proportional valve primary pressure port	G 1/4-13
P2	P2 port	G 1/4-13
Psv	Servo assist port	G 1/4-15
Pi1, Pi2	Negative control port	G 1/4-15
a1, a2, a4	Gauge port	G 1/4-15
a5, a6	Gauge port	G 3/8-17
a7, a8	Gauge port	G 1/4-15
A3	Gear pump discharge port	G 1/2-19
B3	Gear pump suction port	G 3/4-20

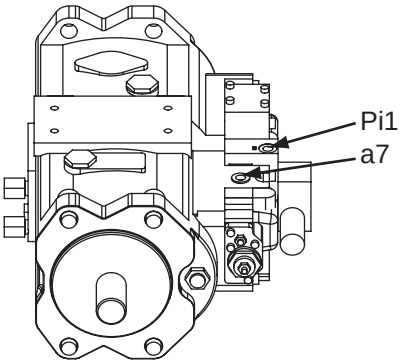

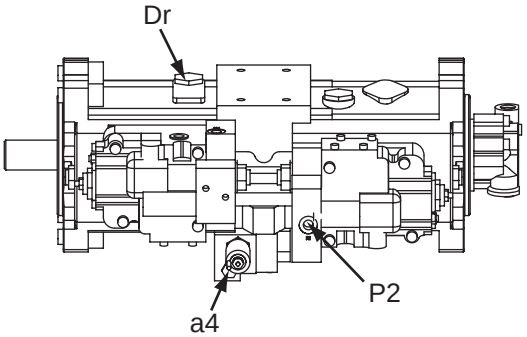

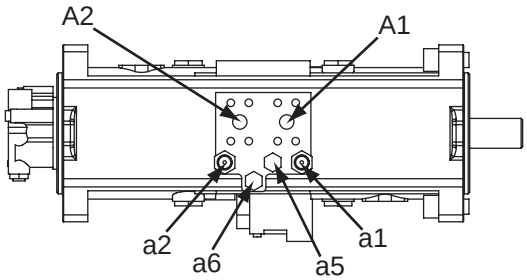

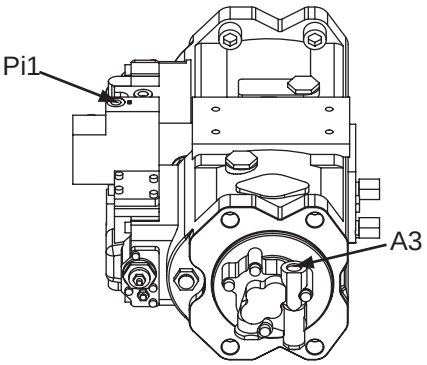

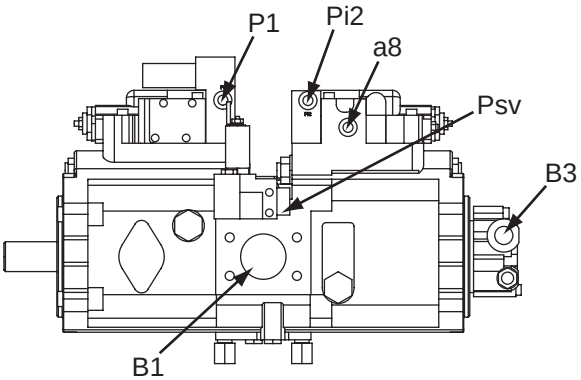

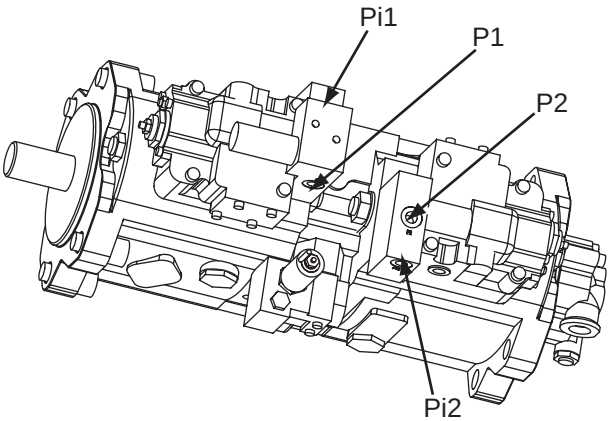

Valves

1. Control Valve

(1) Relief valve

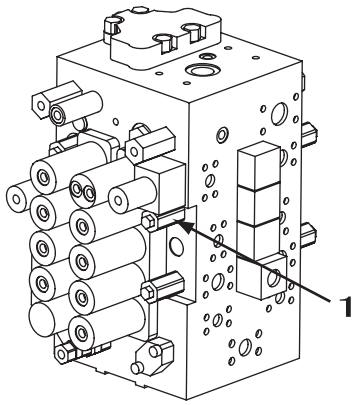

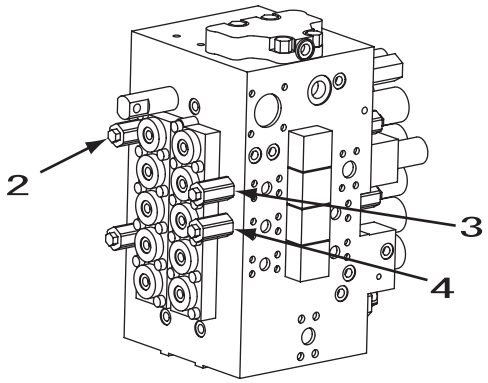

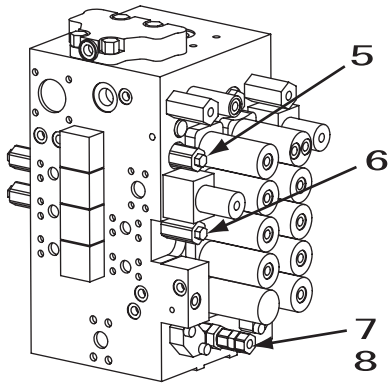

Main relief valve adjustment location details

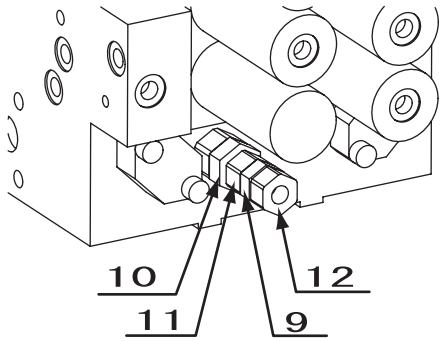

1	Arm-out
2	Arm-in
3	Boom-up
4	Bucket open
5	Boom-down
6	Bucket close
7	Main a relief
8	Main b relief
9	Standard pressure lock nut
10	Boost pressure lock nut
11	Boost pressure adjusting screw
12	Standard pressure adjusting screw

Port Diagram

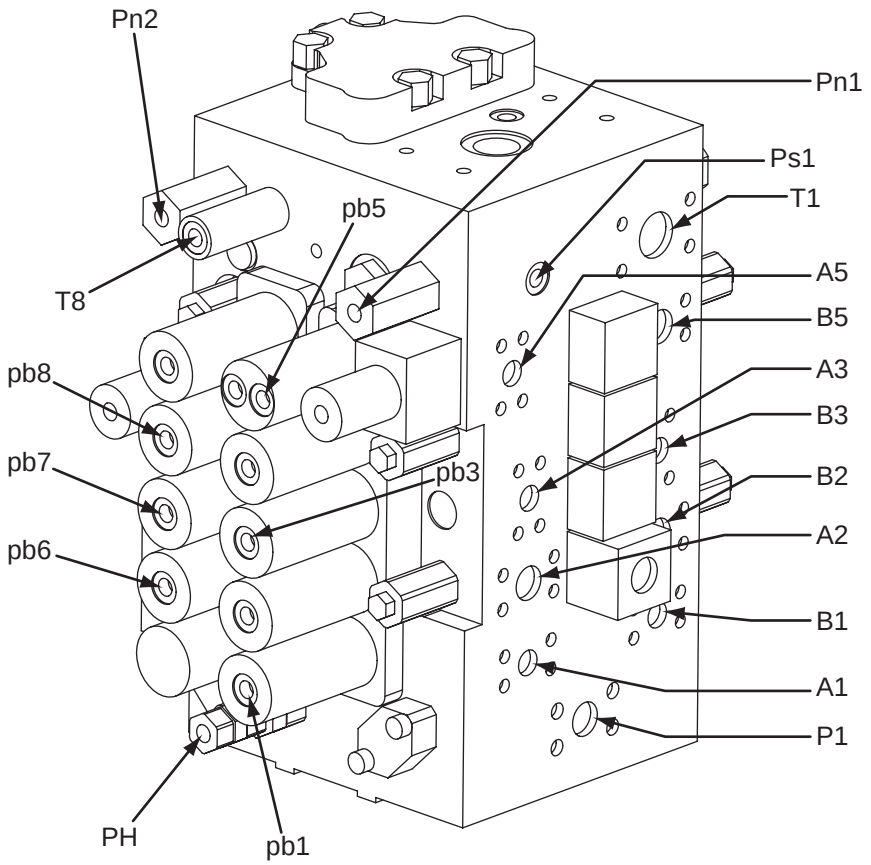

Port	Port size	Port name	Port	Port size	Port name
P1	SAE 6000psi 1	Pressure line	pb1	G1/4	Left travel backward pilot line
A1	SAE 5000psi 3/4	Left travel (forward) line	pb6	G1/4	Right travel backward pilot line
B1	SAE 5000psi 3/4	Left travel (backward) line	pb3	G1/4	Left swing pilot line
A2	SAE 5000psi 1	Option line	pb5	G1/4	Arm-in pilot line
B2	SAE 5000psi 1	Option line	pb7	G1/4	Bucket close pilot line
A3	SAE 5000psi 3/4	Swing right line	pb8	G1/4	Boom down pilot line
B3	SAE 5000psi 3/4	Swing left line	Pn1	G1/4	Negative control power save signal
A5	SAE 5000psi 3/4	Arm-out line	Pn2	G1/4	Negative control power save signal
B5	SAE 5000psi 3/4	Arm-in line	PH	G1/4	Boosted pressure signal port
T1		Return line	Ps1	G1/4	Negative control line
			T8	G1/4	Heat circuit line

Port Diagram

https://truckmanualshub.com/

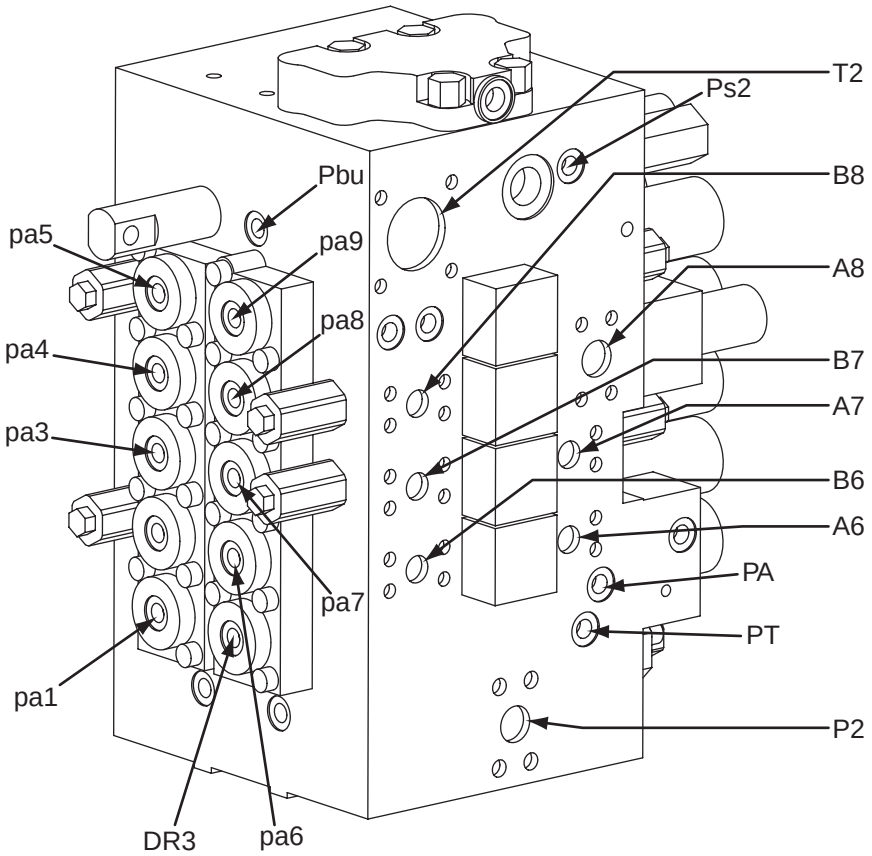

Port	Port size	Port name	Port	Port size	Port name
P2	SAE 6000psi 1	Pressure line	pa7	G1/4	Bucket open pilot line
A6	SAE 5000psi 3/4	Right travel (forward) line	pa3	G1/4	Right swing pilot line
B6	SAE 5000psi 3/4	Right travel (backward) line	pa8	G1/4	Boom 1 up pilot line
A7	SAE 5000psi 3/4	Bucket open line	pa4	G1/4	Boom 2 up pilot line
B7	SAE 5000psi 3/4	Bucket close line	pa9	G1/4	Arm 2 out pilot line
A8	SAE 5000psi 1	Boom up line	pa5	G1/4	Arm 1 out pilot line
B8	SAE 5000psi 3/4	Boom down line	PA	G1/4	Upper side signal
T2		Return line	PT	G1/4	Travel signal
pa1	G1/4	Left travel forward pilot line	Ps2	G1/4	Negative control line
pa6	G1/4	Right travel forward pilot line	Pbu	G1/4	Swing priority variable metering valve switch signal
DR3	G1/4	Straight travel forward drain line			

2. 5-way Solenoid Valve

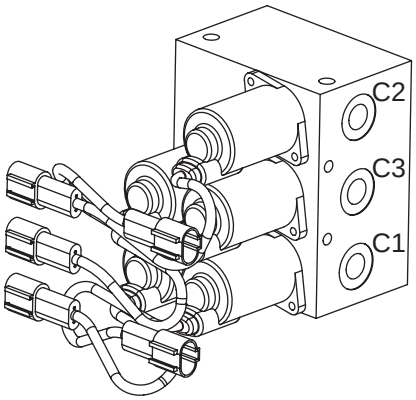

Port	Port size
C2	G1/4
C3	G1/4
C1	G1/4

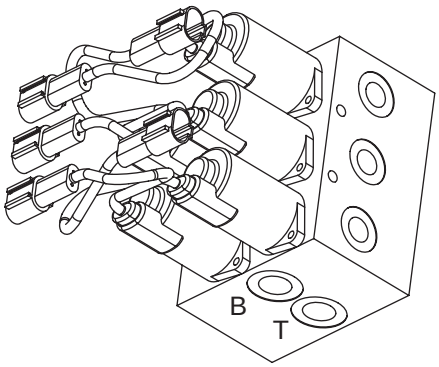

View from bottom

Port	Port size
B	G3/8
T	G3/8

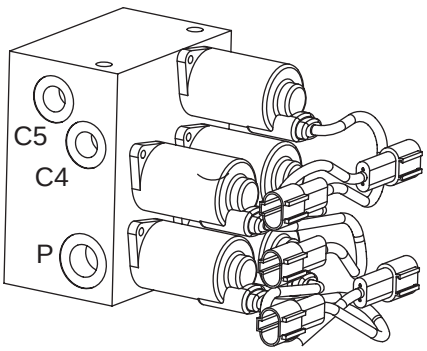

Port	Port size
C5	G1/4
C4	G1/4
P	G3/8

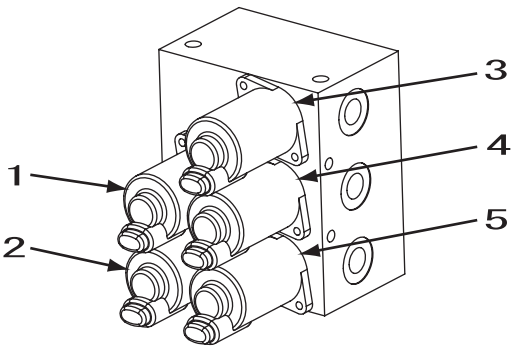

1	Boost pressure
2	Travel speed
3	Swing lock
4	Power save
5	Lever lock

3. 2-way Solenoid Valve

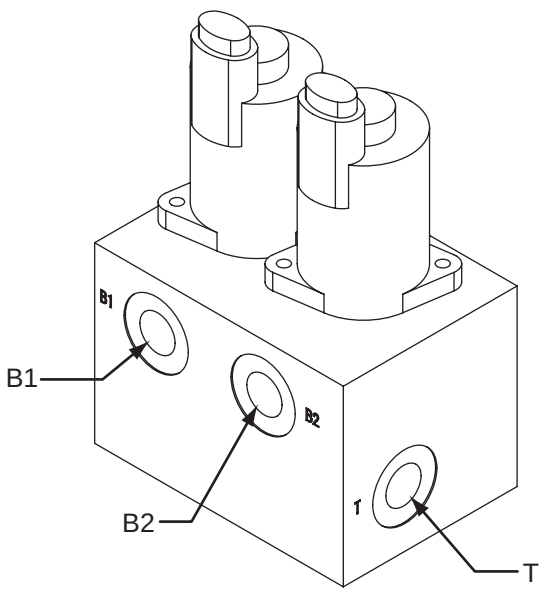

B port side

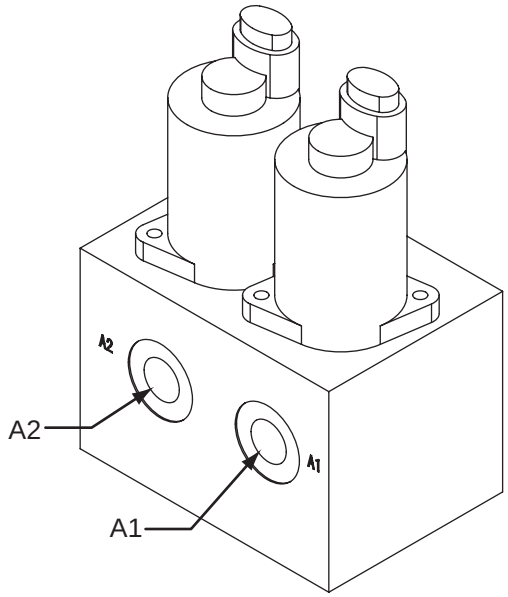

A port side

Port	Port size
A1	G1/4
B1	G1/4
A2	G1/4
B2	G1/4
T	G1/4

4. Remote Control Valves (upper side, travel)

(1) Remote control valve (left-right)

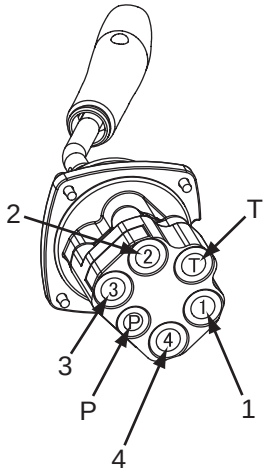

Right side

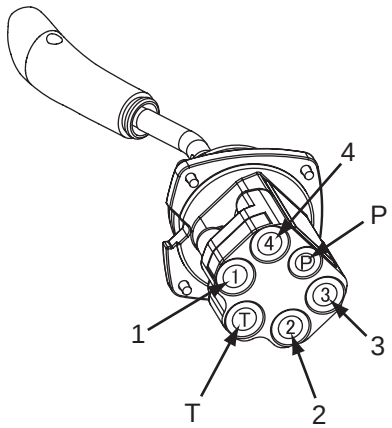

Left side

Right side	Port name	Left side	Port name	Port name
1	Bucket close	1	Swing right	G3/8
2	Boom-down	2	Arm-in	G3/8
3	Bucket open	3	Swing left	G3/8
4	Boom-up	4	Arm-out	G3/8
P	Pressure	P	Pressure	G1/4
T	Tank	T	Tank	G3/8

(2) Remote control valve (travel)

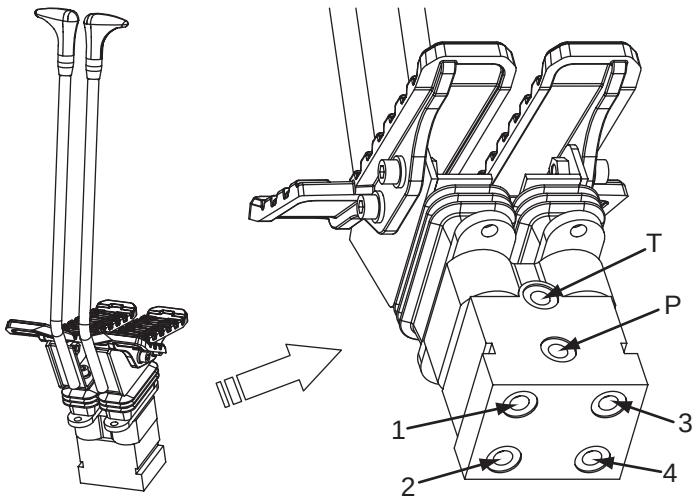

Port	Port name	Port size
1	Backward left	G1/4
2	Forward left	G1/4
3	Backward right	G1/4
4	Forward right	G1/4
P	Pressure	G1/4
T	Tank	G1/4

5. Cushion Valve

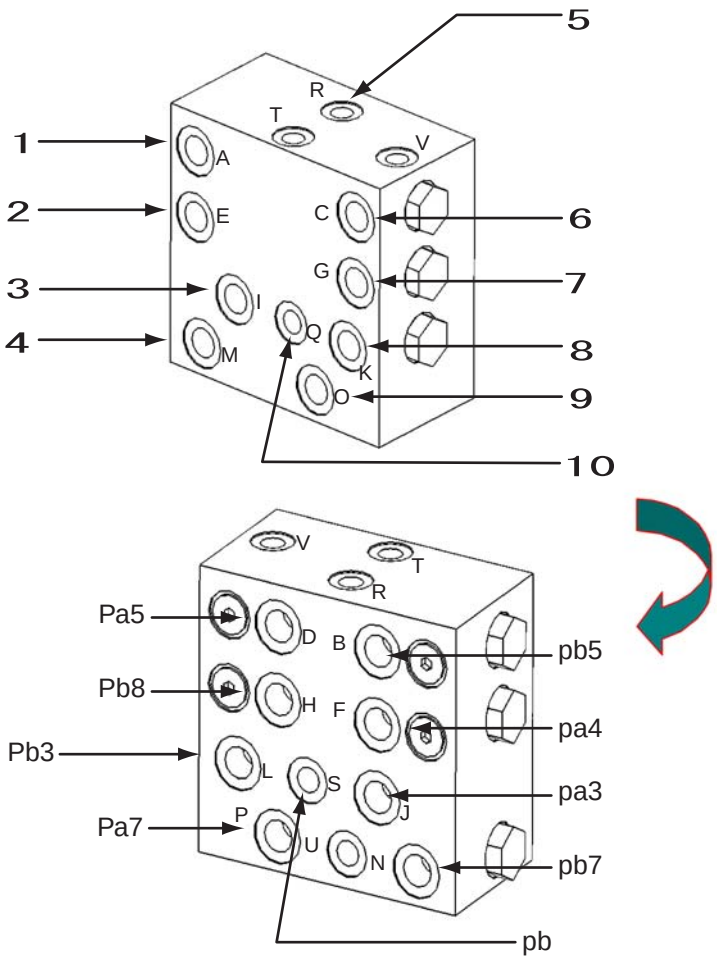

1	2 port (arm-in)
2	4 port (boom up)
3	1 port (swing right)
4	1 port (bucket close)
5	D4 port (filter line)
6	4 port (arm-out)
7	2 port (boom down)
8	3 port (swing left)
9	3 port (bucket open)
10	Pressure sensor

Port	Port name	Port size
E, F	Boom up	G3/8
G, H	Boom down	G3/8
O, P	Bucket open	G3/8
M, N	Bucket close	G3/8
C, D	Arm-out	G3/8
A, B	Arm-in	G3/8
K, L	Swing left	G3/8
I, J	Swing right	G3/8
Q	Swing pressure sensor signal	G1/4
U	-	G1/4
S	Swing priority metering valve switch	G1/4
V	-	G1/4
T	Tank	G1/4
R	Heat circuit	G1/4

6. 4-way Multi-valve **(Not used by LBX)**

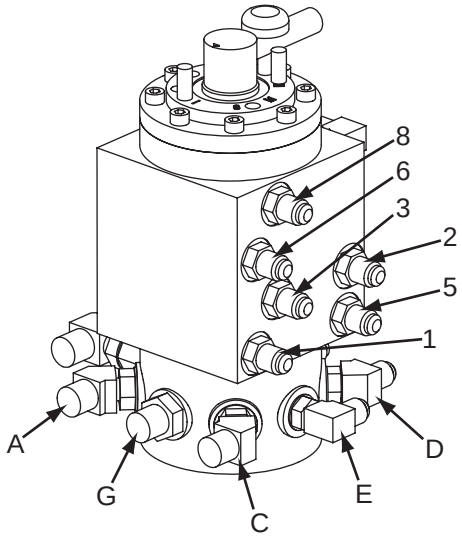

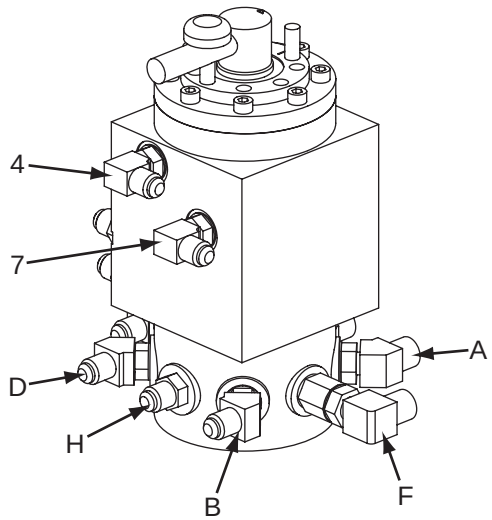

Port	Port name * ISO format	Port size
A	Right remote control valve side port / boom-up	G1/4
C	Right remote control valve side port / boom down	G1/4
D	Right remote control valve side port / bucket open	G1/4
B	Right remote control valve side port / bucket close	G1/4
E	Left remote control valve side port / arm-out	G1/4
G	Left remote control valve side port / arm-in	G1/4
H	Left remote control valve side port / swing left	G1/4
F	Left remote control valve side port / swing right	G1/4
1	Cushion valve side port	G1/4
3	Cushion valve side port	G1/4
4	Cushion valve side port	G1/4
2	Cushion valve side port	G1/4
8	Cushion valve side port	G1/4
6	Cushion valve side port	G1/4
7	Cushion valve side port	G1/4
5	Cushion valve side port	G1/4

7. 2-way Multi-valve

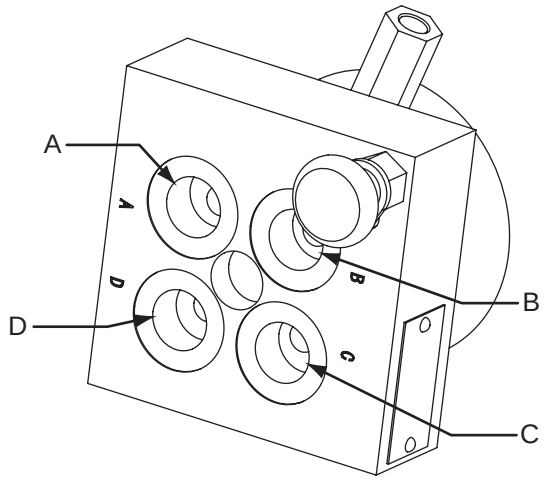

Remote control valve side

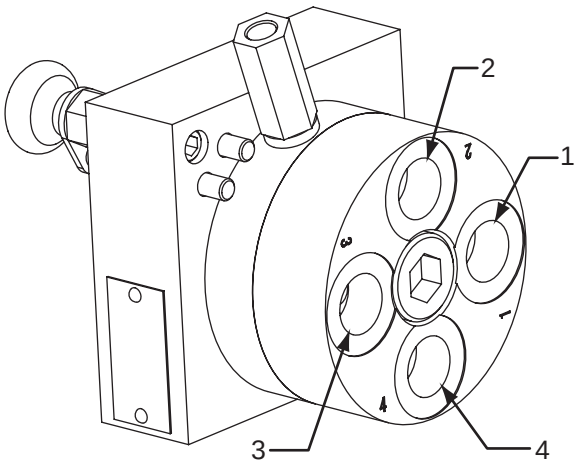

Cushion valve side

Port	Port name *ISO format	Port size
A	Remote control valve side / swing left port	G3/8
B	Remote control valve side / arm-in port	G3/8
C	Remote control valve side / swing right port	G3/8
D	Remote control valve side / arm-out port	G3/8
1	Cushion valve side port	G3/8
2	Cushion valve side port	G3/8
3	Cushion valve side port	G3/8
4	Cushion valve side port	G3/8

8. Direction Valve / Shut-off Valve (Auxiliary Hydraulics)

(1) Direction valve

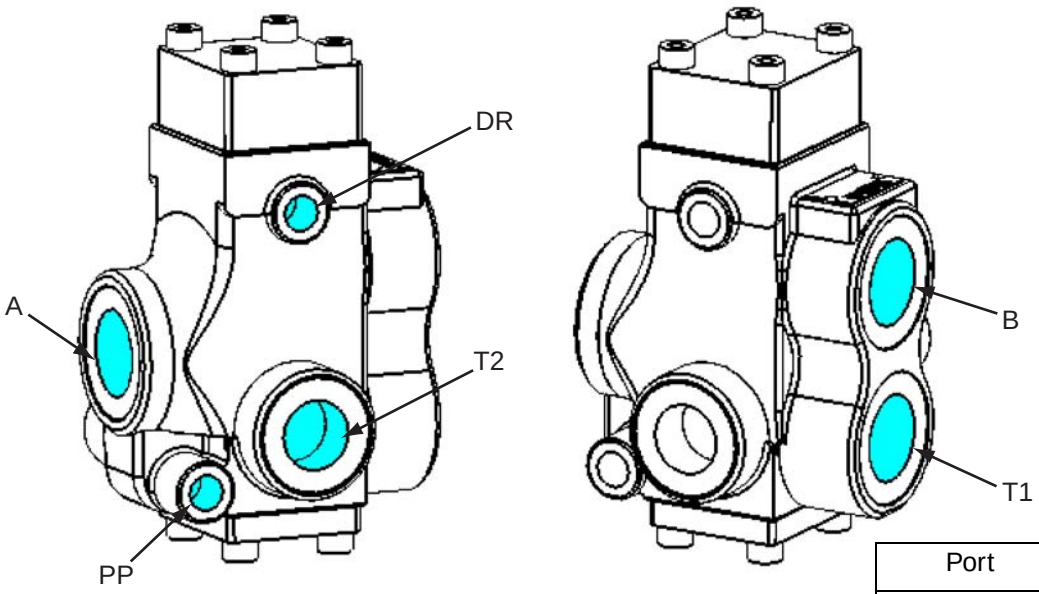

Port	Port size
A	G1
B	G1
T1	G1
T2	G3/4
PP	G1/4
DR	G1/4

(2) Shut-off valve

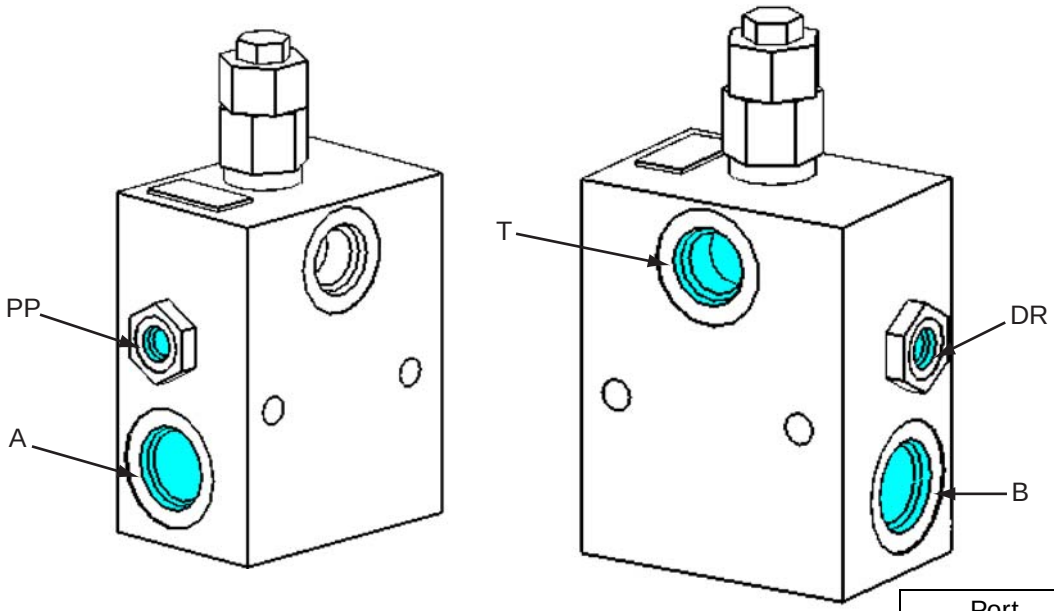

Port	Port size
A	G1
B	G1
T	G3/4
PP	G1/4
DR	G1/4

9. HBCV (Hose burst check valve) Not used by LBX

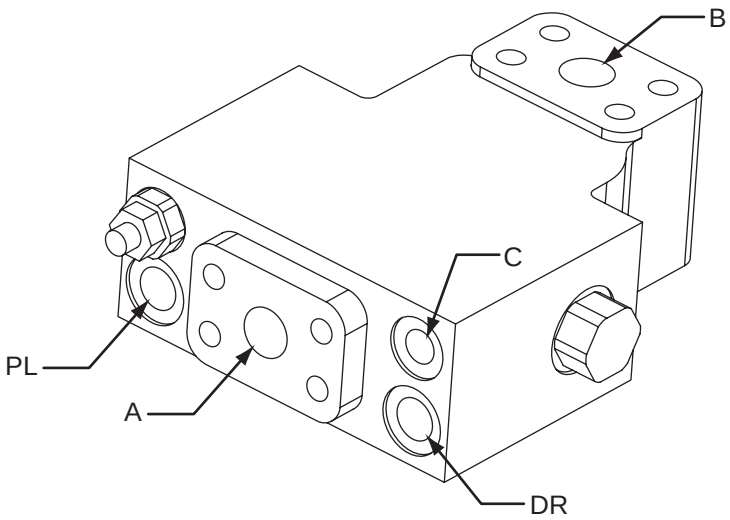

B port opening side

Port	Port size	Remarks
A	SAE 6000psi 1	Arm HBCV
	SAE J6000psi 3/4	Boom HBCV
B	SAE 6000psi 1	Arm HBCV
	SAE J6000psi 3/4	Boom HBCV
C	G1/4	
DR	G3/8	
PL	G1/4	

Port Diagram

Manifolds

1. Manifold Under Cab

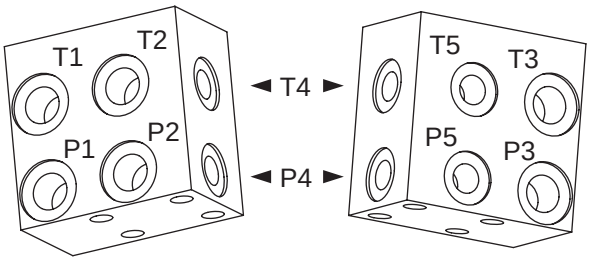

Port	Port size
P1	G3/8
P2	G3/8
P3	G3/8
P4	G1/4
P5	G1/4
T1	G3/8
T2	G3/8
T3	G3/8
T4	G1/4
T5	G1/4

2. Manifold (accumulator section)

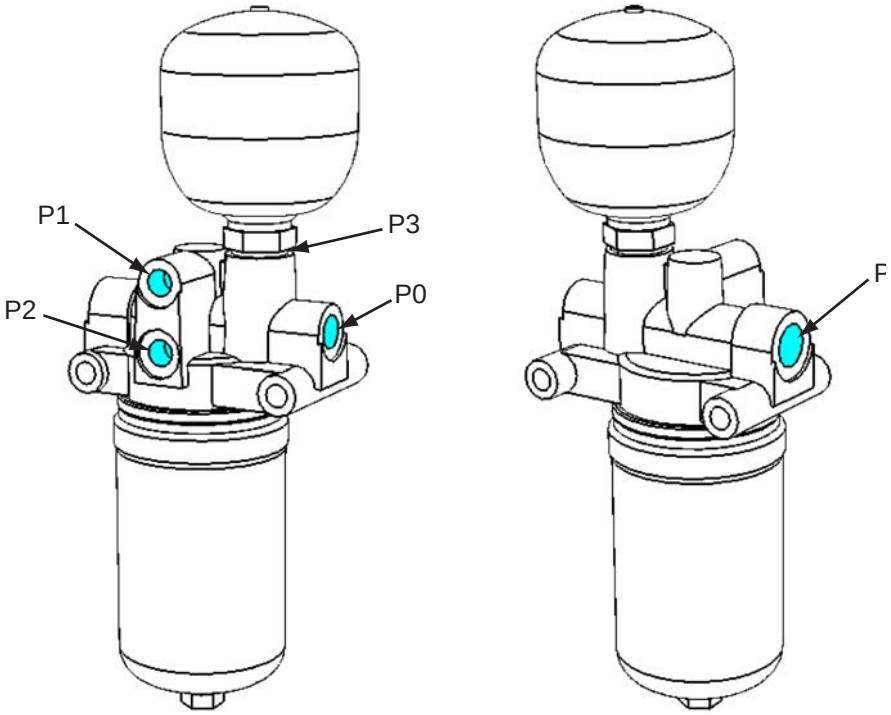

Port	Port size
P	G1/2
P1	G1/4
P2	G1/4
P3	G1/2
P0	G3/8

3. Manifold (hydraulic oil tank section)

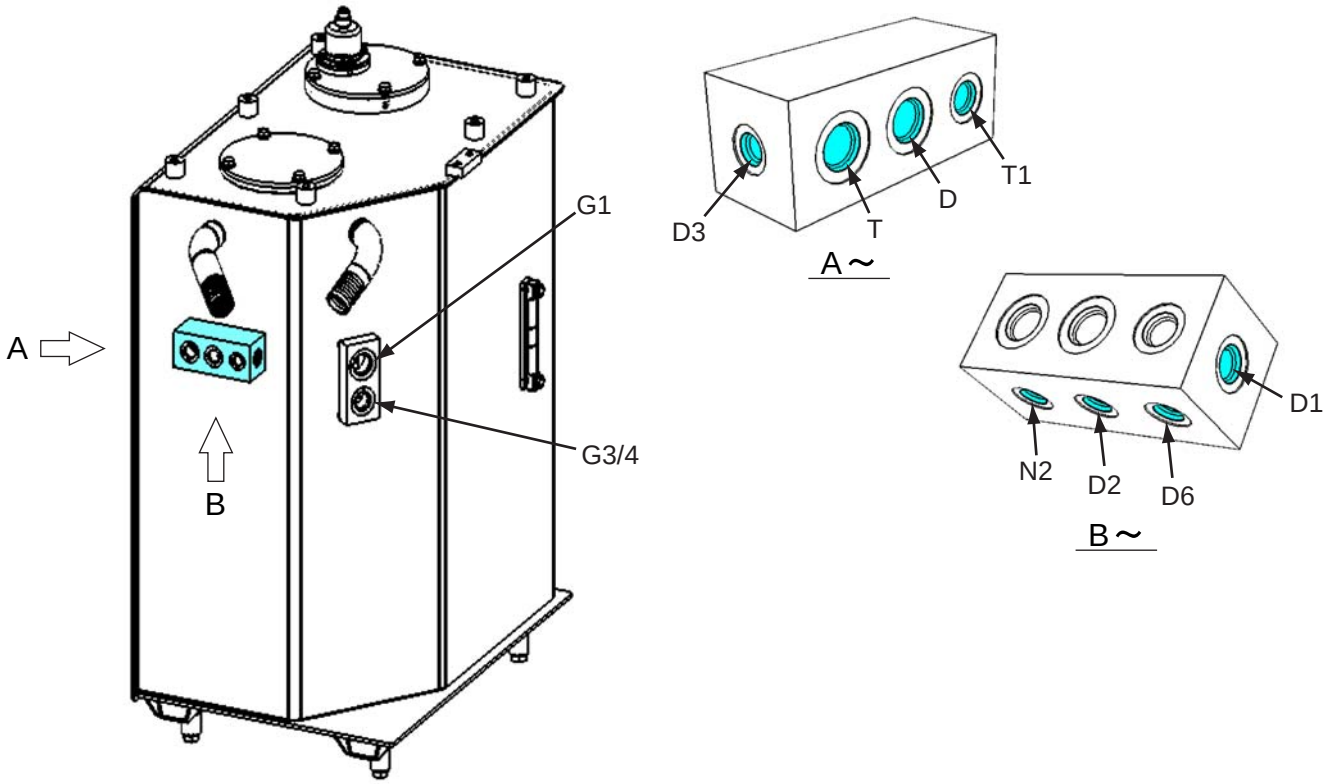

Port	Port size
D	G1/2
D1	G3/8
D2	G1/4
D3	G1/4
D6	G1/4
T	G1/2
T1	G3/8
N2	G1/4

Motors

1. Swing Motor

210X2

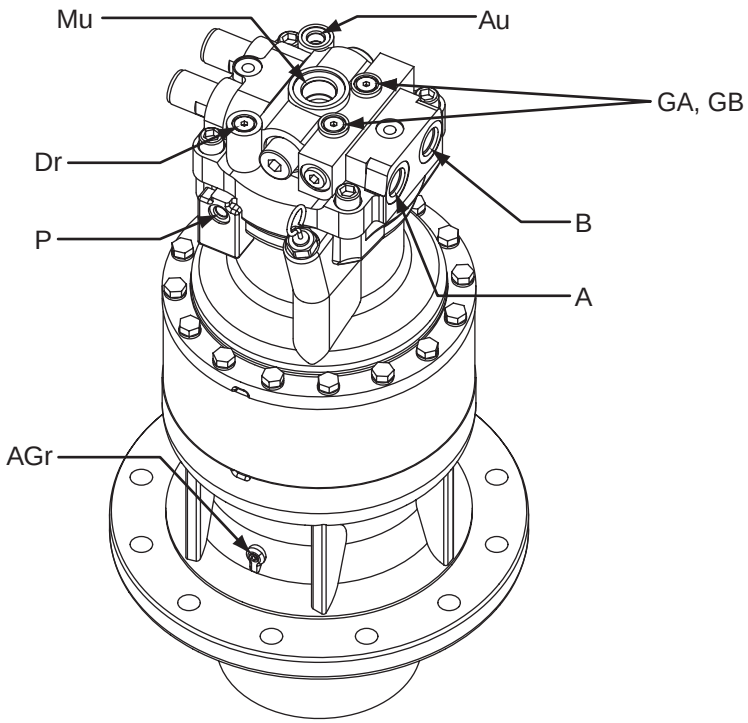

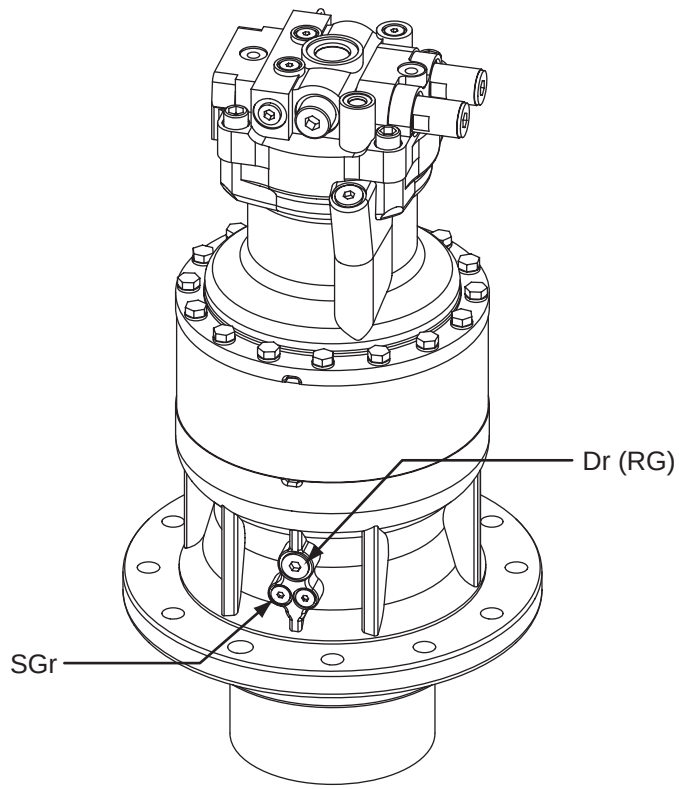

Port	Port name	Port size
Mu	Make-up	G1
Dr	Drain	G3/8
P	Brake release	G1/4
A	Left swing	G3/4
B	Right swing	G3/4
GA, GB	Pressure measurement	G1/4
Au	Air bleed port	G1/4
AGr	Air bleed port for grease-up	Rc1 / 8
Dr (RG)	Reduction gear oil drain port	G1/2
SGr	Reduction gear grease-up port	G1/4

240X2

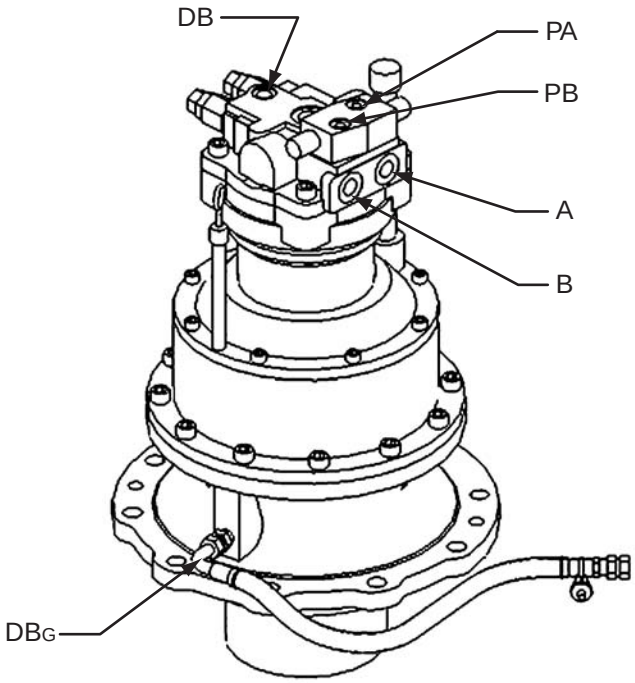

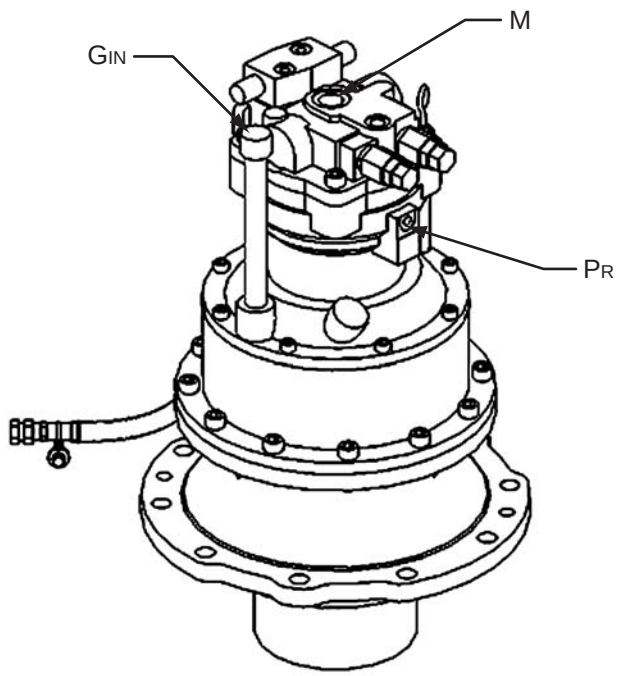

Port	Port name	Port size
A	Main port A	G 3/4
B	Main port B	G 3/4
DB	Drain port	G1/2
PA, PB	Pressure measuring ports	G1/4
DBG	Gear oil drain port	G1/2
M	Make-up port	G1
PR	Brake release port	G1/4
GIN	Gear oil fill port	RC3 / 4

Port Diagram

2. Travel Motor

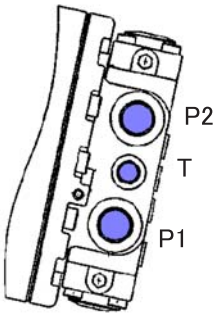

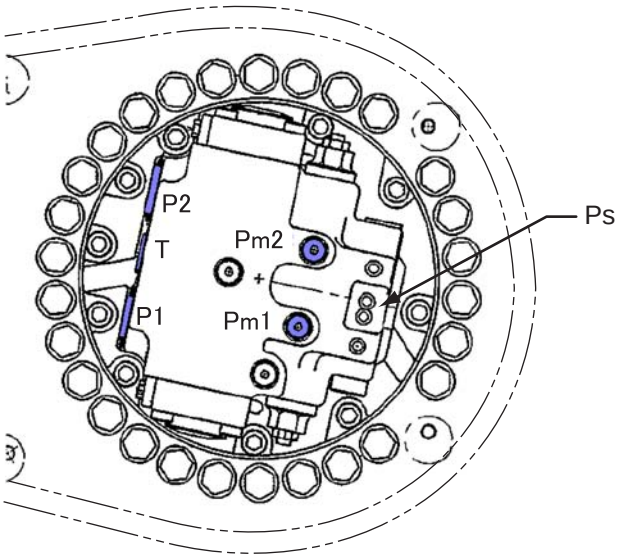

Port	Port name	Port size
P1 , P2	Main pump	G1
T	Drain port	G1/2
Ps	Pilot port	G1/4
Pm1, Pm2	Pressure detection port	G1/4

3. Center Joint

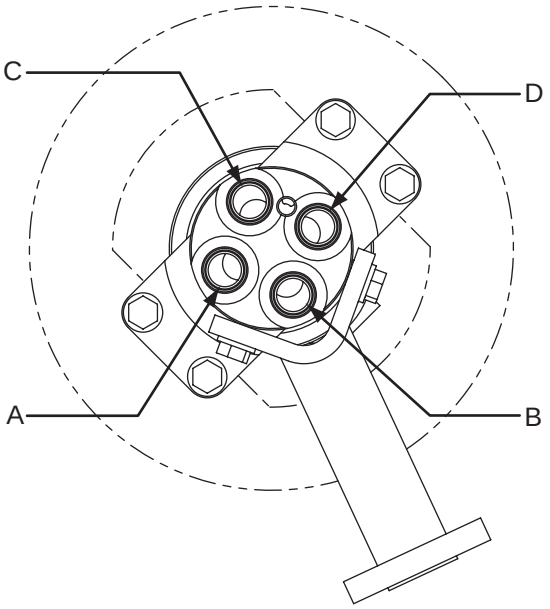

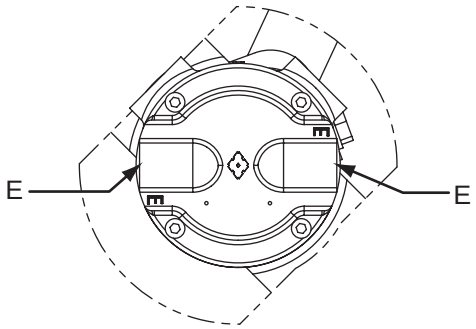

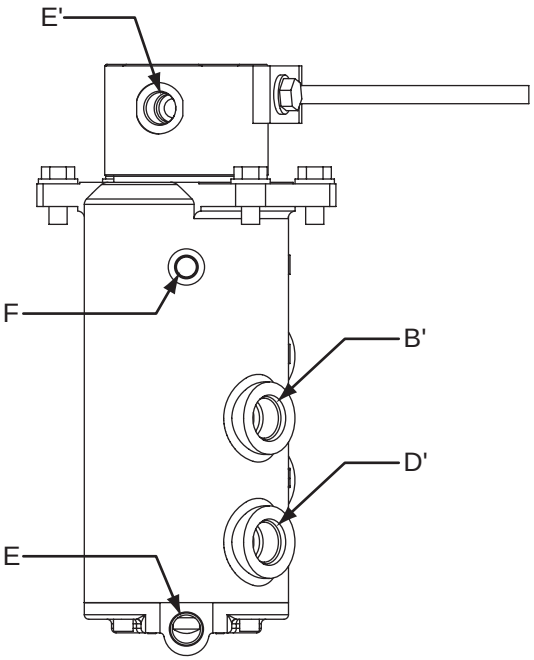

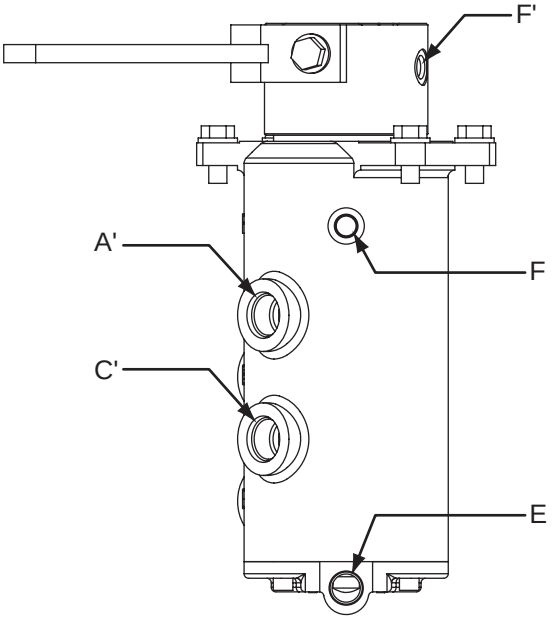

Port	Port name	Port size
A , A'	Main port (forward right)	G3/4
B , B'	Main port (forward left)	G3/4
C , C'	Main port (forward right)	G3/4
D , D'	Main port (forward left)	G3/4
E , E'	Drain port	G1/2
F , F'	Pilot port	G1/4

Pilot Hose Connection Diagram

https://repairmanualshub.com/

Pilot P and T Lines

PARTS NAME	SYMBOL	QTY
HOSE;ASSY	1	1
HOSE;HYD	2	1
HOSE;NYLON	3	1
HOSE;NYLON	4	1
HOSE;ASSY	5	1
HOSE;ASSY	6	1
HOSE;NYLON	7	1
HOSE;ASSY	8	1
HOSE;ASSY	9	1

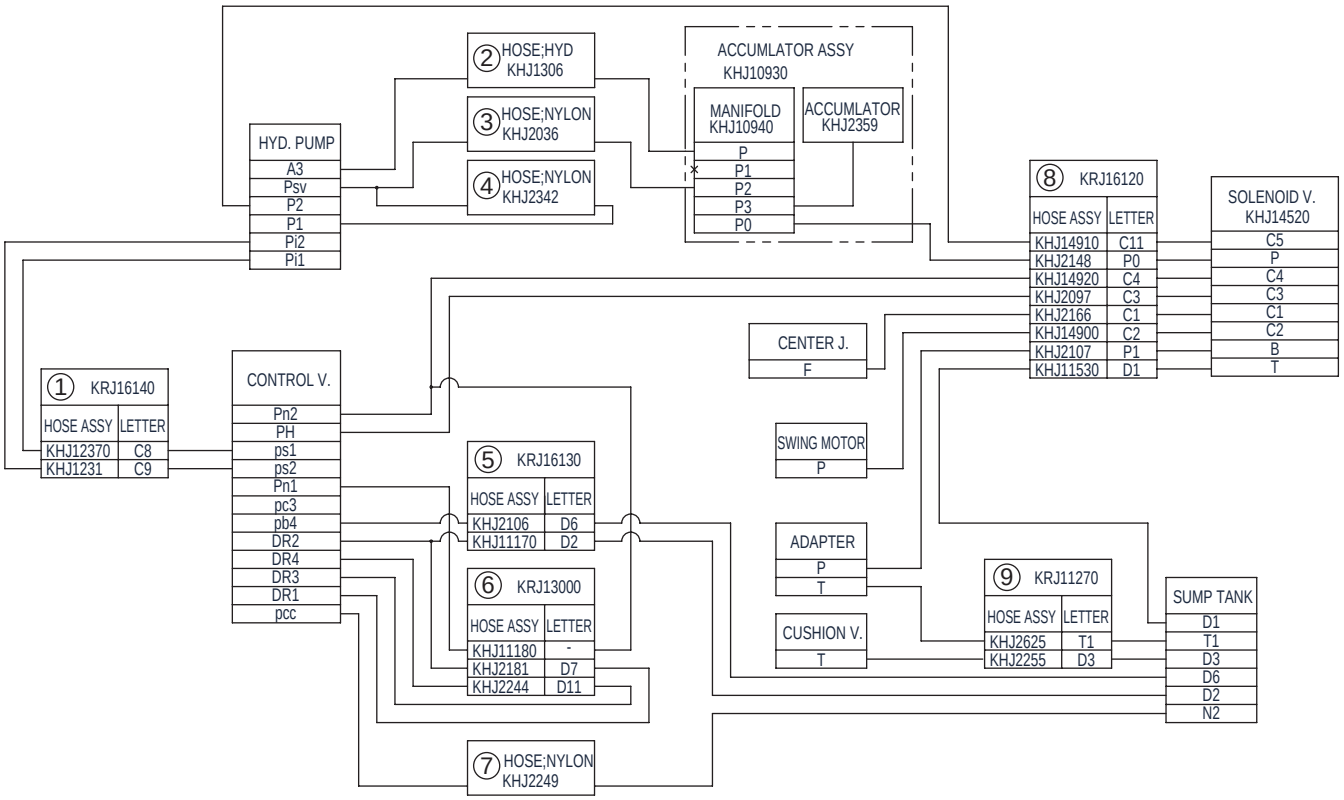

KRJ16160-E02

1	Hydraulic pump	8	Swing frame
2	Hydraulic tank	9	Platform (left)
3	Platform (right)	10	Cushion valve
4	Boom line	11	Control valve
5	Drain line	12	Oil cooler line
6	Swing motor	13	Bucket line
7	Center joint	14	House frame

https://truckmanualclub.com/

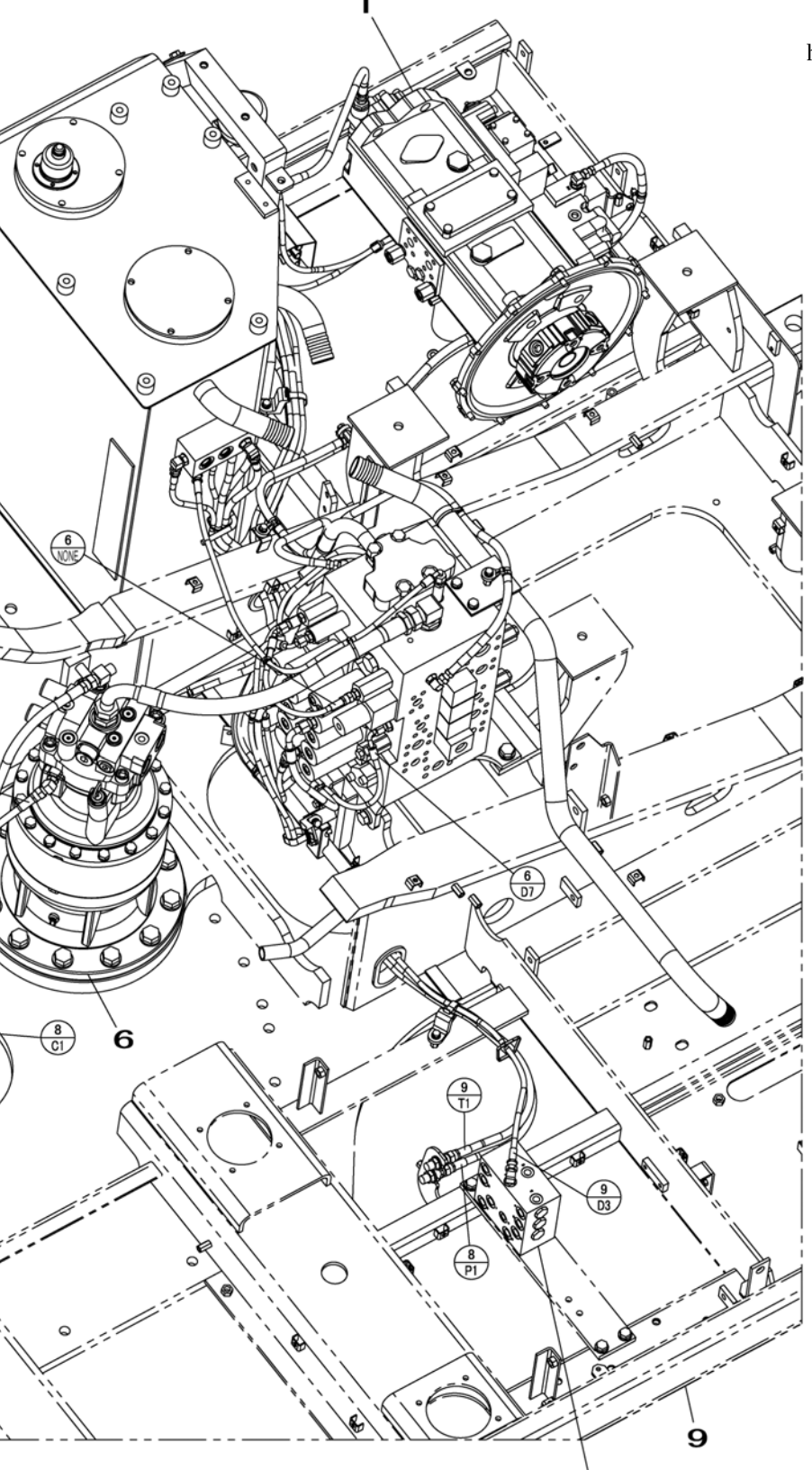

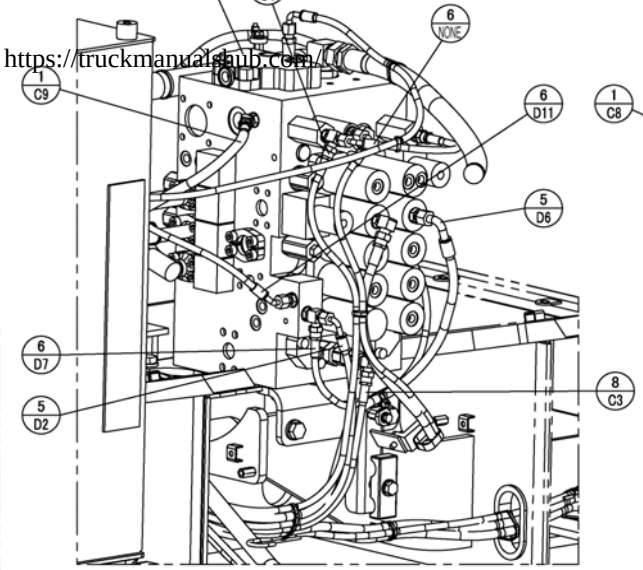

Control valve (forward) details

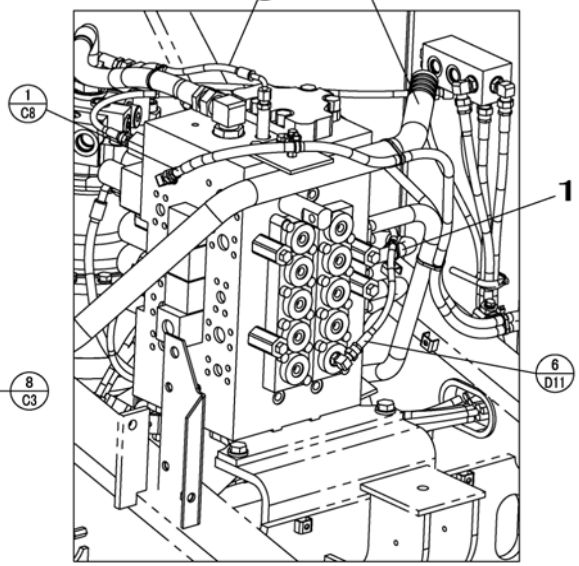

Control valve (backward) details

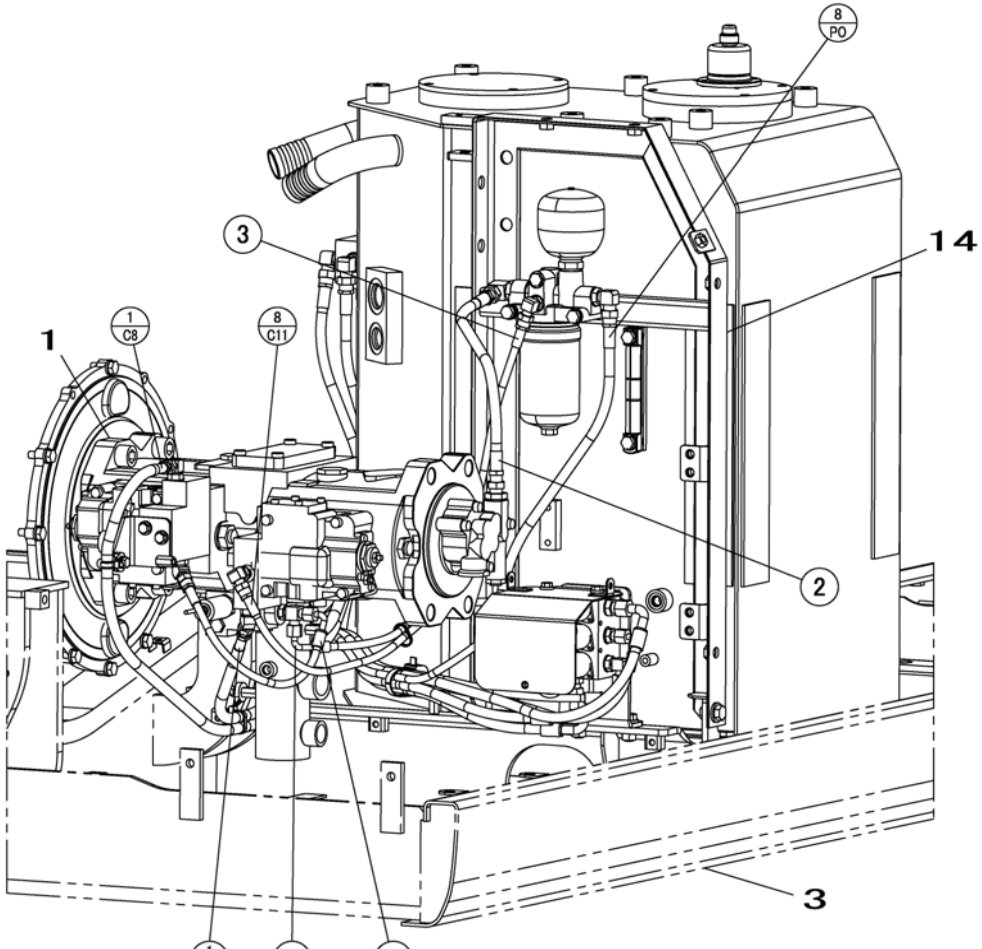

Soleno

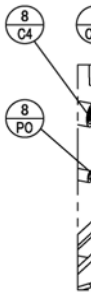

Solen

https://truckmanualshub.com/

Pilot Control Line

PARTS NAME	SYMBOL	QTY
HOSE;ASSY	1	1
HOSE;ASSY	2	1
HOSE;ASSY	3	1
HOSE;ASSY	4	1
HOSE;ASSY	5	1
HOSE;HYD	6	1
HOSE;NYLON	7	1
HOSE;NYLON	8	1
VALVE;CUSHION	9	1

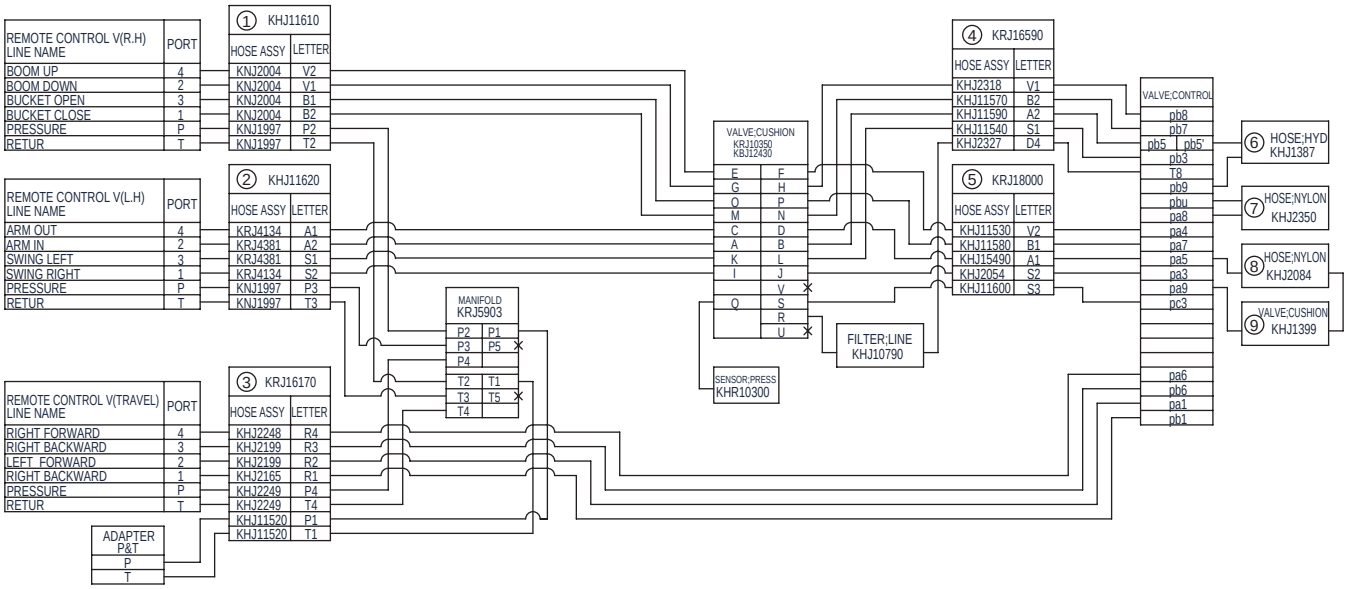

KRJ16200-E02

2 A2	2 port (arm-in)	1 V2	4 port (boom up)
2 S1	3 port (swing left)	1 B2	1 port (bucket close)
2 P3	P port	1 T2	T port
2 T3	T port	1 P2	P port
2 S2	1 port (swing right)	1 B1	3 port (bucket open)
2 A1	4 port (arm-out)	1 V1	2 port (boom down)

1	Control valve
2	Platform (left)
3	Adapter; hose (bulkhead) (pilot P and T)
4	Sensor; pressure

https://truckmanualshub.com/

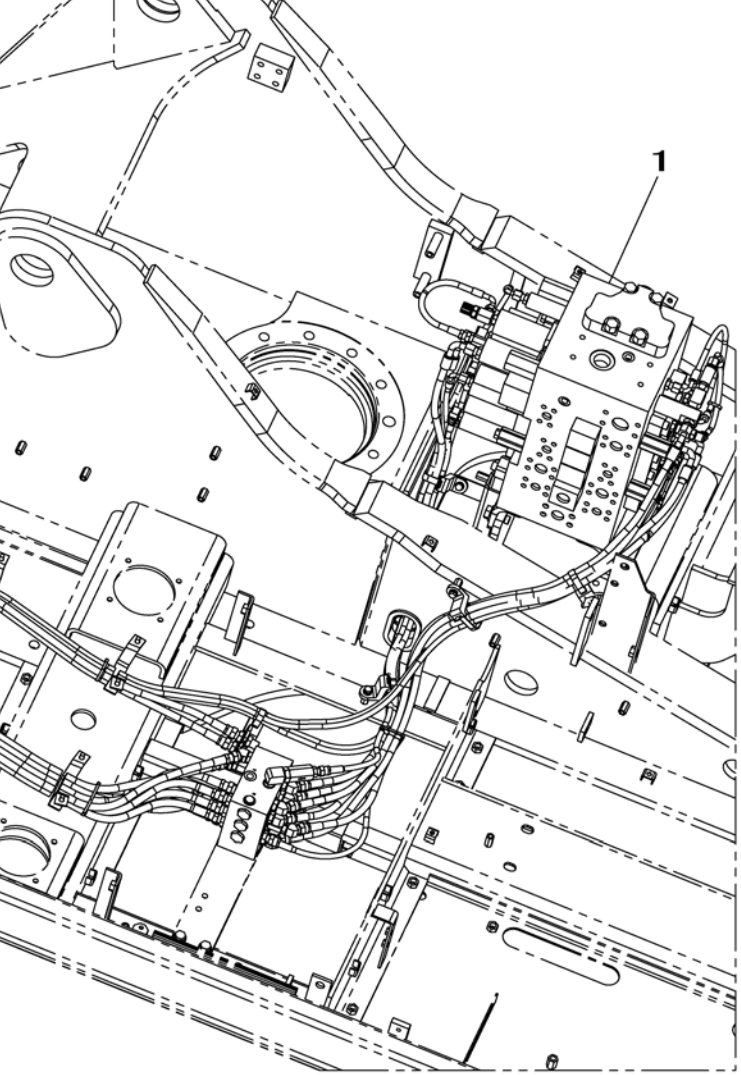

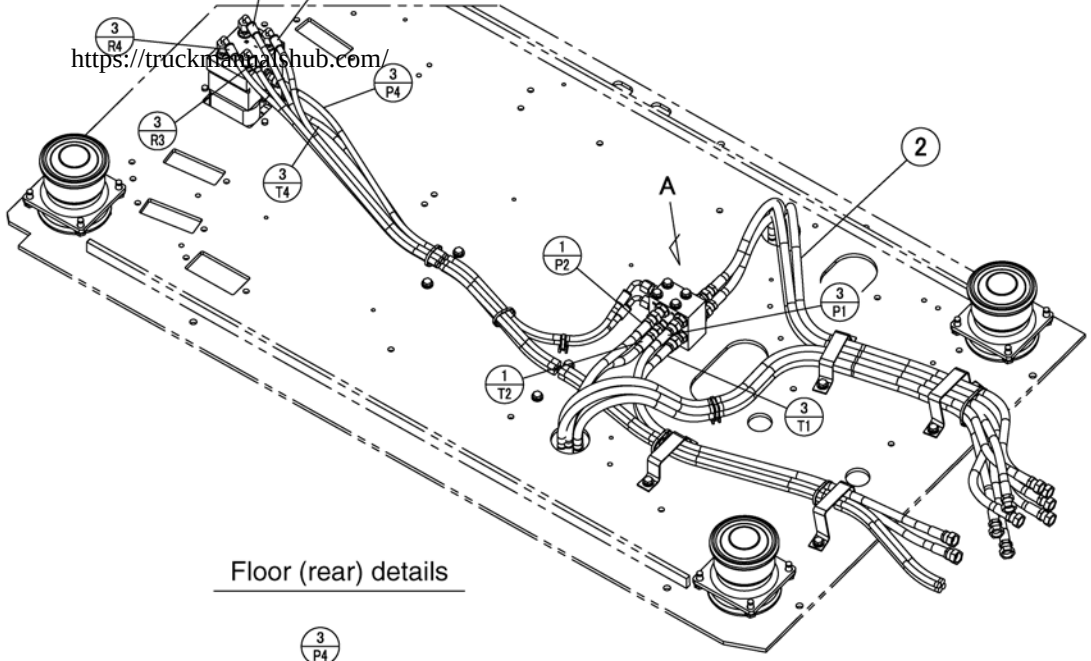

Floor (rear) details

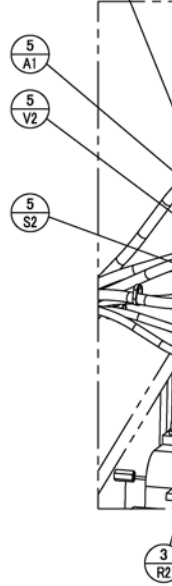

Con

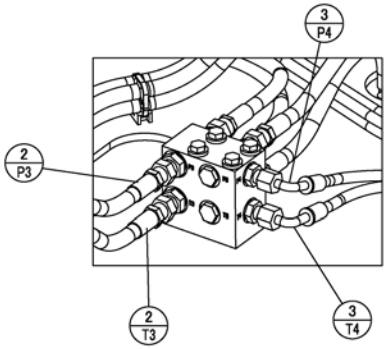

A~

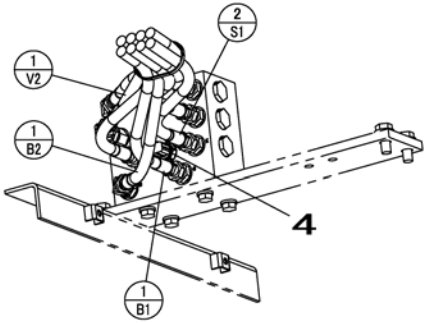

Cushion valve (down side) details

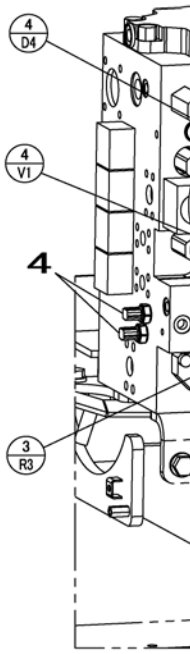

Contr

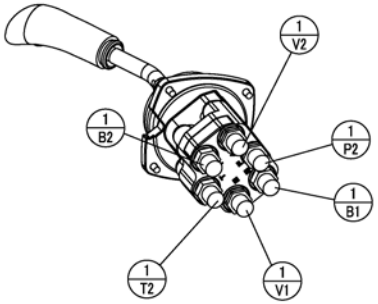

) details

Remote control valve (right side) details

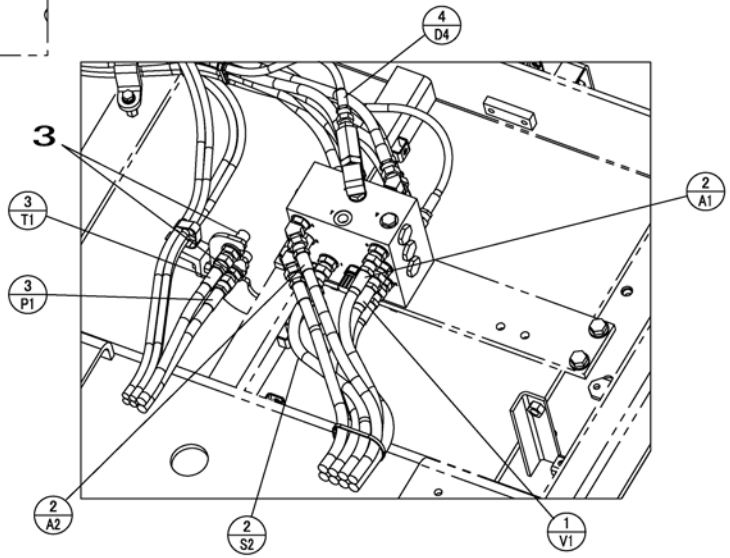

Cushion valve (forward) details

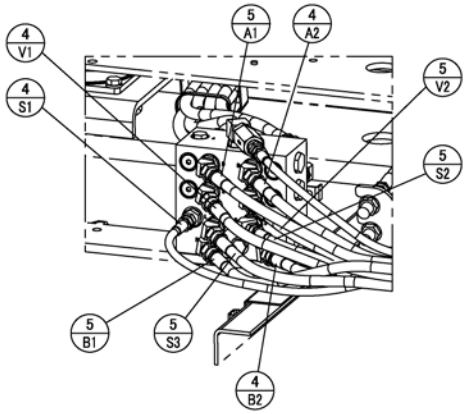

Cushion valve (backward) details

Pilot Hose Connection Diagram

https://repairmanualshub.com/

Pilot Control Line (2-way selector valve) Optional pattern control pattern selector

PARTS NAME	SYMBOL	QTY
HOSE;ASSY	1	1
HOSE;ASSY	2	1
HOSE;ASSY	3	1
HOSE;ASSY	4	1
HOSE;ASSY	5	1
HOSE;HYD	6	1
HOSE;NYLON	7	1
HOSE;NYLON	8	1
VALVE;CUSHION	9	1
TUBE;ASSY	10	1
TUBE;ASSY	11	1
TUBE;ASSY	12	1
TUBE;ASSY	13	1

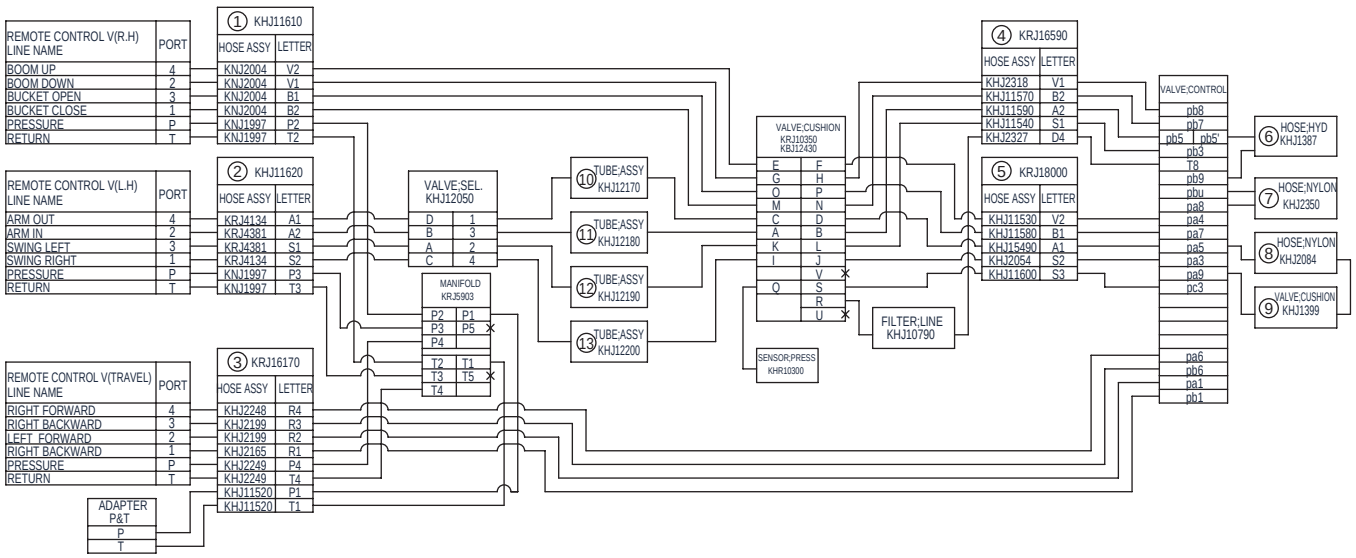

KRJ16210-E02

2 A2	2 port (arm-in)	1 V2	4 port (boom up)
2 S1	3 port (swing left)	1 B2	1 port (bucket close)
2 P3	P port	1 T2	T port
2 T3	T port	1 P2	P port
2 S2	1 port (swing right)	1 B1	3 port (bucket open)
2 A1	4 port (arm-out)	1 V1	2 port (boom down)

1	Control valve
2	Platform (left)
3	Adapter; hose (bulkhead) (pilot P and T)
4	Sensor; pressure

https://truckmanualshub.com/

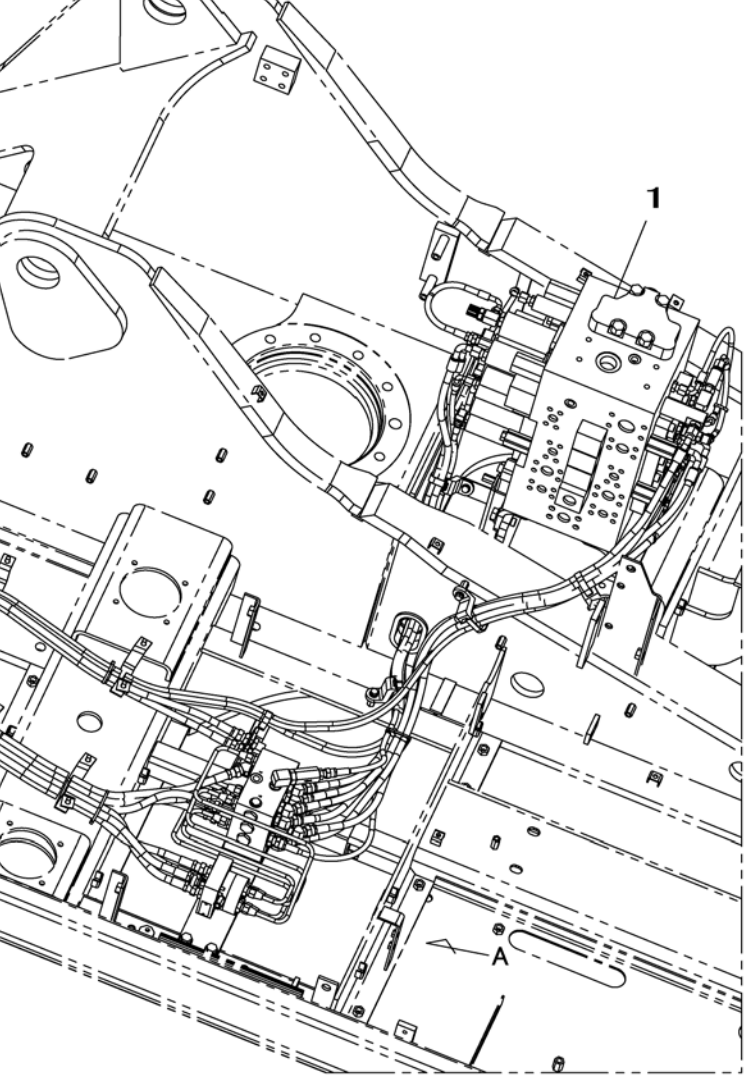

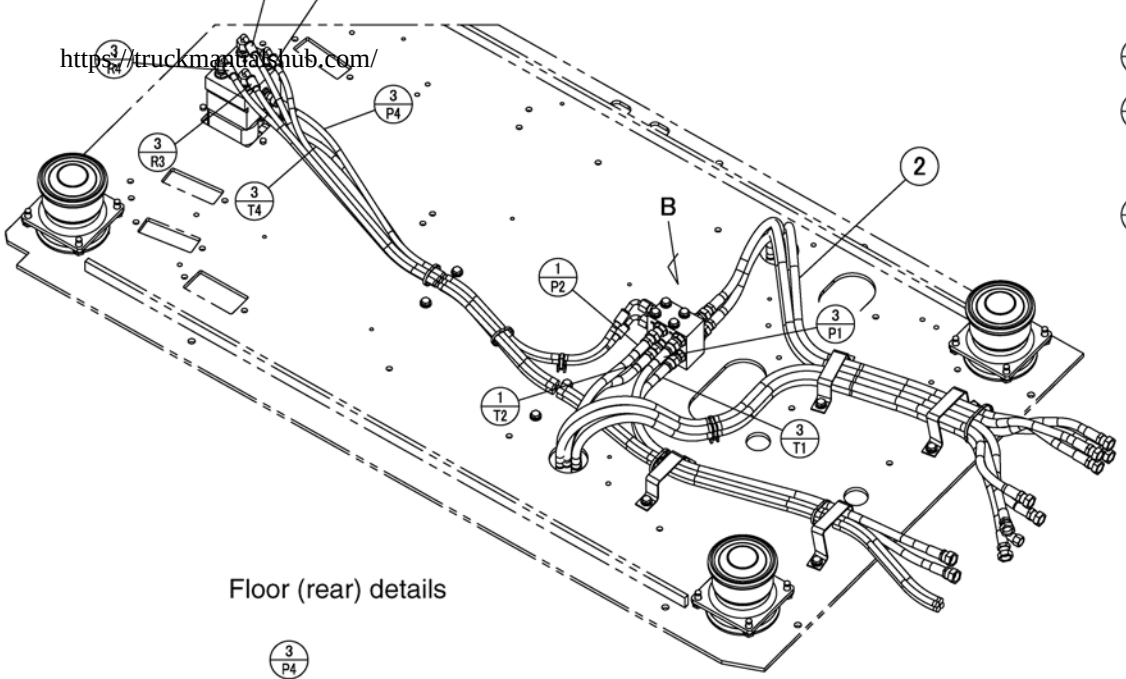

Floor (rear) details

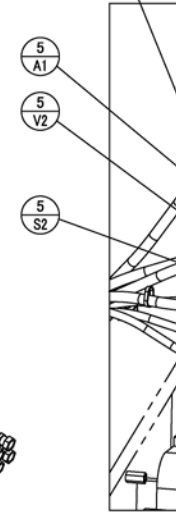

Cont

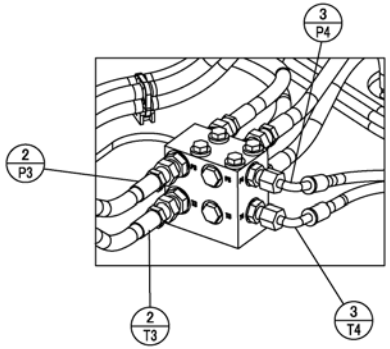

B~

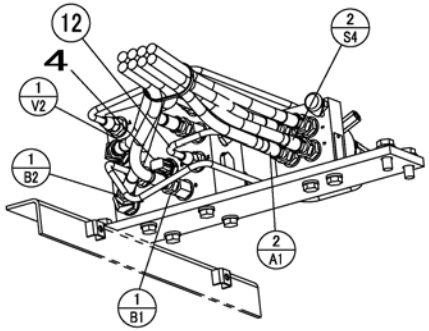

Cushion valve (down side) details

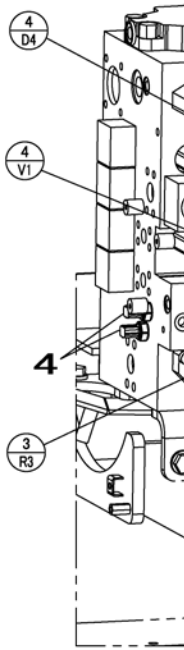

Cont

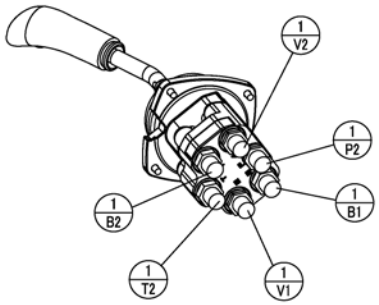

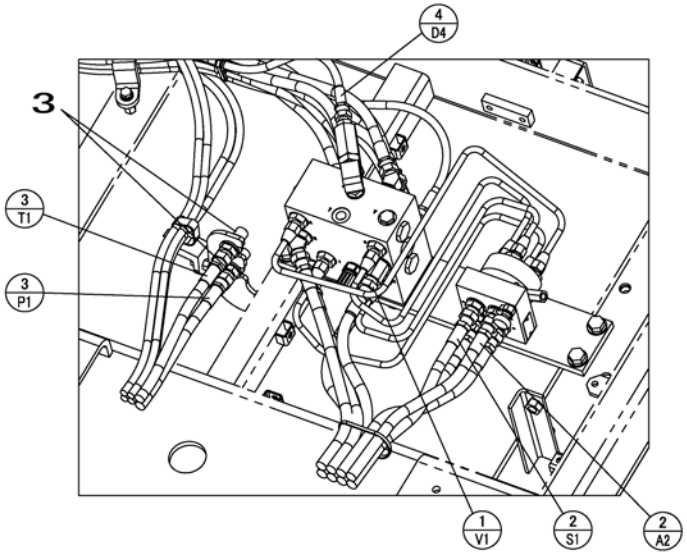

Cushion valve (forward) details

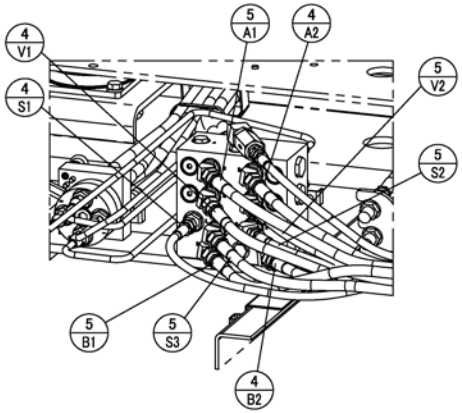

Cushion valve (backward) details

Pilot Hose Connection Diagram

https://truckmanualshub.com/

Pilot Control Line (4-way selector valve) Not used by LBX

PARTS NAME	SYMBOL	QTY
HOSE;ASSY	1	1
HOSE;ASSY	2	1
HOSE;ASSY	3	1
HOSE;ASSY	4	1
HOSE;ASSY	5	1
HOSE;HYD	6	1
HOSE;NYLON	7	1
HOSE;NYLON	8	1
VALVE;CUSHION	9	1
TUBE;ASSY	10	3
TUBE;ASSY	11	1
TUBE;ASSY	12	1
TUBE;ASSY	13	1
TUBE;ASSY	14	1
TUBE;ASSY	15	1
TUBE;ASSY	16	1
TUBE;ASSY	17	1
TUBE;ASSY	18	1
TUBE;ASSY	19	1

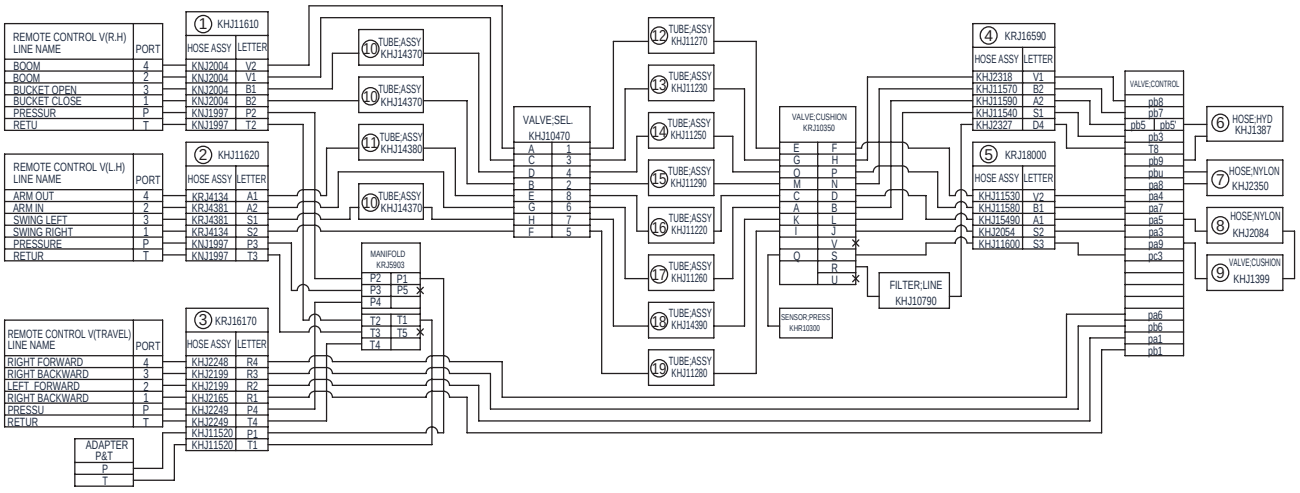

KRJ16220-E02

2 A2	2 port (arm-in)	1 V2	4 port (boom up)
2 S1	3 port (swing left)	1 B2	1 port (bucket close)
2 P3	P port	1 T2	T port
2 T3	T port	1 P2	P port
2 S2	1 port (swing right)	1 B1	3 port (bucket open)
2 A1	4 port (arm-out)	1 V1	2 port (boom down)

1	Control valve
2	Platform (left)
3	Adapter; hose (bulkhead) (pilot P and T)
4	Sensor; pressure

Pilot Hose Connection Diagram

Pilot Hose Connection Diagram

https://truckmanualshub.com/

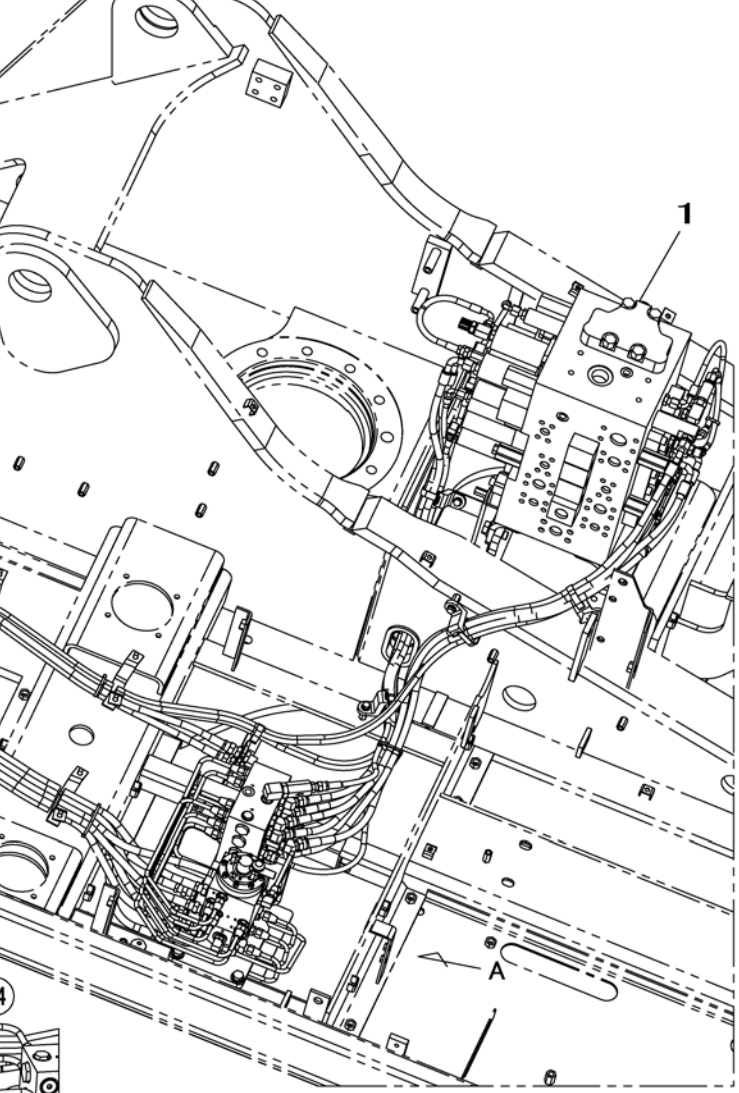

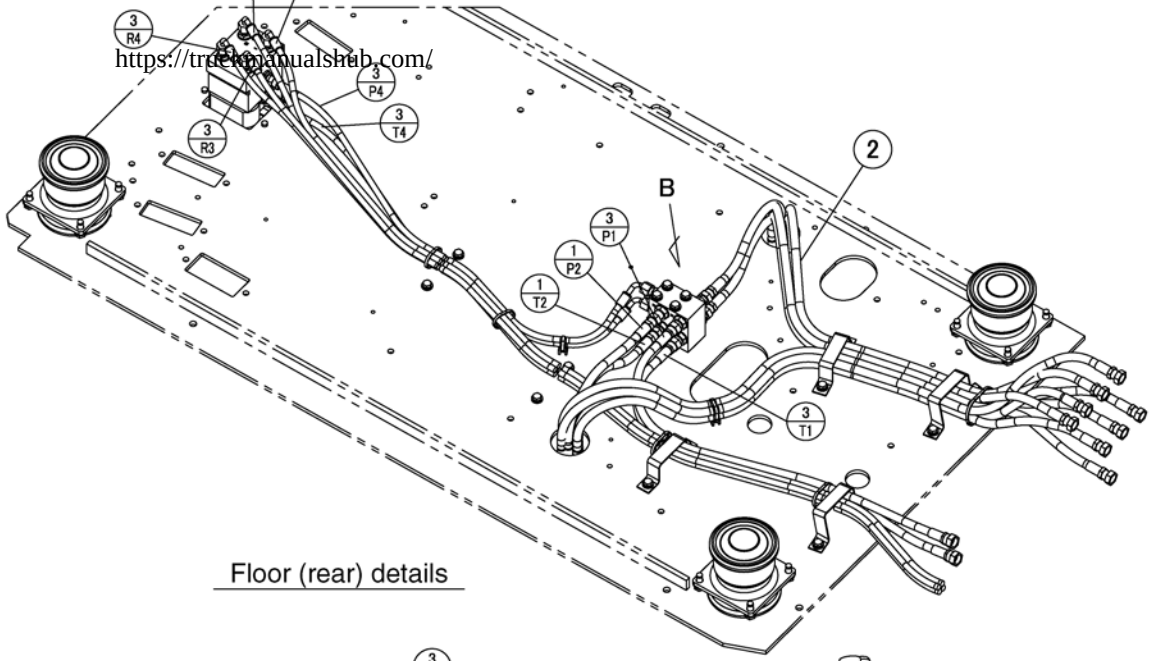

Floor (rear) details

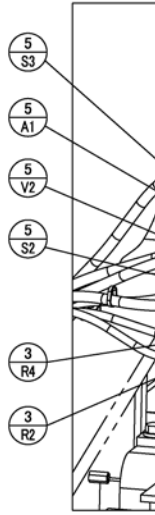

Contr

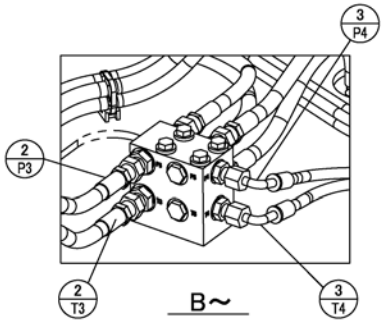

B~

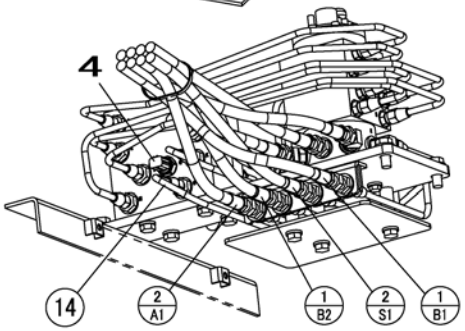

Cushion valve (down side) details

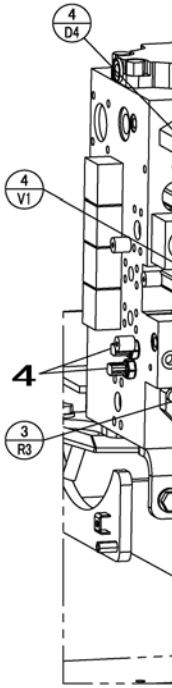

Cont

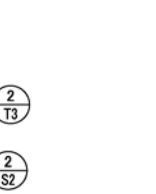

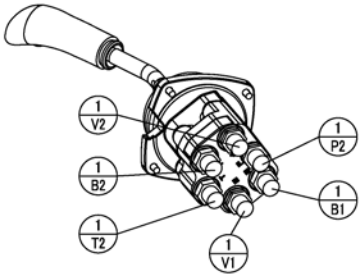

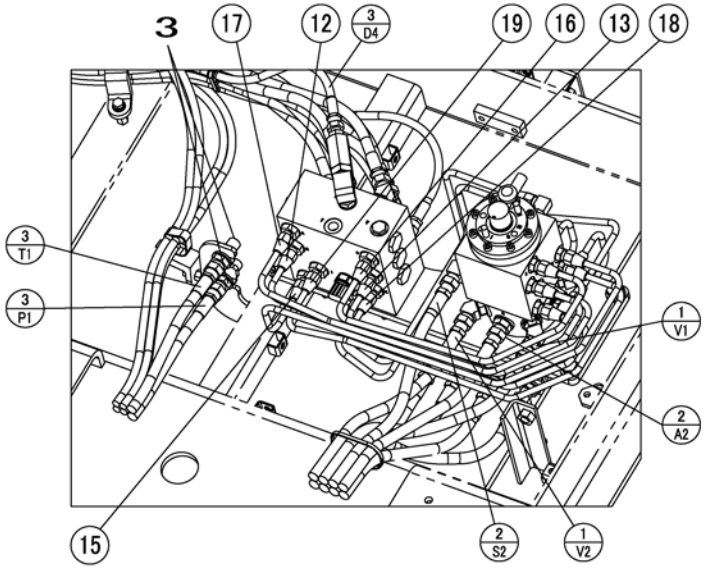

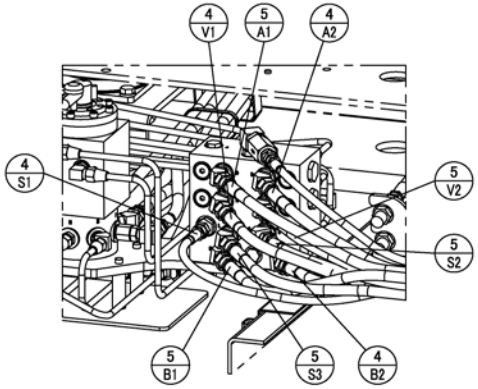

Cushion valve (backward) details

Function Table

◎: New function △: Changed function

Operation	Explanation of functions	Operation explanation
	Travel circuits	
Low-speed circuit	Sets the travel motor two-stage tilt revolution angle to a large angle to set low speed.	Page 41
High-speed circuit	Sets the travel motor two-stage tilt revolution angle to a small angle to set high speed. The speed is automatically switched to low speed according to the load pressure on the travel motor. In order to prevent drift at high speed, if the travel pressure becomes 3742 PSI (25.8 MPa) or higher, the speed is set to low speed.	Page 43
Straight travel circuit (△)	Traveling with other equipment operation, travel is held straight without curving.	Page 45
	Swing circuits	
Swing speed limit control circuit (◎)	In order to increase the cylinder bore and attachment speed, the pump maximum flow was increased, but in order to not increase the swing speed, when swing is operated alone, the pump flow is restricted with the proportional valve installed on the swing pump (front side).	Page 47
Swing relief cut-off control circuit (◎)	When swing is operated alone, if swing is started with a sudden lever operation, the pump flow is reduced with the proportional valve installed on the swing pump (front side). Normally, this control eliminates the excess oil discharged from the swing relief valve and reduces the horsepower consumption. When the swing speed rises, the pump discharge pressure falls, so the pump flow is increased gradually while it is detected with the sensor.	Page 49
Swing priority circuit	[1] Swing pushing is obtained by the swing priority variable orifice built into the control valve. [2] The wing priority variable orifice also works to secure the arm flow for bed metering.	Page 51
Swing brake circuit	Suctions in the oil from the make-up line in order to prevent cavitation when swing stops.	Page 53
Swing parking circuit (△)	[1] When the swing lever is in neutral, swing parking works and is held at 100%. [2] When there is a swing lever or attachment operation, swing parking is released. [3] Swing parking works about five seconds after the swing lever is put into neutral. [4] When an attachment operation is stopped, if there is no swing operation, the swing parking circuit works about one second later. [5] When the engine is stopped, swing parking works.	Page 55
	Boom circuits	
Boom-up circuit	[1] Boom only The flow is merged internally by switching the boom (2) spool to raise the speed. [2] Compound The swing priority variable metering spool is switched to make movement in arm-in compound operation smooth.	Page 61
Boom down regenerative circuit	Regeneration within the boom spool is used to increase speed and prevent cavitation.	Page 65
Boom down tilting prevention circuit	High pressure is suppressed with the bleed-off circuit and tilting is mitigated.	Page 67
Boom down load hold valve circuit	The load hold valve built into the control valve is speed up.	Page 69

D

https://truckmanualshub.com/

◎: New function △: Changed function

Operation	Explanation of functions	Operation explanation
Arm circuits		
Arm-out circuit	The flow is merged internally by switching the arm (2) spool to raise the speed.	Page 71
Arm-in forced regenerative circuit	The speed for compound operation is raised by the forced regeneration release valve in the control valve.	Page 73
Arm-in load hold valve circuit	The load hold valve built into the control valve is released to make the arm-in operation possible.	Page 75
Bucket circuit		
Bucket close regenerative circuit (◎)	Regeneration within the bucket spool is used to increase speed and prevent vacuum.	Page 79
Negative control circuits		
Negative control circuit	For no load operation, this circuit sets the hydraulic pump discharge quantity to minimum to reduce horsepower consumption.	Page 81
Negative control power save circuit (◎)	In the no operation state, this circuit switches the negative control valve set pressure to reduce the pump discharge force and further reduce horsepower consumption.	Page 83
Increased horsepower circuits		
Arm-in increased horsepower circuit	Increases the hydraulic pump discharge volume for arm-in operations.	Page 87
Travel added horsepower circuit	Increases the hydraulic pump discharge volume for travel-only operations.	Page 89
Others		
Cushion circuit	Softens the shock through the work of the cushion valve with heat circuit. These circuit is attached to the boom and arm pilot lines. There is no soft / hard switch.	Page 91
Auto power boost circuit	Boost the main relief pressure from 4875 PSI (34.3 MPa) to 5337 PSI (36.8 MPa) according to the engine load ratio and circuit pressure.	Page 99
Option circuits		
Breaker circuit	The main control valve has an option section as standard so that it can support a breaker, crusher or other special attachment.	Page 101
Option flow adjustment (◎)	It is possible to set the flow for the breaker, crusher, or other special attachment application by just operating a switch in the cab. Maximum of 5 applications	-
Compatible circuit switch (◎)	It is possible to switch the circuit between the breaker and the crusher by just operating the switch in the cab.	-
Second option circuit (◎)	Option valve can be added to the top section of the control valve and a second option line can be installed easily.	Page 109

Explanation of New Functions

1. Swing Relief Cut Control

[1] LX circuits

- When swing starts, almost all the oil is discharged from the swing cross over relief valve.

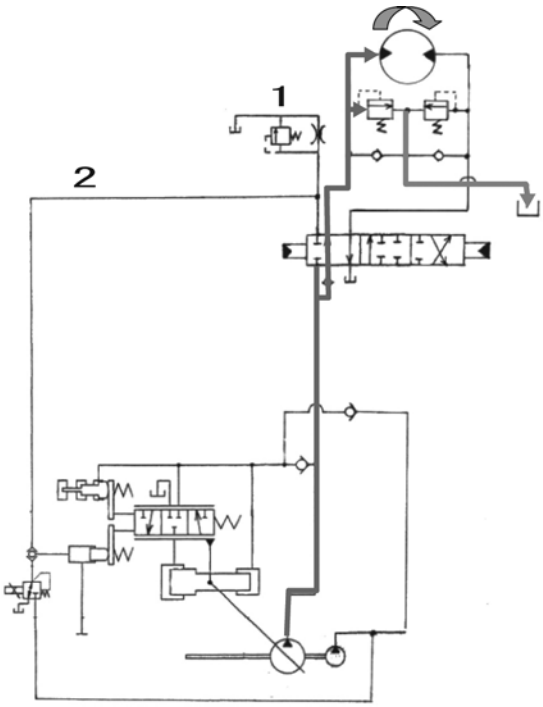

When the swing starts, high pressure is required, but not flow.
For LX, swing relief pressure 4264 PSI (29.4 MPa)
Pump delivery volume at this time 44 Gal. (167 L)/min.
When the pump is beginning to start up, almost all the oil flows from the relief valve to the tank.

RST-04-03-0013LBX

1	Foot relief valve
2	Negative control signal

D

[2] X2 circuits

- When swing starts, the flow is reduced with the front side proportional valve and the excess oil is eliminated.

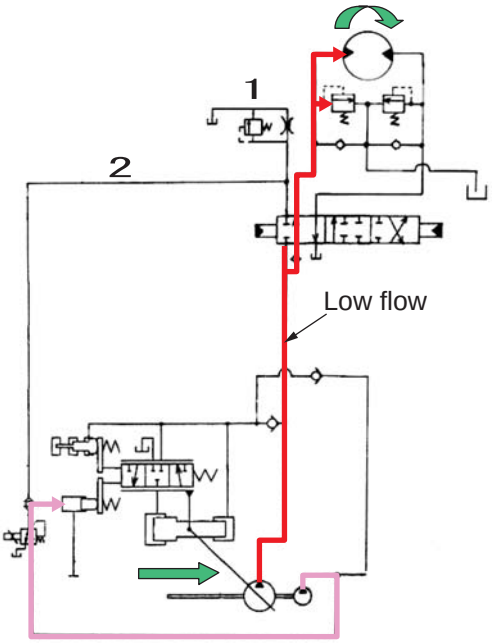

Current is input to the front side proportional valve, pilot pressure oil is led to the negative control port, and the flow decreases on the front side only.
While the pump discharge pressure is sensed, the flow is gradually increased.

1. Operation conditions for swing relief cut control when all the conditions below are satisfied.
   - Travel non-operation
   - No attachments other than boom down are operating
   - Sudden swing operation

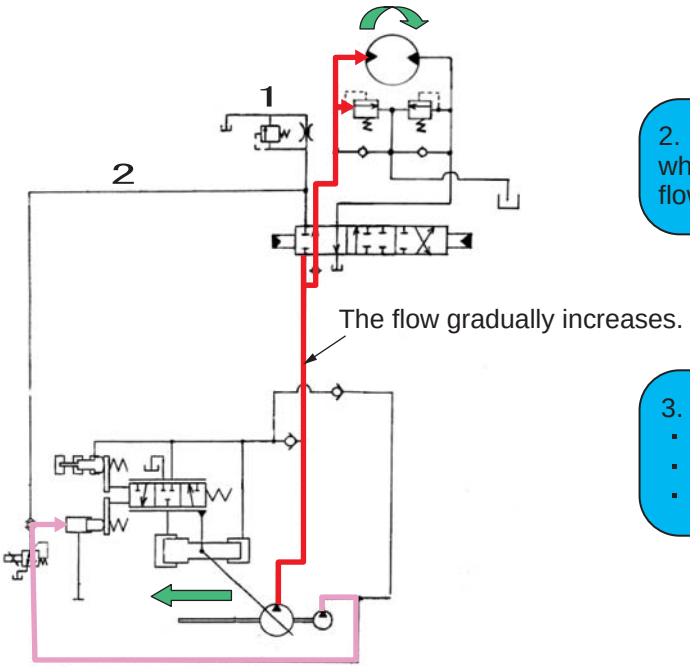

2. Control after swing relief cut control operation while the pump discharge pressure is sensed, the flow is gradually increased.

3. Swing relief cut control end conditions
   - When swing operation is stopped
   - Travel operation
   - Boom-up, arm-out / in, bucket open / close

1	Foot relief valve
2	Negative control signal

2. Swing Speed Limit Control

- The maximum pump flow has been increased, but because it is desired to maintain the current state of the swing speed, the front side proportional valve is used to hold down the flow for swing-only operation.

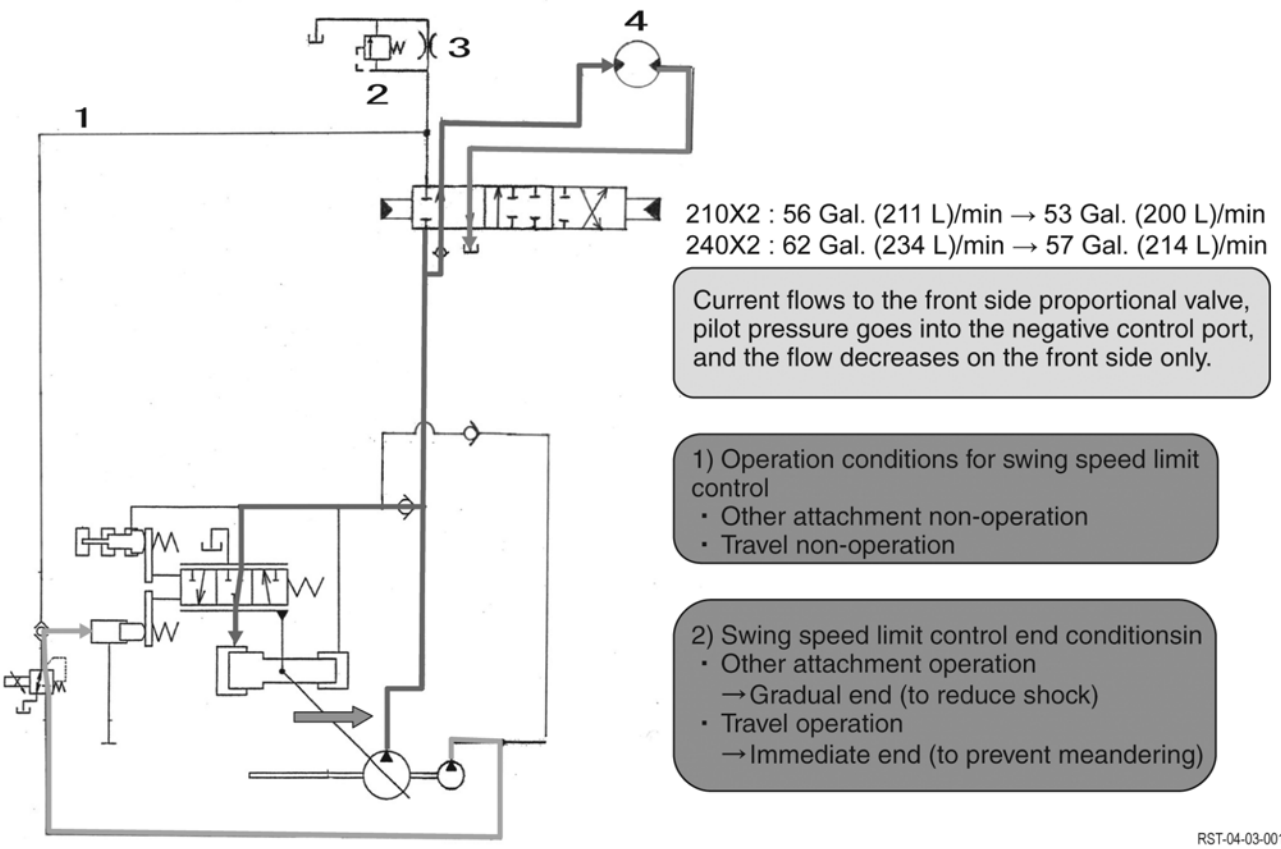

1	Negative control signal
2	Foot relief valve
3	Negative control orifice
4	Swing motor

3. Negative Control Power Save Control

[1] LX negative control circuit

- Control such that the discharge flow decreases as the negative control pressure increases

This reduces the flow for non-operation, so there is an energy-saving effect.

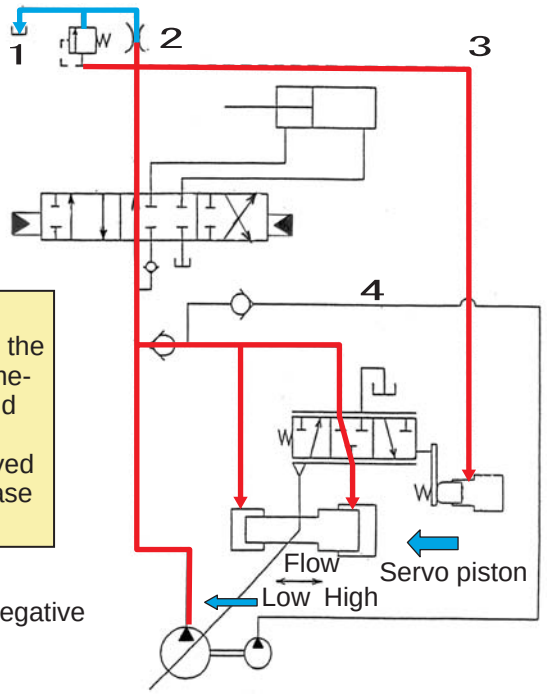

For non-operation
1) The oil discharged from the pump is boosted to the foot relief set pressure at the negative control metering valve downstream of the control valve and the negative control pressure rises.
2) The pump regulator section servo piston is moved in the direction that is left in the figure to decrease the flow.

However, the pump discharge pressure is the negative control pressure and pressure loss.

1	Negative control signal	3	Negative control orifice
2	Negative control relief valve	4	Swing motor

[2] X2 negative control circuit

This circuit uses the power save function.

- The negative control relief was made variable to lower the negative control pressure.

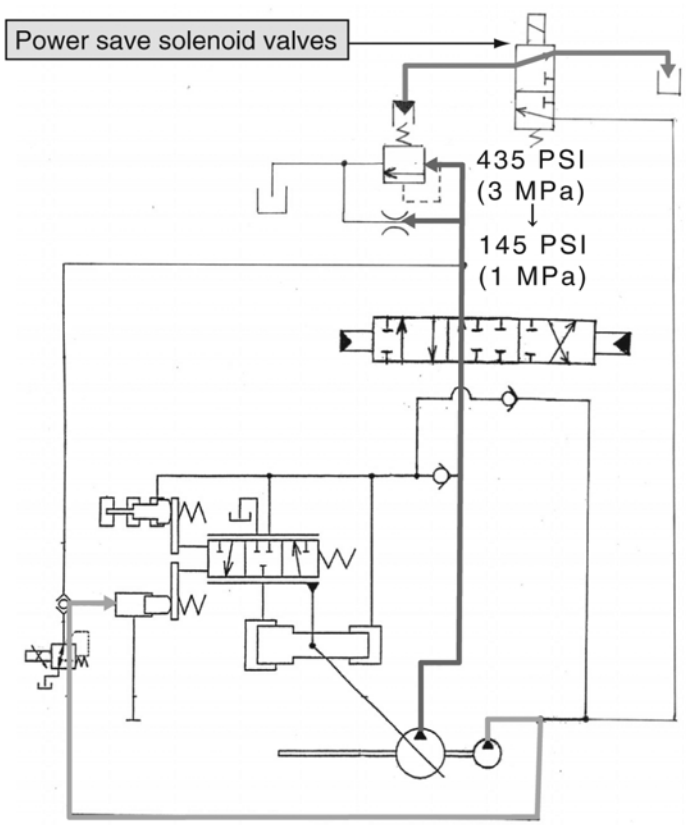

This gives low pressure and low flow for non-operation, so there is an energy-saving effect.

For non-operation
1) When one second passes from the end of operation, the solenoid valve comes ON and the negative control relief spring is released.
2) When the pump discharge pressure drops, the negative control pressure drops at the same time, so the proportional valve is operated to establish the negative control pressure.
3) The rear side pump leads the pilot pressure to the negative control port via the shuttle.
4) When any operation is carried out, this detects the pilot pressure and recovers in about 0.1 second.

RST -04-03-0016bLBX

4. Option Line Flow Adjustment Control

- This control adjusts the set flow to match the breaker, crusher, or other application.

There are various types of front attachments installed on the shovel and the flows they require vary.
Even just for the 20-ton class breakers recognized by this company, the required flow ranges from 32 to 53 Gal. (120 to 200 L)/min.

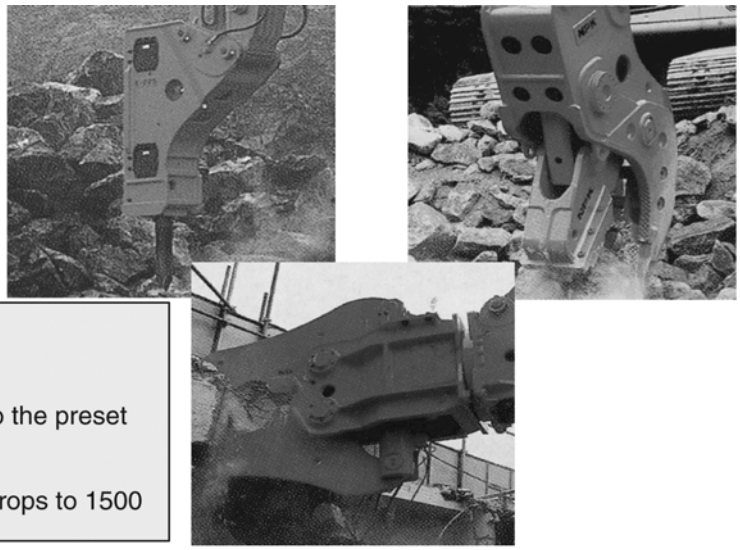

LX breaker control
Breaker mode switch ON
Option pedal ON
When these occur, the engine speed drops to the preset speed.
Example
If the required flow is 40 Gal. (150 L)/min, it drops to 1500 min^{-1}.

Problems
- The change in engine speed creates a sense of discomfort.
- The flow can only be set when the breaker is used. (With the pulverizer specifications, the flow cannot be adjusted.)
- Only one flow can be set.

RST-04-03-0017LBX

X2 uses a front pump proportional valve to adjust the flow.z

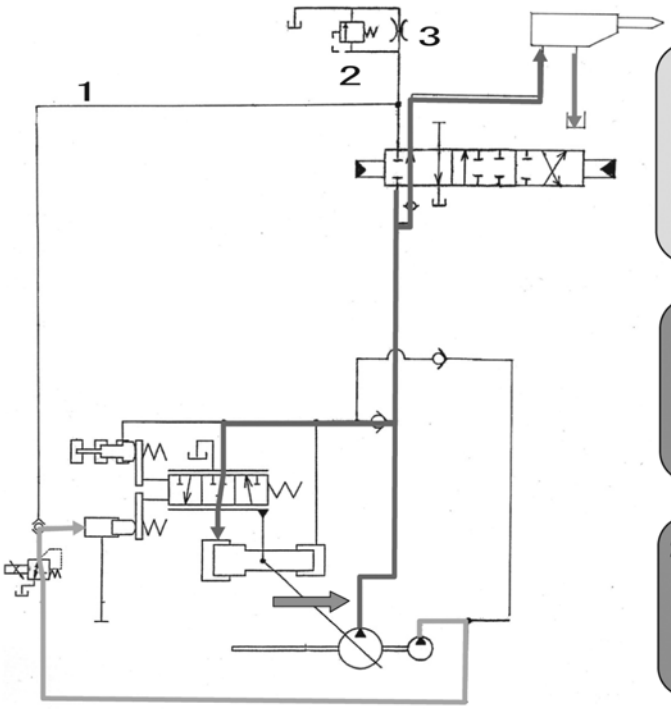

Improved points
- The breaker can be operated without engine speed change.
- The flow can be set even with the crusher specifications.
- Three settings each can be stored for the breaker and the crusher.

1. Operation conditions for option flow adjustment control
- Option operation
- Attachment non-operation
- Travel non-operation
- Swing non-operation

2. Option flow adjustment control end conditions
- Attachment operation
- Travel operation
- Option non-operation
- Swing operation

Control contents
Accompanying the 10 flow settings (front side proportional valve settings), when one setting is selected, the set current is input to the front proportional valve, pilot pressure oil is led to the negative control port, and the flow decreases on the front side only.

1	Negative control signal	2	Negative control relief valve	3	Negative control orifice

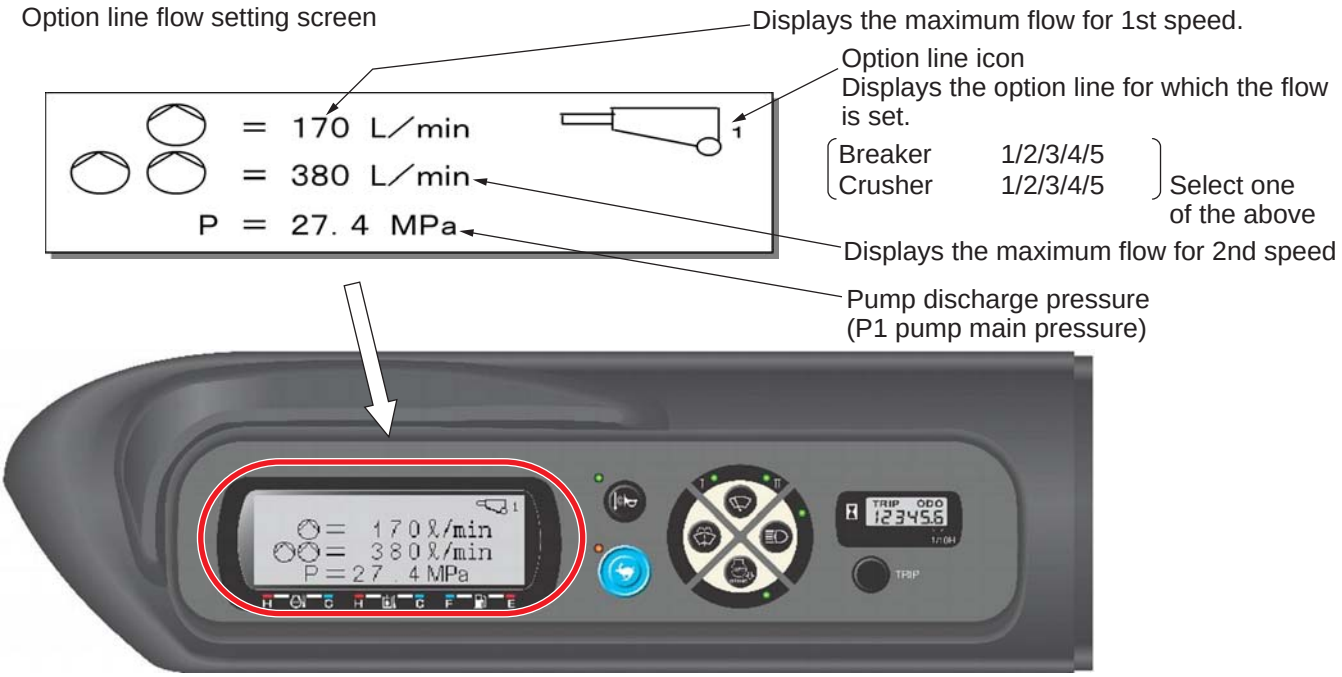

5. Compatible Circuit (breaker ⇔ crusher) One-Touch Switching Control

- This control makes it easy to switch the circuit with a rocker switch in the cab.

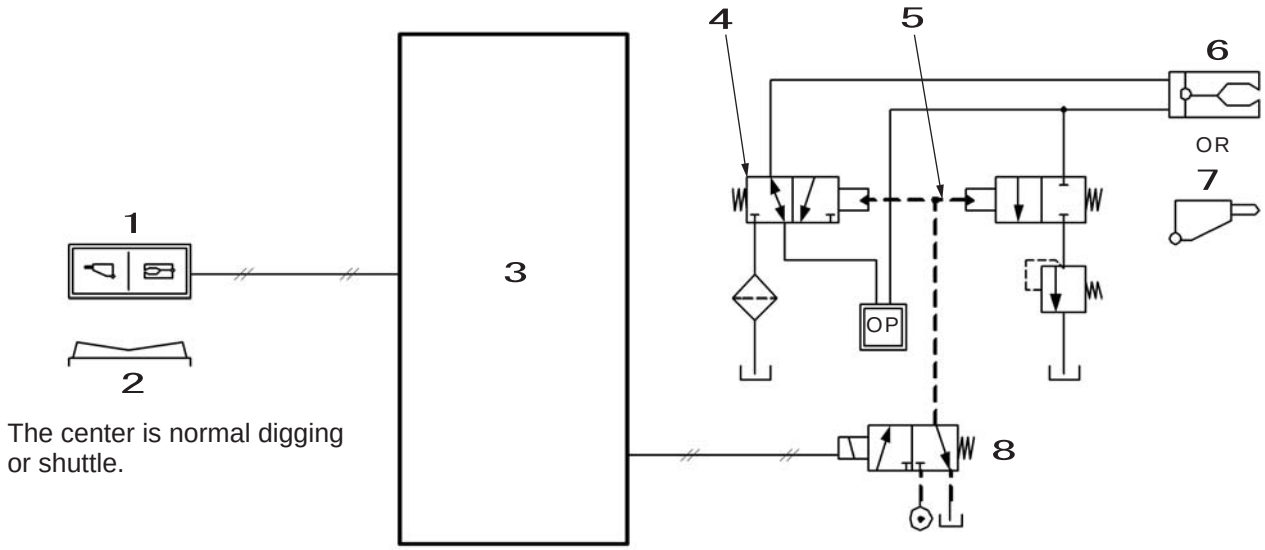

1	Option line select switch
2	3 position switch
3	Computer
4	Three-way valve
5	Pilot switch
6	crusher
7	Breaker
8	Option line switch solenoid

6. Bucket Close Regenerative Circuit

This circuit speeds up bucket closing.
Bucket close regenerative circuit used

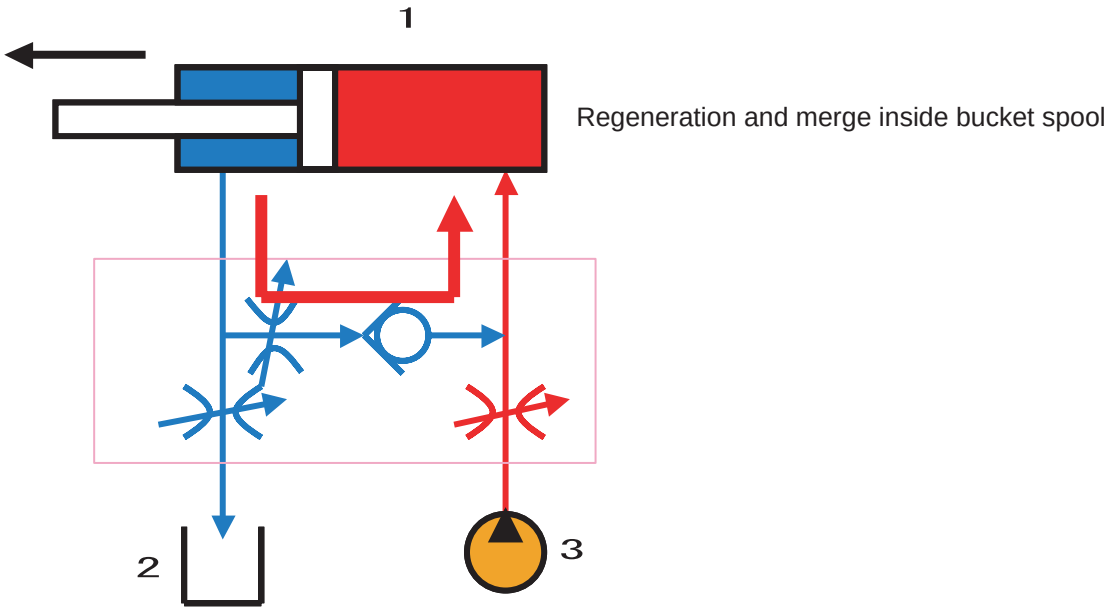

Regeneration conditions: Pressure T > P

Cylinder port merge regeneration

1	Bucket cylinder
2	Hydraulic oil tank
3	Hydraulic pump

D

https://truckmanualshub.com/

Travel Circuits

1. Low-Speed Travel Circuit

As an example, this section explains the forward travel operation.
The travel motor two-stage tilt revolution angle is a large angle side. Even if the travel switch is set to the high-speed side, switching the key switch OFF, then ON again always returns the system to this state.
By operating the travel remote control valve to the forward side, the pilot pressure oil is fed to the control valve Pa1 port and switches the left travel spool to the forward side.
At the same time, the oil is also fed to the Pa6 port to switch the right travel spool to the forward side.
The discharged oil from hydraulic pump A1 enters the control valve P1 port and the discharged oil from hydraulic pump A2 enters the control valve P2 port. Each flows to the respective travel motor and causes forward travel through the left and right spools being switched.
The return oil from the travel motor goes through the left and right travel spools and returns to the hydraulic oil tank.
The travel high-speed solenoid valve goes OFF, the travel motor Ps port oil connects with the tank line and the travel motor revolution tilt angle goes to the large revolution tilt side.

1	Travel motor	10	Console lever lock switch
2	High speed travel select switch	11	Hydraulic pump
3	Computer	12	Travel remote control valve
4	Control valve	13	Check
5	Travel (left)	14	Oil cooler
6	Travel (right)	15	Backward left
7	Travel speed	16	Forward left
8	Lever lock	17	Forward right
9	5-stack solenoid valve	18	Backward right

https://truckmanualshub.com/

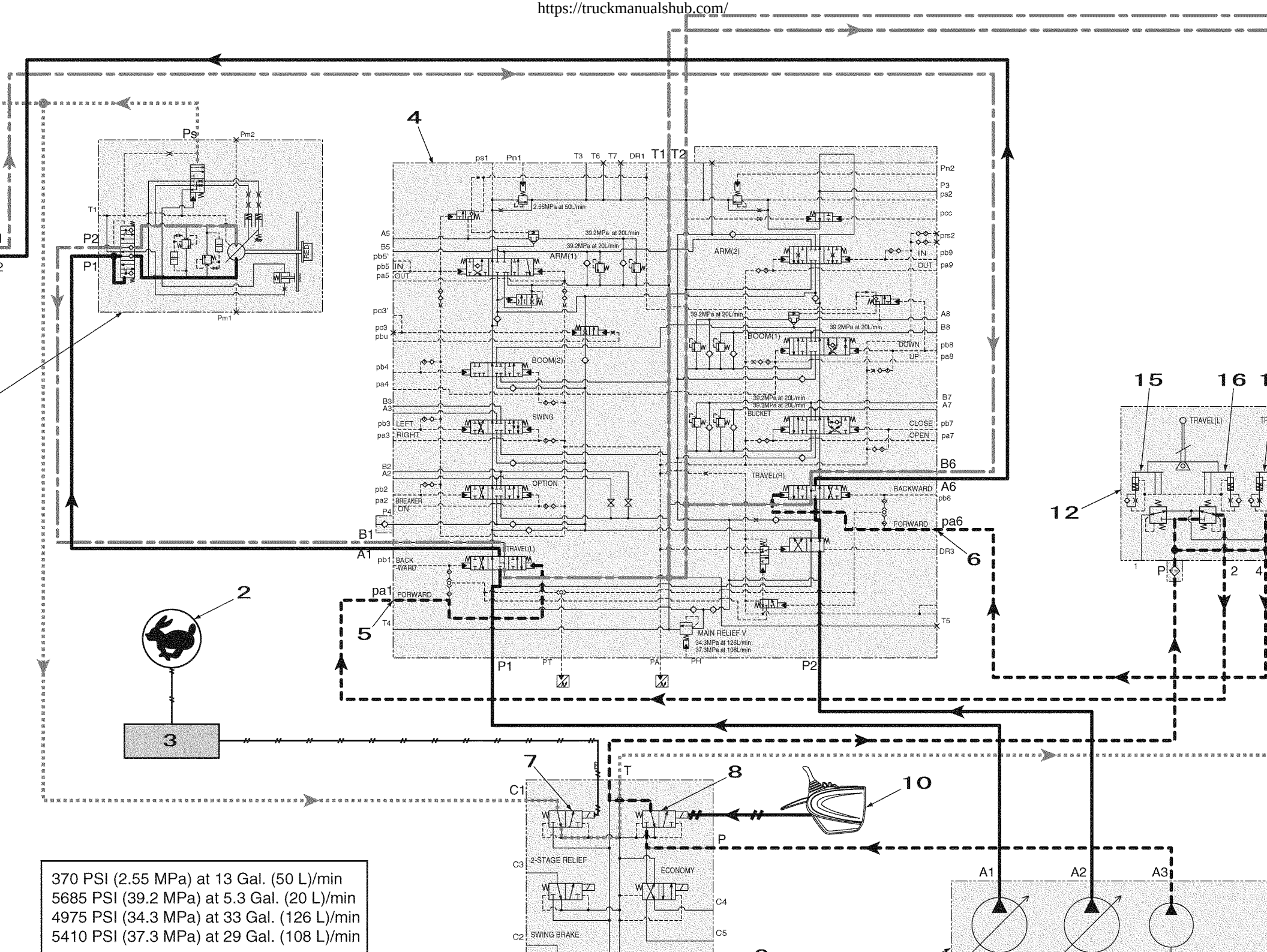

370 PSI (2.55 MPa) at 13 Gal. (50 L)/min
5685 PSI (39.2 MPa) at 5.3 Gal. (20 L)/min
4975 PSI (34.3 MPa) at 33 Gal. (126 L)/min
5410 PSI (37.3 MPa) at 29 Gal. (108 L)/min

https://truckmanualshub.com/

Travel Circuits

2. High-Speed Travel Circuit

As an example, this section explains the forward travel operation.
Sets the travel motor two-stage tilt revolution angle to a small angle to set high speed. The travel motor has an auto switch function that switches the speed from high speed to low speed according to the load pressure on the travel motor.
By operating the travel remote control valve to the forward side, the pilot pressure oil is fed to the control valve Pa1 port and switches the left travel spool to the forward side.
At the same time, the oil is also fed to the Pa6 port to switch the right travel spool to the forward side.
The discharged oil from hydraulic pump A1 enters the control valve P1 port and the discharged oil from hydraulic pump A2 enters the control valve P2 port. Each flows to the respective travel motor and causes forward travel through the left and right spools being switched.
The return oil from the travel motor goes through the left and right travel spools and returns to the hydraulic oil tank.
Electrical signals are sent to the computer A by operation of the high-speed travel select switch and the computer A sends electrical signals to the high-speed travel solenoid valve. Due to the switching of the high-speed travel solenoid valve, the pilot pressure 566 PSI (3.9 MPa) from the C1 port enters the left and right travel motor Ps ports through the center joint and sets the travel motor revolution tilt angle to a small angle to raise the speed.

1	Travel motor	10	Console lever lock switch
2	High speed travel select switch	11	Hydraulic pump
3	Computer	12	Travel remote control valve
4	Control valve	13	Check
5	Travel (left)	14	Oil cooler
6	Travel (right)	15	Backward left
7	Travel speed	16	Forward left
8	Lever lock	17	Forward right
9	5-stack solenoid valve	18	Backward right

https://truckmanualshub.com/

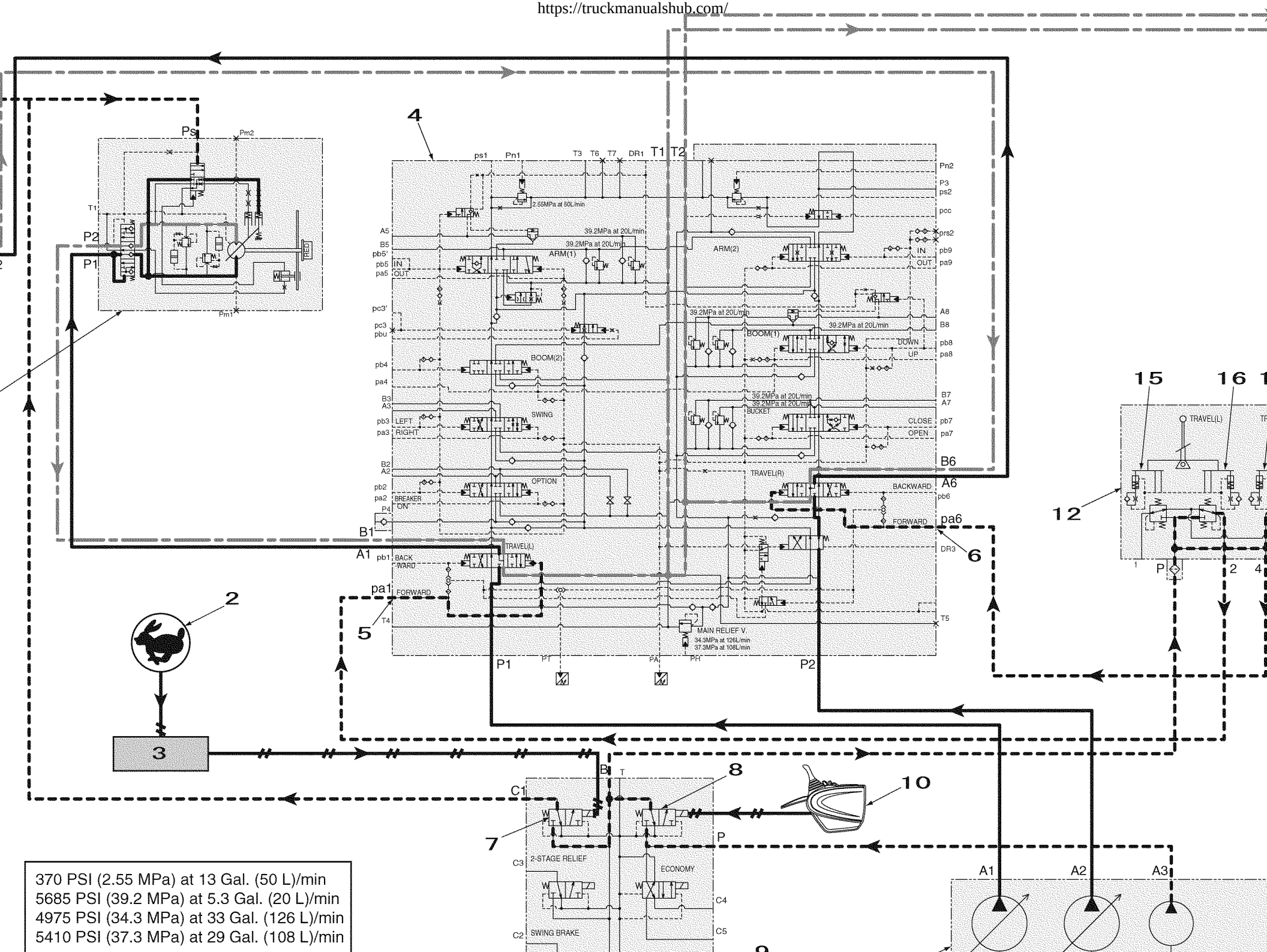

370 PSI (2.55 MPa) at 13 Gal. (50 L)/min
5685 PSI (39.2 MPa) at 5.3 Gal. (20 L)/min
4975 PSI (34.3 MPa) at 33 Gal. (126 L)/min
5410 PSI (37.3 MPa) at 29 Gal. (108 L)/min

https://truckmanualshub.com/

Travel Circuits

3. Straight Travel Circuit

As an example, this section explains simultaneous forward travel and boom up operations.
By operating the travel remote control valve to the forward side, the pilot pressure oil is fed to the control valve Pa1 port and switches the left travel spool to the forward side.
In the same way, oil is also fed to the Pa6 port to switch the right travel spool to the forward side.
Furthermore, the right forward travel pilot pressure oil separated internally from the control valve Pa6 port switches the straight travel signal (right). On the other hand, the travel pilot pressure oil separated internally from the Pa1 port switches the straight travel signal (left) via the straight travel signal (right).
The discharged oil from hydraulic pump A1 enters the control valve P1 port and the discharged oil from hydraulic pump A2 enters the control valve P2 port. Each flows to the respective travel motor and causes forward travel through the left and right spools being switched.
If a boom-up operation is carried out during travel, the pilot pressure oil is fed via the cushion valve to the control valve Pa4 port and switches the boom (1) and (2) spools to the up side.
The upper side (boom, arm, bucket, swing, option) pilot pressure oil separated internally from the control valve Pa4 port is fed to the straight travel valve via the straight travel signal (left) and the straight travel spool is switched.
The amount of switching of the straight travel spool varies with the upper side pilot pressure.
(Because the pilot pressure is low for slight upper side operation, the amount of switching of the straight travel spool is slight to prevent sudden reduction in the travel speed.)
Because the straight travel valve is switched, it is possible for the control valve P1 pressurized oil to drive the left and right travel motors and for the control valve P2 pressurized oil to drive the boom.
Because the left and right motors are driven by one pump, the left and right motors have the same pressure and straight travel is possible. Furthermore, the P2 excess pressurized oil is fed to the travel side via the check valve with travel merge orifice to minimize the drop in speed.
The same operations are carried out when travel and an upper side actuator other than for the boom are operated simultaneously.

1	Travel motor	14	Travel speed
2	Boom (up)	15	Lever lock
3	Boom (down)	16	5-stack solenoid valve
4	Cushion valve	17	Console lever lock switch
5	Remote control valve (boom, bucket)	18	Hydraulic pump
6	Control valve	19	Boom cylinder
7	Travel (left)	20	Travel remote control valve
8	Travel (right)	21	Check
9	Straight travel valve	22	Oil cooler
10	Straight travel signal (left)	23	Backward left
11	Straight travel signal (right)	24	Forward left
12	High speed travel select switch	25	Forward right
13	Computer	26	Backward right

370 PSI (2.55 MPa) at 13 Gal. (50 L)/min
5685 PSI (39.2 MPa) at 5.3 Gal. (20 L)/min
4975 PSI (34.3 MPa) at 33 Gal. (126 L)/min
5410 PSI (37.3 MPa) at 29 Gal. (108 L)/min

https://truckmanualshub.com/

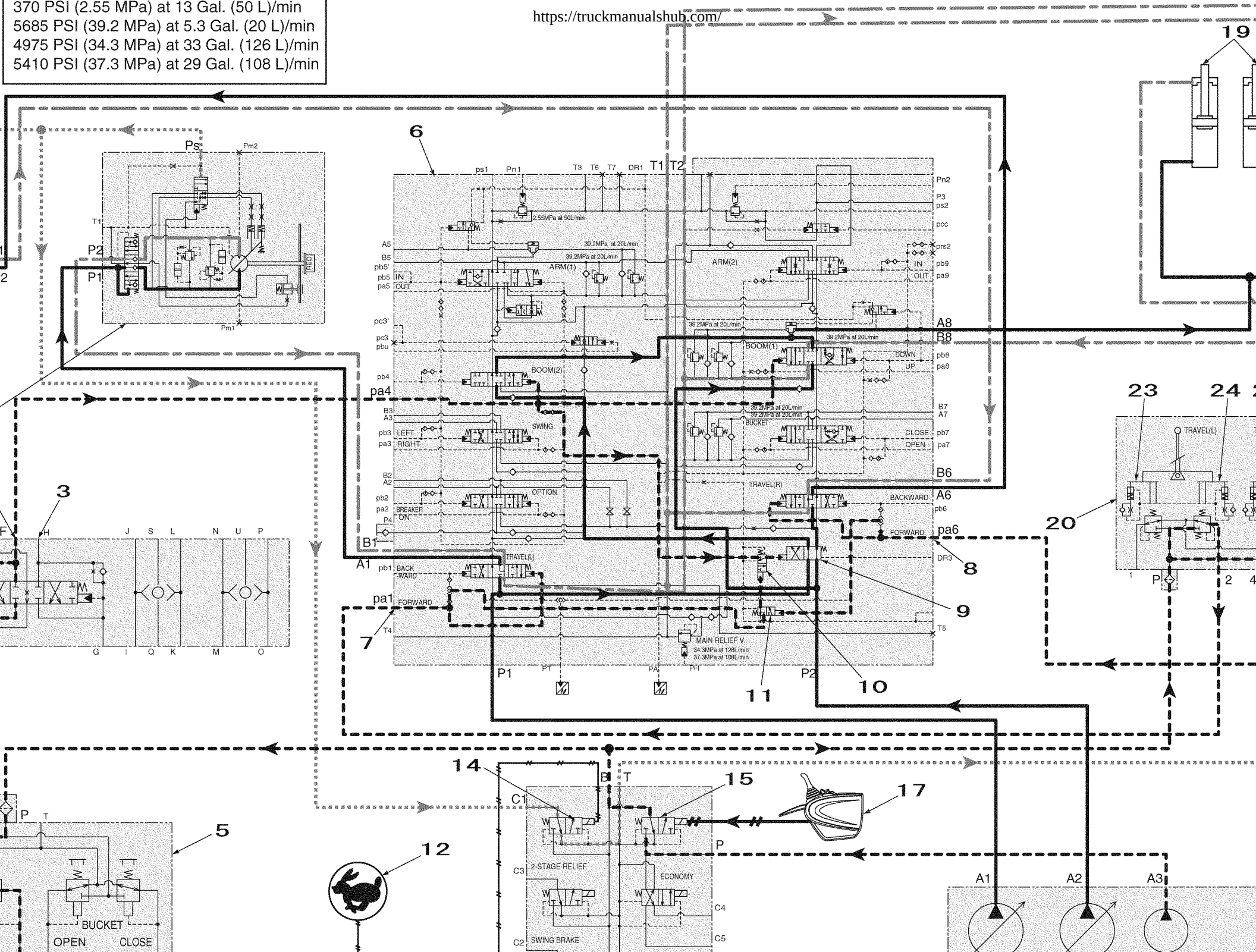

https://truckmanualshub.com/

Swing Circuits

1. Swing Speed Limit Control Circuit

This control is for suppressing increases in the swing speed accompanying increased pump flow.(Only in SP mode)
For swing-only operation, due to the swing pilot pressure sensor and P1 pressure sensor input electric signal, the computer outputs a signal to the P1 hydraulic pump flow control proportional valve.
The discharged oil from the A3 hydraulic pump is fed to the P1 flow control proportional valve.
The hydraulic pump A1 side discharge flow is reduced to 53 Gal. (200 L) / min by the signal output from the computer to the P1 flow control proportional valve.

[1] Conditions under which the swing speed limit control is entered
- Swing only full lever operation
- No travel operation
- Work mode SP

[2] Conditions under which the swing speed limit control is ended
- Upper side operation other than boom down
  → Gradual end (to reduce shock)
- Travel operation
  → Immediate end (to avoid back lash)
- Option operation

1	Swing motor	13	Swing brake
2	Swing	14	5-stack solenoid valve
3	Cushion valve	15	Console lever lock switch
4	Right swing	16	N1 negative control pressure sensor
5	Left swing	17	P1 pressure sensor
6	Swing pilot pressure sensor	18	P1 flow control proportional valve
7	Remote control valve (arm, swing)	19	Hydraulic pump
8	Control valve	20	Horsepower control proportional valve
9	Travel pilot pressure sensor	21	P2 pressure sensor
10	Upper side pilot pressure sensor	22	Check
11	Computer	23	Oil cooler
12	Lever lock		

370 PSI (2.55 MPa) at 13 Gal. (50 L)/min
5685 PSI (39.2 MPa) at 5.3 Gal. (20 L)/min
4975 PSI (34.3 MPa) at 33 Gal. (126 L)/min
5410 PSI (37.3 MPa) at 29 Gal. (108 L)/min

https://truckmanualshub.com/

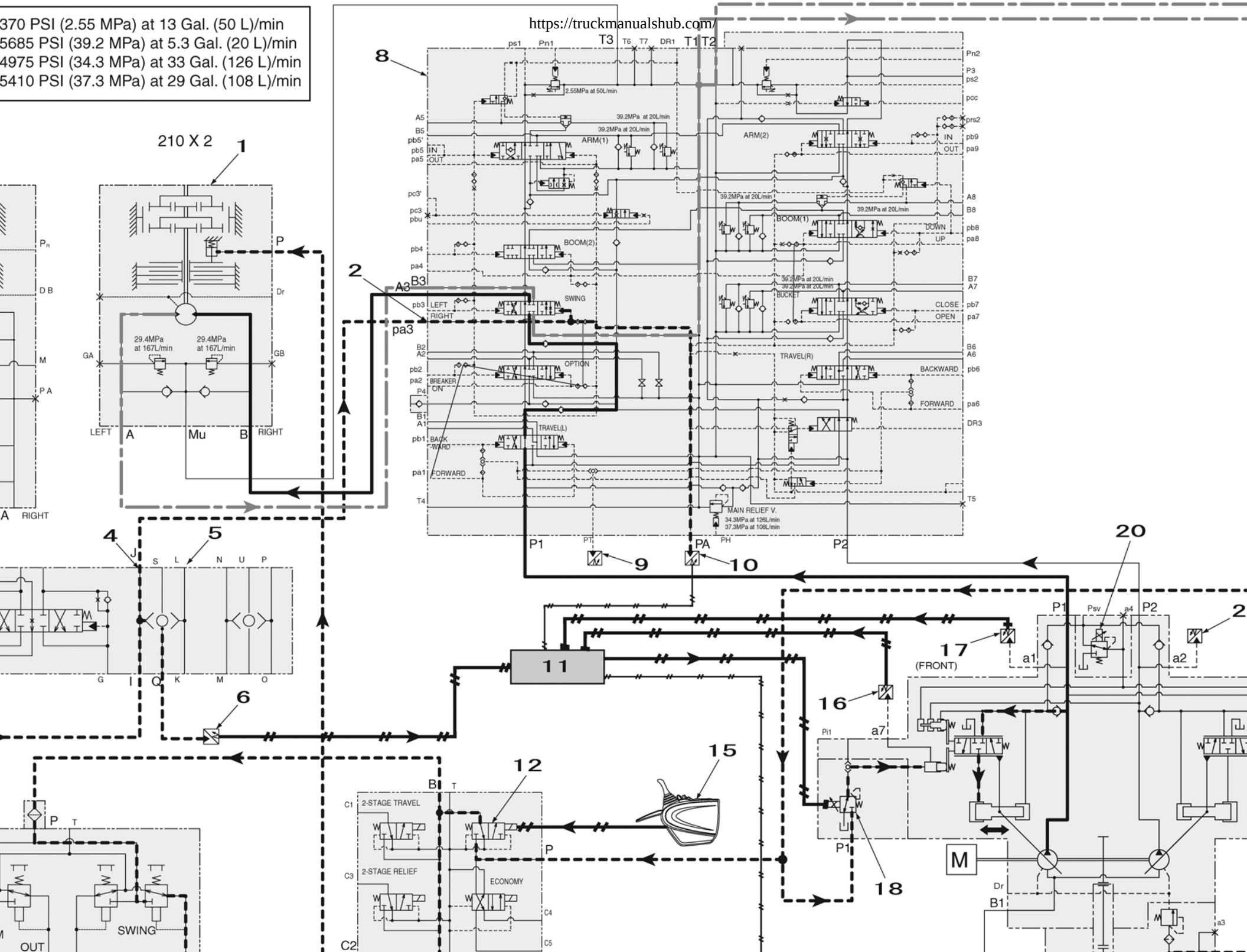

https://truckmanualshub.com/

Swing Circuits

2. Swing Relief Cut-off Control Circuit

This control aims for an energy saving effect by controlling the pump in such a way as to minimize the excess oil drained from the swing motor relief valve for the starting pressure boost for a sudden swing-only operation.

When a swing operation starts, due to the swing pilot pressure sensor and P1 pressure sensor input electrical signals, the computer outputs a signal to the hydraulic pump P1 flow control proportional valve.

The discharged oil from the A3 hydraulic pump is fed to the P1 flow control proportional valve.

The output signal from the computer A to the P1 flow control proportional valve controls the pilot pressure to reduce the hydraulic pump A1 side discharge flow. Also, the input signal from hydraulic pump P1 pressure sensor controls the pilot pressure to gradually increase the discharge flow.

[1] Swing relief cut-off control is executed when all the conditions below are satisfied.

- No travel operation
- Swing-only sudden operation or swing + boom down operation

[2] Swing relief cut-off control ends when a condition below is satisfied.

- When swing operation is stopped
- Travel, boom-up, arm out / in, or bucket open / closed operation

1	Swing motor	13	Swing brake
2	Swing	14	5-stack solenoid valve
3	Cushion valve	15	Console lever lock switch
4	Right swing	16	N1 negative control pressure sensor
5	Left swing	17	P1 pressure sensor
6	Swing pilot pressure sensor	18	P1 flow control proportional valve
7	Remote control valve (arm, swing)	19	Hydraulic pump
8	Control valve	20	Horsepower control proportional valve
9	Travel pilot pressure sensor	21	P2 pressure sensor
10	Upper side pilot pressure sensor	22	Check
11	Computer	23	Oil cooler
12	Lever lock		

370 PSI (2.55 MPa) at 13 Gal. (50 L)/min
5685 PSI (39.2 MPa) at 5.3 Gal. (20 L)/min
4975 PSI (34.3 MPa) at 33 Gal. (126 L)/min
5410 PSI (37.3 MPa) at 29 Gal. (108 L)/min

https://truckmanualshub.com/

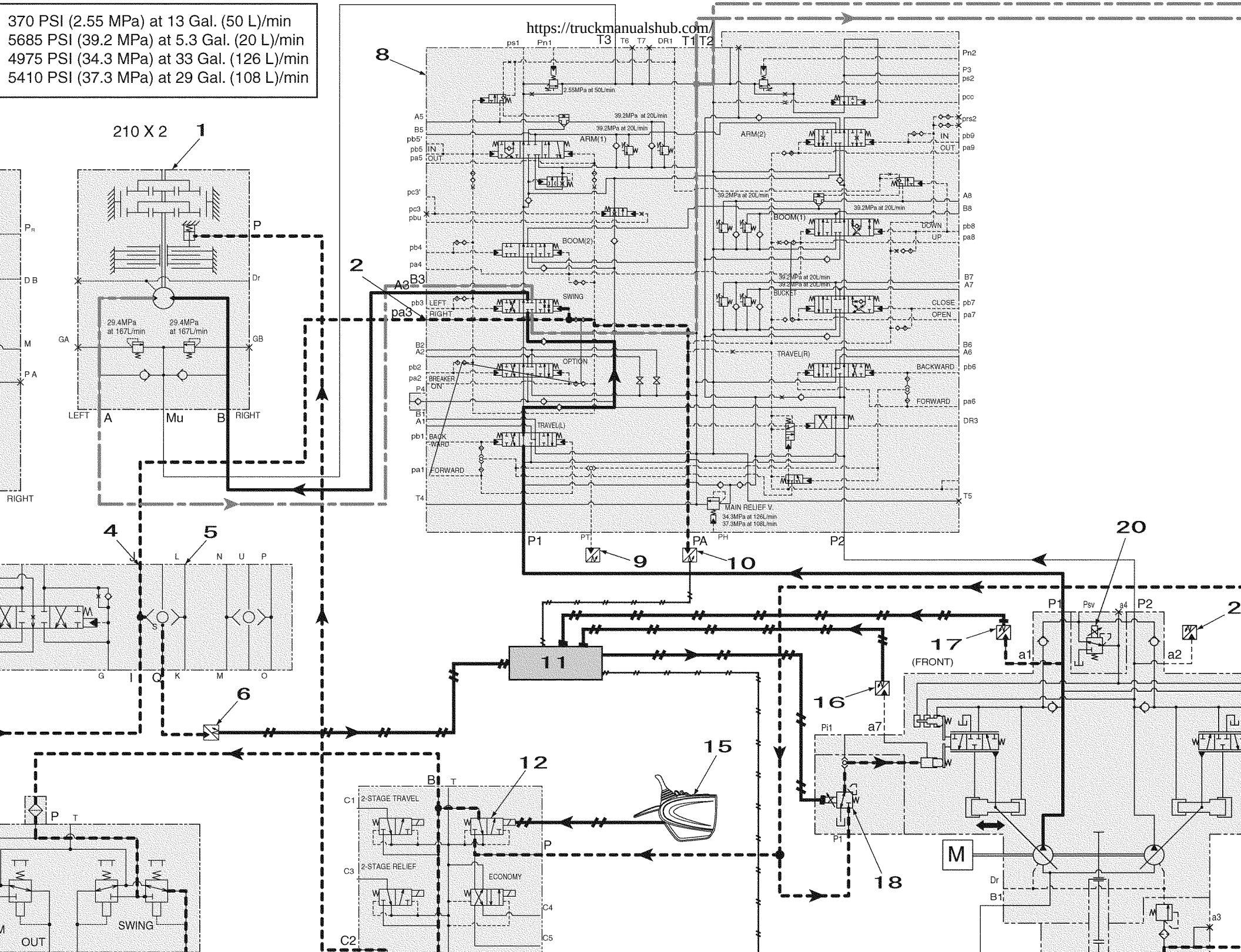

https://truckmanualshub.com/

Swing Circuits

3. Swing Priority Circuit

The swing pilot pressure is fed to the Pc3 port via the shuttle valve and holds the swing priority variable orifice to the right side.By orifice the parallel circuit, for arm and swing simultaneous operation, the swing pressure is boosted to secure the swing force for pressing digging.
As an example, this section explains the right swing and arm-in operation.
By moving the remote control valve to the right swing side, the pilot pressure oil is fed via the shuttle valve to the control valve Pa3 port and switches to the right swing side.
At this time, by moving the remote control valve to the arm-in side, the pilot pressure oil is fed via the cushion valve to the control valve Pb5 port and switches the spool to the arm-in side.
At the same time, the pilot pressure oil from the shuttle valve S port is fed to the control valve Pc3 port to move the swing priority variable orifice to the right side and hold it.
The discharged oil from hydraulic pump A1 enters the control valve P1 port and is fed from the parallel passage to the swing spool.Switching the spool lets the oil flow into the swing motor B port and carries out the swing operation.
The discharged oil from hydraulic pump A2 enters the control valve P2 port, is fed from the parallel passage to the arm (2) spool and merges upstream of the arm (1) spool.Switching the spool lets the oil flow into the arm cylinder bottom and carries out the arm-in operation.
When the right swing and arm-in operations are carried out at the same time, the swing priority variable orifice on the control valve P1 port parallel passage moves and narrows, so the pressure is boosted to secure the swing force for pressing digging.

1	Swing motor	10	Remote control valve (arm, swing)	19	Arm load hold valve check
2	Arm (in)	11	Lever lock	20	Regeneration release valve
3	Arm (out)	12	Swing brake	21	Control valve
4	Right swing	13	5-stack solenoid valve	22	Swing priority variable orifice
5	Left swing	14	Console lever lock switch	23	Arm (2)
6	Cushion valve	15	Arm cylinder	24	Upper side pilot pressure sensor
7	Swing pilot pressure sensor	16	Arm (1)	25	Hydraulic pump
8	Shuttle valve	17	Swing	26	Check
9	Computer	18	Arm load hold valve spool	27	Oil cooler

https://truckmanualshub.com/

4264 PSI (29.4 MPa) at 44 Gal. (167 L)/min
492 PSI (28.9 MPa) at 53 Gal. (201 L)/min

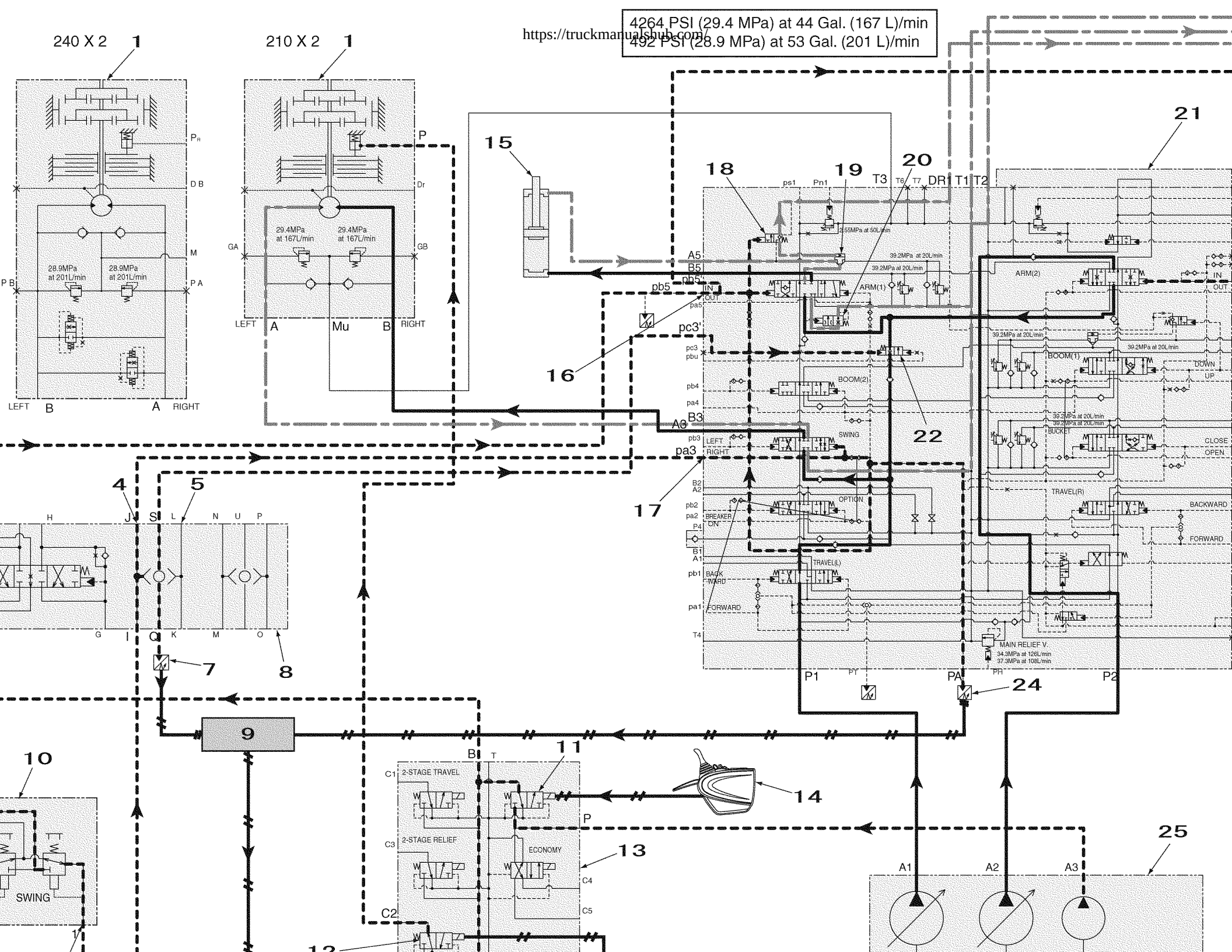

https://truckmanualshub.com/

Swing Circuits

4. Swing Brake Circuit

As an example, this section explains the brake circuit operation after the end of a right swing operation.

When the remote control valve is returned to neutral from a right swing operation, the pilot pressure oil is cut off and the control valve swing spool returns to neutral.

The pressurized oil fed to the swing motor B port from the control valve A3 port is cut. At the same time, the destination location is eliminated for the pressurized oil flowing from the swing motor A port to the control valve A3 port, so the pressure rises to the swing motor relief valve set pressure. The pressure generated here becomes a brake force and stops the motor.

When the swing is stopped, the swing motor continues to rotate for a while due to inertial force. In order to make up the shortfall in the oil quantity, oil is supplied from the make-up line connected to the swing motor Mu port from the control valve T3 port to open the make-up check valve and oil is suctioned in to prevent cavitation.

1	Swing motor	9	Lever lock
2	Cushion valve	10	Swing brake
3	Right swing	11	5-stack solenoid valve
4	Left swing	12	Console lever lock switch
5	Swing pilot pressure sensor	13	Computer
6	Remote control valve (arm, swing)	14	Control valve
7	Hydraulic pump	15	Oil cooler
8	Check	16	Upper side pilot pressure sensor

https://truckmanualshub.com/

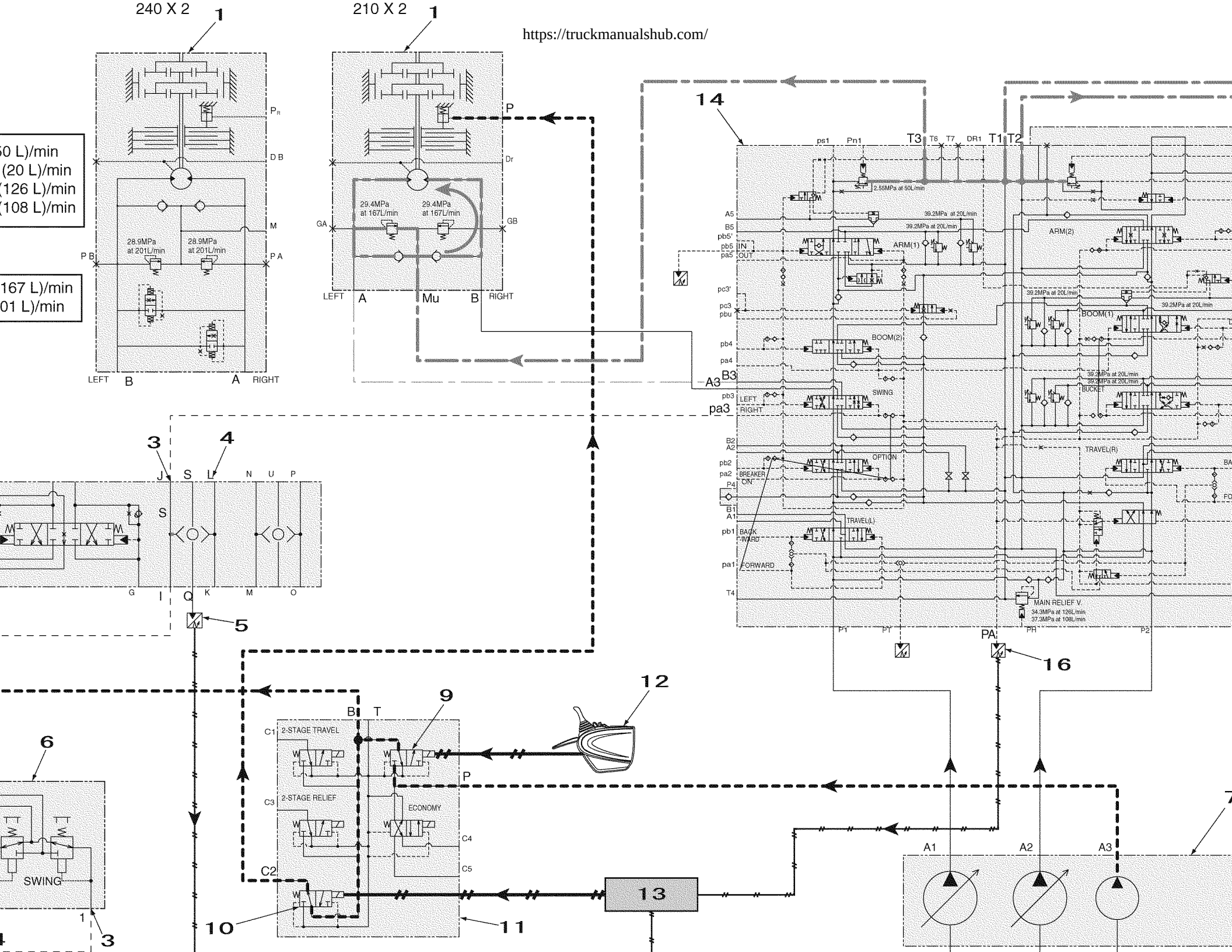

https://truckmanualshub.com/

Swing Circuits

5. Swing Parking Circuit (lever in neutral)

   When the key is switched ON, the swing brake solenoid valve is switched by the electrical signal from the computer.
   The swing motor P port oil goes from the 5-stack solenoid valve C2 port through the swing brake solenoid, and returns to the hydraulic oil tank to hold the swing parking brake.

1	Swing motor	9	Lever lock
2	Cushion valve	10	Swing brake
3	Right swing	11	5-stack solenoid valve
4	Left swing	12	Console lever lock switch
5	Swing pilot pressure sensor	13	Computer
6	Remote control valve (arm, swing)	14	Control valve
7	Check	15	Upper side pilot pressure sensor
8	Oil cooler	16	Hydraulic pump

https://truckmanualshub.com/

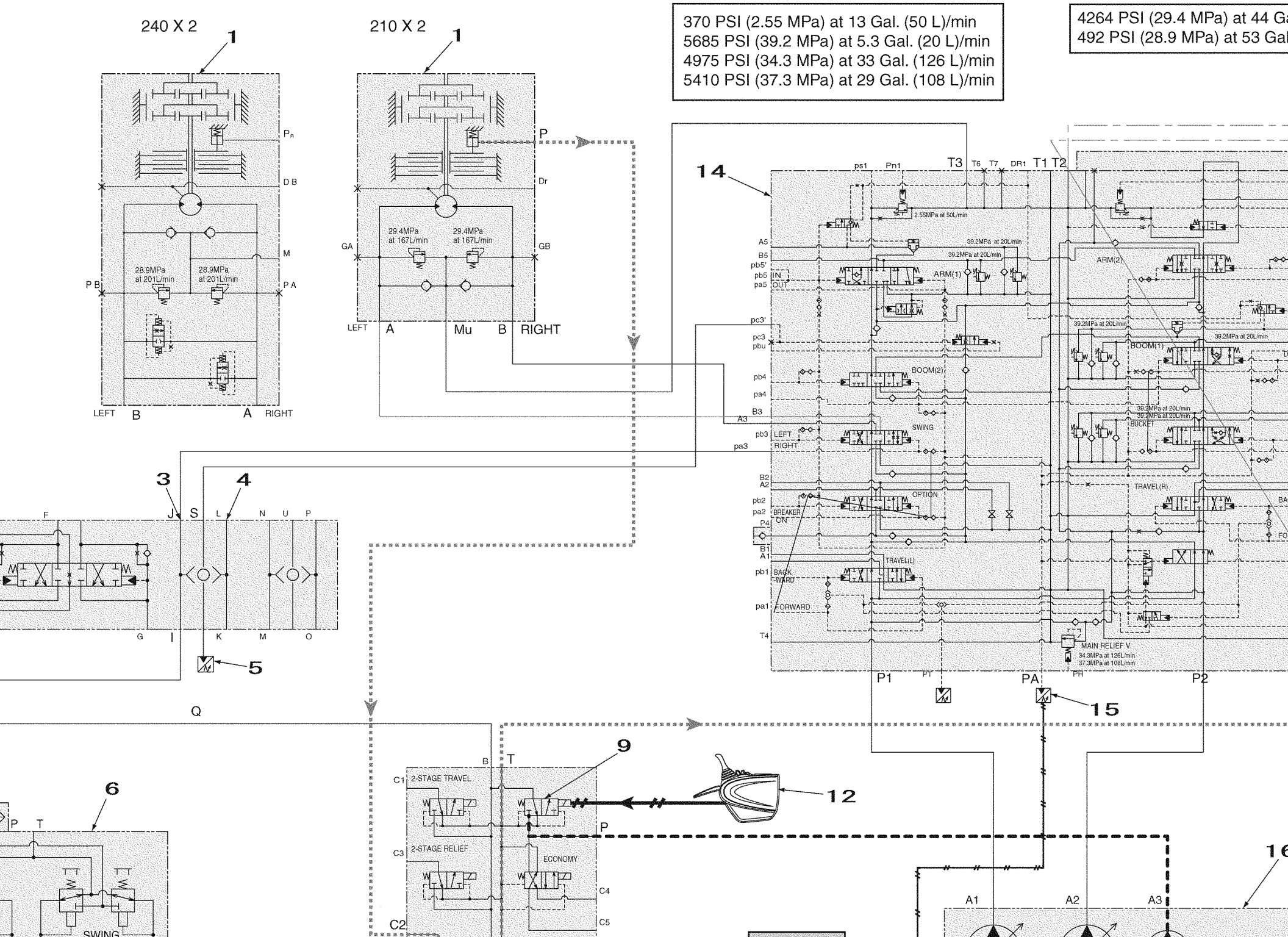

https://truckmanualshub.com/

Swing Circuits

6. Swing Parking Circuit (brake release)

When the engine is started and the swing lever is in neutral, the swing brake solenoid comes ON (24 V input), the pressure to the swing motor P port is cut, and the swing parking brake works.
When the lever operation raises the reading to 73 PSI (0.5 MPa) or higher at the pressure sensor in the swing pilot line, the output from the computer A to the swing brake solenoid valve goes OFF, the swing motor P port pressure rises, the swing parking brake is released, and swing becomes possible.
As an example, this section explains the right swing operation.
By carrying out the right swing operation on the remote control valve, the pilot pressure oil is fed to the control valve Pa3 port via the shuttle valve and switches the swing spool to the right swing side.
At the same time, the computer detects the swing pilot pressure sensor signal, judges that there is a swing operation, the electrical signal output from the computer A goes OFF, and the swing brake solenoid valve is switched. The pilot pressure oil is fed to the swing motor P port from the swing brake solenoid valve C2 port to release the swing parking brake.
The discharged oil from hydraulic pump A1 enters the control valve P1 port and is fed from the parallel passage to the swing spool. Switching the spool lets the oil flow into the swing motor B port and carries out the swing operation.
The pressurized oil from the swing motor A port goes through the swing spool and returns to the hydraulic oil tank.
When this is followed by an attachment operation, the pilot pressure is detected by the control valve PA port pressure sensor and the swing parking brake continues to be released.
After the swing operation ends, if about 5 seconds pass with no upper side operation, the swing brake solenoid valve output from the computer comes ON and the swing parking brake works again.
After the swing ends, if this is followed by an upper side operation or there is an upper side operation within about 5 seconds, when about 1 second passes after the end of the upper side operation, the swing parking brake works again.
The swing parking brake is also released for upper side only operations and when about 1 second passes after the end of the upper side operation, the swing parking brake works again.

Key switch	Swing pilot pressure sensor	Upper side pilot pressure sensor	Swing brake solenoid valve	Swing motor mechanical brake
OFF	0 MPa	0 MPa	OFF	ON
ON	0 MPa	0 MPa	ON	ON
ON	73 PSI (0.5 MPa) min.	0 MPa	OFF	OFF
ON	0 MPa	73 PSI (0.5 MPa) min.	OFF	OFF
ON	73 PSI (0.5 MPa) min.	73 PSI (0.5 MPa) min.	OFF	OFF

Pilot pressure sensor judgement standard
When the pressure goes above 73 PSI (0.5 MPa), the system judges that an operation is underway.
When the pressure goes below 44 PSI (0.3 MPa), the system judges that the operation has ended.

1	Swing motor	10	5-stack solenoid valve
2	Cushion valve	11	Console lever lock switch
3	Right swing	12	Computer
4	Left swing	13	Control valve
5	Swing pilot pressure sensor	14	Upper side pilot pressure sensor
6	Remote control valve (arm, swing)	15	Hydraulic pump
7	Swing	16	Check
8	Lever lock	17	Oil cooler
9	Swing brake		

https://truckmanualshub.com/

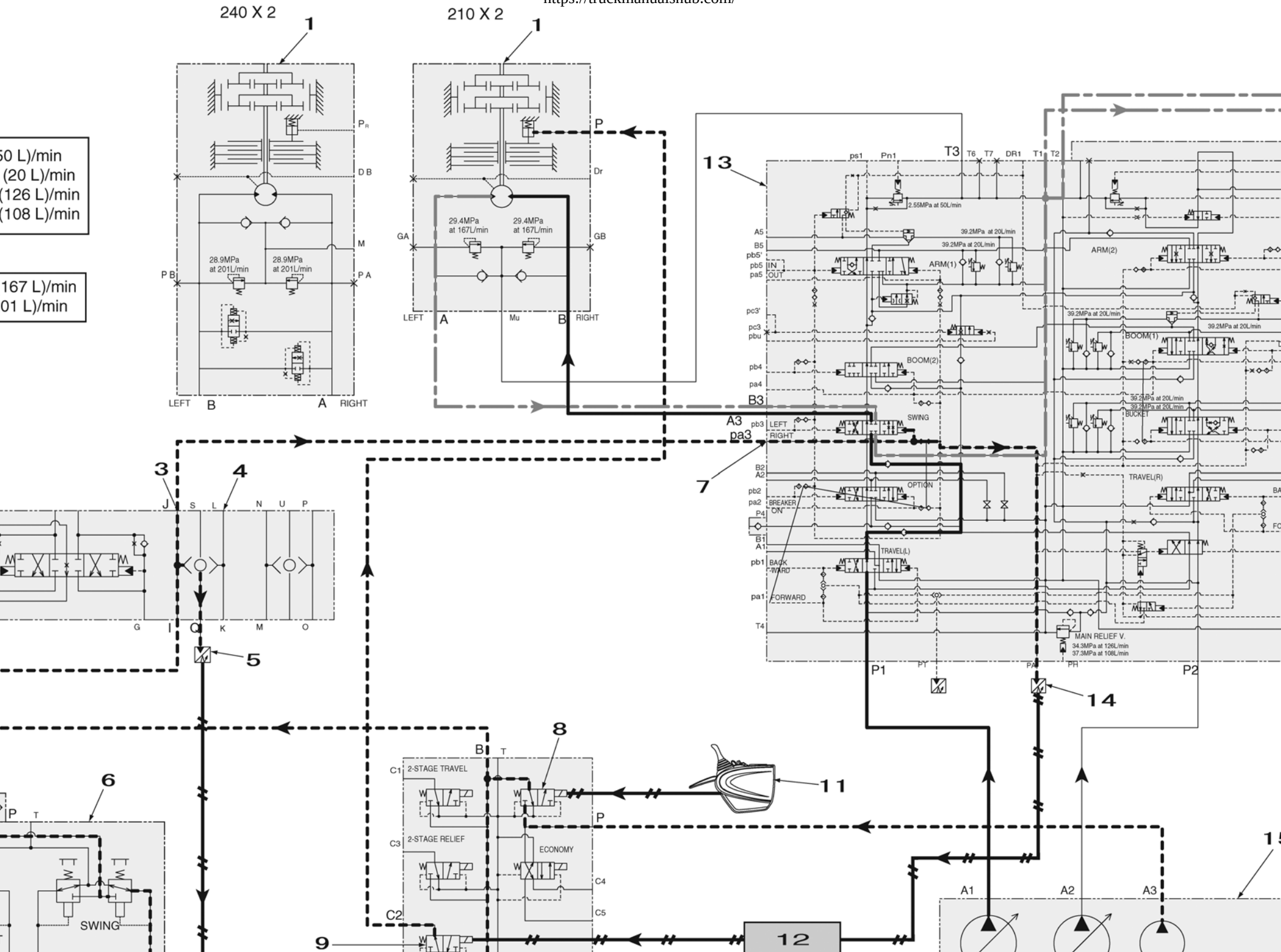

https://machinemanualshub.com/

Swing Circuits

7. Swing Parking Circuit (machine stop)

   When the machine is stopped (the key is switched OFF), the swing motor P port oil goes from the swing brake solenoid C2 port through the lever lock solenoid and returns to the hydraulic oil tank, holding the swing parking brake hold status.

1	Swing motor	9	Lever lock
2	Cushion valve	10	Swing brake
3	Right swing	11	5-stack solenoid valve
4	Left swing	12	Console lever lock switch
5	Swing pilot pressure sensor	13	Computer
6	Remote control valve (arm, swing)	14	Control valve
7	Check	15	Upper side pilot pressure sensor
8	Oil cooler	16	Hydraulic pump

https://truckmanualshub.com/

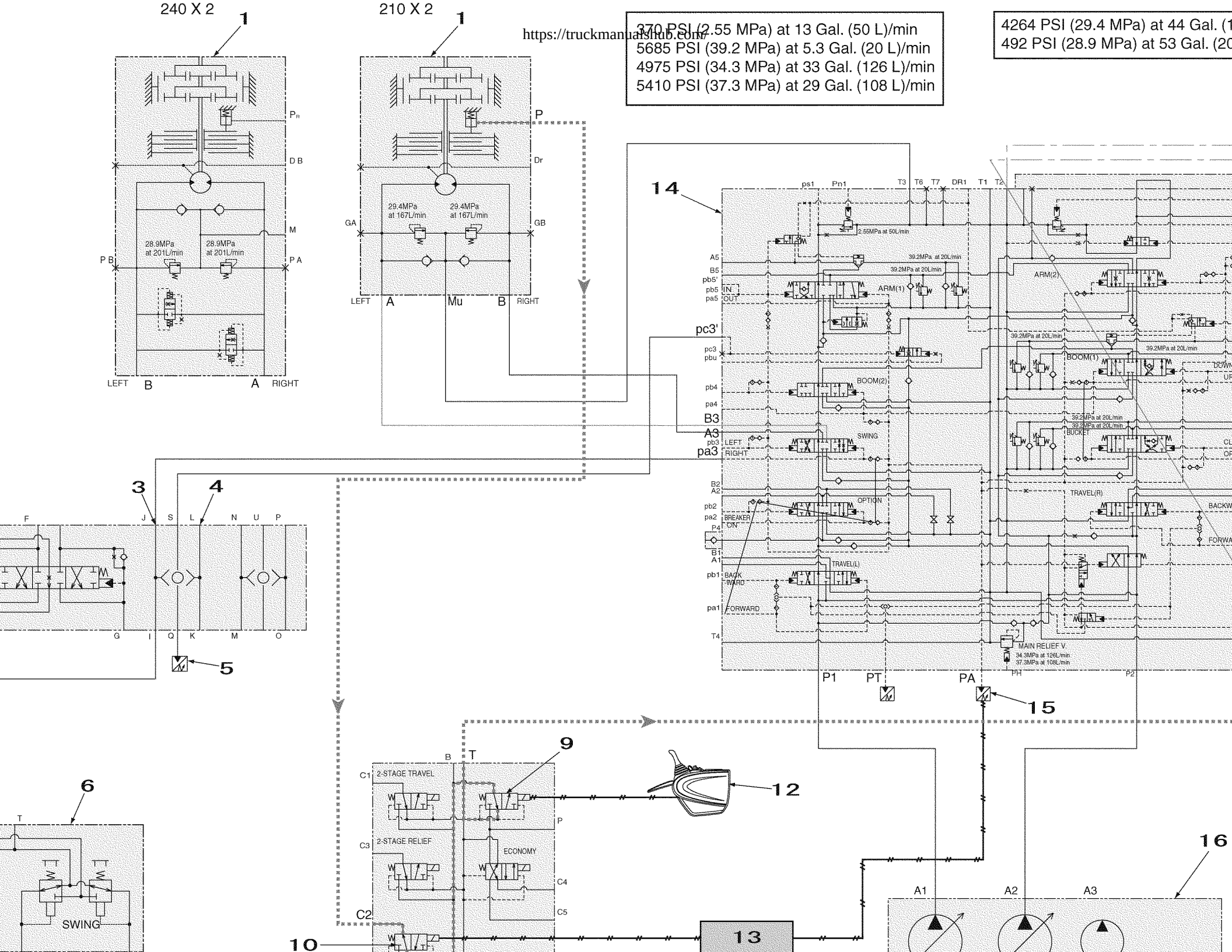

https://truckmanualshub.com/

Boom Circuits

1. Boom-Up Circuit (single operation)

   By operating the remote control valve to the boom-up side, the pilot pressure oil is fed via the cushion valve to the control valve Pa4 port and the boom (2) spool is switched. At the same time, the pilot pressure oil from the Pa4 port separated in the internal path is fed to the boom (1) pilot port and switches the boom (1) spool to the up side.
   The discharged oil from hydraulic pump A1 enters the control valve P1 port, is fed from the parallel passage to the boom (2) spool and merges downstream of the boom (1) spool. The discharged oil from hydraulic pump A2 is fed to the boom (1) spool via the parallel passage, merges with the discharged oil from boom (2), flows through the boom load hold valve check valve and into the boom cylinder bottom side and carries out the boom-up operation.
   The boom cylinder rod side return oil goes through the boom (1) spool and returns to the hydraulic oil tank.

1	Cushion valve	13	Travel pilot pressure sensor
2	Boom (up)	14	Upper side pilot pressure sensor
3	Boom (down)	15	Console lever lock switch
4	Boom (2)	16	Monitor display
5	Remote control valve (boom, bucket)	17	Power up
6	Lever lock	18	Computer
7	Boost relief	19	P1 pressure sensor
8	5-stack solenoid valve	20	P2 pressure sensor
9	Control valve	21	Hydraulic pump
10	Boom load hold valve check	22	Check
11	Boom (1)	23	Oil cooler
12	Boom cylinder		

370 PSI (2.55 MPa) at 13 Gal. (50 L)/min
5685 PSI (39.2 MPa) at 5.3 Gal. (20 L)/min
4975 PSI (34.3 MPa) at 33 Gal. (126 L)/min
5410 PSI (37.3 MPa) at 29 Gal. (108 L)/min

https://truckmanualshub.com/

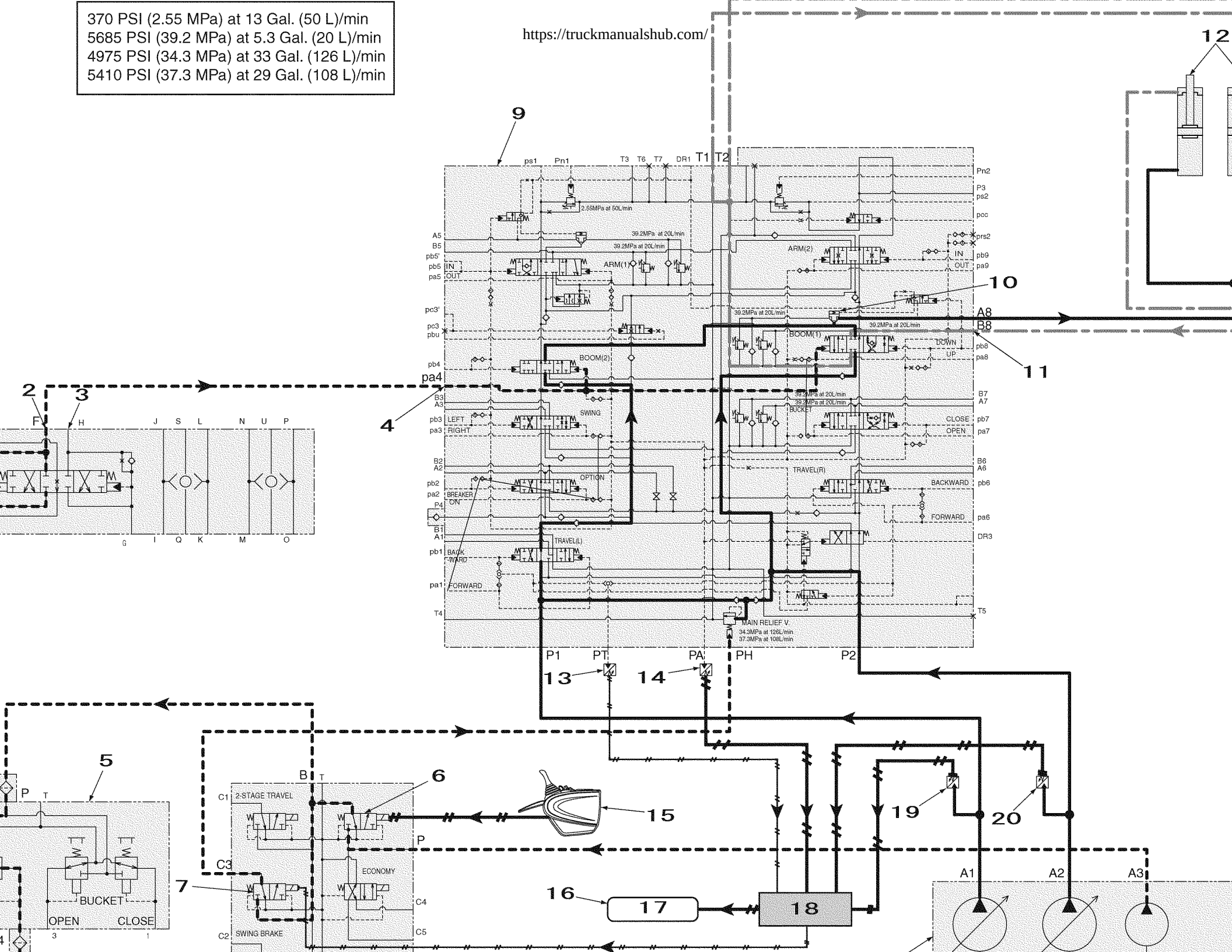

https://truckmanualshub.com/

Boom Circuits

2. Boom-Up Circuit (compound boom-up + arm-in)

As an example, this section explains the boom-up + arm-in compound operation (leveling work).
For bed digging work, the boom-up pilot pressure oil is fed to the Pbu port, the swing priority variable orifice is moved to the left side and the restriction on the flow to the arm is ended to smooth the arm movement.
By operating the remote control valve to the boom up side and arm-in side, the pilot pressure oil is fed via the cushion valve to the control valve Pa4 port and Pb5 port and switches the boom (1) and arm (1) spools. At the same time, pressurized oil separated from the boom (1) side pilot internal path is fed from the Pa8 port to the Pbu port and the swing priority variable orifice spool is switched to the left side.
The discharged oil from hydraulic pump A1 enters the control valve P1 port and is fed from the parallel passage to the boom (2) and arm (1) spools. Because the swing priority variable orifice spool in the parallel passage is moved, the restriction on flow to the arm is released and the oil flows through the arm (1) spool and into the arm cylinder bottom side. This makes arm-in operation movement smooth.
The arm cylinder rod side return oil goes through the load hold valve check valve and the arm (1) spool and returns to the hydraulic oil tank.
The discharged oil from hydraulic pump A2 enters the control valve P2 port and is fed from the parallel passage to the boom (1) spool. Switching the spool lets the oil flow through the load hold valve check valve and into the boom cylinder bottom side and carries out the boom up operation.
The boom cylinder rod side return oil goes through the boom (1) spool and returns to the hydraulic oil tank.

1	Arm cylinder	12	Arm (1)	23	Travel pilot pressure sensor
2	Arm (in)	13	Boom (2)	24	Upper side pilot pressure sensor
3	Arm (out)	14	Arm load hold valve spool	25	Console lever lock switch
4	Boom (up)	15	Load hold valve check	26	Monitor display
5	Boom (down)	16	Regeneration release valve	27	Power up
6	Cushion valve	17	Control valve	28	Computer
7	Remote control valve (boom, bucket)	18	Swing priority variable orifice	29	P1 pressure sensor
8	Remote control valve (arm, swing)	19	Arm (2)	30	P2 pressure sensor
9	Lever lock	20	Boom load hold valve check	31	Hydraulic pump
10	Boost relief	21	Boom (1)	32	Check
11	5-stack solenoid valve	22	Boom cylinder	33	Oil cooler

370 PSI (2.55 MPa) at 13 Gal. (50 L)/min
5685 PSI (39.2 MPa) at 5.3 Gal. (20 L)/min
4975 PSI (34.3 MPa) at 33 Gal. (126 L)/min
5410 PSI (37.3 MPa) at 29 Gal. (108 L)/min

https://truckmanualshub.com/

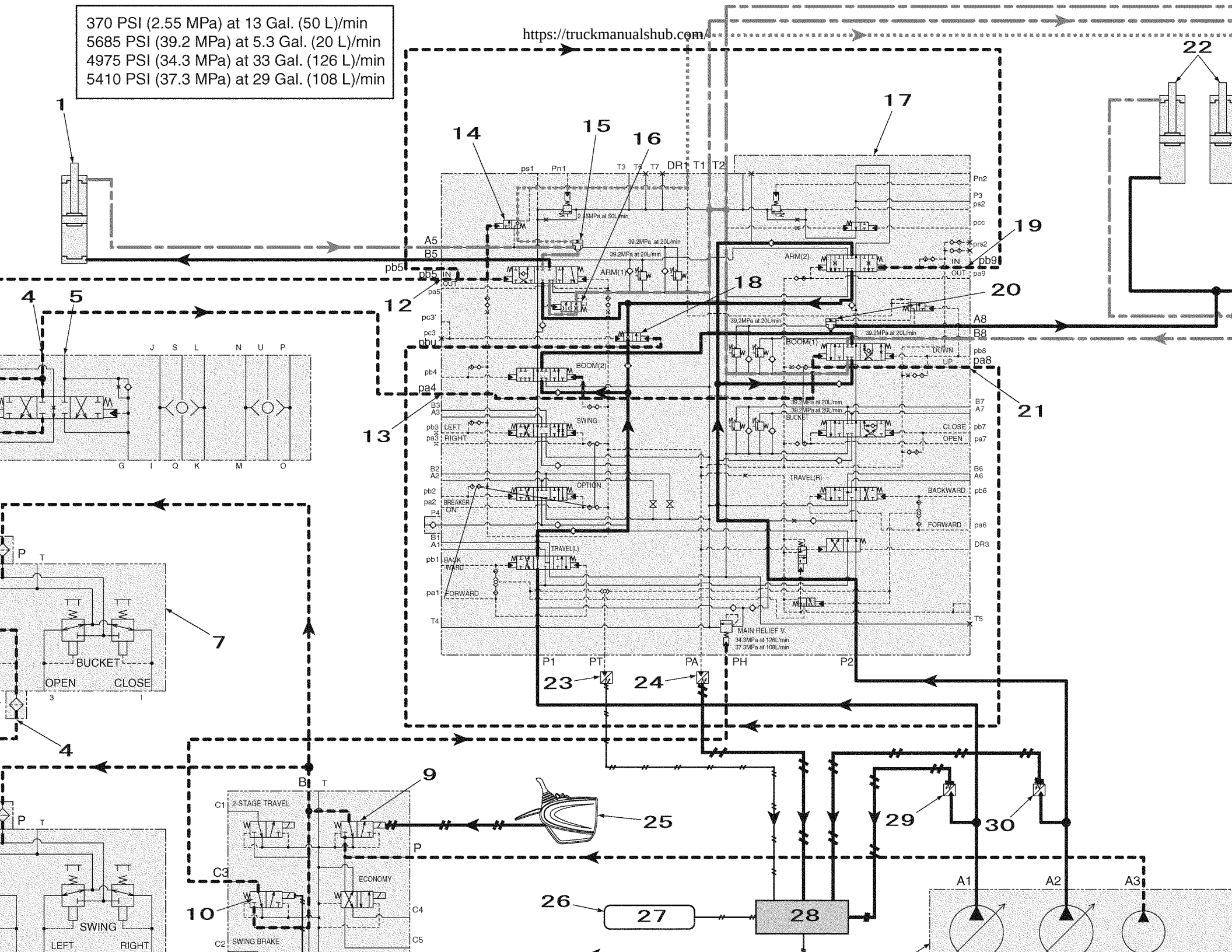

https://truckmanualshub.com/

Boom Circuit

3. Boom Down Regenerative Circuit

By moving the remote control valve to the boom down side, the pilot pressure oil is fed via the cushion valve to the control valve Pb8 port and switches the boom (1) spool to the down side.
The discharged oil from hydraulic pump A2 enters the control valve P2 port and is fed from the parallel passage to the boom (1) spool. Switching the spool lets the oil flow into the boom cylinder rod side and carries out the boom down operation.
The pilot pressure oil from the Pb8 port separated in the internal path is fed to the load hold valve spool and moves the spool to the left. In this way, the load hold valve check valve spring chamber oil is connected to the tank line through the load hold valve spool, the spring chamber pressure drops, and the load hold valve check valve is opened.
The boom cylinder bottom side pressurized oil goes through the load hold valve check valve and is metered by the boom (1) spool regeneration orifice. Through this, the return oil pushes open the check valve in the spool and is regenerated on the cylinder rod side. The lower the cylinder rod side load pressure, the greater the quantity of regeneration. When the cylinder rod side load pressure becomes high, the check valve is closed and the cylinder bottom return oil goes through the boom spool (1) without regeneration and returns to the hydraulic oil tank.
Because the circuit is configured in such a way that even if the boom (1) spool is at full stroke, negative control pressure is generated by the center bypass bleed-off passage and the pump does not discharge full flow and because the short fall is made up for with regeneration, engine output can be used effectively.

1	Load hold valve check	13	5-stack solenoid valve
2	Check	14	Control valve
3	Oil cooler	15	P2 pressure sensor
4	P1 pressure sensor	16	Hydraulic pump
5	Orifice	17	Boom cylinder
6	Bleed-off	18	Boom (1)
7	Cushion valve	19	Travel pilot pressure sensor
8	Boom (up)	20	Upper side pilot pressure sensor
9	Boom (down)	21	Console lever lock switch
10	Remote control valve (boom, bucket)	22	Monitor display
11	Lever lock	23	Computer
12	Boost relief		

370 PSI (2.55 MPa) at 13 Gal. (50 L)/min
5685 PSI (39.2 MPa) at 5.3 Gal. (20 L)/min
4975 PSI (34.3 MPa) at 33 Gal. (126 L)/min
5410 PSI (37.3 MPa) at 29 Gal. (108 L)/min

https://truckmanualshub.com/

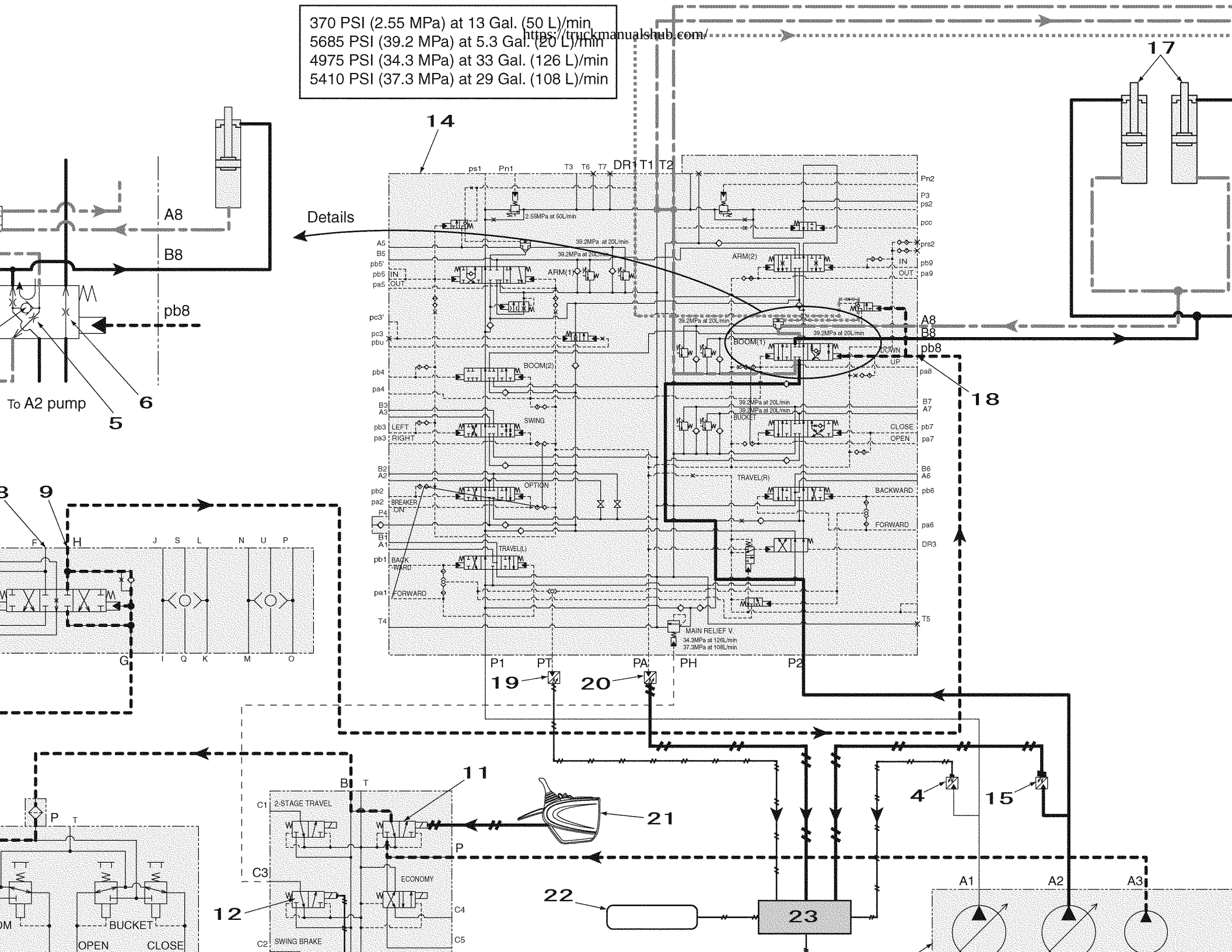

https://truckmanualshub.com/

Boom Circuit

4. Boom Down Tilting Prevention Circuit

   By operating the remote control valve all the way to the boom down side at once, even if the boom spool goes its full stroke, negative control pressure is generated by the center bypass bleed-off passage and the circuit is such that the hydraulic pump does not discharge full flow, so the generation of high pressure is restrained and main unit tilt is reduced. Since the shortfall in the oil quantity is compensated by the regeneration circuit, the engine output can be used effectively.

1	Load hold valve check	12	Control valve
2	Check	13	P2 pressure sensor
3	Oil cooler	14	Hydraulic pump
4	Bleed-off	15	Boom cylinder
5	Cushion valve	16	Boom (1)
6	Boom (up)	17	Travel pilot pressure sensor
7	Boom (down)	18	Upper side pilot pressure sensor
8	Remote control valve (boom, bucket)	19	Console lever lock switch
9	Lever lock	20	Monitor display
10	Boost relief	21	Computer
11	5-stack solenoid valve	22	P1 pressure sensor

370 PSI (2.55 MPa) at 13 Gal. (50 L)/min
5685 PSI (39.2 MPa) at 5.3 Gal. (20 L)/min
4975 PSI (34.3 MPa) at 33 Gal. (126 L)/min
5410 PSI (37.3 MPa) at 29 Gal. (108 L)/min

https://truckmanualshub.com/

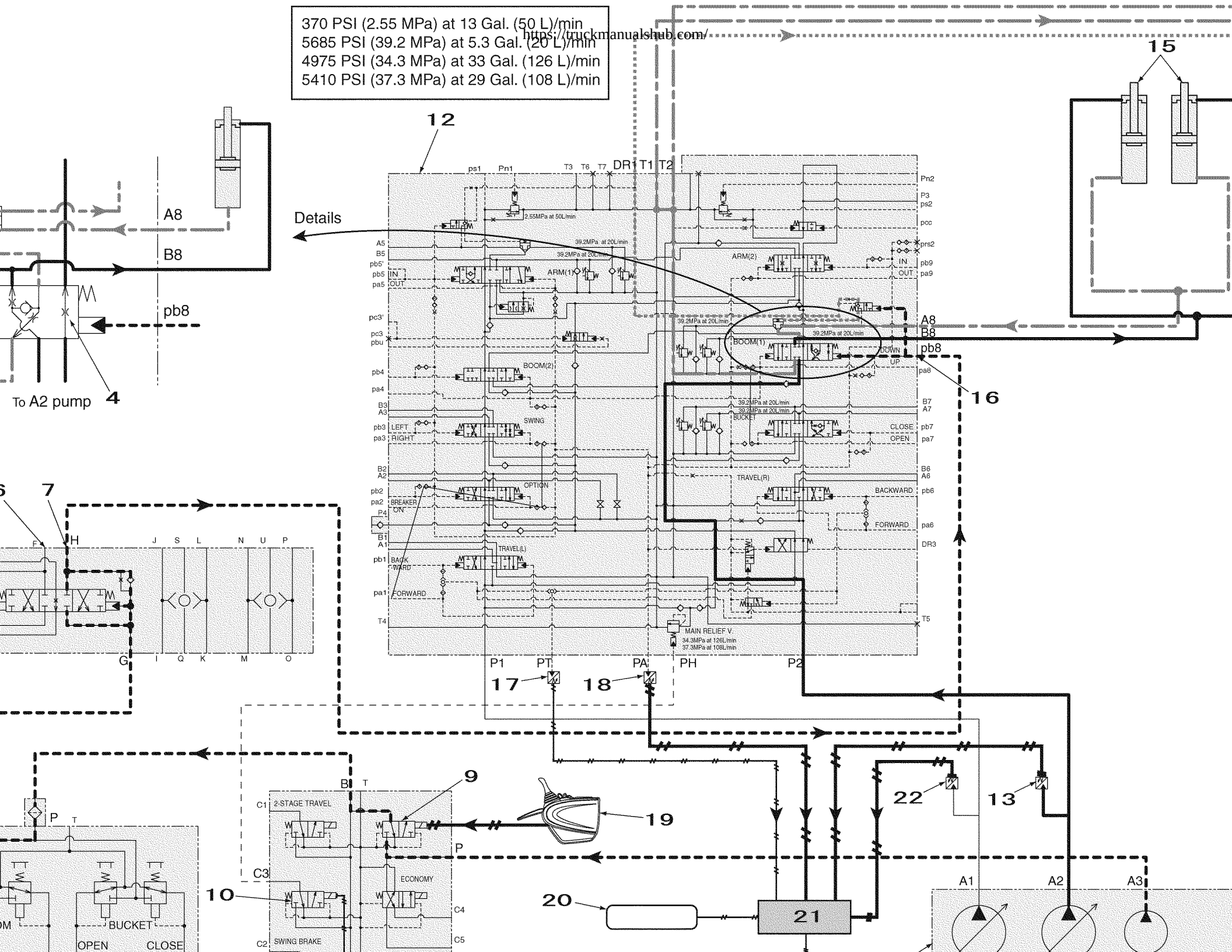

https://truckmanualshub.com/

Boom Circuits

5. Boom Down Load Hold Valve Circuit

When the remote control valve boom operation lever is in neutral, the oil at the boom cylinder bottom side is sealed by the load hold valve check valve, reducing internal leakage from the main spool and reducing the natural drop of the boom.

By moving the remote control valve to the boom down side, the pilot pressure oil is fed via the cushion valve to the control valve Pb8 port and switches the boom spool to the down side.

The discharged oil from hydraulic pump A2 enters the control valve P2 port and is fed from the parallel passage to the boom (1). Switching the spool lets the oil flow into the boom cylinder bottom side and carries out the boom down operation.

The pilot pressure oil from the Pb8 port separated in the internal path is fed to the load hold valve spool and moves the spool to the left. In this way, the load hold valve check valve spring chamber oil is connected to the tank line through the load hold valve spool, the spring chamber pressure drops, and the load hold valve check valve is opened.

The boom cylinder bottom side pressurized oil goes through the load hold valve check valve and the boom (1) spool and returns to the hydraulic oil tank.

1	Boom load hold valve check	12	Oil cooler
2	Load hold valve spool	13	Boom cylinder
3	Cushion valve	14	Boom (1)
4	Boom (up)	15	Travel pilot pressure sensor
5	Boom (down)	16	Upper side pilot pressure sensor
6	Remote control valve (boom, bucket)	17	Console lever lock switch
7	Lever lock	18	Monitor display
8	Boost relief	19	Computer
9	5-stack solenoid valve	20	P1 pressure sensor
10	Control valve	21	P2 pressure sensor
11	Check	22	Hydraulic pump

370 PSI (2.55 MPa) at 13 Gal. (50 L)/min
5685 PSI (39.2 MPa) at 5.3 Gal. (20 L)/min
4975 PSI (34.3 MPa) at 33 Gal. (126 L)/min
5410 PSI (37.3 MPa) at 29 Gal. (108 L)/min

https://truckmanualshub.com/

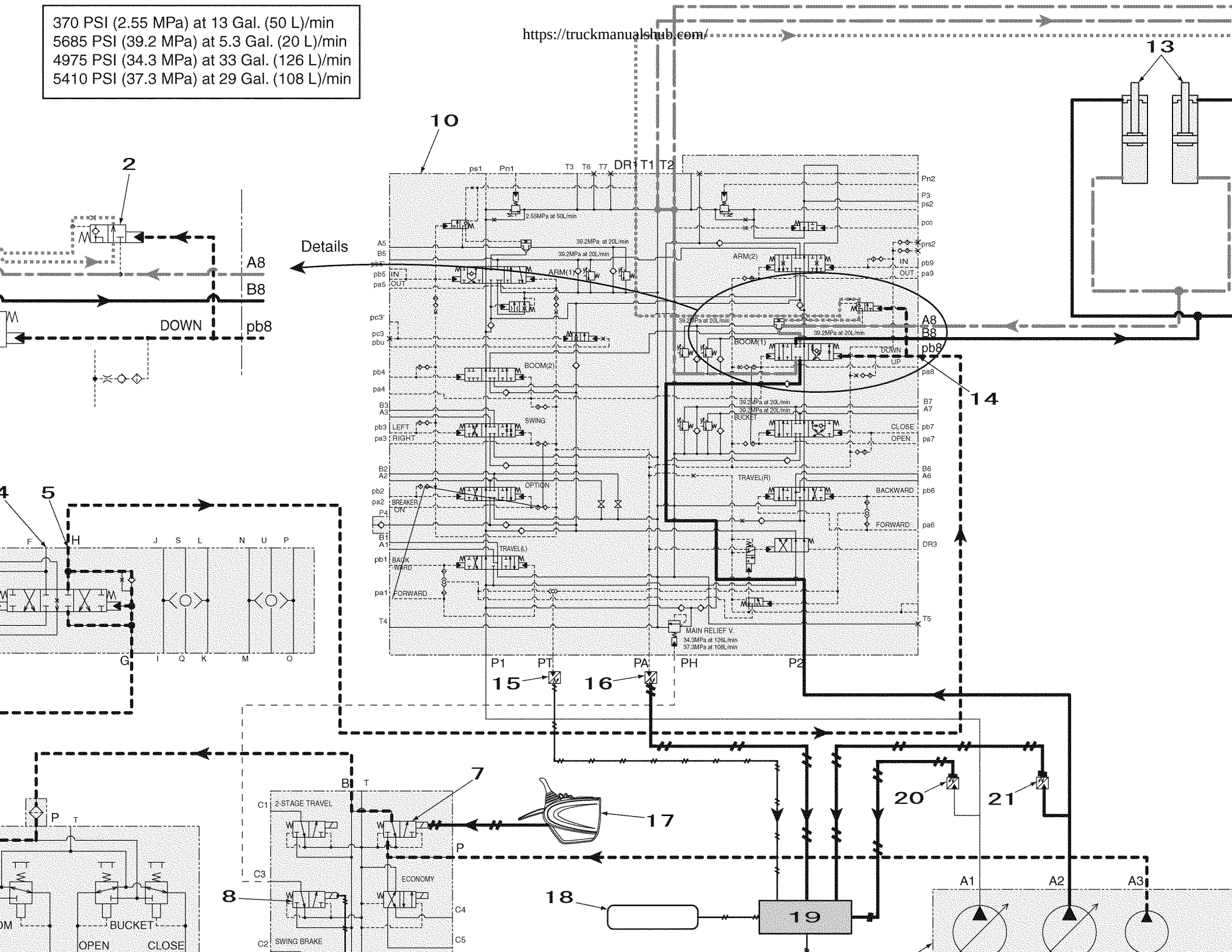

https://truckmanualshub.com/

Arm Circuits

1. Arm-Out Circuit

   By moving the remote control valve to the arm-out side, the pilot pressure oil is fed via the cushion valve to the control valve Pa5 port and Pa9 port and switches the arm (1) and (2) spools to the open side.
   The discharged oil from hydraulic pump A1 enters the control valve P1 port and is fed from the center bypass passage to the arm (1) spool. The discharged oil from hydraulic pump A2 enters the control valve P2 port, flows from the center bypass passage and through the arm (2) spool front arm merge passage and merges upstream of the arm (1) spool.
   Switching the arm spool lets the oil flow through the load hold valve check valve and into the arm cylinder rod side, carrying out the arm-out operation.
   The arm cylinder bottom side return oil goes through the arm (1) and (2) spools and returns to the hydraulic oil tank.

1	Arm cylinder	13	Travel pilot pressure sensor
2	Arm (out)	14	Upper side pilot pressure sensor
3	Arm (in)	15	Console lever lock switch
4	Cushion valve	16	Monitor display
5	Remote control valve (arm, swing)	17	Power up
6	Lever lock	18	Computer
7	Boost relief	19	P1 pressure sensor
8	5-stack solenoid valve	20	P2 pressure sensor
9	Control valve	21	Hydraulic pump
10	Load hold valve check	22	Check
11	Arm (1)	23	Oil cooler
12	Arm (2)	24	Cushion valve

https://truckmanualshub.com/

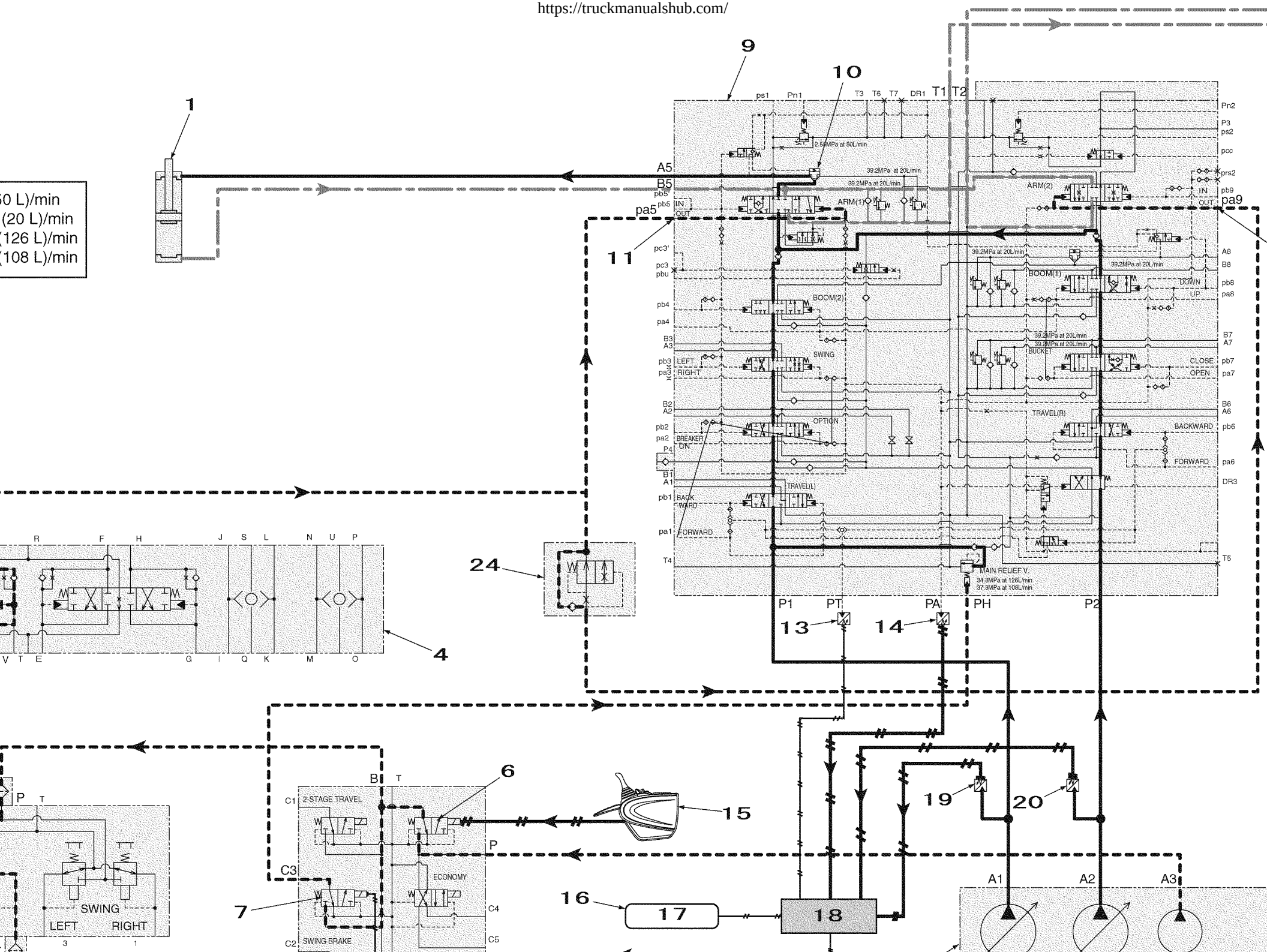

https://truckmanualshub.com/

Arm Circuits

2. Arm-In Forced Regenerative Circuit

By moving the remote control valve to the arm-in side, the pilot pressure oil is fed via the cushion valve to the control valve Pb5 port and Pb9 port and switches the arm (1) and (2) spools to the in side.

The discharged oil from hydraulic pump A1 enters the control valve P1 port and is fed from the center bypass passage to the arm (1) spool. The discharged oil from hydraulic pump A2 enters the control valve P2 port, flows from the center bypass passage and through the arm (2) spool front arm merge passage and merges upstream of the arm (1) spool.

Switching the arm spool lets the oil flow into the arm cylinder bottom side and carries out the arm-in operation.

The pilot pressure oil from the Pb5 port separated in the internal path is fed to the load hold valve spool and moves the spool to the right. In this way, the load hold valve check valve spring chamber oil is connected to the tank line through the load hold valve spool, the spring chamber pressure drops, and the load hold valve check valve is opened.

The arm cylinder rod side pressurized oil goes through the load hold valve check valve and the arm (1) spool and is metered by the forced regeneration release valve. Through this, the return oil pushes open the check valve in the arm (1) spool and is forcibly regenerated on the cylinder bottom side, securing the arm speed for bed excavation work etc. When the cylinder bottom load pressure becomes high, the forced regeneration release valve is switched to the large orifice side and the opening becomes larger. Through this, the check valve in the spool is closed and the cylinder rod side return oil returns to the hydraulic oil tank via the arm spool (1) and forced regeneration release valve without being regenerated.

1	Load hold valve spool	11	Remote control valve (arm, swing)	21	Console lever lock switch
2	Load hold valve check	12	Lever lock	22	Monitor display
3	Oil cooler	13	Boost relief	23	Power up
4	Regeneration check	14	5-stack solenoid valve	24	Computer
5	Orifice large	15	Control valve	25	P1 pressure sensor
6	Orifice small	16	Arm cylinder	26	P2 pressure sensor
7	Forced regeneration release valve	17	Arm (1)	27	Hydraulic pump
8	Arm (in)	18	Arm (2)	28	Check
9	Arm (out)	19	Travel pilot pressure sensor		
10	Cushion valve	20	Upper side pilot pressure sensor		

370 PSI (2.55 MPa) at 13 Gal. (50 L)/min
5685 PSI (39.2 MPa) at 5.3 Gal. (20 L)/min
4975 PSI (34.3 MPa) at 33 Gal. (126 L)/min
5410 PSI (37.3 MPa) at 29 Gal. (108 L)/min

https://truckmanualshub.com/

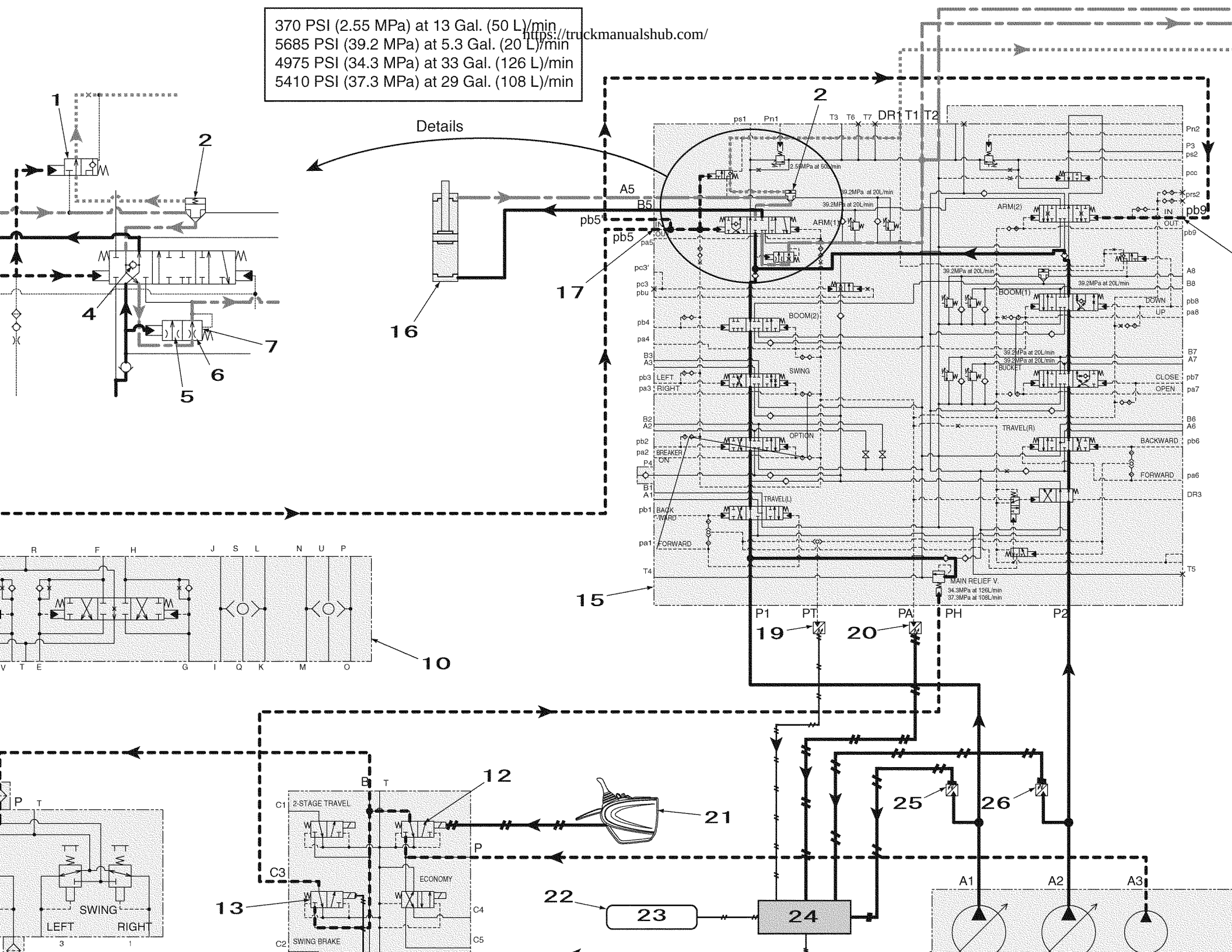

https://truckmanualshub.com/

Arm Circuits

3. Arm-in Load Hold Valve Circuit

When the remote control valve arm operation lever is in neutral, the oil at the arm cylinder rod side is sealed by the load hold valve check valve, reducing internal leakage from the main spool and reducing the natural drop of the arm.

By moving the remote control valve to the arm-in side, the pilot pressure oil is fed via the cushion valve to the control valve Pb5 port and Pb9 port and switches the arm (1) and (2) spools to the in side.

The discharged oil from hydraulic pump A1 enters the control valve P1 port and is fed from the center bypass passage to the arm (1) spool. The discharged oil from hydraulic pump A2 enters the control valve P2 port, flows from the center bypass passage and through the arm (2) spool front arm merge passage and merges upstream of the arm (1) spool.

Switching the arm spool lets the oil flow into the arm cylinder bottom side and carries out the arm-in operation.

The pilot pressure oil from the Pb5 port separated in the internal path is fed to the load hold valve spool and moves the spool to the right. In this way, the load hold valve check valve spring chamber oil is connected to the tank line through the load hold valve spool, the spring chamber pressure drops, and the load hold valve check valve is opened.

The arm cylinder rod side pressurized oil goes through the load hold valve check valve and the arm (1) spool and returns to the hydraulic oil tank.

1	Load hold valve spool	14	Arm (2)
2	Load hold valve check	15	Travel pilot pressure sensor
3	Oil cooler	16	Upper side pilot pressure sensor
4	Arm (in)	17	Console lever lock switch
5	Arm (out)	18	Monitor display
6	Cushion valve	19	Power up
7	Remote control valve (arm, swing)	20	Computer
8	Lever lock	21	P1 pressure sensor
9	Boost relief	22	P2 pressure sensor
10	5-stack solenoid valve	23	Hydraulic pump
11	Control valve	24	Check
12	Arm cylinder		
13	Arm (1)		

370 PSI (2.55 MPa) at 13 Gal. (50 L)/min
5685 PSI (39.2 MPa) at 5.3 Gal. (20 L)/min
4975 PSI (34.3 MPa) at 33 Gal. (126 L)/min
5410 PSI (37.3 MPa) at 29 Gal. (108 L)/min

https://truckmanualshub.com/

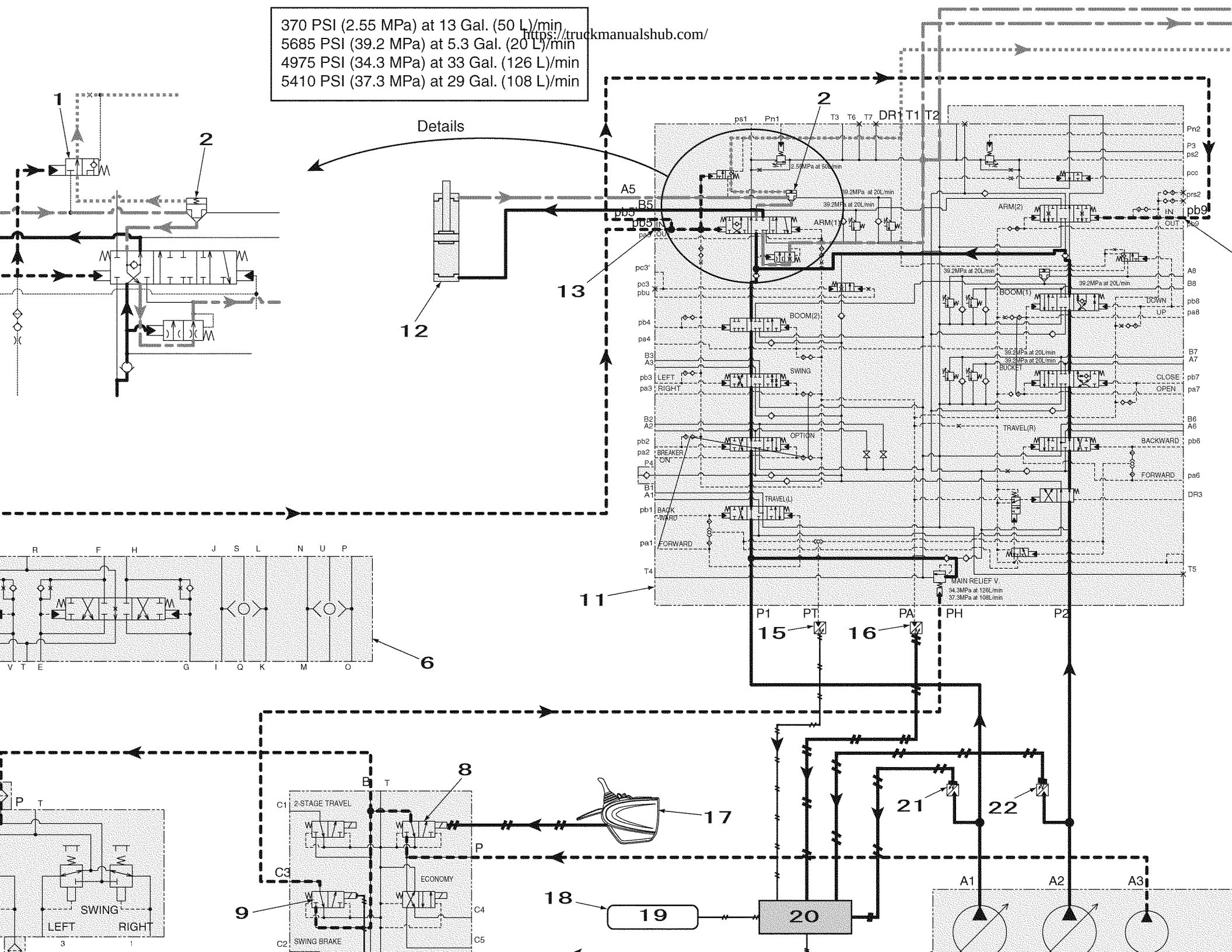

https://truckmanualshub.com/

Bucket Circuit

1. Bucket Open Circuit

   By moving the remote control valve to the bucket open side, the pilot pressure oil is fed via the cushion valve to the control valve Pa7 port and switches the bucket spool to the open side.
   The discharged oil from hydraulic pump A2 enters the control valve P2 port and is fed from the parallel passage to the bucket spool. Switching the spool lets the oil flow into the bucket cylinder rod side and carries out the bucket open operation.
   The bucket cylinder bottom side pressurized oil goes through the spool and returns to the hydraulic oil tank.

1	Cushion valve	12	Upper side pilot pressure sensor
2	Bucket (close)	13	Console lever lock switch
3	Bucket (open)	14	Monitor display
4	Remote control valve (boom, bucket)	15	Power up
5	Lever lock	16	Computer
6	Boost relief	17	P1 pressure sensor
7	5-stack solenoid valve	18	P2 pressure sensor
8	Control valve	19	Hydraulic pump
9	Bucket	20	Check
10	Bucket cylinder	21	Oil cooler
11	Travel pilot pressure sensor		

370 PSI (2.55 MPa) at 13 Gal. (50 L)/min
5685 PSI (39.2 MPa) at 5.3 Gal. (20 L)/min
4975 PSI (34.3 MPa) at 33 Gal. (126 L)/min
5410 PSI (37.3 MPa) at 29 Gal. (108 L)/min

https://truckmanualshub.com/

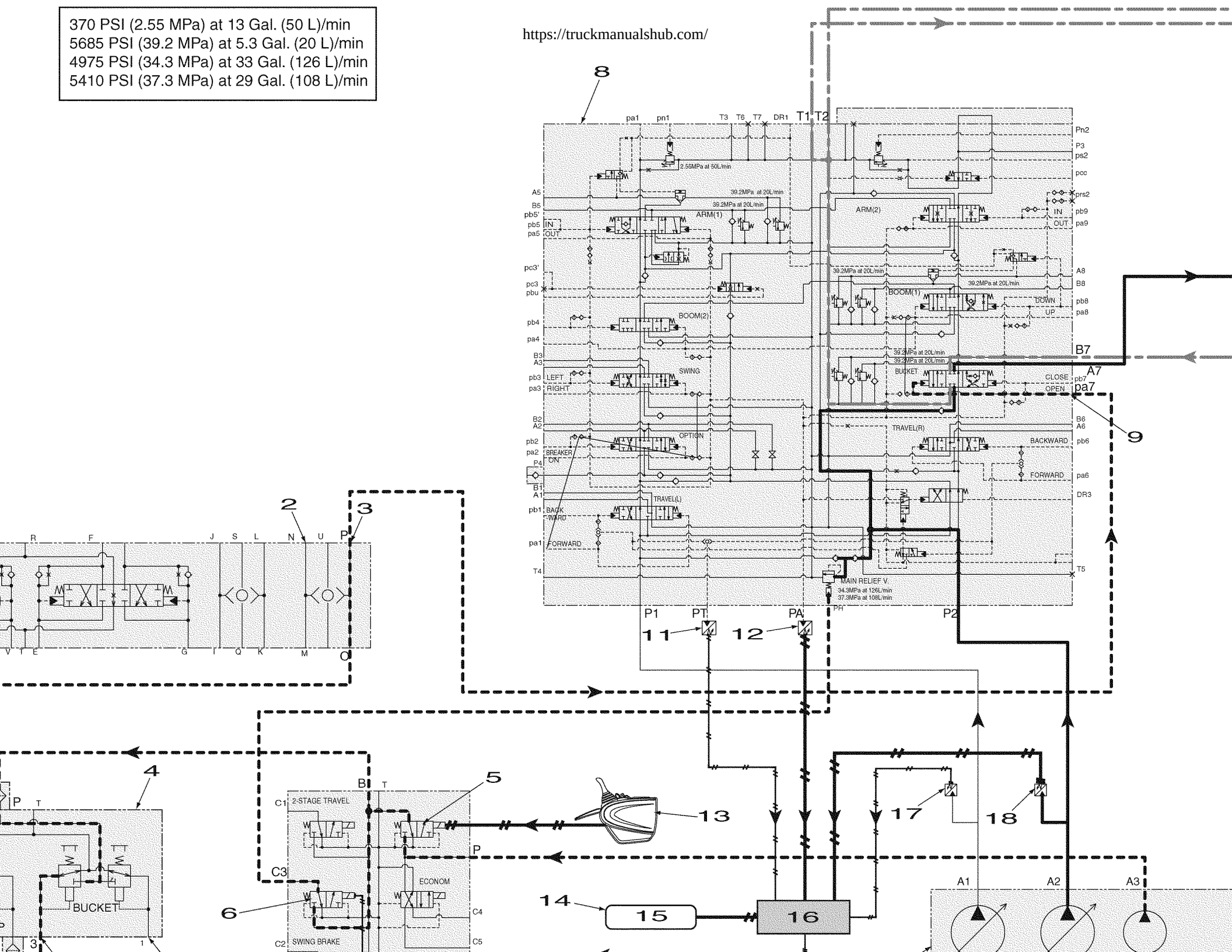

https://truckmanualshub.com/

Bucket Circuit

2. Bucket Close Regenerative Circuit

By moving the remote control valve to the bucket close side, the pilot pressure oil is fed via the cushion valve to the control valve Pb7 port and switches the bucket spool to the close side.
The discharged oil from hydraulic pump A2 enters the control valve P2 port and is fed from the parallel passage to the bucket spool. Switching the spool lets the oil flow into the bucket cylinder bottom and carries out the bucket close operation.
The bucket cylinder rod side oil goes through the bucket spool regeneration orifice. Through this, the return oil pushes open the check valve in the spool and is regenerated on the cylinder bottom side. The lower the cylinder rod side load pressure, the greater the quantity of regeneration. When the cylinder rod side load pressure becomes high, the check valve is closed and the cylinder bottom side return oil goes through the bucket spool without regeneration and returns to the hydraulic oil tank.

1	Regeneration check	13	Bucket cylinder
2	Oil cooler	14	Travel pilot pressure sensor
3	Orifice	15	Upper side pilot pressure sensor
4	Cushion valve	16	Console lever lock switch
5	Bucket (close)	17	Monitor display
6	Bucket (open)	18	Power up
7	Remote control valve (boom, bucket)	19	Computer
8	Lever lock	20	P1 pressure sensor
9	Boost relief	21	P2 pressure sensor
10	5-stack solenoid valve	22	Hydraulic pump
11	Control valve	23	Check
12	Bucket		

370 PSI (2.55 MPa) at 13 Gal. (50 L)/min
5685 PSI (39.2 MPa) at 5.3 Gal. (20 L)/min
4975 PSI (34.3 MPa) at 33 Gal. (126 L)/min
5410 PSI (37.3 MPa) at 29 Gal. (108 L)/min

https://truckmanualshub.com/

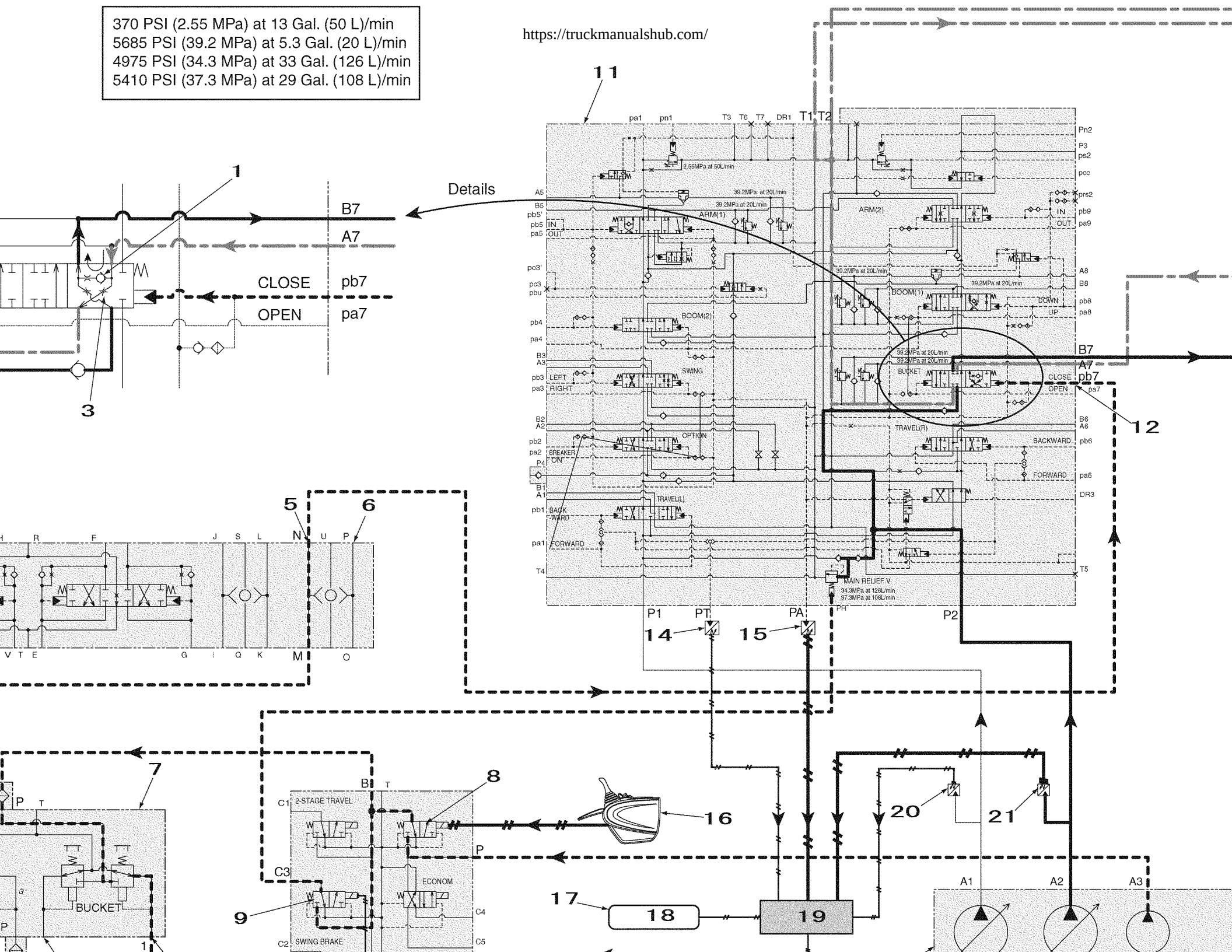

https://truckmanualshub.com/

Negative Control Circuit

1. Negative Control Circuit (power save solenoid OFF)

   When the remote control valve operation lever is set to neutral, the discharged oil from hydraulic pumps A1 and A2 goes from the control valve P1 and P2 ports through the center bypass passage, and through the most downstream negative control variable relief valve, and returns to the hydraulic oil tank.

   The discharged oil from hydraulic pump A3 enters the 5-stack solenoid valve P port, flows through the power save solenoid valve, is fed to the control valve Pn1 and Pn2 ports, and holds the P1 and P2 negative control relief valves at the set pressure of 370 PSI (2.55 MPa).

   The negative control pressure oil separated from the center bypass passage is fed from the Ps1 and Ps2 ports to the hydraulic pump Pi1 and Pi2 ports, moves the pump tilt revolution to the low flow side, and reduces the discharge flow.

1	P1 negative control relief	11	N1 negative control pressure sensor
2	P2 negative control relief	12	P1 pressure sensor
3	Control valve	13	P2 pressure sensor
4	Travel pilot pressure sensor	14	N2 negative control pressure sensor
5	Upper side pilot pressure sensor	15	Horsepower control proportional valve
6	Computer	16	P1 flow control proportional valve
7	Console lever lock switch	17	Hydraulic pump
8	Lever lock	18	Check
9	Power save	19	Oil cooler
10	5-stack solenoid valve		

https://truckmanualshub.com/

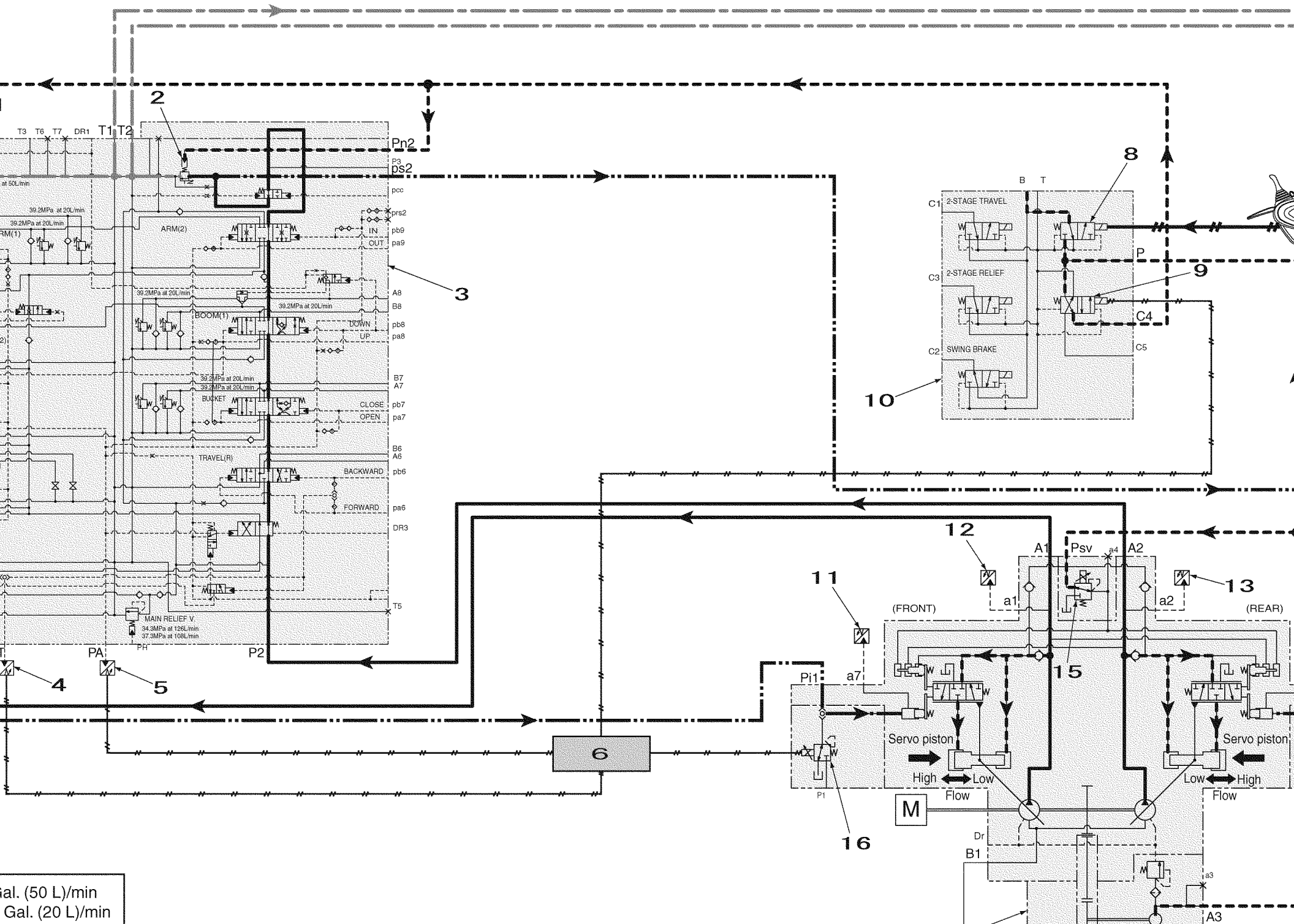

Gal. (50 L)/min
Gal. (20 L)/min

https://truckmanualshub.com/

Negative Control Circuit

2. Negative Control Power Save Circuit (power save solenoid ON)

The purpose of this control is to reduce fuel consumption during standby by reducing the back pressure for the negative control signal.
When the remote control valve is set to neutral, the non-operation state signal enters the computer A from the upper side pilot pressure sensor and the travel pilot pressure sensor installed on the control valve PT port and PA port. After about one second, the power save solenoid valve is switched ON by the signal output from the computer.
The pressurized oil from the control valve negative control relief valve Pn1 and Pn2 ports goes through the power save solenoid valve and returns to the hydraulic oil tank.
Therefore, the negative control relief valve set pressure is switched to low pressure to further reduce the A1 and S2 pump discharge pressure.
With the system running this way, the negative control signal is cut off and the P1 and P2 pump discharged volume quantity increases.
The discharged oil from pilot pump A3 enters the 5-stack solenoid valve P port, flows through the power save solenoid valve, is fed to the hydraulic pump P2 port from the C5 port, moves the pump tilt revolution to the minimum flow side, and reduces the discharge flow.
At the same time, the discharged oil from the A3 pilot pump is fed to the hydraulic pump P1 port by the signal from the computer A to the hydraulic pump P1 flow restriction proportional valve, moves the A1 side pump tilt revolution to the minimum flow side, and reduces the discharge flow.

1	Control valve	10	P1 pressure sensor
2	Travel pilot pressure sensor	11	P2 pressure sensor
3	Upper side pilot pressure sensor	12	N2 negative control pressure sensor
4	Computer	13	Horsepower control proportional valve
5	Console lever lock switch	14	P1 flow control proportional valve
6	Lever lock	15	Hydraulic pump
7	Power save	16	Check
8	5-stack solenoid valve	17	Oil cooler
9	N1 negative control pressure sensor		

https://truckmanualshub.com/

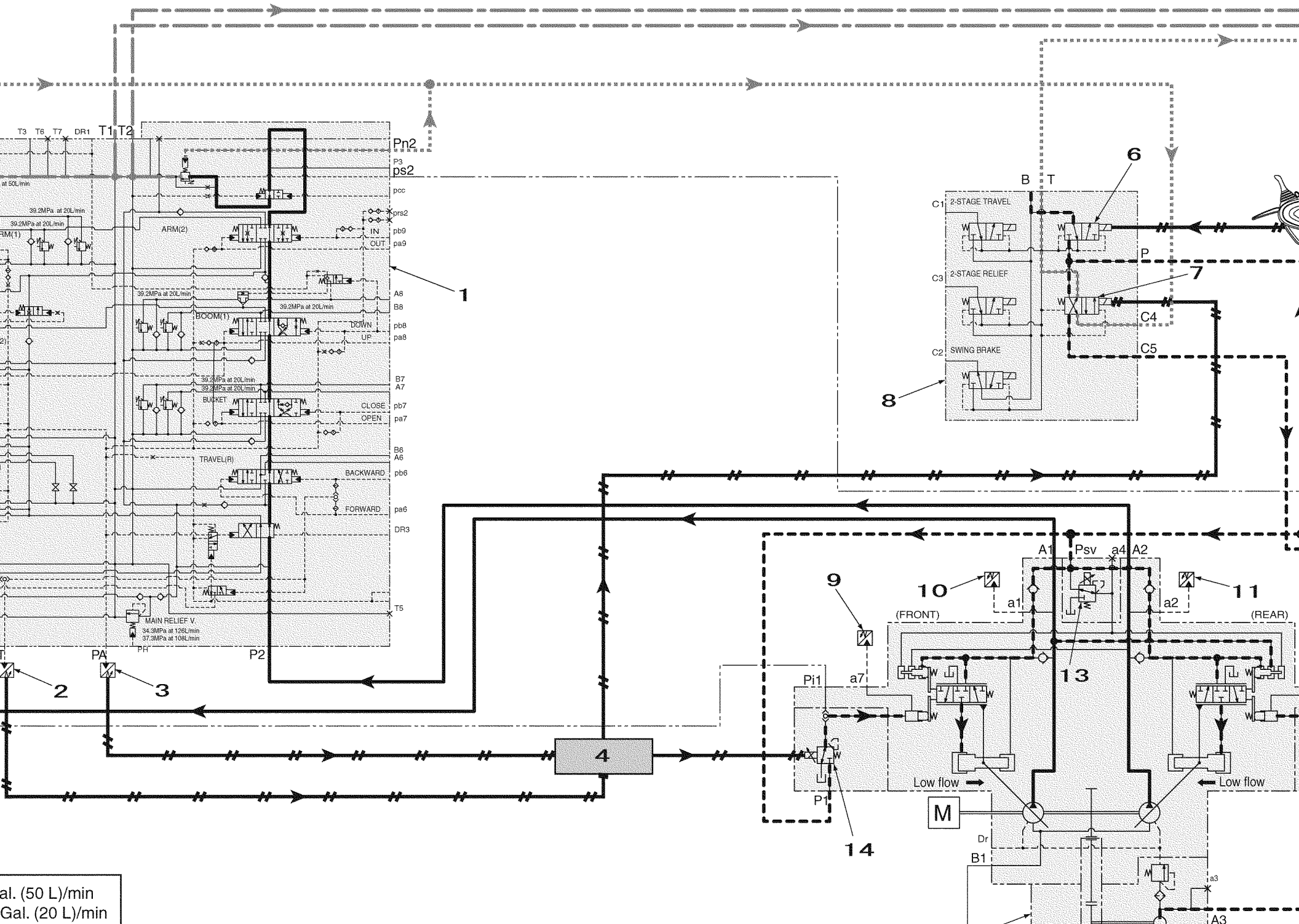

al. (50 L)/min
Gal. (20 L)/min

https://truckmanualshub.com/

Negative Control Circuit

3. Negative Control Circuit (bucket close, power save solenoid OFF)

As an example, this section explains the bucket close operations.
By moving the remote control valve to the bucket close side, the pilot pressure oil is fed via the cushion valve to the control valve Pb7 port and switches the bucket spool to the close side.
The discharged oil from the hydraulic pump A2 enters the control valve P2 port, is fed to the bucket spool, flows into the bucket cylinder bottom side because of the spool switching and carries out the bucket close operation.
At the same time, the upper side pilot pressure sensor signal is detected and through the signal output from the computer A to switch OFF the power save solenoid valve, pilot pressure enters the negative control relief valve, and the pressure becomes the set 370 PSI (2.55 MPa) pressure.
Because the bucket spool switches and the pressurized oil on the center bypass is cut off, the Pi2 pump negative control pressure oil from the Ps2 port is eliminated, the pump revolution tilt moves to the increase side, and the flow is increased.
Also, the command current to the pump P1 flow control proportional valve is lowered and the pressurized oil from the A3 hydraulic pump is cut off, but the negative control pressure is fed from the control valve Ps1 port to the Pi1 port to reduce the A1 hydraulic pump discharged volume quantity.

1	Control valve	12	Power save
2	Travel pilot pressure sensor	13	5-stack solenoid valve
3	Upper side pilot pressure sensor	14	P1 pressure sensor
4	Cushion valve	15	P2 pressure sensor
5	Bucket (close)	16	N1 negative control pressure sensor
6	Bucket (open)	17	N2 negative control pressure sensor
7	Bucket cylinder	18	P1 flow control proportional valve
8	Computer	19	Hydraulic pump
9	Remote control valve (boom, bucket)	20	Check
10	Console lever lock switch	21	Oil cooler
11	Lever lock		

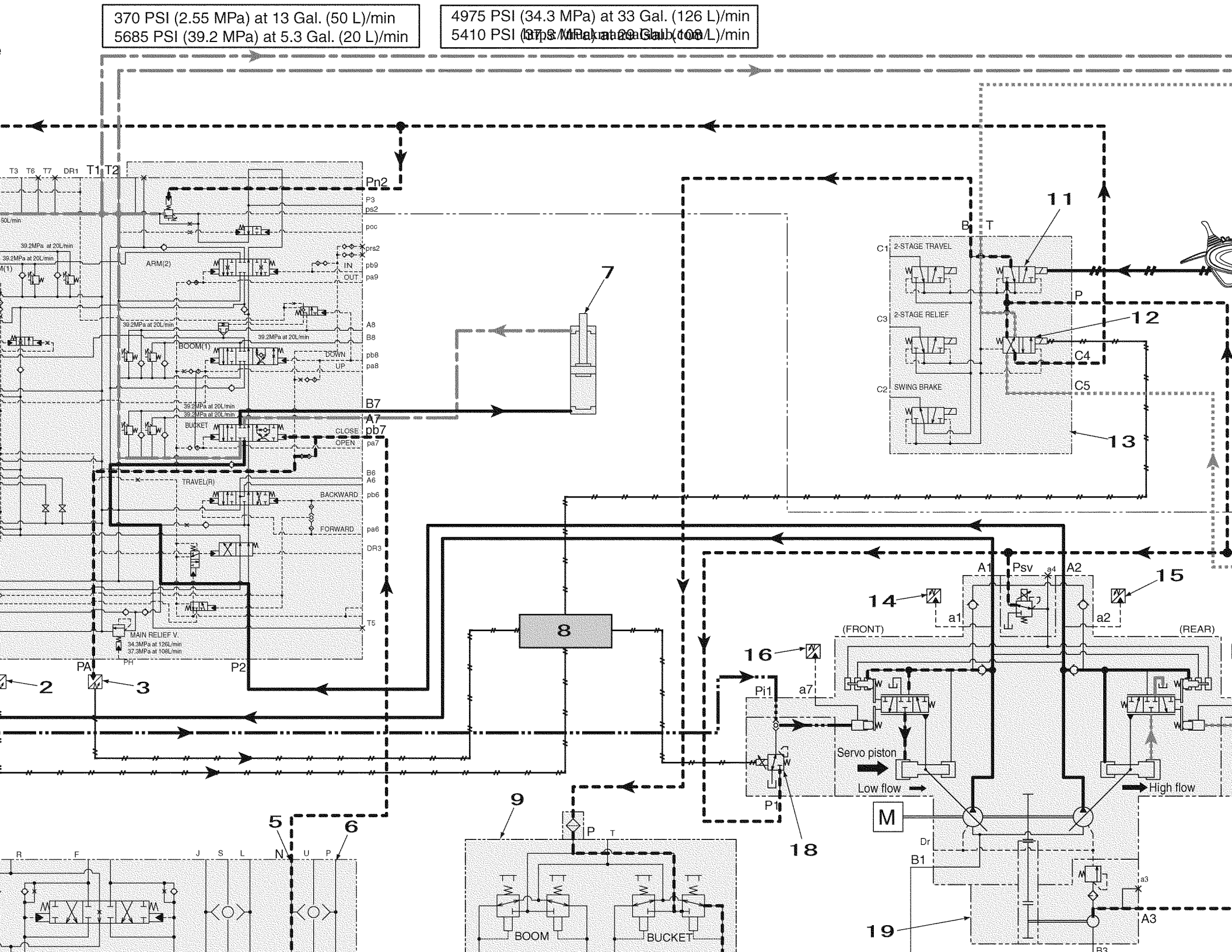
370 PSI (2.55 MPa) at 13 Gal. (50 L)/min
5685 PSI (39.2 MPa) at 5.3 Gal. (20 L)/min
4975 PSI (34.3 MPa) at 33 Gal. (126 L)/min
5410 PSI (37.3 MPa) at 29 Gal. (108 L)/min
T3 T6 T7 DR1 T1 T2
Pn2
P3
ps2
pcc
prs2
ARM(2)
IN
OUT
pb9
pa9
39.2MPa at 20L/min
A8
B8
BOOM(1)
DOWN
UP
pb8
pa8
B7
A7
pb7
BUCKET
CLOSE
OPEN
pa7
B6
A6
TRAVEL(R)
BACKWARD
FORWARD
pb6
pa6
DR3
T5
MAIN RELIEF V.
34.3MPa at 126L/min
37.3MPa at 108L/min
PA
PH
P2
2
3
7
8
11
12
13
14
15
16
18
19
5
6
9
B T
C1 2-STAGE TRAVEL
C3 2-STAGE RELIEF
C2 SWING BRAKE
P
C4
C5
A1 Psv a4 A2
a1
a2
(FRONT)
(REAR)
Pi1
a7
Servo piston
Low flow
High flow
P1
M
Dr
B1
a3
A3
B3
R F J S L N U P
BOOM
BUCKET

https://truckmanualshub.com/

Increased Horsepower Circuits

1. Arm-In Increased Horsepower Circuit

For the arm-in operation, the increased horsepower signal is output to the hydraulic pump horsepower control proportional valve from the computer by the arm pilot pressure sensor input signal and P1 pressure sensor and P2 pressure sensor input signals.
The hydraulic pump discharged volume quantity is increased by the increased horsepower signal to the horsepower control proportional valve from the computer.

[1] Condition under which the arm-in increased horsepower control is entered
- Arm-in pilot pressure 73 PSI (0.5 MPa) or higher (arm-in operation)
- P1 + P2 ≥ 6527 PSI (45 MPa)

[2] Conditions under which the arm-in increased horsepower control is ended
- Arm-in pilot pressure 44 PSI (0.3 MPa) or lower (arm-in operation end)
- P1 + P2 ≤6527 PSI (45 MPa)
  When either occurs

1	Arm (in)	13	Travel pilot pressure sensor
2	Arm (out)	14	Upper side pilot pressure sensor
3	Cushion valve	15	Console lever lock switch
4	Remote control valve (arm, swing)	16	Monitor display
5	Lever lock	17	Computer
6	Boost relief	18	N1 negative control pressure sensor
7	5-stack solenoid valve	19	P1 pressure sensor
8	Arm cylinder	20	P2 pressure sensor
9	Arm pilot pressure sensor	21	N2 negative control pressure sensor
10	Control valve	22	Hydraulic pump
11	Arm (1)	23	Check
12	Arm (2)	24	Oil cooler

https://truckmanualshub.com/

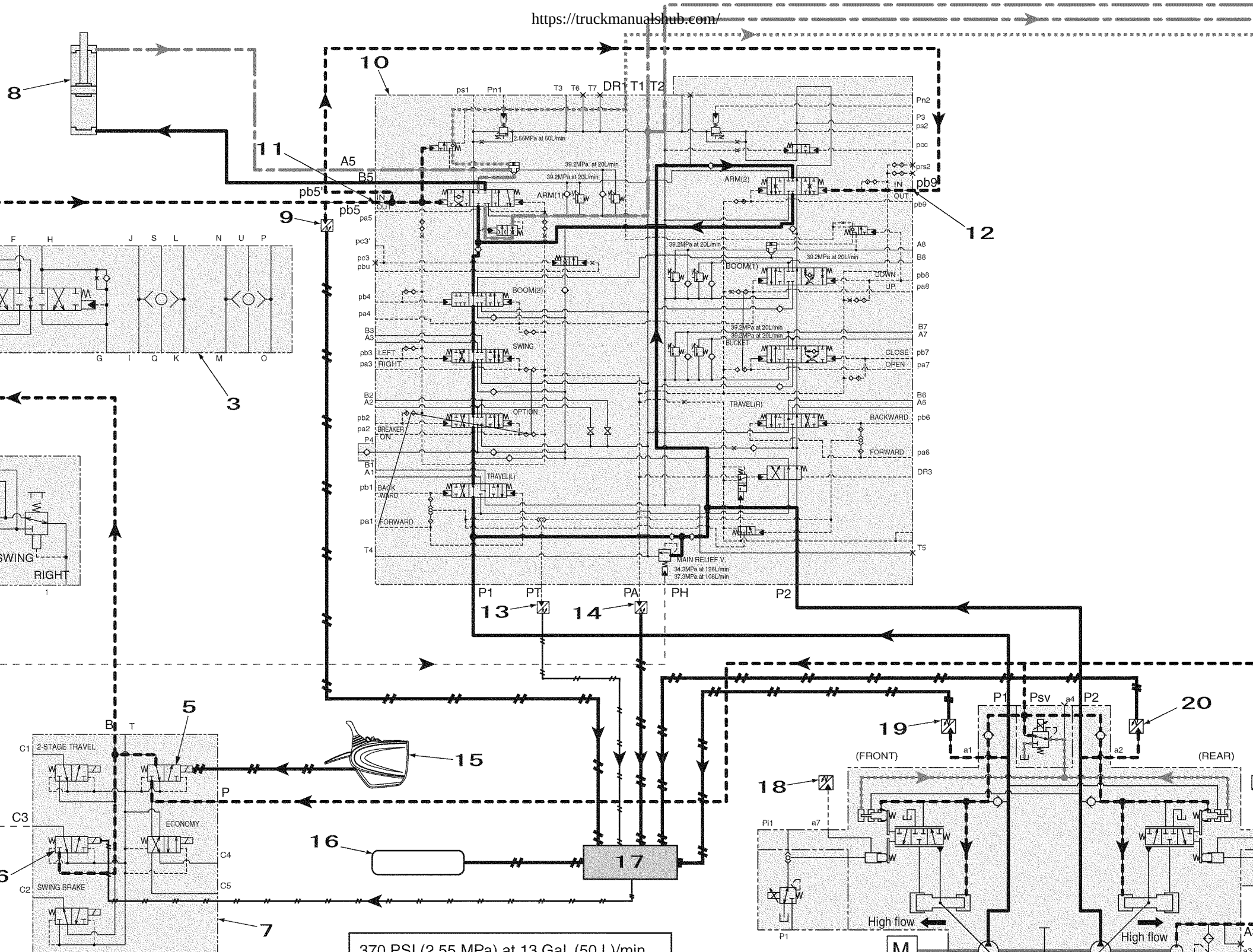

370 PSI (2.55 MPa) at 13 Gal. (50 L)/min

https://truckmanualshub.com/

Increased Horsepower Circuits

2. Travel Increased Horsepower Circuit

For travel single operation, the increased horsepower signal is output to the hydraulic pump horsepower control proportional valve from the computer by the travel pilot pressure sensor input signal. The hydraulic pump discharged volume quantity is increased by the increased horsepower signal to the horsepower control proportional valve from the computer.

[1] Conditions under which the travel increased horsepower control is entered
- Travel pilot pressure 73 PSI (0.5 MPa) or higher.
- SP mode

[2] Conditions under which the travel increased horsepower control is ended
- Travel pilot pressure 44 PSI (0.3 MPa) or lower.
- AUTO mode, H mode

1	Travel motor	13	P1 pressure sensor
2	Travel remote control valve	14	P2 pressure sensor
3	Travel speed	15	N1 negative control pressure sensor
4	Lever lock	16	N2 negative control pressure sensor
5	5-stack solenoid valve	17	Hydraulic pump
6	Console lever lock switch	18	Check
7	High speed travel select switch	19	Oil cooler
8	Computer	20	Backward left
9	Control valve	21	Forward left
10	Travel (right)	22	Forward right
11	Travel (left)	23	Backward right
12	Travel pilot pressure sensor		

https://truckmanualshub.com/

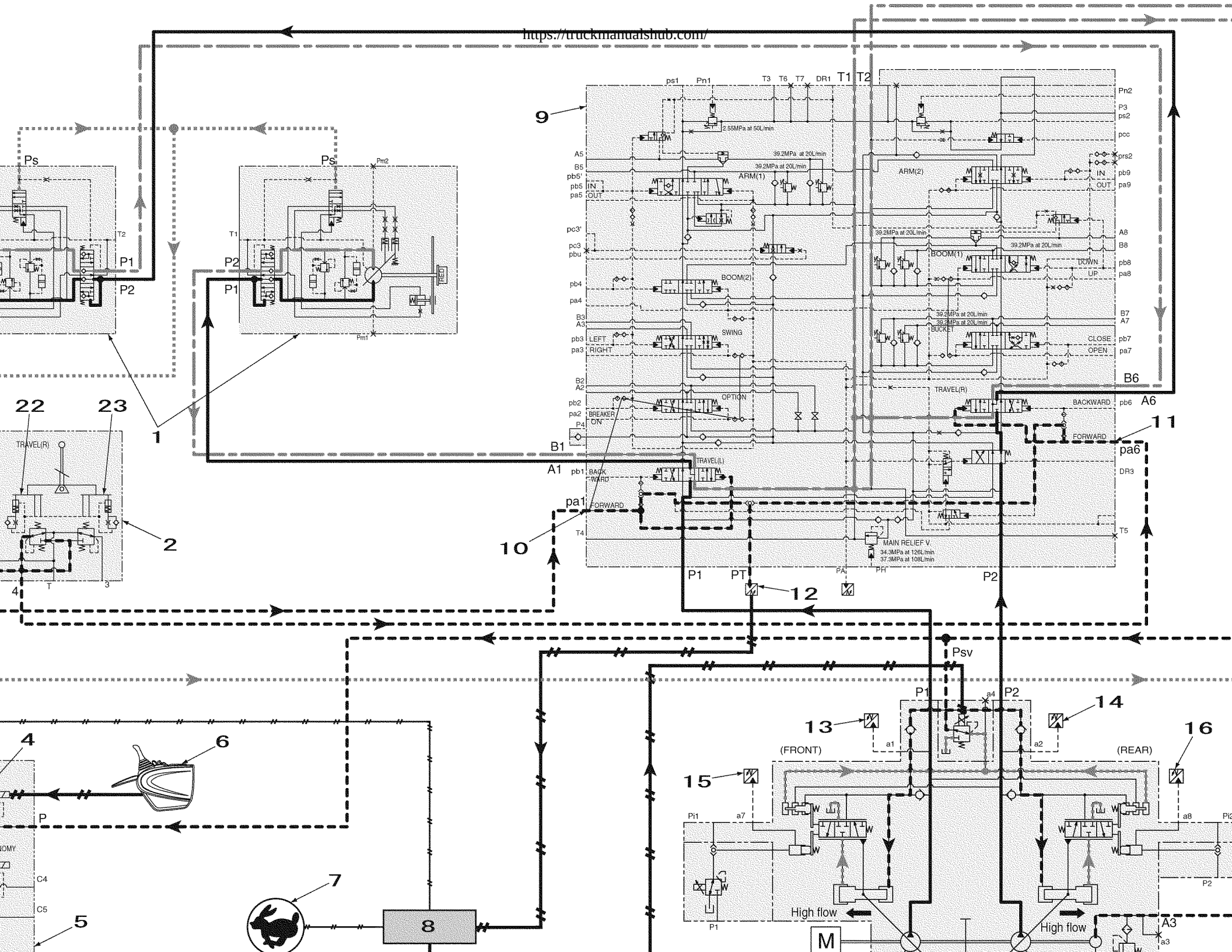

https://truckmanualshub.com/

Other Circuits

1. Cushion Circuit

As examples, this section explains the cases when an arm-out operation is carried out, when an arm-out operation is stopped, and when an arm-out operation is followed by an arm-in operation.

(1) Arm-out operation

When a remote control valve arm-out operation is carried out, the pilot pressure oil enters from the remote control valve 2 port into the cushion valve, pushes up the internal check valve, and is fed to the control valve Pa5 port and Pa9 port.
At the same time, the cushion valve cushion spool is switched to the left.
The arm-in side oil pushed out from the control valve Pa9 and Pb 5 ports passes from the cushion valve B port through the cushion spool switched to the left and returns to the hydraulic oil tank.
At this time, the warmed oil from the return line enters the remote control valve through the cushion spool from the cushion valve R port and returns to the hydraulic oil tank, so heat performance is improved.

1	Arm (in)	10	Control valve
2	Arm (out)	11	Arm (1)
3	Cushion spool	12	Arm (2)
4	Orifice	13	Console lever lock switch
5	Check valve	14	Hydraulic pump
6	Cushion valve	15	Check
7	Remote control valve (arm, swing)	16	Oil cooler
8	Lever lock	17	Shut off valve
9	5-stack solenoid valve		

https://truckmanualshub.com/

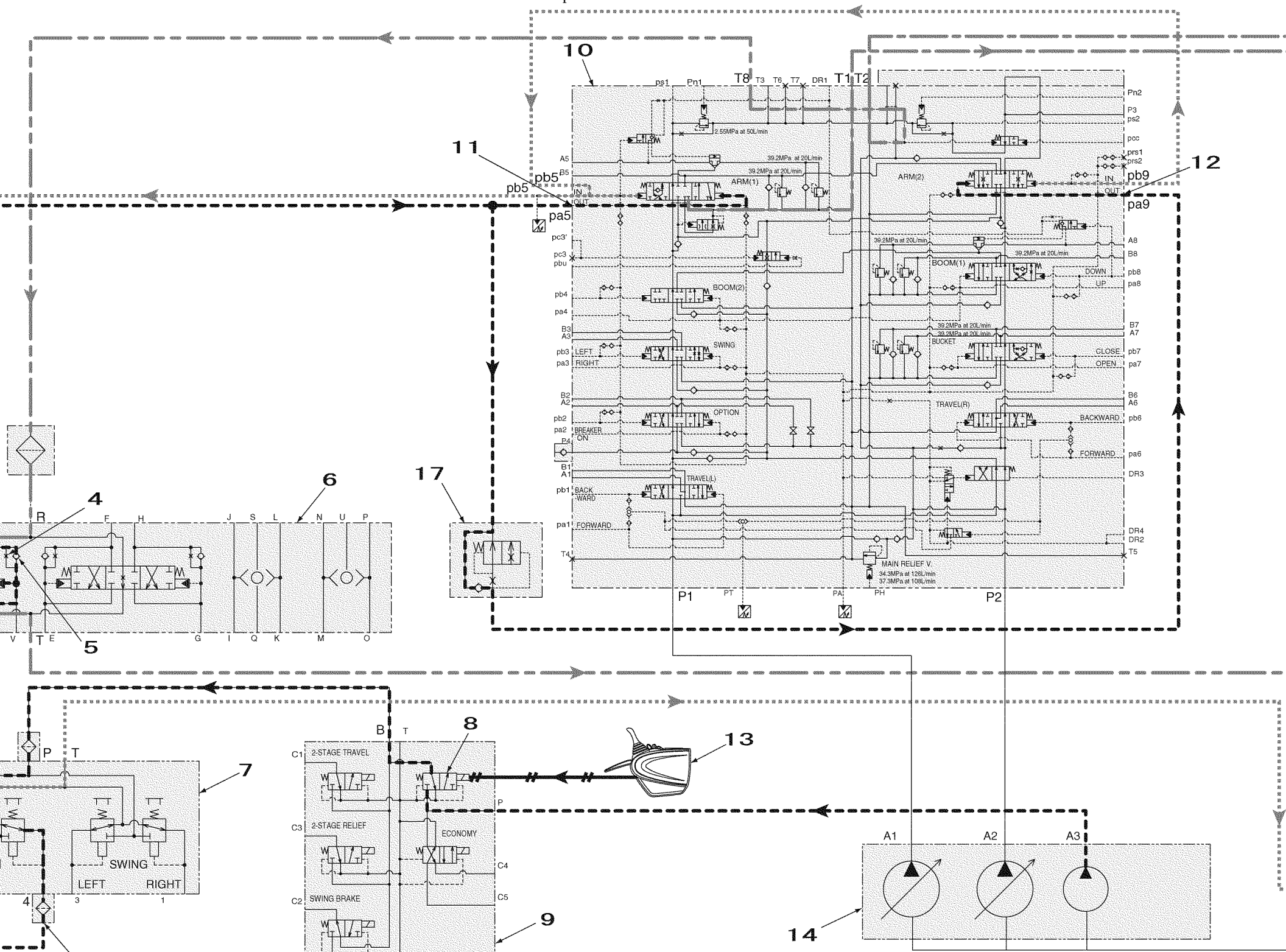

https://truckmanualshub.com/

Other Circuits

(2) When arm-out operation stopped

When the remote control valve arm-out operation lever is returned to neutral, the oil pushed out from the control valve Pa5 and Pa9 ports flows to the cushion valve D port through the cushion orifice and returns from the remote control valve to the hydraulic oil tank.
Through this orifice, the arm spool moves to the neutral position without returning suddenly, so the cushioning is improved.

1	Arm (in)	9	Control valve
2	Arm (out)	10	Arm (1)
3	Cushion spool	11	Arm (2)
4	Orifice	12	Console lever lock switch
5	Cushion valve	13	Hydraulic pump
6	Remote control valve (arm, swing)	14	Check
7	Lever lock	15	Oil cooler
8	5-stack solenoid valve	16	Cushion spool

370 PSI (2.55 MPa) at 13 Gal. (50 L)/min
5685 PSI (39.2 MPa) at 5.3 Gal. (20 L)/min

4975 PSI (34.3 MPa) at 33 Gal. (126 L)/min
5410 PSI (37.3 MPa) at 29 Gal. (108 L)/min

https://truckmanualshub.com/

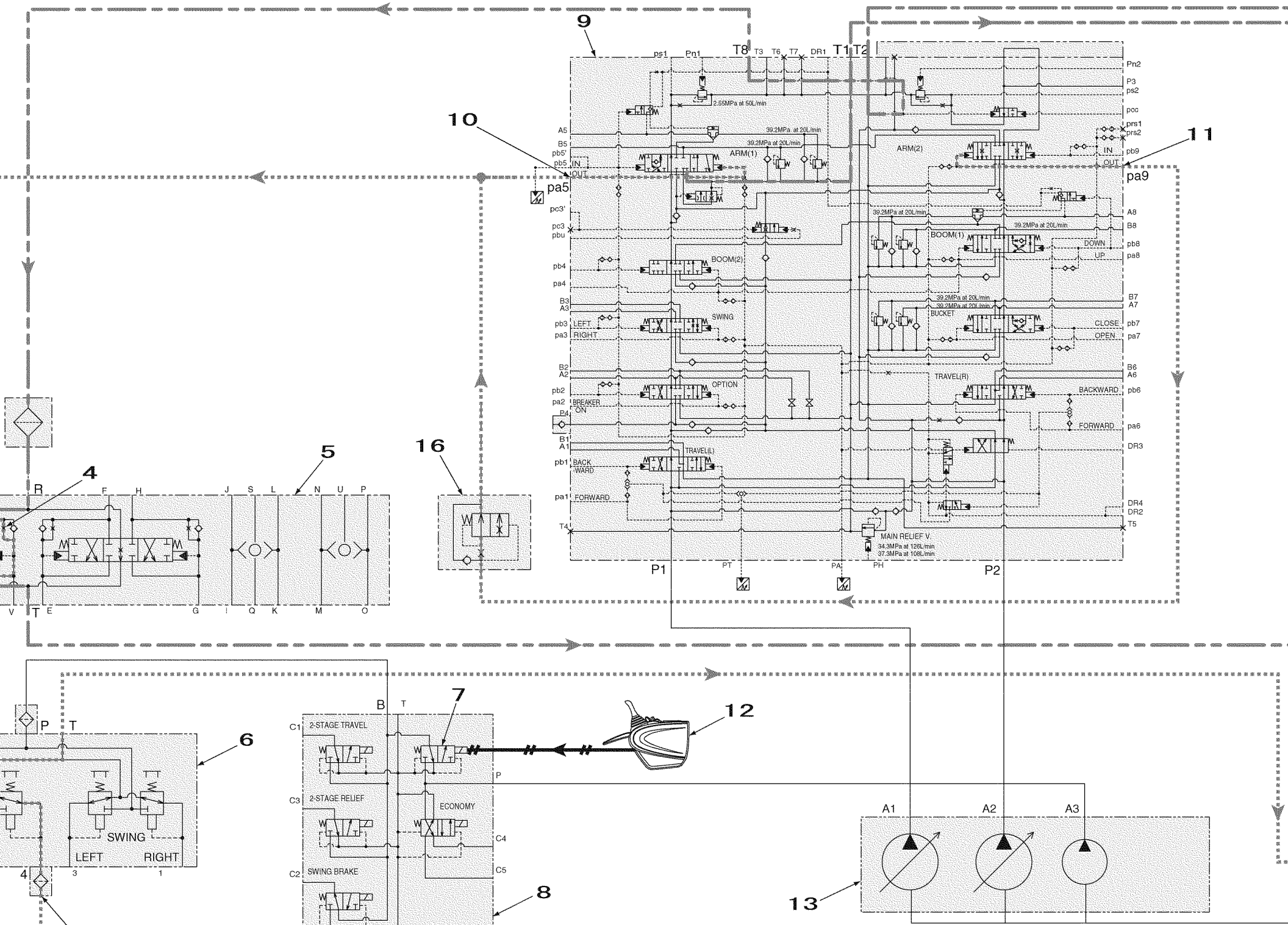

https://truckmanualshub.com/

Other Circuits

(3) Arm-out → Arm-in operation

When the lever is operating all at once from an arm-out operation to an arm-in operation (arm drift operation), the pilot pressure oil is fed from the remote control valve 4 port into the cushion valve A port, pushes up the internal check valve, and reaches the control valve Pb5 port and Pb9 port.
At the same time, the cushion valve cushion spool is switched to the right.
At this time, the oil pushed out from the Pa5 port and Pa9 port does not pass through the cushion orifice, but passes through the cushion spool that has been switched to the right and returns to the hydraulic oil tank, so response is improved.

1	Arm (in)	9	Control valve
2	Arm (out)	10	Arm (1)
3	Cushion spool	11	Arm (2)
4	Orifice	12	Console lever lock switch
5	Cushion valve	13	Hydraulic pump
6	Remote control valve (arm, swing)	14	Check
7	Lever lock	15	Oil cooler
8	5-stack solenoid valve		

https://truckmanualshub.com/

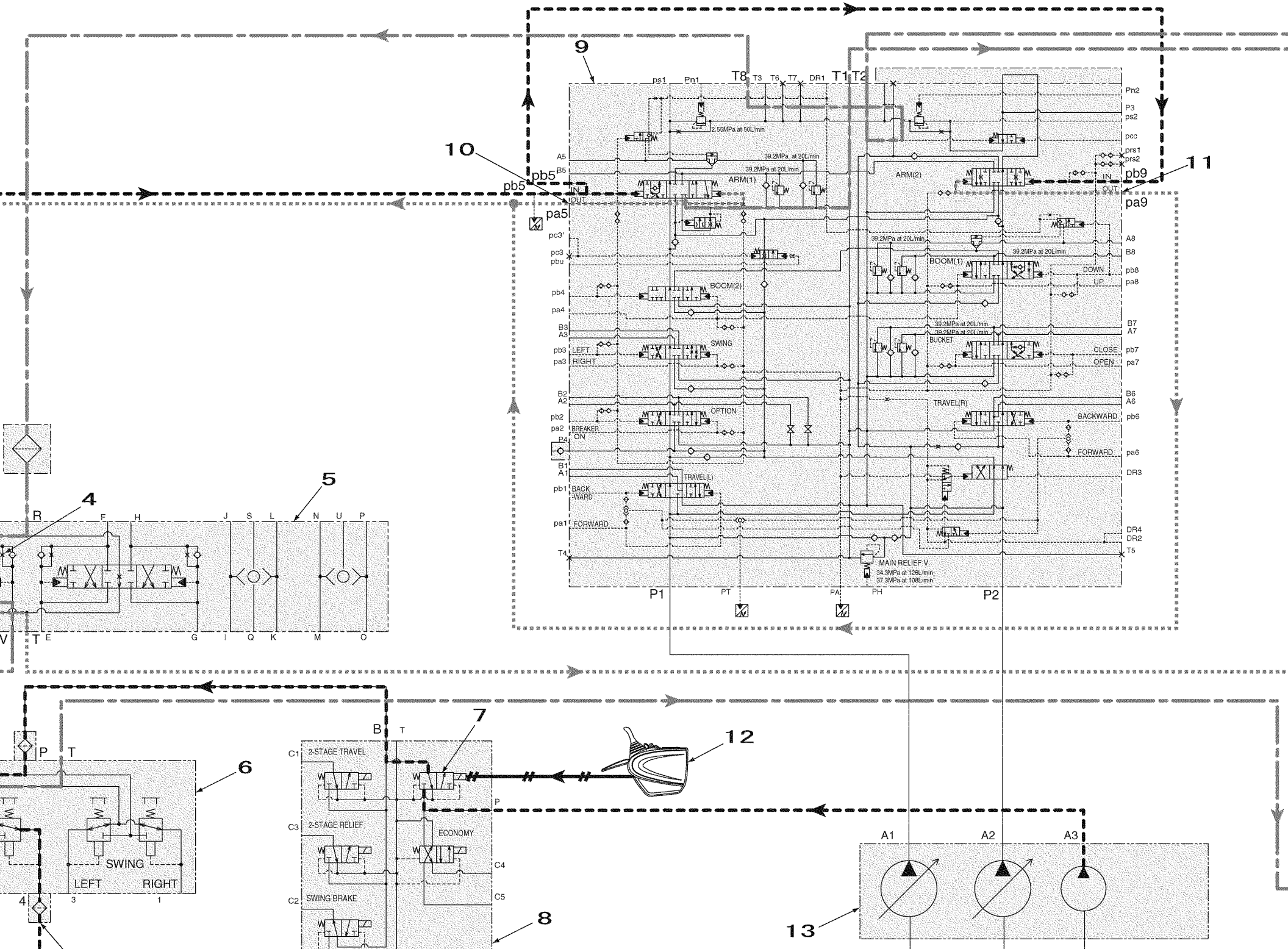

https://truckmanualshub.com/

Other Circuits

2. Heat Circuit (lever in neutral)

The pilot line is equipped with a heat circuit to prevent response delay at low temperatures.
When the remote control valve operation lever is set to neutral, the discharged oil from hydraulic pumps A1 and A2 goes from the control valve P1 and P2 ports through the center bypass passage, and returns to the hydraulic oil tank.
The pressurized oil from the control valve T8 port is fed to the cushion valve R port and returns through the cushion spool to the hydraulic oil tank.
By circulating the oil inside the cushion spool, the temperature of the oil in the cushion valve is raised to improve heat performance.

1	Arm (in)	7	Control valve
2	Arm (out)	8	Console lever lock switch
3	Cushion valve	9	Hydraulic pump
4	Remote control valve (arm, swing)	10	Check
5	Lever lock	11	Oil cooler
6	5-stack solenoid valve		

https://truckmanualshub.com/

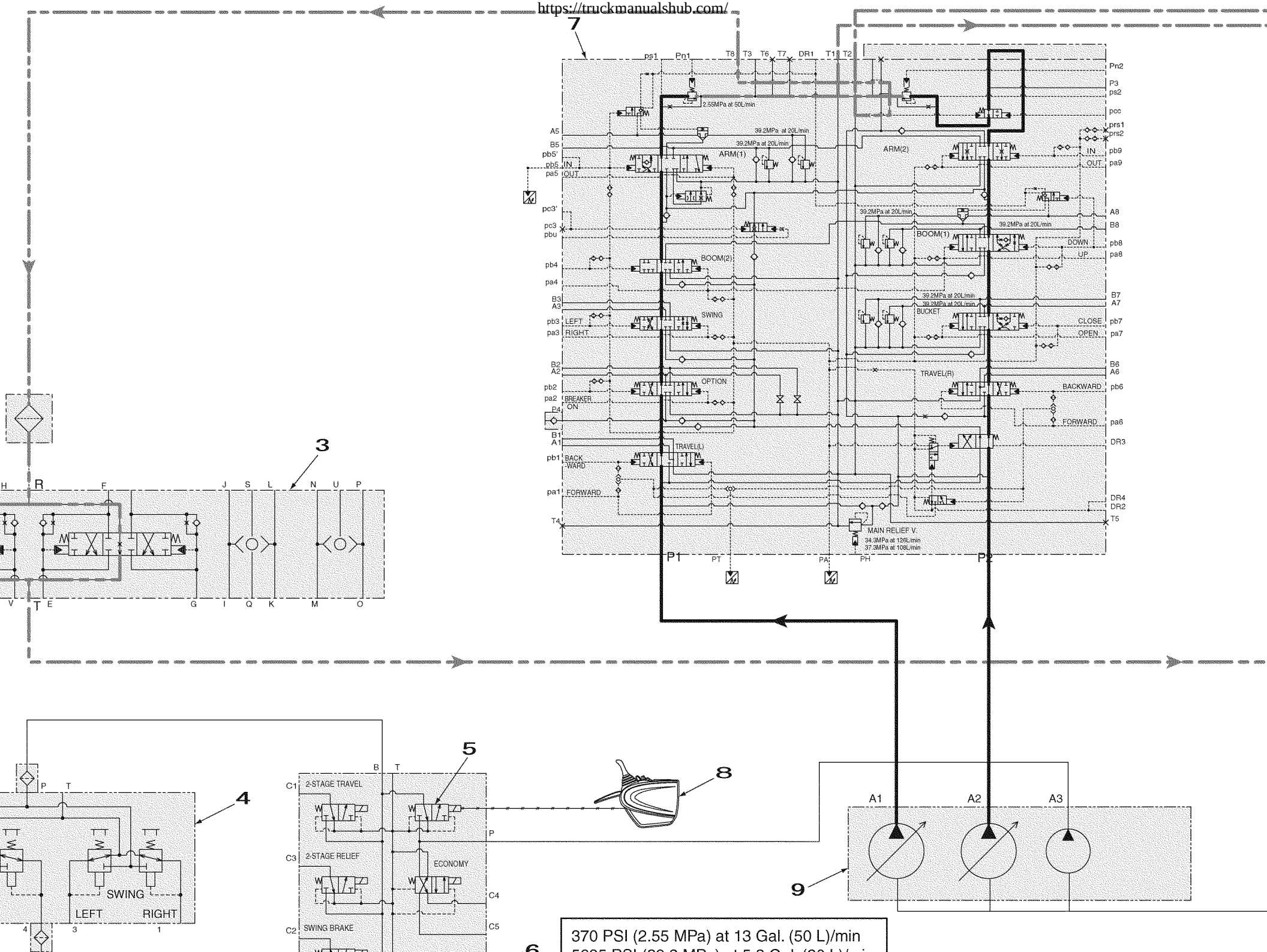

370 PSI (2.55 MPa) at 13 Gal. (50 L)/min

6

https://truckmanualshub.com/

Other Circuits

3. Auto Power Boost Circuit (bucket close)

When an attachment is operated, this circuit boosts the control valve main relief pressure from 34.3 MPa to 5337 PSI (36.8 MPa) according to the engine load ratio and hydraulic load pressure, then ends the pressure boost after 8 seconds.
As an example, this section explains bucket close operations.
By moving the remote control valve to the bucket close side, the pilot pressure oil is fed via the cushion valve to the control valve Pb7 port and switches the bucket spool to the close side.
At the same time, the pressurized oil separated from the pilot internal passage is detected and the upper side pilot pressure sensor output signal is input to the computer, which judges that there is upper side operation. Furthermore, the computer A judges that there is a boost in the main pump P1 and P2 pressure, outputs the ON (24 V) signal to the boost relief solenoid, and switches the valve, and the pilot pressure oil is fed to the control valve main relief valve PH port to hold the boost relief set pressure for 8 seconds.
The option circuit is not boosted during a travel operation.

1	Cushion valve	11	Upper side pilot pressure sensor
2	Bucket (close)	12	Console lever lock switch
3	Bucket (open)	13	Power up
4	Remote control valve (boom, bucket)	14	Monitor display
5	Lever lock	15	Computer
6	Boost relief	16	P1 pressure sensor
7	5-stack solenoid valve	17	P2 pressure sensor
8	Control valve	18	Hydraulic pump
9	Bucket	19	Check
10	Bucket cylinder	20	Oil cooler

370 PSI (2.55 MPa) at 13 Gal. (50 L)/min
5685 PSI (39.2 MPa) at 5.3 Gal. (20 L)/min
4975 PSI (34.3 MPa) at 33 Gal. (126 L)/min
5410 PSI (37.3 MPa) at 29 Gal. (108 L)/min

https://truckmanualshub.com/

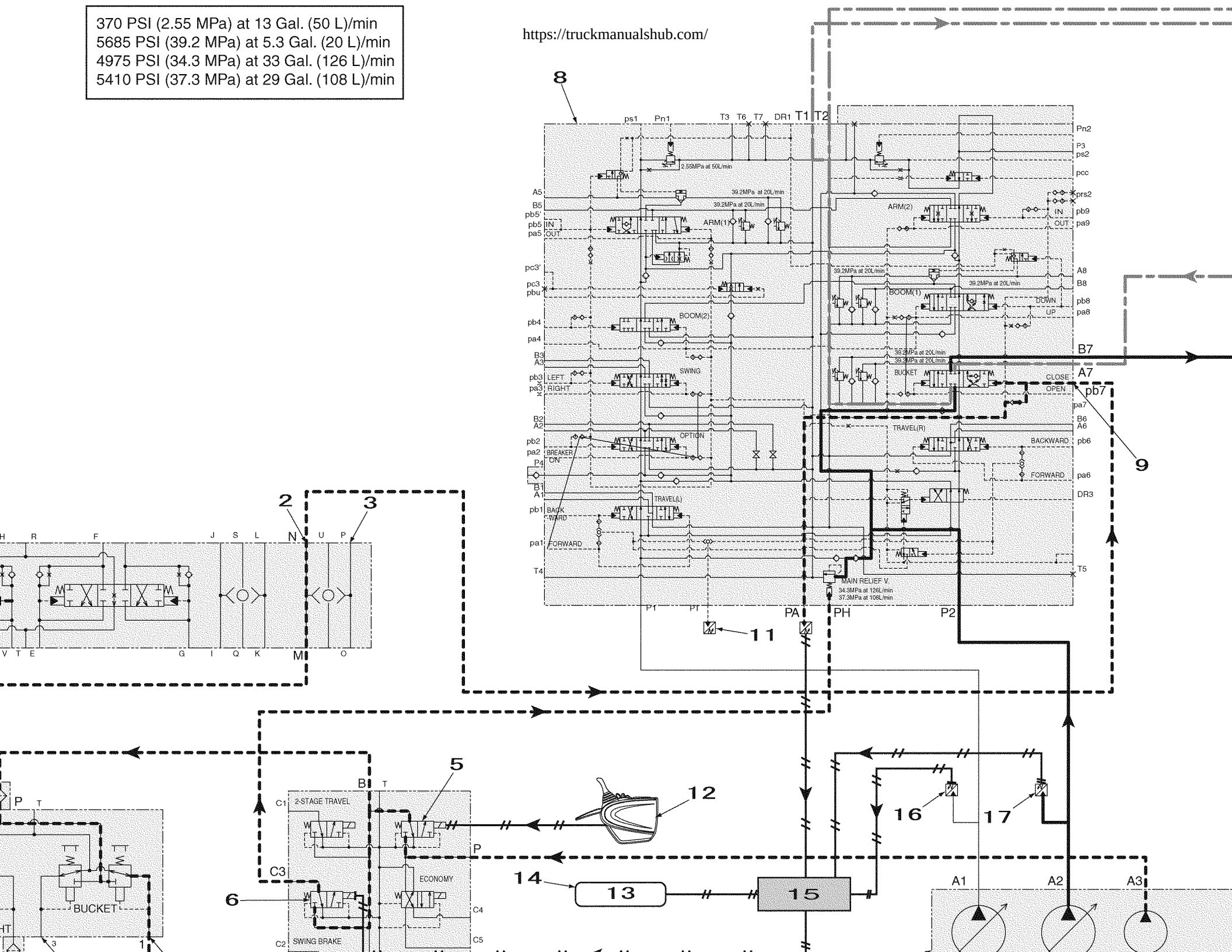

https://truckmanualshub.com/

Option Circuit

1. Breaker Circuit (single operation)

   By operating the option remote control valve to the breaker side, the pilot pressure oil is fed to the control valve Pa2 port and switches the option spool.
   The discharged oil from hydraulic pump A1 is fed from the control valve P1 port through the parallel passage and fed to the option spool. Switching the spool lets the oil flow from the relief valve A port through the B port and into the breaker.
   The breaker set pressure is set by this relief valve.
   At this time, the option pilot pressure sensor signal is detected, the pump P1 flow control proportional valve is controlled by the output signals from the computer to adjust the discharge flow.
   The return oil from the breaker goes through the manifold and returns to the hydraulic oil tank.
   Because the breaker usage flow can be set to five levels on the service support screen of the monitor display with the ON signal from the breaker switch in the cab, the optimum usage flow can be selected.

1	Control valve	12	Console lever lock switch
2	Manifold	13	Lever lock
3	Relief valve	14	5 stack solenoid valve
4	Breaker	15	P1 pressure sensor
5	Travel pilot pressure sensor	16	P2 pressure sensor
6	Upper side pilot pressure sensor	17	N1 negative control pressure sensor
7	Computer	18	N2 negative control pressure sensor
8	Monitor display	19	P1 flow control proportional valve
9	Breaker switch	20	Hydraulic pump
10	Option remote control valve	21	Check
11	Option pilot pressure switch	22	Oil cooler

https://truckmanualshub.com/

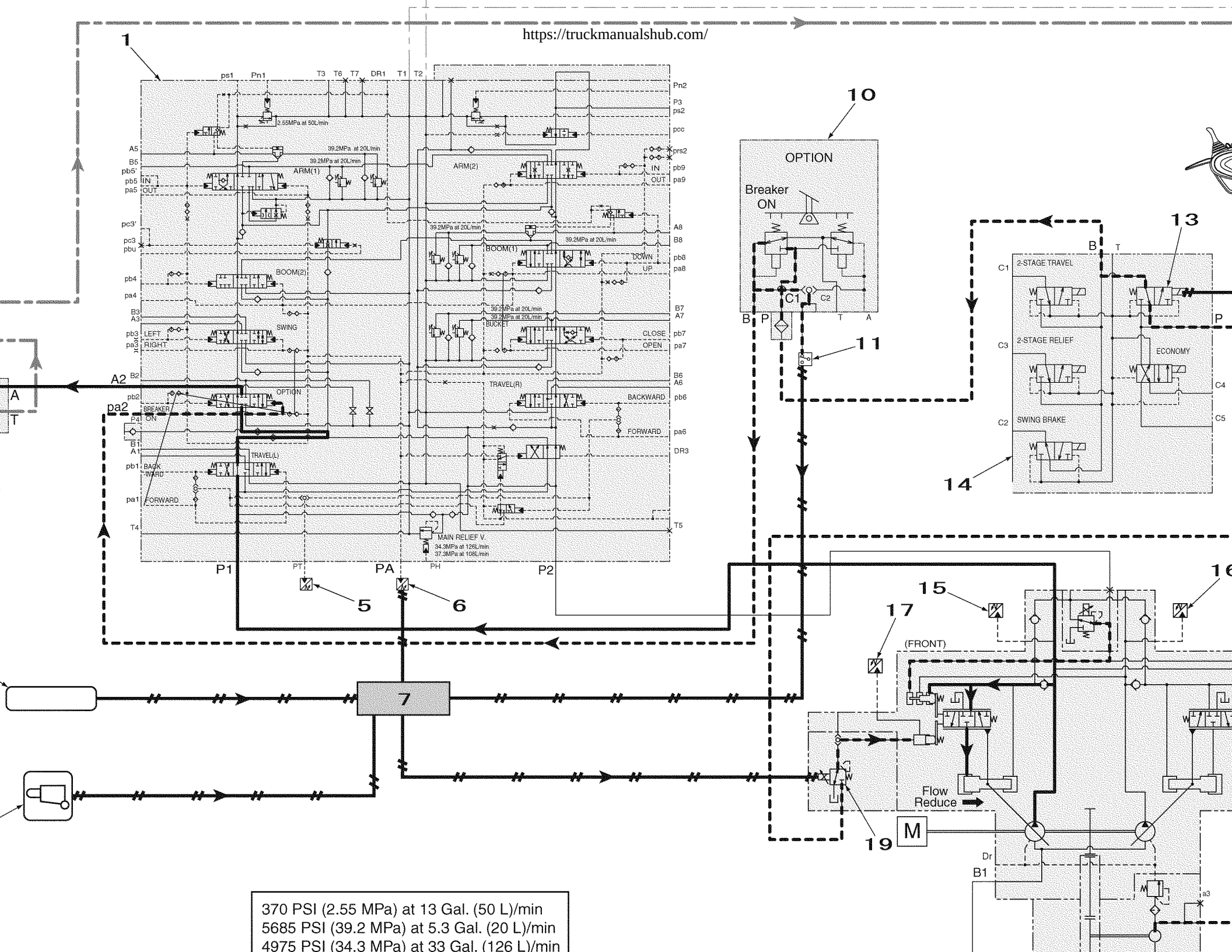

370 PSI (2.55 MPa) at 13 Gal. (50 L)/min
5685 PSI (39.2 MPa) at 5.3 Gal. (20 L)/min
4975 PSI (34.3 MPa) at 33 Gal. (126 L)/min

https://truckmanualshub.com/

Option Circuit

2. Shuttle Circuit (hydraulic fork)

   As an example, this section explains the case in which the hydraulic fork attachment is used.
   By operating the option remote control valve to the fork close side, the pilot pressure oil is fed to the control valve Pa2 port and switches the option spool to the close side.
   The discharged oil from hydraulic pump A1 enters the control valve P1 port, is fed from the parallel passage to the option spool, flows into the hydraulic fork because of the option spool switching and operates to the close side.
   The return oil from the hydraulic fork goes through the option spool and returns to the hydraulic oil tank.

1	Control valve	8	5-stack solenoid valve
2	Hydraulic fork	9	Console lever lock switch
3	Travel pilot pressure sensor	10	Hydraulic pump
4	Upper side pilot pressure sensor	11	Option remote control valve
5	Monitor display	12	Option pilot pressure switch
6	Computer	13	Check
7	Lever lock	14	Oil cooler

https://truckmanualshub.com/

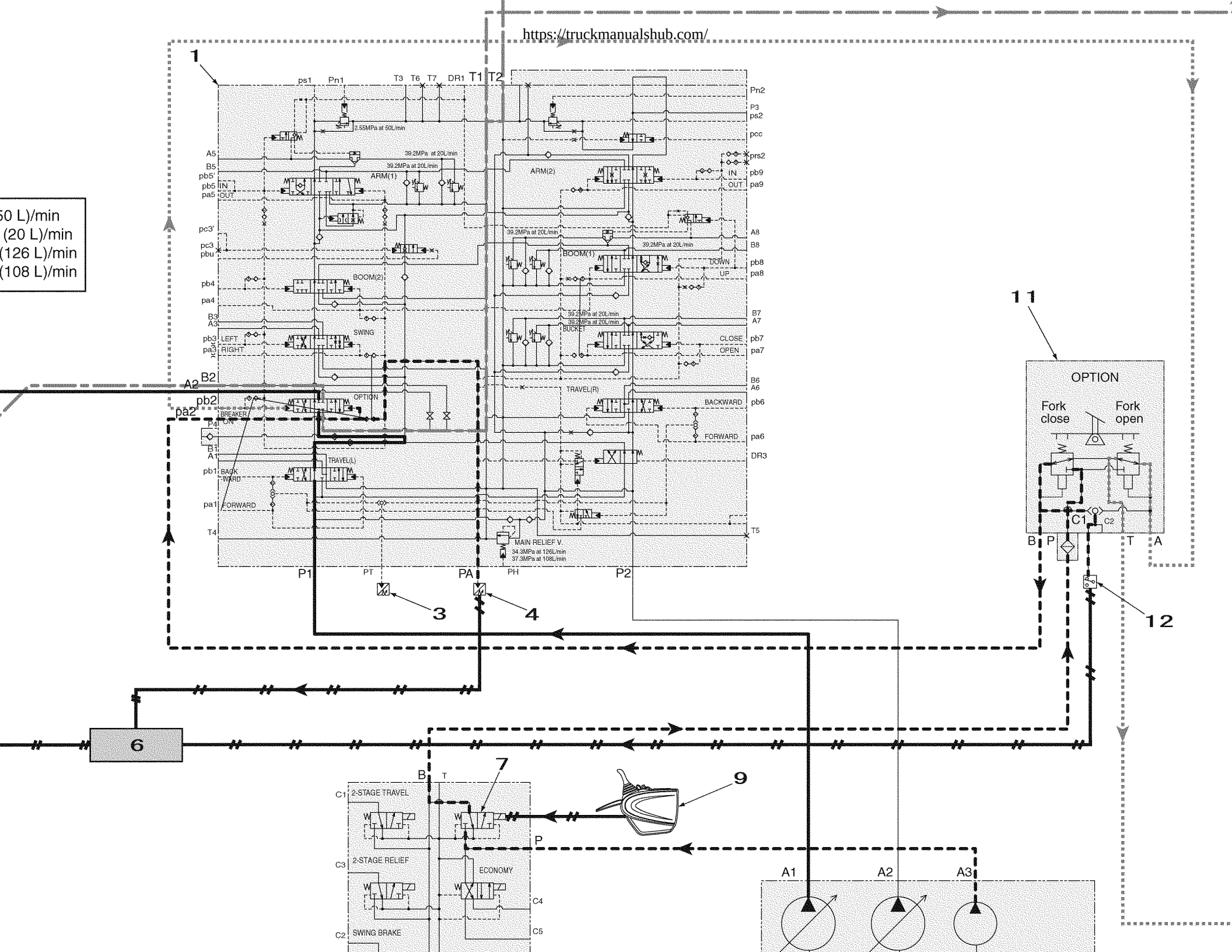

https://truckmanualshub.com/

Option Circuit

3. Combined Circuit

(1) Breaker Q control

When the switch in the cab is flipped to the breaker side, the ON signal (24 V) is output from the computer to the option switch solenoid valve to switch the valve.
The pilot pressure oil flows from the option switch solenoid valve B1 port to the A1 port and is fed to the 3-direction valve PP port and shut-off valve PP port and each valve is switched.
Always switch the 2-speed select switch to the 1-speed side.
By operating the option remote control valve to the breaker side, the pilot pressure oil is fed to the control valve Pa2 port and switches the option spool.
The discharged oil from hydraulic pump A1 is fed from the control valve P1 port through the parallel passage and fed to the option spool. Switching the spool lets the oil flow from the shut-off valve A port through the B port and into the breaker.
The breaker set pressure is set by the relief valve into the shut-off valve.
At this time, the option pilot pressure sensor signal is detected, the pump P1 flow control proportional valve is controlled by the output signals from the computer to adjust the discharge flow.
The return oil from the breaker returns from the 3-direction valve A1 port through the T1 port and to the hydraulic oil tank.
Because the breaker usage flow can be set to five levels on the service support screen of the monitor display, the optimum usage flow can be selected.

1	Control valve	12	Lever lock
2	3-direction valve	13	5-stack solenoid valve
3	Shut-off valve	14	Horsepower control proportional valve
4	Breaker	15	P1 pressure sensor
5	Option remote control valve	16	P2 pressure sensor
6	Option pilot pressure switch	17	N1 negative control pressure sensor
7	Compatible circuit switch	18	N2 negative control pressure sensor
8	Computer	19	P1 flow control proportional valve
9	Monitor display	20	Hydraulic pump
10	Option switchover solenoid valve	21	Check
11	Console lever lock switch	22	Oil cooler

370 PSI (2.55 MPa) at 13 Gal. (50 L)/min
5685 PSI (39.2 MPa) at 5.3 Gal. (20 L)/min

4975 PSI (34.3 MPa) at 33 Gal. (126 L)/min
5410 PSI (37.3 MPa) at 29 Gal. (108 L)/min

https://manualsdb.com/

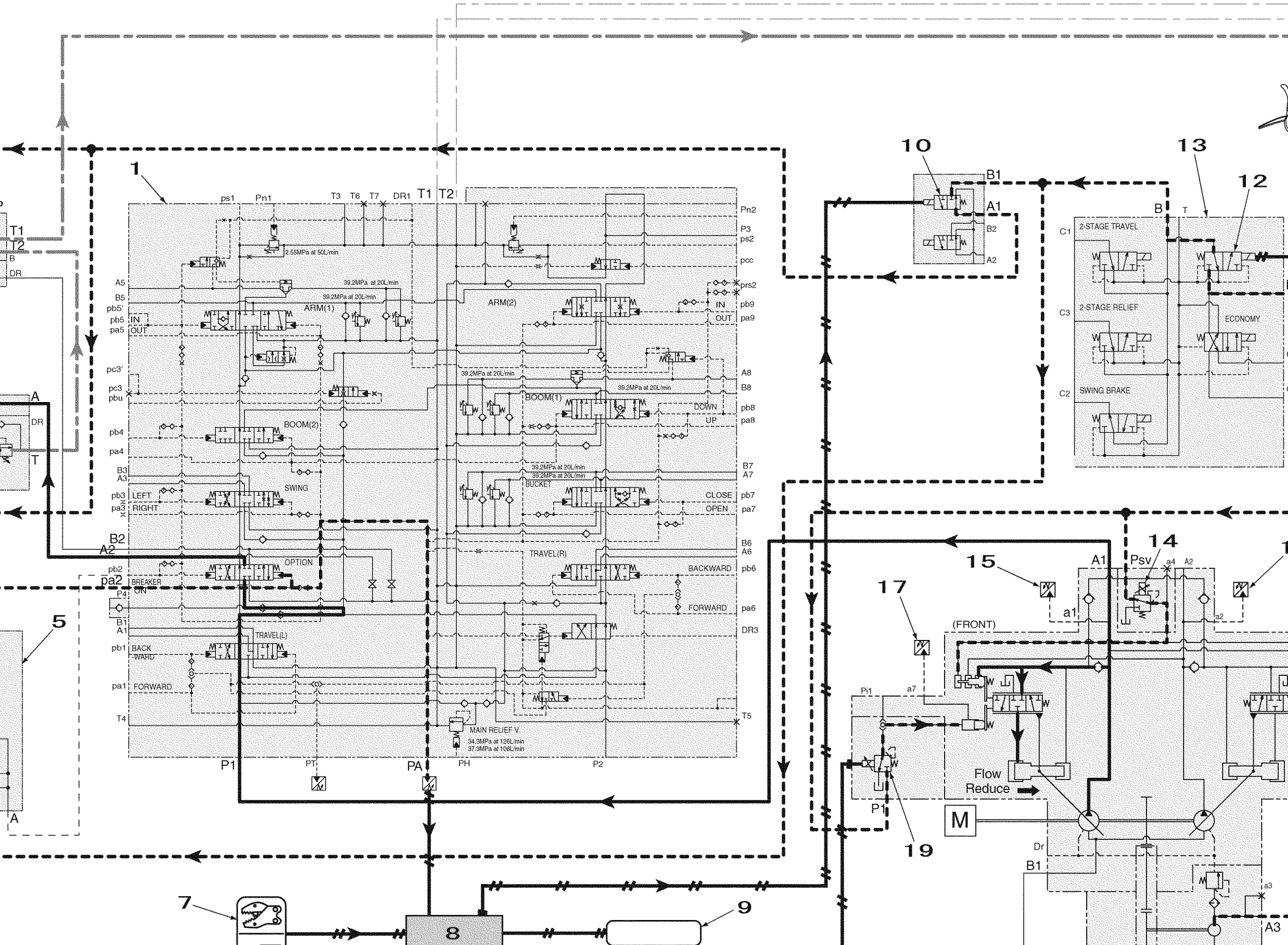

https://truckmanualshub.com/

Option Circuit

(2) 2nd confluerce crusher

When the 2nd speed merge select switch in the cab is flipped to the 2nd speed merge side, the ON signal (24 V) is output from the computer to the 2nd speed merge solenoid valve to switch the valve.
When the compatible circuit switch is flipped to the pulverizer side, the pulverizer circuit is formed without outputting a signal from the computer to the option switch solenoid valve and without switching the valve.
At this time, the pilot signal does not go to the 3-direction valve or to the shut-off valve and the 3-direction valve forms the A ⇔ B circuit.
By operating the option remote control valve to the pulverizer side, the pilot pressure oil is fed to the control valve Pa2 port and switches the option spool.
At the same time, the pilot pressure oil flows from the 2nd speed merge solenoid valve B2 port to the A2 port and is fed to the control valve Pcc port and the control valve neutral cut valve is switched.
The discharged oil from hydraulic pump A2 enters the control valve P2 port and goes through the center bypass passage and since the neutral cut valve has cut the port to the tank, the oil goes from the P3 port via the P4 port and merges on the upstream side of the option spool.
The discharged oil from hydraulic pump A1 is fed from the control valve P1 port through the parallel passage and fed to the option spool. Switching the spool lets the oil flow from the shut-off valve A port through the B port and into the pulverizer.
At this time, the option pilot pressure sensor signal is detected, the pump P1 flow control proportional valve is controlled by the output signals from the computer to adjust the discharge flow.
The return oil from the pulverizer returns from the 3-direction valve A port through the B port and the option spool and returns to the hydraulic oil tank.
Because the pulverizer usage flow can be set to five levels on the service support screen of the monitor display, the optimum usage flow can be selected.

1	3-direction valve	10	Monitor display	19	5-stack solenoid valve
2	Shut-off valve	11	computer	20	Console lever lock switch
3	Pulverizer	12	Compatible circuit switch	21	Horsepower control proportional valve
4	Option switchover solenoid valve	13	2nd speed merge select switch	22	P1 pressure sensor
5	2-way merge solenoid valve	14	Control valve	23	P2 pressure sensor
6	Option remote control valve	15	Neutral cut valve	24	N1 negative control pressure sensor
7	Check	16	Travel pilot pressure sensor	25	N2 negative control pressure sensor
8	Oil cooler	17	Upper side pilot pressure sensor	26	P1 flow control proportional valve
9	Option pilot pressure switch	18	Lever lock	27	Hydraulic pump

https://truckmanualshub.com/

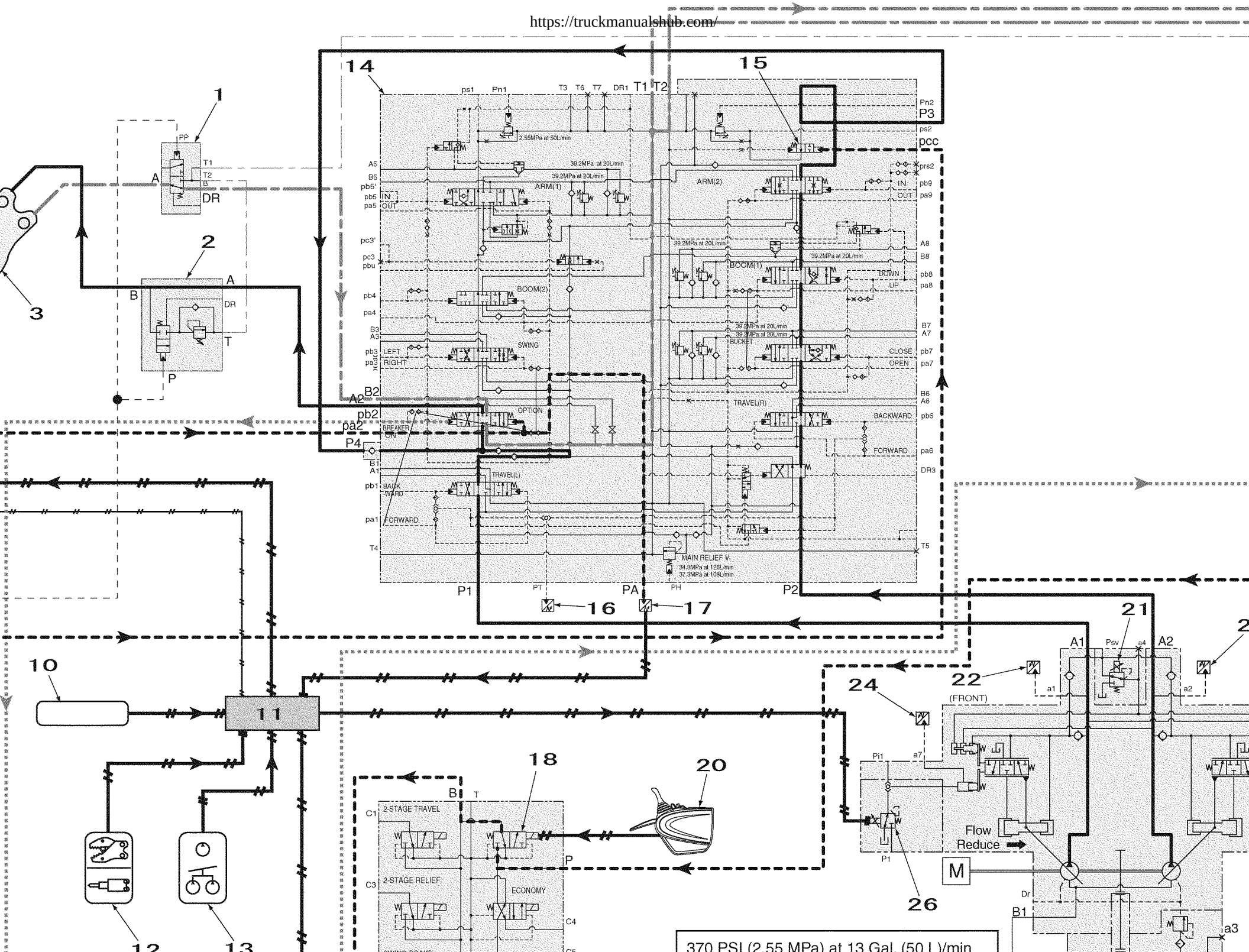

https://truckmanualshop.com/

Option Circuit

4. Second Option Circuit (hydraulic rotation fork)

As an example, this section explains the case in which the hydraulic rotation fork attachment is used.
By operating the 2nd option remote control valve to the right swing side, the pilot pressure oil is fed to the control valve Par2 port.
The 4th hydraulic pump OUT discharged oil is fed to the control valve Pr port, goes through the 2nd option spool and flows to the hydraulic rotation fork to operate to the right swing side.
The return oil from the hydraulic rotation fork goes through the 2nd option spool and returns to the hydraulic oil tank.
The oil in the 2nd option drain line returns to the hydraulic oil tank without going through the control valve.

1	Control valve	9	Oil cooler
2	Travel pilot pressure sensor	10	Hydraulic rotation fork
3	Upper side pilot pressure sensor	11	2nd option pilot pressure switch
4	Lever lock	12	Monitor display
5	5-stack solenoid valve	13	Computer
6	Console lever lock switch	14	4th pump
7	2nd option remote control valve	15	Hydraulic pump
8	Check		

https://truckmanualshub.com/

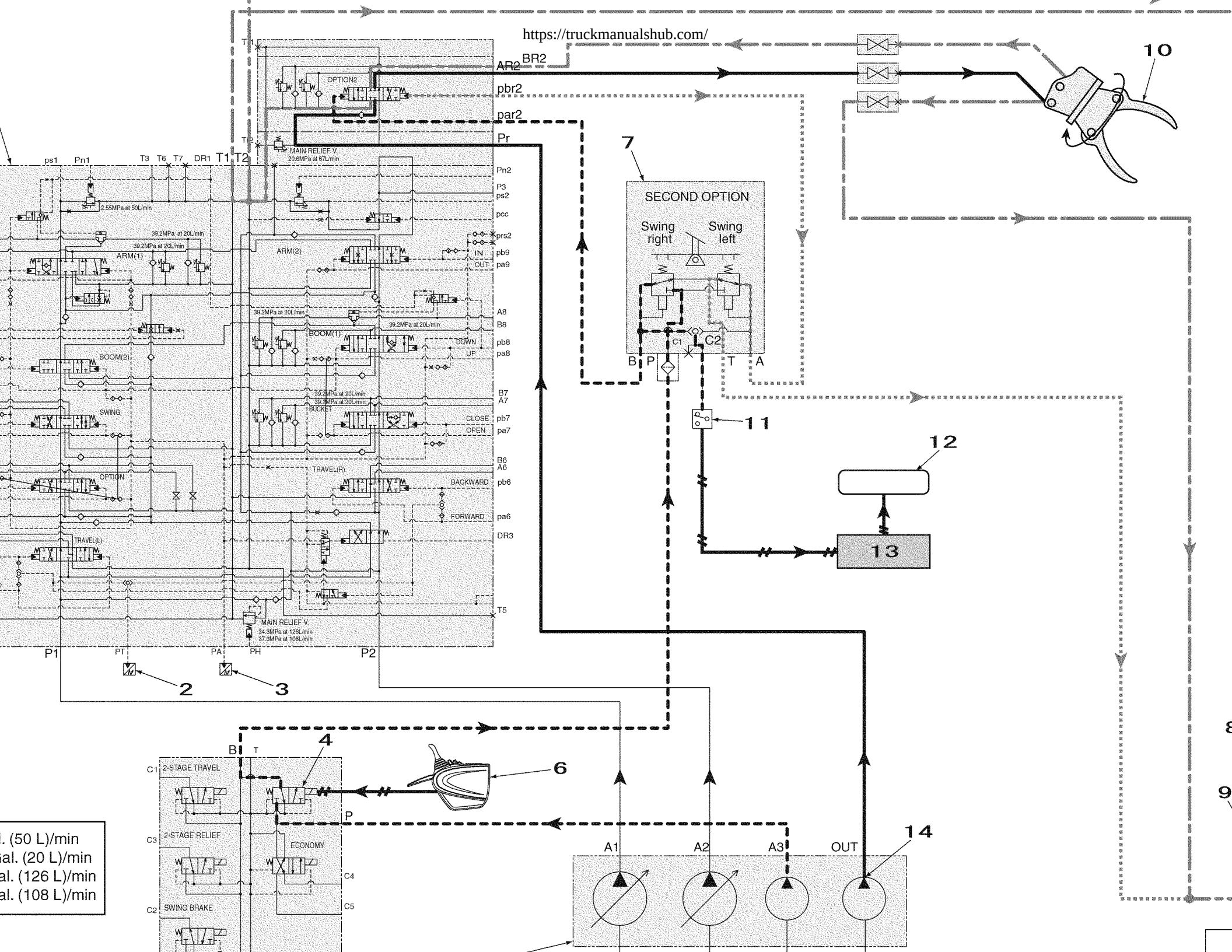

https://truckmanualshub.com/

Pump

1. Hydraulic Pump

(1) Explanation of structures and operations

This pump has a structure with two pumps positioned on the same shaft coupled with the 1st gear (116) and rotation force is distributed to different shafts by the gear structure. The two pumps are driven by transmitting the rotation of the power source to the front side drive shaft (111). Auxiliary pumps installed on different shafts can also be driven at the same time.

The pump can be roughly divided into the rotary group, which is the main part of the pump rotating, the swash plate group, which changes the discharge flow, the valve block group, which switches between oil suction and discharge, and the PTO group that transmits the gear pump drive shaft.

The rotary group is made up of drive shaft F (111), cylinder block (141), piston shoes (151, 152), retainer plate (153), sphere bushing (156), and cylinder spring (157). The drive shaft is is supported at both ends with bearings (123, 124). The shoe is caulked to the piston and forms the spherical joint, reduces the thrust force generated by the load pressure, and has a pocket section for balancing the hydraulic pressure for sliding lightly on the shoe plate (211). The piston shoe sub-group is pressed against the shoe plate by the cylinder spring via the retainer plate and spherical bushing so that it can slide smoothly on the shoe plate. Also, in the same way the cylinder block is pressed against the valve plate (313) by the cylinder spring.

The swash plate group comprises the swash plate (212), shoe plate (211), swash plate support base (251), tilt revolution bushing (214), tilt revolution pin (531), and servo piston (532). The swash plate is supported by the swash plate support base at the cylindrically shaped section formed by the opposite side of the shoe slide plate. By leading the hydraulic pressure force controlled by the regulator into the hydraulic pressure chambers on both sides of the servo position, the servo piston moves left and right. This moves the swash plate back and forth on the swash plate support base via the tilt revolution pin spherical section and changes the tilt revolution angle (α).

The valve block group comprises the valve block (312), valve plate (313), and valve plate pin (885). The valve plate, which has two hook-shaped ports, is installed on the valve block. Its function is to feed oil to the cylinder block and recover it from the cylinder block. The oil switched by the valve plate is connected through the valve block to the outside pipes.

Now when the drive shaft is driven by the power source (motor, engine, etc.), the cylinder block is also rotated at the same time via the spline coupling. When the swash plate tilts, the piston located at the center of the cylinder block moves reciprocally relative to the cylinder while turning with the cylinder block. Therefore, looking at one piston, while the cylinder block turns one rotation, the piston moves away from the valve plate (oil intake stroke) for 356 ºF (180 °C) of the cylinder block rotation, then moves toward the valve plate (oil discharge stroke) for the remaining 356 ºF (180 °C) When the swash plate tilt revolution angle is 0, the piston does not move through a stroke and oil is not discharged.

https://truckmanualshub.com/

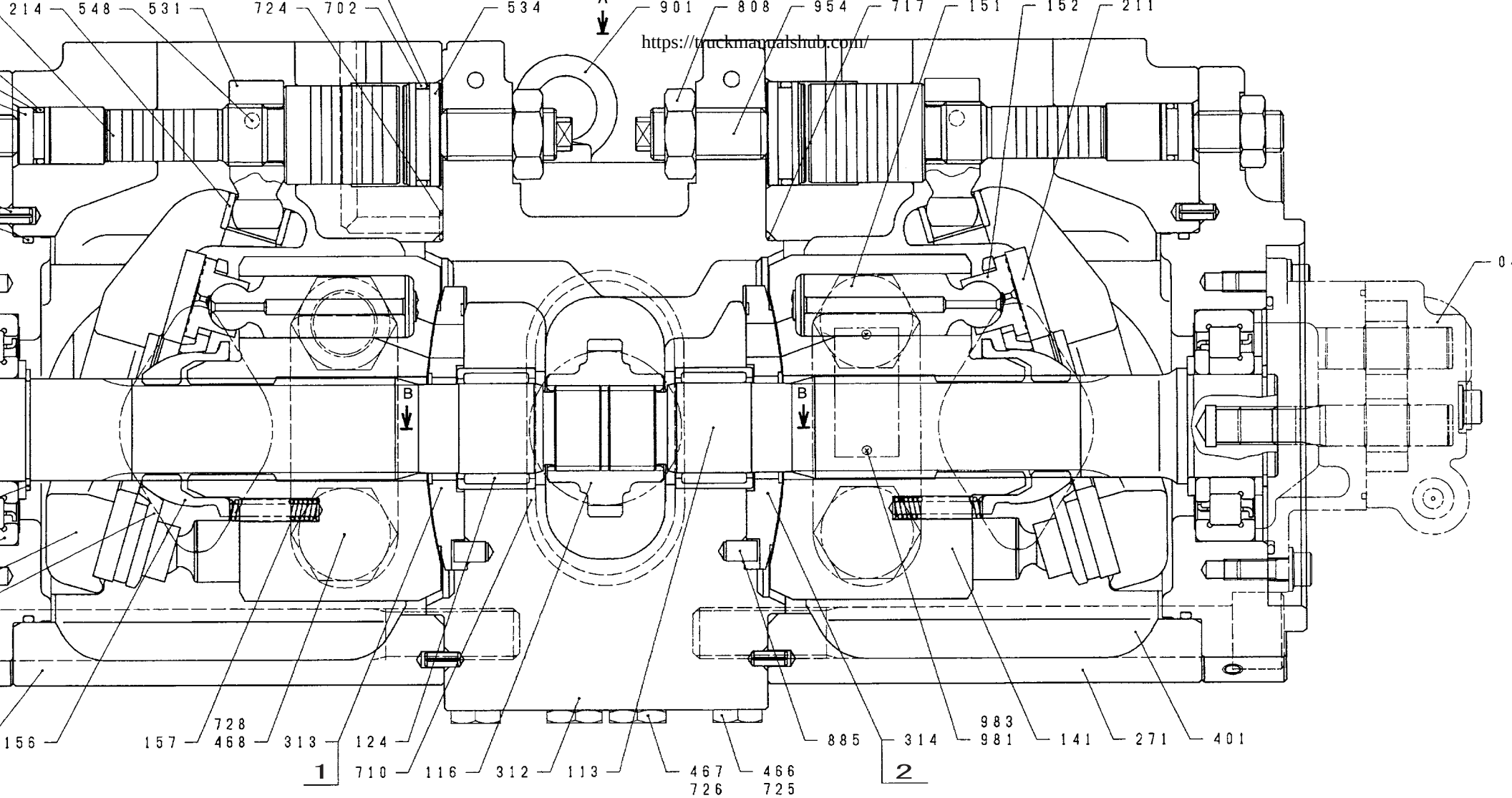

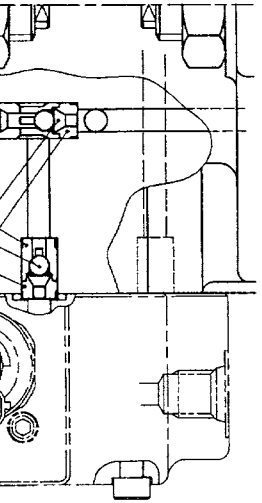

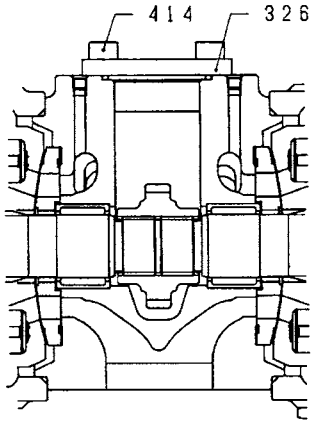

P-P section

1	Right rotation valve plate
2	Left rotation valve plate

Code	Part name	Q'ty	Component part number (quantities) or model
04	Gear pump	1 set	ZX10LBRZ1-07A-V
011	Piston, sub	2 set	151 (9PC), 152 (9PC)
013	Cylinder, sub (R)	1 set	141 (1PC), 313 (1PC)
014	Cylinder, sub (L)	1 set	141 (1PC), 314 (1PC)
030	Swash plate, sub	2 set	212 (1PC), 214 (1PC)
041	Check valve 1, sub	2 set	541 (1PC), 543 (1PC), 545 (1PC)

https://truckmanualshub.com/

2. Regulator

(1) Regulator operation explanation

[1] Flow control

- Operation explanation (See the Regulator operation explanation diagram.)

1) Flow control

The pump discharge flow is controlled as desired with the pilot pressure Pi as in the figure below.

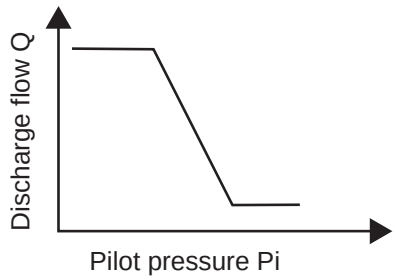

1. Reduced flow operation

When the pilot pressure Pi increases, the pilot piston (643) moves to the right and stops at the location where the pilot spring (646) force and hydraulic pressure force balance each other. The pin (875) fixed to lever 2 (613) fits into the crimped groove section of the pilot piston (643), so lever 2 rotates with the B section (fastened by the support plug (614) and pin (876)) as the support point. The pin (897) fixed to the feedback lever (611) projects into the large hole section (C section) of lever 2 (613), so as lever 2 (613) rotates, the pin (897) moves to the right. The pin (548) fixed to the tilt revolution pin (531) that moves the swash plate (212) fits with the feedback lever (611) two-surface width section (D section), so the feedback lever (611) is rotated by the movement of the pin (897) with the D section as the support point. Since the spool (652) is linked to the feedback lever (611) via the pin (874), the spool moves to the right (652).

When the spool (652) moves, the discharge pressure Pd1 is led to the servo piston large-bore chamber via the spool and CI port. The discharge pressure Pd1 is always led to the servo piston small-bore chamber. As a result, the servo piston is moved to the right due to the surface area difference and reduces the flow.

When the servo piston (532) moves to the right, the D section also moves to the right. The return spring (654) is mounted on the spool (652). Since force pulling the spool to the left is always operating, the pin (897) is pressed into the large hole section (C section) of lever 2 (613). Because of this, accompanying the D section movement, the feedback lever (611) rotates around the C section as the support point and the spool (652) moves to the left. Through this movement, the opening between the sleeve (651) and spool (652) gradually starts to open. At the location where it is completely closed, the servo piston (532) stops.

2. Increased flow operation

When the pilot pressure Pi decreases, the pilot piston (643) is moved to the left by the pilot spring (646) force and lever 2 (613) rotates with the B section as the support point. The pin (897) is pressed in the large hole section (C section) of lever 2 (613) by the return spring (654) via the spool (652), pin (874), and feedback lever (611), so accompanying rotation of lever 2 (613), the feedback lever (611) rotates with the D section as the support point and the spool (652) moves to the left.

When the spool (652) moves, the CI port opens to the tank port, so the pressure in the large-bore chamber of the servo piston drains out, the servo piston (532) is moved to the left by the discharge pressure Pd1 of the small-bore section and the flow increases.

Accompanying the movement of the servo piston (532), the D section moves to the left, the feedback lever (611) rotates with the C section as the support point and the spool (652) moves to the right. This operation continues until the opening between the spool (652) and sleeve (651) and closes and stops at the location where the opening is completely closed.

D

https://truckmanualshub.com/

3. High-pressure selection function
   For the pilot pressure Pi, which is a flow control signal, high pressure is selected from among the multiple command pressures via the shuttle valve sub (050) and the pressure is led.
   KR3G-9Y04-HV selects the higher pressure from Pi1 or the proportional valve 2nd pressure and KR3G-9X04-HV selects the higher pressure from Pi2 or the external command pressure P2.

[2] Horsepower control

1) Horsepower control
   As in the figure below, when the load pressure is increased, the pump tilt revolution angle is reduced to prevent power source over load. Since this regulator is the simultaneous all-horsepower control type, the tilt revolution angles (displacement volumes) of the two pumps are controlled to be the same value as in the following equation.
   $Tin = Pd1 \times q/2\pi + Pd2 \times q/2\pi = (Pd1 + Pd2) \times q/2\pi$
   (q: Displacement volume)
   Horsepower control operation is the same as for flow control. Below is a simple explanation.
   (For detailed operation of each part, see the Flow control item.)

1. Overload prevention operation
   When the self pump discharge pressure Pd1 or the partner pump discharge pressure Pd2 rises, since Pd1 and Pd2 operate on the stepped section of the compensation piston (621), the compensation rod is pressed to the right (623) and moves to the location where the force of the outer spring (625) and inner spring (626) balance out the hydraulic pressure. The movement of the compensation rod (623) is transmitted to lever 1 (612) through the pin (875) and lever 1 (612) rotates around the pin (876) (E section) fastened to the casing. The pin (897) fixed to the feedback lever (611) projects into the large hole section (F section) of lever 1 (612), so as lever 1 (612) rotates, the feedback lever (611) rotates with the D section as the support point and the spool (652) moves to the right.

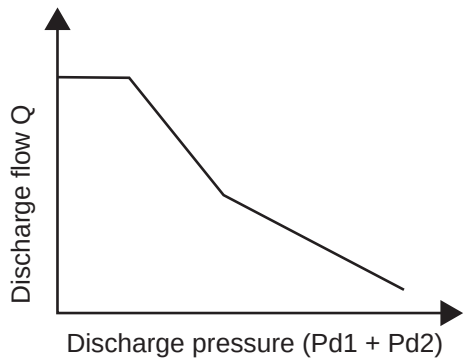

   When the spool (652) moves, the discharge pressure Pd1 is led to the large-bore chamber of the servo piston via the CI port, the servo piston (532) is moved to the right, and the pump discharge flow is decreased to prevent over load of the power source.
   The servo piston (532) movement is transmitted to the feedback lever (611) via the D section. The feedback lever (611) rotates with the F section as the support point and the spool (652) moves to the left. It moves until the opening between the spool (652) and sleeve (651) closes and stops at the location where the opening is completely closed.

2. Flow return operation
   If the self pump discharge pressure Pd1 or the partner pressure pump discharge pressure Pd2 decreases, the compensation rod (623) is pressed back by the outer spring (625) and the inner spring (626) and lever 1 (612) rotates about the E section. Accompanying the lever 1 (612) rotation, the feedback lever (611) rotates around the D section as the support point and the spool (652) moves to the left. Because of this, the CI port opens to the tank port, the servo piston large-bore section pressure drains off, the servo piston (532) moves to the left and the pump discharge flow increases.
   The servo piston (532) movement is transmitted to the spool (652) by the feedback structure and the operation continues until the opening between the spool (652) and sleeve (651) is closed.

https://truckmanualshub.com/

[3] Low tilt revolution (low flow) command priority structure
As above, the flow control and the pressure control tilt revolution command is transmitted to the feedback lever (611) and spool (652) via the large hole sections (C and F sections) of lever 1 (612) and lever 2 (613) , but since the C and F sections have a structure in which a pin (ÉŠ 5) projects into a large hole (ÉŠ 9), the pin (897) only contacts the lever that makes the tilt revolution smaller and the ÉŠ 9 hole for the lever on the side that has the larger tilt revolution command state does not contact the pin (897), but is free. With this type of mechanical selection method, the flow control and horsepower control low tilt revolution side command has priority.

[4] Power shift control (horsepower reduction control)
The pump set horsepower is controlled as desired with the power shift pressure Pf as in the figure below.
When the power shift pressure Pf increases, the compensation rod (623) is moved to the right via the pin (898) and the compensation piston (621), so the minimum horsepower setting for the pump tilt revolution angle is reduced the same as was explained for the operation to prevent overload. On the other hand, if the power shift pressure Pf is reduced, the horsepower setting rises.

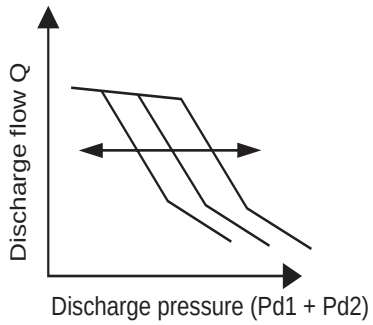

D

https://truckmanualshub.com/

(2) Regulator operation explanation diagram

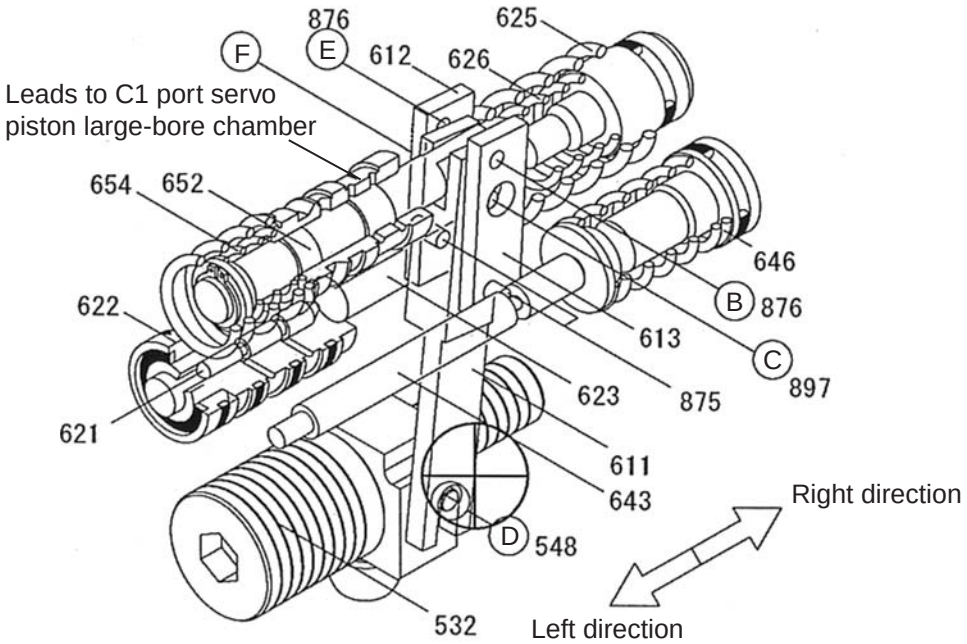

KR3G-9Y04-HV

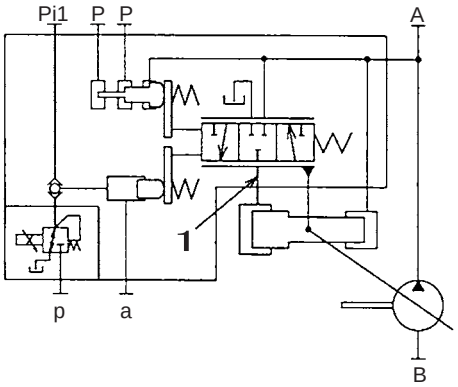

Hydraulic circuit diagram
Front side

KR3G-9X04-HV

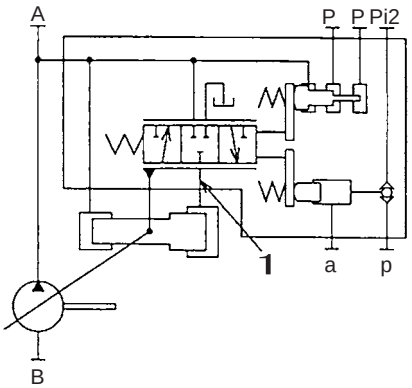

Hydraulic circuit diagram
Rear side

1	C1 port

https://truckmanualshub.com/

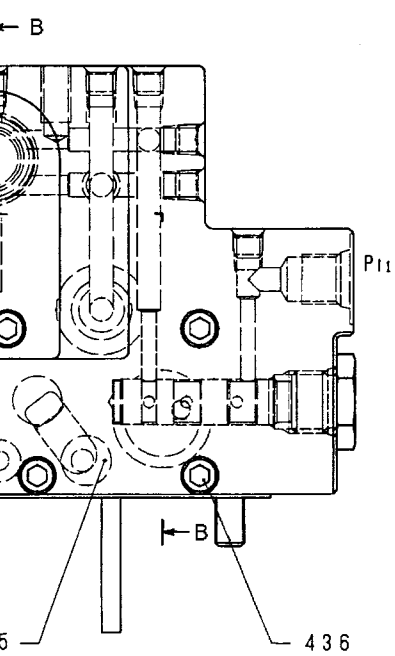

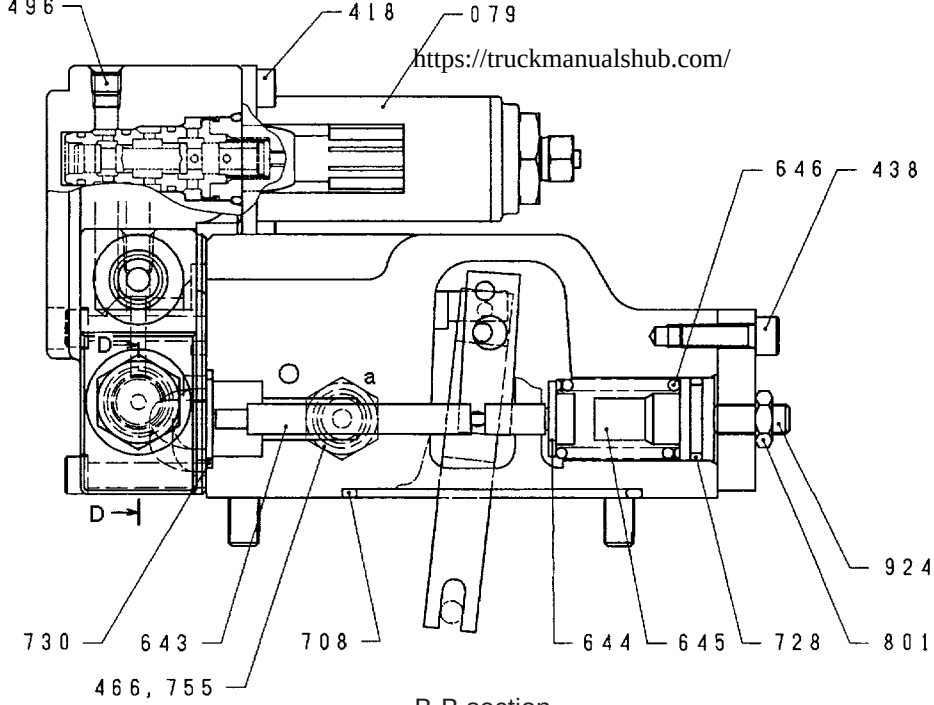

B-B section

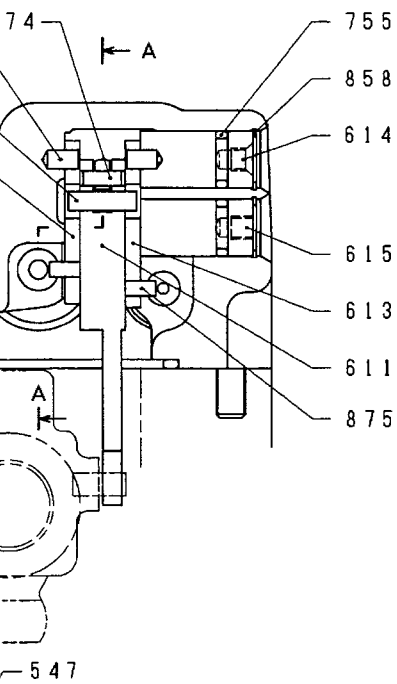

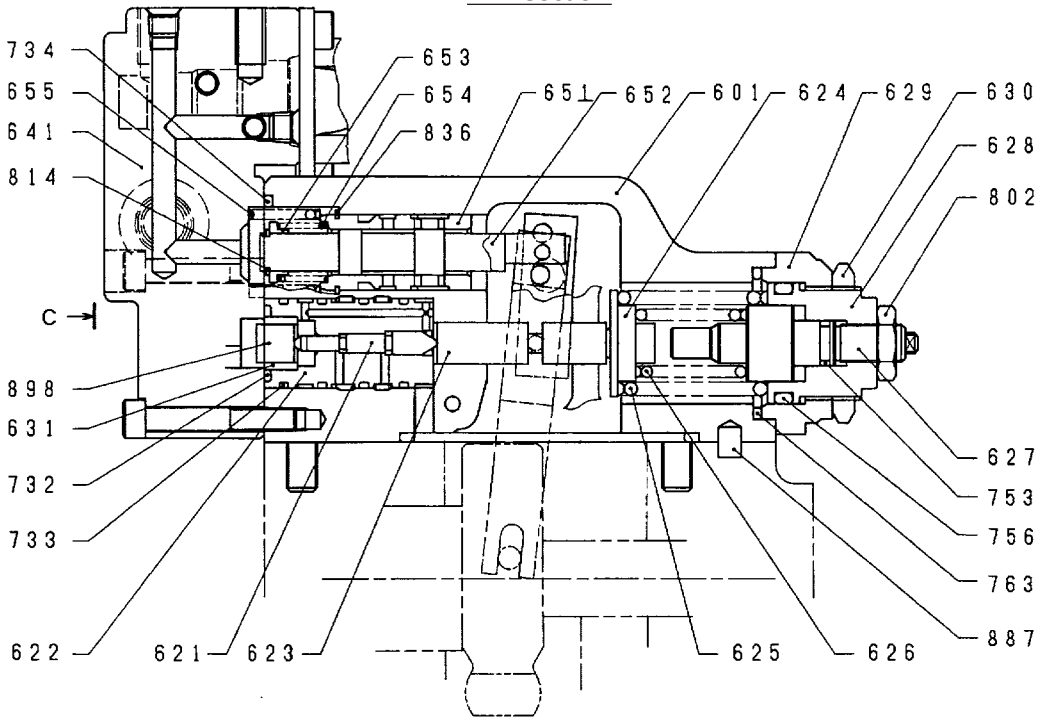

A-A section

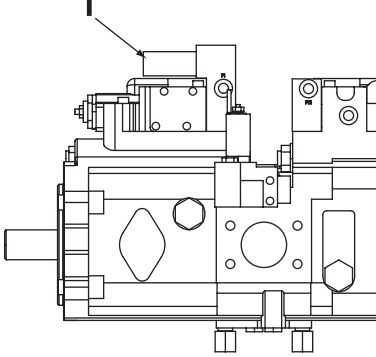

Code	Part name	Qty	Comp
050	Shuttle valve, sub	1st	545 (
079	Electromagnetic proportional pressure reduction valve	1st	KDRI

Code	Part name	Qty
-	Regulator, sub	1
412	Hexagon socket head bolt	2
413	Hexagon socket head bolt	2
418	Hexagon socket head bolt	2
436	Hexagon socket head bolt	4
438	Hexagon socket head bolt	8
466	VP plug	1
467	VP plug	1
496	Insert plug	12
545	Steel ball	1
546	Seat 1	1
547	Seat 2	1
601	Casing	1
611	Feedback lever	1
612	Lever 1	1
613	Lever 2	1
614	Support point plug	1
615	Adjusting plug	1
621	Compensation piston	1
622	Piston case	1
623	Compensation rod	1
624	Spring seating (C)	1
625	Outer spring	1
626	Inner spring	1
627	Adjusting ring (C)	1
628	Adjusting screw (C)	1
629	Cover (C)	1
630	Lock nut	1
631	Pf sleeve	1
641	Pilot cover	1
643	Pilot piston	1

Code
653
654
655
656
708
722
724
725
727
728
730
732
733
734
735
753
755
756
763
801
802
814
836
858
874
875
876
887
897
898
924

1	Front side regulator

https://truckmanualshub.com/

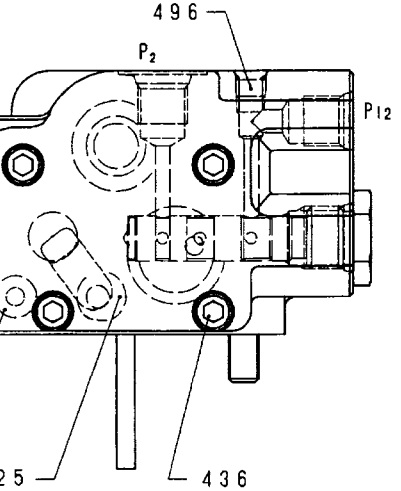

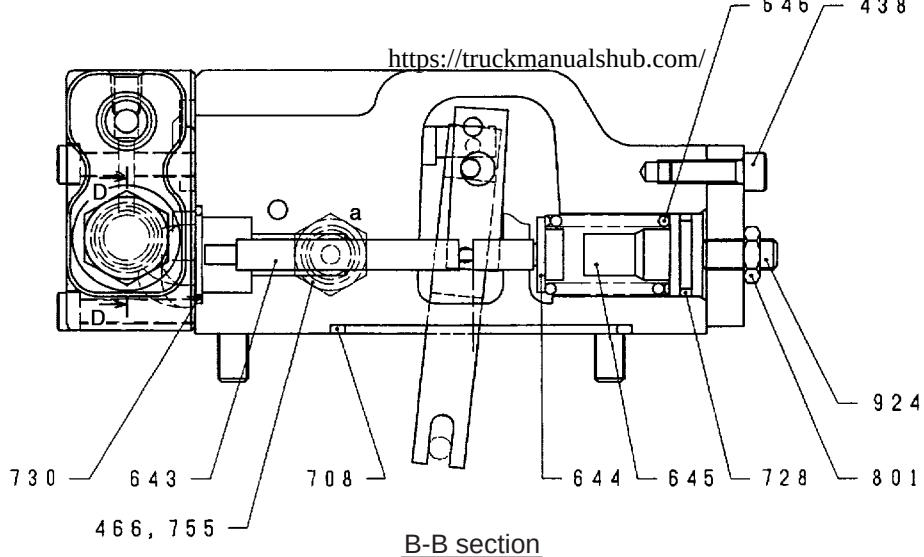

B-B section

Code	Part name	Qty	Com
050	Shuttle valve, sub	1st	545

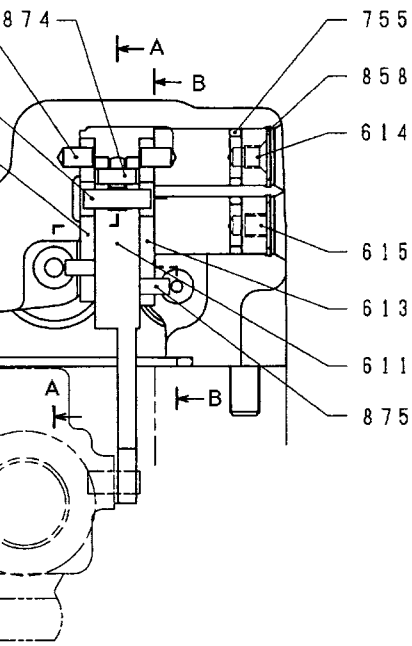

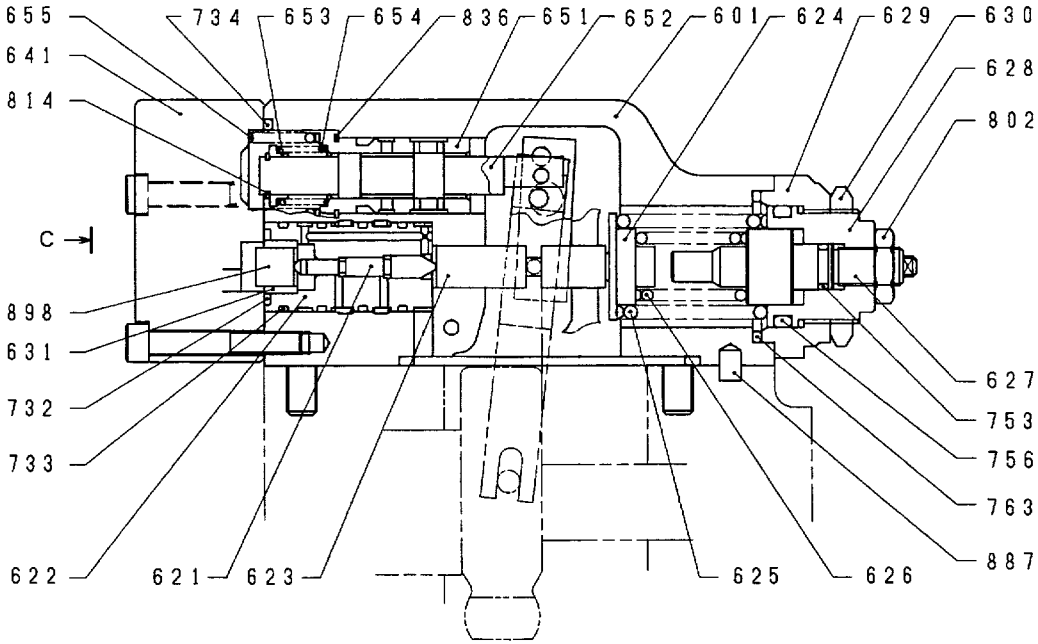

A-A section

Code	Part name	Qty
-	Regulator, sub	1
412	Hexagon socket head bolt	2
413	Hexagon socket head bolt	2
436	Hexagon socket head bolt	4
438	Hexagon socket head bolt	8
466	VP plug	1
467	VP plug	1
496	Insert plug	6
545	Steel ball	1
546	Seat 1	1
547	Seat 2	1
601	Casing	1
611	Feedback lever	1
612	Lever 1	1
613	Lever 2	1
614	Support point plug	1
615	Adjusting plug	1
621	Compensation piston	1
622	Piston case	1
623	Compensation rod	1
624	Spring seating (C)	1
625	Outer spring	1
626	Inner spring	1
627	Adjusting ring (C)	1
628	Adjusting screw (C)	1
629	Cover (C)	1
630	Lock nut	1
631	Pf sleeve	1
641	Pilot cover	1
643	Pilot piston	1
644	Spring seating (Q)	1

Code
654
655
656
708
722
724
725
727
728
730
732
733
734
735
753
755
756
763
801
802
814
836
858
874
875
876
887
897
898
924

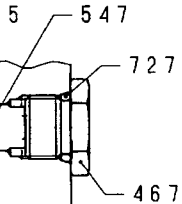

https://truckmanualshub.com/

3. Gear Pump

(1) Gear pump internal structure diagram

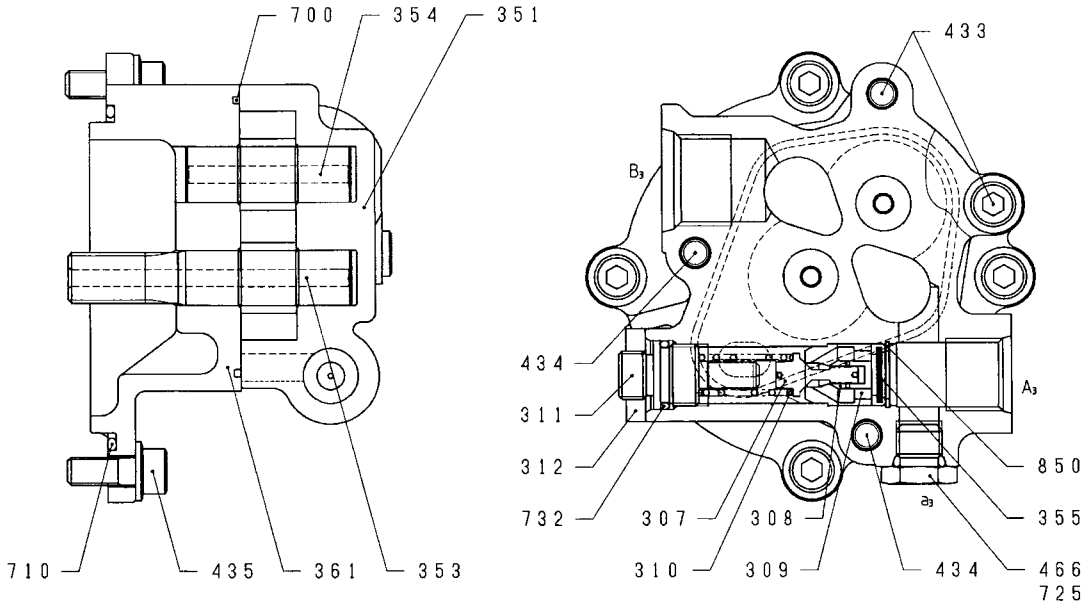

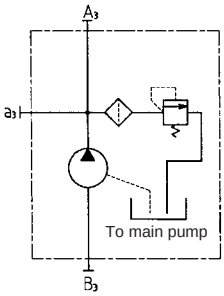

Hydraulic circuit diagram

Code	Part name	Qty	Component part number (quantities) and model
350	Gear case, sub	1st	307 (1PC) , 308 (1PC) , 351 (1PC) 353 (1PC) , 354 (1PC) , 361 (1PC)

Code	Part name	Q'ty
307	Poppet	1
308	Seat	1
309	Ring	1
310	Spring	1
311	Adjusting screw	1
312	Lock nut	1
351	Gear case	1
353	Drive gear	1
354	Driven gear	1
355	Filter	1

Code	Part name	Q'ty
361	Front case	1
433	Flange socket	2
434	Flange socket	2
435	Flange socket	4
466	VP plug	1
700	Angle ring	1
710	O-ring	1
725	O-ring	1
732	O-ring	1
850	Locking ring	1

(2) Explanation of structures and operations

Structure

The casing comprises the front case (361) and gear case (351). Inside the casing are installed the drive gear (353) and driven gear (354) pair and the relief valve for setting the discharge pressure.

The relief valve comprises the filter (355), poppet (307), seat (308), spring (310), ring (309), adjusting screw (311), and lock nut (312).

In order to prevent oil leaking to the outside, an angle ring (700) and O-ring (710) are mounted on the front case (361).

Operation

Suctioned in from suction port B_3 is discharged from discharge port A_3 by the drive and driven gears.

The discharged oil is held at the set pressure of 566 PSI (3.9 MPa) by the relief valve.

Unnecessary discharge oil is drained from the drain port via the relief valve.

https://truckmanualshub.com/

Motor

1. Travel Motor

(1) Travel motor operation explanation

1) Structural diagram

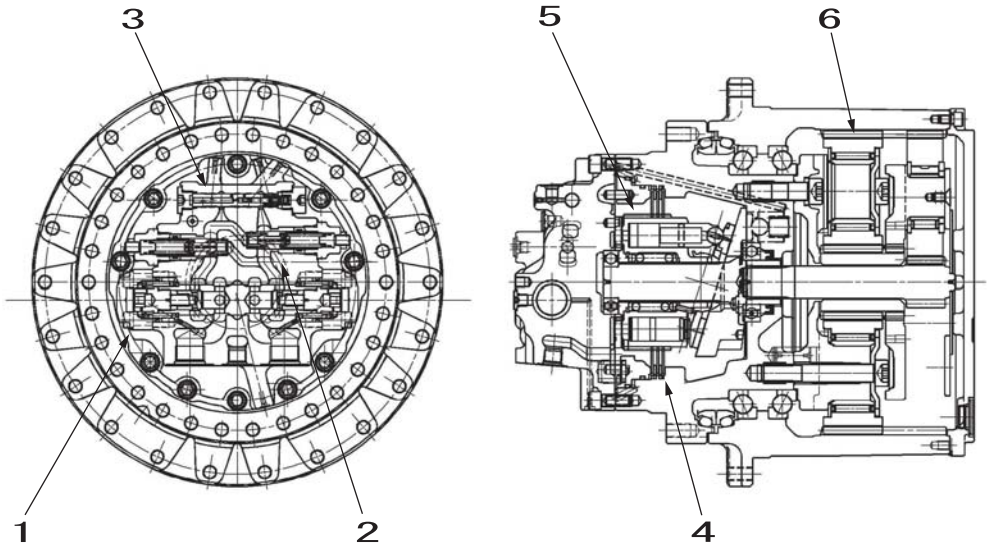

Figure 1 Motor structural diagram

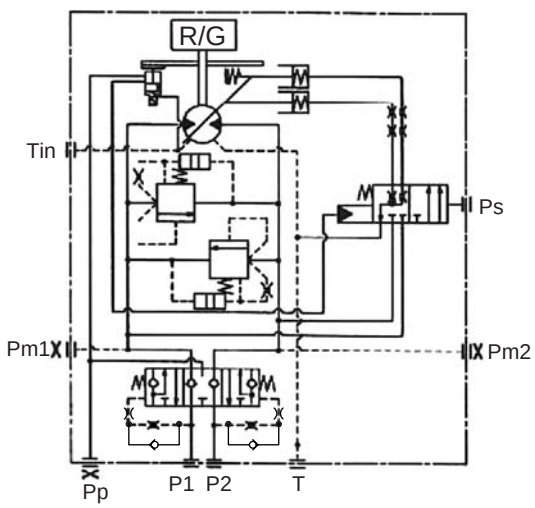

Automatic 2-speed type
Figure 2 Hydraulic circuit diagram

1	Double counter balance valve	4	Parking brake
2	Crossover relief valve	5	Piston motor
3	2-speed switching mechanism	6	Reduction gear

https://truckmanualshub.com/

2) Structure

The swash plate type piston motor with case rotation type reduction gear for the open circuit comprises

[1] the double counter balance valve for controlling the speed of the motor according to the feed flow

[2] the crossover relief valve for determining the motor drive force and braking force

[3] the 2-speed switching mechanism for switching the motor speed between two speeds, low speed and high speed

[4] the parking brake function that locks the motor shaft with a mechanical brake when the motor is stopped,

[5] the piston motor that converts the fluid energy of the pressurized oil sent from the hydraulic pump into mechanical energy and outputs high-speed, low-torque power

[6] the reduction gear that converts the high-speed, low-torque power output from the piston motor into low-speed, high-torque power and outputs it

The fluid energy of the pressurized oil sent from the hydraulic pump is converted into mechanical energy by the piston motor and the high-speed, low-torque rotation power is transmitted to the reduction gear.

At the reduction gear, the rotation power transmitted from the piston motor is converted into low-speed, high-torque rotation power and this power is transmitted to the devices that use the MAG-170VP-3800G series for this open circuit.

Structure functions

[1] Double counter balance valve

The purpose of this valve is to control the speed of the motor according to the feed flow. Therefore, motor rotation getting away due to external load is prevented.

[2] Crossover relief valve

The purpose of this valve is to determine the motor drive force and braking force. Therefore, this valve has a shockless function to soften the shock of motor starting and stopping and provide good operability. Also, this valve is formed into one compact unit with the double counter balance valve to make up the brake circuit.

[3] 2-speed switching mechanism

This motor has a 2-speed switching mechanism that can switch the motor speed between two speeds, low speed and high speed.

Automatic 2-speed function

The low-speed mode fixed position and automatic 2-speed position can be selected. When the automatic 2-speed position is selected, the motor capacity is selected according to the motor load pressure and the motor is switched automatically between low speed and high speed.

[4] Parking brake

The parking brake function is built into the piston motor. When the motor is stopped, the mechanical brake operates to prevent the motor from being rotated by external load.

[5] Piston motor

A swash plate type piston motor is used as the piston motor. This piston motor converts the fluid energy of the pressurized oil sent from the hydraulic pump into mechanical energy and outputs high-speed, low-torque power.

[6] Reduction gear

As the reduction gear structure, a simple planetary two-stage reduction gear structure of the casing rotation type is used. This reduction gear converts the high-speed, low-torque power output from the piston motor into low-speed, high-torque power and outputs it from the reduction gear casing.

Also, a floating seal is used to prevent mud, sand, water, etc. from infiltrating from the outside.

The component devices above are formed into one compact unit that provides high reliability and superior performance.

https://truckmanualshub.com/

3) Explanation of operation of functions

a) Double counter balance valve

As the roles of the double counter balance valve, there are

[1] the overrun prevention function that controls the piston motor speed to match feed quantity in the state of rotation at or higher than the speed determined by the flow feed from the piston motor for the external load (below, pumping action),

[2] the brake function used together with the crossover relief valve to make up the brake circuit that gradually stops the rotation of the piston motor by applying braking force to the piston motor rotation,

[3] high-pressure selection shuttle valve function for releasing the parking brake through its own pressure

Figure 3 shows a structural diagram of the standard double counter balance valve.

This section explains the operations of each function using this standard double counter balance valve.

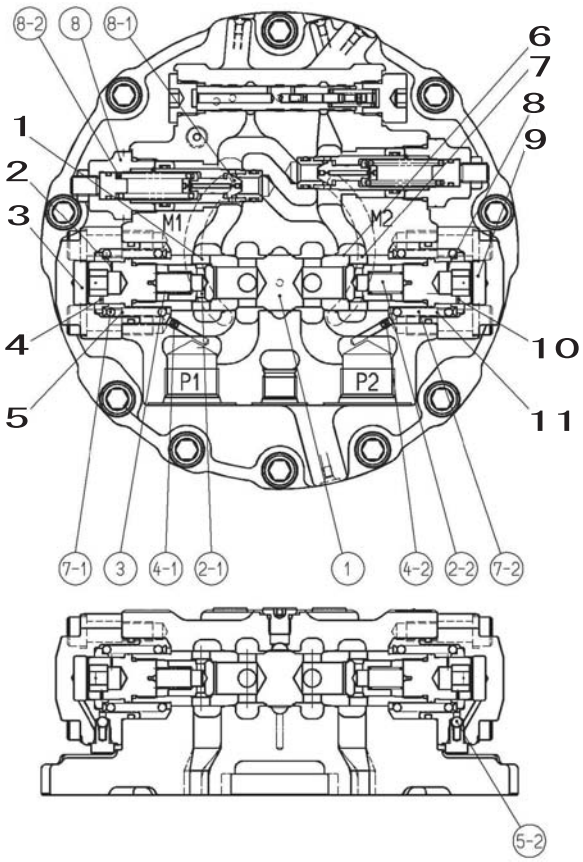

Figure 3 Double counter balance valve structural diagram (stopped state)

1	Oil path C1	5	Spring chamber 1	9	Damper chamber A2
2	Orifice D1	6	Oil path B	10	Orifice D2
3	Damper chamber A1	7	Oil path C2	11	Spring chamber 2
4	Orifice D2	8	Orifice D3		

A.Stopped state (Figure 3)

When the control valve is in neutral (the motor stopped), since pressure is generated at neither the P1 port nor the P2 port, the M1 and M2 ports are locked (hydraulically) with the spool (1) and the check valve (2) and the piston motor does not rotate.

https://truckmanualshub.com/

B. Motor starting (Figure 4)

When the pressurized oil discharged from the hydraulic pump is led to the double counter balance valve P1 port, the check valve (2-1) moves to the left against the spring (3), the oil path C1 is opened, pressurized oil flows from the M1 port into the piston motor and attempts to rotate the piston motor.

On the other hand, the return oil from the piston motor, flows from the M2 port into the double counter balance valve, but the flow is prevented by the check valve (2-2) and the hydraulic pump discharge pressure rises.

Therefore, the P1 port side goes to high pressure, the pressurized oil operates through the orifice (4-1) and the ball check (5-1) on the spring chamber 1 and the damper chamber A1, and that oil pressure moves the plunger (1) to the right against the opposite side spring (7-2) with force proportional to the pressure.

At this time, the M2 port return oil flows through the oil path B in the circumferential notch section of the plunger (1) and into the P2 port while generating back pressure at the M2 port and this return oil returns to the tank through the control valve and the piston motor starts rotating.

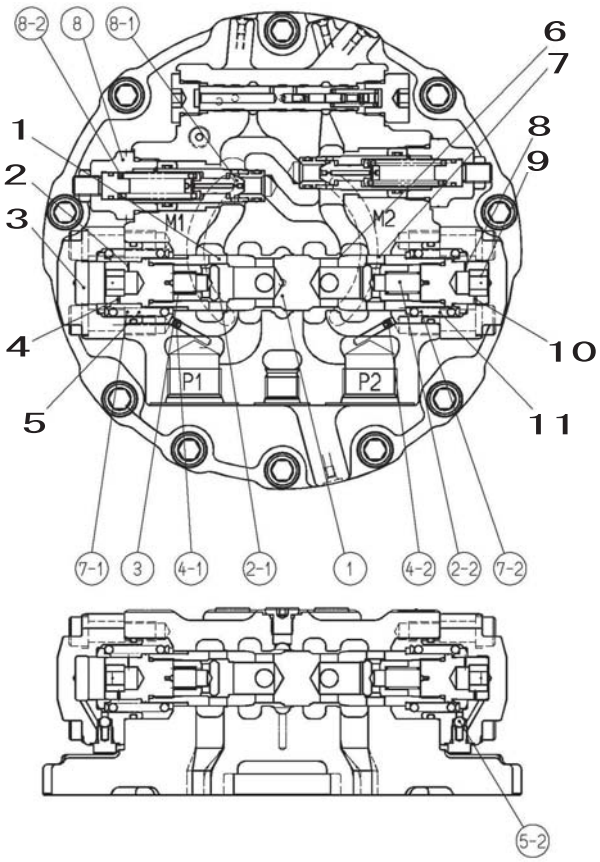

Figure 4 Double counter balance valve when motor rotating

1	Oil path C1	5	Spring chamber 1	9	Damper chamber A2
2	Orifice D1	6	Oil path B	10	Orifice D2
3	Damper chamber A1	7	Oil path C2	11	Spring chamber 2
4	Orifice D4	8	Orifice D3		

https://truckmanualshub.com/

C. Counter balance function (Figure 4)

During piston motor rotation, if the piston motor is forced to rotate by the external load, pumping action occurs in the piston motor, and it runs wild. In this case, since the P1 port section becomes the suction side of the pump action, that pressure drops. At the same time, the pressure also drops in the spring chamber 1 and the damper chamber A1. Therefore, the plunger (1) is moved to the left by the spring (7-2), oil path B is closed, and when the return oil flow stops, the suction side flow stops at the same time.

When the flow of oil through oil path B is stopped, in an instant, the P1 port side pressure rises again due to the hydraulic pump discharge oil and this moves the plunger (1) to the right.

In this way, the plunger (1) moves in small steps when there is pumping action due to the external load to hold the opening surface area of oil path B in an appropriate state. Therefore, rotation of the piston motor at a speed appropriate to the feed flow from the hydraulic pump is maintained and vacuum in the hydraulic circuit is prevented. This prevents the piston motor from running wild.

D. Piston motor braking (Figure 5)

The double counter balance valve makes up the brake circuit together with the crossover relief valve.

When the control valve is returned to neutral, the pressurized oil from the hydraulic pump is cut off and the P1 and P2 ports go to the same pressure. Therefore, the plunger (1) moves to the neutral position, and the oil path B opening surface area becomes small.

On the other hand, because the piston still attempts to rotate due to the inertial energy of the external load (piston motor pumping action), the M2 port pressure rises and acts as a braking force on the rotation of the piston motor.

At this time, when the M2 port side pressure reaches the set pressure for the relief valve (8), the M1 port side poppet (8-1) moves to the left against the spring (8-2) and the pressurized oil escapes to the M1 port side. In this way, the shock pressure due to the M2 port side inertial energy is controlled and at the same time the occurrence of a vacuum on the M1 port side is prevented.

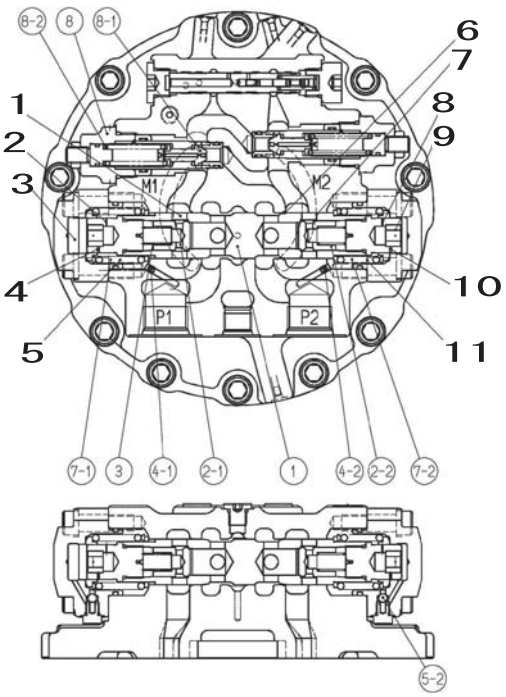

Figure 5 Double counter balance valve and relief valve during piston motor control

1	Oil path C1	5	Spring chamber 1	9	Damper chamber A2
2	Orifice D1	6	Oil path B	10	Orifice D4
3	Damper chamber A1	7	Oil path C2	11	Spring chamber 2
4	Orifice D2	8	Orifice D3		

https://truckmanualshub.com/

E. High-pressure selection shuttle valve function (Figure 6 and Figure 7)

The double counter balance valve has a high-pressure selection shuttle valve function added for releasing the parking brake through its own pressure.

When pressurized oil is fed from the P1 port, the plunger (1) moves to the right side creating the state in Figure 6. Therefore, the motor case drain oil path F is closed, the oil path D to the parking brake cylinder chamber E is opened, the pressurized oil is led into oil path G via the orifice and flows into the parking brake cylinder chamber E, releasing the parking brake.

Also, when the piston motor stops, the plunger (1) returns to the neutral state of Figure 7, the oil path D closes, and the motor case oil path F opens, so the oil in the parking brake cylinder chamber E is led to the motor case drain and the parking brake operates.

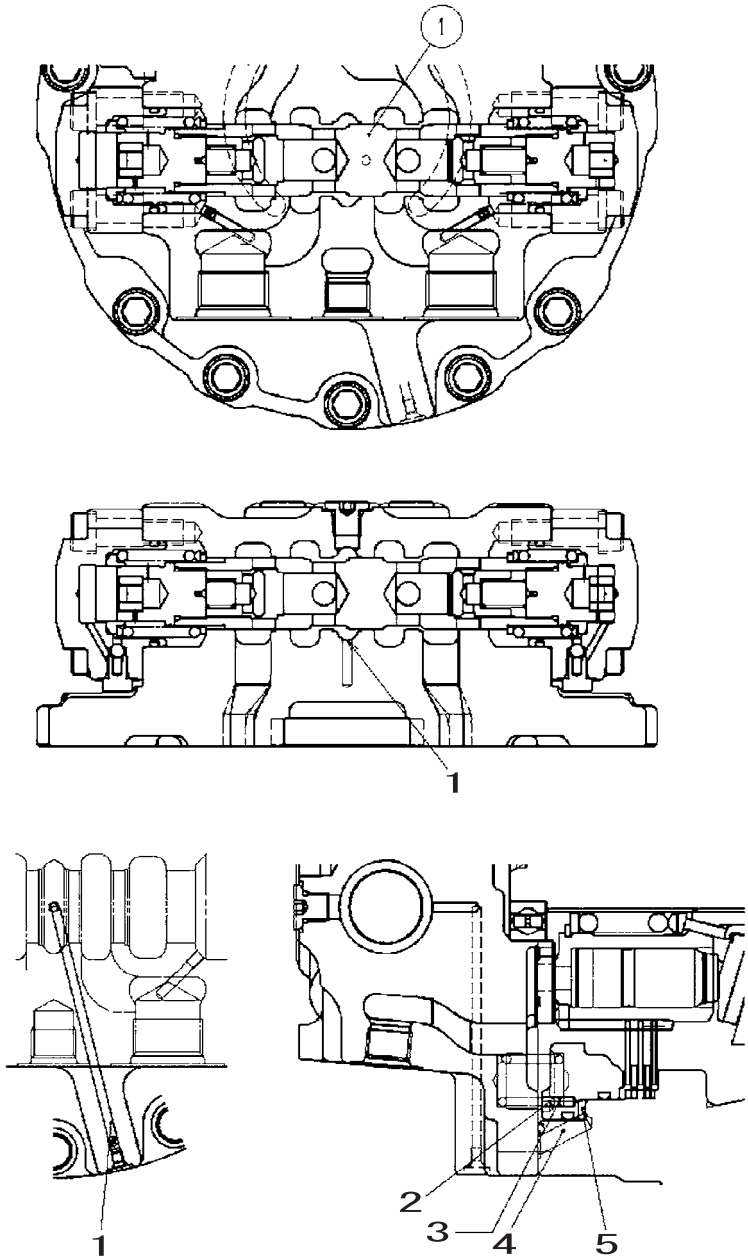

Figure 6 High-pressure selection function High-pressure selection

1	Oil path D	4	Oil path G
2	Oil path F	5	Cylinder chamber E
3	Orifice		

https://truckmanualshub.com/

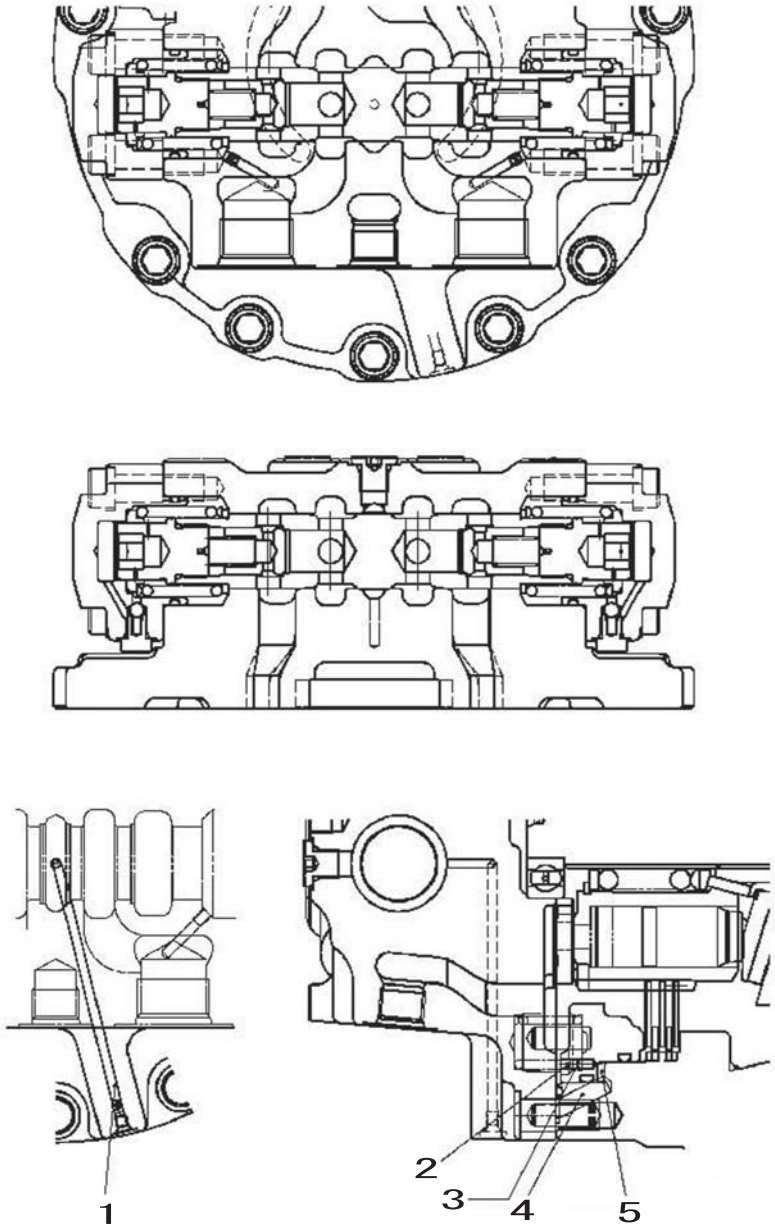

Figure 7 High-pressure selection function Release to motor case drain

1	Oil path D	4	Oil path G
2	Oil path F	5	Cylinder chamber E
3	Orifice		

https://truckmanualshub.com/

b) Crossover relief valve

Figure 8 shows the structure of the relief valve. This relief valve has a shockless function for reducing the shock that occurs at the start of startup and braking of the differential surface area type direct action relief valve.

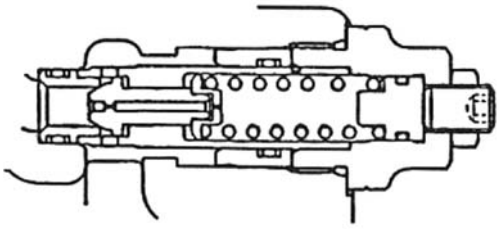

Figure 8 Structure of relief valves

A.Relief valve operation and functions (Figure 9)

When the control valve moves and the piston motor is started up or braked, when the poppet (2-9-2) front surface pressure rises above the set pressure, this pressure wins out over the spring (2-9-5), the poppet (2-9-2) moves to the right and separates from the poppet (2-9-3), and the high-pressure oil at the poppet (2-9-2) front surface bypasses to the low-pressure oil path. In this way, by allowing the high-pressure oil to bypass to the low-pressure oil path, the shock pressure due to the inertial energy of the high-pressure oil path is controlled and at the same time the occurrence of a vacuum in the low-pressure oil path is prevented.

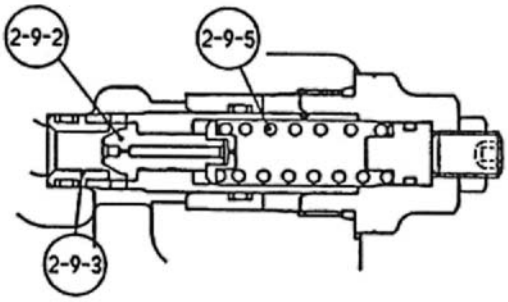

Figure 9 Operation of relief valves

B. Shockless function (Figure 10)

When the relief valve starts to operate, the shockless piston (2-9-2) moves to the left. Therefore, inside the spring chamber D, the pressure is held low. Therefore, the surface of the poppet (2-9-2) pressurized area becomes S1, a quite large pressurized area compared to the pressurized area S1-S2 for the normal relief valve setting.

Therefore, while the shockless piston (2-9-9) movement is completing, the relief valve operating pressure is held to about 1/3 of the normal set pressure, absorbing the shock pressure due to the inertial energy of the high-pressure oil path.

When the shockless piston movement is complete, the pressure inside the spring chamber D rises, the pressure in front and behind the poppet (2-9-2) become equal, and the relief valve operates with its normal set pressure.

Operating the relief valve in two stages in this way reduces the shock that occurs when the piston motor is started or braked and provides good operability. Figure 10 compares the pressure waveforms of the conventional type and the shockless type.

https://truckmanualshub.com/

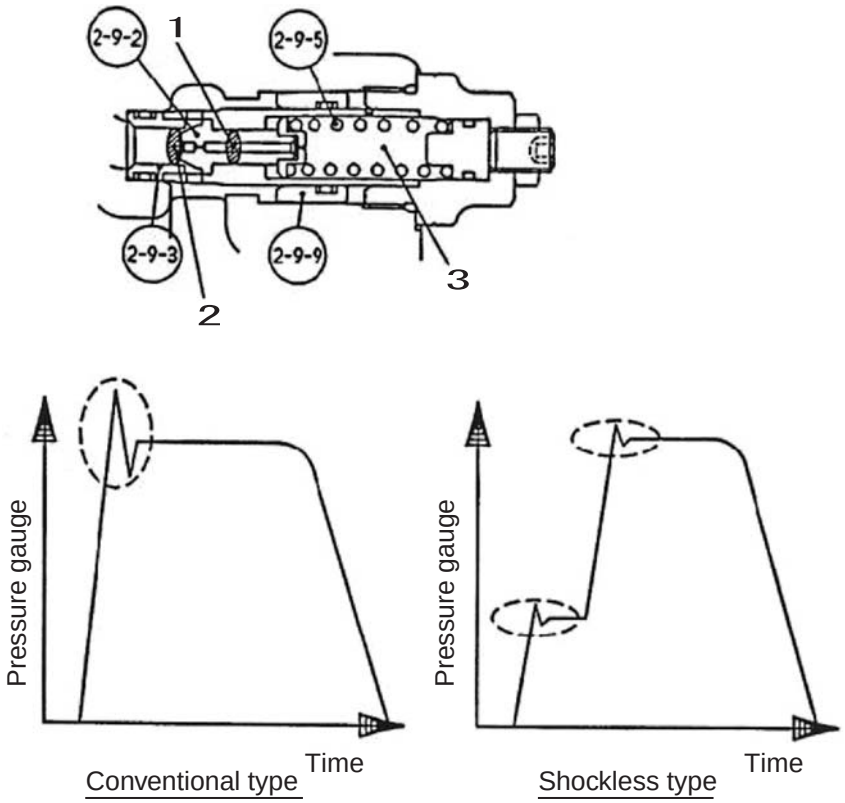

Figure 10 Shockless function and pressure wave comparison

1	Area S2
2	Area S1
3	Spring chamber D

https://truckmanualshub.com/

c) Automatic 2-speed function

A. Motor low-speed (high-capacity) position

Figure 11 shows the state with the motor capacity fixed to the low-speed (high-capacity) position. When the speed control switch is set to low speed and the pilot pressure acting on the Ps port is released to the tank, the motor capacity control valve built into the motor is fixed to the low-speed (high-capacity) position.

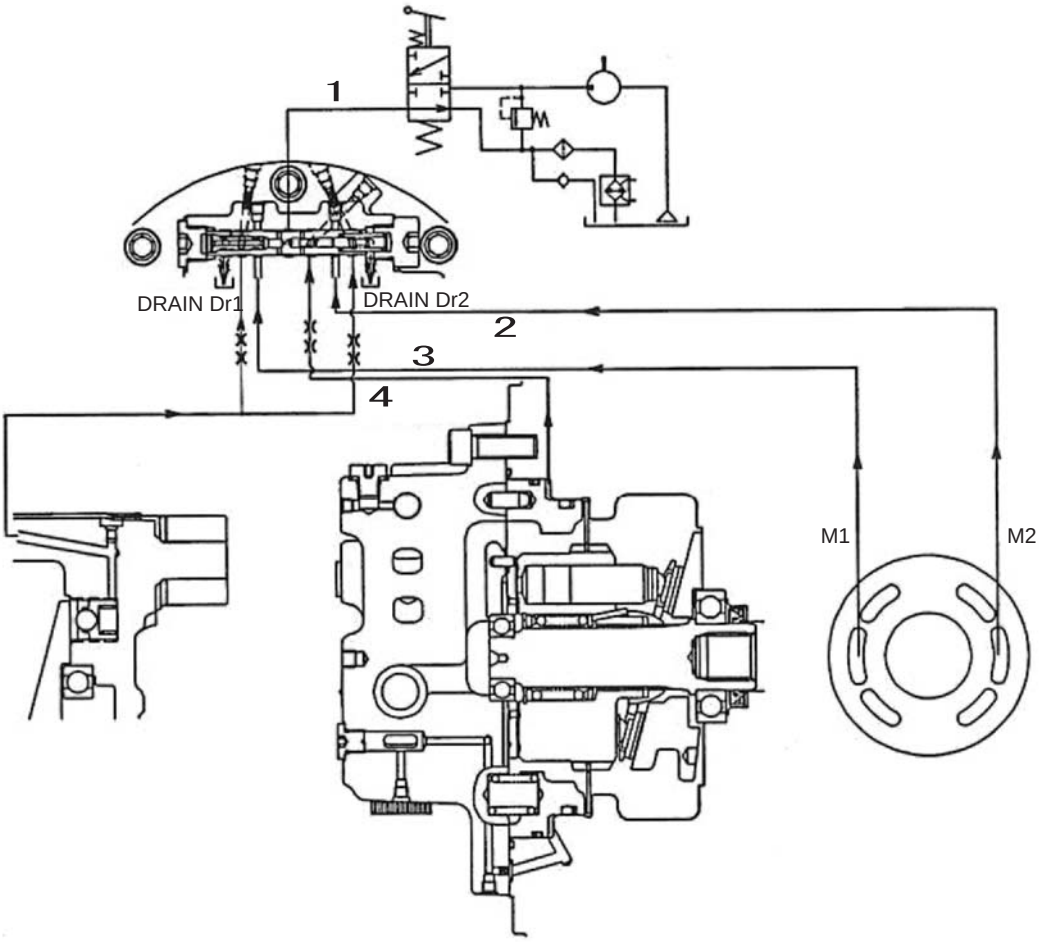

Figure 11 Motor low-speed (high-capacity) fixed mode

1	Pilot pressure
2	Pm2 pressure in motor
3	Pm1 pressure in motor
4	Pin motor load pressure

https://truckmanualshub.com/

B. Automatic 2-speed position that selects the motor capacity according to the load pressure

Figure 12 shows the state of the automatic 2-speed position that selects the motor capacity according to the load pressure.

When the speed control switch is set to high speed and the regulation pressure is allowed to operate on the Ps port, the pressurized oil operating on the Ps port operates on the front surface of the motor capacity control valve built into the motor and the position becomes the automatic 2-speed position that switches the motor capacity according to the load pressure on the motor.

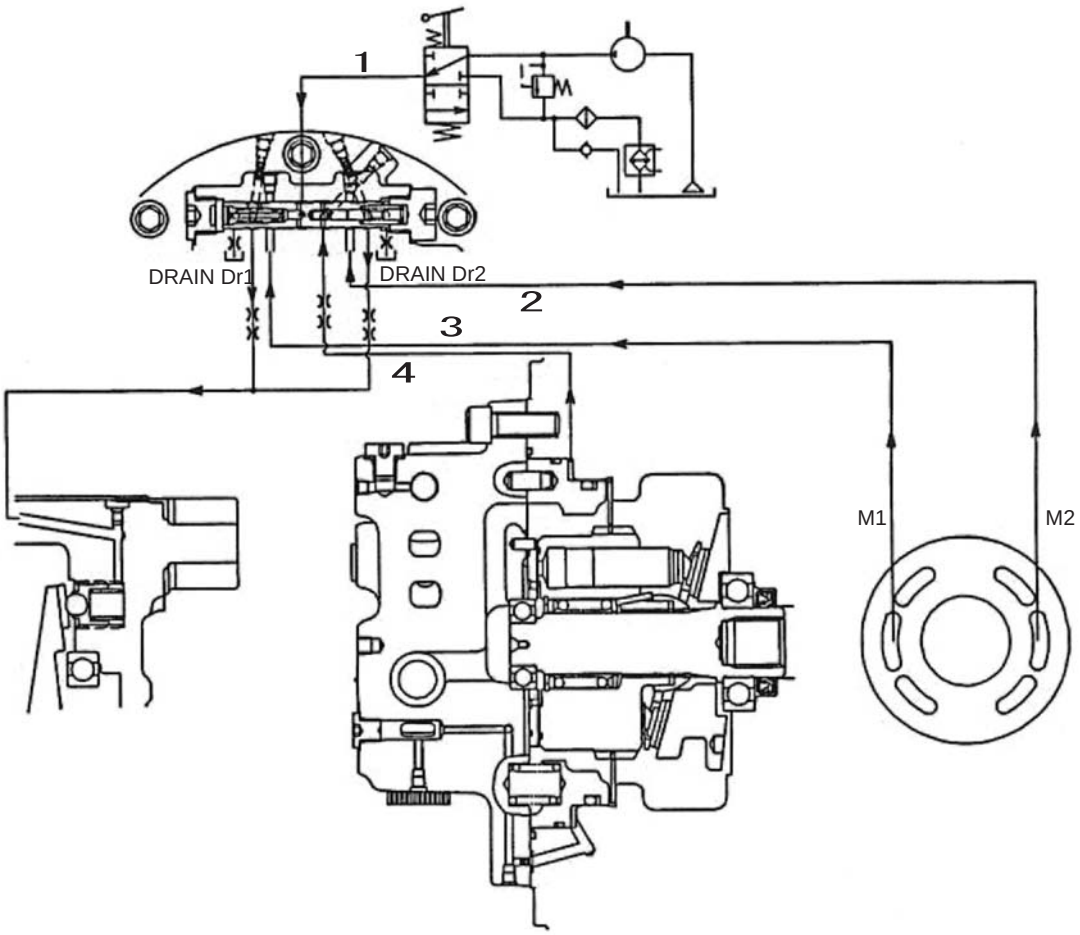

Figure 12 Automatic 2-speed control mode using load pressure

1	Pilot pressure
2	Pm2 pressure in motor
3	Pm1 pressure in motor
4	Pin motor load pressure

https://truckmanualshub.com/

C. High-speed motor state for automatic 2-speed position

Figure 13 shows the high-speed motor state for the automatic 2-speed position.

When the regulation pilot pressure is allowed to operate on the Ps port, the pilot pressurized oil operates on the pilot hydraulic chamber on the motor capacity control valve front surface via oil path A and this pushes the motor capacity control valve to the right. Also, the load pressure Pin on the motor operates on the motor load pressure chamber via oil path B and pushes the motor capacity control valve to the left. When Pin is lower than the motor capacity control pressure P determined by the ratio of the pilot pressure pressurized area and the motor load pressure pressurized area, the motor capacity control valve is held in the state in Figure 13 and the motor operates in high-speed (low-capacity) mode.

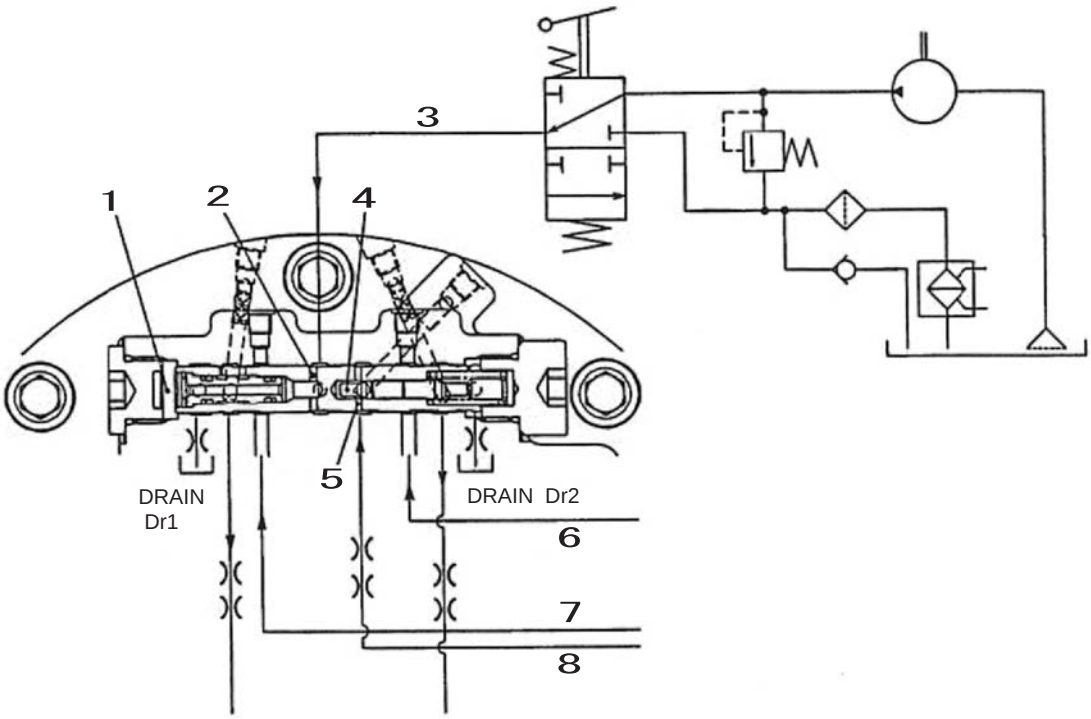

Figure 13 Motor high-speed (low-capacity) position for automatic 2-speed mode

1	Pilot oil pressure chamber	5	Oil path B
2	Oil path A	6	Pm2 pressure in motor
3	Pilot pressure	7	Pm1 pressure in motor
4	Motor load pressure chamber	8	Pin motor load pressure

https://truckmanualshub.com/

D. Low-speed motor state for automatic 2-speed position

Figure 14 shows the low-speed motor state for the automatic 2-speed position.

When the load pressure Pin on the motor rises and becomes higher than the motor capacity control pressure P discussed above, the motor capacity control valve moves to the left, switching the motor to low-speed (high-capacity) mode, so the motor operates at low speed.

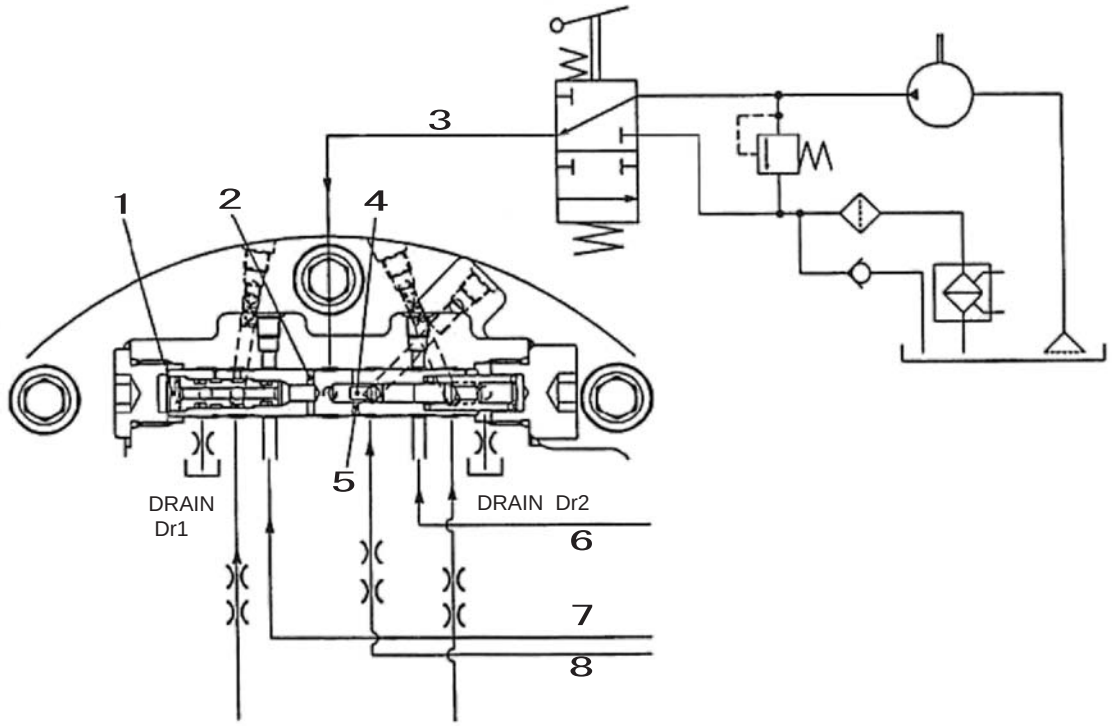

Figure 14 Motor low-speed (high-capacity) position for automatic 2-speed mode

1	Pilot oil pressure chamber	5	Oil path B
2	Oil path A	6	Pm2 pressure in motor
3	Pilot pressure	7	Pm1 pressure in motor
4	Motor load pressure chamber	8	Pin motor load pressure

https://truckmanualshub.com/

d) Parking brake function

Figure 15 shows a structural diagram of the parking brake section.
The parking brake is made up of the disks (1) coupled with the cylinder block, the friction plate (2) mounted between the disks, the brake piston (3), and the spring (4) that applies force to the brake piston.

A. Releasing the parking brake (Figure 15)

When pressurized oil is fed from the P1 port and attempts to start driving the piston motor, when the "high-pressure selection shuttle valve function" explained in Item E of (3) 1) "Double counter balance valve" leads pressurizes oil to the parking brake cylinder chamber E via oil path D, the hydraulic force operates on the brake piston (3) and moves it to the left against the spring (4). As a result, the force pressing the disks (1) disappears, the disks (1) enter the free state, and the parking brake is released.

B. Operating the parking brake (Figure 16)

When the control valve is returned to the neutral position, the feed of pressurized oil to the P1 port is cut off, and an attempt is made to stop the piston motor, because the "high-pressure selection shuttle valve function" explained in Item E of (3) 1) "Double counter balance valve" connects oil path D to motor case drain oil path F, the pressurized oil in the parking brake cylinder chamber E is led to the motor case drain and the pressure drops. Therefore, the brake piston (3) is moved to the right side by the spring (4), the disks (1) are tightened with the force of the spring (4) by the brake piston (3) and motor case, so the piston motor shaft is locked and the parking brake operates.

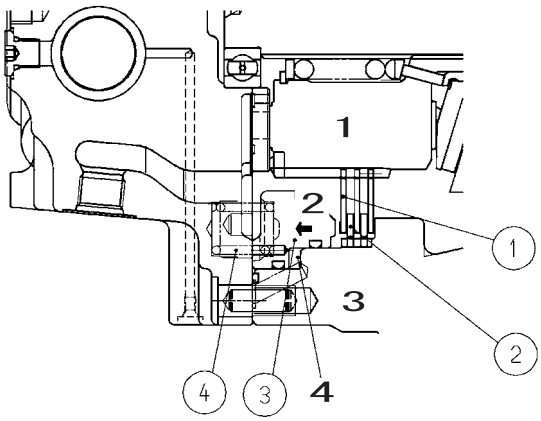

Figure 15 Parking brake released state

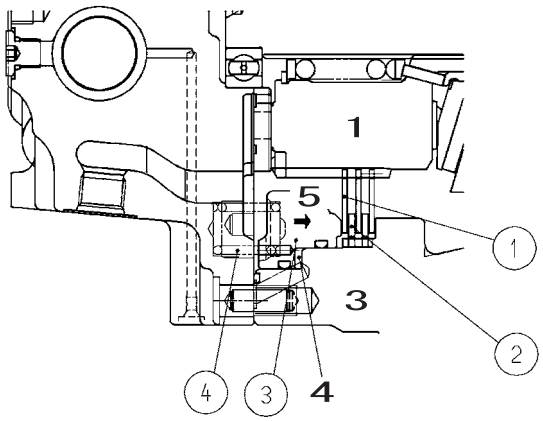

Figure 16 Parking brake engaged state

1	Cylinder block	4	Cylinder chamber E
2	Hydraulic pressure force	5	Spring force
3	Motor case		

https://truckmanualshub.com/

e) Piston motor

A swash plate type piston motor is used as the piston motor.
Figure 17 shows a structural diagram of the piston motor.
Nine pistons (4-2) are incorporated in the cylinder block (4-1) and the end of the cylinder block (4-1) touches a valve plate (22) that has two sausage-shaped ports, B and C. The pressurized oil discharged from the hydraulic pump flow in from the P1 port or the P2 port and while the piston motor rotates, flows out from the P2 port or P1 port.
Also, the drain oil in the case that has leaked from the sliding sections and the gap returns to the hydraulic tank from the base plate (2-1) T1 or T2 port.

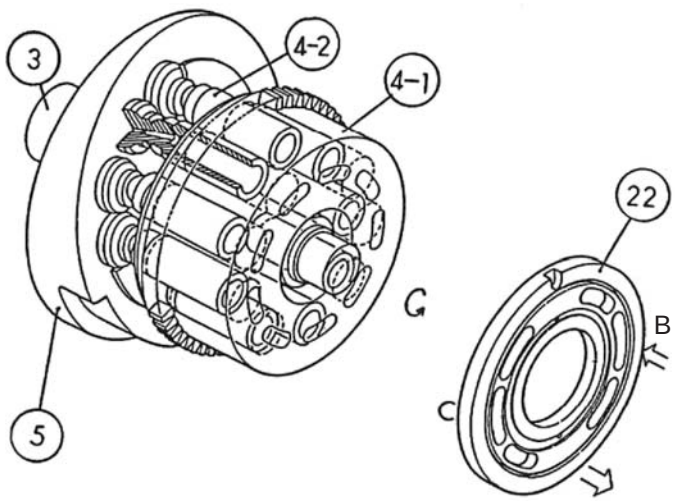

Figure 17 Piston motor structural diagram

[1] The high-pressurized oil from the P1 port enters the valve plate (22) sausage-shaped B port, the piston (4-2) is pressurized, and the top of the swash plate (5) rotates and moves from top dead center to bottom dead center.

[2] The P2 port becomes the low pressure side and while the piston (4-2) rotates and moves from bottom dead center to top dead center, the oil is discharged to the P2 port via the valve plate (22) sausage-shaped C port.

[3] Accompanying the reciprocal movement of the piston (4-2), the cylinder block (4-1) and the shaft (3) spline coupled to it rotate in the counter-clockwise direction of the arrow in the figure.

[4] When the piston motor rotates clockwise, the P1 port side becomes the low-pressure side and the P2 port side becomes the high-pressure side.
In this way, the piston motor converts the fluid energy of the pressurized oil sent from the hydraulic pump into mechanical energy and outputs high-speed, low-torque rotation power. Also, the piston motor torque and speed are determined by the pressure and flow. Therefore, the larger the pressure and flow, the higher the piston motor torque and speed.

https://truckmanualshub.com/

f) Reduction gear

Figure 18 shows a structural diagram of the reduction gear.
The reduction gear structure combines in two stages the simply planetary reduction gear unit made up of the drive gear, sun gear, holder, planetary gear, and ring gear (with teeth cut in the inner diameter of the housing).

When pressurized oil flows into the piston motor, the piston motor shaft rotates at high speed and power is input to the reduction gear section. In the reduction gear section, this high-speed rotation has its speed reduced in two stages by the simple planetary 2-stage reduction system. Low-speed, high-torque output is obtained from the rotation of the housing with ring gears (1-3) and (2-3).

A. 1st stage reduction section operation

The 1st stage reduction section comprises the drive gear (1-1), planetary gear A (1-2), ring gear (1-3), holder (1-4), needle bearing (1-5), and inner race (1-6).
The planetary gear A (1-2) meshes with the drive gear (1-1). When the drive gear (1-1) rotates clockwise, the planetary gear A (1-2) rotates counter-clockwise. On the other hand, since it meshes with the ring gear, it kicks the ring gear and tries to revolve clockwise around the circumference of the drive gear (1-1).
Because the planetary gear (1-2) is fixed in a state in which it rotates freely on the holder (1-4) via the needle bearing (1-5), this clockwise revolution movement is transmitted to the holder (1-4) and the holder (1-4) starts to rotate in the clockwise direction.
Also, since the holder (1-4) is spline coupled with the 2nd stage sun gear (2-1), this holder (1-4) rotation is transmitted to the 2nd stage sun gear (2-1).

B. 2nd stage reduction section operation

The 2nd stage reduction section comprises the sun gear (2-1), planetary gear B (2-2), ring gear (2-3), holder (2-4), needle bearing (2-5), and inner race (2-5).
The planetary gear B (2-2) meshes with the sun gear (2-1). When the sun gear (2-1) rotates clockwise, the planetary gear B (2-2) rotates counter-clockwise.
The planetary gear B (2-2) is fixed in a state in which it rotates freely on the holder (2-4) via the needle bearing (2-5). Furthermore, the holder (2-4) is coupled to the flange (5) by the bolts (3) and (4) and the flange (5) is fastened to the frame of the machine main unit, so it cannot rotate.
Therefore, the planetary gear B (2-2) cannot revolve as in the 1st stage reduction section and rotates counter-clockwise at the position at which it was incorporated. Also, because the planetary gear B (2-2) is meshed with the ring gear, the counterclockwise revolution of the planetary gear B (2-2) is transmitted to the ring gear and the ring gear is rotated counter-clockwise.
Through the above action, the housings (1-3) and (2-3) with the ring gear cut into their inner diameters receive the force of the planetary gears (2-2) and (1-2) and rotate. This transmits power to the driven section of the machine main unit which is coupled with the housings (1-3) and (2-3).

https://truckmanualshub.com/

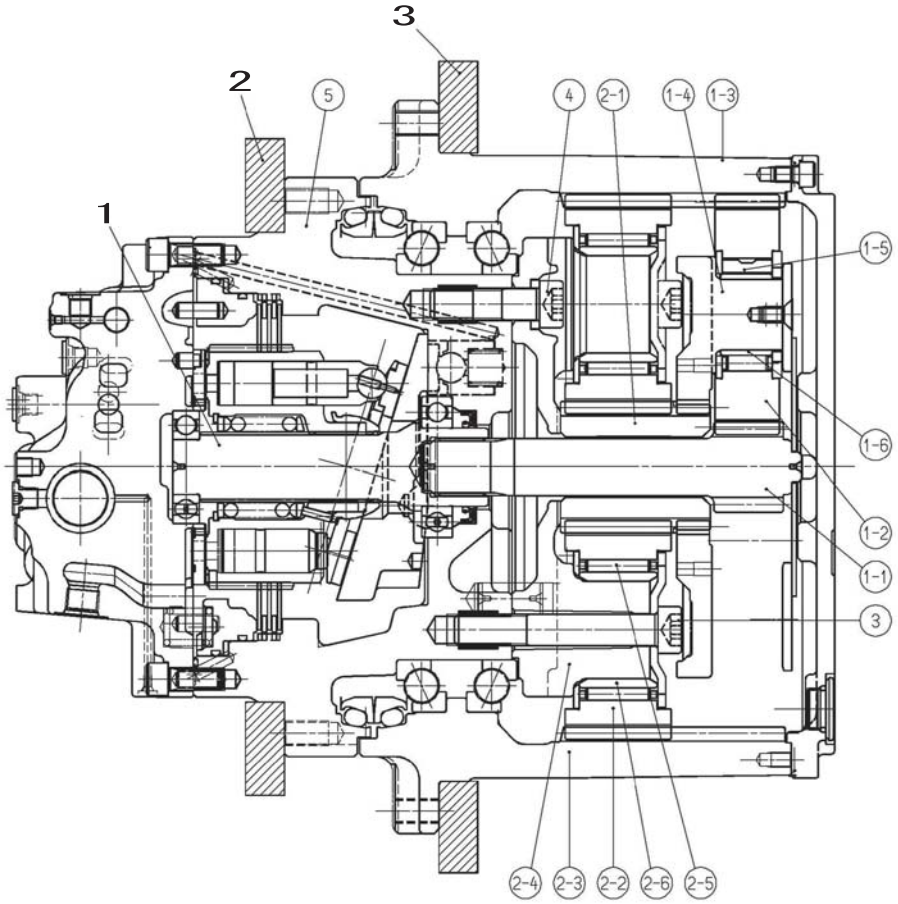

Figure 18 Reduction gear structural diagram

1	Piston motor shaft
2	Connection to driven section of machine
3	Fastened to machine main unit frame

https://truckmanualshub.com/

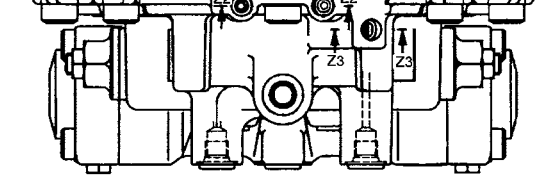

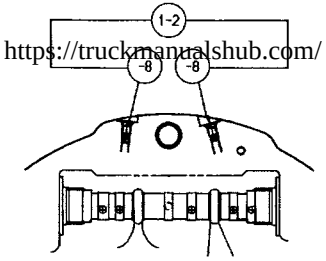

Z2-Z2 section

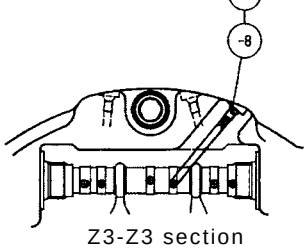

Z3-Z3 section

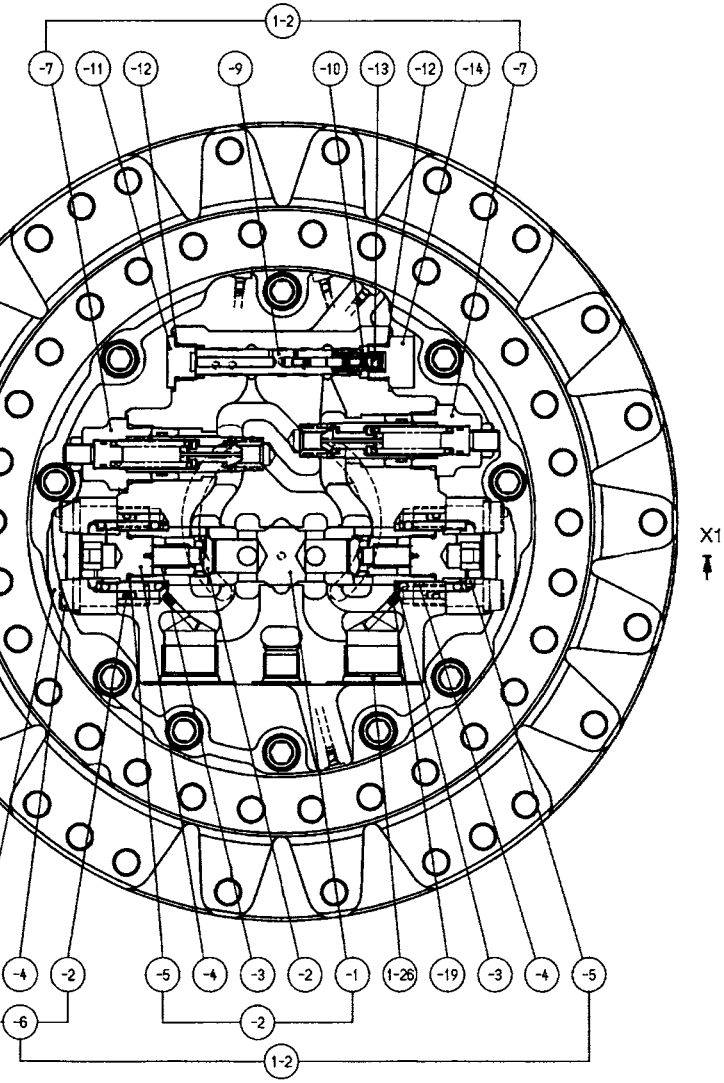

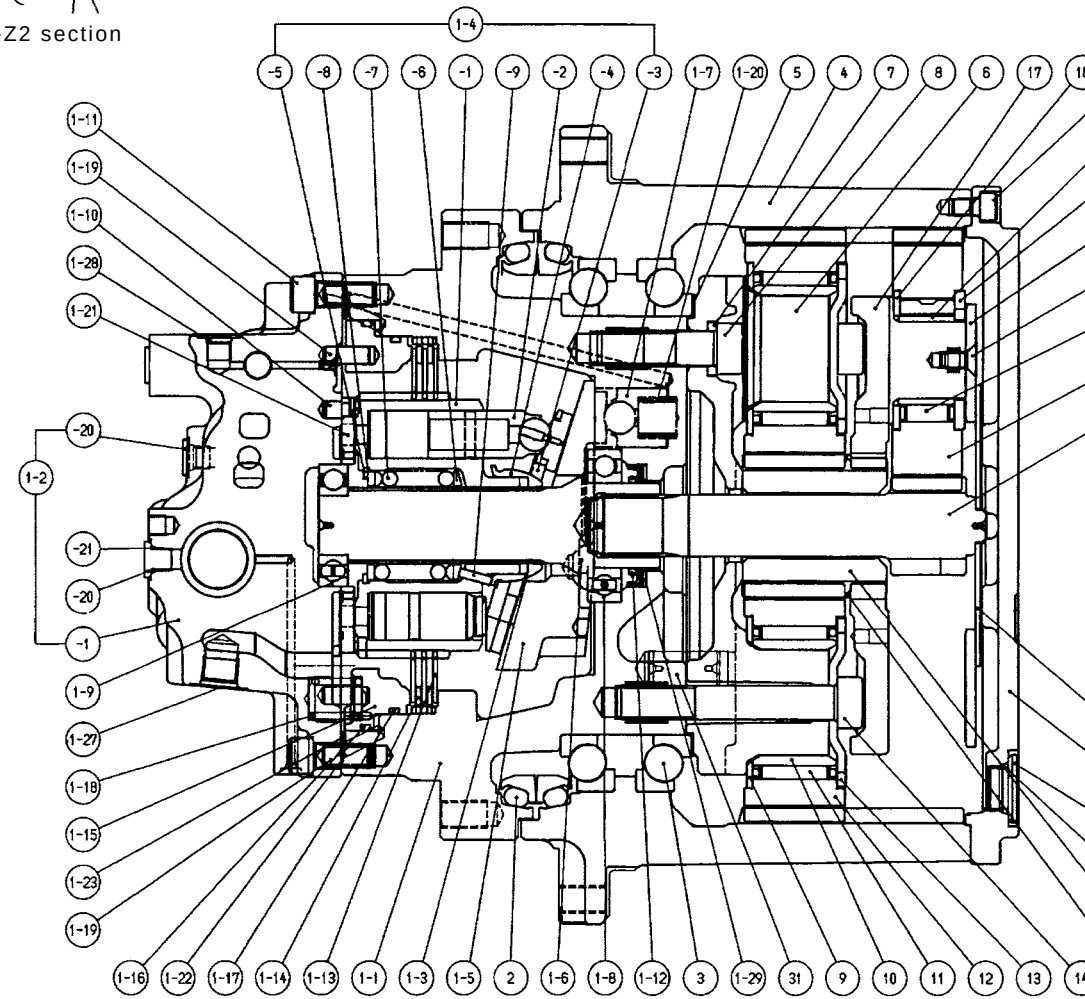

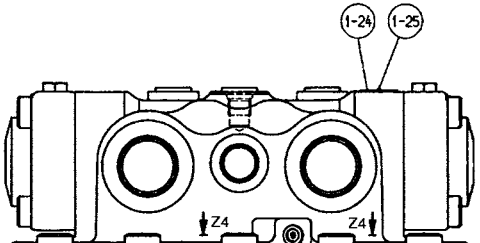

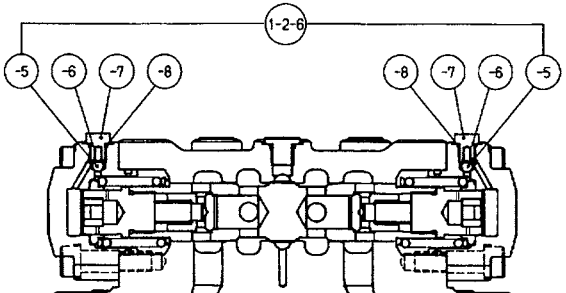

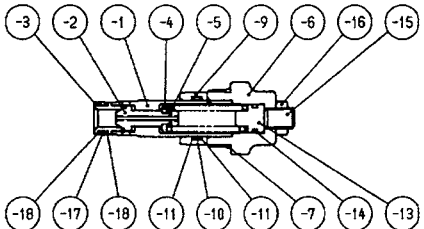

https://truckmanualshub.com/

(3) Travel motor part table

Code	Part name	Qty
1	Piston motor	1
1-1	Flange	1
1-2	Base plate assembly	1
1-2-1	Base plate	1
1-2-2	Spool assembly	1
-1	Spool	1
-2	Check valve	2
-3	Spring	2
-4	Plug	2
-5	O-ring	2
1-2-3	Spring seat	2
1-2-4	Spring	2
1-2-5	Spring seat	2
1-2-6	Cap assembly	2
-1	Cap	1
-2	O-ring	1
-4	Hexagon socket head bolt	4
-5	Steel ball	1
-6	Spring	1
-7	Plug	1
-8	O-ring	1
1-2-7	Relief valve assembly	2
-1	Relief housing	1
-2	Poppet	1
-3	Poppet seat	1
-4	Spring seat	1
-5	Spring	1
-6	Plug	1
-7	O-ring	1
-9	Free piston	1
-10	O-ring	1
-11	Backup ring	2
-13	Spring guide	1
-14	O-ring	1
-15	Stop screw	1
-16	Nut	1
-17	O-ring	1
-18	Backup ring	2
1-2-8	Plug	8
1-2-9	Spool assembly	1
-1	Spool A	1
-2	Spool C	1
1-2-10	Spring	1
1-2-11	Plug	1
1-2-12	O-ring	2
1-2-13	Spring guide	1
1-2-14	Plug	1
1-2-19	Orifice	2
1-2-20	Plug	5
1-2-21	O-ring	5
1-3	Seat	1
1-4	Cylinder block assembly	1
-1	Cylinder block	1
-2	Piston assembly	9
-3	Retainer plate	1
-4	Retainer holder	1
-5	Snap ring	1

Code	Part name	Qty
-6	Spring seat	1
-7	Spring	1
-8	Collar	1
-9	Pin	3
1-5	Swash plate	1
1-6	Steel ball	2
1-7	Piston assembly	2
1-8	Ball bearing	1
1-9	Ball bearing	1
1-10	Pin	1
1-11	Hexagon socket head bolt	10
1-12	Oil seal	1
1-13	Disk plate	3
1-14	Friction plate	2
1-15	Brake piston	1
1-16	O-ring	1
1-17	O-ring	1
1-18	Spring	8
1-19	Pin	4
1-20	Spring	2
1-21	Valve plate	1
1-22	O-ring	4
1-23	O-ring	1
1-24	Nameplate	1
1-25	Rivet	2
1-26	Plug	2
1-27	Plug	1
1-28	Plug	1
1-29	Spacer	1
2	Floating seal	2
3	Angular bearing	2
4	Housing	1
5 *	Shimt = 3.6	1
5 *	Shimt = 2.3	1
5 *	Shimt = 2.8	1
5 *	Shimt = 3.0	1
5 *	Shimt = 3.2	1
6	Holder C	1
7	Washer	8
8	Bolt	8
9	Thrust plate	4
10	Inner race	4
11	Needle bearing	4
12	Planetary gear C	4
13	Thrust plate	4
14	Bolt	4
15	Sun gear C	1
16	Snap ring	1
17	Holder B	1
18	Thrust plate	3
19	Inner race	3
20	Needle bearing	3
21	Planetary gear B	3
22	Thrust plate	3
23	Thrust plate	1
24	Screw	3
25	Drive gear	1

Code	Part name	Qty
26 *	Thrust platet = 3.6	1
26 *	Thrust platet = 2.3	1
26 *	Thrust platet = 2.8	1
26 *	Thrust platet = 3.0	1
26 *	Thrust platet = 3.2	1
27	Cover	1
28	Hexagon socket head bolt	16
29	Plug	3
30	O-ring	3
31	Pin	4

* One is selected and used.

D

https://truckmanualshub.com/

2. Swing Motor

210X2

(1) Equipment configuration

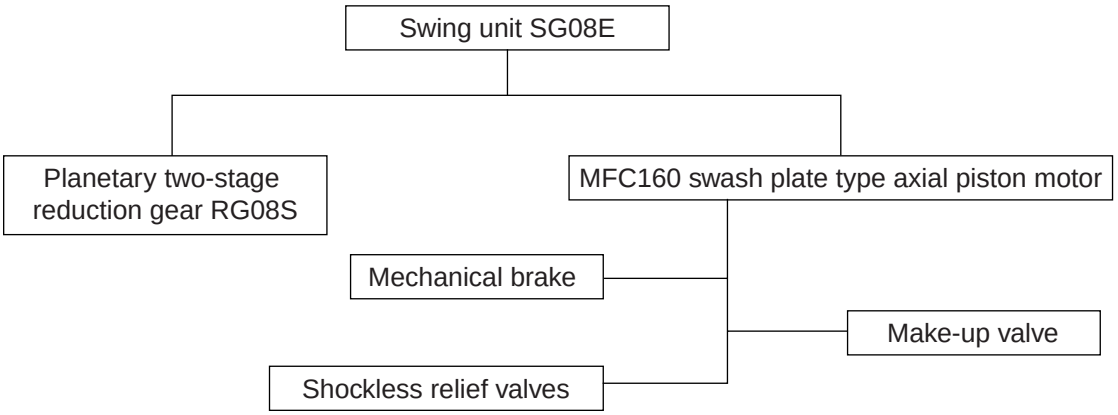

Structure and operating principles (The numbers in parentheses correspond to the section structural diagram.)

1) Hydraulic motor

The rotary group is made up of the one-piece drive shaft and cylinder (24) and the nine pistons AS (7) positioned in the cylinder (24). Also, the cylinder (24) is supported at both ends with bearings (3, 22). The piston AS (7) is guided by the return plate (6) and receiving spring (4) so that it slides smoothly on the cam plate (5).
Also, the balance plate (21) is pressed against the end of the cylinder (24) by the hydraulic pressure operating on the bushing (20) and the force of the Scrowave spring (18).
As parking brakes, it is equipped with mechanical brakes (8), (9), (11), and (13)
between the cylinder (24) outer circumference and the housing (25).
Also, a relief valve (35) for the cushion function and the make-up valves (38), (39), and (40) for preventing cavitation are built into the cover (32) section.

https://truckmanualshub.com/

2) Hydraulic motor operation explanation

The pressurized oil fed by the pump through the control valve or the like enters from the A port (or B port) on the cover (32) and is discharged from the B port (or A port).
Also, the oil that has leaked from the sliding sections and the gap returns to the hydraulic tank from the drain port "a" on the cover (32).
The pressurized oil fed to the A port is fed to the cylinder (24) piston hole "f" through path "b" in the cover (32), path "c" the bushing (20) section in the cover (32), balance plate (21) path "d" that has a crescent shaped port that switches between feed and discharge every 180 of rotation of the motor, and the cylinder (24) path "e".
The pressurized oil operates on the piston AS (7) and the piston AS (7) is pressed against the cam plate (5). The cam plate (5) shoe sliding surface has a constant angle slope, so the piston AS (7) pressing force created by the action of the pressurized oil is converted into force making the shoe slide on the plate. The piston AS (7) shoe spherical section is coupled as a free joint, so the force of the shoe sliding on the plate is transmitted to the motor output shaft section as rotation force via the cylinder (24).
In this way, each piston AS (7) receives pressurized oil in the stroke from the slope surface top dead center to bottom dead center, converts this hydraulic force to rotation force, rotates the cylinder (24), and discharges oil in the stroke from the bottom dead center to the top dead center. The discharge path is the reverse of the above pressurized oil feed path and the oil is discharged from the B port.
In this way, the hydraulic motor operates. The hydraulic motor output torque is determined by the hydraulic pressure force and speed is determined by the feed oil quantity.

3) Reduction gear structure and operation explanation

The power transmitted from the hydraulic motor output shaft is transmitted to the 2nd stage sun gear (72) via the 1st stage sun gear (76), planetary gear (79), and holder 1 (81). At the same time, the power is transmitted to the output shaft (61) via 2nd stage sun gear (72), planetary gear (84), and holder 2 (87). The output shaft (61) is supported in the gear case (66) by two bearings (65, 71). Also, in order to protect the output side bearing (65), which faces severe load conditions, from gear wear powder, there is an oil seal (70) in the center section in the gear case (66), the A chamber side is lubricated with gear oil, and the B chamber side is lubricated with grease.

4) Mechanical brake operation explanation

The friction plate (8) is spline coupled with the exterior circumference section of the cylinder (24).
Also, the partner plate (9) is coupled with the housing (25). When the mechanical brake release chamber pressure is zero, the brake piston (11) presses the friction plate (8) and partner plate (9) with the force of the spring (13) to load rotation of the cylinder (output shaft).
On the other hand, when the oil pressurized to 464 - 711 PSI (3.2 - 4.9 MPa) operates on the brake release chamber, the brake piston (11) wins out over the spring force, the piston stroke proceeds until the cover (32) end, a gap is generated between the friction plate (8) and partner plate (9) and the mechanical brake is released.

D

https://truckmanualshub.com/

5) Make-up valve operation explanation

[1] Half brake state (state in which the shockless relief valve (35) is not operating)
After the swing body is accelerated, when it is decelerated by the control valve with the half lever, the oil feed quantity from the pump to the A port drops, but if the swing body was rotating at relatively high speed, the pressure comes close to negative at the "c" section due to the motor pump operation, so oil supply becomes necessary. However, if the B port pressure is lower than the operating pressure of the shockless relief valve (35), all the oil flowing into the "c" section from the A port is drained to the control valve via the B port, so with just the quantity of oil from the control valve, the quantity of oil is insufficient for what is absolutely required at the "c" section. (Because the valve is at the half lever position, the quantity of oil from the pump is restricted.) In order to prevent this, the make-up check valve (38) is set up to make up the quantity of the oil shortfall to the "c" section from the make-up port.

[2] When the brake operates (state in which the shockless relief valve (35) is operating)
In the state in (1), if the lever is suddenly operated to neutral, the quantity of oil fed from the pump to the A port becomes zero, but the swing body rotates due to inertial force. In this case, the B port side shockless relief valve (35) operates, the oil blown out in relief passes through oil paths "i" and "h", pushes open the A port side make-up check valve (38), and is fed to oil paths "b" and "c", but the quantity of this oil falls short by the quantity of oil that leaked to the motor case drain. In order to prevent that, the make-up check valve (38) is opened from the make-up port, oil is supplied to oil paths "b" and "c" to prevent cavitation.

6) Relief valve operation explanation (relief valve internal structure diagram)

[1] Starting
For the pressurized oil fed to the A port by the operation of the control valve, constant rotation is not reached because the swing body inertial force is large and part of the oil passes through the shockless relief valve (35) which operates as a safety valve, passes through oil paths "g" and "h", pushes open the B port side check valve (38), and flows out to the B port.
The A port oil resists the force of the spring (47), pushes open the poppet (46), passes through the path "g" from between the seat (45) and the poppet (46), and flows out to the path "h".

[2] Braking (cushion)
When the control valve is returned to neutral, the motor discharge oil return path is closed. Immediately after this operation, the motor rotates with a large inertial force and pump operation is caused, which tries to suction in the oil from the A port and discharge it from the B port, but because the control valve return path is closed, the B port pressure rises.
The B port pressure that rises pushes open the poppet (46) resisting the force of the spring (47), so it pushes up the make-up check valve (38) via the oil paths "i" and "h", the oil flows into the path "c", and through this process, the swing body inertial force is absorbed and the swing body comes to a stop.
Also, in the above pressure rise process, the pressurized oil at the B port passes through the poppet (46) outer circumference orifice "i", passes through the small hole path at the center of the piston (51), and enters the piston chamber, moving the piston (51) to the position where it contacts the end of the liner (50). During this time, because the poppet (46) is already pushed open, the cushion action operates at first with somewhat low pressure and after a slight time, rises to the regulation pressure. This two-stage operation provides a function that reduces the shock of motor starting and stopping.

https://truckmanualshub.com/

(2) Internal structure diagram

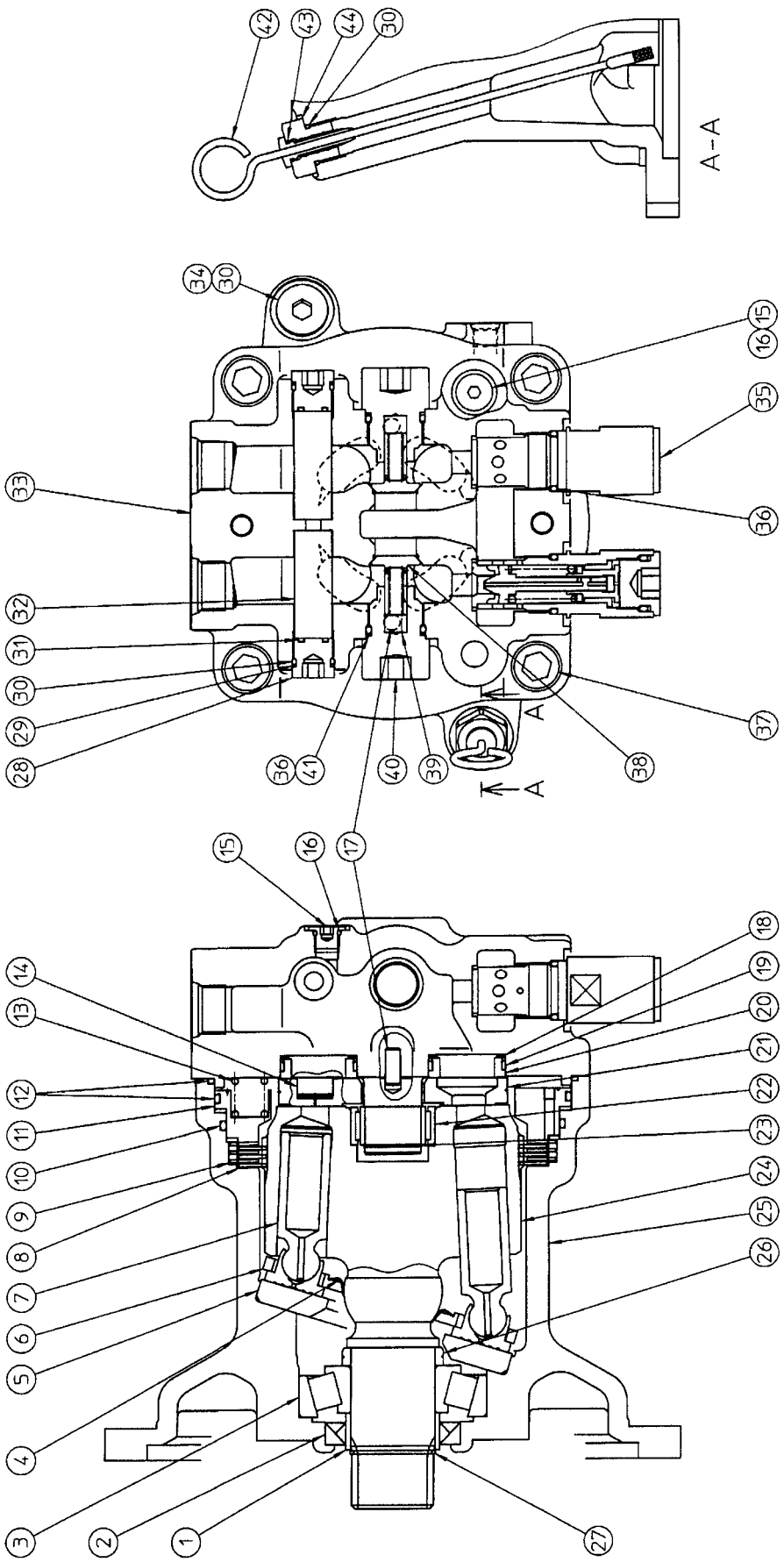

https://truckmanualshub.com/

(3) Swing reduction gear internal structure diagram (SH200-5)

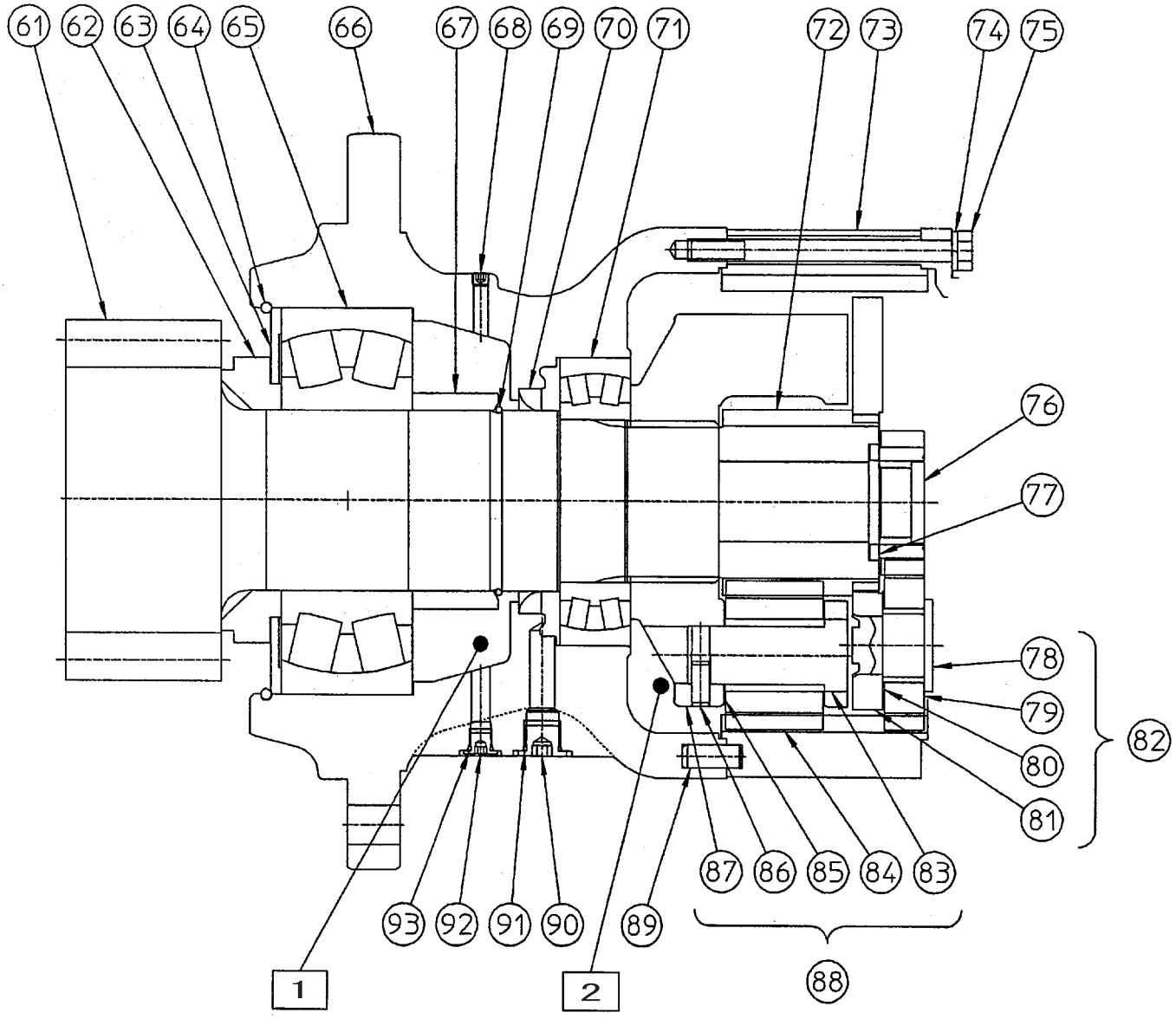

1	Chamber A
2	Chamber B

(4) Relief valve internal structure diagram

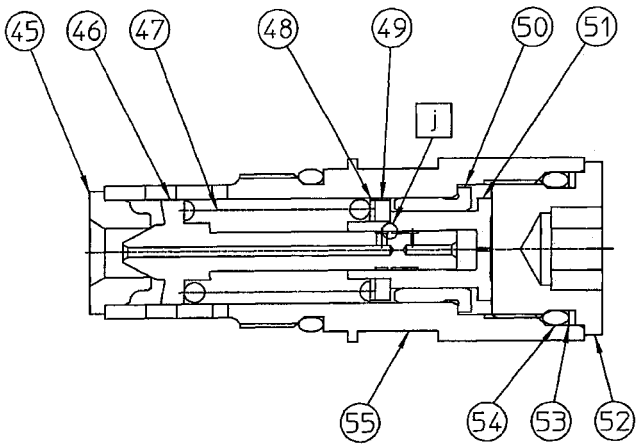

https://truckmanualshub.com/

SH240-5

(1) Swing motor operation explanation

1) Hydraulic motor section (SH240-5)

As the figure below shows, when the high-pressure oil passes through the valve plate (1) intake side port (a) and flows into the cylinder, the hydraulic pressure operates on the piston and a force F is generated in the axial direction. This force F is divided into two vectors, a force F1 perpendicular to the swage plate (3) via the shoe (2) and a force perpendicular to the shaft. This force F2 is transmitted to the cylinder block (4) via the piston, generating a rotational couple around the output shaft.

Nine pistons are arrayed in the cylinder block. Rotation torque is transmitted to the output shaft by multiple pistons sequentially linked with the high-pressure oil intake side port.

When the oil in and out directions are reversed, the rotation of the output shaft also reverses.

The theoretical output torque [Nm] is given by the following equation.

$$T = \frac{p \times q}{2\pi}$$

p:Effective pressure difference [MPa]

q:Compartments per rotation [cm^3]

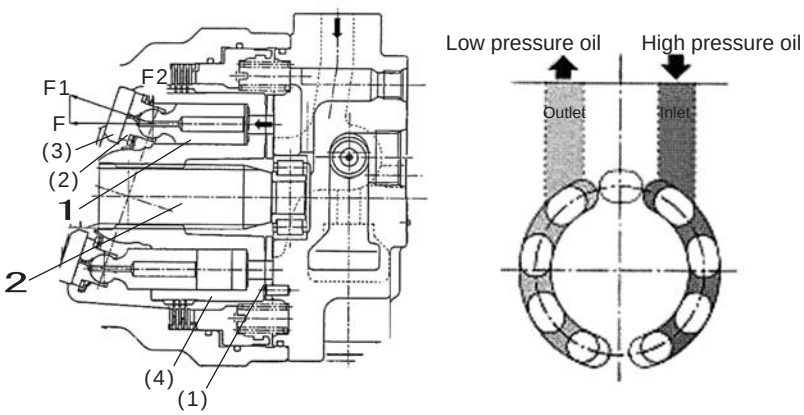

1	Piston
2	Drive shaft

Figure 1 Motor section operation explanation diagram

2) Valve casing section

[1] Anti-cavitation check valve section

Because the system using this type of motor does not have a valve with a counter-balance function, the motor sometimes rotates more than the quantity of oil fed.

In order to prevent cavitation due to insufficient oil, there is a check valve to take in the oil shortfall.

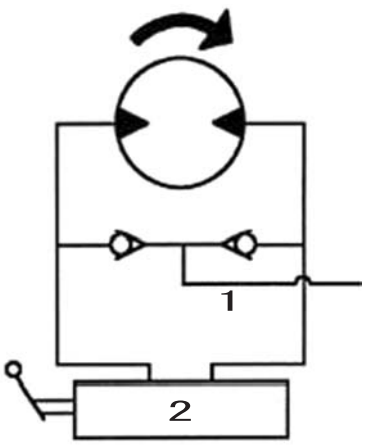

1	M port
2	Control valve

Figure 2 Hydraulic circuit diagram

https://truckmanualshub.com/

3) Brake section

The cylinder (111) is coupled with the drive shaft (101) by the gear. Also, the separator plate (743) is constrained for circumferential rotation by the arc groove cut into the casing (301).
When the friction plate (742) that is gear coupled to the cylinder outer circumference section is pressed to the casing (301) by the brake spring (712) via the separator (743) and the brake piston (702), friction force is generated between the friction plate and casing and between the separator plate and the brake piston. The drive shaft is constrained and braked by this friction force.
On the other hand, when brake release pressure is applied to the oil chamber formed between the brake piston and the casing and the hydraulic pressure wins out over the spring force, the brake piston moves, the force pressing the friction plate against the casing disappears, and the brake is released.

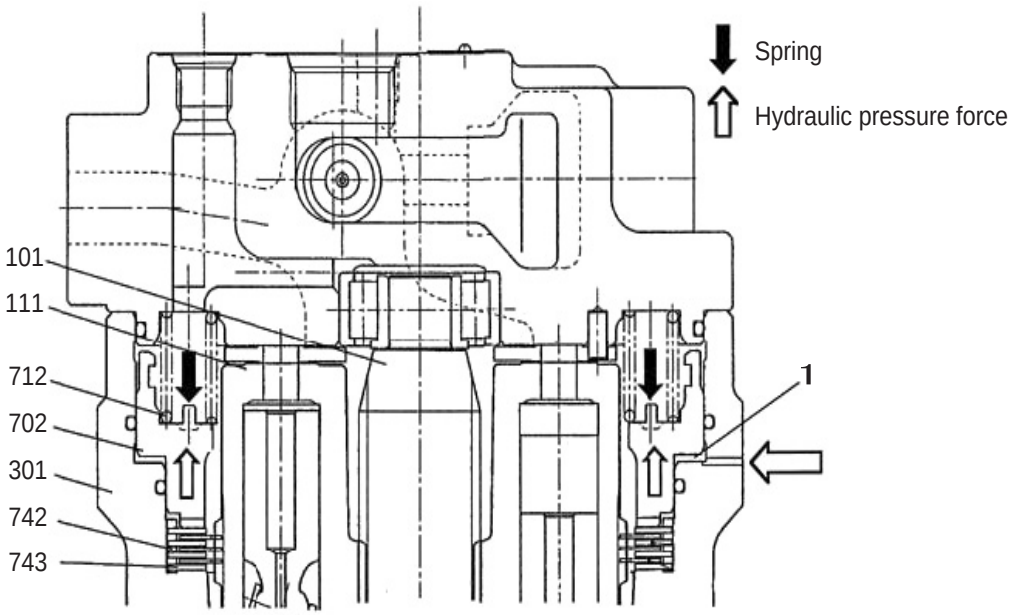

Figure 3 Brake operation diagram

1	Oil chamber

https://truckmanualshub.com/

4) Relief valve operation explanation (Relief valve model: KRD22EK10)

[1] Operation explanation when the relief valve is pressurized

Think of the case in which the P port is pressurized with the tank pressure.

The P and R ports are at the tank pressure at first and go into the states in Figure 4 - (1).

At the pressure where there is balance between the hydraulic pressure determined by the product of the pressure P and the pressurized area A1 of the plunger (301) on the one hand and the hydraulic pressure determined by the spring (321) load FSP and plunger (301) pressurized area A2 and the g chamber pressure Pg on the other hand, the relief valve starts to operate.

After that, the g chamber pressure rises and the piston (302) starts its stroke. Accompanying this movement, the load on the spring (321) increases.

Through the operation above, the relief pressure P is controlled to rise from P1 to Ps in the pressure rise time t1.

This process is explained below in terms of the relationship between the movement state of the parts in Figures 4 - (2) through (4) and the relief pressure.

1) State shown in Figure 4 - (2)

When the relief valve P port is pressurized, pressure is generated in the g chamber via the metering valve m in the plunger (301).

When the hydraulic pressure operating on the plunger (301) increases and reaches the pressure at which it balances the spring (321) load FSP, the relief valve carries out the relief operation at pressure P1.

The relationship at this time is expressed by the following equation.

P1 X A1 = FSP1 + Pg1 X A2FSP1: Initial set load for the spring (321)

2) State shown in Figure 4 - (3)

The g chamber pressure operates on pressurized areas A3 and A4 of the piston (302). When this hydraulic pressure force becomes larger than the load on the spring (321), the piston starts to move to the left.

At this time, the oil in the h chamber formed between the piston and the adjusting plug (401) is discharged into the g chamber via the metering valve n set up on the piston (302) while the piston moves to the left, so the h chamber functions as a damping chamber.

Through this, the spring load gradually increases until the piston reaches the adjusting plug end section and the relief pressure P rises smoothly.

3) State shown in Figure 4 - (4)

When the piston (302) reaches the adjusting plug (401) end section, it does not move farther to the left, so the constant relief state is reached and the relief pressure is held at P2.

Through the processes (1) through (4) above, the relief pressure varies as in Figure 5.

[2] Operation explanation when the relief valve is depressurized

Think of the case in which the P port pressure falls.

When the pressurization of the P port ends, the P port pressure and the g chamber pressure fall together to the tank pressure. Through this, the plunger (301) which was open, moves to the left and seats in the seat (401). At the same time, the piston (302) also is moved to the right by the spring (321) and returns to the state in Figure 4 - (1).

D

https://truckmanualshub.com/

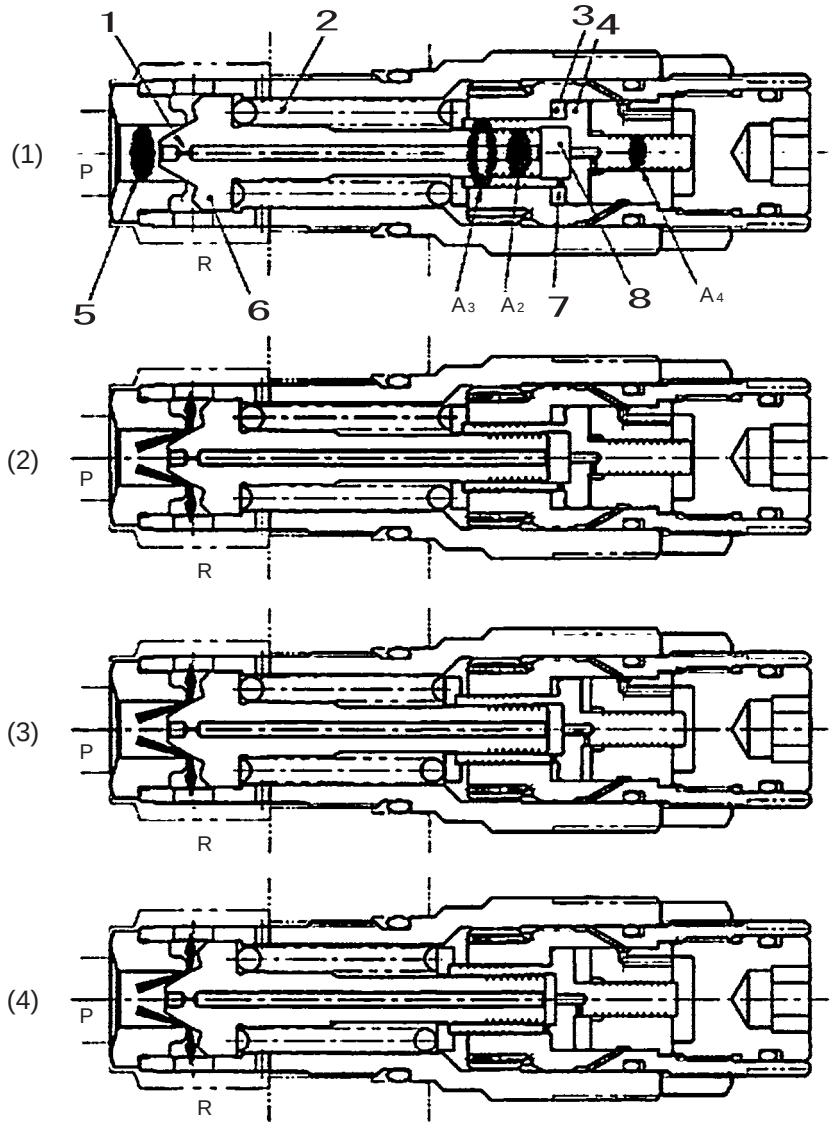

Figure 4 Relief valve operation explanation diagram

1	Metering m	5	A1 pressurized area
2	Spring (321)	6	Plunger (301)
3	Chamber h	7	Metering n
4	Piston (302)	8	Chamber g

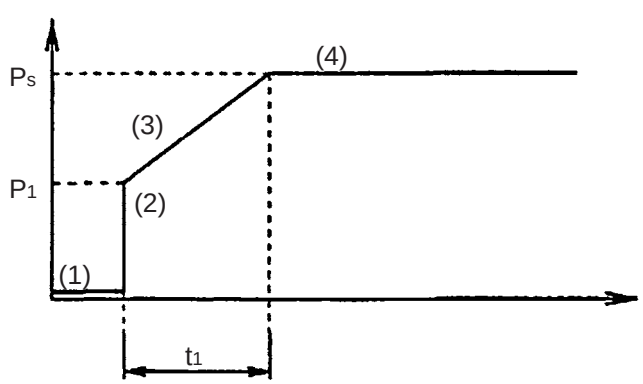

Figure 5 Boost pressure characteristic

https://truckmanualshub.com/

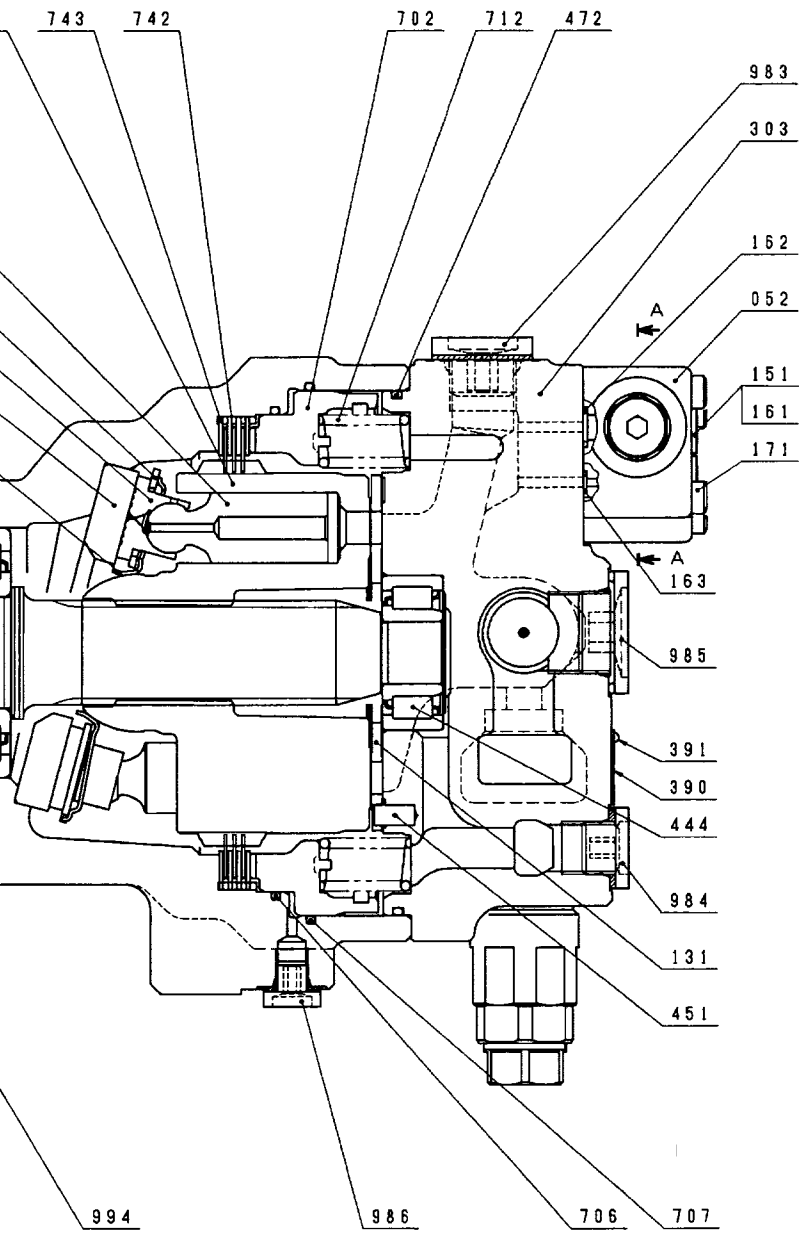

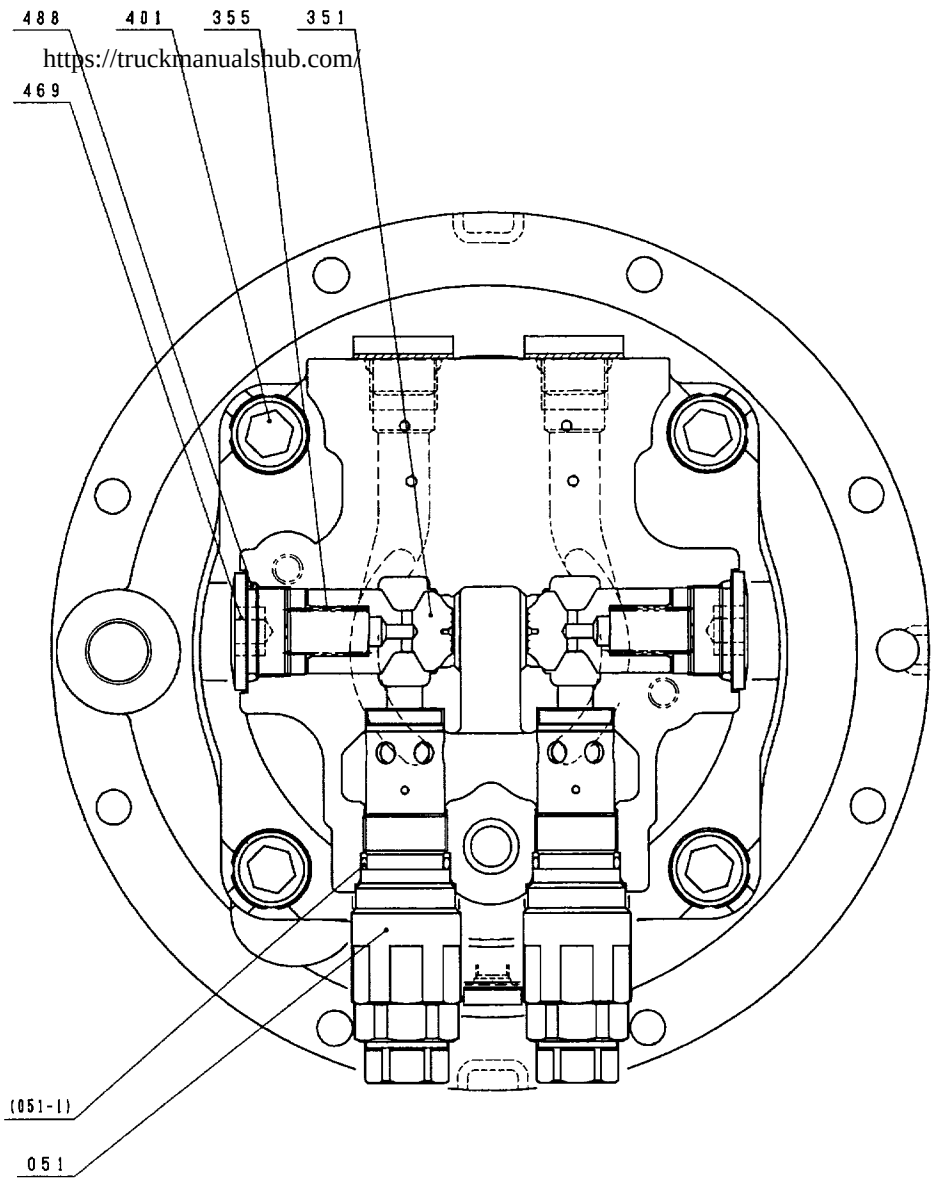

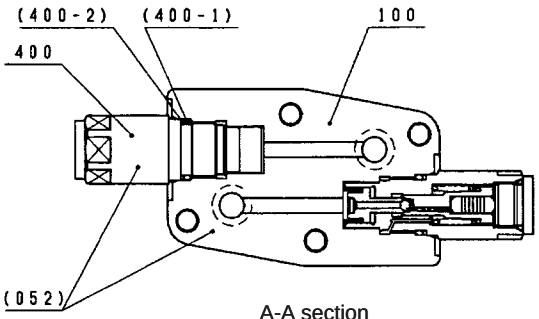

A-A section

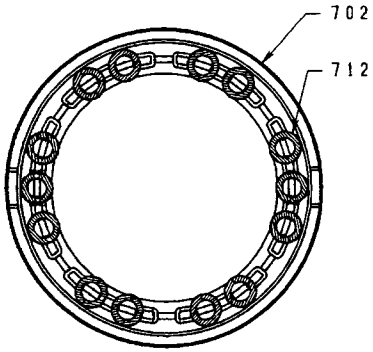

Code	
052	Revers
100	Casing
151	ROH pl
161	O-ring
162	O-ring
163	O-ring
171	Hexago
400	Revers
400-1	O-ring
400-2	Backup

Code	
051	Relief v
051-1	O-ring
10	Piston,
101	Drive s
111	Cylinde
114	Plate s
121	Piston
122	Shoe
123	Retaine
124	Shoe p
131	Valve p
20	Valve c
301	Casing
303	Valve c
351	Plunge
355	Spring
390	Namep
391	Driving
401	Hexago
443	Cylinde
444	Cylinde
451	Pin
469	ROMH
472	O-ring
488	O-ring
491	Oil seal
702	Brake p
706	O-ring
707	O-ring
712	Brake s
742	Friction
743	Separa
983	Maskin
984	Maskin
985	Maskin
986	Maskin

https://truckmanualshub.com/

Valve

1. Control Valve

Basic configuration

This valve is based on the main unit housing which combines the P1 side housing and P2 side housing with the rear surfaces against each other and has a configuration that makes it possible to mount the inlet, add-on section, and outlet on the P2 side housing top.

(1) Operation

[1] When all spools in neutral

1) Neutral path [Fig. 1, Fig. 2]

1. When Pn1 and Pn2 ports pressurized
The oil fed from the P1 port enters the tank path (Ta) from the neutral path (L1) through the low-pressure relief metering valve (Lc1) and returns to ports T1 through T8.
The oil fed from the P2 port enters the tank path (Ta) from the neutral path (R1) through the low-pressure relief metering valve (Rc1) and returns to the T1 through T8 ports.
The pressure in the pressure chambers (L2) and (R2) upstream from the low-pressure relief valve is led into the pump from the ps1 and ps2 ports and controls the P1 and P2 pump discharge quantity.
Also, if excess oil flows into the neutral path (L1), the poppet opens to provide low-pressure relief. This prevents the ps1 and ps2 port pressures from becoming abnormally high.

2. When Pn1 and Pn2 ports not pressurized
In this case, the low-pressure relief poppets open at lower pressure than in (a).
Therefore, the oil fed from the P1 port enters the tank path (Ta) from the neutral path (L1) primarily through the low-pressure relief valve discharge port (L3) and returns to the T1 through T8 ports.
Also, the oil fed from the P2 port enters the tank path (Ta) from the neutral path (R1) primarily through the low-pressure relief valve discharge port (R3) and returns to the T1 through T8 ports.

https://truckmanualshub.com/

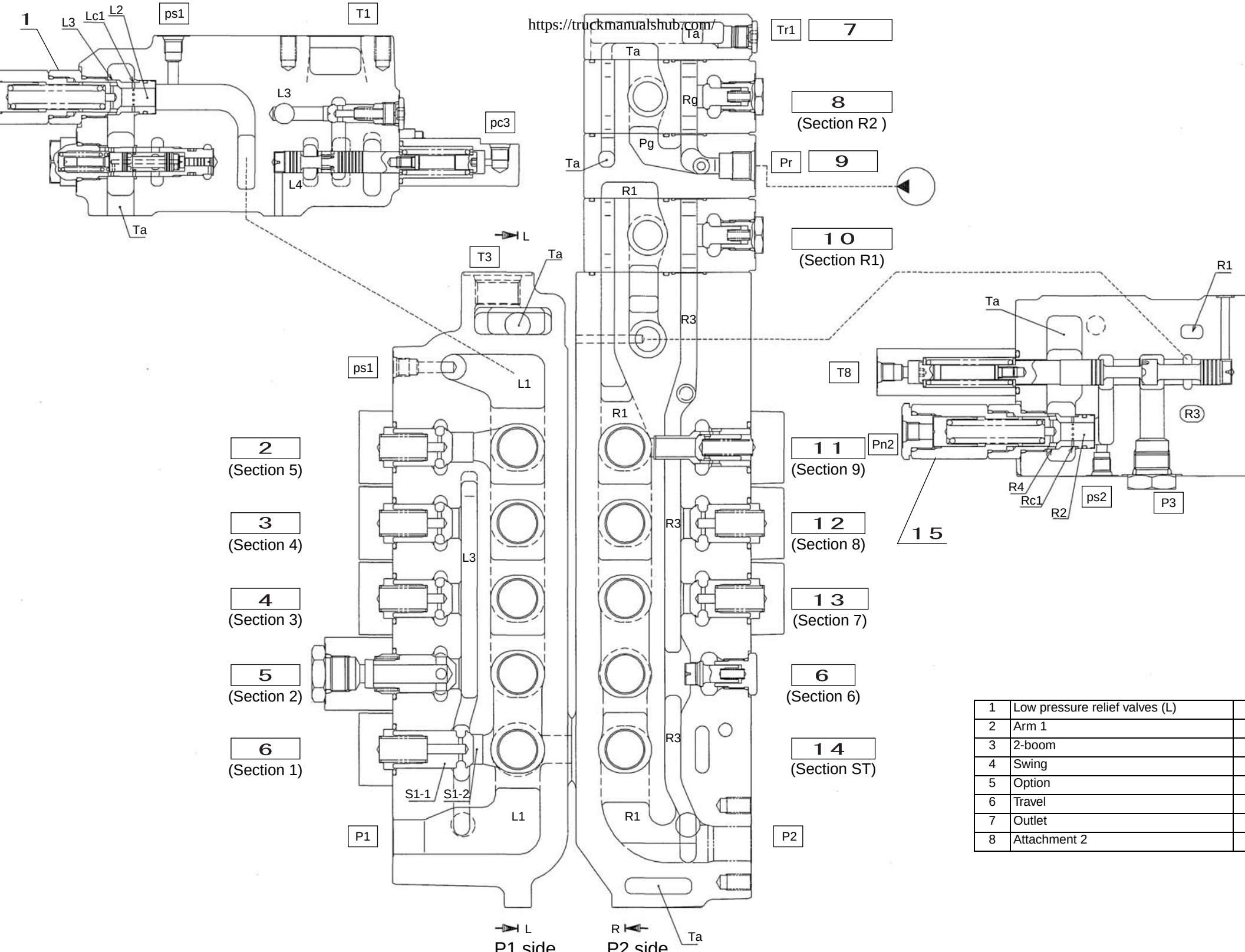

1	Low pressure relief valves (L)	
2	Arm 1	
3	2-boom	
4	Swing	
5	Option	
6	Travel	
7	Outlet	
8	Attachment 2	

	9	Neutral cut
	10	Arm 2
	11	1-boom
	12	Bucket
	13	Travel
	14	Straight travel

https://truckmanualshub.com/

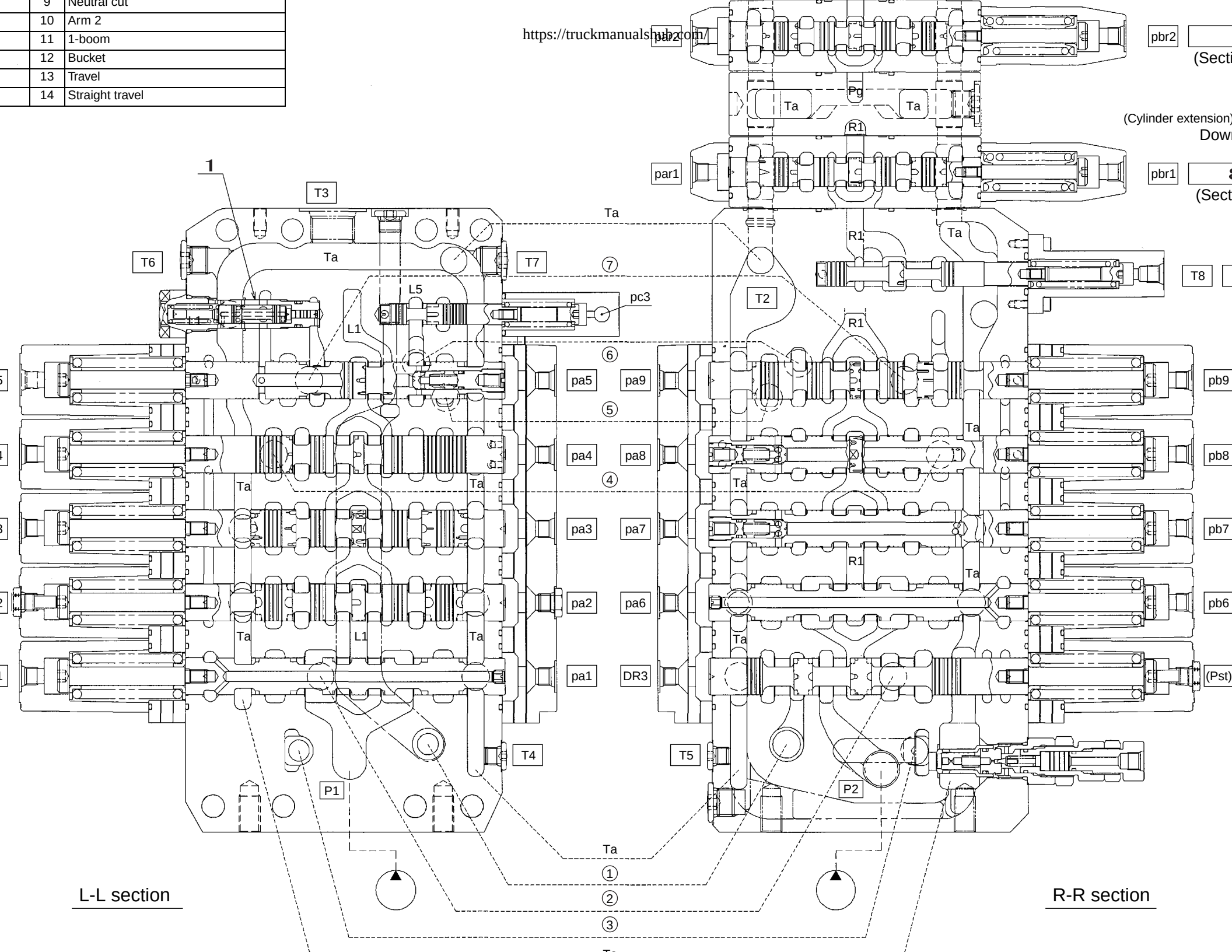

https://truckmanualshub.com/

2) Signal, straight travel signal control valve, plate ASSY [Fig. 3]
There are two signals, (a) and (b) below. The pilot signal for each spool for which a lever is operated is used to generate the pressure that is output.
The straight travel signal control valve integrates the signal pressures and controls straight travel spool switchover.Also, the plate ASSY has a function for picking up the pilot pressures with the built-in shuttle.

1. Travel signal (PT)
The highest of the pilot pressures applied to the travel section 1 (pa1, pb1) and travel section 6 (pa6, pb6) is selected and output to the PT port.
Therefore, when the travel spool is in the neutral position (no-load pilot pressure), no pressure is generated at the PT port.

https://truckmanualshub.com/

2. Front signal (PA)
   The highest of the pilot pressures (pa2 to 9 and pb2 to 9) applied to sections 2 to 9 that use the pressurized oil from the P1 and P2 pumps, except for the travel sections, is selected and output to the PA port.(Note 1)
   Therefore, when all the spools are in the neutral position (no-load pilot pressure), no pressure is generated at the PA port.

Note 1
When an add-on (main pump add-on) is used through the feed from P2, the branches for the add-on pilot signals par1 and pbr1 are connected to the respective main unit valves, prs1 and prs2, and thus incorporated in the front signal PA selection area.
Be careful. If the above pipes are not used, the PA pressure does not rise due to add-on selection.
Also, when using two main pump add-ons, set the circuit so that maximum of the add-on pilot pressures (par1&2, pbr1&2) can be taken out as desired and connect to either prs1 or prs2.

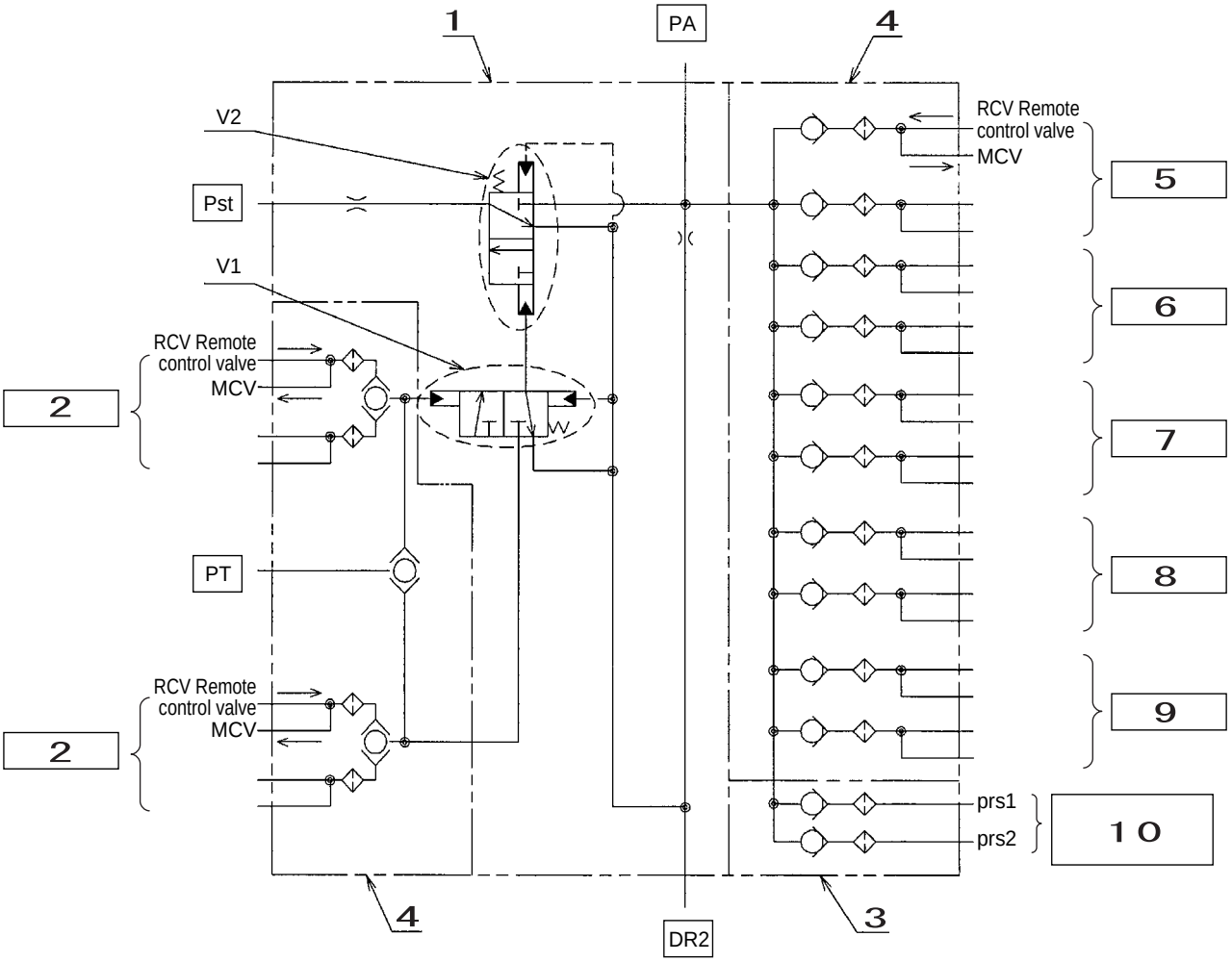

[Fig.3]

1	Straight travel signal control valve	6	Arm
2	Travel	7	Bucket
3	Main unit housing section (option)	8	Swing
4	Plate ASSY	9	Option
5	Boom	10	Add-on (main pump)

https://truckmanualshub.com/

[2] Stand-alone operation

1) Travel spool switchover [Fig. 4 and Fig. 5]

When a travel spool is switched by pressurizing from the travel (section 1) pilot port Pb1 [Pa1], the oil fed from the P1 port flows from the neutral path (L1) through the spool neck section and into the B1 [A1] port.The return oil returns to the tank path (Ta) from the A1 [B1] port through the spool neck section.

When a travel spool is switched by pressurizing from the travel (section 6) pilot port Pb6 [Pa6], the oil fed from the P2 port flows from the neutral path (R1) through the spool neck section or path (S6-1) and into the B6 (A6) port.

When only travel is operated, the parallel path (R3) and the path (S6-1) have the same pressure, so the poppet (S6-2) does not open.The return oil returns to the tank path (Ta) from the A6 [B6] port through the spool neck section.

https://truckmanualshub.com/

1	Trouble state
2	Neutral state
3	Option
4	Travel

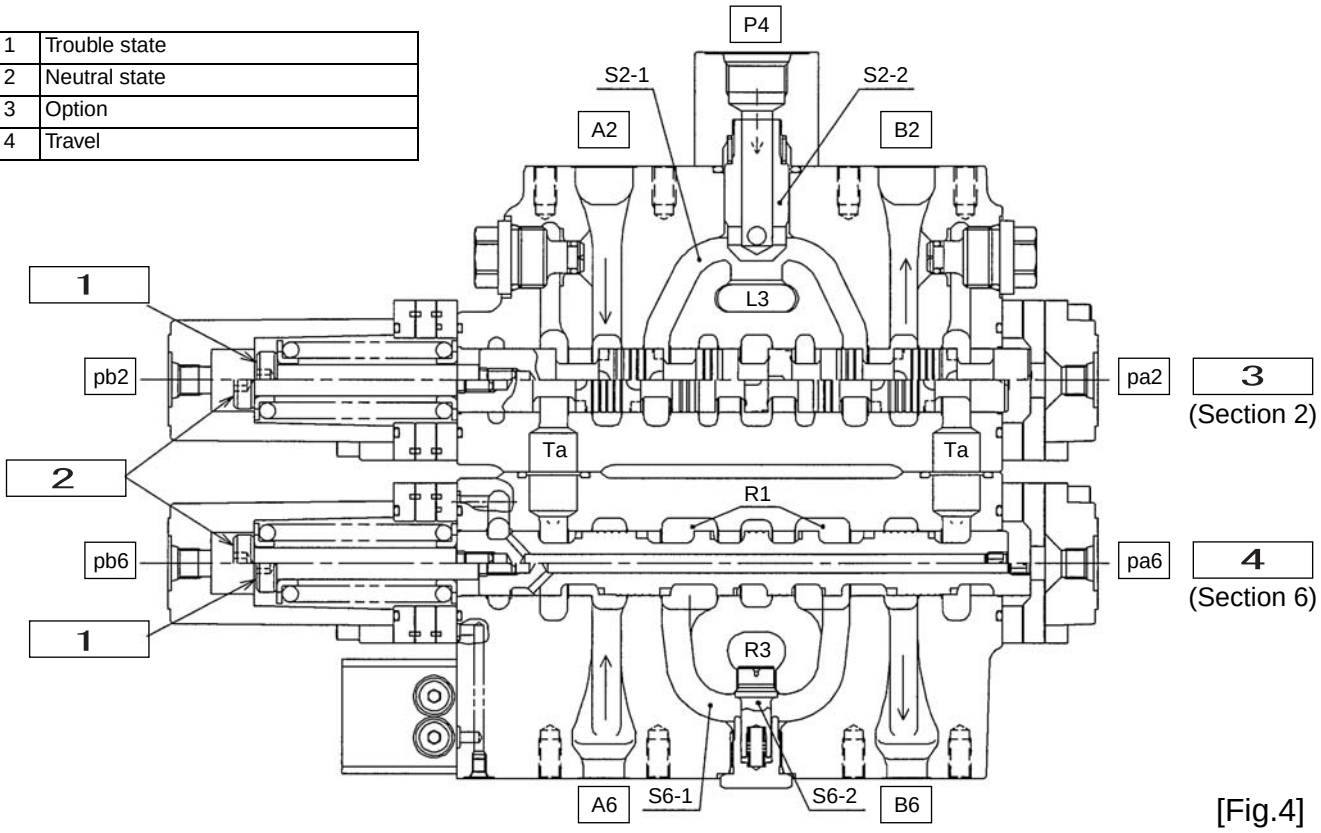

[Fig.4]

1	Trouble state
2	Neutral state
3	Option
4	Straight travel

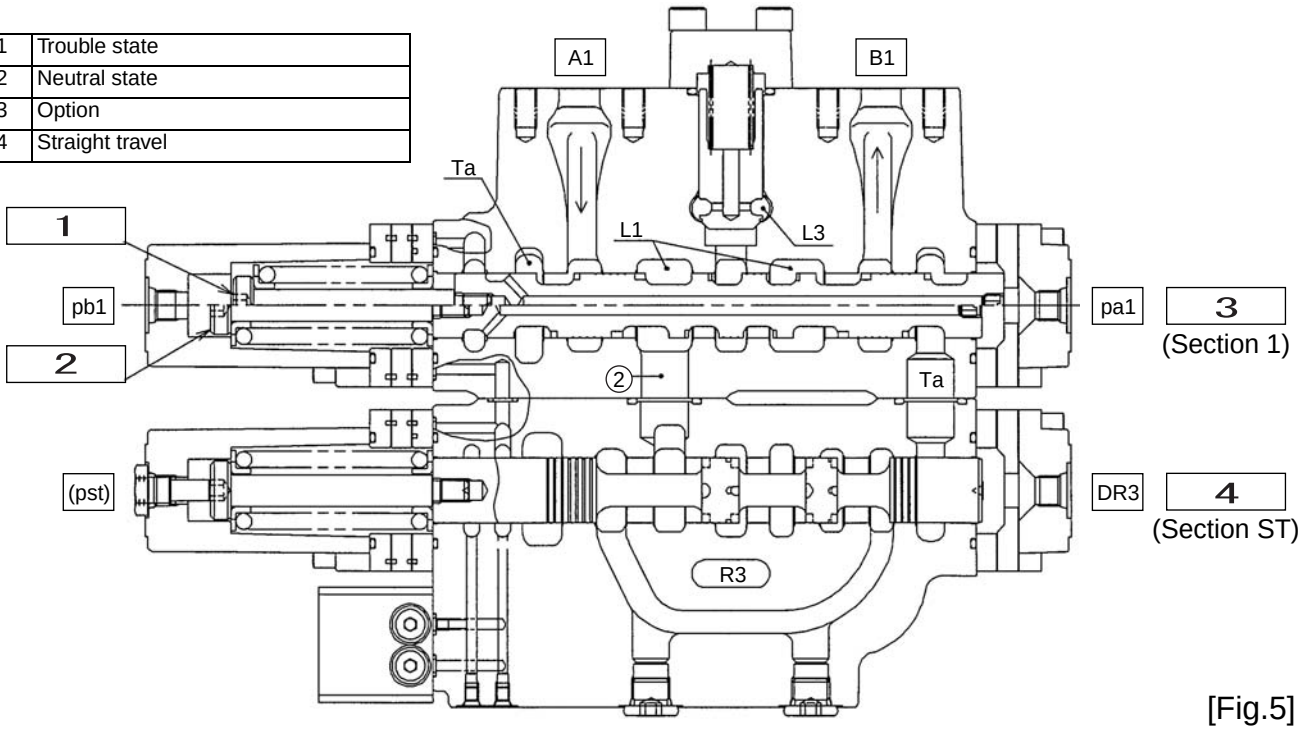

[Fig.5]

https://truckmanualshub.com/

2) Option spool switchover [Fig. 4]
When the option spool is switched by pressurizing from the option (section 2) pilot port Pb2 [Pa2], the neutral path (L1) is closed.The oil fed from the P1 port flows from the parallel path (L3) through the load check valve (S2-2), path (S2-1), and the spool neck, and into the B2 [A2] port.
The return oil returns to the tank path (Ta) from the A2 [B2] port through the spool neck section.
Also, when oil is fed from the P4 port, it passes through the inside of the load check valve (S2-2) and
merges with path (S2-1).

1	Trouble state
2	Neutral state
3	Option
4	Travel

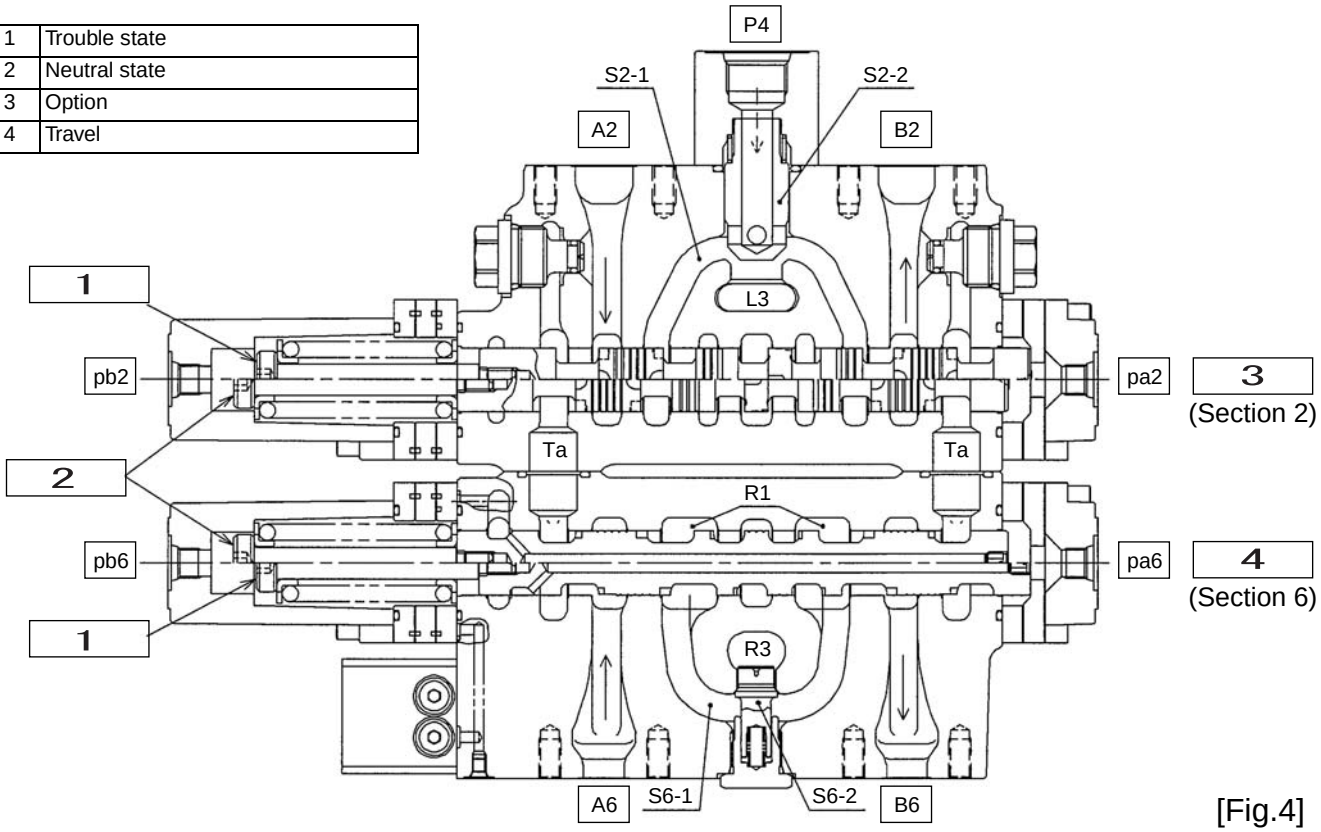

[Fig.4]

1	Trouble state
2	Neutral state
3	Option
4	Straight travel

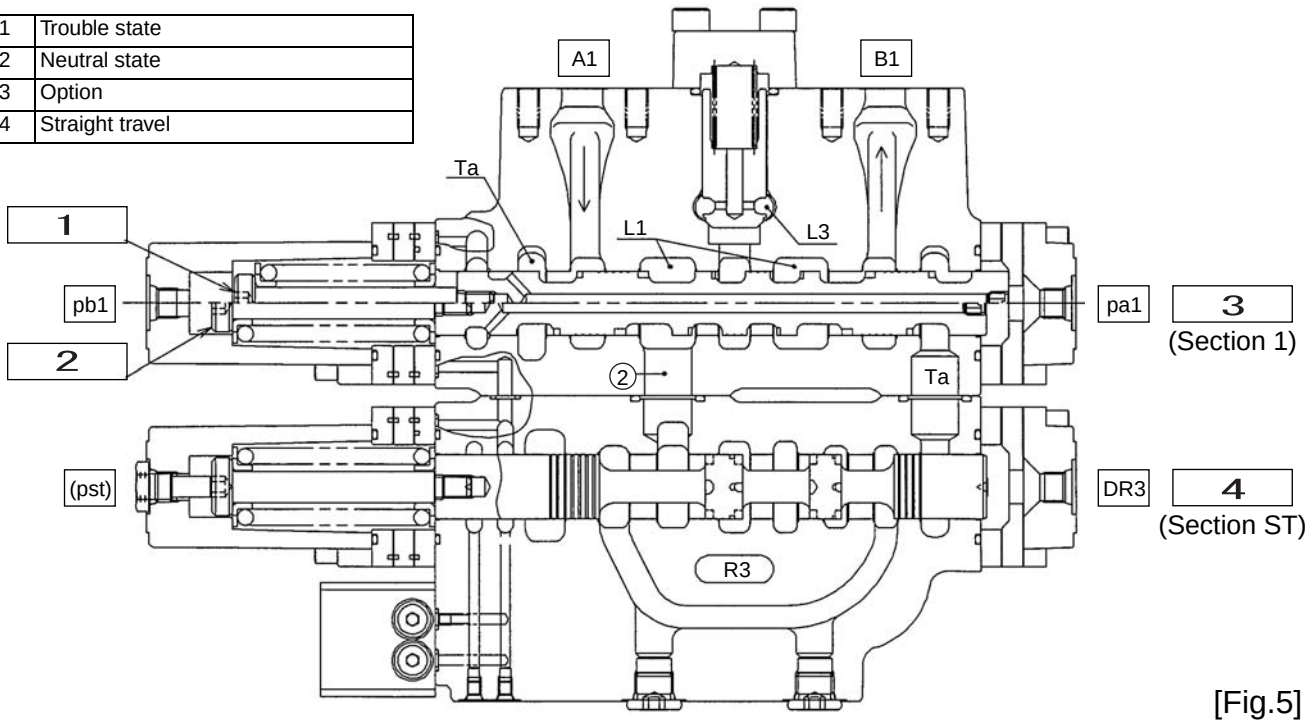

[Fig.5]

https://truckmanualshub.com/

3) Swing spool switchover [Fig. 6]
When the swing spool is switched by pressurizing from the swing (section 3) pilot port Pb3 [Pa3], the neutral path (L1) is closed.The oil fed from the P1 port flows from the parallel path (L3) through the load check valve (S3-2), path (S3-1), and the spool neck, and into the B3 [A3] port.
The return oil returns to the tank path (Ta) from the A3 [B3] port through the spool neck section.

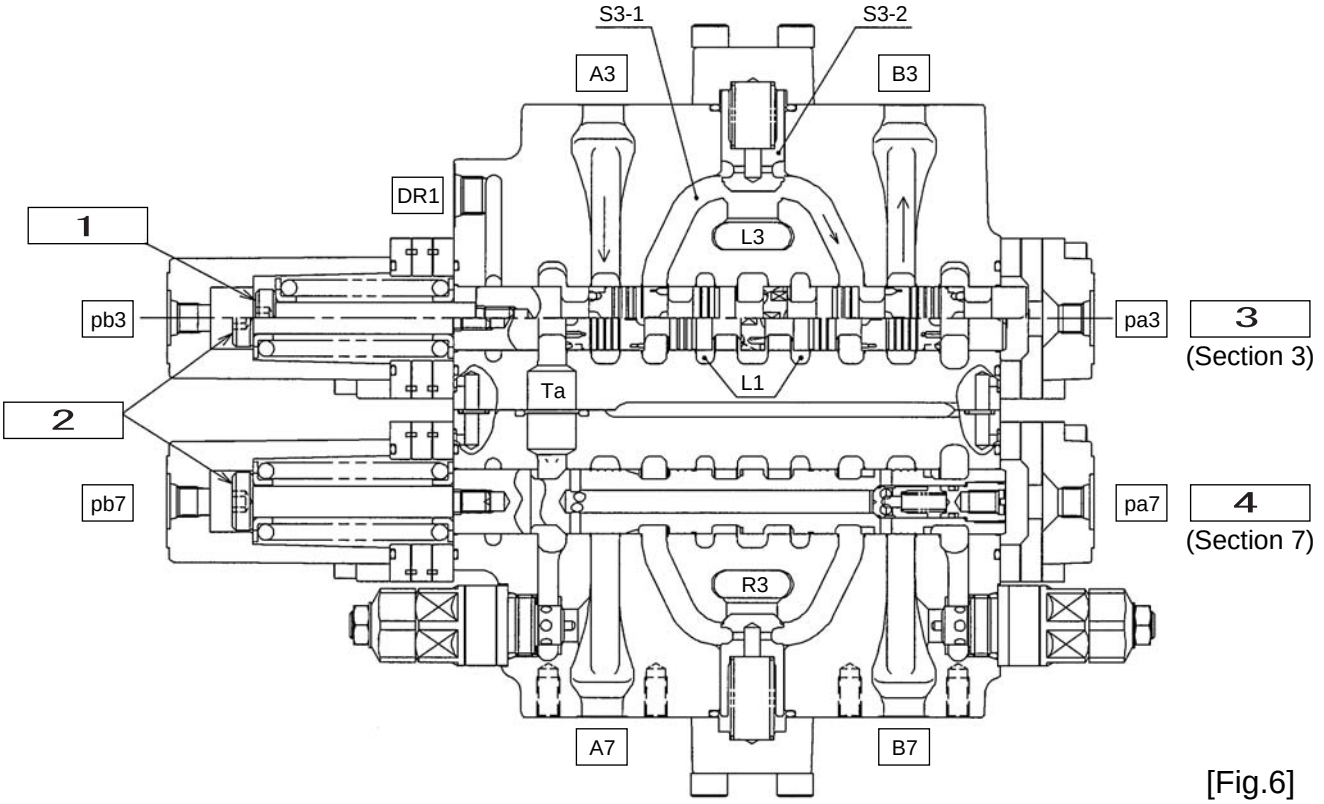

[Fig.6]

1	Trouble state	3	Swing
2	Neutral state	4	Bucket

https://truckmanualshub.com/

4) Bucket spool switchover [Fig. 7 and Fig. 8]

1. Close (regeneration) [Fig. 7]

When the bucket spool is switched by pressurizing from the bucket (section 7) pilot port Pb7, the neutral path (R1) is closed.The oil fed from the P2 port flows through the parallel path (R3), the load check valve (S7-2), path (S7-1), and the spool neck, and into the B7 port.

At the same time, the return oil from the A7 port returns to the tank path (Ta).

After part of the return oil pushes open the poppet (S7-3) inside the bucket spool, it merges into the B7 port to prevent cylinder head cavitation.

Cylinder speed increase and P2 port pressure reduction effects also accompany depending on the port pressure conditions.

Bucket close (regeneration)

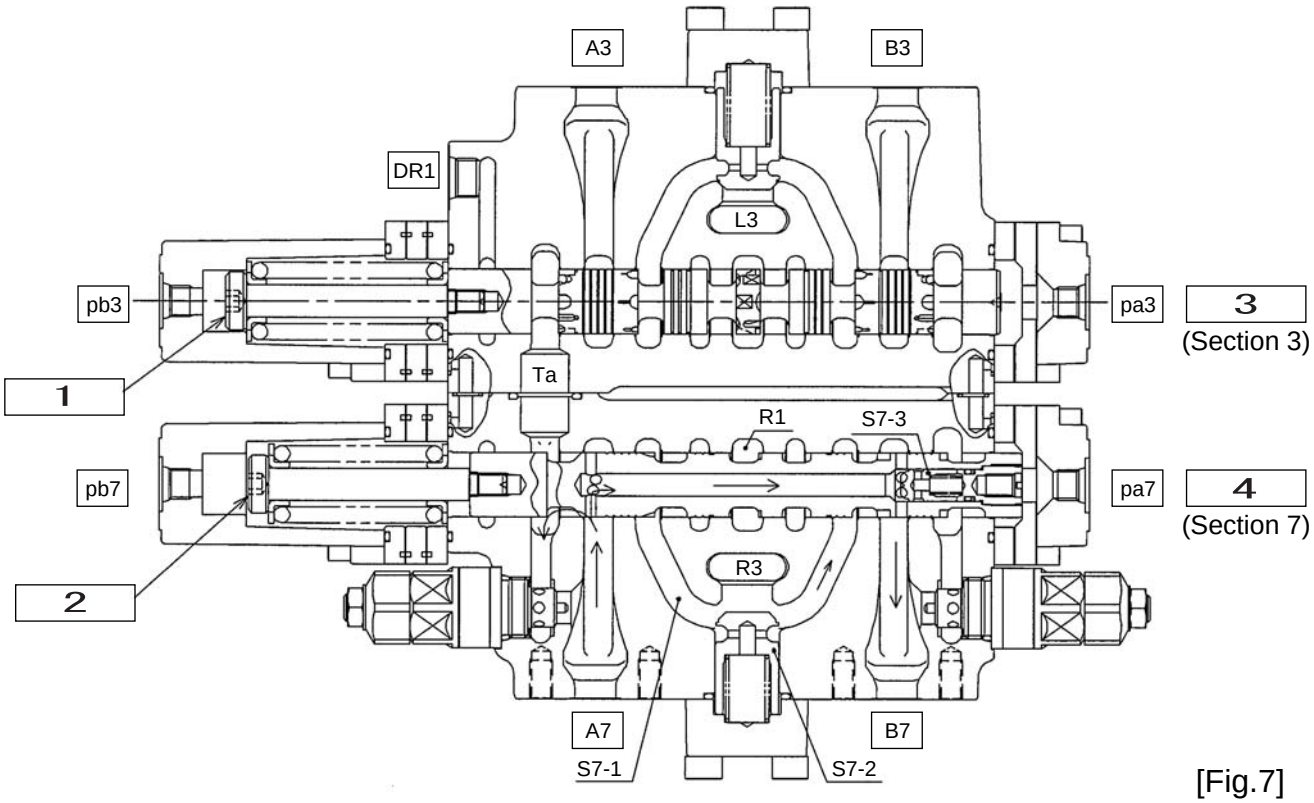

[Fig.7]

1	Neutral state	3	Swing
2	Trouble state	4	Bucket

https://truckmanualshub.com/

2. Open [Fig. 8]
   When the bucket spool is switched by pressurizing from the bucket (section 7) pilot port Pa7, the neutral path (R1) is closed.The oil fed from the P2 port flows through the parallel path (R3),
   the load check valve (S7-2), path (S7-1), and the spool neck, and into the A7 port.
   The return oil returns to the tank path (Ta) from the B7 port through the spool neck section.

Bucket open

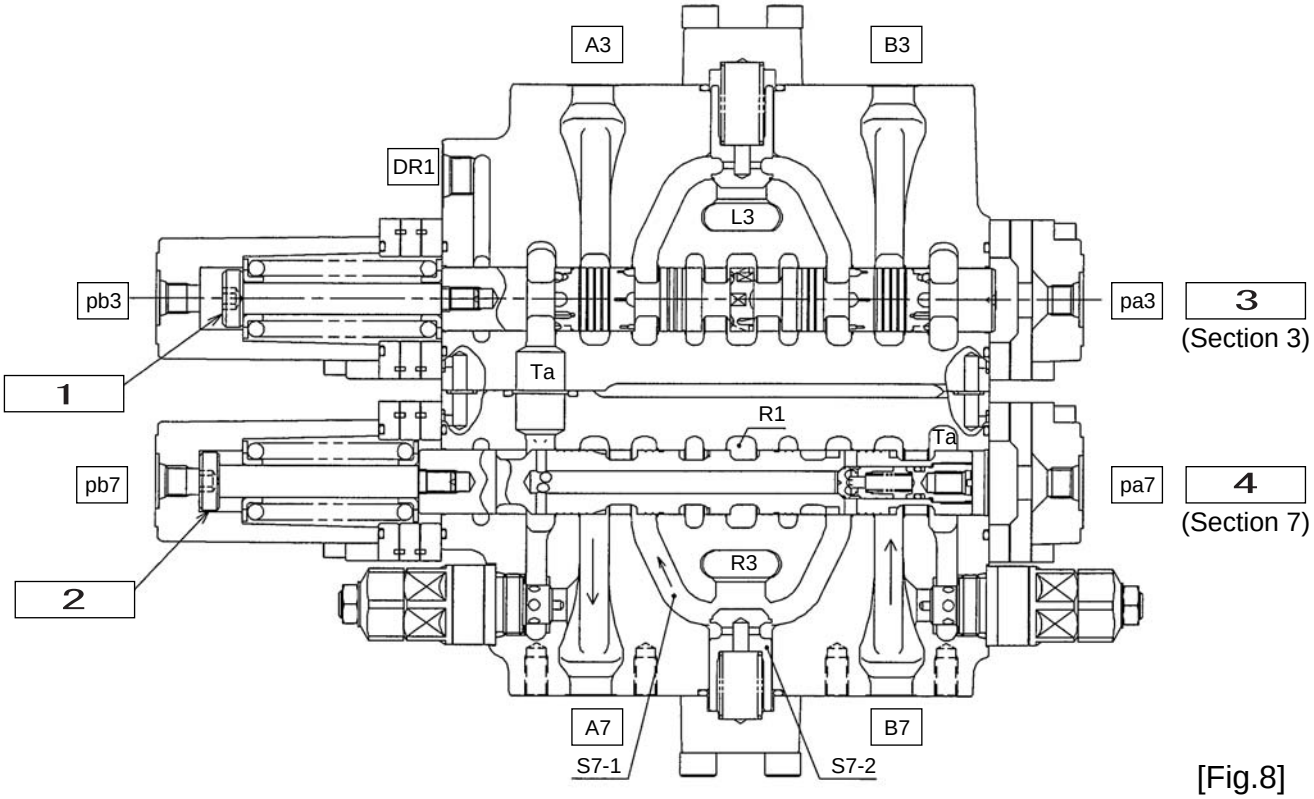

[Fig.8]

1	Neutral state	3	Swing
2	Trouble state	4	Bucket

https://truckmanualshub.com/

5) Boom spool switchover [Fig. 9, Fig. 10, and Fig. 11]

1. Neutral [Fig. 9]

This valve mounts an anti-drift valve on the boom 1 cylinder head (A8) side.
In neutral, the poppet (AD1) is reliably seated by the pressure of the A8 port itself led through path (AD2) and the spool (AD3) into the spring chamber (AD4) to cut off the return oil from the A8 port.

Neutral

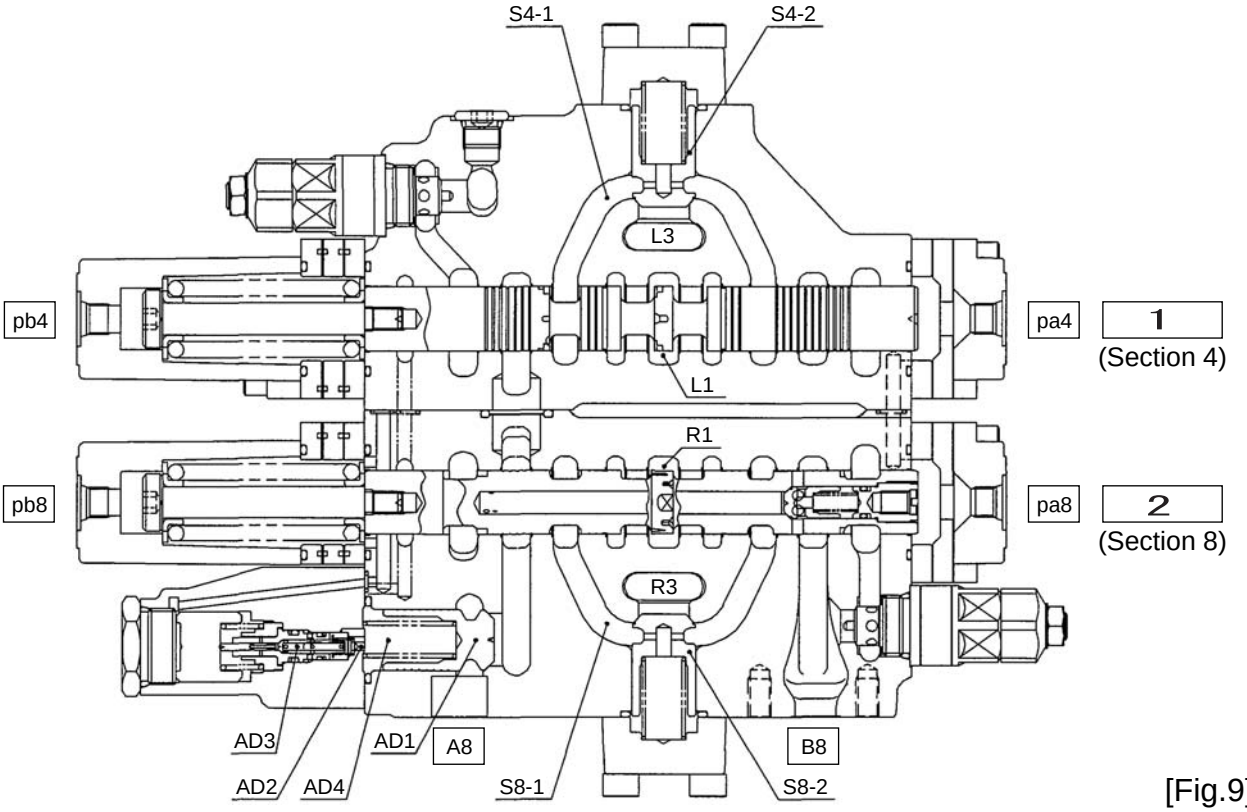

[Fig.9]

1	2-boom
2	1-boom

https://truckmanualshub.com/

2. Boom up (2nd speed merge) [Fig. 10]
   When the boom 1 spool is switched by pressurizing from the boom 1 (section 8) pilot port Pa8, the neutral path (R1) is closed.The oil fed from the P2 port flows through the parallel path (R3), the load check valve (S8-2), and the spool neck and into the A8 port.
   When the boom 2 spool is switched by pressurizing from the boom 2 (section 4) pilot port Pa4, the neutral path (L1) is closed.The oil fed from the P1 port flows through the parallel path (L3), the load check valve (S4-2), the spool neck, and path (4) and merges into the A8 port.The return oil returns to the tank path (Ta) from the B8 port through the spool neck section.

Up (2nd speed merge)

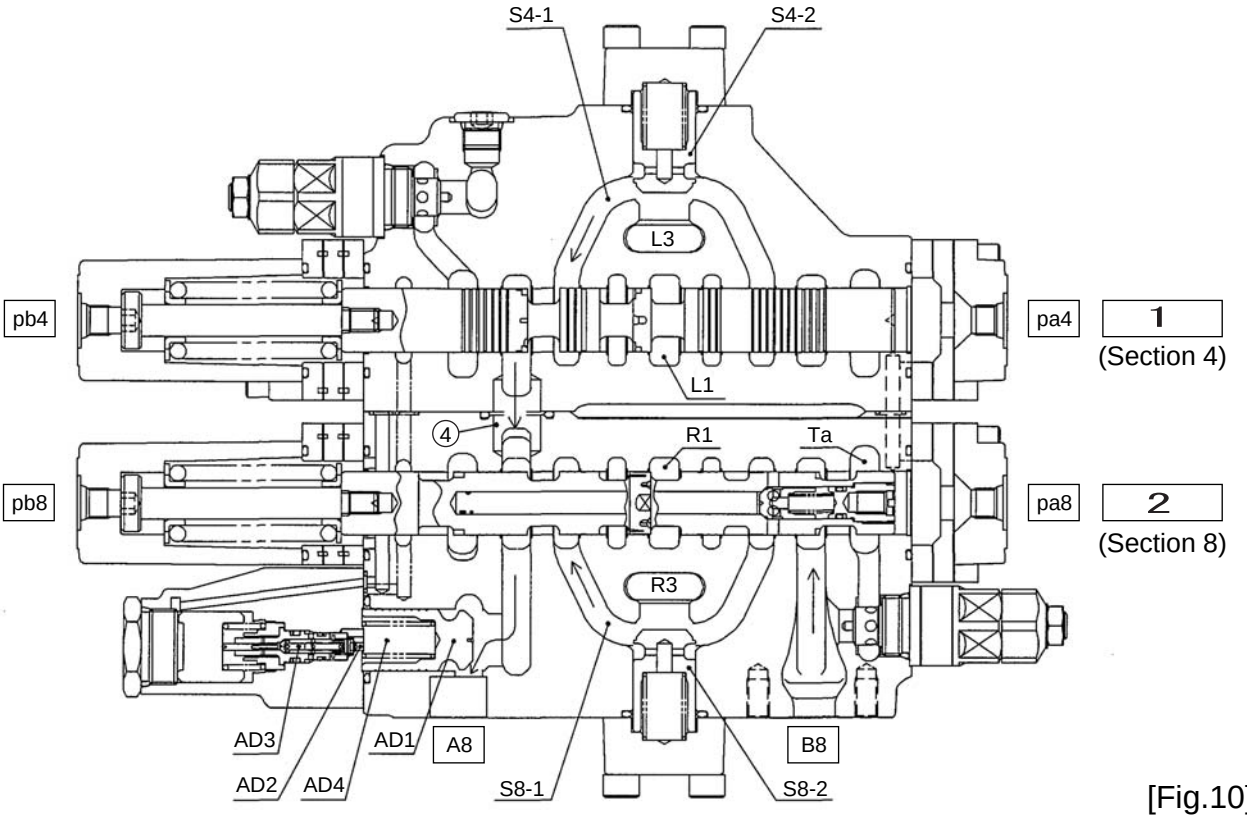

[Fig.10]

1	2-boom
2	1-boom

https://truckmanualshub.com/

3. Boom down (regeneration) [Fig. 11]
   When the boom 1 spool is switched by pressurizing from the boom 1 (section 8) pilot port pb8, the neutral path (R1) is closed.The oil fed from the P2 port flows through the parallel path (R3), the load check valve (S8-2), and the spool neck and into the B8 port.
   The pilot pressure applied to pb8 at this time moves the anti-drift valve spool (AD3) through the path built into the housing at the same time that the spool is switched and reduces the pressure of the spring chamber (AD4) to open the poppet (AD1).
   Through this movement, the cutoff of the A8 port is released before the spool is switched.
   After that, the return oil from the A8 port returns to the tank path (Ta).
   Part of the return oil pushes open the poppet (S8-3) inside the boom 1 spool, passes through path (S8-1), and merges into the B8 port to prevent cylinder rod cavitation.
   Cylinder speed increase and P2 port pressure reduction effects also accompany depending on the port pressure conditions.

Down (regeneration)

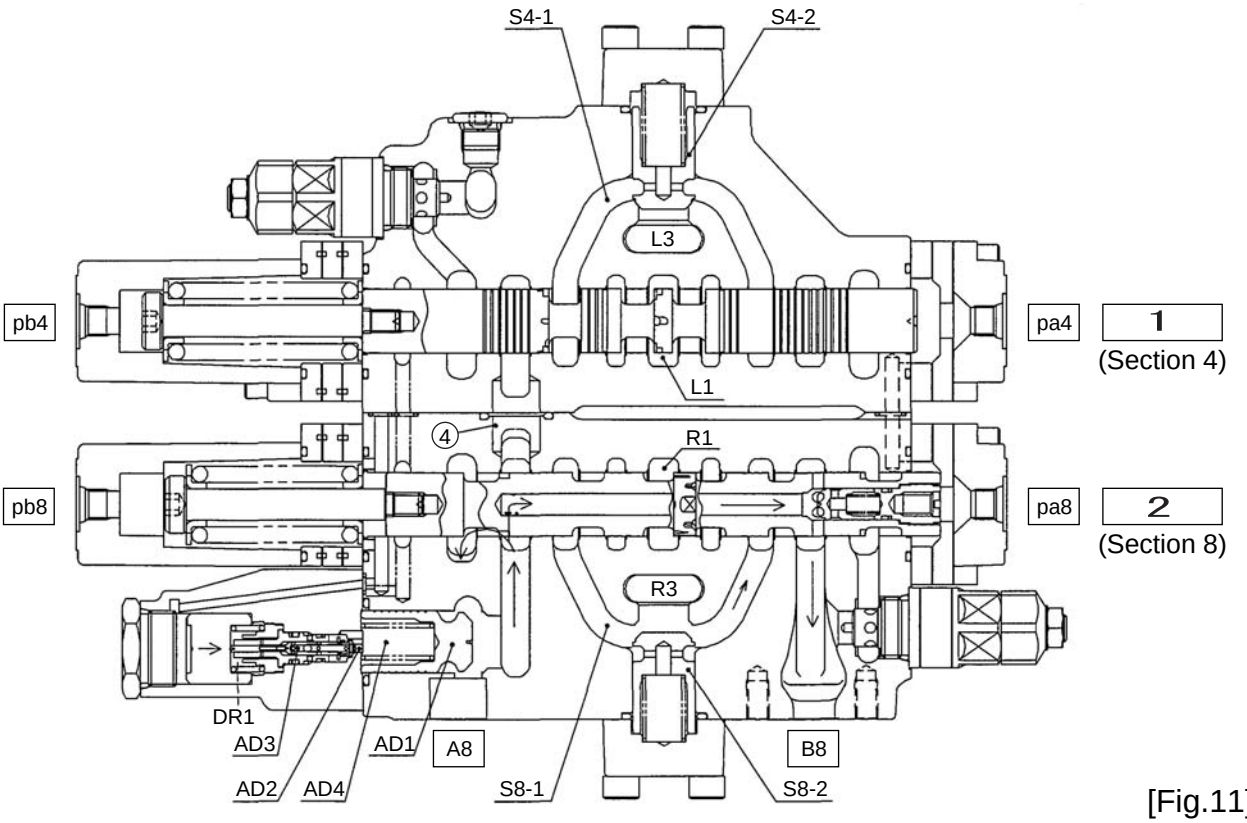

[Fig.11]

1	2-boom
2	1-boom

https://truckmanualshub.com/

6) Arm spool switchover [Fig. 12 through 15]

1. Neutral [Fig. 12]
   This valve mounts an anti-drift valve on the arm 1 cylinder rod side.
   In neutral, the poppet (AD1) is reliably seated by the pressure of the A5 port itself led through path (AD2) and the spool (AD3) into the spring chamber (AD4) to cut off the return oil from the A5 port.

Neutral

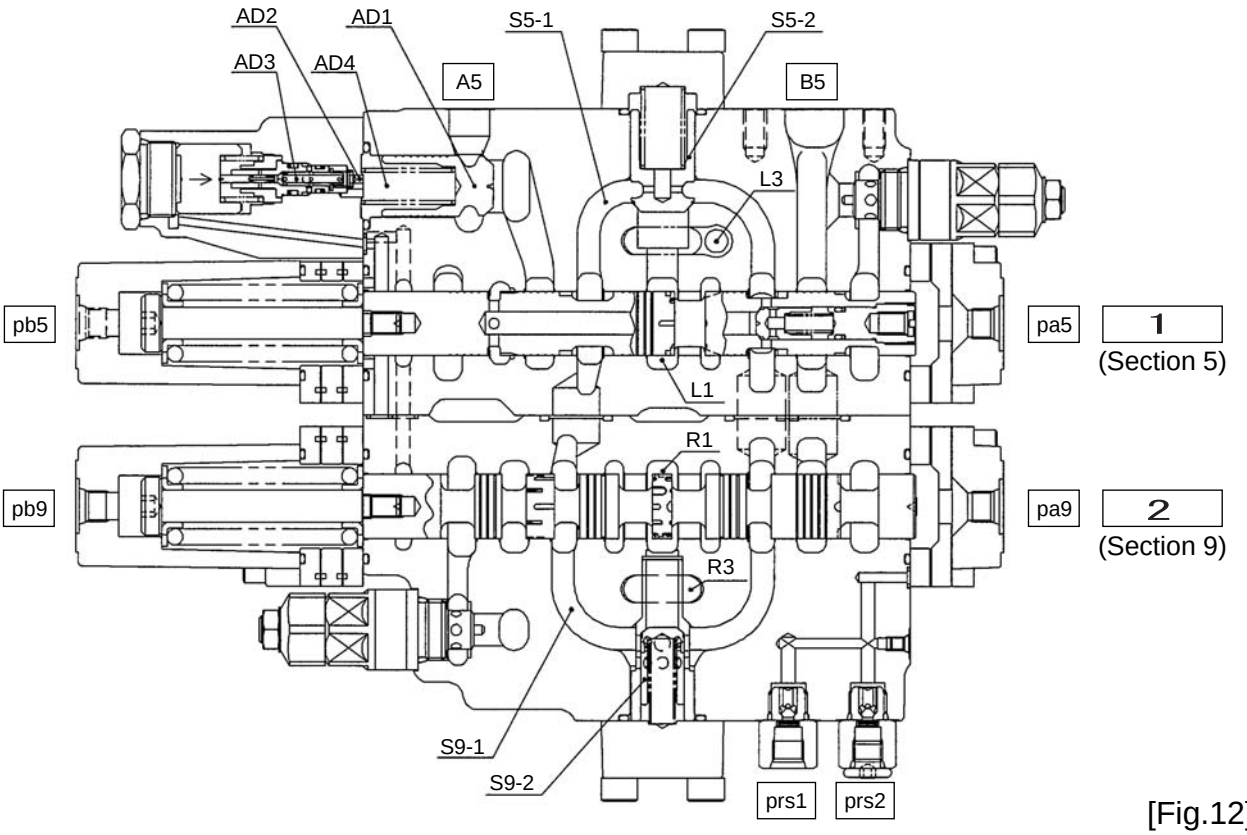

[Fig.12]

1	Arm 1
2	Arm 2

https://truckmanualshub.com/

2. Arm-in (2nd speed merge) [Fig. 13]
   When the arm 1 spool is switched by pressurizing from the arm 1 (section 5) pilot port Pb5, the oil fed from the P1 port flows from the neutral path (L1) through the load check valve (S5-2), path (S5-1), and the spool neck section and into the B5 port.When the arm 2 spool is switched by pressurizing from the arm 2 (section 9) pilot port Pb9, the oil fed from the P2 port flows from the neutral path (R1) through the load check valve (S9-2), path (S9-1), the spool neck section, and path (6) and merges into the B5 port.
   The pilot pressure applied to pb5 at this time moves the anti-drift valve spool (AD3) through the path built into the housing at the same time that the spool is switched and reduces the pressure of the spring chamber (AD4) to open the poppet (AD1).Through this movement, the cutoff of the A5 port is released before the spool is switched.
   After that, the return oil from the A5 port splits into the flow through the regeneration check valve in the spool that is regenerated at the B5 port and the flow returning to the tank path (Ta) through the regeneration control valve.
   (For details on the regeneration function, see the Regeneration valve operation explanation in next item 3) below.)

Arm-in (2nd speed merge)

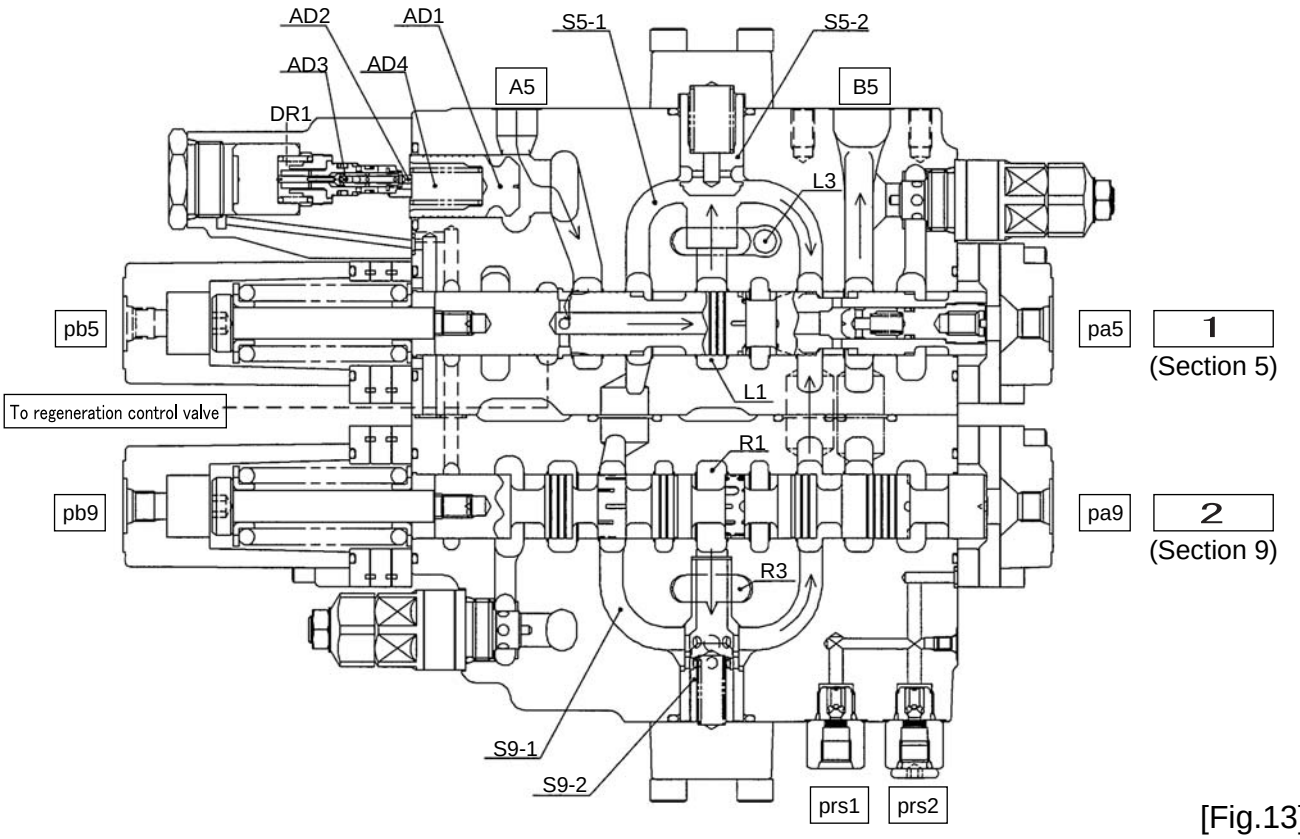

[Fig.13]

1	Arm 1
2	Arm 2

https://truckmanualshub.com/

3. Arm-in (variable regeneration) [Fig. 14]
   For an arm-in operation, after the return oil from the A5 port passes through the notch (a), it divides into two paths:
   1. The return oil returns to the tank path (Ta) through the fixed metering valve (d) in the regeneration control valve, path (e), and the variable metering valve (f).
   2. The return oil passes through the fixed metering valve (b) in the arm 1 spool, the regeneration check valve (c), and the fixed metering valve (i), then merges into the bridge path (S5-1).
   Here, when the bridge path (S5-1) pressure goes higher due to the port B5 load pressure, the regeneration control valve spool (h) is pressed through the regeneration control valve piston (g), and the variable metering valve (f) section opening surface area increases, so the quantity of oil returning to the tank path (Ta) increases.
   On the other hand, the quantity of oil regenerated in the B5 port decreases.
   Though this variable mechanism, both the regeneration ratio for low loads is secured and reduction in the return back pressure for high loads is established.

Arm-in (variable regeneration)

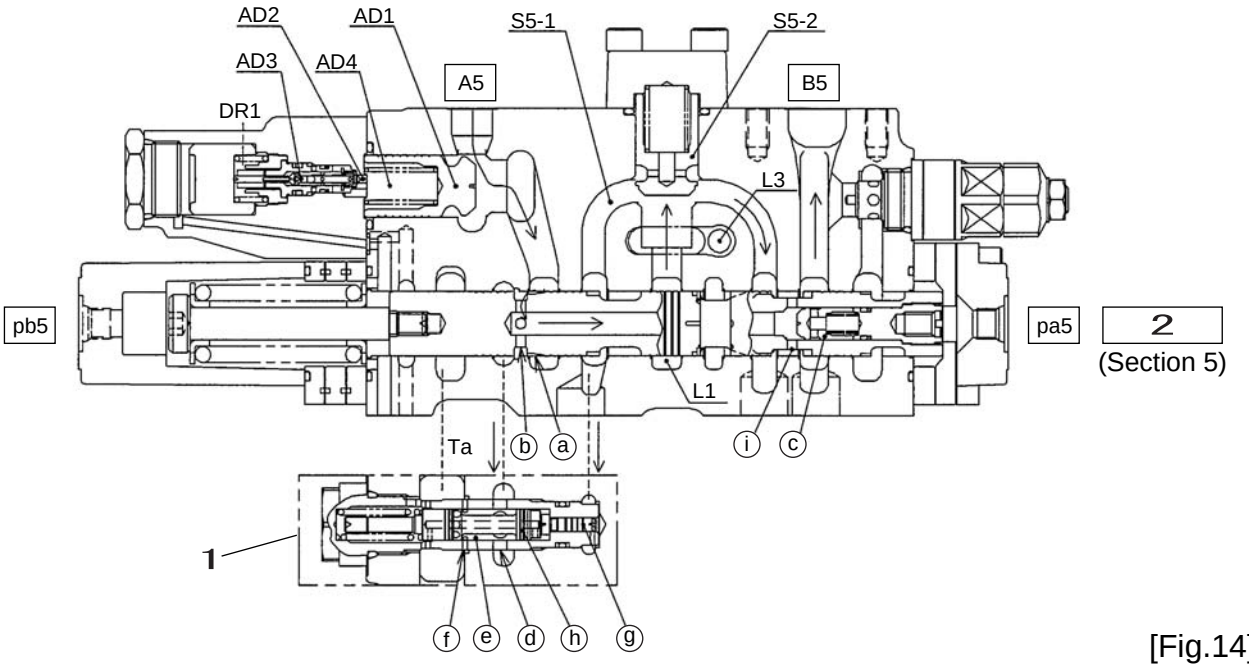

[Fig.14]

1	Regeneration control valve (variable)
2	Arm 1

https://truckmanualshub.com/

4. Arm-out (2nd speed merge) [Fig. 15]
   When the arm 1 spool is switched by pressurizing from the arm 1 (section 5) pilot port Pa5, the oil fed from the P1 port flows from the neutral path (L1) through the load check valve (S5-2), path (S5-1), and the spool neck section and into the A5 port.
   When the arm 2 spool is switched by pressurizing from the arm 2 (section 9) pilot port Pa9, the oil fed from the P2 port flows from the neutral path (R1) through the load check valve (S9-2) and path (S9-1), merges into the arm 1 section path (S5-1) and heads toward the A5 port through the arm 1 spool neck section.The return oil from the B5 port returns to the tank path (Ta) from the B5 port through the spool neck section.

Arm-out (2nd speed merge)

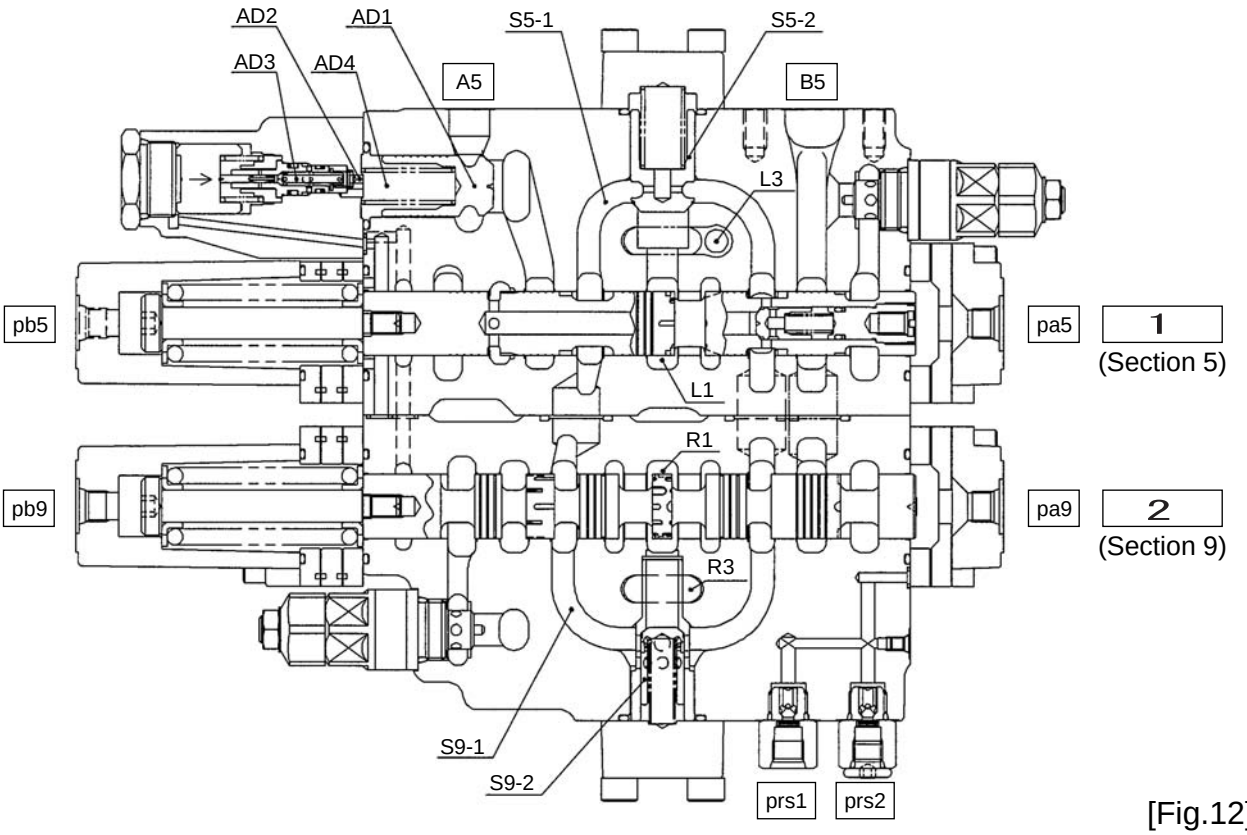

[Fig.12]

1	Arm 1
2	Arm 2

https://truckmanualshub.com/

7) Arm parallel metering valve [Fig. 16]
Metering by the spool is installed in the arm 1 parallel path of this valve to control the quantity of oil fed to arm 1 for compound operations.
The oil fed from the arm 1 (Section 5) parallel path (L3) pushes open the poppet (S5-3) and passes through the variable metering spool metering valve (Lc8), then is connected to path (L5).
Here, the quantity metered by the metering valve (Lc8) is adjusted by pressurizing the pilot port (Pbu).

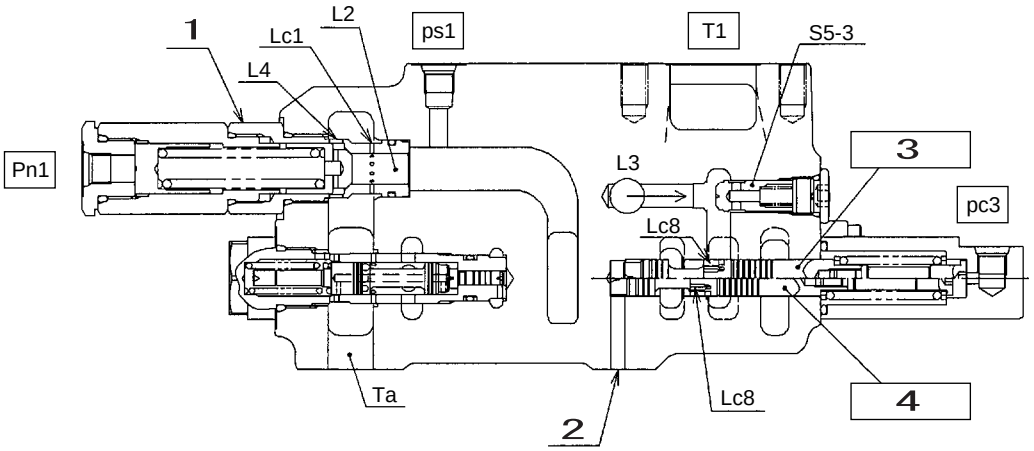

[Fig.16]

1	Low pressure relief valves (L)	3	For boom-up (for Pbu pressurization)
2	Pbu signal path	4	For neutral

https://truckmanualshub.com/

8) Relief valve

1. Main relief valve [Fig. 17]
   The oil fed from the P1 port passes through the poppet (LP) and the oil fed from the P2 port passes through the poppet (RP) and path (3) and is led to the main relief valve.The maximum pressure of the P1 and P2 pumps is controlled by the operation of the main relief valve.

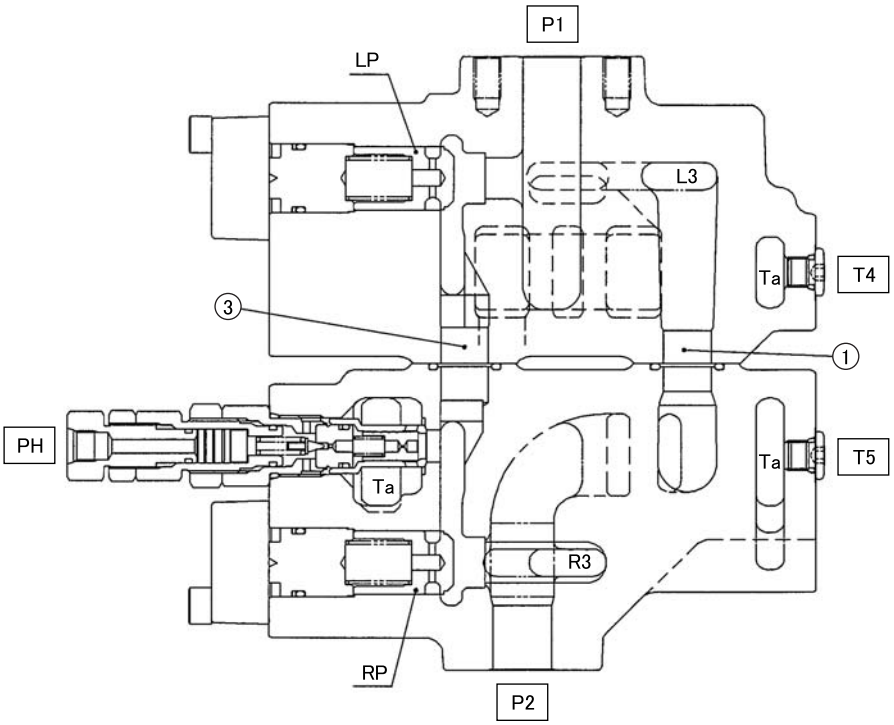

[Fig.17]

2. Overload relief valve [Fig. 18]
   There is an overload relief valve at the boom 1, arm 1, bucket, and add-on cylinder ports to prevent any abnormal rise in actuator pressure, for example due to an external force.
   This relief valve is also equipped with a function for preventing cavitation (suction function) by taking in oil from the tank when there is a load on the cylinder port pressure.

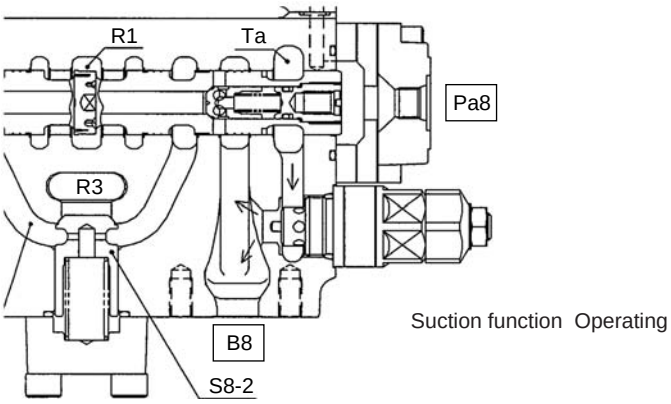

[Fig.18]

https://truckmanualshub.com/

[3] Compound operation

1) Travel compound operation [Fig. 19, Fig. 20]

Under the conditions below when the travel left / right and the front system are operated at the same time, the straight travel spool is switched, and the straight travel characteristic is maintained.

1 When the front is operated during travel left / right simultaneous operation (advance, retreat, or pivot turn)

2 When the left / right are operated simultaneously during front system operation

Front system operation is not affected by the quantity of switches and switchover sections.

1. Signal circuit [Fig. 19]

(A)When the [Travel 1] side level is operated, the pressure branched off from the valve main unit pilot port passes through the filter and the shuttle, then switches the switch valve [V1].

(B)When the [Travel 2] side level is operated, the pressure branched off from the valve main unit pilot port passes through the filter and the shuttle, then if the switch valve [V1] is switched, it switches the switch valve [V2] through the path.On the other hand, if the switch valve [V1] is in the neutral state, the path is cut off by the switch valve [V1]. Therefore, if both (A) and (B) are established at the same time, the straight travel spool internal path (Pst) is conducted to PA. Also, if either (A) or (B) are established, the travel signal (PT) pressure rises.

(C)If at least one of the front systems is switched, the highest pressure of all the pilot pressures in the front system is selected and is connected to the front signal port (PA). Therefore, if (A), (B), and (C) are established at the same time, the straight travel spool switchover quantity is determined proportional to the front signal (PA) pressure through the internal straight travel signal path (Pst). [Fig. 19] shows the example of a case of travel left / right advance + boom-up.

https://truckmanualshub.com/

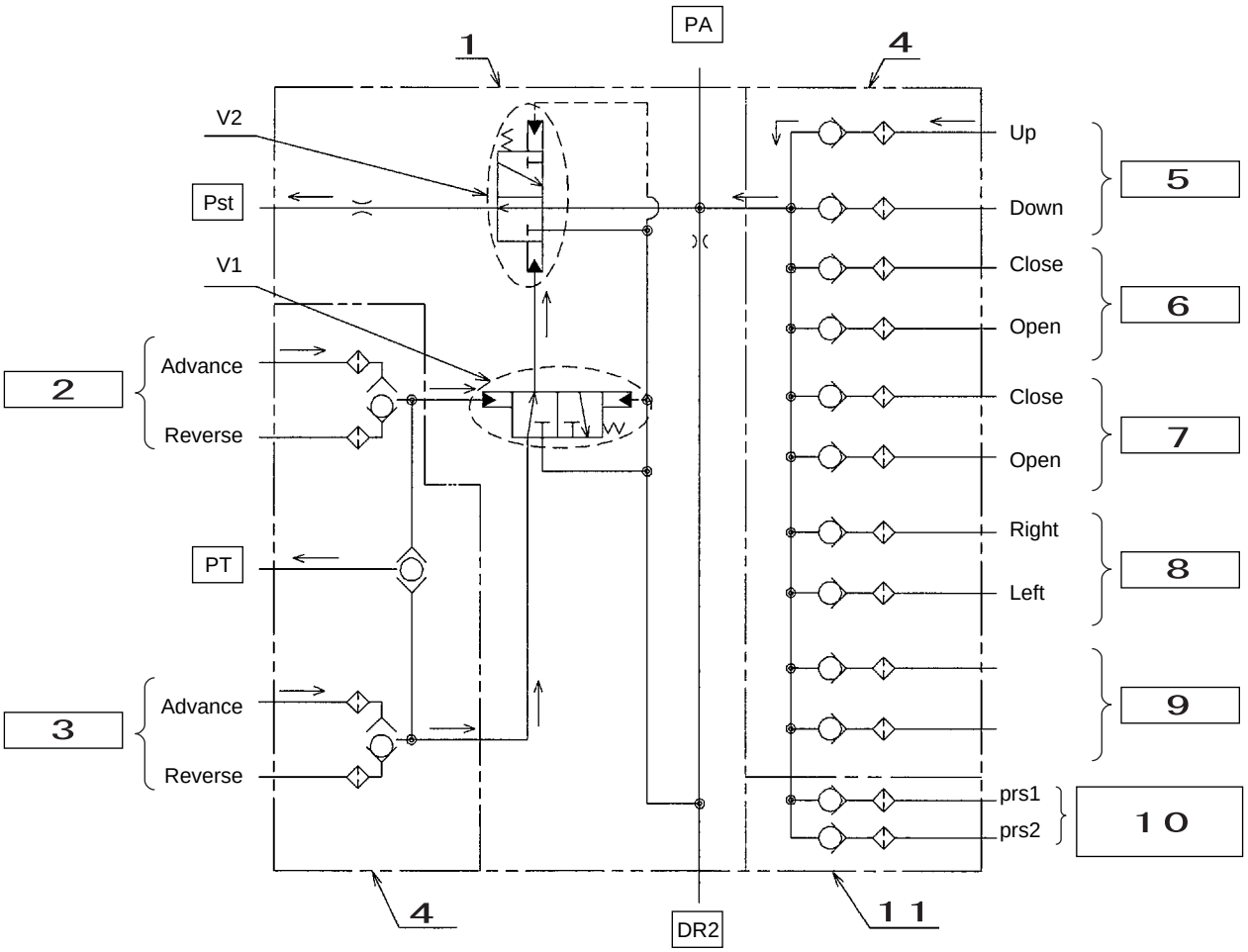

[Fig.19]

1	Straight travel signal control valve	5	Boom	9	Option
2	Travel 1	6	Arm	10	Add-on (main pump)
3	Travel 2	7	Bucket	11	Main unit housing section (option)
4	Plate ASSY	8	Swing		

https://truckmanualshub.com/

2. Main unit circuit [Fig. 20]
When the straight travel spool is switched, the oil fed from the P1 port flows from the neutral path (L1) to travel (section 1) and at the same time passes through path (2), the straight travel spool neck section, and the neutral path (R1) and into travel (section 6) and feed to travel left and right becomes possible.
On the other hand, when the oil fed from the P2 port flows to the parallel path (R3), at the same time it passes through the straight travel spool neck section and path (1) and into the parallel path (L3), so it becomes possible to feed oil to the entire front system.
When the front system is switched during travel and that pressure becomes higher than the load pressure on travel (section 6), part of the oil fed from the P2 port pushes up the poppet (S6-2) from the parallel path (R3) and the oil flows through the metering valve at the poppet tip and merges into path (S6-1).
This softens the shock on the machine body of the sudden drop in speed caused by the switchover to 1 pump travel.
Because as described above, travel (sections 1 and 6) operates with the oil fed from the P1 port and operating machines other than travel are operated with oil fed from the P2 port, travel curving is prevented and the straight travel characteristic maintained during compound operations.

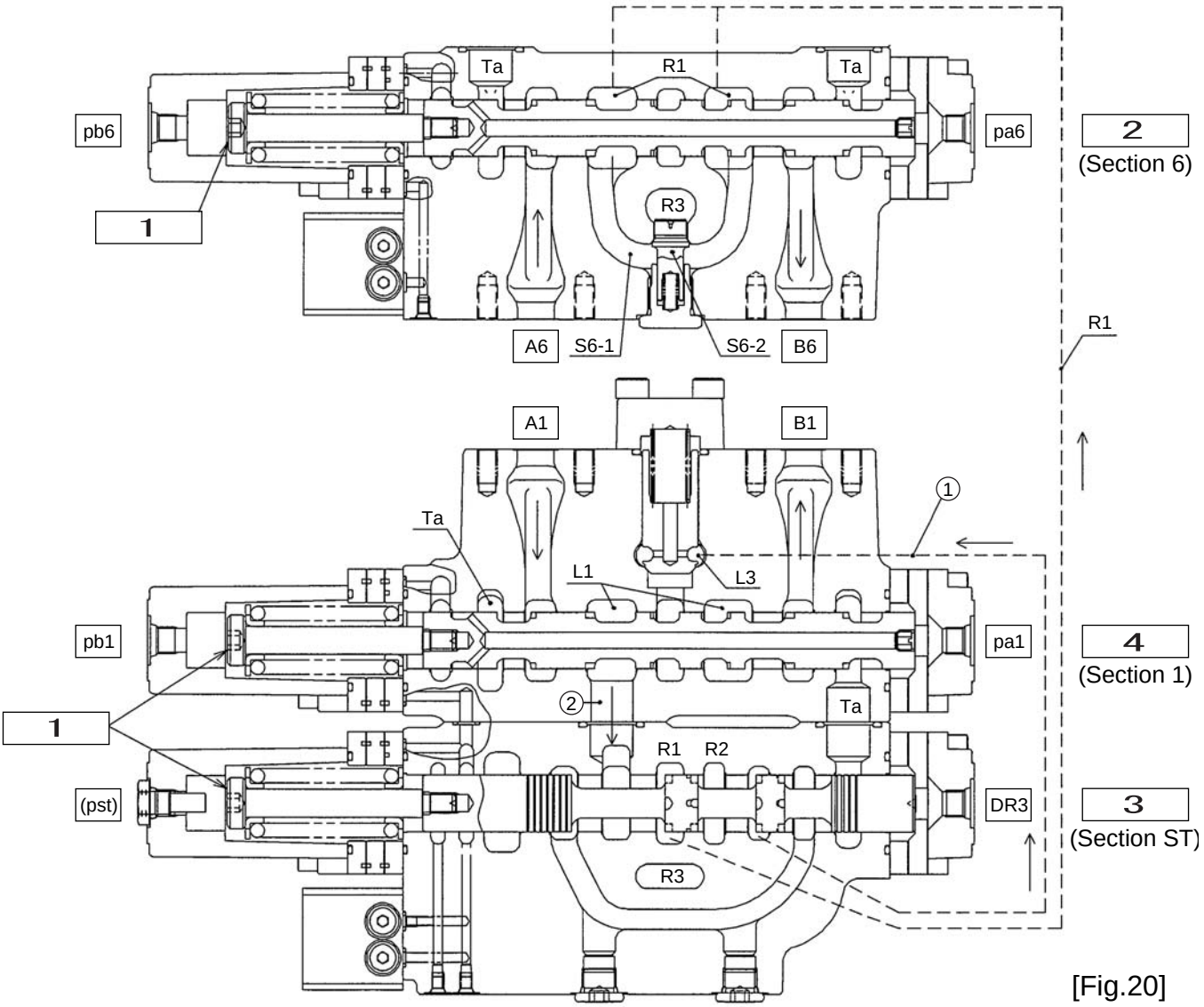

[Fig.20]

1	Trouble state	3	Straight travel
2	Travel	4	Travel

https://truckmanualshub.com/

[4] Anti-drift valve

The anti-drift valve is mounted on the arm rod [boom head] side cylinder port to prevent the arm [boom] cylinder from dropping naturally.
Also, the release signal operates led by the internal path from the pilot signal.
(The arm side (A5) is shown as a typical example.)

1) Neutral (A5 port hold)
   1. The A5 port hold pressure passes from path (a) through path (b), through path (c), and is conducted to the poppet (1) spring chamber (d).
   2. Therefore, the A5 port pressurized oil is cut off by the seat section (S1) and the seat section (S2).

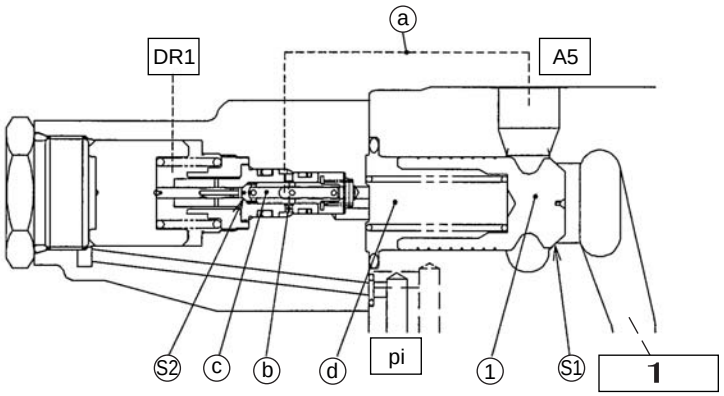

1	Main spool

2) Release signal application
   1. When the pi port is pressurized, the piston (2) moves and the spool (3) operates.
   2. Furthermore, the spool (3) operates the poppet (4).
   3. Then, the operation of the poppet (4) cuts off the connection between the A5 port and the spring chamber (d).

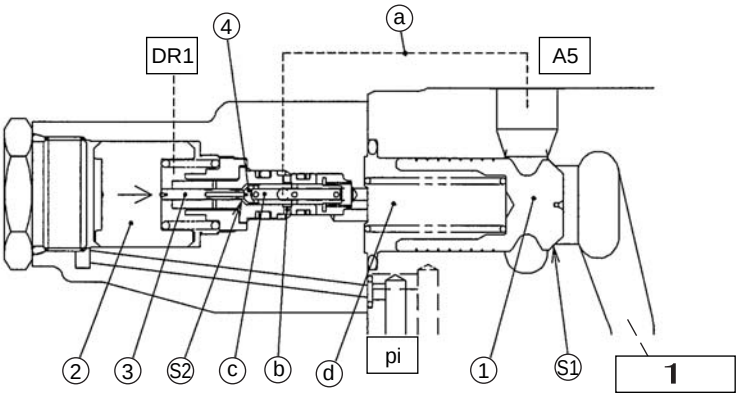

1	Main spool

https://truckmanualshub.com/

3) Ending hold status
   1. When the piston (2) operates further, the spring chamber (d) is connected by the (T2) section from path (c) through path (e) to the drain chamber [DR].
   2. The spring chamber (d) pressure becomes the drain pressure and the main poppet (1) operates.

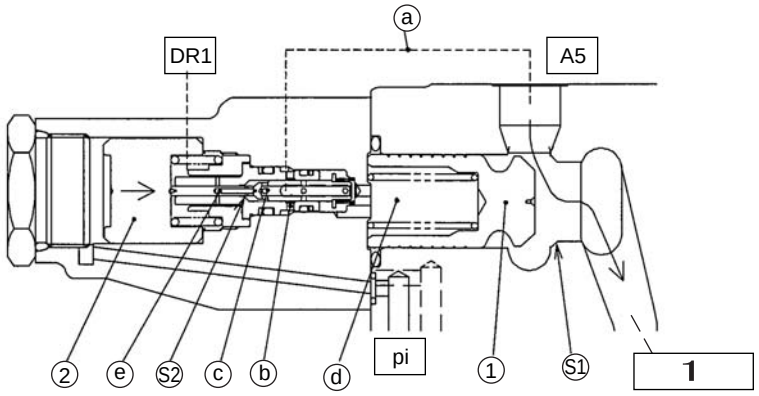

1	Main spool

https://truckmanualshub.com/

[5] Relief valve

1) Main relief valve operation

1. This relief valve is incorporated between the neutral path "HP" and the low-pressure path "LP. The oil passes through the metering hole of the main poppet [C] and charges the interior space [D].Also, the sleeve [E] and the main poppet [C] seat securely operating on the different surface areas [A] and [B].

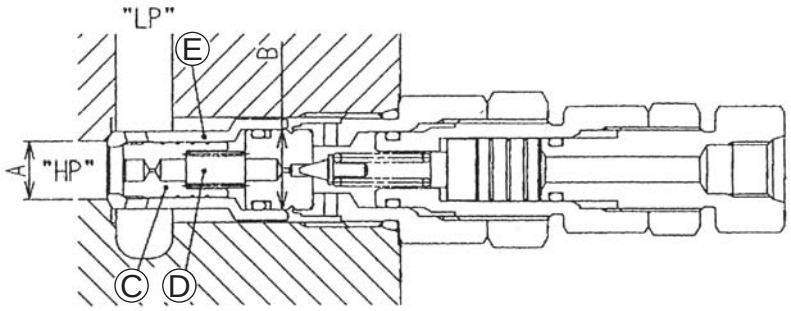

2. When the neutral path "HP" pressure reaches the set pilot poppet spring force, the pilot poppet [F] opens.The oil flows around the poppet, passes through the notch hole [G], and is led to the low-pressure path "LP".

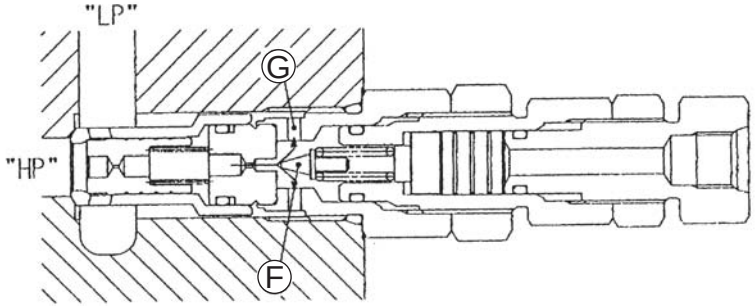

3. Because the pilot poppet has opened, the [D] pressure drops and the main poppet [C] opens, so the oil flows directly into the path "LP".

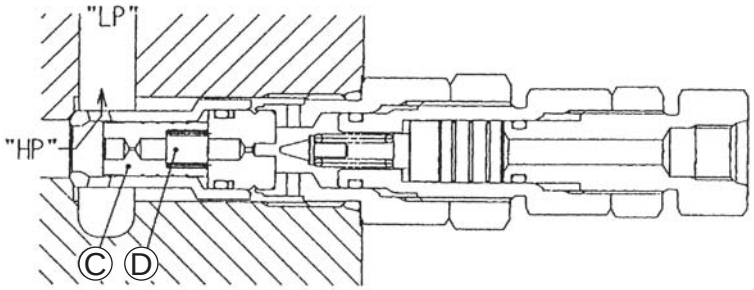

https://truckmanualshub.com/

"Boost pressure operation"
When pressure is applied to the pilot port "PH", the piston [H] is moved to the set position by the plug [I].Because of this, the pilot spring force rises and the "HP" pressure rises.

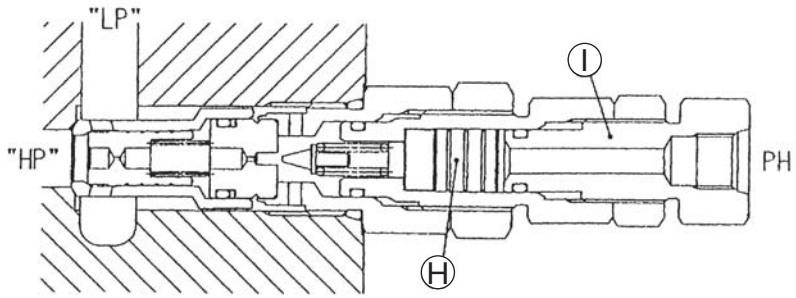

2) Overload relief valve operation
   1. This relief valve is incorporated between the cylinder port "HP" and the low-pressure path "LP". The oil passes through the metering hole of the piston [C] and charges the interior space [G].The sleeve [K] and the main poppet [D] seat securely operating on the different surface areas [A] and [B].

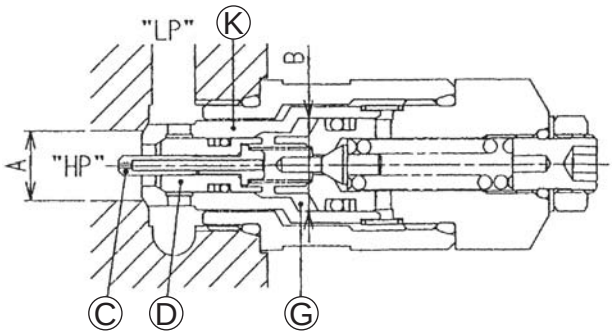

   2. When the cylinder port "HP" pressure reaches the set pilot poppet spring force, the pilot poppet [E] opens.The oil flows around the poppet, passes through the notch hole [H], and is led to the low-pressure path "LP".

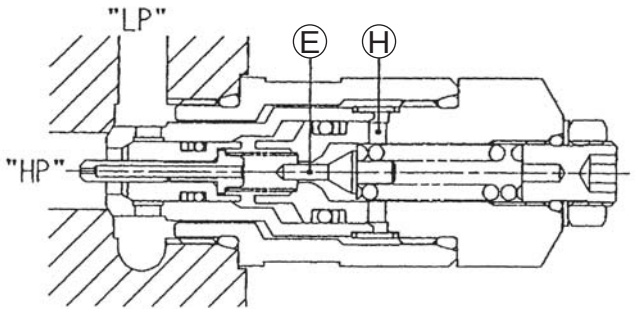

https://truckmanualshub.com/

3. Because the pilot poppet [E] has opened, oil flow is generated through the metering valve [I] of the piston [C], a pressure difference is generated between the path "HP" and the rear side of the piston [C], and the piston [C] moves and seats with the poppet [E].

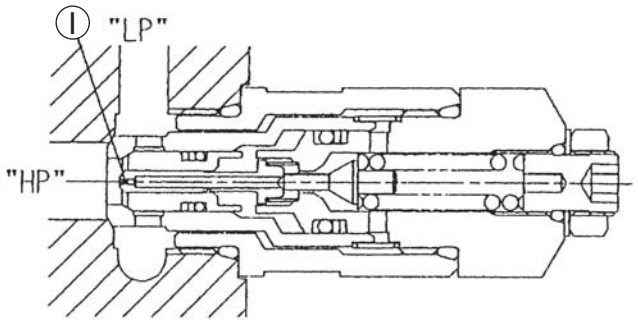

4. The flow of oil from the path "HP" to the rear side of the poppet [D] is only through the ring-shaped gap between the poppet [D] and the piston [C] and through the metering valve [F], so the pressure difference increases.
   Because of this, the poppet [D] opens and the oil flows directly into the path "LP".

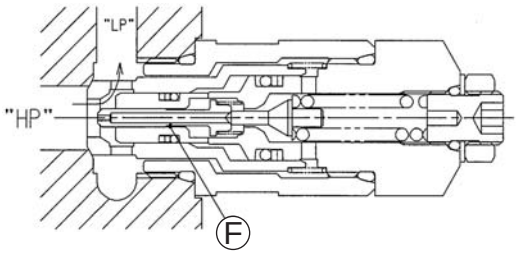

3) Overload relief valve intake operation
   1. This relief valve has a built-in anti-void unit that supplies oil if cavitation occurs at the cylinder port "HP"
      When the cylinder port "HP" pressure is lower than the low-pressure side "LP", the sleeve [K] is opened by the surface area difference between [A] and [B].Oil enters the cylinder port "HP" from the low-pressure side "LP" to prevent cavitation.

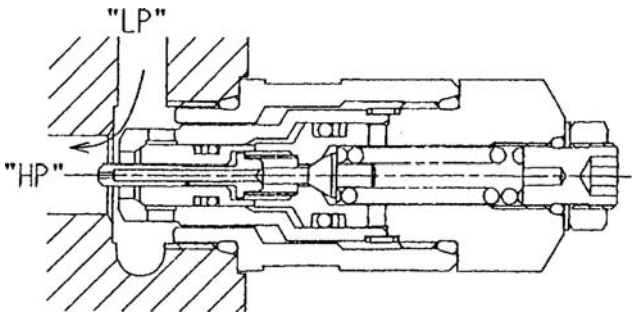

https://truckmanualshub.com/

[6] Neutral cut spool [Fig. 21]

This valve is equipped as standard with a neutral cut spool in the P2 side housing neutral path (R1) minimum flow (low-pressure relief valve upstream).

When the pcc port is pressurized and the neutral cut spool is switched, the path through the metering valve [Lc7] to low-pressure relief valve is cut off and output to the outside from the P3 port becomes possible.

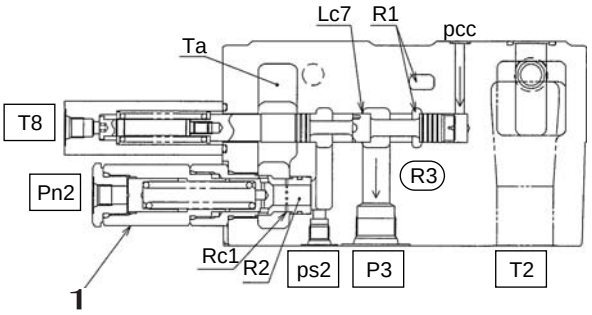

[Fig.21]

1	Low pressure relief valves (R)

[7] Plate ASSY [Fig. 22]

This valve is equipped with a plate ASSY hermetically sealed with a gasket piling a plate on the housing side surface.

The shuttle is built into the inside and this valve has a function for selecting and controlling the spool pilot pressure.

Also, in order to protect the shuttle section from contamination from the outside, a filter is mounted between the plates.

When removing, do not loosen the indicated screw and be careful that internal parts are not dispersed.

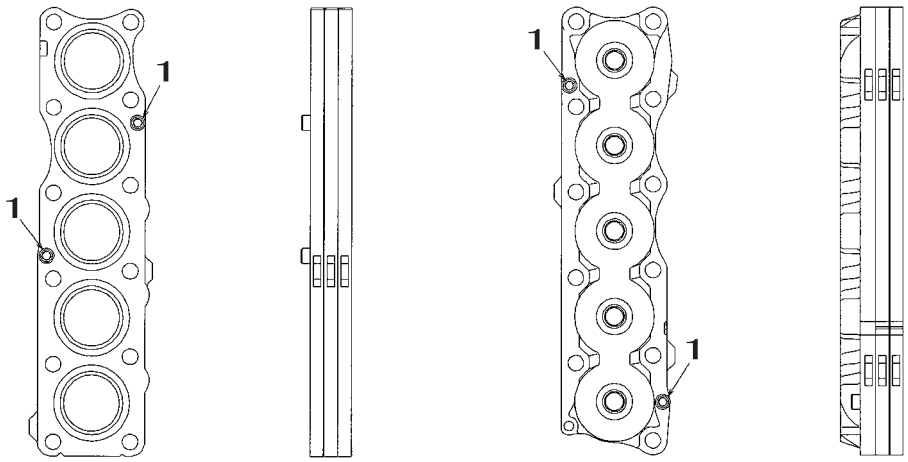

[Fig.22]

[Long cap side]]

[Short cap side]

1	Sub-assembly screw

https://truckmanualshub.com/

[8] Straight travel signal control valve [Fig. 19, Fig. 23]
This valve integrates the pilot pressure for the spool of the front system and travel selected with the plate ASSY and is used to switch the straight travel spool.
When the Travel 1 pilot pressure is pressurized, the spool [V1] is switched.
When the Travel 2 pilot pressure is pressurized at the same time, the spool [V2] is switched.
Here, when the front system pilot pressure [PA] is pressurized, the PA pressure flows into Pst and is led to the straight travel spool pilot chamber and the spool is switched.

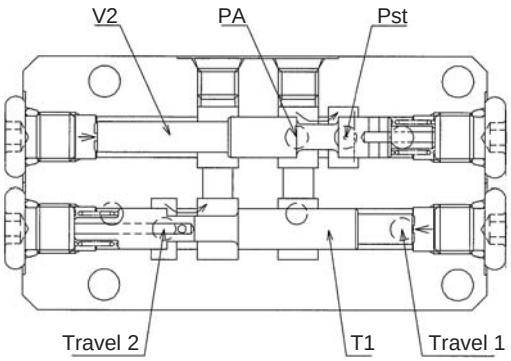

[Fig.23]

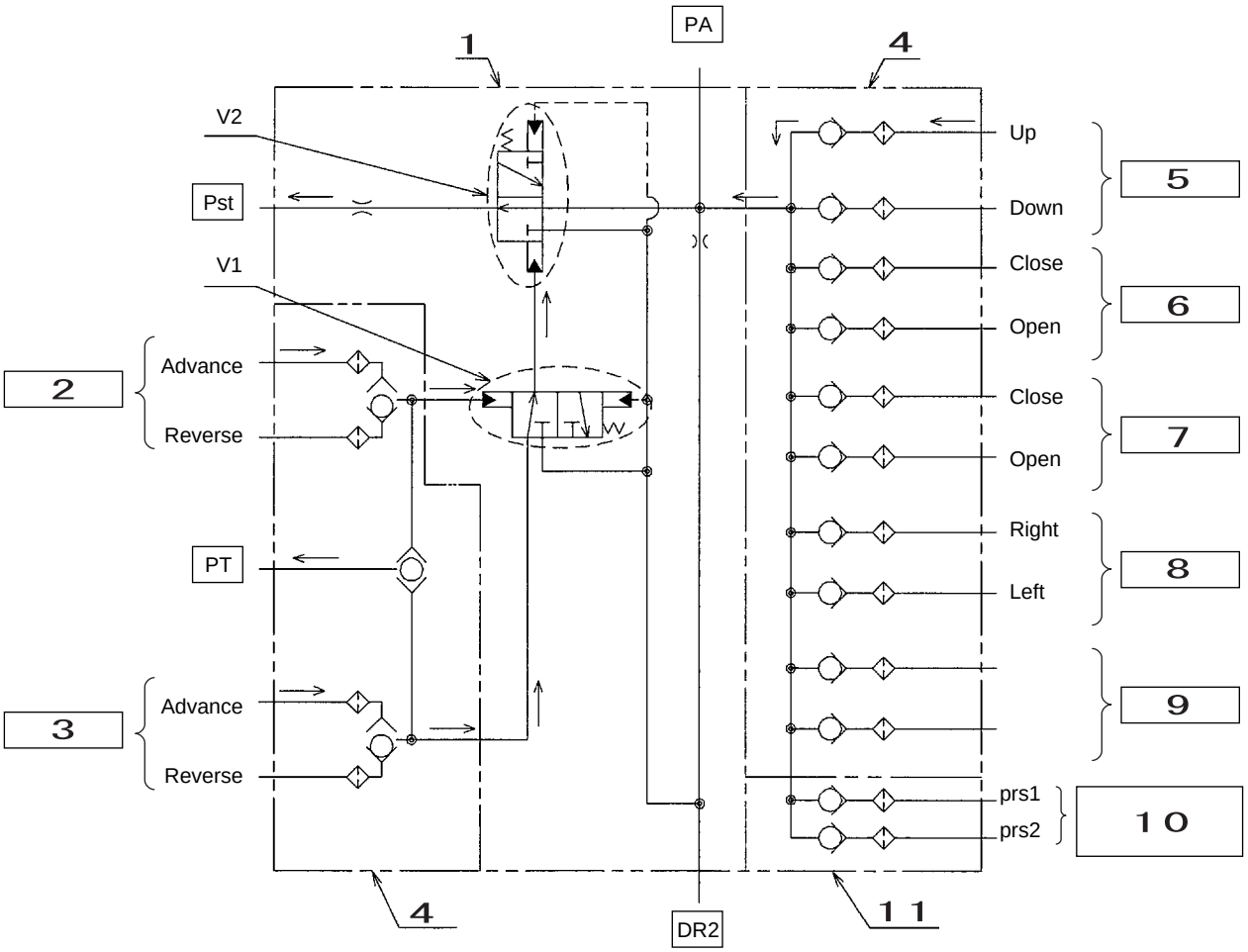

[Fig.19]

1	Straight travel signal control valve	5	Boom	9	Option
2	Travel 1	6	Arm	10	Add-on (main pump)
3	Travel 2	7	Bucket	11	Main unit housing section (option)
4	Plate ASSY	8	Swing		

https://truckmanualshub.com/

[9] Add-on [Fig. 24, Fig. 25]

1) Add-on main relief valve
The oil fed from the Pr port is led to the main relief valve. The Pr pump maximum pressure is regulated by the operation of the main relief valve.

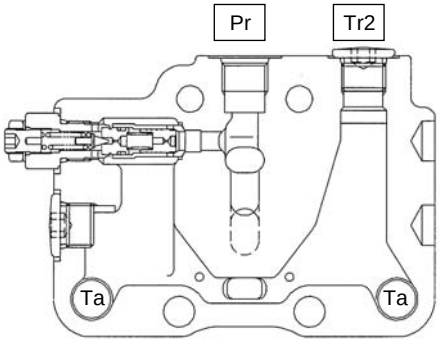

[Fig.24]

2) Spool section
When the spool is pressurized from the add-on (Section 10) pilot port par1 [pbr1] and switched, the neutral path [Pg] is closed.The oil fed from the Pg port flows from the parallel path [Rg] through the load check valve [S10-1], the path [S10-2], and the spool neck, and into the AR1 [BR1] port.
The return oil returns to the tank path [Ta] from the BR1 [AR1] port through the spool neck section.

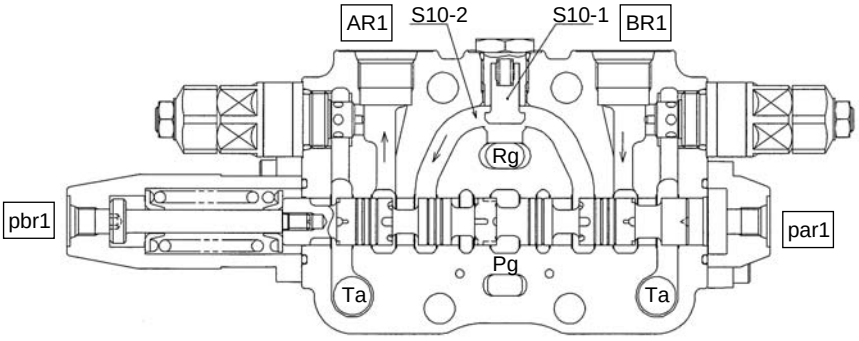

[Fig.25]

https://truckmanualshub.com/

3) Low-pressure relief valve operation [Fig. 26, Fig. 27]

1. Signal pressure generation (when pin1 [pin2] port pressurized)
   The oil fed from the pump port (P1 [P2]) flows through the neutral path (L1 [R1]), then flows from the low-pressure relief path (L2 [R2]) through the metering valve (Lc1 [Rc1]) and out into the tank path (Ta).
   At this time, the pressure generated in path (L2 [R2]) by the metering valve (Lc1 [Rc1]) is led to the low-pressure relief signal port (Ps1 [Ps2]).
   When the (L2 [R2]) upstream main spool operates, the oil flowing through (L2 [R2]) is reduced, so the (Ps1 [Ps2]) signal pressure becomes lower.

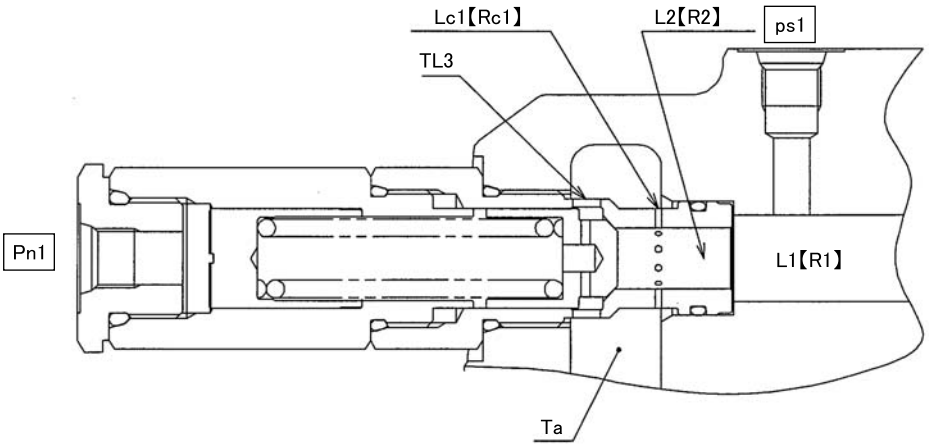

[Fig.26]

2. Relief operation
   When excess oil flows in path (L2 [R2]), the poppet is operated by the pressure generated in path (L2 [R2]) by the metering valve (Lc1 [Rc1]).
   Through this poppet operation, the oil flows from the path, through the notch hole path, and out to the tank path [Ta].This prevents the generation of excess pressure at the low-pressure relief signal port.

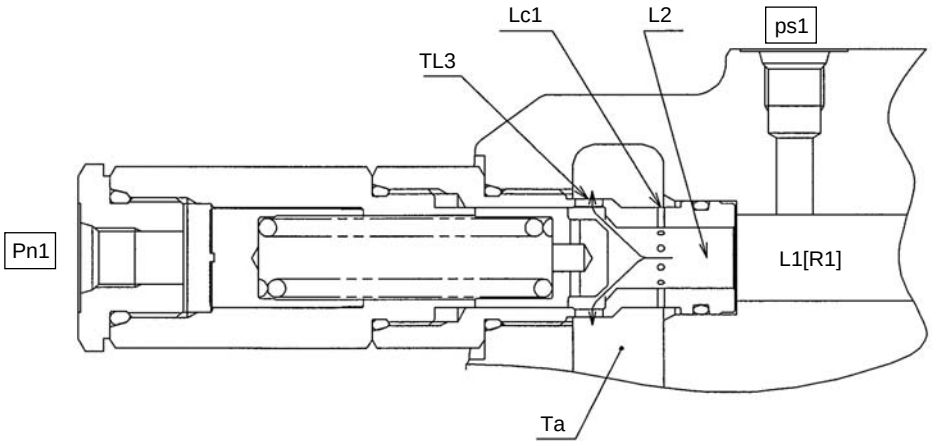

[Fig.27]

https://truckmanualshub.com/

4) Add-on main relief valve

1. Add-on main relief valve operation
   This relief valve is incorporated between the neutral path "HP" and the tank path "LP". The oil passes through the metering hole of the main poppet [1] and charges the interior space [C].
   Also, the sleeve [2] and the main poppet [1] seat securely operating on the different surface areas "A" and "B".

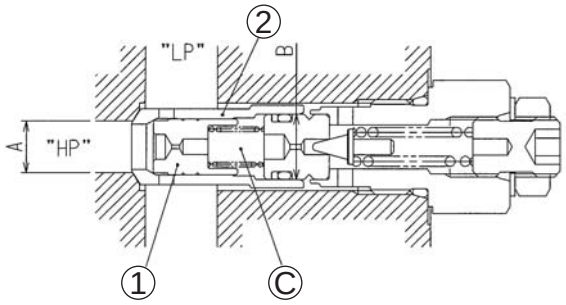

2. When the neutral path "HP" pressure reaches the set pilot spring force, the pilot poppet [3] opens.
   The oil flows around the pilot poppet [3], passes from the notch hole [E] and through the ring-shaped gap [D] and is led to the tank path "LP".

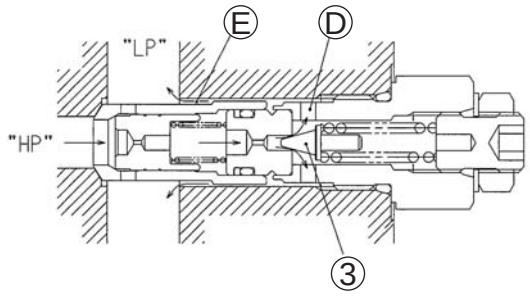

3. Because the pilot poppet [3] has opened, the interior space [C] pressure drops and the main poppet [1] opens, so the "HP" oil flows directly into the path "LP".

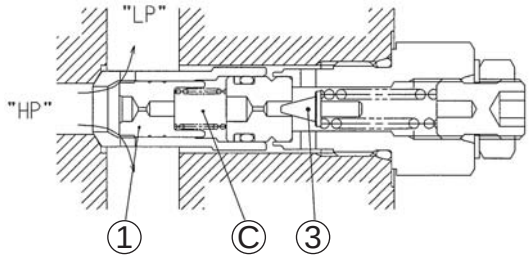

https://truckmanualshub.com/

2. 5-way Solenoid Valve Operation Explanation

(1) External shape diagram (Figure 1) and configuration diagram (Figure 2)

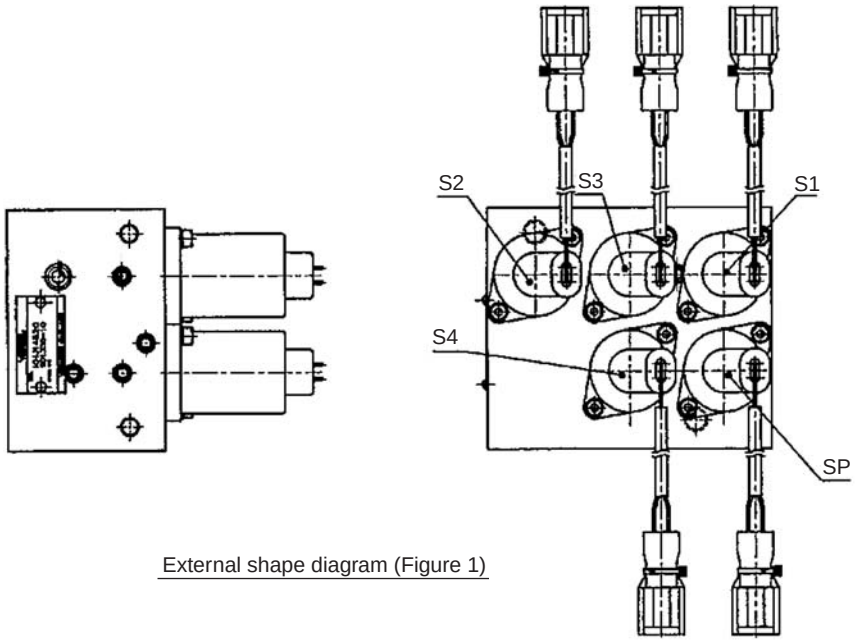

External shape diagram (Figure 1)

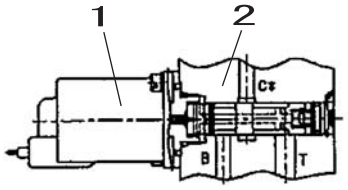

lormal closed type Solenoid; SP, S1, S3

Structural diagram (Figure 2)

1	Electromagnetic switch valve
2	Body

(2) Main component parts

This valve is made up of the body and the electromagnetic switch valve.

https://truckmanualshub.com/

(3) Operation explanation

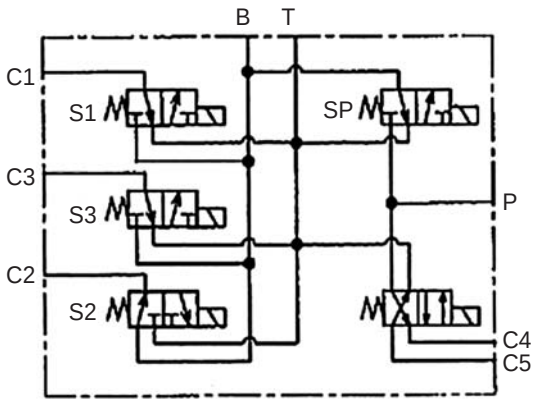

The pressurized oil fed from the P port feeds pressurized oil to the C1 through C5 ports according to the excitation or non-excitation of electromagnetic switch valves S1 through S4 resulting from exciting electromagnetic switch valve SP.

Electromagnetic switch valves S1 and S3	→	Oil passing through when valve excited
Electromagnetic switch valve S2	→	Oil passing through when valve not excited
Electromagnetic switch valve S4	→	Oil passing to C5 when valve excited Oil passing to C4 when valve not excited

(4) Structural diagram

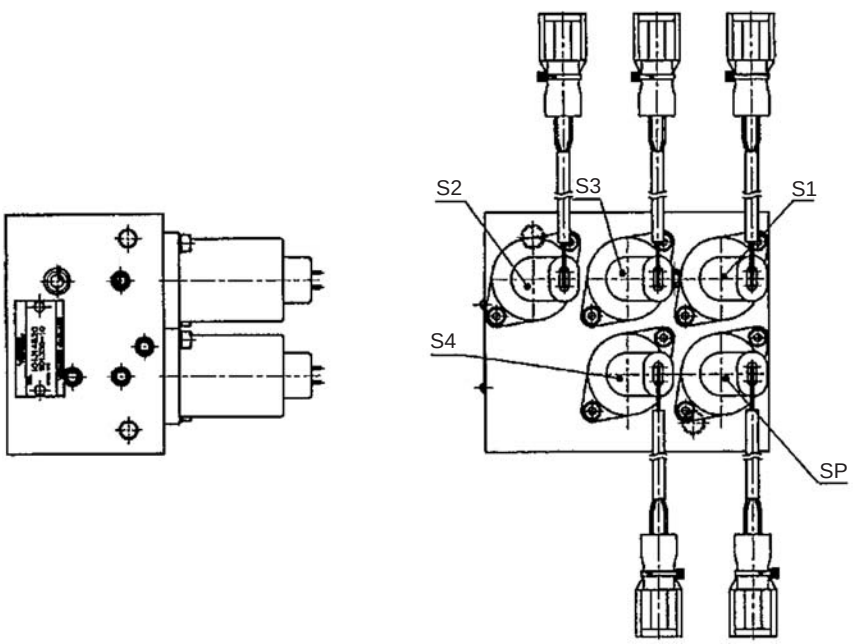

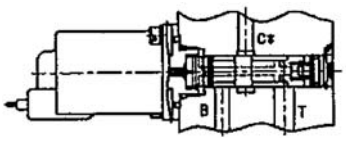

Normal closed type Solenoid; SP, S1, S3

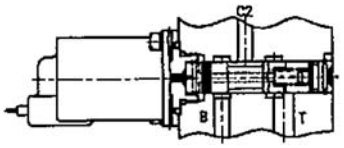

Normal open type Solenoid; S2

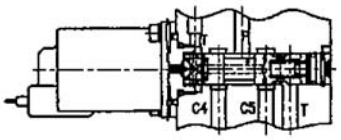

4 port type Solenoid; S4

https://truckmanualshub.com/

3. Upper Side Pilot Valve (remote control valve)

(1) Structure

The remote control valve structure is as shown in the assembly section diagram (Page 185).There is a longitudinal axial hole in the casing and the pressure reduction valve is installed in it.

The pressure reduction valve comprises the spool (201), secondary pressure setting spring (241), return spring (221), spring seating (216), and washer 2 (217).The secondary pressure setting spring (241) is set so that the secondary pressure calculation is 0.5 to 1 MPa (depending on the model).The spool (201) is pressed against the push rod (212) by the return spring (221).

When the push rod (212) is pushed down by tilting the handle or other operation section, the spring seating goes down at the same time and the secondary pressure setting spring (241) setting is changed.

The casing (101) has the oil inlet (primary pressure) port P and the outlet (tank) port T and furthermore the secondary pressure is taken out from the 1, 2, 3, and 4 ports.

(2) Function

[1] Basic functions

The remote control valve is for controlling the control valve spool stroke quantity, direction, etc. This is done by operating the pilot valve output pressure on the control valve spool end section.

In order to satisfy this function, the remote control valve is made up of the following elements.

1) Inlet port (P) to which the oil is fed from the hydraulic pump
2) Multiple output ports (1, 2, 3, 4) for operating the feed pressure from the inlet port on the control valve spool end
3) Tank port (T) required for controlling the above output pressure
4) Spool connecting the output port to the inlet port or tank port
5) Mechanical means including a spring operating on the above spool in order to control the output pressure

[2] Main part functions

The function of the spool (201) is to switch the oil path either to receive the hydraulic pressure fed from the hydraulic pump with the P port and lead the P port pressurized oil to the output ports (1, 2, 3, and 4) or to lead the output port pressurized oil to the T port. The output pressure operating on this spool (201) is determined by the secondary pressure setting spring (241).

In order to change the deflection quantity of the secondary pressure setting spring (241), the push rod (212) is inserted into the plug (211) in such a way that it can slide.

The return spring (221) operates on the casing (101) and spring seating (216) and operates to return the push rod (212) in the displacement zero direction regardless of the output pressure and makes the spool (201) neutral return reliable.It also has the effect of a counterforce spring for giving an operator an appropriate operation feel.

https://truckmanualshub.com/

(3) Operation

Operation of the remote control valve is explained based on the hydraulic circuit diagram (Figure 1) and operation explanation diagrams (Figure 2 through Figure 4).Figure 1 is a typical usage example for the remote control valve.

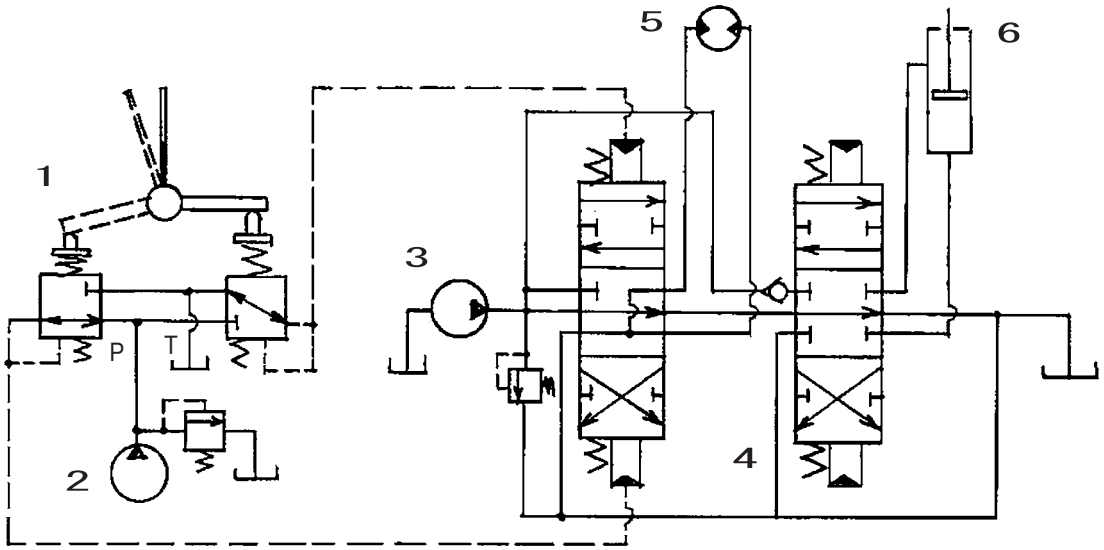

Figure 1 Remote control valve usage example

1	Pilot valve	4	Control valve
2	Pilot pump	5	Hydraulic motor
3	Main pump	6	Hydraulic cylinder

https://truckmanualshub.com/

[1] When handle in neutral (See Figure 2.)
The force of the secondary pressure setting spring (241) that determines the remote control valve output pressure does not operate on the spool (201).Therefore, the spool (201) is pushed up by the return spring (221) (spring seating (216)) and the output ports (2 and 4) are connected with the T port.Therefore, the output pressure is the same as the tank pressure.

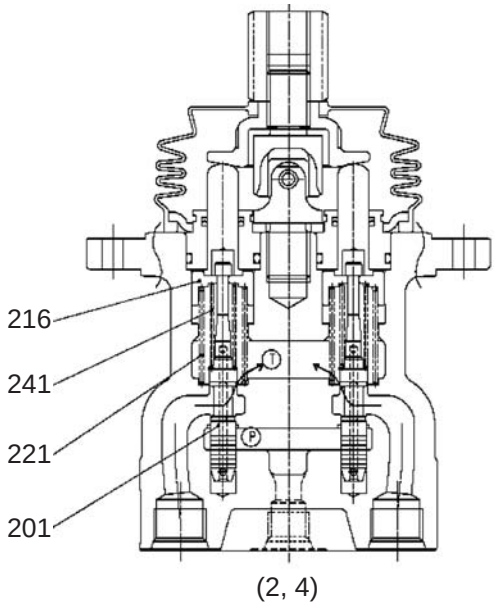

Figure 2 When handle in neutral

[2] When the handle is tilted (See Figure 3.)
When the handle is tiled and the push rod (212) is moved through a stroke, the (spring seating (216)) spool (201) moves down and the oil fed from the pilot pump flows out to the (2 and 4) ports through the P port and the (2 and 4) ports and pressure is generated.

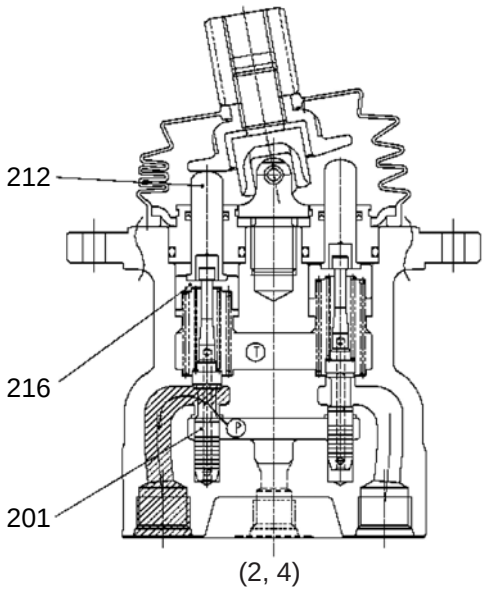

Figure 3 When handle tilted

https://truckmanualshub.com/

[3] When handle held (See Figure 4.)
When the handle is tilted and the port (2 and 4) pressure rises to the pressure equivalent to the set spring force (241), the hydraulic force and the spring force are in balance.When the (2 and 4) ports pressure becomes higher than the set pressure, the (2 and 4) ports and the P port close and the (2 and 4) ports and the T port open. When the (2 and 4) ports pressure becomes lower than the set pressure, the (2 and 4) ports and the P port open and the (2 and 4) ports and the T port close, so the secondary pressure is held constant.

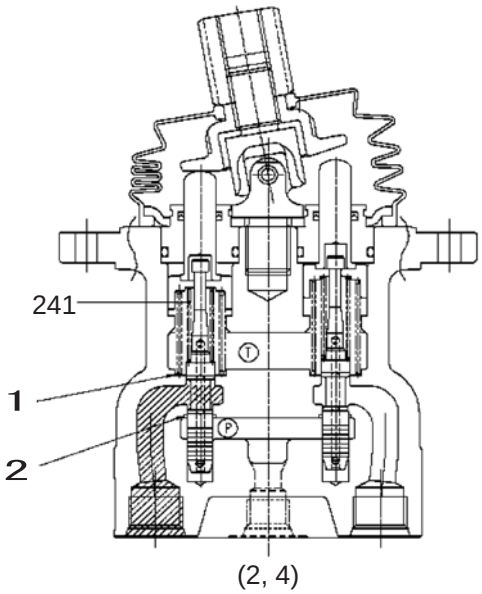

Figure 4 When handle held
(secondary pressure at or above set pressure)

1	T port
2	P port

[4] Operation in area in which the handle tilt is large (depends on the model)
For certain models, when the handle is flipped down beyond a certain angle, the spool top end section touches the push rod bore bottom section and the output pressure goes into the state of still being connected with the P port pressure.
Furthermore, with the structure in which the spring seating and spring are installed inside the push rod, when the handle is flipped down beyond a certain angle, the push rod bore bottom section and the spring touch, that spring force changes the second pressure gradient and after that the push rod bore bottom section and the spring seating top end section touch and the output pressure goes into the state of remaining connected with the P pressure.

https://truckmanualshub.com/

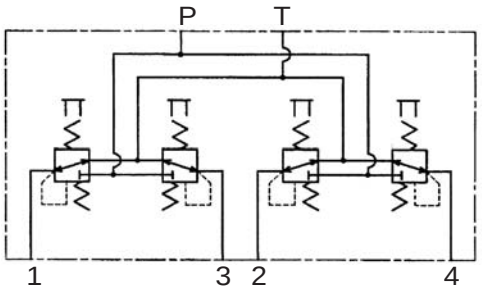

Hydraulic symbol

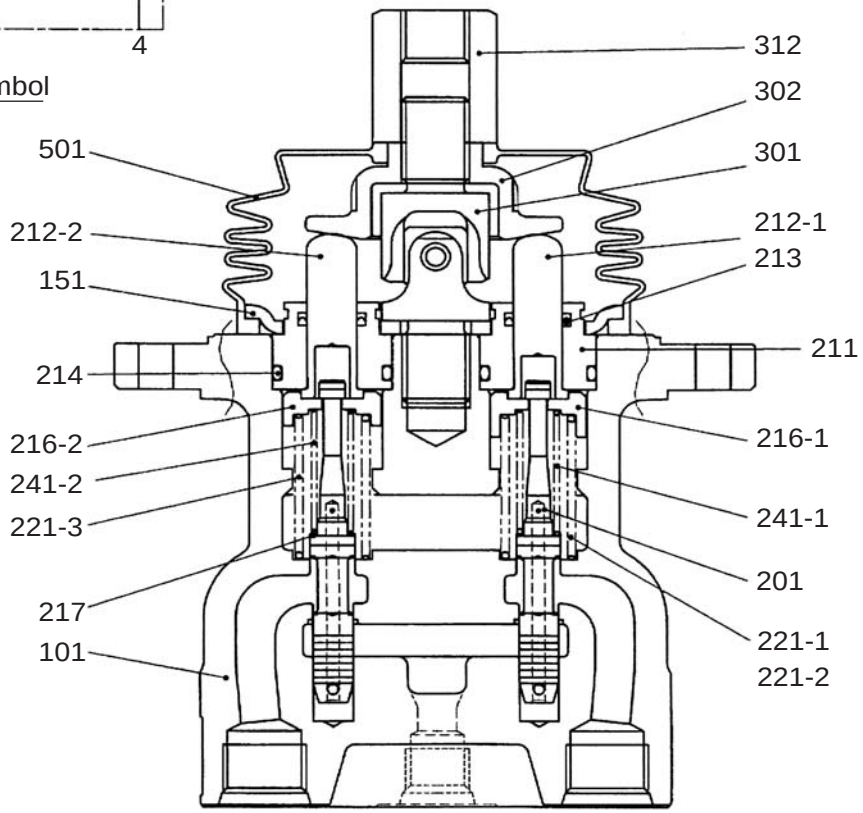

Code	Part name	Qty	Code	Part name	Qty
101	Casing	1	217	Washer 2	4
151	Plate	1	221-1	Spring	1
201	Spool	4	221-2	Spring	1
211	Plug	4	221-3	Spring	2
212-1	Push rod	2	241-1	Spring	2
212-2	Push rod	2	241-2	Spring	2
213	Seal	4	301	Joint	1
214	O-ring	4	302	Disk	1
216-1	Spring seating 1	2	312	Adjusting nut	1
216-2	Spring seating 1	2	501	Bellows	1

https://truckmanualshub.com/

4. Travel Pilot Valve (remote control valve)

(1) Operation

The remote control valve with built-in damper (below, remote control valve with damper) is a remote control valve that incorporates into the remote control valve main unit a damping function for preventing the man-machine system hunting (lever hunting) phenomenon.

Operation of the remote control valve with damper is divided into 3.-(1)-1) Pressure reduction valve section and 3.-(1)-2) Operation section damping mechanism section. The explanations in these two sections are based on the hydraulic pressure circuit diagram, assembly section diagram, and damping operation explanation diagram below.The figure below is a typical usage example for the remote control valve.

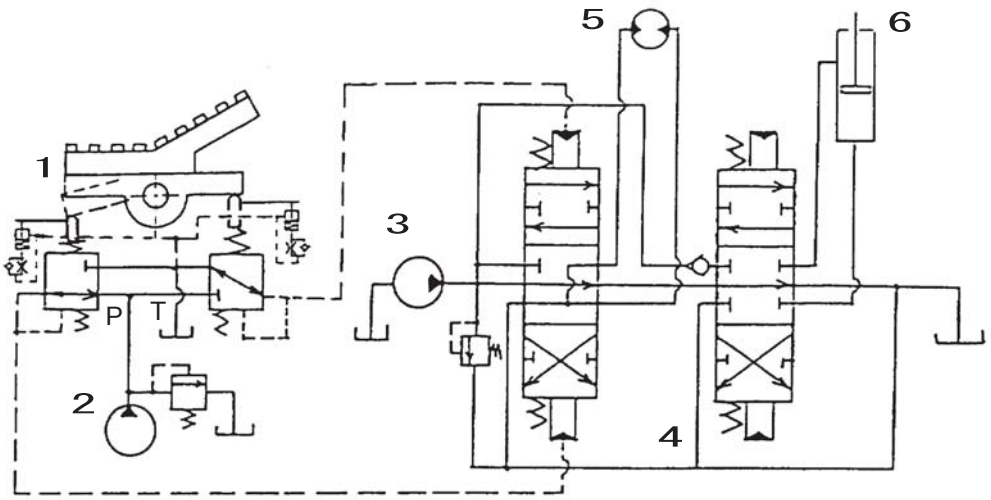

Hydraulic circuit diagram

1	Remote control valve	4	Control valve
2	Pilot pump	5	Hydraulic motor
3	Main pump	6	Hydraulic cylinder

1) Pressure reduction valve section

[1] For neutral state

The spool (301) is pushed up by the return spring (335) via the spring seating (311) and washer 1 (215) and is in the neutral position shown in the assembly section diagram.

Therefore, since the output port is connected only to the port T by the spool switching function, the pressure at output ports 1 and 2 is the same as the pressure at the port T.

[2] When the remote control valve operation section is tilted from the neutral state

In the assembly section diagram, when the cam (420) is rotated clockwise, the port 1 side push rod (214) is pushed down, the spool moves down via washer 1, the spring seating, the secondary pressure setting spring (324), washer 2 (217), and washer 3 (313), the port P and port 1 are connected, and the oil fed from the pilot pump flows to port 1 and generates pressure.

When the port 1 pressure rises to the pressure equivalent to the secondary pressure setting spring force that has been set by tilting the operation section, the hydraulic pressure on the spool and the spring force come into balance and the port 1 output pressure is held constant.The port 2 spool holds the neutral state and the oil from the control valve is discharged via the port T.

Some specifications are of the type that near the maximum angle of the operation section, a push rod directly touches the spool top section and forcibly pushes in the spool to connect the port P and the output port so that they have the same pressure.

https://truckmanualshub.com/

2) Operating section damping mechanism section

[1] For neutral state
The push rod is pushed up by the damping springs (333 and 337) via the piston (224) and is in the position shown in the assembly section diagram.

[2] When the operation section is tilted from the neutral state (See Damping operation explanation diagram (1).)
In the assembly section diagram, when the cam is rotated clockwise, the port 1 side push rod is pushed down and the piston moves down.
At this time, the oil in the damping piston chamber is discharged from the piston metering hole and the pressure generated at this time generates damping force.
On the other hand, the port 2 side push rod is moved up by the damping spring via the piston.
At this time, the tank chamber oil is suctioned in through the three ball check sections made up of bushings (223) and steel balls (225) and into the damping piston chamber.The oil outside the piston chamber drains out from the path that leads from the casing top end section to the port T.

[3] When the operation section is tilted back from a full tilt (See Damping operation explanation diagram (2).)
In the assembly section diagram, after the cam is fully tilted clockwise, then rotated counterclockwise, the port 2 push rod is pushed down and the piston moves down.
At this time, as described above, the oil in the damping piston chamber is discharged from the piston metering hole and the pressure generated at this time generates damping force.
On the other hand, the port 1 push rod is moved up by the return spring (335) and the damping spring.
At this time, the tank chamber oil is suctioned in through the three ball check sections made up of bushings and steel balls and into the damping piston chamber.Also, the oil outside the piston chamber drains out from the path that leads from the casing top end section to the tank port.
In other words, the structure is such that damping force works for either tilt operation, from the neutral position to the full tilt position or from the full tilt position to the neutral position.

https://truckmanualshub.com/

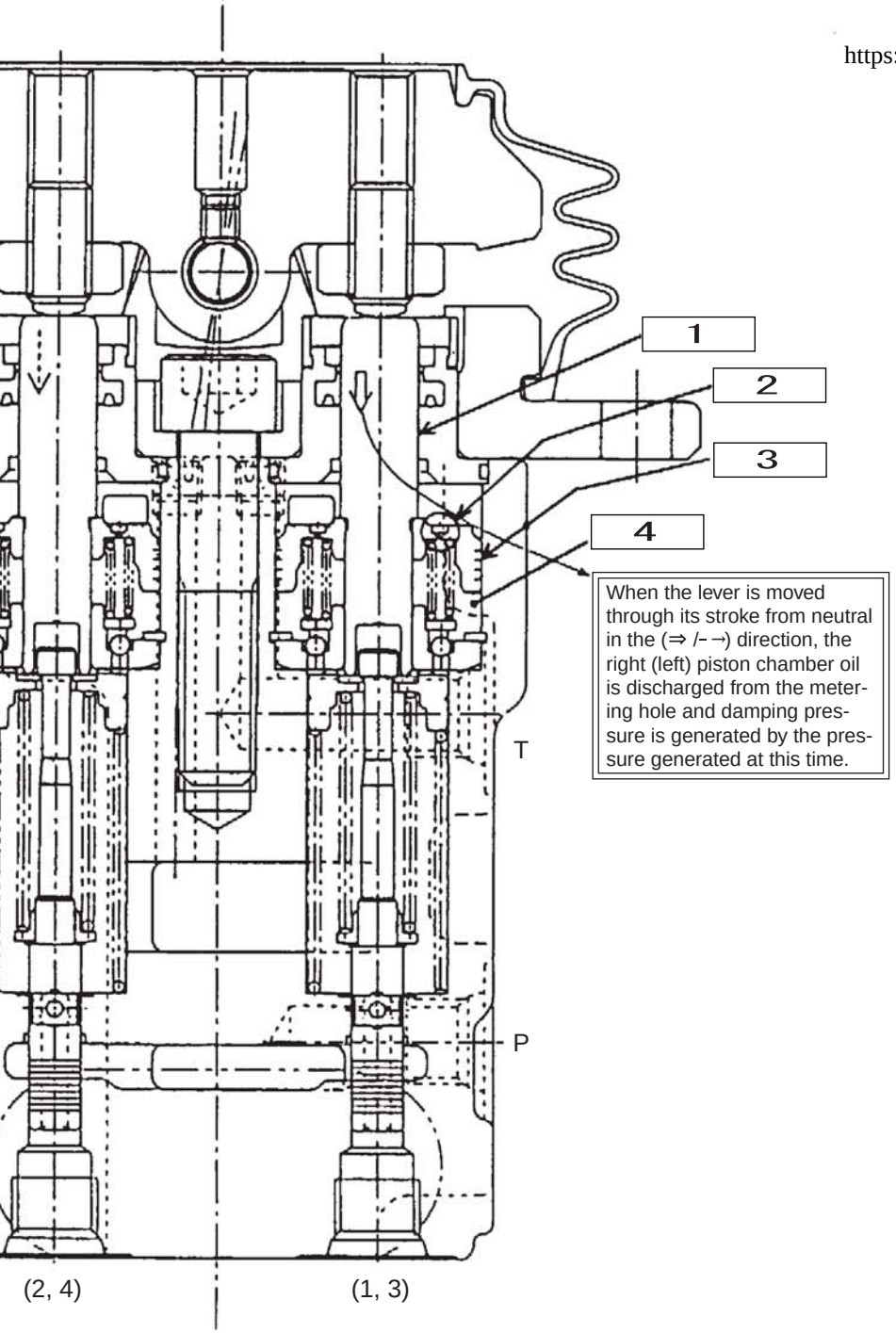

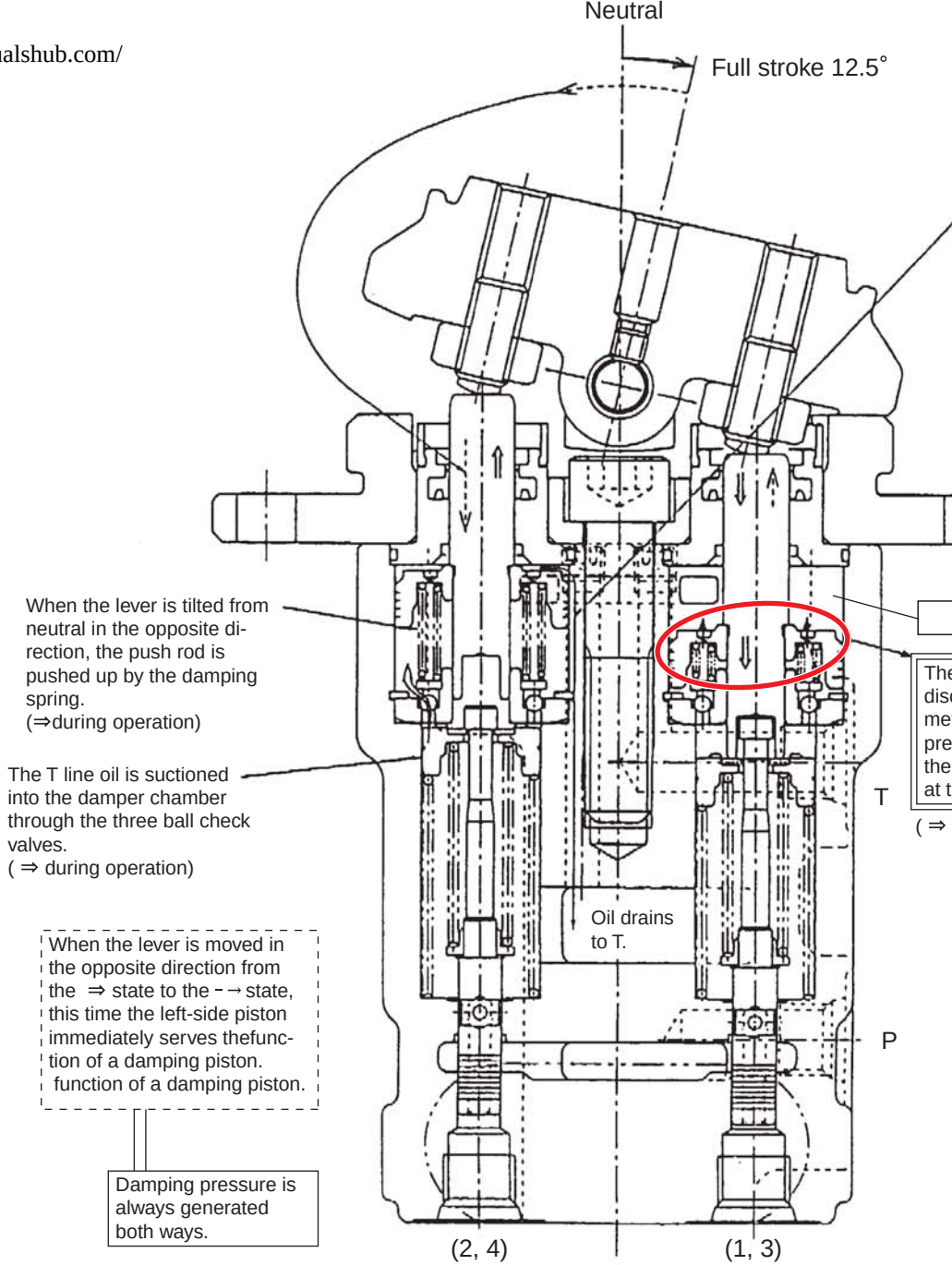

Damping operation explanation diagram

1	Push rod	
2	Metering	

https://truckmanualshub.com/

(2) Assembly and section diagram

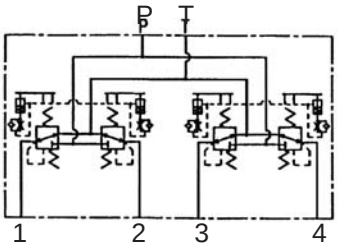

Hydraulic symbol

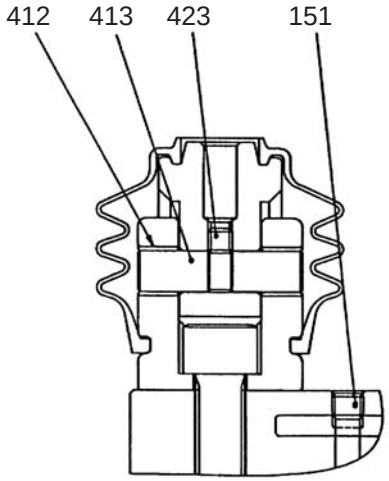

B-B section

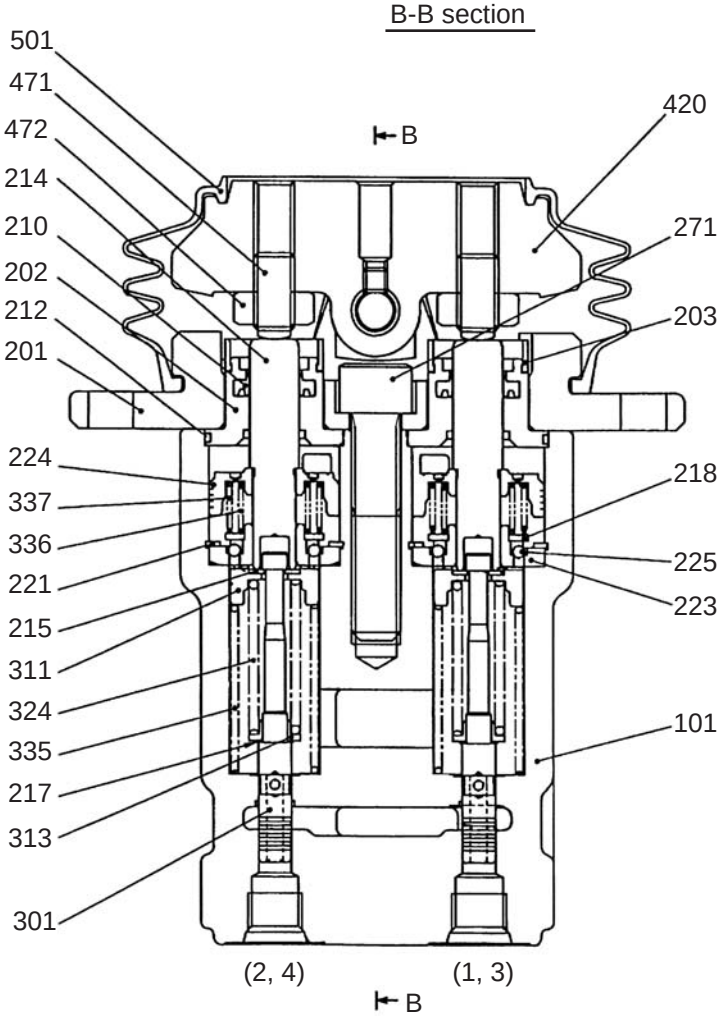

Code	Part name	Qty
101	Casing	1
151	Plug	2
201	Cover	2
202	Plug	4
203	Grease cup	4
210	NHU packing	4
212	O-ring	4
214	Push rod	4
215	Washer 1	8
217	Washer 2	4
218	Spring seating	4
221	Locking ring	4
223	Bushing	4
224	Piston 2D085	4
225	Steel ball	12
271	Hexagon socket head bolt	2
301	Spool	4
311	Spring seating	4
313	Washer 3	4
324	Spring	4
335	Spring	4
336	Spring	4
337	Spring	4
412	Bushing	4
413	Camshaft	2
420	Cam	2
423	Hexagon socket head stop screw	2
471	Stop screw	4
472	Lock nut	4
501	Bellows	2

https://truckmanualsnub.com/

5. Cushion Valve

[1] Valve summary

This valve is made up of a shuttle valve section and cushion valve section with heat circuit.
The cushion valve with heat circuit is connected between the hydraulic shovel control valve and the pilot operation valve to reduce body shaking (cushion function) caused by emergency stop operations by the operator.
This valve is equipped with a circuit with which the operator can deliberately disable the cushion function for reverse operations.
The shuttle valve selects the high-pressure signal pressure from two signal pressure systems.
This valve has two circuits.

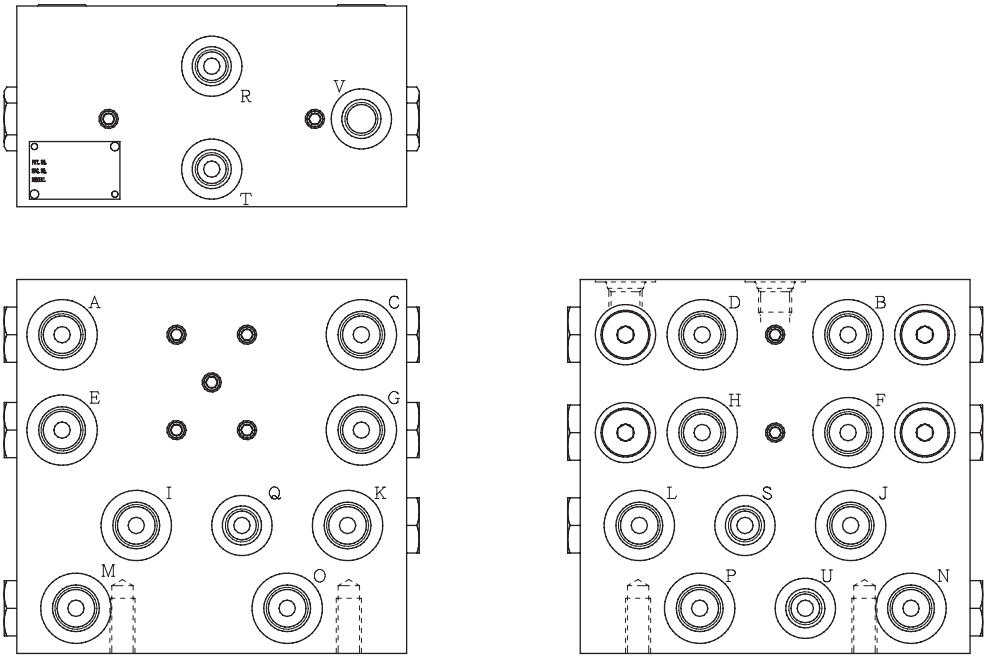

Figure 1

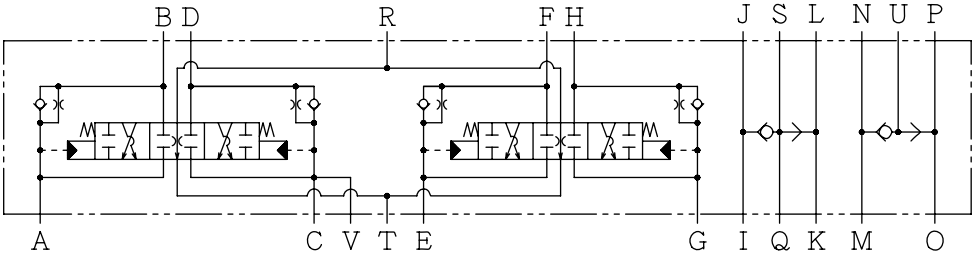

Figure 2

https://industrialsup.com/

[2] Operation explanation

1) Normal operation

The pressurized oil fed from the A port (or C, E, or G port) pushes up the check plunger and is sent to the B port (or D, F, or H port). The pressurized oil that has passed through the B port operates on the control valve spool and operates the actuator. The oil pushed out from the control valve spool passes through the D port (or B, F, or H port) and flows out to the T port.

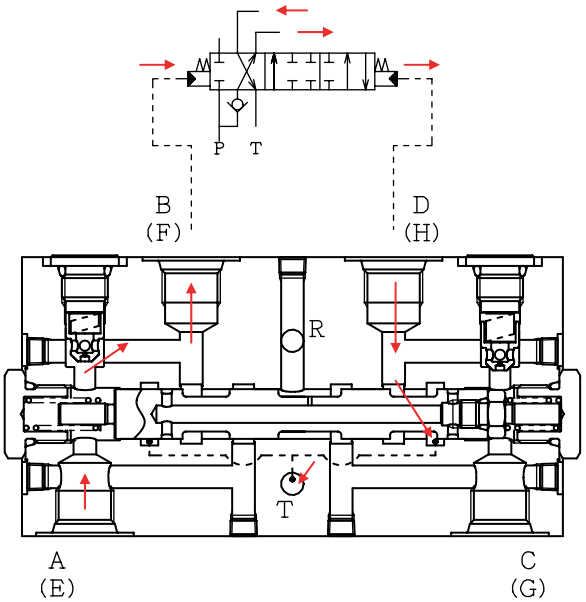

Figure 3

2) Cushion operation

When the pressurized oil fed from the pilot operation valve to the A port (or C, E, or G port) is closed by the pilot operation valve, the pressurized oil that has operated on the control valve spool is pushed back to the B port (or the D, F, or H port). The returned oil passes through the check plunger metering orifice, is sent to the A port (or the C, E, or G port), and is drained from the pilot operation valve. At this time, by passing through the metering orifice, the pressurized oil holds down the control valve spool speed and reduces shaking of the body. (Cushion function)

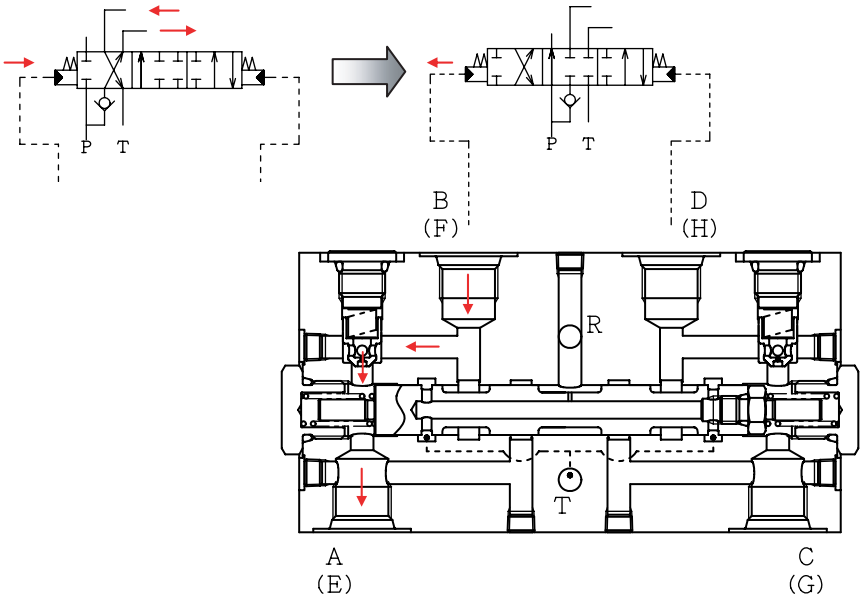

Figure 4

https://truckmanualsnuk.com/

3) Reverse operation

When the pressurized oil fed from the pilot operation valve to the A port (or C, E, or G port) is switched to the C port (or A, E, or G port), the pressurized oil that has operated on the control valve spool is pushed back to the B port. Because the pushed back oil flows out to the T port without passing through the check plunger metering orifice, it does not hold down the control valve spool speed, so the cushion function does not work.

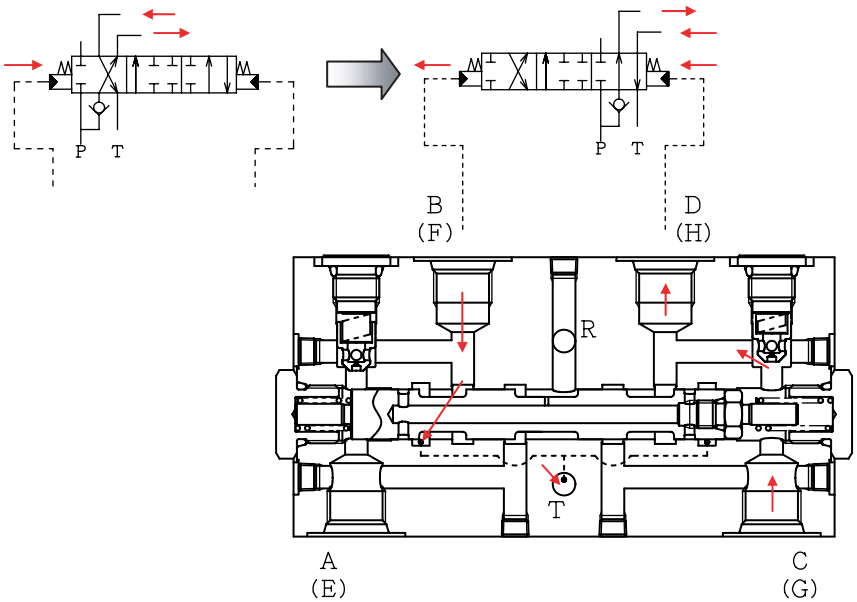

Figure 5

4) Heat circuit

When the pilot operation valve is in the neutral position, the oil fed to the R port passes through the inside of the reverse operation spool, flows out to the T port, and heats up the inside of the valve.

When pressurized oil is being fed from the pilot operation valve to the A port (or C, E, or G port), the oil fed to the R port flows out to the C port (or A, E, or G port) and heats up the circuit to the pilot operation valve and inside the valve.

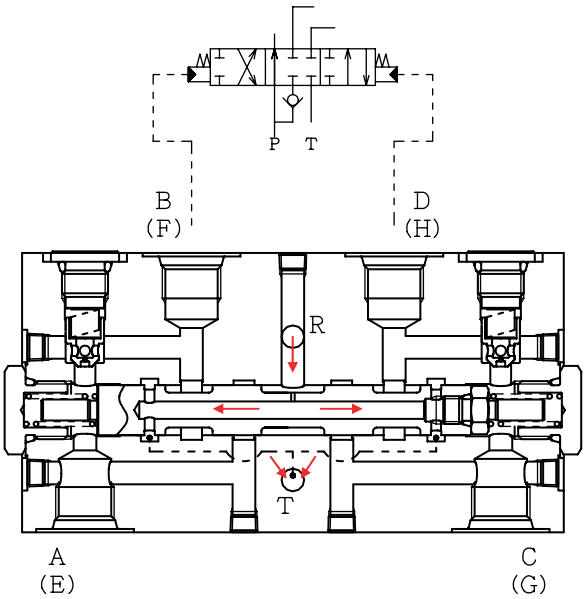

Figure 6

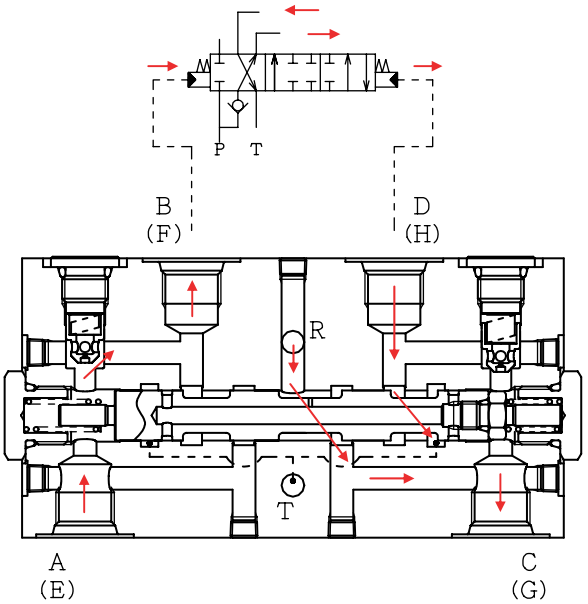

Figure 7

https://manualsnub.com/

5) Shuttle valve
The steel ball is pressed from the high pressure to the low pressure, of the pressure between the I and J ports and the pressure between the K and L ports. Through this, the high-pressure oil is fed to the S port or the Q port. In the same way, oil is fed to the U port at the higher of the pressures between the M and N ports and between the O and P ports.

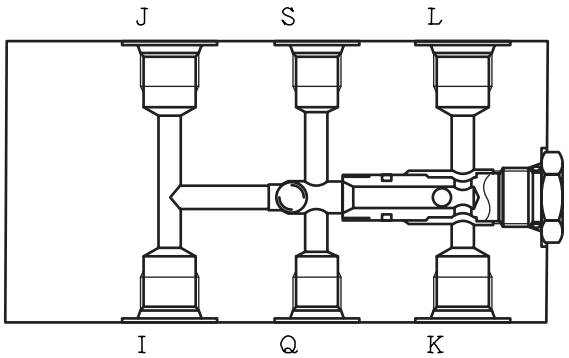

Figure 8

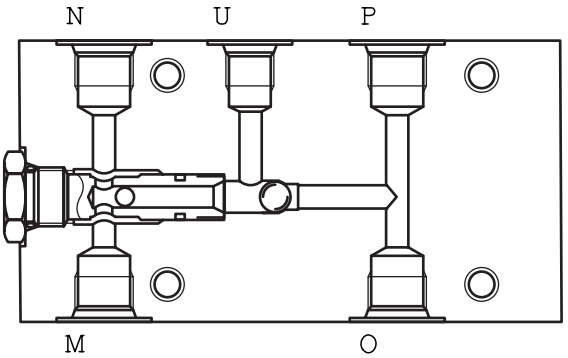

Figure 9

https://truckmanualsnub.com/

6. Selector Valve (4-way) **Not used by LBX**

(1) Structure

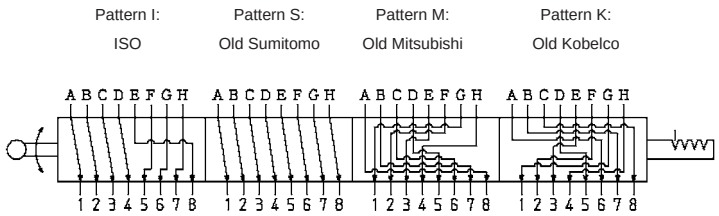

Circuit diagram

Operation, work			
A	Right valve Pull in	1	Bucket in
B	Right valve Left side	2	Boom down
C	Right valve Push out	3	Bucket dirt removal
D	Right valve Right side	4	Swing right
E	Left valve Push out	5	Arm in
F	Left valve Right side	6	Swing left
G	Left valve Pull in	7	Arm dirt removal
H	Left valve Left side	8	Bucket in

Circuit combination table			
I type ISO	S type Old Sumitomo	M type Old Mitsubishi	K type Old Kobelco
A-1	A-1	A-8	A-6
B-2	B-2	B-7	B-7
C-3	C-3	C-6	C-8
D-4	D-4	D-5	D-5
E-8	E-5	E-3	E-3
F-5	F-6	F-2	F-2
G-6	G-7	G-1	G-1
H-7	H-8	H-4	H-4

https://truckmanualsnow.com/

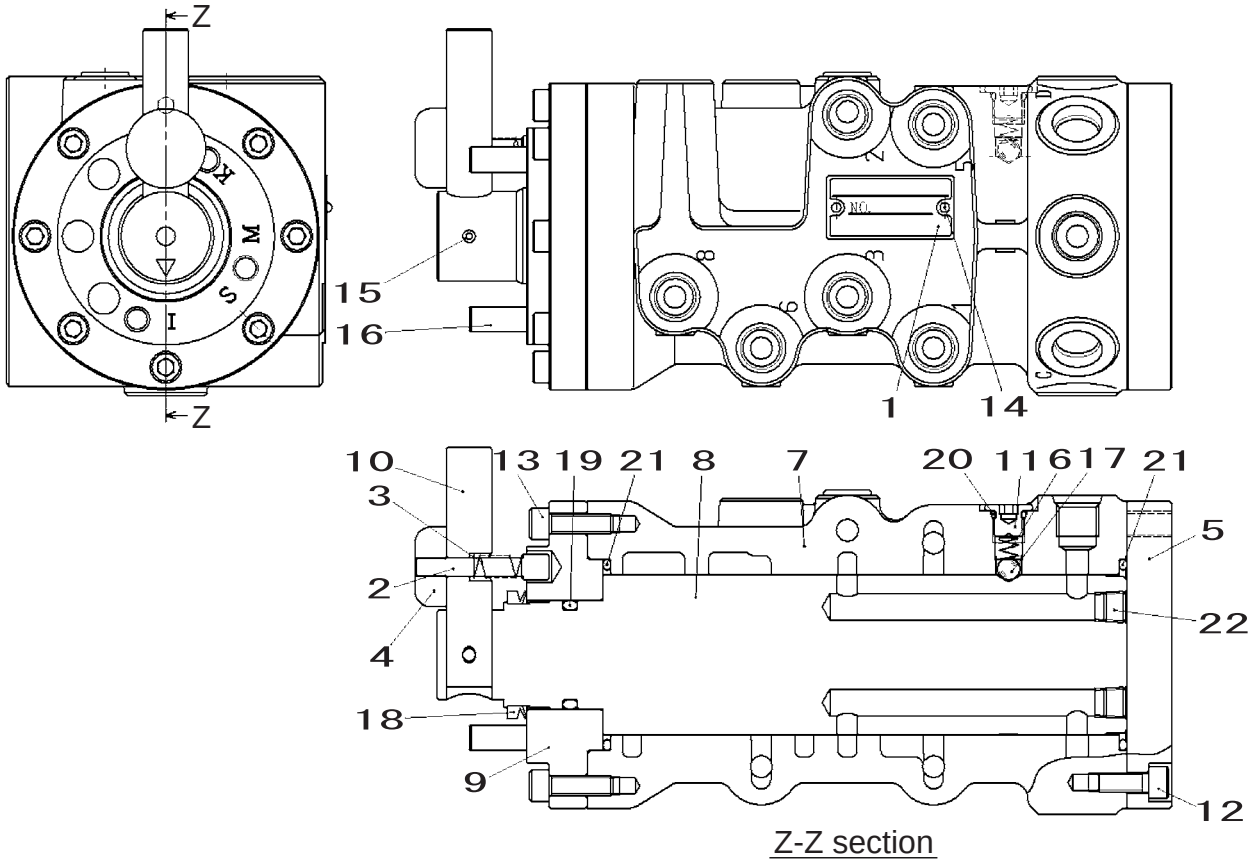

Figure 1 Valve structural diagram and circuit diagram

1	Name plate	9	Cover	17	Steel ball
2	Pin	10	Lever	18	Oil seal
3	Spring	11	Plug with flange	19	O-ring
4	Knob	12	Hexagon socket head bolt	20	O-ring
5	Cover	13	Hexagon socket head bolt	21	O-ring
6	Spring	14	Rivet screw	22	Hexagon socket head plug
7	Casing	15	Spring pin		
8	Shaft	16	Spring pin		

https://truckmanualsnub.com/

(2) Operation explanation

This valve is a rotation type switch valve.
By connecting a pipe between the hydraulic shovel work remote control valve and the main control valve and changing the lever áI to the position for each pattern (rotating the shaft áG), the valve circuit has been changed and the operation pattern changed to that in Figure 2.
For details on the valve structure (circuit diagram), see Figure 1.

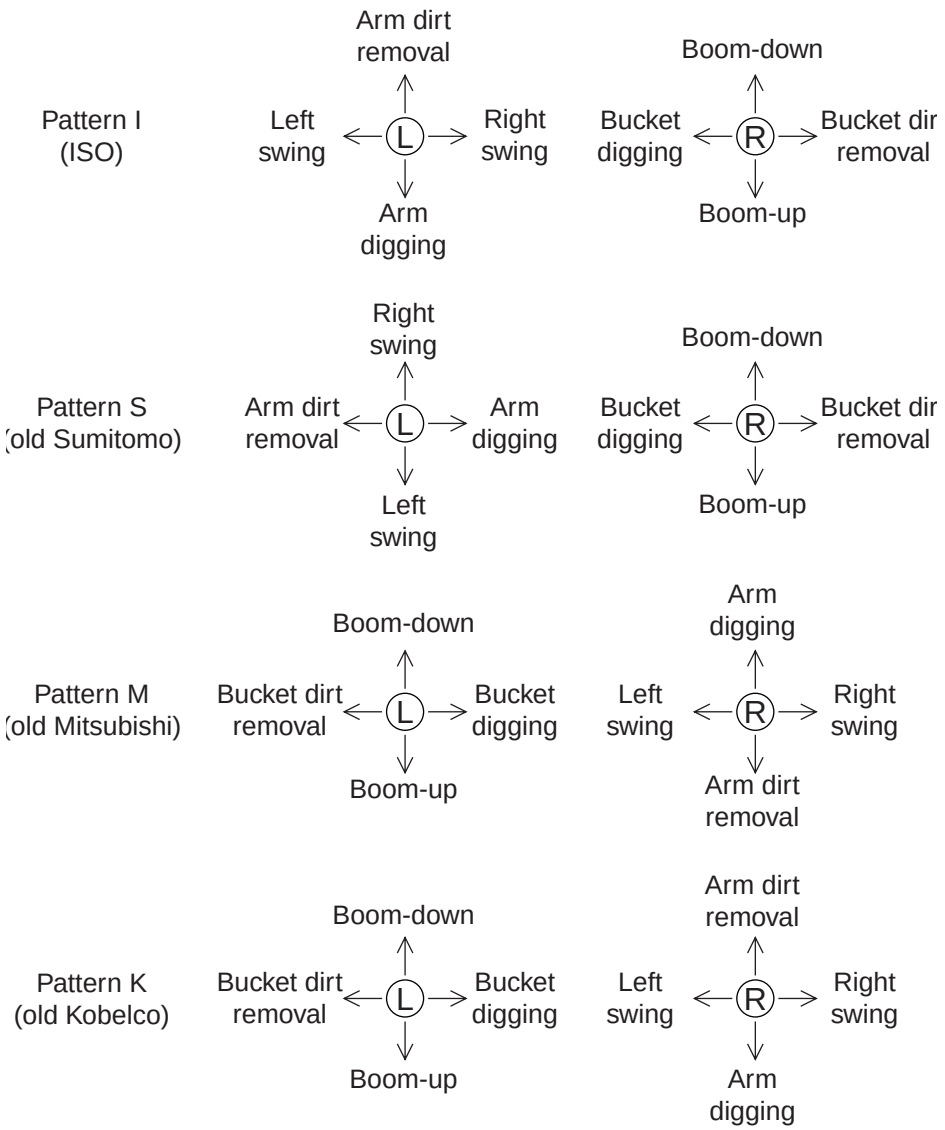

Figure 2 Operation method by pattern

https://forklifttruckmanualshub.com/

(3) Development diagram

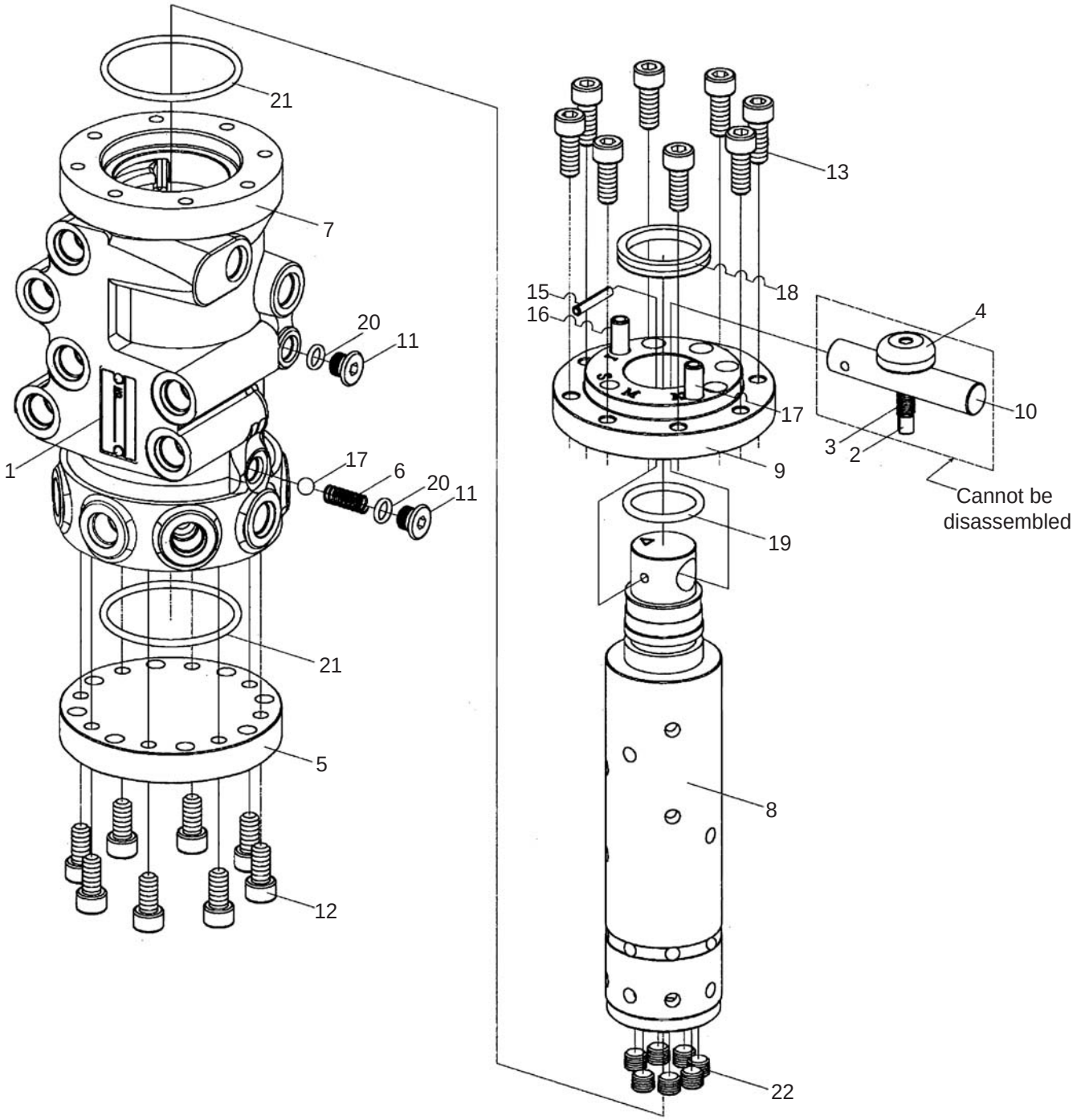

https://truckmanualsnub.com

7. Selector Valve (3-way)

(1) Structure

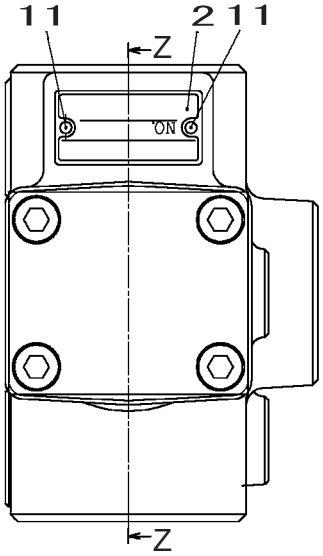

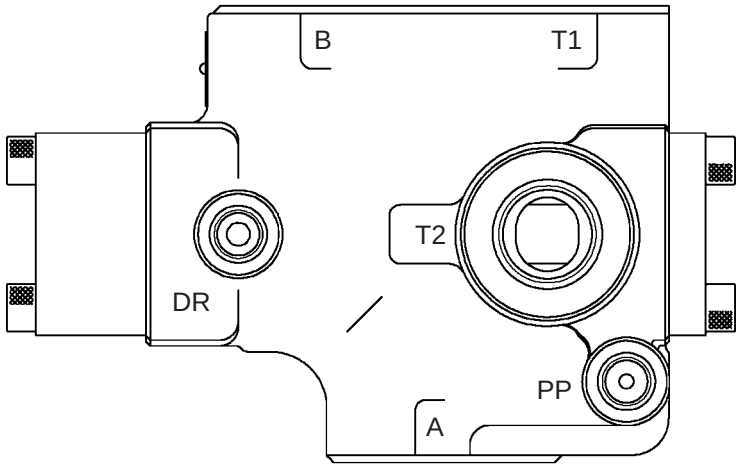

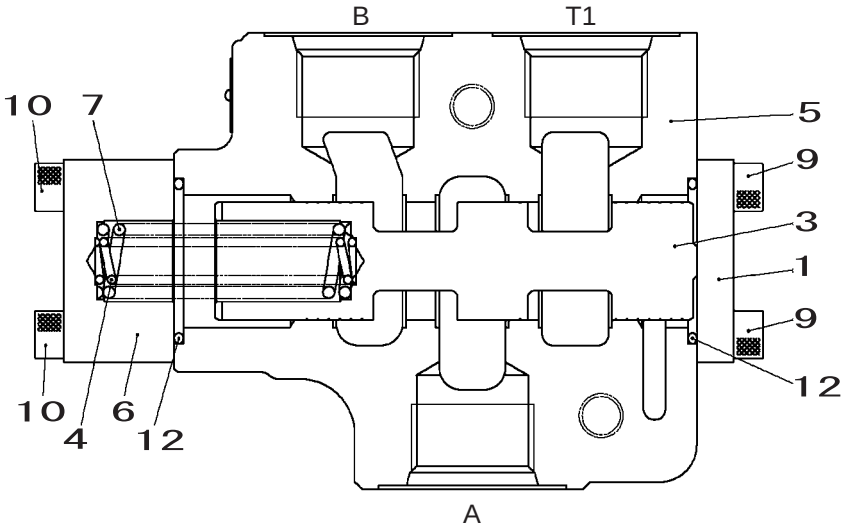

Z-Z section

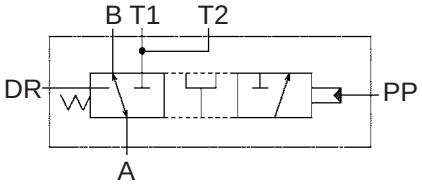

Circuit diagram

Figure 1

1	Cover	5	Body	10	Rivet screw
2	Name plate	6	Cover	11	O-ring
3	Spool	7	Spring	12	Cover
4	Spring	9	Hexagon socket head bolt		

https://industrialsupply.com/

(2) Operation explanation

This valve switches the direction with the pilot pressure.

[1] When the spool is neutral (PP port no load) Shuttle circuit, 2-speed merge circuit selected
When the pilot pressure is not fed to the PP port, the spool ③ is held in the neutral position by the spring ④, ⑦. The A port and the B port are connected and the T1 and T2 port pressurized oil are cut off by the spool ③. (See Figure 2.)

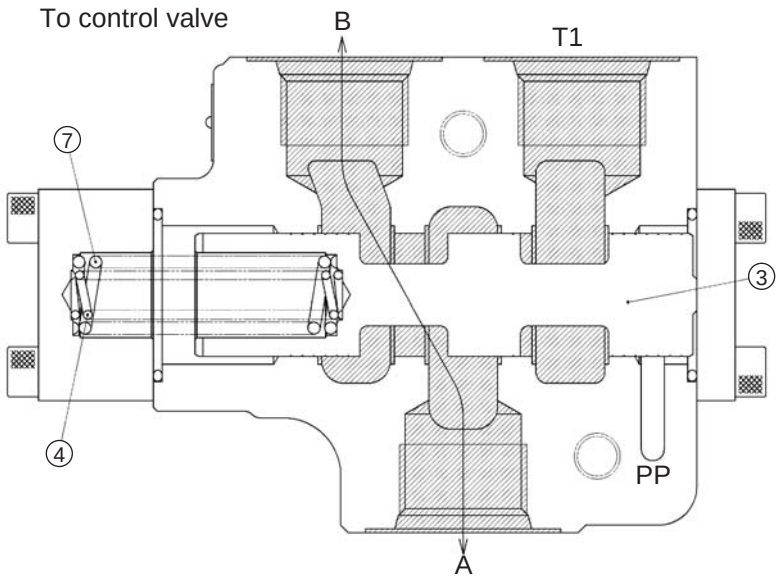

Figure 2

[2] When the spool operates (PP port pressurized) Breaker circuit selected
When pressure is fed to the PP port, force [F] (PP port pressure X spool cross-sectional area) works on the spool③ to the left direction. When F becomes larger than the spring ④, ⑦ set load, the spool ③ moves to the left and the A port is connected with the T1 and T2 ports.
Also, at this time, the pressurized oil at the B port is cut off by the spool ③. (See Figure 3.)

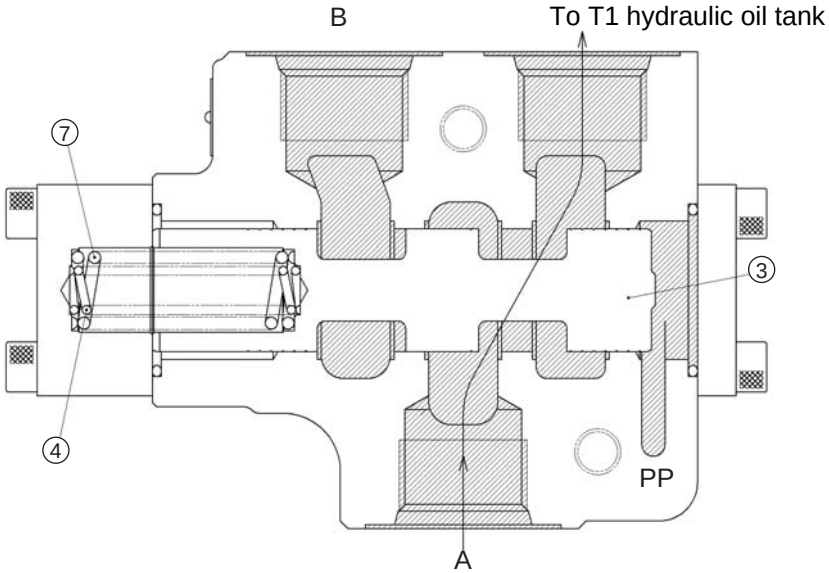

Figure 3

https://industrialstudio.com/

https://truckmanualshub.com/

Work Mode Select Switch

The Throttle Volume and Work Mode Select Switch are Linked!!

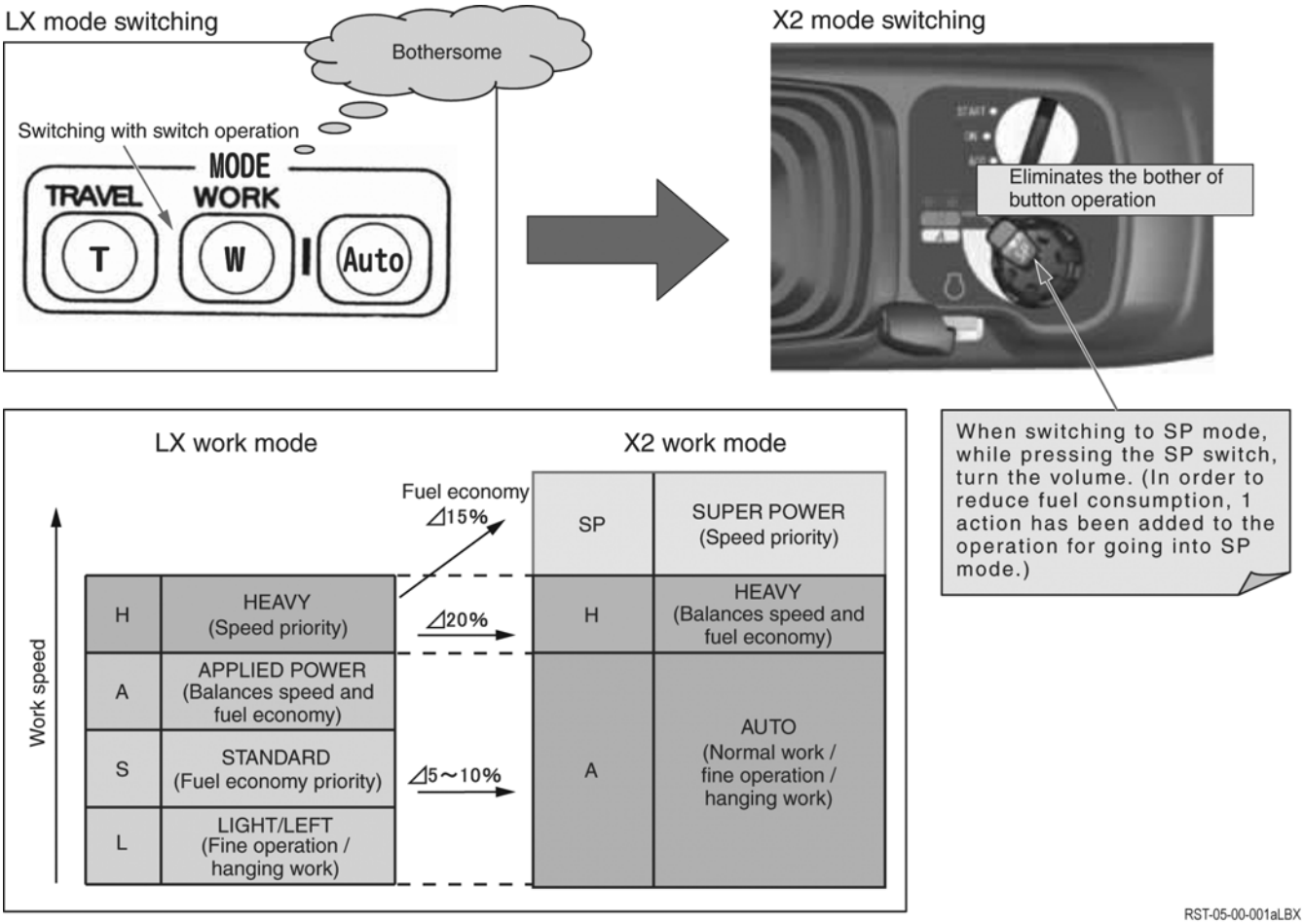

https://truckmanualshub.com/

[1] With Model LX, the throttle volume signal is connected directly to the ECU and only the work mode signal instruction is sent from the main unit computer. With X2, the throttle volume signal first goes to computer, then the target engine speed instruction is sent from computer to the ECM.

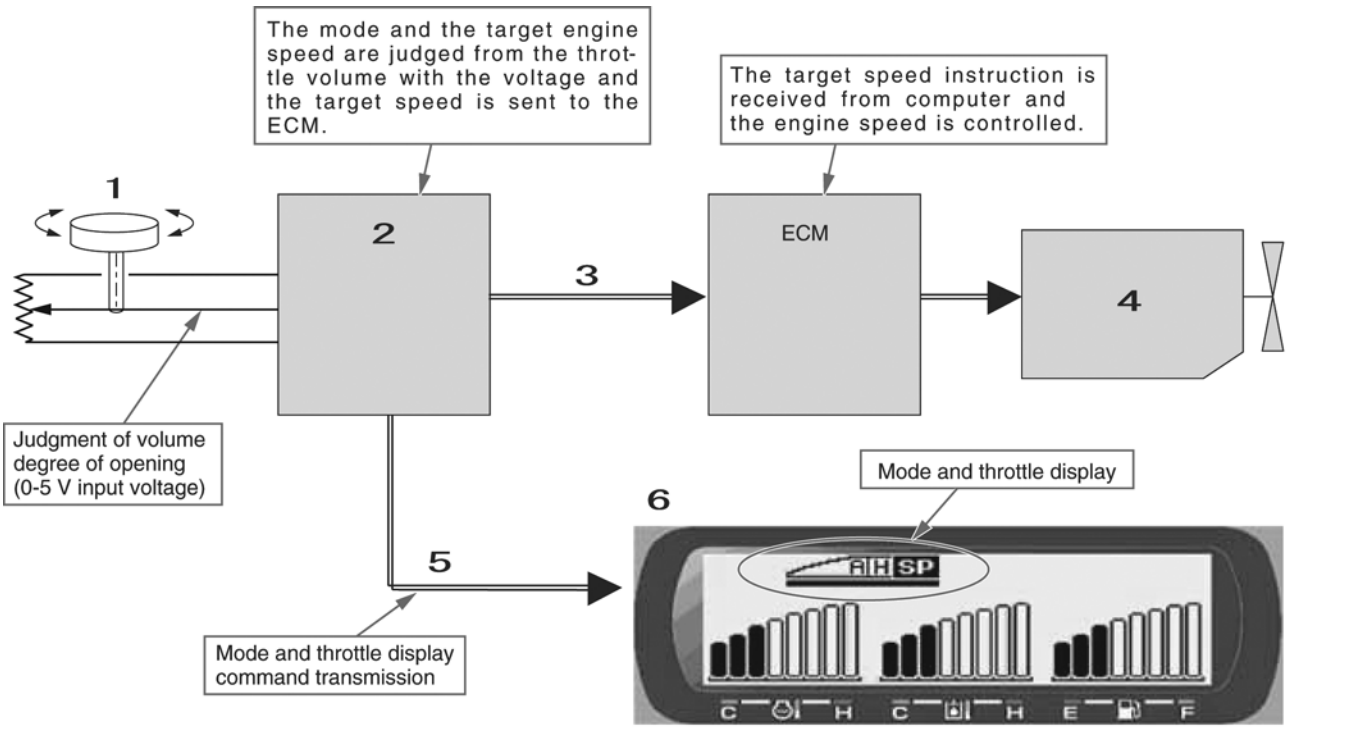

RST-05-00-001bLBX

1	Throttle volume
2	Computer
3	CAN communication
4	Engine
5	UART communications
6	Monitor

[2] Pump horsepower control for each mode
If a throttle volume signal is input to computer, computer judges the work mode according to the degree of opening of the throttle and controls the pump horsepower control current value to match the work mode.

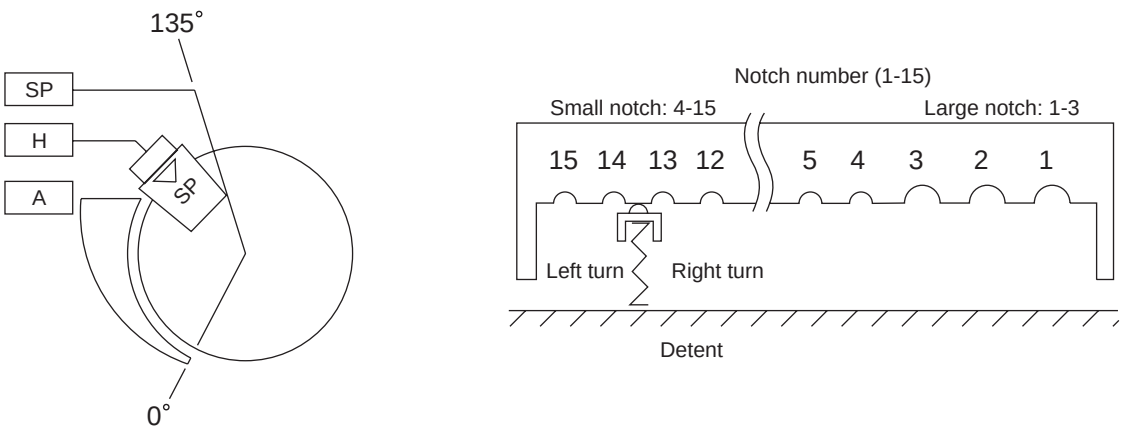

RST-05-00-001c

Control current value			* = When the target engine speed is 1300 min-1 or less, the pump horsepower current value is 50 mA.				
	Volume position (detent position)		1	2	3	4 to 8	9 to 15
	Work mode		SP	H	Applied Power		
210X2	Engine speed (min^{-1})		1800	1700	1600	1599 to 1300	1299 to1000
	Pump type horse-power current value (mA)	Max High	600	600	600	314	50
		Max Low	586	570	570	314	50
		Min	314	314	314	314	50
240X2	Engine speed (min^{-1})		2000	1900	1800	1799 to 1300	1299 to 1000
	Pump type horse-power current value (mA)	Max High	600	600	600	290	50
		Max Low	580	560	560	290	50
		Min	290	290	290	290	50
	Boost pressure		Automatic	Automatic	Normal		

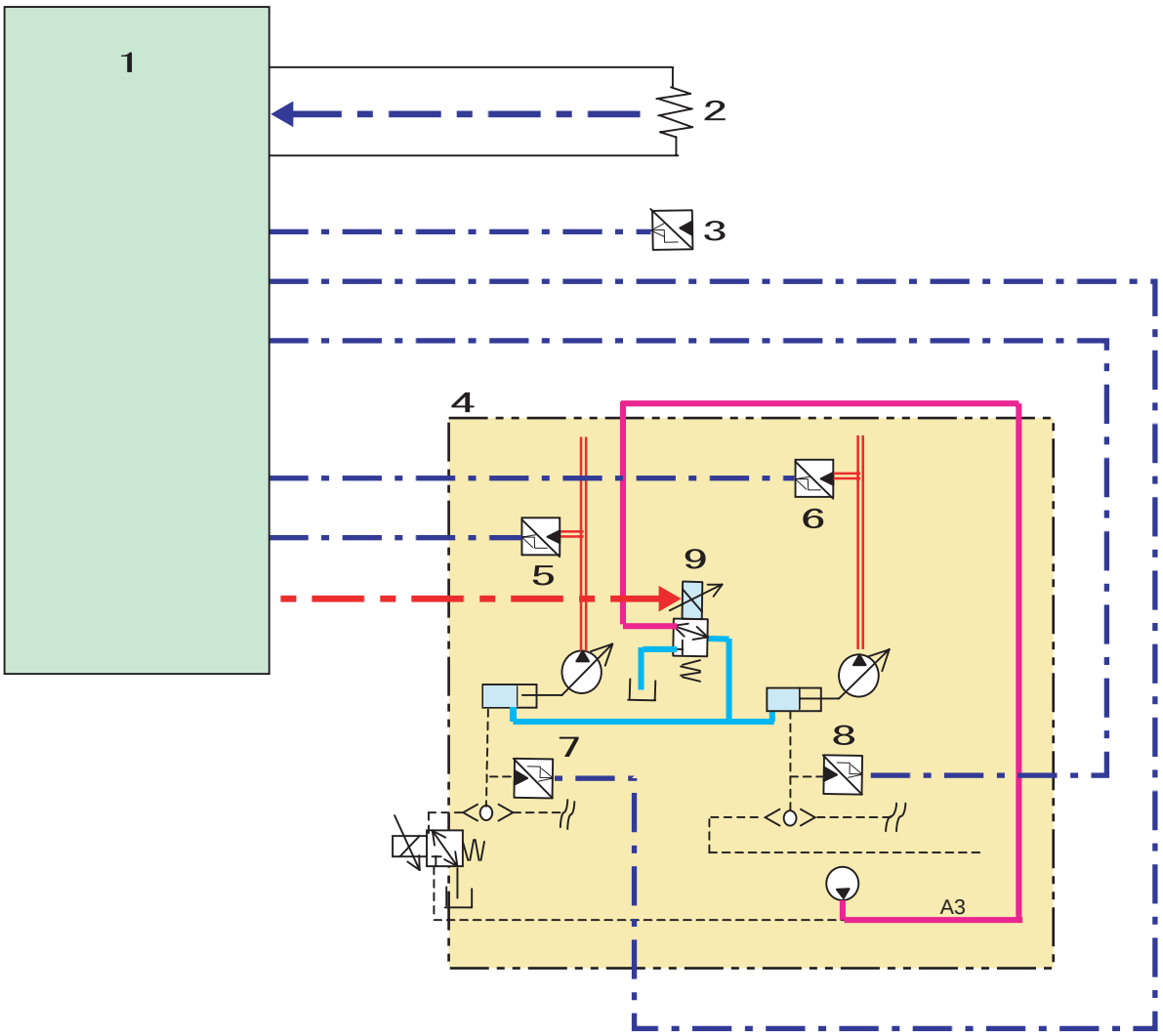

RST-05-00-001d

1	Computer	6	P2 pressure sensor
2	Throttle volume	7	N1 pressure sensor
3	Arm-in pressure sensor	8	N2 pressure sensor
4	Hydraulic pump	9	Pump horsepower proportional valve
5	P1 pressure sensor		

https://truckmanualshub.com/

Computer Connection Method

[1] Computers and ECM connected with CAN communications
[2] The monitor and computers are connected with serial communications (UART).

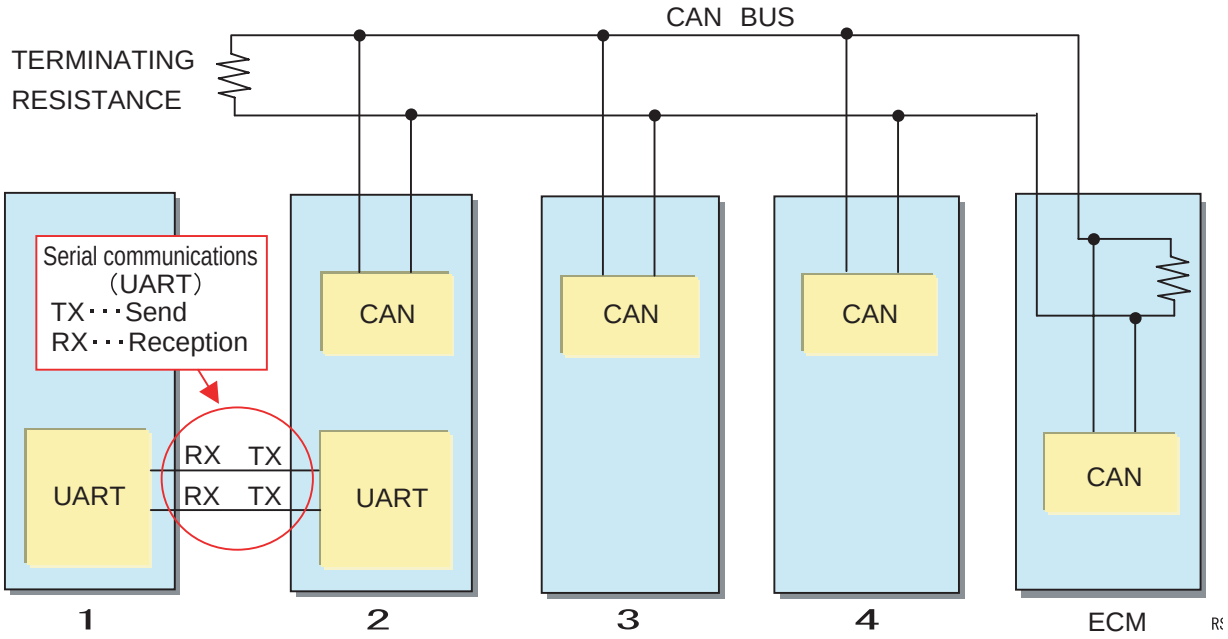

1	Monitor
2	computer
3	computer B (Not used by LBX)
1	computer S (Not used by LBX)

1) computer .....Main unit side computer (standard)
2) computer B.....Up to the wiring for connecting the liftcrane computer (option) is attached as standard. (Not used by LBX)
3) computer S.....Remote support computer (standard) (Not used by LBX)
4) ECM .....Engine computer

https://truckmanualshub.com/

Monitor Changes

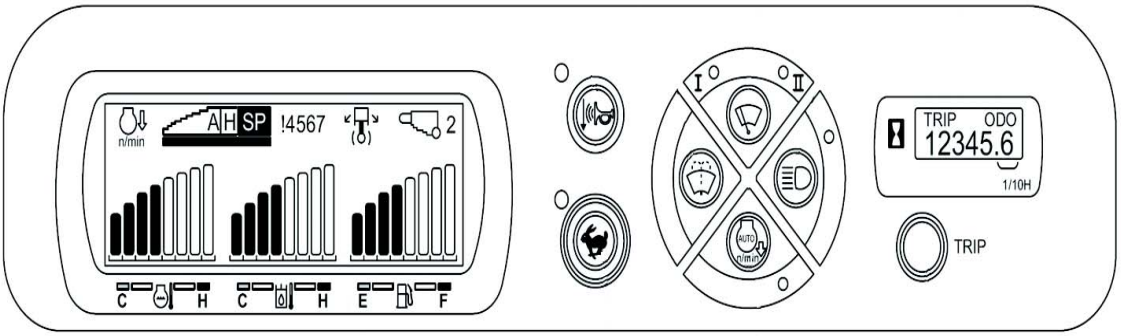

1	Horn volume select switch
2	Travel speed selector switch
3	Auto idle switch

☆Changes from Model LX

[1] LCD backlight color change (green → white); no change in number or size of LCD dots

[2] Mounted switch changes

Switch name	Model LX	Model X2	Details
Work mode	Yes	Eliminated	Throttle volume link mode select switch
Auto mode	Yes	Eliminated	Throttle volume link mode select switch
Travel mode	Yes	Yes	
Wiper	Yes	Yes	
Washer	Yes	Yes	
Working light	Yes	Yes	
Swing lock	Yes	Eliminated	
Emergency stop	Yes	Eliminated	Change to rocker switch
Buzzer stop	Yes	Eliminated	Buzzer changed to auto off
Auto idle	None	Yes	Dedicated switch added
Horn volume	None	Yes	New

[3] Major increase in LCD brightness (Model LX: 6 cd min. → Model X2: 220 cd Typ.) (The increased brightness creates glare at night, so a light reduction function linked to working light output was added.)

https://truckmanualshub.com/

[4] External switch input ports added (5 ports) to monitor

The four switches below are input to the monitor and the switch statuses are transmitted to the controller with serial communications (UART).

(1) Front window limit switch
(2) Breaker select switch
(3) Crusher mode select switch
(4) Option 2 pumps flow switch

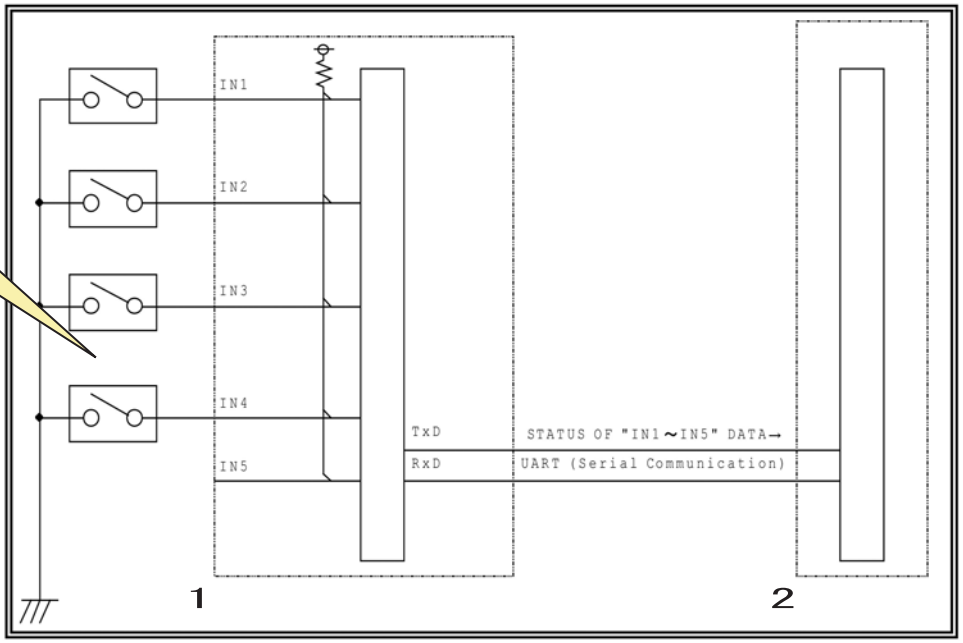

1	Monitor
2	Computer

Purpose

Sending the above switch states to the computer makes it possible to check the operation of each switch on the service support check screen. Also, since the cumulative operation time for each switch is stored in the computer, the time that the front window was open or closed and the usage history of each option line can be checked on the service support HR screen.

https://truckmanualshub.com/

[5] Output port (wiper, washer, working light, horn volume select switch) control method change

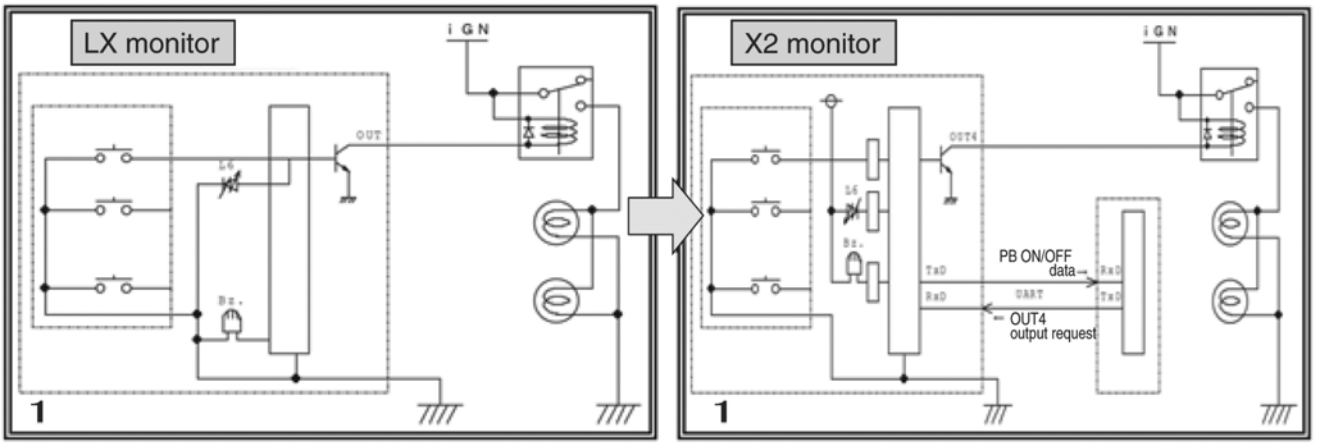

For the 210LX, when a switch on the monitor is switched ON / OFF, output is controlled by the monitor alone.

For X2, switch signals on the monitor are sent to the computer via the UART communication circuit, output ON / OFF is determined by the controller side, and the output request is sent to the monitor via UART.
However, if normal UART communications are not possible (for example, due to a disconnection), the system switches automatically to monitor control. (Same control as for LX)
However, travel mode switching and auto idle switching cannot be operated.

1	Monitor display

Purpose

Passing the switch states through the computer makes the following possible.

1) Checking operation of each switch on the service support check screen
2) Checking the usage history for each operation on the service support HR screen

Judging communications errors

If there is an error in UART communications between the monitor and the computer, the travel mode select switch and auto idle select switch LEDs light up to indicate the error.

https://truckmanualshub.com/

Pilot Pressure Switch Changed to Pressure Sensor

No.	Model LX	Model X2	Change details
1	Upper side pressure switch	Upper side pressure sensor	Switch to sensor
2	Travel pressure switch	Travel pressure sensor	Switch to sensor
3	Swing pressure switch	Swing pressure sensor	Switch to sensor
4	None	Arm-in pressure sensor	New
5	P1 pressure sensor	P1 pressure sensor	Parts change (not compatible with Model 3)
6	P2 pressure sensor	P2 pressure sensor	Parts change (not compatible with Model 3)
7	N1 pressure sensor	N1 pressure sensor	Parts change (not compatible with Model 3)
8	None	N2 pressure sensor	New
9	Option pressure switch	Option pressure switch	No change

[1] Configuration
Pilot pressure sensor and switch sensing point

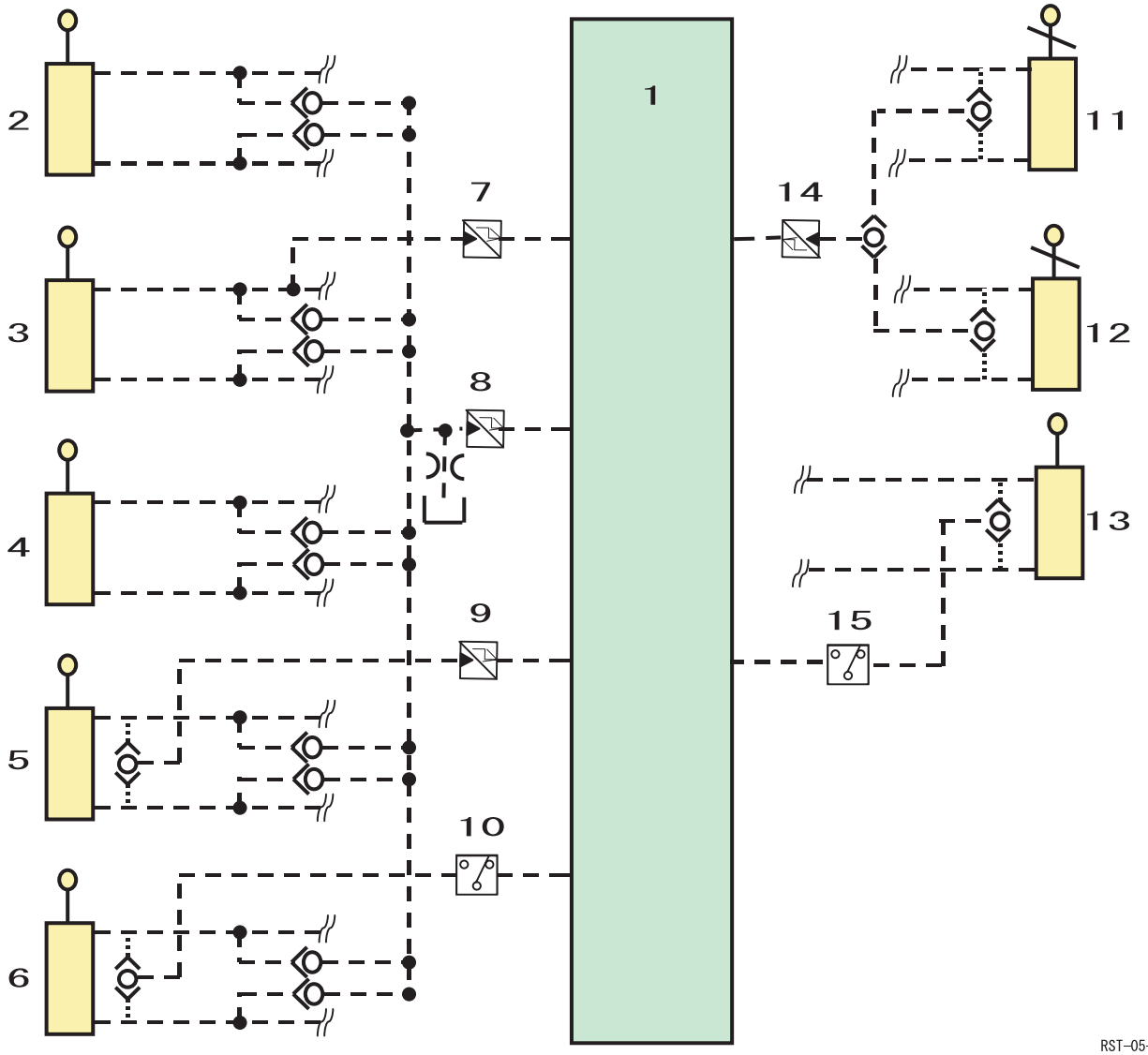

1	Computer	6	1st option lever	11	Travel (left) lever
2	Bucket lever	7	Arm-in pressure sensor	12	Travel (right) lever
3	Arm lever	8	Upper side pressure sensor	13	2st option lever
4	Boom lever	9	Swing pressure sensor	14	Travel pressure sensor
5	Swing lever	10	1st option pressure switch	15	2st option pressure switch

https://truckmanualshub.com/

[2] Pilot pressure sensor characteristic
Relationship between pilot pressure and voltage (rated 725 PSI (5 MPa))

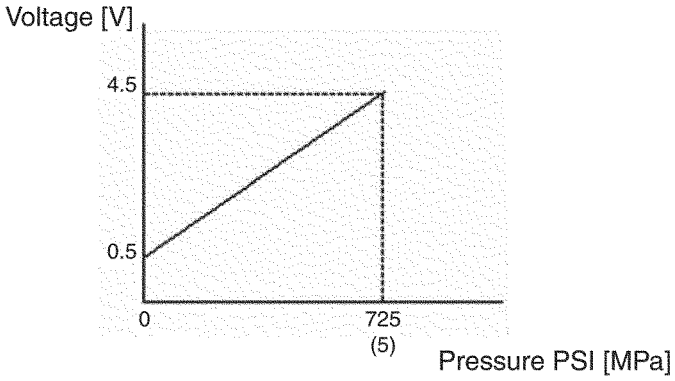

RST-05-00-0019LBX

[3] Sensor ON / OFF criterion

	Upper side sensor	Arm-in sensor	Swing sensor	Travel sensor	Option pressure switch
ON	73 PSI (0.5 MPa)	73 PSI (0.5 MPa)	73 PSI (0.5 MPa)	73 PSI (0.5 MPa)	73 PSI (0.5 MPa)
OFF	44 PSI (0.3 MPa)	44 PSI (0.3 MPa)	44 PSI (0.3 MPa)	44 PSI (0.3 MPa)	44 PSI (0.3 MPa)

[4] Sensor trouble criterion
When 0.25 V < Voltage < 4.75 V, normal; otherwise abnormal

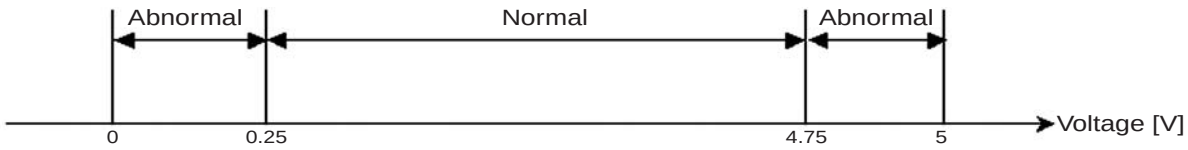

RST–05–00–001 I

[5] New functions through switch to sensor
Changing the pilot pressure switch to a sensor makes it possible to judge sharp operation of the operation lever.

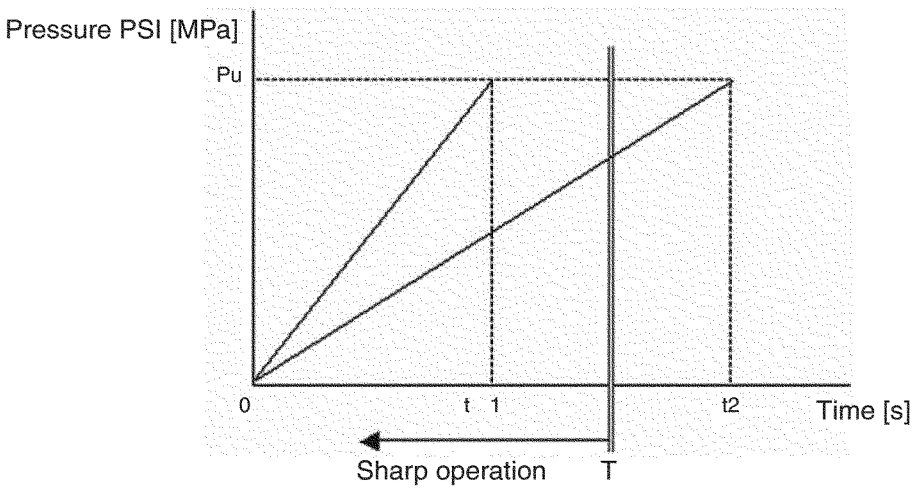

RST-05-00-001m9LBX

Judgment method
When the time to reach the Pu [MPa] pressure is t1 [s] or t2 [s], the shorter time until Pu [MPa] is reached, the more sharp the operation.
Therefore, t1 [s] is more sharp operation than t2 [s].
With LX machines, the sharp operation judgment standards ΔPu [MPa] and ΔT [s] are set and if ΔPu [MPa] pressure rise occurs within ΔT [s], this is judged to be sharp operation.
Also, sharp load is judged in the same way using the main pressure sensor.

https://truckmanualshub.com/

Pump Electromagnetization Proportion Valve

Two electromagnetic proportional valves are mounted on the main pump.

[1] Horsepower control proportional valve

[2] P1 flow control proportional valve (new)

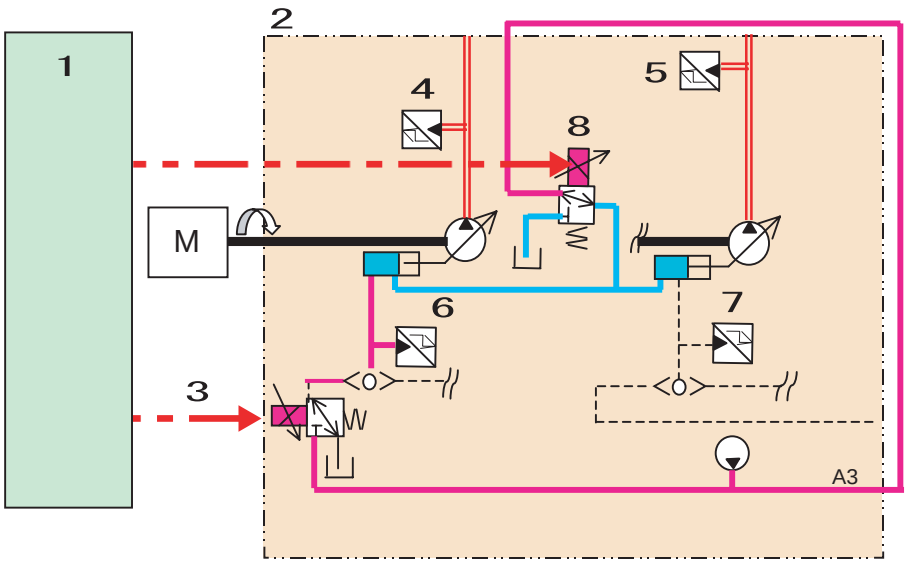

1	Computer
2	Hydraulic pump
3	P1 flow control proportional valve
4	P1 pressure sensor
5	P2 pressure sensor
6	N1 pressure sensor
7	N2 pressure sensor
8	Horsepower control proportional valve

1. Horsepower Control Proportional Valve

   Controls overall flow for the P1 and P2 pumps

   <Applications>

   [1] Pump added horsepower control

   [2] Pump horsepower cut control

   <Control>

   Control current: 50 mA min. 600 mA max.

   Current increase →pump flow increase

   Current decrease →pump flow decrease

2. P1 Flow Control Proportional Valve

   Control of the flow for the P1 pump

   <Applications>

   [1] Swing relief cut control

   [2] Swing speed limit control

   [3] Power save control

   [4] Option flow control

   <Control>

   Control current: 50 mA min. 740 mA max.

   Current increase →pump flow decrease

   Current decrease →pump flow increase

   * In order to detect disconnections, the minimum value for the control current is set to 50 mA. At 0 mA, Computer judges that the line is disconnected.

https://truckmanualshub.com/

System Control for Energy Saving

Fuel consumption is reduced by 8% through the use of three of the new fuel pressure control systems.

[1] Transient load reduction control (5% reduction)

[2] Swing relief cut control (2% reduction)

[3] Power save control (1% reduction)

1. Reduced Fuel Consumption Through Transient Load Reduction Control

When the lever is operated suddenly or there is a sharp high load, the pump control delay reduces the engine speed.
At this time, the engine side control increases the fuel injection quantity to restore the speed to the target engine speed, so fuel consumption increases.By using transient load reduction control, when these conditions occur, the pump torque is reduced to minimize the drop in engine speed and reduce fuel consumption.

(1) Transient load reduction control

When the conditions below occur, the current to the pump horsepower control proportional valve is first lowered to the minimum current to reduce the pump torque, then the horsepower is controlled by gradually raising the current while watching the difference between the actual engine speed and the target speed and thus reducing the increase in fuel injection quantity.

<Conditions>

[1] Sharp lever operation
Judged from sharp rise in the pressure at the upper side pressure sensor

[2] Operation for high loads and sharp loads
Judged from sharp rise in the pressure at the P1 or P2 pump pressure sensor

https://truckmanualshub.com/

(2) Pump added horsepower control

When recovering from transient load reduction control, if the pump horsepower control current is recovered to the rated current, the startup speed is delayed, so there is an impact on operability.In order to compensate for this, when there is sharp lever operation or high load, the current to the pump horsepower control proportional valve is set to the maximum current for the mode to protect against any drop in the recovery speed.

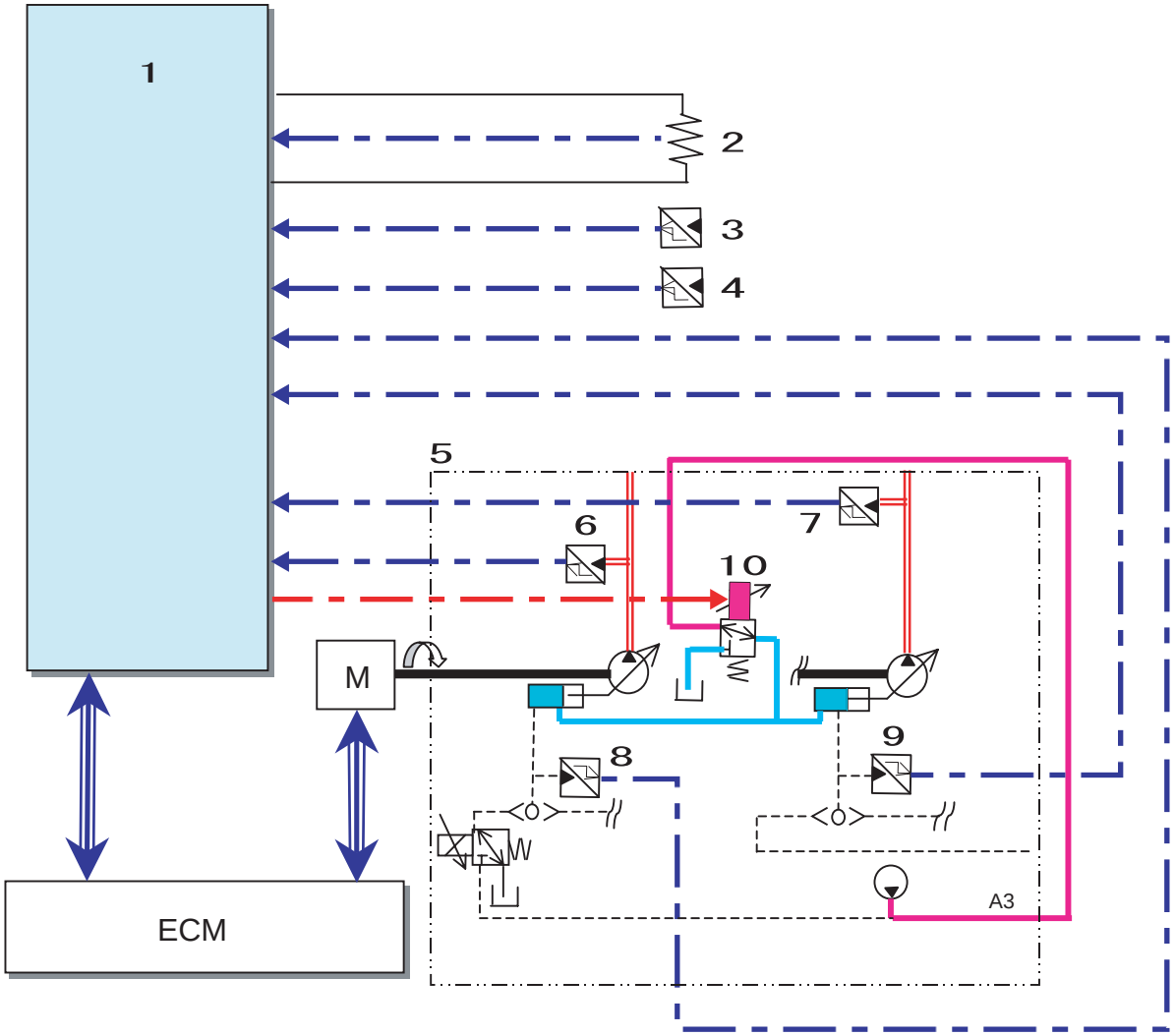

1	Computer	6	P1 pressure sensor
2	Throttle volume	7	P2 pressure sensor
3	Upper side pressure sensor	8	N1 pressure sensor
4	Arm-in pressure sensor	9	N2 pressure sensor
5	Hydraulic pump	10	Horsepower control proportional valve

2. Reduced Fuel Consumption Through Swing Relief Cut Control

Model LX swing line

- When the swing starts, high pressure is required, but not flow.On LX, the swing starts and at first almost all the oil flows from the swing relief to the tank, so energy is consumed needlessly.

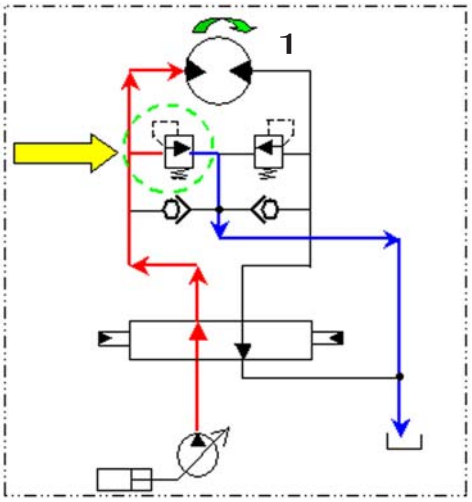

RST–05–00–001p

1	Swing motor

Model X2 swing line

[1] Swing relief cut used

<Purpose>

The swing relief cut control provides relief when the pressure is boosted for the start of the swing due to sharp swing operation and the drained off excess oil is held to the lowest amount possible. This provides an energy saving effect.

<Operation>

For sharp swing operation, when the swing starts, the P1 pump discharge amount is reduced and only the necessary amount of oil is flowed.When the constant swing is reached, flow is necessary, so the P1 pump discharge amount is increased.

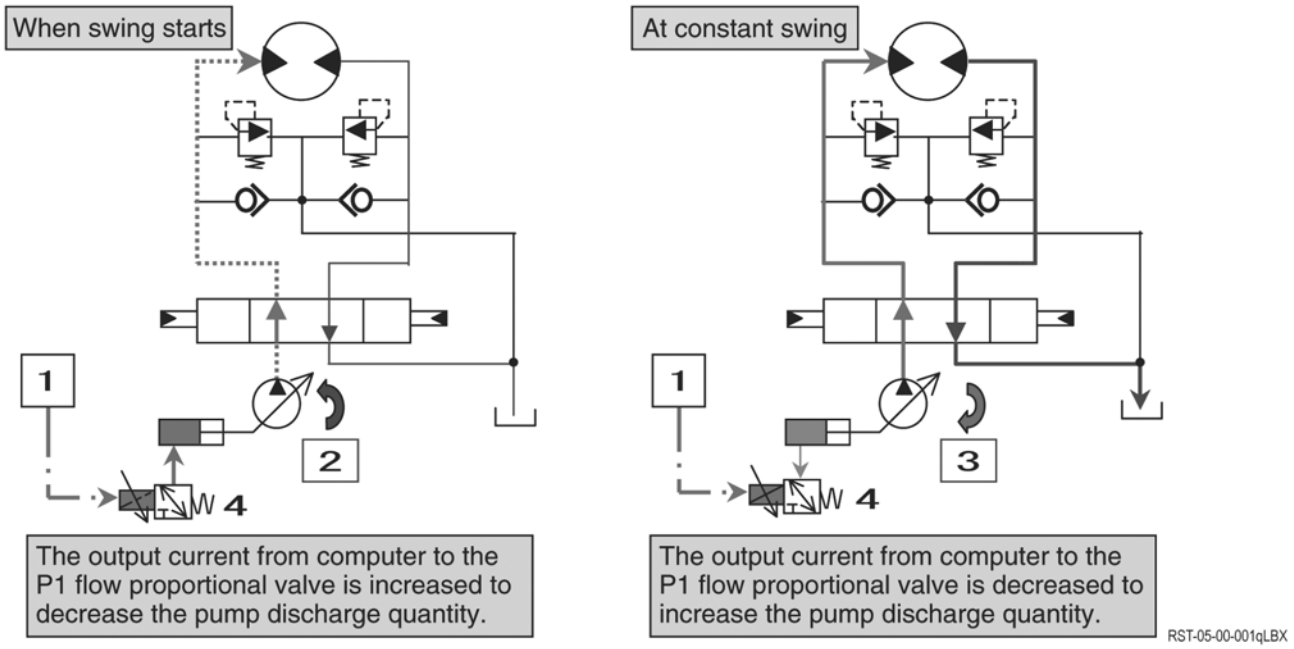

1	Computer	3	Discharge increased
2	Discharge decreased	4	P1 flow control proportional valve

Caution

P1 flow control proportional valve Current (high) ⇒ P1 pump flow (low)

https://truckmanualshub.com/

Current (low) ⇒ P1 pump flow (high)

<Control contents>

When the conditions below are all met, computer A judges that this is swing relief cut control, increases the current to the P1 flow control proportional valve, and reduces the P1 flow.

After that, while checking the P1 pump discharge pressure, it gradually reduces the output current to the P1 flow control valve and raises the P1 flow to the constant swing speed.

<Conditions>

1. Sharp swing operation .....Judged from the swing pilot pressure sensor pressure rise state
2. Within 1 second after start of swing
3. Attachment non-operation ...Attachment non-operation is judged from the N2 negative control pressure & P1 pressure sensor
4. Travel non-operation .....Travel pressure sensor OFF
5. Option line non-operation ....Option pressure sensor OFF

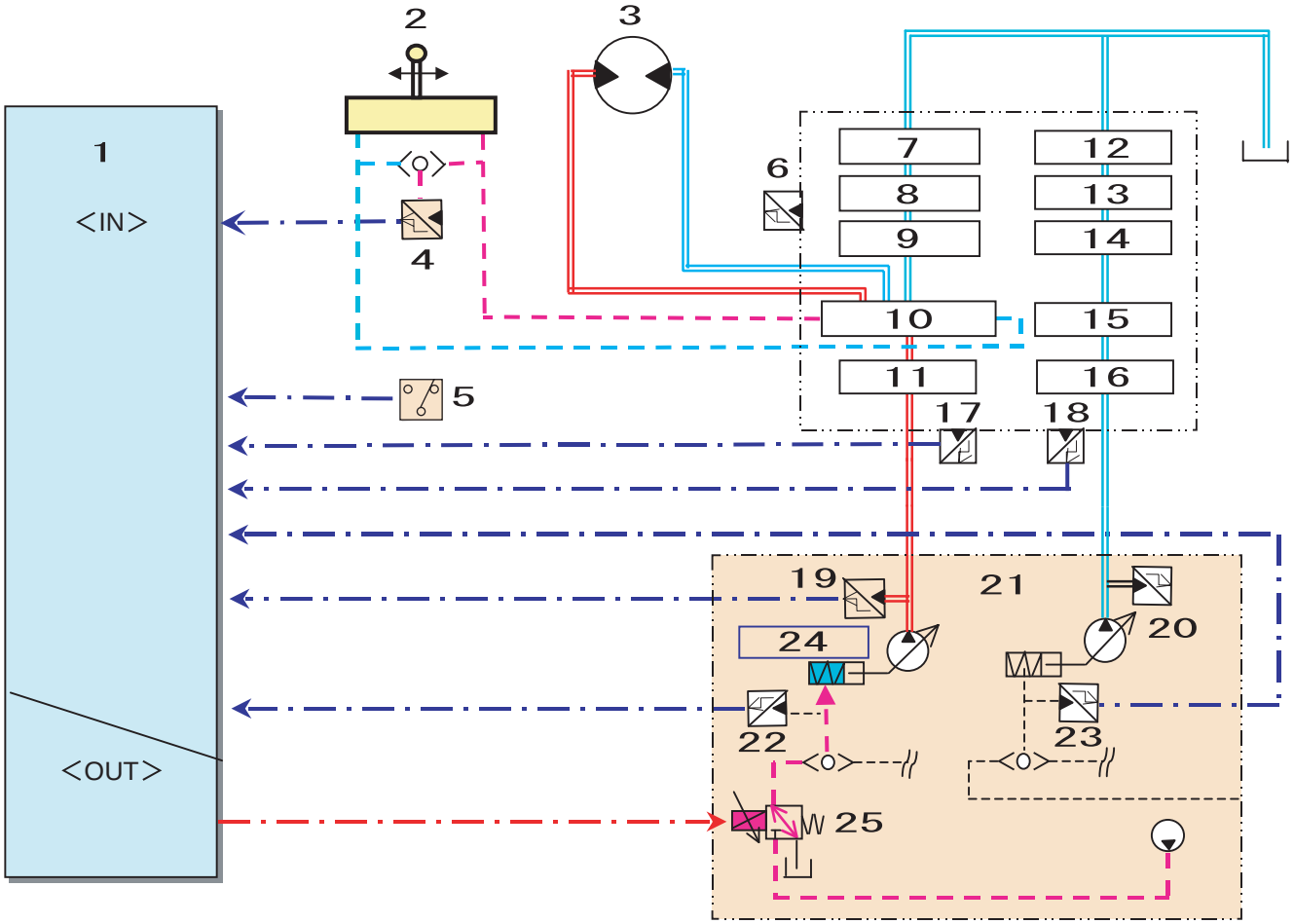

1	Computer	10	Swing	19	P1 pressure sensor
2	Swing remote control valve	11	Travel (right)	20	P2 pressure sensor
3	Swing motor	12	Arm (2)	21	Hydraulic pump
4	Swing pressure sensor	13	Bucket	22	N1 pressure sensor
5	Option pressure switch	14	Boom (1)	23	N2 pressure sensor
6	Arm-in pressure sensor	15	Travel (left)	24	Discharge increased / decreased
7	Arm (1)	16	Straight travel	25	P1 flow control proportional valve
8	Option	17	Travel pressure sensor		
9	Boom (2)	18	Upper side pressure sensor		

https://truckmanualshub.com/

3. Reduced Fuel Consumption Through Power Save Control

Negative control circuit change

[1] Model LX negative control circuit

Control such that the discharge flow decreases as the negative control pressure increases

This reduces the flow for non-operation, so there is an energy-saving effect.

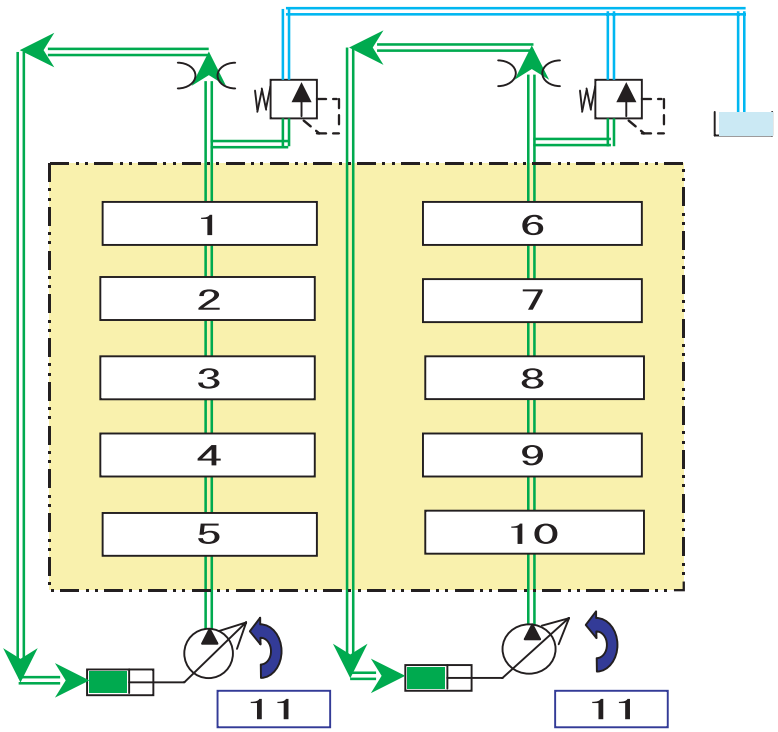

<Operation>

(1) The oil discharged from the pump is drained from the control valve center bypass and boosted to the foot relief set pressure at the negative control metering valve downstream.

(2) The oil drained from the negative control metering valve leads to the negative control ports for the P1 and P2 pumps, so accompanying the negative control pressure boost, the pump tilt revolution angle is tilted to the minimum side to set the pump discharge to minimum.

1	Arm (1)	7	Bucket
2	Option	8	Boom (1)
3	Boom (2)	9	Travel (left)
4	Swing	10	Straight travel
5	Travel (right)	11	Discharge decreased
6	Arm (2)		

https://truckmanualshub.com/

[2] X2 negative control circuit

Power save control used

<Purpose>

By making the negative control relief variable and lowering the negative control pressure, a further energy saving effect is obtained.

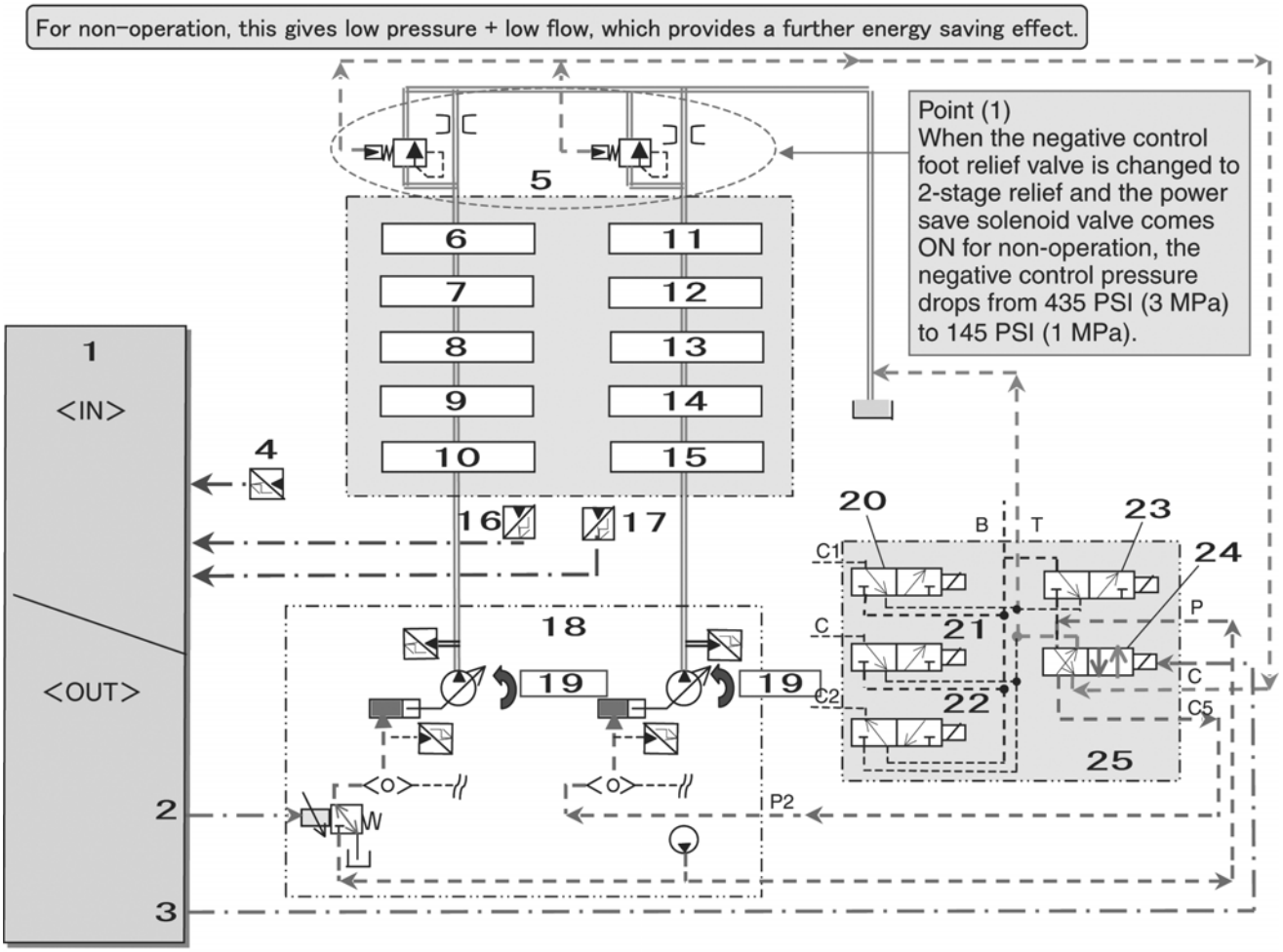

<Operation>

1) One second after the end of operation, the power save solenoid valve comes ON, the negative control relief spring pressure is led from the 5 stack solenoid block C5 port through the power save solenoid valve, and to the tank, the negative control relief valve is switched, and the pump discharge pressure drops.
2) When the pump discharge pressure drops, the negative control pressure drops too, so the P1 and P2 pump negative control valves are controlled as below.
   P1 pump ... The P1 flow proportional valve is operated, the negative control pressure is established, and the pump discharge is lowered by the negative control flow.
   P2 pump ... The switching of the power save solenoid leads the pilot pressure from the solenoid block C5 port through the shuttle valve and to the negative control port to lower the negative control flow.
3) If any of the pilot pressure sensors - upper side, travel, or swing ? comes ON, the normal control is restored after about 0.1 second.

RST-05-00-001tLBX

1	Computer	10	Travel (right)	19	Discharge decreased
2	P1 flow control proportional valve	11	Arm (2)	20	Travel 2nd speed
3	Power save solenoid valves	12	Bucket	21	Boosted pressure
4	Swing pressure sensor	13	Boom (1)	22	Swing brake
5	Negative control relief	14	Travel (left)	23	Lever lock
6	Arm (1)	15	Straight travel	24	Power save
7	Option	16	Travel pressure sensor	25	5-way solenoid valve
8	Boom (2)	17	Upper side pressure sensor		
9	Swing	18	Hydraulic pump		

https://truckmanualshub.com/

Swing Speed Limit Control

<Purpose>

Since the maximum pump flow has been increased compared to Model LX, the swing speed at maximum pump flow is too fast.

For the improved swing operability and energy-saving effects, the maximum swing speed is held down to the same speed as for Model LX.

(210X2 P1 maximum discharge amount held down from 56 Gal. (211 L) / min ⇒53 Gal. (200 L) / min; control only for SP mode)

<Operation>

When the conditions below are all met, the output current to the P1 flow control valve is set to the maximum of 350 mA and the P1 pump flow is held down.

<Conditions>

[1] Swing alone full lever operation ..... Judged from the N1 and N2 negative control pressure sensors and P1 and P2 pressure sensors

[2] Travel non-operation ..... Travel pressure sensor OFF

[3] The work mode is SP mode.

<End conditions>

[1] Travel operation ⇒Immediate end (to prevent meandering)

[2] Other attachment operation ⇒Gradual end (to reduce shock)

[3] Option circuit operation

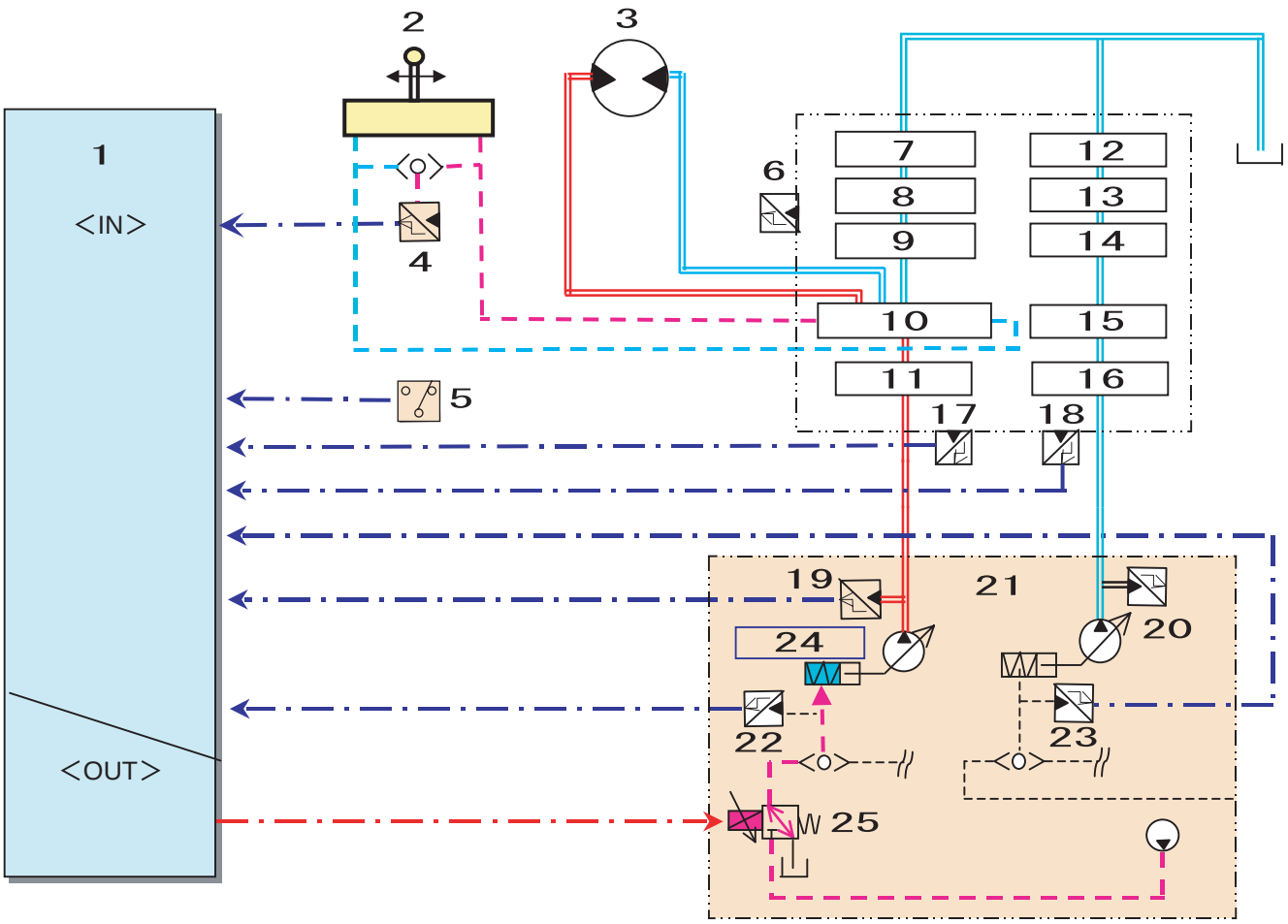

RST–05–00–001r

1	Computer	10	Swing	19	P1 pressure sensor
2	Swing remote control valve	11	Travel (right)	20	P2 pressure sensor
3	Swing motor	12	Arm (2)	21	Hydraulic pump
4	Swing pressure sensor	13	Bucket	22	N1 pressure sensor
5	Option pressure switch	14	Boom (1)	23	N2 pressure sensor
6	Arm-in pressure sensor	15	Travel (left)	24	Discharge increased / decreased
7	Arm (1)	16	Straight travel	25	P1 flow control proportional valve
8	Option	17	Travel pressure sensor		
9	Boom (2)	18	Upper side pressure sensor		

<Flow from swing start to constant-speed swing (SP mode)>
Swing lever operation
⇒Judged to be swing relief cut condition
⇒Increased current to P1 flow control proportional valve
⇒P1 pump flow reduced
⇒Current gradually decreased while watching swing pressure fall status
⇒P1 pump flow increased
⇒Judged to be speed limit condition
⇒P1 pump current fixed to 350 mA

https://truckmanualshub.com

Overall View

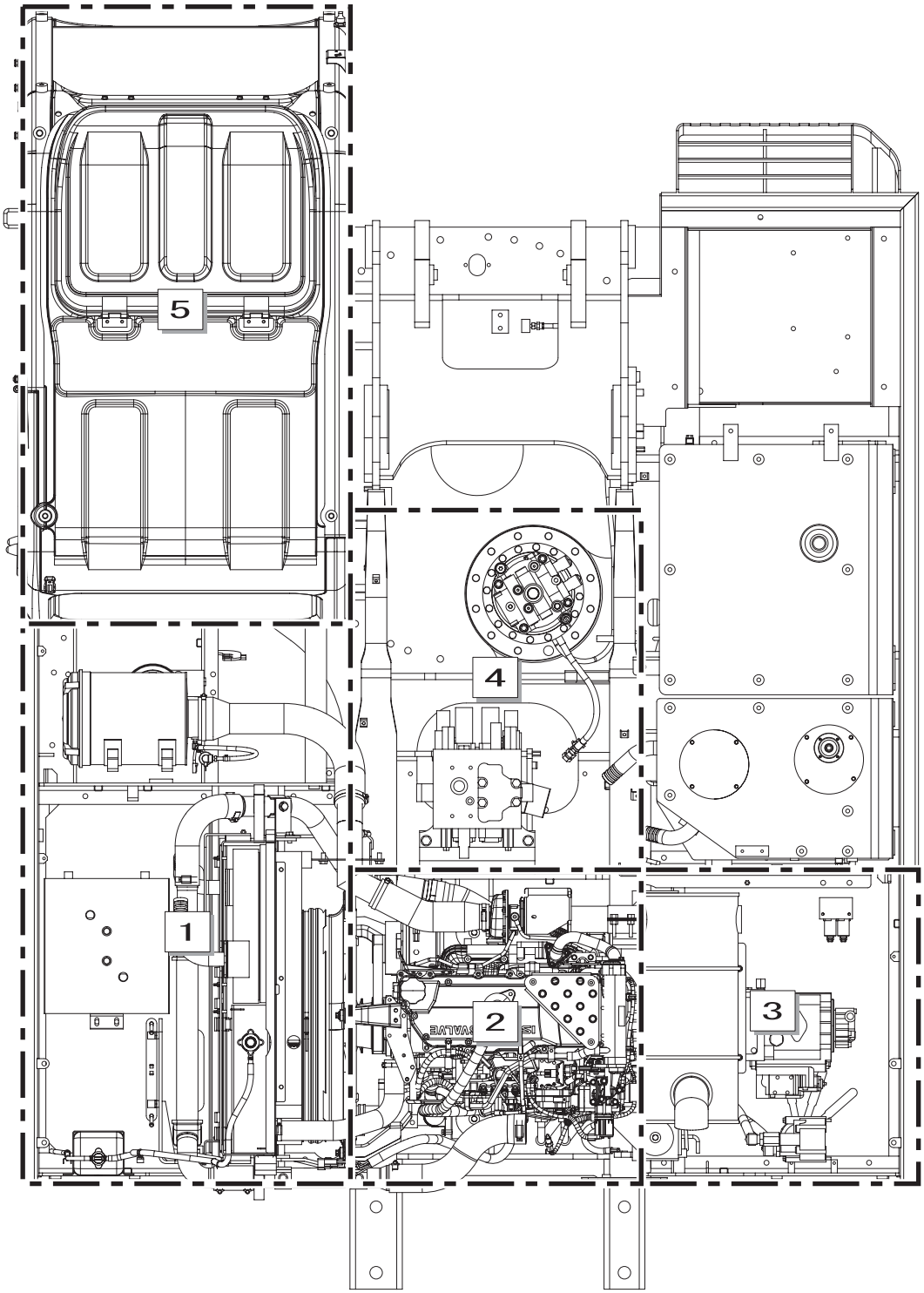

1	Main unit right side (radiator compartment)
2	Engine
3	Main unit left side (pump compartment)
4	Main unit center section
5	In cab

E

Electrical Equipment Layout Diagram

https://truckmanualshop.com/

1. Main Unit Right Side Layout Diagram (radiator compartment)

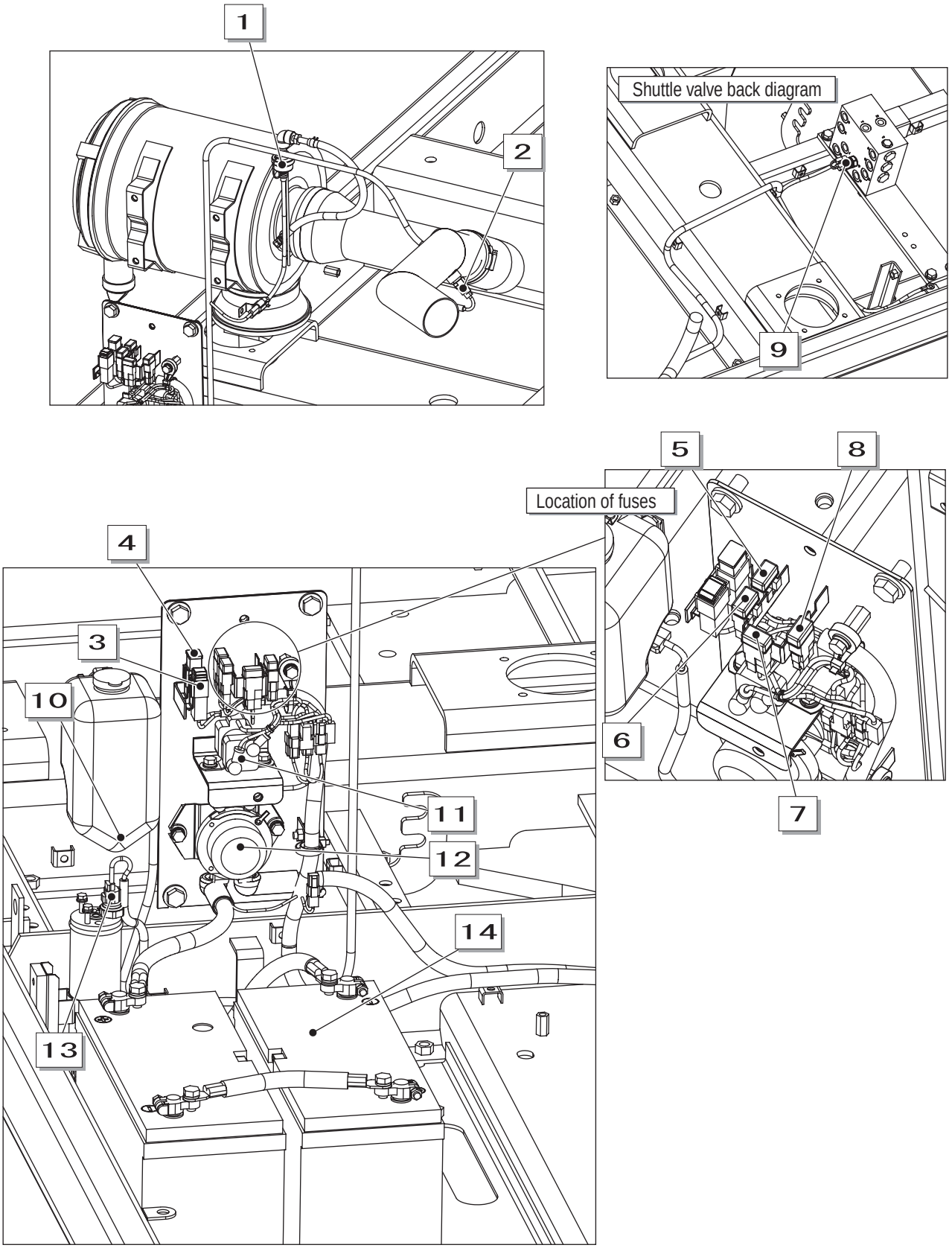

1	Air cleaner sensor	6	Fuse: ECM 20A (F4)	11	Safety relay
2	Suction air temperature sensor	7	Fuse: controller 20A (F5)	12	Battery relay
3	Fusible link 65A (F1)	8	Fuse: GPS 15A (F6)	13	Receiver dryer sensor
4	Fusible link 50A (F2)	9	Swing pilot pressure sensor	14	Battery
5	Fuse: key 15A (F3)	10	Washer motor		

https://truckmanualshub.com

2. Engine Section Layout Diagram

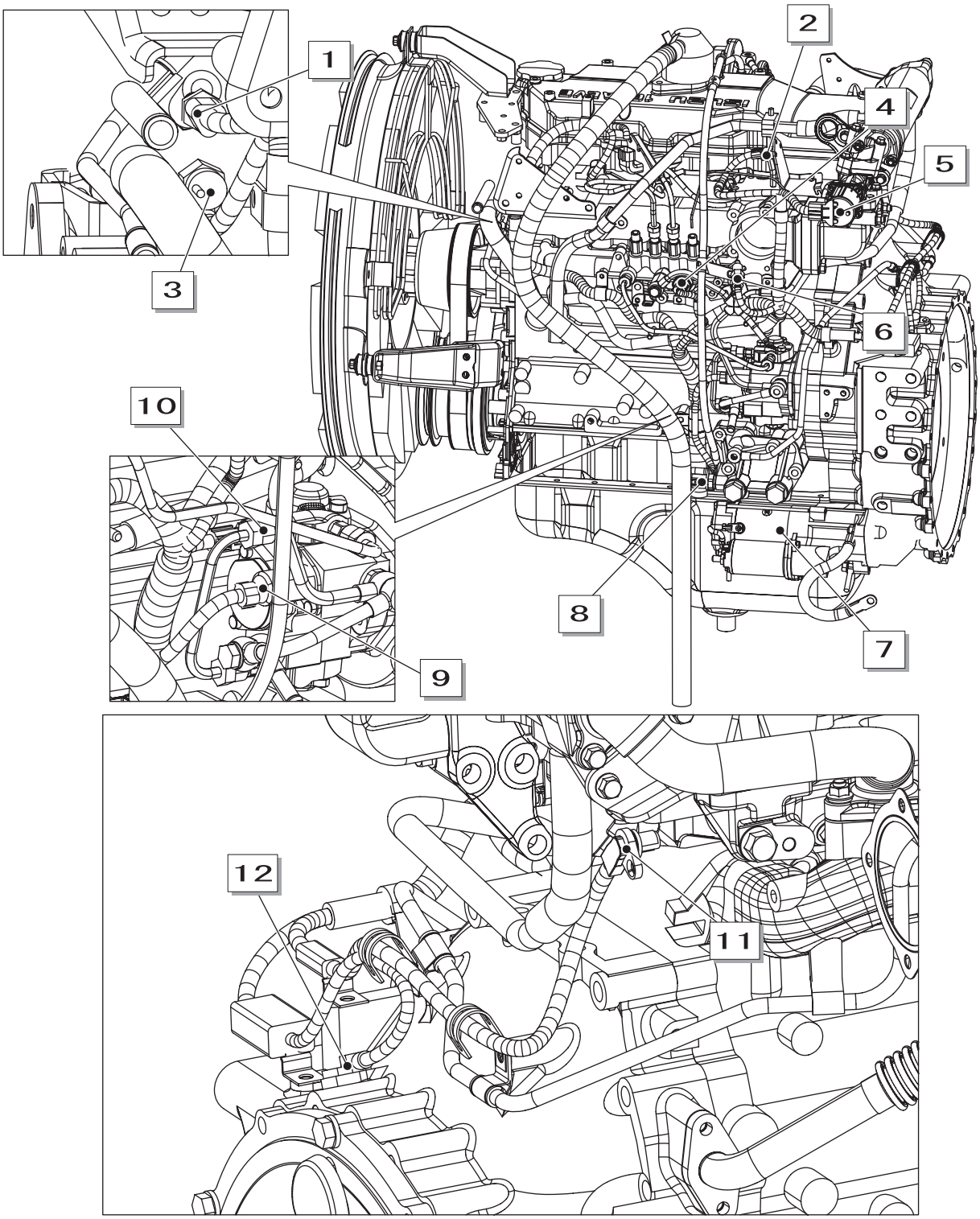

1	Engine coolant temperature sensor	7	Starter motor
2	Boost pressure sensor	8	Engine coolant temperature sensor
3	Overheat switch	9	Suction control valve
4	Common rail pressure sensor	10	Fuel temperature sensor
5	EGR valve	11	Cam position sensor
6	Boost temperature sensor	12	Crank position sensor

https://truckmanualshop.com/

3. Main Unit Left Side Layout Diagram (pump compartment)

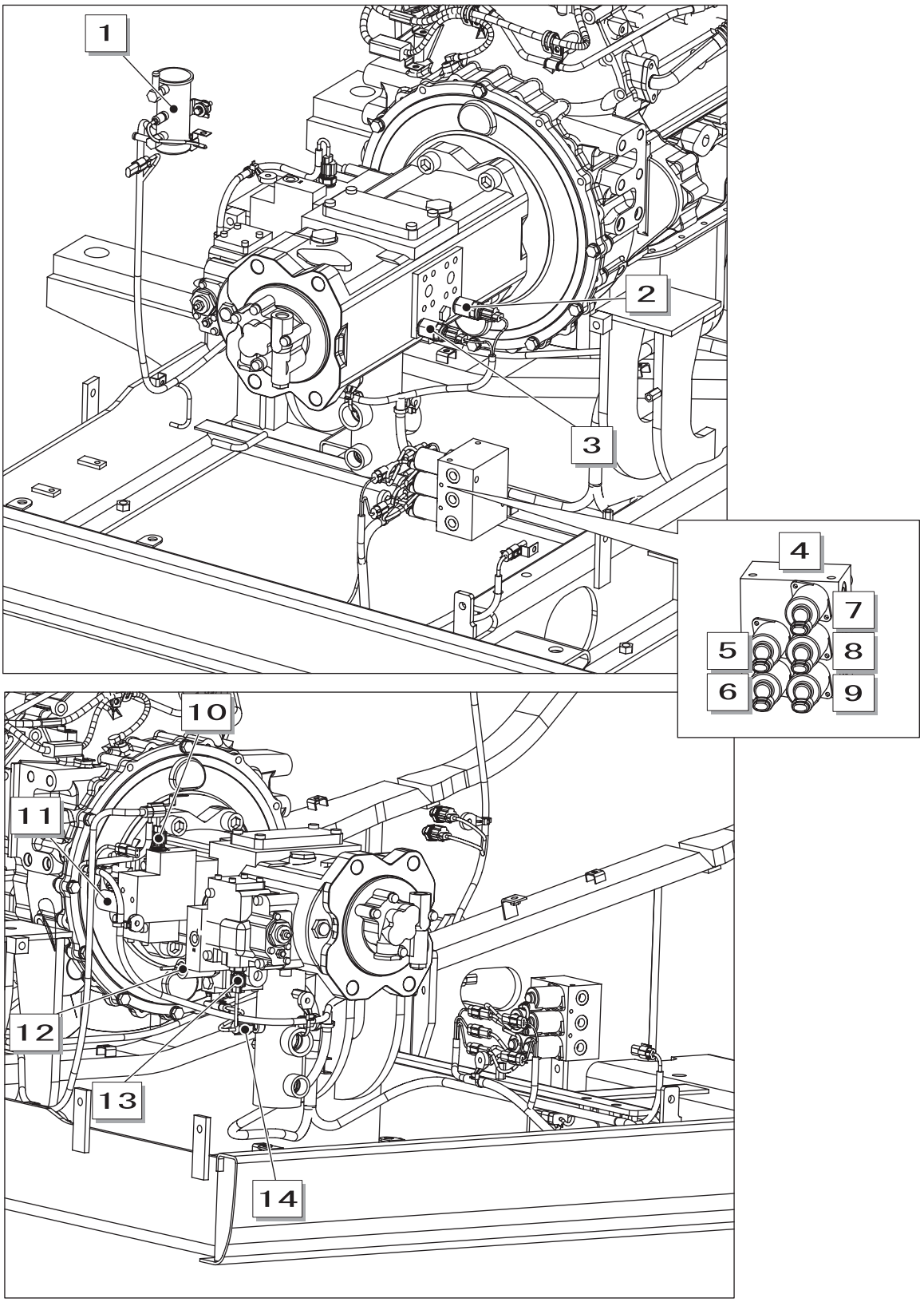

1	Electromagnetic fuel pump	8	Power save
2	P1 pressure sensor	9	Lever lock
3	P2 pressure sensor	10	N1 pressure sensor
4	5-way solenoid valve	11	P1 flow control proportional valve
5	Boost pressure	12	Horsepower control proportional valve
6	Travel speed	13	N2 pressure sensor
7	Swing lock	14	Oil temperature sensor

https://truckmanualshub.com

4. Main Unit Center Section Layout Diagram

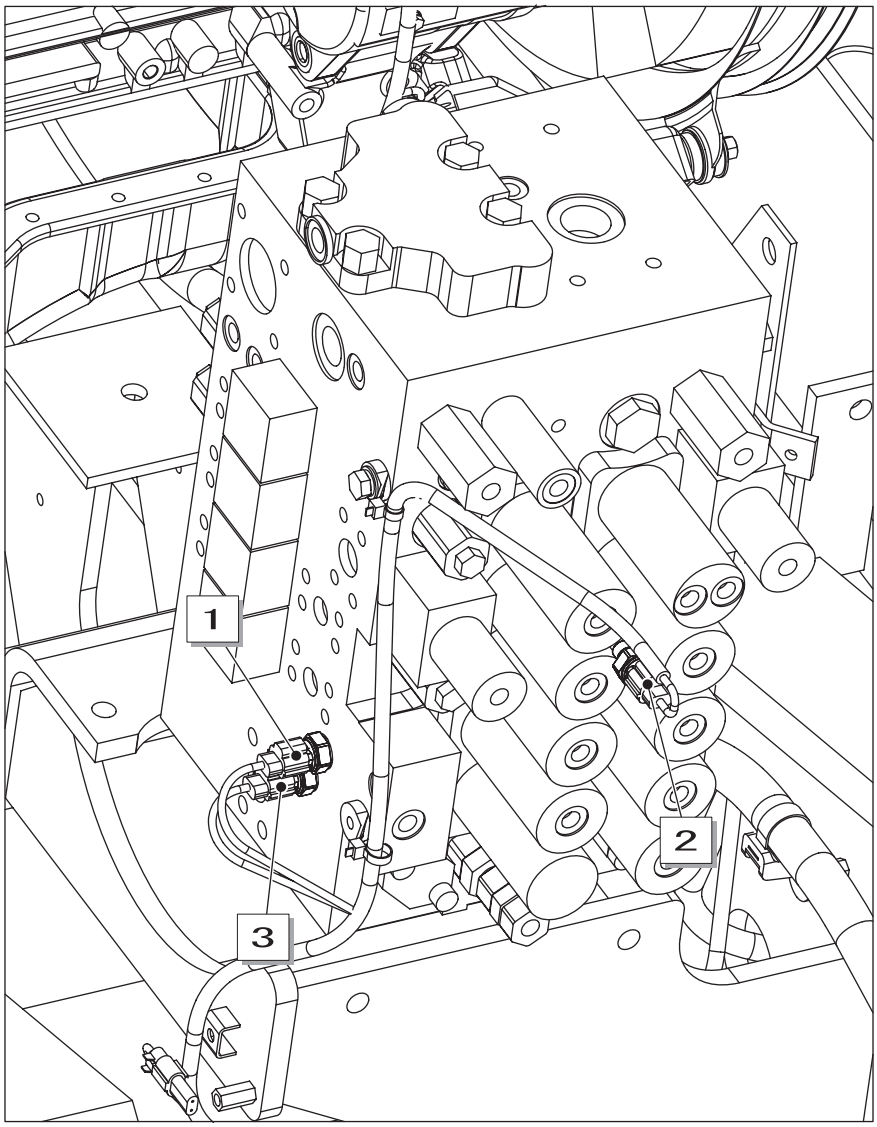

1	Upper side pressure sensor
2	Arm-in pressure sensor
3	Travel pressure sensor

https://truckmanualshop.com/

5. Cab Layout Diagram 1

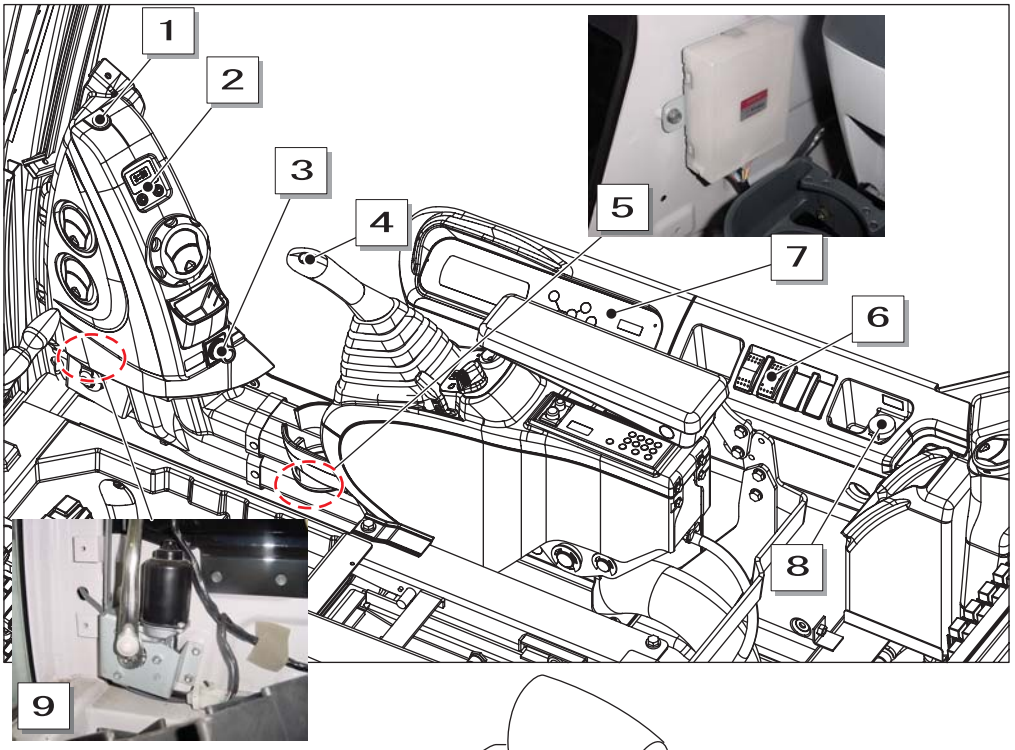

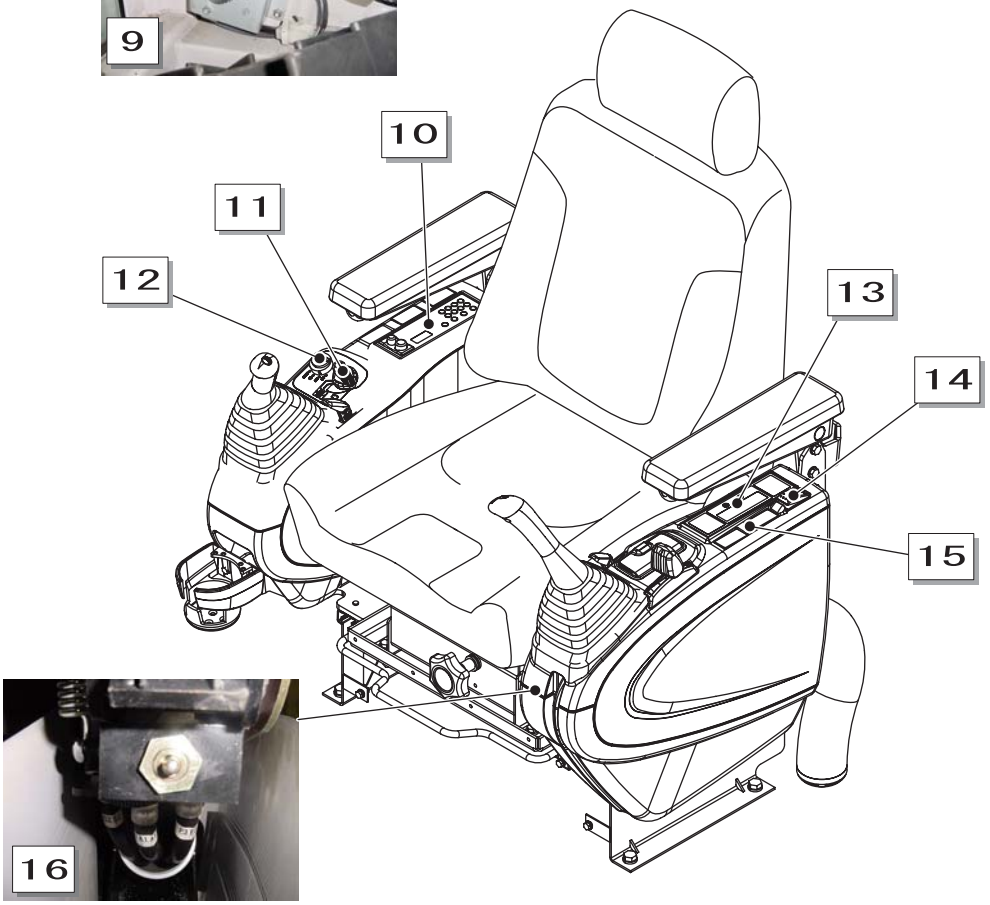

1	Air conditioner solar radiation sensor	7	Monitor display	13	Air conditioner control panel
2	Clock	8	12 V socket	14	Emergency stop switch
3	Cigar lighter	9	Wiper motor	15	Rocker switch
4	Knob	10	Radio	16	Gate lock limit switch
5	Wiper controller	11	Throttle volume		
6	Rocker switches (4)	12	Key cylinder		

https://truckmanualshub.com

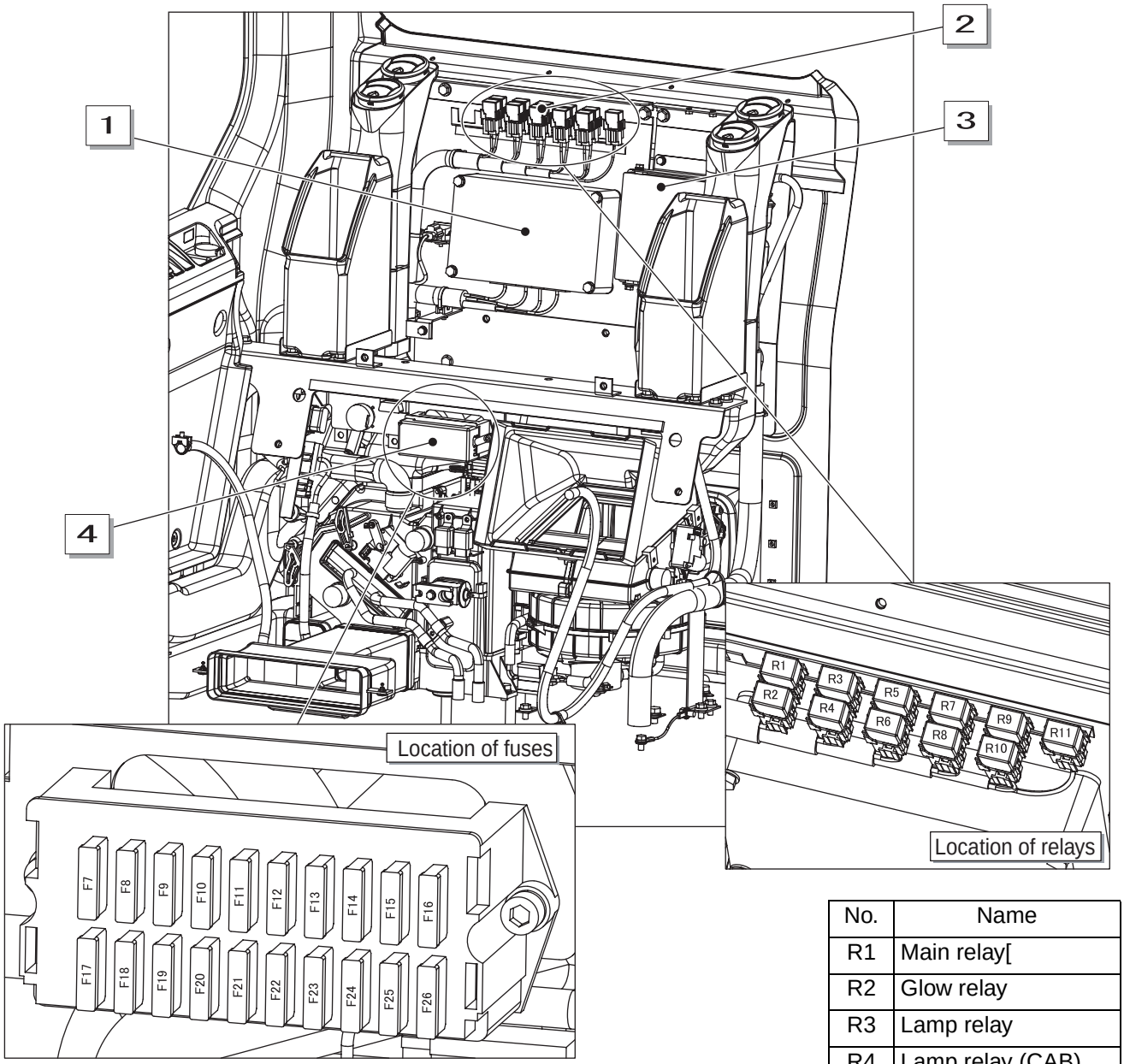

No.	Name	
F7	BACK UP RADIO, ROOM LAMP	10A
F8	ENGINE PRE-HEAT	30A
F9	OPTION LINE	10A
F10	AIR-CONDITIONER UNIT	5A
F11	AIR-CONDITIONER BLOWER	15A
F12	AIR-CONDITIONER COMPRESSOR	5A
F13	SOLENOID	10A
F14	WIPER WASHER	15A
F15	HORN	10A
F16	LAMP (BOOM, HOUSE)	15A

No.	Name	
F17	FUEL FEED PUMP	20A
F18	CLOCK BACK MONITOR	10A
F19	CIGAR LIGHTER KAB SEAT	15A
F20	DC CONVERTER	10A
F21	TRAVEL ALARM BEACON	10A
F22	SPARE (CRANE)	15A
F23	ELEC. FUEL PUMP	10A
F24	LAMP (SPARE)	15A
F25	LOCK LEVER (GATE)	10A
F26	LAMP (CAB)	15A

No.	Name
R1	Main relay[
R2	Glow relay
R3	Lamp relay
R4	Lamp relay (CAB)
R5	Horn relay L
R6	Horn relay R
R7	Speaker relay R
R8	Speaker relay L
R9	Room lamp relay
R10	Beacon relay
R11	Starter cut relay

1	Controller A
2	Relay
3	ECM (engine control module)
4	Fuse box

https://truckmanualshop.com/

6. Layout Around Operator Seat

Right console

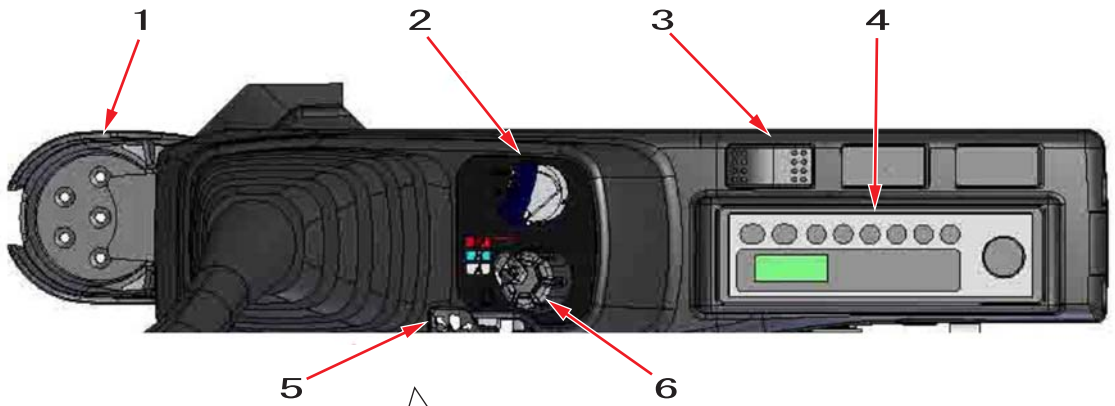

Left console

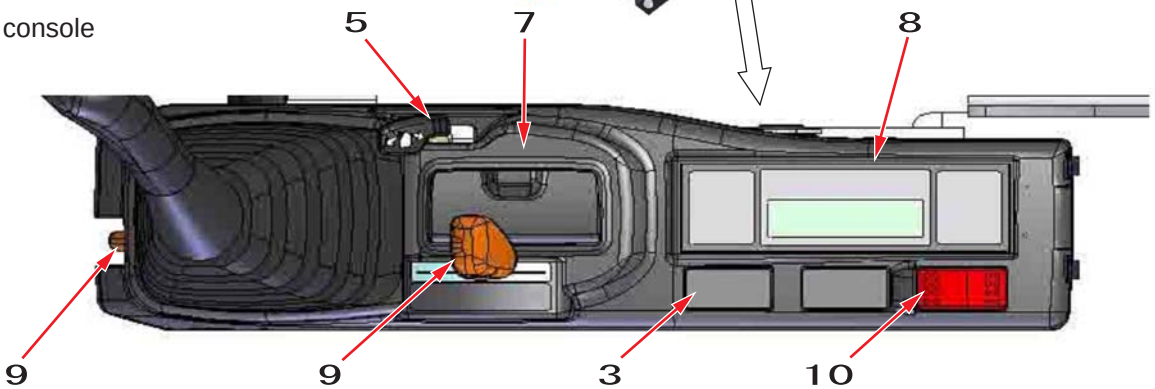

1	Cup holder
2	Key switch
3	Rocker switch base
4	AM / FM radio
5	Tilt lever
6	Throttle volume
7	Ashtray
8	Air conditioner control panel
9	Gate lever
10	Emergency stop switch

https://truckmanualshub.com

Stand-Alone Parts Diagram

Name	Shape	Circuit	Remarks
Safety relay	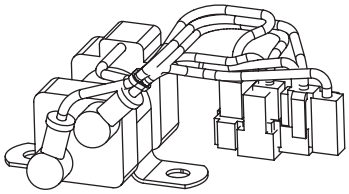	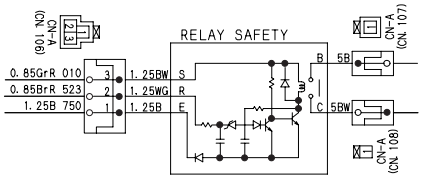	Model: 24 V DC specifications Isuzu Part No.: 182553-0391 Sumitomo Part No.: AEH0017
Battery relay	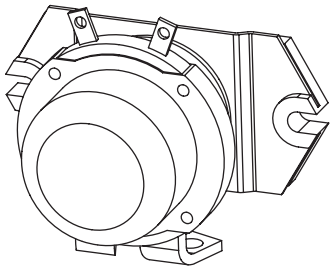	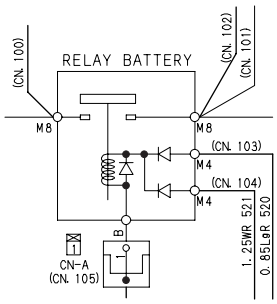	Model: For +24 V DC Sumitomo Part No.: KHR1241
Starter motor	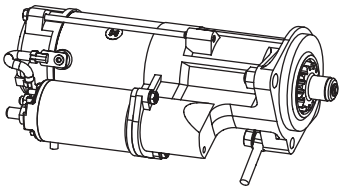	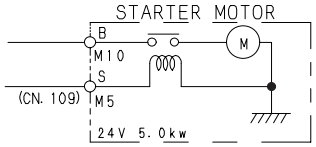	Model: 5.0 kW-24 V Isuzu Part No.: 898001-9150
Alternator	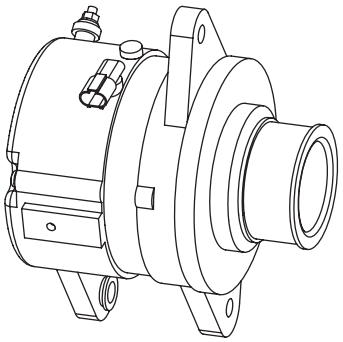	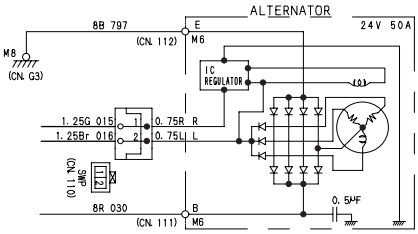	Model: 50 A-24 V Isuzu Part No.: 897375-0171
Battery	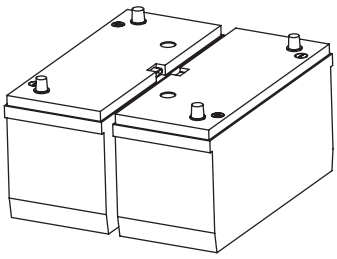	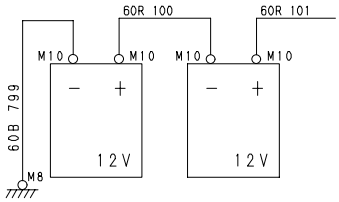	Model: 130E41R Sumitomo Part No.: KHR3944
Washer motor	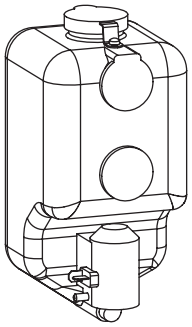	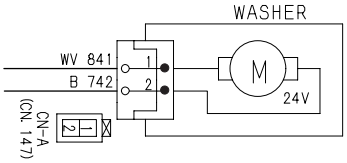	Sumitomo Part No.: KHN1639 (tank + motor)

Electrical Equipment Layout Diagram

https://truckmanualshop.com/

Name	Shape	Circuit	Remarks
Fusible link (F1)	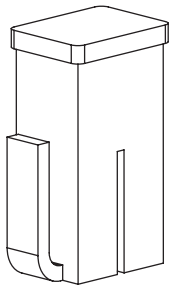	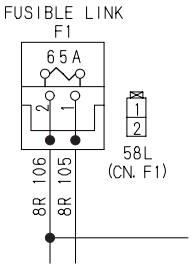	Model: 65 A Sumitomo Part No.: KHR1592
Fusible link (F2)	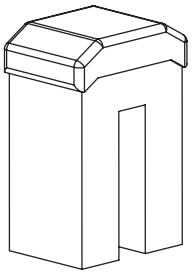	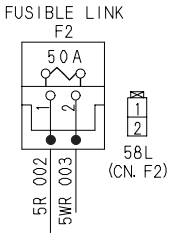	Model: 50 A Sumitomo Part No.: KHR3850
Fuse box (F3, F4, F5, F6)	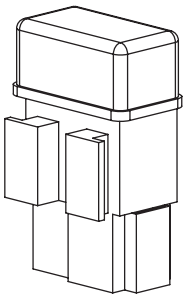	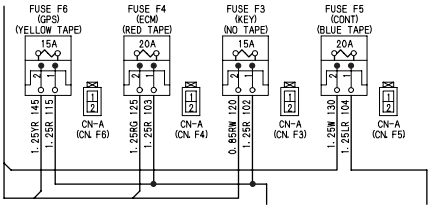	Model: 7224-8511 (20 A) 7224-8512 (15 A)
Throttle volume	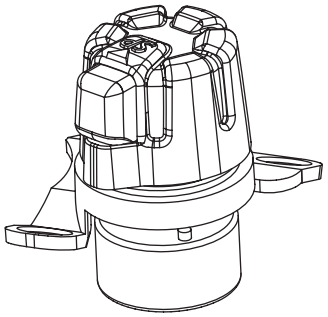	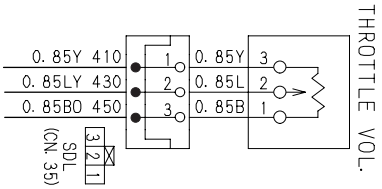	Model: RA30Y2 30SKB1KΩK Sumitomo Part. No.: KHR2751
Starter switch	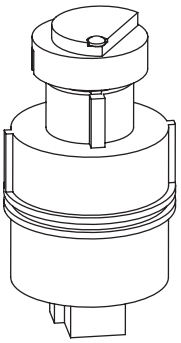	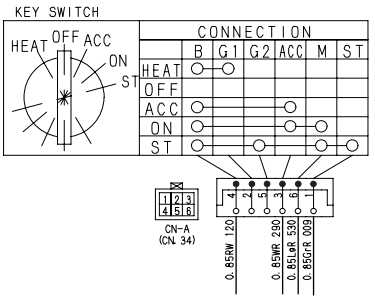	Model: 24 V DC Sumitomo Part No.: KHR15560 (EXP) KHR3270 (LBX, CASE)

https://truckmanualshub.com

Name	Shape	Circuit	Remarks
Fuel level sensor	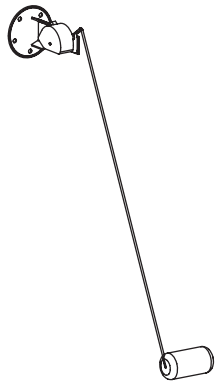	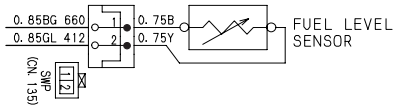	Sumitomo Part No.: KHR10670
Electromag-netic pump	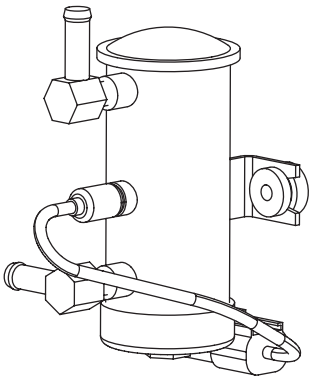	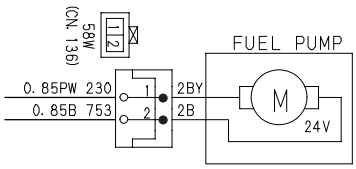	Model: 24 V DC Sumitomo Part No.: KHH10460
Reserve tank limit switch	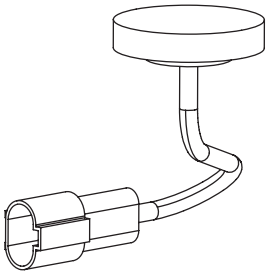	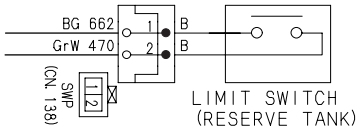	Sumitomo Part No.: KHH0221
Vacuum sensor	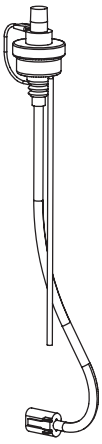	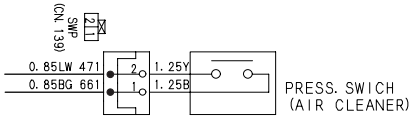	Sumitomo Part No.: KHH10330

E

Electrical Equipment Layout Diagram

https://truckmanualshop.com/

Name	Shape	Circuit	Remarks
Glow plug	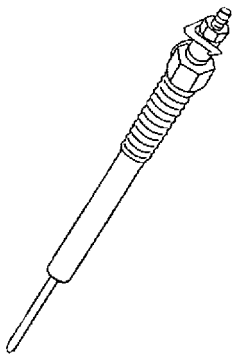	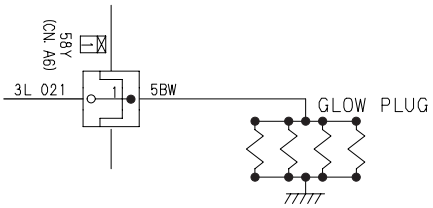	Isuzu Part No.: 894390-7775
EGR motor EGR position sensor	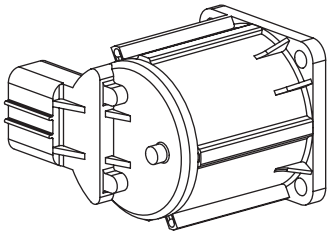	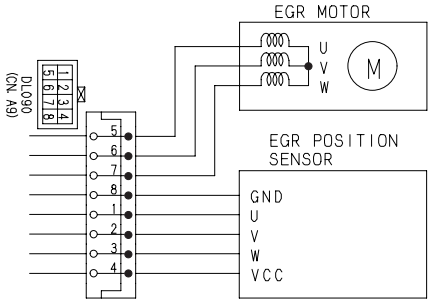	EGR valve accessory EGR valve Isuzu Part No.: 898001-1910
Common rail pressure sensor	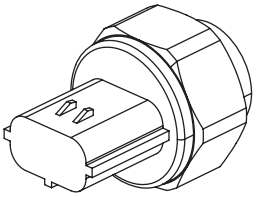	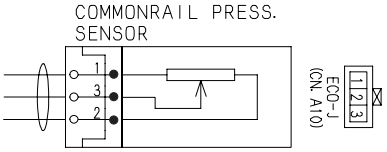	Common rail accessory Common rail Isuzu Part No.: 897306-0632
Cam angle sensor	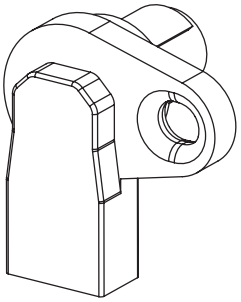	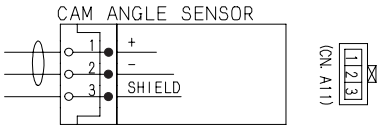	Isuzu Part No.: 898014-8310
Crank angle sensor	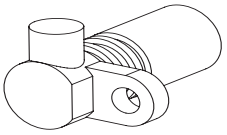		Isuzu Part No.: 897306-1131
Oil pressure sensor	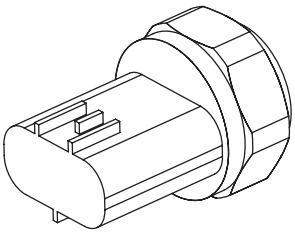	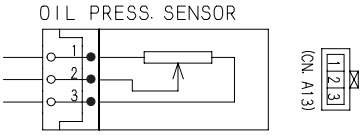	Isuzu Part No.: 897600-4340

https://truckmanualshub.com

Name	Shape	Circuit	Remarks
Boost pressure sensor	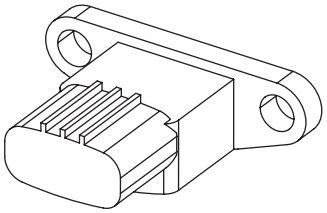	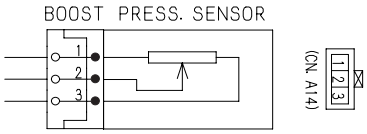	Isuzu Part No.: 180220-0140
Boost temperature sensor	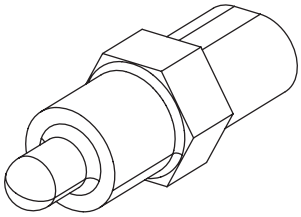	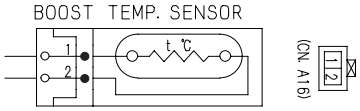	Isuzu Part No.: 81246-8300
Fuel temperature sensor	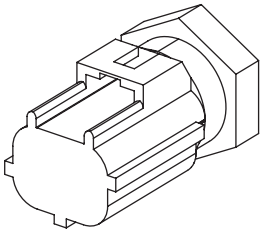	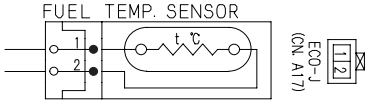	Supply pump accessory part Supply pump Isuzu Part No.: 897306-0448
Suction control valve	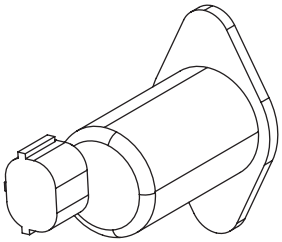	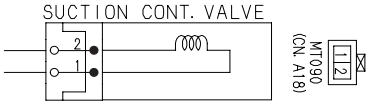	Supply pump accessory part Supply pump Isuzu Part No.: 897306-0448
Injector	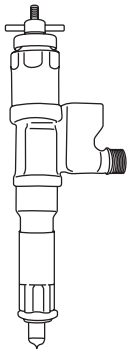	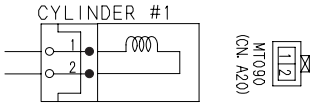	Isuzu Part No.: 897329-7032
Suction air temperature sensor	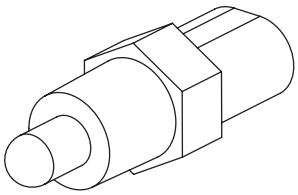	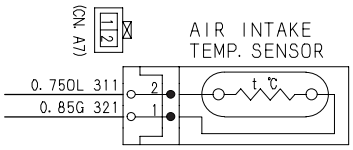	Isuzu Part No.: 812146-8300 Sumitomo Part No.: KHH0535

E

Electrical Equipment Layout Diagram

https://truckmanualshop.com/

Name	Shape	Circuit	Remarks
Engine coolant temperature sensor	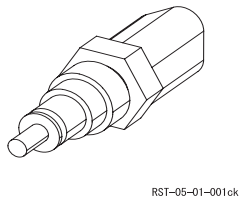	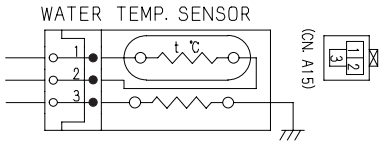	Isuzu Part No.: 897170-3270
Atmospheric pressure sensor	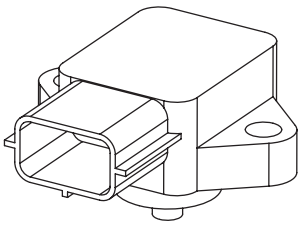	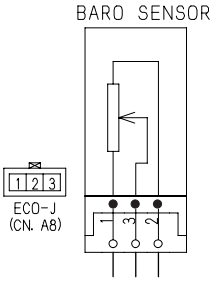	Isuzu Part No.: 897217-7780 Sumitomo Part No.: KHH0536
Computer	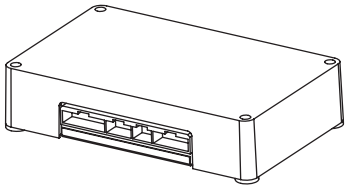	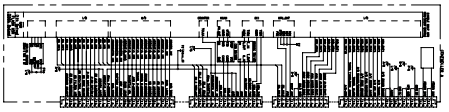	Sumitomo Part No.: KHR10023
Relay	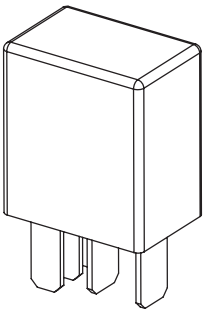	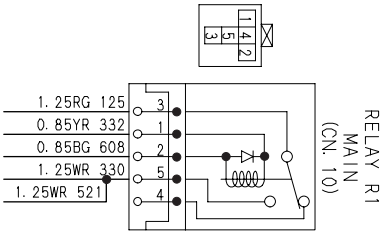	Model: 24 V DC Sumitomo Part No.: KHR3802
DC-DC converter	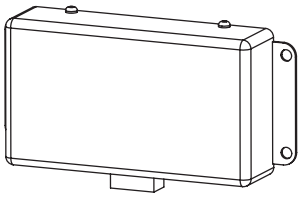	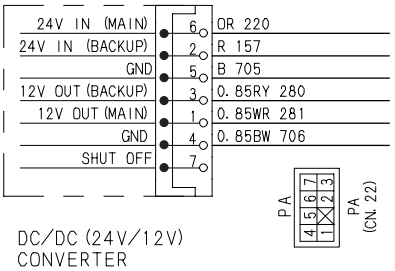	Sumitomo Part No.: KHR2447
Alarm (feed pump)	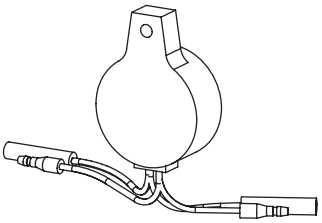	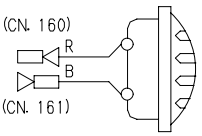	Sumitomo Part No.: KHR4024

https://truckmanualshub.com

Name	Shape	Circuit	Remarks
Feed pump	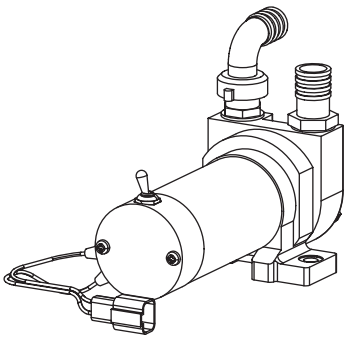	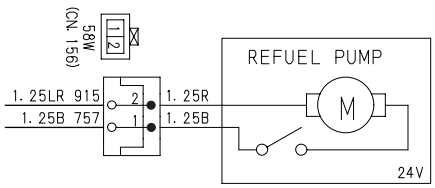	Sumitomo Part No.: KHR12840
Feed pump switch	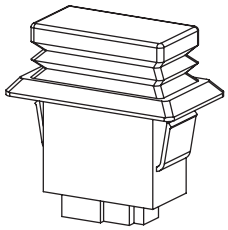	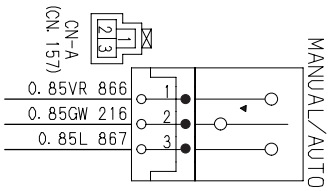	Sumitomo Part No.: KHR11520
Lamp (right side housing)	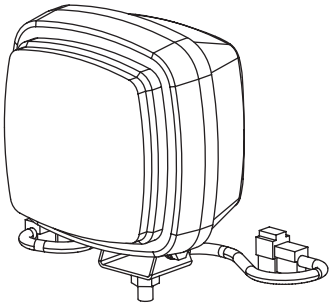	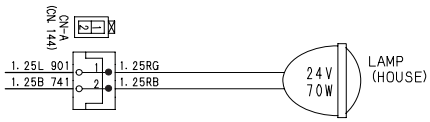	Model: 24 V 70 W Sumitomo Part No.: KHR2475
Lamp (boom)	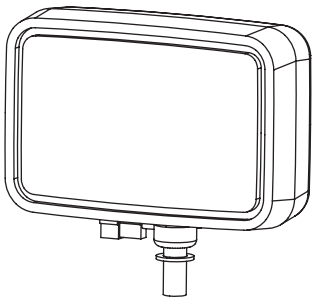	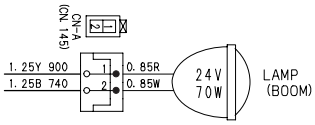	Model: 24 V 70 W Sumitomo Part No.: KHR0957
Lamp (cab top)	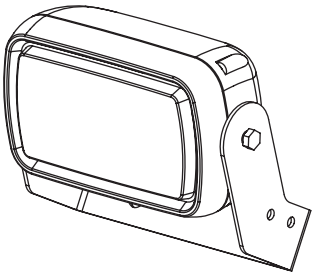	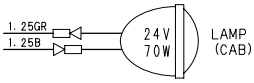	Model: 24 V 70 W Sumitomo Part No.: KHR16240

E

Electrical Equipment Layout Diagram

https://truckmanualshop.com/

Name	Shape	Circuit	Remarks
Speaker (R)	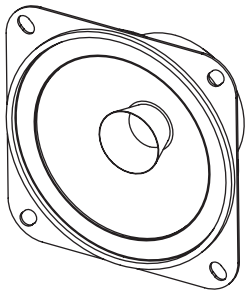	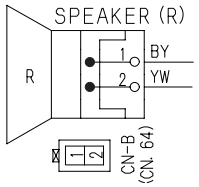	Sumitomo Part No.: CAP2284
Monitor display	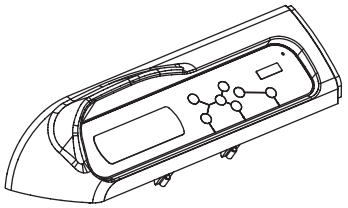	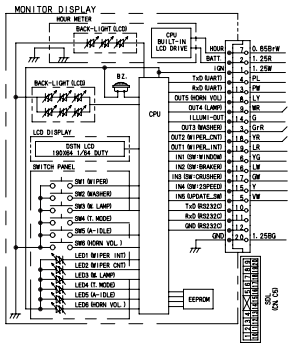	Model: SK-0023-001-N0-KK Sumitomo Part No.: KHR10051 (EXP, LBX) KHR15200 (CASE)
Pressure sensors (P1) (P2)	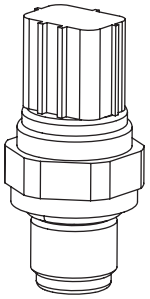	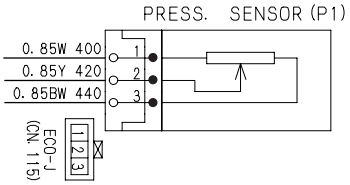	Model: 50.0 MPa Sumitomo Part No.: KHR10290
Pressure sensors (N1) (N2) (swing) (upper side) (travel) (arm-in)	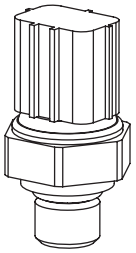	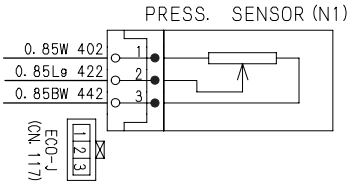	Model: 5.0 MPa Sumitomo Part No.: KHR10300
Pressure switch (option) (second option)	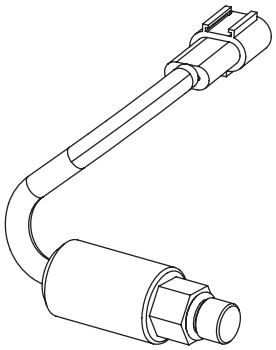	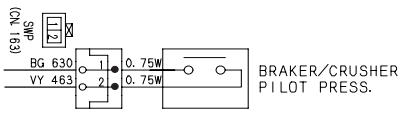	Model: 0.49 MPa Sumitomo Part No.: KHR10820

https://truckmanualshub.com

Name	Shape	Circuit	Remarks
Pressure switch (filter)	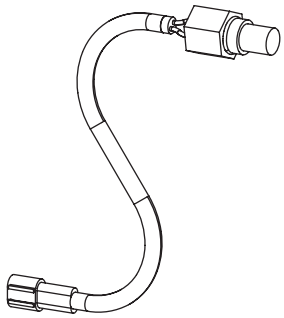	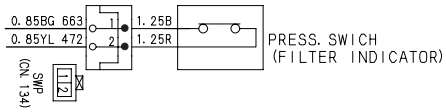	Sumitomo Part No.: KHR14470
5-way solenoid valve	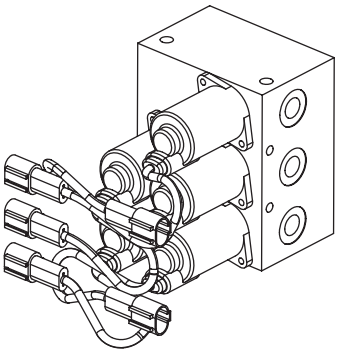	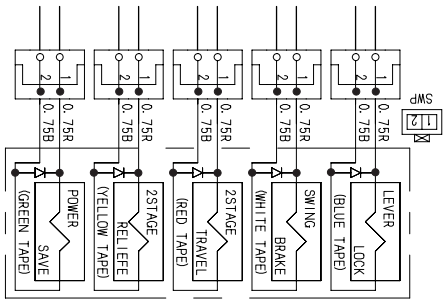	Sumitomo Part No.: KHJ14520
2-way solenoid valve (knob switch type)	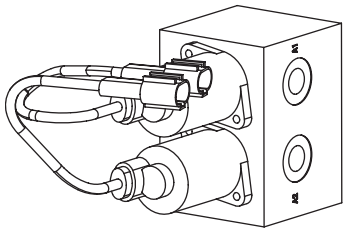	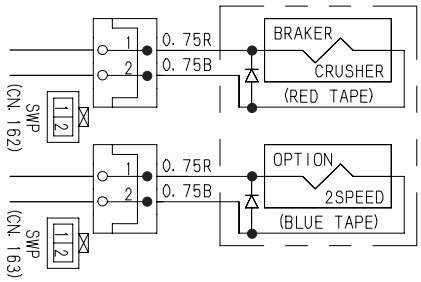	Sumitomo Part No.: KHJ14780
2-way solenoid valve (pedal type)	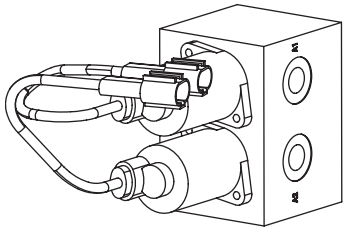	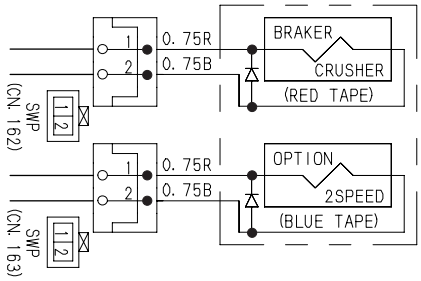	Sumitomo Part No.: KHJ14000
P1 flow control proportional valve	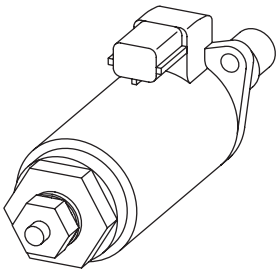	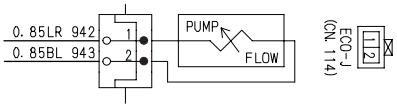	Sumitomo Part No.: TIP0002128

E

Electrical Equipment Layout Diagram

https://truckmanualshop.com/

Name	Shape	Circuit	Remarks
Horsepower control proportional valve	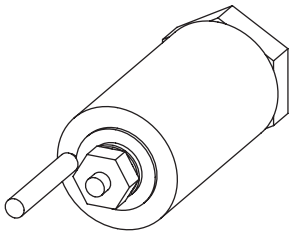	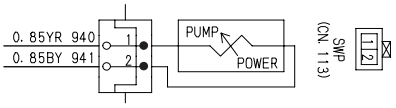	Sumitomo Part No.: LJ014460
Free swing switch	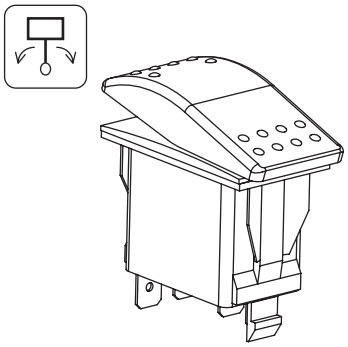	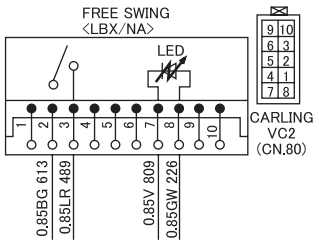	Sumitomo Part No.: KHR16140 (LBX, CASE-NA)
KAB seat	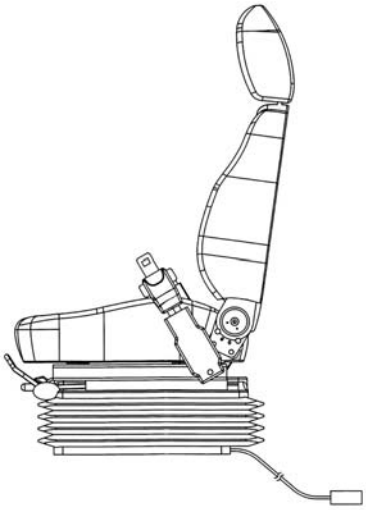	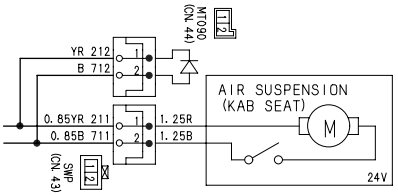	Model: KAB 555 Sumitomo Part No.: KHN12810
Free swing solenoid	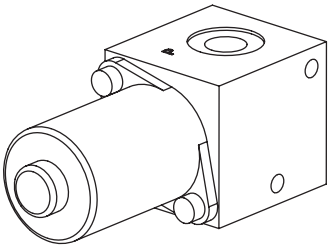	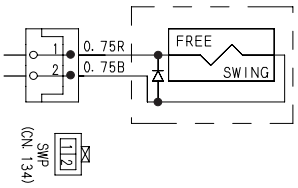	Sumitomo Part No.: KHJ0659 (LBX, CASE-NA)
Hydraulic oil temperature sensor	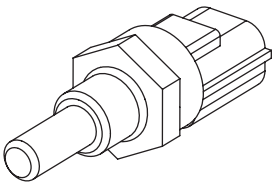	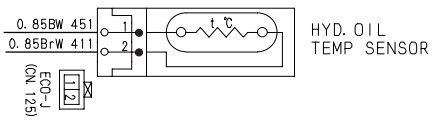	Sumitomo Part No.: KHR2433

https://truckmanualshub.com

Name	Shape	Circuit	Remarks
Clock	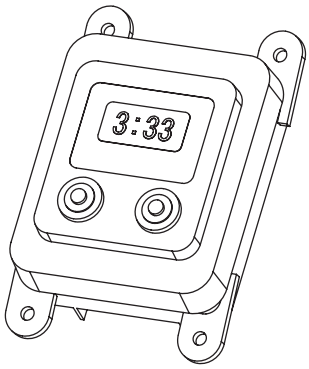	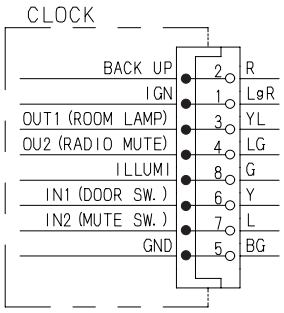	Sumitomo Part No.: KHR10060
Knob right (with one-touch switch)	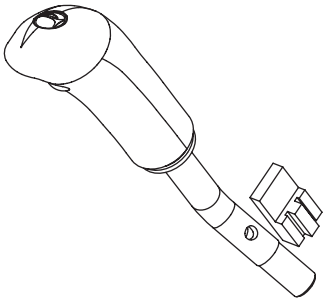	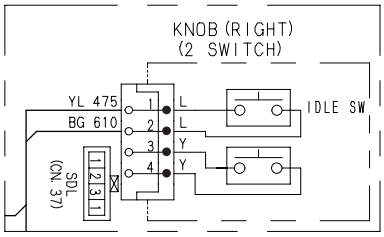	Model: with two switches Sumitomo Part No.: KHJ14460
Knob right (with one-touch switch) (short type)	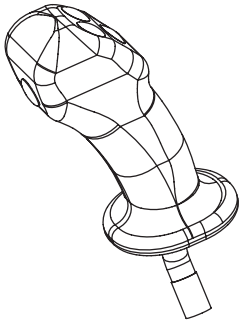	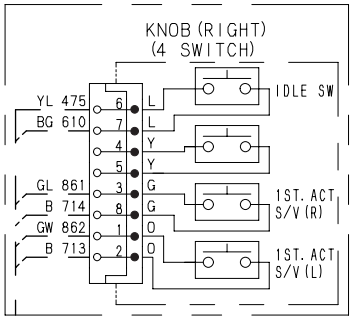	Model: with four switches Sumitomo Part No.: KHJ16140
Knob left (with horn switch and radio mute)	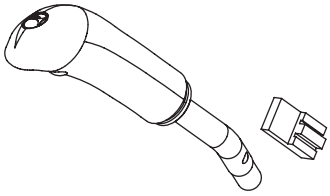	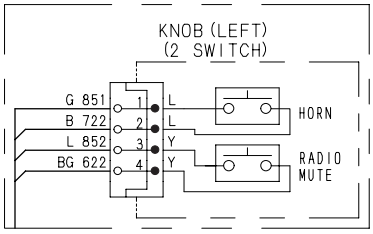	Model: with two switches Sumitomo Part No.: KHJ14450
Knob left (with horn switch and radio mute) (short type)	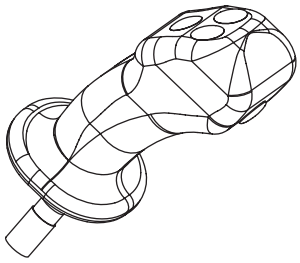	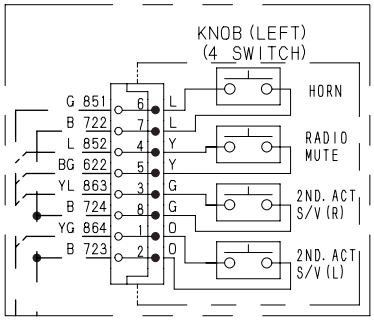	Model: with four switches Sumitomo Part No.: KHJ16150

E

Electrical Equipment Layout Diagram

https://truckmanualshop.com/

Name	Shape	Circuit	Remarks
Travel alarm	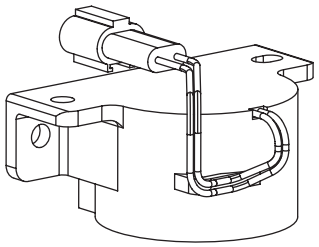	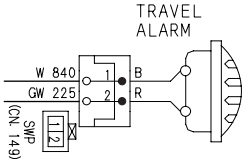	Sumitomo Part No.: KHR3852 Basic frequency: 2560 Hz
Horn (low)	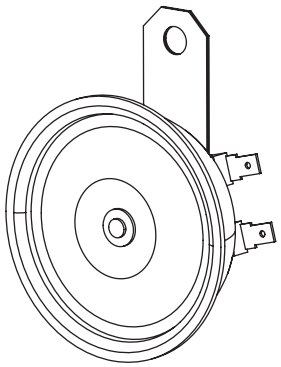	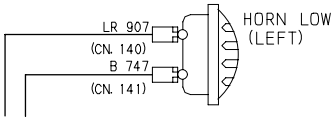	Sumitomo Part No.: KHR2427 Basic frequency: 370 Hz
Horn (high)	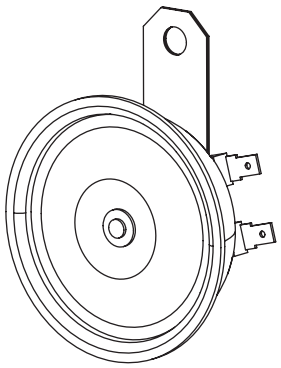	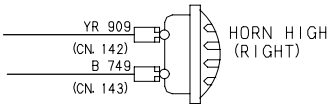	Sumitomo Part No.: KHR2428 Basic frequency: 415 Hz
Diode	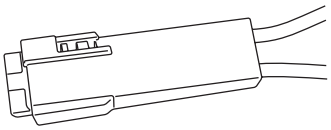	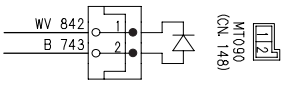	Sumitomo Wiring Systems Part No.: 6098-0017 6098-0061 Sumitomo Part No.: KHP1796
Lever lock limit switch	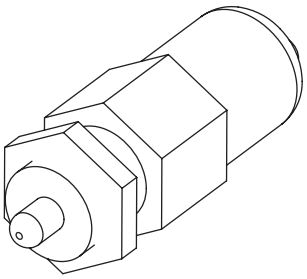	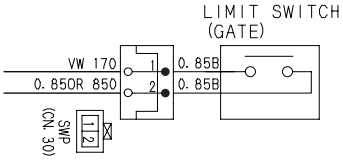	Sumitomo Part No.: KHR14930

https://truckmanualshub.com

Name	Shape	Circuit	Remarks
Radio	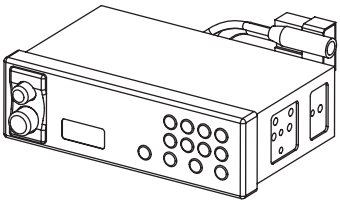	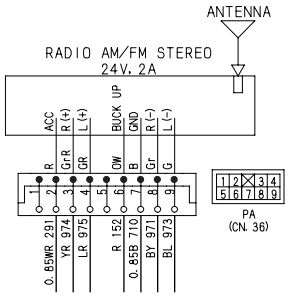	Model: AM / FM ST (12 / 24 V) Sumitomo Part No.: KHR15560 (EXP) KHR15570 (LBX, CASE)
Lamp (room lamp)	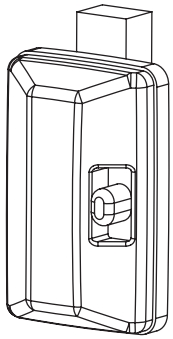	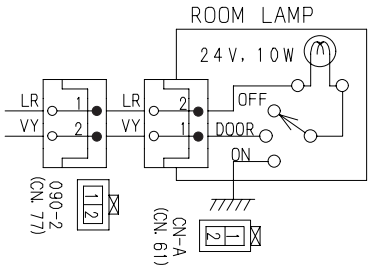	Model: 24 V, 10 W Sumitomo Part No.: KHN2714
Accessory socket	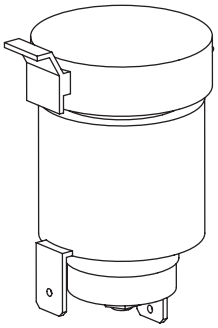	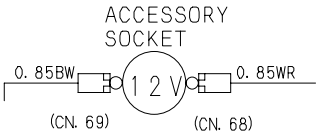	Model: 12 V DC Sumitomo Part No.: KHR2501
Cigar lighter 24 V	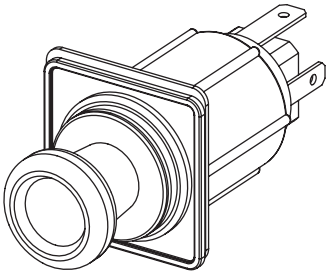	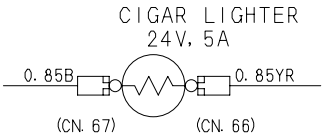	Model: 24 V DC Sumitomo Part No.: KHR11210
Air conditioner unit	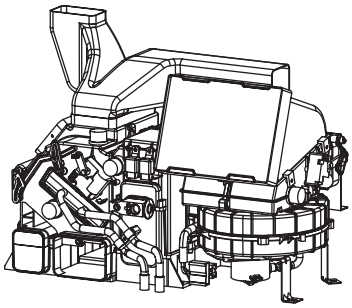	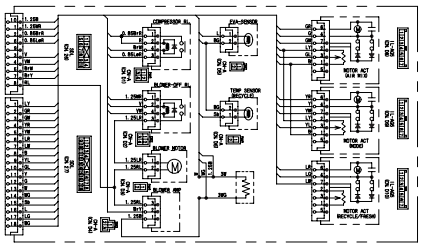	Sumitomo Part No.: KHR13320

E

Electrical Equipment Layout Diagram

https://truckmanualshop.com/

Name	Shape	Circuit	Remarks
Limit switch (front window) (door)	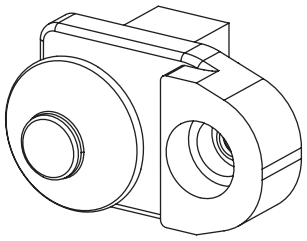	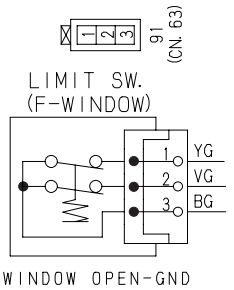	Sumitomo Part No.: KHR2950
Wiper controller	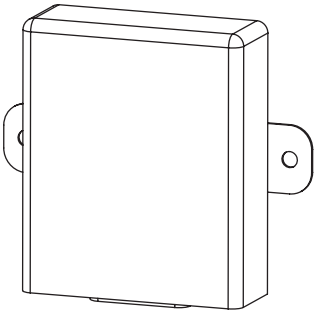	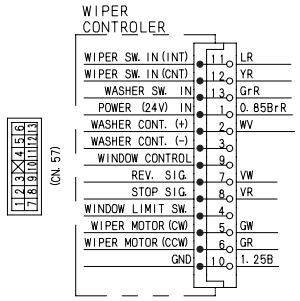	Sumitomo Part No.: KHN3392
Wiper motor	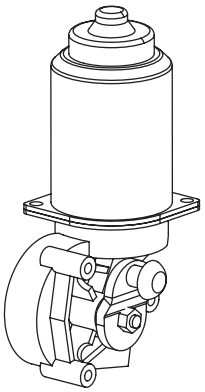	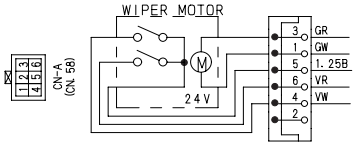	Sumitomo Part No.: KHN16020
Solar radiation sensor	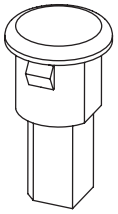	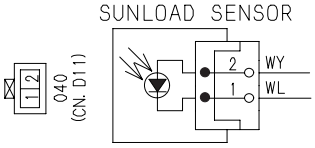	Sumitomo Part No.: KHR10540
Receiver drier (switch)	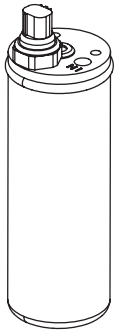	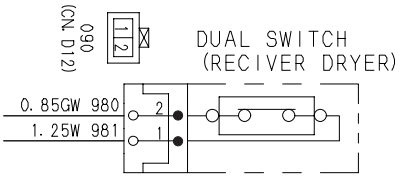	Sumitomo Part No.: KHR13590

https://truckmanualshub.com

Name	Shape	Circuit	Remarks
Air conditioner compressor (magnetic clutch)	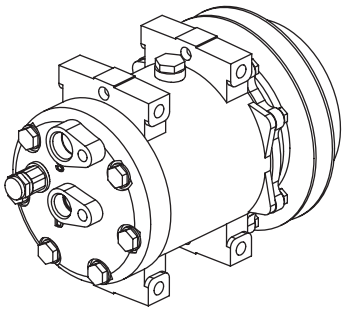	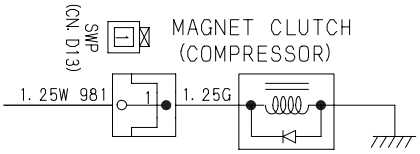	Sumitomo Part No.: KHR3197
Motor actuator (air mix) (mode) (recycle / refresh)	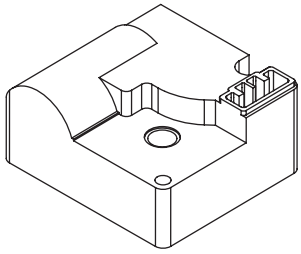	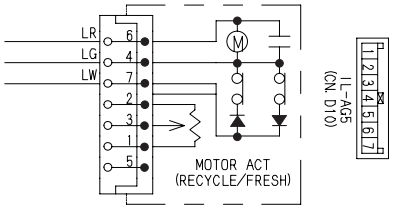	Sumitomo Part No.: KHR13610
EVA sensor	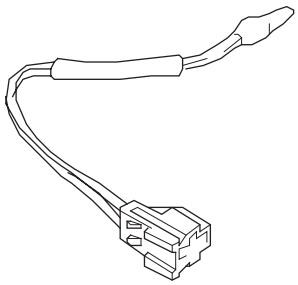	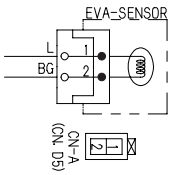	Sumitomo Part No.: KHR13670
Interior temperature sensor	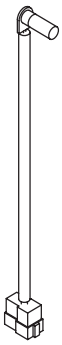	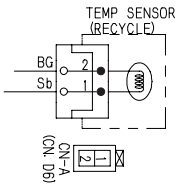	Sumitomo Part No.: KHR13790
Relay (compressor) (blower OFF)	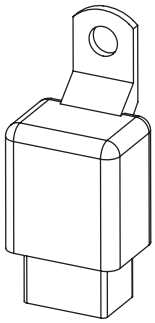	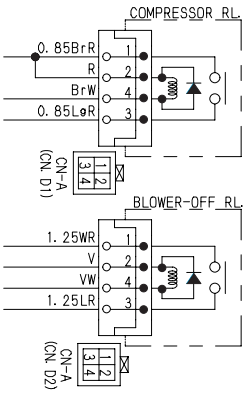	Sumitomo Part No.: KHR2836

E

Electrical Equipment Layout Diagram

https://truckmanualshop.com/

Name	Shape	Circuit	Remarks
Blower motor	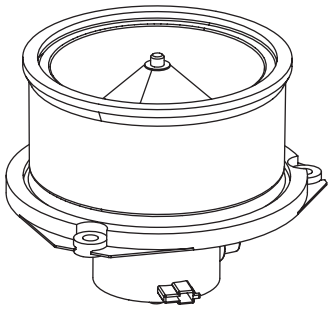	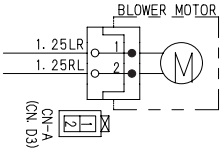	Sumitomo Part No.: KHR2845
Blower amp	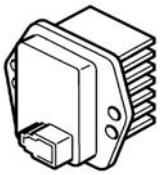	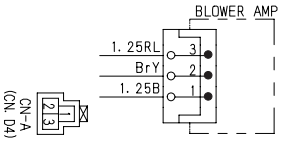	Sumitomo Part No.: KHR13730
Air conditioner switch panel	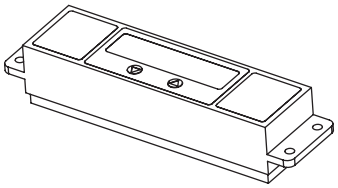	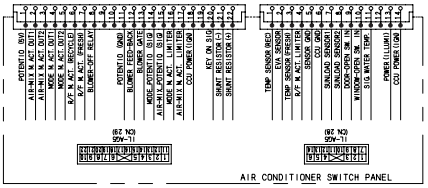	Sumitomo Part No.: KHR12510
Option select switch (breaker / crusher)	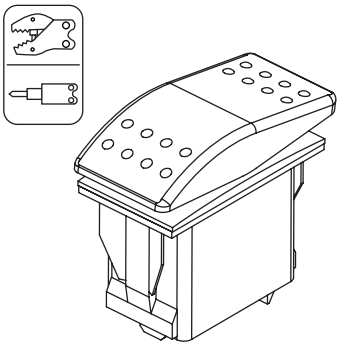	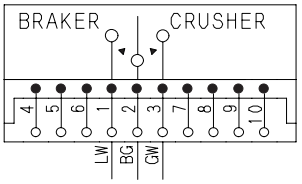	Sumitomo Part No.: KHR14450
Option select switch (breaker)	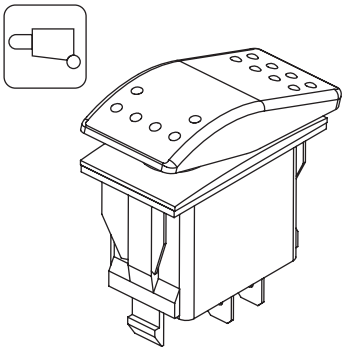	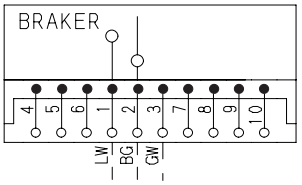	Sumitomo Part No.: KHR14060

https://truckmanualshub.com

Name	Shape	Circuit	Remarks
Option select switch (crusher)	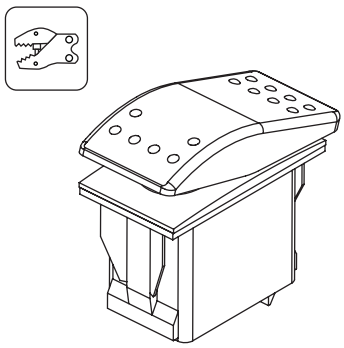	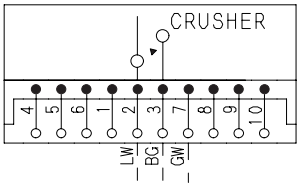	Sumitomo Part No.: KHR15020
2nd speed merge select switch	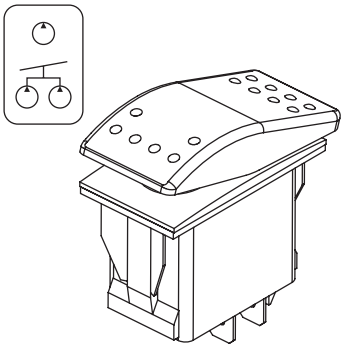	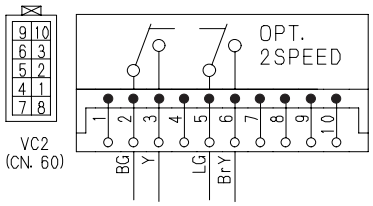	Sumitomo Part No.: KHR14460
Emergency stop switch	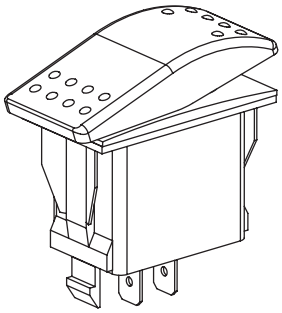	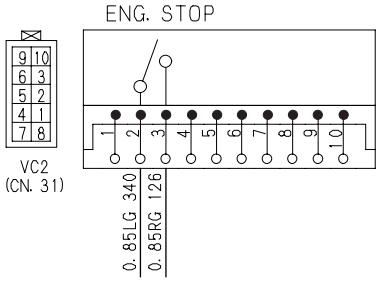	Sumitomo Part No.: KHR14050
Over load warning (Not used by LBX)	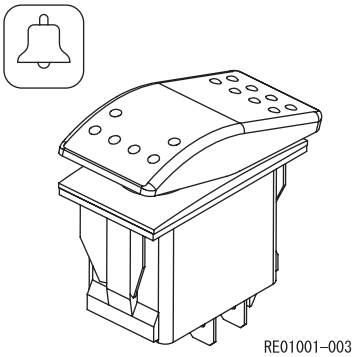	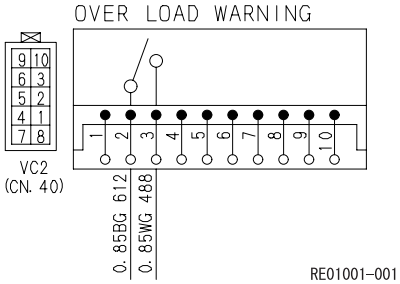	Sumitomo Part No.: KHR15490 (CASE)
Travel alarm switch	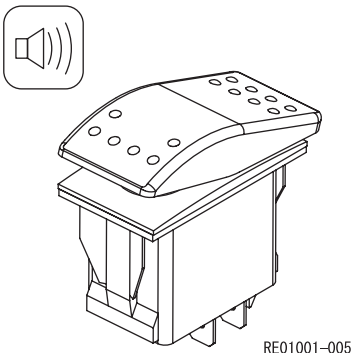	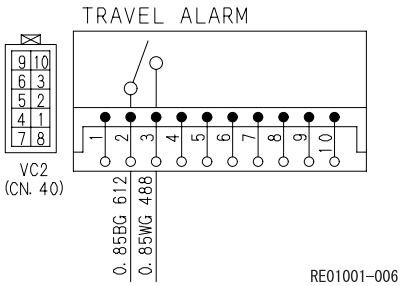	Sumitomo Part No.: KHR15850 (LBX, CASE-NA)

https://truckmanualshub.com

Name	Shape	Circuit	Remarks
Beacon switch	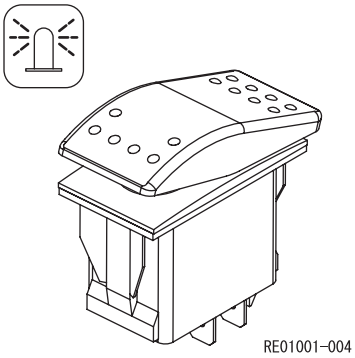	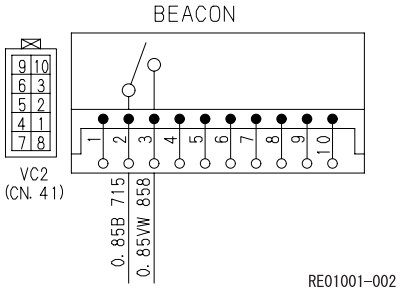	Sumitomo Part No.: KHR15480 (CASE)

E

https://truckmanualshub.com/

Connection Connector Pin Layout

1. Computer

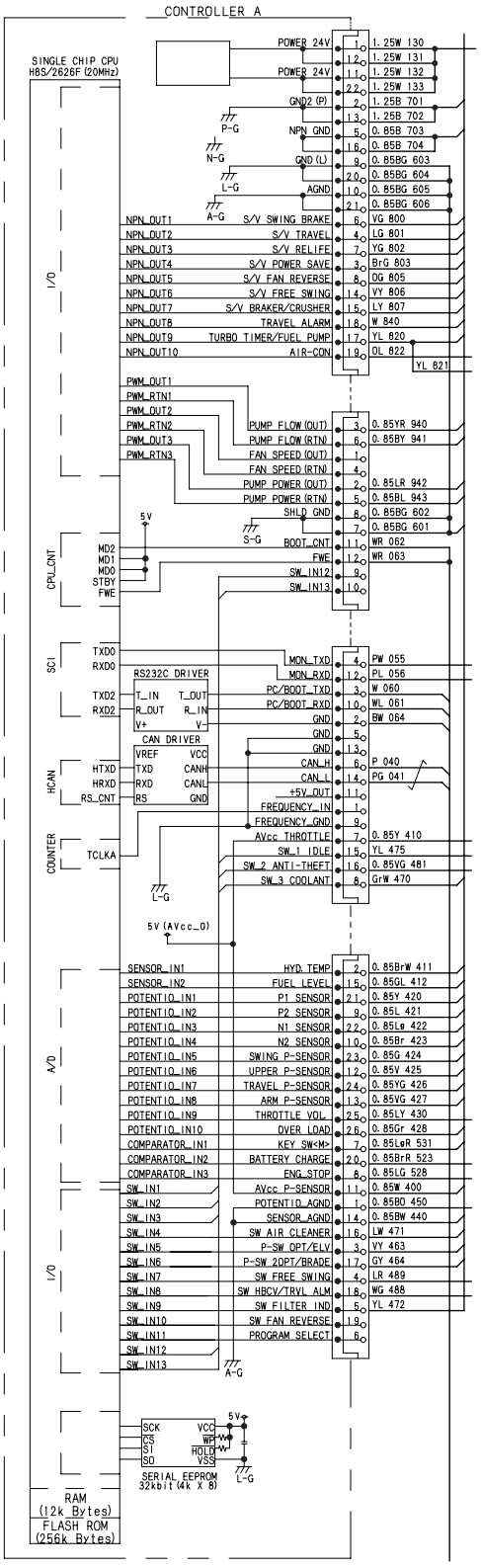

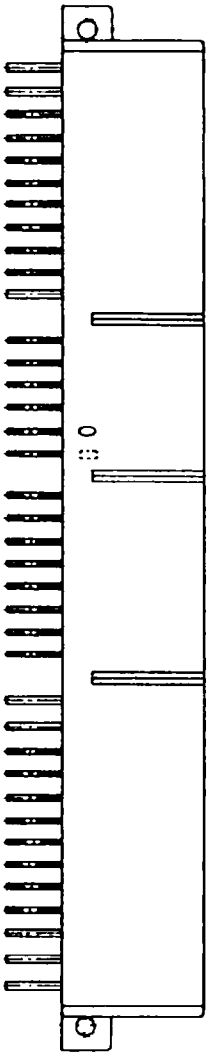

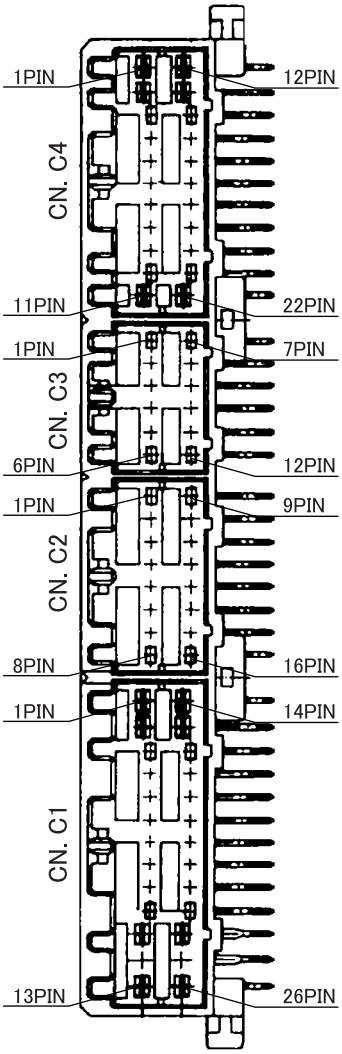

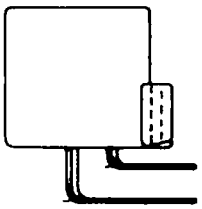

E

https://truckmanualsnet.com/

2. Monitor

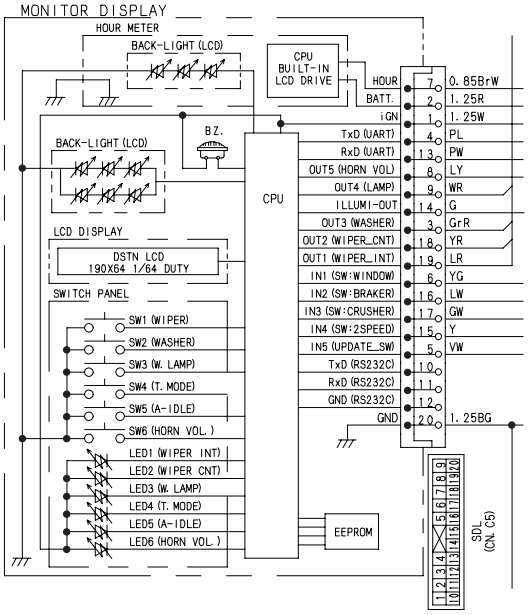

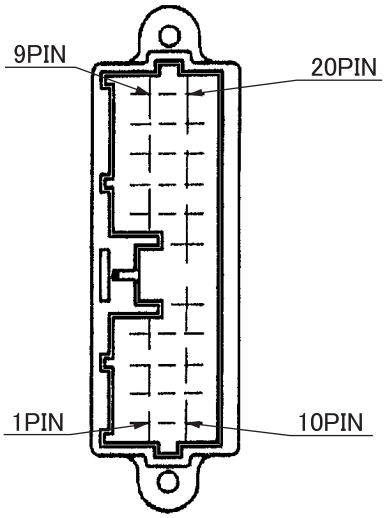

https://truckmanualshub.com/

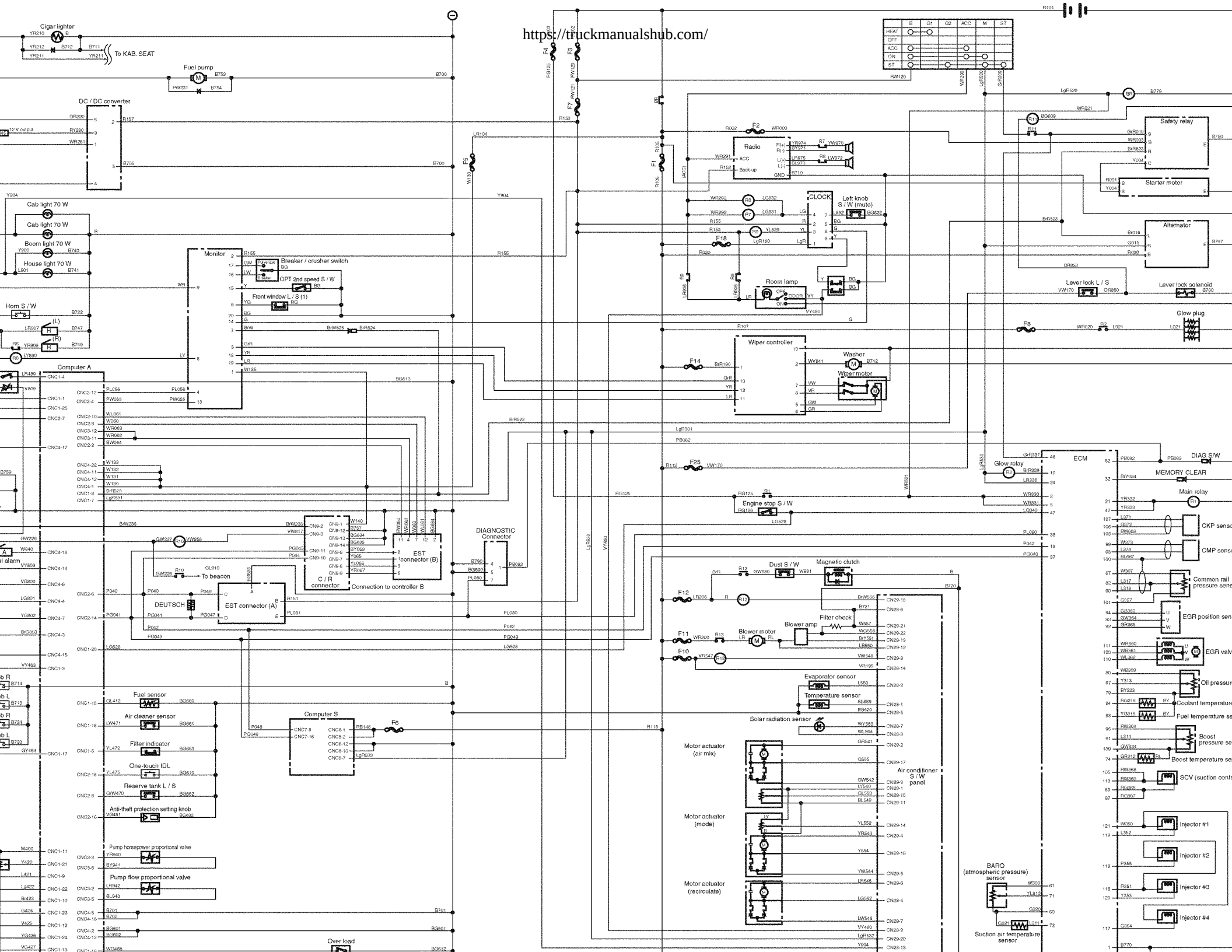

Block Diagram

1. Computer

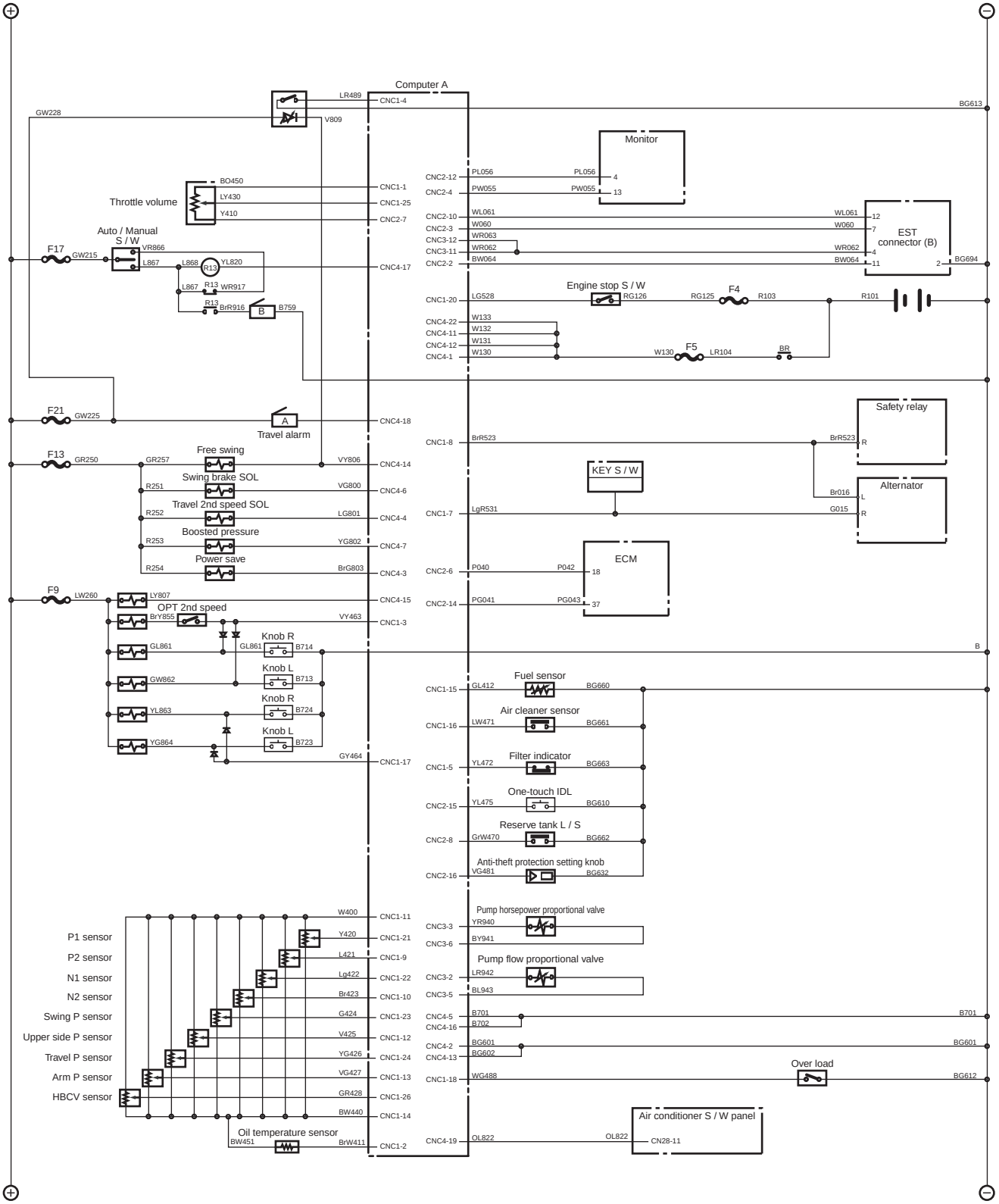

https://truckmanualshub.com/

2. Computer S **(Not used by LBX)**

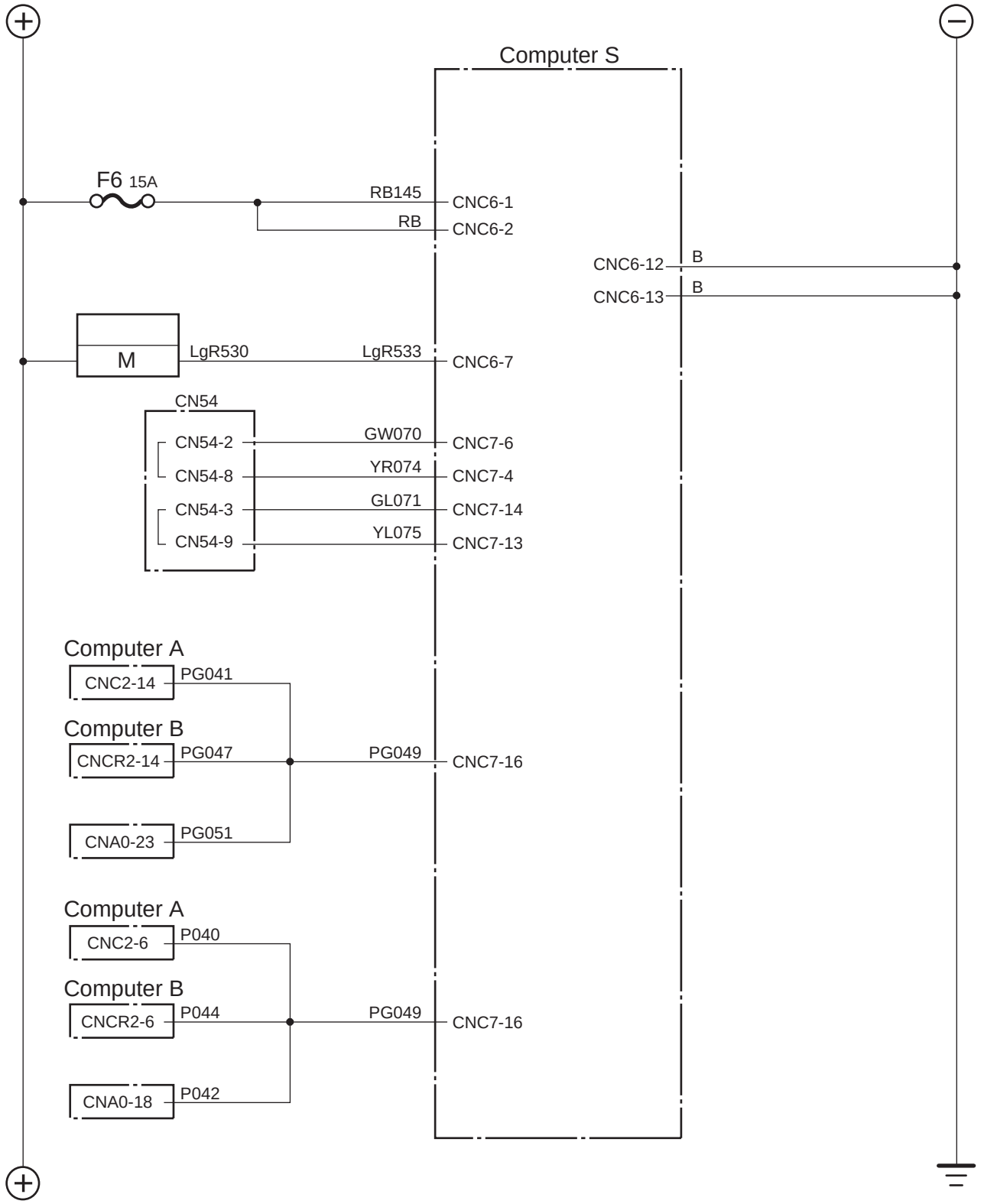

https://truckmanualshub.com/

3. ECM

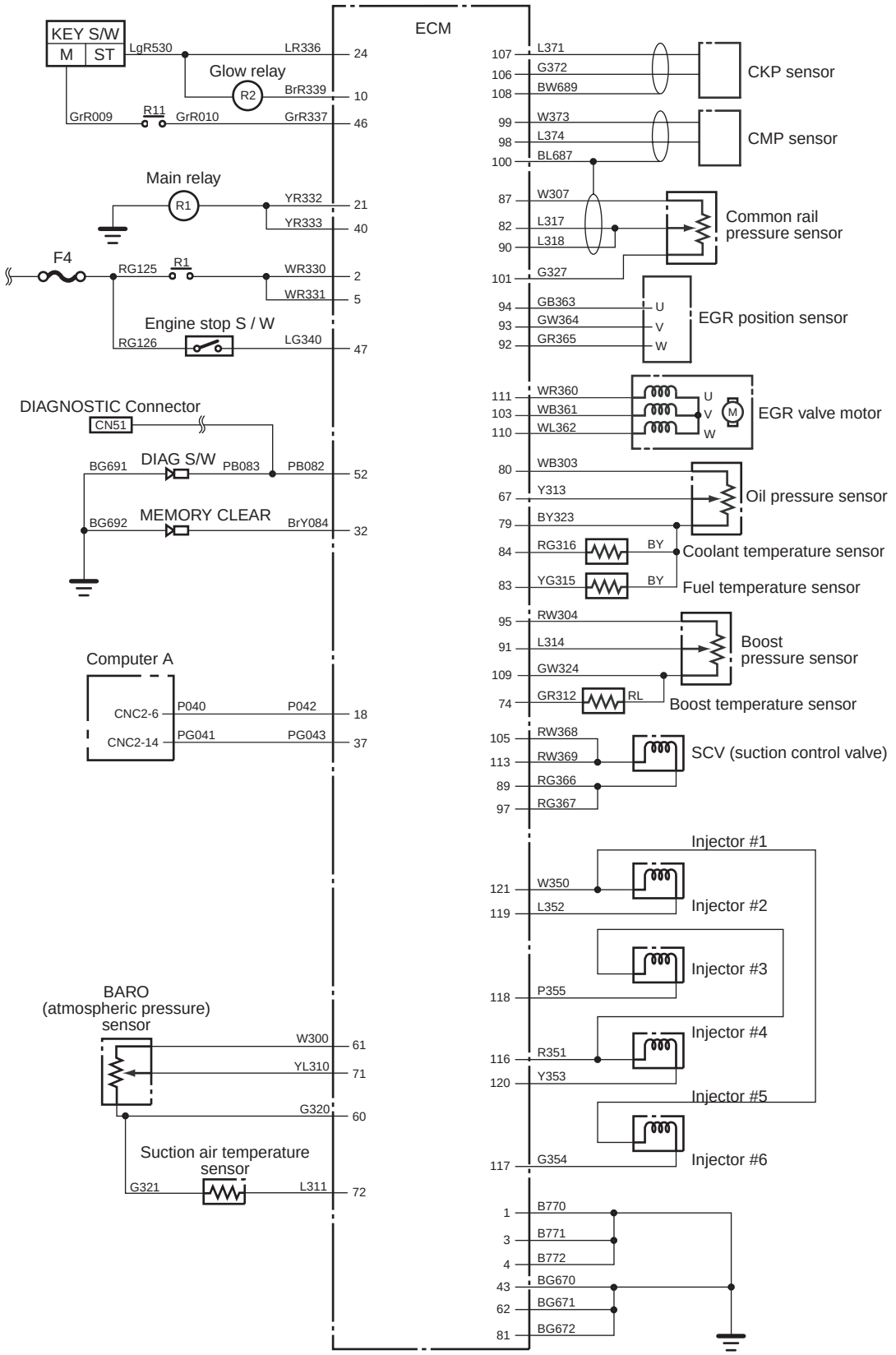

https://truckmanualshub.com/

4. Monitor Display

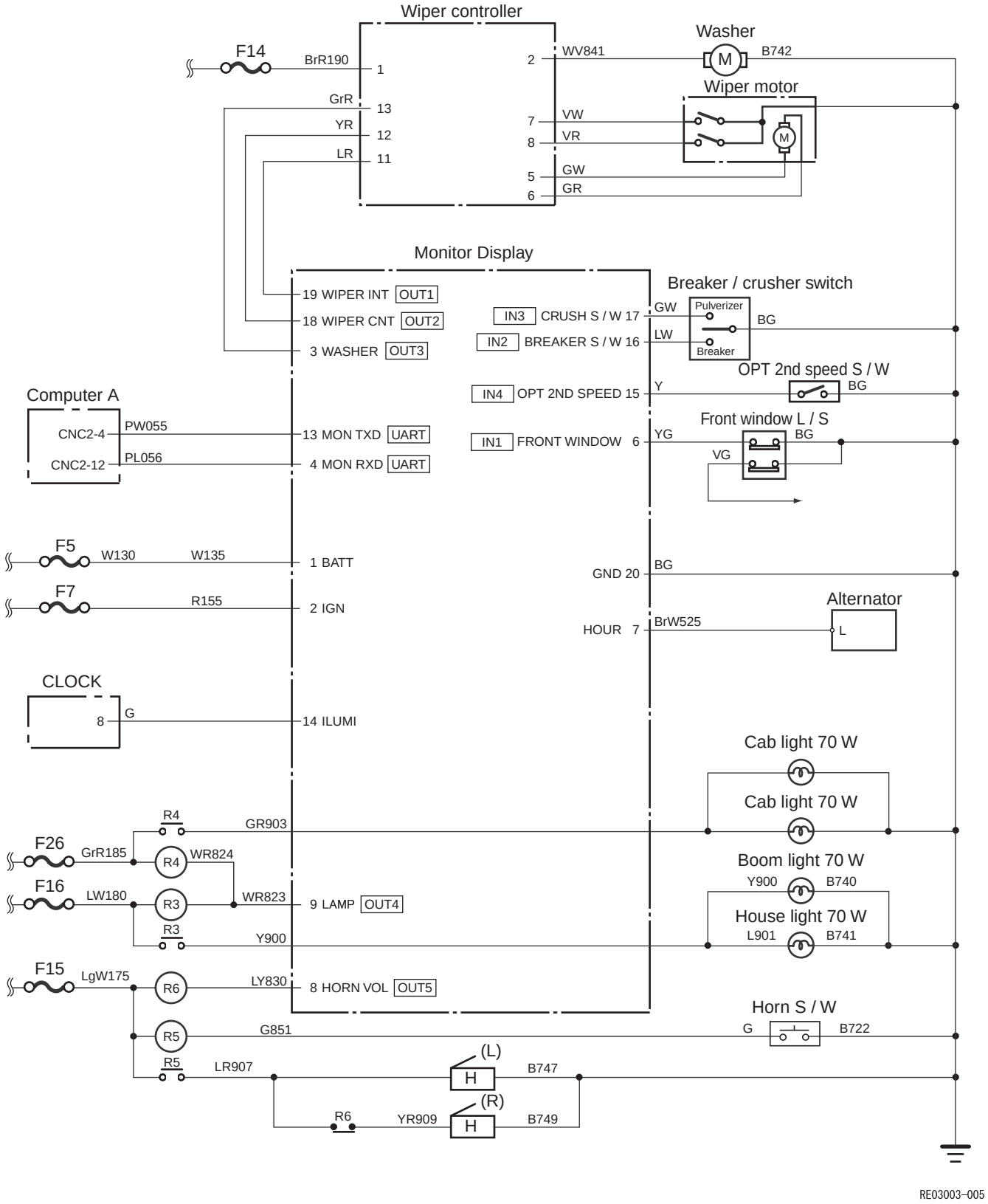

https://truckmanualshub.com/

5. Air Conditioner

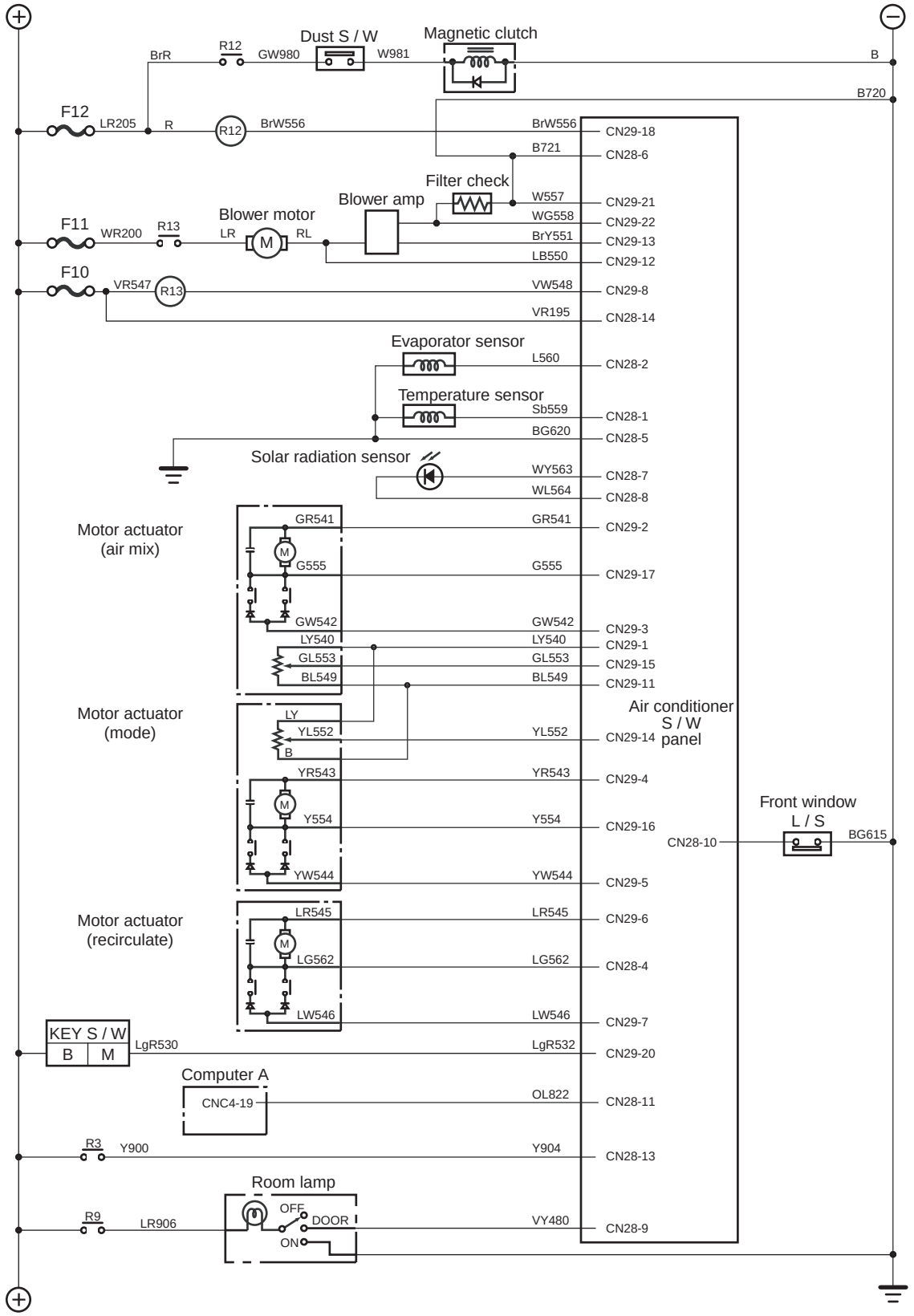

https://truckmanualshub.com/

6. Lever Lock

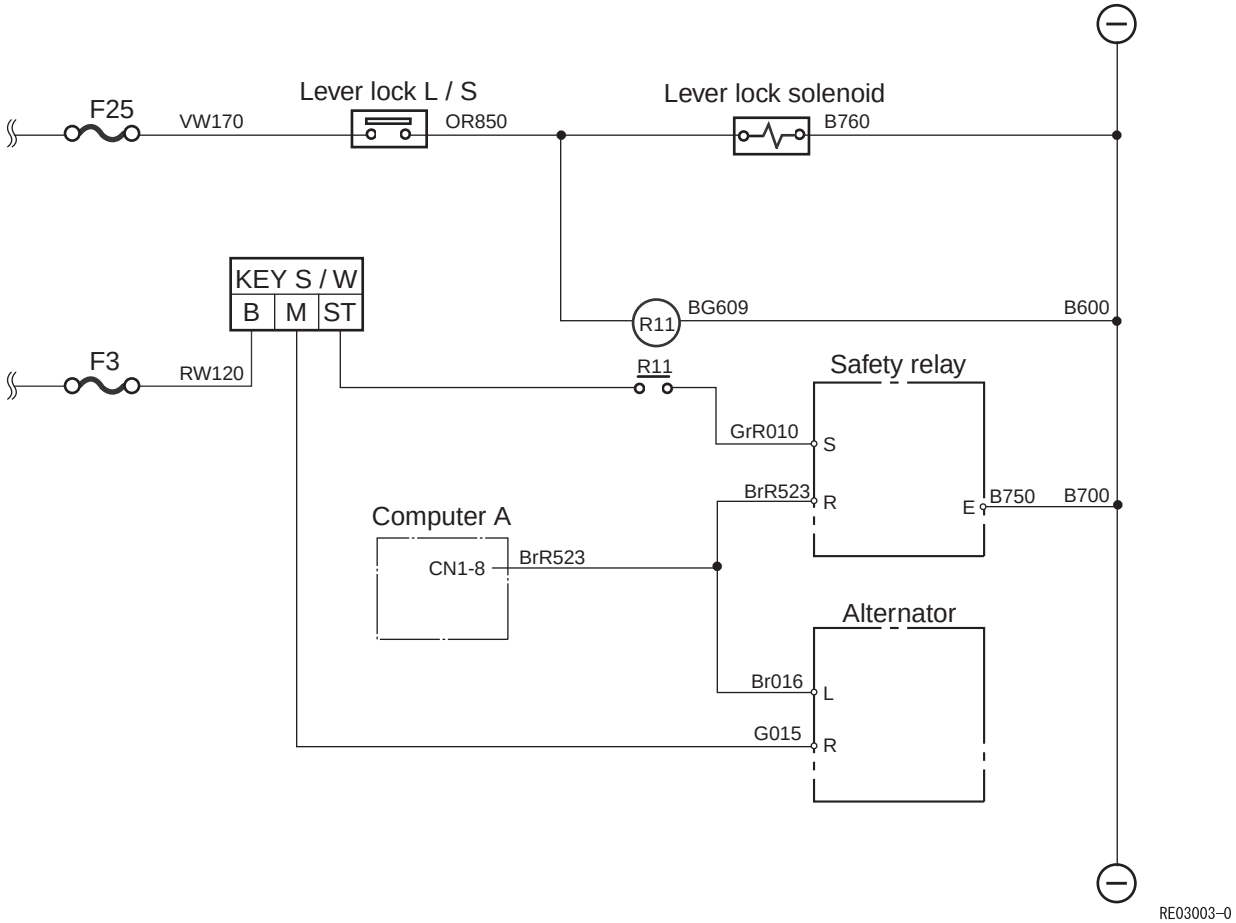

7. Horn

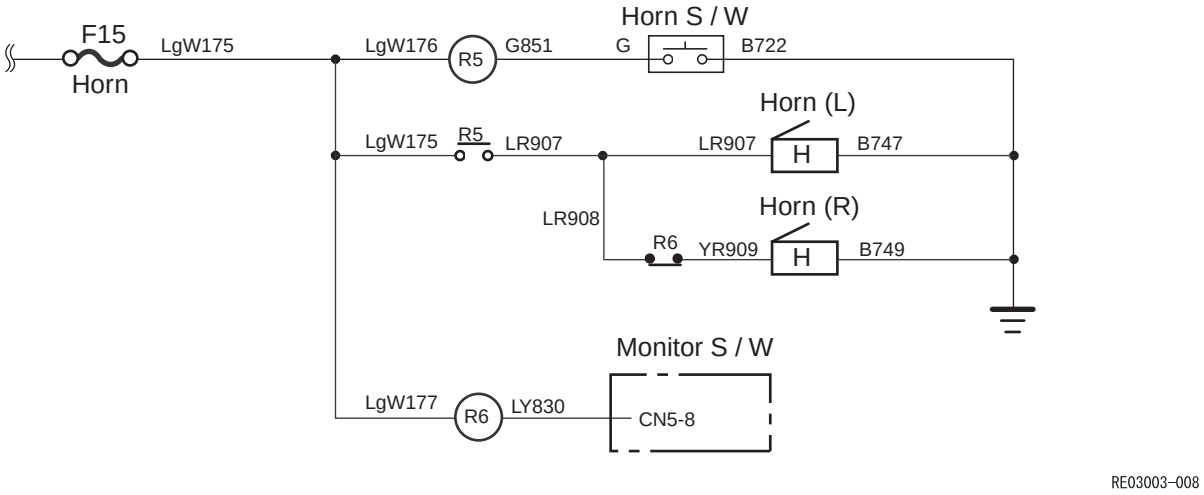

https://truckmanualshub.com/

8. Working Light

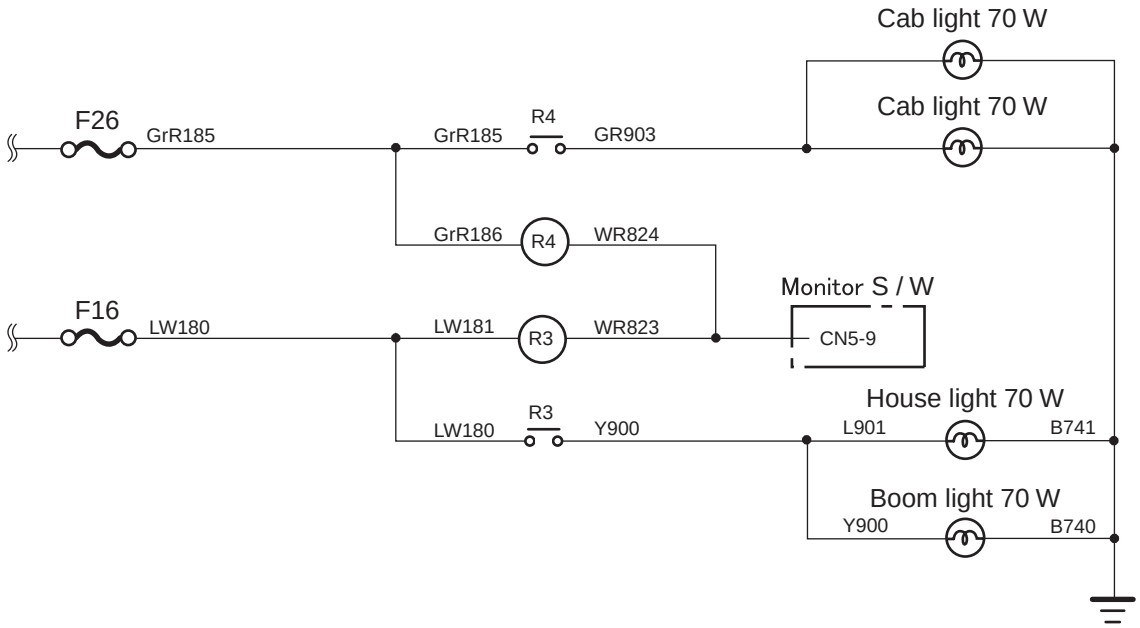

RE03003-009

9. Option

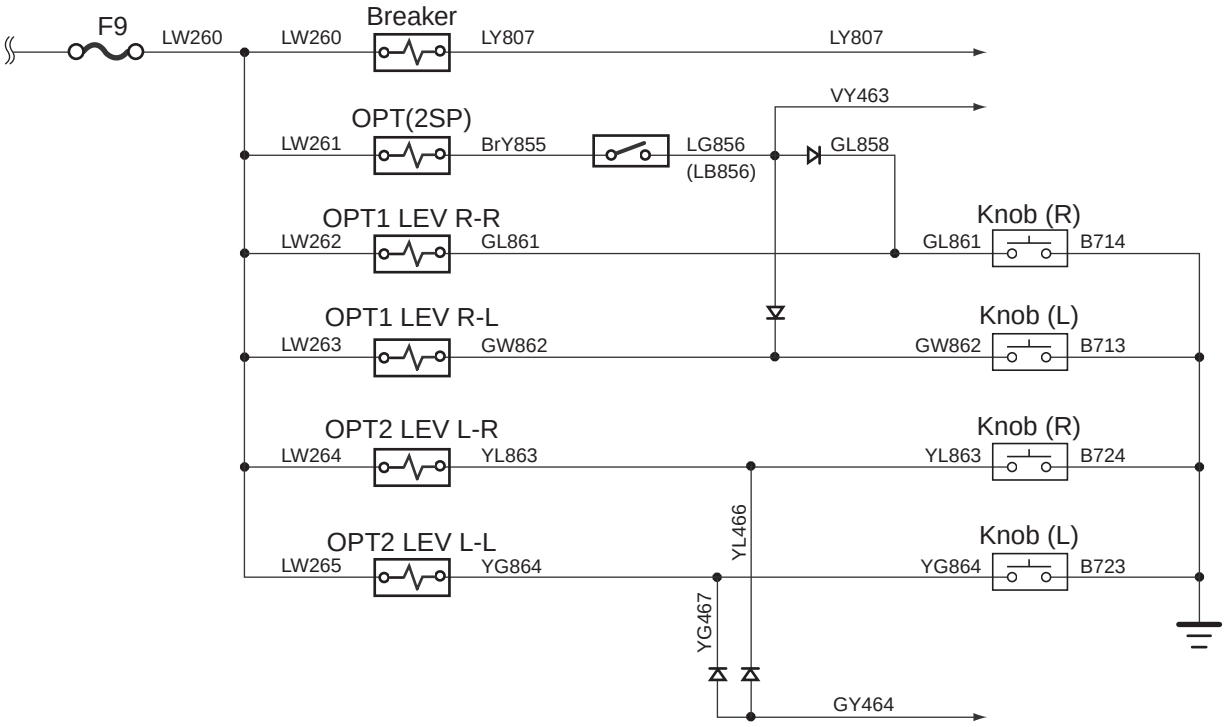

RE03003-010

https://truckmanualshub.com/

10.Others

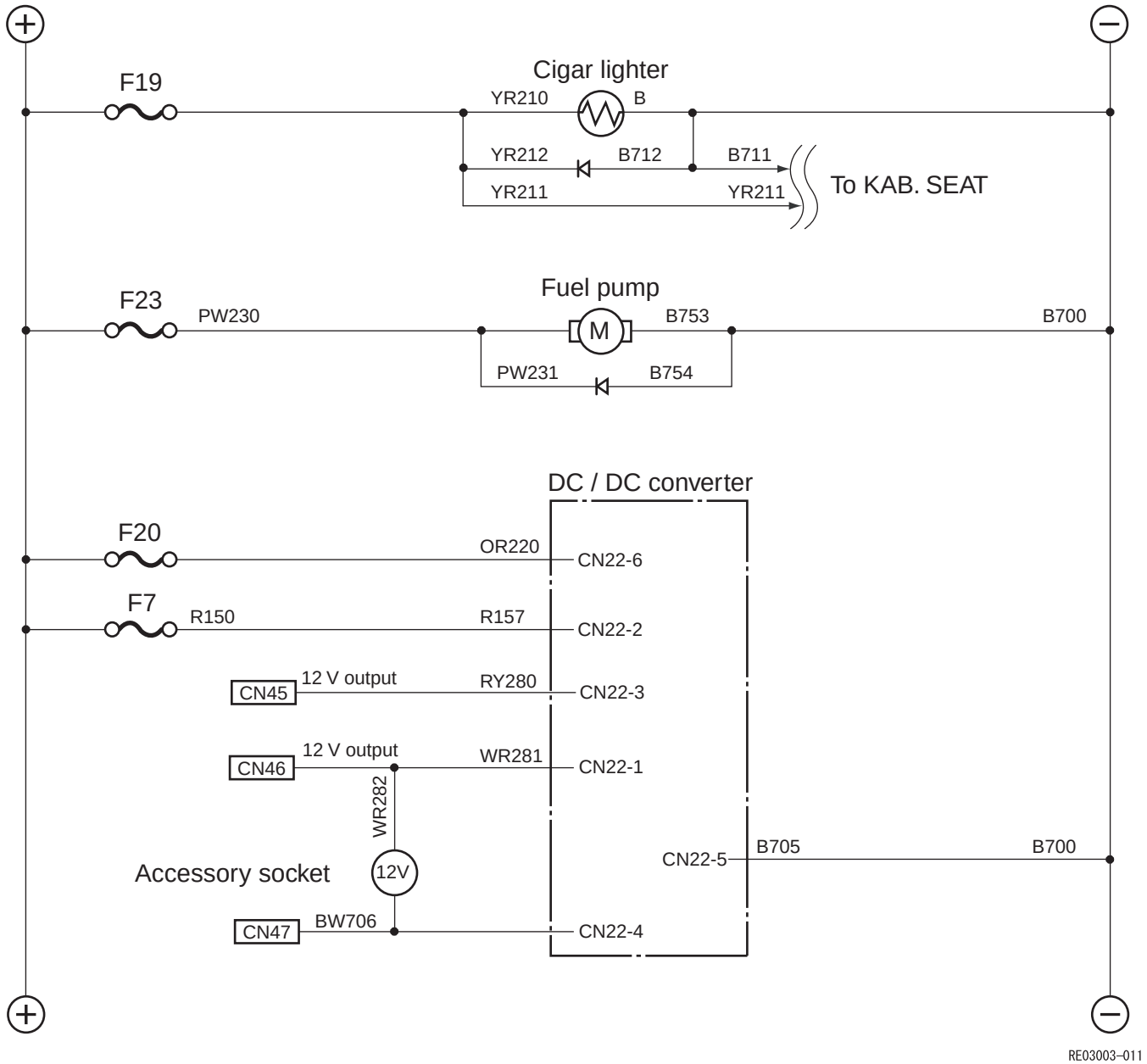

https://truckmanualshub.com/

11.Electrical Symbol List

Symbol	Name	Symbol	Name
	Fuse		Variable solenoid valve
	Diode		Resistor
	LED		Variable resistor
	Toggle switch "a" contact		Variable resistor
	Push switch "a" contact	A	Alarm
	Limit switch "a" contact	B	Buzzer
	Limit switch "b" contact	H	Horn
R	Relay coil	M	Motor
R	Relay contact "a" contact		Solar radiation sensor
R	Relay contact "b" contact		Speaker
	Solenoid valve		Lamp

https://truckmanualshub.com/

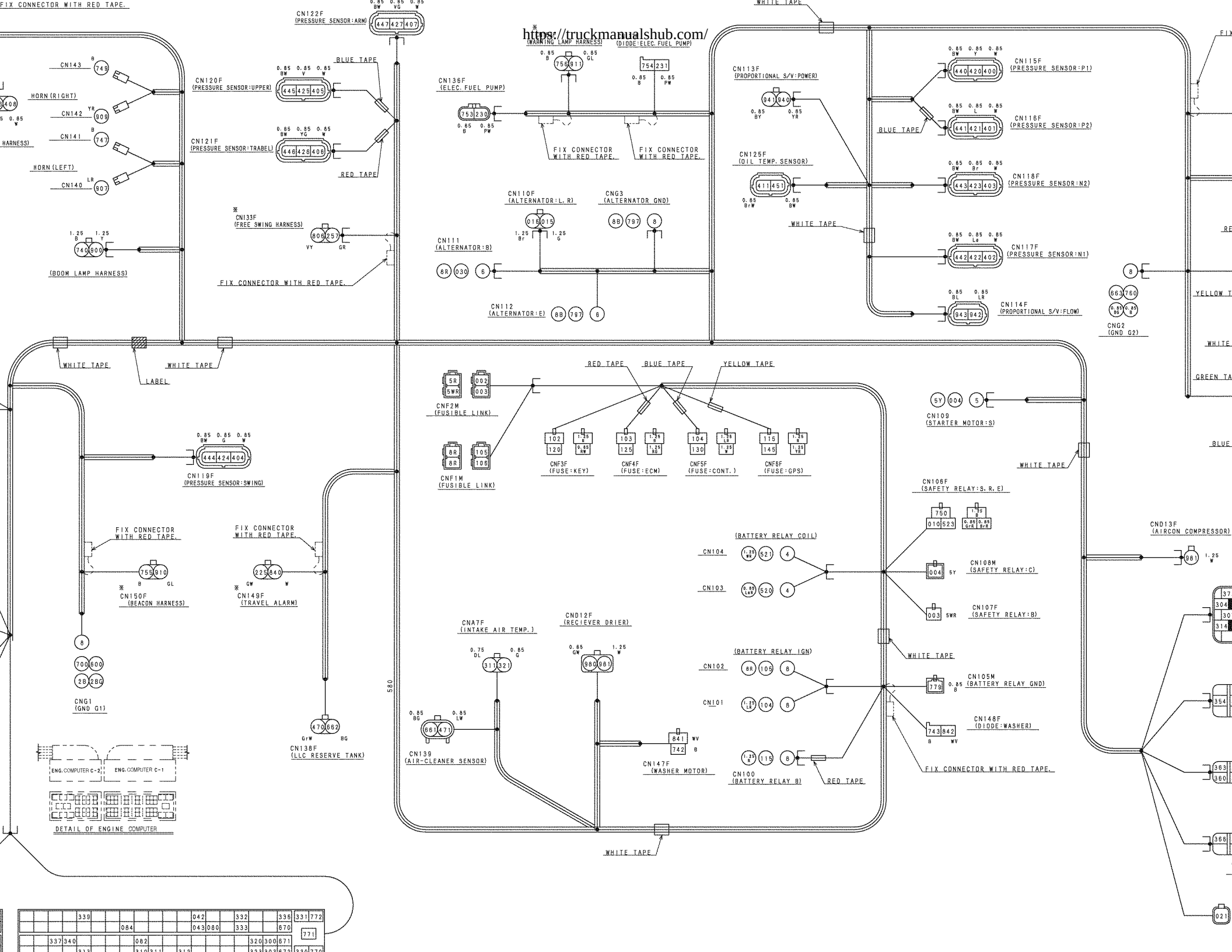

https://truckmanualshub.com/

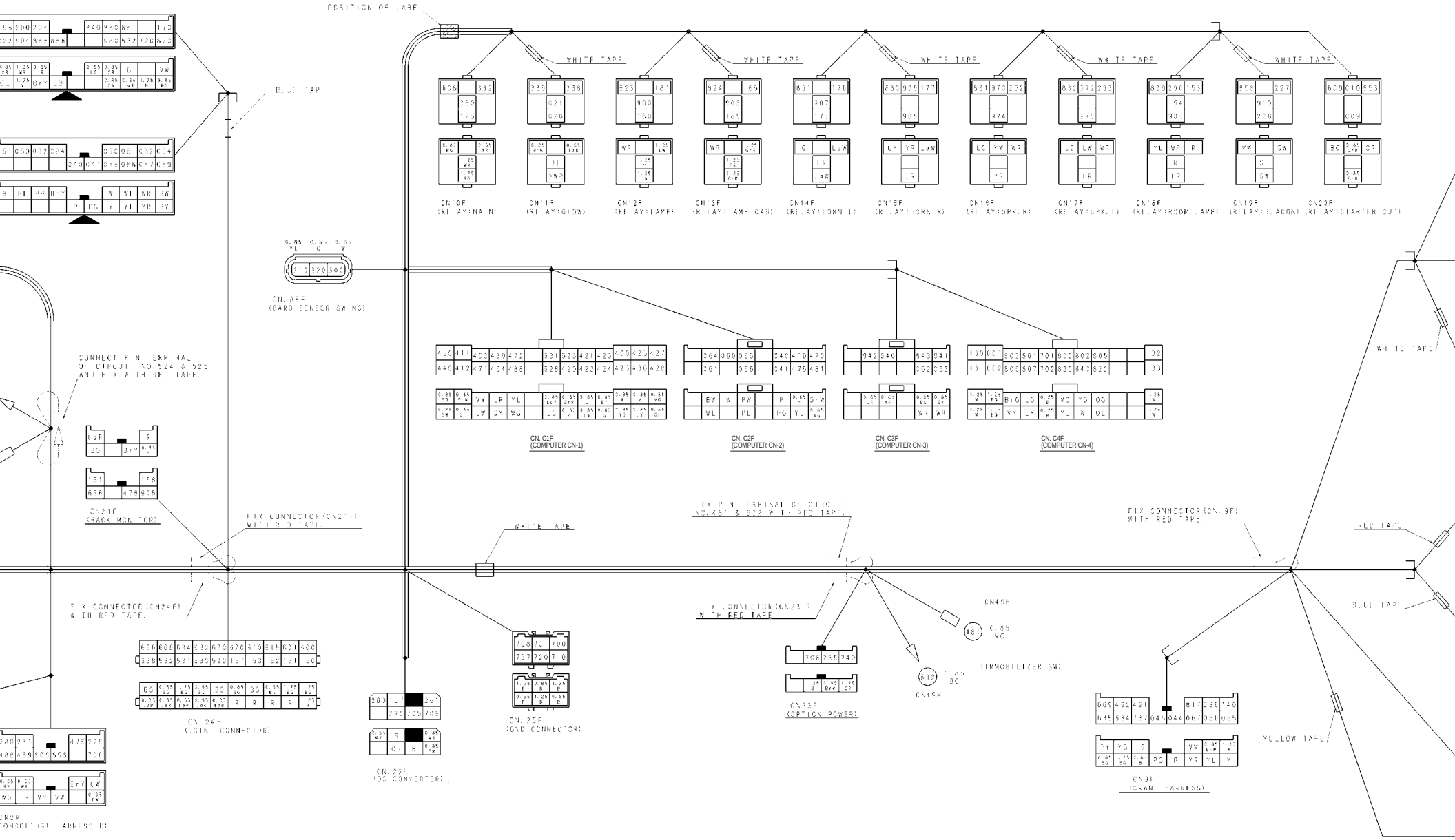

https://truckmanualshub.com/

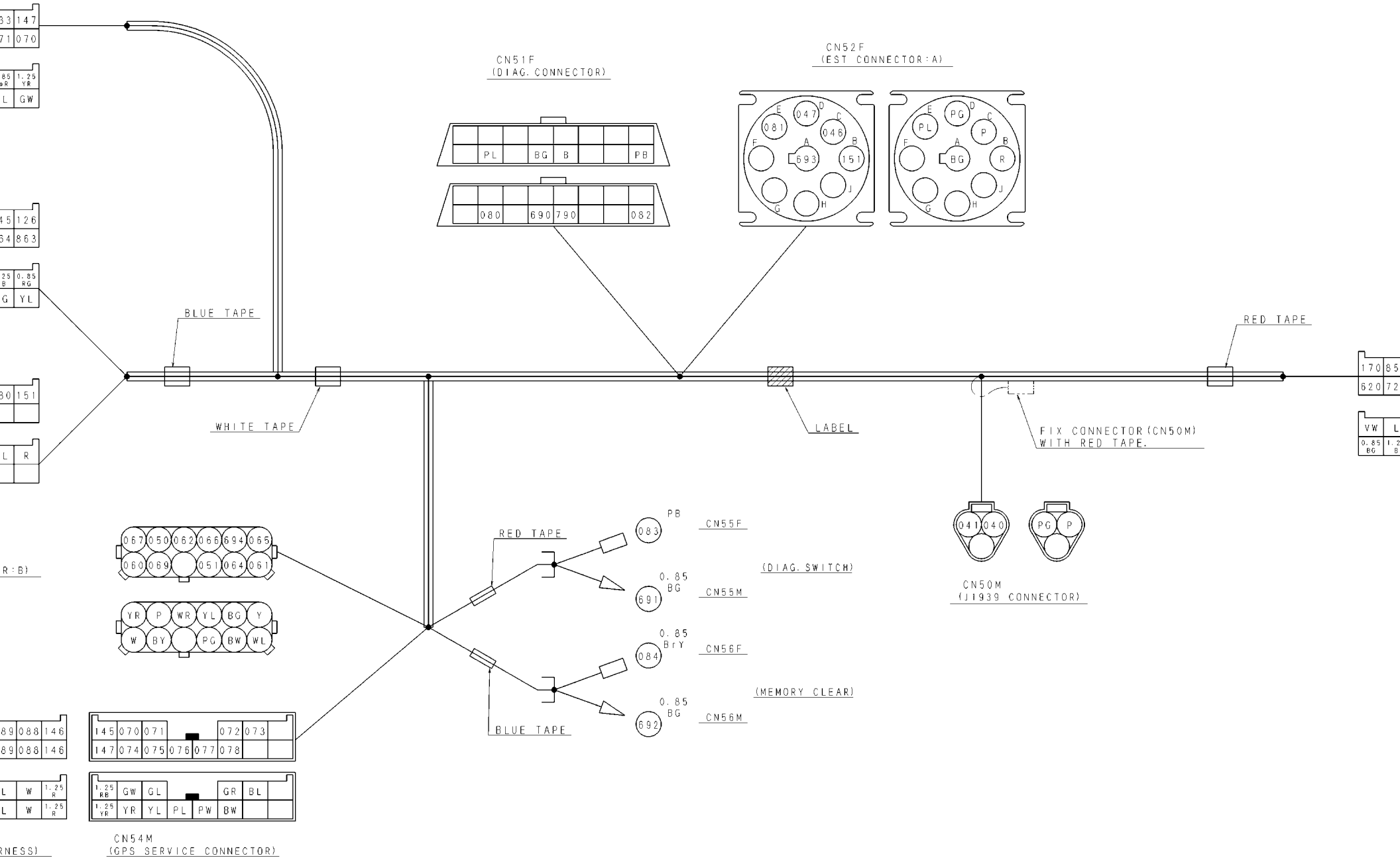

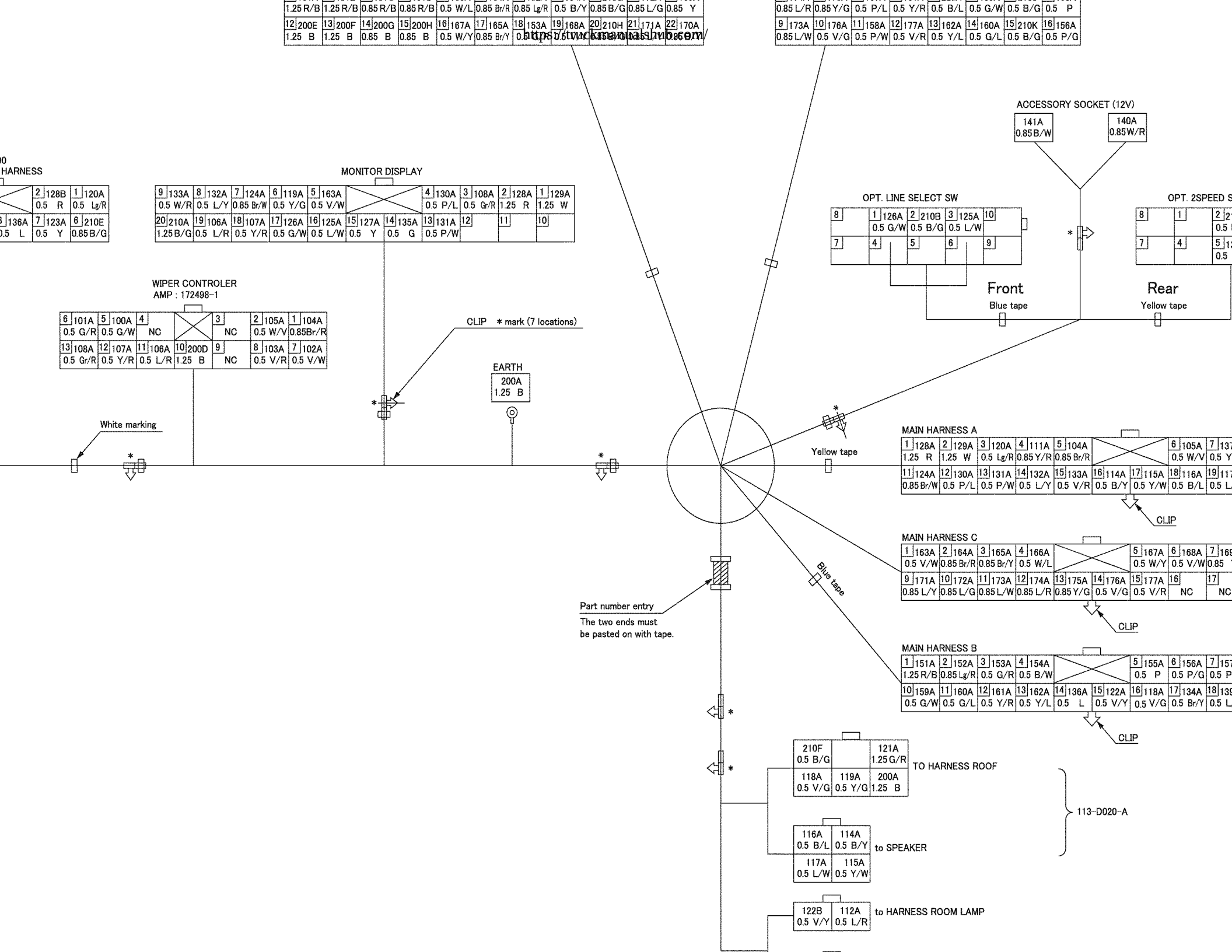
ACCESSORY SOCKET (12V)
141A 0.85B/W
140A 0.85W/R
OPT. LINE SELECT SW
OPT. 2SPEED S
Front
Blue tape
Rear
Yellow tape
MONITOR DISPLAY
WIPER CONTROLER
AMP : 172498-1
CLIP * mark (7 locations)
EARTH
200A 1.25 B
White marking
Yellow tape
MAIN HARNESS A
CLIP
MAIN HARNESS C
CLIP
Blue tape
Part number entry
The two ends must be pasted on with tape.
MAIN HARNESS B
CLIP
TO HARNESS ROOF
113-D020-A
to SPEAKER
to HARNESS ROOM LAMP

https://truckmanualshub.com/

Console

1. Console Right Harness

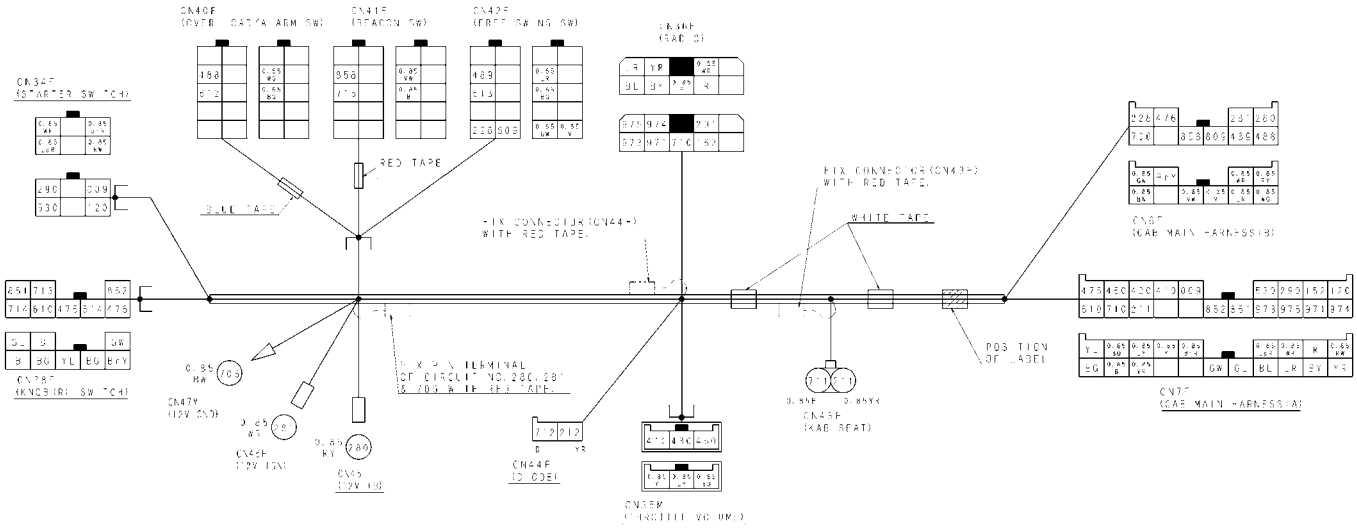

KHR16111-C00

2. Console Left Harness

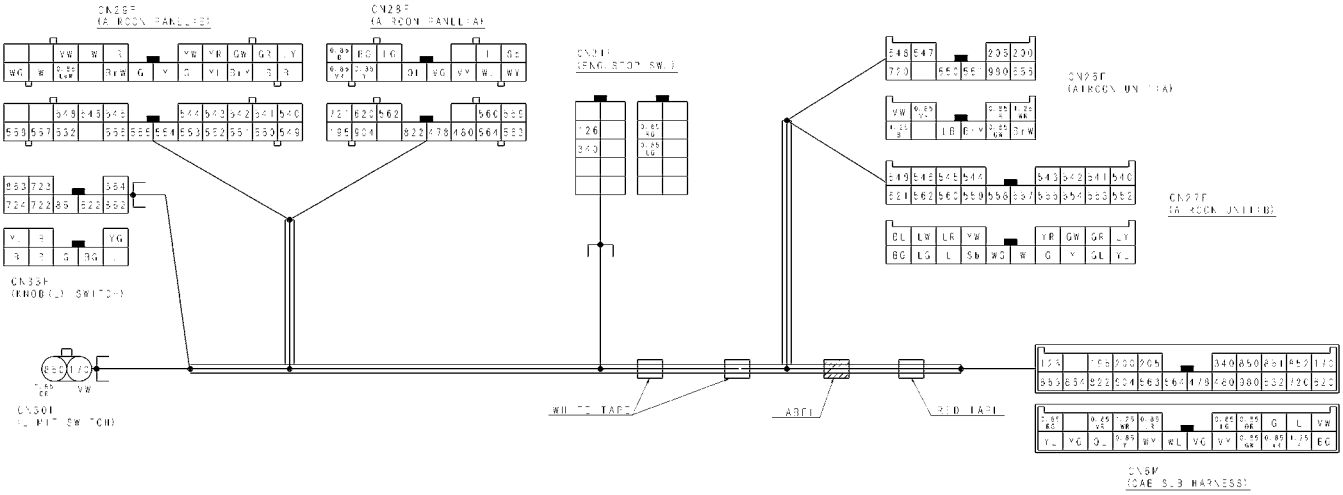

KHR16121-C00

https://truckmanualshub.com/

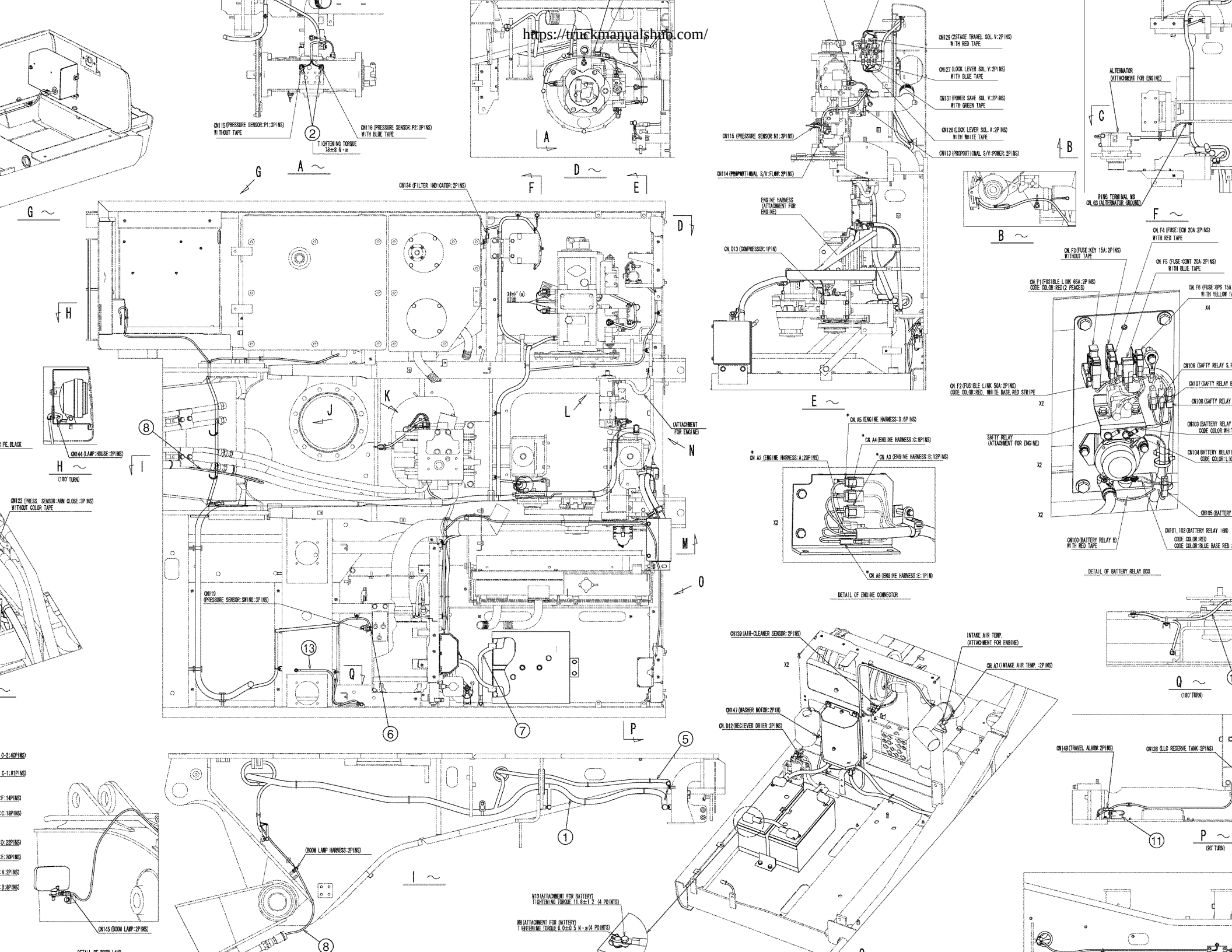

https://truckmanualshub.com/

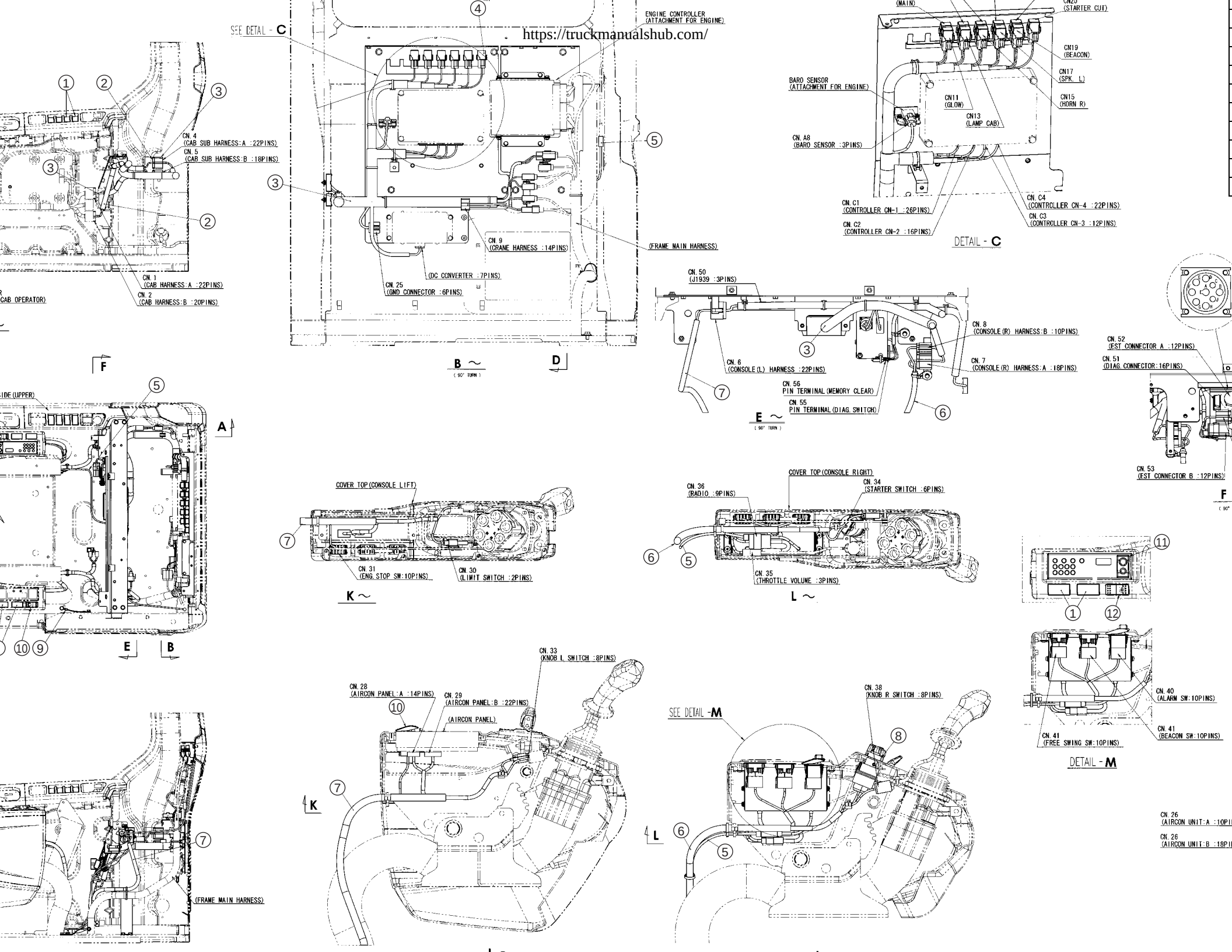

https://truckmanualshub.com/

Explanation of Electrical Functions

No.	Item		Control	Contents
1	Engine Speed Control	1	Throttle Control	The engine speed, work mode, and boost pressure state are switched by the throttle volume.
		2	Idling Control	With auto / one-touch switchover function
		3	Idling Start	Runs the engine at low idle speed when it starts up.
		4	Idle Up	In order to prevent the engine from stalling, during operation, raises the low idle speed to the auto idle speed.
		5	Auto Warm Up	If the coolant temperature is low, warm-up operation is executed automatically when the engine starts
2	Engine Start / Stop Control	1	Engine Start / Stop Judgment	Judgment based on engine speed from ECM
		2	Power-Cut Delay	When key ON →OFF, 4-second delay; when engine running →OFF, 7-second delay
		3	Engine Emergency Stop	When the emergency stop switch is pressed, the ECM recognizes this and stops the engine.
		4	Neutral Start Control	Engine start load (cell not turning) when lever locked
3	Pump Control	1	Work Mode Control	Linked with the throttle, the SP / H / A mode is switched over and the pump horsepower is controlled.
		2	Pump Added Horsepower Control	The pump horsepower current is raised when there is a high load or sudden load.
		3	Pump Horsepower Cut Control	The pump horsepower current is reduced by the transient load control, engine stall prevention control, and PID control conditions.
		4	Power Save Control	The negative control relief pressure for non-operation is varied and the negative control pressure is lowered to reduce the pump load.
4	Swing	1	Swing Brake	When the upper side and swing are not operated, the swing brake is operated automatically and during travelling too
		2	Swing Free Swing (option)	Swing option for North America
		3	Swing Lock	There is a swing lock function (for servicing) with monitor operations.
		4	Swing Relief Cut	When a swing starts, the flow is reduced with the front side proportional valve and the excess oil is eliminated.
		5	Swing Speed Limit	The front side flow is controlled to suppress the speed rise due to increased pump flow.
5	Travel	1	Travel Speed Switchover	Travel speed low-speed / high-speed switchover
		2	Travel Alarm	Buzzer sounded (for 10 seconds) during travel
6	Valve Control	1	Lever Lock	Operation is not possible unless the gate lever is raised. Engine starts only on neutral position.
		2	Solenoid Sticking Prevention	When key ON, solenoid switched ON / OFF for 0.25 second.
		3	Pressure Boost Control	The computer automatically raises the pressure from 4975 PSI (34.3 MPa) ⇒5337 PSI (36.8 MPa) when necessary.
7	Monitor Control	1	Monitor Function	Output port control method change, liftcrane and option screen added to display screens, etc.
		2	Monitor Bar Graph	Bar graph display of coolant temperature, oil temperature, and fuel level on monitor

E

https://truckmanualshub.com/

No.	Item		Control	Contents
8	Accessories	1	Horn	Switching between one or two horns with horn volume select switch
		2	Working Light	Right housing and boom light illumination (option setting for two lights at top of cab)
		3	Wiper & Washer	Wiper with rise-up used (intermittent, continuous, washer) Same one used as for LX
		4	Room Lamp	The room lamp lights up when the door is opened and lights up for exactly 30 seconds from when the door is opened with the key OFF.
		5	Radio Mute	Mute switch setting on the knob
9	Others	1	Anti-Theft Protection	Anti-theft protection set with password input to monitor
		2	Battery Save Function	When the key is ON, no output to travel switchover, boost, power save, bucket lock, option switchover and free swing solenoid valve.
		3	Alternator Power Genera-tion Detection	Alternator L terminal voltage judged with 10 V comparator
		4	Overload Alarm	Only mounted on machines for Europe
10	Options	1	Option Line Control	Switchover crusher ⇔ breaker with just rocker switch in cab
		2	Option Line Control	There are five flow settings each for the breaker and pulverizer, for a total of 10 settings.
		3	DC-DC Converter	Trans form 24 V ⇒12 V
		4	Feed Pump Automatic Stop	Feed pump automatic stop Full tank detected by fuel level sensor and the pump stopped auto-matically
		5	Return Filter Clogging Detected	Alarm issued when return filter clogged (only for breaker specifications)
		6	Beacon Control (rotating light)	Standard for Europe, Japan crane specifications

https://truckmanualshub.com/

Engine Speed Control

1. Throttle Control

(1) Throttle display

[1] Configuration

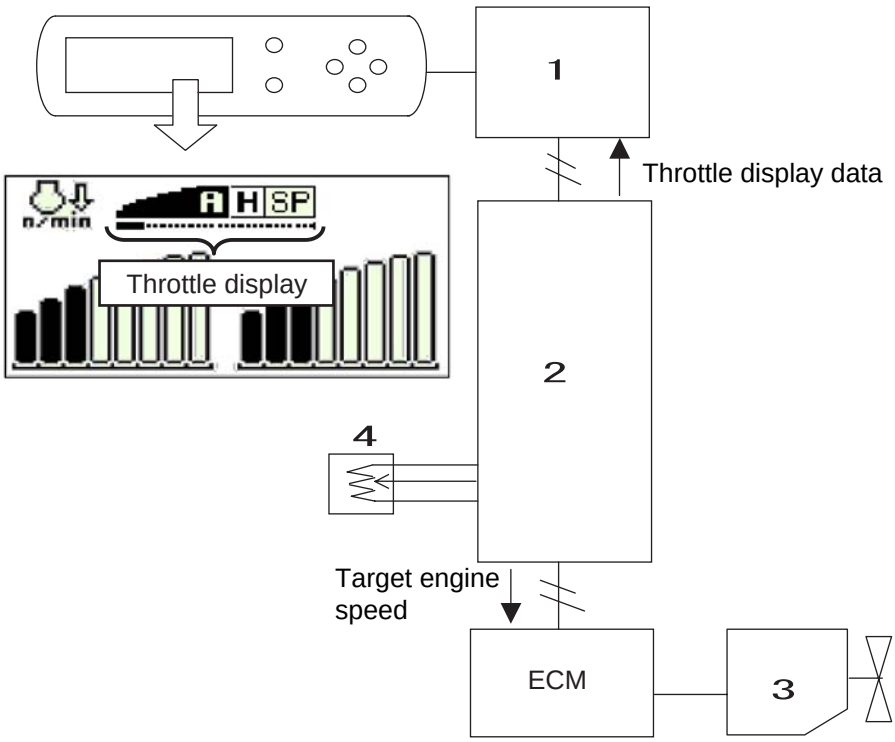

1	Monitor	3	Engine
2	Computer	4	Throttle volume

[2] Summary

The throttle volume voltage signal is first input to Computer. Computer converts the voltage signal to a target speed and sends it to the ECM with CAN communications.
At the same time, Computer sends the throttle display data to the monitor.

(2) Throttle volume position detection

[1] Configuration

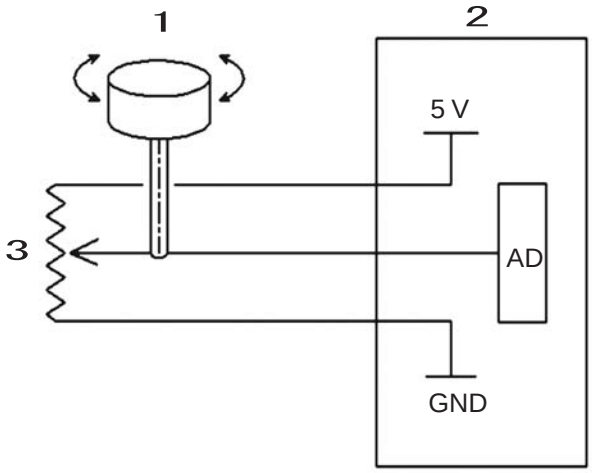

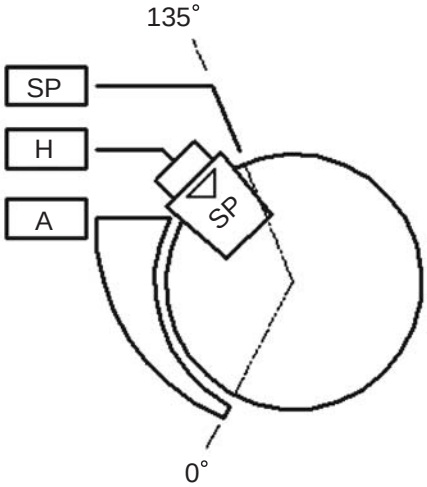

1	Throttle volume
2	Computer
3	Potentio-meter

https://trackmanualshub.com/

[2] Structure

The detent and notches provide a click feel. (15 notches; Notch 1 is the "SP mode" position.)

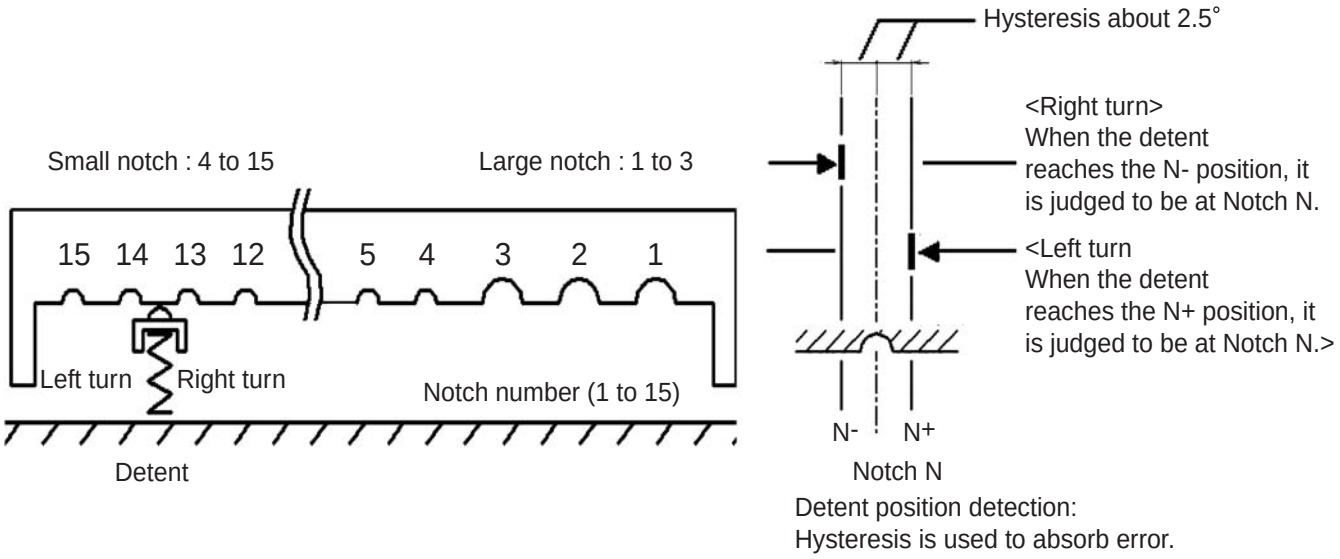

[3] Characteristic

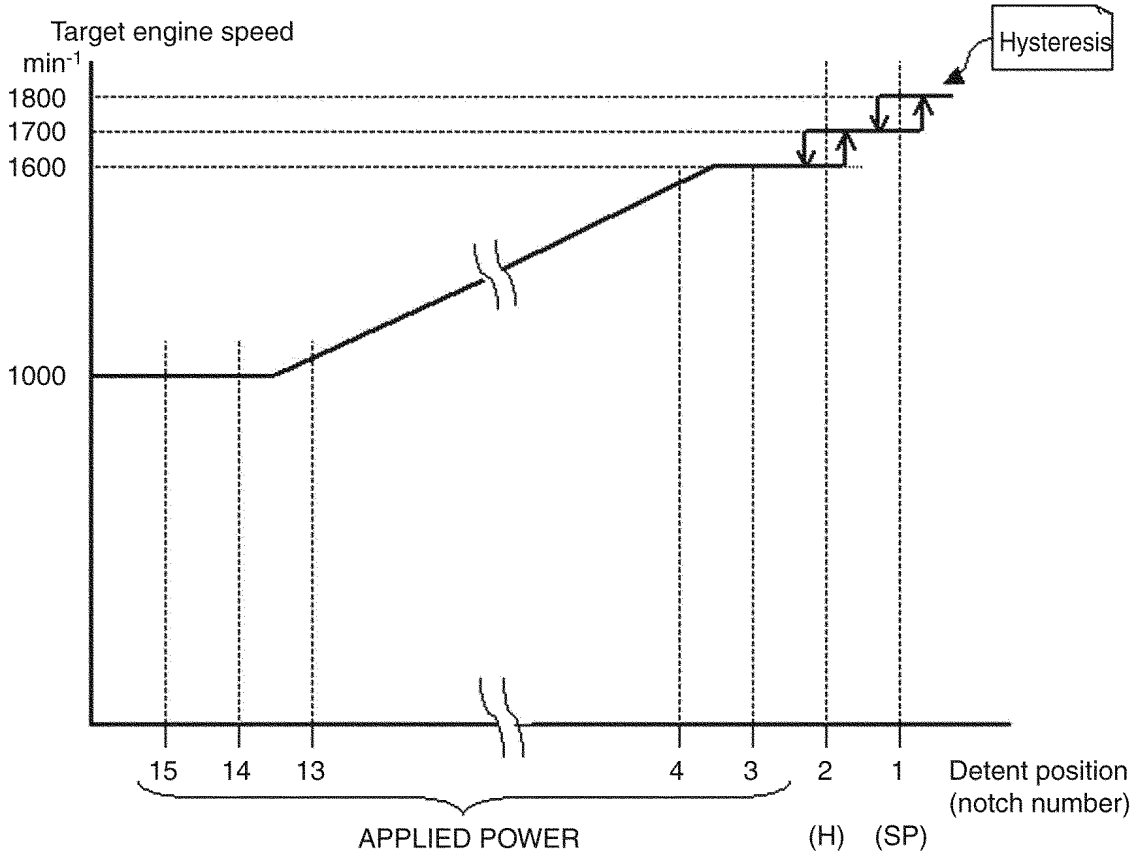

https://truckmanualshub.com/

[4] Potentio-meter characteristic

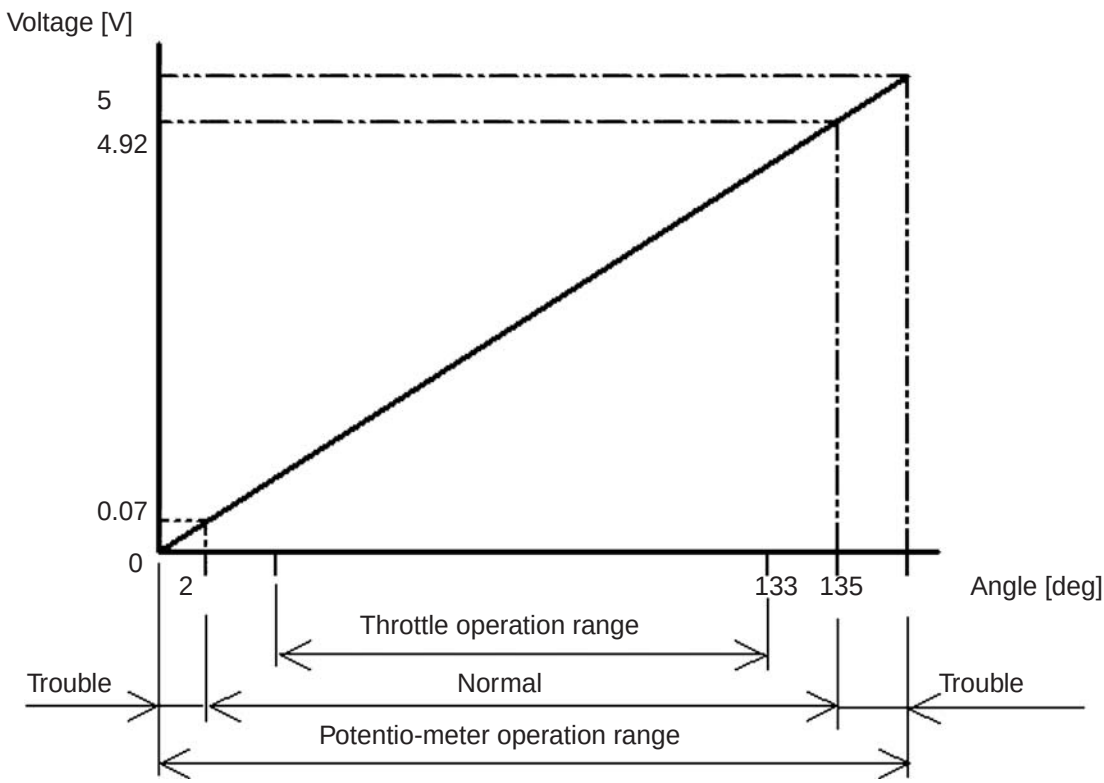

[5] Throttle volume degree of opening calculation

The throttle volume degree of opening (%) that can be checked on the CHK screen is calculated with the standard below.

100 % ・・・When the detent is in the 1+ position

0 % ・・・When the detent is in the 15- position

Therefore, even if the detent is in the 1 position (SP), this does not necessarily mean that the degree of opening is 100%.

In the same way, even if the detent is in the 0 position, the degree of opening is not necessarily 0%.

https://trackmanualshub.com/

[6] Table

For the angle, voltage, and degree of opening for each detent position, see the following table.

Detent	Angle [deg]	Voltage [V]	Degree of opening [%]
1+	131.2	4.86	100.0
1	128.7	4.77	98.0
1-	126.2	4.67	96.1
2+	109.6	4.06	83.0
2	107.1	3.97	81.1
2-	104.6	3.87	79.1
3+	95.2	3.53	71.7
3	92.7	3.43	69.8
3-	90.2	3.34	67.8
4+	88.0	3.26	66.1
4	85.5	3.17	64.1
4-	83.0	3.07	62.2
5+	80.8	2.99	60.4
5	78.3	2.90	58.5
5-	75.8	2.81	56.5
6+	73.6	2.73	54.8
6	71.1	2.63	52.8
6-	68.6	2.54	50.9
7+	66.4	2.46	49.1
7	63.9	2.37	47.2
7-	61.4	2.27	45.2
8+	59.2	2.19	43.5
8	56.7	2.10	41.5
8-	54.2	2.01	39.6
9+	52.0	1.93	37.8
9	49.5	1.83	35.9
9-	47.0	1.74	33.9
10+	44.8	1.66	32.2
10	42.3	1.57	30.2
10-	39.8	1.47	28.3
11+	37.6	1.39	26.5
11	35.1	1.30	24.6
11-	32.6	1.21	22.6
12+	30.4	1.13	20.9
12	27.9	1.03	18.9
12-	25.4	0.94	17.0
13+	23.2	0.86	15.2
13	20.7	0.77	13.3
13-	18.2	0.67	11.3
14+	16.0	0.59	9.6
14	13.5	0.50	7.6
14-	11.0	0.41	5.7
15+	8.8	0.33	3.9
15	6.3	0.23	2.0
15-	3.8	0.14	0.0

https://truckmanualshub.com/

2. Idling Control (auto / one-touch)

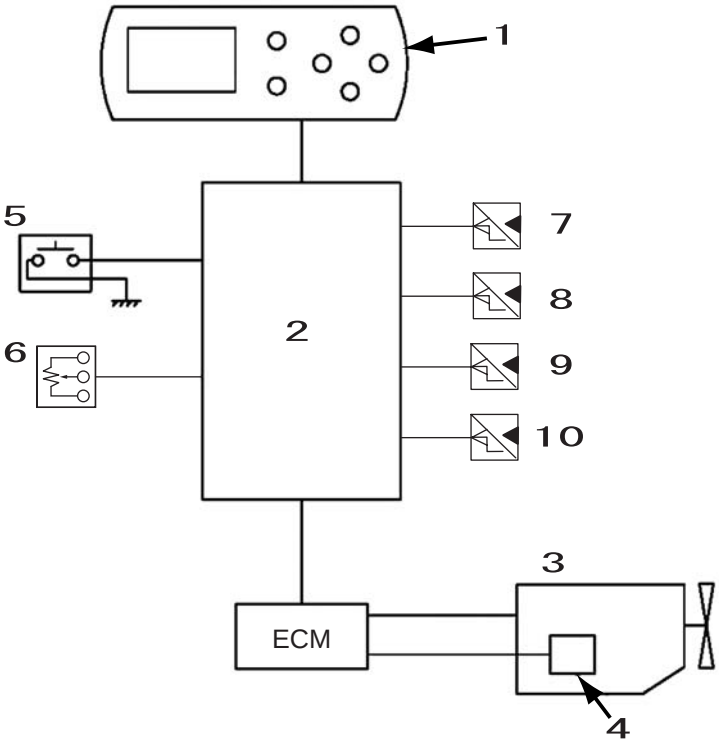

1	Monitor display	5	One-touch idle switch	9	Pressure sensor (travel)
2	Computer	6	Throttle volume	10	Pressure sensor (arm-in)
3	Engine	7	Pressure sensor (upper side)		
4	Coolant temperature sensor	8	Pressure sensor (swing)		

<Operation explanation>

[1] Auto / one-touch switchover function

The operator can switch between one-touch and auto by pressing the auto idle switch on the monitor in the figure below.

When auto idle is ON, the LED at the side of the switch lights up.

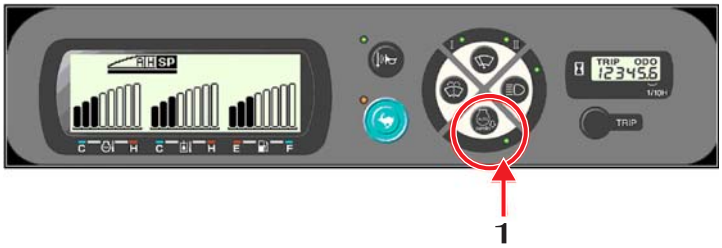

1	Auto idle switch

[2] Auto idle control

1) When auto idle is set, if the lever is left continuously unoperated for 5 seconds, the engine speed automatically becomes the auto idle speed (1200 min^{-1}).
   * This five-second setting for auto idle operation is the default value. This setting can be changed to from 1 to 30 seconds with service support operations.
2) When the lever is operated, the engine speed is automatically returned to the engine speed set for the throttle volume.
3) Even with auto idle set, it is possible to move to auto idle or return from auto idle by pressing the knob switch (one-touch idle switch) on the right operation lever.

[3] One-touch idle control

When auto idle is not set, regardless of lever operation, it is possible to move to auto idle or return from auto idle by pressing the knob switch (one-touch idle switch) on the right operation lever.

The idling speed for one-touch idle control is 1000 min^{-1}.

https://truckmanualshub.com/

[4] Idling speed

1) Auto idling speed ・・・1200 min^{-1}

2) One-touch idling speed ・・・1000 min^{-1}

3) Low idling speed ・・・1000 min^{-1}

The speeds above are the default values. They can be set to from 1000 to 1600 min^{-1} with service support operation. (See Screen Operation in Service Support.) However, the settings are based on the following conditions.
Low idle speed = One-touch idle speed ≦ Auto-idle speed
(The one-touch idle speed and auto-idle speed settings can be changed.)

3. Idling Start

[1] When the engine starts, the engine speed becomes the low idle speed regardless of the throttle position.

[2] When the low idle speed is changed, the engine speed is controlled at this new speed.

[3] During an idling start, the idling icon is displayed at the top left of the monitor.
No message is displayed.

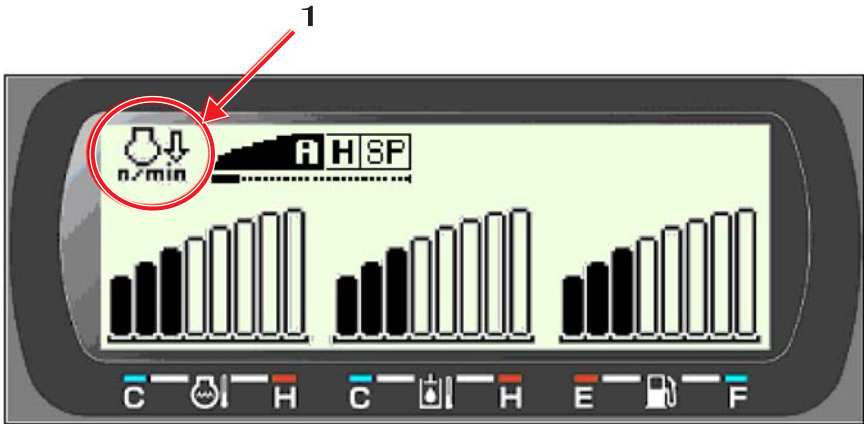

1	Idling icon

[4] An idling start is ended in the following cases and control becomes normal.

1) When the one-touch idle switch is pressed

2) When the throttle volume is operated

3) When the operation lever is operated (upper side, travel, swing, arm-in pressure sensor ON)

[5] Back-up operation

1) Sensor trouble
If trouble occurs in a sensor (upper side, travel, swing, arm-in), the idling start is ended.

2) Throttle volume trouble
Even if the throttle volume is operated, the idling start is not ended. Also, even if the idling start is ended with some other method, the throttle cannot be adjusted.

3) One-touch idle switch trouble
Even if the switch is pressed, the idling start is not ended.

https://truckmanualshub.com/

4. Idle Up

A function that when the engine speed is less than the idling speed, causes lever operation to automatically raise the engine speed to the auto idling speed (Idle speed engine stall prevention function)

<Operation conditions>

[1] Control only when the engine speed is lower than the auto idling speed

[2] The idle up speed is the same as the auto idling speed.(Factory setting 1200 min^{-1})

[3] This control does not operate when the idling speed is higher than the auto idling speed. Also, when auto idling is operated, normally the auto idling function operates.

[4] Even with one-touch idling operating, this control operates to raise the idling speed.

[5] A lever is judged to have been operated when any pressure sensor (upper side, travel, swing, arm-in) comes ON.

[6] If trouble occurs in any of the above pressure sensors, idle up control is not executed.

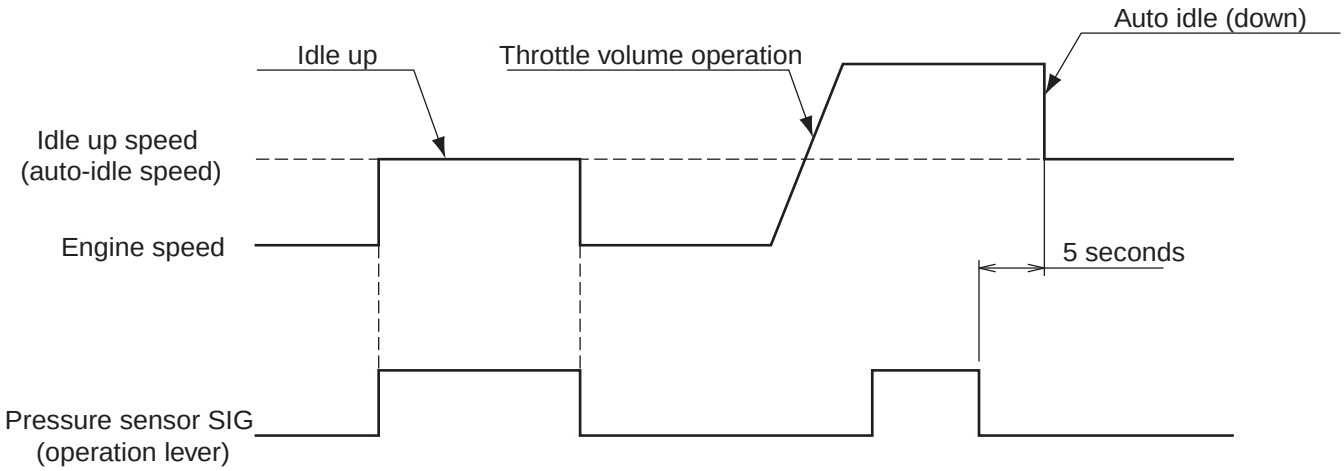

5. Auto Warm Up

If the coolant temperature is low when the engine starts up, warm-up operation is executed, automatically raising the engine speed in steps.

[1] Auto warm up is used if the coolant temperature is lower than 122 ºF (50 ℃) when the engine starts.

[2] If the coolant temperature is 122 ºF (50 °C) or higher, auto warm up is not used and an "idling start" is executed.

[3] Operation
The engine speed is raised in steps from the low idle speed until 1800 rpm as below.
When the low idle speed is changed, the engine speed starts from the newly set speed.
The warm up time is the same, 14 minutes.
When the coolant temperature reaches 122 ºF (50 °C), the engine speed falls immediately to low idle. (Idling start)

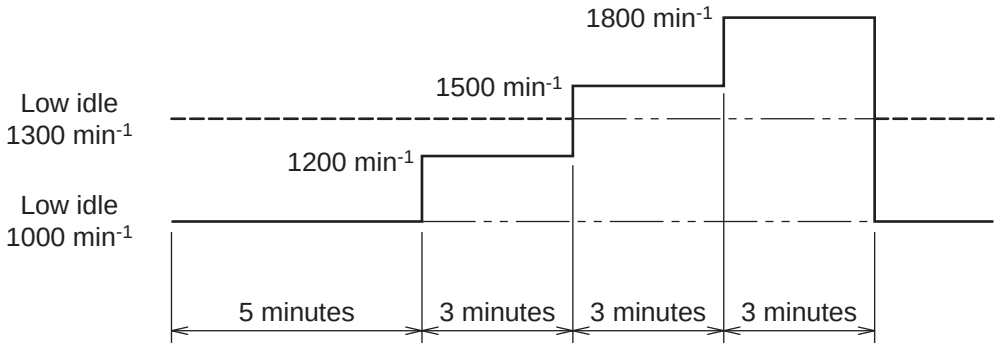

https://truckmanualshub.com/

[4] Monitor display
During auto warm up, the “Auto warm up icon” is displayed at the top left of the monitor.

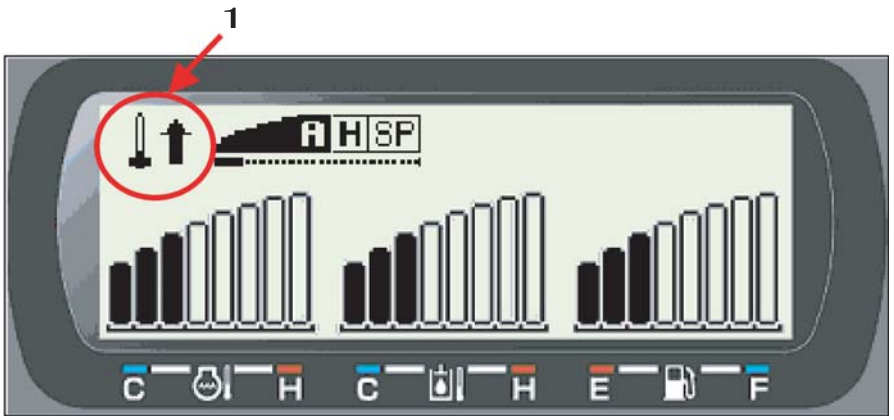

1	Auto warm up icon

[5] In the cases below, auto warm up is ended and operation shifts to "idling start".
1) When the coolant temperature reaches 122 ºF (50 ℃)
2) When the one-touch idle switch is pressed
3) When the entire auto warm up process ends (after 14 minutes)

[6] In the cases below, auto warm up is ended and operation shifts to the engine speed for the throttle position.
1) When the lever is operated (as detected by a pressure sensor)
2) When the throttle volume is operated

[7] Back-up operation
1) Sensor trouble
If trouble occurs in a sensor (upper side, travel, swing, arm-in, coolant temperature sensor), auto warm up is not operated. Also, even trouble occurs in a sensor partway through a warm up, the warm up is ended and operation shifts to normal control.
2) One-touch idle switch trouble
Even if the switch is pressed, auto warm up is not ended.
3) Throttle volume trouble
Even if the throttle volume is operated, the auto warm up is not ended.

https://truckmanualshub.com/

Engine Start / Stop Control

1. Engine Start / Stop Judgment

[1] Configuration

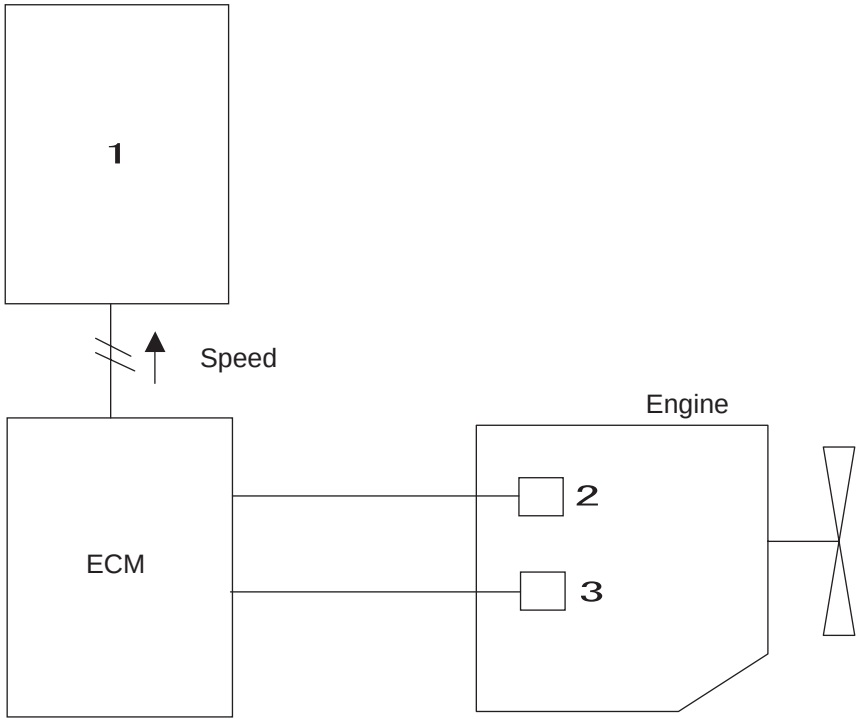

1	Computer
2	Cam sensor
3	Crank sensor

[2] Summary

Engine start and stop is judged based on the engine speed sent from the ECM with CAN communications.

[3] Judgment value

Start 500 min^{-1}, Stop 200 min^{-1}

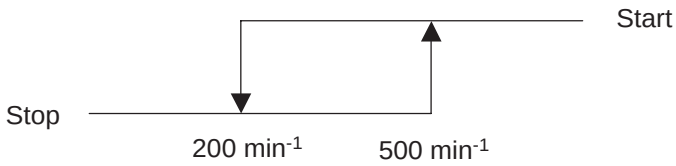

☆) Concerning hysteresis; for Model LX, judged with no hysteresis 500 min^{-1}.

https://truckmanualshub.com/

2. Power-Cut Delay

[1] Configuration (fuses etc. omitted)

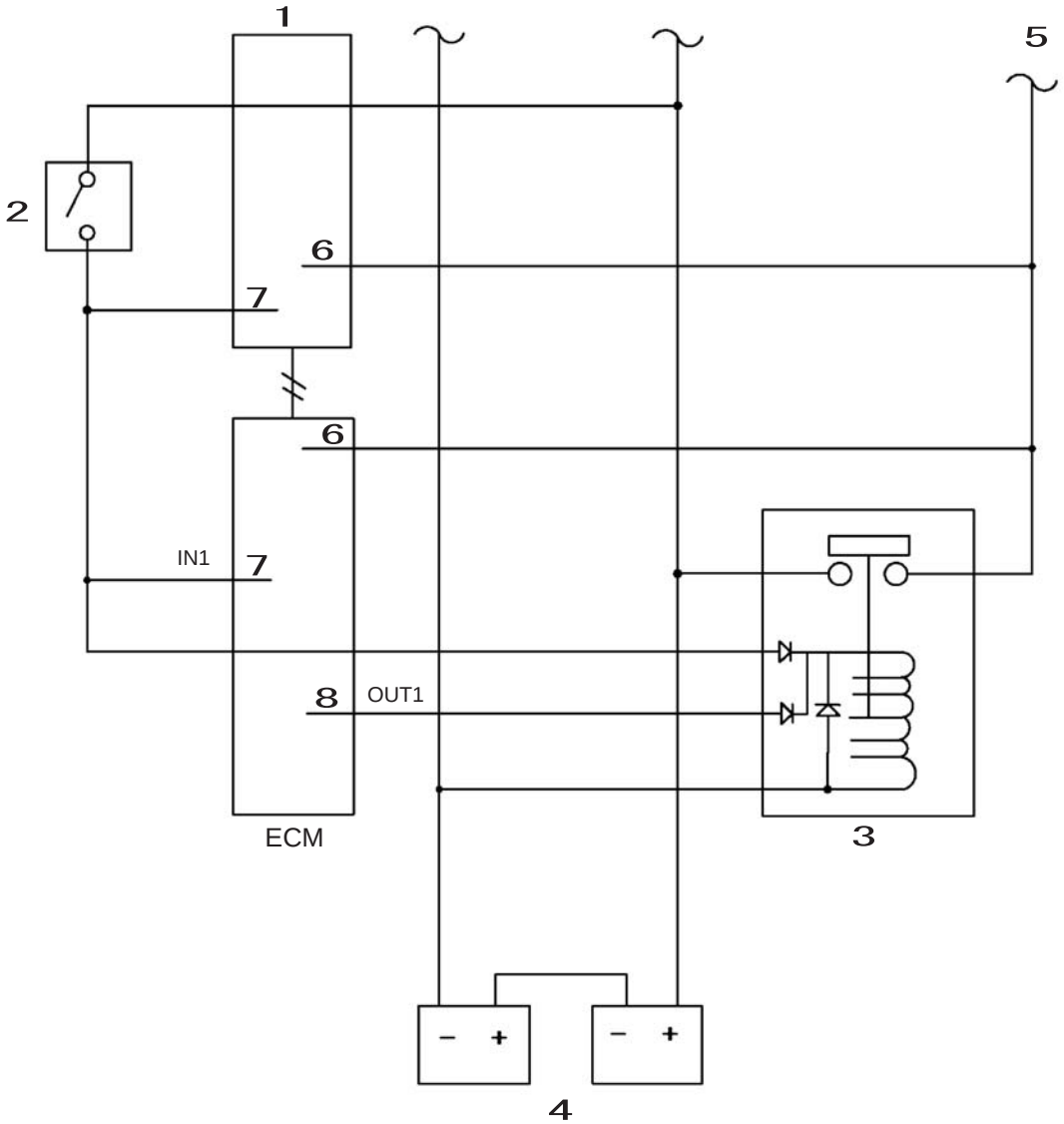

1	Computer	5	Load A
2	Key switch	6	Power supply
3	Battery relay	7	Key switch signal
4	Battery	8	Battery relay hold

[2] Summary

After the key is switched OFF, after the battery relay is held for a certain period, the power supply is cut off.

[3] Purpose

1) This secures time after the key is switched OFF for data to be written in the EEPROM in the ECM and Computer.
2) This waits until the engine completely stops to avoid load dumping.

https://truckmanualshub.com/

[4] Operation

1) When the key is ON, the battery relay is held by the battery relay hold output (OUT1) from the ECM and the key switch.
2) After the key is switched OFF, the battery relay is only held by the ECM.
3) After it detects the key going OFF through the key switch signal input (IN1), the ECM starts the count down.
4) After a certain time has passed, the ECM stops output to the battery relay and the battery relay goes OFF.
   At the same time, the power supply to electrical parts, including the ECM and computer is cut. (Except the backup power supply)
5) The time from the key being switched OFF until the power supply goes OFF (the delay time) depends on whether or not the engine was started.
   * After the key is switched ON, if the key is switched OFF without the engine being started = about 4 seconds
   * If the key is switched OFF after the engine was started = about 7 seconds

[5] Differences from Model LX
With LX, the main unit side computer (called Computer in X2) held the battery relay. With X2, the ECM bears this responsibility. (Engine manufacturer requirement)

3. Engine Emergency Stop

Function for stopping the engine in an emergency
When the emergency stop switch on top of the left console is pressed, the engine is stopped regardless of the key switch position.

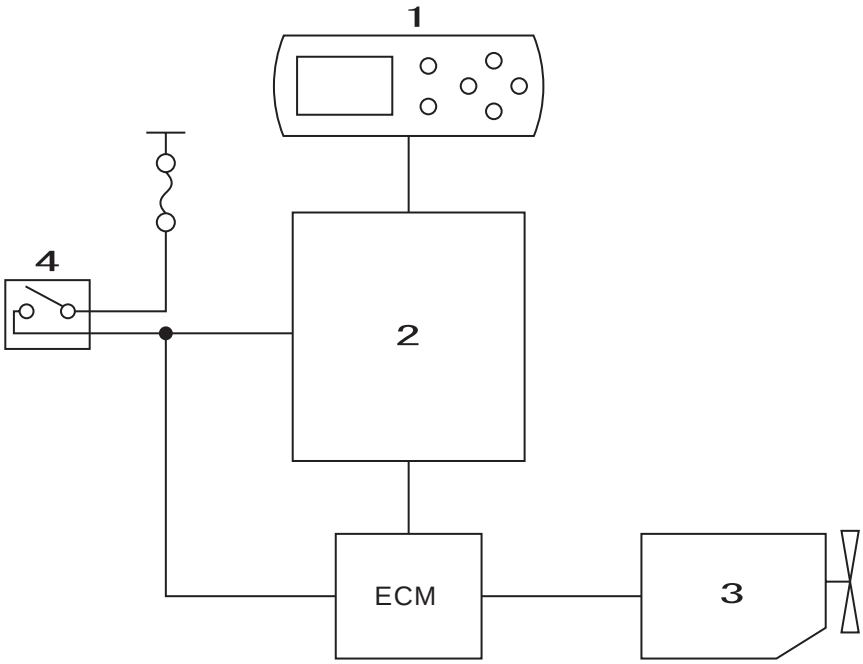

1	Monitor display
2	Computer
3	Engine
4	Emergency stop switch

[1] Circuit

1) When the emergency stop switch is pressed, a 24 V signal enters the ECM input port.
2) When the 1) signal enters, the ECM controls the injector, suction control valve, and EGR valve to stop the engine.
3) The emergency stop switch signal enters Computer too and computer sends the engine stop command to the ECM with CAN communications.
4) At the same time, Computer sends the emergency stop and buzzer instructions to the monitor.

https://truckmanualshub.com/

[2] Display, alarm

1) When the emergency stop switch is switched ON, the "ENGINE STOP" message is displayed on the monitor.
2) Even if there is another message, the "ENGINE STOP" message is displayed with priority for five seconds after the switch is switched ON.
3) At the same time as 1), the buzzer in the monitor buzzes intermittently at 1 Hz.
4) If any kind of trouble is detected during the 1 Hz intermittent buzzing of 3), after the 5-second continuous buzzing, which is the trouble alarm, the buzzing returns to the 1 Hz intermittent buzzing.
5) Even if the buzzing continues after the switch ON/OFF message display (for 5 seconds), the message display is not extended.
6) The above message display and buzzer operate whether the engine is running or stopped.

RST-05-06-001p

[3] An emergency stop takes priority over any other control and stops the engine.

* The engine stops even during lifting magnet suction, during elevator cab rising, and fan reverse operation (large machine only).

[4] When an emergency stop is made, it is not recorded in the trouble log.

[5] The engine can be cranked with the emergency stop switch ON, but the engine will not start.

https://truckmanualshub.com/

4. Neutral Start

[1] Purpose and summary

The engine will not start with the gate lever lifted.(It will not crank.)
This prevents accidental operation if the operation lever is accidentally bumped into when the engine is started.

[2] Configuration

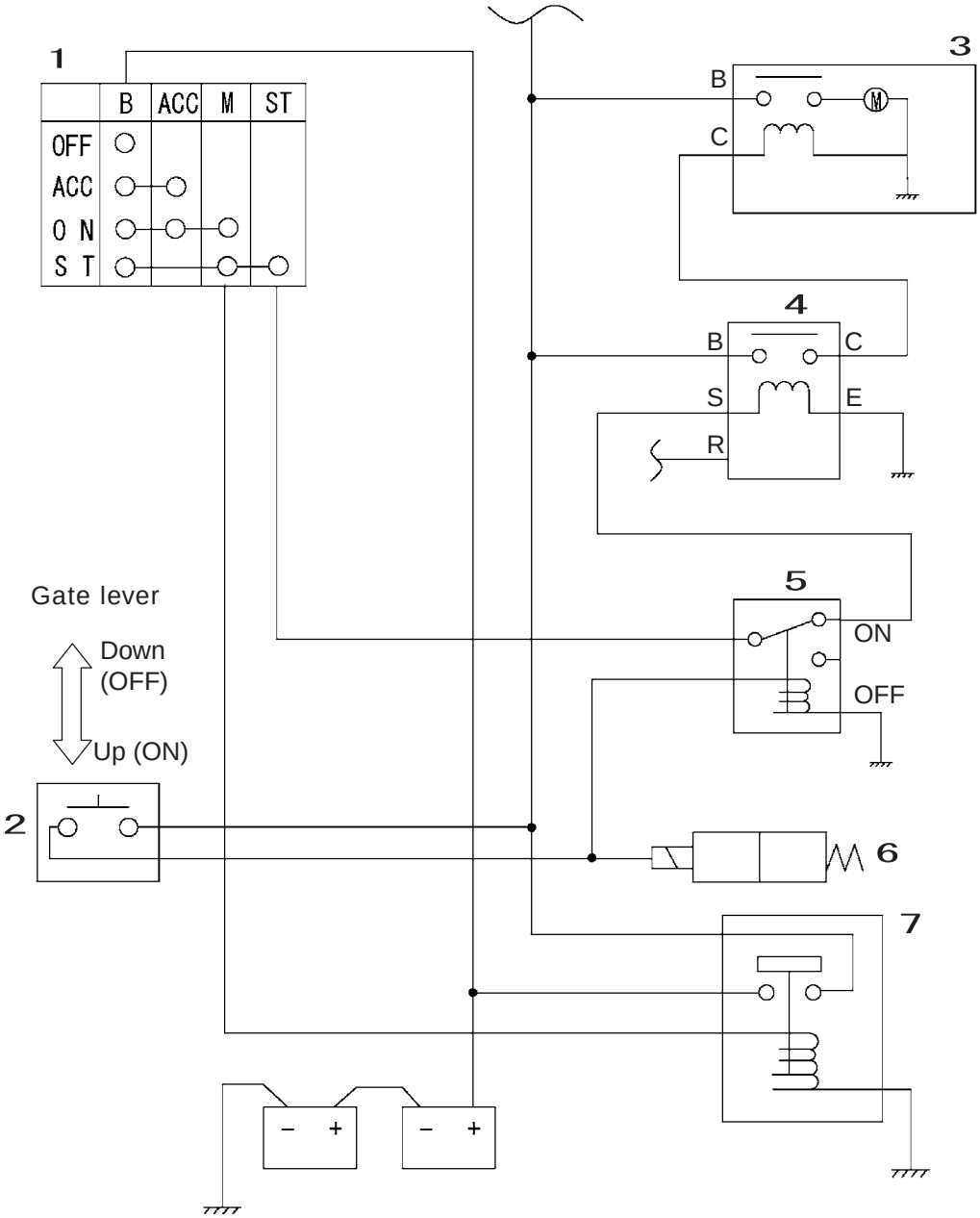

1	Key switch	5	Starter cut relay
2	Gate lock limit switch	6	Lever lock solenoid
3	Starter motor	7	Battery relay
4	Safety relay		

[3] Operation

When the gate lever is raised (and the limit switch comes ON), the starter cut relay is excited, the excitation to the safety relay is cut off, and the engine does not crank. At this time, nothing in particular is displayed on the monitor.

https://trackmanualshub.com/

Pump Control

1. Work Mode Control

<Purpose>
Work mode control enables the operator to select the work mode to match the work contents, for example emphasizing speed, emphasizing fuel economy, etc.
At the same time, the engine speed is adjusted.(throttle adjustment)

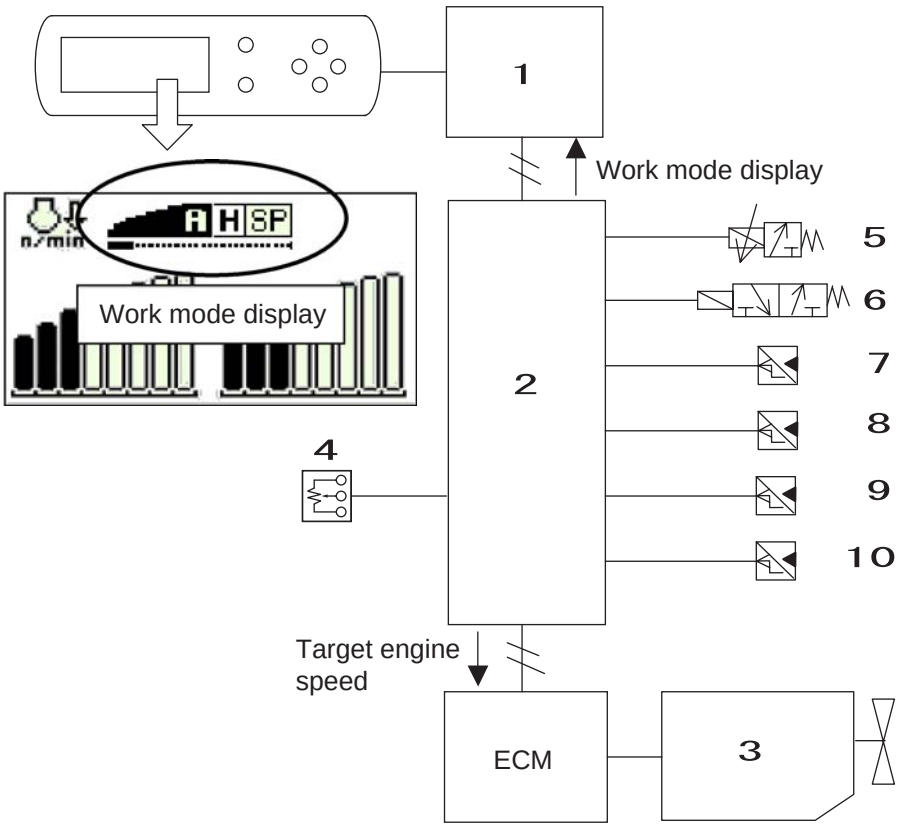

1	Monitor
2	Computer
3	Engine
4	Throttle volume
5	Pump horsepower control proportional valve
6	Boost solenoid
7	P1 pressure sensor
8	P2 pressure sensor
9	N1 pressure sensor
10	N2 pressure sensor

Operation

[1] Manual switchover (main mode)
The operator can select one of the following work modes by turning the throttle volume.
For the correspondence between the throttle volume detents and the work modes, see the attached table.

Mode	Aim	Display	Monitor buzzer
(1) SP mode	Speed emphasis	A H **SP**	The buzzer buzzes twice when this is selected.
(2) H mode	Balances speed and fuel economy	A **H** SP	The buzzer buzzes once when this is selected.
(3) A mode	Fuel economy emphasis	**A** H SP	No buzzing

[2] Automatic switchover (sub mode)
Each of the main modes that can be selected manually and has two sub-modes (high and low).
These sub-modes are switched automatically based on the sensor input values.
* For the high and low currents, refer to the explanation of the 2. Pump Added Horsepower Control in next page.

https://truckmanualshub.com/

2. Pump Added Horsepower Control

<Purpose>

To prevent drop in the engine speed when the lever is operated suddenly, when there is high load, when travelling, etc.

Control current value

	Volume position (detent position)		1	2	3	4 to 8	9 to 15
	Work mode		SP	H	Applied Power		
210X2	Engine speed (min^{-1})		1800	1700	1600	1599 to 1300	1299 to 1000
	Pump horse power current value (mA)	Max High	600	600	600	314	50
		Max Low	586	570	570	314	50
		Min	314	314	314	314	50
240X2	Engine speed (min^{-1})		2000	1900	1800	1799 to 1300	1299 to 1000
	Pump horse power current value (mA)	Max High	600	600	600	290	50
		Max Low	580	560	560	290	50
		Min	290	290	290	290	50
	Boosted pressure		Automatic	Automatic	Normal		

Operation

[1] Reduces the amount of speed drop under high load (SP-H mode)
Operation conditions ..... For high load
When the P1 + P2 pressure becomes high voltage, the current to the pump horsepower control proportional valve Imax is changed Low ⇒High to increase the pump flow.

[2] Reduces the amount of speed drop under high load when digging with the arm-in (SP-H mode)
When the arm-in operation is detected by the arm-in pilot pressure sensor, high load is detected faster than for other operations.

[3] Response speed up for sudden lever operation
Operation conditions ..... For sudden lever operation
When sudden lever operation is detected by the N1 or N2 negative control pressure sensor, the current to the pump horsepower control proportional valve Imax is changed Low ⇒High to increase the pump flow.

[4] For travel operation
For travel operation, the pump current is fixed to 600 mA.
However, if the engine speed is 1300 min^{-1} or less, the pump current is fixed to 50 mA. (Prevention of engine stalling is given priority)

E

https://truckmanualshub.com/

3. Pump Horsepower Cut Control

<Purpose>

The pump current is controlled in order to prevent black smoke under transient loads and engine speed drop and in order to improve energy saving.

The control methods are the following three.

[1] Transient load reduction control

[2] Engine stalling prevention control

[3] PID control

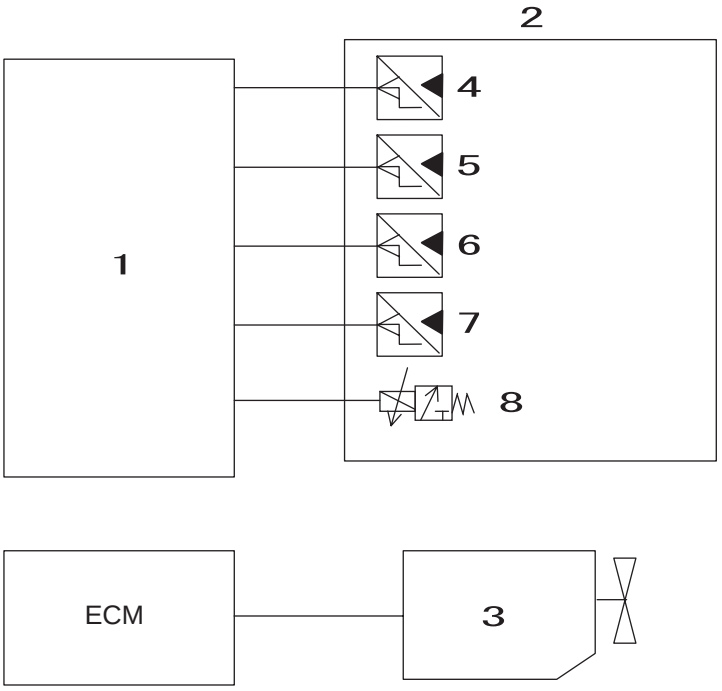

1	Computer
2	Pump
3	Engine
4	P1 pressure sensor
5	P2 pressure sensor
6	N1 pressure sensor
7	N2 pressure sensor
8	Pump horsepower control proportional valve

(1) Transient load reduction control

When the engine is under a transient load, the current to the pump horsepower proportional valve first drops to 50 mA.

After that, the current is gradually raised while watching the difference between the actual engine speed and the target engine speed.

Transient load reduction control is executed in all work modes.

- The engine is judged to be under a transient load when the following conditions are met.

1) Sudden lever operation

When there is sudden lever operation, this is judged from the upper side pressure sensor state.

2) Operation for high loads and sudden loads

Judged from the P1 or P2 pump pressure sensor and from the pump main pressure boost state

(2) Engine stalling prevention control

When the target engine speed is 1300 min^{-1} or less, the current is 50 mA.

(3) PID control

When the engine actual speed falls 30 min^{-1} or more below the target engine speed, the current is gradually lowered to I Min.

When the difference of the actual engine speed from the target engine speed falls below 30 min^{-1} the current rises to the I Max High for the each mode.

Backup control

If trouble occurs in a pressure sensor (P1, P2, upper side), the transient load restriction control is not carried out.

If trouble occurs in the pump horsepower control proportional valve, the output from the computer stops.

https://truckmanualshub.com/

4. Power Save Control

<Purpose>

When no lever is operated, the pump load is reduced with the control below to reduce fuel consumption.

The control methods are the following two.

[1] The negative control relief pressure is varied and the negative control pressure is lowered to reduce the pump load.

[2] The pump discharge amount is set to the minimum flow.

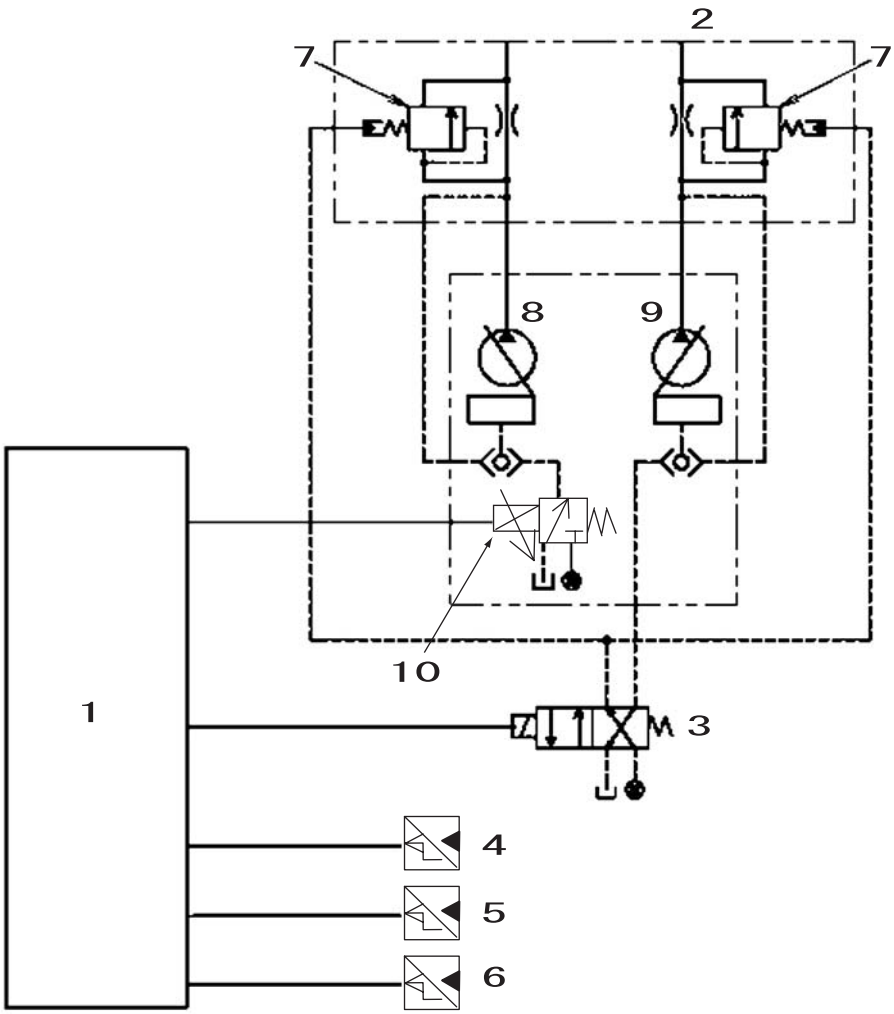

1	Computer
2	Control valve
3	Power save solenoid
4	Upper side pressure sensor
5	Swing pressure sensor
6	Travel pressure sensor
7	Negative control foot relief valve
8	Pump 1
9	Pump 2
10	P1 flow control proportional valve

<Operation explanation>

[1] Normal operation

If more than one second passes with all the sensor signals to the computer OFF (upper side, travel, and swing pressure), the computer judges that no lever is being operated and outputs to the P1 flow control proportional valve and the power save solenoid valve.

1) P1 pump discharge reduced
   1. The P1 flow volume proportional valve current is increased from 50 mA to 740 mA.
   2. The P1 pump swash plate is switched to the minimum tilt revolution and the discharge amount is set to its minimum.
2) P2 pump discharge reduced
   1. When the power save solenoid valve is switched, the pilot source pressure is fed to the P2 pump negative control port via the solenoid valve.
   2. The P2 pump swash plate is switched to the minimum tilt revolution and the discharge amount is set to its minimum.

https://truckmanualshub.com/

3) Negative control pressure reduction
   1. When the power save solenoid valve is switched, the negative control foot relief valve spring chamber is linked with the tank line and the negative control foot relief valve setting pressure drops from 435 PSI (3 MPa) to 145 PSI (1 MPa).
   2. By reducing the negative control relief pressure, the pressure within the circuit is reduced, and the horsepower used by the pump is reduced. This saves energy.

[2] Operation when the engine is stopped with the key ON.
Even if no lever is operated, when the engine stops, the battery save function works and there is no output to the P1 flow control proportional valve or the power save solenoid.

[3] Operation for trouble
If an abnormality occurs on either the input side (upper side, swing, travel pressure sensors) or the output side (P1 flow control proportional valve, power save solenoid valve), the system treats this as operation being underway and control is fixed to the following.
Current to the P1 flow volume valve ・・・ 50 mA, the power save solenoid valve is always OFF.
<Caution>
During a trouble, even if the abnormality is ended, trouble mode does not end until the key is switched OFF.

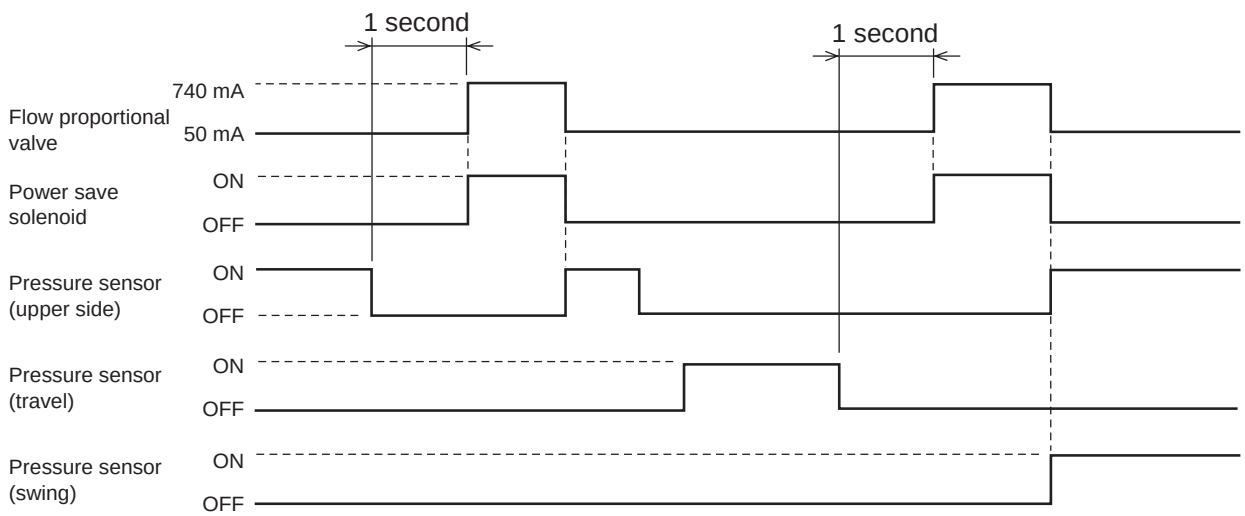

https://truckmanualshub.com/

Swing

1. Swing Brake

[1] Configuration

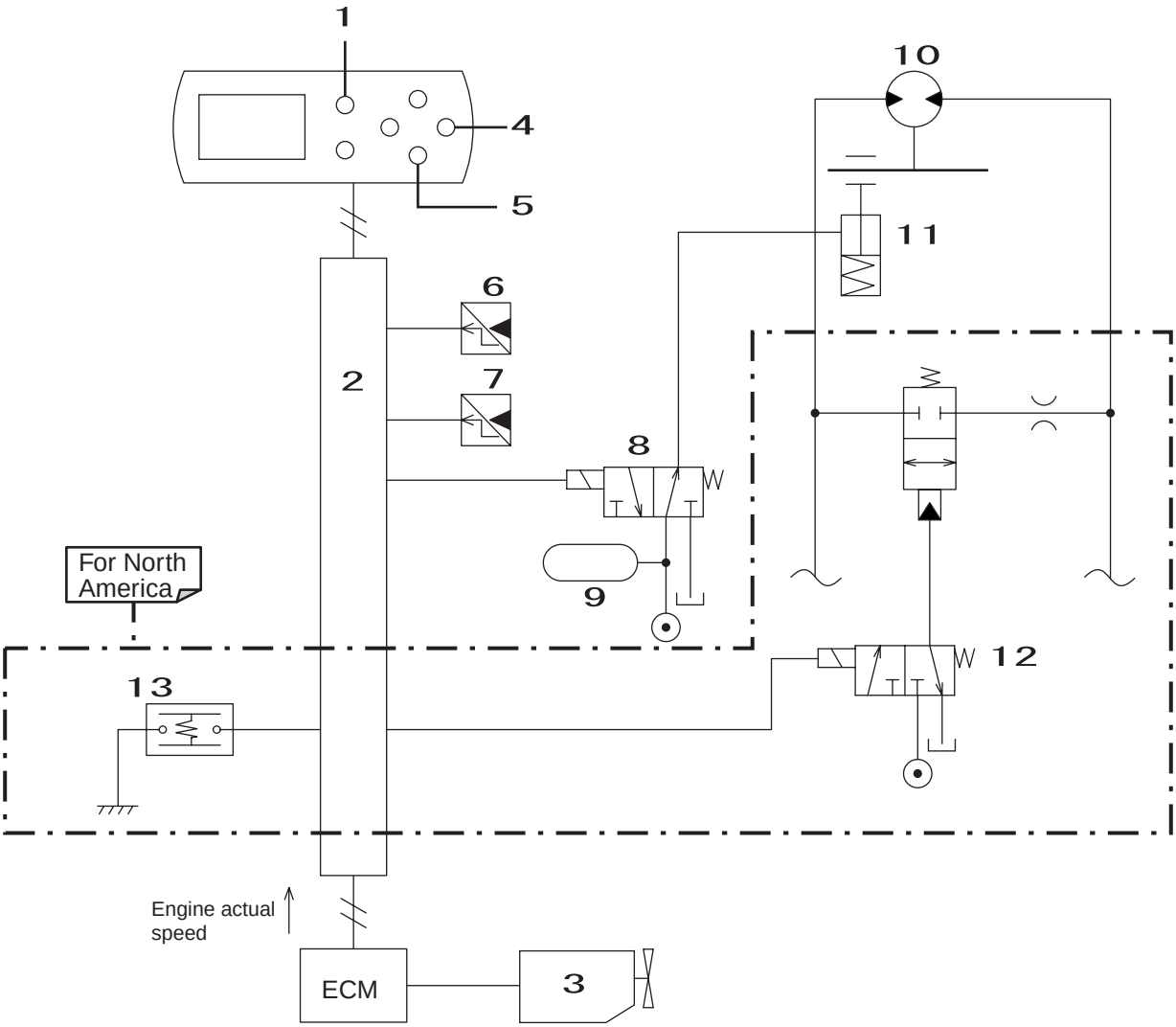

1	Horn volume select switch	8	Swing brake solenoid
2	Computer	9	Accumulator
3	Engine	10	Swing Motor
4	Working light switch	11	Swing Brake
5	Auto idle switch	12	Free swing solenoid
6	Upper side pressure sensor	13	Free swing switch (momentary)
7	Swing pressure sensor		

[2] Braking function during upper operation
When the upper pressure sensor is ON then brake is OFF.
When the upper pressure sensor is OFF, one second after the brake goes ON.

[3] Braking control through swing operation
When the swing pressure sensor is ON then swing brake is OFF.
(Swing brake solenoid=OFF).
When the swing pressure is turned OFF, five seconds after the swing brake comes ON.
(Swing brake solenoid=ON).

[4] Swing lock with key OFF
When the key is OFF (during power-cut delay), the swing brake comes ON unconditionally.

https://truckmanualshub.com/

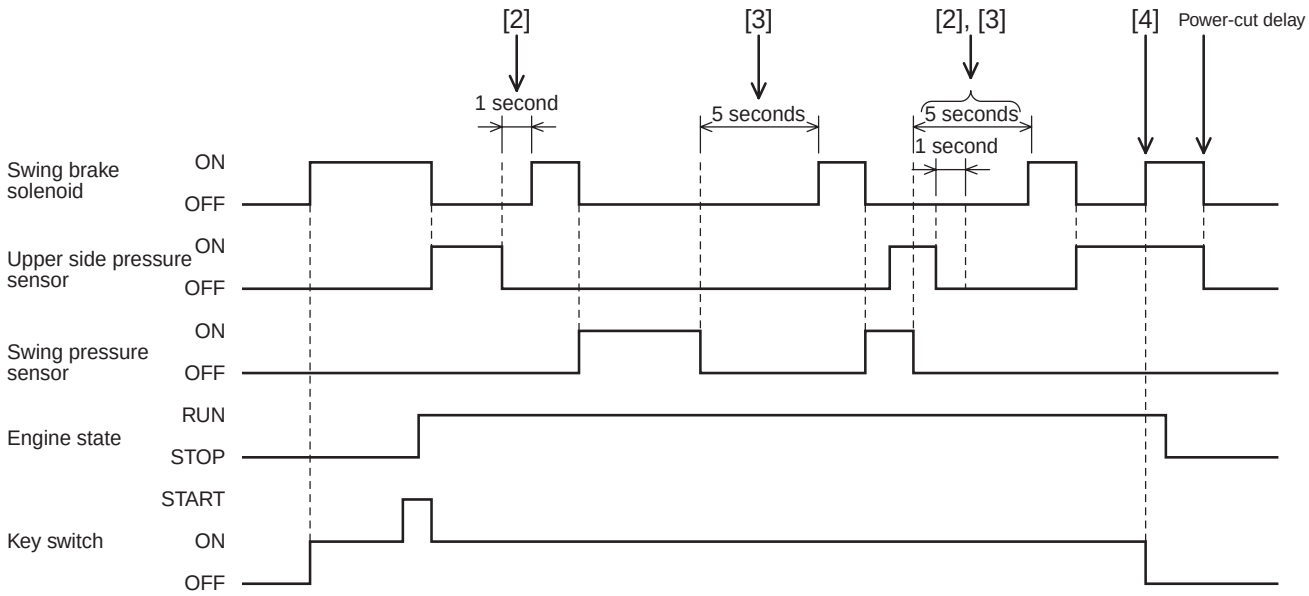

2. Free Swing (Option for North America)

[1] Free swing switchover

When the free swing switch is pressed, the free swing mode is switched ON ⇔ OFF. When the (momentary) key is OFF, always start with free swing OFF.(Previous data reset)

[2] Free swing control

When free swing is ON, the free swing solenoid is ON and the swing brake solenoid is OFF.

[3] Mode display

When free swing is ON, the icon in the figure below is displayed on the monitor.

[4] Battery save

While the engine is stopped with the key ON, if free swing is switched ON, the icon is displayed, but the free swing solenoid valve does not come ON. It does come ON after the engine starts.

https://truckmanualshub.com/

3. Swing Lock (for maintenance)

<Purpose>

This is used for measuring the swing relief pressure and other maintenance tasks.

[1] Swing lock switching

In order to prevent accidental operation under certain special circumstances, sometimes the swing brake need to be left ON all the time. "Swing lock" At this time, the swing lock can be switched ON / OFF by holding down the "horn volume select switch", the "working light switch", and the "auto idle switch" at the same time for 3 seconds.

When turning the key to ON, always start with the swing lock OFF.(Previous data reset)

[2] Swing lock control

When the swing lock is ON, even if the upper side or the swing is operated, the swing brake stays ON. Be particularly careful about swing operation because the swing brake plate is dragged.

(The swing pilot pressure is not shut off. This is no more than a simple swing lock.)

[3] Competition with free swing

If the swing lock is used, even if free swing is ON, the swing brake solenoid comes ON and the free swing solenoid goes OFF.(Swing lock priority)

[4] Mode display

When free swing is ON, the icon in the figure below is displayed on the monitor.

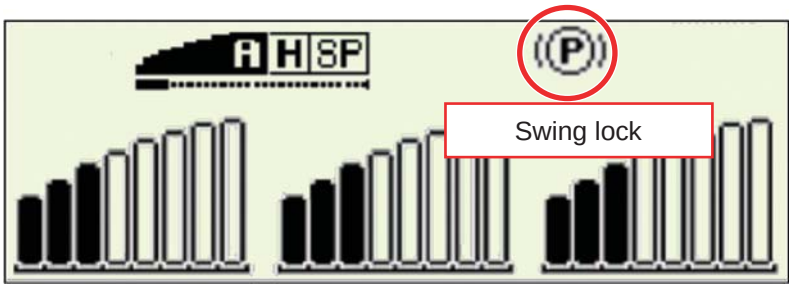

[5] Time chart (free swing & swing lock)

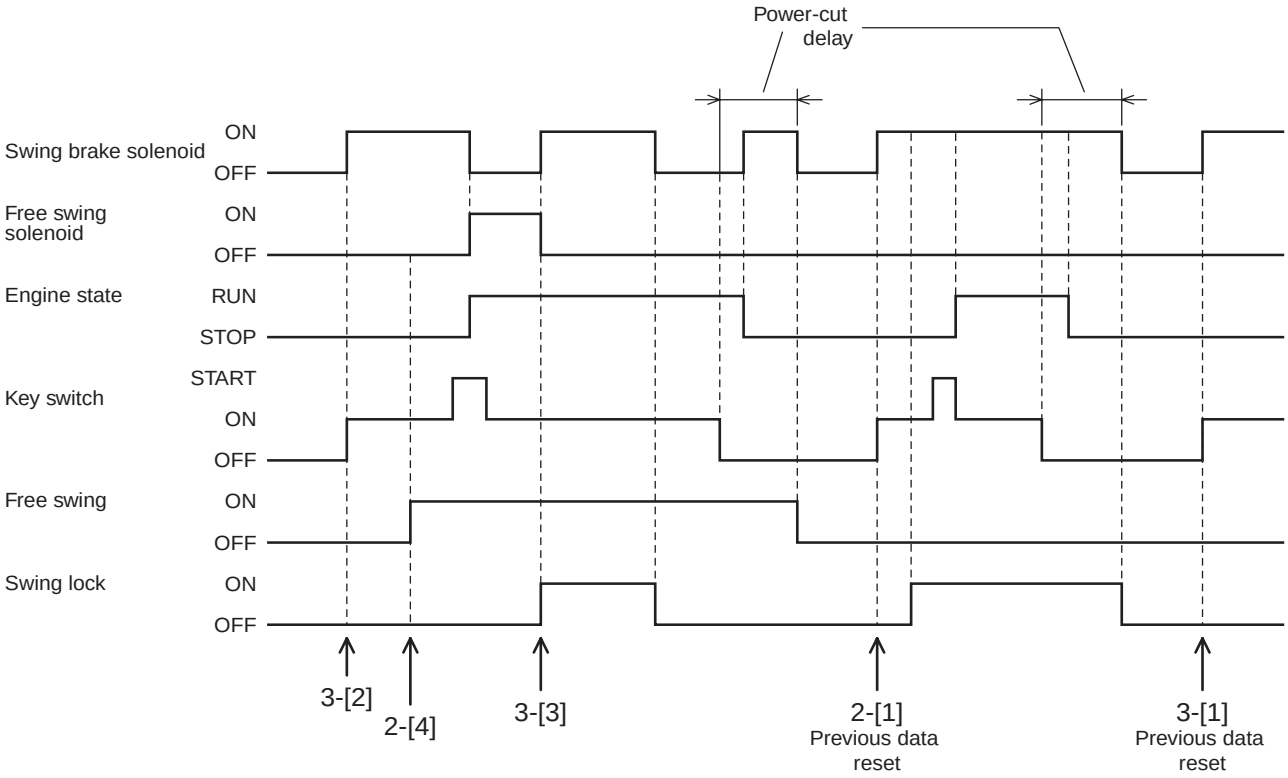

https://truckmanualshub.com/

[6] Trouble mode
If trouble occurs in an input (upper side / swing pressure sensor), communications (CAN), or output (swing brake solenoid / free swing solenoid), the system goes into trouble mode. In trouble mode, the swing brake solenoid is OFF and the free swing solenoid is OFF. Even if the trouble is recovered from, this does not recover the system from trouble mode.

4. Swing Relief Cut

<Purpose>
When swing operation is running alone, the pump flow is reduced, and the excess oil ejected from the swing motor relief valve is eliminated.

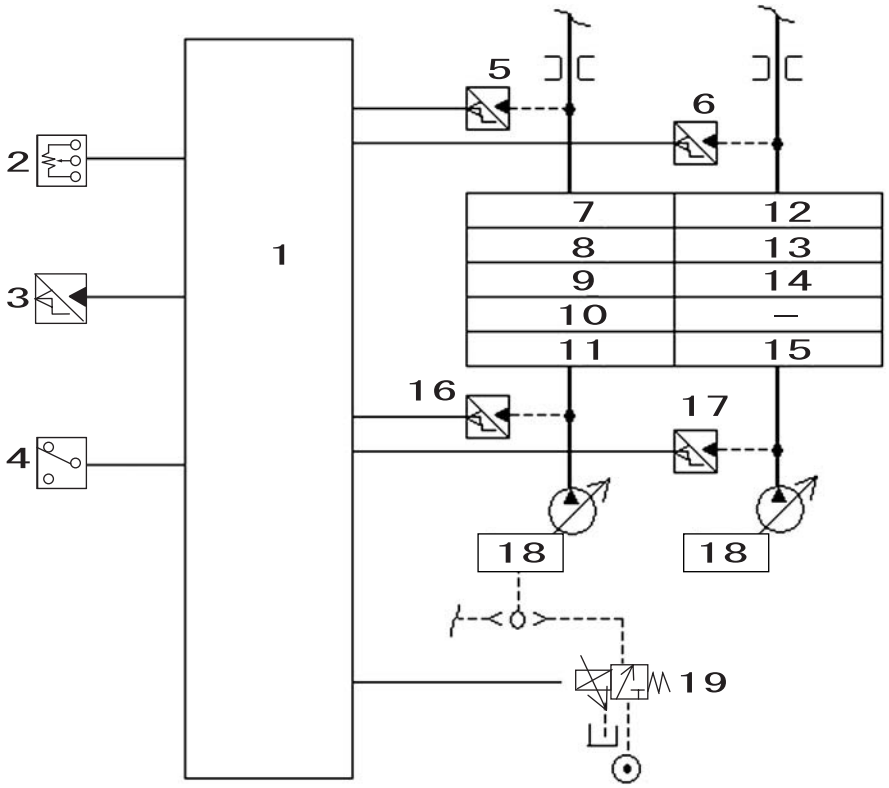

1	Computer	8	Boom (2)	15	Travel (right)
2	Throttle volume	9	Swing	16	P1 pressure sensor
3	Travel pressure sensor	10	Option 1	17	P2 pressure sensor
4	Option 1 pressure switch	11	Travel (left)	18	Regulator
5	N1 pressure sensor	12	Arm (2)	19	P1 flow control proportional valve
6	N2 pressure sensor	13	Boom (1)		
7	Arm (1)	14	Bucket		

Operation explanation

[1] Operation conditions for swing relief cut control
The swing relief cut control provides relief when the pressure is boosted for the start of the swing due to sudden swing operation and the drained off excess oil is held to the lowest amount possible. The purpose is to provide an energy saving effect.
Control is executed when all the conditions below are satisfied.

1) Sudden swing operation ・・・When the swing lever is operated, this is judged from the swing pilot pressure sensor pressure rise.
2) Within 1 second after start of swing
3) Travel non-operation ・・・ Travel pressure sensor OFF
4) No attachments other than boom down are operating.
・・・ That no attachment is operating is judged from the N2 negative control pressure & P1 pressure sensor.
5) Option line non-operation ・・・Option pressure sensor OFF

https://truckmanualshub.com/

[2] Control contents

For the swing relief cut operation, after the current to the P1 flow control proportional valve is increased and the P1 flow is reduced, while checking the P1 pump discharge pressure, the system gradually reduces the output current to the P1 flow control valve and raises the P1 pump flow to the constant swing speed.

- Swing relief cut control flow

  Judged as swing only + sudden operation ⇒ Swing relief cut operation ⇒ Increased current to P1 flow control proportional valve ⇒

  ⇒ P1 pump flow reduced ⇒ Current gradually decreased while watching swing pressure fall status ⇒ P1 pump flow increased

  <Caution>

  P1 flow control proportional valve: Current (high) ⇒ P1 pump flow (low); Current (low) ⇒ P1 pump flow (high)

[3] Swing relief cut end conditions

1) When swing operation is stopped
2) Travel ON
3) Boom up, arm out / in, bucket open / closed
4) Boom down sudden operation
5) Boom down pressure boost

E

5. Swing Speed Limit

Purpose

With the increase in the pump maximum flow, the swing speed at maximum flow is too fast. Therefore, the P1 pump flow is controlled to suppress the speed rise. (Control only in SP mode)

210X2 P1 maximum discharge amount held down from 46.4 Gal. (211 L) / min to 44 Gal. (200 L) / min for swing-only operation

240X2 P1 maximum discharge amount held down from 51.5 Gal. (234 L) / min to 47.1 Gal. (214 L) / min for swing-only operation

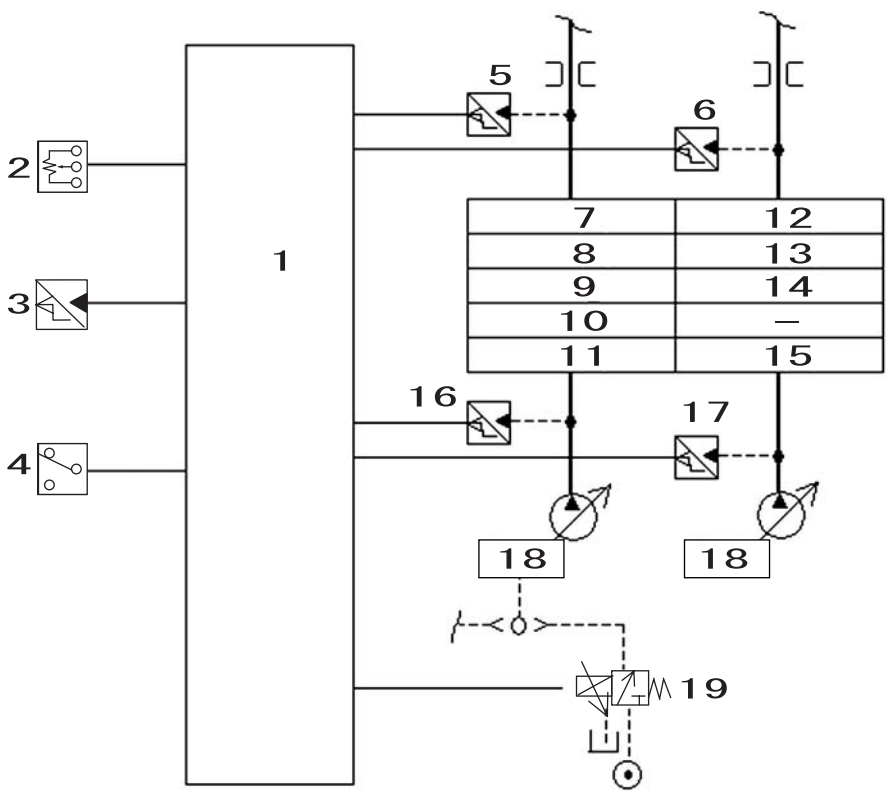

1	Computer
2	Throttle volume
3	Travel pressure sensor
4	Option 1 pressure switch
5	N1 pressure sensor
6	N2 pressure sensor
7	Arm (1)
8	Boom (2)
9	Swing
10	Option 1
11	Travel (left)
12	Arm (2)
13	Boom (1)
14	Bucket
15	Travel (right)
16	P1 pressure sensor
17	P2 pressure sensor
18	Regulator
19	P1 flow control proportional valve

https://truckmanualshub.com/

Operation explanation

[1] Operation conditions for swing speed limit control
Control is executed when all the conditions below are satisfied.

1) Swing alone full lever operation ・・・ Judged from the N1 and N2 negative control pressure sensors and P1 and P2 pressure sensors
2) Travel non-operation ・・・ Travel pressure sensor OFF
3) The work mode is SP mode.

[2] Control contents
(210X2)
The output current to the P1 flow control valve is set to the maximum of 350 mA and the P1 pump flow is held down to 44 Gal. (200 L) / min.
(240X2)
The output current to the P1 flow control valve is set to the maximum of 350 mA and the P1 pump flow is held down to 47.1 Gal. (214 L) / min.

[3] Swing speed limit end conditions

1) Travel operation ⇒Immediate end (to prevent drift)
2) Other attachment operation ⇒Gradual end (to reduce shock)
3) Option circuit operation

https://truckmanualshub.com/

Travel

1. Travel Speed Switchover

The travel motor tilt revolution angle is changed by switching the travel speed between low speed and high speed with the switch.
However, in high-speed mode, if the drive force becomes high due to the functioning of the travel motor itself, the tilt revolution angle is automatically switched to low speed.
After that, when the drive force becomes low, the slope automatically returns to high speed.

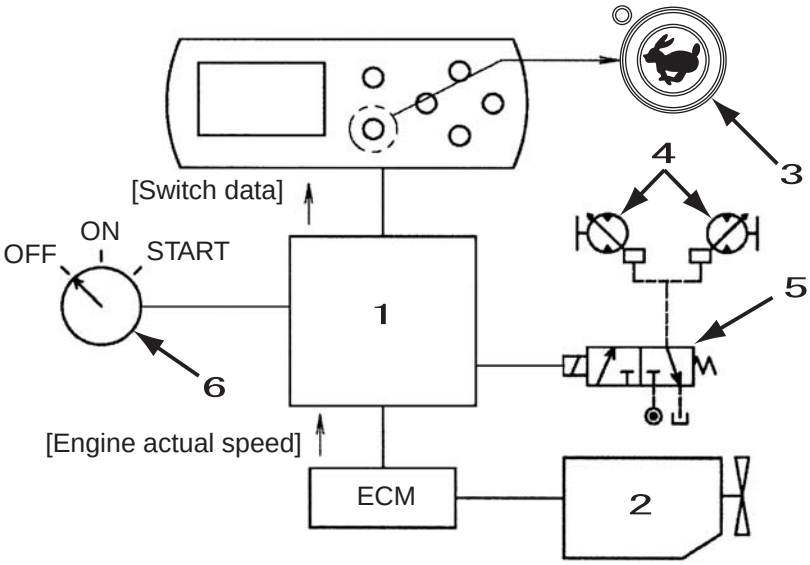

1	Computer
2	Engine
3	Travel high-speed select switch
4	Travel motor
5	Travel high-speed solenoid
6	Key switch

[1] Operation

1) When the key is ON, the speed becomes low speed. The previous travel mode is reset.
(If the service support operation is changed, it is possible to hold the previous data.)
2) Each time the travel high-speed switch is pressed, the speed is switched between low speed and high speed. During high speed, the LED at the top left of the switch lights up.
3) While the engine is stopped with the key ON, if the high speed travel switch is pressed, the solenoid does not operate. The LED lights up.
(To prevent the battery being run down)
4) In high-speed mode, the tilt revolution angle is automatically switched between low speed and high speed by the travel motor drive force.
However, the electrical control remains at high speed, the high-speed LED remains lit, and the solenoid remains ON.

https://trackmanualshub.com/

[2] Trouble mode
If an abnormality occurs in communications (CAN) or computer solenoid output, the speed is fixed to low speed. (The travel high-speed solenoid comes OFF.)

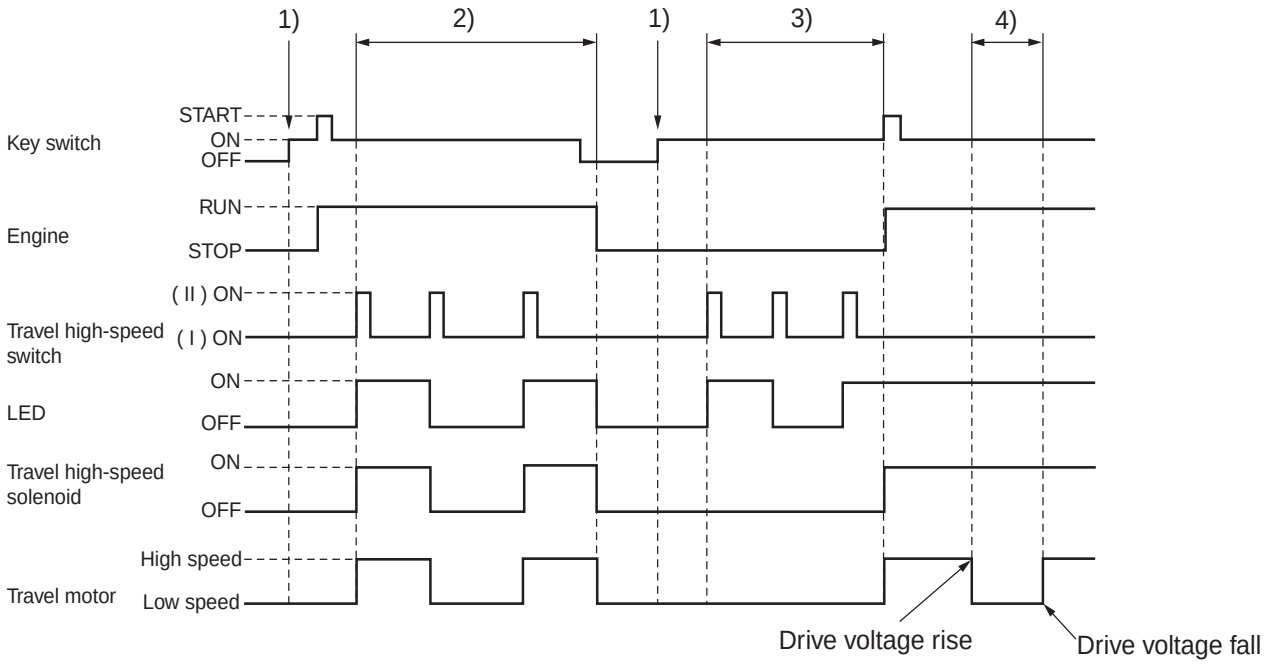

2. Travel Alarm

[1] Configuration

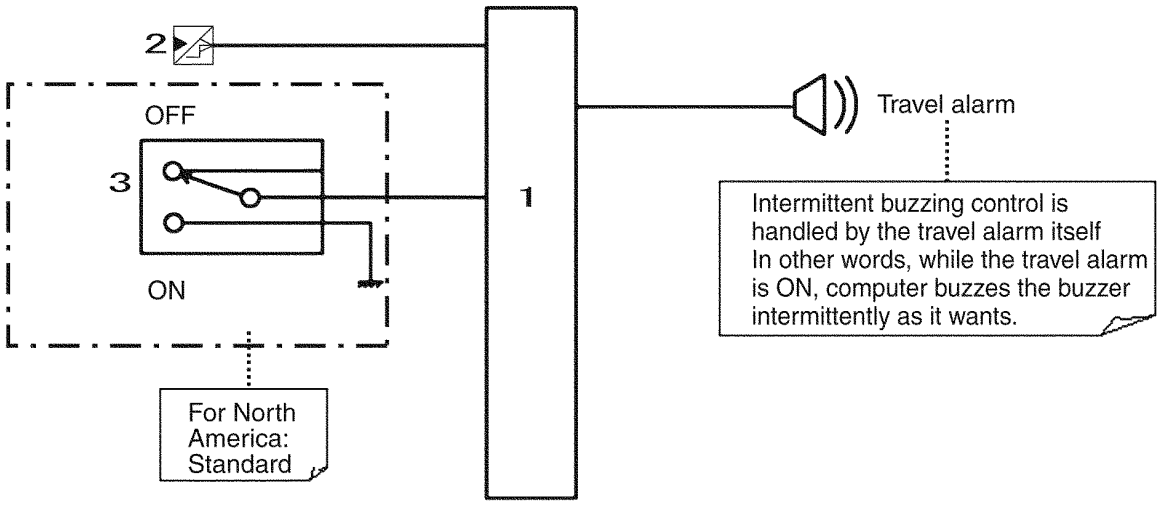

1	Computer	3	Travel alarm mode select switch (alternator)
2	Travel pressure sensor		

[2] Travel alarm (automatic stop)
When the travel pressure sensor comes ON due to travel operation, the travel alarm starts 1 Hz intermittent buzzing. This buzzing automatically stops after 10 seconds.

[3] Travel alarm (continuous buzzing)
When the travel alarm mode select switch is switched ON, the buzzer buzzes continuously during travel. (Function for North America only)

[4] Signals when key is ON
After the key is switched ON, the travel alarm sounds for 0.4 second as a signal.

https://truckmanualshub.com/

[5] Time chart

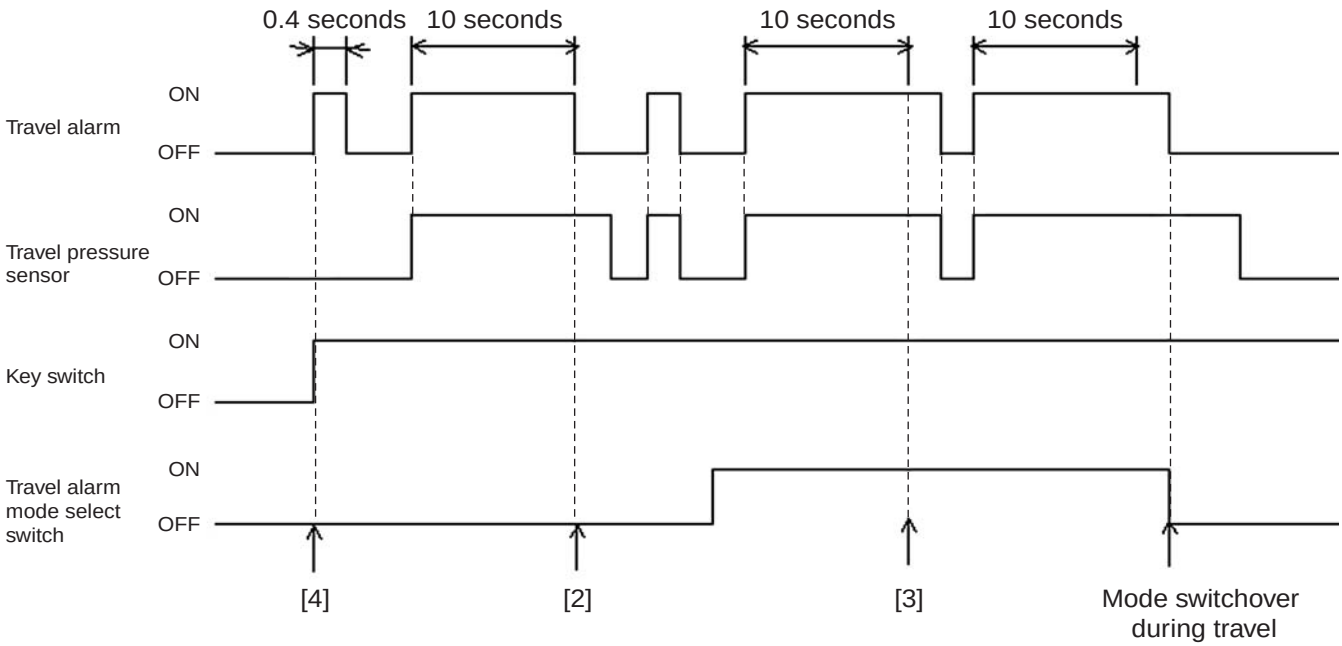

[6] Trouble mode
If trouble occurs in the travel pressure sensor, the machine goes into trouble mode and the travel alarm is always OFF.

E

https://truckmanualshub.com/

Valve Control

1. Lever Lock

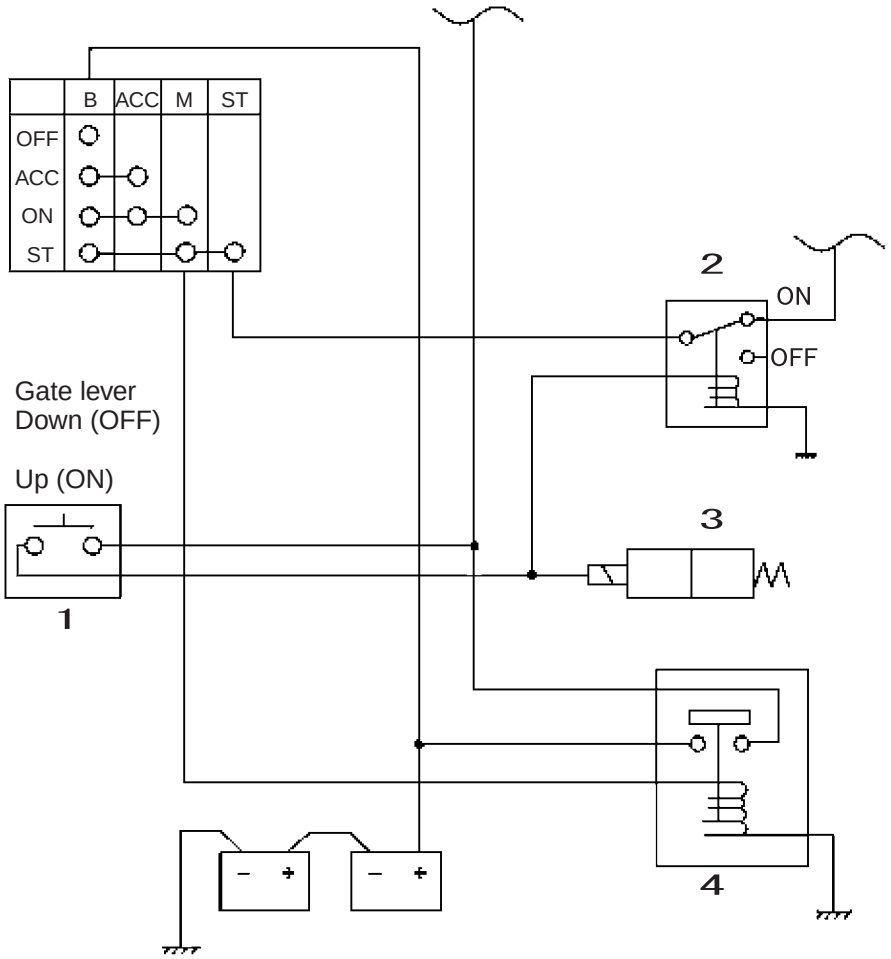

1	Gate lock limit switch	3	Lever lock solenoid
2	Starter cut relay	4	Battery relay

<Operation explanation>
When the battery relay is excited by the key being switched ON, the power enters the lever lock limit switch. When the gate lever is raised, the lever lock switch (limit switch) comes ON and the lever lock solenoid is operated. (For details on neutral start control, see Neutral Start in Explanation of Functions and Operations.)

https://truckmanualshub.com/

2. Solenoid Sticking Prevention

[1] Target solenoid

- Travel high-speed switchover solenoid
- Boost solenoid
- Option switchover solenoid
- Fan reverse solenoid (only for models with hydraulic drive fan)
- Free swing solenoid
- Bucket lock solenoid (only liftcrane application machines)

  * Because the swing brake, power save solenoid, and electromagnetic proportional solenoid go ON and OFF frequently in regular work, they are not subject to control.

[2] Operation

When key ON, switched ON / OFF for 0.25 second.

After that, control is normal control. Control ends before the engine starts, so the machine does not operate accidentally.

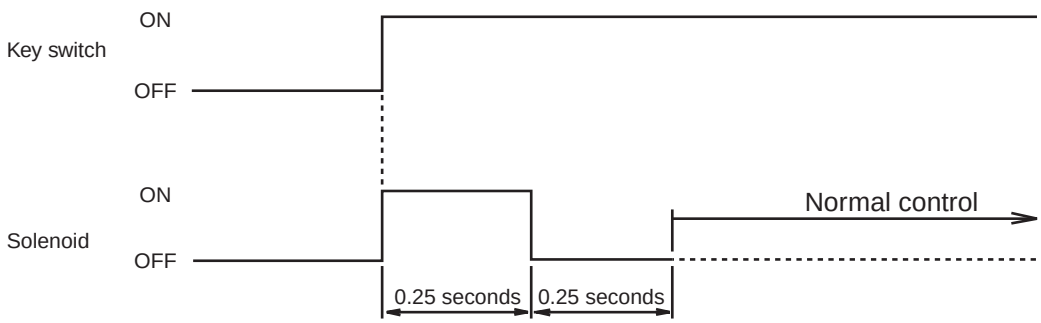

https://trackmanualshub.com/

3. Pressure Boost Control

[1] Configuration

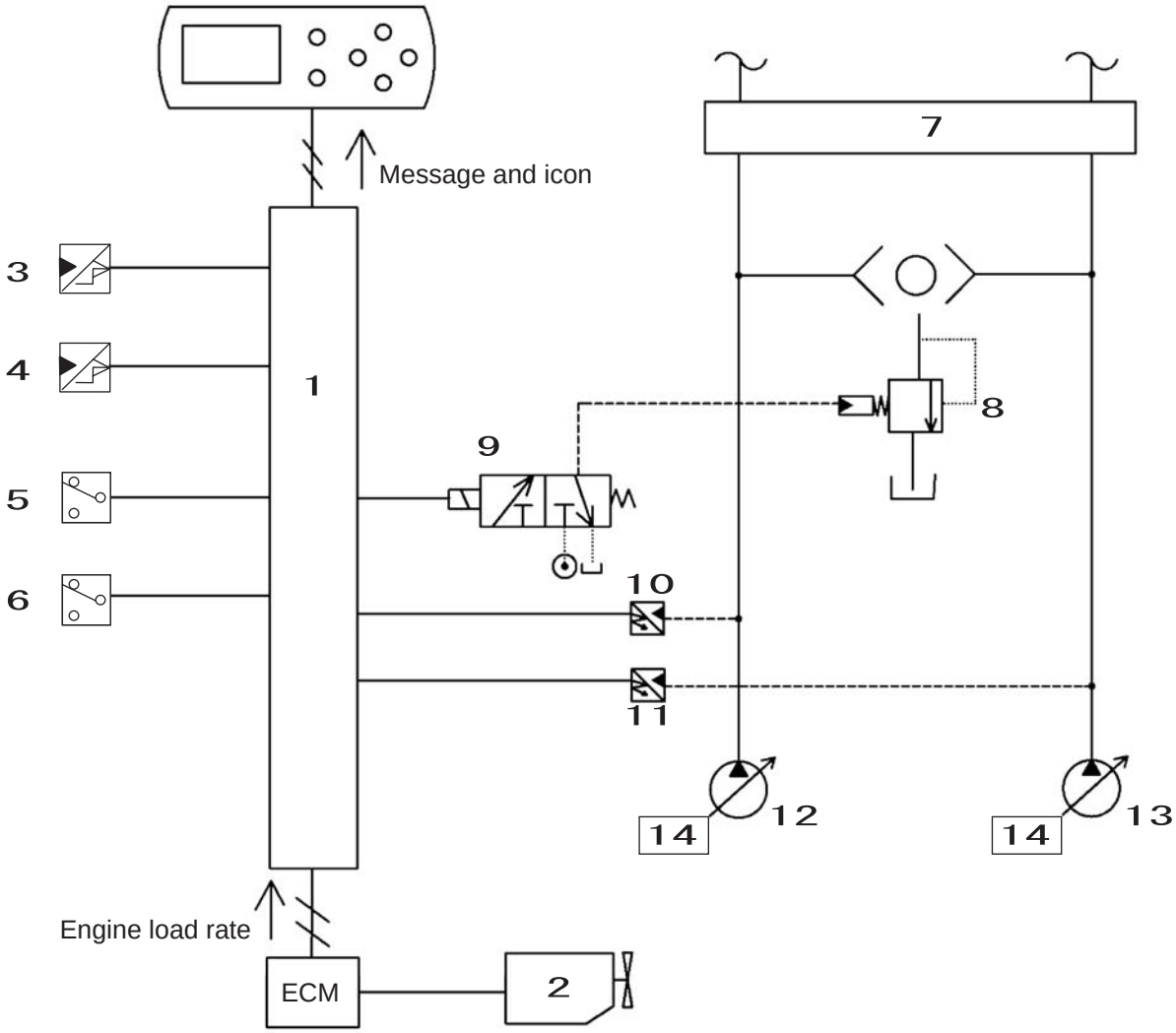

1	Computer	6	Second option line pressure switch	11	P2 pressure sensor
2	Engine	7	Control valve	12	Pump 1
3	Upper side pressure sensor	8	Main relief valve	13	Pump 2
4	Travel pressure sensor	9	Boost solenoid	14	Regulator
5	Option line pressure switch	10	P1 pressure sensor		

[2] During upper side operation (upper side pressure sensor = ON), the next time the high-load conditions are met, the boost solenoid valve on the 5-way solenoid valve comes ON, and the main relief valve pressure rises from 4975 PSI (34.3 MPa) to 5337 PSI (36.8 MPa).
<Conditions>
When the engine load ratio rises and the P1 or P2 pump pressure is boosted.

[3] Auto power boost (ended by time restriction)
When the work mode is SP or H, the boost continues a maximum of 8 seconds, then is automatically ended (boost solenoid = OFF). When the work mode is Applied Power, this time restriction is eliminated and the pressure boost is always available.

[4] Auto power boost (ended by operation stop)
Even before the time limit for auto power boost, if the upper side pressure sensor goes OFF, the boost is ended.

[5] Boost prohibition
During travel (travel pressure sensor = ON) or the breaker is in use (option line pressure switch = ON and
breaker mode), the boost is not used. (Actuator protection)

https://truckmanualshub.com/

[6] Auto power boost setting
Auto power boost can be switched ON / OFF and boost for breaker operation enabled / disabled with service support operation.

[7] During boosting, icon is displayed on the monitor.

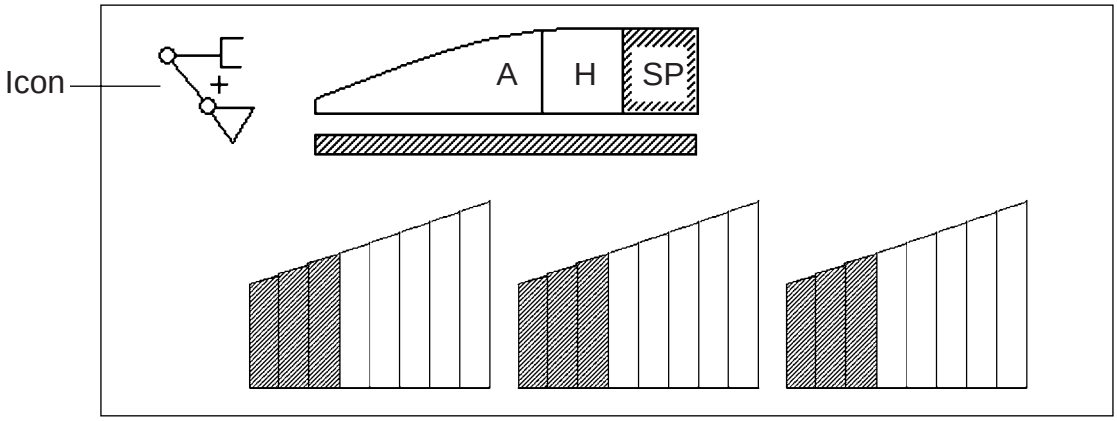

BE06002–002

[8] Time chart (when work mode = SP or H)

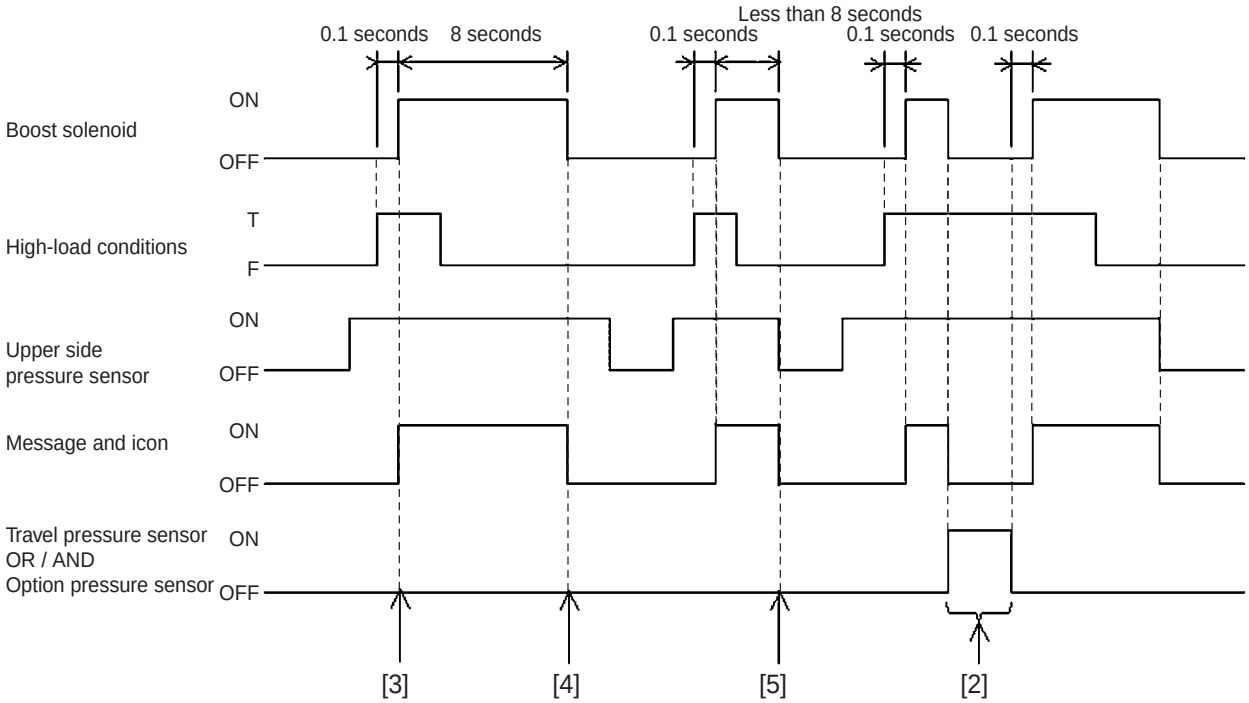

[9] Trouble mode
If trouble occurs in an input (upper side pressure sensor / travel pressure sensor), output (boost solenoid) or communications (CAN), the system goes into trouble mode. In trouble mode, the boost solenoid is fixed to OFF.

* Even if trouble occurs in UART communications , the system does not go into trouble mode.
* Trouble in the (2nd) option line pressure switch cannot be detected.

[10] Recovery from trouble mode
Even if the trouble is recovered from, trouble mode continues.

https://truckmanualshub.com/

Monitor Control

1. Bar Graph (coolant temperature gauge, oil temperature gauge, fuel gauge)

(1) Coolant temperature gauge

[1] Configuration

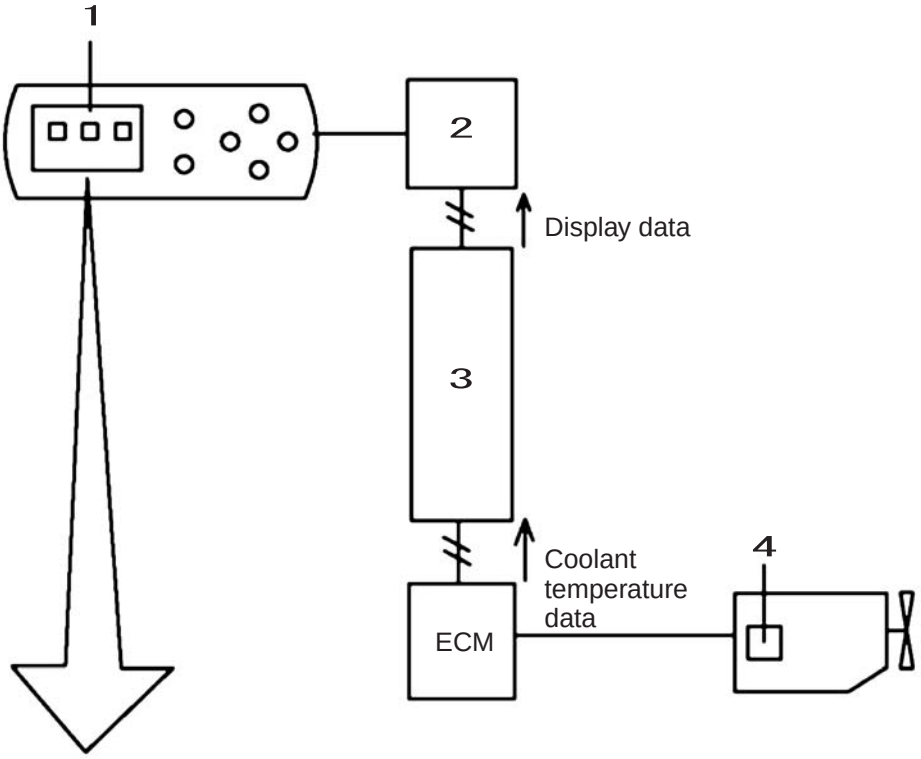

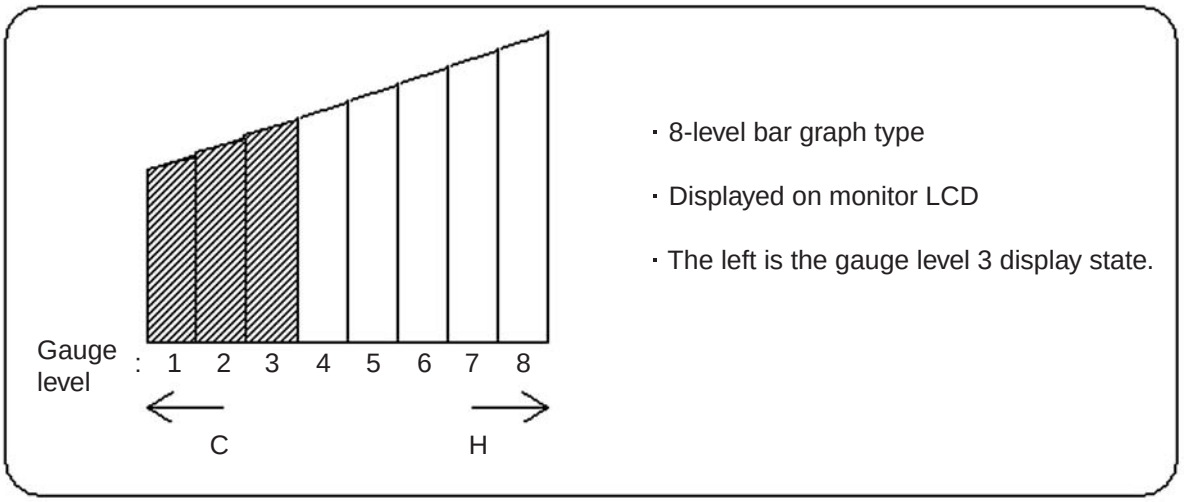

1	Coolant temperature gauge	3	Computer
2	Monitor	4	Coolant temperature sensor

[2] Operation summary

The ECM reads the coolant temperature from the coolant temperature sensor installed on the engine and send to Computer through CAN communications. After Computer receives the coolant temperature, it judges the gauge level, and sends the display data to the monitor with UART communications.

https://truckmanualshub.com/

[3] Gauge coolant temperature
The gauge level is judged based on the figure below.

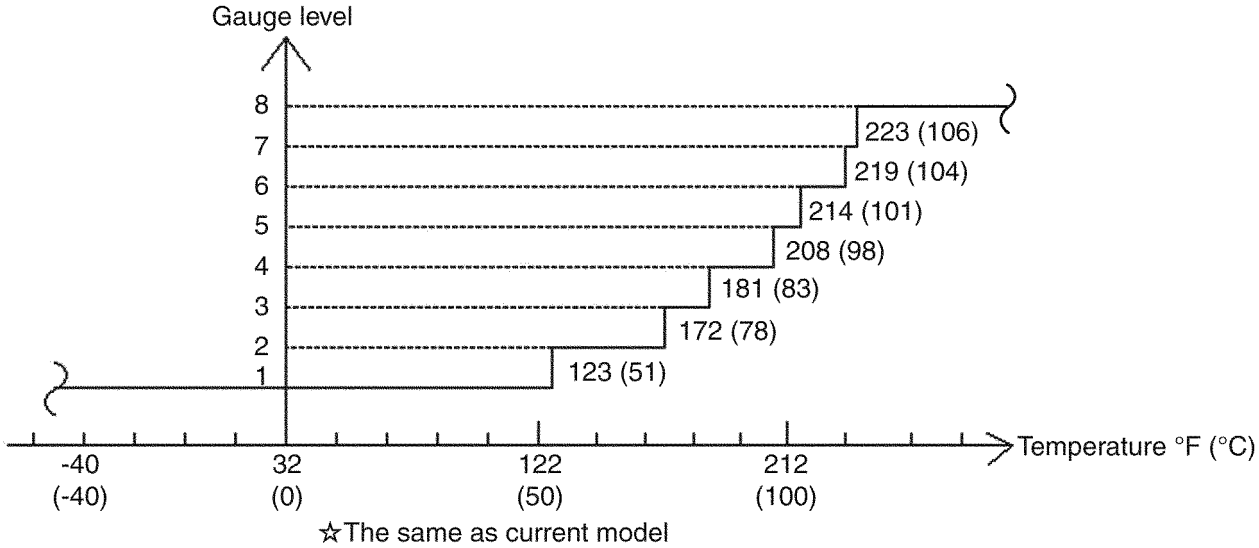

☆The same as current model

[4] Preventing flickering
When the temperature moves up or down near the gauge level fluctuation threshold (for example 123.8 ºF (51 °C)), the gauge goes on and off repeatedly causing flickering. In order to prevent that, the gauge level is judged using the temperature (judgment coolant temperature) after the following processing.

- Judgment coolant temperature = Average of the coolant temperatures acquired the past 32 times
- Coolant temperature acquisition period = 1 second
- Bar graph update period = 32 seconds (updates when the 32nd coolant temperature acquired)

E

https://truckmanualshub.com/

[5] Trouble mode

If trouble occurs in the coolant temperature sensor or CAN bus, the bar graph itself is not displayed.

1) If there is a short, the bar graph display is immediately ended.
2) For a disconnection, the display goes off 3 minutes after the engine starts.

If trouble occurs in UART communications (computer →monitor), the display is fixed at the last state sent.
When the trouble is recovered from, the display returns to normal.
For a disconnection, when the key is switched OFF more than three minutes after the engine starts, then ON again, the display is recovered.

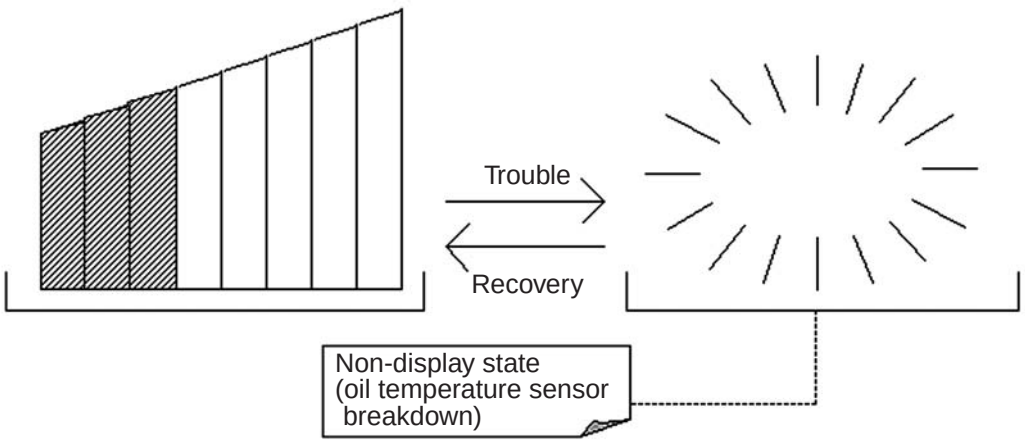

☆) Coolant temperature acquisition during trouble

If a meaningless coolant temperature were acquired and the processing in [4] carried out, display upon recovery would be strange. In order to prevent this, the coolant temperature is not acquired during a coolant temperature sensor or CAN bus trouble.

[6] Message display

When the gauge level reaches 8, "OVERHEAT" is displayed on the monitor and the buzzer buzzes.

https://truckmanualshub.com/

(2) Oil temperature gauge

[1] Configuration

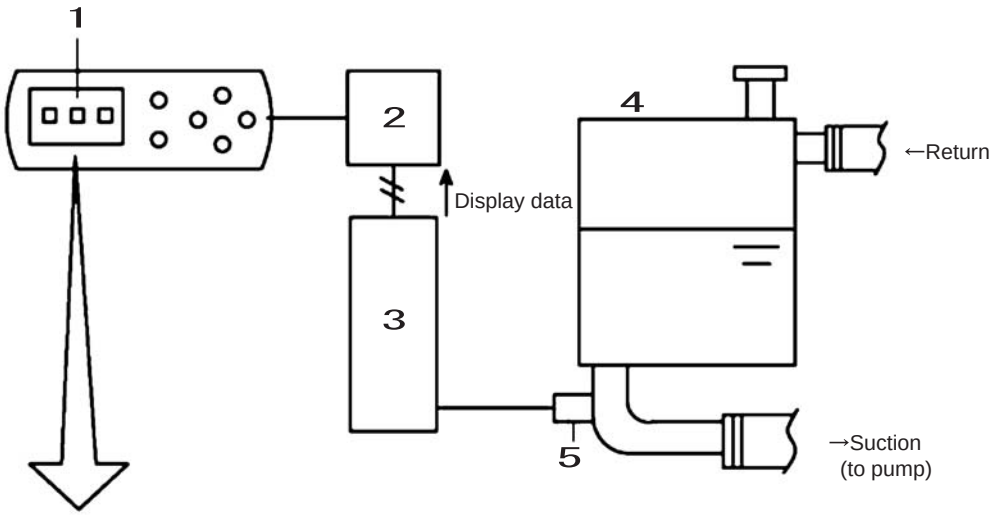

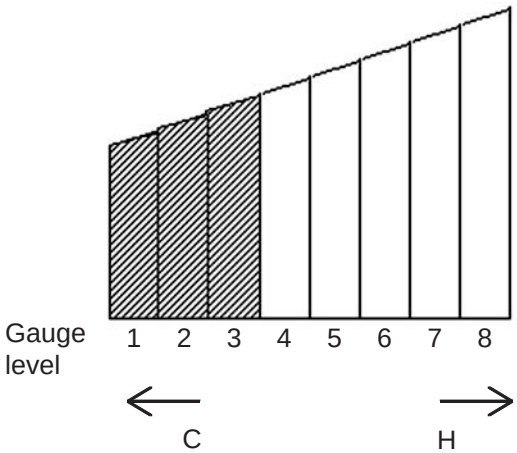

- 8-level bar graph type
- Displayed on monitor LCD
- The left is the gauge level 3 display state.

1	Oil temperature gauge	4	Hydraulic oil tank
2	Monitor	5	Oil temperature sensor
3	Computer		

[2] Operation summary

Computer reads the oil temperature from the oil temperature sensor installed in the hydraulic oil and judges the gauge level. The gauge level is sent to the monitor with UART communications.

https://trackmanualshub.com/

[3] Gauge and oil temperature
The gauge level is judged based on the figure below.

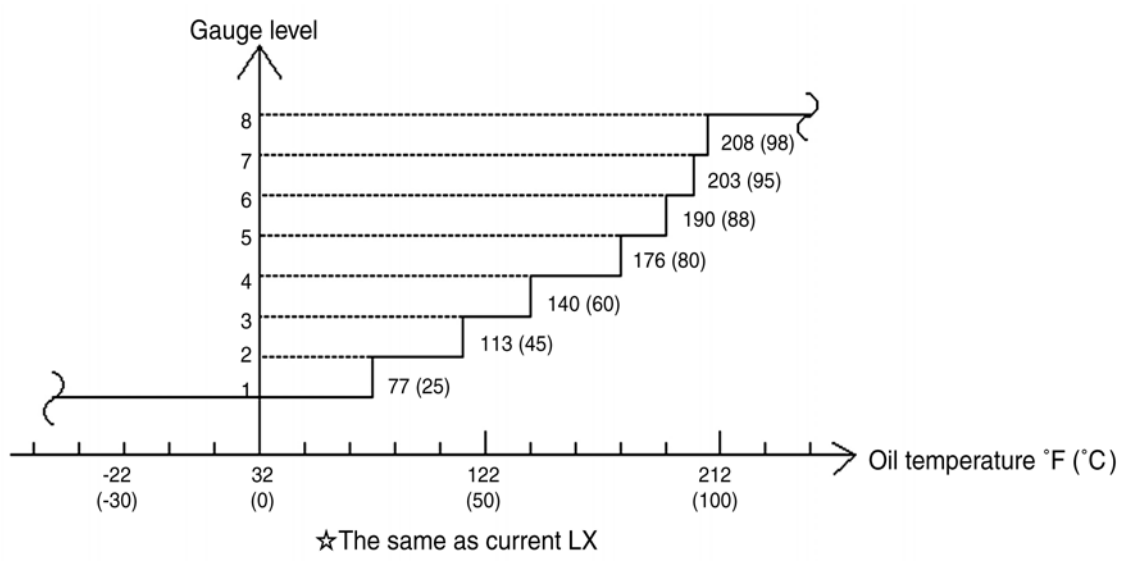

[4] Preventing flickering
When the temperature moves up or down near the gauge level fluctuation threshold (for example
77 ºF (25 ° C)), the gauge goes on and off repeatedly causing flickering. In order to prevent that, the gauge level is judged using the temperature (judgment oil temperature) after the following processing.

- Judgment oil temperature = Average of the oil temperatures obtained the past 32 times
- Oil temperature acquisition period = 1 second
- Bar graph update period = 32 seconds (updates when the 32nd oil temperature acquired)

[5] Trouble mode
If trouble occurs in the oil temperature sensor, the bar graph itself is not displayed. (Only for trouble due to short)
If trouble occurs in UART communications (send: computer → monitor), the display is fixed at the last state sent.
When the trouble is recovered from, the display returns to normal.

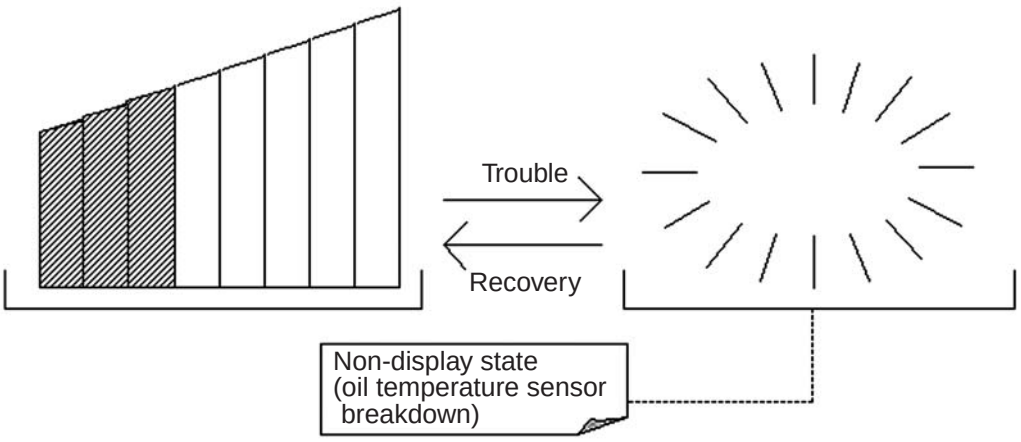

☆) Oil temperature acquisition during trouble
If a meaningless oil temperature were acquired and the processing in [4] carried out, display upon recovery would be strange. In order to prevent this, the oil temperature is not acquired
during an oil temperature sensor trouble.

[6] Message display

https://truckmanualshub.com/

When the gauge level reaches 8, "OVERHEAT" is displayed on the monitor and the buzzer buzzes.

https://trackmanualshub.com/

(3) Fuel gauge

[1] Configuration

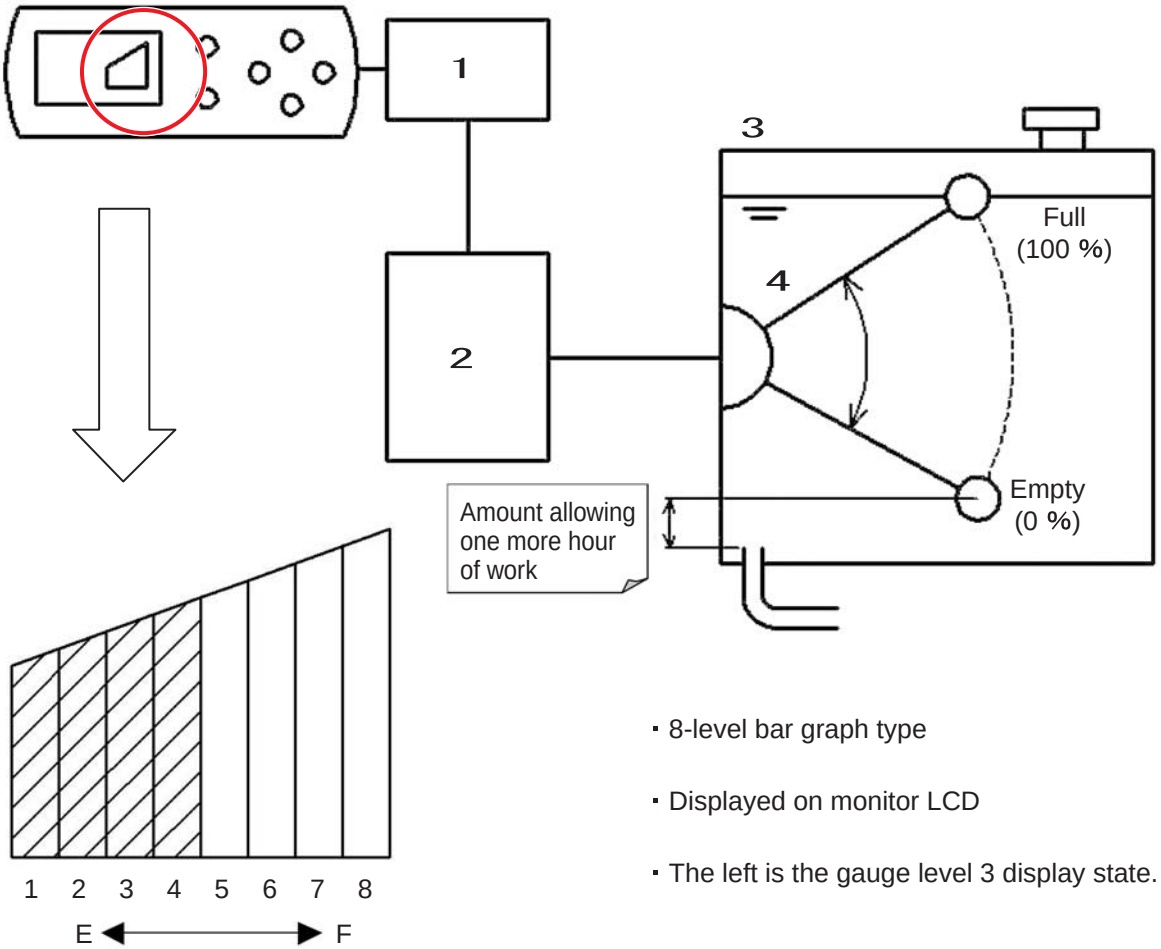

- 8-level bar graph type
- Displayed on monitor LCD
- The left is the gauge level 3 display state.

1	Monitor	3	Fuel tank
2	Computer	4	Fuel sensor

[2] Operation summary

Computer reads the fuel level from the fuel sensor installed in the fuel tank and judges the gauge level.

The gauge level is sent to the monitor with UART communications.

https://truckmanualshub.com/

[3] Relationship between gauge level and lever angle

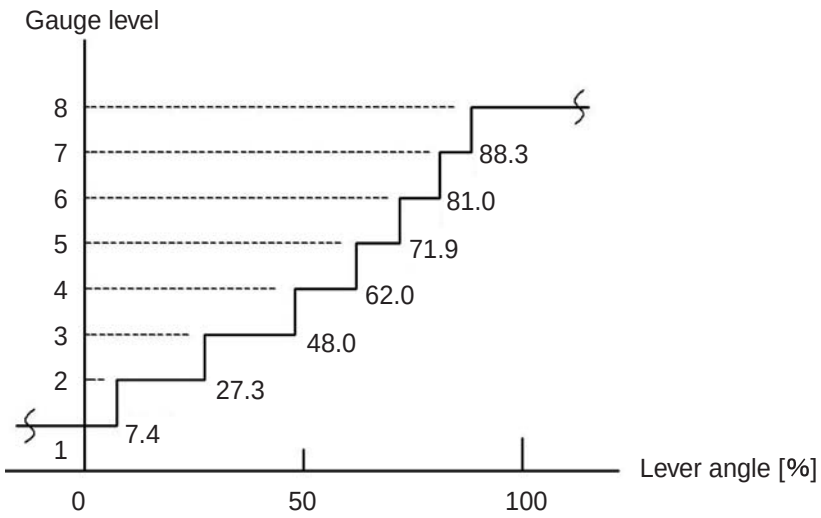

The figures in parentheses ( ) are the fuel sensor lever angles.

Model	Rated [L]	Gauge level and fuel level [L]								Reserve [L]
		8	7	6	5	4	3	2	1	
		(100% to)	(88.3% to)	(81% to)	(71.9% to)	(62% to)	(48% to)	(27.3% to)	(7.4% to)	(0.0%)
210X2	410	407.5 to	358.4 to	331.5 to	295.9 to	255.0 to	196.5 to	196.5 to	116.3 to	37.9
240X2	↑	↑	↑	↑	↑	↑	↑	↑	↑	↑

[4] Message display
When the gauge level reaches 1, "LOW FUEL" is displayed on the monitor and the buzzer buzzes. (See "Message Display List".)

[5] Preventing flickering
When the fuel surface in the tank shakes and the fuel sensor lever angle moves up or down near the gauge level fluctuation threshold (for example 7%), the gauge goes on and off repeatedly causing flickering.
In order to prevent that, the gauge level is judged using the lever angle (judgment lever angle) after the following processing.

- Judgment lever angle = Average of the lever angles obtained the past 32 times
- Lever angle acquisition period = 1 second
- Bar graph update period = 32 seconds (updates when the 32nd lever angle acquired)

[6] Trouble mode
If trouble occurs in the fuel sensor, the bar graph itself is not displayed.
If trouble occurs in UART communications, the display is fixed at the last state sent.
(Send: Computer → Monitor)
When the trouble is recovered from, the display returns to normal.

[7] Lever angle acquisition during trouble
If lever angle were acquired and the processing in [5] carried out, display upon recovery would not be normal.
In order to prevent this, the lever angle is not acquired during a fuel sensor trouble.

https://truckmanualshub.com/

Accessories

1. Horn

Basic operation

[1] When the horn switch is pressed, the horn is driven via a relay.

[2] When the volume select switch is switched ON, the LED indicator lights up and only the left horn sounds. (Horn volume down)
The volume select switch state is retained even when the key is switched OFF.(The previous data is held.)

[3] Communications with computer
When this switch is pressed, the signal is first sent to the computer and processed.
Then, the drive command is sent to the monitor and the monitor drives the right horn (R) relay.

[4] Trouble mode
If there is an error in UART communications, the monitor goes into trouble mode.
In trouble mode, the monitor carries out the operation in [2] on its own without receiving commands from the computer.
However, the previous data is not held. (The monitor always starts up with normal volume.)
When the error is recovered from, trouble mode ends too and the monitor returns to normal mode.

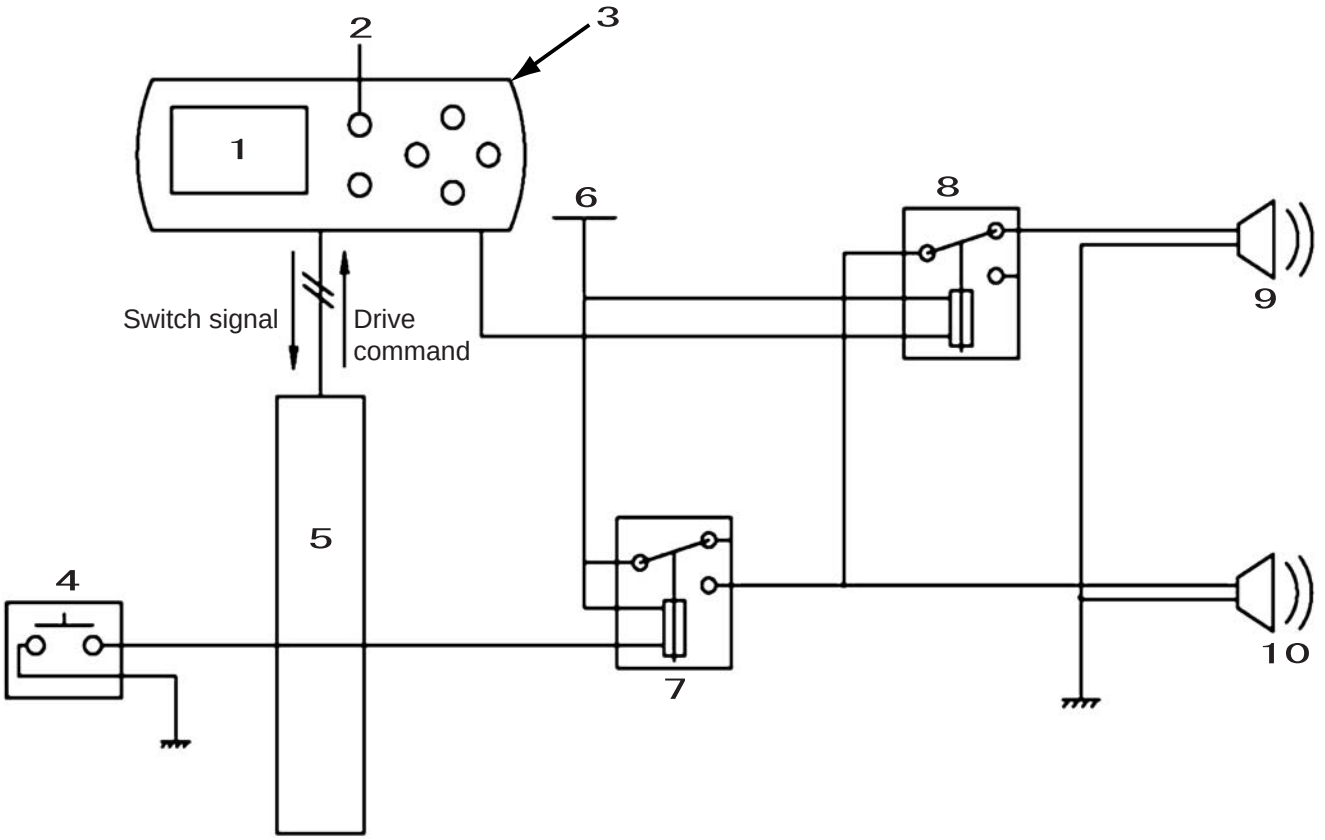

1	Monitor panel	6	Key switch
2	Horn volume select switch	7	Horn (L) relay
3	(Swith LED indicator)	8	Horn (R) relay
4	Horn switch	9	Horn (R)
5	Computer	10	Horn (L)

https://truckmanualshub.com/

2. Working Light

Basic operation

[1] When turning the key to ON, always start with the working light OFF. (Previous data reset)

[2] Each time the working light switch is pressed, the working light is switched between ON and OFF. (Momentary)
When this light is ON, the LED indicator lights up.

[3] Communications with computer
When the working light switch is pressed, the signal is first sent to the computer and processed.
Then, the light command is sent to the monitor and the monitor drives the relay.

[4] Trouble mode
If there is an abnormality occurs in UART communications, the monitor goes into trouble mode.
In trouble mode, the monitor carries out the operation in [2] on its own rather than commands from the computer.
When the communications error is recovered from, trouble mode is exited and the monitor returns to normal mode.

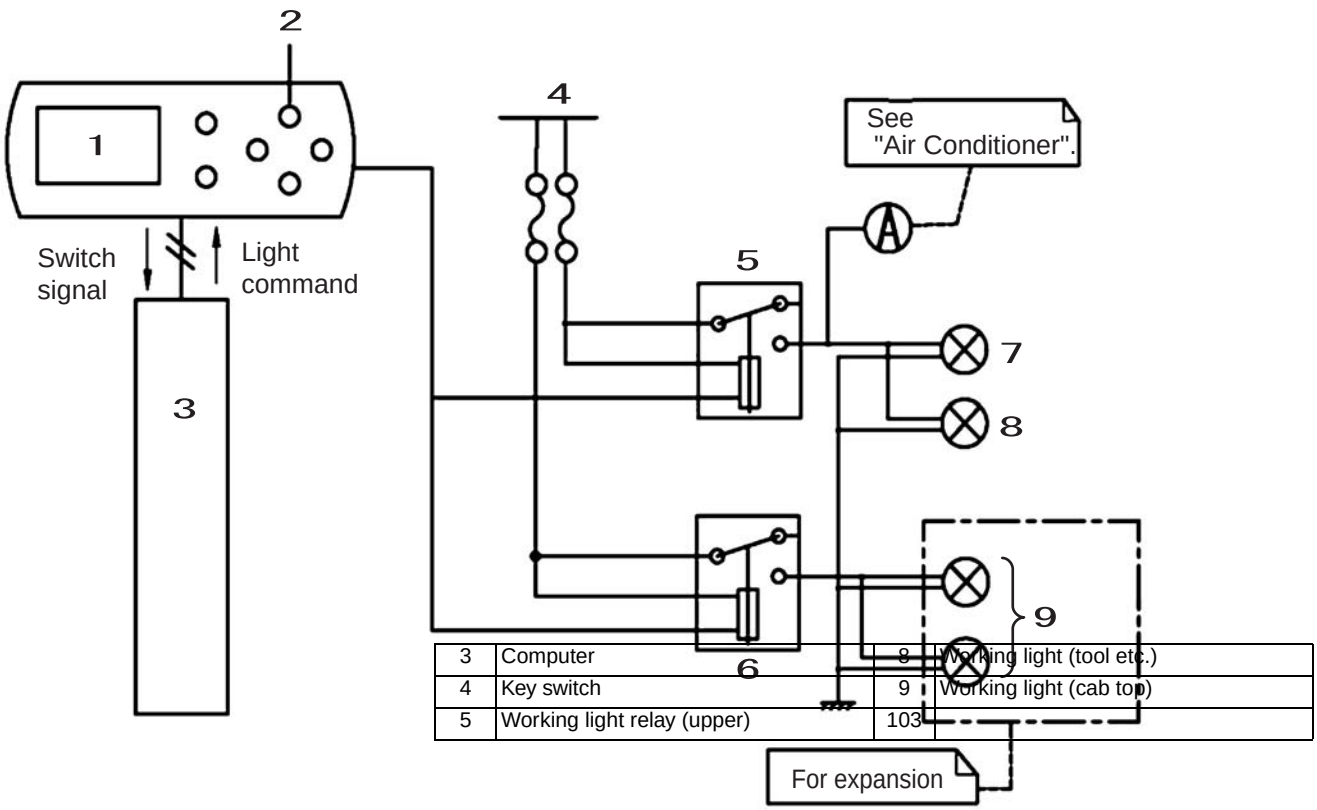

3	Computer	8	Working light (tool etc.)
4	Key switch	9	Working light (cab top)
5	Working light relay (upper)	103	

1	Monitor panel	6	Working light relay (cab)
2	Working light switch (with LED indicator)	7	Working light (boom)

https://truckmanualshub.com/

3. Wiper & Washer

[1] Configuration

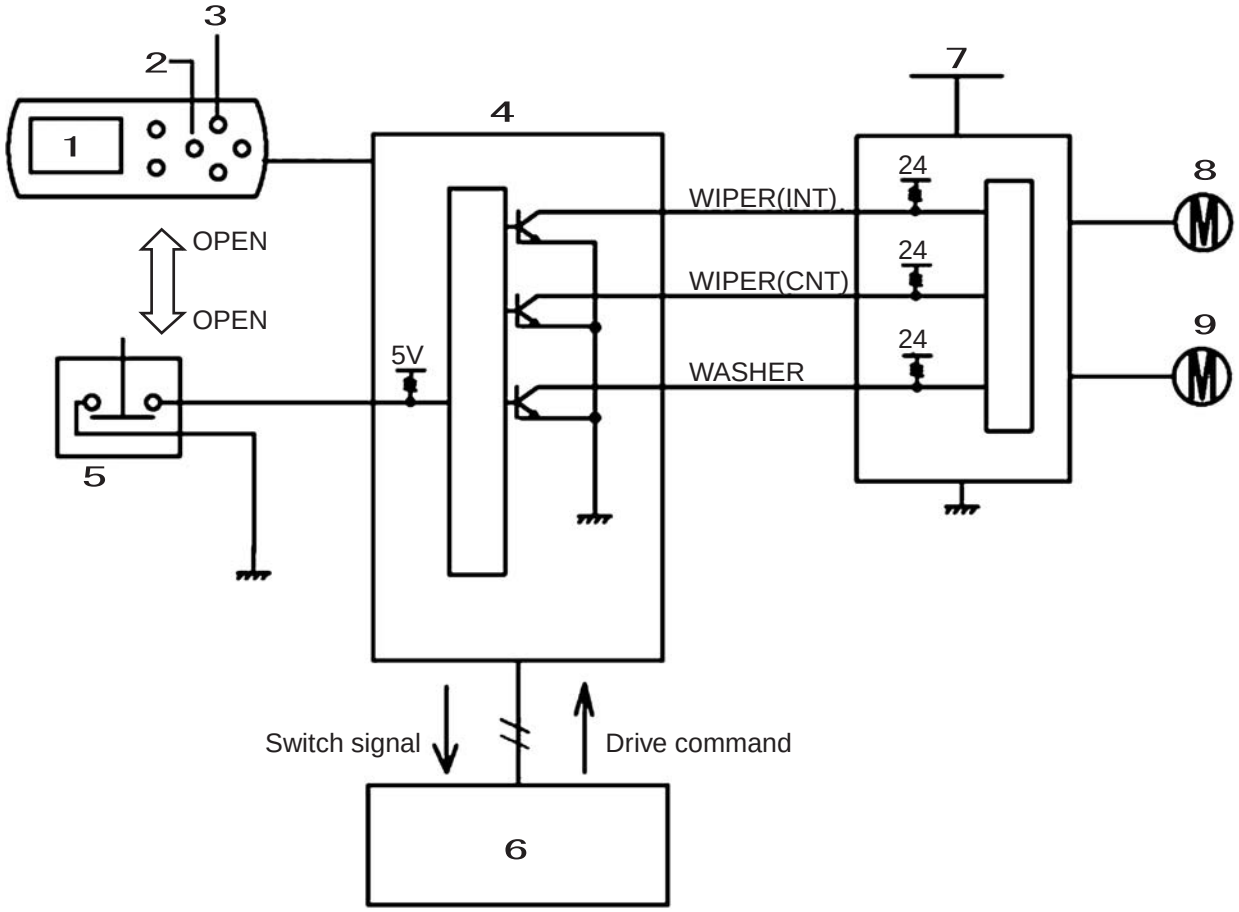

1	Monitor panel	4	Monitor	7	Key switch
2	Washer switch	5	Front window limit SW	8	Wiper motor
3	Wiper switch (with LED indicator)	6	Computer	9	Washer motor

[2] Wiper basic operation

When the wiper switch is pressed, it switches to the next state in the order: intermittent operation → continuous operation → OFF → intermittent. In intermittent operation, the I LED is lit and in continuous operation, the II LED lights up. (When the wipers are OFF, both are OFF.) When turning the key ON, always start from OFF. (Previous data reset)

https://truckmanualshub.com/

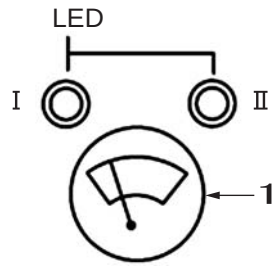

1	Wiper switch

E

https://truckmanualshub.com/

[3] Washer basic operation
While the washer is pressed, the washer operates.

[4] Wipers linked with washer
While the washer switch is pressed, after 0.5 second, the washer starts to operate linked with the wipers.
When the washer switch is released, the washer stops, and after two wipes, the wipers stop too.

1) Auto rise up
Even during wiper operation, if the key is turned OFF, the wipers are automatically stopped and retracted.

2) Overload prevention
If the blades are locked, the monitor output is stopped.

[5] Front window open detection
If the front window is opened while the wipers or washer are operating, it is stopped.
The operations of [2] and [3] are not carried out while the front window is open.

https://truckmanualshub.com/

[6] Wiper computer duty
The wiper computer is responsible for [2] - [4]. [5] is provided by the monitor / computer detecting the front window being opened and the output to the wiper computer being switched OFF.

[7] Computer duty
Computer receives switch signals from the monitor through UART communications (wiper switch, washer switch, front window limit switch).
This signal is processed by Computer and the three ports that control the wiper computer (WIPER (INT), WIPER (CNT), and WASHER) are controlled as in the following time chart.

[8] Time chart

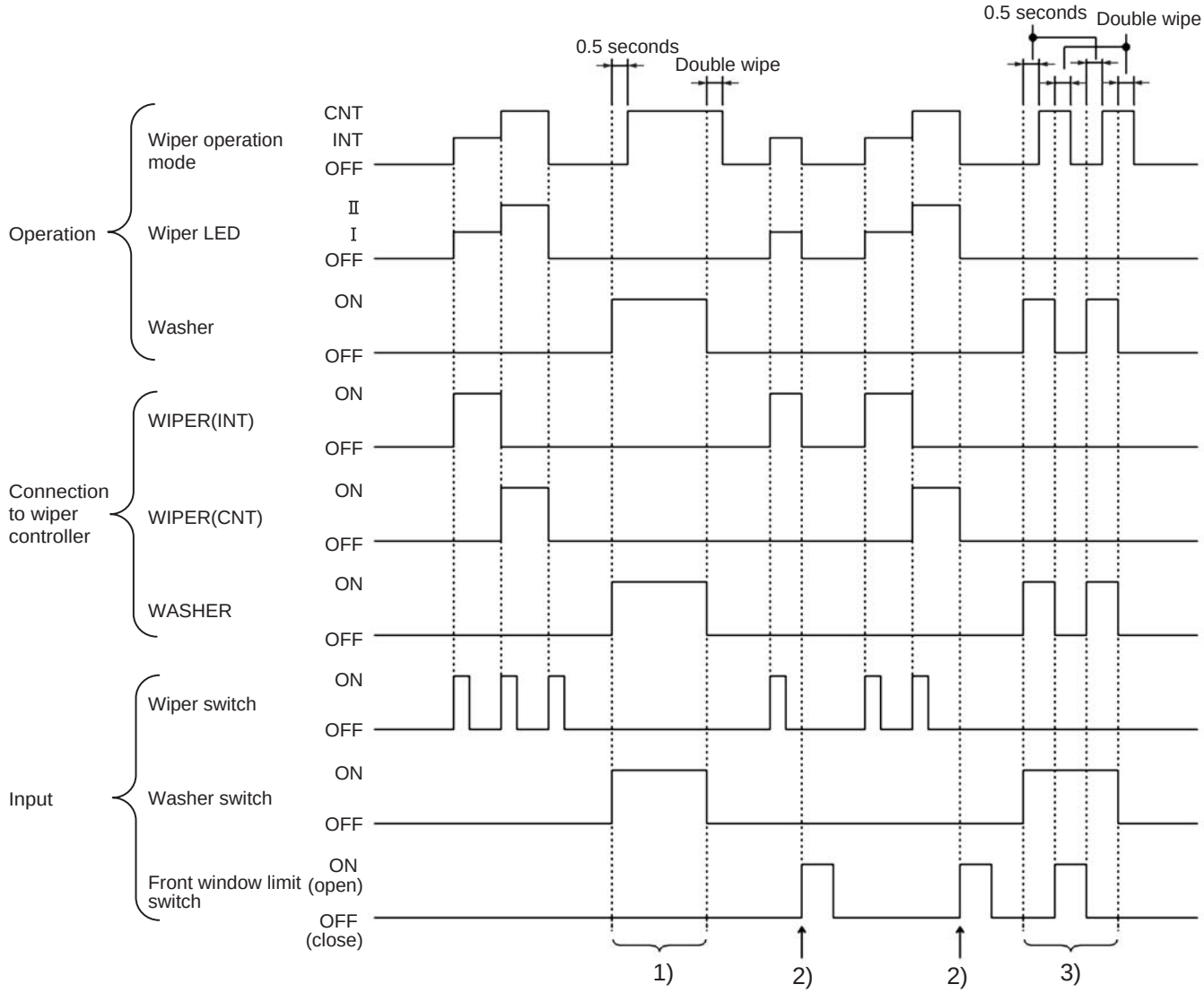

1) During washer operation, wiper operations are handled automatically by the wiper computer even if there is no output to WIPER (INT) or WIPER (CNT).
2) Wiper stop by front window open detection
3) Washer-linked wiper stop by front window open detection

[9] Trouble mode
If there is an error in UART communications, the monitor cannot receive drive commands from Computer. At this time, the monitor goes into trouble mode and executes the same control as for on its own as in [8].
When the UART communications error is recovered from, the monitor recovers from trouble mode and follows the drive commands from Computer.

https://trackmanualshub.com/

4. Room Lamp

[1] Configuration

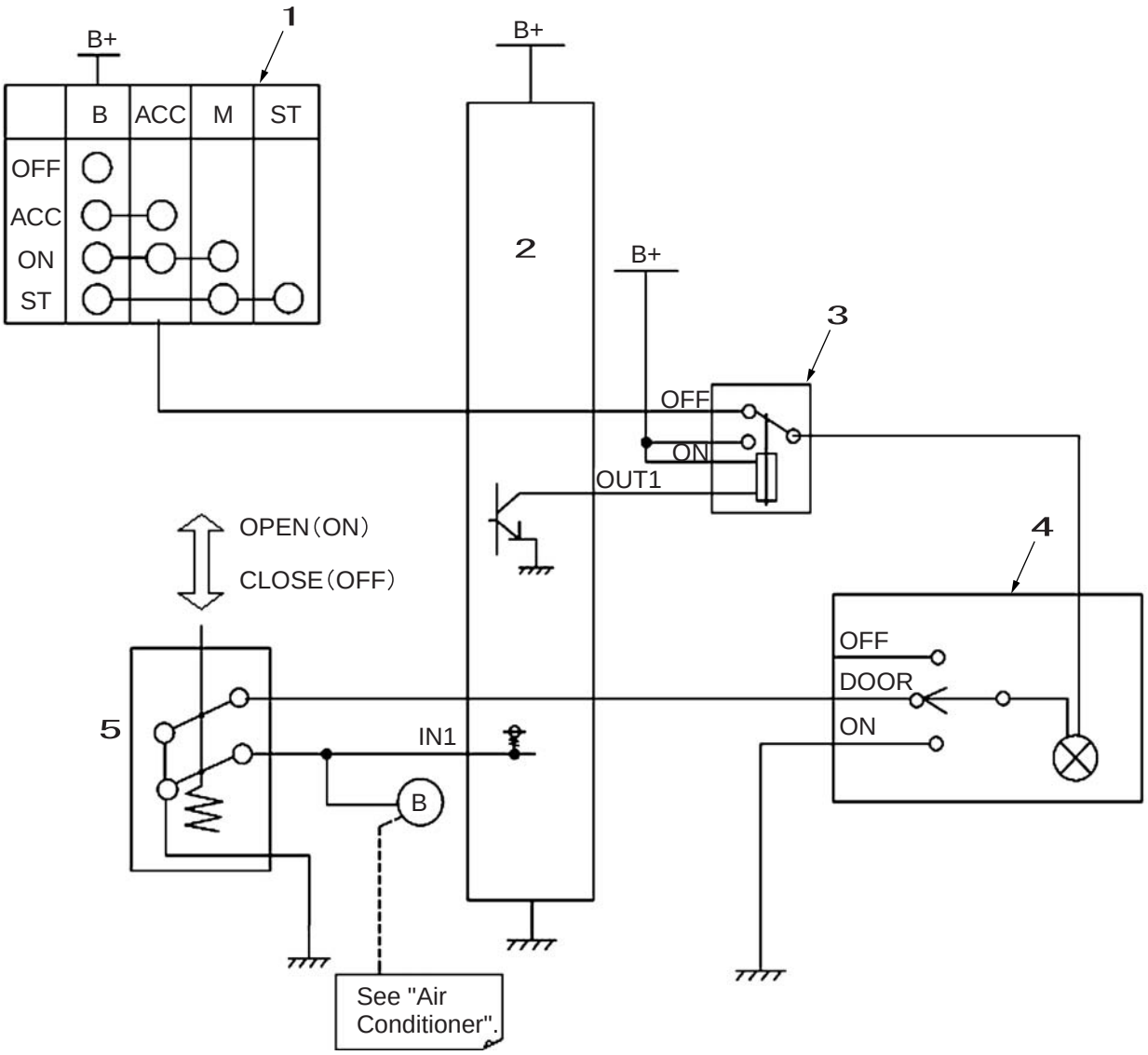

1	Key switch	4	Room lamp
2	Clock unit	5	Door limit switch
3	Room lamp relay		

- The clock unit is not connected with Computer or Computer B (Not used by LBX) and controls the room lamp relay on its own.
- For the Ⓑ connection destination, see "Air Conditioner".
- The clock unit is connected to the backup power supply and continues to operate even if the key is switched OFF.

[2] Door link

When the room lamp switch is set to the DOOR position, the lamp lights when the door is open and goes out when the door is closed.

[3] Auto lamp off

In [2], in order to prevent the battery from being run down, the room lamp goes out 30 seconds after the door is opened. However, this function only works when the key switch is OFF. If it is ACC or ON, auto lamp off does not work.(Because even if the room lamp relay is OFF, power is supplied from ACC.)

The only purpose of this auto lamp off function is to prevent the battery from being run down if the door is left open with the key OFF.

https://truckmanualshub.com/

[4] Time chart
The time chart shows how the function in [3] works. The room lamp switch is set to DOOR.

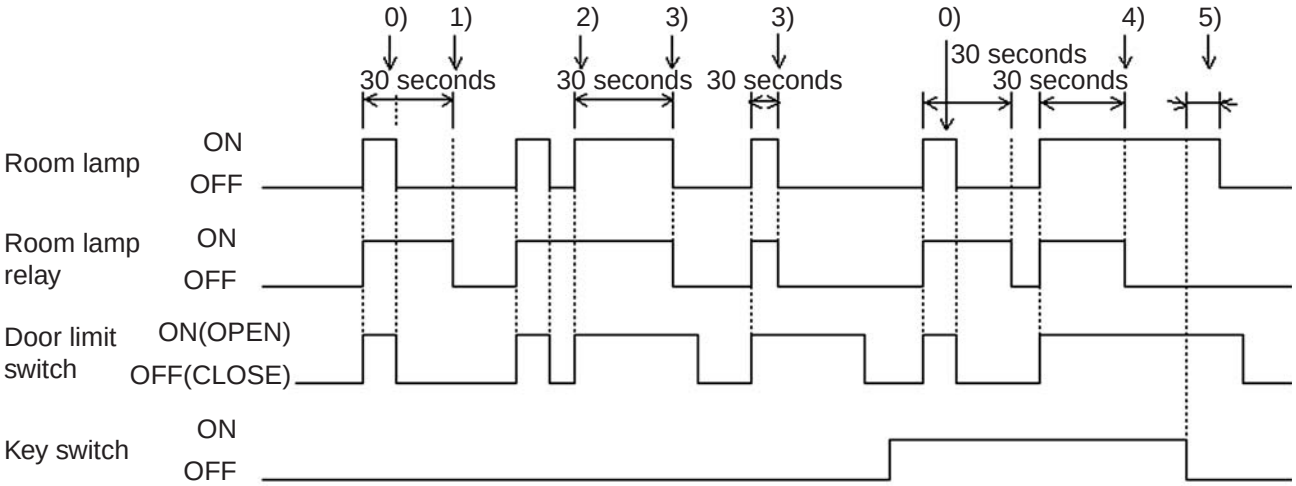

0) Door linked room lamp
1) Even after the door is closed, the room lamp relay is ON for 30 seconds.
2) 30 seconds is counted from the last time the door was closed.
3) After 30 seconds, the lamp goes off automatically.
4) Auto lamp off does not work if the key switch is ON or ACC.
5) When the key is switched OFF, the lamp goes out. (After power-cut delay)

[5] Trouble mode
Since the clock unit does not have a trouble detection function for either input (IN1) or output (OUT1), it does not go into trouble mode.

[6] Time chart
This shows the operation when the room lamp switch is ON.

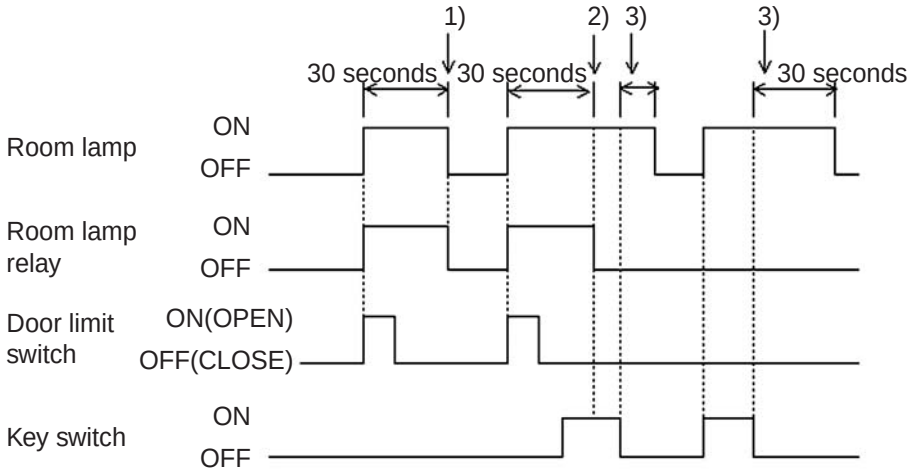

1) If the key is OFF, the lamp goes out automatically after 30 seconds.
2) The door is open, so it does not go out.
3) Power-cut delay

https://trackmanualshub.com/

5. Radio Mute

[1] Configuration

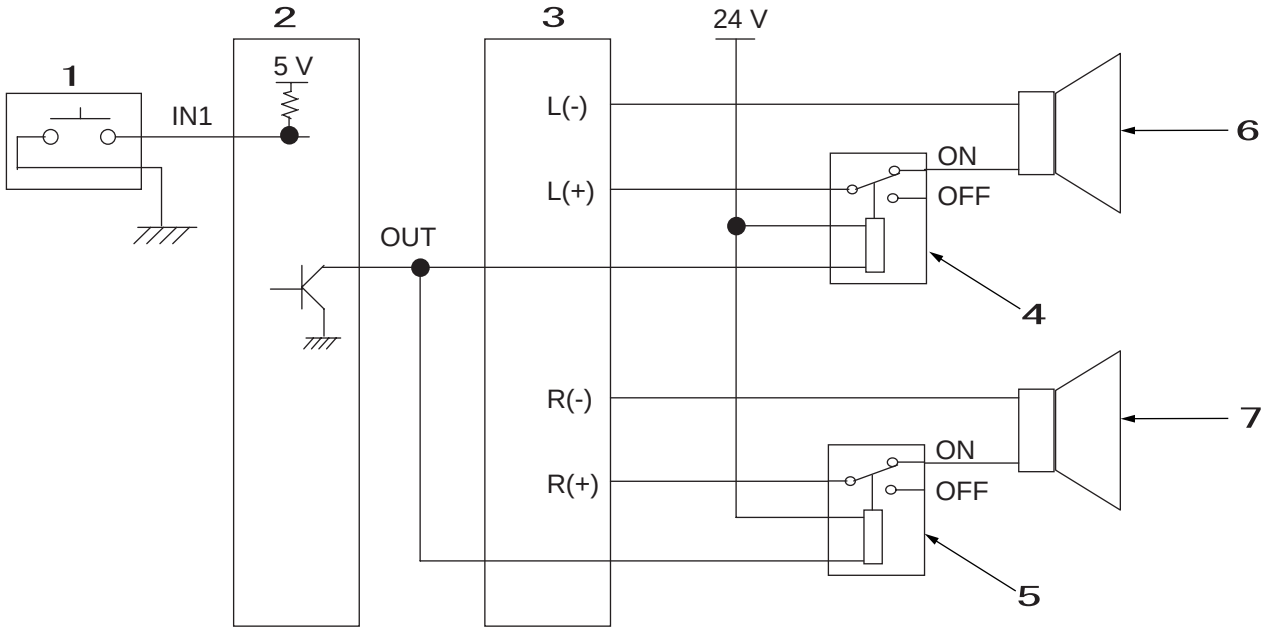

1	Mute switch (knob)	5	Speaker (R)
2	Clock unit	6	Speaker (L) relay
3	Radio	7	Speaker (R) relay
4	Speaker (L)		

[2] Summary and purpose

The radio volume can be switched ON / OFF with one-touch by switching the speaker (L, R) signal lines on and off with a relay.

[3] Operation

Each time the mute switch on the knob is pressed, the radio volume is switched between ON ⇔ OFF. (Momentary)

When the key is switched ON, the radio always starts with mute off (normal radio volume).(Previous data reset)

[4] Battery save

In order to prevent the battery from being run down, when the key is at ACC (accessory), the radio is always set to mute off (normal radio volume).

[5] Time chart

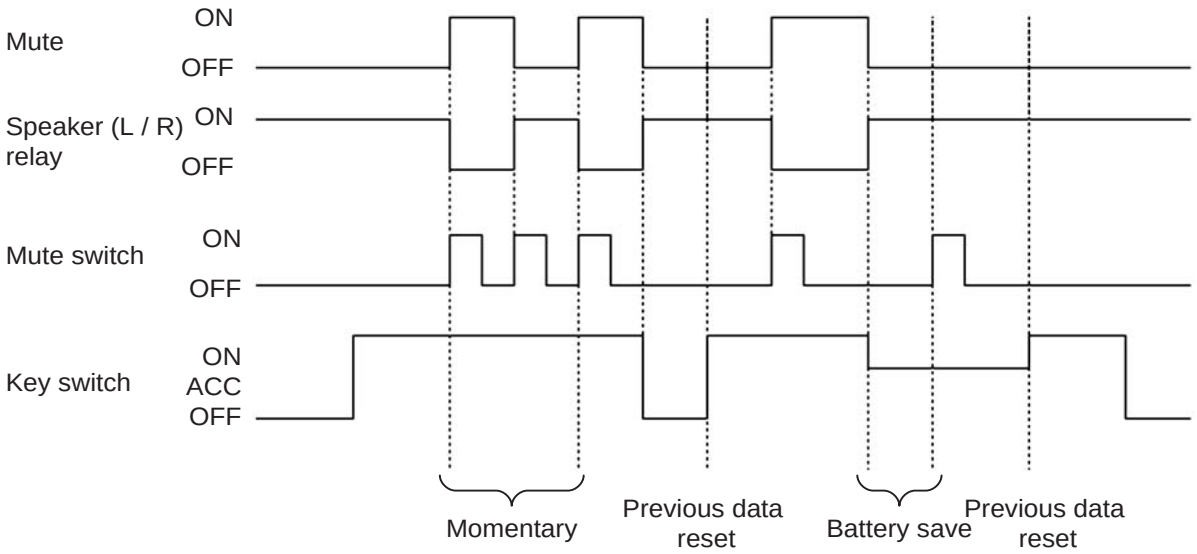

https://truckmanualshub.com/

Others

1. Anti-Theft Protection

(1) Anti-theft protection control

If the anti-theft protection password does not match (anti-theft protection is not ended), the machine operation is controlled.

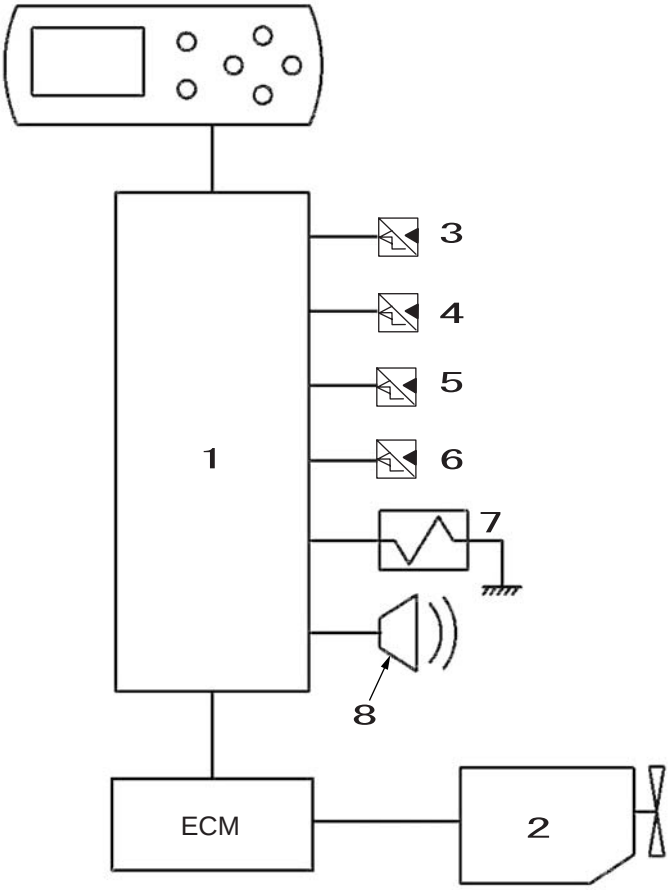

1	Computer	5	Travel pressure sensor
2	Engine	6	Upper side pressure sensor
3	P1 pressure sensor	7	Swing brake solenoid
4	P2 pressure sensor	8	Travel alarm

[1] If the engine is started without ending the anti-theft protection, the machine is controlled as follows.
  1) The engine speed is fixed at low idle.
  2) The swing brake cannot be released. (Solenoid operation is not possible.)
  3) The travel alarm buzzes continuously.

[2] In the state in [1], if any of the following operations is executed, the engine is forced to stop.
  1) Upper side or travel operation (Detected by the corresponding sensor)
  2) The P1 or P2 pressure rises to 725 PSI (5 MPa) or higher.
  3) The engine load is 50 % or higher for two seconds cumulative.
  4) The upper side, travel, P1, or P2 pressure sensor is removed.

[3] Even in the state in [1], the anti-theft protection control can be ended by inputting the correct password.

https://truckmanualshub.com/

2. Battery Save Function

[1] Summary and purpose
In order to prevent the battery from being run down when the key is ON and the engine is stopped, solenoid and proportional valve output is suppressed.

[2] Operation
See the table below.

Control targets	Operation when the engine is stopped with the key ON.
Travel high-speed switchover solenoid	Fixed to OFF (low-speed) whether the travel speed select switch ON or OFF However, the LED at the side of the switch is linked with the switch.
Power save solenoid	Fixed to OFF (power save OFF)
Free swing solenoid	Fixed to OFF (free swing OFF) whether the free swing switch ON or OFF However, the free swing icon on the monitor is linked with the switch.
Option return line switchover solenoid	Fixed to OFF (crusher side) whether the breaker / crusher mode switch ON or OFF However, the attachment icon on the monitor is linked with the switch.
Boost solenoid	Fixed to OFF (no boost) regardless of the work mode (throttle volume position) However, the status icon on the monitor is linked with the throttle.
Pump horsepower proportional valve	0 mA, so the standby current for detecting disconnections of 50 mA does not flow. Disconnections are only detected after the engine has started.
Pump flow proportional valve	Same as above

https://truckmanualshub.com/

3. Alternator Power Generation Detection

[1] Configuration (fuses etc. omitted)

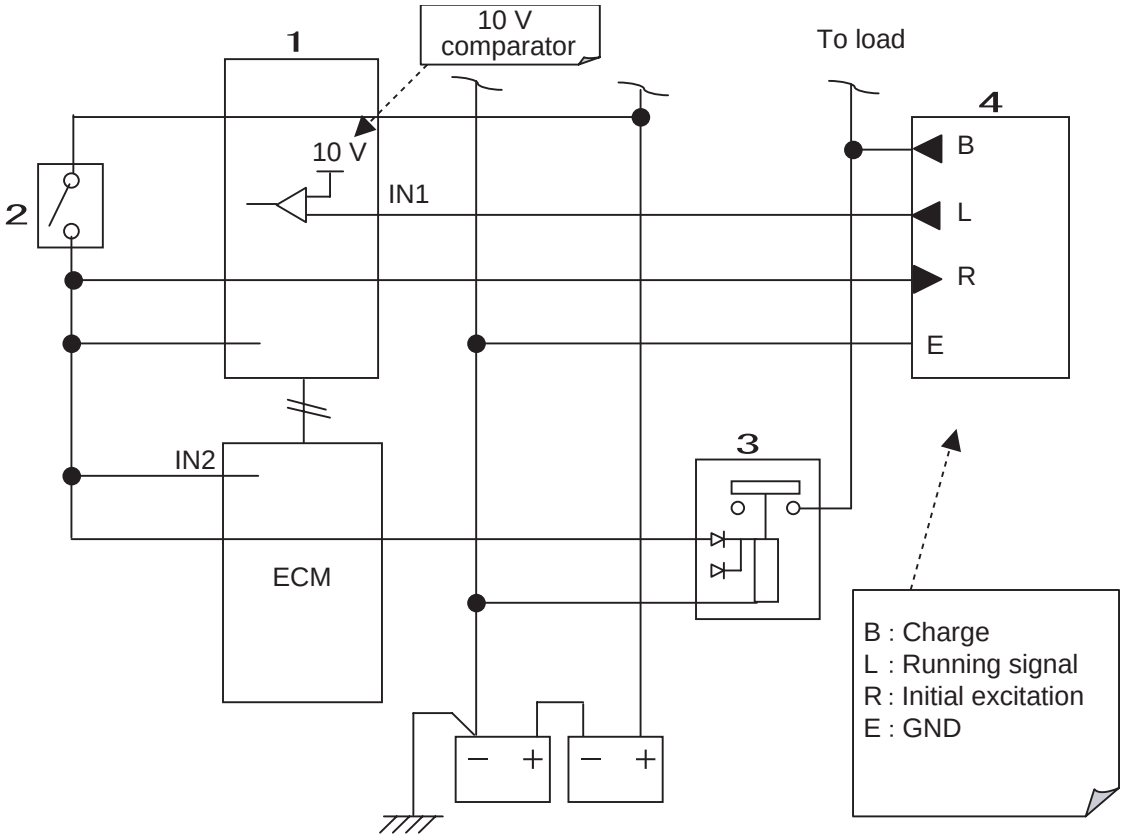

1	Computer	3	Battery relay
2	Key switch	4	Alternator

[2] Separated from battery voltage
When the battery relay is closed, by looking not at the B terminal, where the battery voltage is applied, but rather to the independent L terminal, defects in the alternator alone are detected. (The battery voltage is monitored by the ECM. (IN2))

[3] Operation
Alternator L terminal output voltage judged with 10V comparator
ON when L terminal voltage ≧ 10 V
OFF when L terminal voltage < 10 V * The threshold value of 10 V has a tolerance of ±1 V.

[4] Power generation defect judgment
If the 10V comparator input is OFF even though the engine is running, it is judged that there is a power generation defect. For details on the judgment conditions, see the "Main Unit Error Code Table".

E

https://trackmanualshub.com/

4. Overload Alarm **(Not used by LBX)**

[1] Configuration

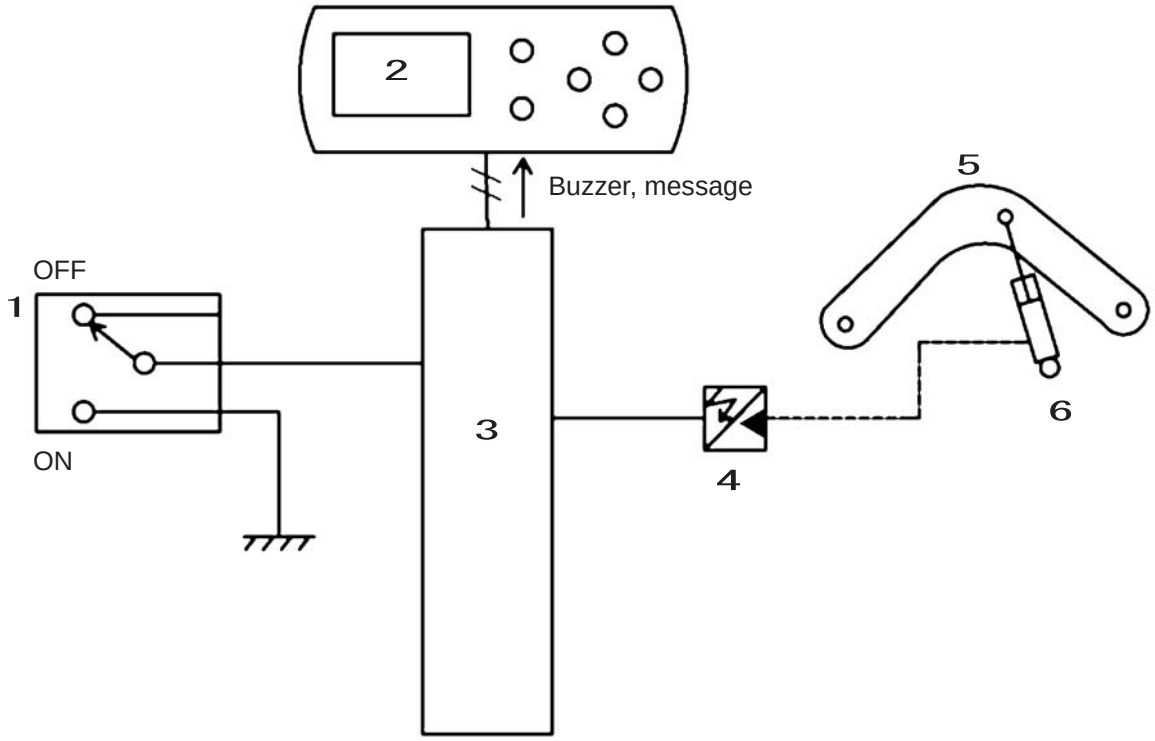

1	Overload alarm switch (alternate)	4	Boom cylinder bottom pressure sensor
2	Monitor panel	5	Boom
3	Computer	6	Boom cylinder

[2] This function is only mounted on machines for Europe

[3] Alarm judgment
When the overload alarm switch is ON, the overload alarm is switched ON / OFF according to the following conditions.
ON: (Boom cylinder bottom pressure ≧ set pressure) for 1 continuous second
OFF: (Boom cylinder bottom pressure ≦ set pressure - 2 MPa) for 1 continuous second
* For the set pressure for each model, see "Overload set pressure".
* The set pressure can be changed with CFG.

[4] Operation when alarm judgment ON
The "OVER LOAD" message is displayed on the monitor and the buzzer buzzes intermittently.
This message is handled as an "alert". For details, see "Message Display List".

[5] Ending the alarm
To end an alarm that has been issued, either switch the overload alarm switch OFF or operate the attachment in such a way that the judgment in [2] goes OFF.
Be aware that there is no buzzer stop switch like the one in LX.

[6] Trouble mode
If trouble occurs in the boom cylinder bottom pressure sensor, this function goes into trouble mode and the alarm judgment is fixed to OFF.
Even if the trouble is recovered from, trouble mode continues until the key is switched OFF.

[7] Trouble judgment
The boom cylinder bottom pressure sensor trouble judgment is made after the overload alarm switch has come ON once.

https://truckmanualshub.com/

[8] Time chart

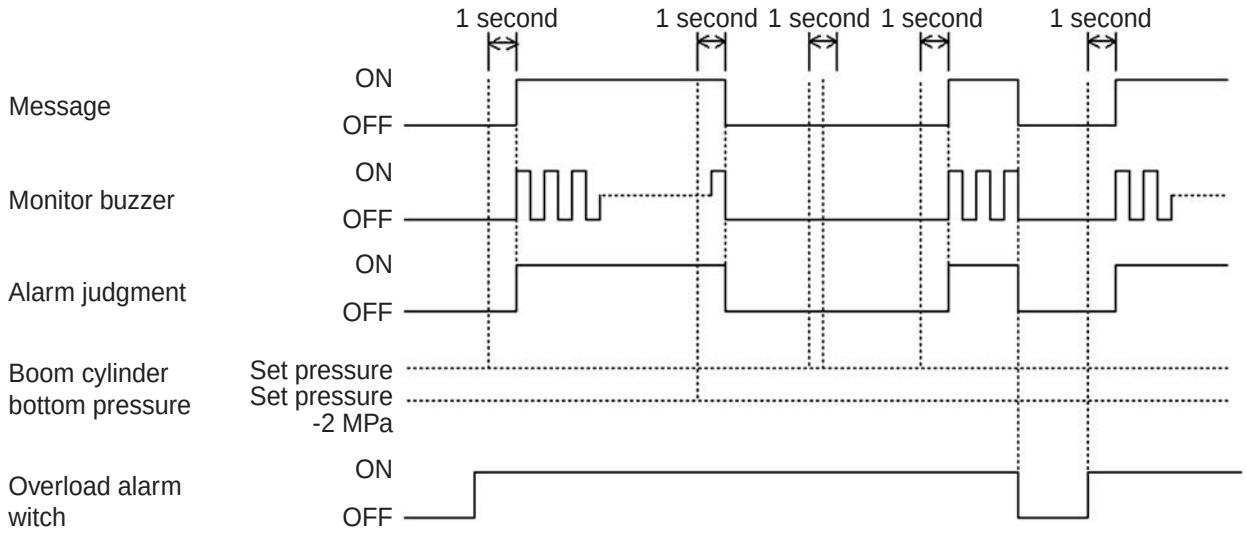

E

https://trackmanualshub.com/

Options

1. Option Line Control

[1] Configuration
[Compatible circuit with second option line]

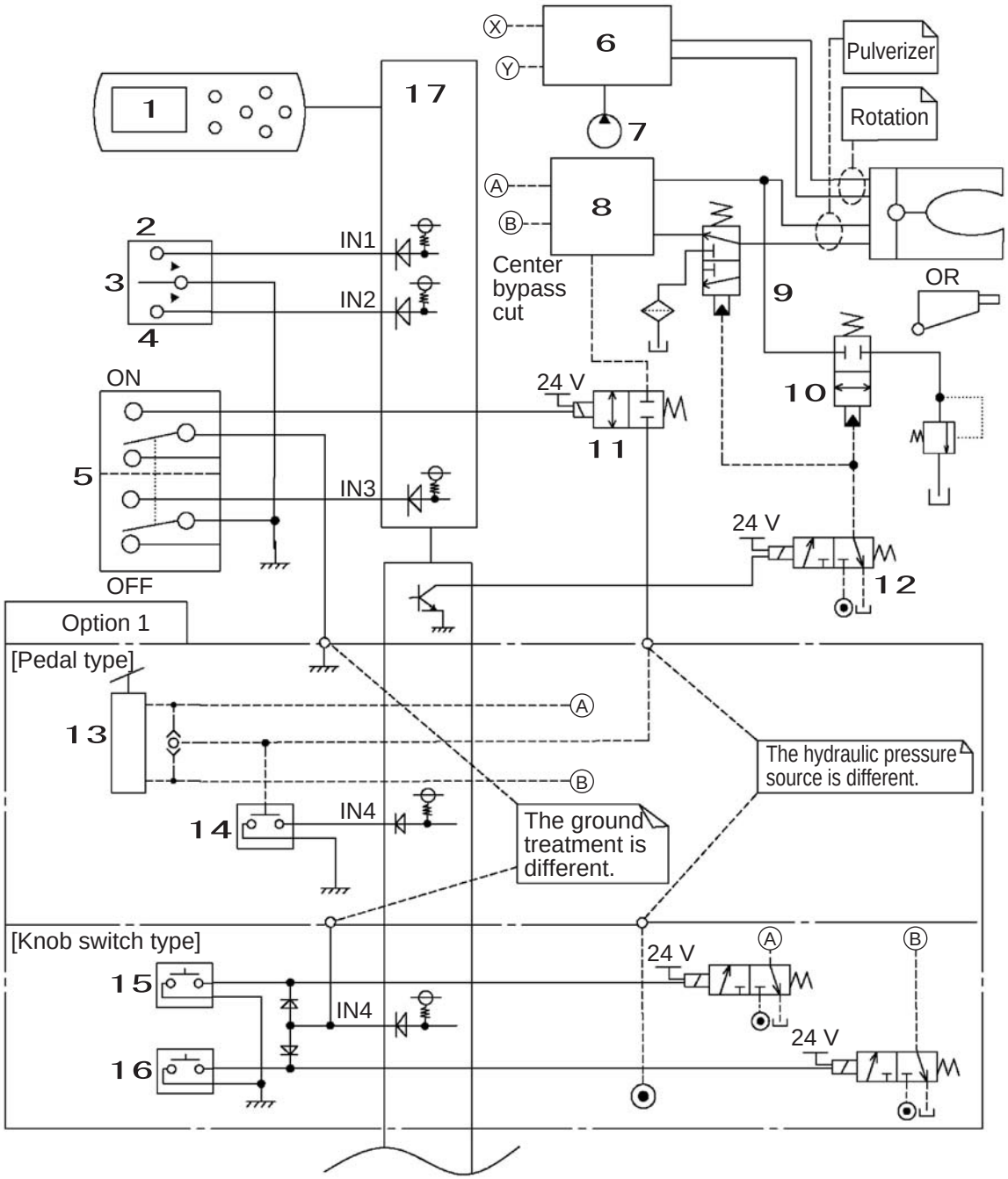

1	Monitor panel	7	4th pump	13	Option 1 pedal
2	Breaker mode switch	8	Control valve	14	Option 1 pressure switch
3	Option select switch	9	3-way valve	15	Option 1 switch (L)
4	Crusher mode switch	10	Shut-off valve	16	Option 1 switch (R)
5	2nd speed confluence select switch	11	2nd speed confluence solenoid valve	17	Computer
6	Second option control valve	12	Option switchover solenoid valve		

Option select switch switchover (breaker mode ⇔ crusher mode)

<Operation>

When the option select switch is set to the breaker mode switch side, the option switchover solenoid valve is operated and the shut-off valve is switched to the shot off valve and the 3-way valve. When the switch is switched to crusher mode, the option switchover solenoid valve goes OFF.

https://truckmanualshub.com/

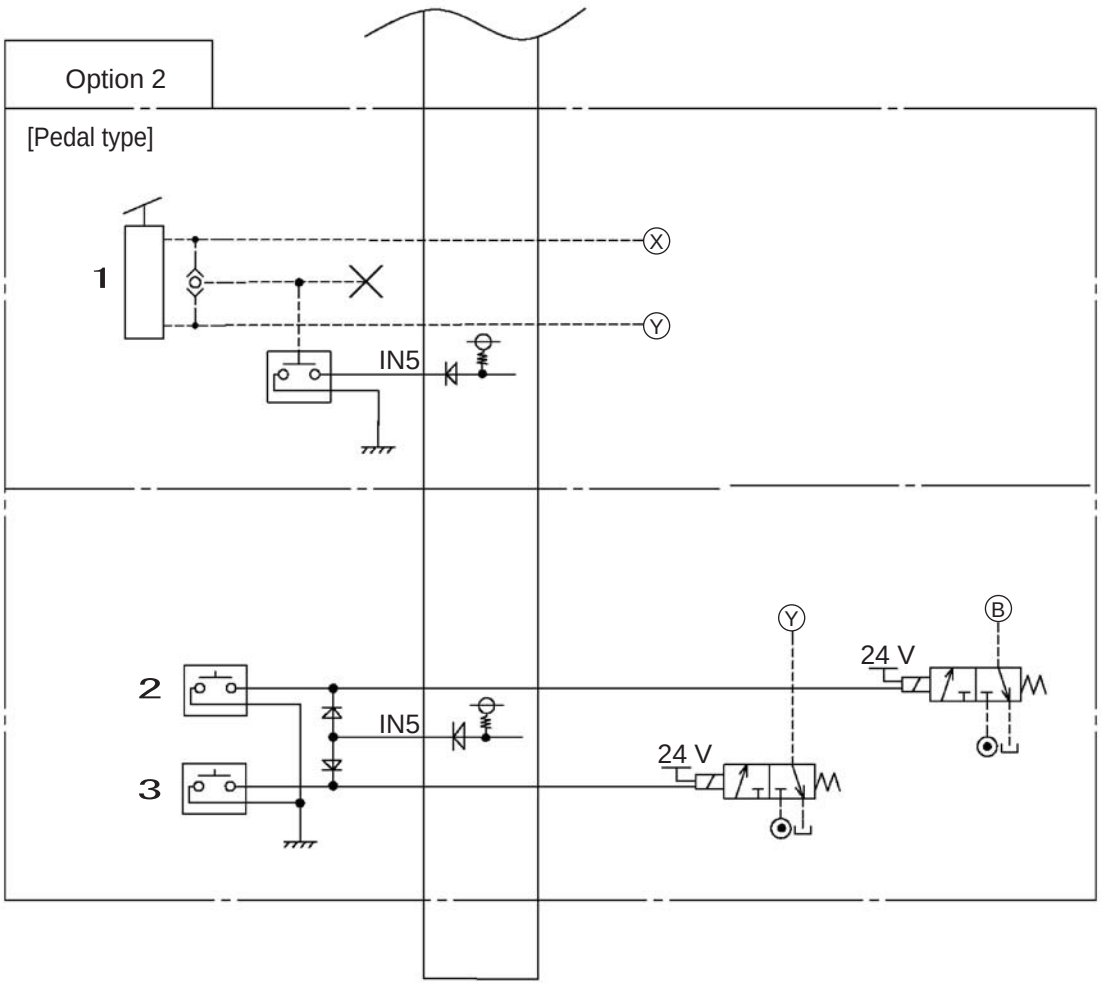

1	Option 2 pedal
2	Option 2 switch (L)
3	Option 2 switch (R)

2nd speed confluence select switch (1st speed ⇔ 2nd speed)

<Operation>

When the 2nd speed confluence switch is switched ON, the 2nd speed confluence solenoid valve switches to 2nd speed contluence.

Difference between pedal type and knob switch type

For the pedal type, 2nd speed confluence solenoid hydraulic pressure source is the secondary pressure via the option 1 pedal shuttle, but for the knob switch type, the 2nd speed confluence solenoid hydraulic pressure source comes directly from the gear pump.
Therefore, when the 2nd speed confluence switch is switched ON, operation becomes always 2nd speed.
In order to prevent this, whereas for the pedal type the ground treatment for the 2nd speed confluence switch is to ground directly,
with the knob switch type, it is set so that the switch is not grounded unless one or the other of the option switches is ON.

* Be careful. With X2, the shuttle valve is built into the option 1 pedal remote control valve.

https://trackmanualshub.com/

Mode select switch
When the breaker mode switch / crusher mode switch is pressed, the option line mode changes as follows.

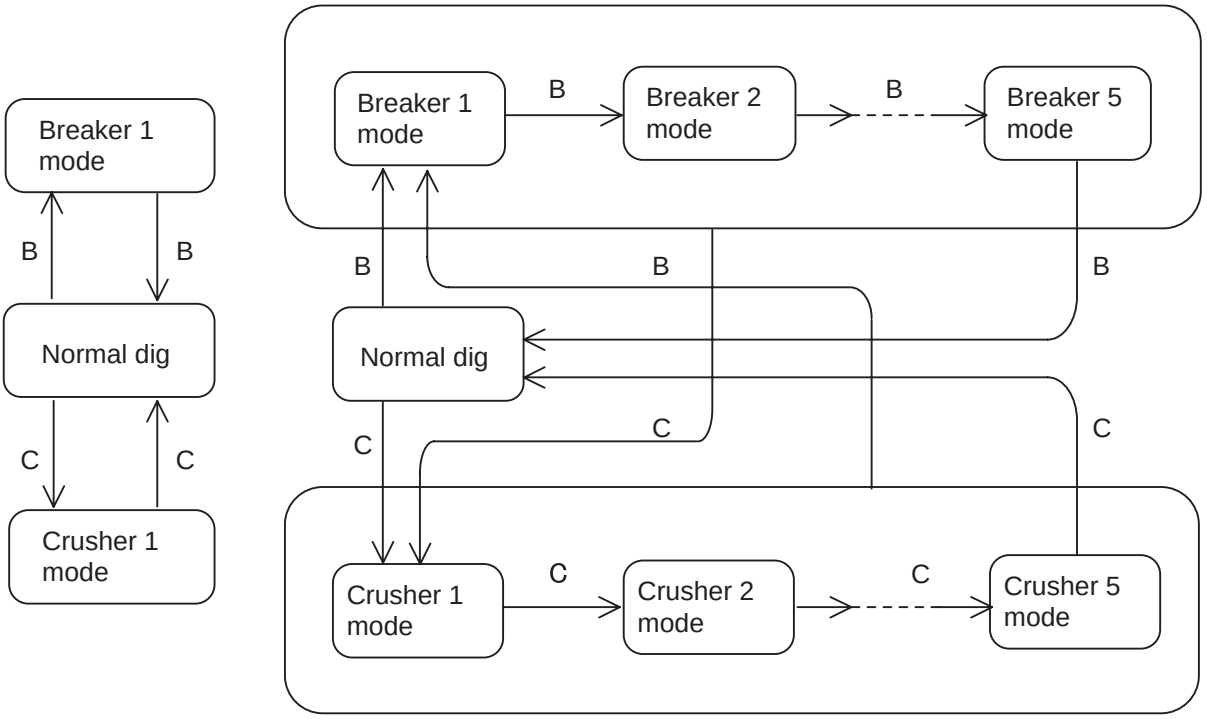

B : Breaker mode switch pressed
C : Crusher mode switch pressed

* The factory setting is that only breaker 1 mode and crusher 1 mode can be selected.
* With settings on the service screen, the number of modes can be increased to five each for the breaker and for the pulverizer, for a total of 10.

[2] For [1], the following icons are displayed according to the mode.

	Breaker mode	Pulverizer mode	Normal dig mode
1:	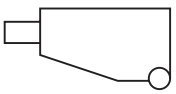 1	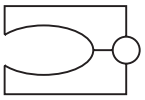 1	None
2:	2	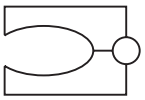 2	
3:	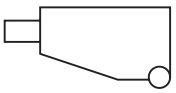 3	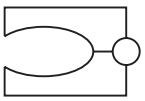 3	
4:	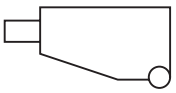 4	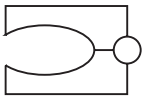 4	
5:	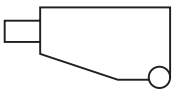 5	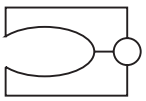 5	

https://truckmanualshub.com/

2. Option Line Control

[1] Configuration

[Compatible circuit with second option line (pedal type)]

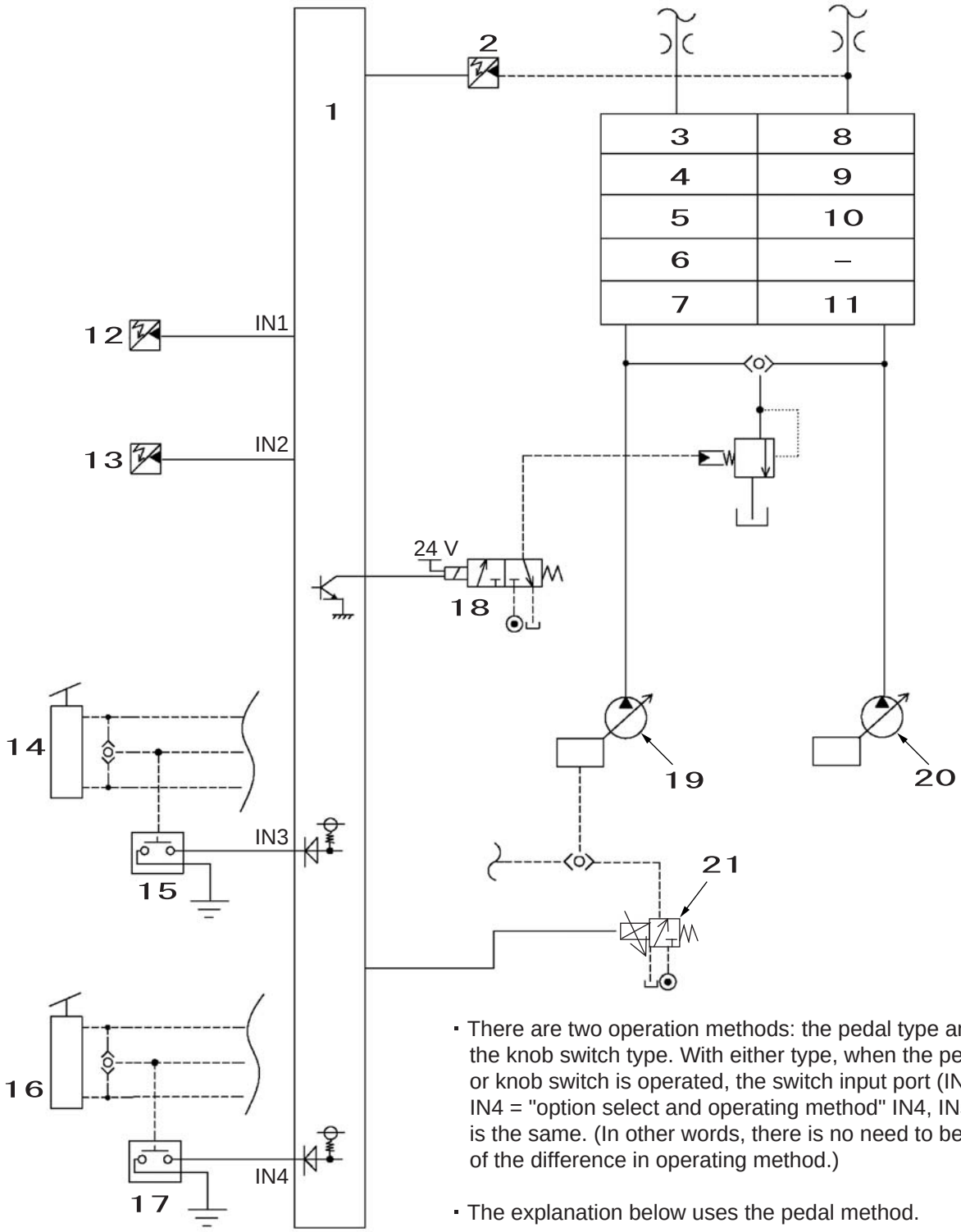

- There are two operation methods: the pedal type and the knob switch type. With either type, when the pedal or knob switch is operated, the switch input port (IN3, IN4 = "option select and operating method" IN4, IN5) is the same. (In other words, there is no need to be aware of the difference in operating method.)
- The explanation below uses the pedal method.

1	Computer	8	Arm (2)	15	Option pressure switch
2	N2 pressure sensor	9	Boom (1)	16	Second option pedal
3	Arm (1)	10	Bucket	17	Second option pressure switch
4	Boom (2)	11	Travel (right)	18	Boost solenoid
5	Swing	12	Swing pressure sensor	19	P1 pump
6	Option 1	13	Travel pressure sensor	20	P2 pump
7	Travel (left)	14	Option pedal	21	P1 flow control proportional valve

https://truckmanualshub.com/

[2] Option line operation control
The table below shows the control for operation of the option alone and compound operation.

Option line mode	Breaker		Pulverizer		Option 2	
Operation	Option 1 pressure Switch … ON (IN3 is ground)		Option 1 pressure Switch … ON (IN3 is ground)		Option 2 pressure Switch … ON (IN4 is ground)	
	Option alone	Compound	Option alone	Compound	Option alone	Compound
Boost cut	Yes		Yes		No	
Flow restriction	Yes		Yes	No	No function (4th pump)	
Engine speed / Pump horsepower current	According to the command for the work mode selected with the throttle					

- The flow is not cut for compound crusher operation. (To secure speed for compound operation)
- Since the breaker often works while the machine is jacked up with the boom (compound operation), the flow is cut even for compound work. (The same as the engine reduction for the current breaker)
- The pressure boost is cut when Option 1 and Option 2 are operated at the same time. (Boost cut priority)
- The engine speed and pump horsepower current are according to the work mode currently selected with the throttle.
  (cannot be forced to change to another mode only for breaker/pulverizer.)

[3] Option 1 operation alone judgment conditions
When all the conditions below are satisfied, it is judged that Option 1 is being operated alone.
<Conditions>

Option 1 pressure switch … ON Swing pressure sensor … OFF

Travel pressure sensor … OFF N2 pressure sensor ≧ 348 PSI (2.4 MPa)

[4] Flow cut
The maximum flow for option line operation is restricted to the flow for the option line mode selected with "Option line selection & 2nd speed merge".
Also, be careful about the fact that since the flow set for the option line is the flow for SP mode, when used in H/A mode, the flow is slightly less than the display.

[5] Trouble mode
If a trouble occurs in input (swing pressure sensor, travel pressure sensor, N2 pressure sensor) or output (boost solenoid, flow proportional valve),
the machine goes into trouble mode and

- Output command to boost solenoid = fixed to OFF
- Output command to flow proportional valve = fixed to OFF

Trouble mode continues until the key is switched OFF.

https://truckmanualshub.com/

3. Feed Pump Automatic Stop **(Fuel Feed Pump not used on LBX machines)**

[1] Configuration

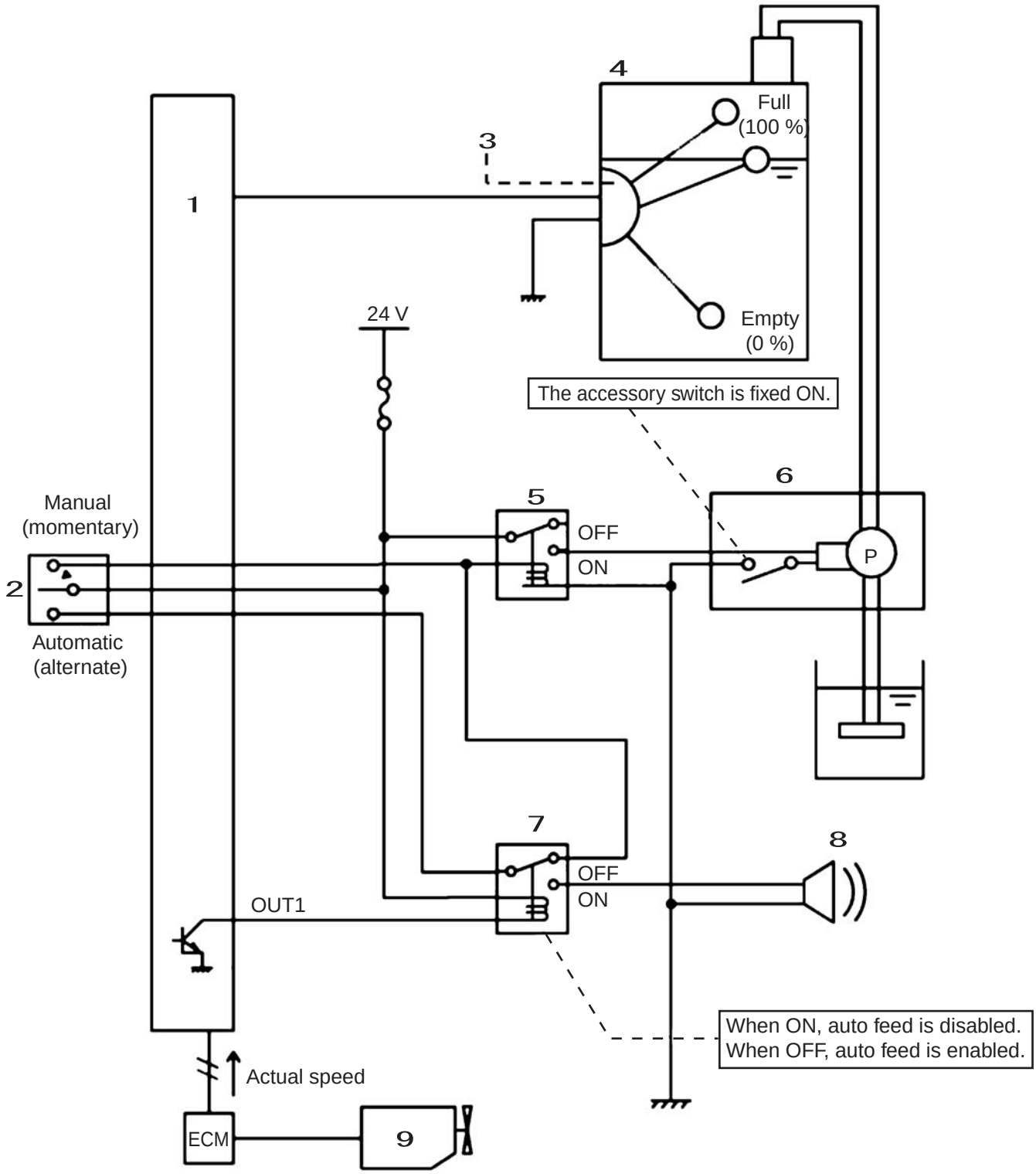

1	Computer	4	Fuel tank	7	Feed stop relay
2	Feed switch	5	Oil feed start relay	8	Full tank detection buzzer
3	Fuel sensor	6	Oil feed pump made by Jabsco	9	Engine

Feed pump main unit accessory (original) switch this must be fixed ON beforehand in order to use this function.

https://truckmanualshub.com/

[2] Operating method

1) With the engine stopped and the key ON, if the feed switch is flipped down to the Auto side, the fuel feed starts.
2) When the tank is full, the fuel feed stops automatically and the buzzer buzzes to announce that.
3) Returning the feed switch to the center stops the buzzer.
4) To feed more fuel
   Press the feed switch manual side. The fuel is fed while the switch is pressed.

[3] Computer control targets
Input = Fuel sensor (0 to 100 %), engine state (running / stopped)
Output = Feed stop relay

[4] System state (when relay OFF)
When the feed switch is set to the Auto side, the start relay comes ON and the pump operates.

[5] System state (when relay ON)
When the feed switch is set to the Auto side, the start relay goes OFF, and the pump does not operate. Also, the buzzer buzzes.

[6] Feed stop relay control (while engine running and key ON)
Always ON (no feed)

[7] Feed stop relay control (while engine stopped and key ON)
When (fuel level < 94 % continuously for 3 seconds), OFF (auto feed enabled)
When (fuel level ≧ 94 % continuously for 3 seconds), ON (auto feed disabled)

https://truckmanualshub.com/

[8] Time chart

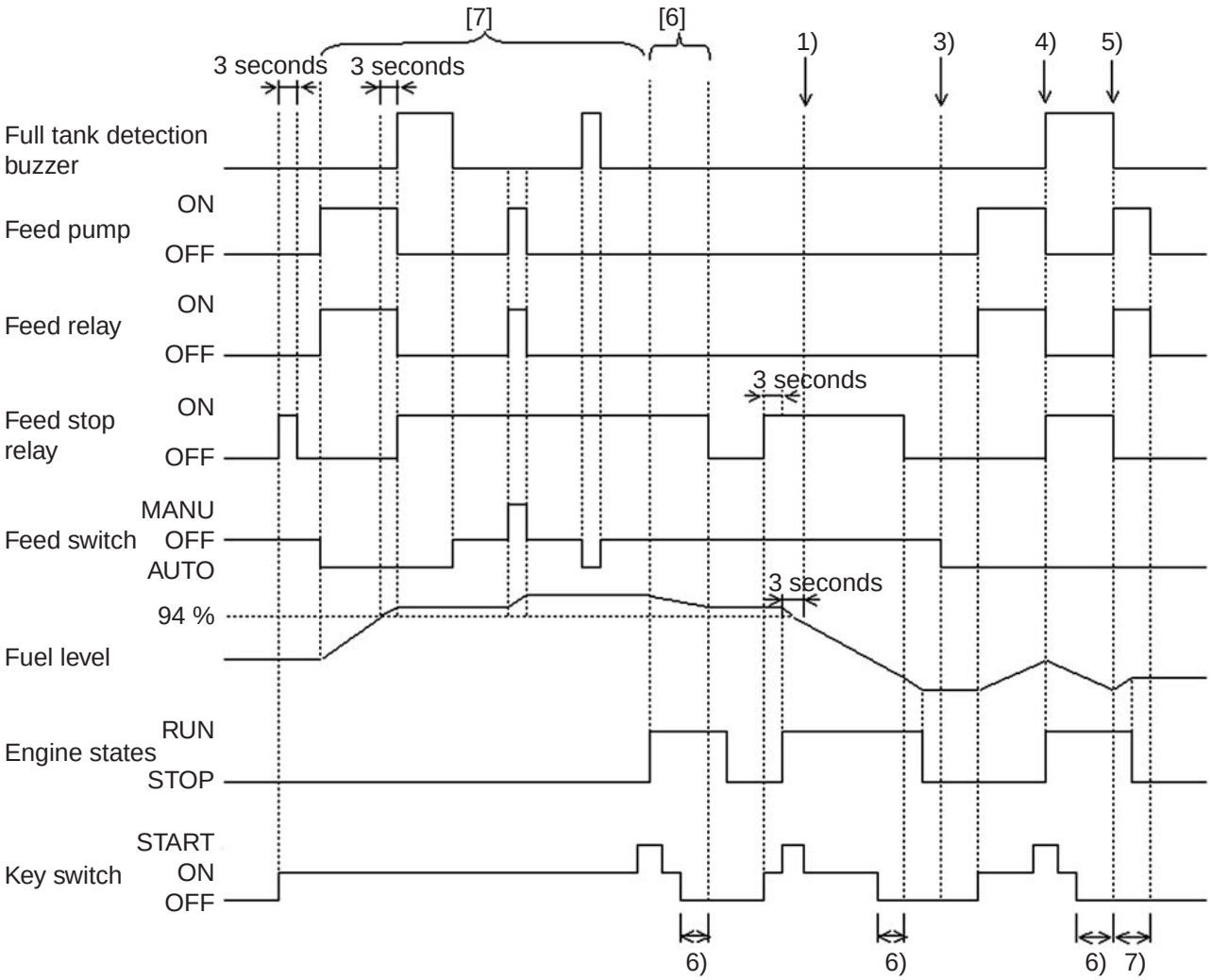

1) Even if the level falls below 94 %, no fuel can be fed as the engine is running.
2) Stopped, so fuel can be fed.
3) Fuel feed is not possible unless the key is switched ON.
4) If the engine is started during fuel feeding, the fuel feed stops.
5) When the operator forgets and leaves the switch switched to the Auto side, the pump operates during the power-cut delay. (When fuel level under 98 %)
6) Power-cut delay

[9] Trouble mode

If trouble occurs in an input (fuel sensor), output (feed stop relay) or communications (CAN), the system goes into trouble mode and the feed stop relay is fixed to OFF. Be careful. In trouble mode, even if the feed switch is set to Auto, the fuel feed is not stopped.

https://truckmanualshub.com/

4. Return Filter Clogging Detected

[1] Configuration

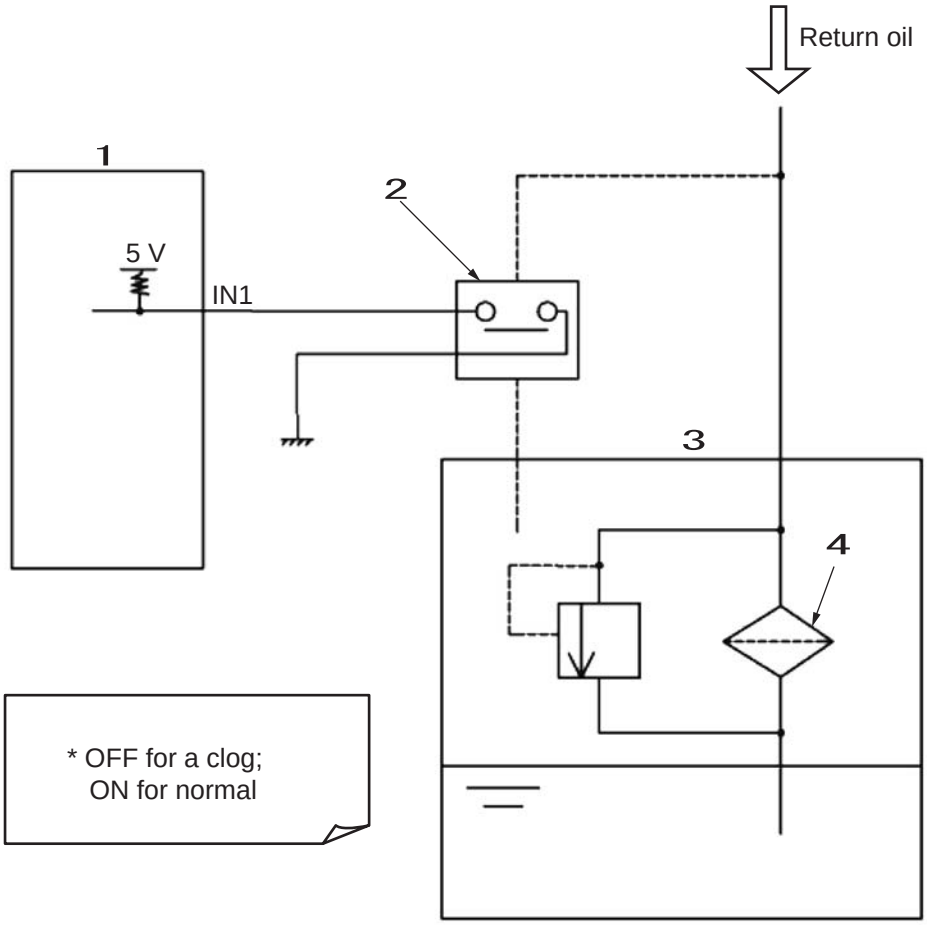

1	Computer
2	Return filter clog pressure switch
3	Hydraulic oil tank
4	Return filter

[2] Return filter clog pressure switch specifications

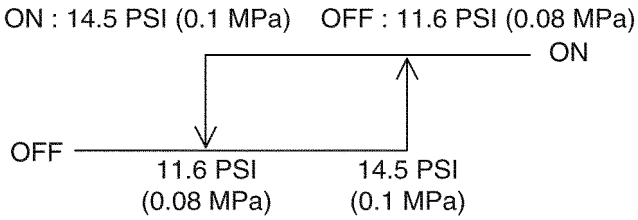

[3] Detection cancellation when breaker used
When the breaker is used, the return oil pressure pulse is intense, so clog detection is not attempted.

[4] Detection cancellation when oil temperature low
When the oil temperature is less than 86 ºF (30 ℃), its viscosity rises and filter pressure damage increases, so clog detection is not attempted.

E

https://truckmanualshub.com/

[5] Solution for machines with no breaker setting
Machines with no breaker setting from [3]
(= machines with no return filter clog pressure switch) Even with these machines, filter clogs would be detected. In order to prevent this, a special connector is set that is always shorted.

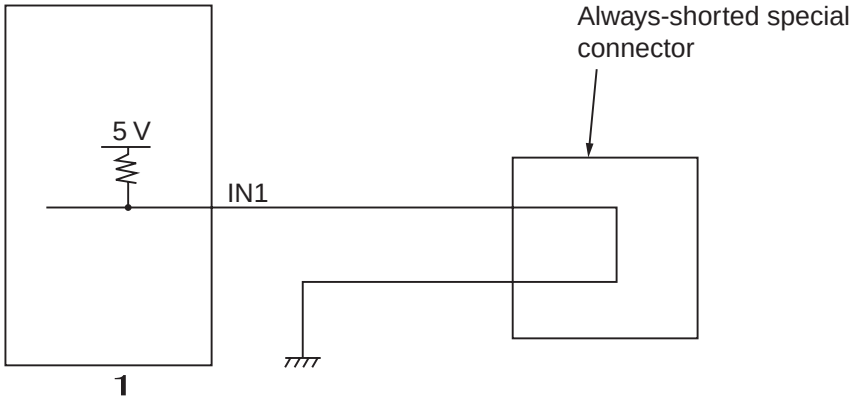

1	Computer

[6] Disconnection detection
When the key is ON, if IN1 was OFF before the engine was started, the situation is judged to be a disconnection abnormality.

5. Beacon

[1] Configuration

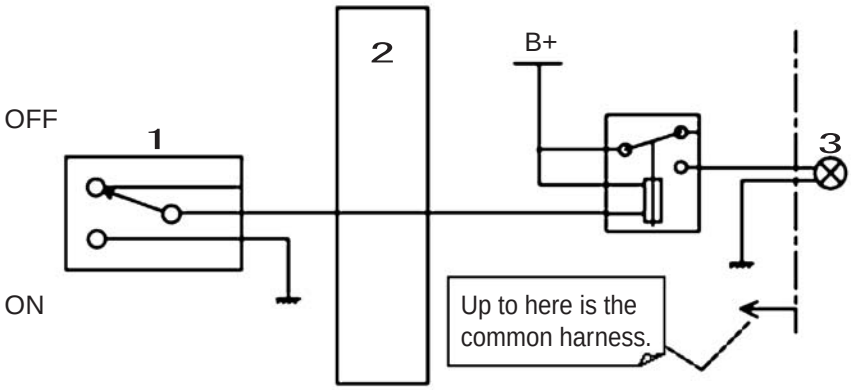

1	Beacon switch (alternate)
2	Computer
3	Beacon

[2] Destination
This function is for Europe.

[3] Operation
The beacon is driven via the beacon relay linked with the beacon switch.
This function is not mediated by the computer.

E

Screen Operations

1. Screen Shift

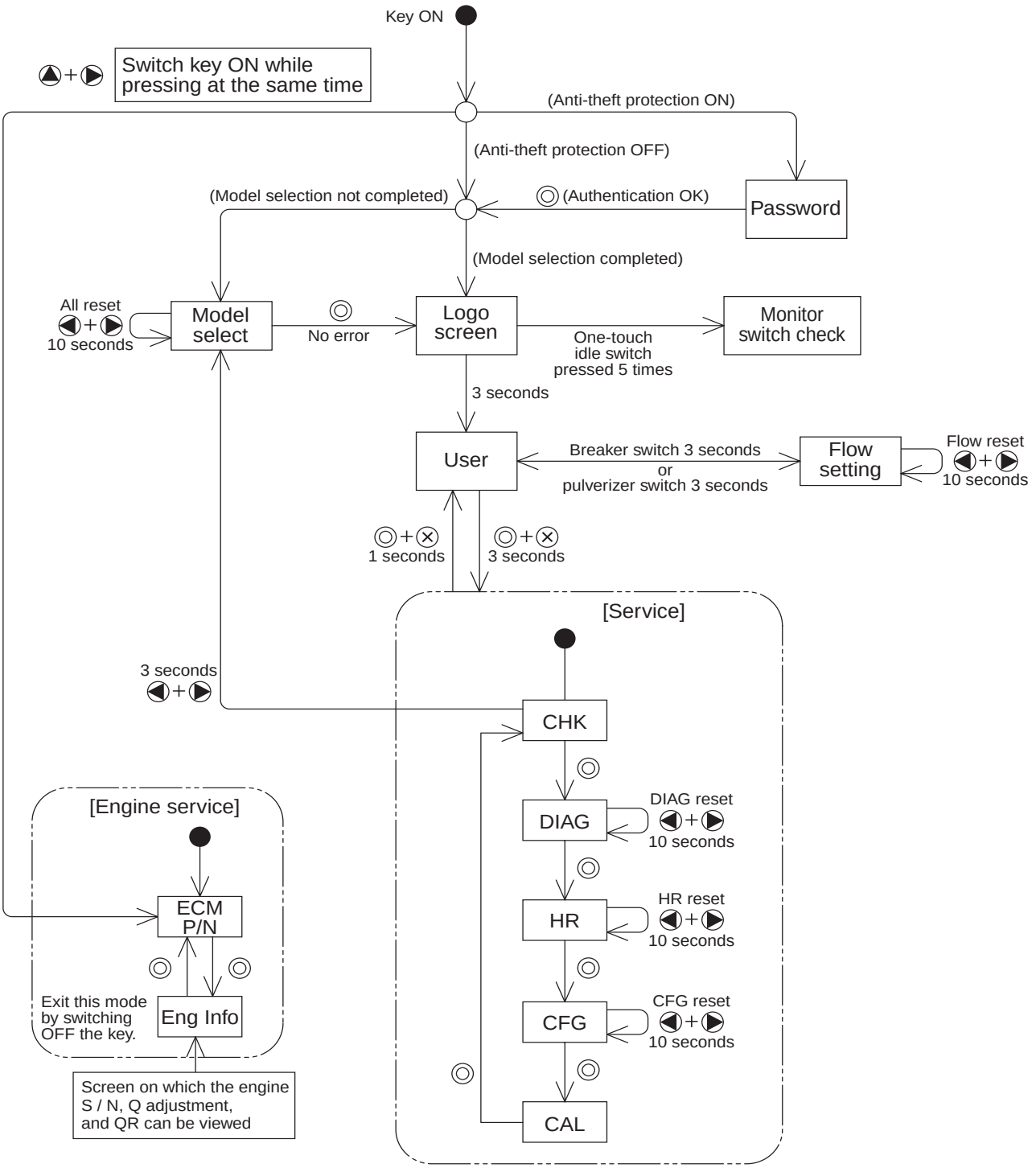

[1] Operation for shifting to service support screen

1) If both the travel mode select switch and the horn volume select switch on the switch panel are held down for 3 seconds, the display switches to the service support screen.
2) If both the high speed travel switch and the horn volume select switch on the switch panel are held down again for 1 second, the display returns to the normal screen.

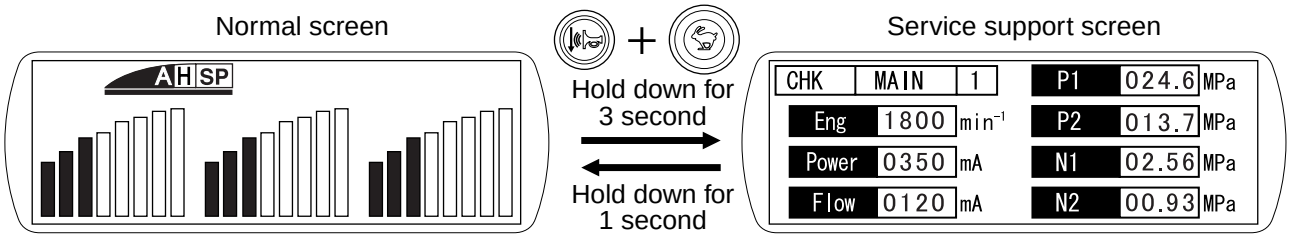

[2] Service support screen switching operation

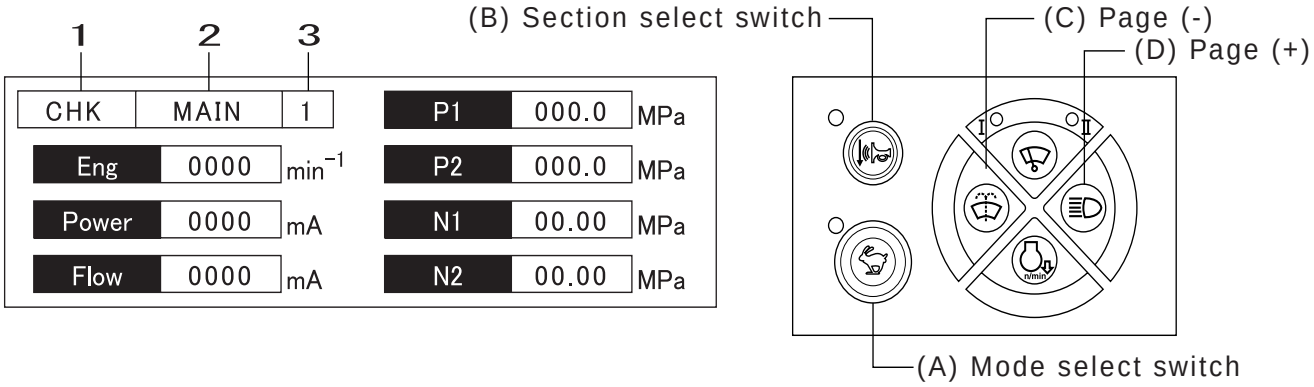

1	Mode
2	Section
3	Page

1) Mode switching; switching with high speed travel switch
2) Section switching; switching with horn volume select switch
3) Page switching; forward with light switch and back with washer switch

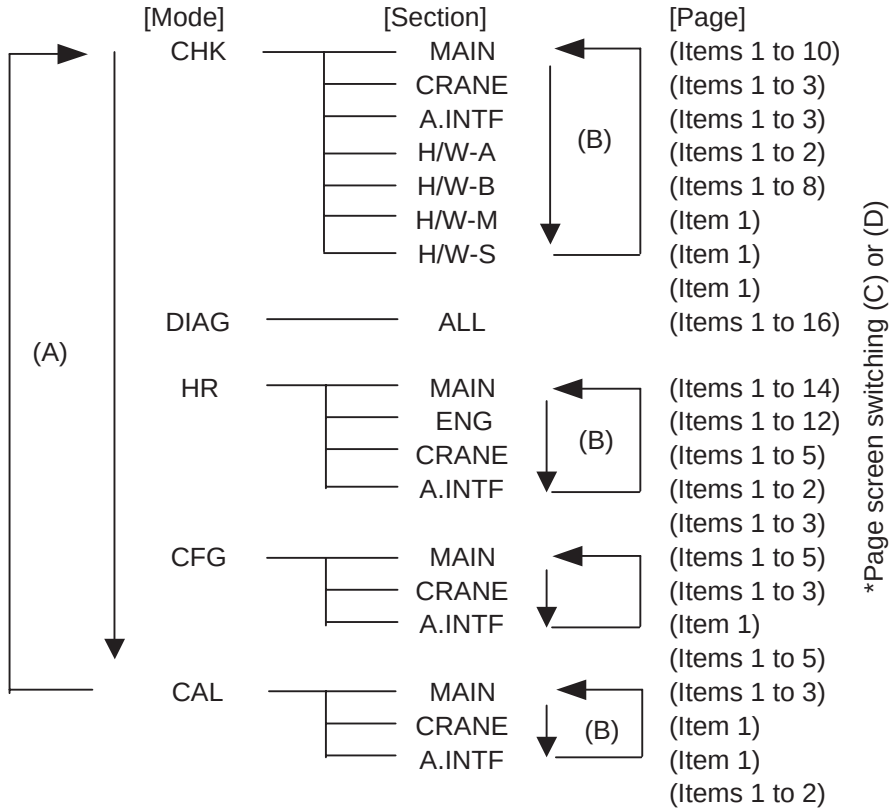

Screen Display List

1. CHK (status display) Screen List

MAIN

[1] Engine and pump

CHK	MAIN	1		P1	000.0	MPa
Eng	0000	min^{-1}		P2	000.0	MPa
Power	0000	mA		N1	00.00	MPa
Flow	0000	mA		N2	00.00	MPa

Eng	:	Engine speed	
Power	:	Pump power current Actual	
Flow	:	Pump flow current Actual	
P1	:	Pump1	Discharge pressure
P2	:	Pump2	Discharge pressure
N1	:	Pump1	Negative control pressure
N2	:	Pump2	Negative control pressure

[2] Temperature and pressure

CHK	MAIN	2		Baro	0000	hPa
CoolInt	0000	℃		EngOil	0000	kPa
HydOil	0000	℃		BstT	0000	℃
FuelT	0000	℃		Air	0000	℃

CoolInt	:	Radiator coolant temperature
HydOil	:	Hydraulic oil temperature
FuelT	:	Fuel temperature
Baro	:	Barometric pressure
EngOil	:	Engine oil pressure
BstT	:	Boost temperature
Air	:	Suction air temperature

[3] Load and boost

CHK	MAIN	3		P1	000.0	MPa
Eng	0000	min^{-1}		P2	000.0	MPa
Load	0000	%		BstT	0000	℃
Power	0000	mA		BstP	0000	kPa

Eng	:	Engine speed	
Load	:	Load ratio	
Power	:	Pump power current Actual	
P1	:	Pump1	Discharge pressure
P2	:	Pump2	Discharge pressure
BstT	:	Boost temperature	
BstP	:	Boost pressure	

[4] Load and pump power current

CHK	MAIN	4		P1	000.0	MPa
Eng	0000	min^{-1}		P2	000.0	MPa
Load	0000	%		N1	00.00	MPa
Power	0000	mA		N2	00.00	MPa

Eng	:	Engine speed	
Load	:	Load ratio	
Power	:	Pump power current Actual	
P1	:	Pump1	Discharge pressure
P2	:	Pump2	Discharge pressure
N1	:	Pump1	Negative control pressure
N2	:	Pump2	Negative control pressure

[5] Pump power current target and actual value

CHK	MAIN	5		-4-		
Eng	0000	min^{-1}		tEng	0000	min^{-1}
Load	0000	%		ThVol	0000	%
Power	0000	mA		tPower	0000	mA

Eng	:	Engine speed
Load	:	Load ratio
Power	:	Pump power current Actual
-4-	:	*
tEng	:	Target engine speed
ThVol	:	Throttle volume opening
tPower	:	Target pump power current

[6] Flow current target and actual value

CHK	MAIN	6		P1	000.0	MPa
Eng	0000	min^{-1}		N1	00.00	MPa
Power	0000	mA		Swg	00.00	MPa
Flow	0000	mA		tFlow	0000	mA

Eng	:	Engine speed
Power	:	pump power current Actual
Flow	:	Pump flow current Actual
P1	:	Pump1 Discharge pressure
N1	:	Pump1 Negative control pressure
Swg	:	Swing pilot pressure
tFlow	:	Target pump flow current

[7] Fan current target and actual value

CHK	MAIN	7		HydOil	0000	℃
Eng	0000	min^{-1}		FuelT	0000	℃
CoolnT	0000	℃		BstT	000	℃
Fan	0000	mA		tFan	000	mA

Eng	:	Engine speed
CoolnT	:	Radiator coolant temperature
Fan	:	Fan speed current Actual (large machine only)
HydOil	:	Hydraulic oil temperature
FuelT	:	Fuel temperature
BstT	:	Boost temperature
tFan	:	Target fan speed current (large machine only)

[8] Pilot pressure

CHK	MAIN	8		Upr	00.00	MPa
P1	000.0	MPa		Swg	00.00	MPa
P2	000.0	MPa		Trv	00.00	MPa
Cyl(B)	000.0	MPa		AmCls	00.00	MPa

P1	:	Pump1 Discharge pressure
P2	:	Pump2 Discharge pressure
Cyl(B)	:	Boom bottom pressure
Upr	:	Upper pilot pressure
Swg	:	Swing pilot pressure
Trv	:	Travel pilot pressure
AmCls	:	Arm close pilot pressure

[9] Hydraulic circuits

CHK	MAIN	9		P1	000.0	MPa
In	○○○○			P2	000.0	MPa
Out1	●○○○			N1	00.00	MPa
Out2	●○○○			N2	00.00	MPa

P1	:	Pump1 Discharge pressure
P2	:	Pump2 Discharge pressure
N1	:	Pump1 Negative control pressure
N2	:	Pump2 Negative control pressure

Hydraulic circuit input / output state (○=OFF, ●=ON)

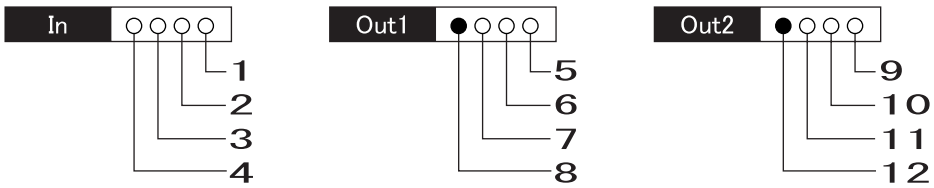

1	Pressure sensor Arm close	5	Solenoid Free swing / beacon	9	Relay Travel alarm
2	Pressure sensor Travel	6	Solenoid Travel high-speed switchover	10	Solenoid Fan reverse (large machine only)
3	Pressure sensor Swing	7	Solenoid Boost	11	Solenoid Return line switchover
4	Pressure sensor Upper	8	Solenoid Swing brake	12	Solenoid Power save

[10] Electrical circuits

CHK	MAIN	10			
			Eng	0000	min^{-1}
In	●●○○		CoolInt	0000	℃
Out1	○○○○		Batt	0000	V
Out2	○○○○		FuelLv	0000	%

Eng : Engine speed
CoolInt : Coolant temperature
Batt : Battery voltage
FuelLv : Fuel sensor

Hydraulic circuit input / output state (○=OFF, ●=ON)

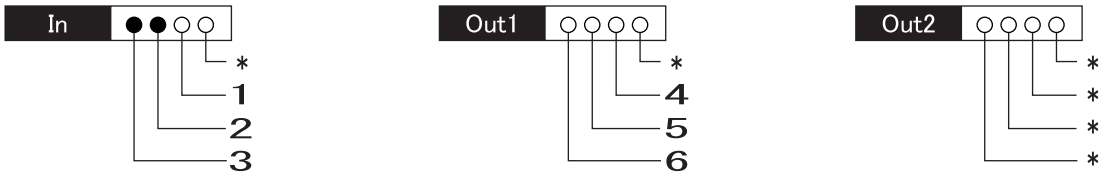

1	Switch Anti-theft protection	4	A/C coolant temperature transmission
2	Switch Level Alternator voltage	5	Relay Feed pump automatic stop
3	Switch Key	6	Glow signal

CRANE **(Not used by LBX)**

[1] Radius and hanging load ratio

CHK	CRANE	1			
			Wng	00	
Rd	0.00	m	WLoad	0000	%
Ht	00.00	m	rHt	00.00	m
Wt	000	kg	rWt	0000	kg

Rd : Work radius
Ht : Work height
Wt : Hanging load
Wng : Warning state
WLoad : Load ratio
rHt : Rated height
rWt : Rated load

[2] Angle and radius

CHK	CRANE	2			
			Rd	0000	m
BmA	0000	deg	Ht	0000	m
AmA	0000	deg	rHt	0000	m
ofA	0000	deg	rWt	0000	kg

BmA : Boom angle
AmA : Arm angle
OfA : Offset angle
Rd : Work radius
Ht : Work height
rHt : Rated height
rWt : Rated load

[3] Angle and pressure

CHK	CRANE	3			
			Rd	0000	m
BmA	0000	deg	Ht	0000	m
AmA	0000	deg	Cyl(B)	0000	MPa
OfA	0000	deg	Cyl(R)	0000	MPa

BmA : Boom angle
AmA : Arm angle
OfA : Offset angle
Rd : Work radius
Ht : Work height
Cyl(B) : Boom cylinder bottom pressure
Cyl(R) : Boom cylinder rod pressure

A.INTF

[1] Angle and zone

CHK	A.INTF	1	Zone	0000	
BmA	0000	deg	Rd	0000	m
AmA	0000	deg	Ht	0000	m
ofA	0000	deg	Of	0000	m

BmA : Boom angle
AmA : Arm angle
OfA : Offset angle
Zone : Safety area / speed reduction area / stop area
Rd : Work radius
Ht : Work height
Of : Offset amount

[2] Zone and command current

CHK	A.INTF	2	Zone	0000	
BmI	0000	mA	Rd	0000	m
AmI	0000	mA	Ht	0000	m
OfI	0000	mA	Of	0000	m

BmI : Boom stop current
AmI : Arm stop current
OfI : Offset stop current
Zone : Safety area / speed reduction area / stop area
Rd : Work radius
Ht : Work height
Of : Offset amount

[3] Command current and actual value

CHK	A.INTF	3	Zone	0000	
tBmI	0000	mA	BmI	0000	mA
tAmI	0000	mA	AmI	0000	mA
tOfI	0000	mA	OfI	0000	mA

tBmI : Target boom stop current
tAmI : Target arm stop current
tOfI : Target offset stop current
Zone : Safety area / speed reduction area / stop area
BmI : Boom stop current
AmI : Arm stop current
OfI : Offset stop current

H / W-A

[1] Digital input / output

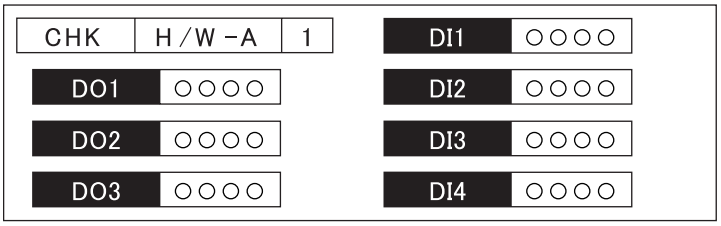

Hydraulic circuit input / output state (○=OFF, ●=ON)

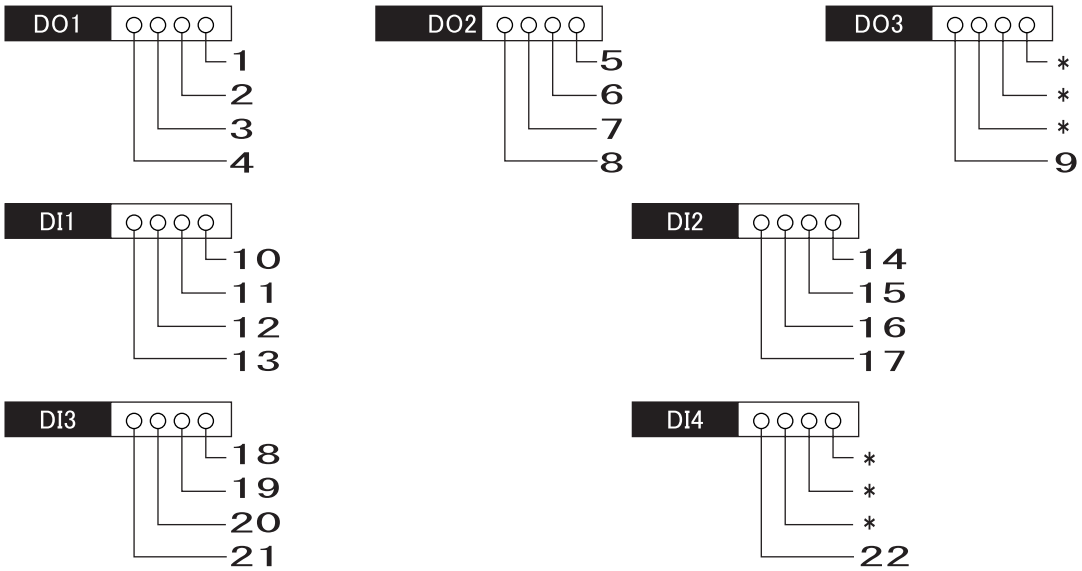

1	Solenoid Power save	9	Relay Feed pump	17	Alternator
2	Solenoid Travel high-speed switchover	10	Switch Level Coolant	18	Switch Free swing / beacon
3	Boost	11	Switch Engine emergency stop	19	Switch Travel alarm / overload
4	Solenoid Swing brake	12	Switch Key	20	Switch Fan reverse (large machine only)
5	Solenoid Fan reverse (large machine only)	13	Switch One-touch idle	21	Switch Pressure Second option / blade
6	Solenoid Free swing / beacon	14	Switch Pressure Option	22	Switch Anti-theft protection
7	Solenoid Return line switchover	15	Switch return filter Clog		
8	Buzzer Travel alarm	16	Switch Clog Air cleaner		

[2] Digital output / output monitor

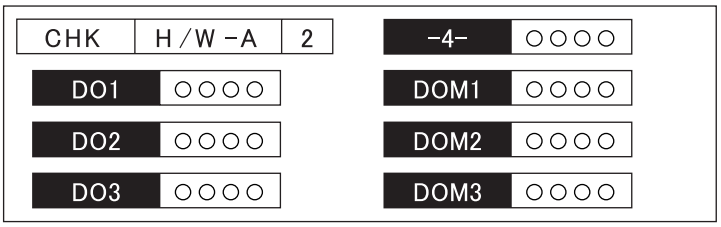

Hydraulic circuit input / output state (○=OFF, ●=ON)

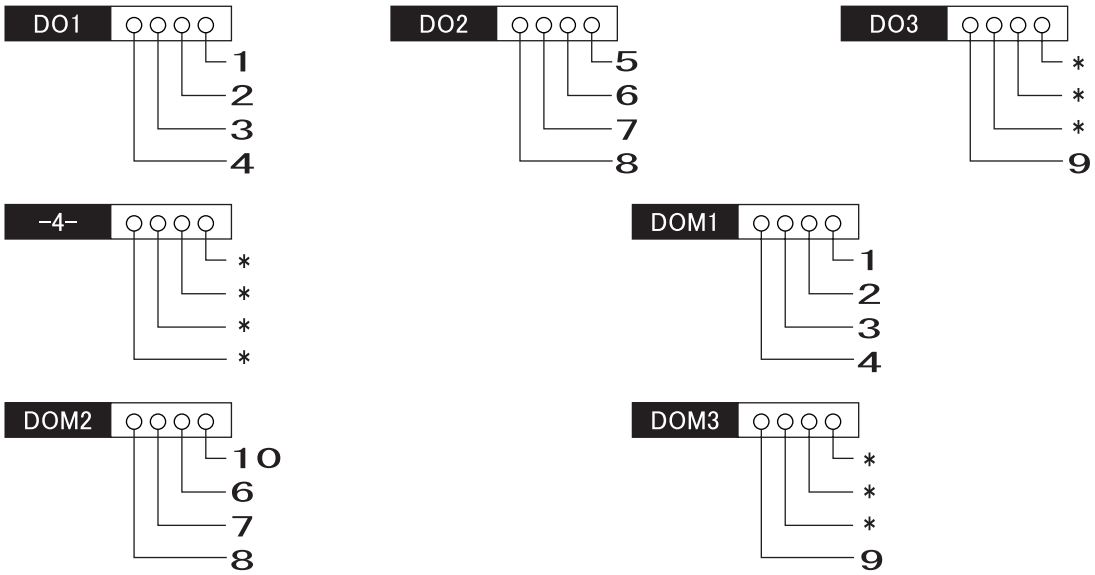

1	Solenoids Energy save A and energy save B	5	Solenoid Fan reverse	9	Relay Feed pump
2	Solenoid Travel high-speed switchover	6	Solenoid Free swing / beacon	10	Solenoid Fan reverse (large machine only)
3	Solenoid Boost	7	Solenoid Return line switchover		
4	Solenoid Swing brake	8	Buzzer Travel alarm		

[3] Potentio-meter voltage

CHK	H/W-A	3	Pot4	0000	V
Pot1	0000	V	Pot5	0000	V
Pot2	0000	V	Pot6	0000	V
Pot3	0000	V	Pot7	0000	V

Pot1 : Sensor pressure P1
Pot2 : Sensor pressure P2
Pot3 : Sensor pressure N1
Pot4 : Sensor pressure N2
Pot5 : Sensor pressure Upper
Pot6 : Sensor pressure Travel
Pot7 : Sensor pressure Swing

[4] Potentio-meter and sensor voltage

CHK	H/W-A	4	Sn1	0000	V
Pot8	0000	V	Sn2	0000	V
Pot9	0000	V	Sn1	0000	Ω
Pot10	0000	V	Sn2	0000	Ω

Pot8 : Sensor pressure Arm close
Pot9 : Sensor pressure Overload
Pot10 : Sensor throttle
Sn1 : Sensor temperature Hydraulic oil
Sn2 : Sensor level Fuel
Sn1 : Sensor temperature Hydraulic oil
Sn2 : Sensor level Fuel

[5] PWM data

CHK	H/W-A	5	duty	0000	%
PWM#	0000	mA	freq	0000	Hz
actcur	0000	mA	volt	0000	V
tgtcur	0000	mA	ovc	0000	

PWM# : PWM channel number
actcur : Pump power current (actual)
tgtcur : (Target)
duty : Duty
freq : Frequency
volt : Voltage
ovc : Overcurrent detection status

[6] PWM data

CHK	H/W-A	6	duty	0000	%
PWM#	0000	mA	freq	0000	Hz
actcur	0000	mA	volt	0000	V
tgtcur	0000	mA	ovc	0000	

PWM# : PWM channel number
actcur : Fan current (actual)
tgtcur : (Target)
duty : Duty
freq : Frequency
volt : Voltage
ovc : Overcurrent detection status

[7] PWM data

CHK	H/W-A	7	duty	0000	%
PWM#	0000	mA	freq	0000	Hz
actcur	0000	mA	volt	0000	V
tgtcur	0000	mA	ovc	0000	

PWM# : PWM channel number
actcur : Pump power current (actual)
tgtcur : (Target)
duty : Duty
freq : Frequency
volt : Voltage
ovc : Overcurrent detection status

[8] Frequency and communication

CHK	H/W-A	8	RS232	0000
FreqIn	0000		-5-	0000
CAN	0000		-6-	0000
UART	0000		-7-	0000

FreqIn : Frequency input
CAN : CAN communication state
UART : UART communication state
RS232 : RS232C communication state
-5- : *
-6- : *
-7- : *

H / W-B

[1] Computer B **(Not used by LBX)** digital input / output

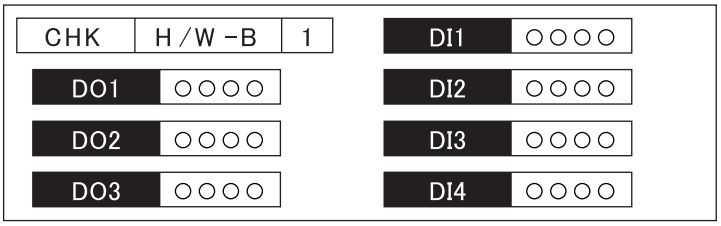

Hydraulic circuit input / output state (○=OFF, ●=ON)

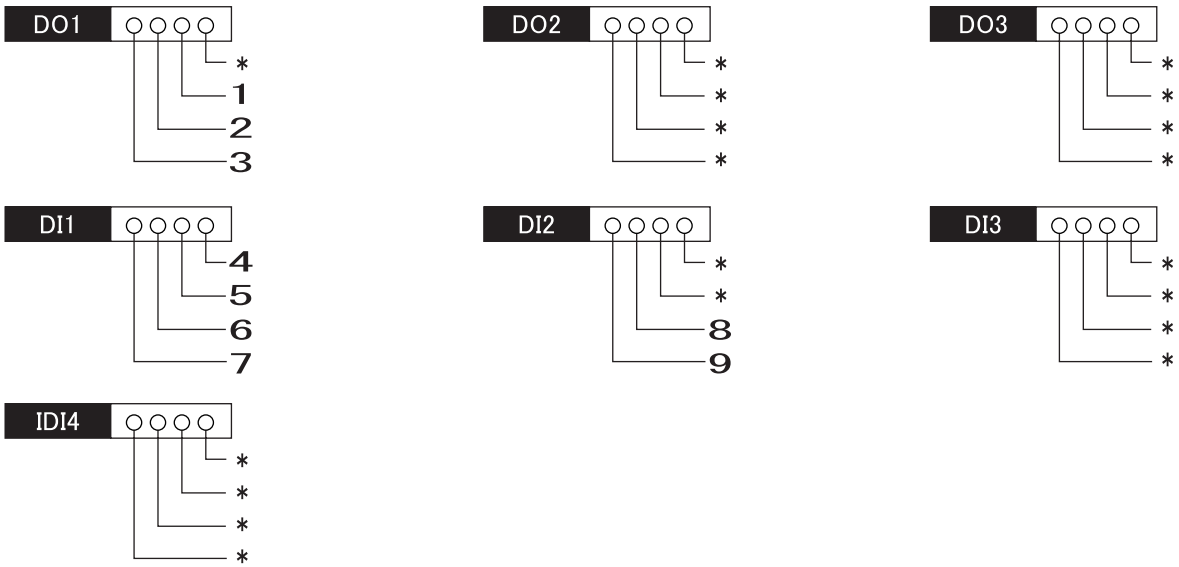

1	Solenoid lever lock	6	Switch Interference Temporary release
2	Rotating light and bucket lock	7	Switch Lifting magnet mode
3	Crane Buzzer	8	Program select 1
4	Switch Crane Mode	9	Switch, interference, shut-off release
5	Switch Crane Display switching		

[2] Digital output / output monitor

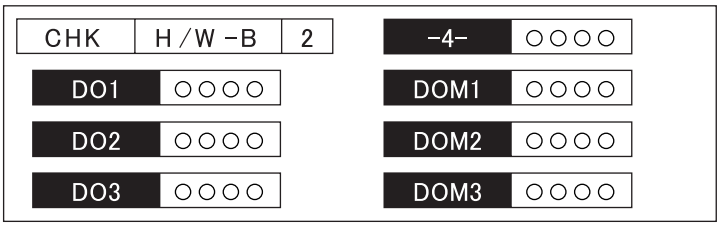

Hydraulic circuit input / output state (○=OFF, ●=ON)

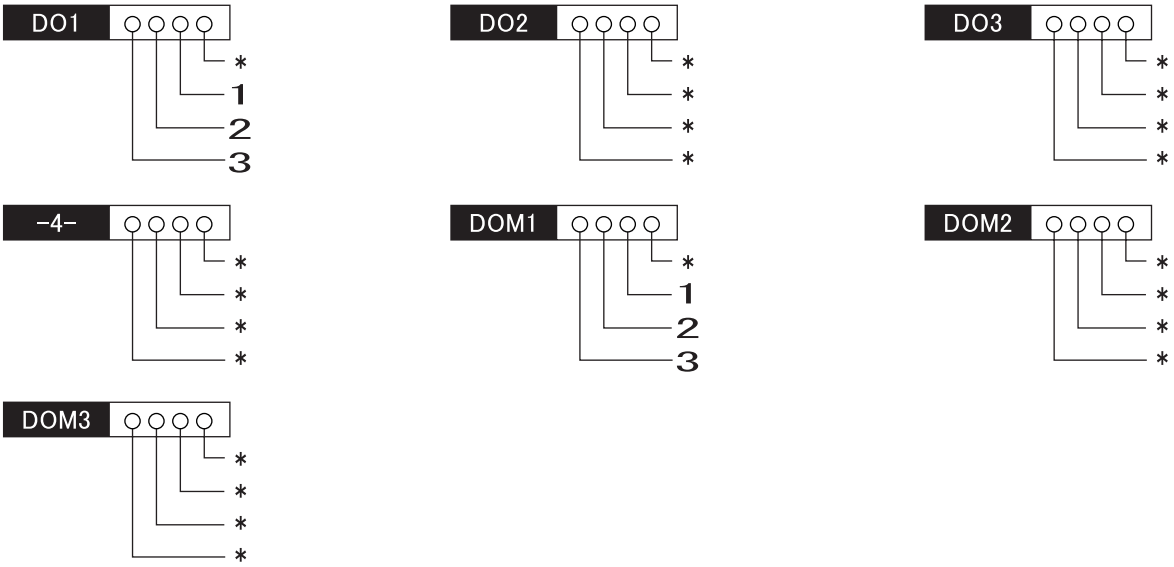

1	Solenoid lever lock
2	Rotating light and bucket lock
3	Crane Buzzer

[3] Potentio-meter voltage

CHK	H/W-B	3	Pot4	0000	V
Pot1	0000	V	Pot5	0000	V
Pot2	0000	V	Pot6	0000	V
Pot3	0000	V	Pot7	0000	V

Pot1 : Sensor angle boom
Pot2 : Sensor angle arm
Pot3 : Sensor angle offset
Pot4 : Sensor pressure bottom
Pot5 : Sensor pressure rod
Pot6 : *
Pot7 : *

[4] Potentio-meter and sensor voltage

CHK	H/W-B	4	Sn1	0000	V
Pot8	0000	V	Sn2	0000	V
Pot9	0000	V	Sn1	0000	Ω
Pot10	0000	V	Sn2	0000	Ω

Pot8 : *
Pot9 : *
Pot10 : *
Sn1 : *
Sn2 : *
Sn1 : *
Sn2 : *

[5] PWM data

CHK	H/W-B	5	duty	0000	%
PWM#	0000	mA	freq	0000	Hz
actcur	0000	mA	volt	0000	V
tgtcur	0000	mA	ovc	0000	

PWM# : PWM channel number
actcur : Pump power current (actual)
tgtcur : (Target)
duty : Duty
freq : Frequency
volt : Voltage
ovc : Overcurrent detection status

[6] PWM data

CHK	H/W-B	6	duty	0000	%
PWM#	0000	mA	freq	0000	Hz
actcur	0000	mA	volt	0000	V
tgtcur	0000	mA	ovc	0000	

PWM# : PWM channel number
actcur : Pump power current (actual)
tgtcur : (Target)
duty : Duty
freq : Frequency
volt : Voltage
ovc : Overcurrent detection status

[7] PWM data

CHK	H/W-B	7	duty	0000	%
PWM#	0000	mA	freq	0000	Hz
actcur	0000	mA	volt	0000	V
tgtcur	0000	mA	ovc	0000	

PWM# : PWM channel number
actcur : Pump power current (actual)
tgtcur : (Target)
duty : Duty
freq : Frequency
volt : Voltage
ovc : Overcurrent detection status

[8] Frequency and communication

CHK	H/W-B	8	RS232	0000
FreqIn	0000		-5-	0000
CAN	0000		-6-	0000
UART	0000		-7-	0000

FreqIn : Frequency input
CAN : CAN communication state
UART : UART communication state
RS232 : RS232C communication state
-5- : *
-6- : *
-7- : *

H / W-M

[1] Monitor

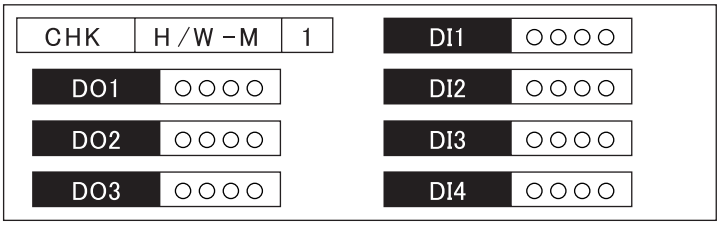

Hydraulic circuit input / output state (○=OFF, ●=ON)

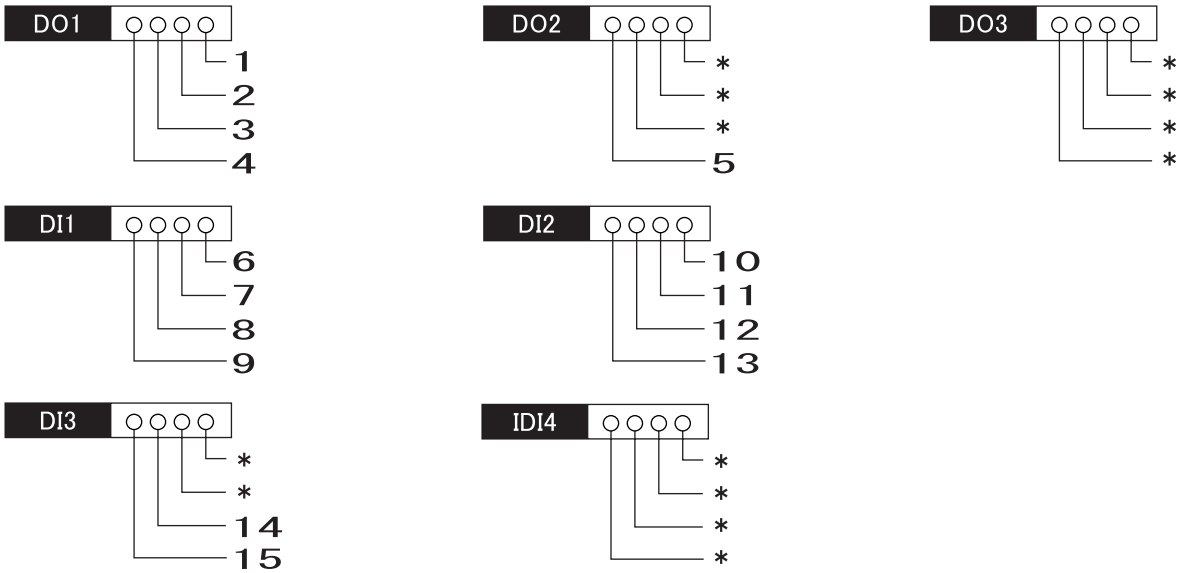

1	Working light	6	Switch Wiper	11	Switch 2nd speed merge
2	Motor Washer	7	Switch Washer	12	Switch Auto idle switching
3	Wiper CNT	8	Switch Horn volume switching	13	Switch Working light
4	Wiper INT	9	Switch Travel 2-speed switching	14	Switch Limit Front window
5	Relay, horn volume switching	10	Switch Breaker switching	15	Switch Crusher switching

H / W-S

[1] Satellite communications computer

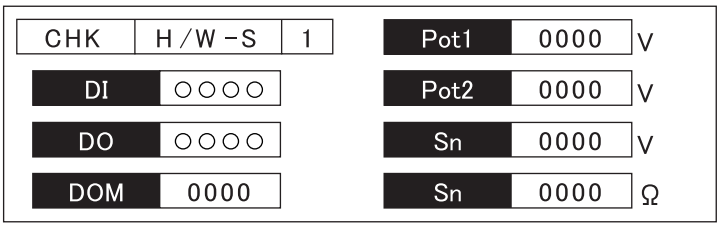

Hydraulic circuit input / output state (○=OFF, ●=ON)

2. DIAG (trouble diagnosis) Screen

(1) Screen

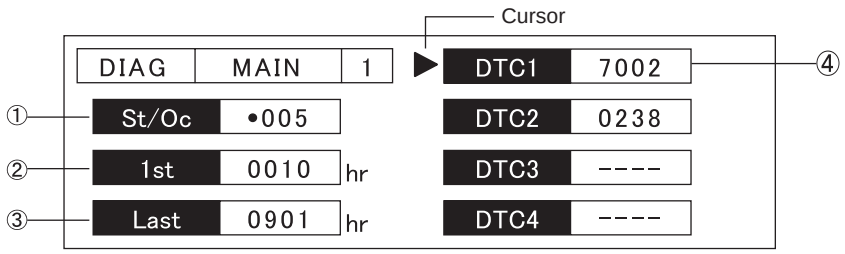

[1] Displays the status at the cursor and the occurrence count.

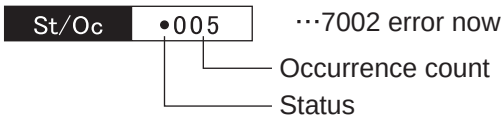

…7002 error now occurring / trouble has occurred 5 times in the past

[Status]

Displays whether the diagnostic trouble code under the cursor is current or from the past.

For ●, the trouble is current or continuing.

For ○, the status is normal or recovered. (The trouble is not occurring now, but has occurred in the past.)

[Occurrence count]

The number of times that diagnostic trouble code under the cursor has occurred

[2] Displays the time at which the trouble under the cursor first occurred

1st 0010 hr …Occurred first at 10 hours

[3] Displays the time at which the trouble under the cursor last occurred

1st 0010 hr …Occurred first at 10 hours

[4] Diagnostic trouble code

The troubles are sorted with the last one to occur at the top of the list.

Displayed when the whether the diagnostic trouble code under the cursor is (1) to (3).

DTC1 7002 …7002 (faulty N1 pressure sensor)

DTC2 0238 …0238 (Boost pressure sensor abnormally high voltage)

DTC3 ----

DTC4 ----

For details on error codes, see the separate error list.

Maximum display count

4 codes per page X 16 pages = 64 diagnostic trouble codes are displayed. From the 65th code onward, the oldest code is erased. However, even though these codes are not displayed, the data is retained.

(2) Operation

① Cursor up / down
Up operation ··· wiper switch
Down operation ··· auto idle switch

② Page forward / back
Forward operation ··· light switch
Back operation ··· washer switch

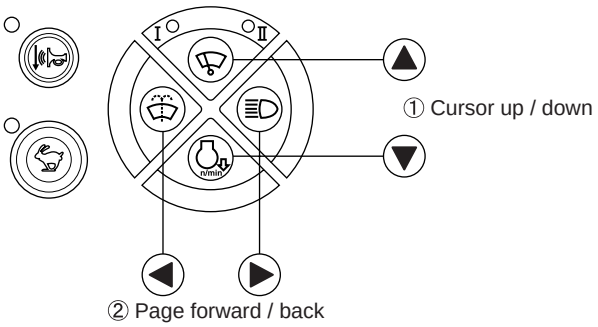

(3) Reset

If the washer switch and the light switch are held down for 10 seconds, the error log is reset.

3. HR (usage log) Screen List

(1) MAIN

[1] Main unit operating time

HR	MAIN	1			
			Upr	0000	hr
KeyOn	0000	hr	Swg	0000	hr
EngOn	0000	hr	Trv	0000	hr
Work	0000	hr	TrSolo	0000	hr

KeyOn : Key ON time
EngOn : Alterneter generating time
Work : Upper operating time (Upper ON or travel ON)
Upr : Upper operating time
Swg : Swing operating time
Trv : Travel operating time
TrSolo : Solo travel time

[2] Electrical parts Operating time

HR	MAIN	2			
			WLight	0000	hr
WpInt	0000	hr	HornLo	0000	hr
WpCnt	0000	hr	DrOpn	0000	hr
Wsh	0000	hr	WinOpn	0000	hr

WpInt : Wiper (intermittent) operating time
WpCnt : Wiper (continuous) operating time
Wsh : Washer operating time
WLight : Working light operating time
HornLo : Horn volume low time
DrOpn : Door open time
WinOpn : Front window open time

[3] Idle time

HR	MAIN	3			
			4	0000	hr
1	0000	hr	5	0000	hr
2	0000	hr	6	0000	hr
3	0000	hr	7	0000	hr

1 : Auto idle time
2 : One-touch idle time
3 : Boosted pressure time
4 : *
5 : *
6 : *
7 : *

[4] Pressure switch operation count

HR	MAIN	4			
			4	0000	times
1	0000	times	5	0000	times
2	0000	times	6	0000	times
3	0000	times	7	0000	times

1 : Upper pressure sensor (pseudo) ON count
2 : Swing pressure sensor (pseudo) ON count
3 : Travel pressure sensor (pseudo) ON count
4 : Arm close pressure switch (pseudo) ON count
5 : Option 1 pressure switch ON count
6 : Option 2 pressure switch ON count
7 : *

[5] Operation switch operation count

HR	MAIN	5			
			4	0000	times
1	0000	times	5	0000	times
2	0000	times	6	0000	times
3	0000	times	7	0000	times

1 : Key ON count
2 : Engine start count
3 : Front window open count
4 : Door open count
5 : Boost solenoid ON count
6 : Swing brake solenoid ON count
7 : Power save solenoid ON count

[6] Work mode

HR	MAIN	6			
			4	0000	hr
1	0000	hr	5	0000	hr
2	0000	hr	6	0000	hr
3	0000	hr	7	0000	hr

1 : Mode usage time
2 : Mode usage time
3 : Mode usage time
4 : Mode usage time
5 : Mode usage time
6 : Mode usage time
7 : Mode usage time

[7] Breaker usage time

HR	MAIN	7			
			4	0000	hr
1	0000	hr	5	0000	hr
2	0000	hr	6	0000	hr
3	0000	hr	7	0000	hr

1 : Breaker 1 operating time
2 : Breaker 2 operating time
3 : Breaker 3 operating time
4 : Breaker 4 operating time
5 : Breaker 5 operating time
6 : *
7 : *

[8] Crusher usage time

HR	MAIN	8			
			4	0000	hr
1	0000	hr	5	0000	hr
2	0000	hr	6	0000	hr
3	0000	hr	7	0000	hr

1 : Crusher 1 operating time
2 : Crusher 2 operating time
3 : Crusher 3 operating time
4 : Crusher 4 operating time
5 : Crusher 5 operating time
6 : *
7 : *

[9] Travel time distribution

HR	MAIN	9			
			4	0000	hr
1	0000	hr	5	0000	hr
2	0000	hr	6	0000	hr
3	0000	hr	7	0000	hr

1 : 1st speed time
2 : 2nd speed time
3 : *
4 : *
5 : *
6 : *
7 : *

[10] P1 pressure (P) distribution

HR	MAIN	10			
			4	0000	hr
1	0000	hr	5	0000	hr
2	0000	hr	6	0000	hr
3	0000	hr	7	0000	hr

1 : P < 10 MPa Time
2 : 10 MPa ≦ P < 15 MPa Time
3 : 15 MPa ≦ P < 20 MPa Time
4 : 20 MPa ≦ P < 25 MPa Time
5 : 25 MPa ≦ P < 30 MPa Time
6 : 30 MPa ≦ P < 35 MPa Time
7 : 35 MPa ≦ P Time

[11] P2 pressure (P) distribution

HR	MAIN	11			
			4	0000	hr
1	0000	hr	5	0000	hr
2	0000	hr	6	0000	hr
3	0000	hr	7	0000	hr

1 : P < 10 MPa Time
2 : 10 MPa ≦ P < 15 MPa Time
3 : 15 MPa ≦ P < 20 MPa Time
4 : 20 MPa ≦ P < 25 MPa Time
5 : 25 MPa ≦ P < 30 MPa Time
6 : 30 MPa ≦ P < 35 MPa Time
7 : 35 MPa ≦ P Time

[12] N1 pressure distribution

HR	MAIN	12			
1	0000	hr	4	0000	hr
2	0000	hr	5	0000	hr
3	0000	hr	6	0000	hr
			7	0000	hr

1 : P < 1.0 MPa Time
2 : 1.0 MPa ≦ P < 1.5 MPa Time
3 : 1.5 MPa ≦ P < 2.0 MPa Time
4 : 2.0 MPa ≦ P < 2.5 MPa Time
5 : 2.5 MPa ≦ P < 3.0 MPa Time
6 : 3.0 MPa ≦ P < 3.5 MPa Time
7 : 3.5 MPa ≦ P Time

[13] N2 pressure (P) distribution

HR	MAIN	13			
1	0000	hr	4	0000	hr
2	0000	hr	5	0000	hr
3	0000	hr	6	0000	hr
			7	0000	hr

1 : P < 1.0 MPa Time
2 : 1.0 MPa ≦ P < 1.5 MPa Time
3 : 1.5 MPa ≦ P < 2.0 MPa Time
4 : 2.0 MPa ≦ P < 2.5 MPa Time
5 : 2.5 MPa ≦ P < 3.0 MPa Time
6 : 3.0 MPa ≦ P < 3.5 MPa Time
7 : 3.5 MPa ≦ P Time

[14] Oil temperature (T) distribution

HR	MAIN	14			
1	0000	hr	4	0000	hr
2	0000	hr	5	0000	hr
3	0000	hr	6	0000	hr
			7	0000	hr

1 : T < 45 °C Time (bar graph 1st and 2nd gradation)
2 : 45 °C ≦ T < 60 °C Time (bar graph 3rd gradation)
3 : 60 °C ≦ T < 80 °C Time (bar graph 4th gradation)
4 : 80 °C ≦ T < 88 °C Time (bar graph 5th gradation)
5 : 88 °C ≦ T < 95 °C Time (bar graph 6th gradation)
6 : 95 °C ≦ T < 98 °C Time (bar graph 7th gradation)
7 : 98 °C ≦ T Time (bar graph 8th gradation)

(2) ENG

[1] Oil temperature / coolant temperature / pressure maximum values
(Measured starting 10 minutes after engine started)

HR	ENG	1			
CoolInt	0000	°C	Air	0000	°C
HydOil	0000	°C	BstT	0000	°C
FuelT	0000	°C	BstP	0000	kPa
			EngOil	0000	kPa

CoolInt : Radiator coolant temperature
HydOil : Hydraulic oil maximum temperature
FuelT : Fuel maximum temperature
Air : Suction air maximum temperature
BstT : Boost maximum temperature
BstP : Boost maximum pressure
EngOil : Engine oil minimum pressure

[2] Engine actual speed (S) distribution

HR	ENG	2			
1	0000	hr	4	0000	hr
2	0000	hr	5	0000	hr
3	0000	hr	6	0000	hr
			7	0000	hr

1 : S < 1025 min^{-1} Time
2 : 1025 min^{-1} ≦ S < 1225 min^{-1} Time
3 : 1225 min^{-1} ≦ S < 1425 min^{-1} Time
4 : 1425 min^{-1} ≦ S < 1625 min^{-1} Time
5 : 1625 min^{-1} ≦ S < 1825 min^{-1} Time
6 : 1825 min^{-1} ≦ S < 2025 min^{-1} Time
7 : 2025 min^{-1} ≦ S Time

[3] Coolant temperature (T) distribution

HR	ENG	3			
			4	0000	hr
1	0000	hr	5	0000	hr
2	0000	hr	6	0000	hr
3	0000	hr	7	0000	hr

1 : T < 77 °C Time (bar graph 1st and 2nd gradation)
2 : 77 °C ≦ T < 82 °C Time (bar graph 3rd gradation)
3 : 82 °C ≦ T < 97 °C Time (bar graph 4th gradation)
4 : 97 °C ≦ T < 100 °C Time (bar graph 5th gradation)
5 : 100 °C ≦ T < 103 °C Time (bar graph 6th gradation)
6 : 103 °C ≦ T < 105 °C Time (bar graph 7th gradation)
7 : 105 °C ≦ T Time (bar graph 8th gradation)

[4] Fuel temperature (T) distribution

HR	ENG	4			
			4	0000	hr
1	0000	hr	5	0000	hr
2	0000	hr	6	0000	hr
3	0000	hr	7	0000	hr

1 : T < 40 °C Time
2 : 40 °C ≦ T < 50 °C Time
3 : 50 °C ≦ T < 60 °C Time
4 : 60 °C ≦ T < 70 °C Time
5 : 70 °C ≦ T < 80 °C Time
6 : 80 °C ≦ T < 90 °C Time
7 : 90 °C ≦ T Time

[5] Suction air temperature (T) distribution

HR	ENG	5			
			4	0000	hr
1	0000	hr	5	0000	hr
2	0000	hr	6	0000	hr
3	0000	hr	7	0000	hr

1 : T < -20 °C Time
2 : -20 °C ≦ T < 0 °C Time
3 : 0 °C ≦ T < 15 °C Time
4 : 15 °C ≦ T < 30 °C Time
5 : 30 °C ≦ T < 45 °C Time
6 : 45 °C ≦ T < 60 °C Time
7 : 60 °C ≦ T Time

[6] Boost temperature (T) distribution

HR	ENG	6			
			4	0000	hr
1	0000	hr	5	0000	hr
2	0000	hr	6	0000	hr
3	0000	hr	7	0000	hr

1 : T < 50 °C Time
2 : 50 °C ≦ T < 80 °C Time
3 : 80 °C ≦ T < 110 °C Time
4 : 110 °C ≦ T < 140 °C Time
5 : 140 °C ≦ T < 170 °C Time
6 : 170 °C ≦ T < 200 °C Time
7 : 200 °C ≦ T Time

[7] Barometric pressure (P) distribution

HR	ENG	7			
			4	0000	hr
1	0000	hr	5	0000	hr
2	0000	hr	6	0000	hr
3	0000	hr	7	0000	hr

1 : P < 600 hPa Time
2 : 600 hPa ≦ P < 690 hPa Time
3 : 600 hPa ≦ P < 780 hPa Time
4 : 780 hPa ≦ P < 870 hPa Time
5 : 870 hPa ≦ P < 960 hPa Time
6 : 960 hPa ≦ P < 1050 hPa Time
7 : 1050 hPa ≦ P Time

[8] Engine oil pressure (P) distribution

HR	ENG	8			
1	0000	hr	4	0000	hr
2	0000	hr	5	0000	hr
3	0000	hr	6	0000	hr
			7	0000	hr

1 : 1P < 0 kPa Time
2 : 0 kPa ≦ P < 150 kPa Time
3 : 150 kPa ≦ P < 300 kPa Time
4 : 300 kPa ≦ P < 450 kPa Time
5 : 450 kPa ≦ P < 600 kPa Time
6 : 600 kPa ≦ P < 750 kPa Time
7 : 750 kPa ≦ P Time

[9] Boost pressure (P) distribution

HR	ENG	9			
1	0000	hr	4	0000	hr
2	0000	hr	5	0000	hr
3	0000	hr	6	0000	hr
			7	0000	hr

1 : P < 150 kPa Time
2 : 150 kPa ≦ P < 180 kPa Time
3 : 180 kPa ≦ P < 210 kPa Time
4 : 210 kPa ≦ P < 240 kPa Time
5 : 240 kPa ≦ P < 270 kPa Time
6 : 270 kPa ≦ P < 300 kPa Time
7 : 300 kPa ≦ P Time

[10] Load ratio (R) distribution

HR	ENG	10			
1	0000	hr	4	0000	hr
2	0000	hr	5	0000	hr
3	0000	hr	6	0000	hr
			7	0000	hr

1 : R < 30 % Time
2 : 30 % ≦ R < 40 % Time
3 : 40 % ≦ R < 50 % Time
4 : 50 % ≦ R < 60 % Time
5 : 60 % ≦ R < 70 % Time
6 : 70 % ≦ R < 80 % Time
7 : 80 % ≦ R Time

[11] Load ratio (R) distribution for SP mode

HR	ENG	11			
1	0000	hr	4	0000	hr
2	0000	hr	5	0000	hr
3	0000	hr	6	0000	hr
			7	0000	hr

1 : R < 30 % Time
2 : 30 % ≦ R < 40 % Time
3 : 40 % ≦ R < 50 % Time
4 : 50 % ≦ R < 60 % Time
5 : 60 % ≦ R < 70 % Time
6 : 70 % ≦ R < 80 % Time
7 : 80 % ≦ R Time

[12] Load ratio (R) distribution for H mode

HR	ENG	12			
1	0000	hr	4	0000	hr
2	0000	hr	5	0000	hr
3	0000	hr	6	0000	hr
			7	0000	hr

1 : R < 30 % Time
2 : 30 % ≦ R < 40 % Time
3 : 40 % ≦ R < 50 % Time
4 : 50 % ≦ R < 60 % Time
5 : 60 % ≦ R < 70 % Time
6 : 70 % ≦ R < 80 % Time
7 : 80 % ≦ R Time

(3) CRANE **(Not used by LBX)**

[1] Crane operating time

HR	CRANE	1		Upr	0000	hr
KeyOn	0000	hr		Swg	0000	hr
EngOn	0000	hr		Trv	0000	hr
Work	0000	hr		TrSolo	0000	hr

KeyOn : *
EngOn : *
Work : operating time
Upr : Upper operating time
Swg : Swing operating time
Trv : Travel operating time
TrSolo : Solo travel time

[2] Hanging load (W) distribution

HR	CRANE	2		4	0000	hr
1	0000	hr		5	0000	hr
2	0000	hr		6	0000	hr
3	0000	hr		7	0000	hr

1 : W < 4000 kg Time
2 : 400 kg ≦ W < 800 kg Time
3 : 800 kg ≦ W < 1200 kg Time
4 : 1200 kg ≦ W < 1600 kg Time
5 : 1600 kg ≦ W < 2000 kg Time
6 : 2000 kg ≦ W < 2400 kg Time
7 : 2400 kg ≦ W Time

[3] Distribution of proportion (R) of hanging load to rated load

HR	CRANE	3		4	0000	hr
1	0000	hr		5	0000	hr
2	0000	hr		6	0000	hr
3	0000	hr		7	0000	hr

1 : R < 20 % Time
2 : 20 % ≦ R < 40 % Time
3 : 40 % ≦ R < 60 % Time
4 : 60 % ≦ R < 80 % Time
5 : 80 % ≦ R < 90 % Time
6 : 90 % ≦ R < 100 % Time
7 : 100 % ≦ R Time

[4] Distribution of proportion (R) of work radius to maximum work radius

HR	CRANE	4		4	0000	hr
1	0000	hr		5	0000	hr
2	0000	hr		6	0000	hr
3	0000	hr		7	0000	hr

1 : R < 30 % Time
2 : 30 % ≦ R < 40 % Time
3 : 40 % ≦ R < 50 % Time
4 : 50 % ≦ R < 60 % Time
5 : 60 % ≦ R < 70 % Time
6 : 70 % ≦ R < 80 % Time
7 : 80 % ≦ R Time

[5] Distribution of proportion (R) of work height (or depth) to maximum work height
*Height above ground = 0%

HR	CRANE	5		4	0000	hr
1	0000	hr		5	0000	hr
2	0000	hr		6	0000	hr
3	0000	hr		7	0000	hr

1 : R < -45 % Time
2 : -45 % ≦ R < -30 % Time
3 : -30 % ≦ R < -15 % Time
4 : -15 % ≦ R < 0 % Time
5 : 0 % ≦ R < 15 % Time
6 : 15 % ≦ R < 30 % Time
7 : 30 % ≦ R Time

(4) A.INTF

[1] Offset angle (D) Right is positive.

HR	A.INTF	1			
1	0000	hr	4	0000	hr
2	0000	hr	5	0000	hr
3	0000	hr	6	0000	hr
			7	0000	hr

1 : D < 30 ° Time
2 : 30 ° ≦ D < -18 ° Time
3 : -18 ° ≦ D < -6 ° Time
4 : -6 ° ≦ D < 6 ° Time
5 : 6 ° ≦ D < 18 ° Time
6 : 18 ° ≦ D < 30 ° Time
7 : 30 ° ≦ D Time

[2] Work area distribution

HR	A.INTF	2			
1	0000	hr	4	0000	hr
2	0000	hr	5	0000	hr
3	0000	hr	6	0000	hr
			7	0000	hr

1 : Temporary end time
2 : Abnormal end time
3 : Safety area time
4 : Stop area time
5 : Speed reduction area time
6 : *
7 : *

4. CFG (setting change) Screen

(1) Operation

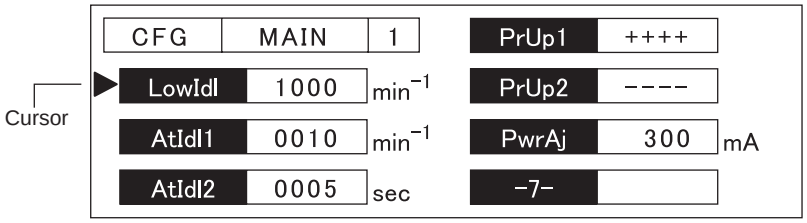

[1] View mode (screen switching operations)

① Switching to edit mode
Hold down the auto idle switch for one second. The mode switches to edit mode and the cursor is displayed.

② Page forward / back
Forward operation ··· light switch
Back operation ··· washer switch

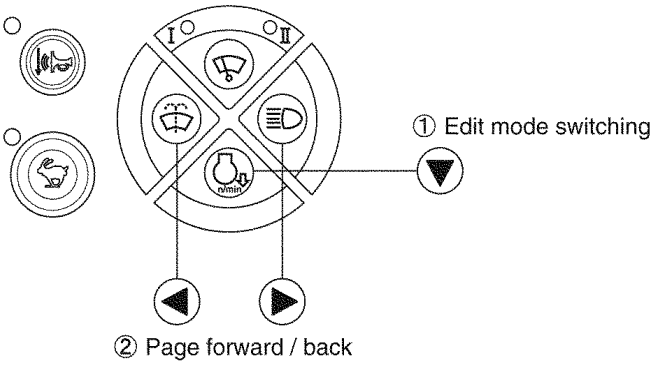

[2] Edit mode (setting change operation)

① Cursor up / down
Up operation ··· wiper switch
Down operation ··· auto idle switch

② Numeric value increase / decrease
Increase value ··· light switch
Decrease value ··· washer switch

③ Enter
Enters the set contents.

④ Cancel
Cancels the set contents.

When ③ or ④ is executed, this exits edit mode and shifts the mode to view mode. (The cursor disappears.)

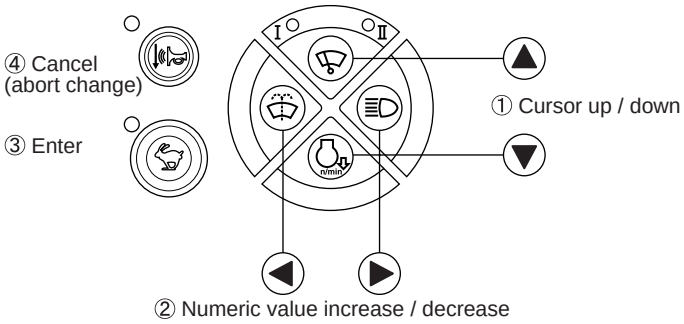

[3] Reset
If the washer switch and the light switch are held down for 10 seconds, the setting contents are reset and all settings return to their default values.

(2) Screen

[1] MAIN 1

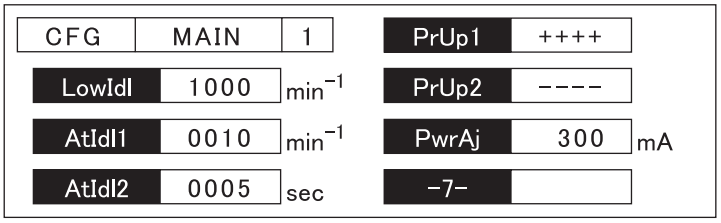

Item name	Explanation	Setting range	Default value
LowIdl	Low idling speed	Min speed to Auto-idle speed	1000
AtIdl1	Auto idling speed	Low idling speed to 1500	1200
AtIdl2	Auto idling shift time	1 to 30	5
PrUp1	Auto power boost yes / no	+ : YES, - : NO	+
PrUp2	Auto power boost for option line usage yes / no	+ : YES, - : NO	-
PwrAj	Overload minimum current	50 to 400	300
-7-			

[2] MAIN 2

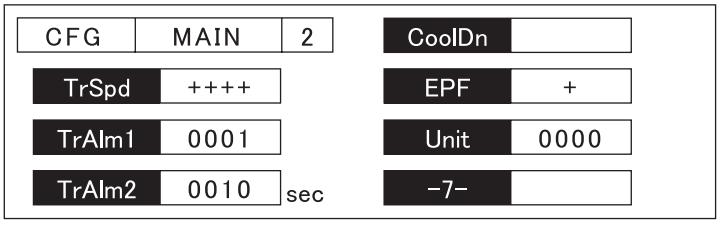

Item name	Explanation	Setting range	Default value
TrSpd	Travel speed previous data held yes / no	+ : YES, - : NO	+
TrAlm1	Travel alarm mode	0: None, 1: Automatic stop, 2: Continuous	1
TrAlm2	Travel alarm automatic stop time	1 to 30	10
CoolDn			
EPF	EPF (Engine Protection Feature) yes / no	+ : YES, - : NO	-
Unit	Display unit	0: MPa, 1: PSI, 2: kgf/cm	0
-7-			

* Display unit contents … MPa = { MPa,° C }, PSI = { psi, ° F}, kgf/cm^2 = { kgf/cm^2, ° C }

[3] MAIN 3

CFG	MAIN	3		MntMsg	+	
Spd1			min^{-1}	Cycle	0500	
Spd2			min^{-1}	Remain	0500	mA
OvLd			sec	-7-		

Item name	Explanation	Setting range	Default value
Spd1			
Spd2			
OvLd	Pressure at which alarm starts		
MntMsg	"SERVICE DUE" display yes / no	+ : YES, - : NO	+
Cycle	"SERVICE DUE" display range	0 to 5000	500
Remain	Time until next "SERVICE DUE" display	0 to 5000	500
-7-			

* OvLd is an option for Europe. **(Not used by LBX)**

[4] AINTF 1

CFG	A.INFT	1		BkWd		
Front			min^{-1}	-5-		
Right			min^{-1}	-6-		mA
BkLen			sec	-7-		

Item name	Explanation	Setting range	Default value
Front	All surface stop area compensation value		
Right	Right surface stop compensation value		
BkLen	Bucket toe distance		
BkWd	Bucket width		
-5-	N / A		
-6-	N / A		
-7-	N / A		

5. CAL (troubleshooting support) Screen

(1) Operation

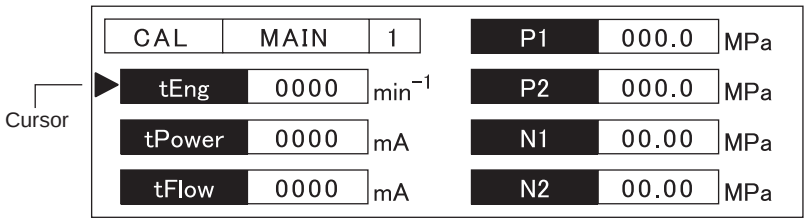

[1] View mode (screen switching operation)

① Switching to edit mode
Hold down the auto idle switch for one second. The mode switches to edit mode and the cursor is displayed.

② Page forward / back
Forward operation ··· light switch
Back operation ··· washer switch

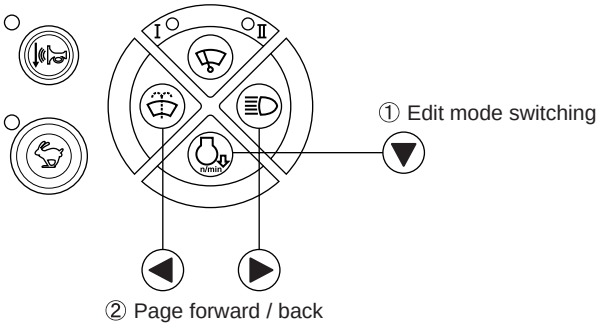

[2] Edit mode (setting change operation)

① Cursor up / down
Up operation ··· wiper switch
Down operation ··· auto idle switch

② Numeric value increase / decrease
Increase value ··· light switch
Decrease value ··· washer switch

③ Enter
Enters the set contents.

④ Cancel
Use the travel high-speed select switch or horn volume select switch to cancel.Exits edit mode and shifts to view mode. (The cursor disappears.)

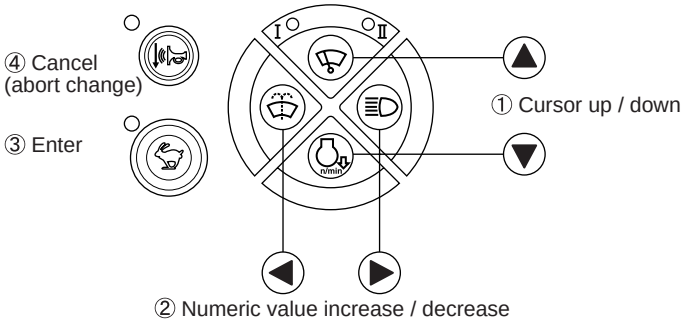

(2) Screen

[1] Engine pump override 1

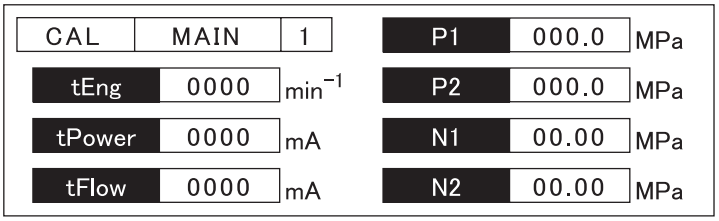

Item name	Explanation	Setting range	Default value
tEng	Target engine speed	500 to max speed	1000
tPower	Target pump power current	50 to 40	500
tFlow	Target pump flow current	5 to 740	500
P1	P1 pressure	-	-
P2	P2 pressure	-	-
N1	N1 pressure	-	-
N2	N2 pressure	-	-

[2] Engine pump override 2

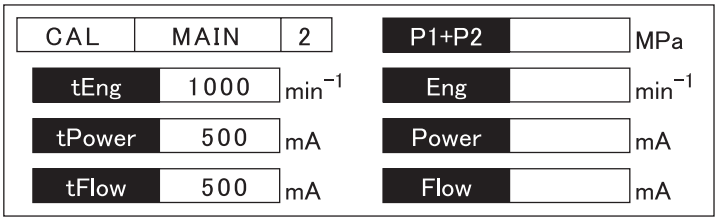

Item name	Explanation	Setting range	Default value
tEng	Target engine speed	500 to max speed	1000
tPower	Target pump power current	50 to 740	500
tFlow	Target pump flow current	50 to 740	500
P1+P2	P1+P2 pressure	-	-
Eng	Actual engine speed	-	-
Power	Actual pump power current	-	-
Flow	Actual pump flow current	-	-

[3] Hydraulic pressure drive fan override

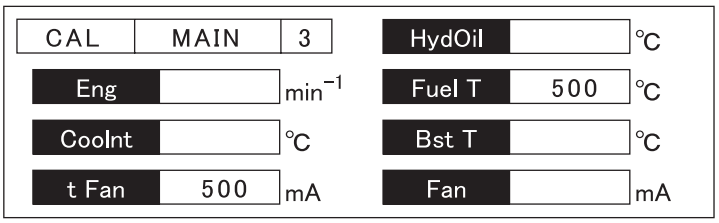

Item name	Explanation	Setting range	Default value
Eng	Actual engine speed	-	-
CoolInt	Coolant temperature	-	-
tFan	Target fan current	50 to 740	500
HydOil	Oil temperature	-	-
FuelT	Fuel temperature	-	-
BstT	Boost temperature	-	-
Fan	Fan current	-	-

6. Check the Monitor Switch (monitor switch check screen)

(1) Summary and purpose

By directly displaying the ON / OFF status of the switches that the monitor itself recognizes, monitor switch trouble (including external input switches) is diagnosed.

(2) Screen

To go to this screen, see "Screen shift and reset".

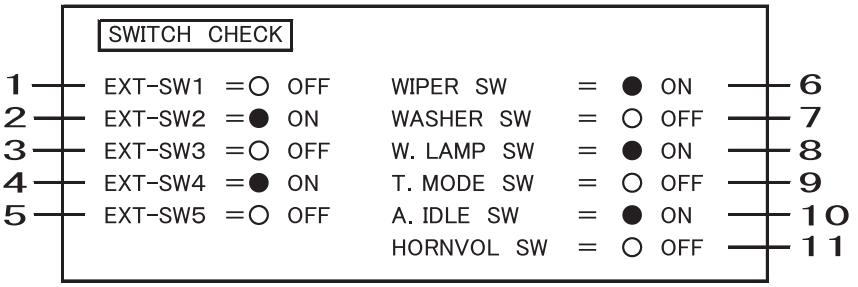

1	2nd speed merge switch	5	Not used	9	Travel high-speed select switch
2	Front window limit switch	6	Wiper switch	10	Auto idle switch
3	Breaker mode switch	7	Washer switch	11	Horn volume select switch
4	Crusher mode switch	8	Working light switch		

(3) Configuration

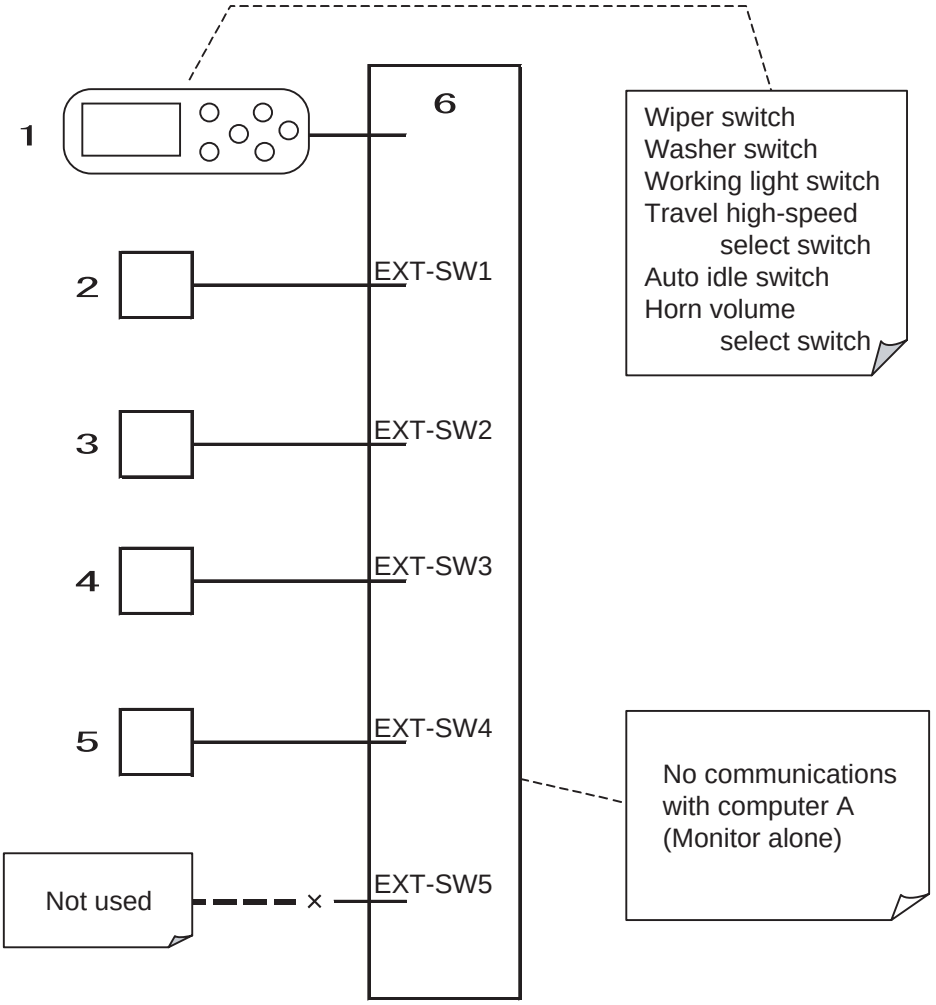

1	Switch panel	4	Breaker mode switch
2	2nd speed merge switch	5	Crusher mode switch
3	Front window limit switch	6	Monitor

(4) Differences from CHK screen [CHK|H/W-M|1]

Monitor main unit input / output can also be checked on the CHK screen.However, the CHK screen

[1] displays the results sent to the monitor as screen data

[2] after the switch input is communicated to Computer,

[3] then processed by Computer.

On the monitor switch check screen, the switch input recognized by the monitor itself is displayed directly on the screen (without involving communications or Computer), so it is possible to diagnose purely the switches themselves.

7. Option Flow Setting

[1] Operation

1) Switching to flow setting screen
From the normal screen, if the breaker switch or the crusher switch is held down for 3 seconds, the display shifts to the flow setting.
Flow setting screen

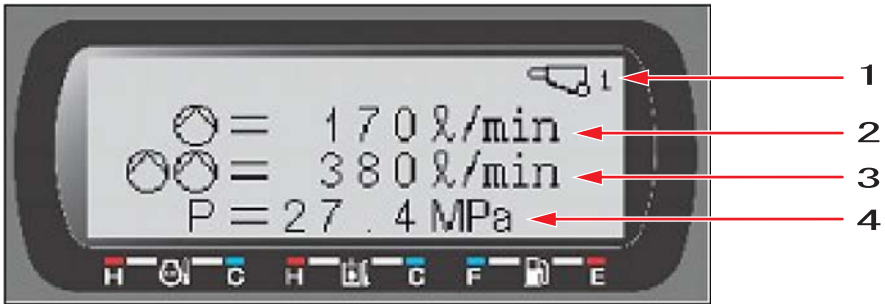

1	Mode display (breaker / crusher)	3	2nd speed flow
2	1st speed flow	4	Discharge pressure (P1)

2) Flow setting
1. Press the breaker or crusher mode switch to select the mode to set the flow for.

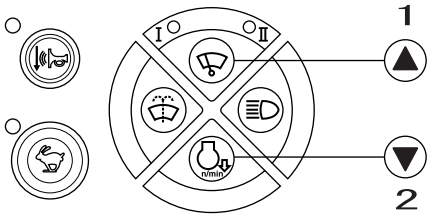

- Rocker switch -

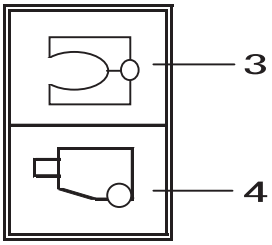

1	Flow increase	3	Crusher mode (1 to 5) switchover
2	Flow decrease	4	Breaker mode (1 to 5) switchover

2. The flow setting for the selected mode is selected by pressing the wiper switch or auto idle select switch.
   The flow setting can be set to 10 levels from Level 1 to Level 10.
   Caution
   The set flow is the flow value when SP mode is selected.
   Be careful. If run with the engine speed reduced, the actual flow is not the flow displayed.

	Unit	210X2	240X2
1st speed flow (flow Level 1)	Gal. (L)/ min	55 (210)	62 (234)
1st speed flow (flow Level 2)	Gal. (L)/ min	52 (196)	58 (218)
1st speed flow (flow Level 3)	Gal. (L)/ min	48 (182)	53 (202)
1st speed flow (flow Level 4)	Gal. (L)/ min	44 (166)	49 (184)
1st speed flow (flow Level 5)	Gal. (L)/ min	39 (146)	43 (161)
1st speed flow (flow Level 6)	Gal. (L)/ min	34 (129)	37 (141)
1st speed flow (flow Level 7)	Gal. (L)/ min	29 (111)	32 (120)
1st speed flow (flow Level 8)	Gal. (L)/ min	25 (94)	26 (100)
1st speed flow (flow Level 9)	Gal. (L)/ min	19 (74)	20 (77)
1st speed flow (flow Level 10)	Gal. (L)/ min	13 (50)	13 (50)
2nd speed flow (flow Level 1)	Gal. (L)/ min	111 (420)	114 (468)
2nd speed flow (flow Level 2)	Gal. (L)/ min	107 (406)	119 (452)
2nd speed flow (flow Level 3)	Gal. (L)/ min	104 (392)	115 (436)
2nd speed flow (flow Level 4)	Gal. (L)/ min	99 (376)	110 (418)
2nd speed flow (flow Level 5)	Gal. (L)/ min	94 (356)	104 (395)
2nd speed flow (flow Level 6)	Gal. (L)/ min	90 (339)	99 (375)
2nd speed flow (flow Level 7)	Gal. (L)/ min	85 (321)	94 (354)
2nd speed flow (flow Level 8)	Gal. (L)/ min	80 (304)	88 (334)
2nd speed flow (flow Level 9)	Gal. (L)/ min	75 (284)	82 (311)
2nd speed flow (flow Level 10)	Gal. (L)/ min	69 (260)	75 (284)

3) There is no need to do anything to finalize the setting.End by leaving this screen or switching OFF the key.
   The factory settings for each mode are as follows.
   There are no 4 or 5 settings for the breaker or crusher. Just a hyphen is displayed for these settings.

Mode	Flow display
Breaker circuit 1 / Crusher 1	Level 3 flow
Breaker circuit 2 / Crusher 2	Level 5 flow
Breaker circuit 3 / Crusher 3	Level 7 flow
Breaker circuit 4 / Crusher 4	- (Not used)
Breaker circuit 5 / Crusher 5	

8. Anti-Theft Protection Setting

[1] Anti-theft protection setting and password registration

1) Enabling the anti-theft protection function
With the key OFF, connect the anti-theft protection knob terminal.
When the male and female knob terminals are connected on the cab main harness in the rear cover, the anti-theft protection function is enabled.The factory setting is for these knob terminals to be disconnected.

Anti-theft protection setting knobVG
Connect VG (purple / green)
and BG (black / green)

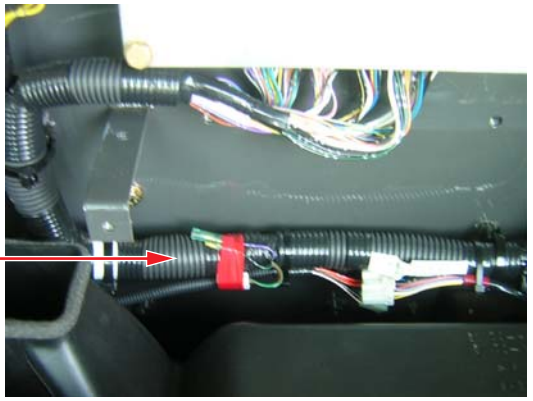

2) Setting the password
When the knob terminals are connected, then the key switched ON, the following screen is displayed.
Enter any 4-digit number made up of the numbers 1 to 9.
(If all four digits are not input, "ERROR" is displayed.)
Input by using the monitor switches as follows.
When the Enter button is pressed, the password is stored into memory and display returns to the normal screen.

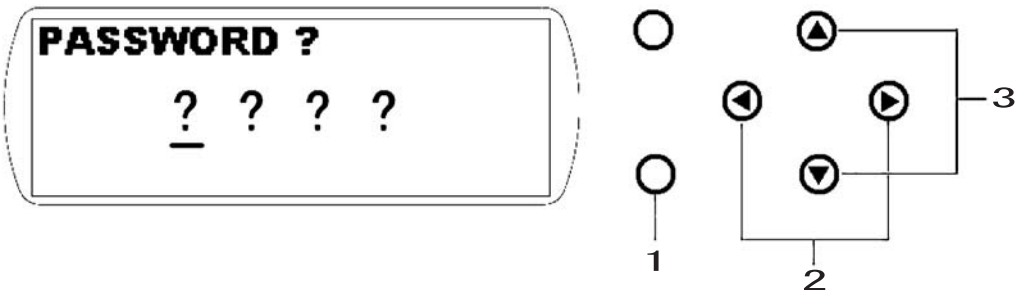

1	Enter	3	Numeric value increase / decrease
2	Cursor movement		

3) Changing the password
If the password has been forgotten or it is desired to change the password, if the knob terminal in [1]-1) are disconnected and the key switched ON, the password is cleared.To re-input the password, repeat the procedure in [1].

[2] Anti-theft protection function operation

1) If the key is switched twice in a row ON → OFF → ON → OFF, the anti-theft protection function is switched ON.
(All the key switching operations must be done within 2 seconds.)

2) When the anti-theft protection comes ON, the monitor buzzes and the "key" icon is displayed.
(Once the anti-theft protection is switched ON, this icon is displayed while the power is OFF.)

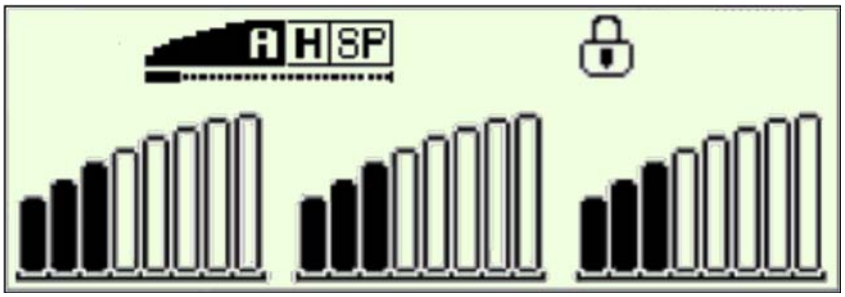

3) The next time the key is switched ON, the anti-theft protection operates and the password input screen is displayed.
Input the password made up of 4 digits 0 to 9.
Input by using the monitor switches as follows.
If an incorrect number is input, "ERROR" is displayed and the buzzer buzzes.
The key must be switched OFF, then ON again before the password can be re-input.

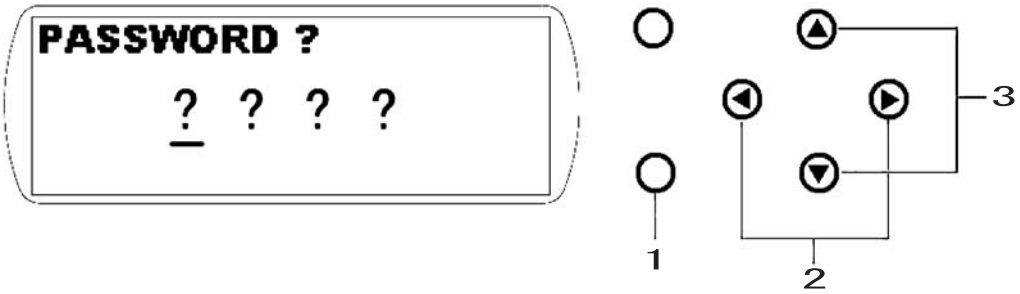

1	Enter	3	Numeric value increase / decrease
2	Cursor movement		

4) Disabling the anti-theft function
   1. If the engine is stopped by switching OFF the key, the anti-theft function does not operate.
   2. To disable the anti-theft function, disconnect the anti-theft knob terminals VG (purple/green) and BG (black/green). The registered password is canceled.

9. Model Setting

The model and specifications must be input in order to select a program inside the computer.
When the factory settings are made or the specifications changed, the necessary items are input using the "Model select screen".

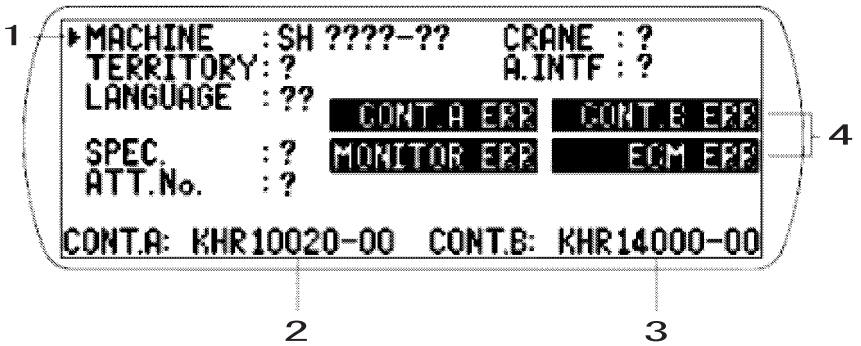

1	Cursor	3	Computer B Part number (Not used by LBX)
2	Computer Part number	4	Error display section

[1] If the model selection has not been completed, immediately after the key is switched ON, the "Model select screen" is displayed.
For the "CONT.A" item, the part number for computer is automatically displayed.
In the same way, if computer B is connected (for the liftcrane application or interference prevention application), the part number for computer B is automatically displayed for the "CONT. B" item.

[2] Items that must be input are displayed with '?'.
For items that do not have to be input, "-" is displayed.

a) MACHINE : Model

b) TERRITORY : Destination

c) LANGUAGE : Language

d) SPEC : Main body specification

e) ATT.No. : Attachment specification

f) CRANE : No crane - '0'
Crane - '1'

MACHINE:	SH120-5, SH150-5, SH180-5, 210X2, 240X2, SH290-5
TERRITORY:	Domestic / General Export : 0, LBX: 1, CASE NA: 2, CASE EU: 3
LANGUAGE:	Japanese: 0, English : 1
SPEC : (Input not required)	
ATT NO : (Input not required)	

g) A.INTF : No interference prevention function - '0'
Interference prevention function - '1'

(* Normally, the ATT. No. is '-' and does not need to be input, but when CRANE or A.INTF is set to 1 (Yes), it changes from '-' to '?' and input becomes necessary.)

[3] Input operating method
Input by using the monitor switches as follows.
(On the model select screen, the normal monitor switch functions do not work.)

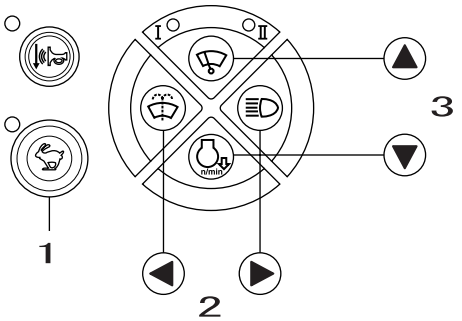

1	Setting button
2	Numeric value change
3	Cursor movement

[4] When all the input is complete, press '◎ '(Enter).
If the input is inappropriate, "CONT. A ERR" is displayed.
(When there is a ' ? ' remaining)
(When the combination of model, destination, specification, or the like is inappropriate)
At the same time, the ECM part number is automatically checked.If the input model and the ECM part number do not correspond, "ECM ERR" is displayed.

[5] If there is no problem in the input, the input ends.

[6] Even after the model selection is complete, it is possible to change just the LANGUAGE, CRANE, or ATT. NO. setting without a complete reset.

[7] All reset

On the model select screen, if + are held down at the same time for 10 seconds, the data below is erased.

- Data input in model selection (All this data returns to '?'.)
- Trouble log
- Usage log
- Data changed with CFG

10.Engine Screen Information

[1] Purpose
When the ECM and injector are replaced, the ECM stores the engine information.This makes it possible to copy the engine information (Q resistance, QR code, engine serial number) to the new ECM.

[2] How to go to this screen
See the service support operation procedure.

[3] Engine start restriction
When this screen is displayed, the engine cannot be started.

[4] Screen
The engine information held in Computer can be checked as follows.

1) Pages 1 to 4: Injector cylinder 1 to 4 QR code (Pages 5 and 6 are not used and cannot be input.)

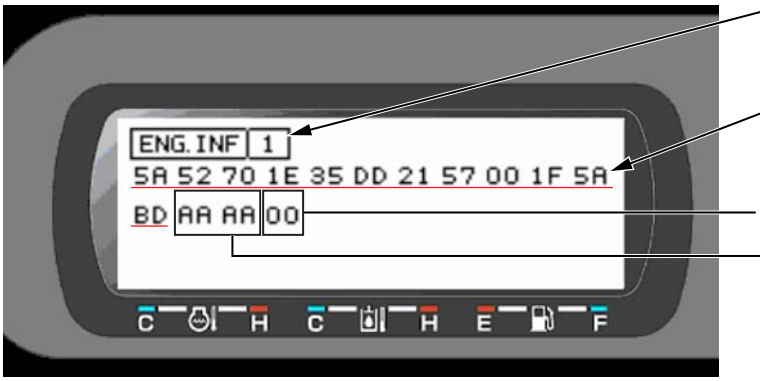

1	Page
2	QR code 24 digits
3	Error code
4	Indicates the display mode. Currently displays the information in computer .

2) Page 7: Q resistance data

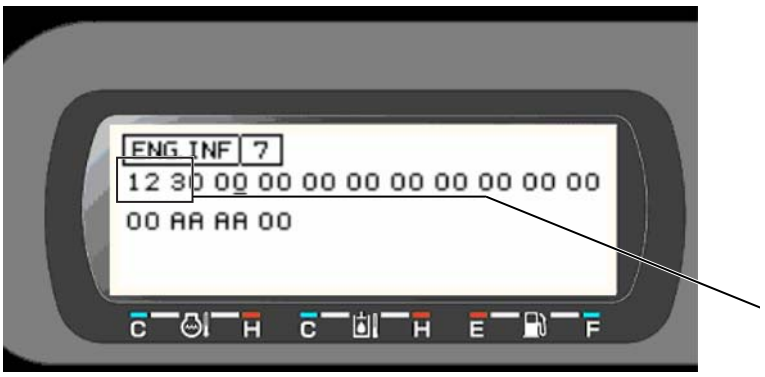

1	Q resistance data 3 digits

3) Page 8: Engine serial (number)

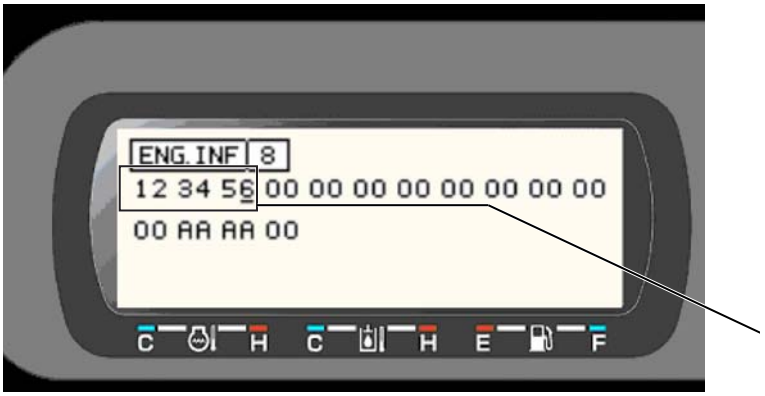

1	Engine serial number 6 digits

Screen Display Details

1. Message Display List

Display	Message type	Display ON timing	Display OFF timing
LOW OIL PRESS	Warning	When the "engine oil pressure abnormally low" trouble occurs	None Does not go off while the key is ON.
CHECK ENGINE	Warning	When the "ECM mismatch" trouble occurs Also, when a diagnostic trouble code is sent from the ECM	↑
ELEC. PROBLEM (*1)	Warning	When any of the troubles below occur "Sensor pressure P1", "Sensor pressure P2", "Sensor pressure N1", "Sensor pressure N2", "Sensor pressure overload", "Sensor pressure bottom", "Sensor pressure rod", "Sensor pressure Upper", "Sensor pressure swing, "Sensor pressure travel", "Sensor pressure arm close", "Sensor fuel level", "Sensor oil temperature", "Sensor angle boom", "Sensor angle arm", "Sensor angle offset" , "Pressure switch return filter clog" "Solenoid swing brake", "Solenoid high speed travel", "Solenoid power save" "Relay feed pump automatic stop", "Solenoid option return circuit", "Solenoid free swing" "Solenoid fan reverse", "Air conditioner signal output", "Crane buzzer" "Rotating light & solenoid bucket lock", " Solenoid lever lock" "Proportional valve pump horsepower", "Proportional valve pump flow" "Proportional valve fan", "Proportional valve boom", "Proportional valve offset", "Proportional valve arm", "Communications monitor", "Communications ECM", Communications computer B" (Not used by LBX), Communications computer S (Not used by LBX), "CAN bus"	↑
OVERHEAT	Warning	When any of the troubles below occur "Abnormally high coolant temperature 1", "Abnormally high oil temperature"	When all the troubles below are recovered from "Abnormally high coolant temperature 1" "Abnormally high oil temperature"
LOW COOLANT	Warning	When the "Coolant level low" trouble occurs	None Does not go off while the key is ON.
BATTERY CHARGE	Warning	When the "Abnormally low alternator voltage" trouble occurs	↑
CHECK HYD.OIL FILTER	Warning	When the "Return filter clogged" trouble occurs	↑
AIR FILTER	Warning	When the "Air cleaner clogged" trouble occurs	↑
BOOST TEMP.HIGH	Warning	When the "Abnormally high boost temperature 1" trouble occurs	When the "Abnormally high boost temperature 1" trouble is recovered from
LOW FUEL	Warning	When the "Fuel level drop" trouble occurs	When the "Fuel level low" trouble is recovered from
SWITCH TO 1-PUMP	Alert	When the breaker mode is ON and 2nd speed merge is ON	When the conditions on the left are no longer met
ENGINE STOP	Alert	When the engine emergency stop switch is ON	↑
OVER LOAD (Not used by LBX)	Alert	When the boom cylinder bottom pressure exceeds the set pressure	↑
FAN REVERSING	Alert	When the fan reverse switch is ON	↑
ENG. IDLING	Status	During one-touch idling or auto idling	When the conditions on the left are no longer met

Display	Message type	Display ON timing	Display OFF timing
POWER UP	Status	During auto power boost	↑
ENG. PRE HEAT	Status	When power ON to glow plug	↑
AUTO WARMUP	Status	During auto warm up	↑
SERVICE DUE	Status	When the key is ON and the hour meter has reached the regulation time	After 1 minute after the key was switched ON

(*1) Even if one of the following troubles occurs, "ELEC. PROBLEM" is not issued.
"Solenoid travel alarm", "Monitor thermistor", "Air conditioner coolant signal output"

Message type

[1] Status..... Message only
[2] Alert ..... The intermittent alarm continues to sound at one-second intervals.
[3] Warning..... The continuous alarm sounds for just 5 seconds.

Abnormality Display

1. Diagnostic Trouble Code Display

[1] Purpose and summary
When a trouble occurs, the diagnostic trouble code (DTC) is displayed on the user screen.
This enables the operator to verbally communicate the trouble to the service engineer.

[2] Screen
Displayed with the ! mark next to the work mode followed by a four-digit number.
If there is no trouble, nothing at all is displayed.

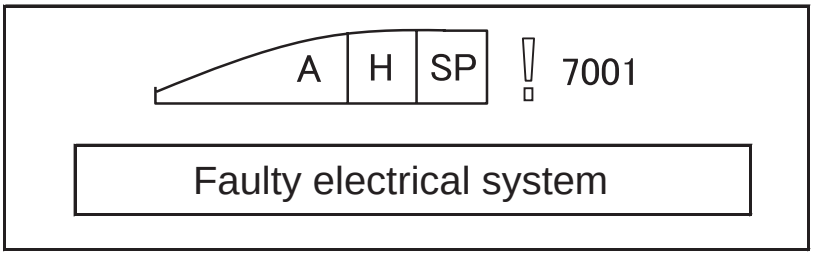

[3] Trouble display
The "ELEC. PROBLEM" or "CHECK ENGINE" message is displayed.
When trouble occurs, the corresponding diagnostic trouble code is displayed.If the message makes clear the trouble location, the location is not displayed elsewhere.
For details, see the "Diagnostic trouble code list". All the diagnostic trouble codes sent from the ECM are subject to display.

[4] Displayed trouble status
Only current and ongoing troubles are displayed.Troubles that have been recovered from are not displayed.

[5] Multiple trouble display
When multiple troubles occur, they are displayed in turn at intervals of five seconds.

2. Main Unit Error Code Table

(1) Electrical troubles (input) [7000-7199]

Trouble location	Trouble mode	Diagnostic trouble code		Judgment timing	Prerequisites	Occurrence judgment	Recovery judgment
		DTC	Display			Conditions	Conditions
Sensor pressure P1	Ground short / disconnection	7000	○	Immediately after key switched ON	None	Voltage ≦ 0.25 V	0.25 V < Voltage < 4.75 V
	Power supply short					Voltage ≧ 4.75 V	
Sensor pressure P2	Ground short / disconnection	7001	○	Immediately after key switched ON	None	Voltage ≦ 0.25 V	0.25 V < Voltage < 4.75 V
	Power supply short					Voltage ≧ 4.75 V	
Sensor pressure N1	Ground short / disconnection	7002	○	Immediately after key switched ON	None	Voltage ≦ 0.25 V	0.25 V < Voltage < 4.75 V
	Power supply short					Voltage ≧ 4.75 V	
Sensor pressure N2	Ground short / disconnection	7003	○	Immediately after key switched ON	None	Voltage ≦ 0.25 V	0.25 V < Voltage < 4.75 V
	Power supply short					Voltage ≧ 4.75 V	
Sensor pressure over-load	Ground short / disconnection	7004	○	Immediately after key switched ON	EU selected as destination	Voltage ≦ 0.25 V	0.25 V < Voltage < 4.75 V
	Power supply short					Voltage ≧ 4.75 V	
Sensor pressure bottom	Ground short / disconnection	7005	○	Immediately after key switched ON	Liftcrane selected	Voltage ≦ 0.25 V	0.25 V < Voltage < 4.75 V
	Power supply short					Voltage ≧ 4.75 V	
Sensor pressure rod	Ground short / disconnection	7006	○	Immediately after key switched ON	Liftcrane selected	Voltage ≦ 0.25 V	0.25 V < Voltage < 4.75 V
	Power supply short					Voltage ≧ 4.75 V	
Sensor pressure upper	Ground short / disconnection	7020	○	Immediately after key switched ON	None	Voltage ≦ 0.25 V	0.25 V < Voltage < 4.75 V
	Power supply short					Voltage ≧ 4.75 V	
Sensor pressure swing	Ground short / disconnection	7021	○	Immediately after key switched ON	None	Voltage ≦ 0.25 V	0.25 V < Voltage < 4.75 V
	Power supply short					Voltage ≧ 4.75 V	
Sensor pressure travel	Ground short / disconnection	7022	○	Immediately after key switched ON	None	Voltage ≦ 0.25 V	0.25 V < Voltage < 4.75 V
	Power supply short					Voltage ≧ 4.75 V	
Sensor pressure arm close	Ground short / disconnection	7023	○	Immediately after key switched ON	None	Voltage ≦ 0.25 V	0.25 V < Voltage < 4.75 V
	Power supply short					Voltage ≧ 4.75 V	
Sensor fuel level	Disconnection	7040	○	Immediately after key switched ON	None	Resistance ≧ 100 Ω	2 Ω < Resistance < 100 Ω
	Short					Resistance ≦ 2 Ω	
Sensor oil temperature	Disconnection	7041	○	Three minutes after engine start	None	Resistance ≧ 67200 Ω (Voltage ≧ 4.93 V)	111 Ω<Resistance<67200 Ω (0.5 V < Voltage < 4.93 V)
	Short			Immediately after key switched ON		Resistance ≦ 111 Ω (Voltage ≦ 0.5 V)	
Monitor thermistor (*1)	Disconnection	7045	×	Immediately after key switched ON	None	Trouble bit received from monitor	No trouble bit received from monitor
	Short						
Pressure switch return filter clog	Disconnection	7063	○	From immediately after key switched ON until engine starts	None	Pressure switch = OFF	Pressure switch = ON

For items for which X is displayed, the "ELEC. PROBLEM" message is not displayed.Also, there is no DTC display on the user screen.
However, the DTC is recorded on the service (diagnostics) screen.

(2) Electrical troubles (output) [7200-7399]

Trouble location	Trouble mode	Diagnostic trouble code		Judgment timing	Prerequisites	Occurrence judgment	Recovery judgment
		DTC	Display			Conditions	Conditions
Solenoid swing brake	Disconnection	7200	○	Immediately after key switched ON	None	Output ≠ Output monitor	Output = Output monitor
	Short						
Solenoid travel 2nd speed	Disconnection	7201	○	Immediately after key switched ON	None	Output ≠ Output monitor	Output = Output monitor
	Short						
Solenoid boost	Disconnection	7202	○	Immediately after key switched ON	None	Output ≠ Output monitor	Output = Output monitor
	Short						
BZ travel alarm (*1)	Disconnection	7203	×	Immediately after key switched ON	None	Output ≠ Output monitor	Output = Output monitor
	Short						
Solenoid power save	Disconnection	7204	○	Immediately after key switched ON	None	Output ≠ Output monitor	Output = Output monitor
	Short						
REL feed pump stop	Disconnection	7205	○	Immediately after key switched ON	None	Output ≠ Output monitor	Output = Output monitor
	Short						
Solenoid option return circuit	Disconnection	7206	○	Immediately after key switched ON	None	Output ≠ Output monitor	Output = Output monitor
	Short						
Solenoid free swing	Disconnection	7207	○	Immediately after key switched ON	None	Output ≠ Output monitor	Output = Output monitor
	Short						
Solenoid fan reverse	Disconnection	7208	○	Immediately after key switched ON	None	Output ≠ Output monitor	Output = Output monitor
	Short						
Air conditioner coolant temperature signal output (*1)	Disconnection	7209	×	Immediately after key switched ON	None	Output ≠ Output monitor	Output = Output monitor
	Short						
BZ liftcrane	Disconnection	7210	○	Immediately after key switched ON	None	Output ≠ Output monitor	Output = Output monitor
	Short						
REL Rotating light & bucket lock	Disconnection	7211	○	Immediately after key switched ON	None	Output ≠ Output monitor	Output = Output monitor
	Short						
Solenoid gate lock	Disconnection	7212	○	Immediately after key switched ON	None	Output ≠ Output monitor	Output = Output monitor
	Short						
Proportional valve pump horsepower	Disconnection	7240	○	After engine start	None	Current ≦ 30 mA	30 mA < Current < 3 A
	Short			Immediately after key switched ON		Current ≧ 3 A	
Proportional valve pump flow	Disconnection	7241	○	After engine start	None	Current ≦ 30 mA	30 mA < Current < 3 A
	Short			Immediately after key switched ON		Current ≧ 3 A	
Proportional valve fan	Disconnection	7242	○	After engine start	None	Current ≦ 30 mA	30 mA < Current < 3 A
	Short			Immediately after key switched ON		Current ≧ 3 A	

For items for which X is displayed, the "ELEC. PROBLEM" message is not displayed.Also, there is no DTC display on the user screen.
However, the DTC is recorded on the service (diagnostics) screen.

(3) Mechanical troubles [7400-7599]

Trouble location	Trouble mode	Diagnostic trouble code		Judgment timing	Prerequisites	Occurrence judgment	Recovery judgment
		DTC	Display			Conditions	Conditions
Fuel level	Drop	–	×	Immediately after key switched ON	Fuel sensor = Normal	Fuel sensor lever angle ≦ 0 %	Fuel sensor lever angle ≧ 10 %
Coolant temperature	Abnormally high temperature 1	7400	×	One minute after engine start	Coolant temperature sensor = Normal CAN communications = Normal ECM 5 V power supply voltage = Normal	Coolant temperature ≧ 221 º F (105 ℃)	Coolant temperature < 105 ° C
	Abnormally high temperature 2	7402	×			Coolant temperature ≧ 230 ºF (110 ℃)	Coolant temperature <221 ºF (105° C)
	Abnormally high temperature 3	7403	×			Coolant temperature ≧ 248 ºF (120 ℃)	Coolant temperature < 120° C
Oil temperature	Abnormally high temperature	7404	×	One minute after engine start	Oil temperature sensor = Normal	Oil temperature ≧ 203 203 ºF (95° C)	Oil temperature < 95° C
Boost temperature	Abnormally high temperature 1	7405	×	One minute after engine start	Boost temperature sensor = Normal, CAN communications = Normal, ECM 5 V power supply voltage = Normal	Boost temperature ≧ 176 176 ºF (80° C)	Boost temperature ≦158 ºF (70° C)
	Abnormally high temperature 2	7406	×			Boost temperature ≧ 194 194 º (F90° C)	Boost temperature < 90° C
Alternator voltage	Abnormally low voltage	7420	×	10 seconds after engine start	None	Generated voltage ≦ 10 V	Generated voltage > 10 V
Coolant level	Drop	7421	×	Immediately after key switched ON	None	Level switch = ON	Level switch = OFF
Engine oil pressure	Abnormally low pressure	7422	×	30 seconds after engine start	Oil pressure sensor = Normal, CAN communications = Normal, ECM 5 V power supply voltage = Normal	Pressure ≦ 5.8 PSI (40 kPa)	Pressure > 40 kPa
Air cleaner	Clog	7423	×	10 seconds after engine start	None	Vacuum switch = ON	Vacuum switch = OFF
Return filter	Clog	7424	×	10 seconds after engine start	Return filter pressure switch = Normal	Pressure switch = OFF	Pressure switch = ON

(4) Faulty communications [7800-7799]

Trouble location	Trouble mode	Diagnostic trouble code		Judgment timing	Prerequisites	Occurrence judgment	Recovery judgment
		DTC	Display			Conditions	Conditions
CAN bus	Faulty bus	7600	○	Immediately after key switched ON	None	Bus Off or error passive	When the occurrence conditions are not met
Communications monitor	Faulty reception	7601	○	Immediately after key switched ON	None	Packets not coming from monitor	When the occurrence conditions are not met
	Faulty transmission		○			Reception from monitor Defective packet received	When the occurrence conditions are not met
Communications ECM	Time out	7602	○	Immediately after key switched ON	None	Messages not coming from ECM	When the occurrence conditions are not met
Communications computer S (**Not used by LBX)**	Time out	7604	○	Immediately after key switched ON	None	Messages not coming from computer S	When the occurrence conditions are not met
ECM	Mismatch	7425	○	Immediately after key switched ON	Model selection completed	Model ≠ ECM calibration No.	None No recovery

For items for which X is displayed, the "ELEC. PROBLEM" message is not displayed.Also, there is no DTC display on the user screen.
However, the DTC is recorded on the service (diagnostics) screen.

https://truckmanualshub.com/

Engine vibration, idle instability, drop of output power, rev-up defect, black smoke, engine stalling	The ratio for the fuel flow command signal to the SCV is 33 % or less. Differential pressure send amount 2800 mm^3 / second min. Any one of the above and the conditions below at 1200 min^{-1} min., actual rail pressure 4351 PSI (30 MPa) or more below the target rail pressure for 5 seconds or longer	Multi-injection stop Target common rail pressure upper limit 11603 PSI (80 MPa)	Fuel system clogged, pipe (hose) blocked Electromagnetic pump defect (discharge defect) Wiring defect (short) between ECM and common rail Injector defect Supply pump defect Common rail pressure sensor defect (common rail) Pressure limiter defect (common rail)
Nothing in particular	The boost temperature sensor voltage is 0.1 V or lower for 4 seconds or longer.	No backup	Wiring defect (disconnection, short, high resistance) temperature sensor Boost temperature sensor defect ECM internal defect
Nothing in particular	The boost temperature sensor voltage is 4.95 V or higher for 4 seconds or longer.	No backup	Wiring defect (disconnection, short, high resistance) temperature sensor Boost temperature sensor defect ECM internal defect
Drop of output power If the coolant temperature exceeds 226 ºF (108°C) during overheating, the fuel flow is restricted.	The coolant temperature is higher than 248 º F (120°C) for 5 seconds or longer.	No backup	Wiring defect (short) between ECM and engine coola Engine cooling system trouble (radiator clog or the lik Engine coolant level too low Engine coolant sensor defect
Engine vibration, idling instability, drop of output power Possibility of rev-up defect, engine stalling	Injector monitor inputs for all common 1 system No signal for 3 seconds or longer	Common 1 stop (No. 1, 4 cylinder stop) EGR stop	No 1, 4 injector harness defect (disconnection, short) Injector defect ECM defect
Engine vibration, idling instability, drop of output power Possibility of rev-up defect, engine stalling	Injector monitor inputs for all common 2 system No signal for 3 seconds or longer	Common 2 stop (No. 2, 3 cylinder stop) EGR stop	No 2, 3 injector harness defect (disconnection, short) Injector defect ECM internal defect
No fault during engine rotation, but when it is stopped once, it cannot be restarted.	No correct CMP sensor pulse in crank gap position	No change when error occurs (shift to crank sensor) However, engine cannot be restarted.	Wiring defect (disconnection, short, high resistance sensor Camshaft gear installation defect Flywheel installation defect
Engine starting difficulty, power supply not cut off	Main relay input power supply voltage 1 V or lower for 2 seconds or longer Even when the main relay coil OFF command is issued, the relay does not cut off within 5 seconds	No backup	Wiring defect (disconnection, short, high resistance relay Wiring defect (disconnection, short, high resistance) Main relay defect ECM internal defect
Drop of output power, black smoke	Analog / digital conversion not possible	Analog sensor system default processing (sensors operating with default values, because conversion not possible) Multi-injection stop Target common rail pressure upper limit 11603 PSI (80 MPa)	ECM internal defect
Black smoke at high altitudes, insufficient output at low altitudes	Key switch power supply voltage 5.5 V or higher or 4.5 V or lower for 0.5 second or longer	EGR control stop Default value setting 80 kPa (equivalent to 2734 yd (2500 m))	Power supply circuit wiring defect (short) between E sure sensor ECM internal defect
Poor starting and black smoke at low temperatures	Key switch power supply voltage 5.5 V or higher or 4.5 V or lower for 0.5 second or longer	Control using default values	Power supply circuit wiring defect (short) between E ECM internal defect
Black smoke	Key switch power supply voltage 5.5 V or higher or 4.5 V or lower for 0.5 second or longer	Control using default values	Power supply circuit wiring defect (short) between sensor ECM internal defect
Possibility of poor engine rev-up, drop of output power, back smoke, engine stalling	Key switch power supply voltage 5.5 V or higher or 4.5 V or lower for 0.5 second or longer	Control using default values	Power supply circuit wiring defect (short) between E sure sensor ECM internal defect

Control from actual machine side stops working because CAN communications become impossible.The engine speed drops to 1500 min^{-1}	Engine rotation that computer A sends with CAN stops for 2 second or longer.	Engine speed down to 1500 min^{-1}	puter ECM internal defect Computer A internal defect
Possibility of engine vibration, idle instability, drop of output power, black smoke, excess output	Actual rail pressure of 2176 PSi (15 MPa) or lower for 3 seconds or longer	Multi-injection stop Target common rail pressure upper limit 11603 PSI (80 MPa)	Fuel system clogged (element), pipe (hose), etc. bloc Wiring defect (short) between ECM and common rail Injector defect Common rail pressure sensor defect Supply pump defect Pressure limiter defect
Engine vibration, idle instability, drop of output power, rev-up defect	1st stage Rail pressure exceeds 26832 PSi (185 MPa) for 5 seconds or longer, common rail pressure sensor voltage 3.9 V or higher 2nd stage First stage established, rail pressure exceeds 27557 PSI (190 MPa for 5 sec)onds or longer, common rail pressure sensor voltage 4 V or higher	Multi-injection stop Target common rail pressure upper limit 11603 PSI (80 MPa)	Fuel system pipe (hose), etc. blocked Air in fuel system (check hose connection.) Common rail pressure sensor defect Supply pump defect
Engine vibration, idle instability, drop of output power, rev-up defect	Actual rail pressure 5801 PSI (40 MPa) or more above the target rail pressure for 5 seconds or longer	Multi-injection stop Target common rail pressure upper limit 11603 PSI (80 MPa)	Common rail pressure sensor defect Supply pump defect ECM, SCV, common rail pressure sensor connector c
Black smoke and excess output	When the SCV drive current exceeds the rated current for 2 seconds or longer When the difference between the target and actual current exceeds the rated current for 2 seconds or longer	Multi-injection stop Target common rail pressure upper limit 11603 PSI (80 MPa)	SCV defect Wiring defect (disconnection, short, high resistance) ECM internal defect
Black smoke at high altitudes, insufficient output at low altitudes	The atmospheric pressure sensor voltage is 0.5 V or lower for 5 seconds or longer.	EGR control stop Default value setting 80 kPa (equivalent to 2734 yd (2500 m))	Wiring defect (disconnection, short, high resistance) spheric pressure sensor Atmospheric pressure sensor defect ECM internal defect
Black smoke at high altitudes, insufficient output at low altitudes	The atmospheric pressure sensor voltage is 3.8 V or higher for 4 seconds or longer.	EGR control stop Default value setting 80 kPa (equivalent to 2734 yd (2500 m))	Wiring defect (disconnection, short, high resistance) spheric pressure sensor Atmospheric pressure sensor defect ECM internal defect
Possibility of white smoke when starting at low temperatures	The suction air temperature sensor voltage is 0.1 V or lower for 4 seconds or longer.	EGR control stop Default value setting Starting: 14 ºF (-10° C) Running: 77 ºF (25° C)	Wiring defect (short) between ECM and suction air te Suction air temperature sensor defect ECM internal defect
Possibility of white smoke when starting at low temperatures	The suction air temperature sensor voltage is 4.95 V or higher for 4 seconds or longer.	EGR control stop Default value setting Starting: 14 ºF (-10° C) Running: 77 ºF (25° C	Wiring defect (disconnection, short, high resistance) air temperature sensor Suction air temperature sensor defect ECM internal defect
Poor starting at low temperatures, black smoke, drop of output power	The coolant temperature sensor voltage is 0.1 V or lower for 4 seconds or longer.	EGR control stop Default value setting Starting: -4ºF (-20ºC) Running:176ºF (80ºC)	Wiring defect (short) between ECM and engine coola Engine coolant sensor defect ECM internal defect
Increase in noise, white smoke at low temperatures, rough idling	The coolant temperature sensor voltage is 4.85 V or higher for 4 seconds or longer.	EGR control stop, default value setting Starting: -4ºF (-20ºC) Running: 176ºF (80ºC	Wiring defect (disconnection, short, high resistance) coolant sensor Engine coolant sensor defect ECM internal defect
Nothing in particular	The fuel temperature sensor voltage is 0.1 V or lower for 4 seconds or longer.	Default value setting Starting: -4ºF (-20ºC) Running: 158ºF (70° C)	Wiring defect (short) between ECM and fuel tempera Fuel temperature sensor (supply pump) defect ECM internal defect
Nothing in particular	The fuel temperature sensor voltage is 4.85 V or lower for 4 seconds or longer.	Default value setting Starting: -4ºF (-20ºC)	Wiring defect (disconnection, short, high resistance temperature sensor Fuel temperature sensor (supply pump) defect

https://truckmanualshub.com/

Possibility of drop of output power and engine stalling	The common rail pressure sensor voltage is 4.5 V or higher.	Default value setting 11603 PSI (80 MPa)	mon rail Common rail pressure sensor defect (common rail) ECM internal defect
High engine vibration, idle instability, drop of output power, rev-up defect	No. 1 cylinder injector drive circuit disconnection / short detected No. 1 cylinder injector monitor input No signal for 2.4 seconds or longer	No. 1 cylinder injection stop EGR control stop	Wiring defect (disconnection, short, high resistance) injector intermediate connector No. 1 injector terminal looseness Wiring defect (disconnection, high resistance) betwee ate connector and No. 1 injector terminal No. 1 injector defect ECM internal defect
High engine vibration, idle instability, drop of output power, rev-up defect	No. 2 cylinder injector drive circuit disconnection / short detected No. 2 cylinder injector monitor input No signal for 2.4 seconds or longer	No. 2 cylinder injection stop EGR control stop	Wiring defect (disconnection, short, high resistance) injector intermediate connector No. 2 injector terminal looseness Wiring defect (disconnection, high resistance) betwee ate connector and No. 2 injector terminal No. 2 injector defect ECM internal defect
High engine vibration, idle instability, drop of output power, rev-up defect	No. 3 cylinder injector drive circuit disconnection / short detected No. 3 cylinder injector monitor input No signal for 2.4 seconds or longer	No. 3 cylinder injection stop EGR control stop	Wiring defect (disconnection, short, high resistance) injector intermediate connector No. 3 injector terminal looseness Wiring defect (disconnection, high resistance) betwee ate connector and No. 3 injector terminal No. 3 injector defect ECM internal defect
High engine vibration, idle instability, drop of output power, rev-up defect	No. 4 cylinder injector drive circuit disconnection / short detected No. 4 cylinder injector monitor input No signal for 2.5 seconds or longer	No. 4 cylinder injection stop EGR control stop	Wiring defect (disconnection, short, high resistance) injector intermediate connector No. 4 injector terminal looseness Wiring defect (disconnection, high resistance) betwee ate connector and No. 4 injector terminal No. 4 injector defect ECM internal defect
Drop of output power	Engine speed for one second or longer Set rotation 2000 min^{-1} or higher.	Injection quantity restriction When the speed drops, the restriction is ended.	Faulty engine main unit (common rail, supply pump, i It is necessary to check whether or not there is anoth Mechanical engine trouble (turbo damaged, engine o ECM internal defect
Nothing in particular	The boost pressure sensor voltage is 0.1 V or lower for 3 seconds or longer.	Default value setting 22 PSI (150 kPa)	Wiring defect (disconnection, short, high resistance) pressure sensor Boost pressure sensor defect ECM internal defect
Black smoke	The boost pressure sensor voltage is 4.9 V or higher for 3 seconds or longer.	Default value setting 22 PSI (150 kPa)	Wiring defect (disconnection, short, high resistance) pressure sensor Boost pressure sensor defect ECM internal defect
Possibility of drop of output power, white smoke, engine vibration Possibility of engine stalling (when the CMP sensor is normal, restarting is possible.)	There is a CMP signal, but not a CKP signal.	When the CMP sensor is normal, cam standard control	Wiring defect (disconnection, short, high resistance sensor CKP sensor defect ECM internal defect
Possibility of drop of output power, white smoke, engine vibration Possibility of engine stalling (when the CMP sensor is normal, restarting is possible.)	CKP signal pulses do not match	When the CMP sensor is normal, cam standard control	Wiring defect (short) between ECM and CKP sensor CKP sensor defect Flywheel ring gear tooth missing ECM internal defect
No fault during engine rotation, but when it is stopped once, it cannot be restarted.	There is a CKP signal, but not a CMP signal.	While engine turning: When the CKP sensor is normal, crank standard After engine stop: Restart impossible due to inability	Wiring defect (disconnection, short, high resistance sensor CMP sensor defect Faulty cam gear

https://truckmanualshub.com/

No fault during engine rotation, but when it is stopped once, it cannot be restarted.	When excess cam pulses detected or insufficient cam pulses detected	While engine turning: When the CKP sensor is normal, crank standard After engine stop: Restart impossible due to inability to discriminate cylinders	CMP sensor defect Faulty camshaft gear Supply pump defect ECM internal defect
Low-temperature starting defect	The glow relay drive instruction signal and glow relay monitor signal (line 339 in electrical circuit diagram) are different.	No backup	Wiring defect (disconnection, short, high resistance) Wiring defect (disconnection, short, high resistance relay Glow relay defect ECM internal defect
Nothing in particular	Signal inputs from EGR position sensor U, V, and W all ON or all OFF for 3 seconds or longer	EGR valve all-close command	Wiring defect (disconnection, short, high resistance position sensor EGR valve (position sensor) defect ECM internal defect
Nothing in particular	When the difference between the target valve lift and the actual position is larger than 20% for 10 seconds or longer	EGR valve all-close command	Wiring defect (disconnection, short, high resistance motor EGR valve defect ECM internal defect
Nothing in particular	The oil pressure sensor voltage is 0.1 V or lower for 4 seconds or longer.	No backup	Wiring defect (short) between ECM and oil pressure Oil pressure sensor defect ECM internal defect
Nothing in particular	The oil pressure sensor voltage is 4.85 V or higher for 4 seconds or longer.	No backup	Wiring defect (disconnection, short, high resistance) sure sensor Oil pressure sensor defect ECM internal defect
Engine stop	Faulty ROM detected Reflash failure	No backup (engine stop)	ECM internal defect
Nothing in particular	Faulty EEPROM detected	No backup	ECM internal defect
Drop of output power, starting not possible	The CPU monitoring IC detects faulty main CPUs for 100 ms after the key is switched ON. The RUN-SUB pulse (signal between CPU and SUB-CPU) was unchanging for 20 ms or longer.	Multi-injection stop Injection quantity restriction The SUB-CPU stopped the CPU.	ECM internal defect
Drop of output power	The RUN-SUB pulse (signal between CPU and SUB-CPU) was unchanging for 20 ms or longer.	Injection quantity restriction	ECM internal defect
Engine vibration, idling instability, drop of output power Possibility of rev-up defect, engine stalling	When the ECU charge circuit bank 1 voltage is low for 1.5 seconds or longer	Common 1 stop (No. 1, 4 cylinder stop) EGR stop	ECM terminal, ECM ground terminal defect (disconne ECM internal defect
Engine vibration, idling instability, drop of output power Possibility of rev-up defect, engine stalling	When the ECU charge circuit bank 2 voltage is low for 1.5 seconds or longer	Common 2 stop (No. 2, 3 cylinder stop) EGR stop	ECM terminal, ECM ground terminal defect (disconne ECM internal defect
Drop of output power, hunting	When the pressure limiter is open or when the common rail pressure exceeds 29008 PSI (200 MPa) for 1 second or longer	Injection quantity restriction	Fuel system pipe (hose), etc. blocked Air in fuel system (check hose connection.) Pressure limiter defect Common rail pressure sensor defect Wiring defect (short) between ECM and common rail Supply pump defect ECM internal defect

https://truckmanualshub.com/

bles.
ustrated below to restore it from troubles.
or code depending on circumstances, control of main switch is necessary as follows:.
itch to start the engine, hold the switch for 10 second as it is turned ON, and then turn it OFF to restore it to be normal.
itch, hold the switch for 10 second as it is, and then turn it OFF to restore it to be normal.

https://truckmanualshub.com/

pper side pres-sure sensor	Arm-in pressure sensor	Swing pressure sensor	Travel pressure sensor	P1 pressure sensor	P2 pressure sensor	N1 pressure sensor	N2 pressure sensor	Oil temperature sensor	Co
0 MPa	0 MPa	0 MPa	0 MPa	0 MPa	0 MPa	0 MPa	0 MPa	-40°C	
Input value	Input value	Input value	Input value	Input value	Input value	Input value	Input value	Input value	
ckup value control (*1)	Backup value control (*1)	Backup value control (*1)	Backup value control (*1)		*	*	*	*	
ckup value control (*2)	Backup value control (*2)	Backup value control (*2)	Backup value control (*2)	*	*	*	*	*	
ckup value control (*3)	Backup value control (*3)	Backup value control (*3)	Backup value control (*3)	*	*	*	*	*	
ckup value control (*4)	Backup value control (*4)	Backup value control (*4)	Backup value control (*4)	*	*	*	*	*	
ixed to ON (*22)	*	*	Fixed to ON (*22)	Fixed to ON (*22)	Fixed to ON (*22)	*	*	*	
*	*	*	*	*	*	*	*	*	
ckup value control (*5)	*	*	*	Backup value control (*5)	Backup value control (*5)	*	*	*	
*	*	*	Backup value control (*6)	*	*	*	*	*	
*	Backup value control (*7)	*	*	*	*	*	*	*	
*	*	*	*	*	*	*	*	*	
xed to 50 mA (*8)	*	Fixed to 50 mA (*8)	Fixed to 50 mA (*8)	Fixed to 50 mA (*8)	Fixed to 50 mA (*8)	Fixed to 50 mA (*8)	Fixed to 50 mA (*8)	*	
xed to 50 mA (*9)	*	Fixed to 50 mA (*9)	Fixed to 50 mA (*9)	Fixed to 50 mA (*9)	Fixed to 50 mA (*9)	Fixed to 50 mA (*9)	Fixed to 50 mA (*9)	*	
ed to 50 mA (*10)	*	Fixed to 50 mA (*10)	Fixed to 50 mA (*10)	Fixed to 50 mA (*10)	Fixed to 50 mA (*10)	Fixed to 50 mA (*10)	Fixed to 50 mA (*10)	*	
ckup value control (*10)	*	Backup value control (*10)	Backup value control (*10)	*	*	*	*	*	
ckup value control (*11)	*	*	Fixed to OFF (*13)	Backup value control (*12)	Backup value control (*12)	*	*	*	
*	*	*	Fixed to OFF (*13)	*	*	*	*	*	
*	*	*	Fixed to OFF (*13)	*	*	*	*	*	
xed to OFF (*14)	*	Fixed to OFF (*14)	*	*	*	*	*	*	
ixed to ON (*15)	*	Fixed to ON (*15)	*	*	*	*	*	*	
ixed to ON (*16)	*	Fixed to ON (*16)	*	*	*	*	*	*	

0 MPa	0 MPa	0 MPa	0 MPa	0 MPa	0 MPa	0 MPa	0 MPa	-40° C	
Input value	Input value	Input value	Input value	Input value	Input value	Input value	Input value	Input value	
*	*	*	Backup value control (*17)	*	*	*	*	*	
*	*	*	*	*	*	*	*	*	
*	*	*	*	*	*	*	*	*	
*	*	*	*	*	*	*	*	*	No
*	*	*	*	*	*	*	*	Not displayed (*19)	
*	*	*	*	*	*	*	*	*	
*	*	*	*	*	*	*	*	*	Bac

https://truckmanualshub.com/

even during work.

ded.

l.

ol (for transient loads) not possible.

ven for travel.

ven for arm-in.

ration in fuel economy)

essive swing speed)

tion in fuel economy)

(*11) Auto power boost stops. (constant power boost for A mode is executed.)
(*12) Auto power boost is not carried out for a pump load on only one side.
(*13) Boost always OFF.
(*14) Swing brake always OFF.
(*15) During a swing lock, held ON even if there is trouble.
(*16) During swinging with anti-theft prevention, held ON even if there is trouble.
(*17) Travel alarm stops. (Key ON alarm sounds)
(*18) Coolant temperature gauge not displayed. (Goes out)
(*19) Oil temperature gauge not displayed. (Goes out)
(*20) Fuel level gauge not displayed. (Goes out)

(*21) Air flow max
(*22) The engine cannot be started if the password has not bee

https://truckmanualshub.com/

https://truckmanualshub.com/

5. EPF (Engine Protection Feature)

This feature controls the engine speed or stopping when the coolant temperature rises, the boost temperature rises, or the oil pressure drops.

- Trouble state -
Recovered = State in which trouble recovered from during the key On cycle
Ongoing = State in which the key was switched OFF, then ON again with the previous trouble underway (or continuing)

- Degree of speed restriction -
0: None
1: Backup speed
2: Low idle
3: Stop (restart possible, low idle)
4: Stop (restart not possible)

		- Degree of speed restriction -	Explanation
Coolant temperature over 221ºF (105° C)	- Trouble underway -	0: None	-
	Recovered	0: None	-
	Ongoing	0: None	-
Coolant temperature over 230ºF (110° C)	- Trouble underway -	2: Low idle	-
	Recovered	0: None	When the coolant temperature falls below 221ºF (105° C), the system recovers and controls returns to normal.
	Ongoing	2: Low idle	When the key is switched ON again and the engine starts, the time (2 minutes) until judgment starts, the engine speed is restricted to low idle.After that, the status moves to trouble underway or recovered based on judgment results.
Coolant temperature over 248ºF (120° C)	- Trouble underway -	4: Stop (Restart not possible)	Engine stop.The engine cannot be restarted until either the key is switched ON again or the coolant temperature recovers to the normal level.
	Recovered	0: None	When the coolant temperature falls below 248ºF (120° C), the degree of restriction due to the coolant temperature being over 248ºF (120° C) goes to 0. (Normal control) However, if the degree of restriction due to the coolant temperature being over 230ºF (110° C) is not 0, that degree of restriction is applied.
	Ongoing	2: Low idle	When the key is switched ON again and the engine starts, the time (1 minutes) until judgment starts, the engine speed is restricted to low idle.After that, the status moves to trouble underway or recovered based on judgment results.
Boost temperature over 176ºF (80° C)	- Trouble underway -	2: Low idle	
	Recovered	0: None	When the boost temperature falls below 158ºF (70° C), the system recovers and controls returns to normal.
	Ongoing	2: Low idle	When the key is switched ON again and the engine starts, the time (1 minutes) until judgment starts, the engine speed is restricted to low idle.After that, the status moves to trouble underway or recovered based on the judgment results.

		- Degree of speed restriction -	Explanation
Boost temperature over 90° C	- Trouble underway -	4: Stop (Restart not possible)	Engine stop.The engine can not be restarted until either the key is switched ON again or the boost temperature recovers to the normal level.
	Recovered	0: None	When the boost temperature falls below 194ºF (90° C), the degree of restriction due to the boost temperature being over 194ºF (90° C goes to 0.(Normal control) However, if the degree of restriction due to the boost temperature being over 176ºF (80° C is not 0, that degree of restriction is applied.
	Ongoing	2: Low idle	When the key is switched ON again and the engine starts, the time (1 minutes) until judgment starts, the engine speed is restricted to low idle.After that, the status moves to trouble underway or recovered based on the judgment results.
Engine oil pressure drop	- Trouble underway -	4: Stop (Restart not possible)	Engine stop.The engine cannot be restarted until the key is switched ON again.Recovery cannot be judged until the engine is restarted, so the system does not move from trouble underway to be recovered.
	Recovered	0: None	The engine oil pressure recovers to less than 5802 PSI (40 kPa) and controls returns to normal.
	Ongoing	2: Low idle	When the key is switched ON again and the engine starts, the time (30 seconds) until judgment starts, the engine speed is restricted to low idle.After that, the status moves to trouble underway or recovered based on the judgment.

Main Data Table (changes from model 3)

		210X2 (Exhaust gas third regulation)	210LX (Exhaust gas second regulation)
Engine model name	-	ISUZU 4HK1	ISUZU 6BG1
Model	-	4-cycle, water cooled, overhead camshaft, vertical in-line, direct injection type	4-cycle, water cooled, overhead valve, vertical in-line, direct injection type
Dry weight	lb (kg)	1058 (480)	1067 (484)
Displacement	cc	5193	6494
Number of cylinders - bore X stroke	in. (mm	4-4.5 (115)×4.9 (125	6-105×125
Compression ratio	-	17.5	18.0
Rated output	kW / min^{-1}	117 / 1800	103.0 / 1950
Maximum torque	lbf•ft (Nm /min^{-1})	463 (628) / 1500	392 (532) / 1600
No load maximum speed	min^{-1}	1800	2000
No load minimum speed (idling)	min^{-1}	1000	900
Rated fuel consumption ratio	g / kW•hr	229.3 max	243.0 max
Fuel unit	-	HP3 model common rail from Denso Corp.	ADS model inline type pump from Bosch Corp.
Control device	-	ECM made by Transtron Inc.	ECU made by Bosch Corp.
Cooling fan	-	7N suction ϕ650 plastic	7N suction ϕ600 plastic
Bell mouth type fan guide	-	Yes	Yes
Fan belt	-	Drive by one V-rib belt	Drive by two B-model V belts
Alternator	-	50 A-24 V, made by Nikko Electric	50 A -24 V, made by Mitsubishi Electric Corp.
Starter	-	5.0 kW-24 V, made by Nikko Electric	4.5 kW-24 V, made by Nikko Electric
Turbo	-	RHF55 model made by IHI	RHG6 model made by IHI
Preheat unit	-	QOS-II	QOS-II
Inter cooler	-	Yes	No
Fuel cooler	-	Yes	No
Electromagnetic pump	-	Yes	No
Fuel filter	-	4 μ main unit remote type with water separator function	20 μ with water separator function With engine
Fuel pre-filter	-	10 μ main unit remote type with water separator function	-
Oil filter	-	Remote type	With engine
Oil pan capacity	Gal. (L)	3.4 (13.0) to 5.4 (20.5)	4.3 (16.4) to 5.7 (21.5)
Oil pan drain cock	-	Yes	No

Overall Appearance Diagram

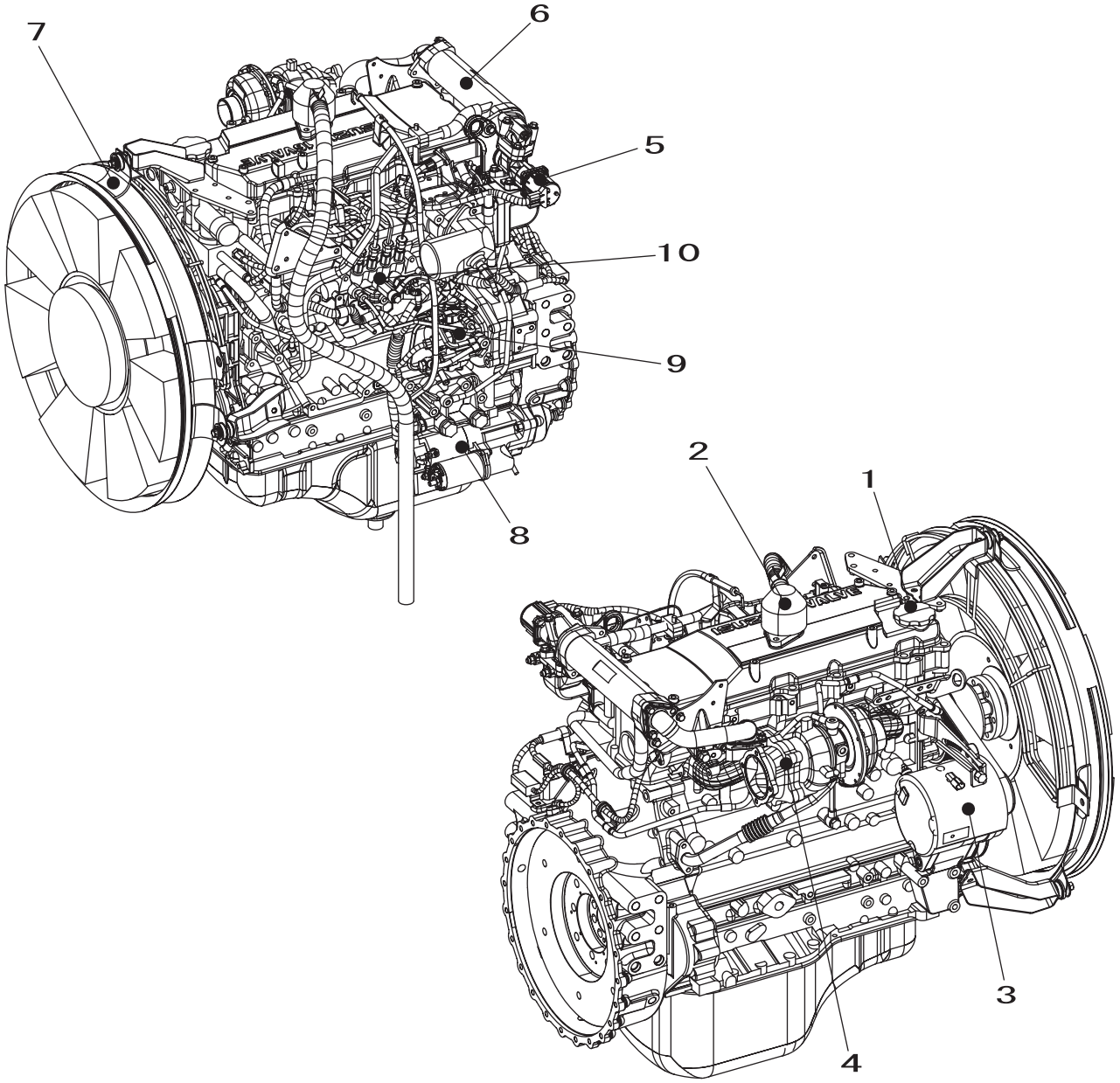

1	Engine oil fill port	6	EGR cooler
2	Air breather	7	Bell mouth type fan guide
3	Alternator	8	Starter motor
4	Turbo	9	Supply pump (SCV)
5	EGR valve	10	Common rail

Sensor and Auxiliary Equipment Layout (left)

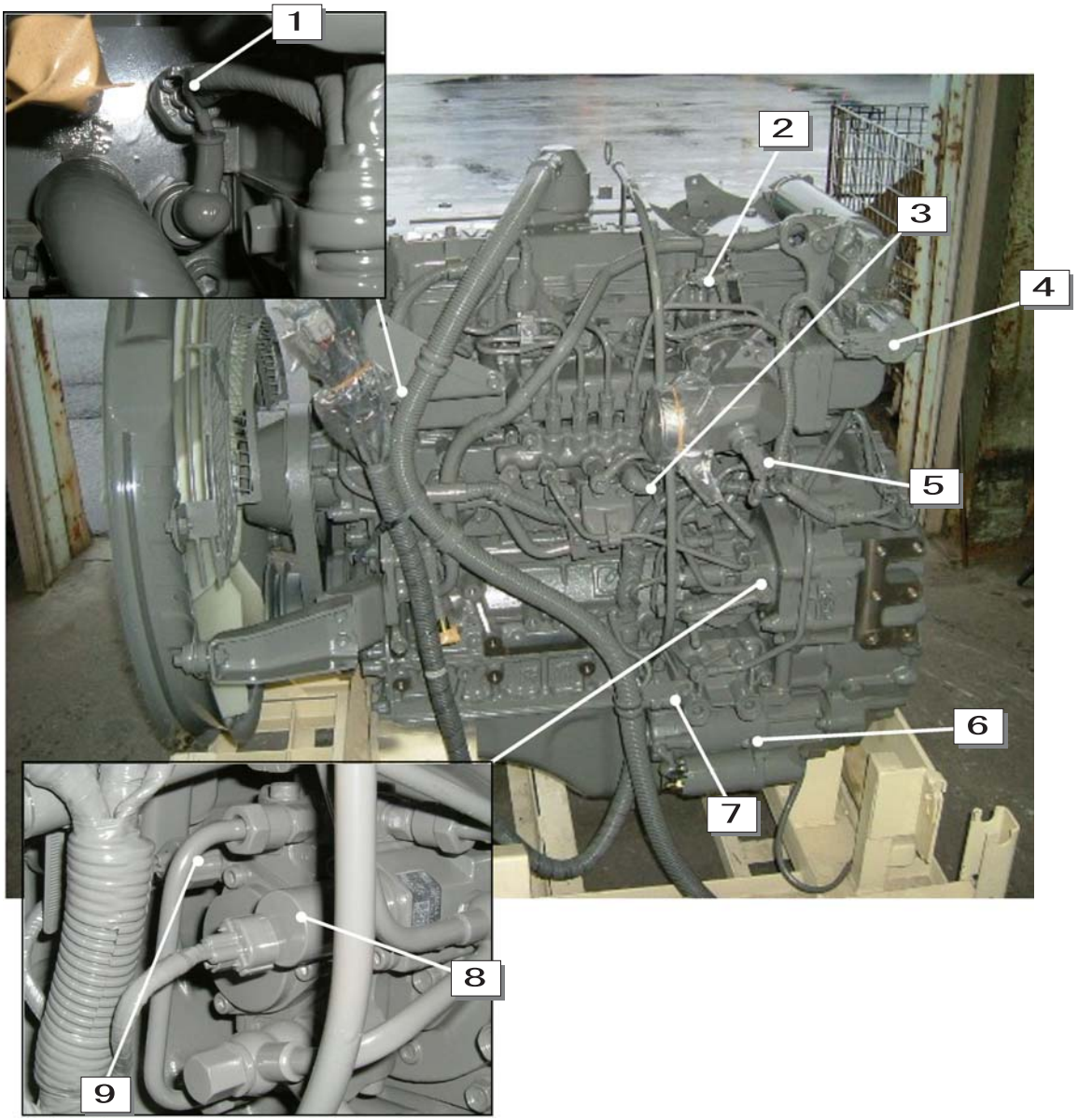

1	Engine coolant temperature sensor	6	Starter motor
2	Boost pressure sensor	7	Oil pressure sensor
3	Common rail pressure sensor	8	Suction control valve (SCV)
4	EGR valve	9	Fuel temperature sensor
5	Boost temperature sensor		

Sensor and Auxiliary Equipment Layout (rear)

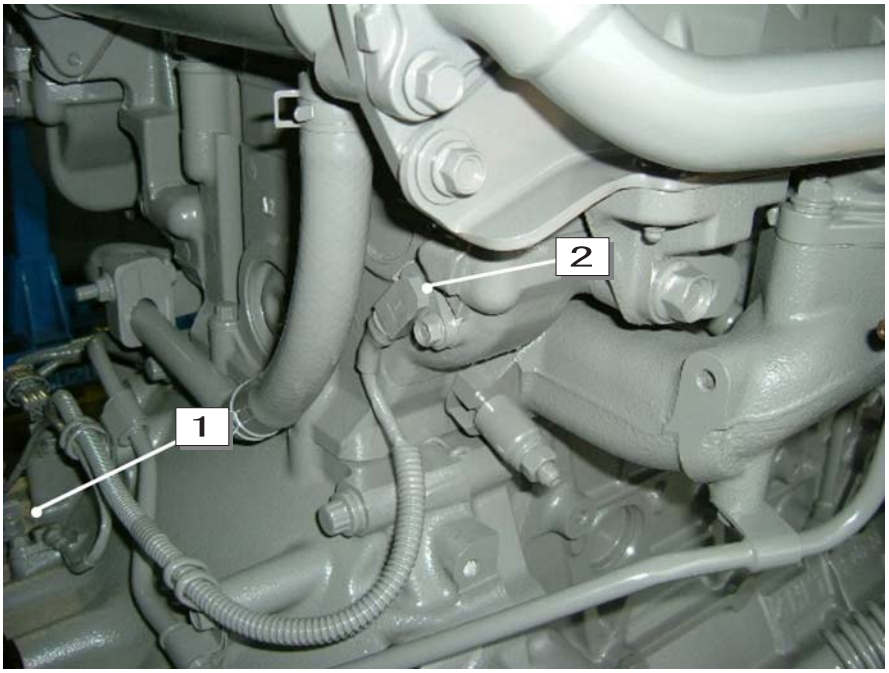

1	Crank position sensor
2	Cam position sensor

Engine System Diagram

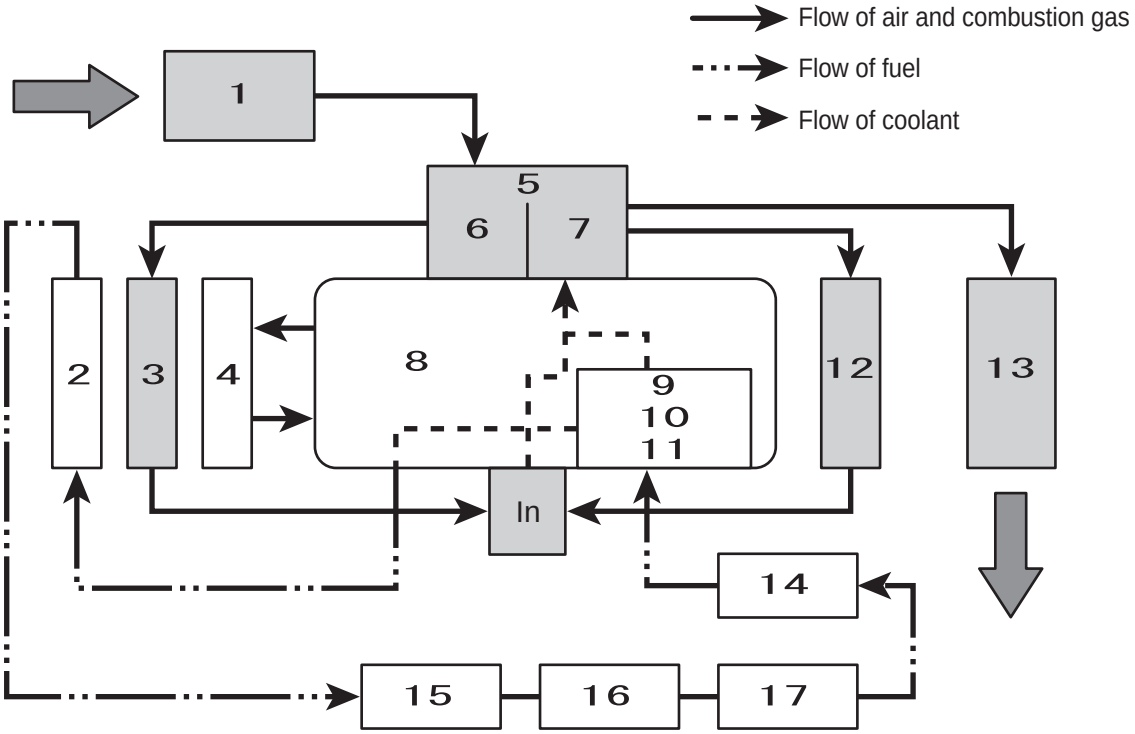

1	Air cleaner	7	Turbine side	13	Muffler
2	Fuel cooler	8	Engine	14	Fuel main filter
3	Inter cooler	9	Injector	15	Fuel tank
4	Radiator	10	Common rail	16	Fuel prefilter
5	Turbo	11	Supply pump	17	Electromagnetic pump
6	Compressor side	12	EGR cooler		

Fuel System Diagram

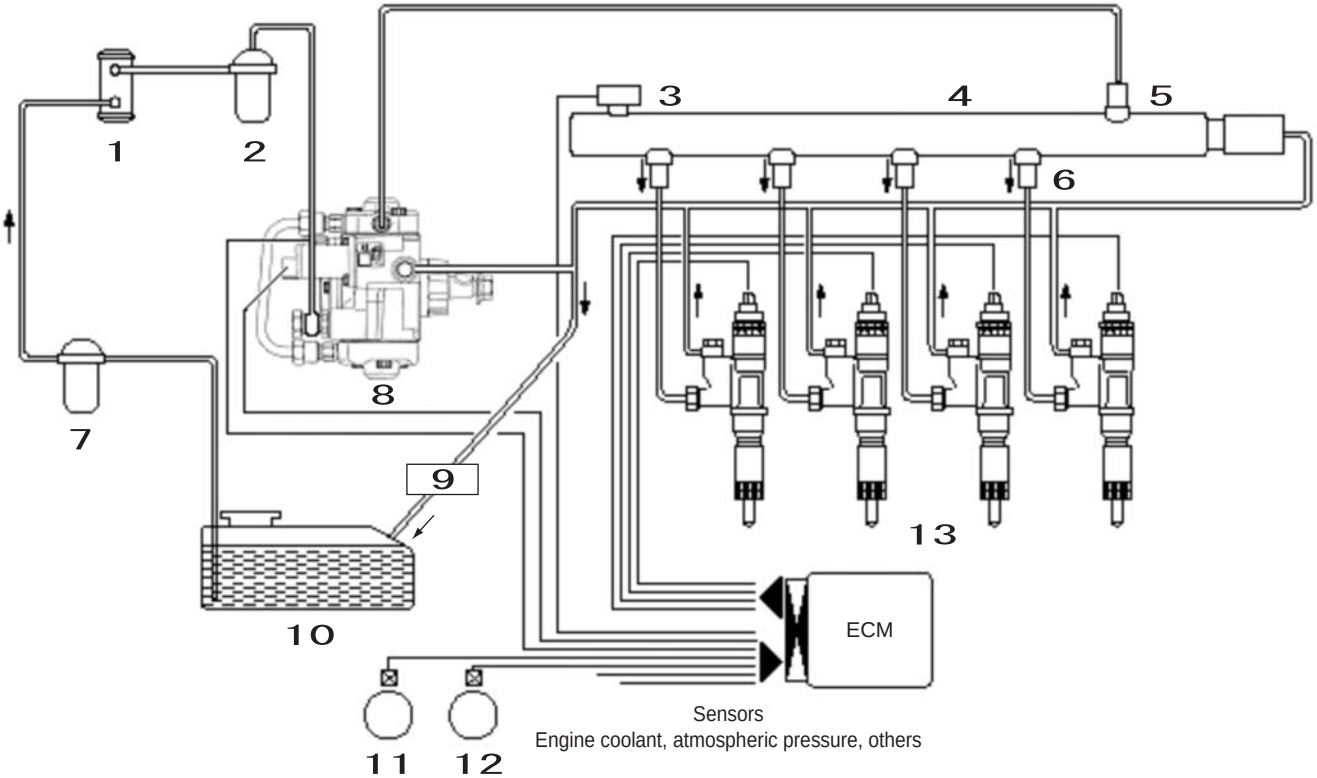

1	Electromagnetic pump	6	Flow damper	11	CMP sensor
2	Fuel main filter	7	Fuel prefilter	12	CKP sensor
3	Common rail pressure sensor	8	Supply pump	13	Injector
4	Common rail	9	Fuel cooler		
5	Pressure limiter	10	Fuel tank		

Detailed Parts Diagrams

1. ECM (engine control module)

Three roles of the ECM

[1] The ECM constantly monitors information sent from the various sensors and controls the power train systems.

[2] The ECM executes system function diagnosis, detects problems in system operation, issues trouble alarms to warn the operator and stores the diagnostic trouble code into memory.
The diagnostic trouble code identifies the area in which the problem occurred and supports repair work by the service engineer.

[3] The ECM puts out 5 V and other voltages to supply power to the various sensors and switches.
The ECM controls output circuits by controlling ground or power supply circuits via one device or another.

2. Supply Pump / SCV (suction control valve)

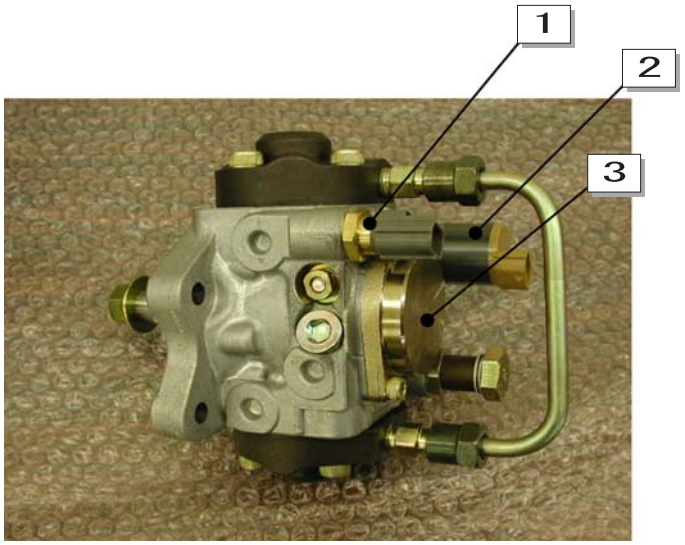

1	Fuel temperature sensor
2	SCV (suction control valve)
3	Feed pump

Supply pump
The supply pump uses the force of the engine rotation to raise the fuel pressure and send it to the common rail.The SCV, fuel temperature sensor, and feed pump are installed on the supply pump.

SCV (suction control valve)
The SCV is installed on the supply pump and controls the sending of fuel to the common rail under pressure (discharge amount). The ECM controls the time during which power is on to the SCV and controls the fuel discharge amount.

3. Common Rail / Flow Damper

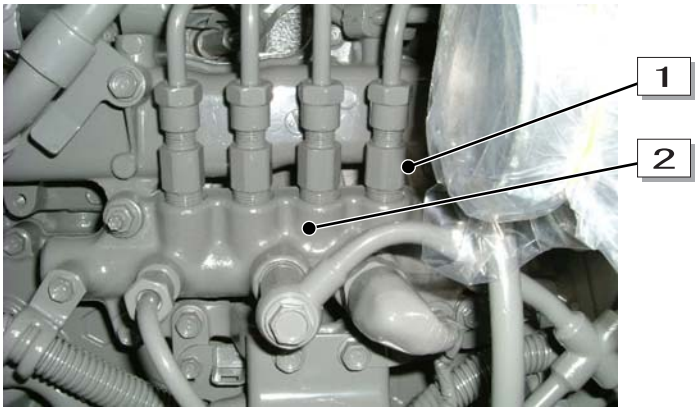

1	Flow damper
2	Common rail

[1] Common rail
The common rail receives the fuel from the supply pump, holds the common rail (fuel) pressure, and distributes the fuel to each cylinder. The common rail pressure sensor, flow dampers, and pressure limiter are installed on the common rail.

[2] Flow damper
The flow dampers are installed on the discharge port of each injector of the common rail. They suppress pressure pulses in the common rail and prevent excess fuel injection from the injectors.
When a flow damper operates, the fuel supply to the injector stops.

4. Common Rail Pressure Sensor / Pressure Limiter

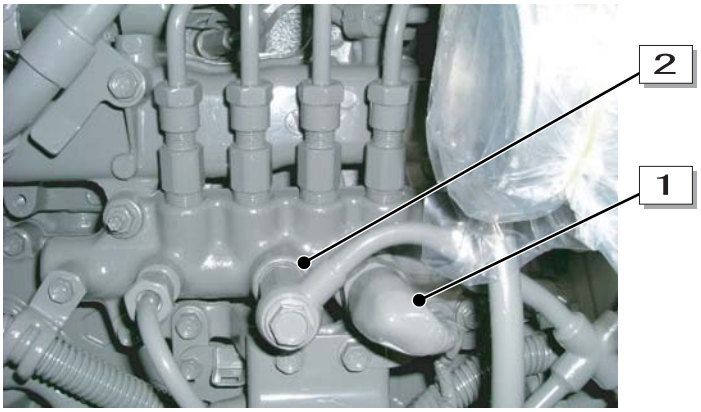

1	Common rail pressure sensor
2	Pressure limiter

[1] Common rail pressure sensor
Sends the pressure inside the common rail to the ECM as a voltage signal. From the signal sent, the ECM calculates the actual common rail pressure (fuel pressure) and uses this for fuel injection control.

[2] Pressure limiter
If the pressure in the common rail becomes abnormally high, the pressure limiter relieves the pressure, and excess fuel is returned to the tank.

5. Injector

The injectors are installed on the cylinder head sections. They are controlled from the ECM and inject fuel. The injector drive voltage is boosted (to 118 V) inside the ECM and applied to the injectors. By controlling the time this power to the injectors is on, the ECM controls the fuel injection, injection timing, etc.

6. Engine Coolant Temperature Sensor

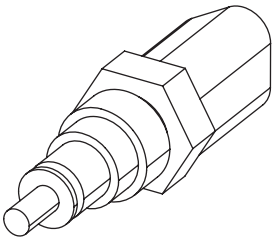

RST-05-01-001ck

The engine coolant temperature sensor is installed on the engine block. The resistance of its thermistor varies with the temperature.
The resistance is low when the engine coolant temperature is high and high when the coolant temperature is low. From the ECM voltage variation, the ECM calculates the engine coolant temperature and uses this for fuel injection control etc.

7. Engine Oil Pressure Sensor

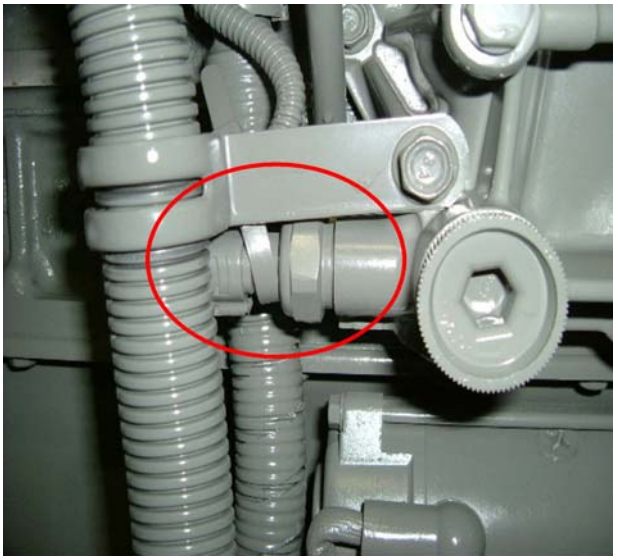

The engine oil pressure sensor is installed near the cylinder block starter motor. It detects the engine oil pressure, converts this pressure into an electrical signal, and sends that signal to the ECM.

8. Cam Position Sensor (CMP sensor)

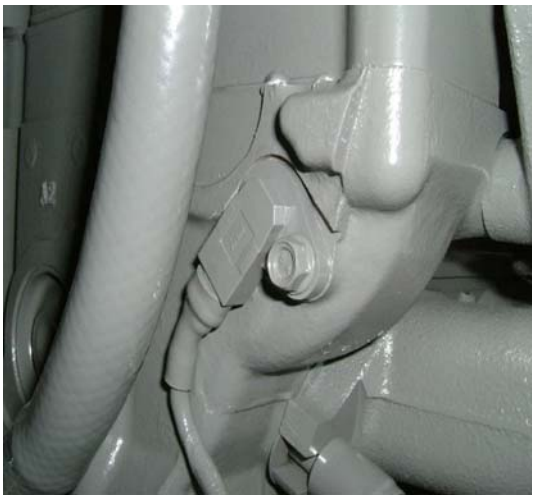

This sensor sends a signal to the ECM when the engine camshaft cam section passes this sensor.
The ECM identifies the cylinders through this sensor input, determines the crank angle, and uses this information to control the fuel injection and to calculate the engine speed.
The CMP sensor also provides a back-up function in case of trouble in the CKP sensor. However, if there is trouble in the CMP sensor system, there is no change in the behavior while the engine runs, but after it stops, the engine cannot start.

9. Crank Position Sensor (CKP sensor)

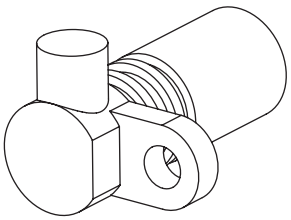

RST-05-01-001bs

This sensor sends a signal to the ECM when the projection section of the engine flywheel passes this sensor.
The ECM identifies the cylinders through this sensor input, determines the crank angle, and uses this information to control the fuel injection and to calculate the engine speed.
In case of trouble in the CKP sensor, the CMP sensor provides a back-up function.

10.Atmospheric Pressure Sensor

The atmospheric pressure sensor is installed in the cab. The ECM converts the atmospheric pressure into an electric signal and calculates the atmospheric pressure from this voltage signal and corrects the fuel injection quantity according to the atmospheric pressure.

11.Suction Air Temperature Sensor

The suction air temperature sensor is installed midway through the suction air duct. It detects the suction air temperature in order to optimize the fuel injection quantity.

12.Boost Pressure Sensor

The boost pressure sensor uses a pressure hose between the boost pressure sensor and intake pipe to detect the boost (suction air pressure), converts this pressure into an electrical signal, and sends that signal to the ECM.

13.Boost Temperature Sensor

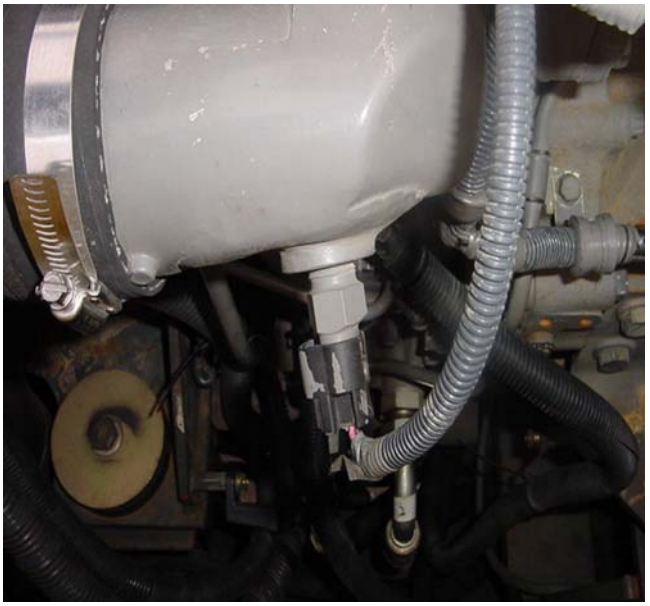

The boost temperature sensor is installed on the upstream side of the EGR valve of the intake manifold.
This sensor is the thermistor type. The internal resistance of the sensor changes with the temperature.

14.Electromagnetic Pump

Converting the fuel filter and pre-filter to remote operation increased the distance from the fuel tank to the feed pump.
Therefore, this new pump was added to assist in drawing the fuel from the tank and to make it easy to bleed out air during maintenance.
This pump always operates when the key switch is ON.

15.EGR Cooler

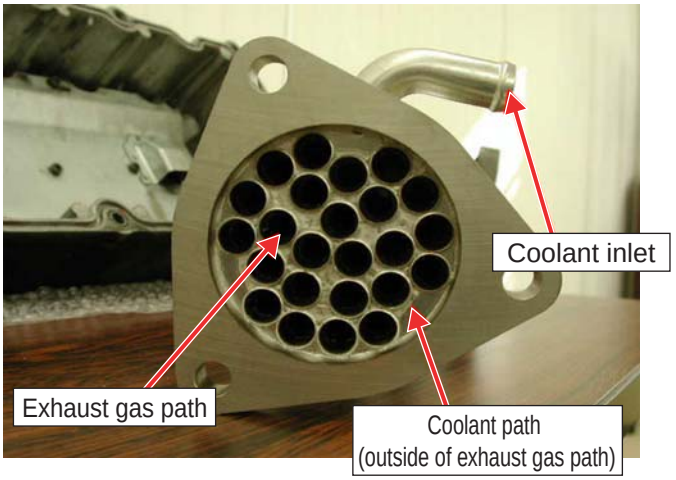

The cooled EGR (cooling unit installed in the path) uses the engine coolant to cool exhaust gas at high temperature (about 1292 ºF (700 °C)) down to (about 392 ºF (200 °C)), to drop the combustion temperature, and to reduce NOx.

16.Lead Valve (check valve)

The lead valve is installed between the EGR valve outlet and the inlet manifold. It suppresses EGR gas back flow and allows the EGR gas to only flow in one direction.

17.EGR Valve

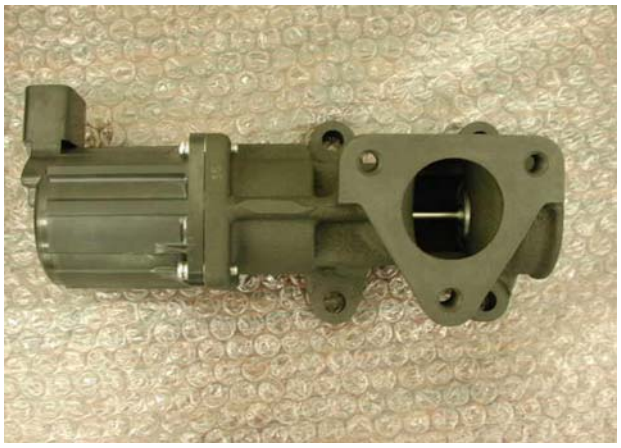

The operation of the EGR valve (lift amount) is controlled by signals from the ECM.

Engine Control Summary

Electronic control fuel injection system (common rail type)

This is a system in which the engine speed, engine load, and other information (signals from many sensors) are acquired from the engine control module (ECM) and based on that information, the ECM sends electrical signals to the supply pump, injectors, etc. to appropriately control the fuel injection quantity and timing for each cylinder.

Injection quantity control

To provide the optimum injection quantity, the ECM controls the injectors based mainly on the engine speed and the instructed speed from computer A and controls the fuel injection quantity.

Injection pressure control

The injection pressure is controlled by controlling the fuel pressure in the common rail.The appropriate pressure in the common rail is calculated from the engine speed and fuel injection quantity and by controlling the supply pump, the appropriate quantity of fuel is discharged and the pressure sent to the common rail is controlled.

Injection timing control

Instead of a timer function, primarily the appropriate fuel injection timing is calculated from the engine speed, injection quantity, etc. and the injectors controlled.

Injection rate control

In order to improve the combustion in the cylinder, at first only a small amount of fuel is injected (pre-injection), the fuel is ignited, then once the fuel has ignited, a second injection (main injection) is carried out.This injection timing and quantity control is effected by controlling the injectors.

https://truckmanualshub.com/

Function Explanation Table

	Name	Function
1	Common rail	Receives the high-pressure fuel sent under pressure from the supply pump, holds the fuel pressure, and distributes the fuel to each injector.
2	Pressure limiter (common rail component part)	Operates to allow pressure within the common rail to escape if the pressure in the common rail becomes abnormally high.
3	Flow damper (common rail component part)	Installed on the discharge port of each injector. Suppress pressure pulses in the common rail and prevent fuel supply to the injectors when there is pipe damage.
4	Common rail pressure sensor (common rail component part)	Detects the pressure inside the common rail, converts it to a voltage, and sends that voltage to the ECM.
5	Injector	Controlled by the ECM and injects the fuel.
6	Supply pump	Raise the fuel pressure and send it under pressure to the common rail by using the force of the engine rotation.
7	SCV (suction control valve) (supply pump component part)	Controls the fuel pressure (discharge quantity) sent to the common rail. The ECM controls the time during which power is on to the SCV to increase or decrease the amount of fuel discharged.
8	Fuel temperature sensor (supply pump component part)	Detects the fuel temperature and sends it to the ECM. Used for supply pump control etc.
9	EGR (Exhaust Gas Recirculation)	Recirculates part of the exhaust gas in the intake manifold and mixes the EGR gas with the suction air to reduce the combustion temperature and reduce NOx.
10	EGR valve (EGR position sensor)	The EGR valve operation (open and close) timing and the lift amount are controlled by signals from the ECM. (The valve lift amount is detected by the EGR position sensor)
11	EGR cooler	Cools the high-temperature EGR gas by using the engine coolant.
12	Lead valve	Increases the amount of EGR by suppressing back flow of the EGR gas and letting it flow only in one direction.
13	ECM (engine control module)	Constantly monitors the information from each sensor and controls the engine system.
14	QOS (quick on start system)	Determines the glow time according to the engine coolant temperature, operates the glow relay, and makes starting at low temperatures easy and also reduces white smoke and noise immediately after the engine starts.
15	CKP sensor (crank position sensor)	Sends a signal to the ECM when the projection section of the engine flywheel passes this sensor. The ECM identifies the cylinders through this sensor input, determines the crank angle, and uses this information to control the fuel injection and to calculate the engine speed. In case of trouble in the CKP sensor, the CMP sensor provides a back-up function.
16	Oil pressure sensor	Detects the engine oil pressure and sends it to the ECM. Used for oil pressure drop alarms etc.
17	Engine coolant temperature sensor	Detects the engine coolant temperature and sends it to the ECM. Used for fuel injection control, QOS control, etc.

https://truckmanualshub.com/

	Name	Function
18	CMP sensor (cam position sensor)	Sends a signal to the ECM when the engine camshaft cam section passes this sensor. The ECM identifies the cylinders through this sensor input, determines the crank angle, and uses this information to control the fuel injection and to calculate the engine speed. Also provides a back-up function in case of trouble in the CKP sensor. However, if there is trouble in the CMP sensor system, there is no change in the behavior while the engine turns, but after it stops, restarting is difficult.
19	Atmospheric pressure sensor	Detects the atmospheric pressure and sends it to the ECM. The injection quantity is corrected according to the atmospheric pressure.
20	Suction air temperature sensor	Detects the suction air temperature and sends it to the ECM. Optimizes the fuel injection quantity.
21	Boost pressure sensor	Detects the boost (suction air pressure) inside the intake pipe and sends it to the ECM. Used to control fuel injection with the boost pressure.
22	Boost temperature sensor	Detects the boost temperature and sends it to the ECM. Used for fuel injection control etc.

Technology for Exhaust Gases

1. Common Rail System

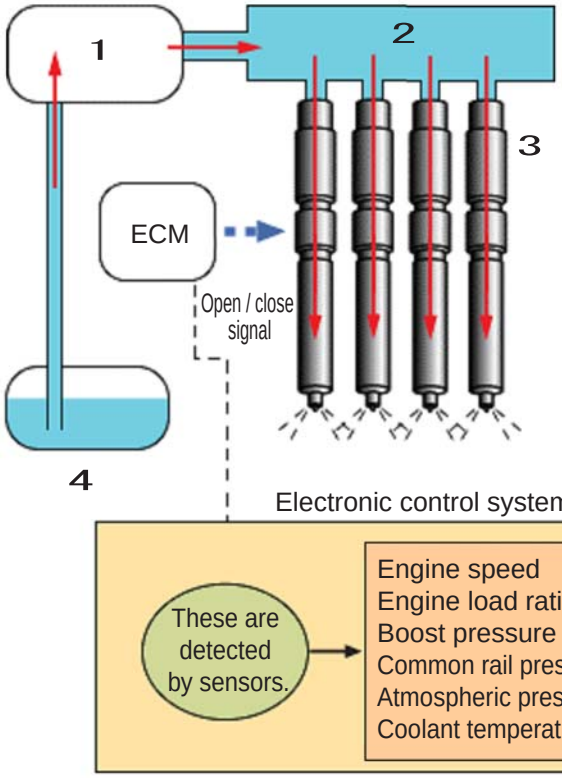

High-pressure fuel is accumulated for all cylinders and fed uniformly to each injector.

The fuel injection pressure, injection timing, and injection quantity are controlled electronically to attain ideal combustion.

1	Supply pump
2	Common rail
3	Injector
4	Fuel tank

2. Multi-Stage Fuel Injection (multiple injection)

Start of injection

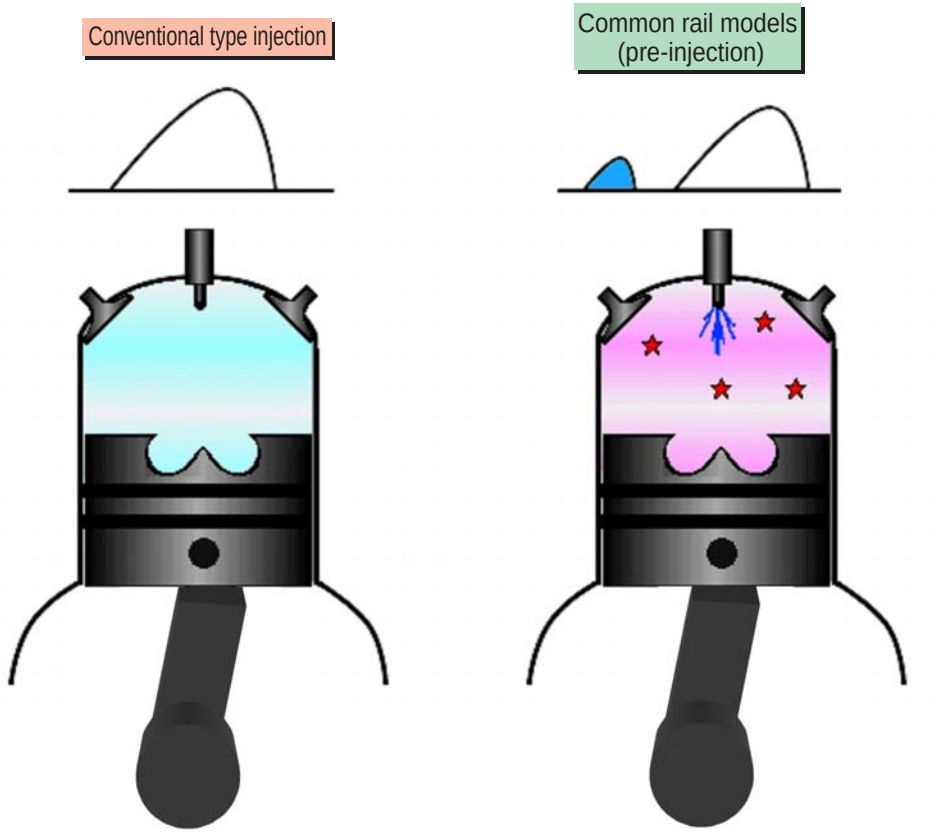

With conventional models, there is the no-injection state, but with common rail models, pre-injection is started and ignition starts.

Ignition

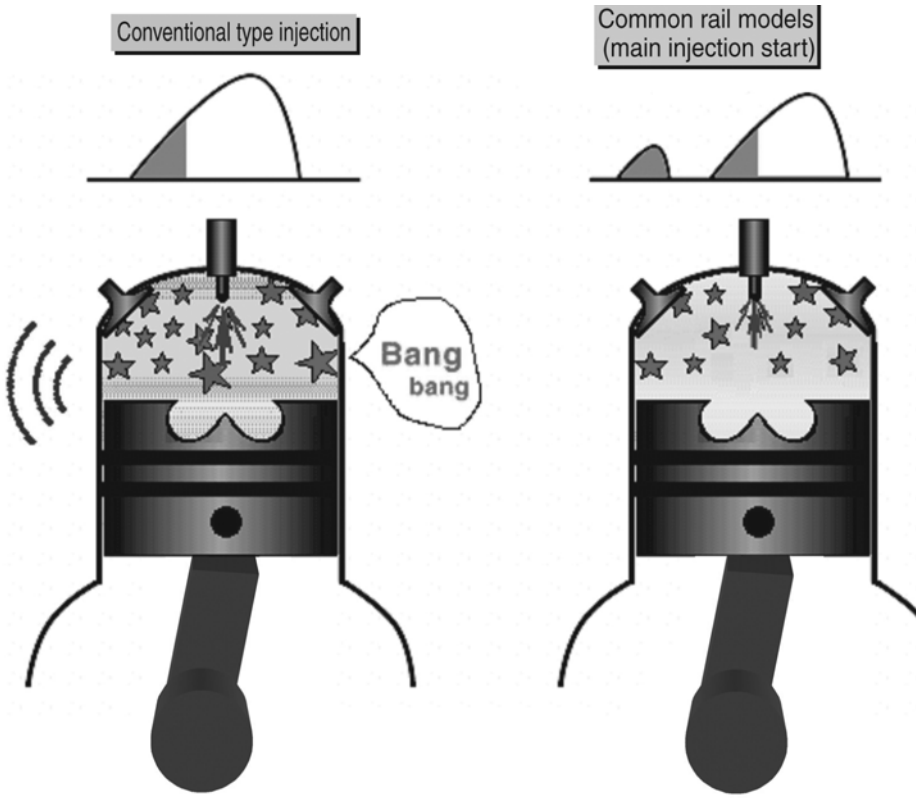

Conventional models start injection at this point in time, but common rail models have already ignited with pre-injection and now start the second injection (main injection).

Combustion

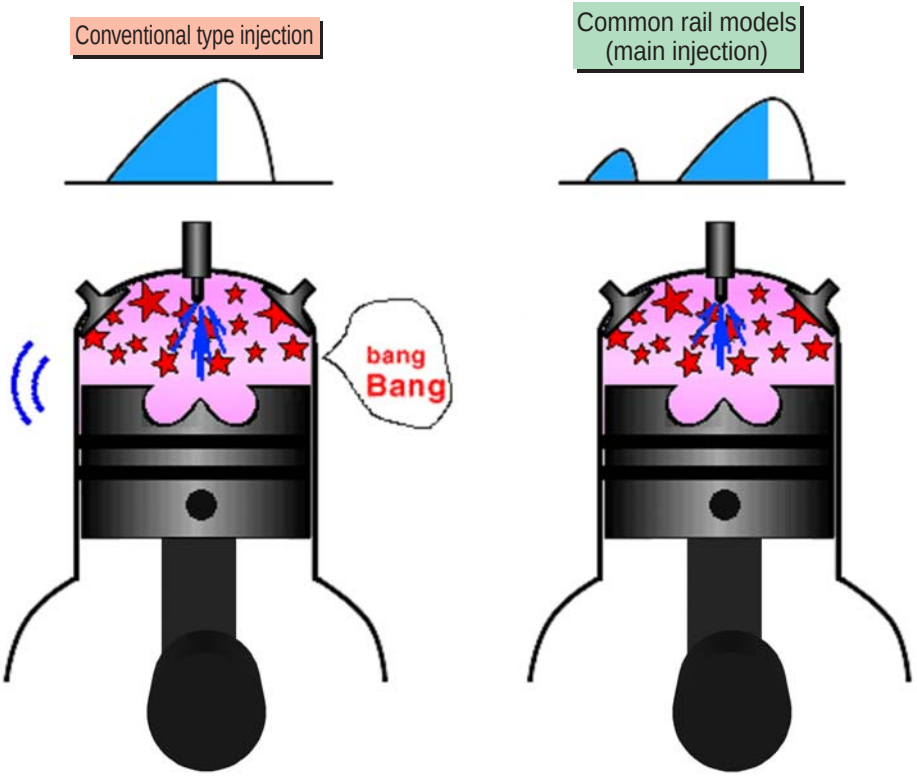

Common rail models divide the high-pressure fuel injection over many times to make it possible to create a uniform, complete combustion state in the combustion chamber and also to reduce the engine noise and vibration.

https://truckandbusshub.com/

3. Inter Cooler

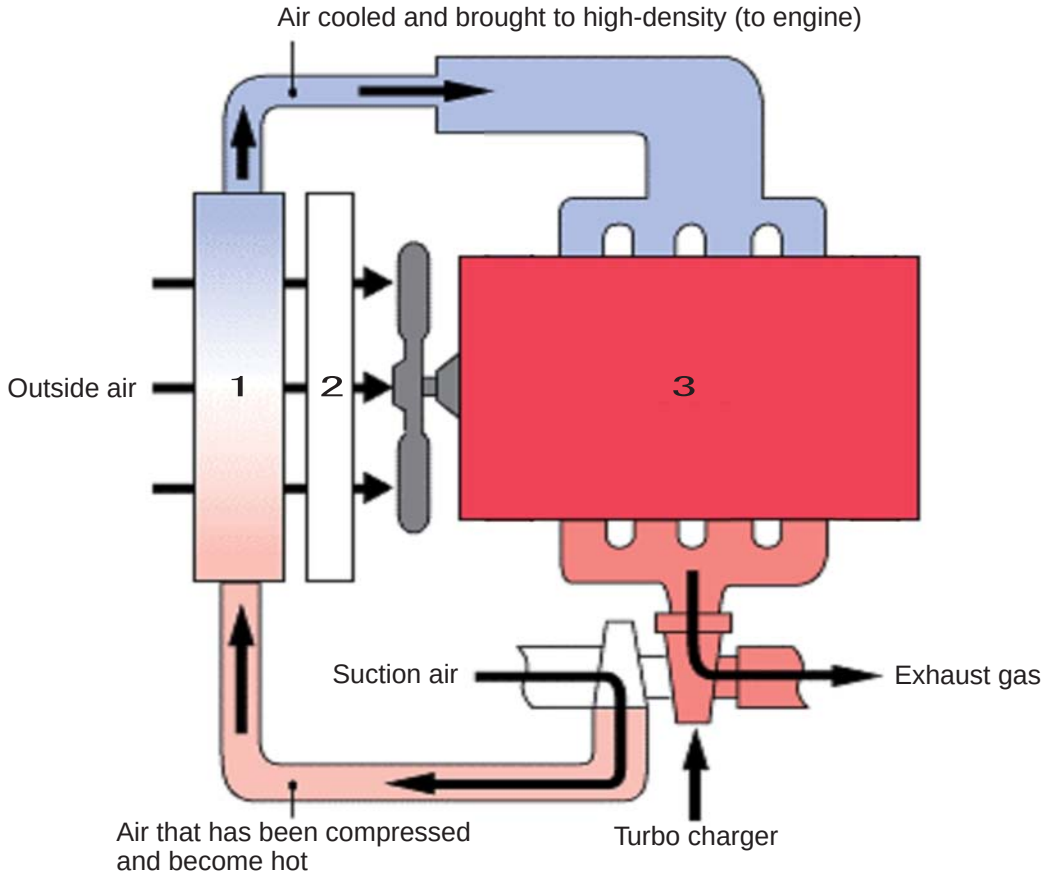

By cooling intake air that had reached high temperature due to turbo-charging, the air density rises and the charging efficiency rises.
This raises the engine fuel efficiency and improves fuel efficiency (CO / CO_2 reduction) and also has the effect of lowering the combustion temperature that reduces NO_X.

1	Inter cooler
2	Radiator
3	Engine

https://truckmanualshub.com/

4. EGR (exhaust gas recirculation)

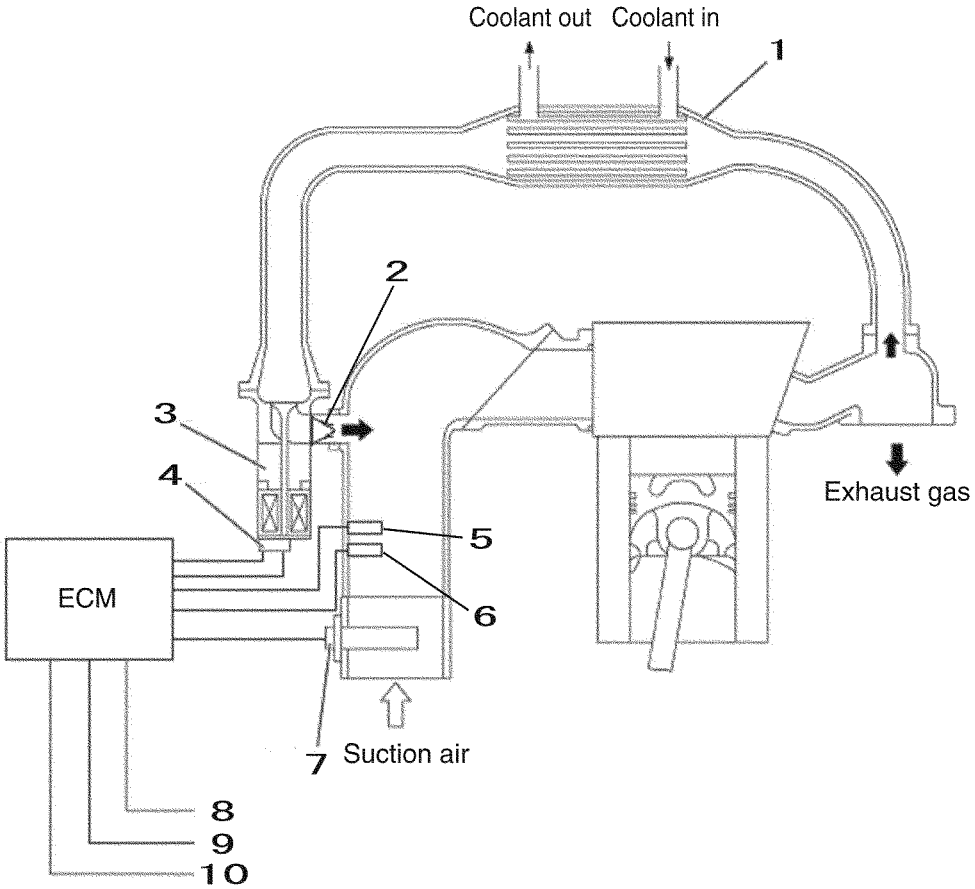

1	EGR cooler	6	Boost pressure sensor
2	Lead valve	7	Suction air temperature sensor
3	EGR valve	8	Engine speed
4	EGR position sensor	9	Engine coolant temperature
5	Boost temperature sensor	10	Engine load

EGR (exhaust gas recirculation)
EGR system is an abbreviation for "exhaust gas recirculation" system. The EGR system recirculates part of the exhaust gas in the intake manifold and mixes inactive gases with the suction air to reduce the combustion temperature and suppress the generation of nitrogen oxides (NOx).The EGR quantity is controlled by the operation (opening and closing) of the EGR valve, which is installed between the exhaust manifold and the intake manifold.

The ERG quantity is determined from the engine speed and engine load rate (fuel injection quantity) and the EGR amount is controlled.A cooling device (EGR cooler) is installed in the EGR gas path to cool the high-temperature EGR gas with this EGR cooler. This cooled EGR gas is mixed with new air intake to make the combustion temperature lower than with normal EGR, which contributes to the reduction of NOx. (Cooled EGR)

Furthermore, a lead valve is used in the EGR system to suppress EGR gas back flow and allow the EGR gas to only flow in one direction.

https://truckandtrailshub.com/

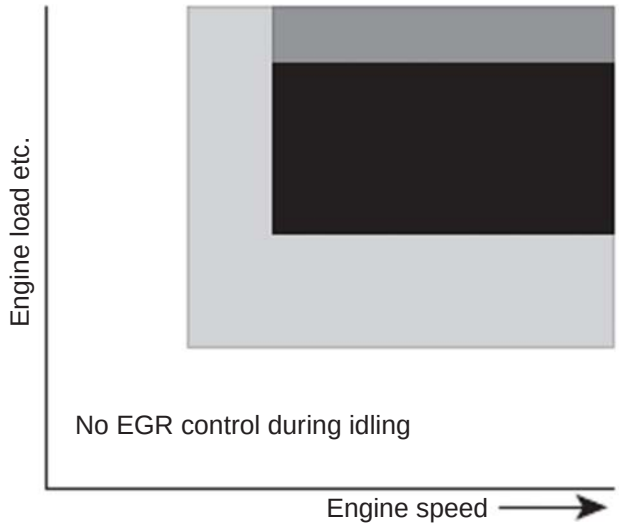

The ECM operates the motor according to such engine states as the speed and load and controls the EGR valve lift amount.
The valve lift amount is detected by the EGR position sensor. The sections shown in darker color in the diagram have larger valve lift amount. The darkest color indicates a lift amount near 100%.

Engine Overall

1. Comparison of 6BG1 and 4HK1

2 valves OHV

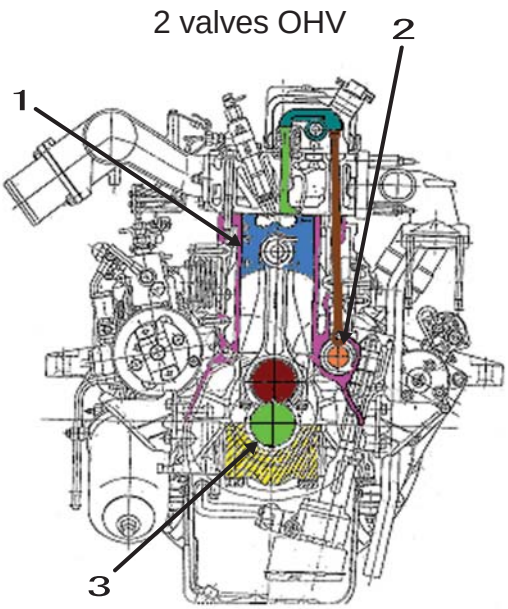

6BG1

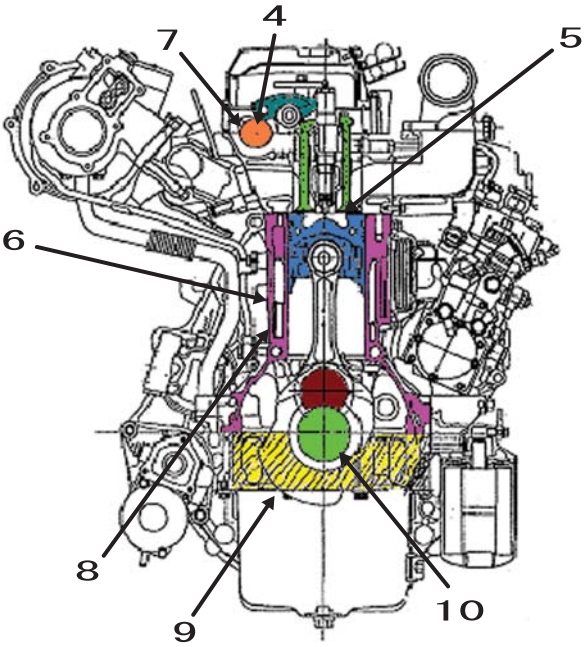

4HK1

1	Liner chrome plating roughness 5 μ	6	Liner phosphate film roughness 3 μ (reduced oil consumption)
2	Cam flat tappet	7	Overhead cam (high-rigidity cylinder head)
3	Crank / journal pin diameter ϕ 80 / ϕ 64	8	High-rigidity cylinder
4	Roller rocker (increases ability of lubricant to withstand wear)	9	Block & ladder frame (high rigidity, high output)
5	4 valves (combustion improvement, high output, high rigidity)	10	Crank / journal pin diameter ϕ 80 / ϕ 73 (high output)

6B engine

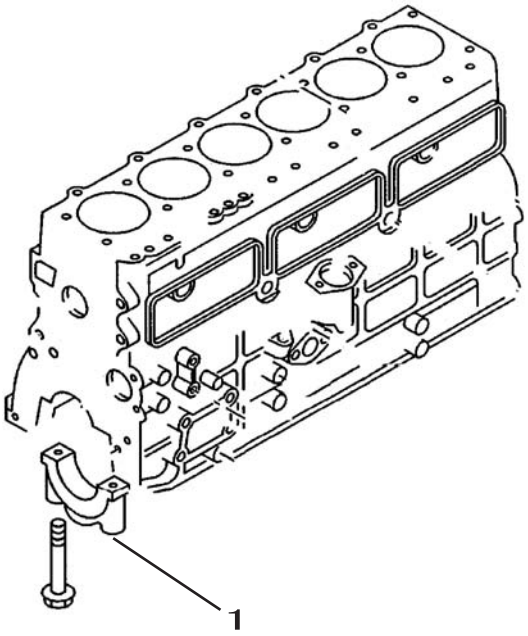

4H engine

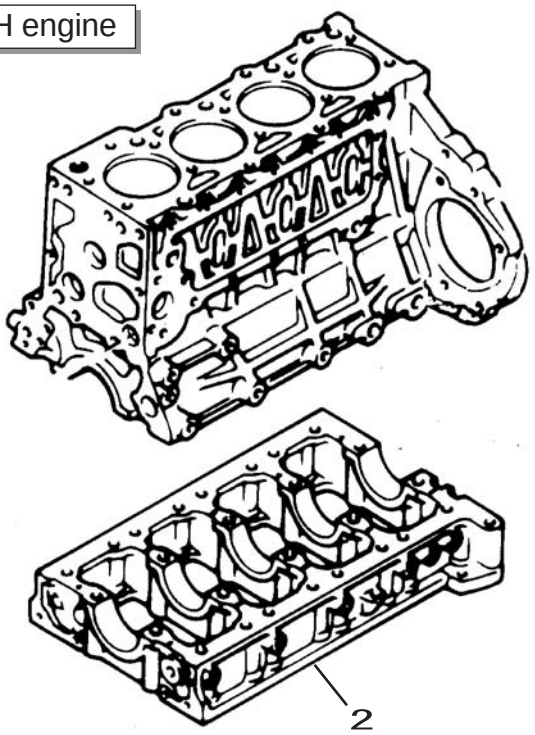

1	Bearing cap structure
2	Ladder frame structure

With the ladder frame structure, the crank shaft bearing is supported as one piece by the frame. (increased engine rigidity and reduced noise)

https://truckmanualshub.com/

Fuel Unit

1. Common Rail System Summary

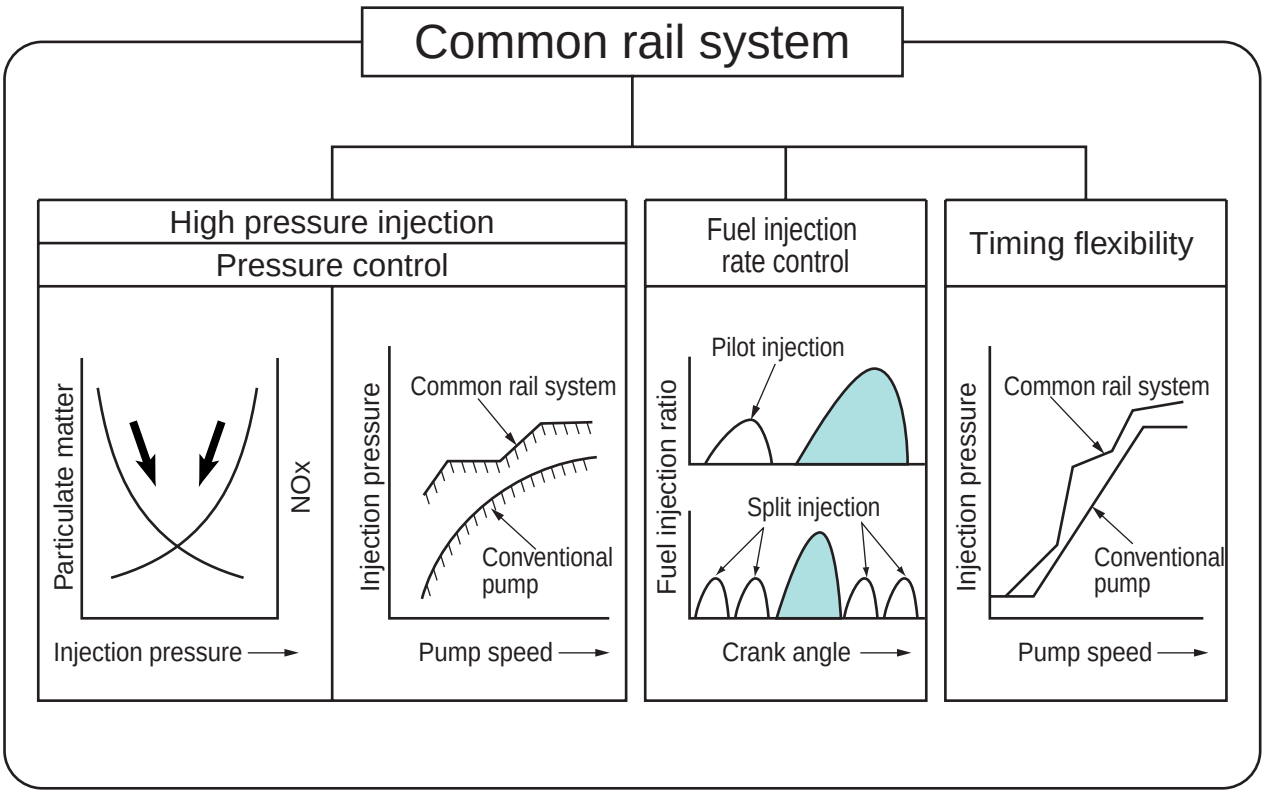

Conventional fuel injection pump

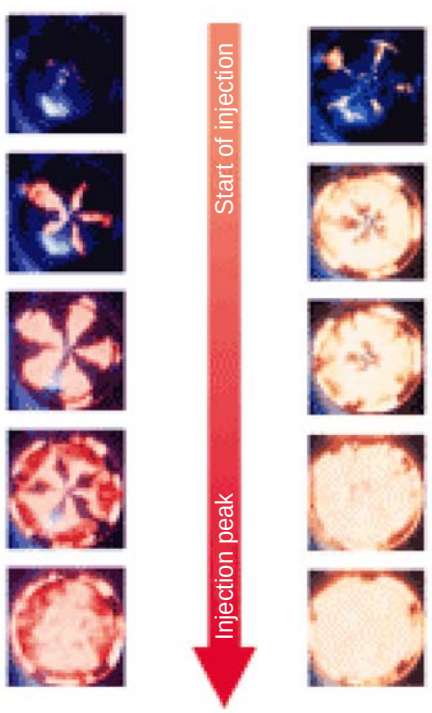

Common rail type high-pressure fuel injection system

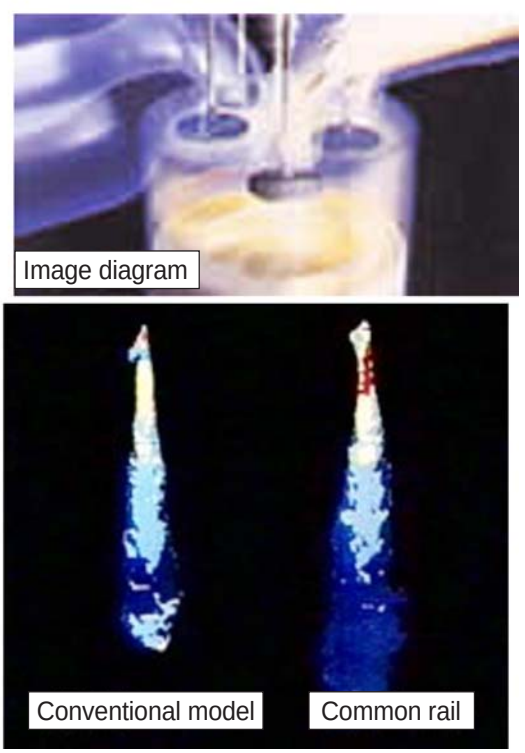

The common rail system pressurizes the fuel to high pressure and injects the fuel mist widely into the cylinder to increase the surface of contact with the air and improve the combustion state.

https://truckmanualshub.com/

Relationship between ECM and sensor actuators

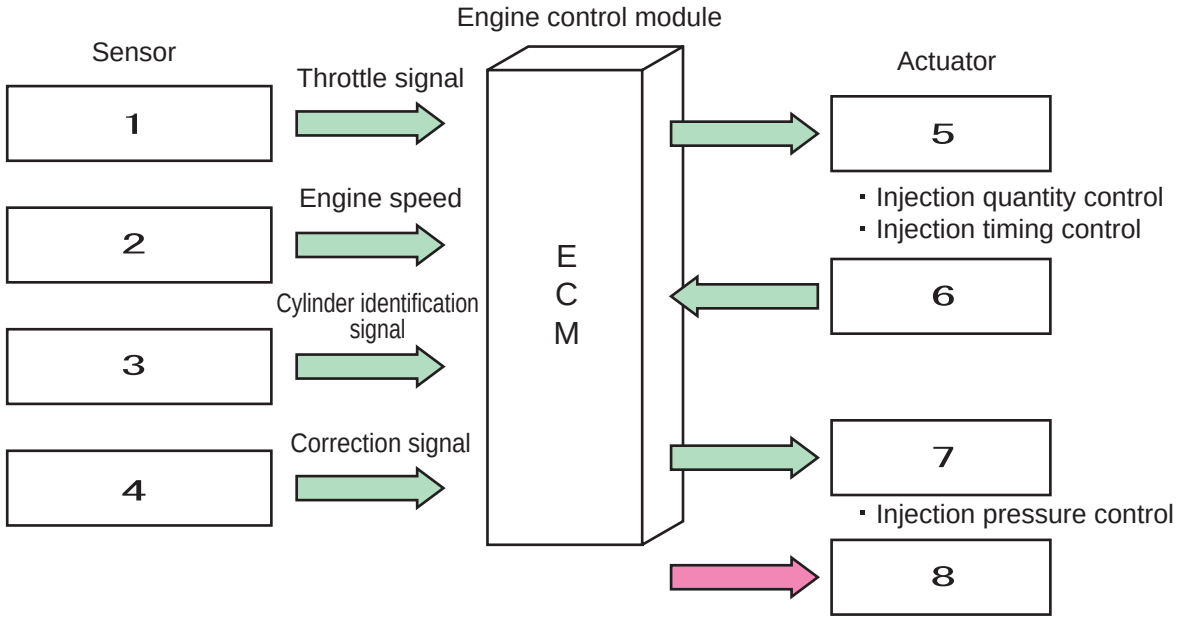

1	Throttle volume (Computer)	5	Injector
2	Crank shaft position sensor	6	Common rail pressure sensor
3	Camshaft position sensor	7	Supply pump
4	Other sensors	8	EGR valve

2. Change Points for Injection Method (governor, common rail)

	Inline type	Common rail system
System	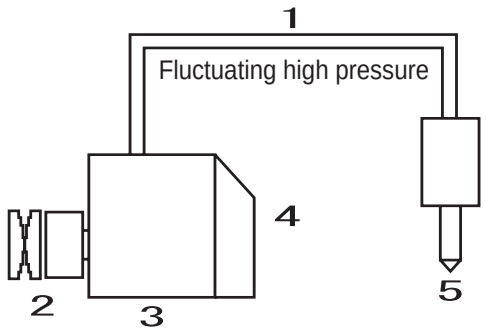	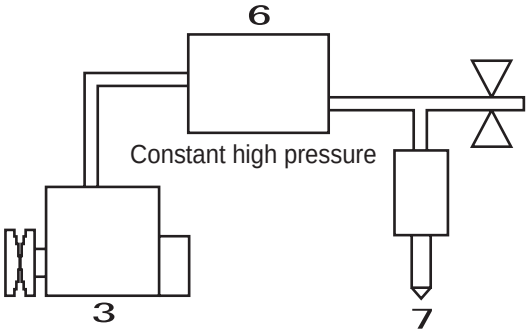
Injection quantity adjustment	Pump (governor)	ECM, injector
Injection timing adjustment	Pump (timer)	ECM, injector
Pressure boost	Pump	Supply pump
Distribution method	Pump	Common rail
Injection pressure adjustment	According to engine speed and injection quantity	Supply pump (SCV)

1	Pipe	5	Nozzle
2	Timer	6	Common rail
3	Supply pump	7	Injector
4	Governor		

https://truckmanualshub.com/

3. Explanation of Injector Operation

(1) When there is no signal from the ECM (state before injection)

The outer valve in the injector is pushed down by the force of the spring A and seals the fuel into the control chamber.
The hydraulic piston and spring B are pushed down by the fuel in the control chamber and the nozzle is in the closed state.

No signal

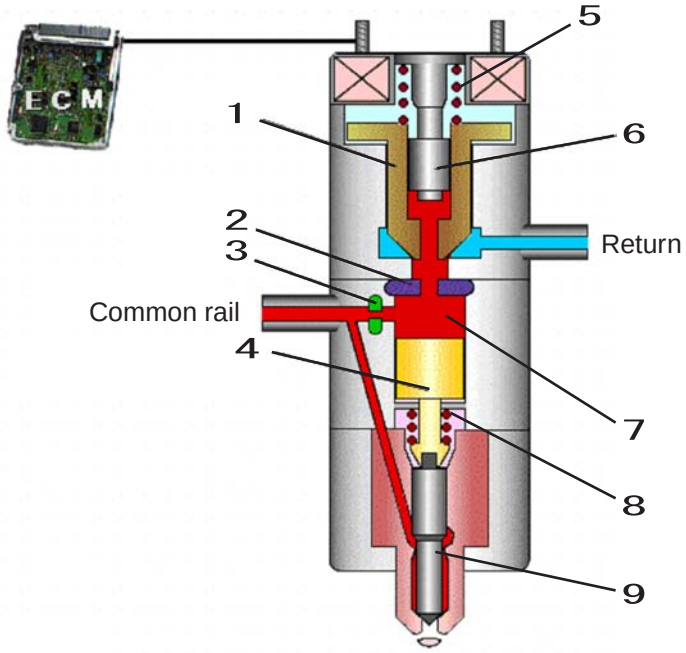

1	Outer valve
2	Orifice 1
3	Orifice 2
4	Hydraulic piston
5	Spring A
6	Inner valve
7	Control chamber
8	Spring B
9	Nozzle

(2) When there is a signal from the ECM

When the signal from the ECM passes power through the injector solenoid, the outer valve compresses the spring A and moves it up.
The outer valve opening allows the fuel in the control chamber to return to the tank via the return line.

Signal input

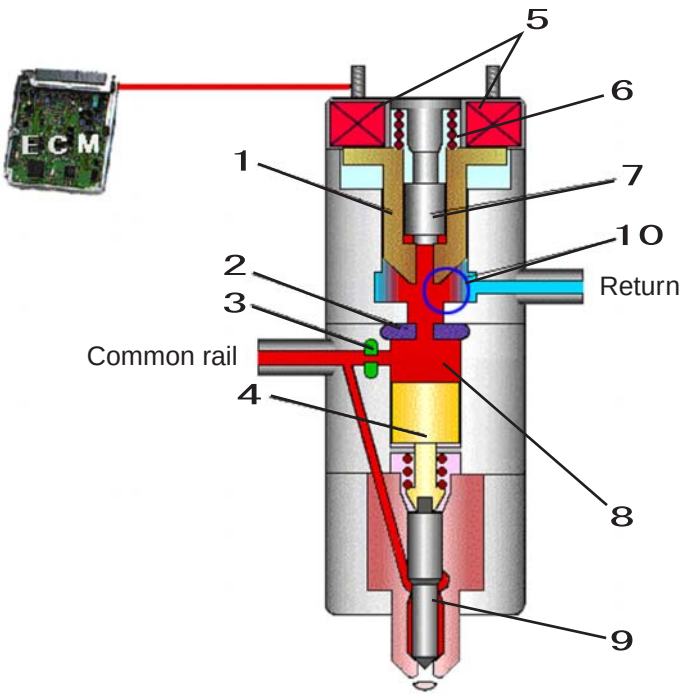

1	Outer valve
2	Orifice 1
3	Orifice 2
4	Hydraulic piston
5	Solenoid
6	Spring A
7	Inner valve
8	Control chamber
9	Nozzle
10	Valve open

(3) Injection start state

The pressure difference between the control and the nozzle chamber, which is caused by the control chamber opening to return line, opens the nozzle, then fuel is injected.

Start of injection

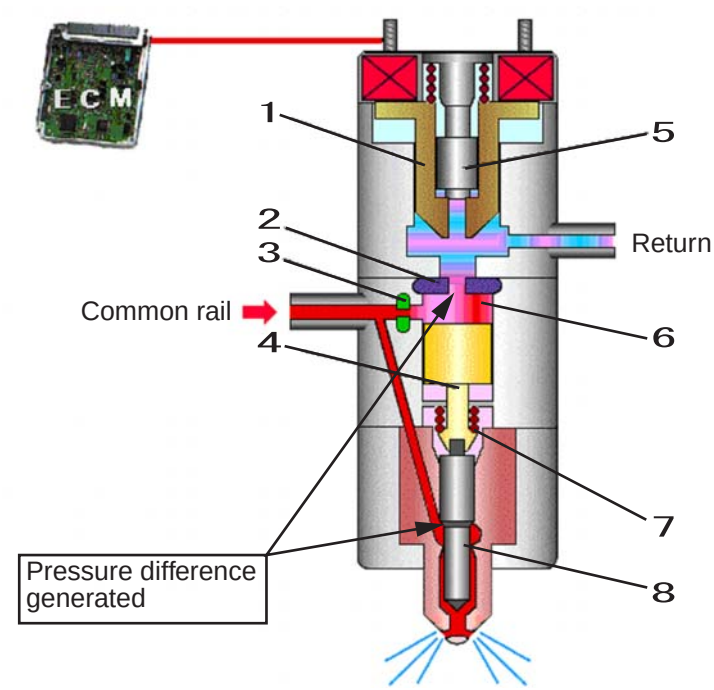

1	Outer valve
2	Orifice 1
3	Orifice 2
4	Hydraulic piston
5	Inner valve
6	Control chamber
7	Spring B
8	Nozzle

(4) When the signal from the ECM is cut off

Because the power to the injector solenoid is cut off, the outer valve is pushed back down by the force of the spring A and the outer valve closes the return line path.

Signal stop

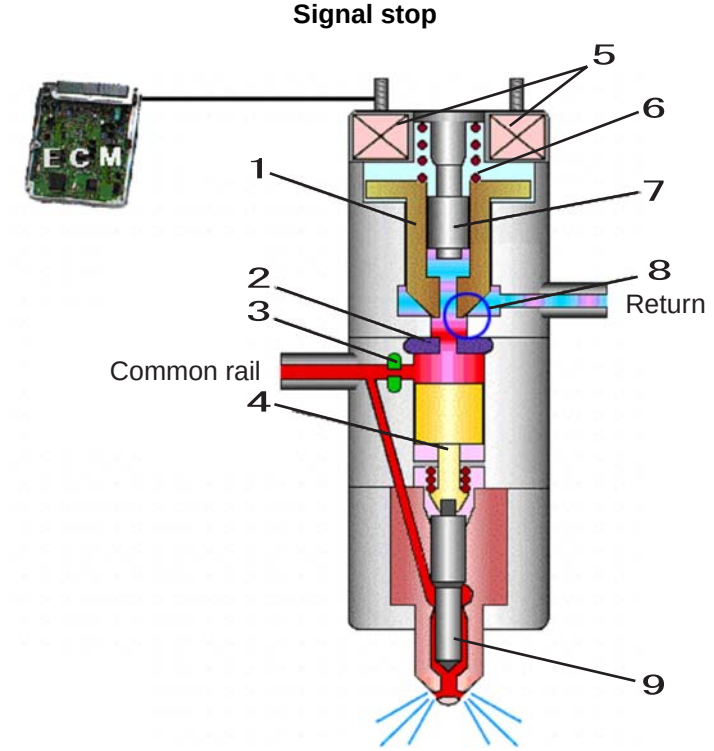

1	Outer valve
2	Orifice 1
3	Orifice 2
4	Hydraulic piston
5	Solenoid
6	Spring A
7	Inner valve
8	Valve close
9	Nozzle

https://truckmanualshub.com/

(5) Injection stop state (injection end)

Because the fuel is sealed into the return line, fuel fills the control chamber again.
The hydraulic piston and the spring B are compressed down by the filled fuel and the nozzle is closed.
This ends the injection.

Injection stop

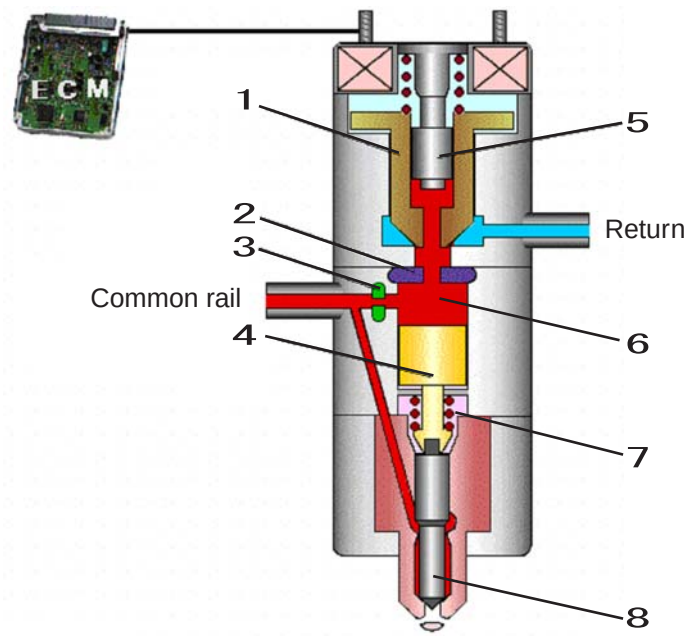

1	Outer valve
2	Orifice 1
3	Orifice 2
4	Hydraulic piston
5	Inner valve
6	Control chamber
7	Spring B
8	Nozzle

https://truckmanuals.net/

4. Explanation of Supply Pump Operation

The drive shaft is driven by the force of engine rotation.
The feed pump is turned by the power of the drive shaft and draws up fuel from the fuel tank.
The fuel pressurized by the feed pump has feed pressure pulse stabilized by the adjustment valve.
Part of this fuel remains at the suction control valve to lubricate the plunger and cam and is returned to the fuel tank via the over flow.
The signal from the ECM is input to the suction control valve and the opening stroke varies according to the quantity of power passed through.
The quantity of fuel corresponding to the stroke is sent to the suction valve under pressure and is compressed to high pressure at the plunger.
The fuel raised to high pressure at the plunger is sent under pressure from the delivery valve to the common rail.
The fuel temporarily built up in the common rail is distributed to the injectors for each cylinder.

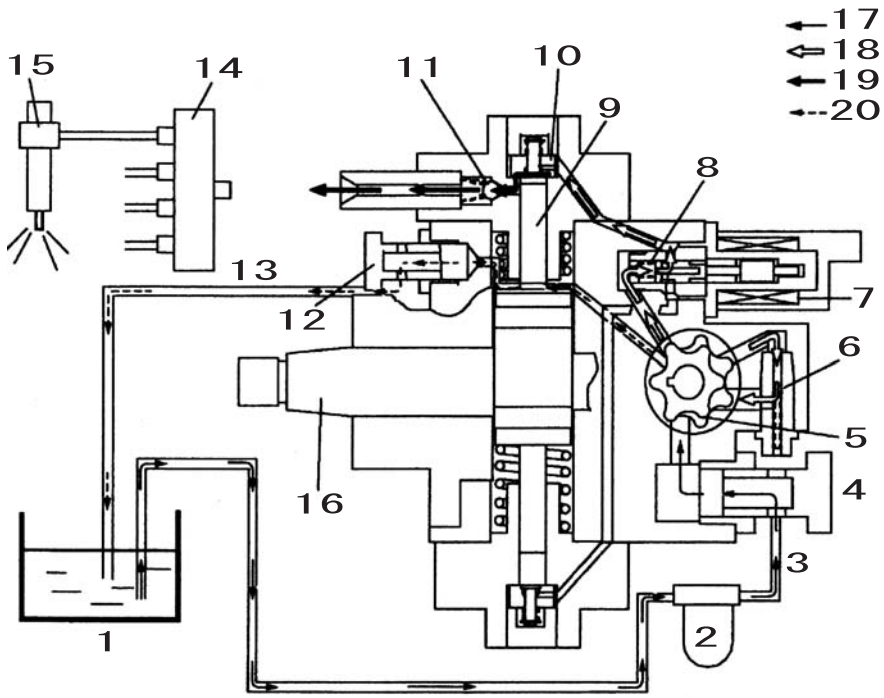

1	Fuel tank	8	Return spring	15	Injector
2	Fuel filter	9	Plunger	16	Drive shaft
3	Suction	10	Suction valve	17	Suction pressure
4	Fuel inlet	11	Delivery valve	18	Feed pressure
5	Feed pump	12	Over flow	19	High pressure
6	Adjusting valve	13	Return	20	Return pressure
7	Suction control valve	14	Common rail		

https://truckmanualshub.com/

5. Supply Pump Disassembly Diagram

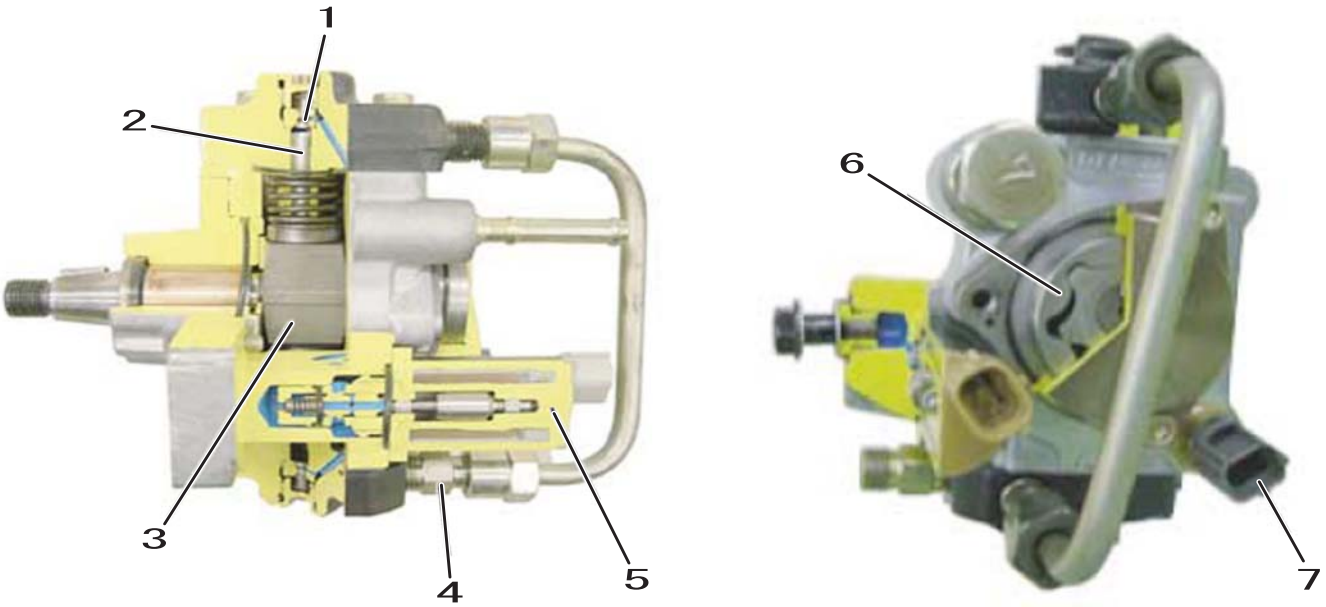

1	Suction valve	5	Suction control valve
2	Plunger	6	Feed pump
3	Cam ring	7	Fuel temperature sensor
4	Delivery valve		

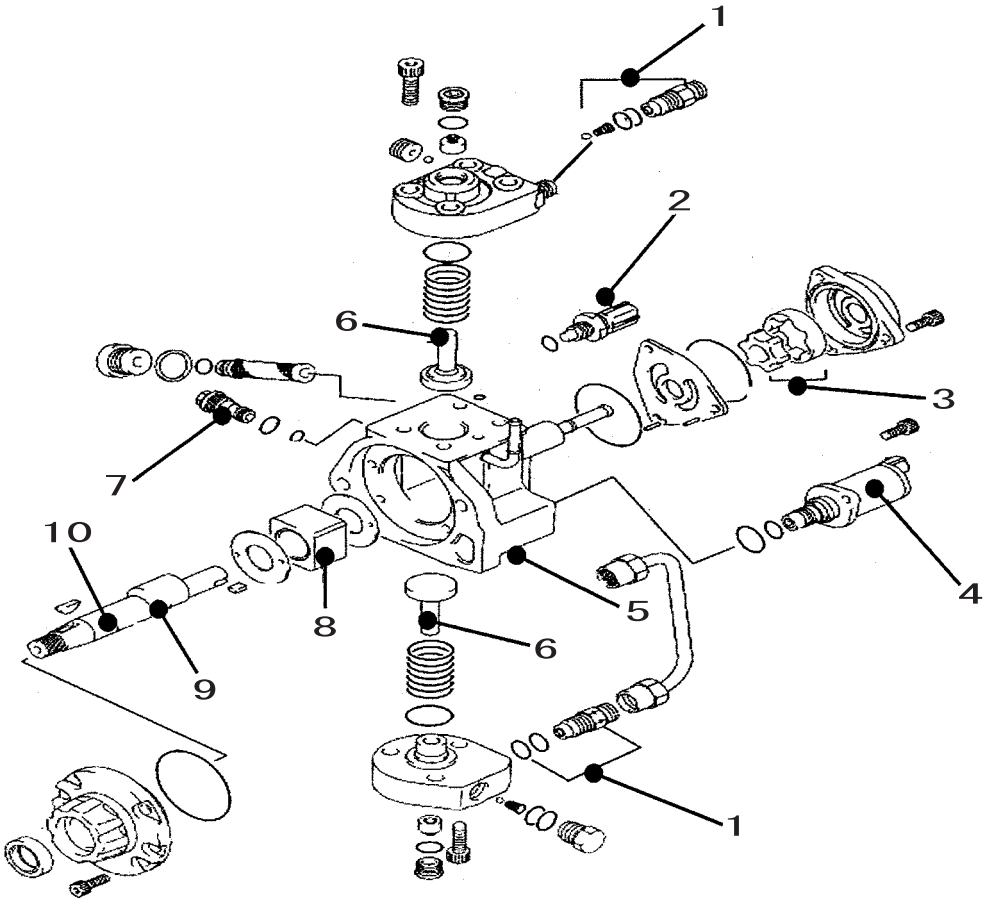

RF04001–001

1	Delivery valve	6	Plunger
2	Fuel temperature sensor	7	Adjusting valve
3	Feed pump	8	Cam ring
4	SCV (suction control valve)	9	Eccentric cam
5	Pump housing	10	Camshaft

6. Explanation of Flow Damper Operation

Internal structure diagram

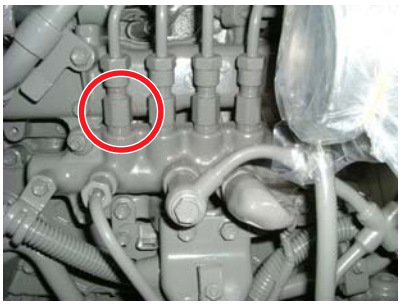

Common rail side Injector side

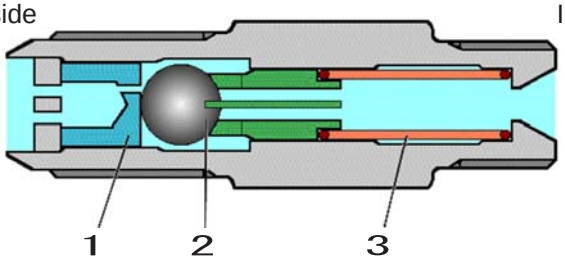

1	Piston
2	Ball
3	Spring

[1] When engine is stopped

Common rail side Injector side

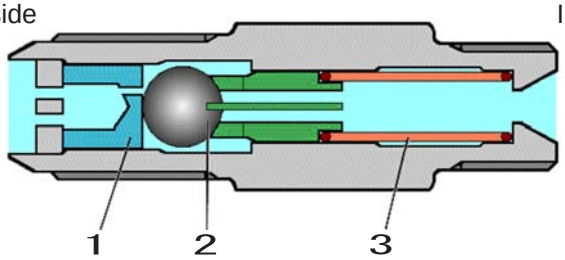

1	Piston
2	Ball
3	Spring

When the engine is stopped, the ball and piston are pressed to the common rail side by the tension of the spring.

[2] When engine starts (damping)

Common rail side Injector side

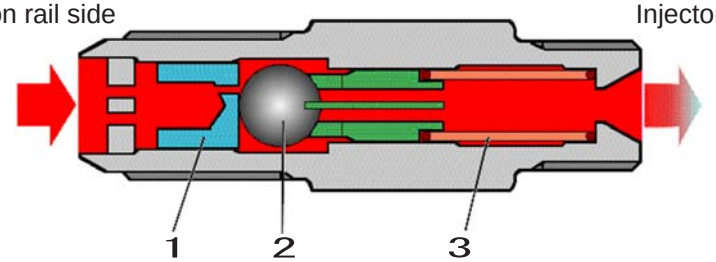

1	Piston
2	Ball
3	Spring

When the engine starts, the fuel pressure from the common rail side is applied and the piston and ball move to the injector side.
The fuel pulses (damping) are absorbed by the spring.

https://truckmanualshub.com/

[3] Faulty fuel outflow

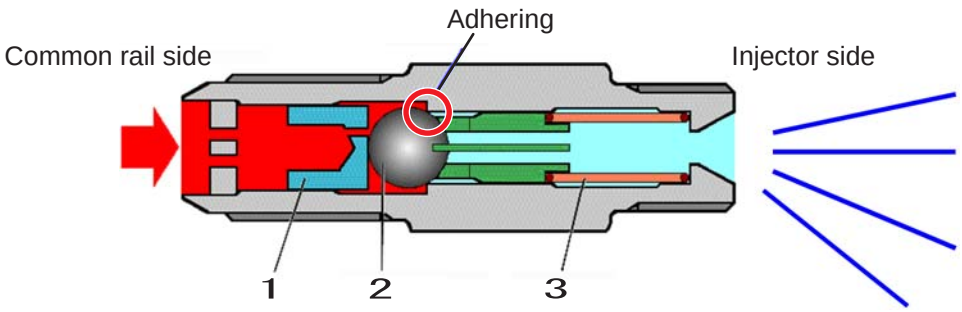

1	Piston
2	Ball
3	Spring

When there is faulty fuel outflow from the injection pipe etc. on the injector side, the injector side pressure drops drastically, so the piston and ball are pushed out by the pressure difference with the common rail side to seal the flow damper with the ball and prevent fuel outflow from the common rail side.

7. Pressure Limiter

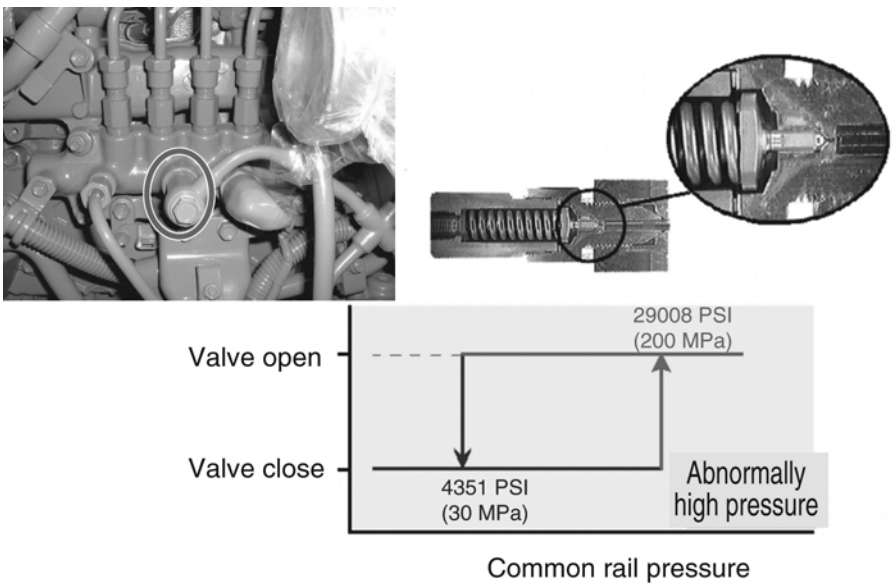

When the pressure within the common rail reaches 29008 PSI (200 MPa), for the sake of safety, the pressure limiter opens and returns fuel to the tank.
When the pressure drops to 4351 PSI (30 MPa), the valve closes to return operation to normal.

https://truckmanualshub.com/

8. Cautions for Maintenance

(1) Cautions concerning fuel used

With common rail engines, the supply pump and injector are lubricated by the fuel running through them.
Therefore, if any fuel other than diesel is used, this leads to engine trouble, so use of non-specified fuel is strictly prohibited.
Please be aware that troubles resulting from the use of non-specified fuel are not covered by the warranty.

Specified fuel
JIS No. 2 diesel, JIS No. 3 diesel, special No. 3 diesel, or SUMITOMO approval fuel (Please contact to your dealer about details of SUMITOMO Approval fuel.)

The parts of the fuel system (injector internal part etc.) and the holes and gaps that form the fuel path are made with extremely high precision
Therefore, they are extremely sensitive to foreign matter. Foreign matter in the fuel path can damage it, so use great care to keep out foreign matter.

[1] Clean and care for the fuel line and its surroundings before starting other maintenance.
[2] Those working on the fuel line must have hands clean of dirt and dust.Wearing gloves while working is strictly prohibited.
[3] After removing fuel hoses and fuel pipes, always seal the hoses and pipes by covering the open sections with plastic bags or the like.
[4] When replacing parts, do not open the packing for the new parts until it is time to install them.
[5] Do not reuse any gaskets or O-rings. Replace them with new ones.

https://truckmanualshub.com/

- Do not reuse fuel system high-pressure pipes or injector pipes.If they are removed, replace them with new parts.
- Do not replace a pressure limiter, fuel temperature sensor or flow damper alone.If there is any problem, replace the common rail assembly and all the fuel pipes.

(2) Unreusability of high pressured fuel line.

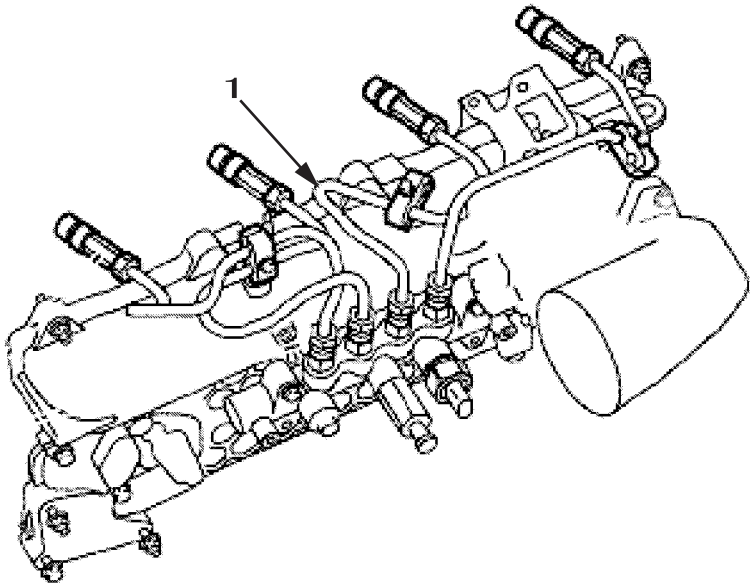

1	Injector pipes

The SCV pump alone cannot be replaced because the fuel temperature sensor is installed on the pump main unit. Always replace the supply pump assembly.

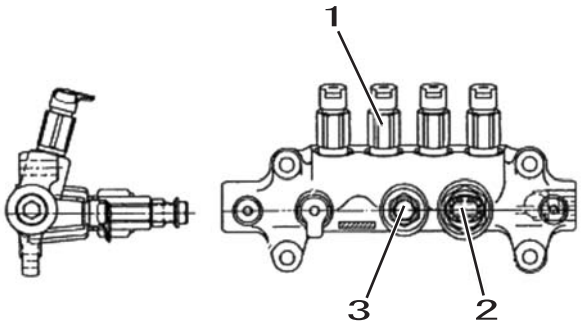

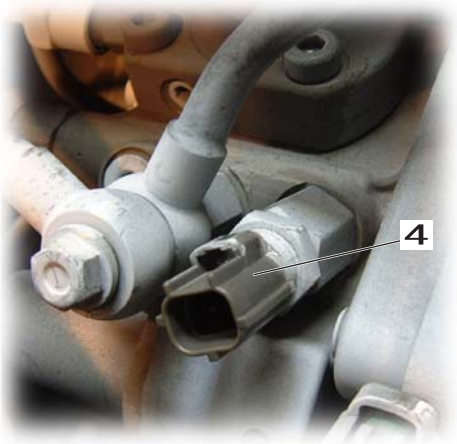

1	Flow damper	3	Fuel temperature sensor
2	Common rail pressure sensor	4	Pressure limiter

(3) If there is engine trouble, it is strictly prohibited to judge individual cylinders as OK or NG by starting up the engine and loosening the injection pipes.(Never do this. The high-pressure fuel sprays out dangerously.)

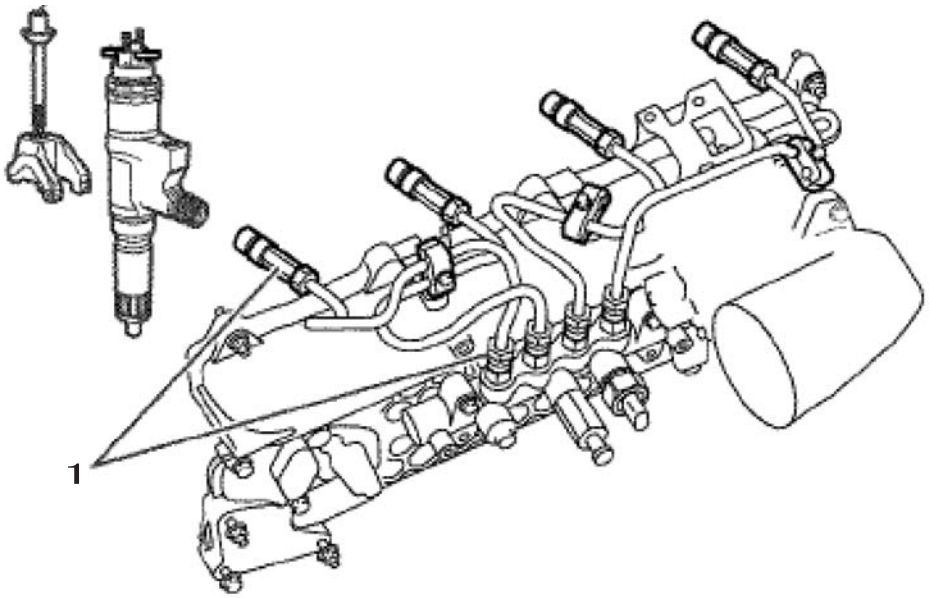

1	Loosening when engine starts strictly prohibited

(4) Be careful. High voltage of 118 V or higher is applied to the injectors.Disconnect the battery cable ground before replacing injectors.

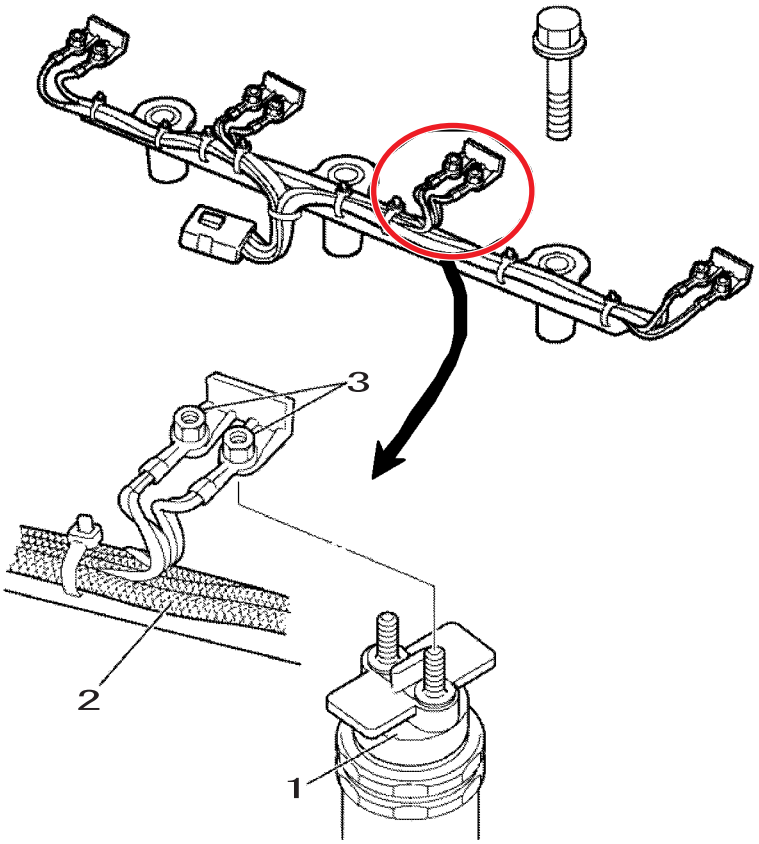

1	Injector
2	Injector harness
3	Injector nut

https://truckmanualshub.com/

Explanation of Engine Control

1. Fuel Injection Quantity Correction

   The ECM calculates the basic injection quantity from the throttle volume boost sensor, CKP sensor, CMP sensor, and other signals.
   According to the common rail pressure, engine coolant temperature, and other conditions at this time, the ECM controls the SCV and controls the injector energization time to attain optimum injection timing and correct the injection quantity.

2. Starting Q Correction

   The engine starting Q correction is terminated at the idling speed + α min^{-1} (+ α depends on the coolant temperature.).

   Also, below the system recognition engine speed (30 min^{-1}), the ECM cannot recognize engine rotation, so starting Q correction and engine starting become impossible.

   * Minimum engine starting speed 60 min^{-1}

3. Pre-Heat Control (QOS quick on start)

   The ECM determines the glow timing (pre-glow, glow, and after-glow) according to the engine coolant temperature and control the glow relay.
   The QOS system makes starting at low temperatures easier and reduces white smoke and noise immediately after starting.
   When the key is switched ON, the ECM detects the coolant temperature with the signal from the engine coolant sensor and varies the glow time to always obtain the optimum starting conditions.
   Also, the after-glow function makes it possible to stabilize the idling rotation immediately after starting.
   Also, if there is trouble in the engine coolant temperature sensor system, control assumes a fixed coolant temperature of-4 ºF (-20 °C) for engine starting and 176 ºF (80 °C) for running.
   Also, EGR control stops.(Thermostat valve opening temperature 179 ºF (82 °C))

4. Atmospheric Pressure Correction (high altitude correction)

   The ECM calculates the current altitude from the atmospheric pressure sensor signals.
   The ECM controls the SCV and controls the injector power on time to attain optimum fuel flow according to the altitude and other conditions at the time.
   Also, if there is sensor trouble, control assumes a fixed atmospheric pressure of 11.6 PSI (80 kPa) (equivalent to an altitude of 2187 yd (2000 m)) and stops EGR control too.

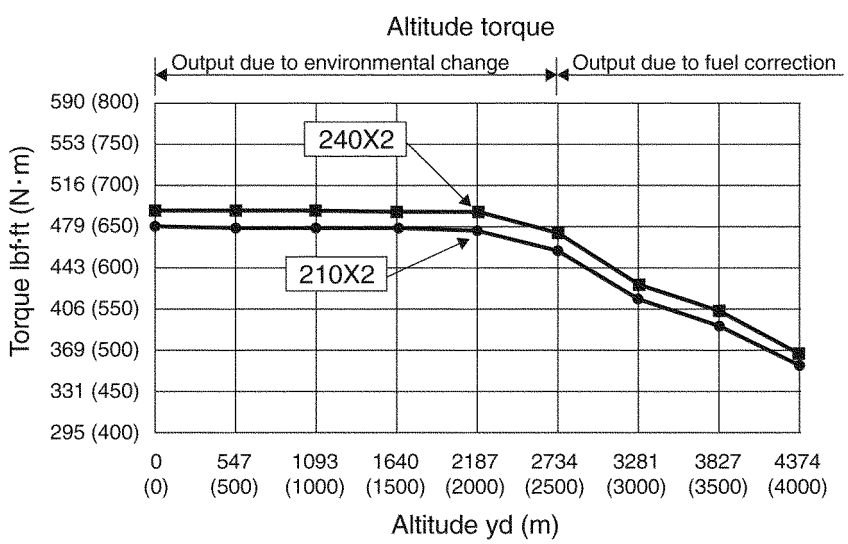

5. Control for Overheating

When the engine overheats, in order to protect the engine, if the engine coolant temperature exceeds 212 ºF (100 ºC), fuel flow restriction is started.
If the temperature rises further, the fuel flow is further restricted.
If engine coolant temperature rises to 248 ºF (120 ºC), the engine is stopped.

The protection function is started one minute after the engine starts. (in order to detect a stable coolant temperature)

Setting	Judgment time	Engine control	Recovery condition
212 ºF (100 ºC)	-	ECM: Reduced fuel injection quantity Computer: Normal	-
221 ºF (105 ºC)	8th on coolant temperature gradation		7 or lower on coolant temperature scale
230 ºF (110 ºC)	5 seconds	ECM: Reduced fuel injection quantity Computer: Idling	
248 ºF (120ºC)	5 seconds	ECM: Reduced fuel injection quantity Computer: Engine stopped	Key switched ON after engine stopped

* The protection function does not work if any of the error codes below occurs.
0117 (Coolant temperature sensor abnormally low voltage)
0118 (Coolant temperature sensor abnormally high voltage)
2104 (Faulty CAN bus)
2106 (Faulty CAN time-out)
0090 (CAN communication error)

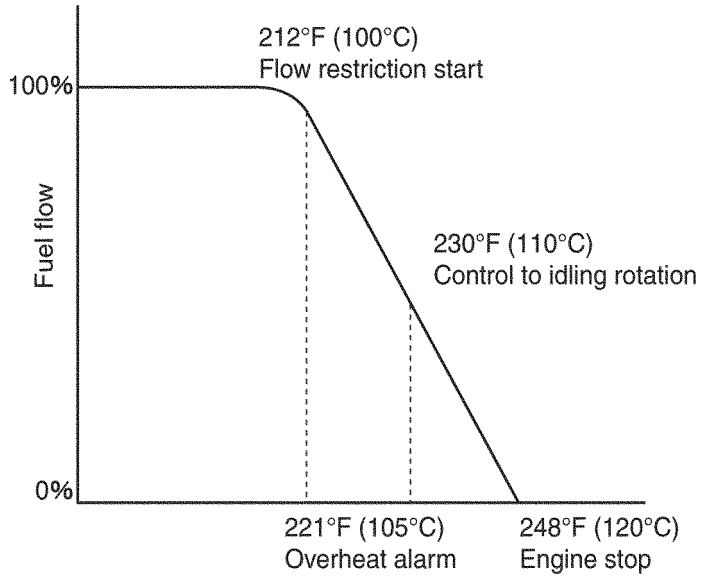

https://truckmanualshub.com/

6. Control for Boost Temperature Rise

If the boost temperature exceeds 80 ℃ , fuel flow restriction is started.

If temperature rises to 90 ℃ , the engine is stopped.

The protection function is started one minute after the engine starts.(in order to detect a stable boost temperature)

Setting	Judgment time	Engine control	Recovery condition
176ºF (80ºC)	5 seconds	ECM: Normal Computer: Idling control	State of 158ºF (70ºC) or less continues for 30 seconds
194ºF (90ºC)	5 seconds	ECM: Normal Computer: Engine stop control	Key switched ON after engine stopped

* The protection function does not work if any of the error codes below occurs.
1112 (Boost temperature sensor abnormally low voltage)
1113 (Boost temperature sensor abnormally high voltage)
2104 (Faulty CAN bus)
2106 (Faulty CAN time-out)
0090 (CAN communication error)

7. Control for Engine Oil Pressure Drop

If the engine oil pressure drops, the engine is stopped to prevent engine damage.

The protection function is started 30 seconds after the engine starts. (in order to detect a stable engine oil pressure)

Setting	Judgment time	Engine control	Recovery condition
5.8 PSI (40 kPa)	5 seconds	ECM: Normal Computer: Engine stop control	Key switched ON after engine stopped

* The protection function does not work if any of the error codes below occurs.
0522 (Oil pressure sensor abnormally low voltage)
0523 (Oil pressure sensor abnormally high voltage)
2104 (Faulty CAN bus)
2106 (Faulty CAN time-out)
0090 (CAN communication error)
1633 (Faulty 5 V power supply 3 voltage / sensor power supply)

8. Start Control (coolant temperature monitoring)

[1] Purpose

When the coolant temperature is 32ºF (0ºC) or lower, the ECM controls the fuel amount depending on the coolant temperature, for stable engine starting.

9. Long Cranking Control

[1] Purpose

For the purpose of reducing black smoke when starting the engine and as backup in case adequate starting Q (fuel injection) is not obtained, for example due to injector wear, after the stipulated time after the start of cranking, the starting Q is raised the stipulated amount to improve start ability.

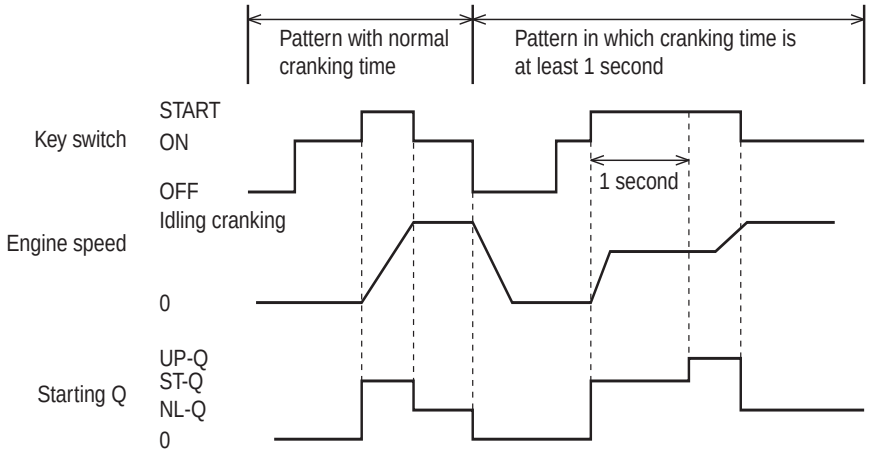

ST-Q: Standard starting Q
UP-Q: Starting Q after increase
NL-Q: Q for no load

10. Starting Control for Reduced Number of Cylinders

When the fact that there is a stopped injector is detected with trouble diagnosis (when an error code is detected), for the purpose of emergency escape, the fuel injection quantity is corrected to secure engine start ability.

[1] The injection quantity for the troubled injector is allocated to the normal injectors.(The total injection quantity is made the same.)
* The injector correction factors are as follows.

Number of effective cylinders	4	3	2	1	0
Correction factor	1.0	1.33	2.0	1.0	1.0

Caution:
No control if there is trouble in injectors for 3 or more cylinders.
No control if an injector has a mechanical trouble.

11. Normal Stop (key switch OFF operation)

[1] The key switch is set OFF.
[2] When the ECM recognizes that the key is OFF, [3] to [5] are carried out at the same time.
[3] Injector injection quantity calculation stop
[4] Suction control valve (SCV) full close instruction
[5] EGR valve full close instruction, EGR valve initial correction
[6] When the operations in [3] to [5] end, the trouble log etc. are written to the EEPROM in the ECM.
[7] The main relay is switched OFF and the power feed to the ECM is switched OFF.

https://truckmanualshub.com/

12.Engine Start / Stop Judgment

Engine start and stop is judged based on the engine speed sent from the ECM with CAN communications.

Judgment value Start: 500 min^{-1}

Stop: 200 min^{-1}

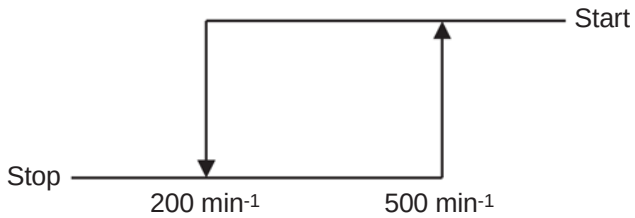

Configuration diagram

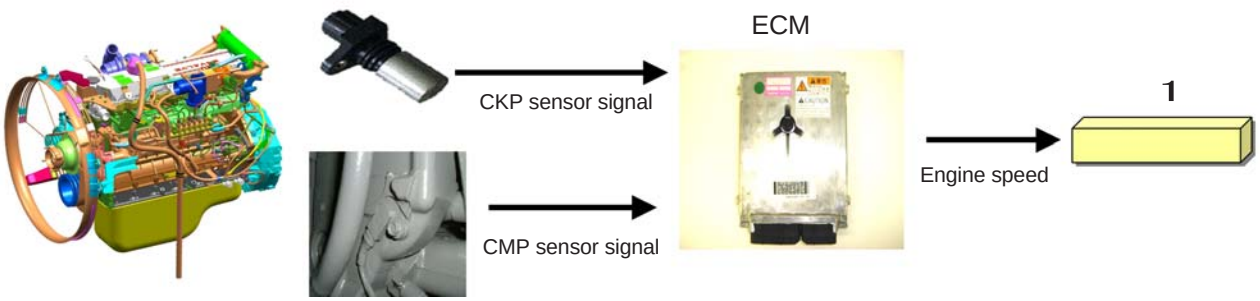

1	computer

https://truckmanualshub.com/

Engine Information Screen

1. Purpose

   It has been made possible to copy the engine information (Q resistance, QR code, engine serial number) stored in the ECM to the new ECM when the ECM and injector are replaced.

2. How to Go to This Screen

   See the service support operation procedure.

3. Engine Start Restriction

   When this screen is displayed, the engine cannot be started.

4. Screen

   The engine information held in computer can be checked as follows.
   The information inside the ECM is checked by changing the display mode with the method shown in "Replacing computer at the Same Time".

   [1] Pages 1 to 4: Injector cylinder 1to 4 QR code (Pages 5 and 6 are not used and cannot be input.)

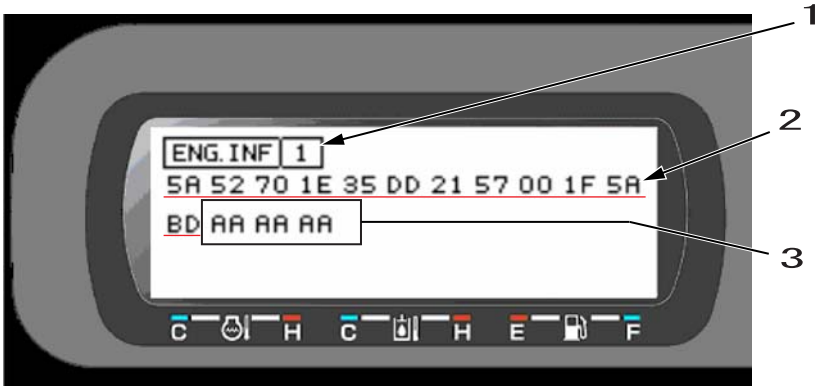

1	Page
2	QR code 24 digits
3	Indicates the display mode. Currently displays the information in computer

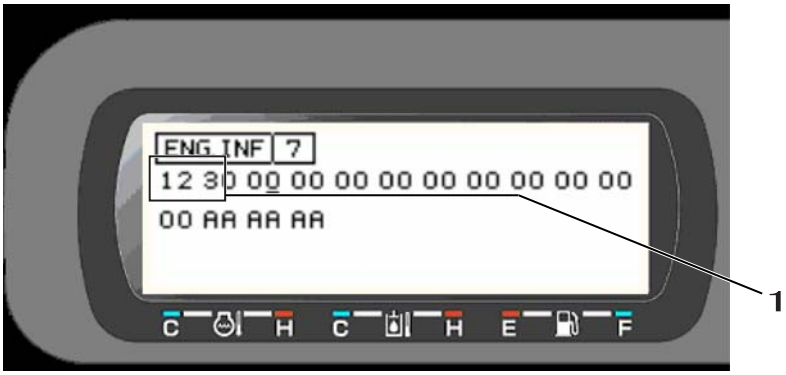

1	Q resistance data 3 digits

[2] Page 8: Engine serial number

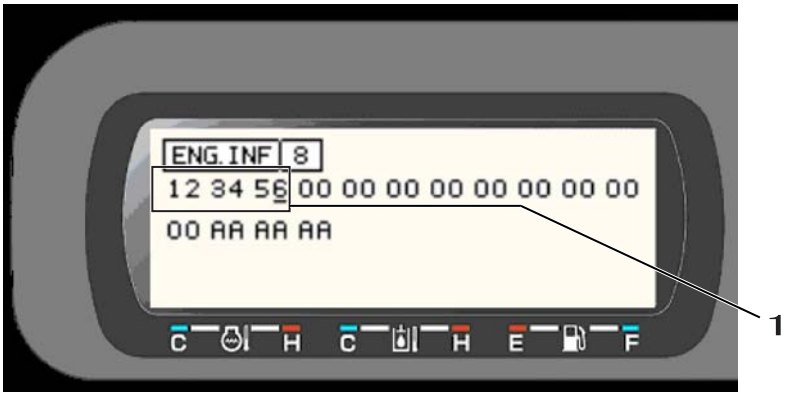

1	Engine serial number 6 digits

https://truckmanualshub.com/

Monitor Operation Method

1. View Mode

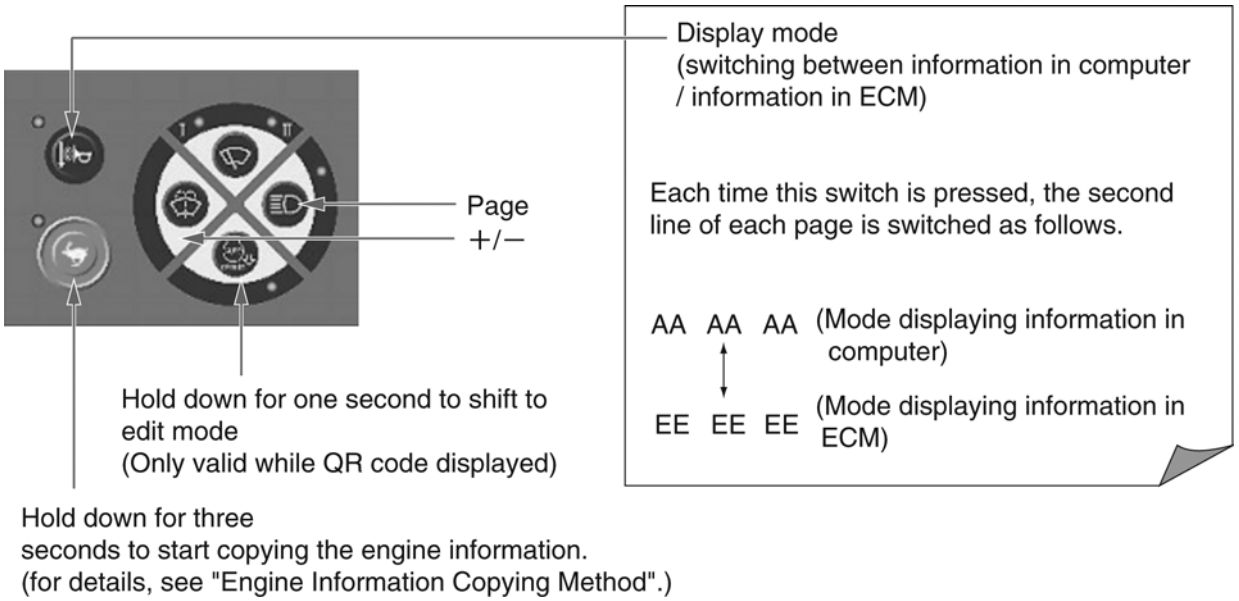

2. Edit Mode

* Can only be shifted to during QR code display.

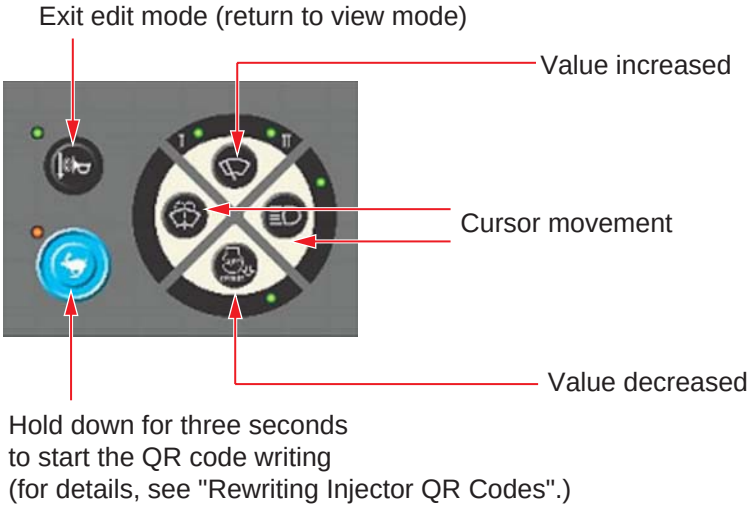

https://truckmanualshub.com/

Engine Information (Q resistance, QR code, engine serial number) Copying Method

If the ECM is replaced with a new one for any reason, the engine information is copied with the procedure below.

[1] Arrange for a service ECM.
* A service ECM is an ECM in which all the engine information is zero.
Engine information can only be copied to a service ECM.

[2] Connect the service ECM and check the following.
1) The old ECM information must still be in computer.
2) All the engine information in the service ECM must be zero.
3) The ECM must match the model.(Check on the ECM parts number screen.)
4) The model selection must be completed.
5) There must be no error code of faulty EEPROM on computer, faulty EEPROM on ECM, faulty ECM time-out, or faulty CAN bus, on the monitor.

[3] Go to the engine information screen, then hold down for three seconds. The buzzer buzzes and the copy starts.
* The display may be any page (1 to 8) and either display mode (computer or ECM).

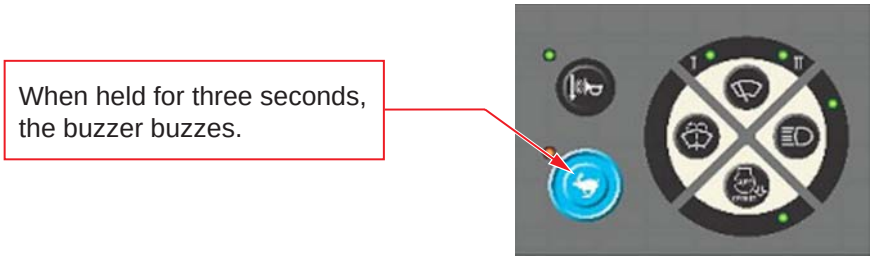

During copying, the display is as below.During writing, the error code FF is displayed.
Wait about 20 seconds.
When the copy ends normally, the buzzer buzzes once and the error code 00 is displayed.
When the copy ends abnormally, the buzzer buzzes twice and error code 01 to 04 is displayed.

Example: Starting copying from the Q resistance screen

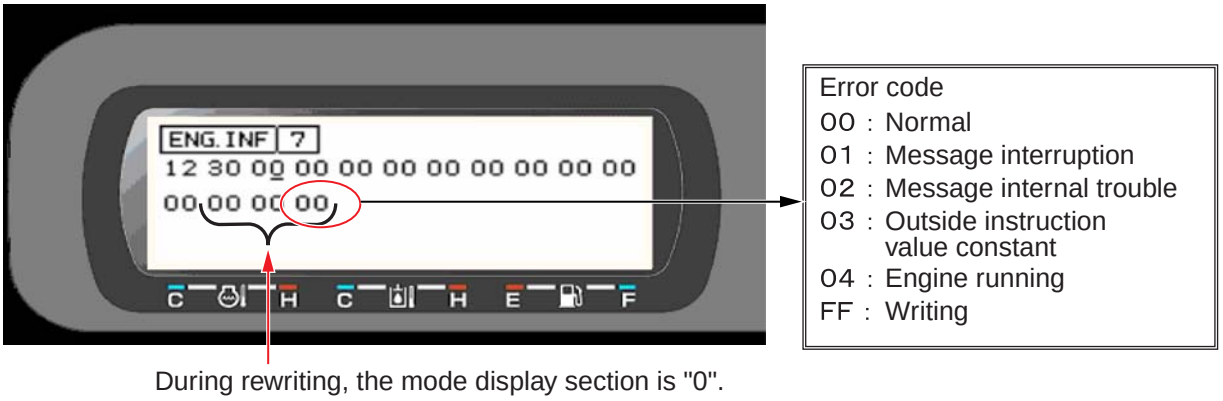

During rewriting, the mode display section is "0".

[4] When the copy ends normally, check that the information has been rewritten by switching the key switch OFF → ON once.

https://truckmanualshub.com/

Rewriting Injector QR Codes

When an injector is replaced, input and write the QR codes with the following procedure.

[1] Arrange for the replacement injector.
Input the part below from the character array written on the injector.

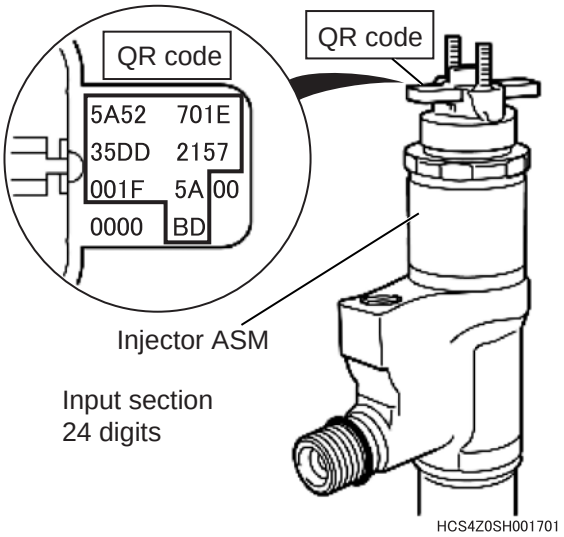

Input the QR codes one at a time.
Engine information screen Pages 1 to 4 correspond to the injectors with those numbers.(See the figure below.)

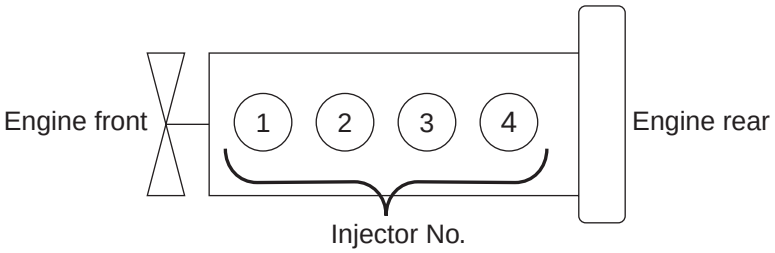

[2] Check that there is no faulty ECM EEPROM, ECM time-out, or CAN communications trouble diagnostic trouble code.

[3] Hold down for one second to shift to edit mode.

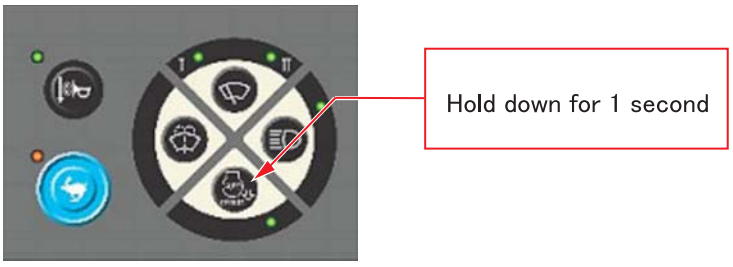

https://truckmanualshub.com/

[4] The cursor is displayed and all the data becomes zeros.

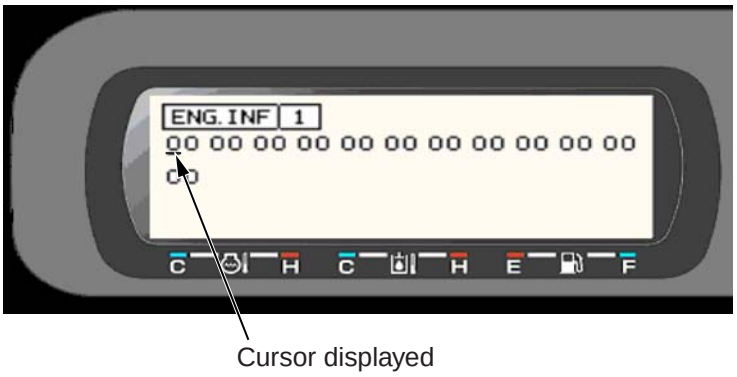

[5] Move the cursor with to raise and lower the value with

and input the QR codes written on the injector.

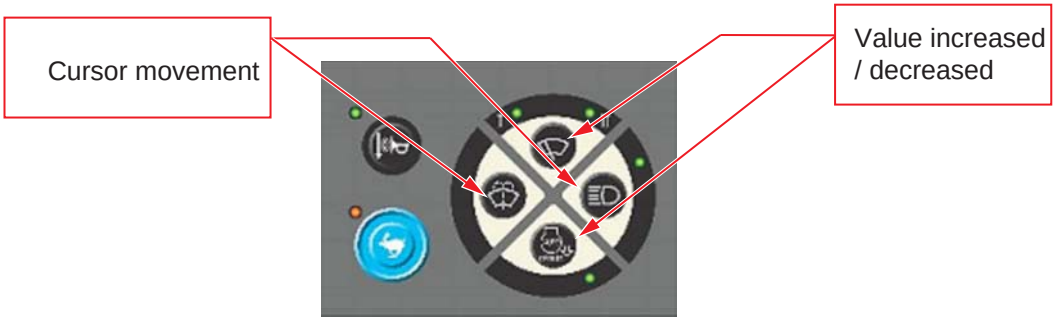

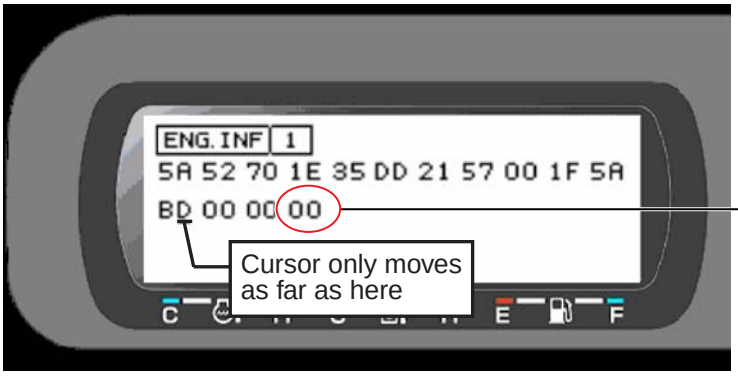

Error code
00 : Normal
01 : Message interruption
02 : Message internal trouble
03 : Outside instruction value constant
04 : Engine running
FF : Writing

[6] When the QR code input is complete, hold down for three seconds.

The buzzer buzzes once and the writing starts.
The error code FF (writing) is displayed.Wait 5 seconds. When the writing ends normally, the buzzer buzzes once and the error code 00 is displayed.
* When the writing ends abnormally, the buzzer buzzes twice and error code 01 to 04 is displayed.

(To cancel input, press .)

[7] Switch OFF the key switch, then ON again and check the QR codes have been written.

https://truckmanualshub.com/

When Replacing computer A at the Same Time

If the ECM and computer have trouble at the same time and the engine information inside the ECM cannot be used, restore the engine information with the procedure below.

[1] Rather than a service ECM, arrange for an ECM with the engine information already written into it and use that as the replacement.

* An ECM with the engine information already written into it means one into which the Q resistance data has been written with EMPS.

[2] Input the injector QR codes one at a time. (with the procedure in the preceding item)

Engine Information Acquisition Timing

The engine information is acquired once each time the key is switched ON.

Trouble Display

If the engine information cannot be displayed correctly due to an ECM time-out, CAN communications trouble, or faulty EEPROM, the display is all Fs.

[1] Display for faulty computer A EEPROM, CAN communications trouble, or ECM time-out

[2] Display for faulty ECM EEPROM, CAN communications trouble, or ECM time-out

https://truckmanualshub.com/

Exhaust Gas Third Regulation Accessory Electrical Parts Compatibility (ISUZU part number)

Engine model	4J	4H	6H	6U	6W
Supply pump	897381-5551	897306-0448	115603-5081	898013-9100	897603-4140
Common rail	898011-8880	897306-0632	897323-0190	897603-1211	
Injector	898011-6040	897329-7032		897603-4152	115300-4360
Starter	898045-0270	898001-9150	181100-4142	181100-4322	181100-3413
Alternator	898018-2040	897375-0171	181200-6032		181200-5304
EGR valve	897381-5602	898001-1910		116110-0173	
Crank sensor	897312-1081	897306-1131		897306-1131	
Cam angle sensor	897312-1081	898014-8310		Supply pump accessory part	
Coolant temperature sensor	897363-9360	897170-3270		897363-9360	
Fuel temperature sensor	Supply pump accessory part			897224-9930	
Suction air temperature sensor	812146-8300				
Boost temperature sensor	812146-8300				
Boost pressure sensor	809373-2691	180220-0140			
Common rail pressure sensor	Common rail accessory part				
Oil pressure sensor	897600-4340				
Atmospheric pressure sensor	897217-7780				
Glow plug	894390-7775				182513-0443

Caution

[1] For 4J, the crank sensor and the cam angle sensor have the same part number.

[2] The 6U / 6W cam angle sensor is a supply pump accessory part.

[3] The coolant temperature sensor part number is different for the 4H / 6H and the 4J / 6U / 6W.

Features of Materials Subject to Exhaust Gas Regulation

NOx (nitrogen oxides)

The generic term for NO, NO2, N2O2, etc. is me.
I am one cause of acid rain.

PM (particulate matter), black smoke

It is said that black smoke is easy to see and unpleasant to look at.

CO (carbon monoxide)

I am generated when combustion occurs with inadequate oxygen.
I am the material that can cause poisoning symptoms. Diesel engines emit less than gasoline engines.

HC (hydrocarbons)

I am a cause of photo-chemical smog and am reported to affect the respiratory system.

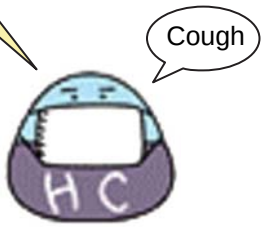

CO2 (carbon dioxide)

I am one of the greenhouse gases that are causing global warming.
But diesel engines emit less than gasoline engines.

Exhaust Gas Regulation Values

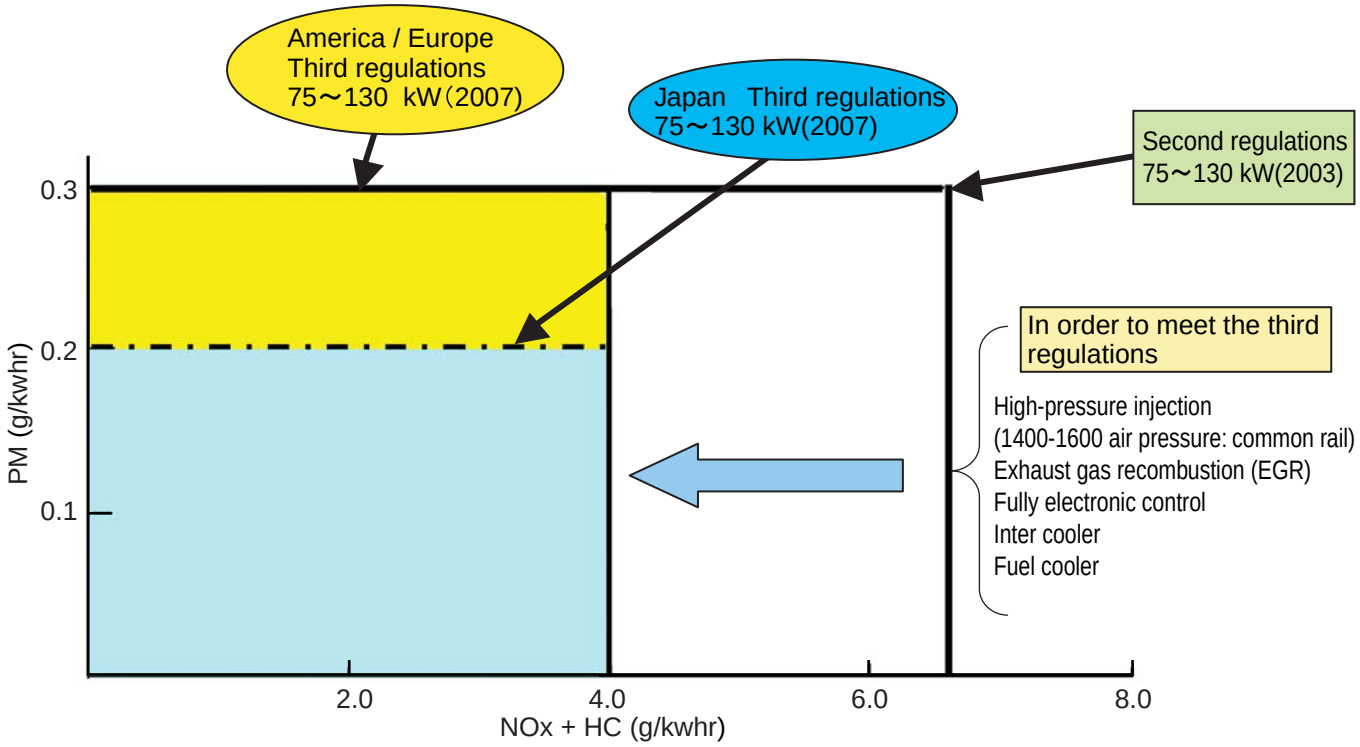

Compared to current engines
- NOx + HC : 40 % reduction
- PM : 30 % reduction in PM

Exhaust Gas Regulations

https://truckmanualshub.com/

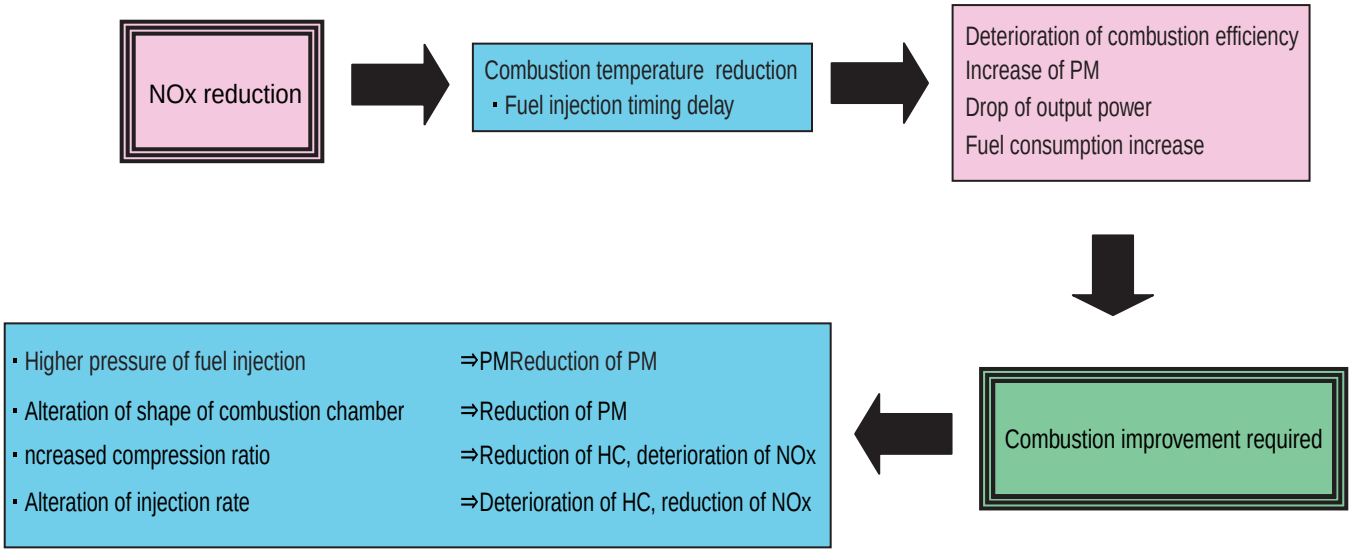

[Example of method for meeting exhaust gas third regulations]

In order to simultaneously reduce both NOx and PM, which are in a trade-off, more complex fuel injection is required. Therefore, injection has become all electronic control. Common rail engine (high pressure injection / multiple injection / injection rate control)

In addition, it depends on the engine size, but it is conceivable that it will be necessary to change from two valves to four valves, mount an inter cooler, and use EGR (exhaust gas recirculation).

* With the Model 5 SPACE5, all these systems are used.

Engine Fuel and Maintenance of Fuel Filters

In order to meet the emission control regulation of 3rd-stage, the engine components have been made precisely and they are to be used under high-pressure conditions.
Therefore, the specified fuel must be used for the engine.
As a matter of course, not only the guarantee will not be given for the use of a fuel other than the specified but also it may invite a serious breakdown.
In addition, since suitable specifications for the fuel filter elements have been established for this engine, use of the genuine filter is essential.
The following describes the specifications and the requirements of the fuel to be applied, and maintenance of the fuel and the fuel elements.

1. Fuel to be applied

Selection of fuel

Following conditions must be met for the diesel engines, that is the one;

[1] In which no dust even fine one is mixed,
[2] With proper viscosity,
[3] With high cetane rating,
[4] With good flow properties in lower temperature,
[5] With not much sulfur content, and
[6] With less content of carbon residue.

(1) Applicable standards for diesel fuel

Applicable Standard	Recommendation
JIS (Japanese Industrial Standard)	NO.2
DIN (Deutsche Industrie Normen)	DIN 51601
SAE (Society of Automotive Engineers)	
Based on SAE-J-313C	NO. 2-D
BS (British Standard) Based on BS/2869-1970	Class A-1

If a standard applied to the fuel for the diesel engine is stipulated in your country, check the standard for details.

(2) Requirements for diesel fuel

Although conditions required for the diesel fuel are illustrated above, there are other requirements exerting a big influence on its service durability and service life.

Be sure to observe the following requirements for selecting fuel.

Sulfur content	2500 ppm or less
HFRR*	460 μm or less
Water content	0.05 wt% or less

* HFRR (High-Frequency Reciprocating Rig.): An index showing lubricating properties of the fuel.

https://truckmanualshub.com/

Sulfur content reacts to moisture to change into sulfuric acid after combustion.
Use of a fuel containing much sulfur content allows it to accelerate internal corrosion and wear.
In addition, much sulfur content quickens deterioration of engine oil allowing its cleaning dispersive property to be worse which results in acceleration of wear of sliding portions.
HFRR is an index that indicates lubricating property of a fuel.
Large value of the index means poor lubrication so that seizure of the machine components may result if such a fuel is used.
Since a fuel with high HFRR value also has lower viscosity, it can easily be leaked out.
If the fuel is mixed with the engine oil, the oil is diluted to deteriorate its lubricating property resulting in acceleration of wear.
Water content allows inside of the fuel tank to rust which in turn blocking the fuel line and the fuel filter.
This may also cause wear and seizure of the machine components.
If atmospheric temperature goes below the freezing point, moisture content in the fuel forms fine particle of ice allowing the fuel line to be clogged.
Obtain table of analysis for the fuel you are using from the fuel supplier to confirm that it meets the criteria described above.

Important

If a fuel which does not meet the specifications and the requirements for the diesel engine, function and performance of the engine will not be delivered.

In addition, never use such a fuel because a breakdown of the engine or an accident may be invited.
Guarantee will not be given to a breakdown caused by the use of a improper fuel.
Some fuels are used with engine oil or additives mixed together with diesel engine fuel.
In this case, do not use these fuels because damage to the engine may result as the fuel has been contaminated.
It is natural that the emission control regulation of 3rd-stage will not be cleared in case where a fuel that does not meet the specifications and the requirements is used.
Use the specified fuel for compliance of the exhaust gas control.

Important

It you use diesel fuel which contains much sulfur content more than 2500 ppm, be sure to follow the items below for the engine oil selection and maintenance of engine parts.

Guarantee will not be given to breakdowns caused by not to follow these items.

[1] Selection of engine oil
Use API grade CF-4 or JASO grade DH-1.

[2] Exchange the engine oil and engine oil filter element by periodical interval below.

Engine oil	Every 250 hour of use
Engine oil filter element	Every 250 hour of use

[3] Inspect and exchange the EGR parts and fuel injector parts of engine by periodical interval below.

EGR (*) parts	Every 3000 hour of use
Fuel injector parts	Every 3000 hour of use

* EGR : Exhaust Gas Recirculation
For the detail of inspection and replacement for the above engine parts, please contact your nearest SUMITOMO outlet.

[4] In addition above if the value of HFRR or water content in the fuel you use is more then limitation in above table of this manual, please also contact your nearest SUMITIMO outlet.

2. Maintenance of fuel filters

Be sure to use the genuine fuel filters.

The fuel injection system is precisely constructed and the genuine filter employs finer mesh than conventional filters to improve protection of machine equipment.

If a filter with coarse mesh is used, foreign object passing through the filter enters into the engine so that machine equipment can wear out in a short period of time.

Important

If a fuel filter other than the genuine filter is used, guaranty will not be applied to a fault caused by the use of a wrong filter.

Two kinds of fuel filter, the pre-filter and the main filter, are mounted on the machine.

Be sure to use the genuine fuel filters and replace them at a periodic intervals.

Replacement criteria

	Every 250 hour of use	Every 500 hour of use
Pre-filter	○	
Main filter		○

Since the pre-filter also has a function of water separation, discharge water and sediment when the float reaches lower part of the filter elements.

Time to replace filters may be advanced according to properties of the fuel being supplied.

Running the engine with the fuel filter blocked may cause the engine to be stopped due to establishment of engine error code.

If much foreign objects are found in the fuel, carry out earlier inspection and regular replacement of the filters.

If dust or water get mixed with the fuel, It may cause the engine trouble and an accident.

Therefore, take measures to prevent dust or water from being entered in the fuel tank when supplying fuel.

When supplying fuel directly from a fuel drum can, leave the drum as it stands for a long period of time to supply clean fuel standing above a precipitate.
If it is hard to leave the drum for a long period of time, install a fuel strainer and a water separator before the fuel tank of the machine to supply clean fuel.

Water drain cock is provided on the bottom side of the fuel tank.

Drain water before starting the engine every morning.

In addition, remove the cover under the tank once a year to clean up inside of the tank.

Change List

○: Changed ×: Deleted ●: New

Change	Part name	Qty	Comment
×	Computer	1	Computer eliminated by use of one-piece computer with control panel
○	Motor control	3	Due to the computer change, the motor actuator was also changed (Step motor → DC motor + potentio-meter)
○	Cooler part evaporator	1	Changed due to change in expansion valve
○	Case unit, front	1	The hole position was changed due to the motor actuator change, so the case was also changed.
○	Case unit, rear	1	
○	Case unit, bottom	1	
○	Valve, expansion	1	Expansion valve shape change
○	Thermo-sensor	1	Connector changed
○	Heater core	1	Pipe bore increased (to ϕ 17.3)
○	Blower computer (blower amp)	1	
○	Relay	2	Compressor clutch relay added
●	Inside air intake port packing	1	
○	Inside air filter	1	Changed from mesh to paper
○	Outside air filter	1	Thickness increased

Air Conditioner Overall Diagram

1. Frame

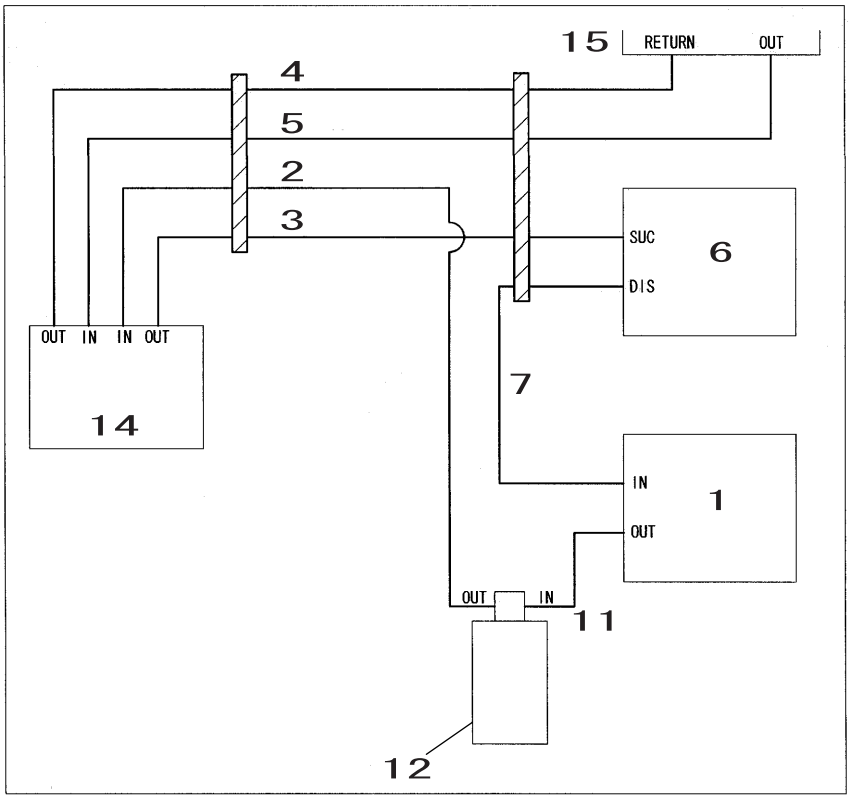

Part name	Code	Qty
Air conditioner condenser	1	1
Cooler hose (LIQUID2)	2	1
Cooler hose (SUCTION)	3	1
Rubber hose 16 X 4100	4	1
Rubber hose 16 X 3800	5	1
Air conditioner compressor	6	1
Cooler hose (DISCHARGE)	7	1
Tension pulley (with cover)	8	1
Compressor bracket	9	1
Slide shaft	10	1
Cooler hose (LIQUID1)	11	1
Dryer receiver (D60.05)	12	1
Belt; VB47 (L=1215)	13	1
Air conditioner unit	14	1
Engine	15	1

Hose connection table

KRR11970-E01

https://truckmanualshub.com/

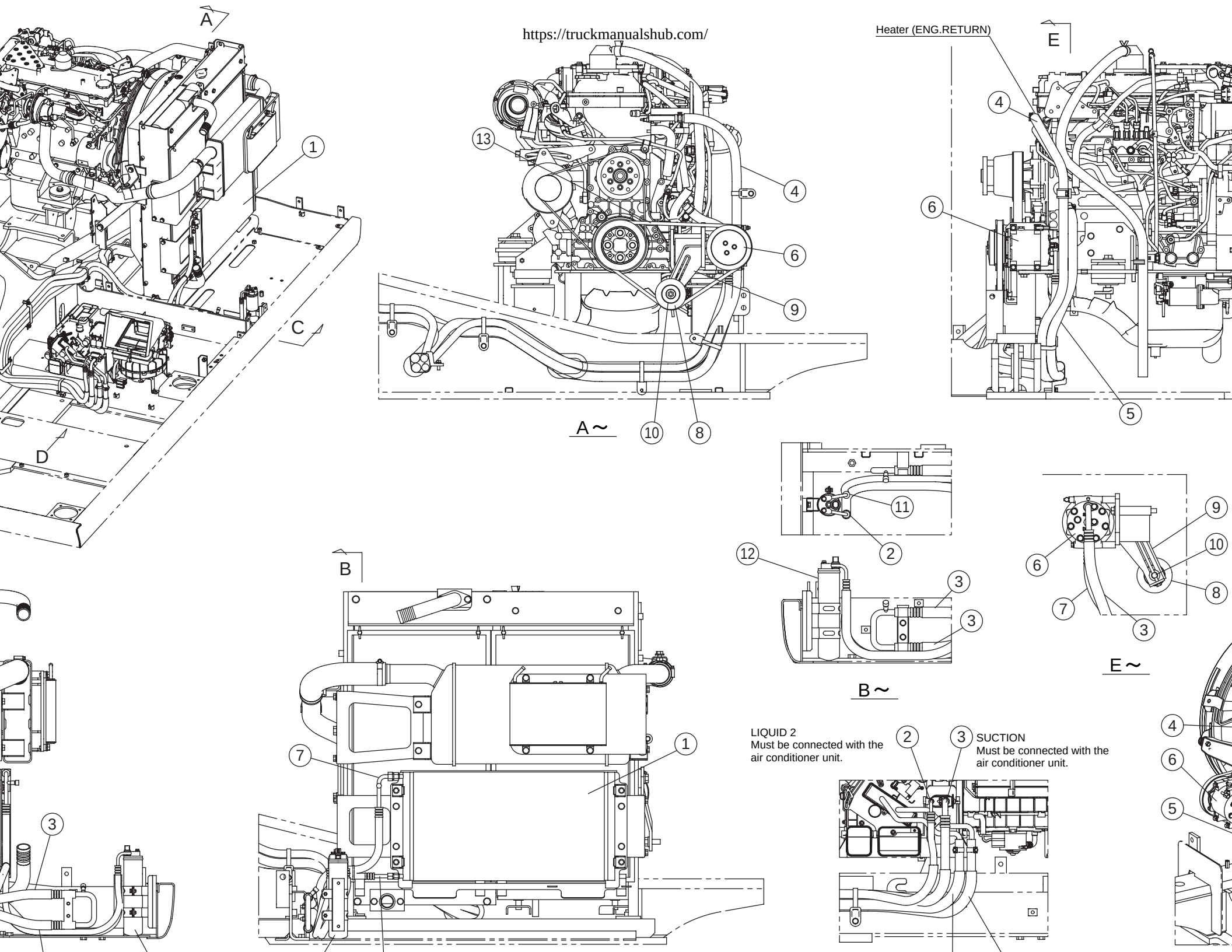

https://truckmanualshub.com/

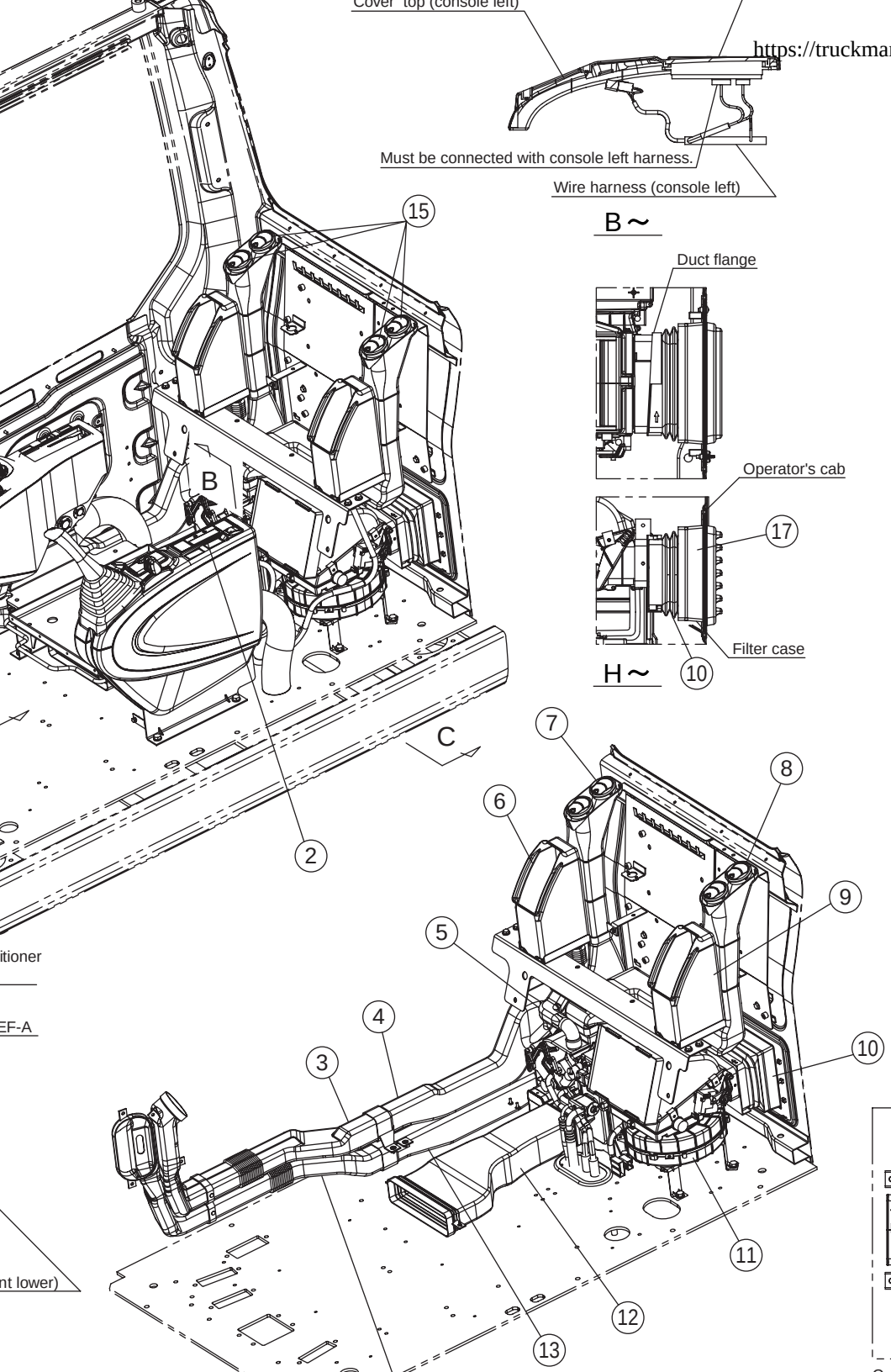

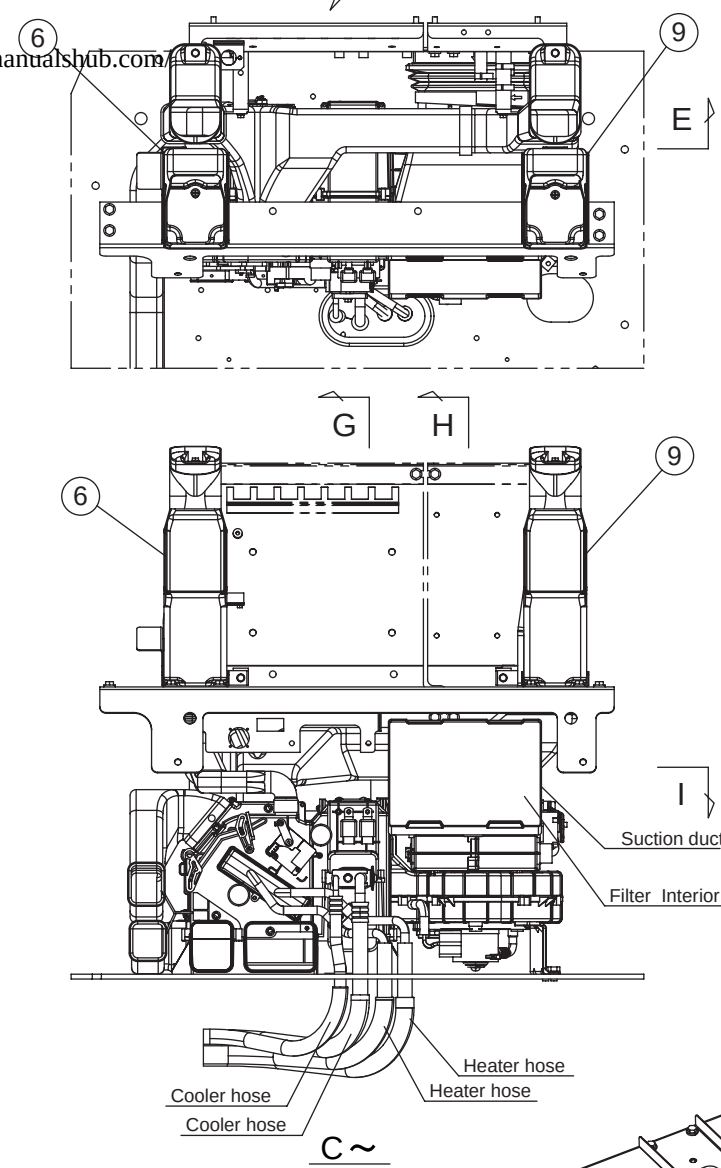

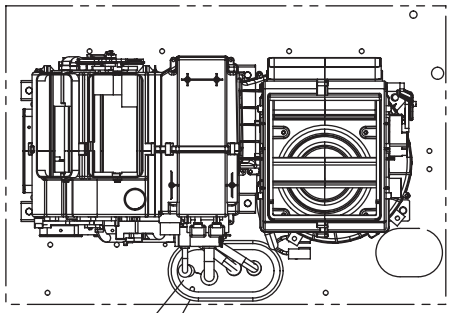

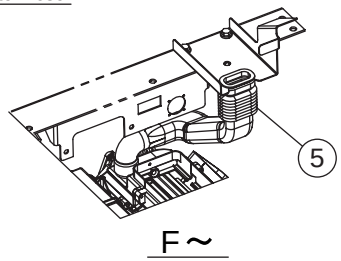

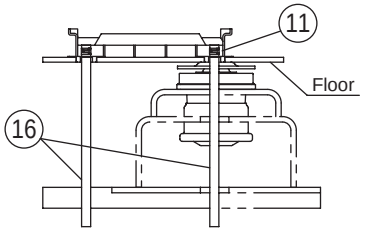

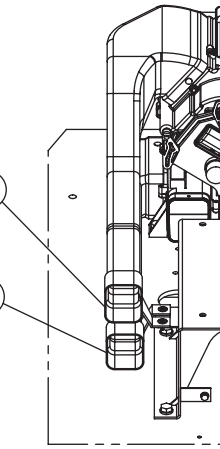

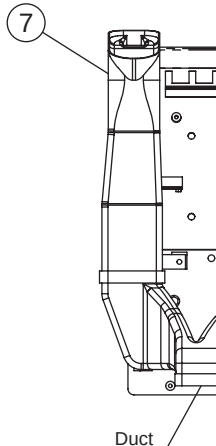

Face
Con
Duc
Duc
Duc
Box
Duc
Duc
Box
Duc
Air c
Duc
Duc
Duc
Face
Drai
Air f
Box

Equipment Layout Diagram

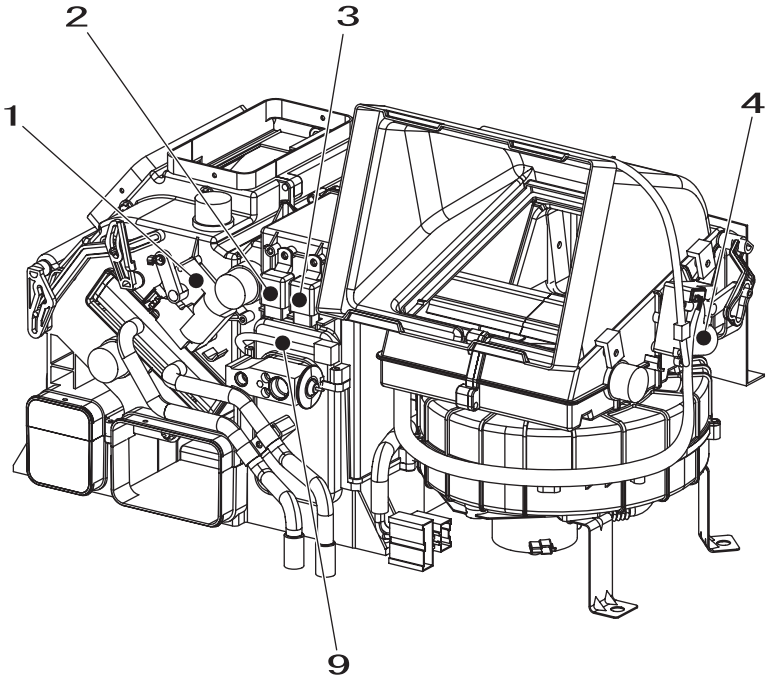

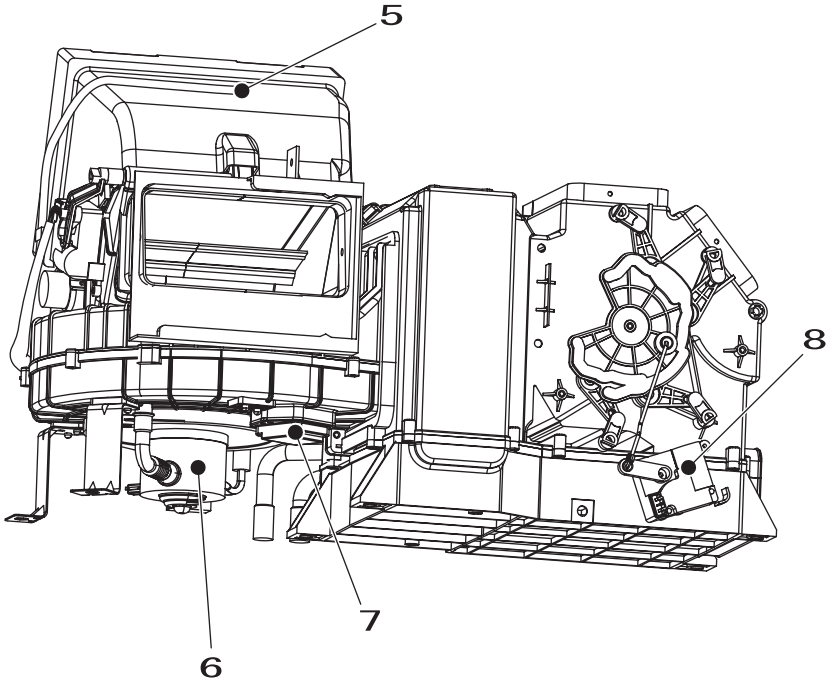

Code	Part name
1	Motor actuator (mode)
2	Compressor relay
3	Blower OFF relay
4	Motor actuator (refresh / recirculate switch)
5	Interior temperature sensor
6	Blower motor
7	Blower amp
8	Motor actuator (air mix)
9	Evaporator sensor

Explanation of Control

Back-up function

Even when air conditioner operation is stopped (switched OFF) with the ignition key power supply or operation panel ON/OFF switch, the set temperature and all the other setting states are stored in memory, so the next time air conditioner operation starts, it goes into the same state as before it was stopped.

When the ignition key power supply is cut off, the data is backed up by storing it in the internal EEPROM. However, if the main key power supply is cut off within 0.5 seconds of switch input, that switch input is not stored into memory. Also, the data read out from EEPROM when the power is switched ON is judged to see if it is within the valid range. If data outside the valid range was written into memory, for example due to noise, then operation starts from the default settings to avoid abnormal operation.

Fahrenheit temperature display

To switch, hold down both the temperature setting UP and DOWN switches for 5 seconds. The display toggles between Celsius and Fahrenheit display each time the switches are both held down for five seconds.

The Fahrenheit display is a two-digit integer and below the decimal point is not used, so "F" is displayed. However, in case of trouble, this display takes priority.

When this display is switched, the new status is backed up in memory, so even if the main key power supply is switched OFF, the display status is retained. Internal calculations are all done in Celsius. Only the operation panel display is in Fahrenheit. Therefore, the display may differ slightly from the exact Fahrenheit temperature.

Below is shown the Fahrenheit temperature and the corresponding Celsius temperature used in internal processing.

Caution

These specifications are written with Celsius as the standard. Therefore, if the temperature is displayed in Fahrenheit, convert the temperature to centigrade by using the table below.

Fahrenheit and Celsius correspondence

Fahrenheit display [F]	Interior recognition set temperature (Celsius) [°C]
63	18.0
64	18.5
65	19.0
:	:
77	25.0
:	:
91	32.0

https://truckmanualshub.com/

1. Air Mix Motor Actuator Control

[1] Summary explanation
The provisional target degree of opening is determined from the target blow temperature and the current blow mode, various restrictions are applied, and the target degree of opening is calculated. Then drive is output to move the motor actuator position to the target degree of opening.
Below are the details.

[2] Restrictions on operation angle according to the blow mode
When the blow mode motor actuator is in the B / L, FOOT, or DEF position, it is prohibited for this motor actuator degree of opening to be less than 68 ºF (20 °C)

[3] Heater unit hysteresis correction operation (motor actuator one-direction stop)
After the actuator moves to the target degree of opening, it returns to the specified position. However, if the target degree of opening is less than 32 ºF (0 °C), the actuator is treated as having reached the target degree of opening when it reaches 32 ºF (0 °C), then it moves to the specified position.
(A stop in the fully-open direction is used as the standard.)

[4] Operation start / stop judgment
1) The operating motor actuator stops when the current position comes within the target position.
2) The stopped motor actuator operates when the current position goes beyond the target position.

[5] Motor actuator operation priority order
The operation priority for this motor actuator is No. 1. This means that if the target degree of opening for this motor actuator changes and operation becomes necessary, even if some other motor actuator is operating, that other motor operation is paused, and this motor actuator operates.

2. Blow Mode Motor Actuator Control

[1] Summary explanation
The blow mode is switched by rotating the diffuser switching damper with the motor actuator. There are two types of control: auto and manual.

[2] Auto control
When the AUTO blow mode signal is recognized, the blow mode changes to auto control. During auto control, the diffuser is switched according to the target blow temperature Auto control continues until operation of the blow mode select switch is recognized.

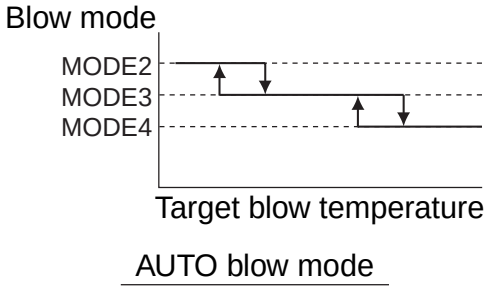

[3] Manual control

1) When operation of the blow mode select switch is recognized, the motor actuators are driven to attain the output shaft angle below and the display is switched too. Each time operation of the switch is recognized, the display switches MODE1 →MODE2 →MODE3 → MODE4 →MODE1→... However, if this switch is pressed during auto control, auto control is ended and the diffuser is fixed at its current position.

2) MODE5 in the table below only occurs when operation of the DEF select switch is recognized. After that, when operation of the blow mode select switch is recognized, the blow mode becomes the one that was in effect just before operation of the DEF switch was recognized.

Blow mode and display and motor actuator angle

Blow mode	MODE 1	MODE 2	MODE 3	MODE 4	MODE 5
Blow mode motor actuator degree of opening	90°	65.5°	46.5°	26.6°	0°
Panel display	FACE	VENT	B/L	FOOT	DEF

[4] Mode unit hysteresis correction operation (motor actuator one-direction stop)
After the actuator moves to the target degree of opening a, it returns to the specified position. However, if a is less than 32 ºF (0 °C), the actuator is treated as having reached the target degree of opening a when it reaches 32 ºF (0 °C), then it moves to the specified position.
(A stop in the VENT or FACE direction is used as the standard.)

[5] Operation start / stop judgment

1) The operating motor actuator stops when the current position comes within the target position.

2) The stopped motor actuator operates when the current position goes beyond the target position.

[6] Blow mode control priority order
The priority order for auto control and manual control is as follows.

Control priority order

Priority order	Control
1	Manual control
2	Auto control

3. Refresh / Recirculate Switch Motor Actuator Control

[1] Recirculate mode
In refresh mode, when it is recognized that the refresh / recirculate switch on the operation panel has been closed, the system goes into recirculate mode. At this time, the display switches to recirculate and the refresh / recirculate switch motor actuator operates to the recirculate angle.

[2] Refresh mode
In recirculate mode, when it is recognized that the recirculate / refresh select switch on the operation panel has been closed, the system goes into refresh mode. At this time, the display switches to refresh and the refresh / recirculate switch motor actuator operates to the refresh angle.

https://truckmanualshub.com/

[3] Operation stop judgment
When one of the limiters is detected, operation stops.

Refresh / recirculate mode and refresh / recirculate display and motor actuator angle		
Refresh / recirculate mode	Recirculate	Refresh
Refresh / recirculate motor actuator degree of opening	0 °	90 °
Panel display		

4. Blower Amp Control

[1] Summary explanation
The air flow is controlled by outputting to the blower amp connected in series with the blower motor. The air flow is switched by varying the analog voltage output by changing the PWM output duty ratio and increasing or decreasing the blower motor speed.
There are two types of air flow control: auto air flow control and manual air flow control. Also, in auto air flow control, the air flow is restricted by the cold blast prevention control etc.
Auto air flow control has no levels and manual control has four levels.

[2] Manual air flow control
Each time it is recognized that the air flow UP switch has been closed, Lo → M1 → M2 → Hi the air flow is fixed to the next higher level of air flow. When Hi is already displayed, the air flow is not changed.
In the same way, each time it is recognized that the air flow DOWN switch has been closed, Hi → M2 → M1 → Lo the air flow is fixed to the next lower level of air flow. When Lo is already displayed, the air flow is not changed.
The same is true when air flow control is switched from auto to manual. For example, when AUTO M1 is displayed, if it is recognized that the air flow DOWN switch has been closed, the display becomes Lo and AUTO is no longer displayed.
Also, the change speed for air flow output switchover is the same as discussed for auto below.

Relationship between air flow and PWM output

Air flow	Display	Target % (approx.)
Hi (maximum air flow)		100 %
M2	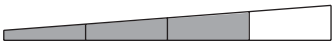	75 %
M1	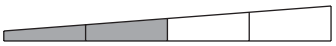	59 %
Lo (minimum air flow)	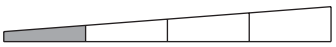	40 %

[3] Auto air flow control

When it is recognized that the AUTO switch has been closed, the air flow is controlled automatically and AUTO is displayed.

1) During auto air flow control, the air flow is set according to the target blowing temperature as in Figure 3.
2) Auto air flow control continues until closing of either the air flow UP or air flow DOWN switch is recognized.
3) The auto air flow amount calculation results are continuous, not divided into levels.
4) When it is recognized that the AUTO switch has been closed, the display becomes as in Table 10 according to the results of the auto air flow amount calculation.
5) The normal auto air flow output change is roughly 5 V / second.
6) Auto air flow control is restricted by the cold blast prevention control described in (4), which is the next item.

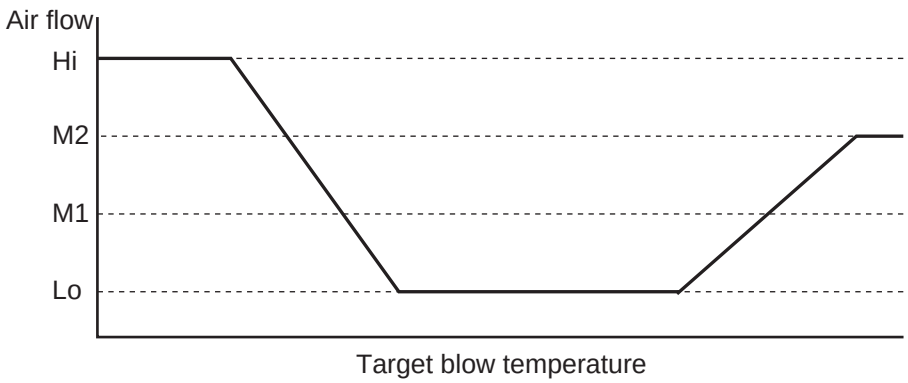

Relationship between air flow and target blow temperature

Display refreshing and air flow output correspondence table

Current display	Item	Target % (approx.)
Lo display	Output range changed to M1	When 53 % or higher
M1 display	Output range changed to Lo	When 46 % or lower
	Output range changed to M2	When 70 % or higher
M2 display	Output range changed to M1	When 64 % or lower
	Output range changed to Hi	When 92 % or higher
Hi display	Output range changed to M2	When 83 % or lower

https://truckmanualshub.com/

[4] Cold blast prevention control

The air flow is restricted according to the value of the coolant temperature and other parameters sent from the vehicle side. The air flow restriction has two levels - air flow 0 and air flow Lo. Whether or not to use the restriction is determined from the judgment results.

1) Conditions under which cold blast prevention control is used
   1. Auto air flow
   2. When set temperature - inside air sensor temperature ≥ 11
   3. When the coolant temperature signal from vehicle is the less than 95 ºF (35°C) signal or the 95 ºF (35°C) or higher but less than 113 ºF (45 °C) signal

   Under the condition above, the inside air sensor temperature is the value immediately after the ignition key power is switched ON and AUTO and Tset are according to the current switch states. Therefore, when the AUTO switch is pressed after the air flow has been set manually, if the coolant temperature is within the cold blast prevention range, the air flow is restricted. In the same way, even if the set temperature is changed, if the conditions are met, the air flow is restricted.

   While cold blast prevention control is being executed, the display corresponds to the restricted air flow.

2) Air flow 0 control

   When the coolant temperature signal from vehicle is the less than 95 ºF (35°C) signal, the air flow is set to 0. This continues until a coolant temperature signal of 86 ºF (30 °C) or higher is received. Once a coolant temperature signal of 86 ºF (30 °C) or higher is received and these conditions are no longer met, air flow 0 is ended.

3) Air flow Lo control

   When the coolant temperature signal from vehicle is the 95 ºF (35°C) or higher but less than 113 ºF (45 °C) signal, the air flow is set to Lo. This continues until a coolant temperature signal of 113 ºF (45 °C) or higher is received. Also, the same as for (2), this shift is irreversible. Once a coolant temperature signal of 113 ºF (45 °C) or higher is received, control is normal.

<u>Coolant temperature signal sent from the vehicle (one cycle)</u>

* Finalized by the same waveform for three cycles. However, for the first combustion after the ignition switch is switched ON, judged with the latest one cycle.
* The default state for the coolant temperature signal when the ignition is switched ON is 113 ºF (45 ºC) or higher.

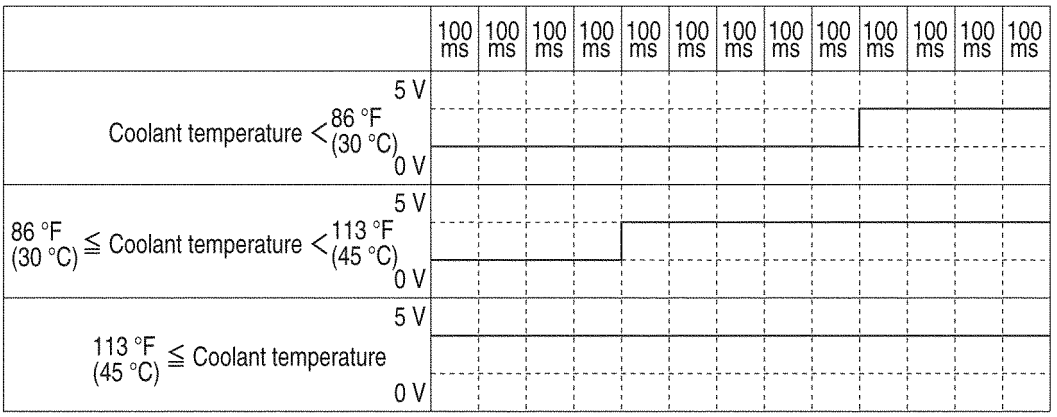

[5] Air flow control priority order
The priority order for auto air flow control, manual air flow control, and cold blast prevention control is as follows.

Control priority order

Priority order	Control
1	Blower air flow control when mode motor actuator angle switched
2	Manual air flow control
3	COOLMAX control
4	Cold blast prevention control
5	HOTMAX control
6	Auto air flow control

5. Compressor Clutch Control

[1] Summary explanation
The compressor clutch is controlled by the power to the clutch coil being switched ON / OFF by an external relay. This control is executed by thermo operation, the condensation prevention function, and the fletching prevention function. Thermo operation has control mode 1 and control mode 2. These modes are applied according to the blow mode and other conditions. However, for blower air flow 0, the compressor clutch is switched OFF. The operation temperature does not include the thermistor variation.

[2] Thermo operation (AC switch ON)

1) Control mode switchover
- When the blow mode is B / L and the target blow temperature is as in the figure below, control mode 2 is used.
  As the figure shows, there is hysteresis between control modes 1 and 2.
- Other than the above is all control mode 1.

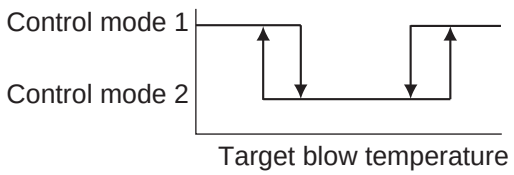

Relationship between control mode and target blow temperature for B / L

2) Control mode 1
- OFF temperature: 5 ± 34 ºF (1 °C)
  When this temperature or lower is detected, the compressor clutch is switched OFF.
  (It is kept OFF until a temperature at or above the ON temperature is detected.)
- ON temperature: OFF temperature + 2 ± 33 ºF (0.5 °C)
  When this temperature or higher is detected, the compressor clutch is switched ON.
  (It is kept ON until a temperature at or below the OFF temperature is detected.)

3) Control mode 2
- OFF temperature: 5 ± 34 ºF (1 °C)
- ON temperature: OFF temperature + 2 ± 33 ºF (0.5 °C)

https://truckmanualshub.com/

[3] Condensation prevention function

1) Timer set temperature: 8 ± 35.6 ºF (2 °C)
When this temperature or lower is detected, the timer is set and starts counting.(It is not reset until a temperature at or above the timer cancel temperature is detected.)

2) Timer cancel temperature: Timer set temperature + 1 ± 34 ºF (1 °C)
When this temperature or higher is detected, the timer is reset.

3) Count-up time: 10 ± 1 minutes
When the timer count reaches this time, the compressor clutch is switched OFF. After this, when the timer recovery temperature or higher is detected, the compressor clutch is switched ON and timer setting is prohibited.

4) Timer recovery temperature: Timer set temperature + 2 ± 34 ºF (1 °C)
When this temperature or higher is detected, the compressor clutch is switched ON and timer setting is permitted.

[4] Fletching prevention function

1) Operation conditions
After the end of initial operation, if 5 ± 1 minutes continue with the air flow M2 or higher and the compressor clutch not coming ON even once, the compressor clutch is switched ON one time.
This control is cleared by the ignition key power being switched OFF and this control starts again when this power supply is switched ON again.
Compressor clutch ON time: 1 ± 0.6 seconds

2) This control takes priority over all other control.

[5] AUTO switch link function
When operation of the AUTO switch is recognized, compressor clutch control comes ON and AUTO is displayed.

1) Compressor clutch control is the same control as for the AC switch being switched ON.

2) When it is recognized that the AC switch has been switched OFF, the AUTO display goes out. Even when it is recognized that the AC switch has been switched ON again, AUTO is not displayed.

However, at this time, if the main key power is switched OFF, then ON again, since the AC ON, air flow AUTO, and blow mode AUTO conditions are all met, AUTO is displayed.

6. COOLMAX Control and HOTMAX Control

[1] When the set temperature is 64.4 ºF (18.0 °C) [COOLMAX] (or 18. E)

1) The air mix motor actuator is set to the 0° limiter position (fully closed).

2) For auto air flow control, the air flow is set to Hi.

3) For AUTO blow mode control, the blow mode is set to VENT.

[2] When the set temperature is 89.6 ºF (32.0 °C) [HOTMAX]

1) The air mix motor actuator is set to the 90 ° limiter position (fully open).

2) For auto air flow control, the air flow is set to M2.

3) For auto blow mode control, the blow mode is set to FOOT.

7. Trouble Detection and Control after Trouble Detected

[1] Summary explanation

If there is trouble in a motor actuator drive line or sensor controller input circuit, the trouble is detected and control from then on changed as described below.

In any of these cases, once trouble has been detected, even when that location is returned to normal, trouble control is not ended. Trouble control is only ended when the ignition key power supply is switched OFF or when air conditioner operation is stopped with the ON / OFF switch on the operation panel. However, motor actuator restriction is only ended by switching OFF the main key power supply.

[2] Trouble in a motor actuator and its input / output circuits

1) Disconnection detection

Immediately after the main key power supply is switched ON, if a motor actuator potentio-meter line is disconnected or shorted, the display in the table below for that motor actuator is carried out and that motor actuator is not driven until the main key power is switched OFF, then ON again.

Disconnection detection display

Trouble location	Trouble display
Air mix motor actuator	HL.E is displayed on the set temperature display LCD.(See the figure below.)
Blow mode motor actuator	The passenger icon display flashes.
Refresh / recirculate motor actuator	Potentio-meter line not used

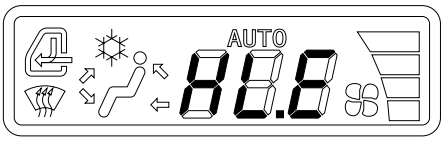

2) Motor lock detection

If the output shaft rotation angle for a motor actuator does not reach its target value within 15 seconds, this is treated as lock detection, output to that motor is stopped, and trouble is displayed on the controller according to the trouble location.

Motor lock detection display

Trouble location	Operation panel trouble display
Air mix motor actuator	HL.E is displayed on the set temperature display LCD.(See the figure below.)
Blow mode motor actuator	The passenger icon display flashes.
Refresh / recirculate switch motor actu-ator	The refresh / recirculate mark flashes.

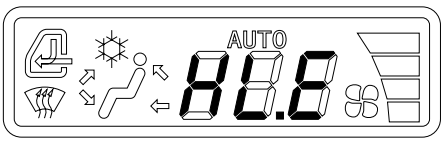

https://truckmanualshub.com/

[3] Trouble in a sensor or its input / output circuits (disconnection or short)

1) Disconnection or short in the inside air sensor or its input / output circuits

1. Operator compartment temperature control end
   - All control related to the operator compartment temperature (target blow temperature) is stopped and the air mix degree opening is directly adjusted according to the temperature adjustment switch input.
   - Accompanying this, the operation panel set temperature display changes as in the figure below.

HL. *

* is a value from 0 to 9. Each time the DOWN switch is closed, this value decreases by 1; each time the UP switch is closed, this value increases by 1.
For any blow mode other than FACE or VENT, the minimum value is set to 1.

Display and control for inside air sensor trouble

* value	Motor actuator degree of opening (°)
0	0 °
1 to 8	* value X 10 50 ºF (°C)
9	90 °

2. Auto air flow control end
   - The air flow is temporarily fixed at that in effect when the inside air temperature sensor trouble was detected.
   - The AUTO display is set flashing.
   - After this, the air flow is switched by the manual air flow switch.
3. AUTO blow mode control end
   - The blow mode is temporarily fixed at that in effect when the inside air temperature sensor trouble was detected.
   - The AUTO display is set flashing.
   - After this, the blow mode is switched by the manual blow mode switch.
4. Air mix damper degree of opening display priority
   - Even if the trouble shown by one of the items below occurs during inside air sensor trouble, E is not displayed in the * section below the decimal point and the air mix damper degree of opening display is given priority.
   - HL.E is only displayed for air mix motor actuator trouble.
5. Thermo operation control mode fixed
   - Switching of the control mode according to the blow mode and target blow temperature is stopped and the control mode is fixed at control mode 1.

2) Disconnection or short in evaporator sensor or its input / output circuits

1. Compressor control is not executed and the compressor clutch is always OFF.
   However, fletching prevention control is executed.
2. E is displayed in the first fraction position of the set temperature display LCD. (See the figure below.)
   (The temperature setting is in 34 ºF (1 °C) steps.)
   However, E is not displayed for inside air sensor trouble.
3. The AC mark flashes.

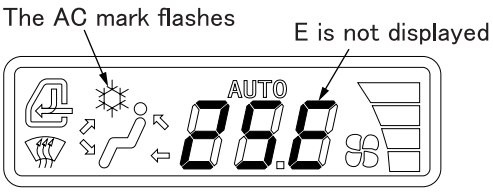

3) Disconnection or short in solar radiation sensor or its input / output circuits
   1. The solar radiation compensation data is set to 0.
   2. E is not displayed in the first fraction position of the set temperature display LCD as it is for other sensors.
4) Coolant temperature signal trouble
   Cold blast prevention control does not work and normal control is used.

8. Monitor Mode

[1] Summary explanation
Monitor mode is a mode for understanding trouble in the controller itself or in other control. The system goes into monitor mode when there is the special switch input below on the operation panel.

[2] Starting monitor mode
When the air conditioner is operating with basic control, if the operation panel ON / OFF switch closed path continues for one second while the refresh / recirculate switch closed path is ongoing, monitor mode is started.

[3] Monitor contents
1) LCD segment diagnosis
   When monitor mode is entered, the target LCD lights up for one second. An LCD with trouble does not light up.
2) Sensor diagnosis
   The detection value (AD value or ºF (°C)) for each sensor is displayed.
3) Coolant temperature signal recognition value
   This displays the reception status for the coolant temperature signal sent from the vehicle.

[4] Monitor contents
1) LCD segment diagnosis
   When monitor mode is entered, the target LCD lights up for one second. An LCD with trouble does not light up.
2) Sensor diagnosis
   The detection value ºF (°C) for each sensor is displayed.

[5] Display contents in monitor mode
In monitor mode, the data (detection value for each sensor, coolant temperature signal recognition, etc.) is displayed in the three digits of the 7-segment display for the temperature setting. The data displayed is selected with the blower UP / DOWN switches and AUTO switch. The blower UP / DOWN switches move the display on the dedicated monitor mode 7-segment display through 16 displays, 0 to F, and the corresponding data is displayed.(Table A on next page) Hexadecimal data display and decimal data display can be selected with the AUTO switch. Only for the coolant temperature signal recognition value, the value detected immediately before entry into monitor mode is displayed.
The difference between hexadecimal data and decimal data is indicated by the third digit of the 7-segment display. For hexadecimal data, "H" is displayed there and for decimal data, numbers (0 to 9) are displayed there.
1) Hexadecimal display
   AD values 00H through FFH are displayed. When the AD value corresponds to that in Table B on the next page (or Table C for the solar radiation sensor), this indicates a disconnection or short. In the hexadecimal display, when the value of a sensor changes in monitor mode, the hexadecimal display changes with it. If the display before entering monitor mode was [HL.*], the error judgment value is displayed.(In other words, the value detected before the trouble was detected) In the same way, if the display before entering monitor mode was [**.E], the display becomes **.E and the error judgment value is displayed.

https://truckmanualshub.com/

2) Decimal display
From -146 ºF to 210 ºF (-99.9 °C to 99.9 °C) is decimal display. Also, the "-" minus display displays the arrow mark for FOOT mode.

[6] Air conditioner operation in monitor mode
When the system enters monitor mode, all output (operation) through control is stopped and until monitor mode is ended, operations and settings of basic control through all the switches are not possible.

[7] Ending monitor mode
In monitor mode, if the operation panel ON / OFF switch closed path continues for one second while the refresh / recirculate switch closed path is ongoing, monitor mode is ended and the system returns to the basic control state. The same also occurs if the ignition key power supply is switched OFF.

Table A

Dedicated monitor mode 7-segment display	Display contents			
0	Inside air sensor temperature data			
1	Evaporator sensor temperature data			
2	Solar radiation compensation data			
C	Coolant temperature signal status data			
	Trouble	Lower than 86 ºF (30 °C)	86 ºF (30 °C) or higher and lower than 113 ºF (45 °C)	113 ºF (45 °C) or higher
	4	1	2	3
3 to 9 and B to F	Data (sensor diagnosis etc.)			

Table B

Sensor name	Short	Disconnection
Inside air sensor	F6H	0CH
Evaporator sensor	F6H	0CH

Table C

Sensor name	5 V short	Ground short
Solar radiation sensor	C7H	0CH

9. Door Switch Control

[1] Summary explanation
This control adds a restriction to air conditioner operation with the door switch or front window switch. Its purpose is to prevent overheating of the ignition unit. Concretely, it suppresses condenser heating and controls in a way restricted in order to obtain a feeling of comfort.

[2] Door switch / front window switch signal
The signal input into the controller is as follows for both the door and front window switches.

1) When door / front window open
When contact closedIn other words, the control controller input is at ground level.

2) When door / front window closed
When contact openPulled up to 5 VDC inside the control controller

[3] Control restricted by door switch / front window switch

1) Starting restricted control
When either the door or front window is open continuously for one second or longer, it is recognized that the switch is open. At the count of 60 seconds, the buzzer buzzes the same way as for switch input to tell the operator that restricted control is starting and that control starts.

2) Restricted control

1. For both auto and manual blow mode control
Even if auto or manual blow mode is selected, unless the blow mode is FACE, the following air flow restriction is executed.(If the blow mode is FACE, the air flow is not restricted.)
I. If the target blow temperature <68 ºF (20 °C), the air flow upper limit is set to M1.
II. If the target blow temperature ≥ 77 ºF (25 °C), the air flow restriction in I is ended.

2. When the current blow mode control is AUTO
Auto control with the AUTO blow mode VENT changed to FACE is used.

3. When the current blow mode control is manual selection
Only if the blow mode is VENT immediately after the open switch is recognized, that mode is changed to FACE. After this, all the blow modes can be selected with manual operation.

3) Ending the restriction
When both the door and front window are closed continuously for one second or longer, it is recognized that the switches are closed. After a count of 1 second, the buzzer buzzes the same way as for switch input to tell the operator that restricted control has been ended. When the restricted control is ended, the restriction on the air flow discussed in 1. above and the change from VENT to FACE in 3. are ended and control returns to normal. However, if the blow mode has been manually selected, even if the mode was changed from VENT to FACE by the above restriction, it does not return to VENT when the restricted control is ended.

10.Inside Air Filter Clogging Detection Control

[1] Summary explanation
This control recognizes the blower current with the dedicated shunt resistor voltage input, judges from that value whether or not the AC unit inside air filter is clogged and if it judges that that filter is clogged, it issues a warning to encourage the operator to replace the filter.

[2] Filter detection control

1) Starting detection control (detection timing)
Five seconds after the end of initial operation, if the air conditioner is operating and the cold blast prevention conditions are not present, this control is started. Also, this control is executed every 50 hours of air conditioner (blower) operation. However, during a temporary filter clog or filter clog, it is executed every time.

https://truckmanualshub.com/

2) Detection method
Cooling / heating is judged from the operation mode and in this way the air mix motor actuator target position is determined. Also, the mode motor actuator target value is set to FOOT, the blower air flow target value is set to M1, and output is made to attain the target values. When all the target values are attained, the blower current from the shunt resistor voltage is recognized, and the filter clog is judged by comparing this current with the default current value.

(Cooling / heating judgment)

When the operation mode is	FACE or VENT,	: Cooling (COOLMAX)
	When FOOT or DEF	: Heating (HOTMAX)
	When B / L: Final inside air temperature	If < 71.6 º (22 °C, heating)
	When B / L: Final inside air temperature	If < 71.6 º (22 °C, heating)

(Detection current threshold)

Relative to the default current value	For cooling	: 0.37 ± 0.02 A min.
	For heating	: 0.51 ± 0.03 A min.

If the value is below this three times in a row, it is judged that there is a clog.

(Default current value)

Current found in the initialization operation described below.

3) Clog warning
(Buzzer)
The buzzer buzzes intermittently at 1 Hz for 10 seconds.
(Display)
"FIL" is displayed on the 7-segment display for the set temperature for 10 seconds. Other marks go out.
However, if there is any switch input, the "FIL" display is ended immediately.

4) Alarm reset
If a reset detection value is recognized during the clog state, the clog state is reset.
The reset detection value is 50 % of the clog detection threshold.

5) ON / OFF switching
This function is switched ON / OFF by pressing the [Refresh / Recirculate], [MODE], and [DEF] switches at the same time. The factory setting for this function is OFF. This function does not come ON until the initialization operation discussed below is executed.
(Buzzer)
When operation of this switch is recognized, there is the normal switch input sound.
(Display)
ON or OFF is displayed on the set temperature 7-segment display, whichever is the state after switching. Other marks go out.

6) Initialization operation
When the [Refresh / Recirculate] and [DEF] switches are pressed at the same time, the default current value is detected and all the data for filter detection is initialized. Before executing this operation, make sure that the air conditioner unit (with a new inside air filter installed), ducts, and grilles (with all grilles fully open) are all installed in their normal states on the vehicle. If initialization is carried out in any other state, there is a danger of the clog detection judgment control making an incorrect judgment. Immediately after replacing the inside air filter with a new one, execute the initialization operation.
(Buzzer)
When operation of the switch is recognized, the buzzer buzzes with the normal switch input sound. When the detection ends, the buzzer buzzes for 3 seconds.

https://truckmanualshub.com/

7) Detection processing avoidance
   - When the inside / outside air damper is not at the recirculate position immediately before the current value is read
   - When the power supply voltage is not in the tolerance range for the voltage during the initialization operation
   - Trouble in any of the motor actuators

Air Mix Motor Actuator Inspection

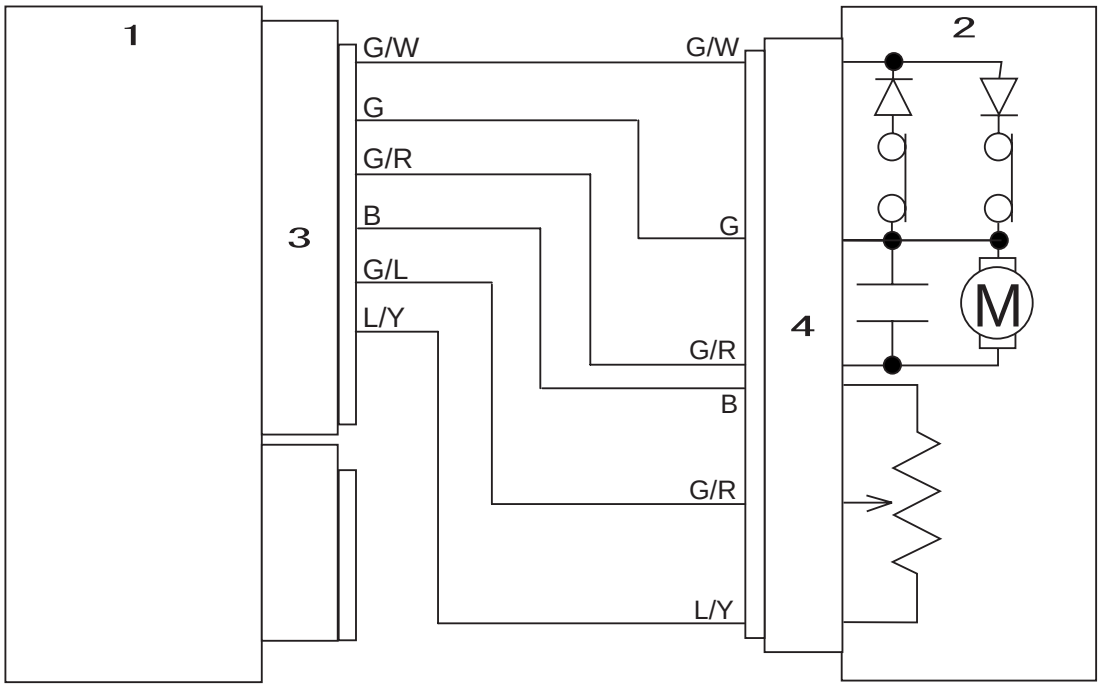

Air mix damper operation defect

↓

See the chart.

↓

Specifying the trouble location

1	Control panel
2	Air mix motor actuator
3	Connector 1
4	Connector 9

・Chart

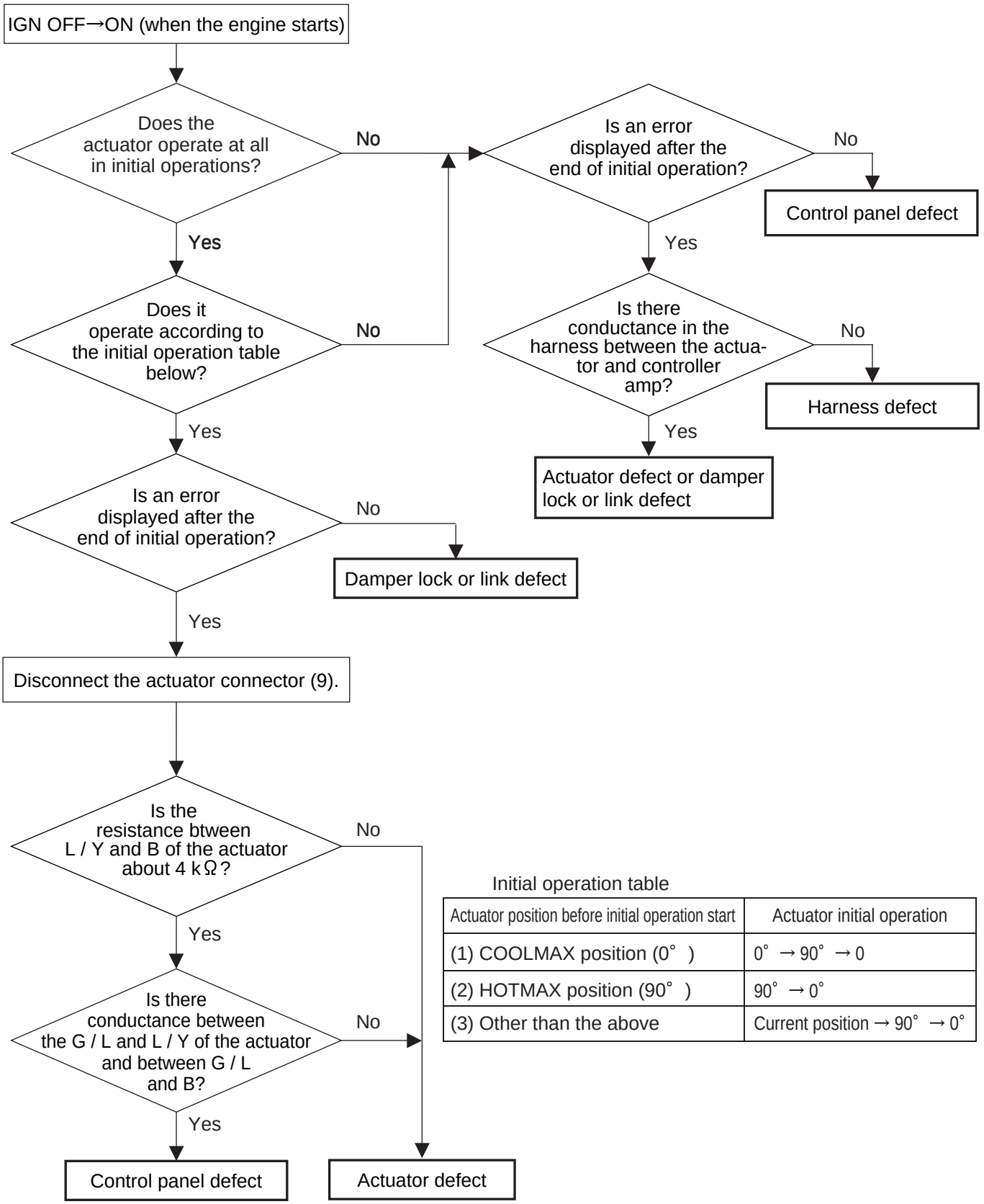

Initial operation table

Actuator position before initial operation start	Actuator initial operation
(1) COOLMAX position (0°)	0° → 90° → 0
(2) HOTMAX position (90°)	90° → 0°
(3) Other than the above	Current position → 90° → 0°

Refresh / Recirculate Motor Actuator Inspection

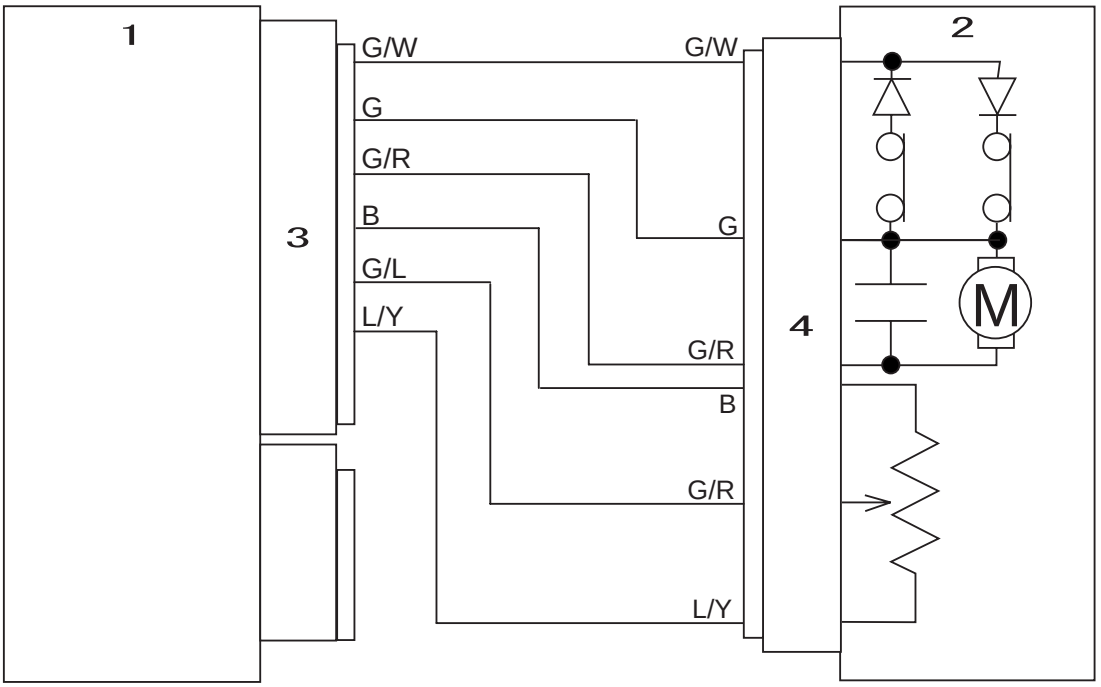

Air mix damper operation defect

↓

See the chart.

↓

Specifying the trouble location

1	Control panel
2	Refresh / recirculate motor actuator
3	Connector 1
4	Connector 2
5	Connector 11

• Chart

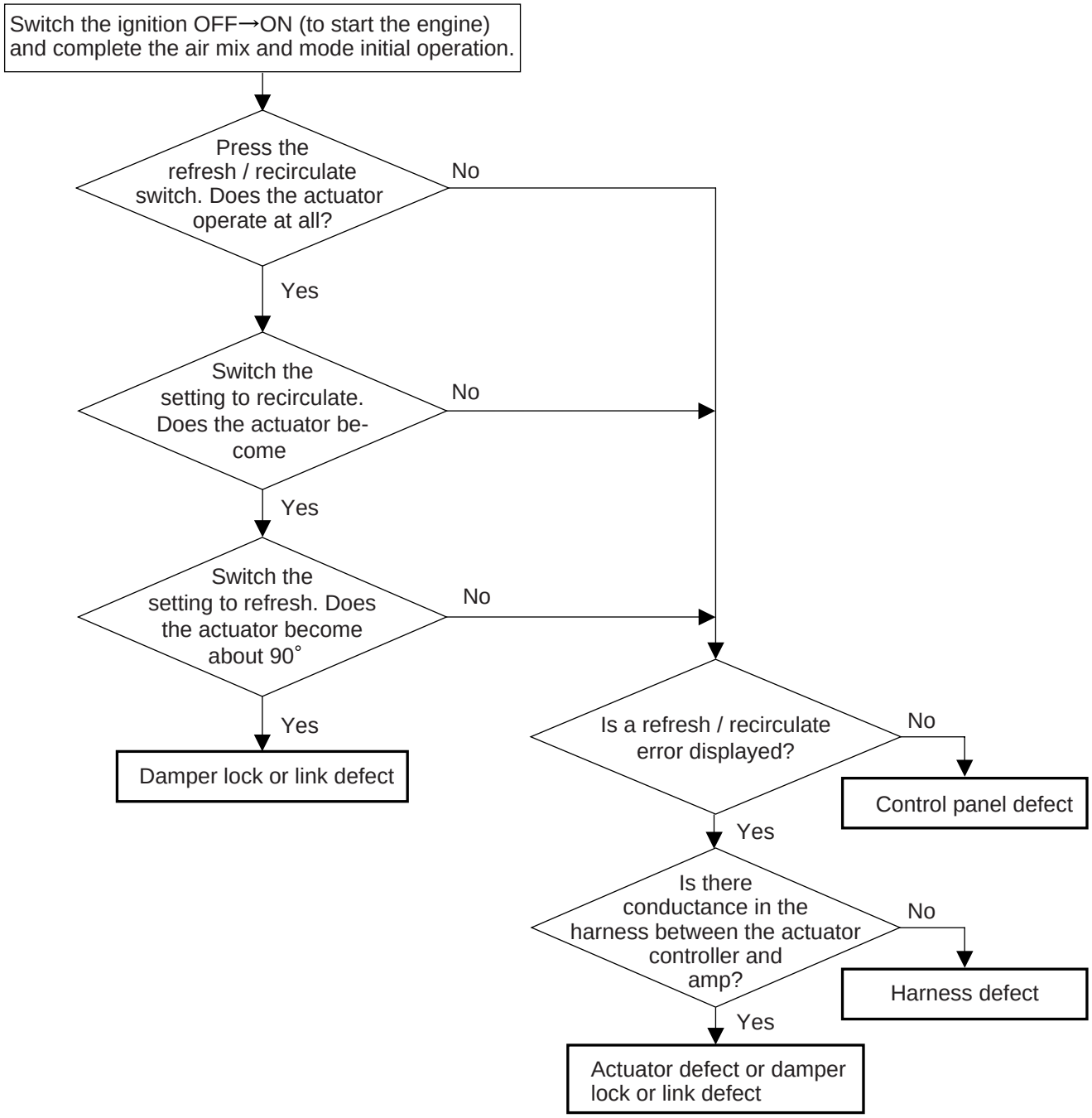
Switch the ignition OFF→ON (to start the engine) and complete the air mix and mode initial operation.
Press the refresh / recirculate switch. Does the actuator operate at all?
No
Yes
Switch the setting to recirculate. Does the actuator become
No
Yes
Switch the setting to refresh. Does the actuator become about 90°
No
Yes
Damper lock or link defect
Is a refresh / recirculate error displayed?
No
Control panel defect
Yes
Is there conductance in the harness between the actuator controller and amp?
No
Harness defect
Yes
Actuator defect or damper lock or link defect

Mode Motor Actuator Inspection

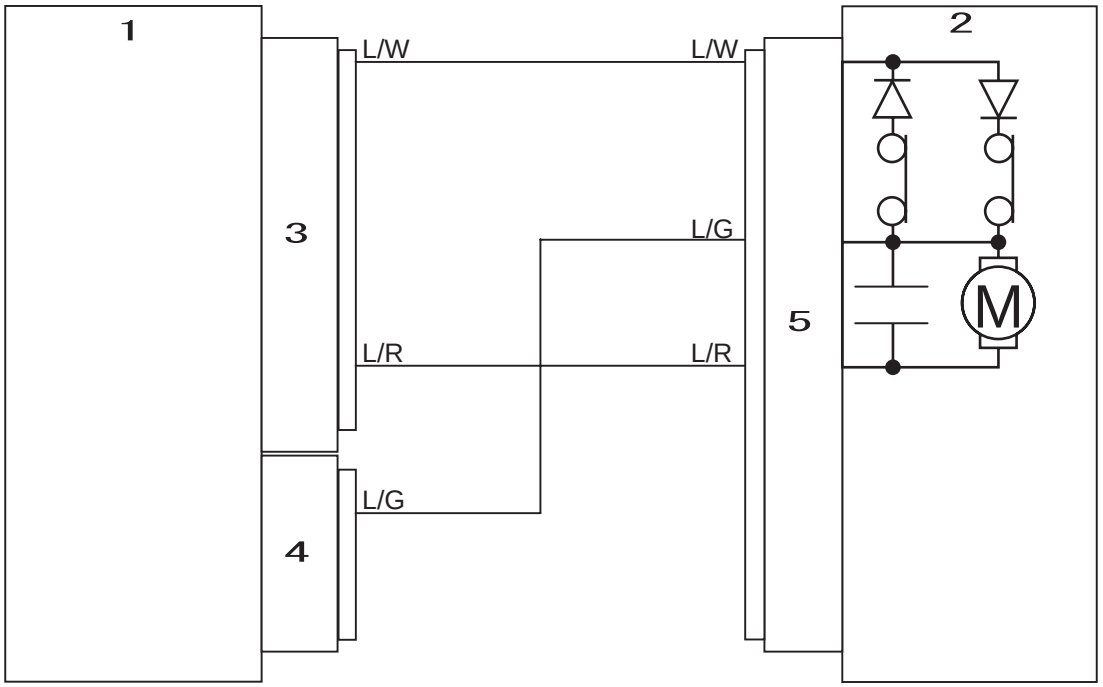

Inside / outside air mix damper operation defect

↓

See the chart.

↓

Specifying the trouble location

1	Control panel
2	Mode motor actuator
3	Connector 1
4	Connector 10

• Chart

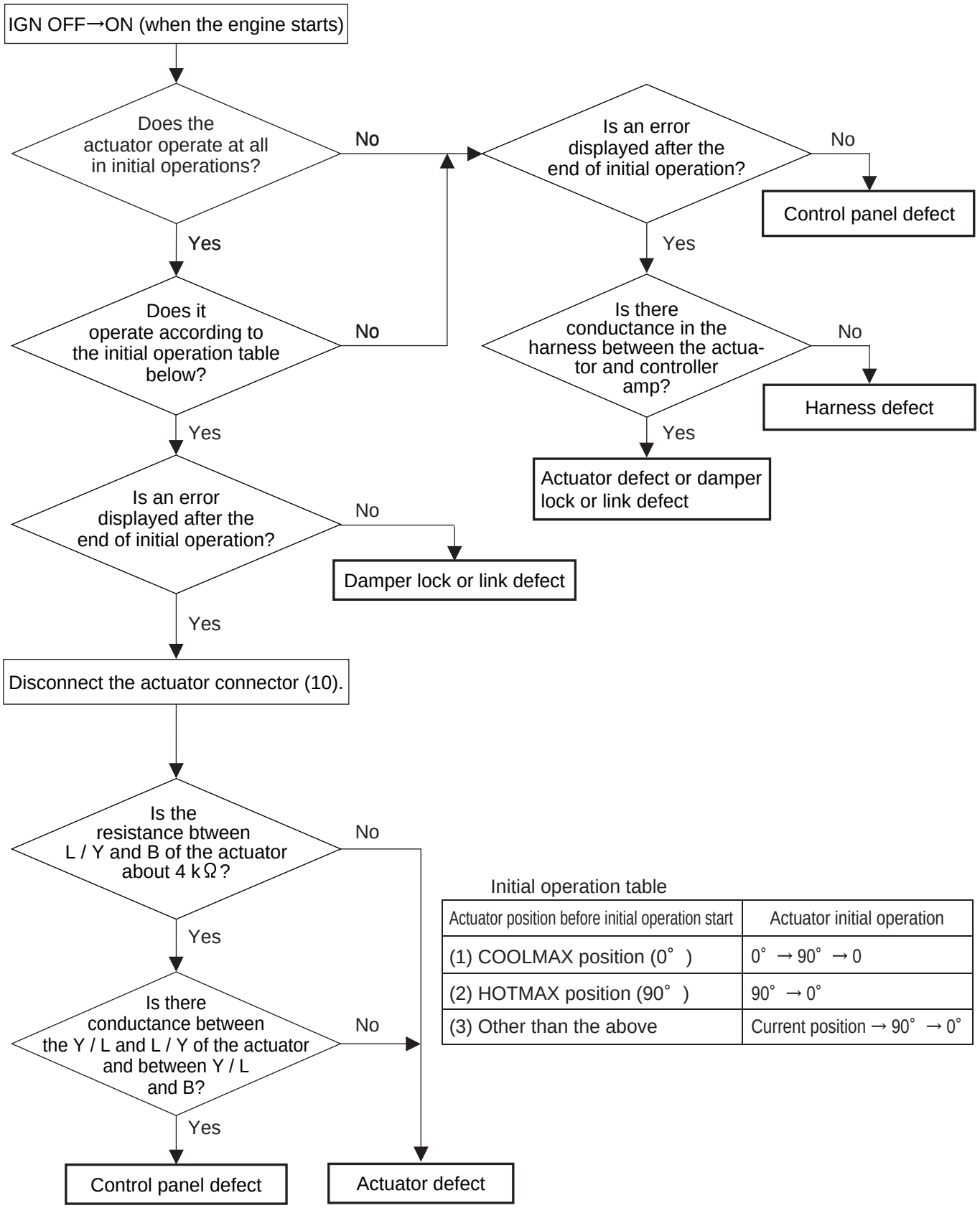

Initial operation table

Actuator position before initial operation start	Actuator initial operation
(1) COOLMAX position (0°)	0° → 90° → 0
(2) HOTMAX position (90°)	90° → 0°
(3) Other than the above	Current position → 90° → 0°

https://truckmanualshub.com/

Trouble Display and Self-Check Procedure

Motor actuator and sensor troubles can be checked on the panel display.

1. Trouble Display Position

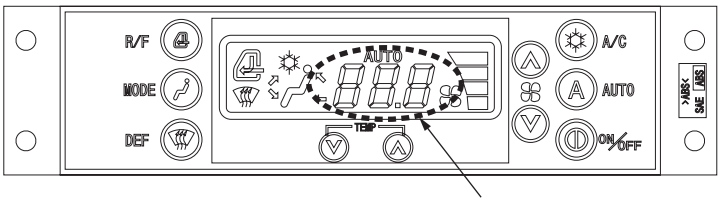

Error displayed on 3-digit 7-segment display

2. Explanation of Trouble Display

(1) Motor actuator trouble

[1] HL.E displayed on three-digit 7-segment display

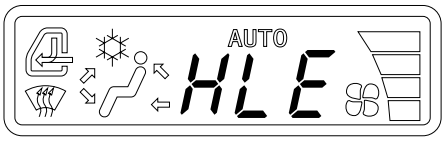

Check the air mix damper motor actuator for harness disconnection or disconnected connector.

[2] MODE flashes.

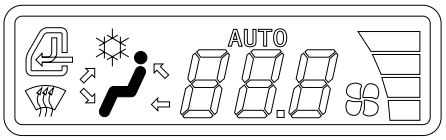

Check the blow mode damper motor actuator for harness disconnection or disconnected connector.

[3] The R / F flashes.

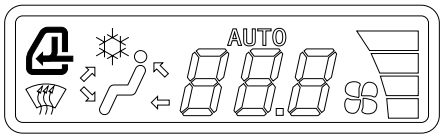

Check the refresh / recirculate motor actuator for harness disconnection or disconnected connector.

Caution

With the panel ON / OFF switch ON, the above display and flashing does not function even if a harness disconnection or disconnected connector occurs.

After trouble occurs, when the panel ON / OFF switch is switched ON, the function is displayed.

After trouble occurs, the trouble display and flashing are not ended until the main switch is switched OFF → ON.

https://truckmanualshub.com/

(2) Sensor trouble

[1] HL.* displayed on three-digit 7-segment display

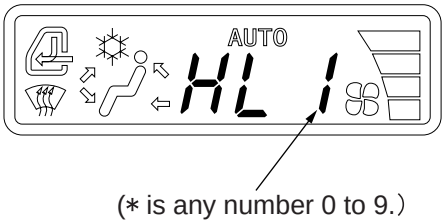

(∗ is any number 0 to 9.)

Check the inside air sensor and check its harness for disconnection, short, or connector connection defect.

[2] **.E and the ❄ mark flashing display are displayed on the three-digit 7-segment.
(** displays the set temperature value at that time still remaining.)

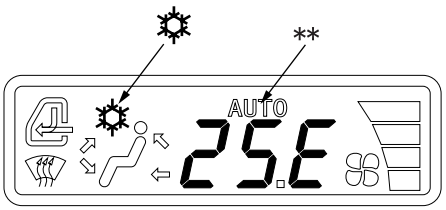

Check the evaporator sensor and its harness for disconnection, short, or connector connection defect.

Caution

The display in [1] and [2] above is displayed on the three-digit 7-segment display when trouble occurs with the panel ON / OFF switch ON.

After the trouble section is repaired, end the trouble display by switching the panel ON / OFF switch OFF → ON.

https://truckmanualshub.com/

3. Explanation of Monitor Mode

2. (2) When sensor trouble is displayed, the sensor status (disconnection, short) can be checked in monitor mode.

(1) Monitor mode display position

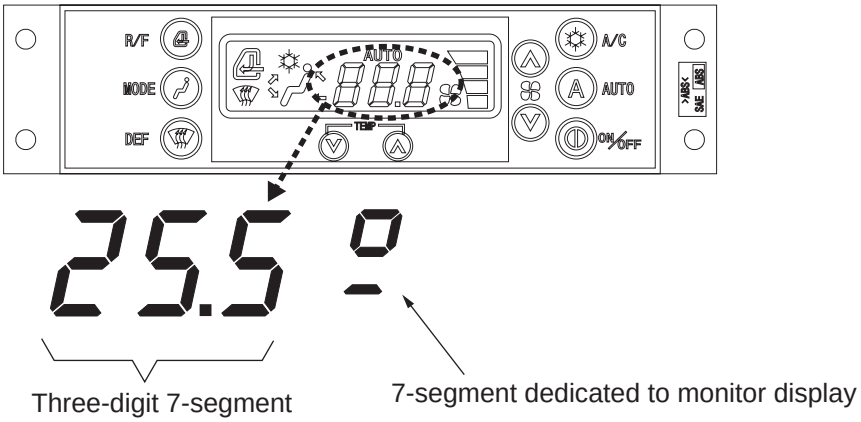

(2) Monitor mode display operation method

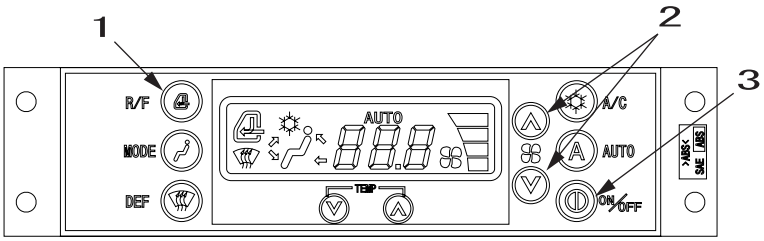

1	Refresh / recirculate switch
2	Blower switch UP / DOWN switch
3	ON / OFF switch

[1] Hold down the refresh / recirculate switch and the ON / OFF switch at the same time for one second or longer.

[2] Press the AUTO switch.
(All the segments light up for one second, then the system enters monitor mode.)

[3] Numbers 0 to 9 or letters A to F are displayed in the second and third digit of the three-digit 7-segment display.
"H" is displayed in the first digit.

[4] The 0 to 2 display on the dedicated 7-segment display is carried out with the blower UP / DOWN switches. The necessary sensor is selected from the table below.

7-segment display
table dedicated to monitor

0	Inside air sensor
1	Evaporator sensor
2	Solar radiation sensor

(Display other than the above (3 to 9, B to F) is not used during service.)

[5] To end the monitor display, either hold down the refresh / recirculate switch and the ON / OFF switch at the same time for one second or longer or switch the vehicle main switch OFF.

Caution

1. **During monitor mode, operations and settings of basic control through all the switches are not possible until the air conditioner control operation is stopped and monitor mode ended.**
2. **During monitor mode, even if a sensor is repaired, the trouble display is recorded in memory, and until the ON / OFF switch is switched OFF, then ON again, the trouble display is not ended.**

https://truckmanualshub.com/

(3) Display contents in monitor mode

See the dedicated monitor 7-segment display table and three-digit 7-segment table.

[1] Display example 1

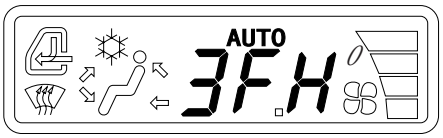

The dedicated monitor 7-segment display is 0 (indicates the inside air sensor state).
From the three-digit 7-segment table 3F →The sensor is normal.
→The inside air sensor is normal.

[2] Display example 2

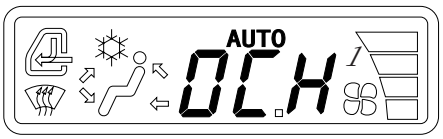

The dedicated monitor 7-segment display is 1 (indicates the evaporator sensor state).
From the three-digit 7-segment table 00 →The sensor is disconnected.
→The evaporator sensor is disconnected.

[3] Display example 3

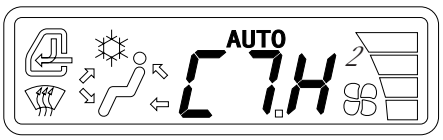

The dedicated monitor 7-segment display is 2 (indicates the solar radiation sensor state).
From the three-digit 7-segment table FF →The sensor is shorted.
→The solar radiation sensor is shorted.

Three-digit 7-segment table

3rd-digit of 7-segment display	Second digit of 7-segment display: 0	1	2	3	4	5	6	7	8	9	A	B	C	D	E	F
0	Inside air sensor disconnection OCH0 display															
	Evaporator sensor disconnection OCH1 display															
	Solar radiation sensor short OCH2 display															
1																
2																
3																
4	Sensors normal 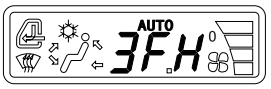															
5																
6																
7																
8																
9																
A																
B																
C																
D	Solar radiation sensor 5 V side short C7H2 display 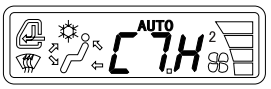															
E																
F							Inside air sensor short F6H0 display									
							Evaporator sensor short F6H1 display									

https://truckmanualshub.com/

Air conditioner troubleshooting

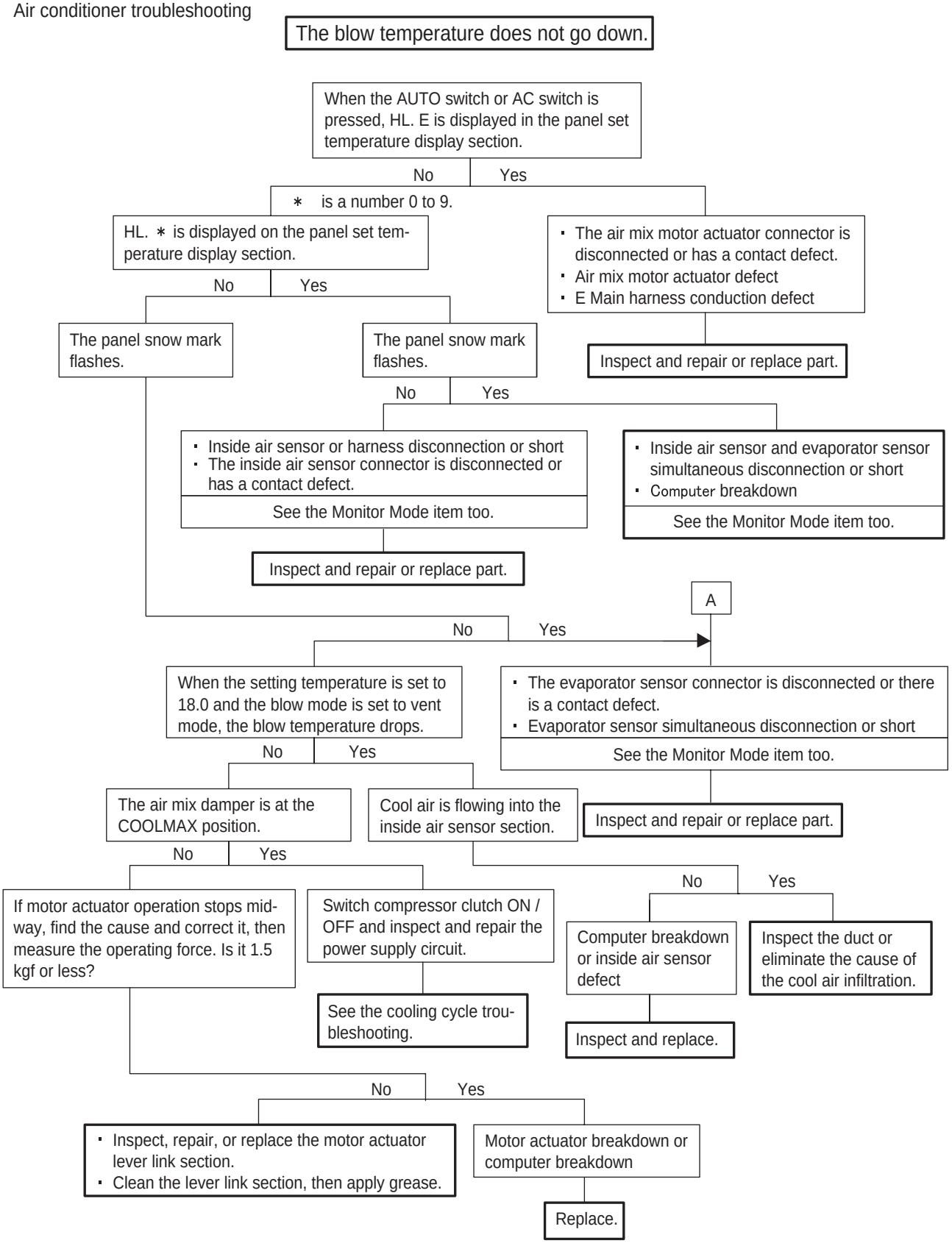

https://truckmanualshub.com/

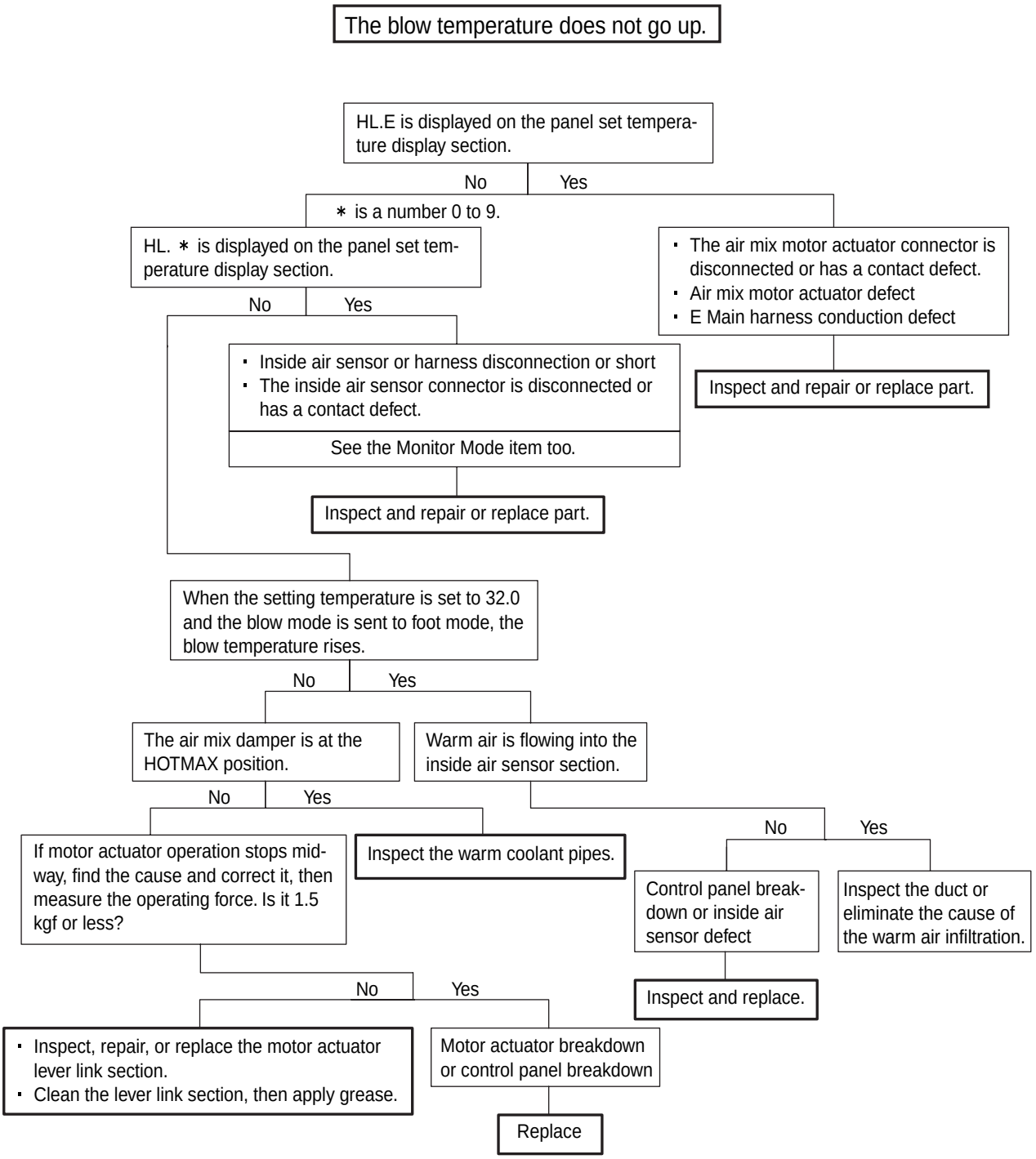

https://truckmanualshub.com/

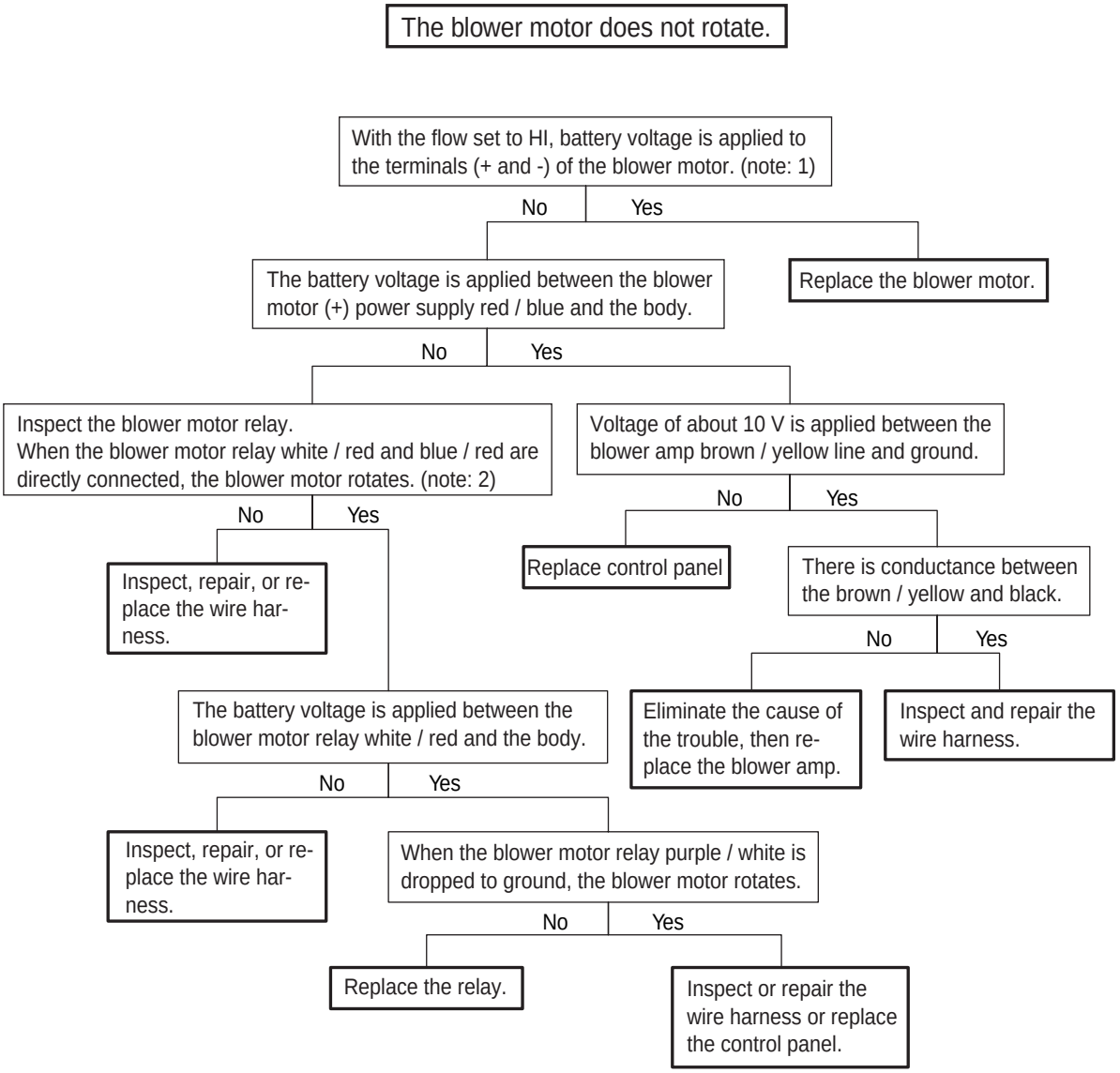

(Note: 1) Measure with the connector connected.
(Note: 2) For the sake of safety, have the air conditioner, vehicle key, and light switches all OFF when working with direct connections in place.

https://truckmanualshub.com/

The blower motor speed does not change.

-1

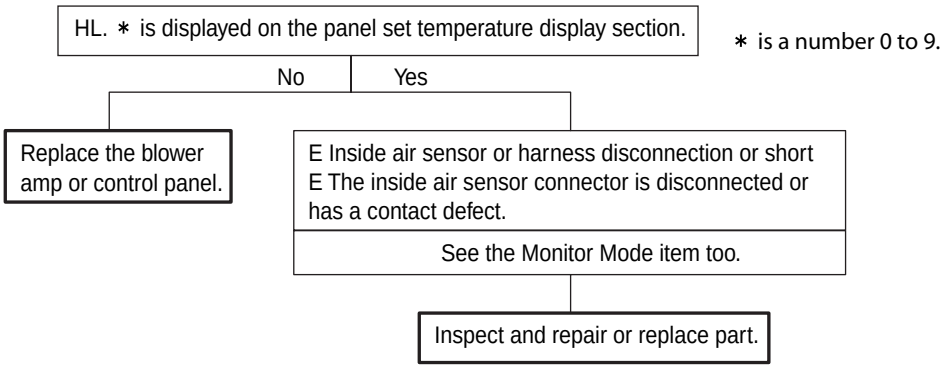

-2

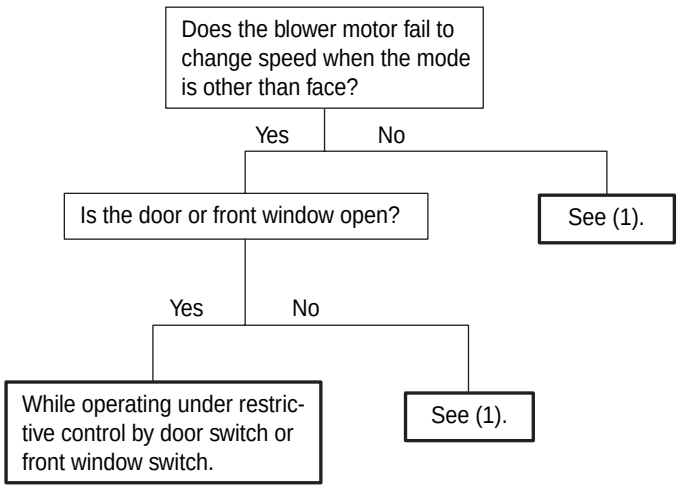

https://truckmanualshub.com/

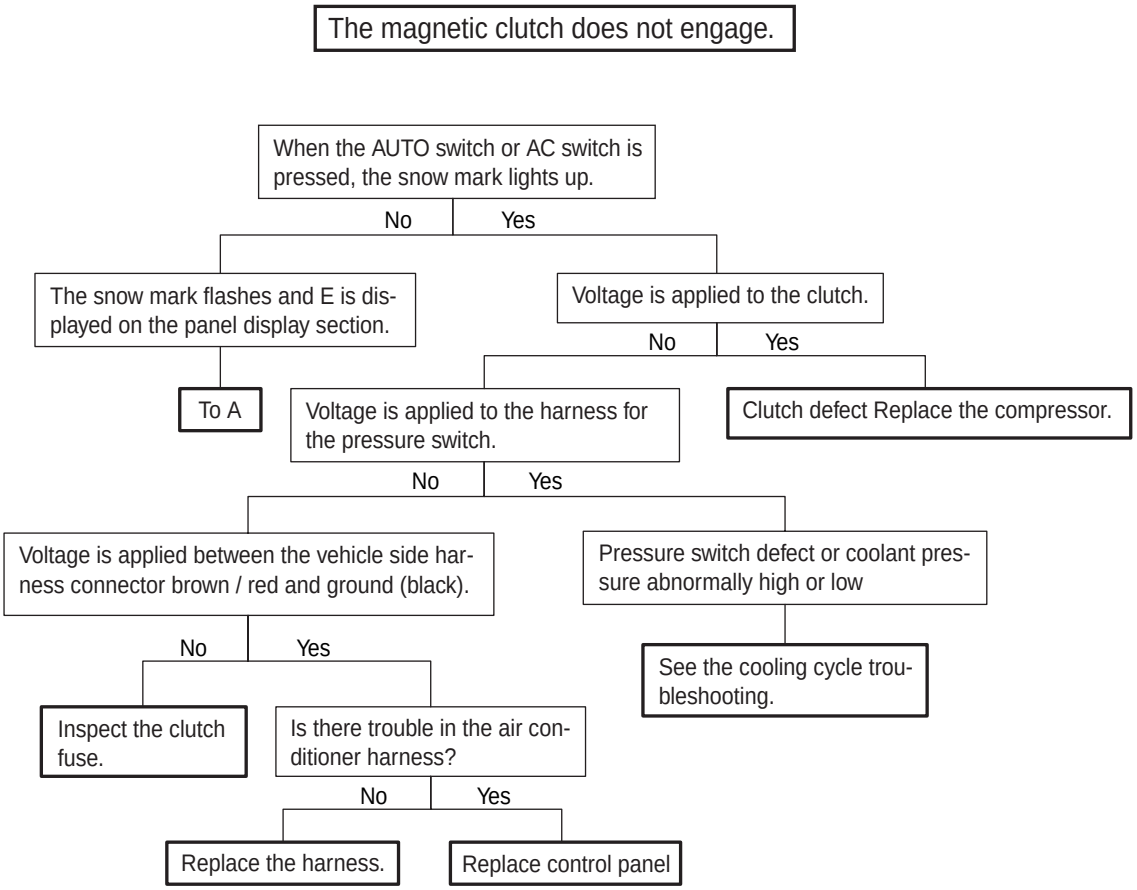

https://truckmanualshub.com/

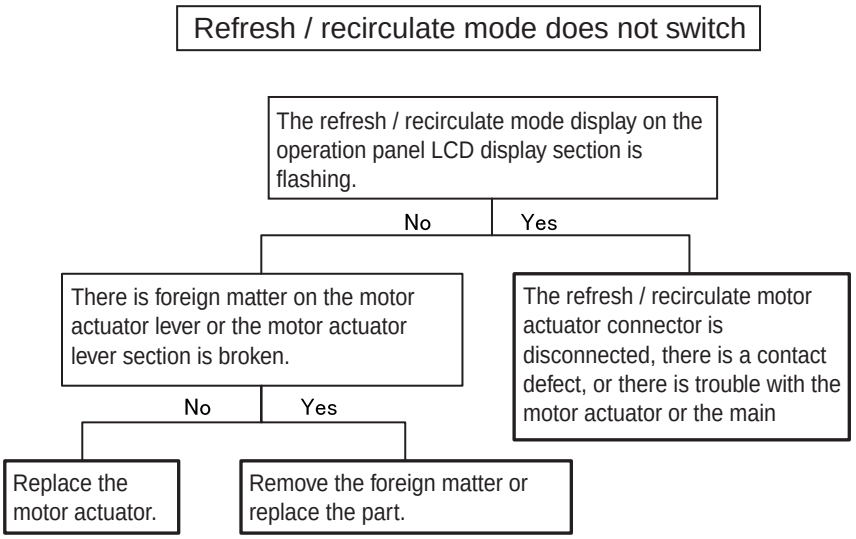

https://truckmanualshub.com/

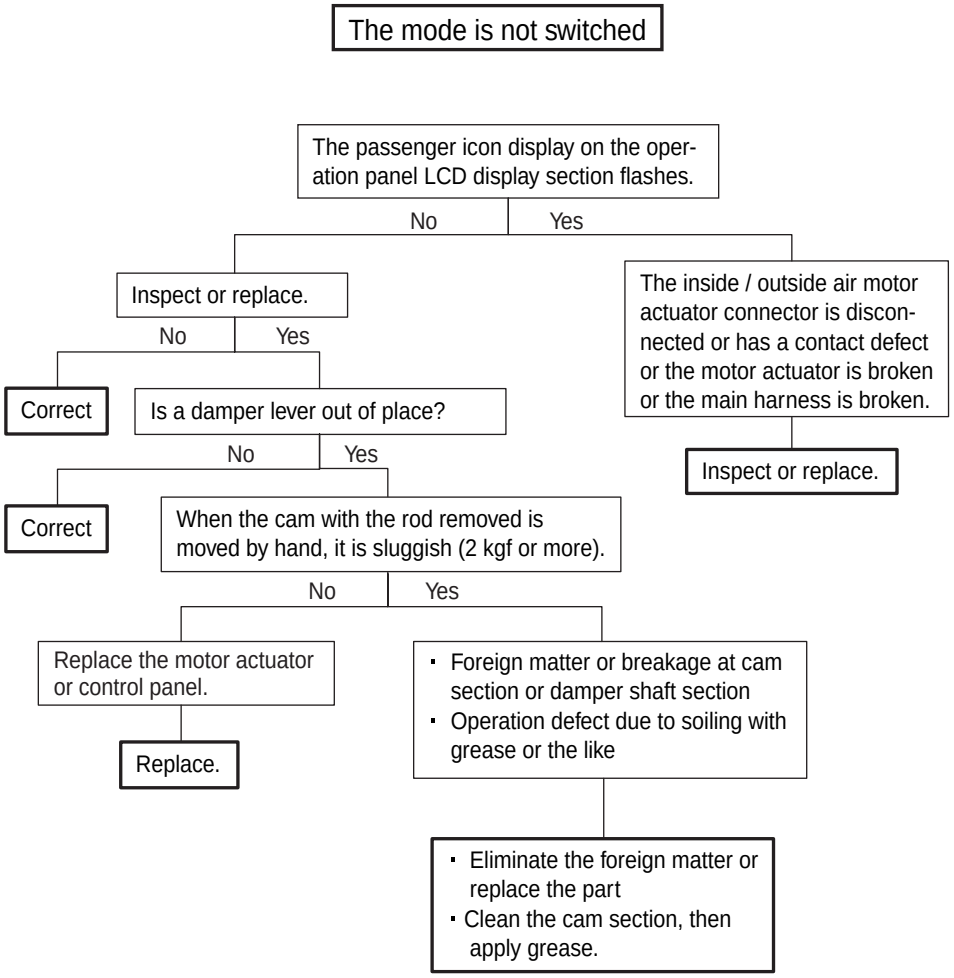

https://truckmanualshub.com/

Control Panel and Control Unit

The control panel and control unit are formed into one piece. The operation of its built-in microcomputer compares, operates on, and processes the sensor input signals and control panel switch input signals, switches the output side actuators (refresh / recirculate switching, air mix) and comprehensively controls the fan motor and compressor.
It is equipped with self-diagnosis functions to make trouble diagnosis easier.(For details see the control specifications.)

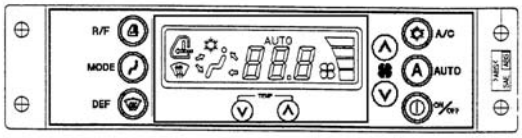

Blower Amp

The blower amp receives the control signals from the control unit and changes the speed of the blower motor.

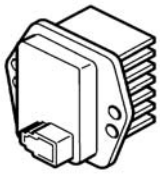

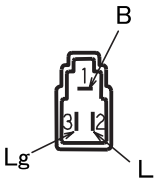

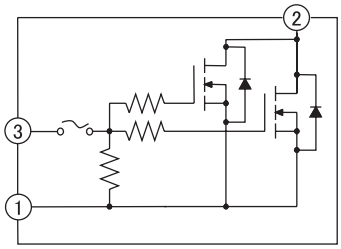

Normal

	Terminal number			Conductance
	1	2	3	
Tester	+		-	Conductance (4.7 kΩ±5 %)
	-	+		No conductance
	+	-		Conductance (diode parallel forward direction)

[1] Remove the blower amp connector.
[2] Check the conductance between the blower amp side terminals.

* The installation position is on the left side of the air conditioner unit.

G

https://truckmanualsnet.com/

Relay

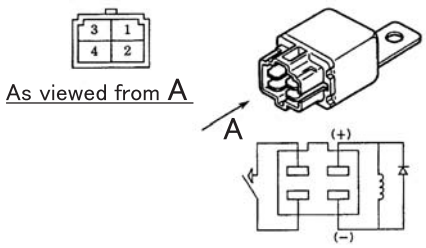

4-pole relays are used for the blower OFF relay and compressor relay.

Blower OFF relay

This relay receives the signal from the control amp and switches the blower OFF relay ON.
When the blower OFF relay is switched ON, the power supply voltage is fed to the blower motor via the blower amp and the blower motor is started.

Compressor relay

The compressor relay is switched ON / OFF by the control amp compressor control;

Relay inspection contents

[1] Relay
[2] Coil resistor: 320 É¹
[3] Specification voltage: 20 to 30 VDC
[4] Be careful. The coil side of this relay must be installed with the poles facing correctly.
[5] Inspection: Inspect the conductance between 3 and 4 under the conditions below.

20 - 30 V applied between Terminals 1 and 2	:	Conductance
No voltage applied between Terminals 1 and 2	:	No conductance

Air Mix Actuator

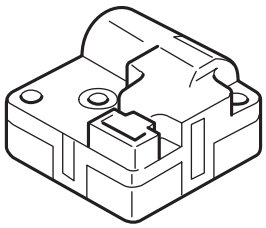

The air mix actuator is installed at the center of the air conditioner unit. It opens and closes the air mix damper via the link. Built into the air mix actuator is the potentio-meter which varies linked with the actuator shaft.

When the target air mix door position is determined by the temperature control switch, the control unit reads in the potentio-meter position in the actuator and determines whether the motor turns forward or reverse.The contacts move linked with the motor. When the contacts move open or the target potentio-meter position is reached, the control unit output signal goes OFF and the motor stops.
(See "Air Mix Motor Actuator Inspection".)

https://truckmanualshub.com/

Refresh / Recirculate Actuator

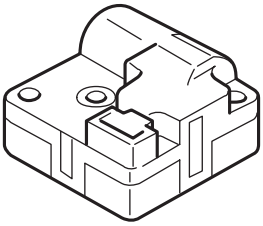

The refresh / recirculate switch actuator is installed on the blower intake unit. It opens and closes the refresh / recirculate damper via the link.
Built into the refresh / recirculate switch actuator is the position detection switch that changes linked with the actuator shaft.

When the refresh / recirculate damper position is determined by the refresh / recirculate switch on the control panel, the control unit reads in the signal of the position detection switch in the actuator and determines whether the motor turns forward or reverse.The contact moves linked with the motor and when the contact reaches the position detection switch and separates, the motor stops.
(See "Refresh / Recirculate Motor Actuator Inspection".)

Blow Mode Actuator

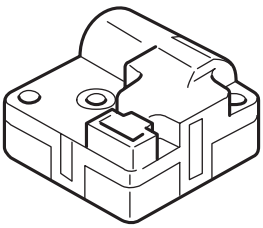

The blow mode actuator is installed on the back surface of the air conditioner unit. It opens and closes the blow damper via the link.
Built into the blow mode actuator is the potentio-meter which varies linked with the actuator shaft.

When the blow mode position is determined by the temperature control switch, the control unit reads in the potentio-meter position in the actuator and determines whether the motor turns forward or reverse.The contacts move linked with the motor. When the contacts move open or the target potentio-meter position is reached, the control unit output signal goes OFF and the motor stops.
(See "Mode Motor Actuator Inspection".)

G

https://truckmanualsnb.com/

Evaporator Sensor

In order to prevent the evaporator freezing, the evaporator blow temperature is detected and the compressor ON / OFF controlled.

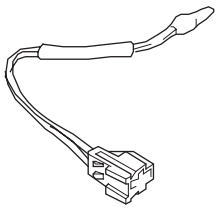

- Evaporator sensor inspection method (specifications value)
  Disconnect the evaporator connector from the main harness and measure the resistance between the sensor side connector terminals using the tester.

Resistance between terminals	When the sensor section detection temperature is 32 ºF (0 ° C)	:	7.2 kΩ
	When the sensor section detection temperature is 77 ºF (25 ° C)	:	2.2 kΩ

Dual Pressure Switch

- The dual pressure switch is installed on the receiver drier. When there is pressure trouble in the coolant high-pressure side line (abnormally high pressure or abnormally low pressure), the dual pressure switch contacts open up to cut off the compressor power and protect the cooling cycle.

Dual pressure switch specifications

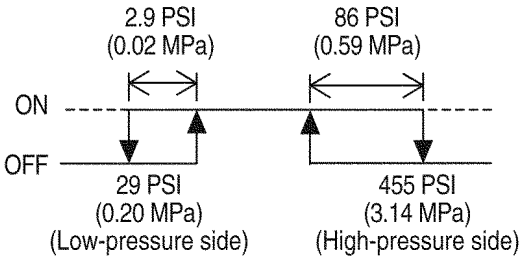

- Simple inspection method for dual pressure switch

[1] With the cooling cycle stopped, disconnect the connector from the switch and check the conductance between the switch side connector terminals using the tester.If there is conductance, the switch is normal.(When the outside air temperature is 32 ºF (0 C) or higher)

[2] Connect the gauge manifold high-pressure side hose to the high-pressure side charge port. With the cooling cycle operating, the condenser front surface is covered with the plate top and the high-pressure rises.If the compressor stops around 455 PSI (3.14 MPa), the switch is normal.

[3] With the coolant removed, check the conductance between the switch side connector terminals using the tester.If there is no conductance, the switch is normal.

Solar Radiation Sensor

This is the air conditioner solar radiation correct sensor. It detects the strength of sunlight with a photodiode, converts it into current and sends that to the control panel.

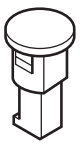

- Solar radiation sensor inspection method
  Disconnect the solar radiation sensor connector from the harness and measure the resistance between the sensor side connector terminals using the tester's voltage measurement mode.
  The voltage must be different when light is striking the photoreceiver section and when it is not.(The voltage is 0 V when absolutely no light is striking the photoreceiver.)

Caution

Always measure with the tester in voltage measurement mode (V mode).

Measuring with the tester in resistance mode (mode) would destroy the sensor.

https://truckmanualsonline.com/

Procedures for pressure measurement from the monitor display

Monitor and switch panel

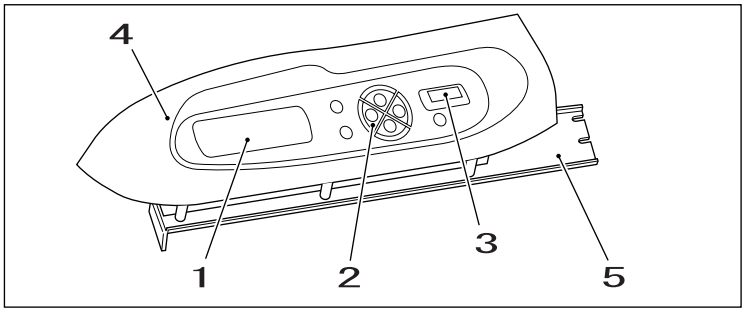

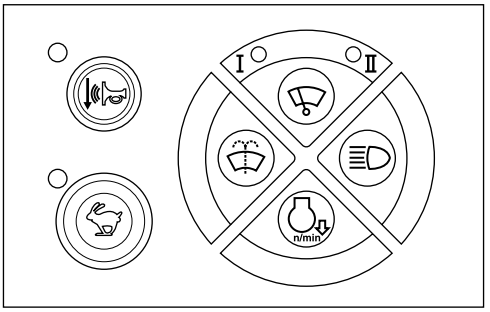

1	Liquid crystal monitor	4	Design panel
2	Switch panel	5	Installation bracket
3	Hour meter		

1. Pressure Measurement Method

   The P1, P2, N1, and N2 pressure can be measured from the monitor display.
   (The pilot pressure cannot be measured.)

2. Operating Method

   [1] If you hold down both the travel mode select switch and the horn volume select switch on the switch panel for 3 seconds, the display switches to the service support screen.

   [2] The respective pressures are displayed in the service support screen's "P1" (P1 pump main pressure), "P2" (P2 pump main pressure, "N1" (N1 negative control pressure, and "N2" (N2 negative control pressure) columns.

   * If you again hold down both the travel mode select switch and the horn volume select switch on the switch panel for 1 second, the display returns to the normal screen.

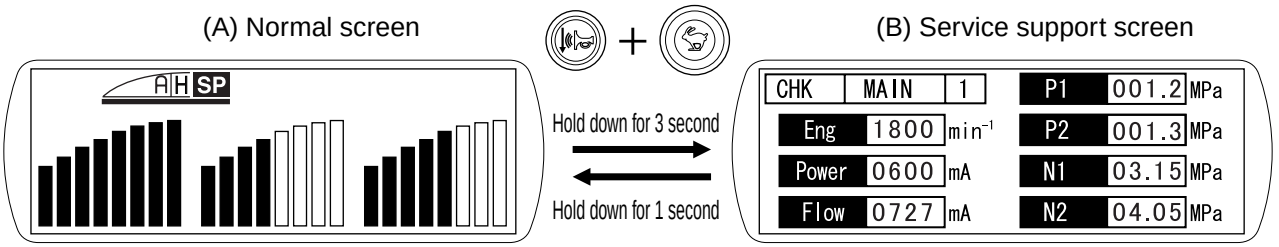

https://truckmanualshub.com/

Procedures for measuring hydraulic oil temperature from the monitor display

1. Hydraulic Oil Temperature Measurement Method
   The hydraulic oil temperature can be measured from the monitor display.
2. Operating Method
   [1] If you hold down both the travel mode select switch and the horn volume select switch on the switch panel for 3 seconds, the display switches to the service support screen.
   [2] With the travel mode select switch (mode select switch), set the mode to "CHK".
   [3] With the horn volume select switch (section switch), set the section "MAIN".
   [4] With the light switch (page +), switch to Page "2".
   [5] The hydraulic oil temperature is displayed in the "Hydoil" column.

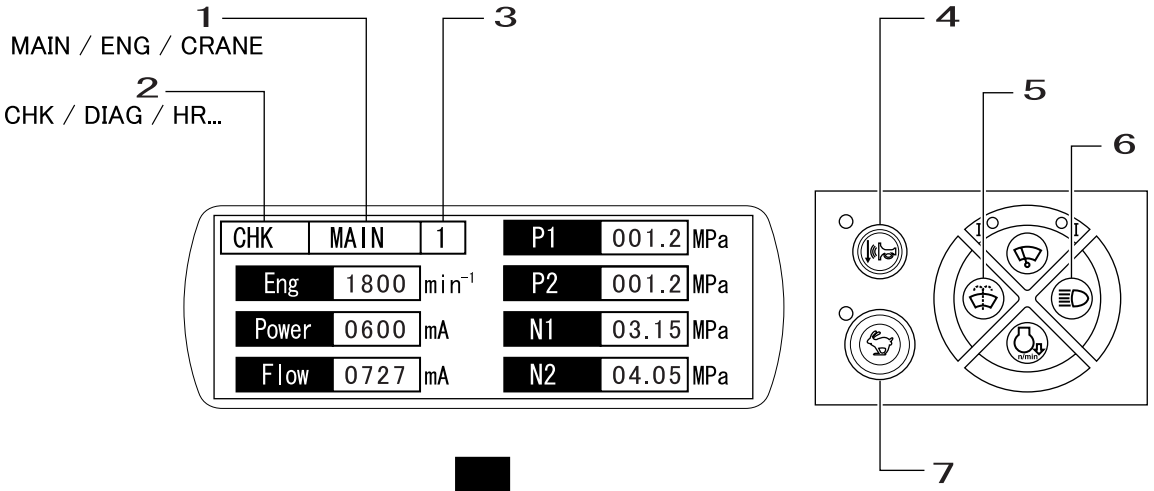

Page switch operation

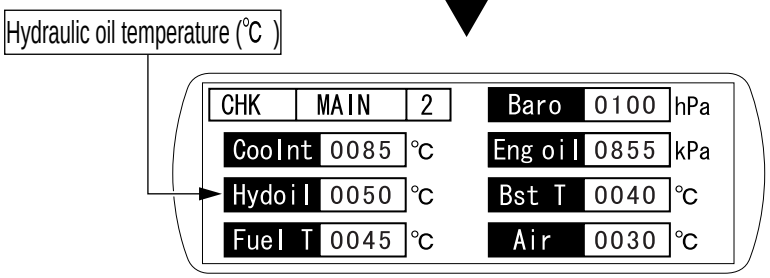

1	Section	5	Page (-)
2	Mode	6	Page (+)
3	Page	7	Mode select switch
4	Section switch		

https://truckmanualsonline.com/

Procedures for pressure measurement by installing pressure gauge

1. Preparations

Workers 2 Role (Worker 1: Work supervisor, pressure adjustment)

Role (Worker 2: Operator)

2. Items to Prepare

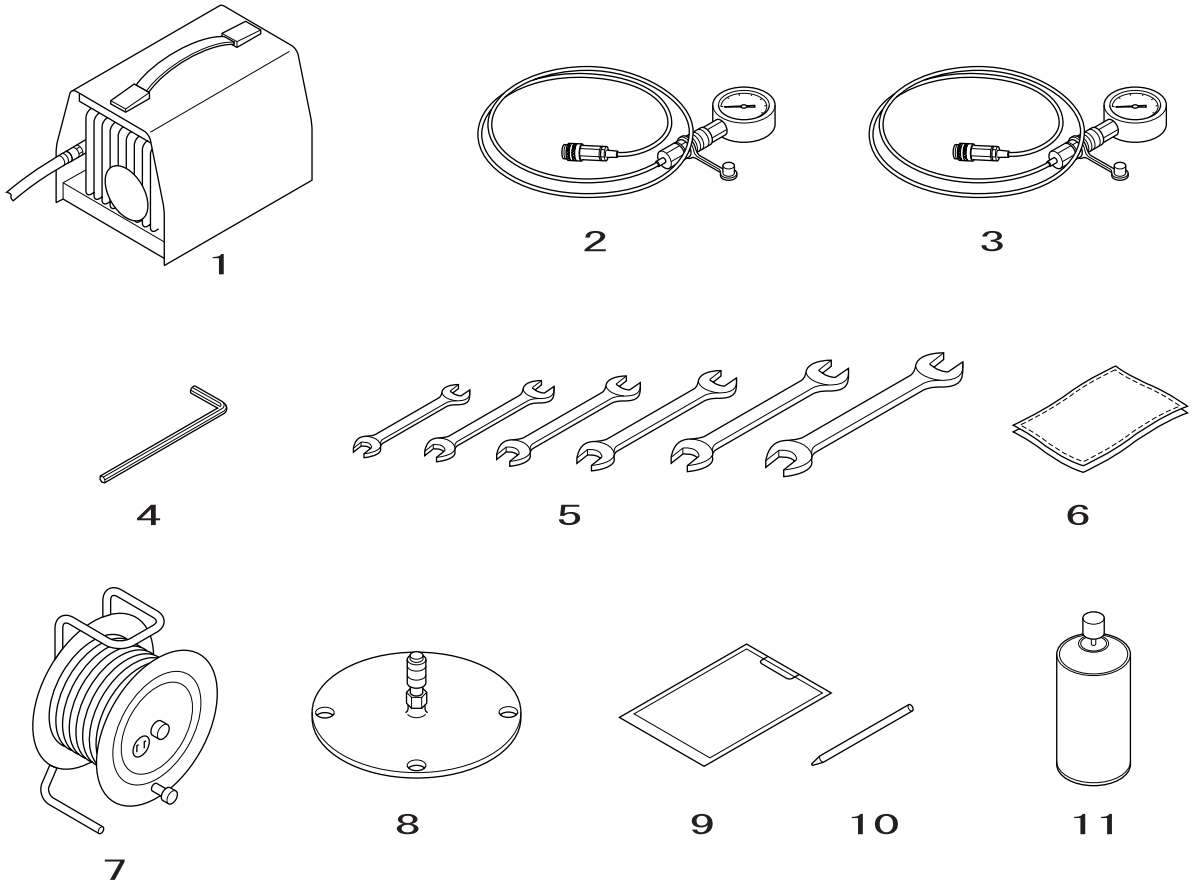

1	Vacuum pump, power supply (for vacuum pump)
2	Pressure gauge1450 PSI (10Mpa X 1)
3	Pressure gauge 8702 PSI (60Mpa X 2)
4	Hexagon wrench (8mm, 6 mm)
5	Spanners (17, 19, 24, 27 X 2, 32, 36 X 2)
6	Rags
7	Extension cable
8	Hydraulic oil tank lid (vacuum pump)
9	Recording sheet
10	Pen
11	Cleaning fluid

https://truckmanualshub.com/

Pressure measuring ports

There are the following three ports for measuring the pressure.

- Main pressure: pressure ports (P1, P2)
- Negative control pressure: pressure ports (N1, N2)
- Pilot pressure: pressure port (P3)

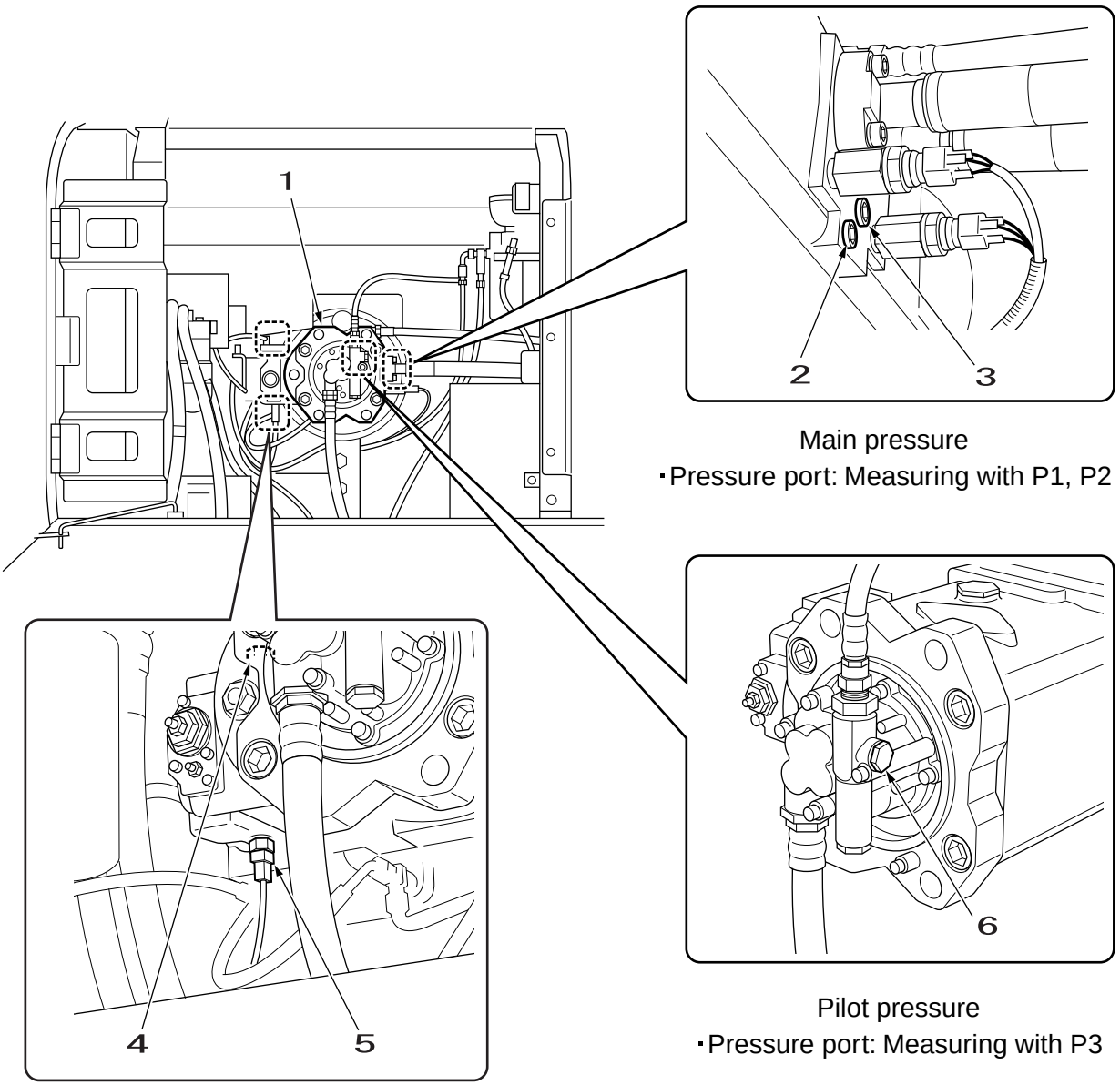

Main pressure
・Pressure port: Measuring with P1, P2

Pilot pressure
・Pressure port: Measuring with P3

Negative control pressure
・Pressure port: Measuring with N1, N2
(Remove the negative control pressure sensor, then Install the pressure gauge.)

1	Pump	4	Pressure port: N1
2	Pressure port: P2	5	Pressure port: N2
3	Pressure port: P1	6	Pressure port: P3

https://truckmanualsonline.com/

Control valve

1. Location of Relief Valves

Position			Tools		Set pressure PSI (MPa)	Pressure per rotation of adjusting screw PSI (MPa)	Measuring port
			Lock nut	Adjusting screw	Lock nut		
①	a	Main (normal use)	Hexagon diagonal 27 mm	Hexagon diagonal 27 mm	4975 (34.3)	3089 (21.3)	Monitor P1
①	b	Main (boosted pressure)	Hexagon diagonal 32 mm	Hexagon diagonal 27 mm	5337 (36.8)	4119 (28.4)	Monitor P1
②		Boom-up	Hexagon diagonal 17 mm	Hexagon diagonal 6 mm	5613 (38.7)	3075 (21.2)	Monitor P2
③		Boom down			4264 (29.4)	3075 (21.2)	Monitor P2
④		Arm-in			5613 (38.7)	3075 (21.2)	Monitor P1
⑤		Arm-out			5613 (38.7)	3075 (21.2)	Monitor P1
⑥		Bucket close			5613 (38.7)	3075 (21.2)	Monitor P2
⑦		Bucket open			5613 (38.7)	3075 (21.2)	Monitor P2
⑧		Pilot	Hexagon diagonal 24 mm		569 (3.92)	290 (2.0)	

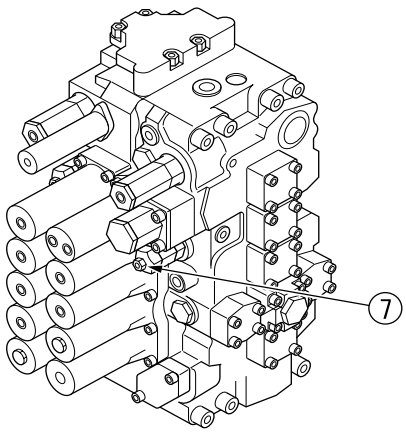

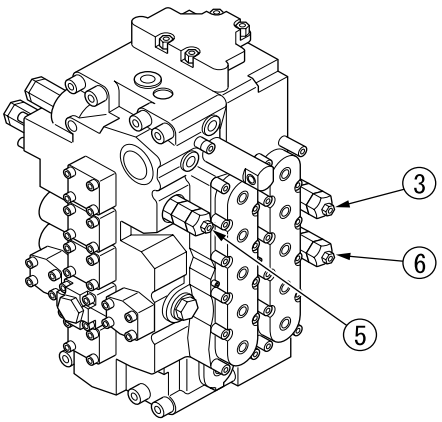

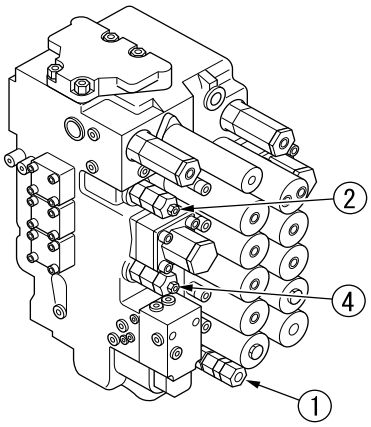

Main relief valve adjustment location details

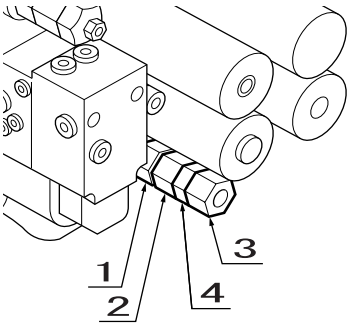

1	Boost pressure lock nut
2	Boost pressure adjusting screw
3	Standard pressure adjusting screw
4	Standard pressure lock nut

https://truckmanualshub.com/

Pressure measurement preparations

[1] Items to prepare

1) Pressure gauge	For 1450 PSI (10 MPa) (for pilot and negative control pressure measurement) For 8702 PSI (60 MPa) (for main pressure measurement)
2) Tools	Spanner (closed wrench) 17 mm Hexagon wrench 6 mm
3) Others	Rags Cleaning fluid

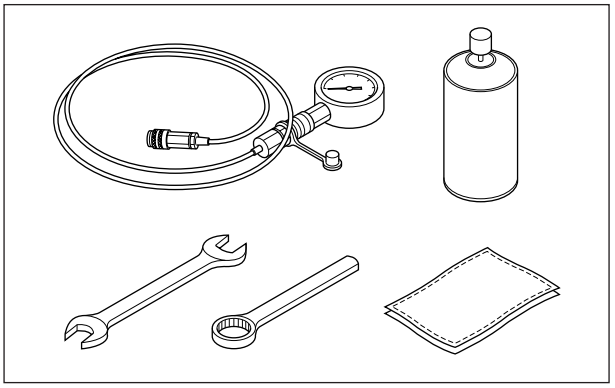

[2] Monitor check

Use the service check to check the no load engine maximum speed and the SP mode pump input current.

Engine MAX	SP mode current
1800 min^{-1}	600 mA (operating)

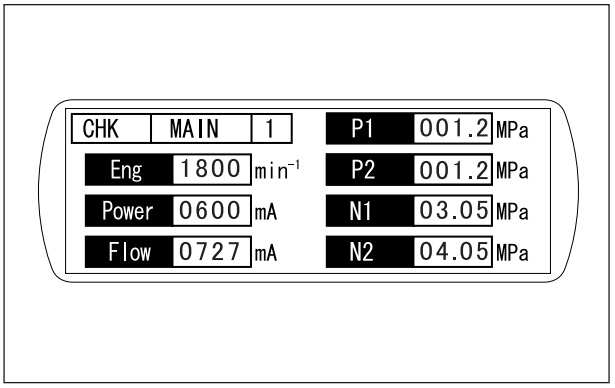

[3] Main unit installation

Put the main unit on solid, level ground, put the bucket cylinder at its open stroke end, the arm cylinder at its out stroke end, lower the boom, and touch the arm top to the ground.

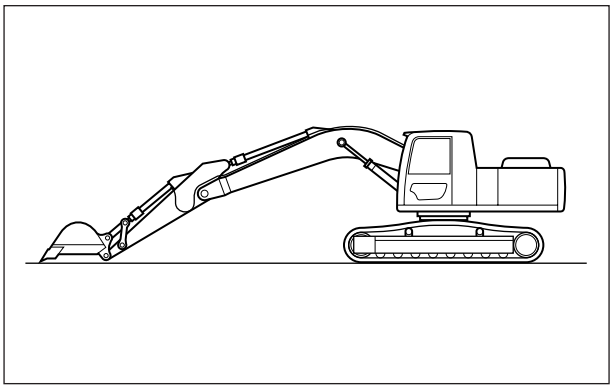

[4] Ignition key

Switch OFF the ignition key, check that the engine has stopped, then switch the ignition key ON again. (Do not start the engine.)

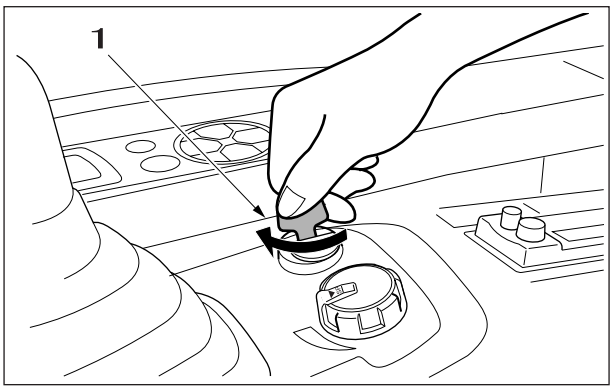

1	Ignition key

https://truckmanualshub.com/

[5] Oil temperature check
Use the service check to check the hydraulic oil temperature.

Oil temperature	113 to 131 ºF (45 to 55° C)

If the oil temperature is low, raise the oil temperature according to the warm-up operation procedure in the operator's manual.

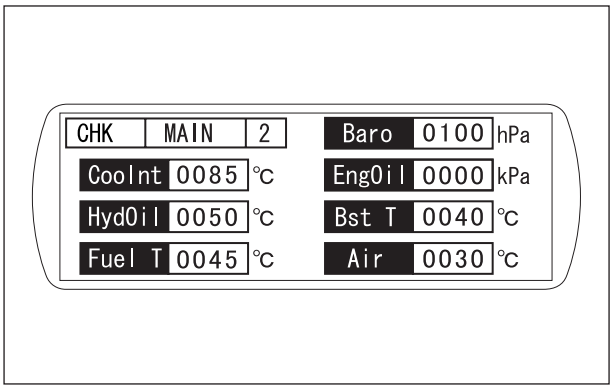

[6] Bleeding pressure from inside circuits
Flip the lever forward, then turn the upper side operation lever about 10 times to bleed out the pressure.

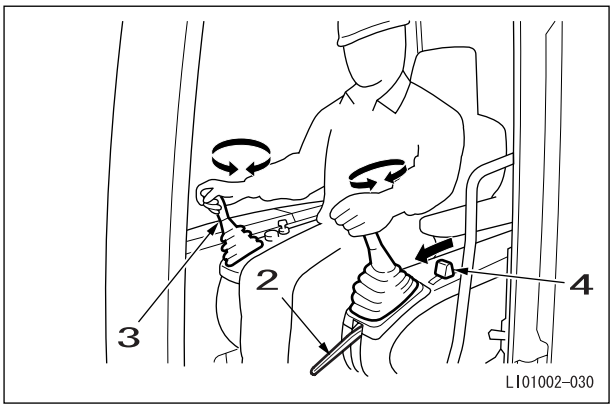

Move the travel lever back and forth about five times to bleed out the pressure.

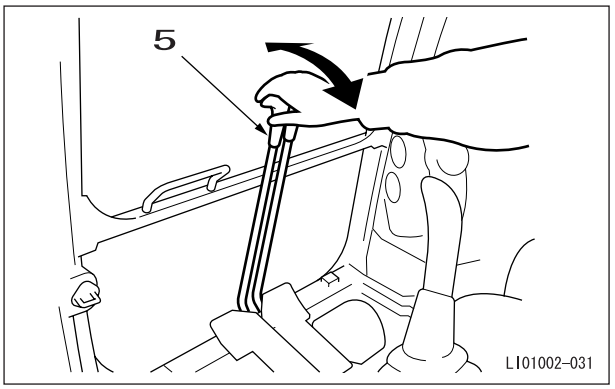

[7] Bleeding pressure from inside the hydraulic oil tank
Press the air breather button on top of the hydraulic oil tank to release the pressure inside the tank.

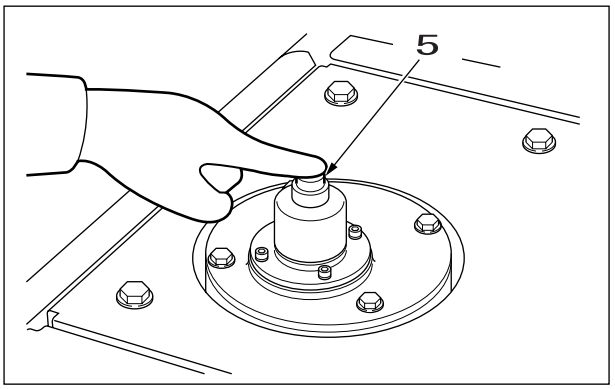

2	Lever
3	Upper side operation lever
4	Travel lever
5	Air breather button

https://truckmanualshub.com/

[8] Side door opening and closing
Open the side door. At this time, be sure to lock.

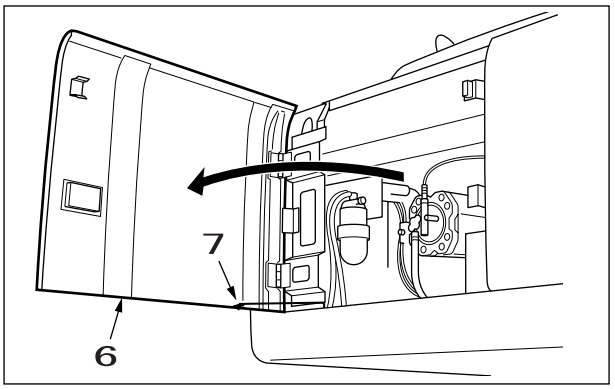

This completes the preparations.

6	Side door
7	Lock

https://truckmanualsonline.com/

Pressure measurement and adjustment procedures

1. Main Pressure Measurement

[1] Pressure gauge installation

Install pressure gauges at the pump pressure measuring ports.
(Pressure ports: P1 / P2)

P1: Can be measured	P2: Can be measured
Travel left	Travel right
Option	Bucket
Swing	Boom
Arm	

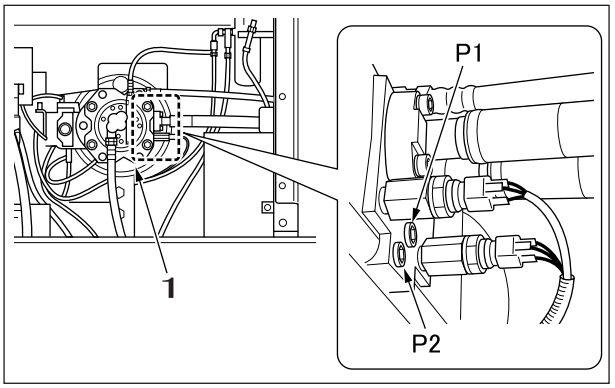

Use a hexagon wrench (8 mm) to remove the caps.

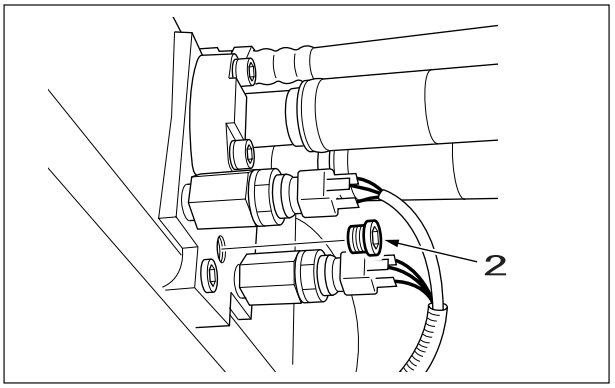

Install adapters where the caps were removed.

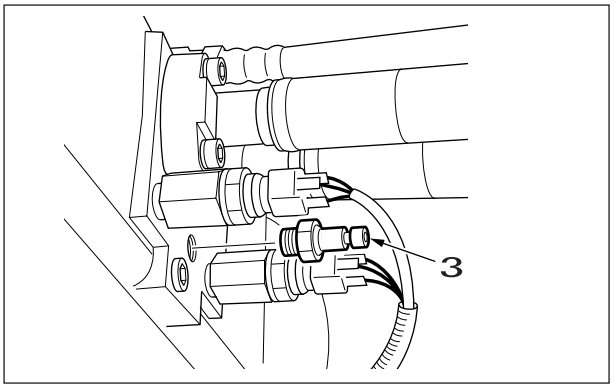

1	Pump
2	Cap
3	Adapter

https://truckmanualshub.com/

Install pressure gauges on the adaptors and fasten.

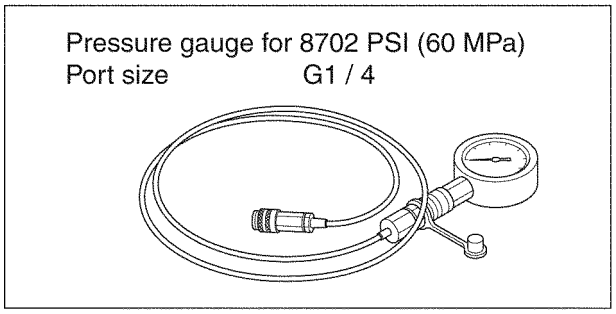

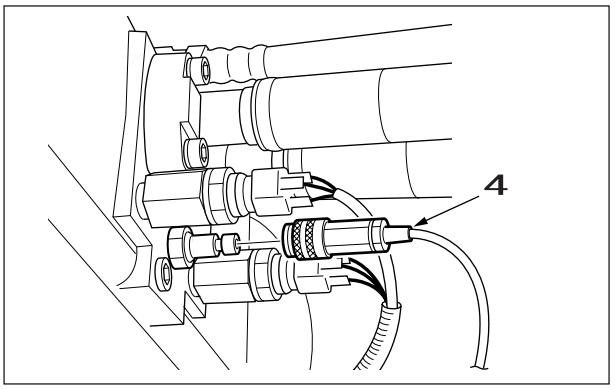

4	Pressure gauge

(1) Attachment pressure measurement

Example: Arm-out pressure measurement
Measure with the following operations.

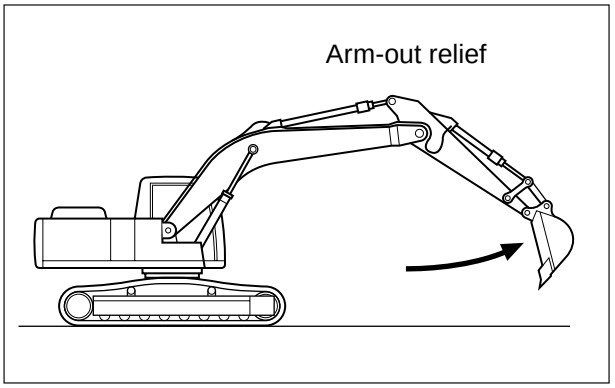

Engine speed	1800 min^{-1}
Work mode	SP mode
Lever operation	Arm-out relief
Oil temperature	113 to 131 ºF (45 to 55° C)
Measuring port	1st speed: P1 port
	2nd speed: P2 port
Set pressure PSI (MPa)	Boost pressure: 5337 (36.8)
	Standard: 4975 (34.3)

When the attachment operates, since the pressure boost operates automatically, you can check the set boost pressure for about 8 seconds.After 8 seconds or more, you can check the standard set pressure.
Measure relieving each cylinder with the arm out and in, the bucket open and closed, and the boom up.

Lever operation	Arm-out	Arm-in	Bucket open	Bucket close	Boom up	Boom down
Engine speed	1800 min^{-1}					
Work mode	SP mode					
Oil temperature	45 to 55° C					
1st speed measuring port	P1	P1	P2	P2	P2	P2
2nd speed measuring port	P2	P2	None	None	P1	P1
Boost pressure PSI (MPa)	5337 (36.8)	5337 (36.8)	5337 (36.8)	5337 (36.8)a	5337 (36.8)	4264 (29.4)
Standard pressure PSI (MPa)	4975 (34.3)	4975 (34.3)	4975 (34.3)	4975 (34.3)	4975 (34.3)	4264 (29.4)

Pressure measurement with boom down

For pressure measurement with the boom down, put the arm cylinder at its out stroke end, open the bucket, put the bucket tip on the ground, carry out the boom-down operation, and measure.

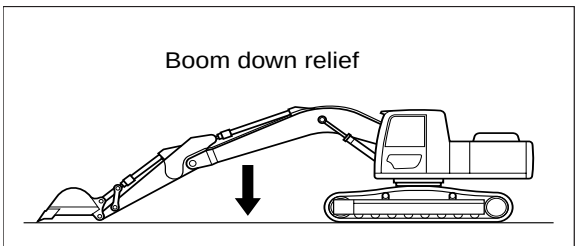

https://truckmanualsonline.com/

(2) Travel pressure measurement

[1] Install the stopper on the crawler sprocket section and lock the travel motor.

[2] Measure with the following operations.

Engine speed	1800 min^{-1}
Work mode	SP mode
Lever operation	Travel relief
Oil temperature	113 to 131 ºF (45 to 55° C)
Measuring port	Left travel: P1 port
	Right travel: P2 port
Set pressure	4975 PSI (34.3 MPa)

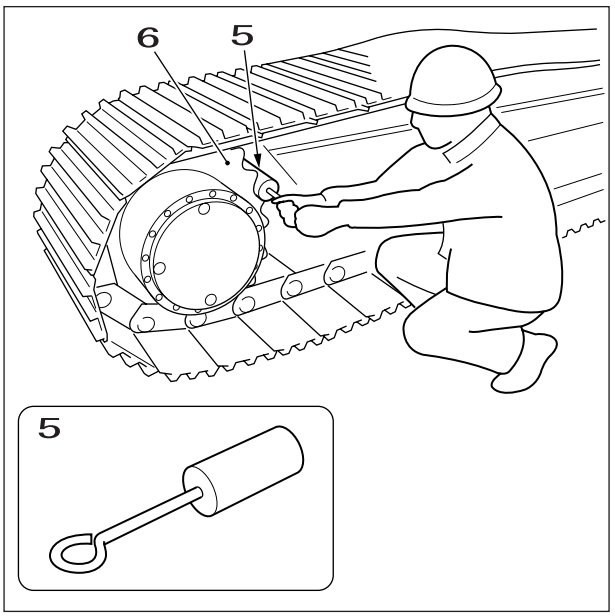

5	Stopper
6	Sprocket

(3) Swing pressure measurement

[1] Set the swing lock with the monitor.

[2] Measure with the following operations.

Engine speed	1800 min^{-1}
Work mode	SP mode
Lever operation	Swing relief
Oil temperature	113 to 131 ºF (45 to 55° C)
Measuring port	P1 port
Set pressure	4264 PSI (29.4 MPa)

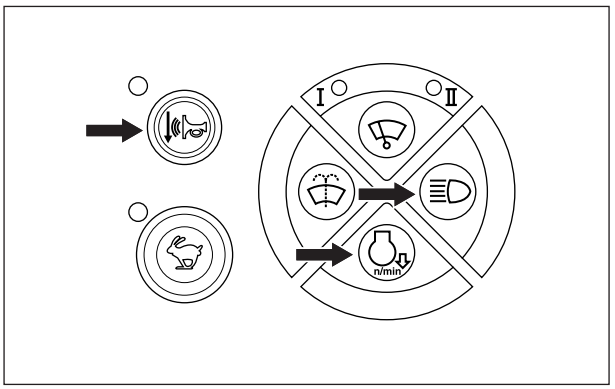

[3] After the end of pressure measurement, release the swing lock with the monitor.

Swing lock switching

In order to prevent accidental operation under certain special circumstances, sometimes the swing brake need to be left ON all the time.(Swing lock) At this time, you can switch the swing lock ON / OFF by holding down the "horn volume select switch", the "working light switch", and the "auto idle switch" at the same time for 2 seconds.When turning the key to ON, always start with the swing lock OFF.(Previous data reset)

https://truckmanualshub.com/

(4) Option Line Pressure Measurement

[1] Close the option line stop valve.

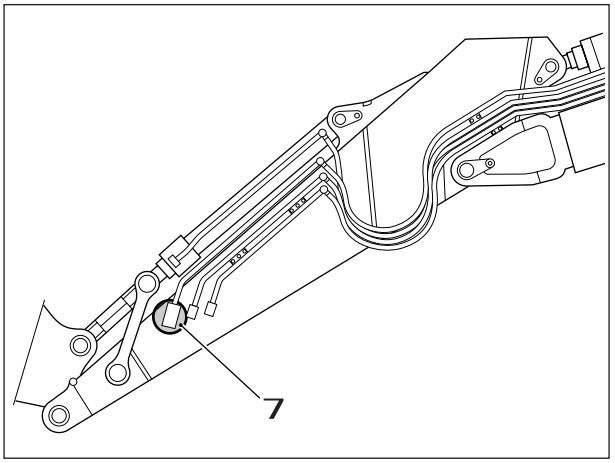

7	Stop valve

[2] With the option operation select switch in the cab, switch to the option line to measure.(Breaker, shuttle)

[3] Measure with the following operations.

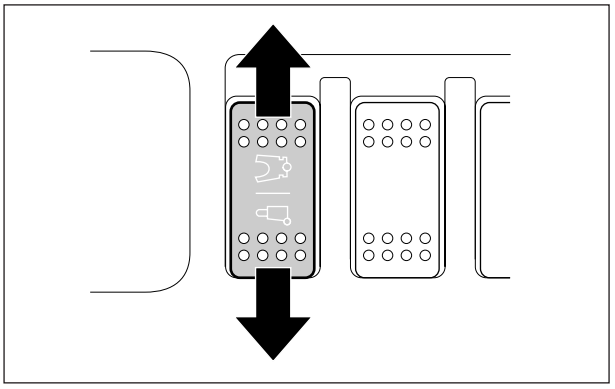

Engine speed	1800 min^{-1}
Work mode	SP mode
Pedal operation	Option relief
Oil temperature	113 to 131 ºF (45 to 55° C)
Measuring port	1st speed: P2 port
	2nd speed: P1 port
Set pressure	4264 PSI *(29.4 MPa)

*Adjust the set pressure to match the specifications of the attachment used.

Factory Pressure Settings

Breaker circuit: 4264 PSI (2.94 MPa)
Shuttle, combine (crusher) circuit: 2582 PSI (17.8 MPa)

https://truckmanualsnb.com/

2. Pilot Pressure Measurement

(1) Pressure gauge installation

Install a pressure gauge at the pump pressure measuring port. (Pressure port: P3)

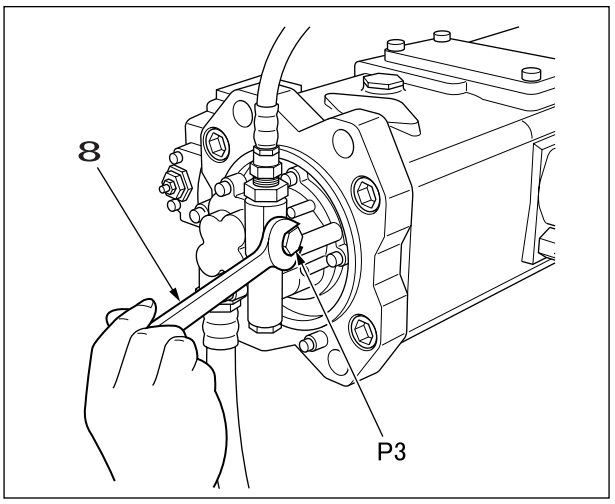

Install the adapter.

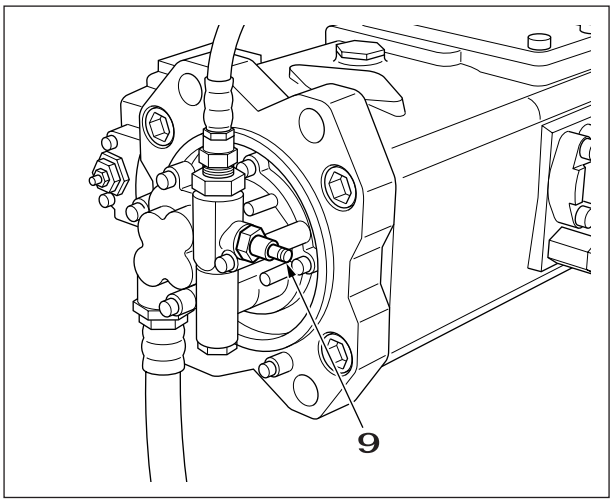

Install the pressure gauge and measure the pressure.

Engine speed	1800 min^{-1}
Work mode	SP mode
Oil temperature	113 to 131 ºF (45 to 55° C)
Measuring port	P3 port
Set pressure	566 PSI (3.9 MPa)

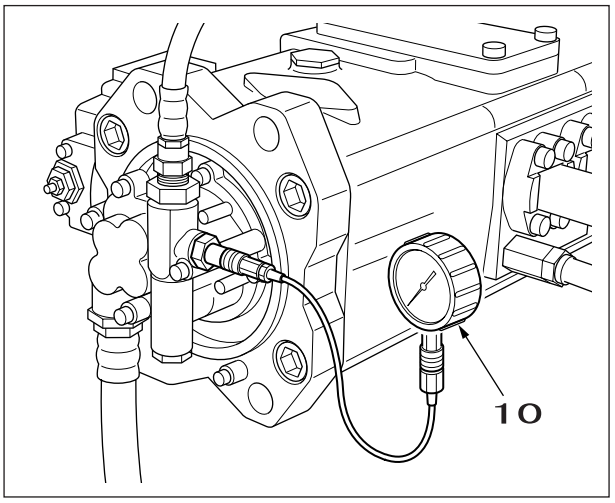

Pressure gauge for 1450 PSI (10 MPa)
Port size G1 / 4

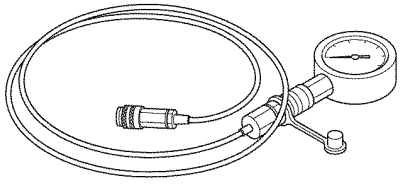

8	Spanner
9	Adapter
10	Pressure gauge

https://truckmanualshub.com/

3. Negative Control Pressure Measurement

(1) Pressure gauge installation

Remove the pump N1 or N2 pressure sensor. (The pressure sensor location becomes the measurement point.)

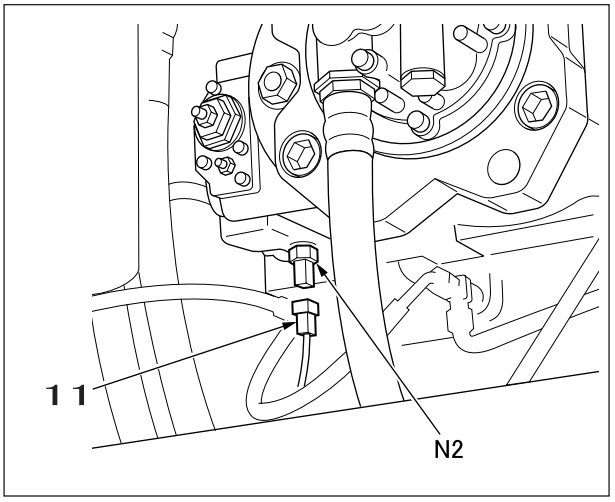

Install the pressure gauge at the port from which the N1 or N2 pressure sensor was removed.

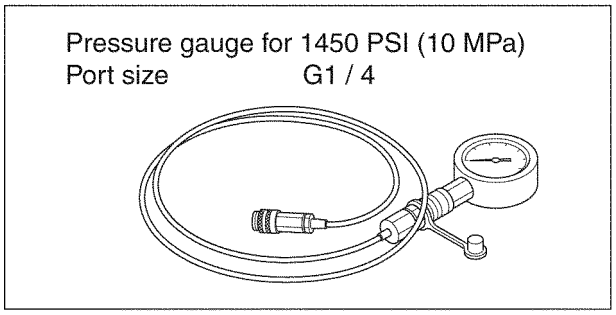

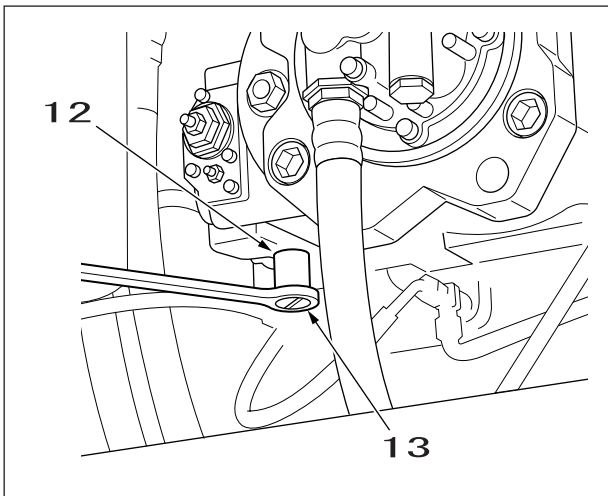

Measure the negative control pressure for each operation.

Engine speed	1800 min^{-1}
Work mode	SP mode
Oil temperature	113 to 131 ºF (45 to 55° C)
Measuring port	P1 port side: N1 port
	P2 port side: N2 port
Set pressure	566 PSI (3.9 MPa) max.

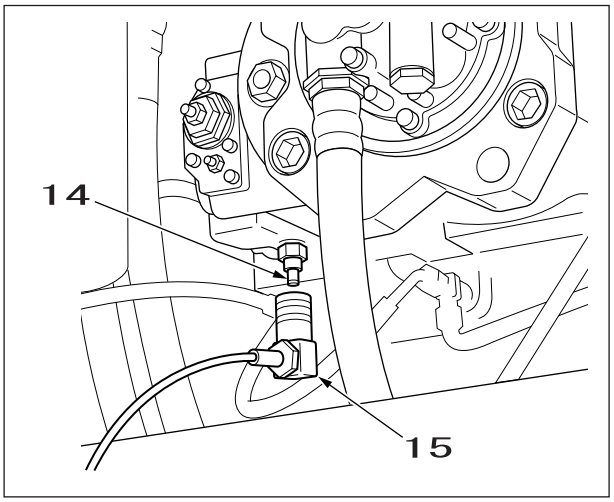

11	Pressure sensor
12	Plug
13	Ratchet
14	Plug
15	Pressure gauge

https://truckmanualsnb.com/

Pressure adjustment

1. Main Pressure Adjustment

Pressure measurement and adjustment preparation work

Pressure is adjusted with control valves.
The following preparations are required for adjusting with control valves.

[1] Engine hood opening and closing
Release the two engine hood lock levers.

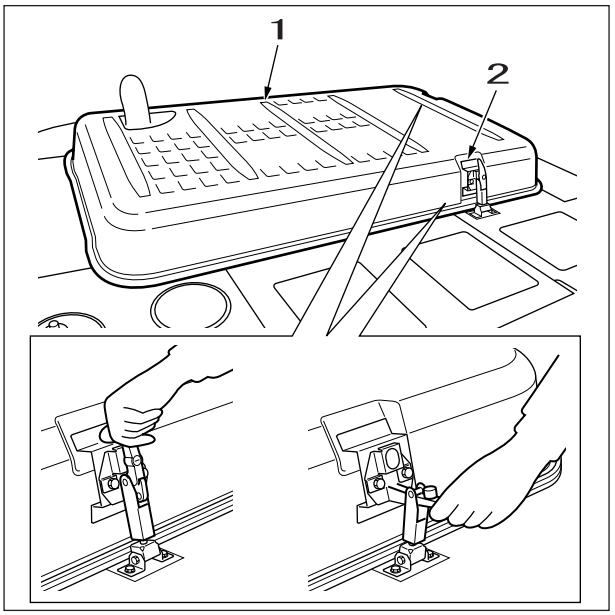

Open the engine hood.
Always check that the lock is locked.

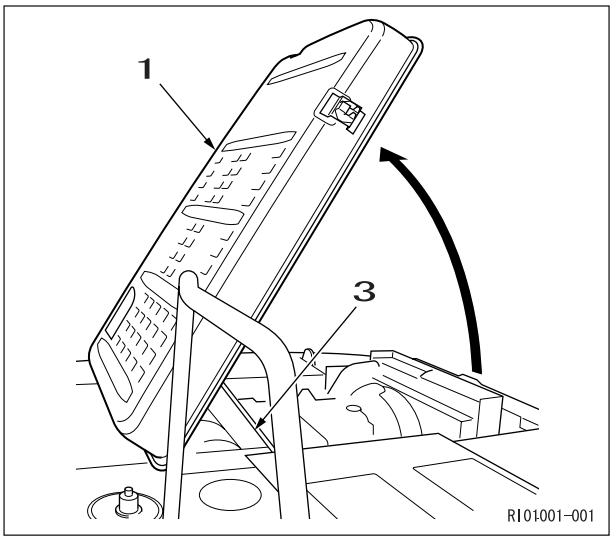

[2] Cover removal
Remove the five screws, then remove the cover.

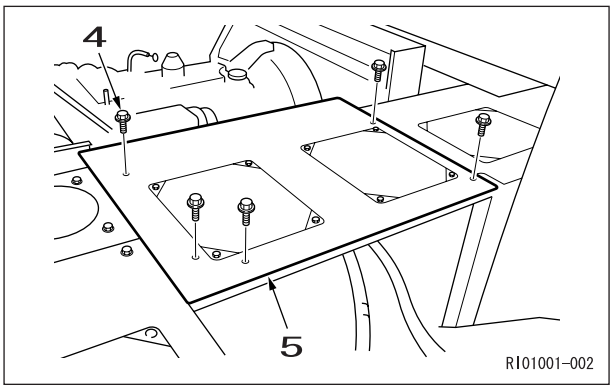

1	Engine hood
2	Lock lever
3	Lock
4	Screw
5	Cover

https://truckmanualshub.com/

(1) Main relief pressure adjustment

Engine speed	1800 min^{-1}
Work mode	SP mode
Lever operation	Arm-in relief
Oil temperature	113 to 131 ºF (45 to 55° C)
Measuring port	P1 port
Measurement pressure	Boost pressure: 5337 PSI (36.8 MPa)
	Standard: 4975 PSI (34.3 MPa)
Pressure per rotation of adjusting screw	Boost pressure:4119 PSI (28.4 MPa) / rotation
	Standard: 3089 PSI (21.3 MPa) / rotation

Before adjusting, remove the pilot hose for the boost pressure signal connected to the main relief valve, then plug the hose side. The procedures for boost pressure and standard pressure are different.

Boost pressure

a) Loosen the standard pressure lock nut (27 mm) and tighten the adjusting screw (27 mm).Fasten with a spanner (27 mm) so that the boost pressure adjusting screw does not turn.
b) After tightening until the adjusting screw stops turning, tighten the lock nut.
c) Start the engine and run it at maximum rotation.
d) Move the arm lever to the in side, set the relief state, and hold.
e) Loosen the boost pressure lock nut (32 mm) and adjust the set pressure with the adjusting screw (27 mm).
- When lower than the set pressure, tighten.
- When higher than the set pressure, first lower below the set pressure, then adjust on the tightening side.

f) After adjustment, fasten the adjusting screw with a spanner (27 mm), then tighten the lock nut.
g) After locking, check the boost pressure side pressure.
Repeat a) to f) until the set pressure is correctly adjusted.

Standard pressure

h) Loosen the standard pressure lock nut (27 mm).
i) Loosen the adjusting screw, lower below the set pressure, then adjust on the tightening side.
j) After adjustment, tighten the lock nut while fastening the adjusting screw with a spanner.
k) After locking, check the pressure.
Repeat h), i), and j) until the set pressure is correctly adjusted.
l) Stop the engine.

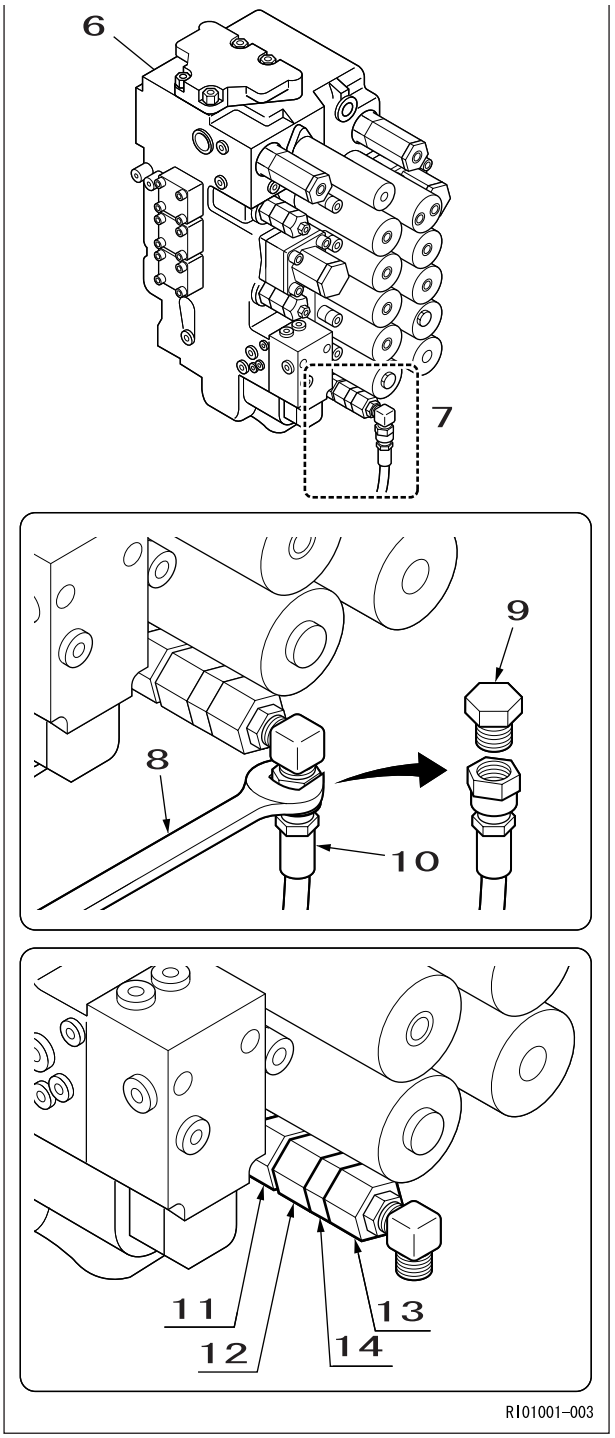

6	Control valve
7	Main relief valve
8	Spanner (19 mm)
9	Plug
10	Pilot hose for the boosted pressure signal
11	Boost pressure lock nut Spanner size (32 mm)
12	Boost pressure adjusting screw Spanner size (27 mm)
13	Standard pressure adjusting screw Spanner size (27 mm)
14	Standard pressure lock nut Spanner size (27 mm)

https://truckmanualsonline.com/

(2) Overload relief pressure adjustment

Engine speed	1800 min^{-1}
Work mode	SP mode
Oil temperature	113 to 131 ºF (45 to 55° C)
Measuring port	P1 / P2 port
Measurement pressure PSI (MPa)	Boom down: 4264 (29.4)
	Others: 5613 (38.7)
Pressure per rotation of adjusting screw PSI (MPa)	Boom down: 3075 (21.2) / rotation
	Others: 5613 (38.7) / rotation

Since the overload relief pressure is set higher than the main relief pressure, it is necessary to provisionally set the main relief pressure higher than the overload relief pressure.(Except for boom down)

Main Relief Pressure Provisional Setting

- Using the main pressure adjustment procedure for reference, temporarily set the boost pressure and standard pressure to at least 5613 PSI (8.7 MPa).
  *For boom down, since the overload set pressure is lower than the main relief set pressure, there is no need to temporarily set the main relief pressure.

Pressure adjustment

Example: Arm-in overload relief adjustment

[1] Loosen the lock nut and adjust by the turning the adjusting screw.
- When lower than the set pressure, tighten.
- When higher than the set pressure, first loosen to a pressure lower than the set pressure, then adjust on the tightening side.

[2] After adjustment, lock the lock nut.

[3] After adjusting the overload relief pressure, adjust the boost pressure and standard pressure to their normal values referencing the main pressure adjustment procedure.

* For the position of each overload relief, see the "Control Valve Relief Locations".

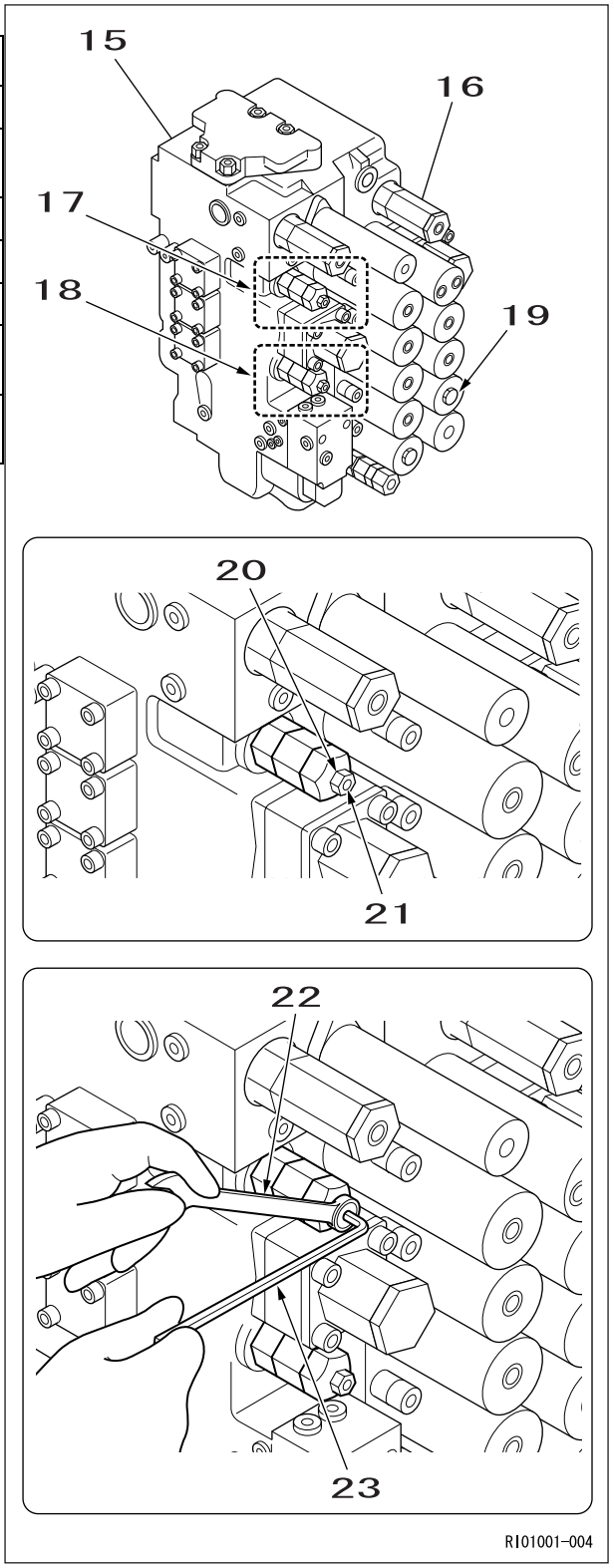

15	Control valve
16	Overload relief
17	Boom-up
18	Arm-in
19	Bucket open
20	Spanner 17 mm
21	Adjusting screw 6 mm
22	Lock nut 17 mm
23	Hexagon wrench 6 mm

https://truckmanualshub.com/

(3) Swing relief pressure adjustment (SH240-5)

Engine speed	1800 min^{-1}
Work mode	SP mode
Oil temperature	113 to 131 ºF (45 to 55° C)
Measuring port	P1 port
Measurement pressure	4264 PSI (29.4 MPa)
Pressure per rotation of adjusting screw	1682 PSI (11.6 MPa) / rotation

Swing pressure

[1] Using the swing pressure measurement procedure for reference, lock the swing, and check the swing pressure.

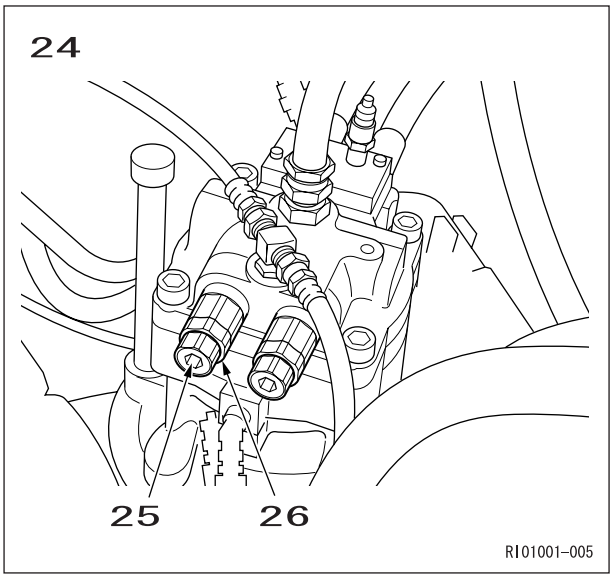

[2] Loosen the lock nut and adjust by the turning the adjusting screw.
- When lower than the set pressure, tighten.
- When higher than the set pressure, first loosen to a pressure lower than the set pressure, then adjust on the tightening side.

[3] After adjustment, lock the lock nut.

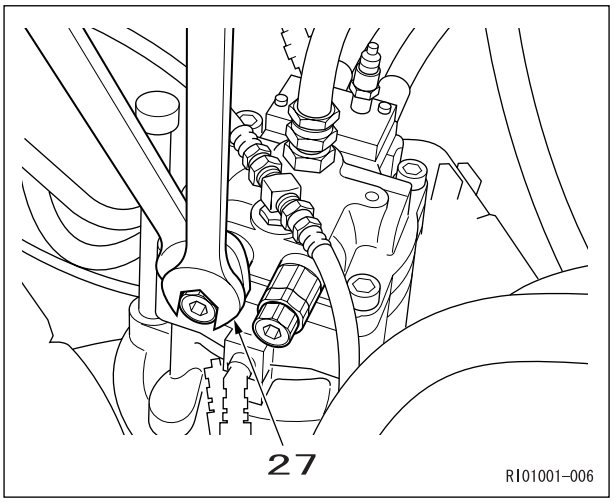

2. Pilot Pressure Adjustment

(1) Pressure measurement

a) Install the pressure gauge.

b) While holding the plug with a spanner (24 mm), adjust with a hexagon wrench (6 mm).

Engine speed	1800 min^{-1}
Lever operation	Neutral
Measuring port	P3
Set pressure	566 PSI (3.9 MPa)

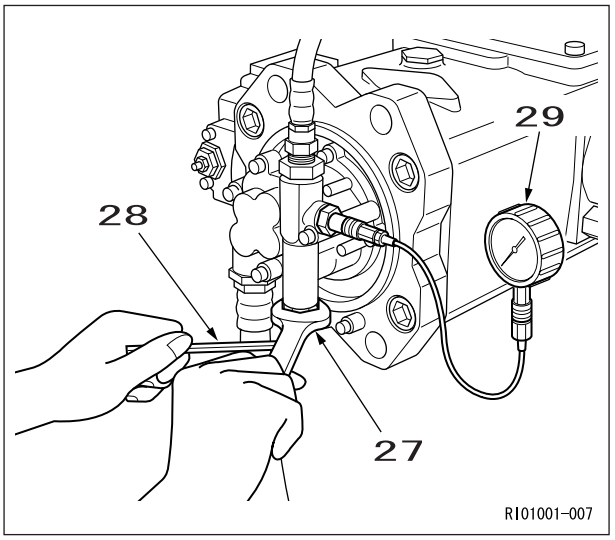

24	Swing relief
25	Adjusting screw Spanner size (24 mm)
26	Lock nut Spanner size (32 mm)
27	Spanner
28	Hexagon wrench
29	Pressure gauge

https://truckmanualshub.com/

Preparations

Workers 3 Role (Worker 1: Work supervisor, pressure adjustment)
Role (Worker 2: Operator)
Role (Worker 3: Flow, pressure measurement, recording)

1. Items to Prepare

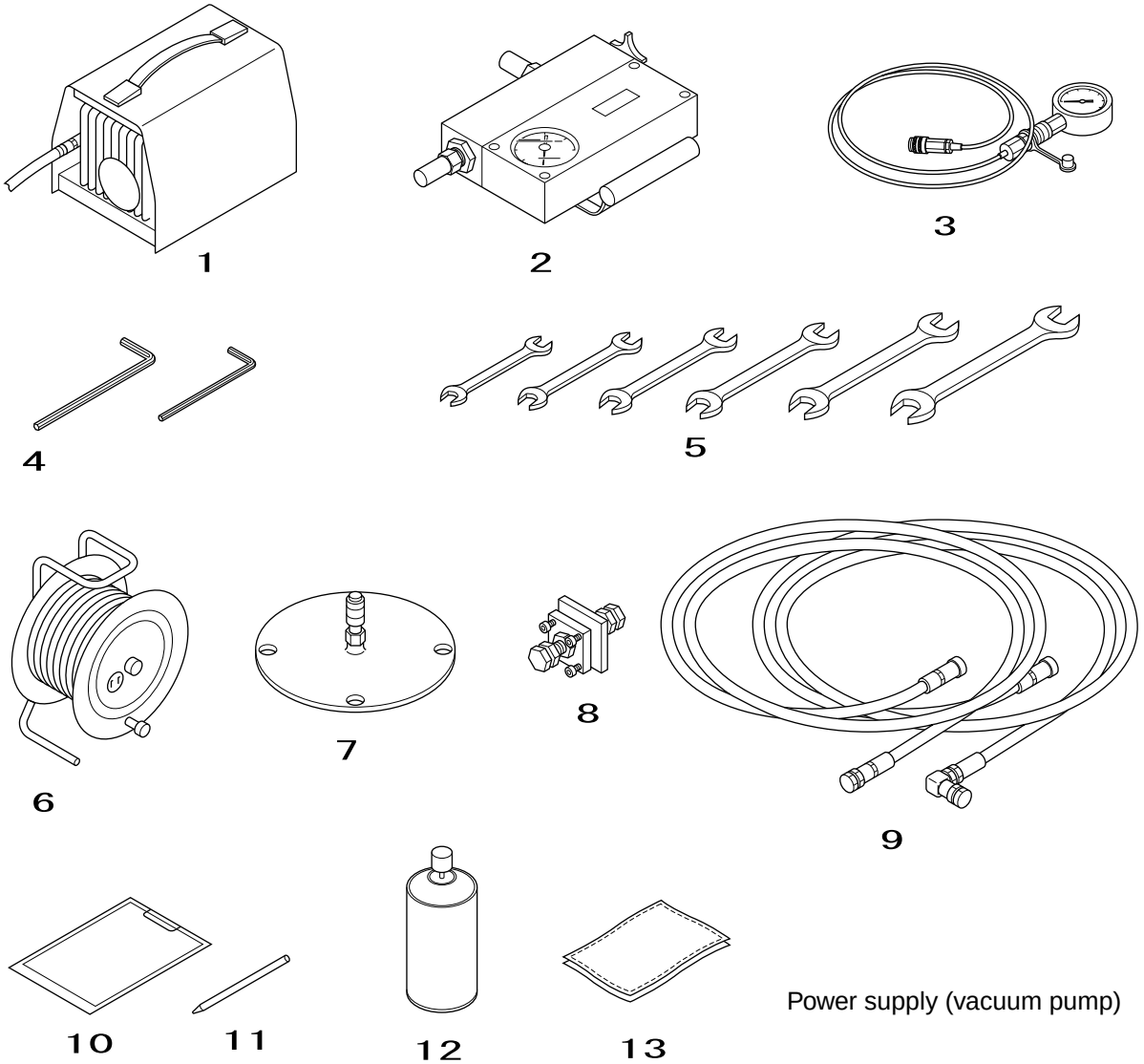

Power supply (vacuum pump)

1	Vacuum pump	8	Adapter (flange type)
2	Flow meter	9	Hydraulic hose (for flow measurement)
3	Pressure gauge 8702 PSI (60 MPa X 2)	10	Recording sheet
4	Hexagon wrench (8 mm, 6 mm)	11	Pen
5	Spanners (17, 19, 24, 27 X 2, 32, 36 X 2)	12	Cleaning fluid
6	Extension cord	13	Rags
7	Hydraulic oil tank lid (for vacuum pump)		

https://excavatorhub.com/

Work preparations

[1] Check that the main unit is in its work posture (arm-vertical).

[2] Bleed out the pressure.(See the details on Bleeding Pressure in the Pressure Measurement and Adjustment Procedures.)
* Check the swing stop.

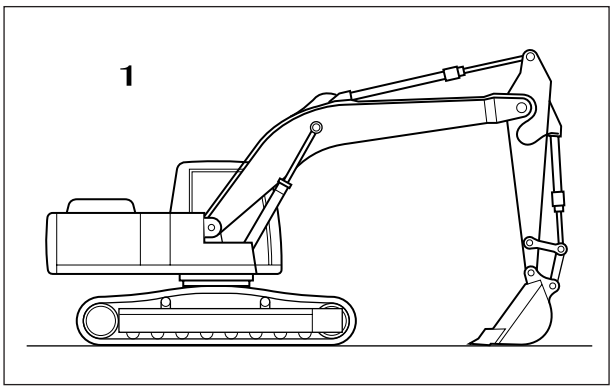

[3] Use a spanner (17 mm) to remove the feed port cover.

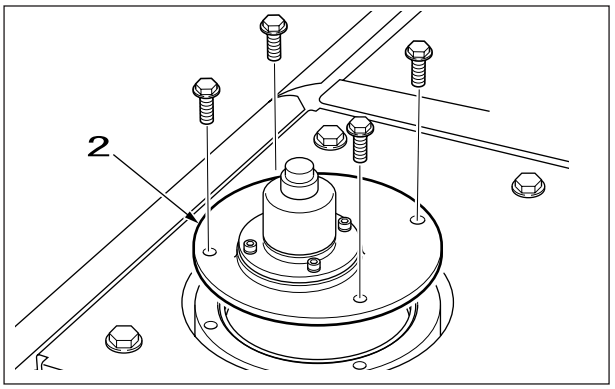

[4] Use the bolts removed in [3] to install the hydraulic oil tank lid.

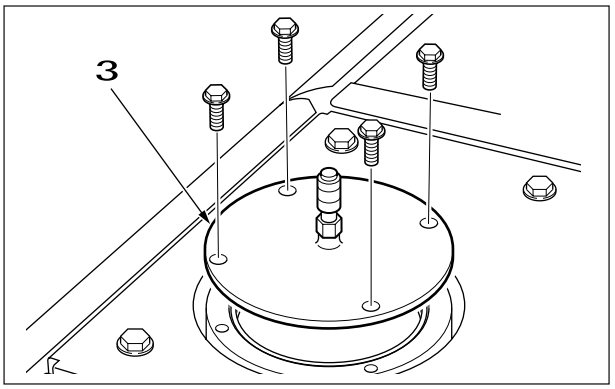

[5] Install the vacuum pump on the hydraulic oil tank lid.

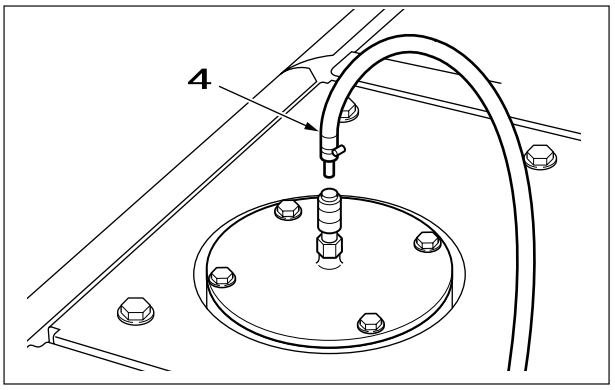

1	Arm-vertical
2	Feed port cover
3	Hydraulic oil tank lid (for vacuum pump)
4	Vacuum pump

https://truckmanualshub.com/

[6] After setting the vacuum pump as in the figure on the right, switch on the power.
(If the cable is too short, use an extension cable.)

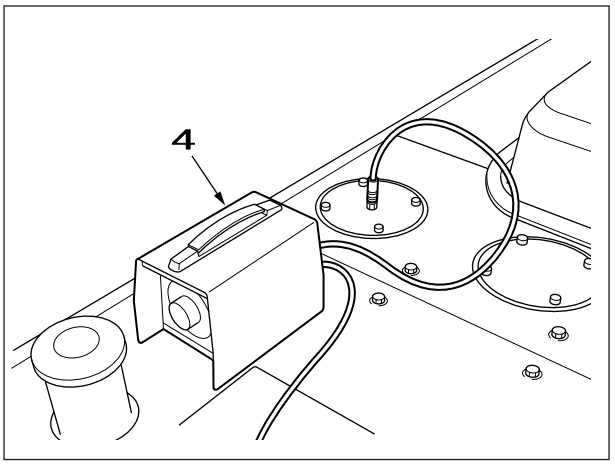

[7] Use a hexagon wrench (8 mm) to remove the split flange and hydraulic hose.
(This explanation uses flow measurement at the P2 pump.)

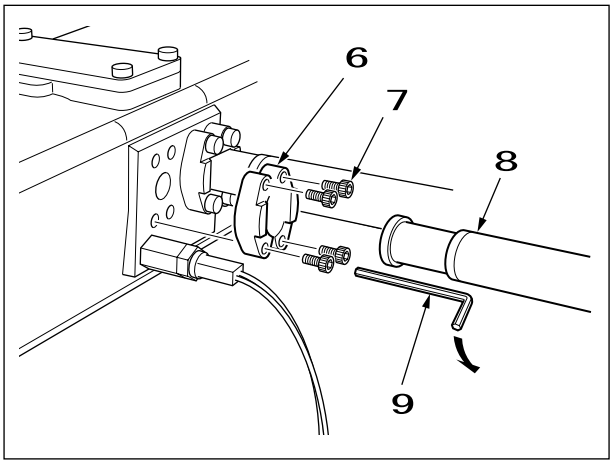

4	Vacuum pump
6	Split flange
7	Bolt
8	Hydraulic hose
9	Hexagon wrench

https://truckmanualshub.com/

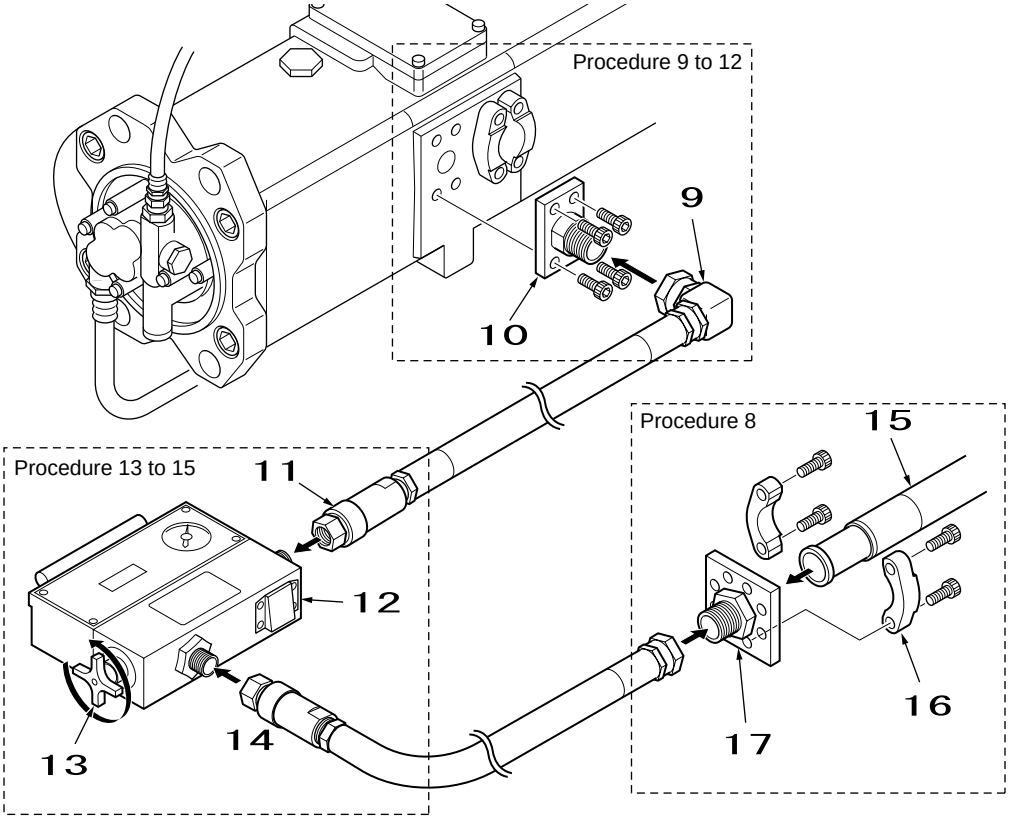

9	Elbow adaptor	14	Hydraulic hose (OUT)
10	Adapter	15	Hydraulic hose
11	Hydraulic hose (IN)	16	Split flange
12	Flow meter	17	Adapter (flange type)
13	Metering valve		

[8] Use the split flange to install the adaptor (flange type) on the tip of the hydraulic hose removed in [7].

[9] Install the adaptor at the position from which the hydraulic hose was removed.

[10] When the parts are set as in the figure above, remove the plug.

[11] Use the spanner to connect the adaptor installed on the pump in [9].

[12] If necessary, install an "elbow adaptor" on the (prepared) hydraulic hose connected to the flow meter IN side.

[13] Install the hydraulic hose on the flow meter IN side, then fasten with the spanner.

[14] Install the (prepared) hydraulic hose on the flow meter OUT side, then fasten with the spanner.
* When connecting, always check the connection positions.
* Always have the metering valve fully open.

[15] Install pressure gauges on P1 and P2.
(See "Main Pressure Measurement").

[16] Remove the vacuum pump and re-install the hydraulic oil tank the same way it was.

[17] Open the engine hood.
(See "Main Pressure Adjustment").

[18] Remove the cover.

[19] Remove the pilot hose for the boost pressure signal, then plug the hose side.
(See "Main Relief Pressure Adjustment").

This completes the preparation for flow measurement.

https://truckmanualshub.com/

Flow measurement

[1] Measure the flow.
When measuring the flow, position the workers as in the figure on the left.
(Worker 1: Work supervisor, pressure adjustment)
(Worker 2: Operator)
(Worker 3: Flow, pressure measurement, recording)

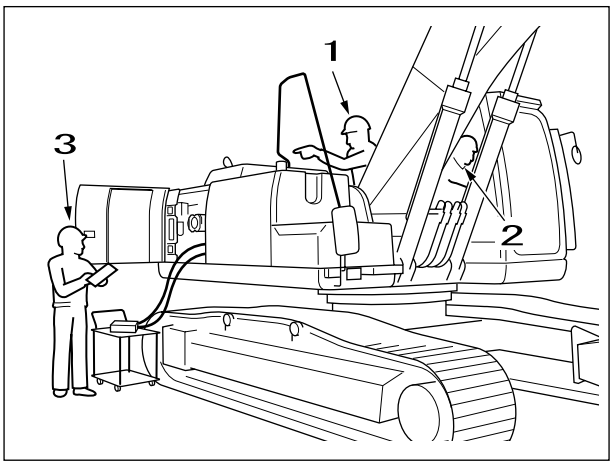

[2] At the signal from the work supervisor, the operator starts the engine.

[3] Check the hydraulic oil temperature on the monitor. 122 ºF (50 °C)
Check that the engine rotation and pump current are normal.

[4] The operator signals the arm-out relief operation to worker 1.

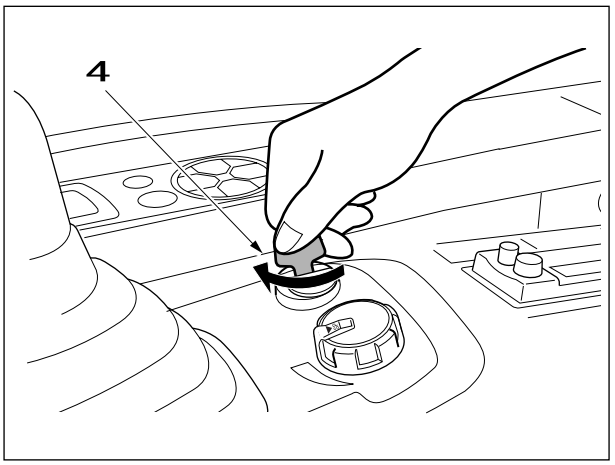

[5] Worker 2 lowers the arm-out port relief.
(Min: 3481 PSI (24 MPa) P1 + P2)

[6] Start of flow measurement

[7] The arm-out relief operation is carried out.

[8] Data measured in units of 290 PSI (2.0 MPa) (P1 + P2)
* The measurement is carried out from 3480 PSI to 11023 PSI (24.0 to 76.0 MPa) and ends when the maximum pressure is reached.

[9] Remove the flow meters.
* Because from 5802 PSI (40 MPa) the pressure exceeds the permitted value for the flow meter pressure gauge maximum pressure

[10] Reset the arm-in port relief valve to normal pressure.
(For details on this adjustment, see "PRESSURE ADJUSTMENT".)

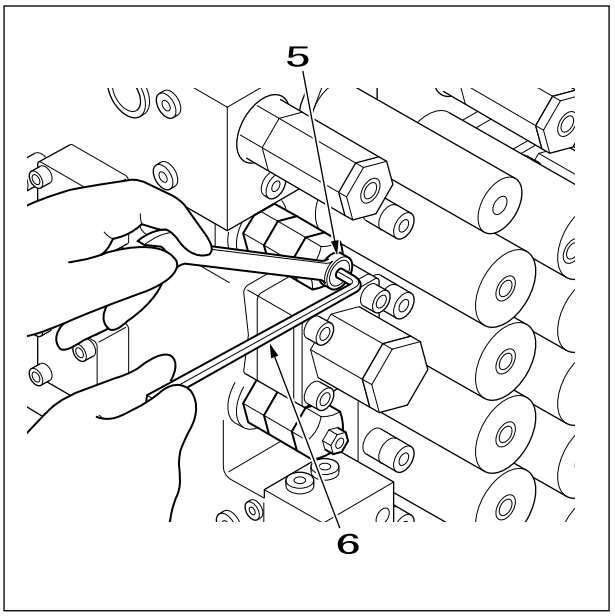

[11] Remove the pressure gauges etc. and put everything back to normal. This completes the work.

1	Worker 1
2	Worker 2
3	Worker 3
4	Ignition key
5	Lock nut 17 mm
6	Hexagon wrench 6 mm

https://truckmanualshub.com/

Preparations

Measuring conditions

Engine speed	1800 min^{-1}
Mode	SP mode
Oil temperature	About 122 º F (50 ° C)

* Be careful. The drain volume varies greatly with the oil temperature.

Travel motor drain volume measurement

[1] Ground the arm as in the figure on the right, then make the shoe crawler on one side float.

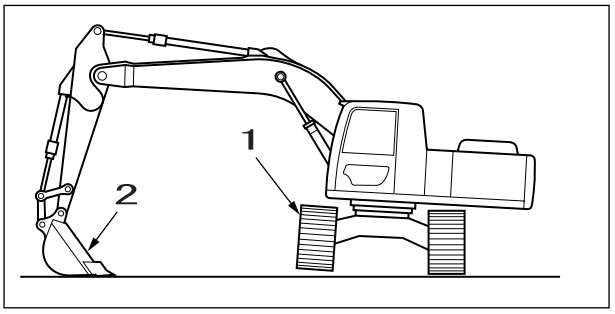

[2] Remove the bolts, then remove the cover.

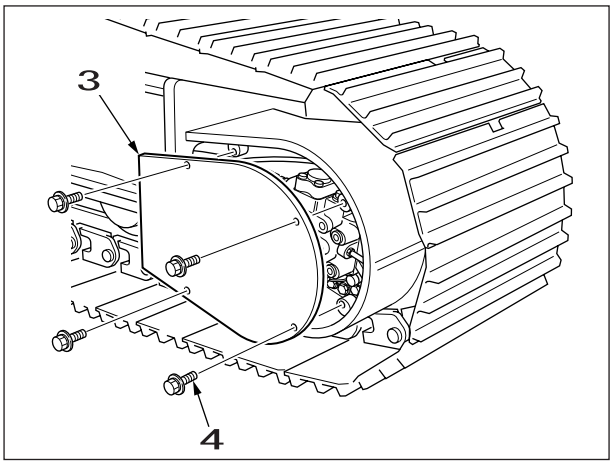

[3] Always lay a rag underneath before removing the drain hose.

[4] Use a spanner to remove the drain hose. (Always install a cap on the drain hose.)

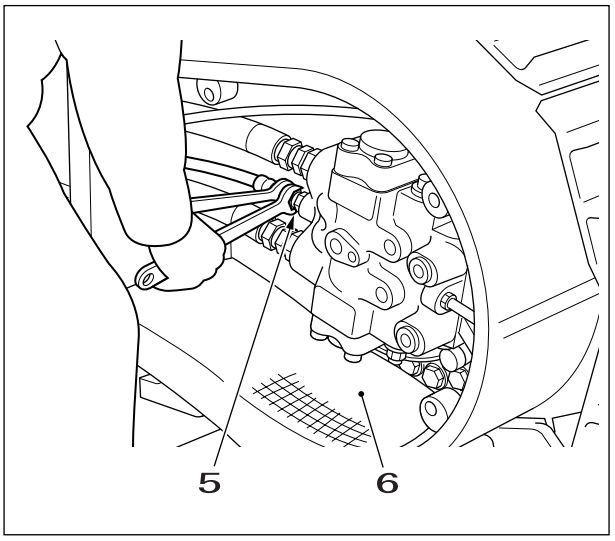

1	Shoe crawler
2	Arm
3	Cover
4	Bolt
5	Drain hose
6	Rags

https://truckmanualshub.com/

[5] Install the extension hose for measurement on the side of the motor from which the drain hose was removed.

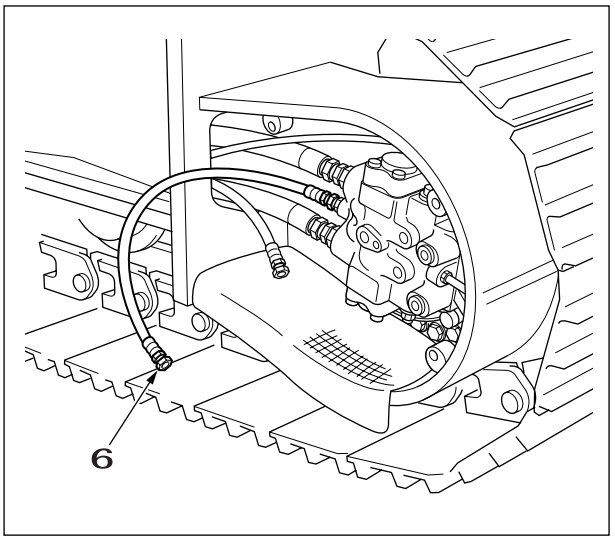

[6] Prepare a waste oil receiver and measuring container and set them as in the figure on the right.

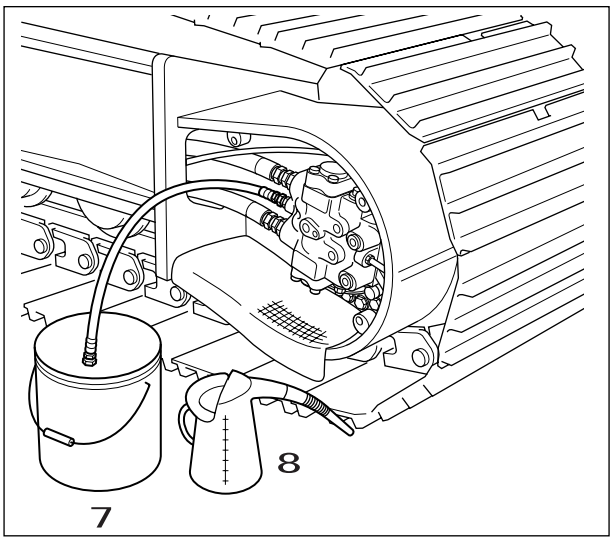

[7] Catch the stopper between the sprocket section and the frame and lock the travel motor.

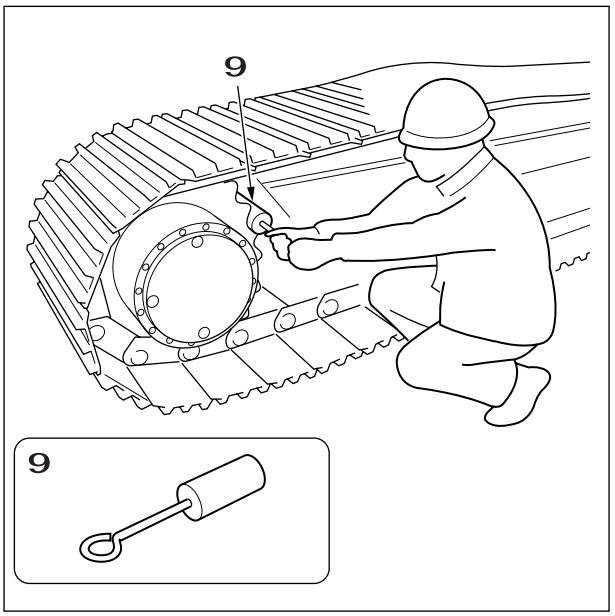

6	Extension hose for measurement
7	Waste oil receiver
8	Measuring container
9	Stopper

https://truckmanualshub.com/

[8] In SP mode at medium speed, relieve the travel operation and at the same time the motor starts, move the extension hose to the measuring container.
(When the motor starts, start measurement with a stop watch.)

[9] After 30 seconds, move the extension hose to the waste oil can.

[10] Measure the volume of oil in the measuring container as the drain volume for 30 seconds.

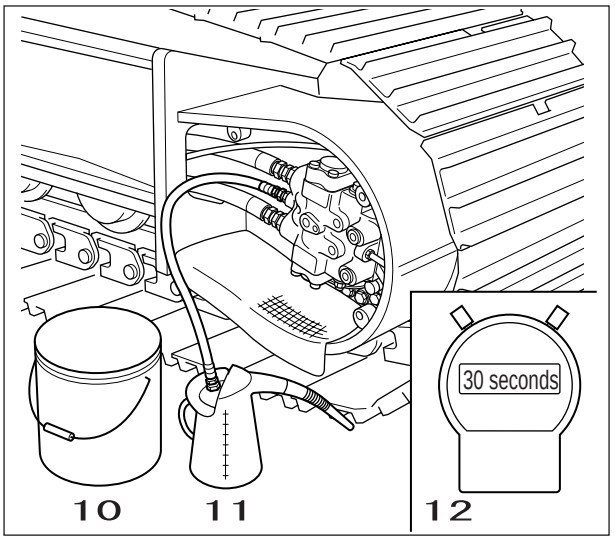

	Advance		Retreat	
	1st speed	2nd speed	1st speed	2nd speed
Right				
Left				

* Measure at least three times each for left, right, advance, and retreat.

10	Bucket
11	Measuring cup
12	Stop watch

https://truckmanualshub.com/

Swing motor drain volume measurement

[1] Remove the two drain hoses and put blind plugs in the hose side of each.
(Spanner size: 27 mm, clamp 22 mm (hose side))

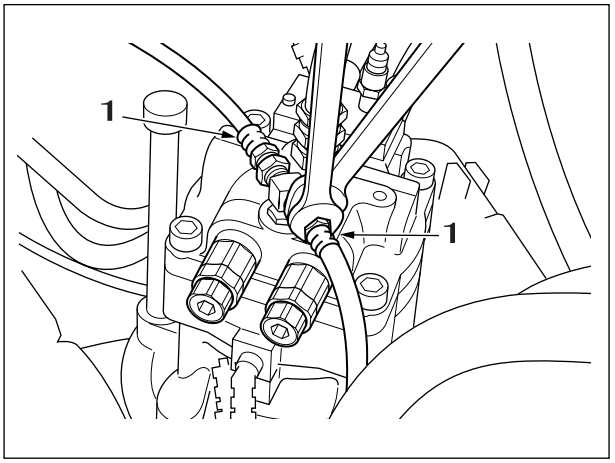

[2] Install the extension hose for measuring the drain volume on one side of the T nipple.Install the hose facing in a direction that makes measurement easy and install a blind plug on the other side.

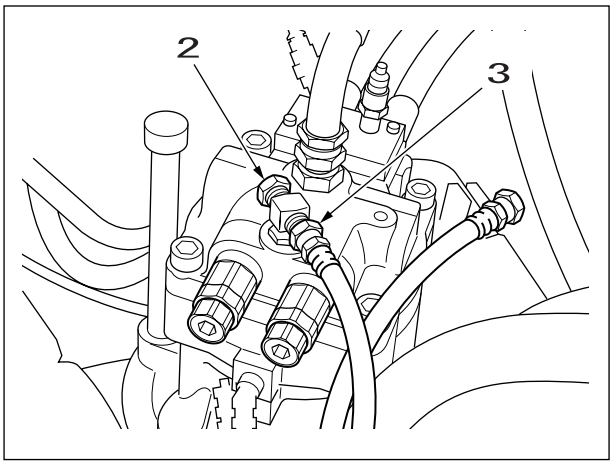

[3] Prepare a waste oil receiver and measuring container and set them as in the figure on the right.
For details on the method for locking the swing motor, see "Swing Relief Pressure Adjustment (240-2)".

[4] In SP mode, relieve the swing operation and at the same time the motor starts, move the extension hose to the measuring container.
(When the motor starts, start measurement with a stop watch.)

[5] After 60 seconds, move the extension hose to the waste oil receiver.

[6] Measure the volume of oil in the measuring container as the drain volume for 60 seconds.
Measure at least three times each for left and right.

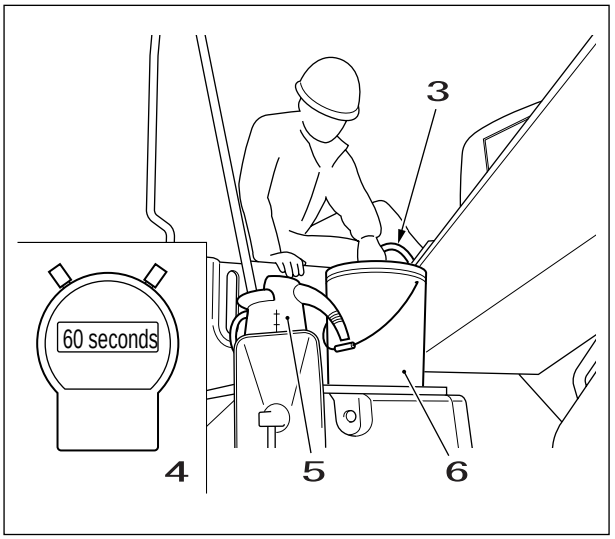

Right	Left

1	Drain hose
2	Blind plug
3	Extension hose
4	Stop watch
5	Measuring cup
6	Bucket

Caution	Always bleed off any air in the hydraulic circuits after replacing the hydraulic oil, repairing or replacing hydraulic equipment, or removing hydraulic pipes.

	Air bleed procedure mode (when bleeding, follow the procedure below.)				
	Hydraulic pump air bleeding	Cylinder air bleeding	Swing motor air bleeding	Travel motor air bleeding	Check
Hydraulic oil or hydraulic pump replacement	○ →	○ →	○	→	○
Cylinder replacement		○	→	→	○
Swing motor replacement			○	→	○
Swing motor replacement				○ →	○

* Failure to completely bleed off all the air can reduce the service life of hydraulic equipment and lead to damage.

Hydraulic pump

[1] Loosen the air bleed plug and check that oil oozes from the air bleed port.

[2] If oil does not ooze out, remove the air bleed plug, and fill hydraulic oil from the air bleed port into the pump case.

[3] Temporarily tighten the air bleed plug.

[4] Run the engine at low idle, slightly loosen the air bleed port, and run until oil oozes from the air bleed port section.

[5] Completely tighten the air bleed plug.

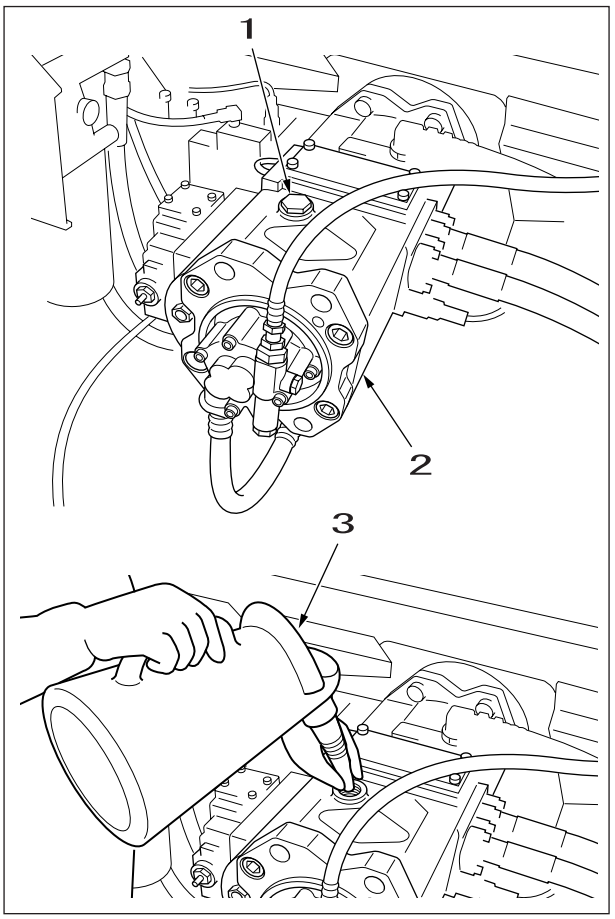

1	Air bleed plug
2	Pump
3	Hydraulic oil

Travel motor

[1] Remove the bolt , then remove the cover.

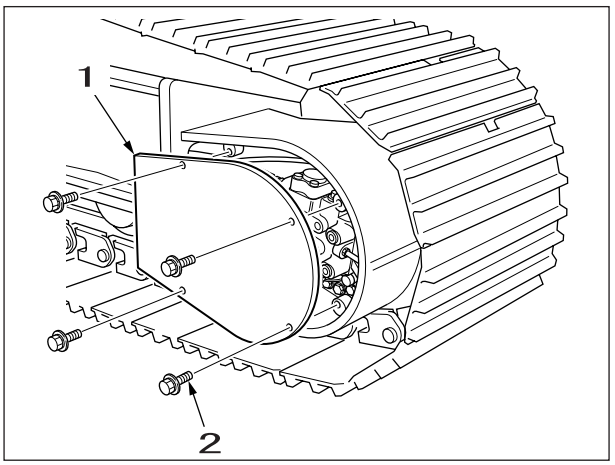

[2] Use a hexagon wrench (6 mm) to remove the air bleed plug as in the figure on the left.

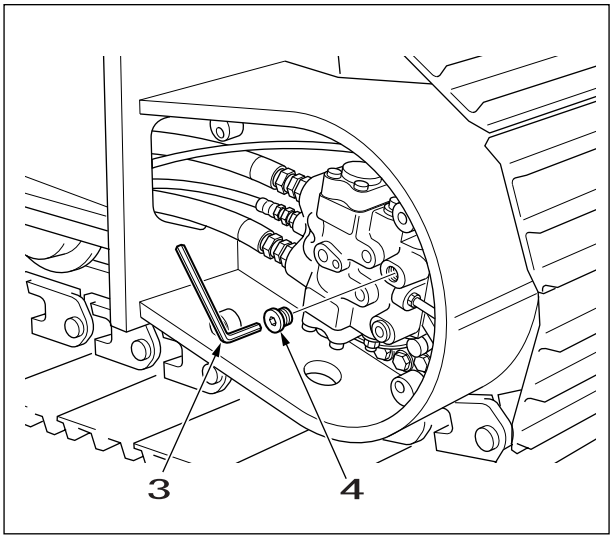

[3] Pour in about 500 cc of hydraulic oil from the air bleed port.

[4] When inside the motor is filled with hydraulic oil, tighten the air bleed plug.

[5] Start the engine and execute a slow travel operation.

[6] Repeatedly travelling forward and back bleeds off the air.

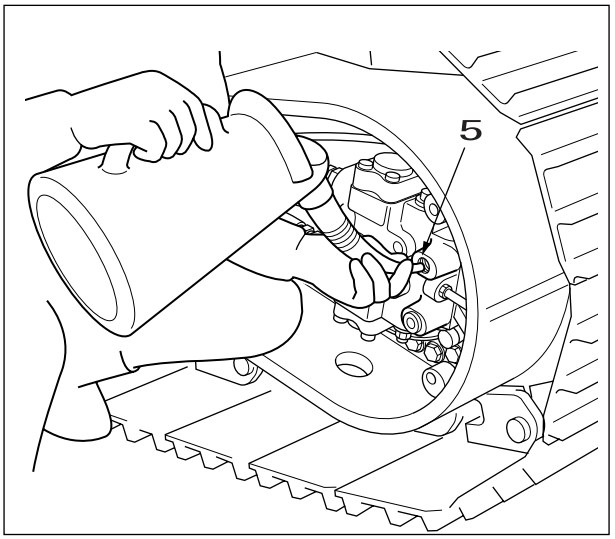

1	Cover
2	Bolt
3	Hexagon wrench
4	Air bleed plug
5	Hydraulic oil

Swing motor

[1] Run the engine at low idle, loosen the air bleed plug, and check that oil oozes from the air bleed port section.
* Do not execute a swing operation.

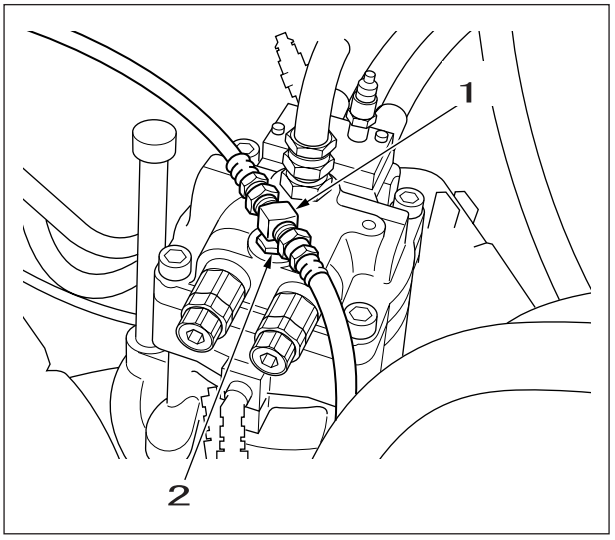

[2] If oil does not ooze out, stop the engine for now, remove the air bleed plug, and fill hydraulic oil into the motor case.

[3] Temporarily tighten the air bleed plug.

[4] Run the engine at low idle, slightly loosen the air bleed port section, and run until oil oozes from the air bleed port section.

[5] Completely tighten the air bleed plug.

[6] With the engine at low idle, slowly swing evenly left and right at least two rotations.

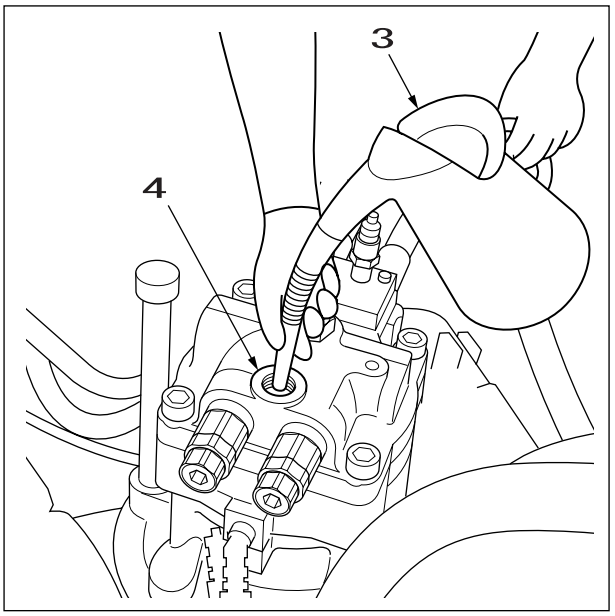

Check

After the air bleeding is complete, stop the engine for at least five minutes to allow any air bubbles in the hydraulic oil tank to dissipate.

1	Drain hose
2	Air bleed plug
3	Hydraulic oil
4	Air bleed port section

HBCV

Caution	The HBCV air bleeding work requires two workers: an operator and an air bleed worker. Decide your signals beforehand and work safely. Set the main unit so that the arm HBCV is at the highest position.(See the figure below.)

1. Boom Cylinder HBCV

   [1] Start the engine and lower the boom without jacking up the main unit.

   [2] In the above state, loosen the hose mouthpiece at the position in the figure.

   [3] Foaming hydraulic oil comes out from the hose coupling section.
   When foaming hydraulic oil stops coming out, tighten the hose mouthpiece .

   [4] Execute Steps [2] and [3] for the opposite side boom cylinder too.

   [5] Check boom operations. If there is a delay in the operation response, bleed the air again with the same procedure.

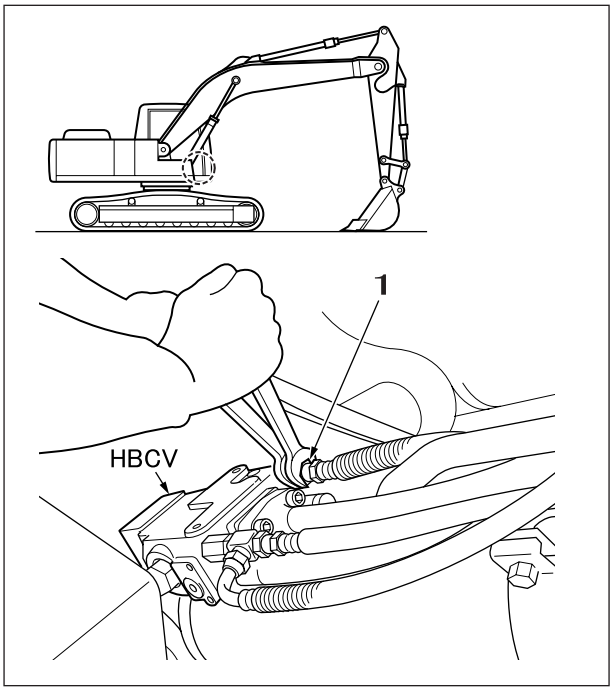

2. Arm Cylinder HBCV

   For arm-in operations, bleed the air from the arm cylinder HBCV using the same procedure as for boom cylinder HBCV air bleeding.

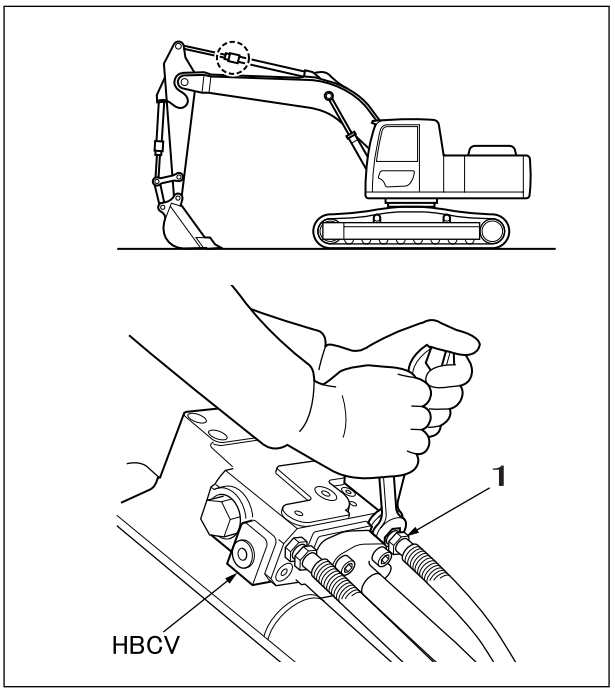

1	Hose coupring

https://truckmanualshub.com/

Air conditioner belt, fan belt replacement

If the belt is loose, battery charging defects, engine overheating, and rapid belt wear occur.

1. Air Conditioner Belt Replacement

[1] Use a box wrench (19 mm) to remove the bolts, then remove the bottom cover .

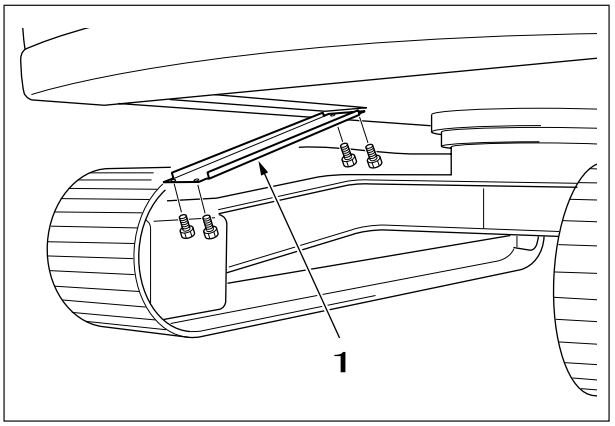

[2] The air conditioner belt is at the position in the figure on the right.

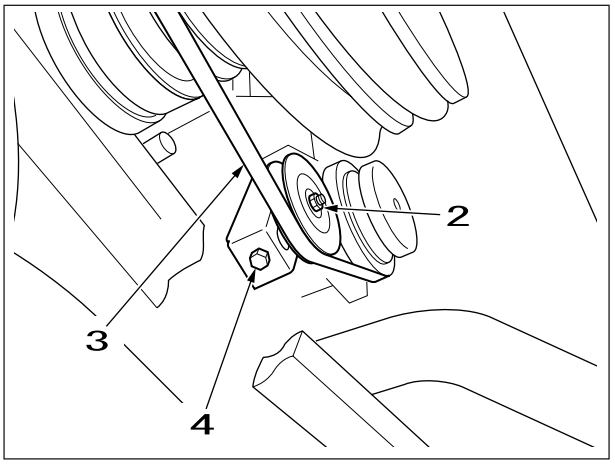

[3] Use a box wrench (14 mm) to remove the nut.

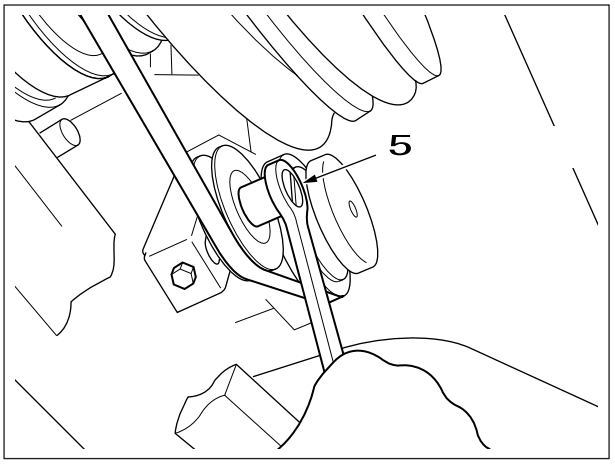

1	Cover
2	Nut
3	Air conditioner belt
4	Tension bolt
5	Box wrench

https://truckmanualshub.com/

[4] Use a box wrench (14 mm) to remove the tension bolt.

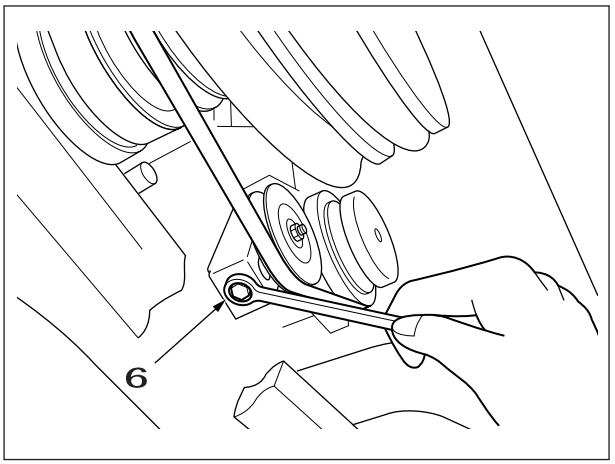

[5] Remove the air conditioner belt from the tension pulley and replace it.

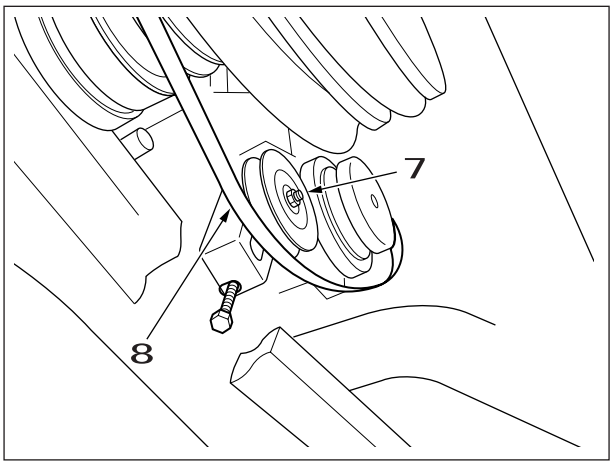

Tension adjustment

After replacing the air conditioner belt, it is necessary to adjust the belt tension.

[1] Use a box wrench (14 mm) to tighten the tension bolt.

[2] Adjust the belt so that when you press the center section of the belt with a finger, it deflects about 1 cm.
(See the figure on the right.)

[3] Securely fasten the nut .

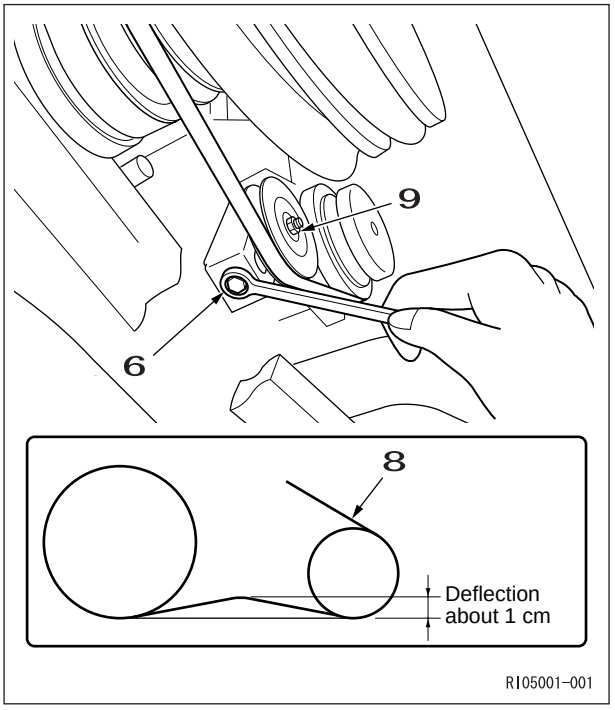

6	Box wrench
7	Tension pulley
8	Air conditioner belt
9	Nut

https://truckmanualshub.com/

2. Fan Belt Replacement

[1] Remove the air conditioner belt.
(See "Air Conditioner Belt Replacement".)

[2] Use a spanner (14 mm) to remove the bolt .

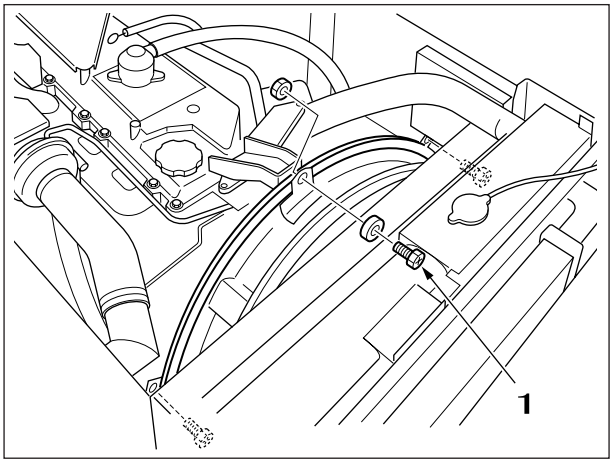

[3] Use a spanner (14 mm) to remove the bolt .

[4] Remove the bracket.

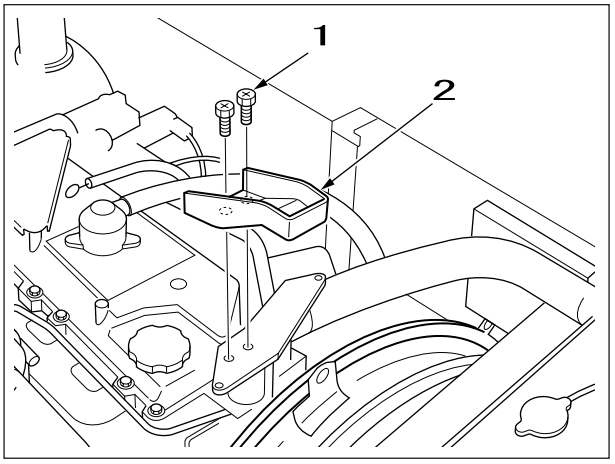

[5] Remove the fan guard .

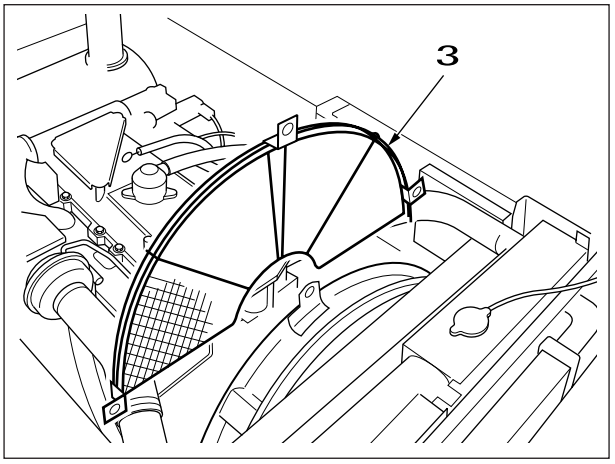

1	Bolt
2	Bracket
3	Fan guard

https://truckmanualshub.com/

[6] Use a box wrench (17 mm) to loosen the installation bolts, then free the alternator adjuster plate.

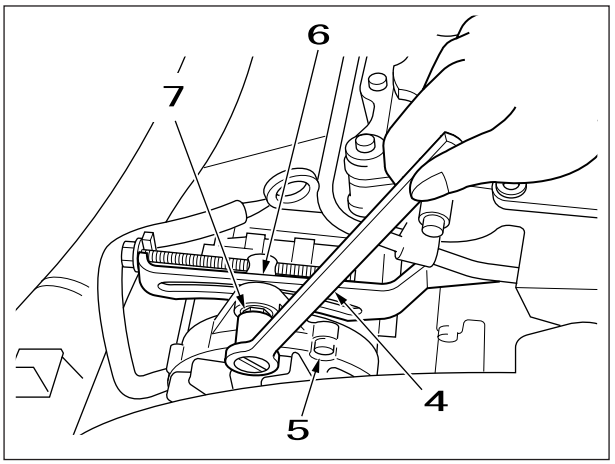

[7] Use a box wrench (17 mm) to loosen the alternator tension bolt .

[8] Remove the fan belt from the alternator.

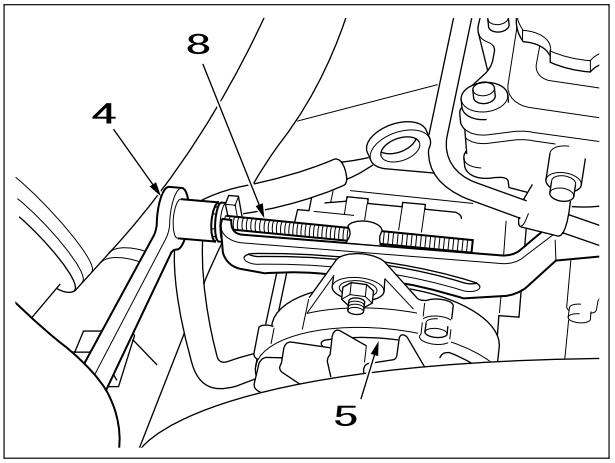

[9] While slowly turning the fan , pass the fan belt over the five one at a time and remove it.

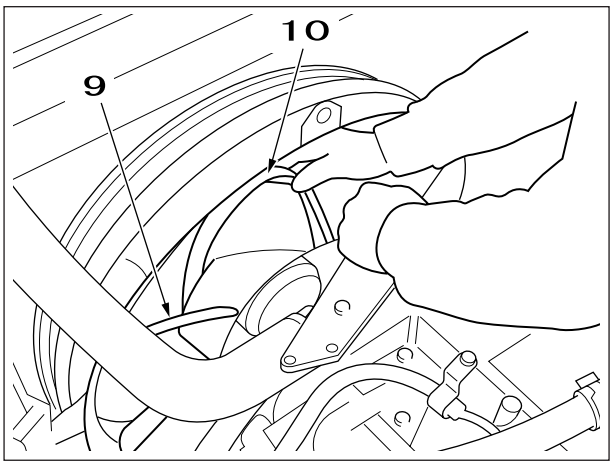

4	Box wrench
5	Alternator
6	Adjuster plate
7	Nut
8	Tension bolt
9	Fan
10	Fan belt

https://truckmanualshub.com/

Tension adjustment

After replacing the fan belt, it is necessary to adjust the belt tension.

[1] Use a box wrench (17 mm) to loosen the alternator tension bolt.

[2] Adjust the belt so that when you press the center section of the belt with a finger, it deflects about 0.39 in. (1 cm).

[3] Securely fasten the nut.

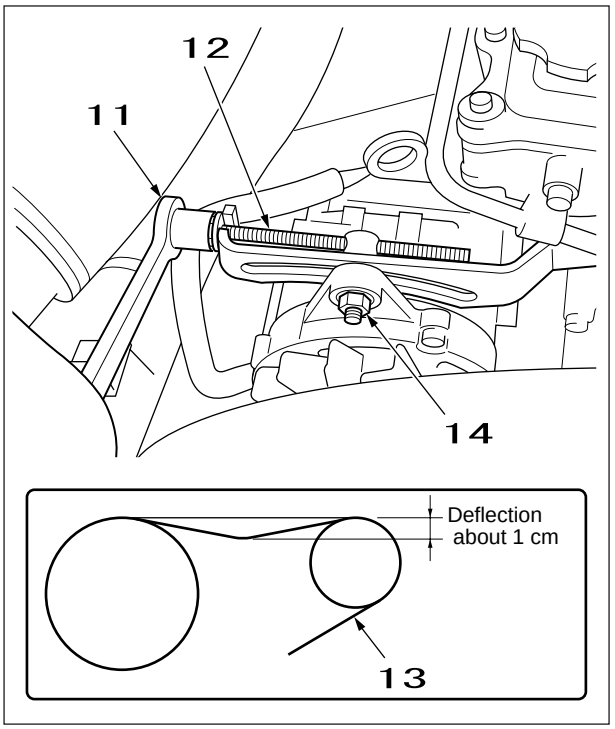

11	Box wrench
12	Tension bolt
13	Fan belt
14	Nut

https://truckmanualshub.com/

Fuel filter replacement

1. Filter Replacement

When replacing the fuel filter, always bleed the air.

[1] Close stop valve on the fuel line.

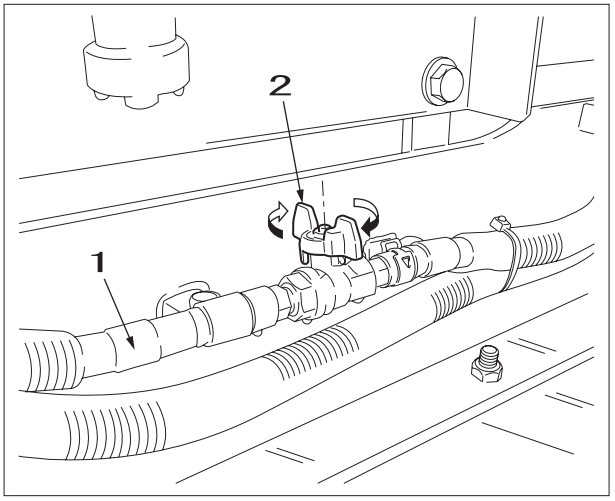

[2] Use a spanner (10 mm) to loosen the air bleed plug.

[3] Loosen the cap at the bottom and drain out any remaining fuel.
* Put a waste oil case underneath.

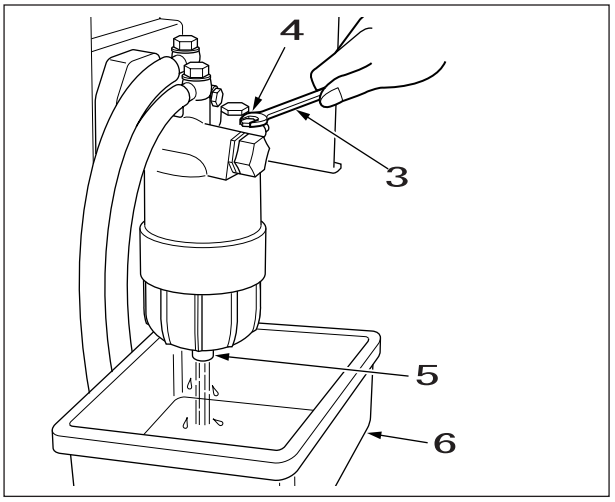

[4] Remove the filter cover with the special filter wrench.

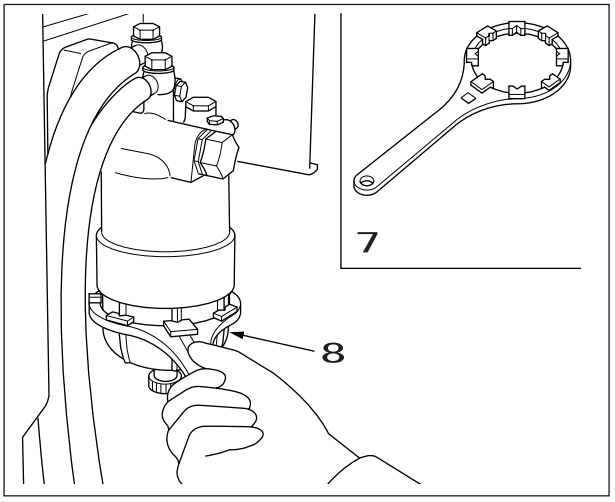

1	Fuel line	5	Cap
2	Stop valve (close)	6	Waste oil case
3	Spanner	7	Special filter wrench
4	Air bleed plug	8	Filter cover

https://truckmanualshub.com/

[5] Remove the element and replace it.

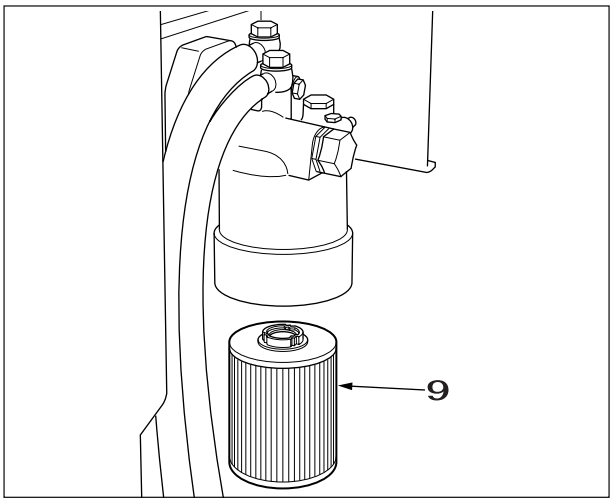

[6] Loosen the fuel line stop valve.
Open stop valve on the fuel line.

9	Element

https://truckmanualshub.com/

2. Air Bleeding

If air gets into the fuel system, this can cause difficulty starting and poor engine condition.When the fuel tank has been emptied, water drained from the fuel, the element replaced, or other such work carried out, always bleed the air.

[1] Install the air bleed hose at the position in the figure on the right.

[2] Use a spanner (10 mm) to loosen the air bleed plug.

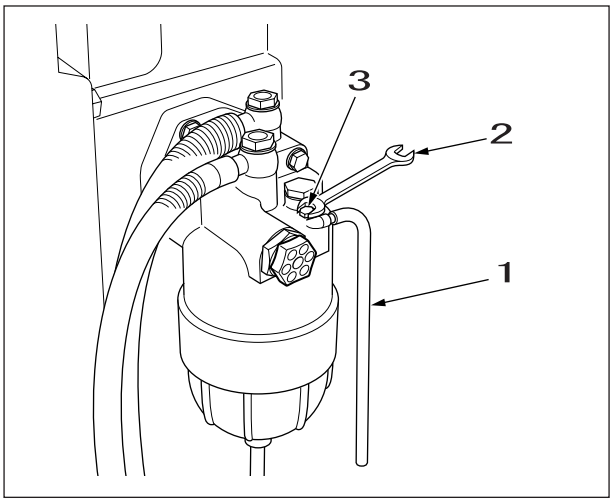

[3] When you turn the filter case priming pump in the direction of the arrow, the knob pops out.

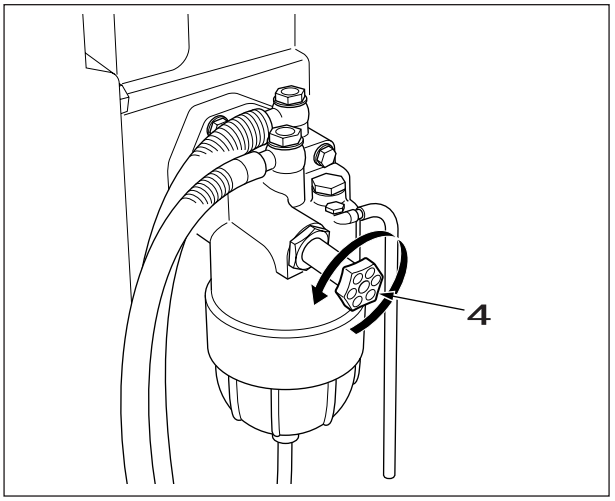

[4] Press the knob a few times.
When fuel appears inside the filter case, gently tighten the air bleed plug for now.Press the knob a few times with the plug and knob as they are.
Finally, hold the knob pressed in and slightly loosen the air bleed plug.
Fuel oozes out from the hose like bubbles.

[5] Repeat the operation in [4] until no more bubbles appear.

[6] Tighten the air bleed plug, then turn the knob and lock it.

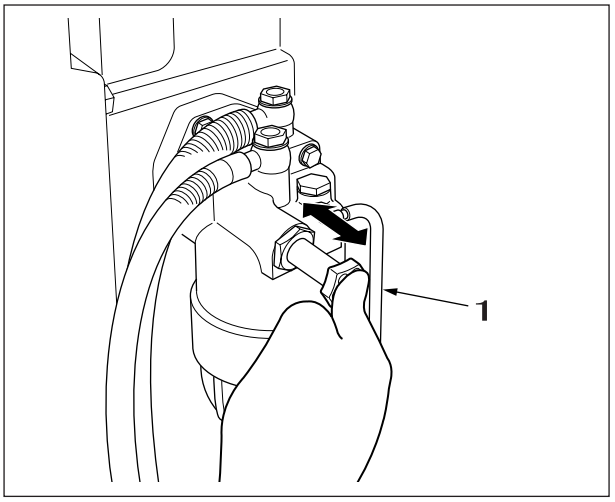

1	Air bleed hose
2	Spanner
3	Air bleed plug
4	Knob

https://truckmanualshub.com/

Engine oil filter and engine oil replacement

Caution	If the engine oil is severely dirty or deteriorated, replace it quickly even if it is not yet time for periodic replacement.

1. Engine Oil Replacement
   [1] Open the engine hood.
   [2] Remove the engine oil cap.

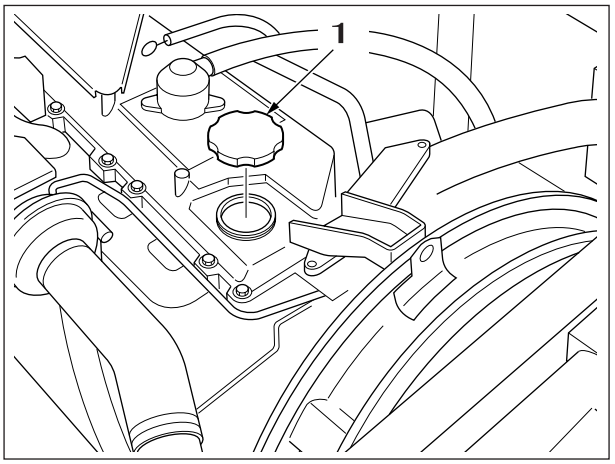

   [3] Put a waste oil can underneath the engine oil drain port.

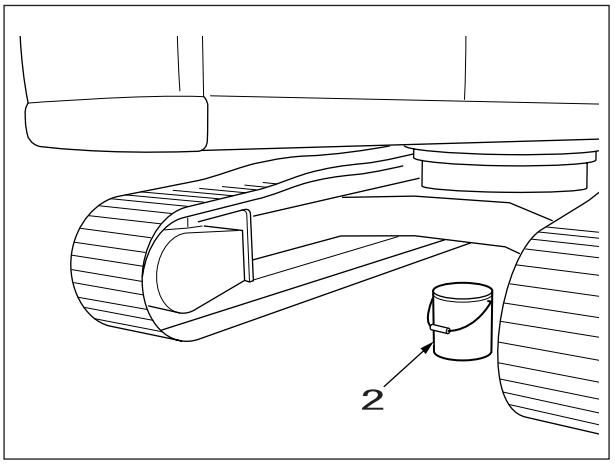

   [4] Remove the bottom cover.

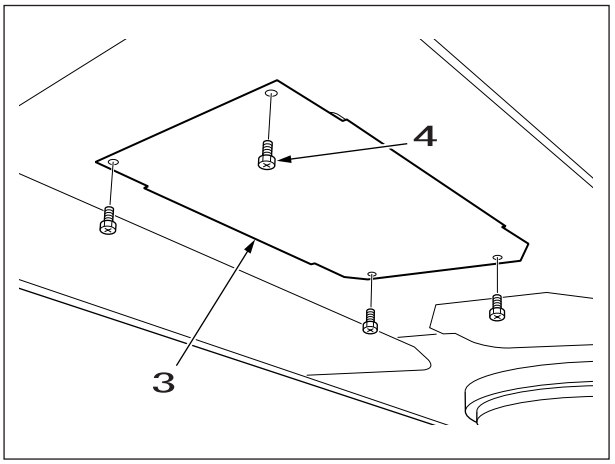

1	Engine oil cap
2	Waste oil can
3	Cover
4	Bolt

https://truckmanualshub.com/

[5] Remove the drain plug.

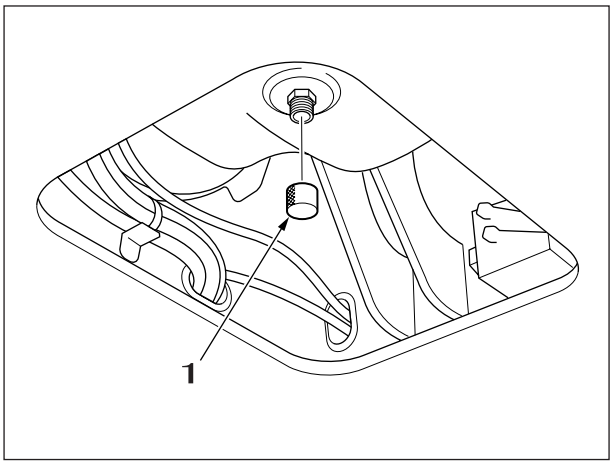

[6] Install the drain plug with hose and screw it in.
The valve is pressed automatically and the oil is drained.

[7] After draining the oil, securely install the drain plug.

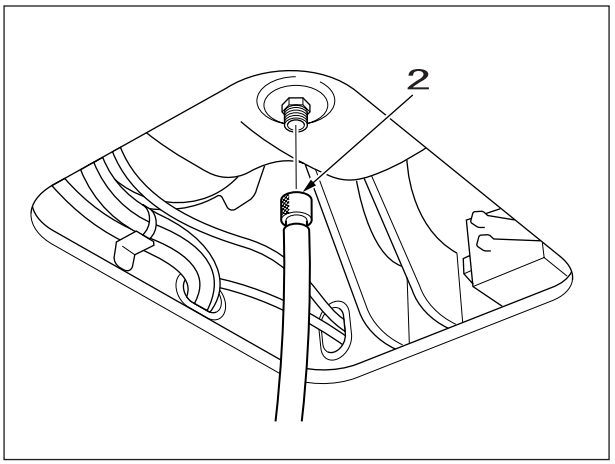

1	Drain plug
2	Drain hose

https://truckmanualshub.com/

2. Engine Oil Filter Replacement

[1] Remove the engine oil filter cover with the special filter wrench .

[2] Replace the engine oil filter .

[3] When installing the engine oil filter , check that the O-ring is not damaged, then install. Also, if you replace the O-ring, apply oil to it before installing it.

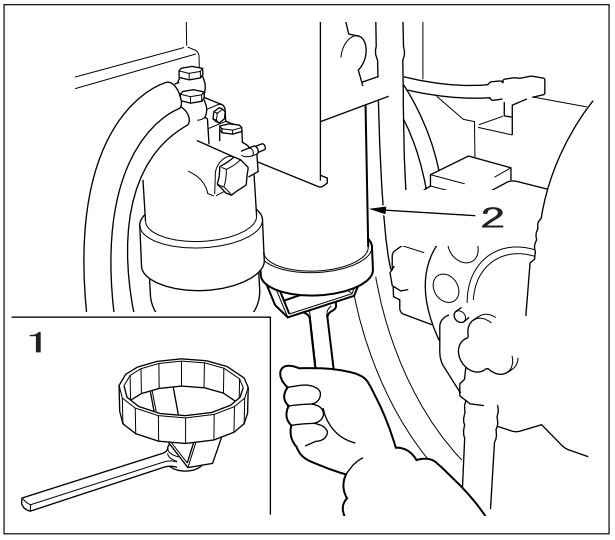

[4] Fill engine oil from the feed port at the top.

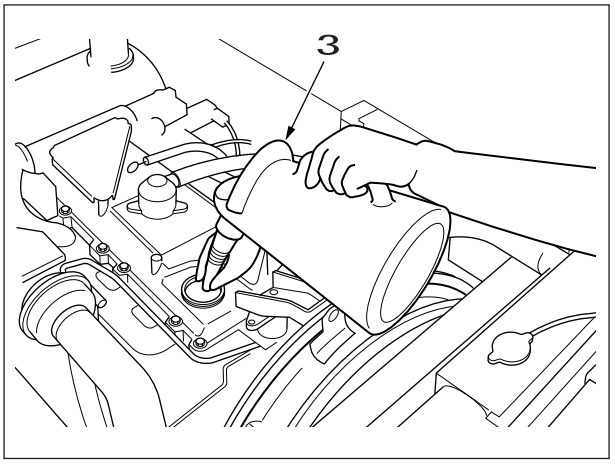

[5] Check on the oil gauge that the oil volume is correct.

[6] Start the engine and let it idle for a few minutes.
During this idling, check for oil leaking.

[7] Stop the engine, wait about 20 minutes, then inspect the oil volume again.
If the oil volume is correct now, the oil change is OK.
If the oil is low, fill more.

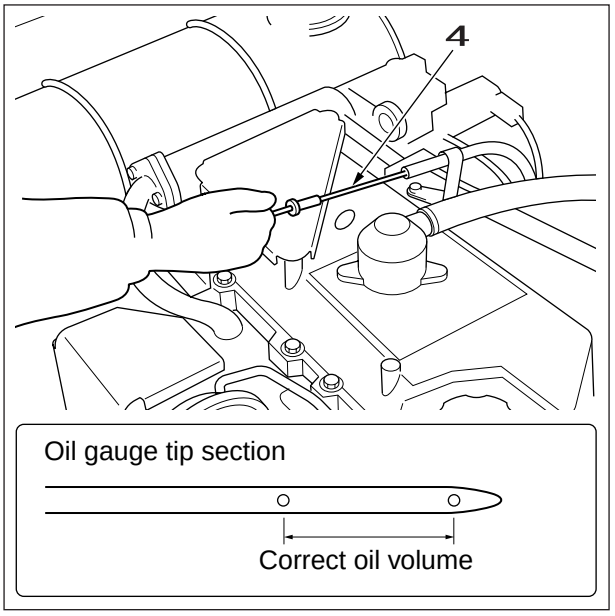

1	Special filter wrench
2	Engine oil filter
3	Engine oil
4	Oil gauge

https://truckmanualshub.com/

Radiator coolant replacement

[1] Open the engine hood.

[2] Remove the radiator cap.

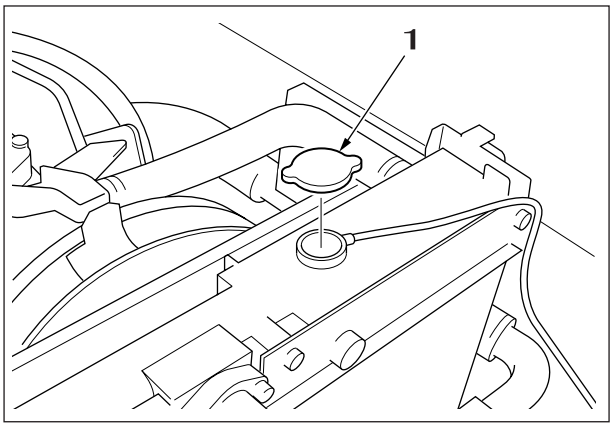

[3] Use a box wrench (19 mm) to remove the bolts, then remove the bottom cover.

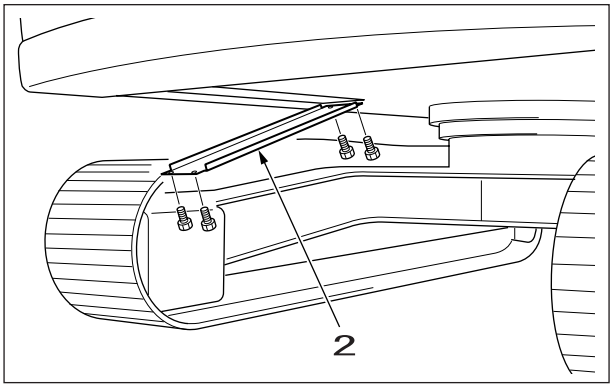

[4] Turn the drain cock to the left and drain the coolant.

[5] Return the drain cock to its original position, fill the radiator with hot water up to the radiator port, then run the engine slightly faster than idling.
Run for about 10 minutes to raise the water temperature to 176 ºF (80 °C), then drain the water.

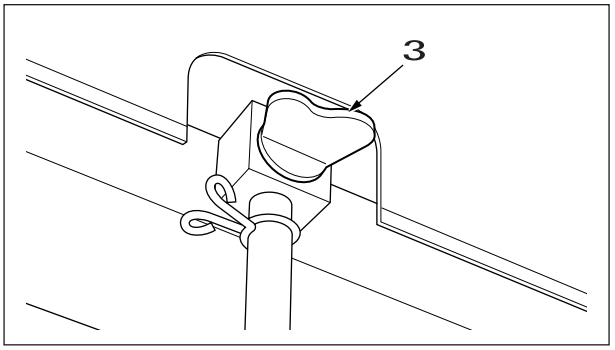

[6] Fill the radiator with coolant up to the radiator port.
Run the engine for about 10 minutes, then adequately bleed air from the cooling system.

[7] Stop the engine and check the coolant level.
If the coolant level is low, fill in more.

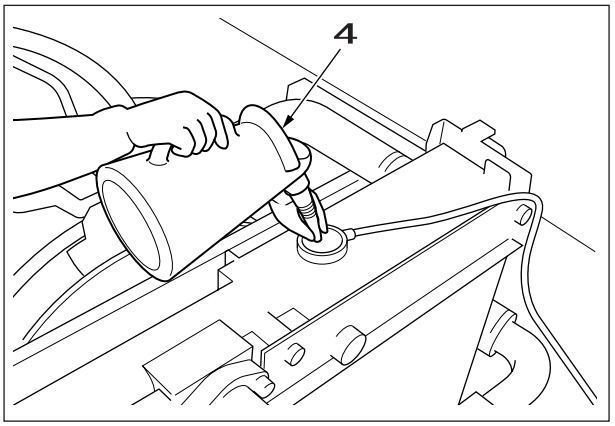

1	Radiator cap
2	Cover
3	Drain cock
4	Coolant

https://truckmanualshub.com/

Air cleaner cleaning and replacement

[1] Open the door.

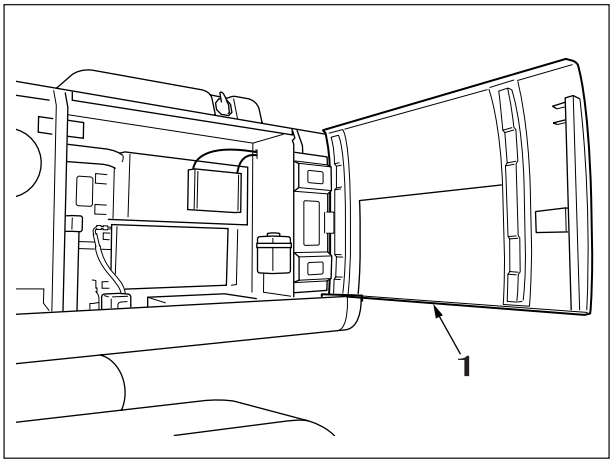

[2] Release the four locks , then remove the cover.

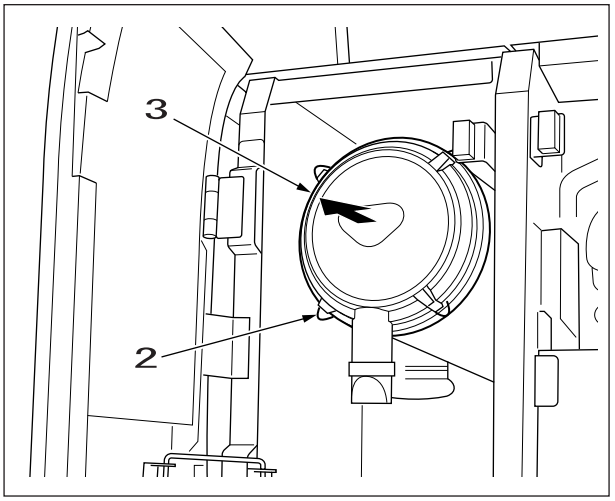

[3] Remove the air cleaner (outer).

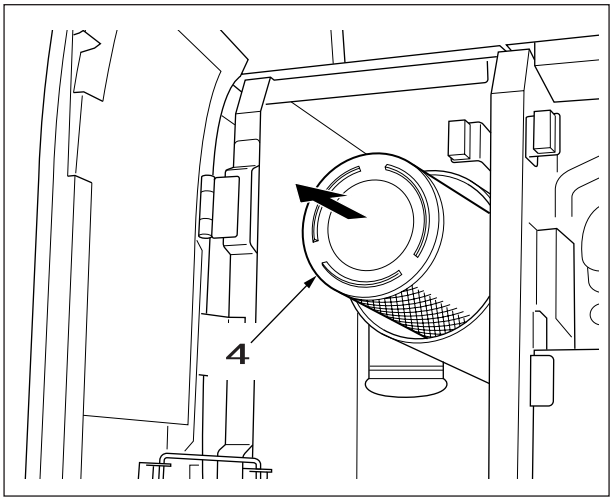

1	Door
2	Lock
3	Cover
4	Air cleaner (outer)

https://truckmanualshub.com/

[4] Use a compressed air gun to blow out from the inside of the air cleaner and clean it.

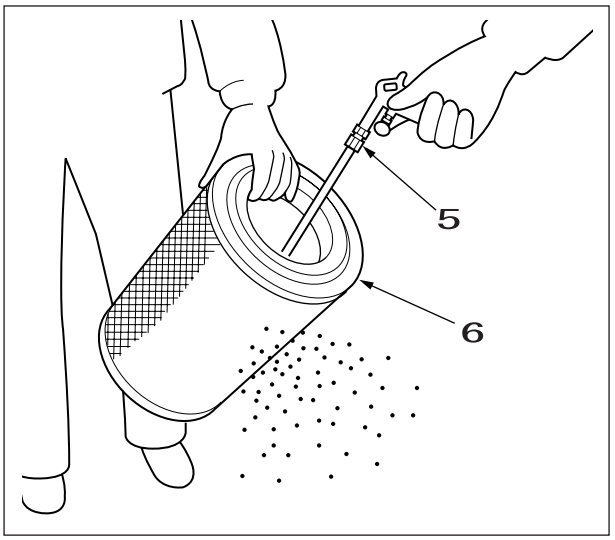

[5] Remove the air cleaner (inner) and replace it. This air cleaner cannot be cleaned.Always replace it.

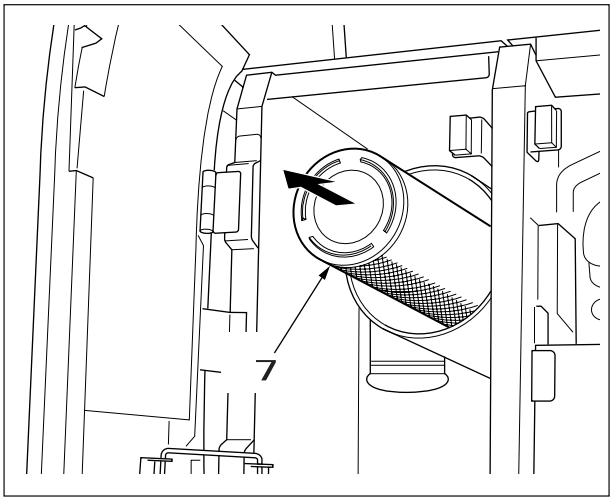

5	Air gun
6	Air cleaner
7	Air cleaner (inner)

https://truckmanualshub.com/

Hydraulic oil filter replacement

Caution	• When replacing the hydraulic oil, be careful to keep dirt, water, sand, and all other foreign matter out of the tank. • When replacing the hydraulic oil, always replace the filter and element with new ones. • When using with a hydraulic breaker mounted, the deterioration of the hydraulic oil is more severe than for normal excavation work, so maintain the hydraulic oil frequently enough. • Manage the hydraulic oil (by checking samples for contamination and deterioration) every 1000 hour per engine running time."We recommend the Sumitomo Oil Analysis System (Oiltech).)

Put the main unit into the posture for transport or shipping.

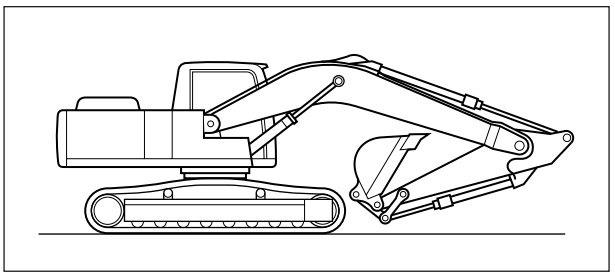

1. Return Filter Replacement

[1] Press the rubber cap at the breather section on the top of the hydraulic oil tank to bleed off the pressure in the tank.

[2] Use a spanner (17 mm) to remove the bolts , then remove the cover .
(There is an O-ring on the rear.)

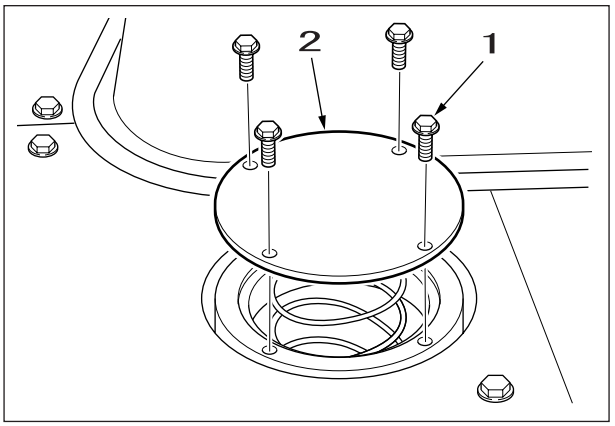

[3] Take the spring , valve , and return filter out from the tank.

[4] Replace the return filter.

[5] If the O-ring on the rear of the cover is worn or damaged, replace it.

[6] The installation procedure is the reverse of the removal procedure.

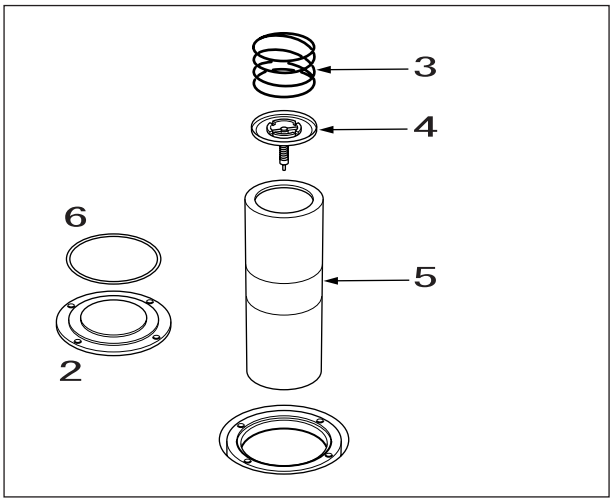

1	Bolt
2	Cover
3	Spring
4	Valve
5	Return filter
6	O-ring

https://truckmanualshub.com/

2. Suction Filter Replacement

[1] Press the rubber cap at the breather section on the top of the hydraulic oil tank to bleed off the pressure in the tank.

[2] Use a spanner (17 mm) to remove the bolts , then remove the feed port cover.
(There is an O-ring on the rear).

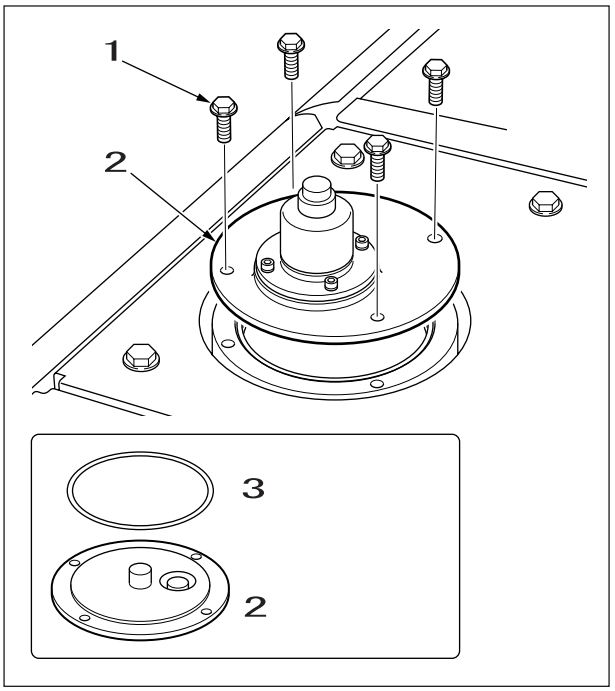

[3] Pull out the suction strainer .

[4] Replace the suction strainer with a new one.

[5] If the O-ring is worn or damaged, replace it.

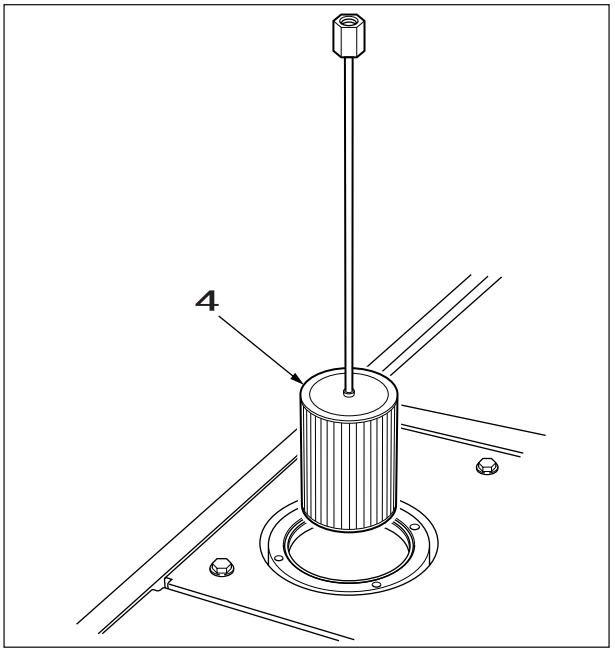

[6] The installation procedure is the reverse of the removal procedure.
* When installing the feed port cover , align it with the position in the fig.

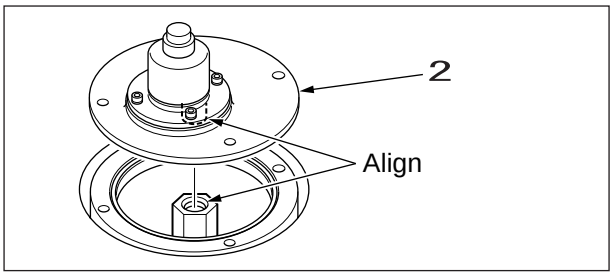

1	Bolt
2	Feed port cover
3	O-ring
4	Suction strainer

https://truckmanualshub.com/

3. Air Breather Element Replacement

[1] Press the rubber cap at the breather section on the top of the hydraulic oil tank to bleed off the pressure in the tank.

[2] Use a spanner (19 mm) to remove the nut.

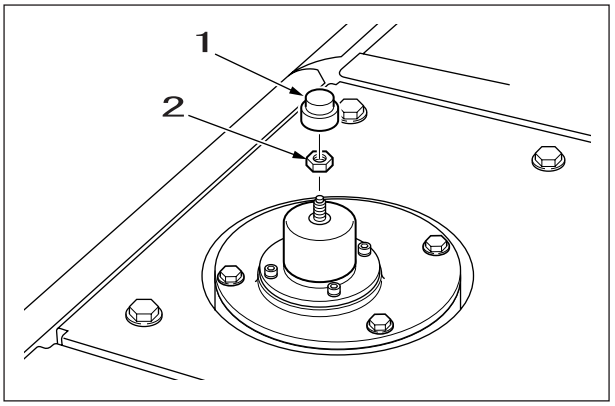

[3] Remove the cover .

[4] Replace the filter element with a new one.

[5] The installation procedure is the reverse of the removal procedure.

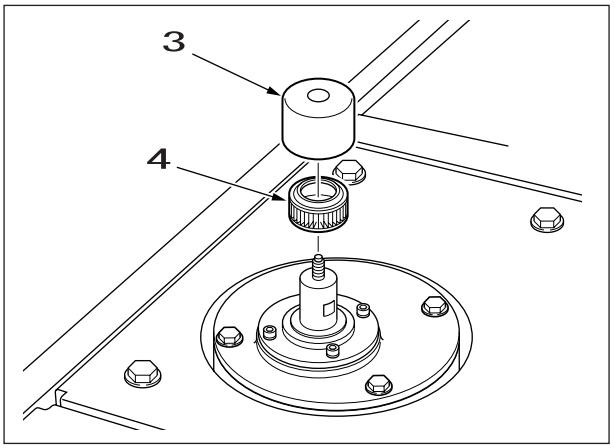

1	Rubber cap
2	Hexagon nut
3	Cover
4	Filter element

4. Pilot Oil Filter Replacement

[1] Use a filter wrench or the like to remove the pilot oil filter cover.

[2] Replace the pilot oil filter.

[3] When installing the pilot oil filter , check that the O-ring is not damaged, then install.
Also, if you replace the O-ring, apply oil to it before installing it.

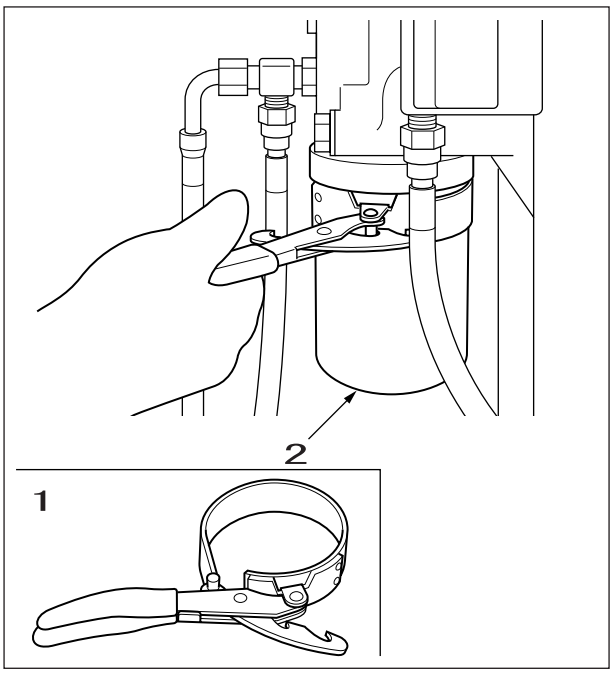

1	Pilot oil filter
2	Filter wrench etc.

https://truckmanualshub.com/

5. Hydraulic Oil Replacement

[1] Rotate the main unit slightly before replacing the hydraulic oil.(Enough to make the work easy).

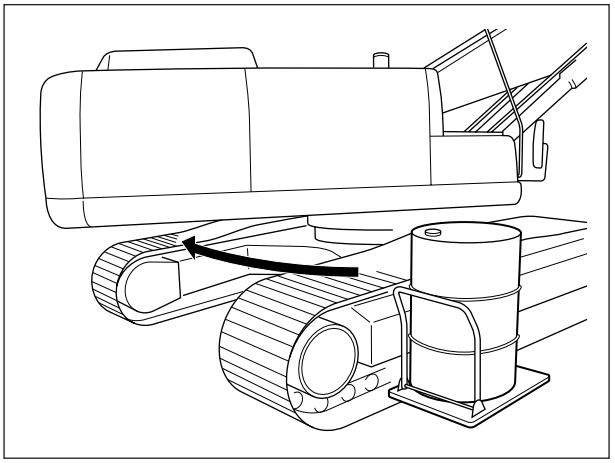

[2] Use a spanner (17 mm) to remove the bolts , then remove the feed port cover .

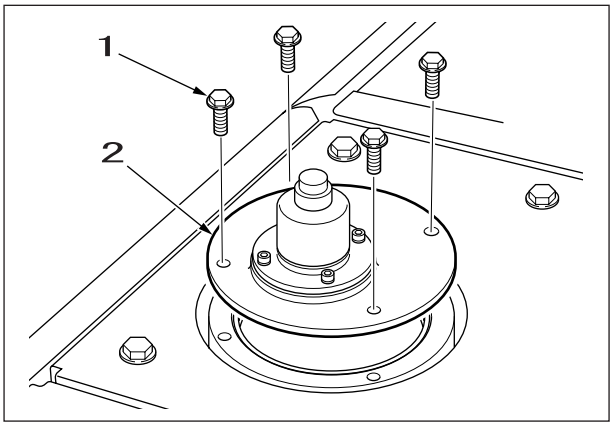

[3] Insert the feed pump into the feed port.

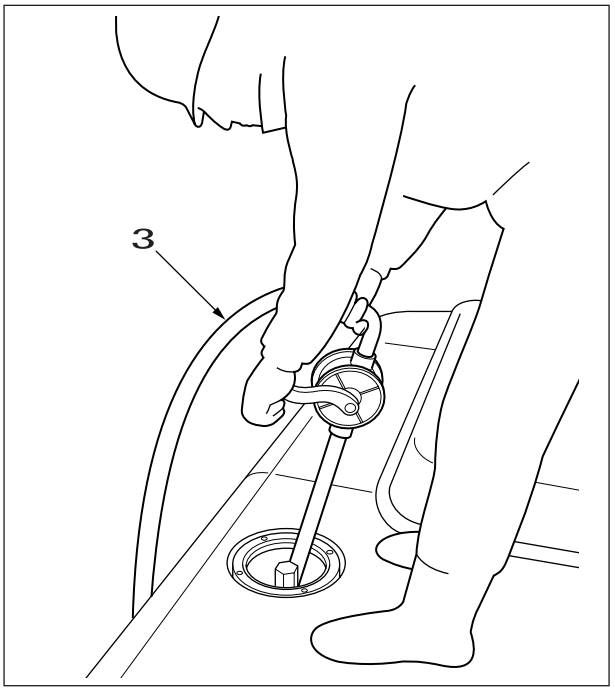

1	Bolt
2	Feed port cover
3	Feed pump

https://truckmanualshub.com/

[4] Prepare a can to drain the hydraulic oil into.

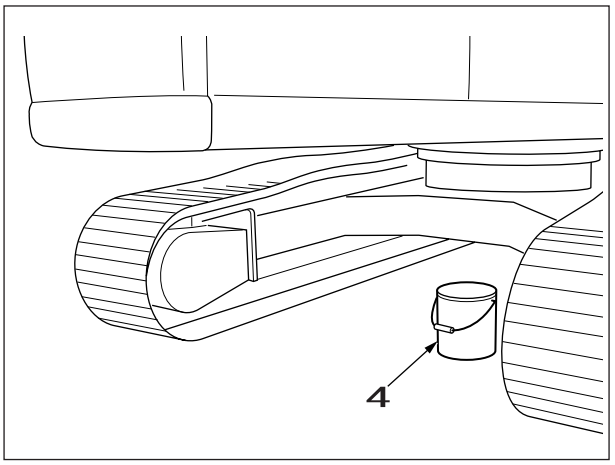

[5] Use a spanner (19 mm) to remove the bottom cover.

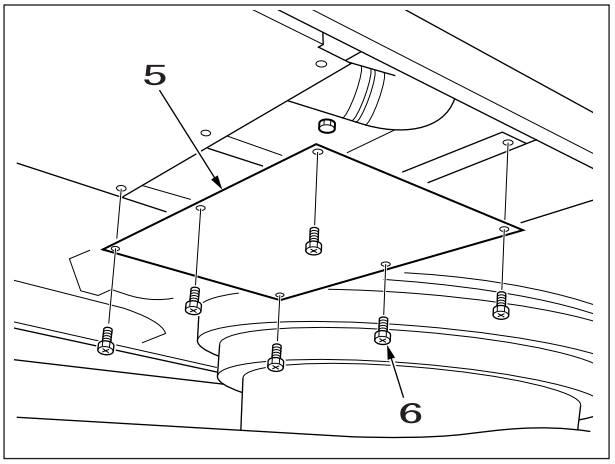

[6] Use a spanner (17 mm) to remove the drain plug.

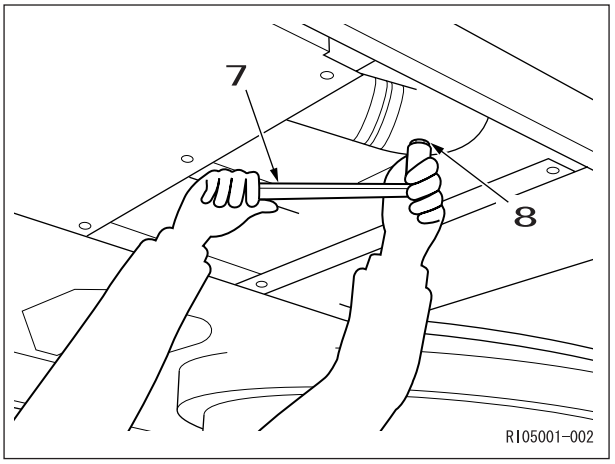

4	Waste oil can
5	Cover
6	Bolt
7	Spanner
8	Drain plug

https://truckmanualshub.com/

[7] Drain the waste oil into the drain can .

[8] After draining the waste oil, securely install the drain plug.

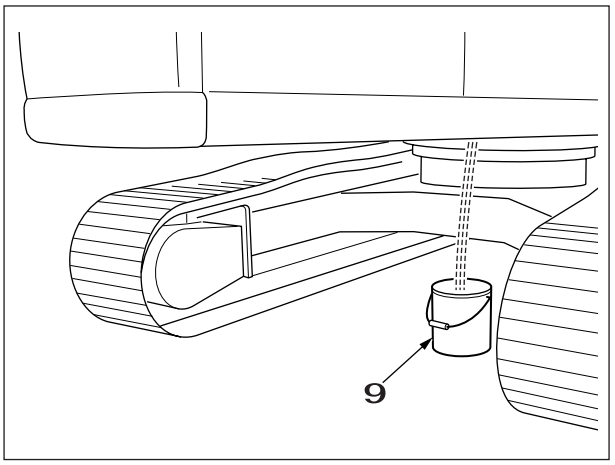

Hydraulic Oil Filling

[1] Fill with the feed pump as in the figure on the right.

[2] Check that the hydraulic oil comes to the correct position on the level gauge.

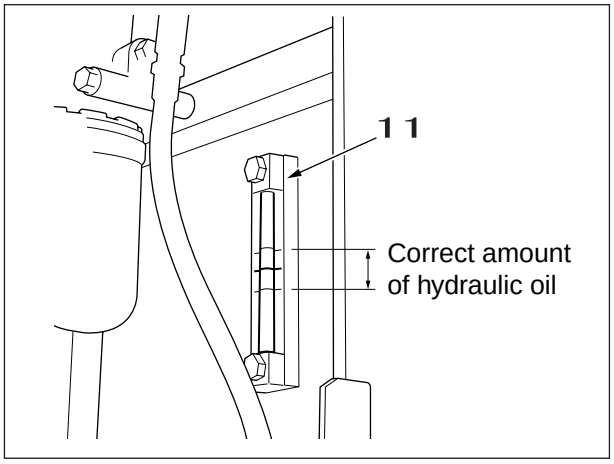

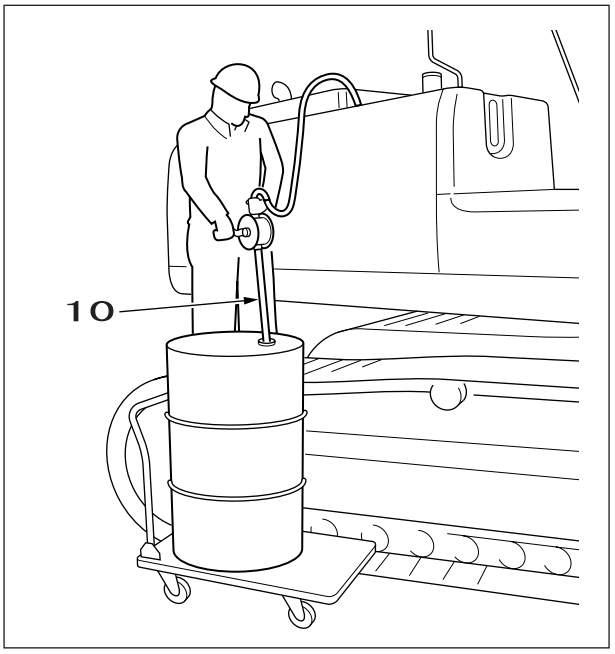

9	Waste oil can
10	Feed pump
11	Level gauge

https://truckmanualshub.com/

Others

1. Coolant Filling

   Remove the reserve tank cap and pour in coolant.

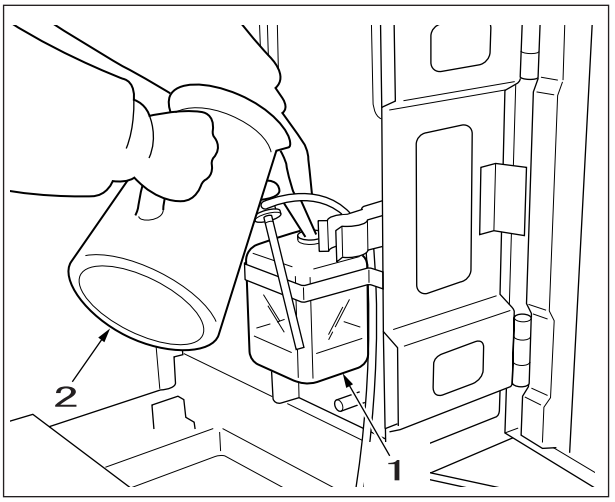

2. Washer Fluid Filling

   Remove the washer tank cap and pour in washer fluid.

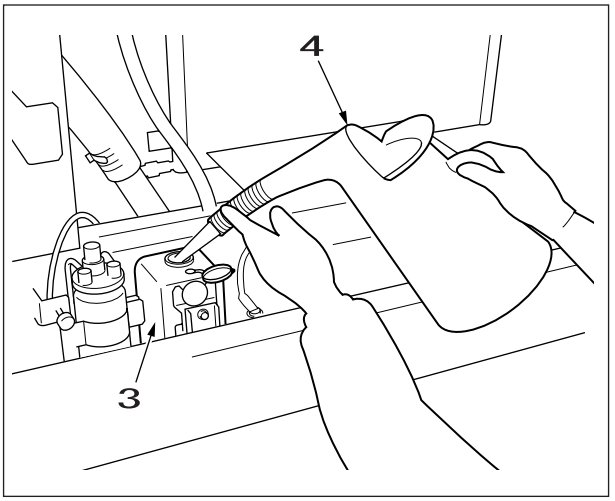

1	Reserve tank
2	Coolant
3	Washer tank
4	Washer fluid

https://truckmanualshub.com/

Lever Pattern Change Procedure

The lever pattern operation method (4 patterns) can be changed by changing the connection for the hose on the cushion valve operator cab side.
Before the work, bleed out the pressure.(See Pressure Measurement.)

Items to prepare

You can change to the following types with the ISO type as the basic type.

- Sumitomo type
- Mitsubishi type
- Shinko type

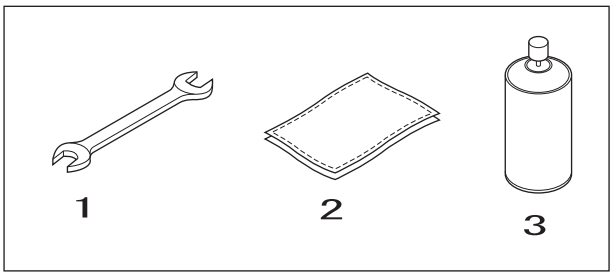

1	Spanner (22 mm)
2	Rags
3	Cleaning fluid

ISO type

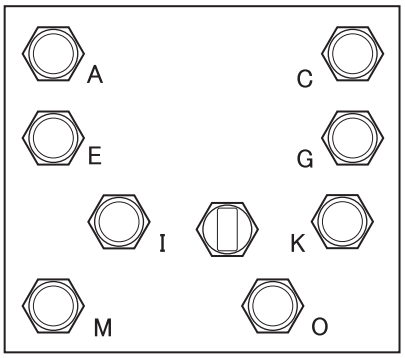

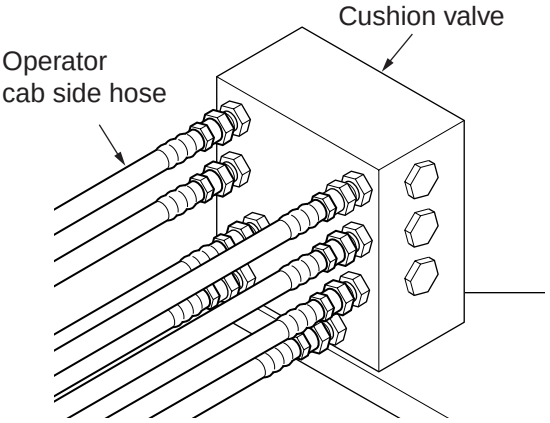

Connection type

Port	ATT	Hose
C	Arm-out	A1
A	Arm-in	A2
K	Swing left	S1
I	Swing right	S2
E	Boom down	V1
G	Boom up	V2
O	Bucket close	B1
M	Bucket open	B2

Lever Pattern Change Procedure

https://truckmanualshub.com/

ISO type →SUMITOMO type

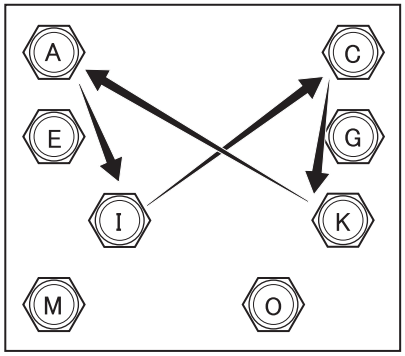

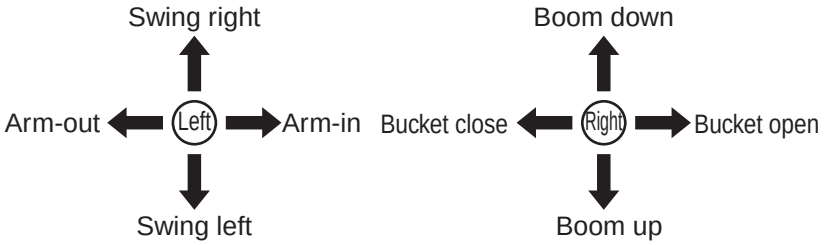

Connection type

Remote controller (right)	Hose No.		Cushion valve		Hose No.	Remote controller (right)
Boom down	V1	← ISO	E	→ Sumitomo	V1	Boom up
Boom up	V2		G		V2	Boom down
Bucket close	B1		O		B1	Bucket open
Bucket open	B2		M		B2	Bucket close

Remote controller (left)	Hose No.		Cushion valve		Hose No.	Remote controller (left)
Arm-out	A1	← ISO	C	→ Sumitomo	S2	Swing right
Arm-in	A2		A		S1	Swing left
Swing left	S1		K		A1	Arm-in
Swing right	S2		I		A2	Arm-out

ISO type →MITSUBISHI type

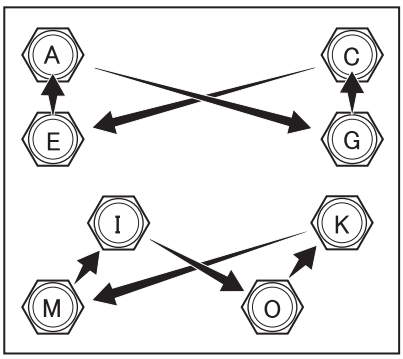

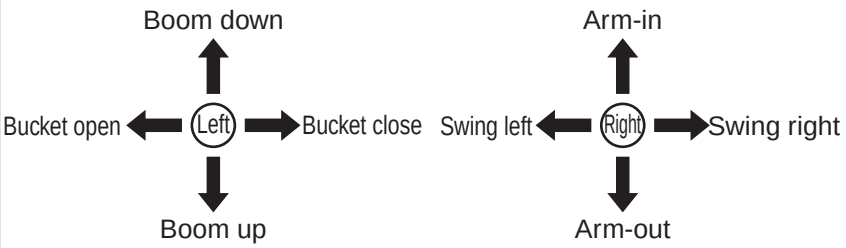

Connection type

Remote controller (right)	Hose No.		Cushion valve		Hose No.	Remote controller (right)
Boom up	V1	← ISO	E	→ Mitsubishi	A1	Arm-out
Boom down	V2		G		A2	Arm-in
Bucket open	B1		O		S2	Swing right
Bucket close	B2		M		S1	Swing left

Remote controller (left)	Hose No.		Cushion valve		Hose No.	Remote controller (left)
Arm-out	A1	← ISO	C	→ Mitsubishi	V2	Boom down
Arm-in	A2		A		V1	Boom up
Swing left	S1		K		B1	Bucket open
Swing right	S2		I		B2	Bucket close

https://truckmanualshub.com/

ISO type → SHINKO type

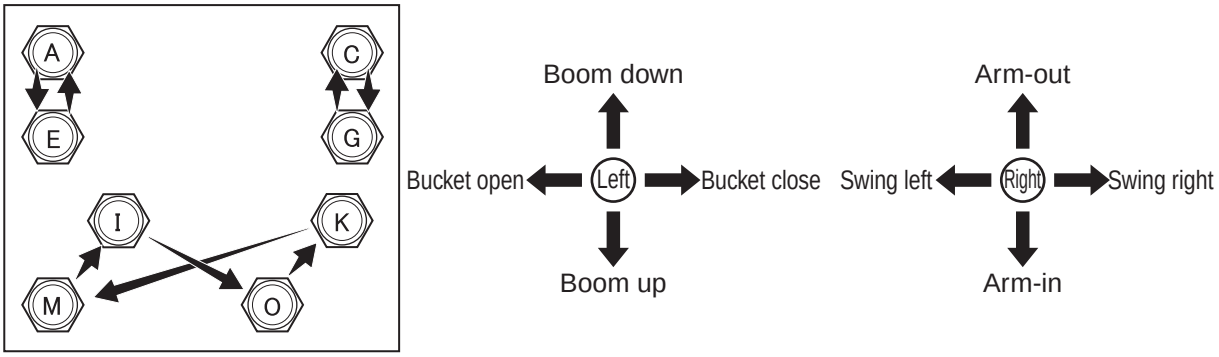

Connection type

Remote controller (right)	Hose No.		Cushion valve		Hose No.	Remote controller (right)
Boom up	V1	← ISO	E	→ Kobelco	A2	Arm-in
Boom down	V2		G		A1	Arm-out
Bucket open	B1		O		S2	Swing right
Bucket close	B2		M		S1	Swing left

Remote controller (left)	Hose No.		Cushion valve		Hose No.	Remote controller (left)
Arm-out	A1	← ISO	C	→ Kobelco	V2	Boom down
Arm-in	A2		A		V1	Boom up
Swing left	S1		K		B1	Bucket open
Swing right	S2		I		B2	Bucket close

https://truckmanualshub.com/

Maintenance every 250 hours

1. Battery Inspection and Replacement

Check the color from the battery cover inspection window.

Green: OK
Black: Charge (Charge the battery).
White: Replace (Replace the battery).

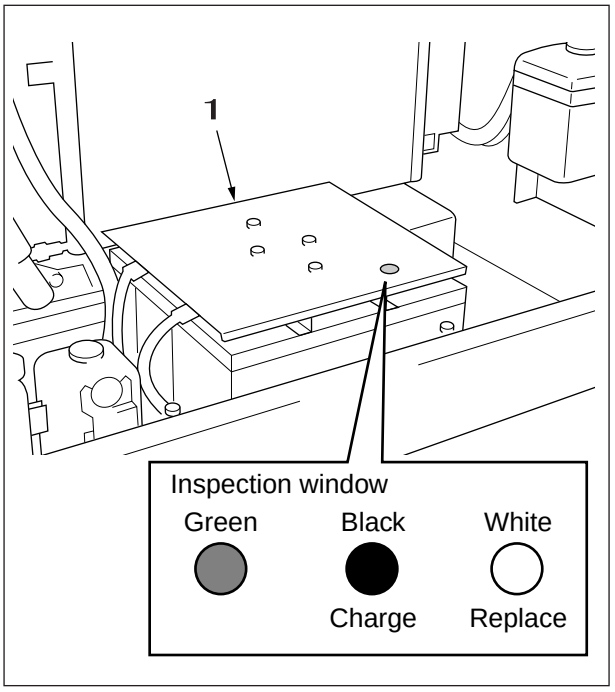

■Battery replacement method

[1] Remove the two screws, then remove the battery cover.

[2] Remove the two cables connected to the battery terminals, then replace the battery with a new one.

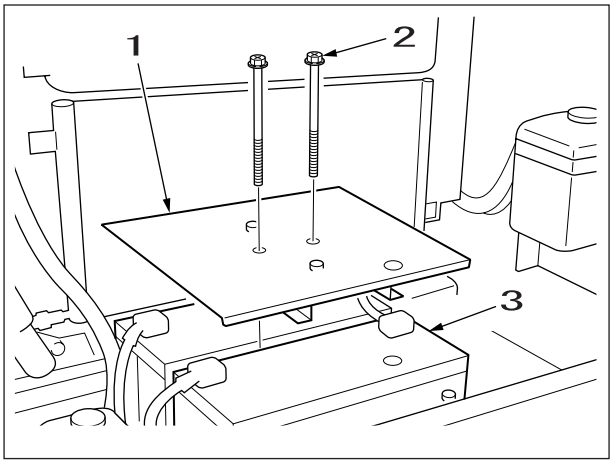

1	Battery cover
2	Screw
3	Battery

https://truckmanualshub.com/

Maintenance after first 250 hours for new machine / every 1000 hours from then ON

1. Swing Reduction Gear Oil Replacement

   240-2

   [1] Use a spanner (19 mm) to remove the bottom cover.

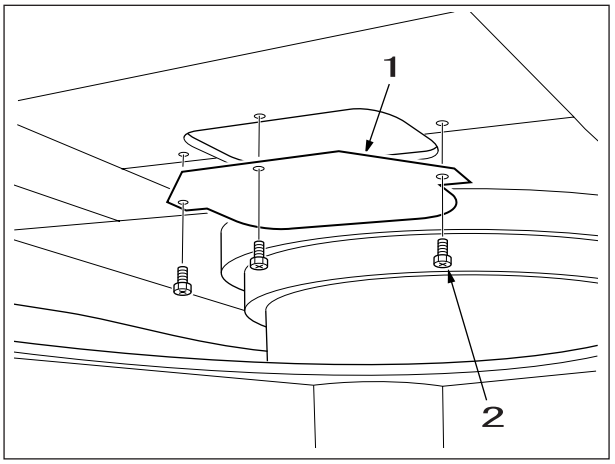

   [2] Prepare a waste oil receiver.

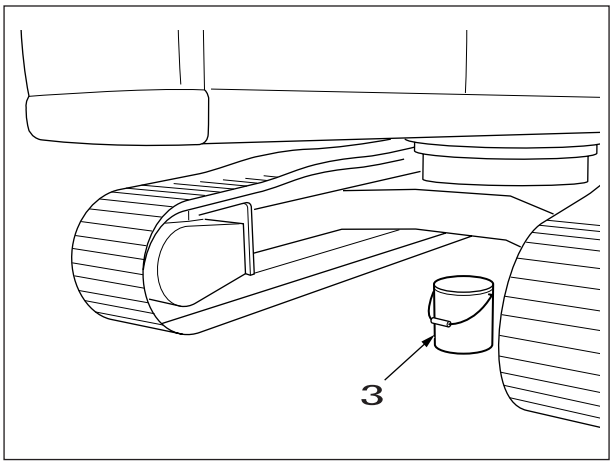

   [3] Remove the feed plug.

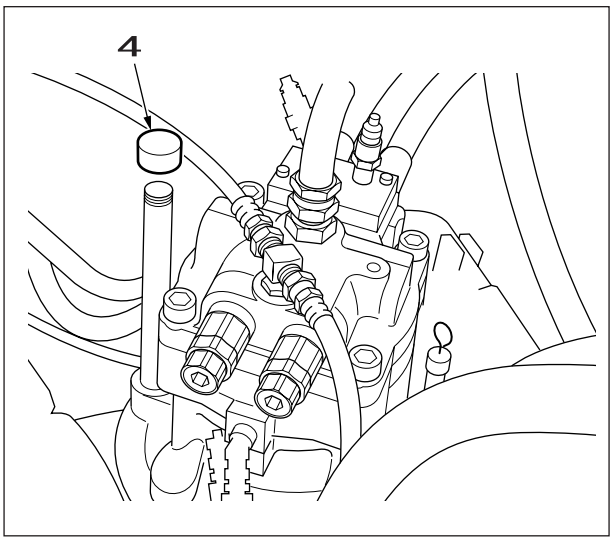

1	Cover
2	Bolt
3	Waste oil can
4	Feed plug

https://truckmanualshub.com/

[4] Use a spanner (27 mm) to remove the drain plug and drain off the oil.

[5] After oil draining is complete, tighten the drain plug.

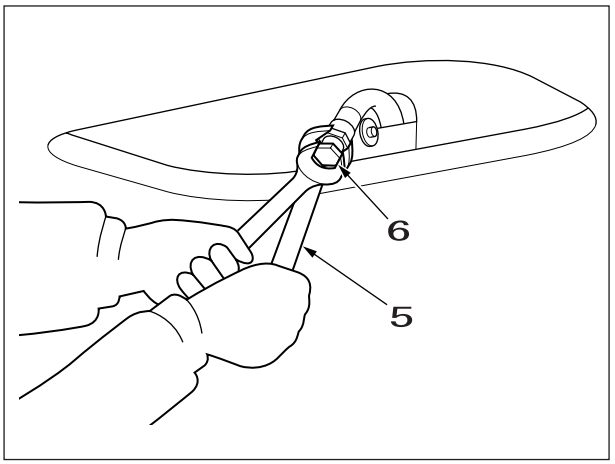

5	Spanner
6	Drain plug

2. Gear Oil Filling

[1] Fill the stipulated amount of oil from the feed port.

[2] When filling with oil, removing the level gauge beforehand facilitates oil filling.

[3] After about 10 minutes, check the oil volume with the level gauge.

[4] If the oil volume is correct, install the drain plug.

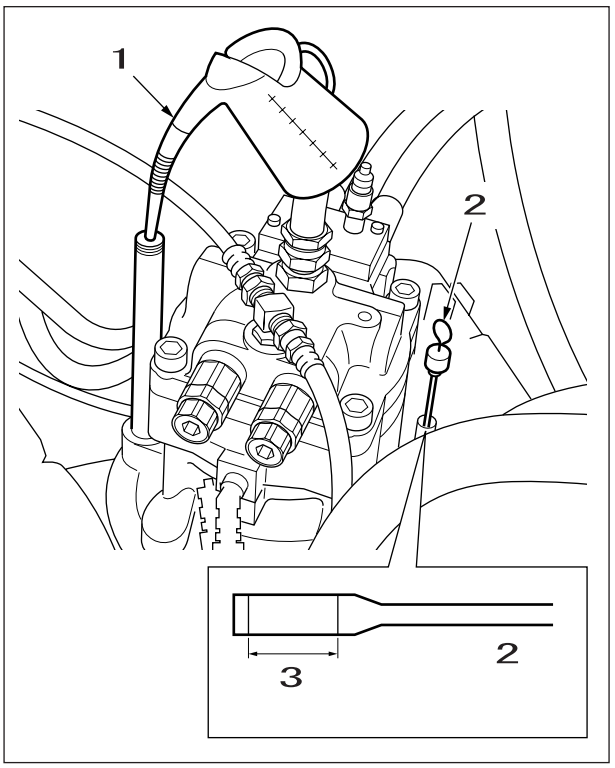

1	Gear oil
2	Level gauge
3	Stipulated amount of oil

https://truckmanualshub.com/

3. Replace the Flange Packing at the Bottom of the Fuel Tank.
   [1] Whenever the fuel tank bottom cover is removed, for example for cleaning the fuel tank, replace the packing.
   [2] When installing the packing, apply liquid packing.(See the figure below.)
   - Replacement parts

Part name	Part No.
Joint seat packing	KSH0503
Liquid packing 1104	KYC0075

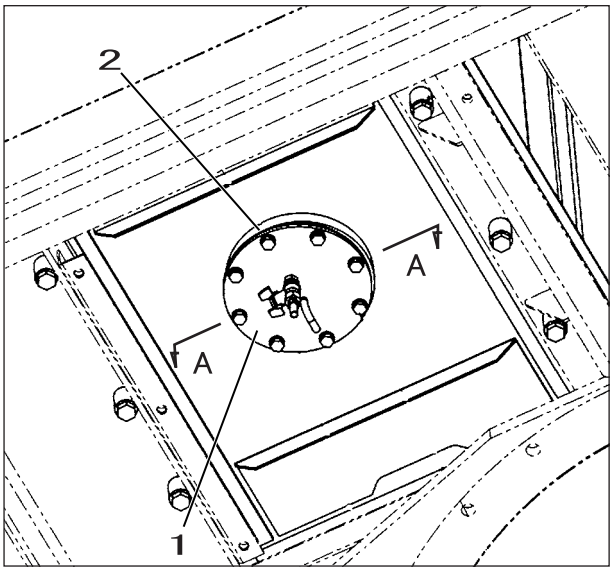

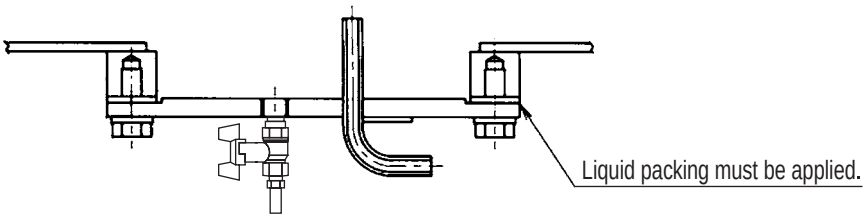

A～A

1	Cover
2	Packing

Bolt and nut tightening

- Tighten alternating between left and right and top and bottom so that uniform tightening force is applied.

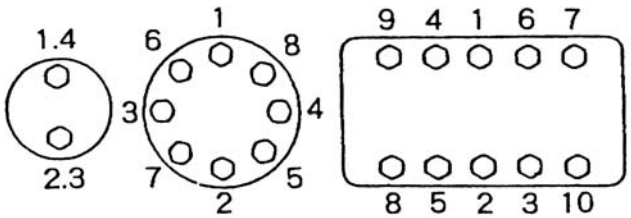

- For bolts at critical locations, apply engine oil to the threads for a uniform tightening force without catching on the thread peaks.
- For bolts and nuts at critical locations and at locations that cannot be inspected from the outside, use wire, cotter pins, folded washers, or the like to securely prevent turning.

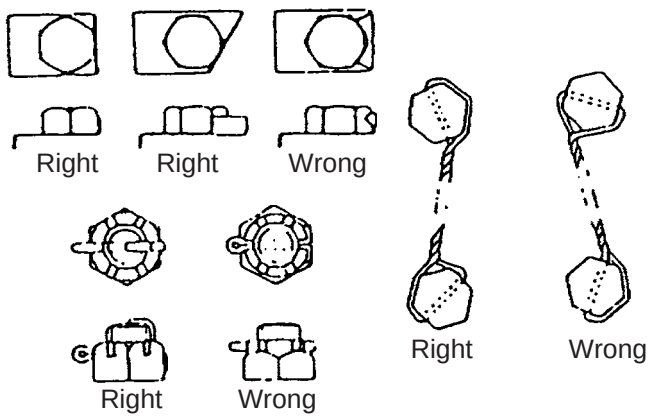

- If Locktite was used on a removed bolt (there is something white sticking to the bolt when it is removed), clean the old Locktite off with cleaning fluid, dry the bolt, then apply 2 to 3 drops of Locktite to the thread section of the bolt.

Bolt and Nut Retightening [After 1st 50 Hours for New Machine][Every 250 Hours]

Tighten and retighten bolts and nuts in each section according to the table.Also before and after day-to-day work, inspect for loose or fallen out bolts and nuts. Retighten any that are loose and replace any that have come out.
Inspect and retighten after the first 50 hours for a new machine and every 250 hours after that.

https://truckmanualshub.com/

Retightening torque table

Sign	Retightening location		Bolt nominal diameter	Spanner used	Tightening torque lbf • f ([N•m])
②	Travel motor		M16	24 mm	197 to 230 (267 to 312)
②	Drive sprocket		M16	24 mm	(197 to 230 (267 to 312)
③	Take-up roller		M16	24 mm	197 to 230 (267 to 312)
④	Top roller (carrier roller)		M20	30 mm	414 to 448 (521 to 608)
⑤	Bottom roller (track roller)		M18	27 mm	274 to 319 (371 to 432)
⑥	Track guard		M18	27 mm	295 to 341 (400 to 462)
7	Shoe bolt		M20	30 mm	593 ± 36 (804 ± 49 N•m)
8	Counterweight	210-2	M33	50 mm	1373 to 1301 (1862 to 1764)
		240-2			1373 to 1518 (1862 to 2058)
9	Turntable bearing (lower frame)	210-2	M20	30 mm	345 to 402 (468 to 545)
		240-2	M24	36 mm	578 to 674 (784 to 914)
10	Turntable bearing (swing frame)	210-2	M20	30 mm	345 to 402 (468 to 545)
		240-2	M24	36 mm	578 to 674 (784 to 914)
⑪	Swing unit	210-2	M20	30 mm	398 to 465 (539 to 630)
		240-2	M24	36 mm	578 to 674 (784 to 914)
⑫	Engine (engine mount)		M16	24 mm	195 to 232 (265 to 314)
⑬	Engine bracket		M10	17 mm	47 to 54 (64 to 73)
			M16	24 mm	152 to 182 (206 to 247)
14	Radiator		M16	24 mm	108 to 131 (147 to 177)
⑮	Hydraulic pump		M10 M20	17 mm Hexagon socket head	47 to 55 (64 to 74) 271 to 366 (367 to 496)
⑯	Hydraulic oil tank		M16	24 mm	171 to 204 (232 to 276)
⑰	Fuel tank		M16	24 mm	171 to 204 (232 to 276)
18	Control valve		M16	24 mm	197 to 230 65 to 79 (267 to 312)
⑲	Center joint		M12	19 mm	65 to 79 (88 to 107)
20					80 to 94 (109 to 127)
21	Cab		M16	24 mm	181 to 217 (245 to 294)
22	Battery		M10	17 mm	15 to 21 (20 to 29)

Caution
For items marked with ○, always apply Locktite #262 or the equivalent and tighten with the specified torque.
N•m ÷ 9.8 gives the tightening torque in kgf•m.

The tightening for bolts and nuts not otherwise specified in the table above is as follows.

Bolt nominal diameter (size)			M6	M8	M10	M12	M14	M16	M18	M20
Hexagon bolt	Spanner used	[mm]	10	13	17	19	22	24	27	30
	Tightening torque	[N•m]	5.16.9	19.6	39.2	58.8	98.1	157.0	196.0	294.0
Hexagon socket head bolt	Spanner used	[mm]	5	6	8	10	12	14	14	17
	Tightening torque	[N•m]	8.8	21.6	42.1	78.4	117.6	176.4	245.0	343.0

Bolt Size and Torque Table

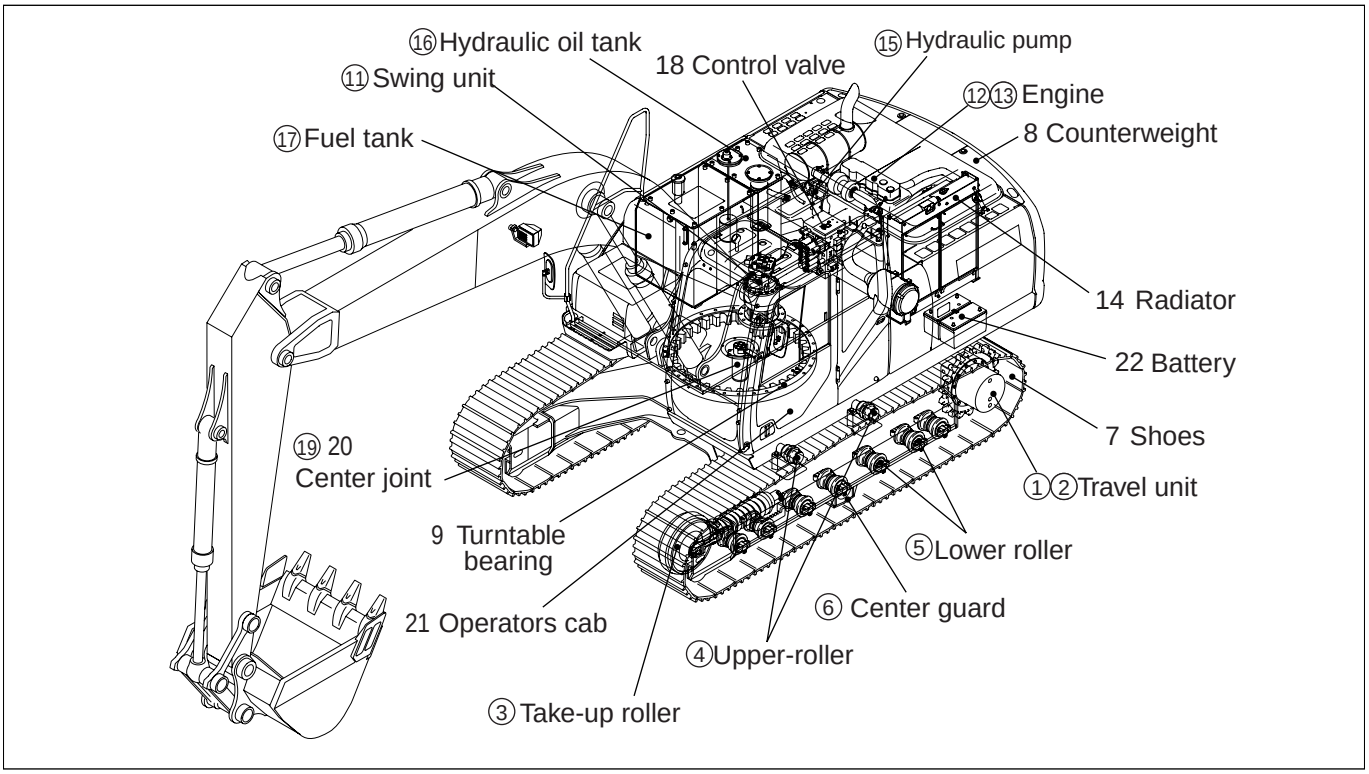

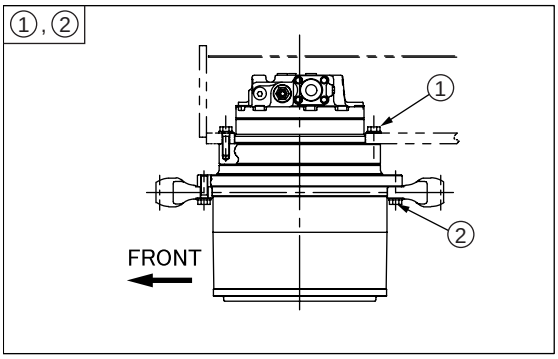

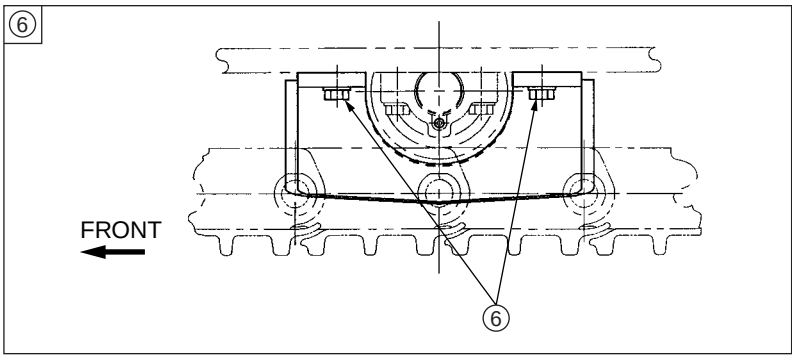

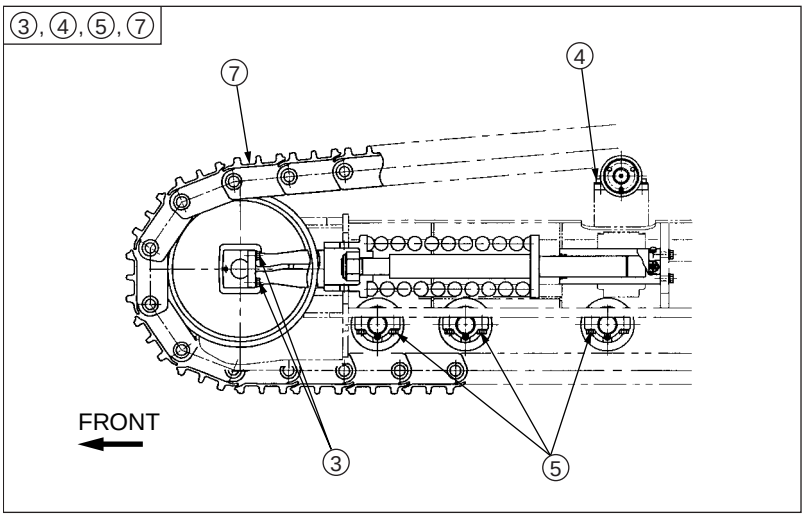

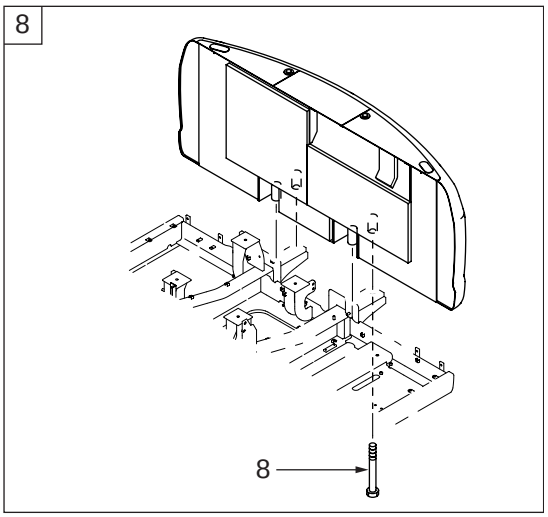

https://truckmanualshub.com/

9 , 10

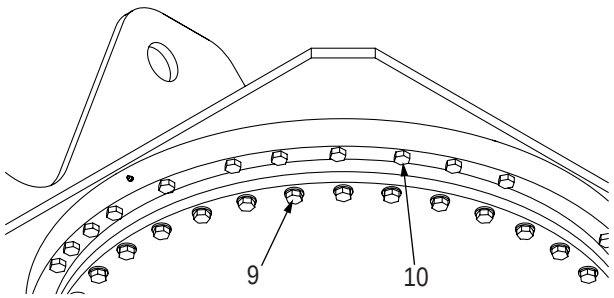

⑪

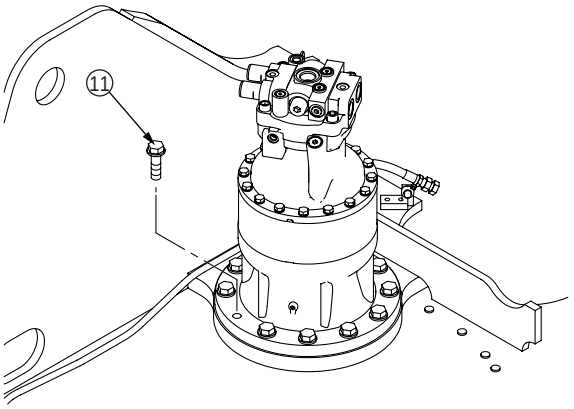

⑫ , ⑬

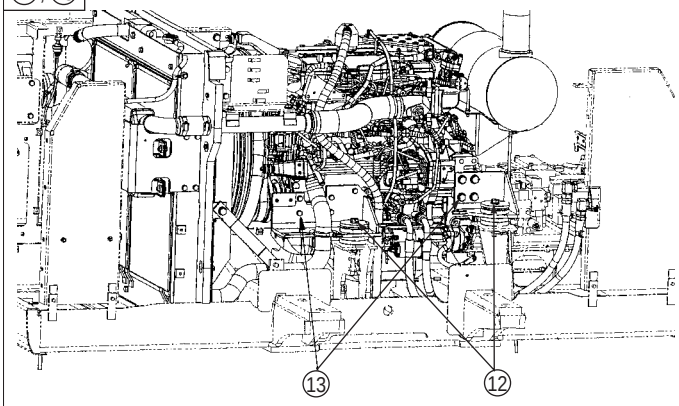

14

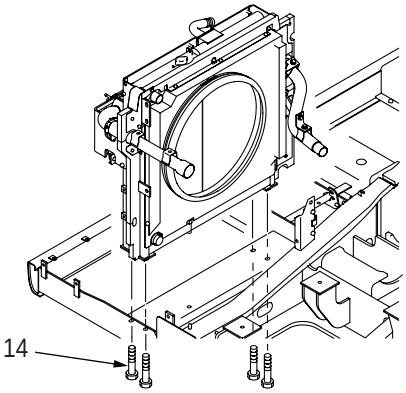

⑮

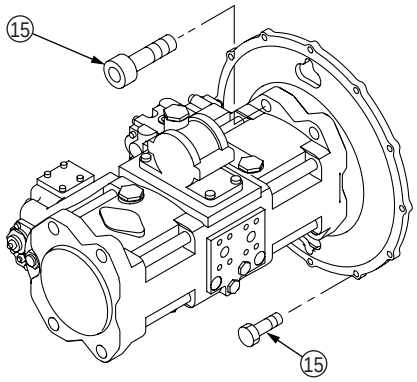

⑯

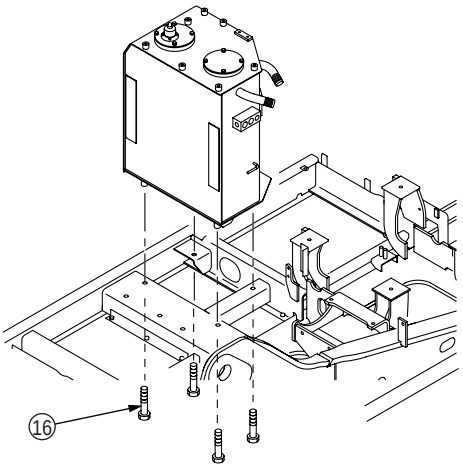

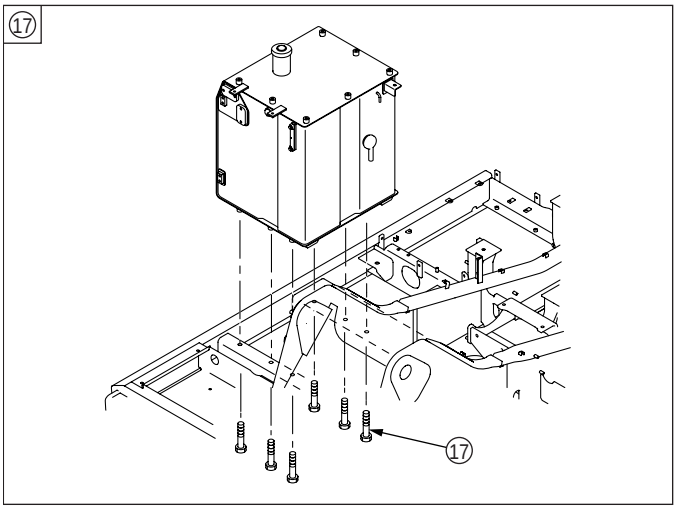
⑰
⑰

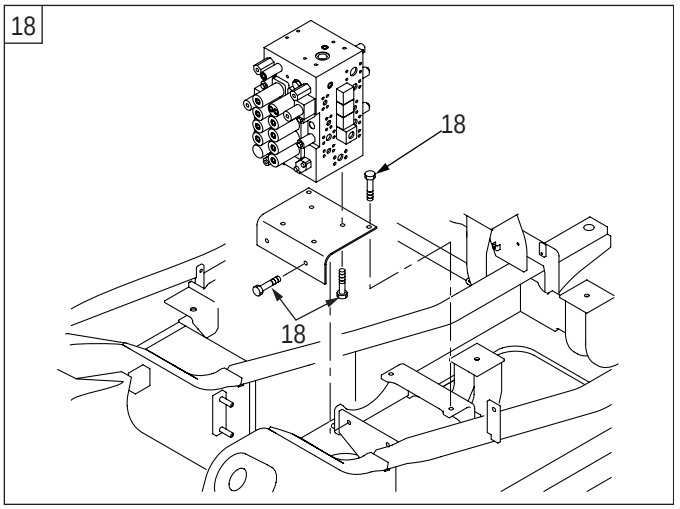
18
18
18

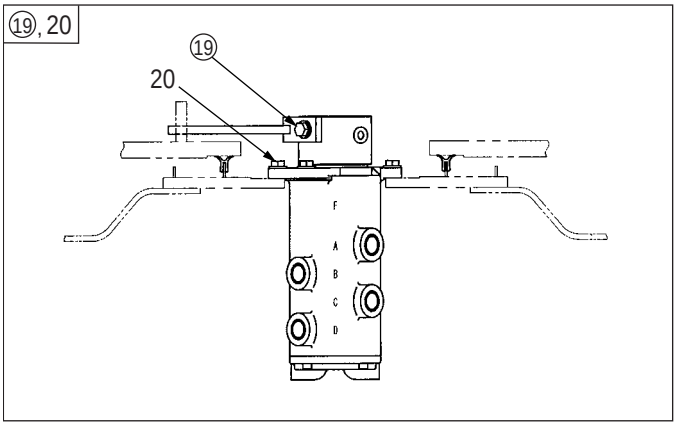
⑲, 20
⑲
20
F
A
B
C
D

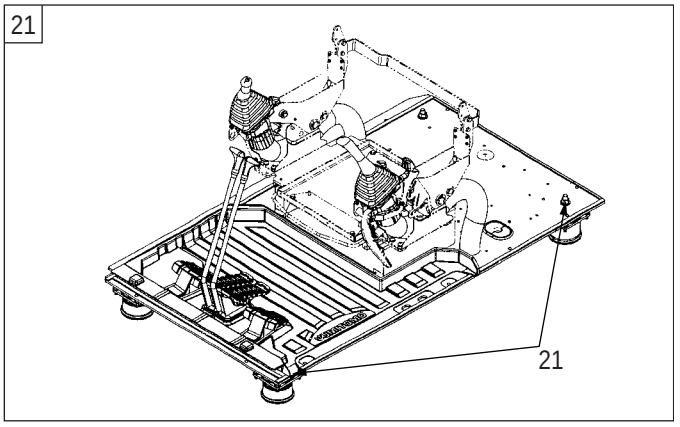
21
21

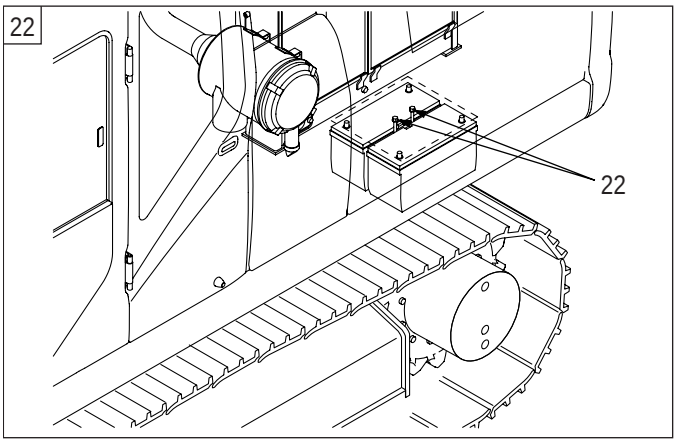
22
22

Major Component Weight (standard specifications)

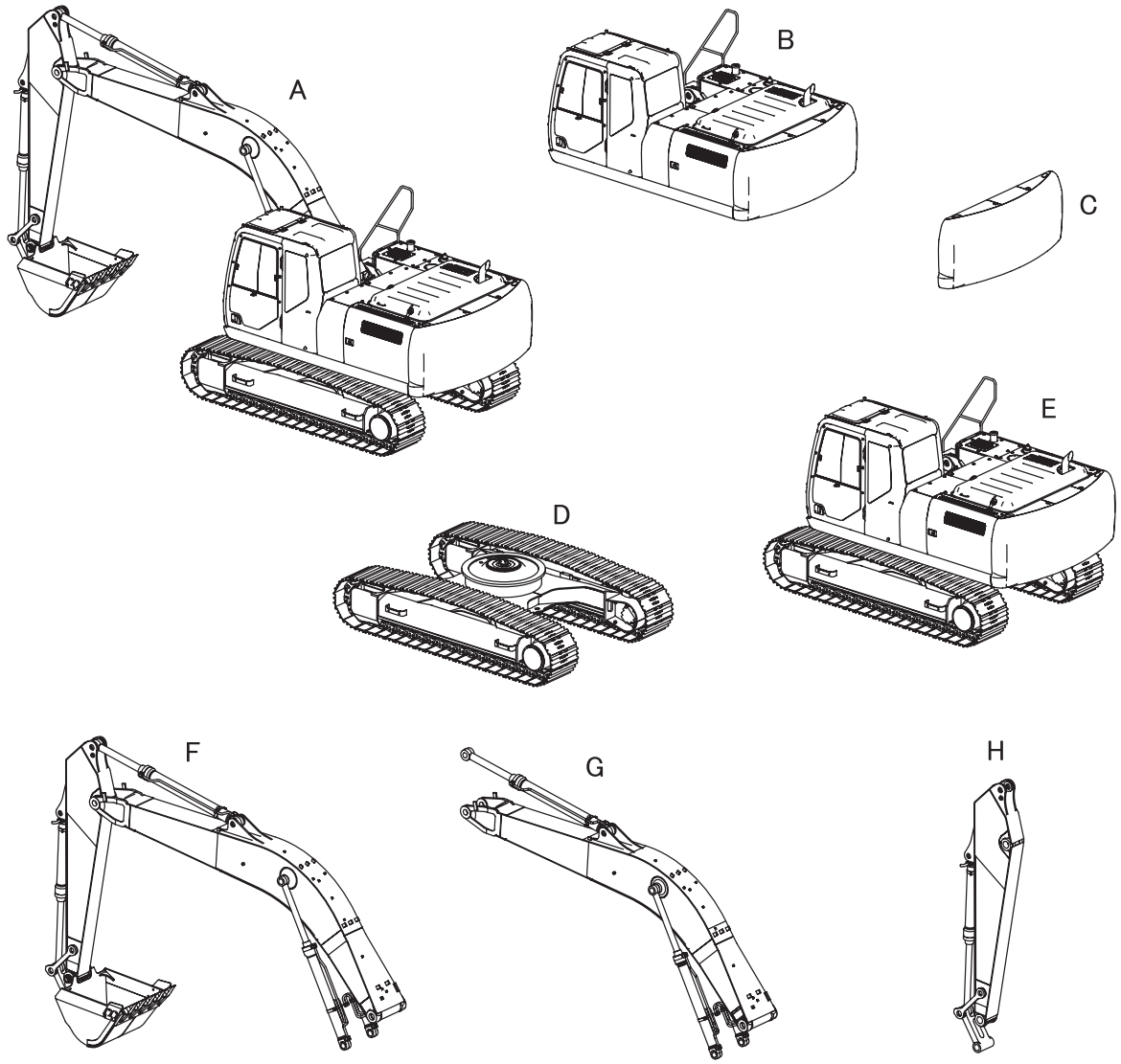

RST-11-01-001a

Weight lb (kg)

Symbol	Component name	210LX2	240LX2
A	Operating weight	47399 (21500)	54895 (24900)
B	Upper mechanism (including counterweight and turntable bearing)	21186 (9610)	24824 (11260)
C	Counterweight	9083 (4120)	11618 (5270)
D	Lower mechanism (with grouser shoe)	17416 (7900)	19532 (8860)
E	Main Unit Weight	38603 (17510)	44357 (20120)
F	Attachments	8642 (3920)	10472 (4750)
G	Boom (including cylinders)	4916 (2230)	5975 (2710)
H	Arm (including cylinders and linkage)	2271 (1030)	2712 (1230)

* The weight information is approximate.

Individual Part Weight

Dry weight for each part is shown in the table below.

Weight lb (kg)

	Part name	210LX2	240LX2
1	Travel unit	723 (328)	←
2	Take-up roller	191 (87)	←
3	Upper-roller	37 (17)	←
4	Lower roller	75 (34)	79 (36)
5	Swing unit	531 (241)	655 (297)
6	Turntable bearing	580 (263)	64825 (404)
7	Engine	1170 (531)	←
8	Radiator	295 (134)	313 (142)
9	Hydraulic pump	317 (144)	←
10	Fuel tank	353 (160)	←
11	Hydraulic oil tank	335 (152)	←
12	Control valve	447 (203)	←
13	Center joint	68 (31)	←
14	Boom	3366 (1527)	4037 (1831)

Shoe Weight (one side)

Weight lb (kg)

	Part name	210LX2	240LX2
1	23.6 in. (600 mm) grouser shoe	2954 (1340)	3263 (1480)
2	27.6 in. (700 mm) grouser shoe	3439 (1560)	3594 (1630)
3	31.5 in. (800 mm) grouser shoe	3770 (1710)	3924 (1780)

Arm Weight

Weight lb (kg)

	Part name	210LX2	240LX2
1	Standard arm	1537 (697)	1746 (792)
2	Short arm	1477 (670)	1499 (680)
3	Long arm	-	1969 (893)

Bucket Weight

210LX2

	Bucket capacity yd^3 (m^3)	Weight lb (kg)	L1 in. (mm)	L2 in.(mm)
1	0.65 (0.5)	1133 (514)	28.7 (730)	32.7 (830)
2	1.1 (0.8)	1142 (654)	40.6 (1030)	44.5 (1130)
3	1.2 (0.9)	1530 (694)	44.5 (1130)	48.4 (1230)
4	1.3 (1.0)	1646 (747)	49.6 (1260)	53.5 (1360)
5	1.4 (1.1)	1720 (780)	53.5 (1360)	57.5 (1460)
6	1.0 (0.8)HD	1601 (726)	40.8 (1036)	44.7 (1136)

240LX2

	Bucket capacity yd^3 (m^3)	Weight lb (kg)	L1 in. (mm)	L2 in. (mm)
1	1.1 (0.8)	1636 (742)	38.8 (985)	42.8 (1086)
2	1.3 (1.0)	1854 (841)	46.2 (1175)	50.2 (1276)
3	1.4 (1.1)	1949 (884)	49.6 (1260)	53.6 (1361)
4	1.7 (1.3)	2083 (945)	57.5 (1460)	61.4 (1561)

Bucket shape

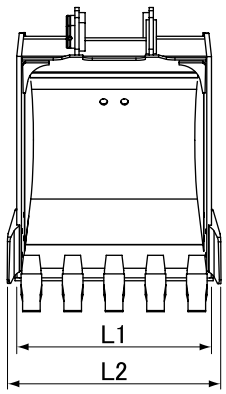

Hoe bucket

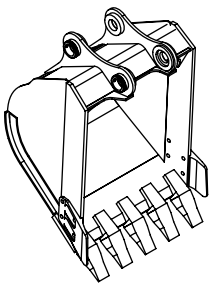

RST-11-01-001b

Compatibility

1. Main Part Compatibility Table (SH210LX2)

Region		Part name	210LX	Compatibility	210LX2	Remarks
Lower related	A	Travel motor	KRA10120	←× →	KRA10150	Drive force increased
		Shoe (600 mm)	KRA11370	←O →	KRA11370	
		Lower roller	KRA1189	←O →	KRA10360	Contact surface with link machining added
		Upper-roller	KRA1717	←O →	KRA1717	
		Take-up roller	KRA1767	←O →	KRA1767	
		Recoil spring	KRA1776	←× →	KRA10170	Specifications change
		Drive sprocket	KRA1665	←O →	KRA10160	Tooth shape change
		Center joint	KRA1875	←O →	KRA11190	The lock bar is different.
Upper related	B	Counterweight	KRB1541	←× →	KRB12620	Shape change
		Turntable bearing	KRB10160	←× →	KRB11710	Power increased
	C	Swing motor assembly	KRC0226	←× →	KRC10010	Specifications change
		Swing motor	LJ01076	←× →	LJ014440	
		Swing reduction gear	LN00111	←× →	LN001820	
	H	Engine	KRH1514	←× →	KRH11180	Third engine
		Radiator / oil cooler	KRH1374	←× →	KRH10810	Parallel type used
		Air cleaner	KRH1569	←× →	KRH10050	Indicator position change
		Muffler	KRH1227	←× →	KRH10880	Size increased
		Fuel tank	KRH1352	←× →	KRH10800	Capacity increased
	J	Hydraulic pump	KRJ6199	←× →	KRJ10290	Specifications change
		Control valve	KRJ10420	←× →	KRJ10310	Specifications change
		Remote control valve (operating machine)	KRJ5804	←× →	KHJ13270	Specifications change
		Remote control valve (travel)	KRJ5803	←O →	KRJ5803	
		Hydraulic oil tank	KRJ6216	←× →	KRJ15660	Shape change
	N	Cab	KHN10020	←× →	KHN13470	Structure change
		Operator seat	KHN3470	←× →	KHN10500	Suspension change
		Console box	KHN2652	←× →	KHN12210	Design change
	R	Computer	KHR2680	←× →	KHR10021	Specifications change
		Monitor display	KHR3827	←× →	KHR15210	Design change
		Air conditioner unit	KHR4135	←O →	KHR13320	Unit main unit only interchangeable
Attachment related	V	Boom (EMS)	KRV17890	←× →	KRV20180	Specifications change
		Arm (EMS)	KRV10430	←× →	KRV20190	The arm tip section has a steel bushing.
		Bucket (0.8 m^3)	KRV2783	←O →	KRV19330	Bottom plate change
		Bucket link	KRV3081	←× →	KRV20240	The bucket link section has a steel bushing.
		Arm link	KRV2365 KRV2366	←× →	KRV2365 KRV2366	
		Boom cylinder	KRV3234 KRV3235	←× →	KRV19520 KRV19540	Specifications change
		Arm cylinder	KRV3236	←× →	KRV19600	Specifications change
		Bucket cylinder	KRV3237	←× →	KRV19640	Specifications change
		Pin bushing				Arm top and bucket pin only interchangeable

The parts numbers are for reference.When arranging for parts, check with the parts manual.

2. Main Part Compatibility Table (240LX2)

Region		Part name	240LX	Compatibility	240LX2	Remarks
Lower related	A	Travel motor	KBA10060	←× →	KBA10290	Drive force increased
		Shoe (600 mm)	KBA11230	←O →	KBA11230	
		Lower roller	KBA1123	←O →	KBA10310	Contact surface with link machining added
		Upper-roller	KRA1717	←O →	KRA1717	
		Take-up roller	KRA1767	←O →	KRA1767	
		Recoil spring	KRA1776	←× →	KRA10170	Specifications change
		Drive sprocket	KRA1665	←O →	KRA10160	Tooth shape change
		Center joint	KRA1875	←O →	KRA11190	The lock bar is different.
Upper related	B	Counterweight	KBB0722	←× →	KBB11610	Shape change
		Turntable bearing	KBB10090	←× →	KBB11350	Power increased
	C	Swing motor assembly	KBC0109	←× →	KBC10010	Specifications change
		Swing motor	KBC0108	←× →	KBC10020	Specifications change
		Swing reduction gear	KBC0154	←× →	KBC10030	Specifications change
	H	Engine	KBH1007	←× →	KBH11180	Third engine
		Radiator / oil cooler	KBH1001	←× →	KBH10800	Parallel type used
		Air cleaner	KRH1569	←× →	KRH10050	Indicator position change
		Muffler	KBH0848	←× →	KRH10880	Size increased
		Fuel tank	KRH1352	←× →	KRH10800	Capacity increased
	J	Hydraulic pump	??	←× →	KBJ10290	Specifications change
		Control valve	KRJ10200	←× →	KBJ10390	Specifications change
		Remote control valve (operating machine)	KRJ5804	←× →	KHJ13270	Specifications change
		Remote control valve (travel)	KRJ5803	←O →	KRJ5803	
		Hydraulic oil tank	KRJ6216	←× →	KRJ15660	Shape change
	N	Cab	KHN10020	←× →	KHN13470	Structure change
		Operator seat	KHN3470	←× →	KHN10500	Suspension change
		Console box	KHN2652	←× →	KHN12210	Design change
	R	Computer	KHR2680	←× →	KHR10021	Specifications change
		Monitor display	KHR3827	←× →	KHR15210	Design change
		Air conditioner unit	KHR4135	←O →	KHR13320	Unit main unit only interchangeable
Attachment related	V	Boom (EMS)	KBV1638	←× →	KBV15360	Specifications change
		Arm (EMS)	KBV10420	←× →	KBV15700	The arm tip section has a steel bushing.
		Bucket	(1.0 m^3) KBV1355	←O →	(1.1 m^3) KBV13370	Bottom plate change
		Bucket link	KBV1655	←× →	KBV15720	The bucket link section has a steel bushing.
		Arm link	KBV1337 KBV1338	←O →	KBV1337 KBV1338	
		Boom cylinder	KBV1787 KBV1788	←× →	KBV10980 KBV11000	Specifications change
		Arm cylinder	KBV1789	←× →	KBV11020	Specifications change
		Bucket cylinder	KBV1790	←× →	KBV11040	Specifications change
		Pin bushing				Arm top and bucket pin only interchangeable

The parts numbers are for reference.When arranging for parts, check with the parts manual.

https://truckmanualshub.com/

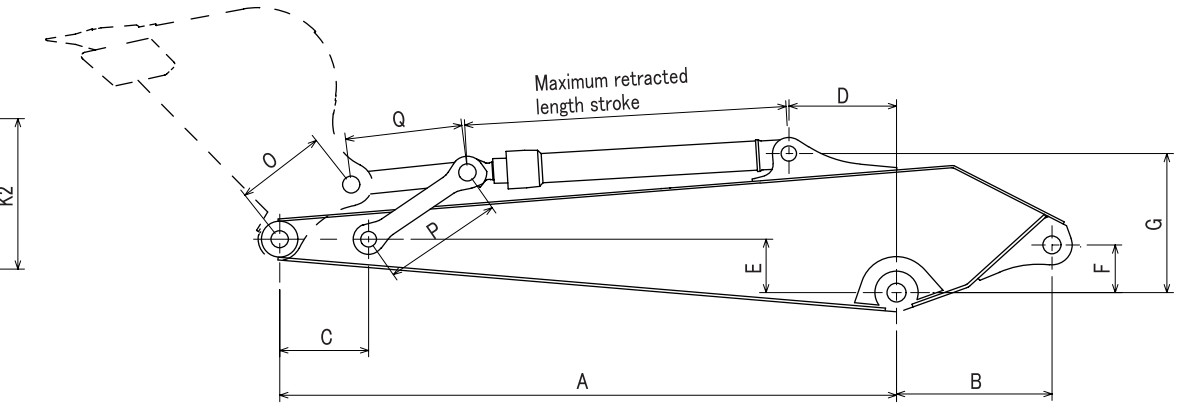

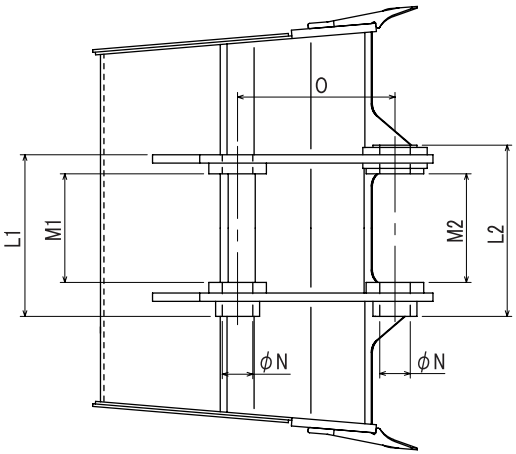

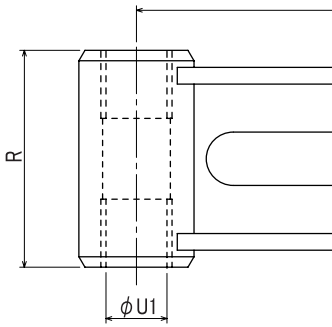

Bucke

Standard arm												Bucket						Arm link		
B	C	D	E	F	G	H	I	J1	J2	K1	K2	L1	L2	M1	M2	N	O	P	Q	R
31.3 (796)	17.5 (445)	17.9 (454)	10.1 (256.3)	8.3 (210)	28.2 (717.3)	7.3 (186)	5.5 (140)	3.1 (80)	3.0 (75)	12 (306)	11.7 (296)	18.1 (460)	18.7 (476)	12.1 (307)	12.1 (307)	3.1 (80)	3.1 (80)	22.8 (580)	22.0 (560)	12.0 (306)
34.9 (886.5)	18.1 (460)	15.3 (388.2)	10 (254)	11.1 (281)	28.3 (719.5)	7.7 (196)	5.9 (150)	3.5 (90)	3.1 (80)	12.8 (325)	12.4 (316)	19.1 (485)	20 (507)	12.8 (326)	12.8 (326)	3.5 (90)	18.4 (468)	24.4 (620)	23.8 (605)	12.8 (325)

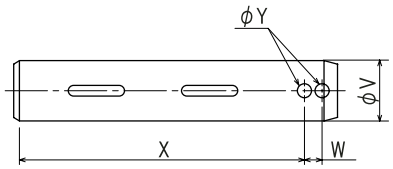

Bucket pin

RST-11-04-001b

Bucket pin								Bucket cylinder		
ucket and arm connection section				Bucket and bucket link connection section				Maximum retracted length	Stroke	Cylinder top width
	W	X	Y	V	W	X	Y			

Paint Colors

		SUMITOMO No.	MUNSELL No.
1	Red	F-222	
2	Granite gray	S-148	
3	MS37 gray	N-300	1.2Y 3.8 / 0.3
4	Black	S-141	9.0YR 3.3 / 0.1

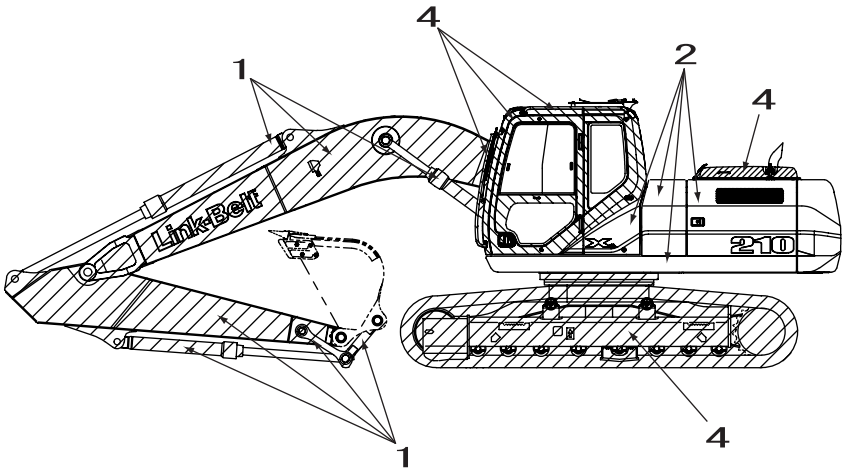

RK05001-002

No.	Paint location	Color	SUMITOMO No.	Paint part No.
1	• The upper of machine (Except cabin, engine, muffler, exhaust pipe, house door, engine hood, frame duct, front cover, tank cover, electric parts, plastics) • Rev.frame (front side)	Granite gray	S-148	KHP1444 (urethane)
2	• Attachment	Red	F-222	KHP1444 (urethane)
3	• Inside of house • Rev.frame (expect front and lower side)	MS37 Gray	N-300	KHP1193 (one-coat)
4	• Upper under cover	MS37 Gray	N-300	KHP1444 (urethane)
5	• Outside of cabin	Granite gray	S-148	- (Melamine)
		Black	S-141	
6	• Inside of cabin	Black	S-141	- (Melamine)
7	• Frames of front window	Black	S-141	- (Melamine)
8	• Floor, bracket trim	MS37 Gray	N-300	KHP1193 (one-coat)
9	• The lower of machine • Rev.frame (lower side) • Include of turntable bearing	Black	S-141	KHP1189 (acryle)
10	• Rev.frame (under engine&inside)	MS37 Gray	N-300	KHP1189 (acryle)
11	• Lower under cover	MS37 Gray	N-300	KHP1193 (one-coat)
12	• Muffler and exhaust pipe	Black	Ceramic coating (K.K)	KHP1200 (heat resist)
13	• House door, side cover	Granite gray	S-148	KHP1445 (baking)
14	• Engine hood	Black	S-141	KHP1445 (baking)
15	• Hand rail	Black	S-141	Powder coating
16	• Frame duct	MS37 Gray	N-300	KHP1445 (baking)
17	• Front cover, tank cover	Black	S-141	KHP1445 (baking)

Unit Conversion Ratio

Weight unit	←× → ←÷ →	SI unit
Kgf	9.807	N
lbf	4.448	N
Kgf•cm	0.0981	N•m
lbf•ft	1.356	N•m
lbf•in	0.113	N•m
Kgf/cm^2	0.0981	MPa
atm	0.1013	MPa
$lbf•in^2$	0.0069	MPa
mmHg	133.3	Pa
inHg	3386	Pa
Kgf•m/s	0.00981	kW
lbf•ft/s	0.00136	kW
PS	0.7355	kW
HP	0.746	kW
Kgf•m	9.807	J
Kcal	4186	J
$Kgf•s/cm^2$	98067	Pa•s
cP	0.001	Pa•s
P	0.1	Pa•s
cSt	$1×10^{-6}$	m^2/s
St	0.0001	m^2/s

https://truckmanualshub.com/

Contents

210 X2 and 240 X2 Shop Manual

2 Engine

2-2 Procedures for Replacing Consumable Parts

1 Engine Oil 1
2 Removal and Installation of Engine Oil Element 3
3 Fuel Filter 4
4 Charge Fuel Pump Filter 8
5 Removal and Installation of Fan Belt 10
6 Removal and Installation of Air Conditioner Belt 12

2-3 Assembly and Disassembly

1 Removal and Installation of Engine Hood 13
2 Removal and Installation of Engine Assembly 15
3 Removal and Installation of Starter 26
4 Removal and Installation of Alternator 28
5 Removal and Installation of Common Rails 30
6 Removal and Installation of Supply Pump 33
7 Removal and Installation of Injector 39
8 Removal and Installation of Turbo 43
9 Removal and Installation of Muffler 46
10 Removal and Installation of EGR Cooler 48
11 Removal and Installation of Engine Sensors 51
12 Removal and Installation of Engine Inter Cooler 52
13 Removal and Installation of Fuel Cooler 54

3 Air Conditioner

3-6 Assembly and Disassembly

1 Removal and Installation of Compressor 55
2 Removal and Installation of Condenser 57
3 Removal and Installation of Receiver Dryer 59

4 Maintenance

4-9 Electric Equipment Checking Procedure

1 Voltage Measurement Procedure 61

https://truckmanualshub.com/

Contents

5 Assembly and Disassembly

5-1 Lower Mechanism: Track Shoe
1 Removal and Installation of Shoe Assembly.....63
2 Removal and Installation of Shoe Plates.....65

5-2 Lower Mechanism: Travel Drive Unit
1 Removal and Installation of Travel Motor Assembly.....66
2 Assembly and Disassembly of Travel Motor.....71
3 Travel Motor Operator's Manual.....169

5-3 Lower Mechanism: Take-up Roller
1 Take-up Roller Disassembly and Assembly.....207

5-4 Lower Mechanism: Upper Roller
1 Removal and Installation of Upper Roller.....216
2 Assembly and Disassembly of Carrier Roller.....218

5-5 Lower Mechanism: Lower Roller
1 Removal and Installation of Lower Roller.....226
2 Assembly and Disassembly of Track Roller.....228

5-7 Swing Body: Swing Driving Unit
1 Removal and Installation of Swing Motor Assembly.....237
2 210 X2 Assembly and Disassembly of Swing Unit.....241
3 210 X2 Assembly and Disassembly of Swing Motor.....256
4 240 X2 Assembly and Disassembly of Swing Motor.....283
5 210 X2 Assembly and Disassembly of Swing Reduction Gear.....312
6 240 X2 Assembly and Disassembly of Swing Reduction Gear.....325

5-9 Swing Body: Center Joint
1 Removal and Installation of Center Joint.....343

5-10 Upper Swing Body: Counterweight
1 Removal and Installation of Counterweight.....347

https://truckmanualshub.com/

Contents

5-11 Upper Swing Body: Pump

1 Removal and Installation of Pump 350
2 Assembly and Disassembly Procedures of Pump Main Unit 355
3 Explanation of Regulator Operation 368
4 Regulator Disassembly and Assembly Procedures 384

5-12 Upper Swing Body: Remote Control Valve

1 Explanation of Pilot Valve Operation 396
2 Removal and Installation of Joystick Remote Control Valve Assembly 418
3 Removal and Installation of Travel Remote Control Valve Assembly 423
4 4-Way Selector Valve Installation Procedure 427

5-13 Upper Swing Body: Control Valve

1 Removal and Installation of Control Valve Assembly 439

5-14 Upper Swing Body: Solenoid Valve

1 Removal and Installation of 5-Stack Solenoid Valve 447
2 Removal and Installation of Cushion Valve 450
3 Assembly and Disassembly of Cushion Valve 453

5-15 Upper Swing Body: Radiator and Oil Cooler

1 Removal and Installation of Radiator 462
2 Removal and Installation of Oil Cooler 470

5-16 Upper Swing Body: Tank

1 Removal and Installation of Hydraulic Oil Tank 474
2 Removal and Installation of Fuel Tank 481

5-17 Structure: Attachment

1 Removal and Installation of Bucket 486
2 Removal and Installation of Bucket Link 488
3 Installation of Bucket Cylinder 491
4 Removal and Installation of Arm 494
5 Removal and Installation of Arm Cylinder 496
6 Removal and Installation of Boom 500
7 Removal and Installation of Boom Cylinder 505
8 Removal and Installation of Arm HBCV 509
9 Removal and Installation of Boom HBCV 511

https://truckmanualshub.com/

Contents

5-18 Light

1 Removal and Installation of Boom Light 514
2 Removal and Installation of Tool Box Light.....515

5-20 Procedures for Removal and Installation of Cab Inner and Outer Parts

1 Removal and Installation of Cab Assembly 516
2 Removal and Installation of Operator's Seat 523
3 Removal and Installation of Wiper 525
4-1 Removal and Installation of Wiper Controller.....526
4-2 Removal and Installation of Wiper Motor 529
5 Removal and Installation of Monitor.....532
6 Removal and Installation of Cab Front Glass 533
7 Adjustment Procedure of Window Lock.....535

5-21 Hydraulic Equipment

1 Accumulator.....537
2 Suction Filter.....538
3 Return Filter 540
4 Pilot Filter.....542

5-23 Others

1 Removal and Installation of Side Door.....543
2 Draining Oil from Hydraulic Oil Tank.....544

https://truckmanualshub.com/

2-2 Engine: Procedures for Replacing Consumable Parts

1 Engine Oil

Warning	• Keep away from fire.

Caution	• Be sure to stop the engine before beginning work.

Items to prepare

- Wrench (19 mm)
- Specialized plug
- Waste oil can
- Rags
- Cleaning fluid

[1] Remove 4 mounting bolts (1) using a 19-mm wrench, and remove the under cover (2).

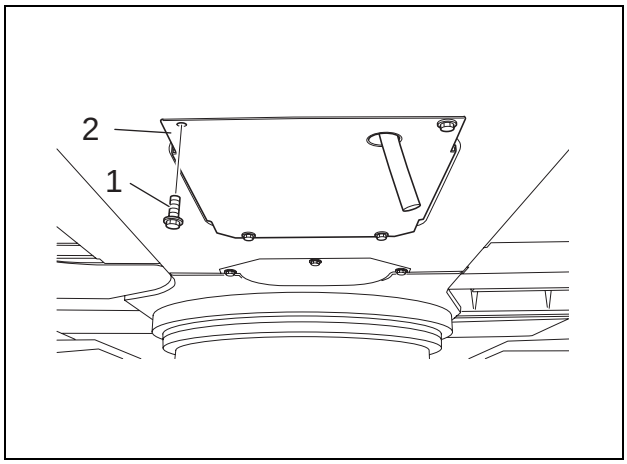

[2] Remove the drain plug (1).

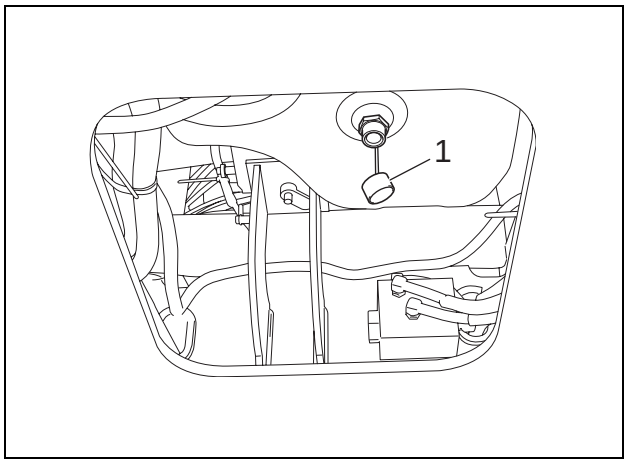

https://truckmanualshub.com/

[3] Prepare the waste oil can (1).

[4] Screw the specialized plug (2) in the oil drain port, and the engine oil will drain.

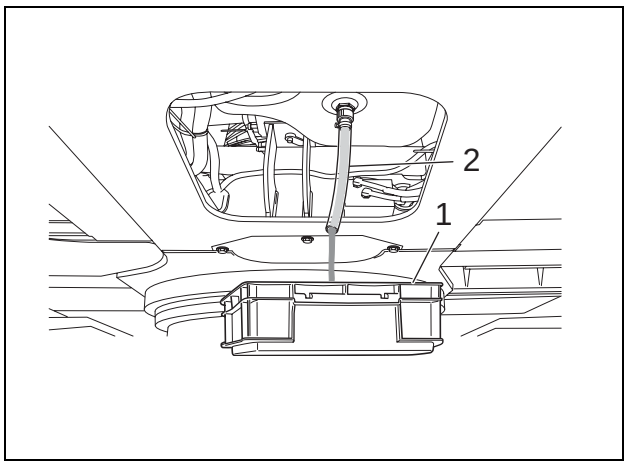

https://truckmanualshub.com/

2 Removal and Installation of Engine Oil Element

Caution	• Be sure to stop the engine before beginning work.

Items to prepare

- Specialized wrench
- Rags
- Cleaning fluid

[1] Use a specialized wrench (1) to remove the engine oil element (2).

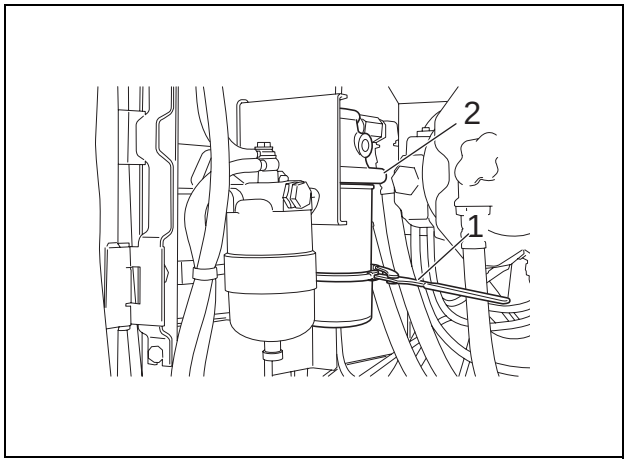

https://truckmanualshub.com/

3 Fuel Filter

Warning	• Keep away from fire.

Cautions	• Always bleed the air from fuel system if you have emptied the fuel tank, drained the water from fuel tank, or replaced the filter element. • Be sure to stop the engine before beginning work.

Items to prepare

- Wrench (10 mm, 22 mm)
- Specialized filter wrench
- Waste oil can
- Rags
- Cleaning fluid

[1] Tighten and close the cock (1).

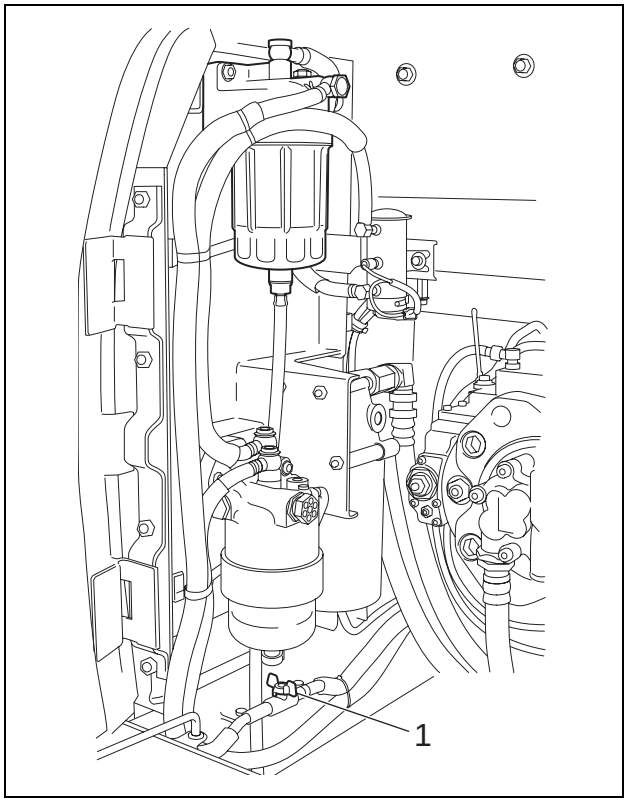

https://truckmanualshub.com/

[2] Prepare the waste oil can (1).

[3] Loosen the air bleeding plug (2) using a 22-mm wrench.

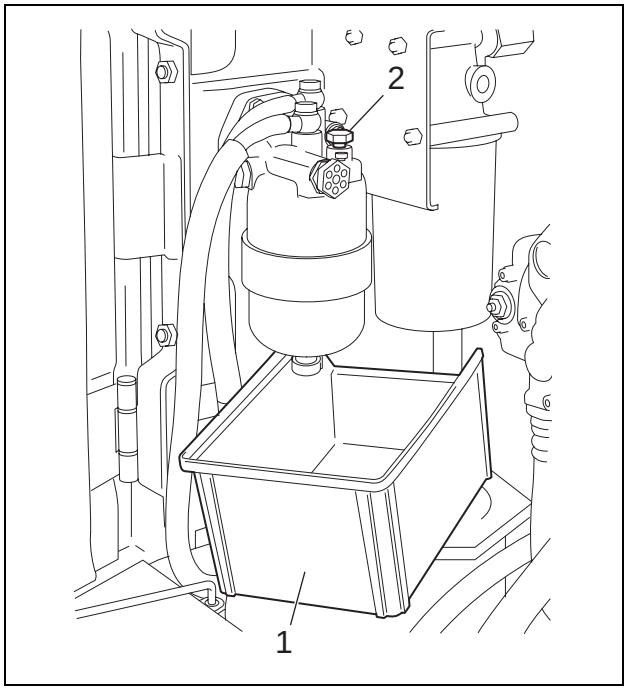

[4] Remove the drain plug (1).

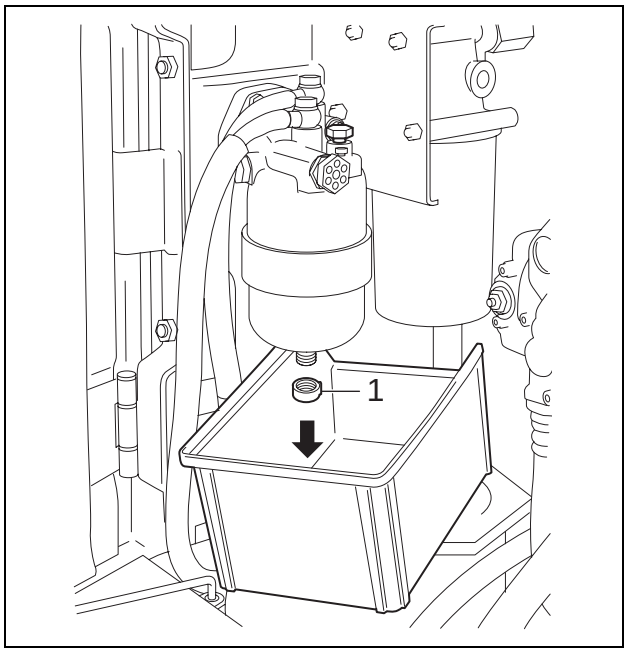

https://truckmanualshub.com/

[5] Drain the fuel.

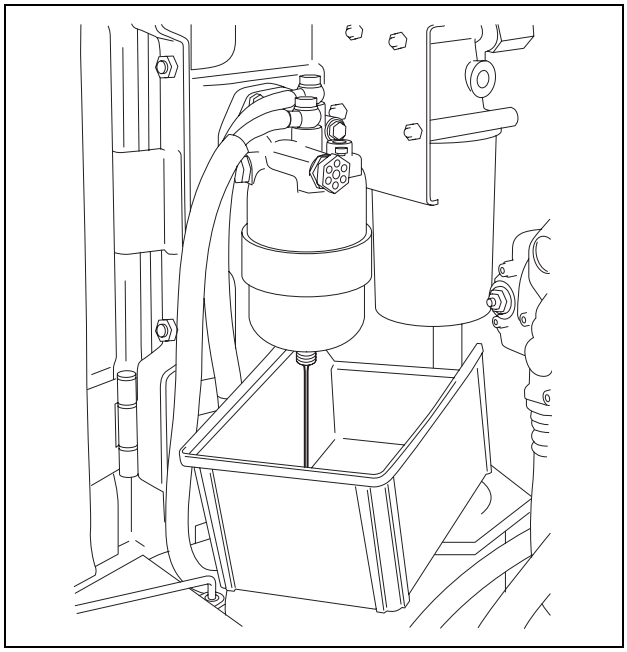

[6] Remove the cover (2) using a specialized filter wrench (1).

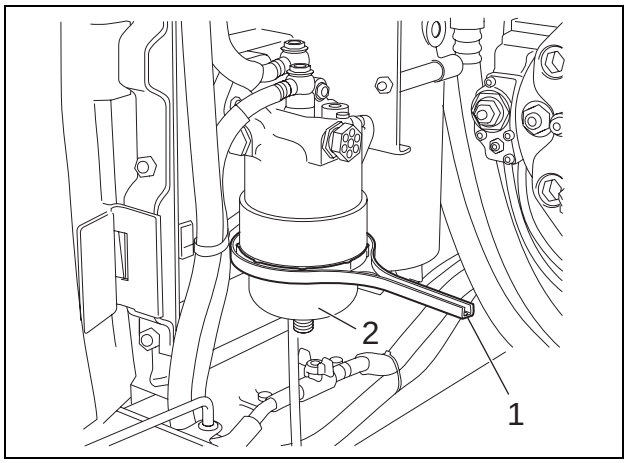

[7] Replace both the filter (1) and O-ring (2) with new ones.

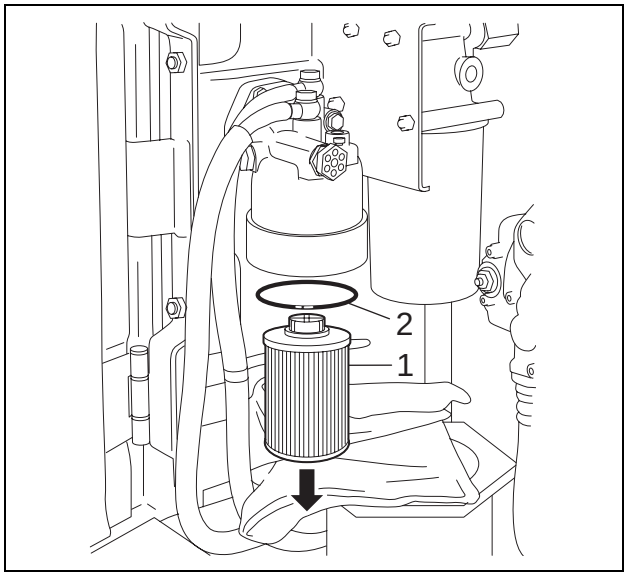

https://truckmanualshub.com/

[8] After you have replaced the filter, mount cover (2) using a specialized filter wrench (1).

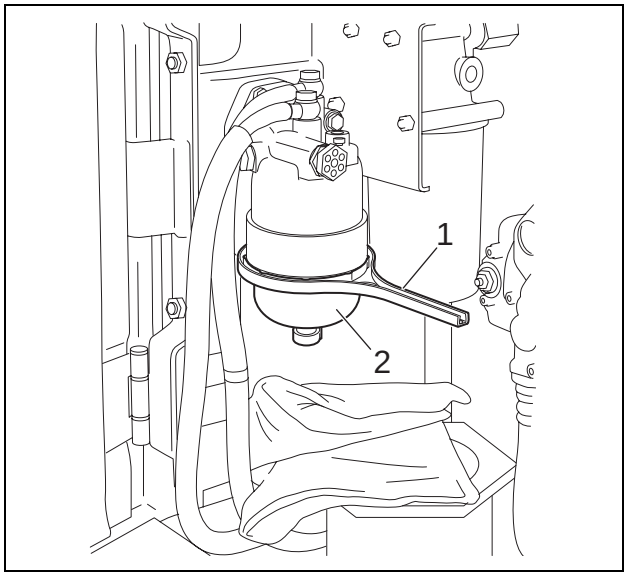

[9] Loosen the air bleeding plug (1) using a 10-mm wrench, and fill the fuel pump filter section with the fuel by operating the priming pump (2) (more than 10 times).

[10] Wait for approximately 1 minute, and bleed the air from the fuel filter section by loosening the air bleeding plug (1).

[11] When the air bleeding stops, securely tighten the air bleeding plug (1).

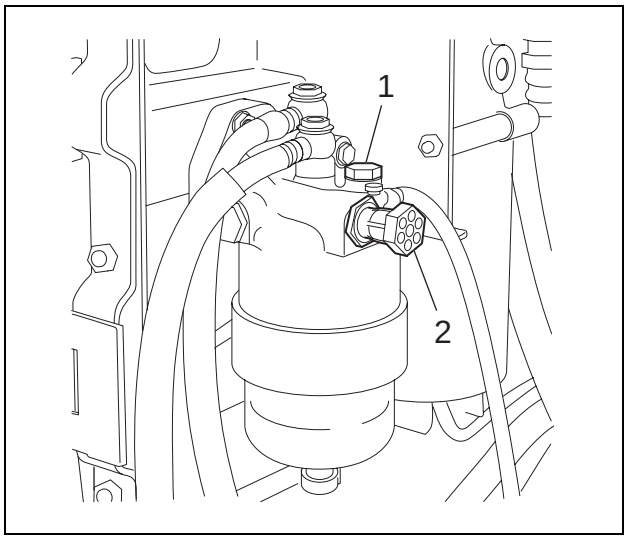

https://truckmanualshub.com/

4 Charge Fuel Pump Filter

Caution	• Be sure to stop the engine before beginning work.

Items to prepare

- Wrench (10 mm)
- Pliers
- Caps
- Rags
- Cleaning fluid

[1] Remove the connector (1).

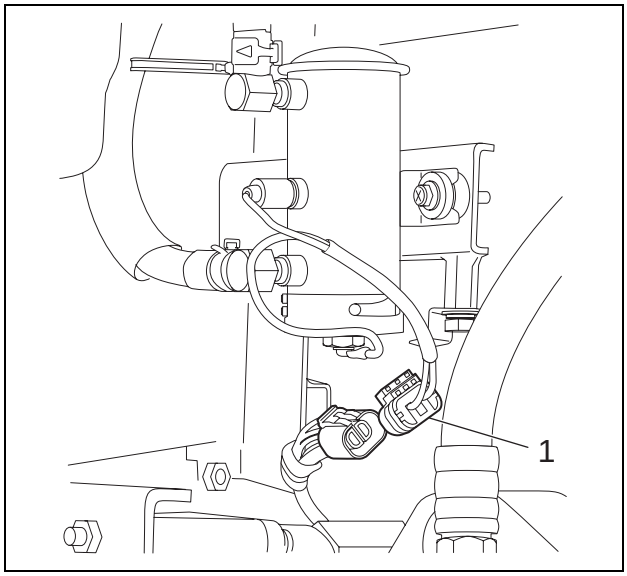

[2] Loosen hose bands (1) and (2) using pliers or a similar tool, and remove hoses (3) and (4).
- Use caps or plugs to cover the charge fuel pump filter and hoses to prevent the entry of water, dust or dirt.

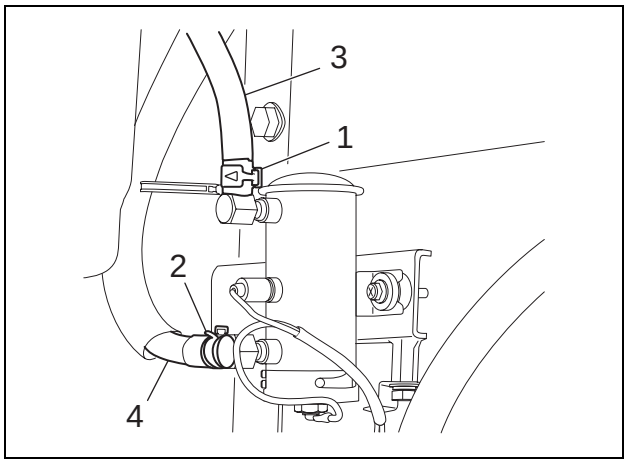

https://truckmanualshub.com/

[3] Remove 2 mounting bolts (1) using a 10-mm wrench, and remove the charge fuel pump filter (2).

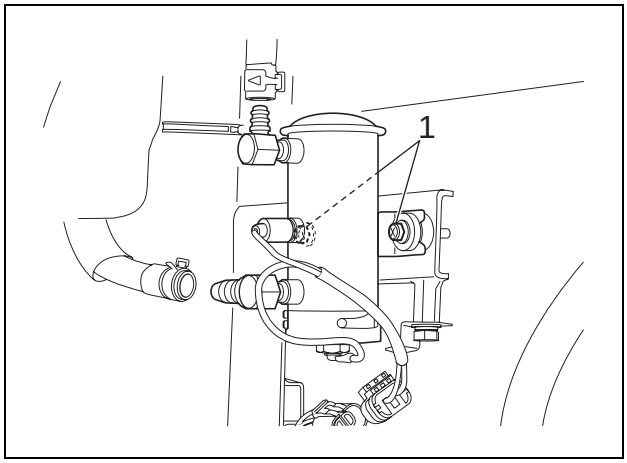

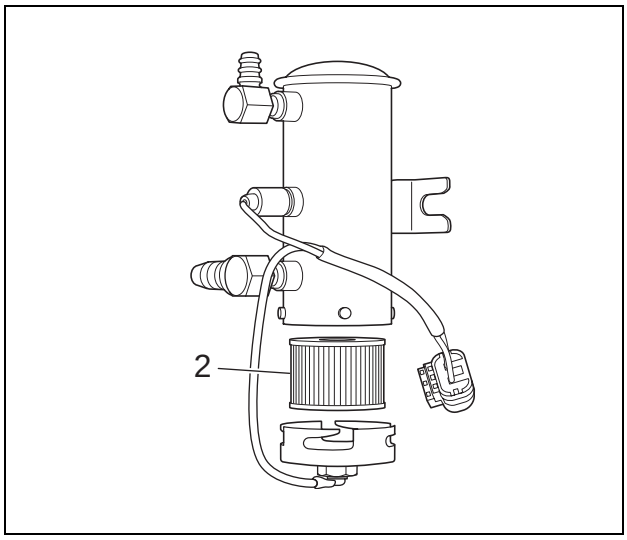

https://truckmanualshub.com/

5 Removal and Installation of Fan Belt

Caution	• Be sure to stop the engine before beginning work.

Items to prepare

- Wrench (14 mm, 17 mm)
- Rags
- Cleaning fluid

[1] Remove the air conditioner belt.
(For details, see "Removal and Installation of Air Conditioner Belt")

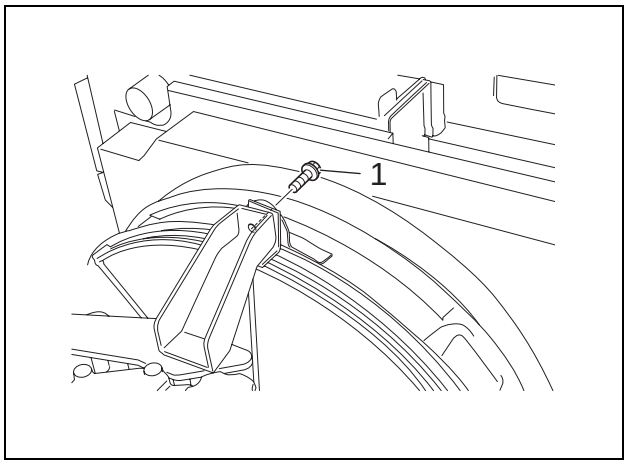

[2] Use a 14-mm wrench to remove the installation bolts (1), (2) and (3), and then remove the fan guard.

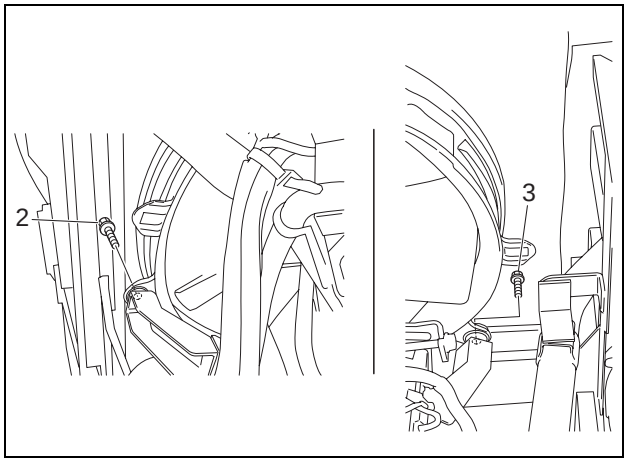

[3] Use a 17-mm wrench to loosen the installation bolt (1).

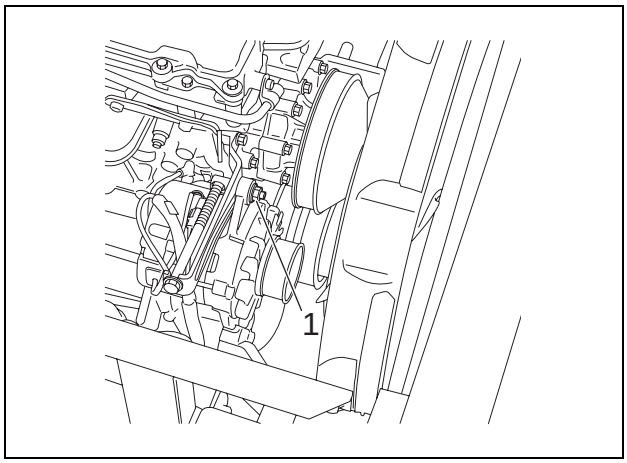

https://truckmanualshub.com/

[4] Use a 17-mm wrench to loosen the tension bolt (1).

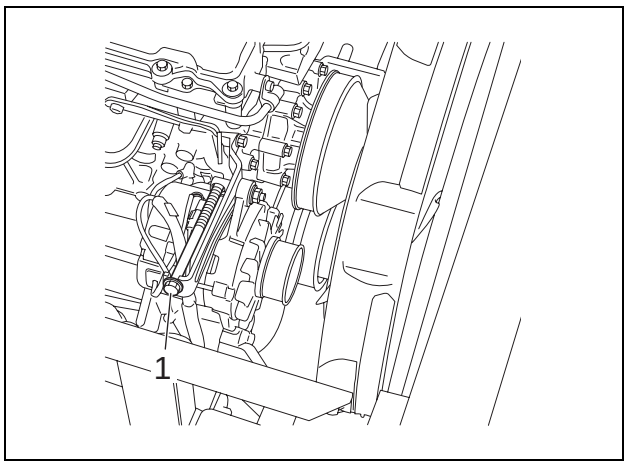

[5] Use a 17-mm wrench to remove the installation bolt (1), and then remove the tensioner (2).

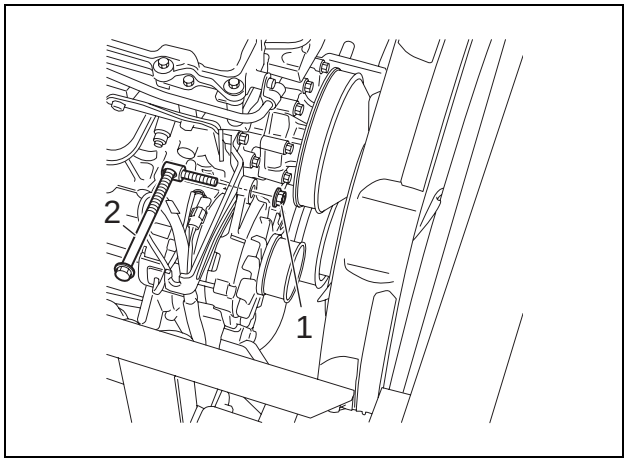

[6] Pass the fan belt (1) over the fans one at a time and remove it.

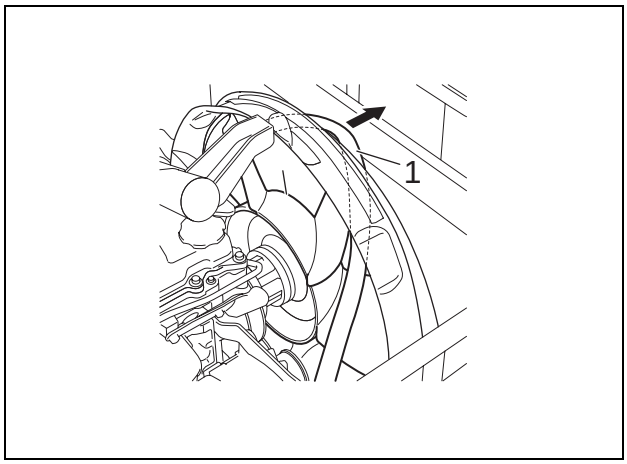

https://truckmanualshub.com/

6 Removal and Installation of Air Conditioner Belt

Caution	• Be sure to stop the engine before beginning work.

Items to prepare

- Wrench (19 mm)
- Box wrench (14 mm)
- Rags
- Cleaning fluid

[1] Use a 19-mm wrench to remove the 4 installation bolts, and then remove the under cover (1).

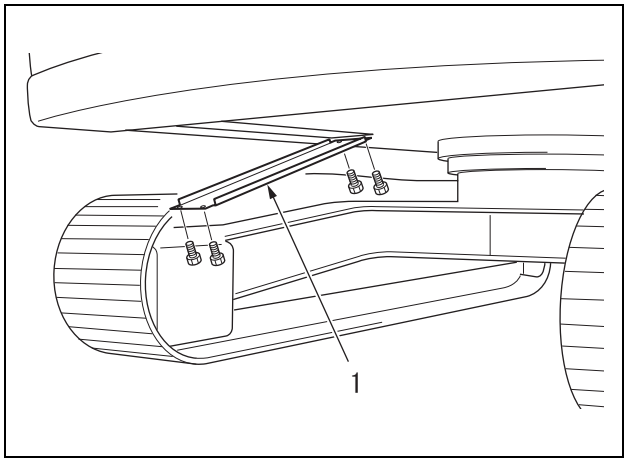

[2] Use a 14-mm box wrench to loosen the nut (1).

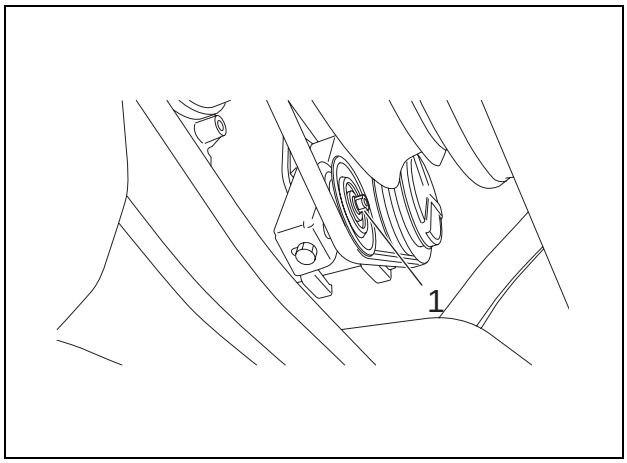

[3] Use a 14-mm box wrench to loosen the tension bolt (1), and then remove the air conditioner belt (2).

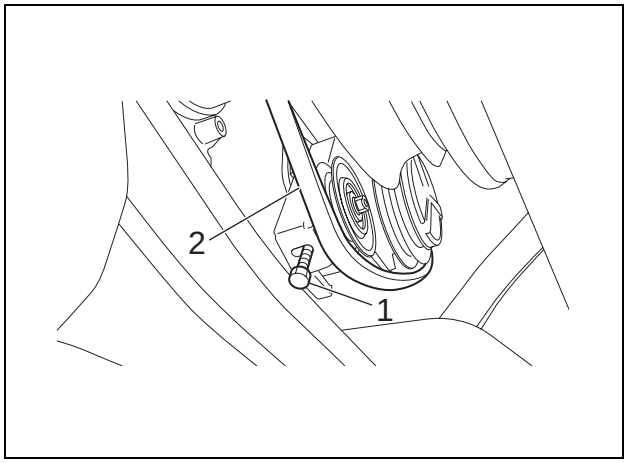

https://truckmanualshub.com/

1 Removal and Installation of Engine Hood

Caution	• Be sure to stop the engine before beginning work. • Do not perform this operation in strong wind. • Be sure to inspect the nylon slings and other lifting equipment before beginning work. • Do not stand or pass under the suspended load (engine hood).

Items to prepare

- Wrench (19 mm)
- Nylon sling (with the required breaking load)
- Crane (that meets the lifting capacity)

[1] Open the engine hood, and then remove the snap pin (1) and the flat washer (2).

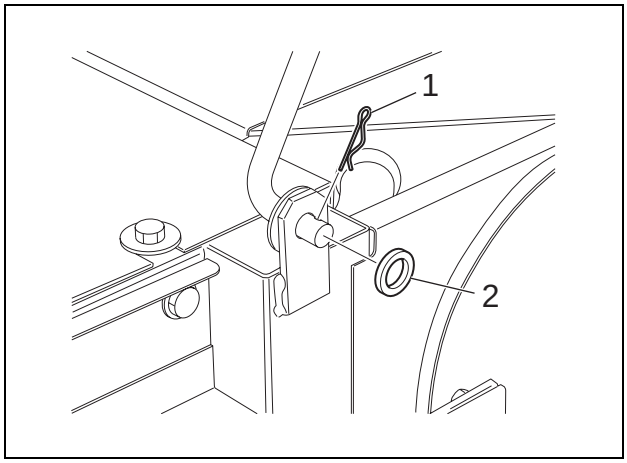

[2] Pull out the locking arm (2) from the engine hood (1).

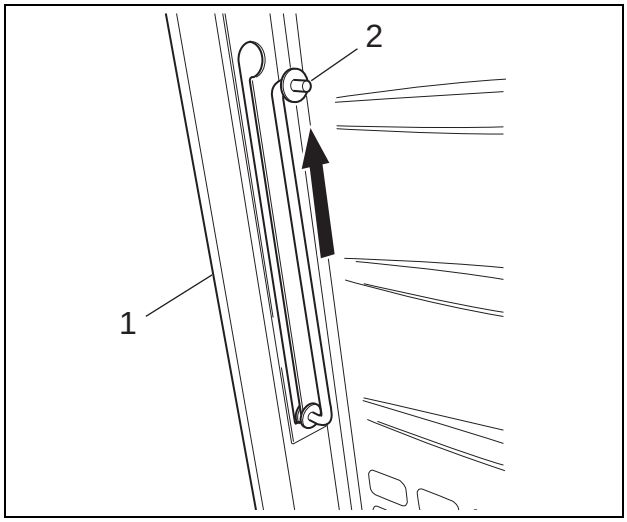

https://truckmanualshub.com/

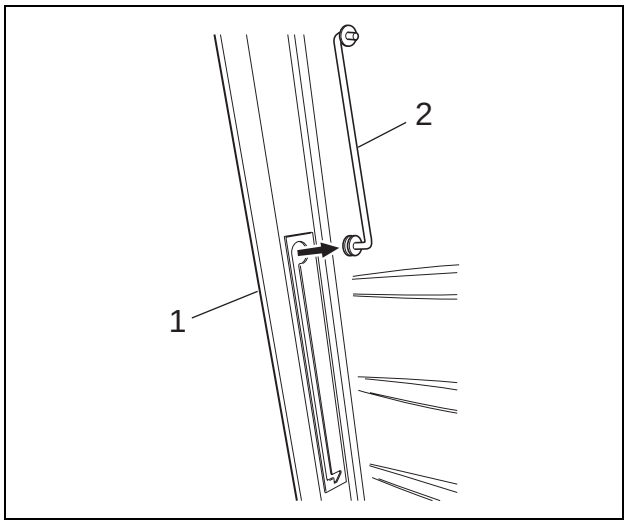

[3] After closing the engine hood, use a 19-mm wrench to remove the 6 installation bolts (1) from the engine hood.

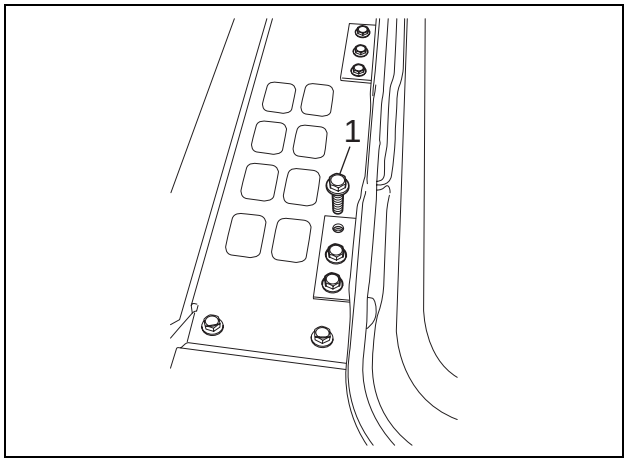

[4] Wrap the nylon sling (1) around the engine hood, and then use the crane to lift the engine hood.

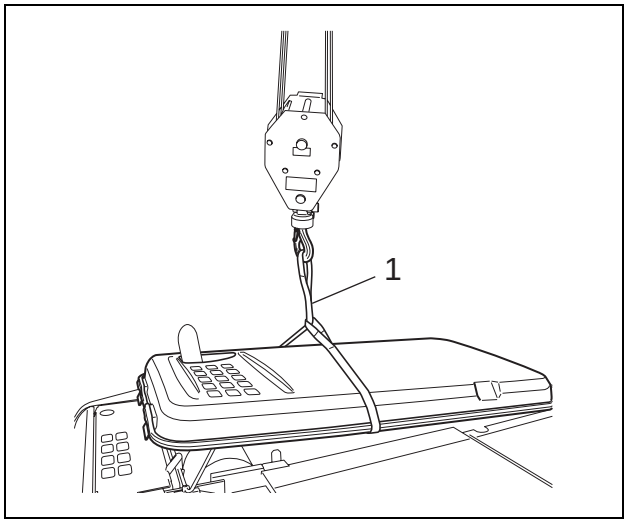

https://truckmanualshub.com/

2 Removal and Installation of Engine Assembly

Warning	• Keep away from fire. • Be sure to release the hydraulic pressure before beginning work. • The air conditioner circuit is filled with high-pressure gas. Beware of the gas that is released when loosening the pipes. • Do not use open flames and do not allow sparks near the battery.

Cautions	• Be sure to stop the engine before beginning work. • Be sure to inspect the wire rope and other suspended items before beginning work. • Do not stand or pass under the suspended load (engine assembly).

Items to prepare

- Wrench (7 mm, 8 mm, 10 mm, 12 mm, 13 mm, 14 mm, 17 mm, 36 mm)
- Box wrench (24 mm)
- Shackles (with the required lifting capacity × 2)
- Wire rope (with the required breaking load)
- Crane (that meets the lifting capacity)
- Marking pen
- Caps
- Plugs
- Waste oil can
- Rags
- Cleaning fluid
- Crossties

[1] Remove the counterweight.
(For details, see "Removal and Installation of Counterweight")

[2] Remove the pump.
(For details, see "Removal and Installation of Pump")

[3] Use a 14-mm wrench to remove the installation bolts (1), (2) and (3), and then remove the fan shroud.

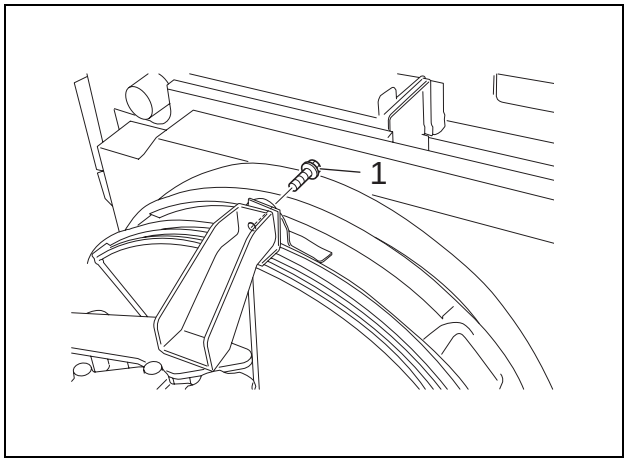

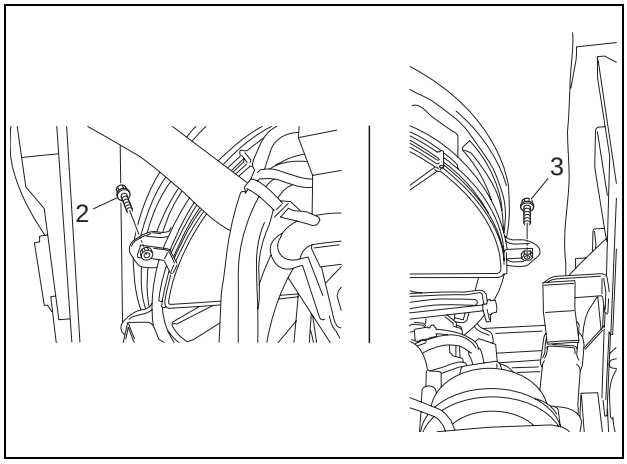

https://truckmanualshub.com/

[4] Use a 14-mm wrench to remove the installation bolts (1) and (2), and then remove the fan guard.

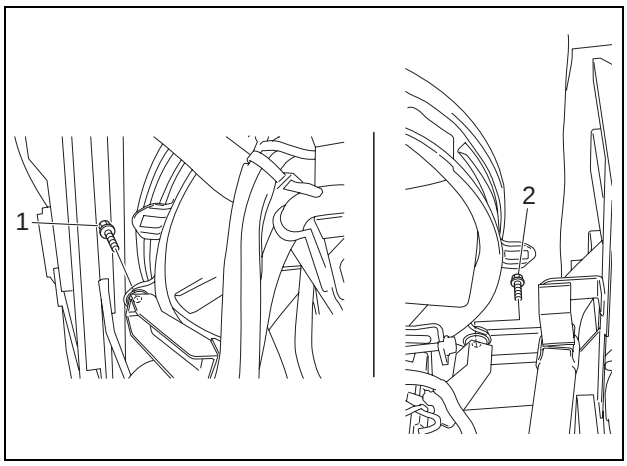

[5] Use a 7-mm wrench to loosen the hoseband (1), and then remove the upper hose (2) from the radiator.

[6] Use a 7-mm wrench to loosen the hoseband (3), and then remove the lower hose (4) from the radiator.

- Use caps to cover the radiator and hoses and prevent the entry of water, dust or dirt.
- Completely drain the coolant before removing the radiator hoses.

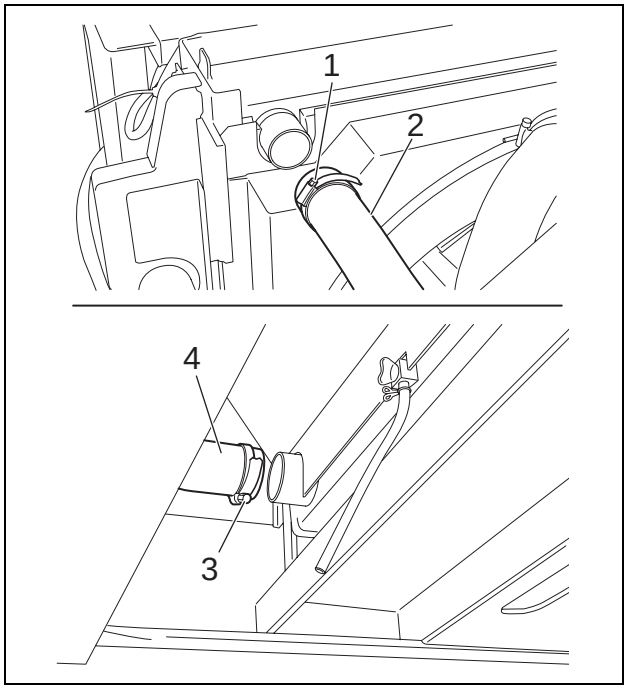

[7] Use a 12-mm wrench to loosen the adjusting bolts on the pipe in the 2 locations, and then remove 2 pipes (2) from the compressor.

- Always remove the low-pressure pipe first.
- Attach caps or plugs to the compressor and pipes to prevent the entry of water, dust or dirt.

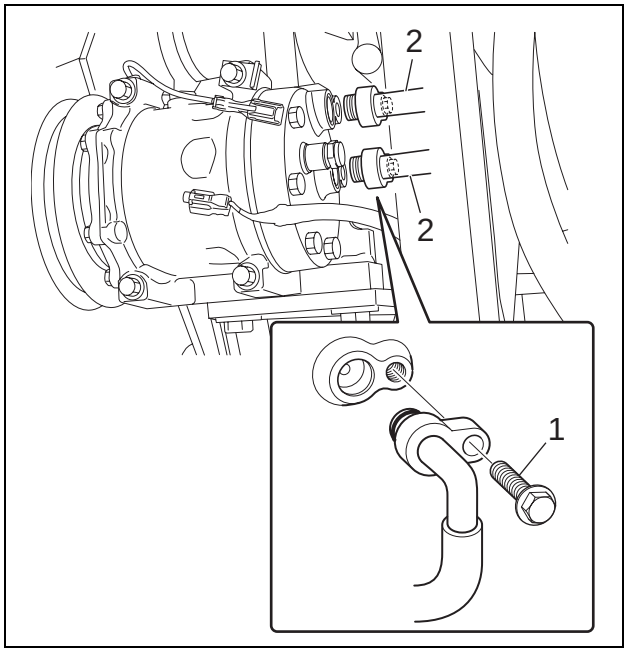

https://truckmanualshub.com/

[8] Use a 8-mm wrench to loosen the hoseband (1) on the inter cooler, and then remove the hose (2).
- Use caps to cover the pipe and hose to prevent the entry of water, dust or dirt.

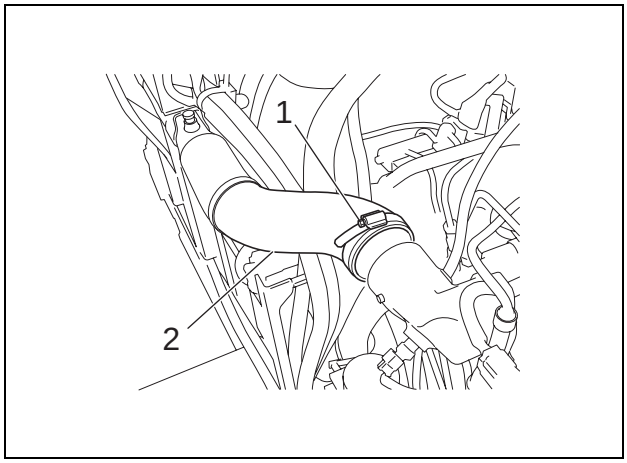

[9] Remove the hosebands (1) in the three locations.

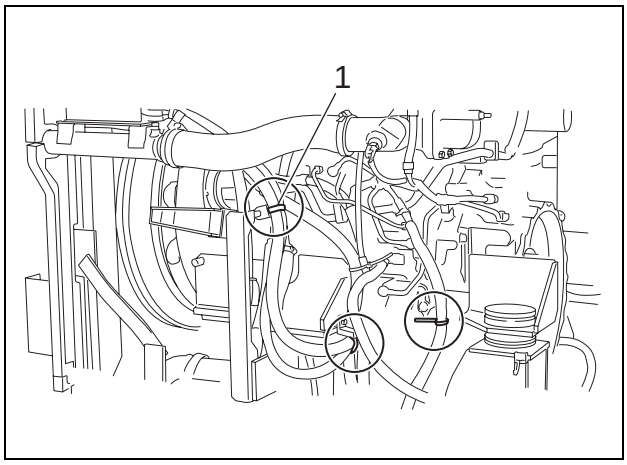

[10] Insert the breather hose that is on the outside.

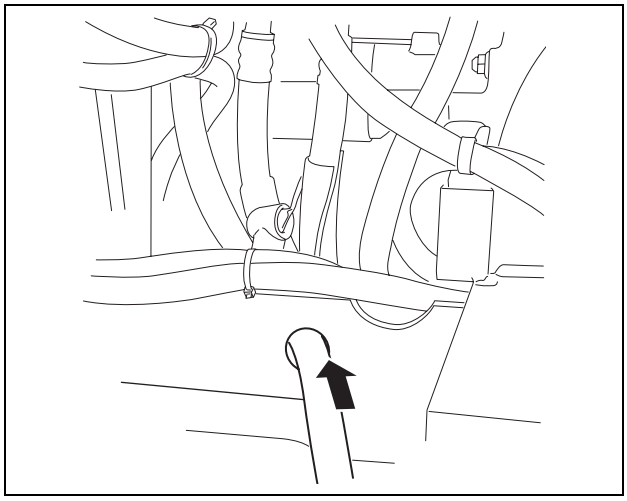

https://truckmanualshub.com/

[11] Prepare a waste oil can (1).
- As the engine oil hose will be removed, first drain the engine oil.

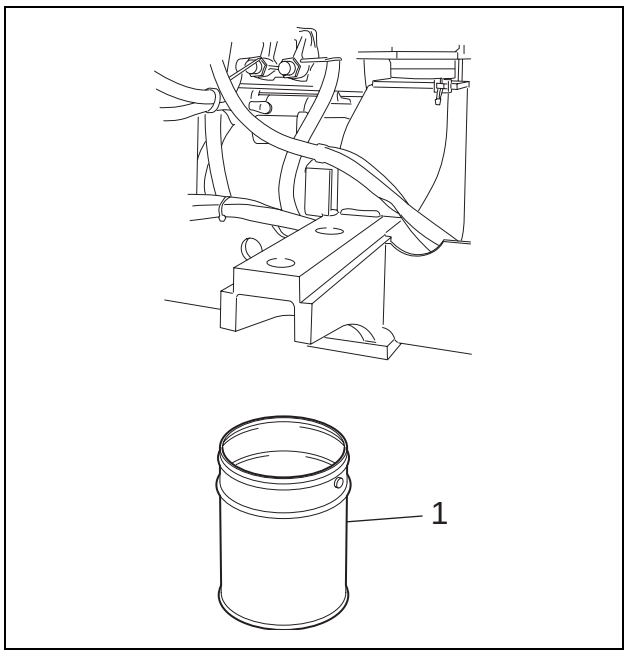

[12] Use a 36-mm wrench to remove the 2 hoses (1).
- Mark the engine and hoses so that they can be connected correctly at the time of assembly.
- Attach caps or plugs to the engine and hoses to prevent the entry of water, dust or dirt.
- Clean the engine and hoses by spraying with a parts cleaner to prevent scratches and prevent dirt from accumulating on the connectors.

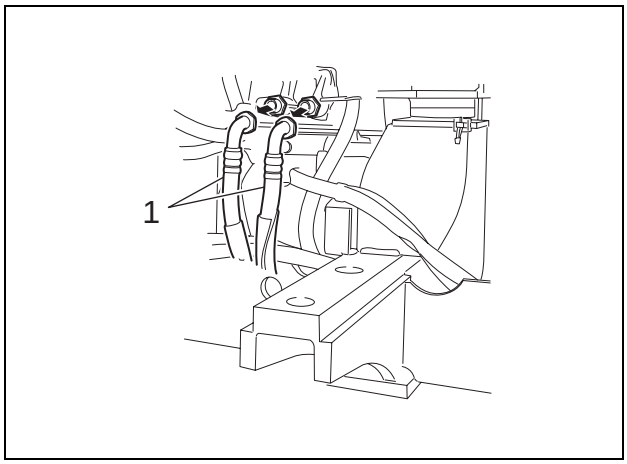

[13] Use a 17-mm wrench to remove the installation bolt (1), and then remove the negative terminal (2) of the battery.
- When removing the terminal and harness, secure them so that they do not interfere with the frame.
  Also, be sure to protect them with a rubber cap or other protective device, to prevent sparks.

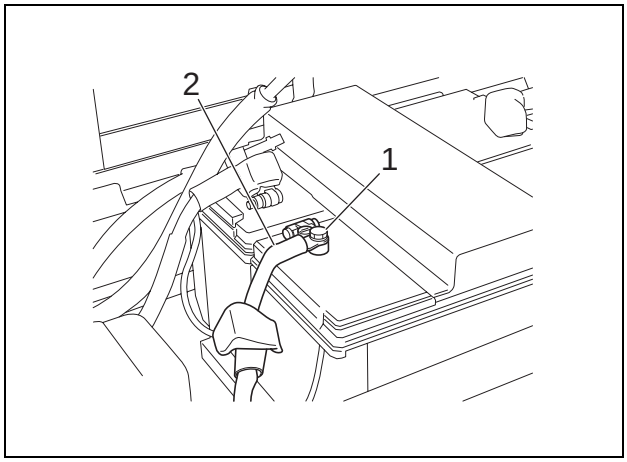

https://truckmanualshub.com/

[14] Use a 8-mm wrench to remove the installation nut (1), and then remove the wire (2) from the cell motor.

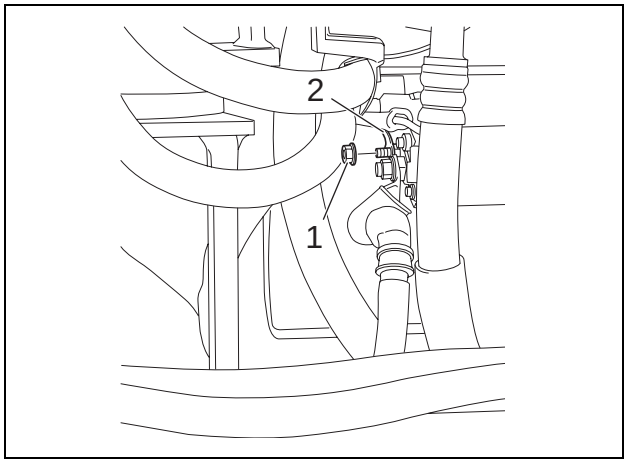

[15] Use a 14-mm wrench to remove the installation nut (1), and then remove the wire (2) from the cell motor.

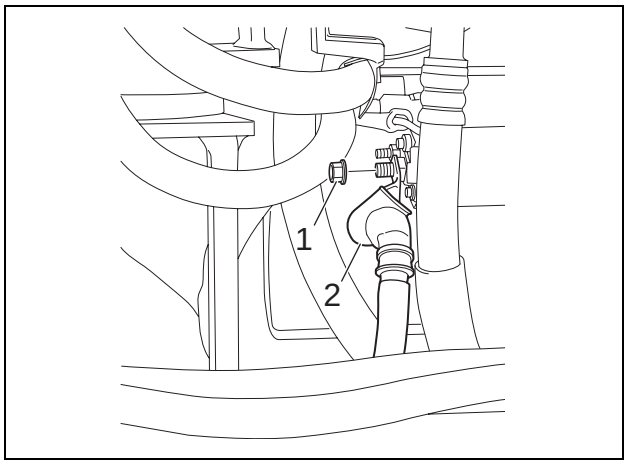

[16] Remove the hose stopper (1), and then remove the hose (2).
- Attach caps or plugs to the engine and hoses to prevent the entry of water, dust or dirt.

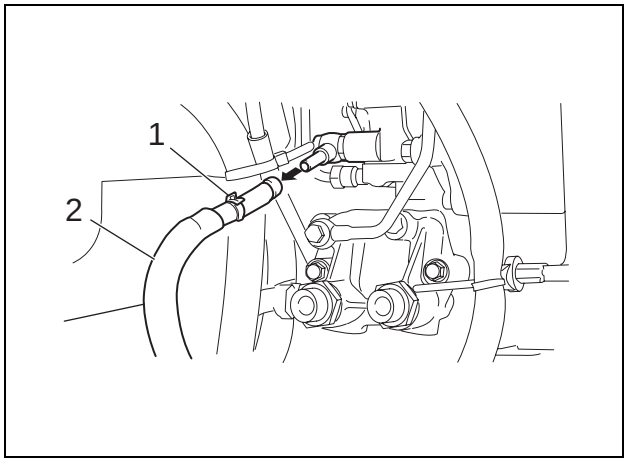

https://truckmanualshub.com/

[17] Remove the hose stopper (1), and then remove the hose (2).
- Attach caps or plugs to the engine and hoses to prevent the entry of water, dust or dirt.

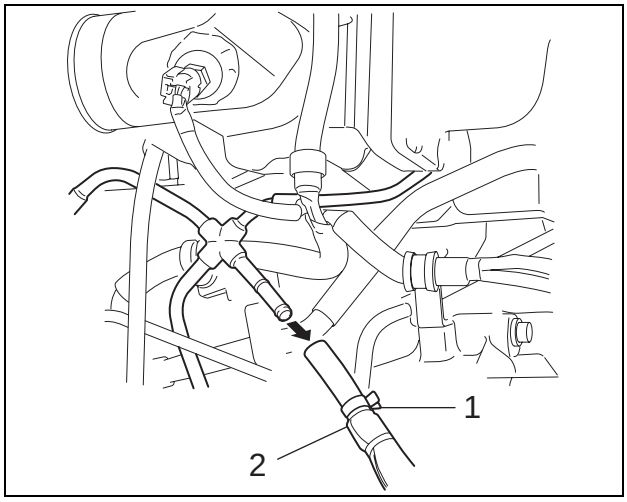

[18] Use a 13-mm wrench to remove the 3 installation bolts (1), and then remove the box cover (2).

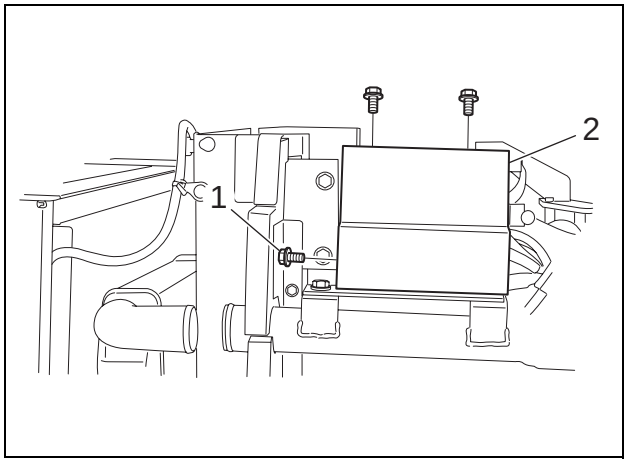

[19] Remove the connectors in the box.
- After tying the connectors together, put them in a plastic bag.

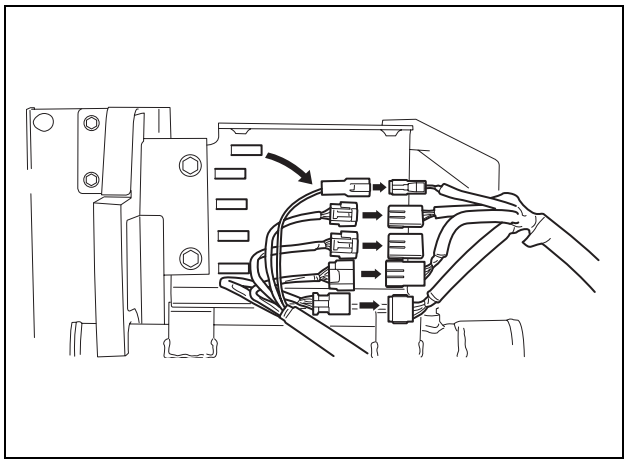

https://truckmanualshub.com/

[20] Use a 7-mm wrench to loosen the hoseband (1), and then remove the hose (2).
- Attach caps or plugs to the engine and hoses to prevent the entry of water, dust or dirt.

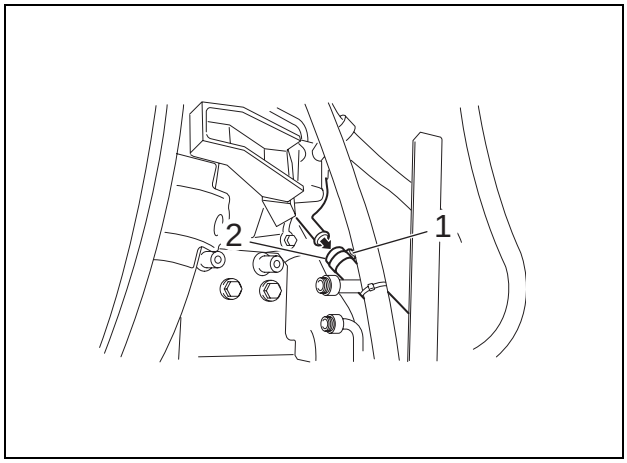

[21] Use a 7-mm wrench to loosen the hoseband (1), and then remove the hose (2).
- Attach caps or plugs to the engine and hoses to prevent the entry of water, dust or dirt.

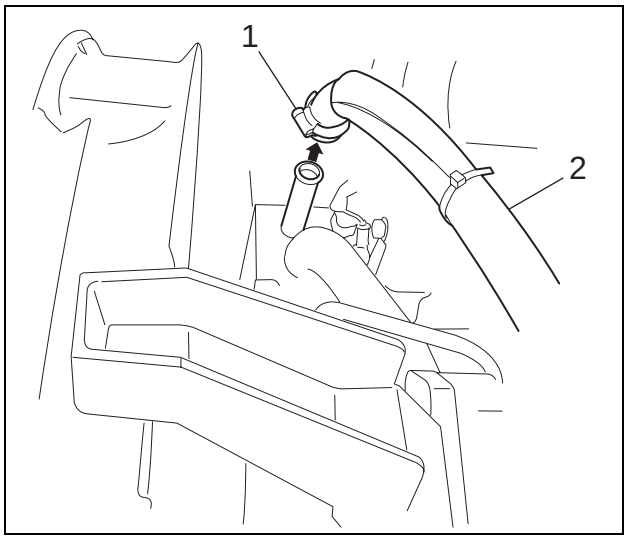

[22] Use a 7-mm wrench to loosen the hoseband (1), and then remove the hose (2).
- Use caps to cover the pipes and hoses to prevent the entry of water, dust or dirt.

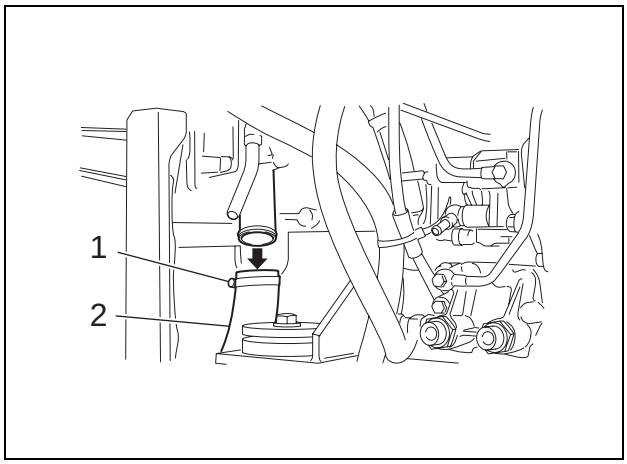

https://truckmanualshub.com/

[23] Use a 7-mm wrench to loosen the hoseband (1), and then remove the hose (2).
- Use caps to cover the pipes and hoses to prevent the entry of water, dust or dirt.

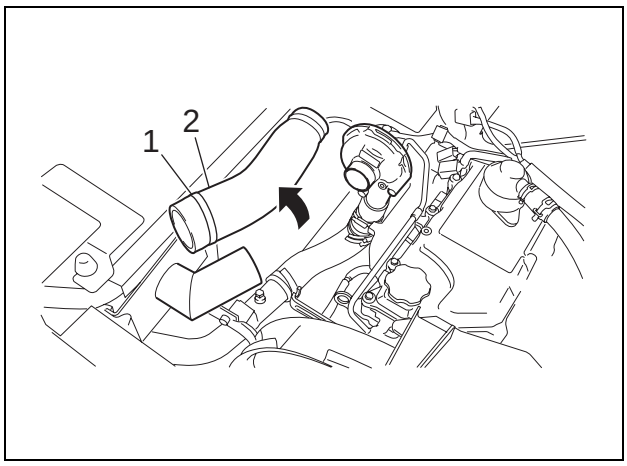

[24] Use a 8-mm wrench to loosen the hoseband (1), and then remove the hose (2).
- Use caps to cover the pipes and hoses to prevent the entry of water, dust or dirt.

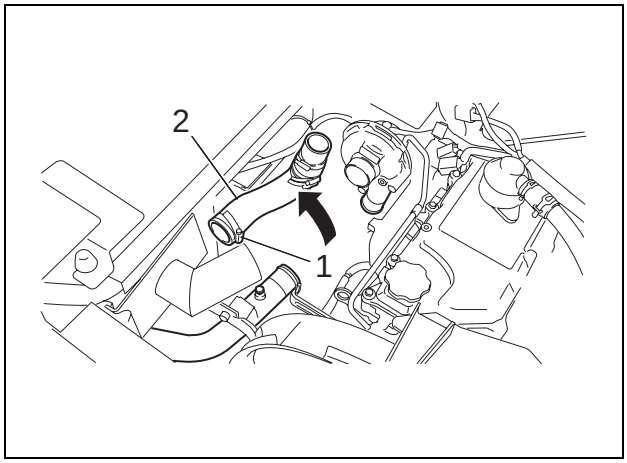

[25] Remove the connector (1) from the alternator.

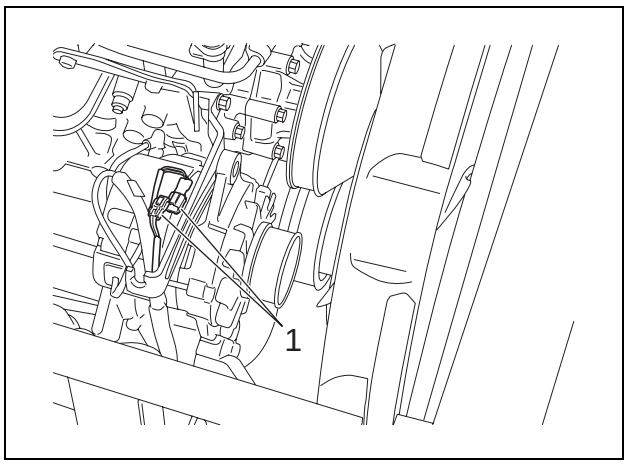

https://truckmanualshub.com/

[26] Use a 10-mm wrench to remove the installation bolt (1), and then remove the wires (2) from the alternator.

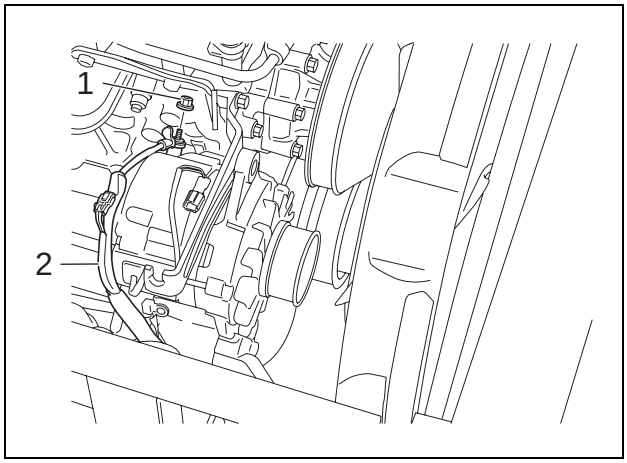

[27] Use a 13-mm wrench to remove the installation bolt (1), and then remove the clamp (2).

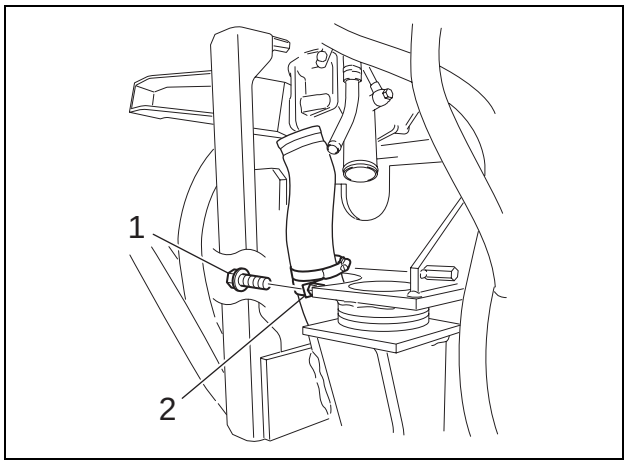

[28] Use a 13-mm wrench to remove the installation bolt (1), and then remove the clamp (2).

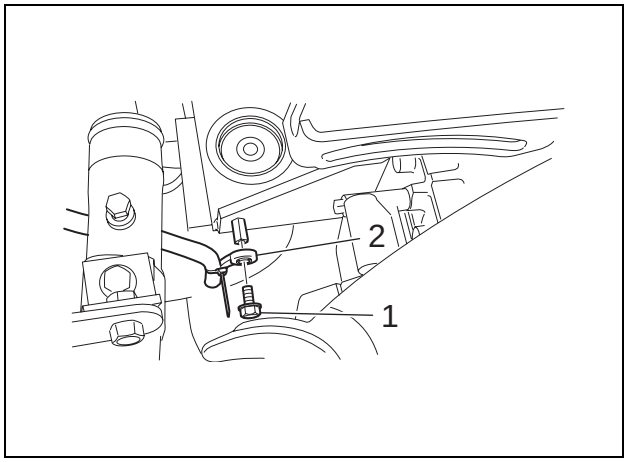

https://truckmanualshub.com/

[29] Connect 2 shackles (1), and then use the wires and crane to secure the engine.

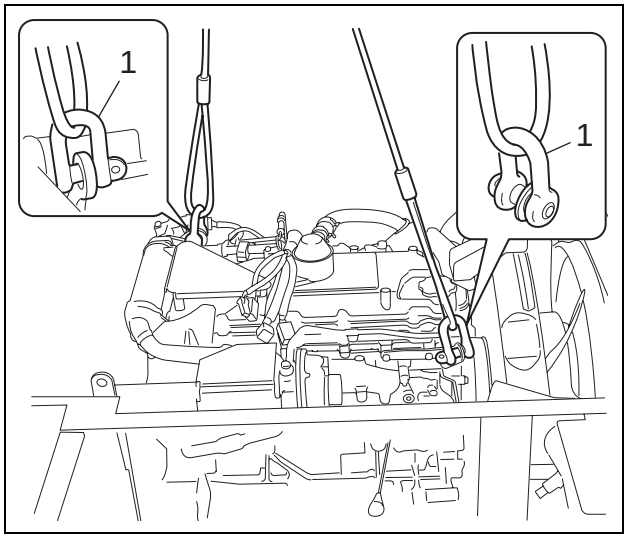

[30] Use a 24-mm box wrench to remove 4 installation bolts (1) from the mount.

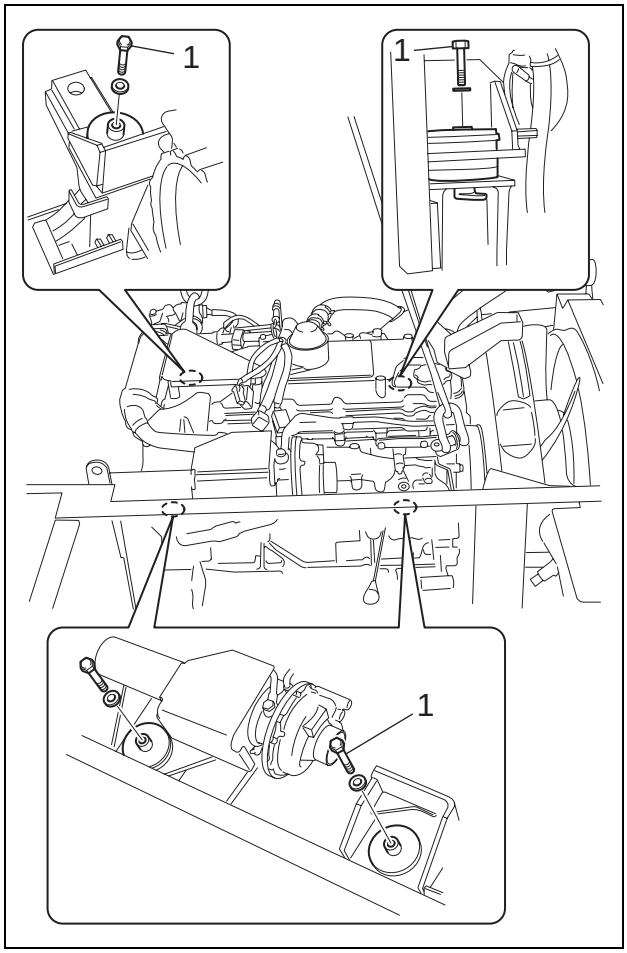

https://truckmanualshub.com/

[31] Use the wires and crane to lift the engine.

[32] Thoroughly check that the location is safe before lowering the engine on a crosstie.

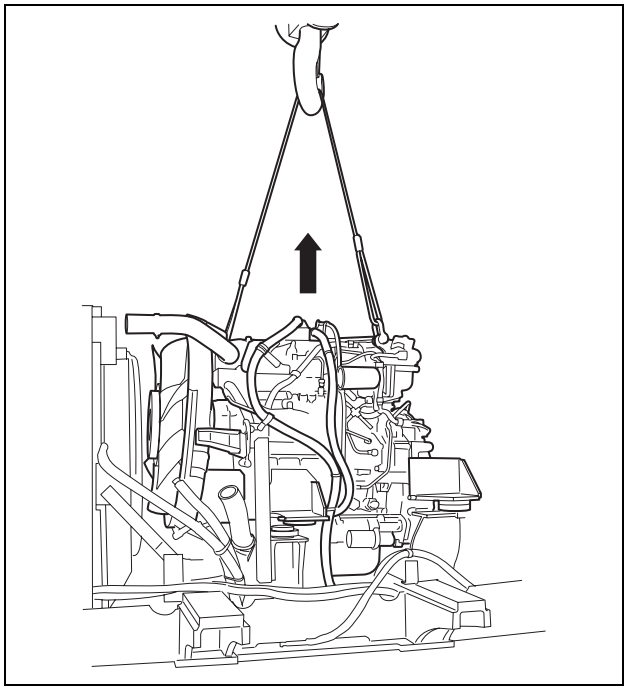

https://truckmanualshub.com/

3 Removal and Installation of Starter

Warning	• Do not use open flames and do not allow sparks near the battery.

Caution	• Be sure to stop the engine before beginning work.

Items to prepare

- Wrench (8 mm, 14 mm, 17 mm)
- Rags
- Cleaning fluid

[1] Use a 17-mm wrench to remove the installation bolt (1), and then remove the negative terminal (2) of the battery.
- When removing the terminal and harness, secure them so that they do not interfere with the frame.
  Also, be sure to protect them with a rubber cap or other protective device, to prevent sparks.

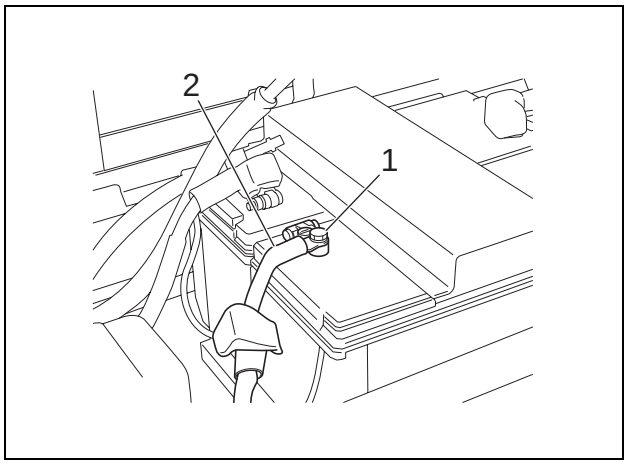

[2] Use a 8-mm wrench to remove the installation nut (1), and then remove the wire (2).

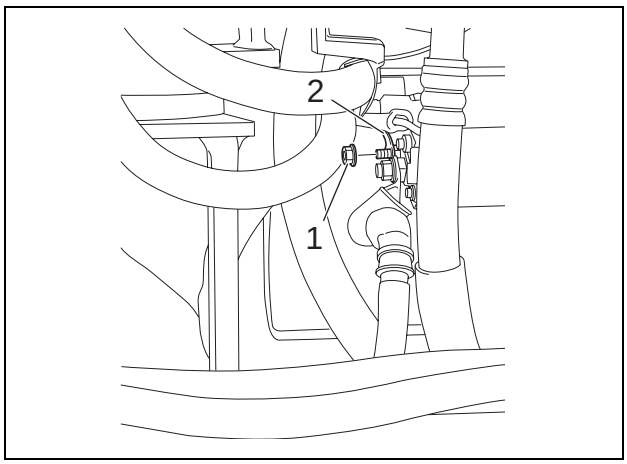

https://truckmanualshub.com/

[3] Use a 14-mm wrench to remove the installation nut (1), and then remove the wire (2).

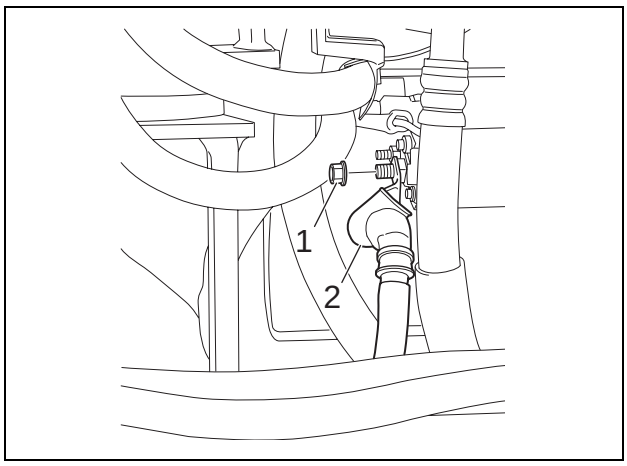

[4] Use a 14-mm wrench to remove the installation bolt (2) with the ground (1).

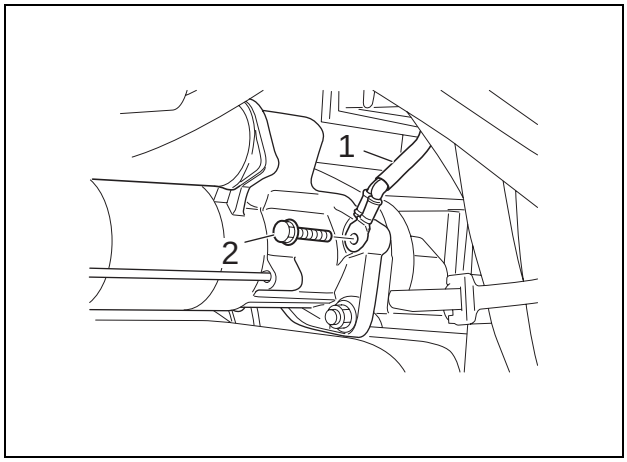

[5] Use a 17-mm wrench to remove the installation nut (1), and then remove the cell motor (2).

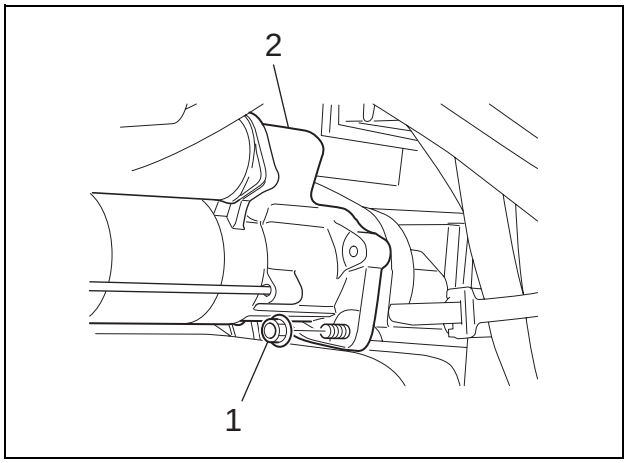

https://truckmanualshub.com/

4 Removal and Installation of Alternator

Warning	• Do not use open flames and do not allow sparks near the battery.

Caution	• Be sure to stop the engine before beginning work.

Items to prepare

- Wrench (10 mm, 17 mm, 20 mm)
- Rags
- Cleaning fluid

[1] Remove the fan belt.
(For details, see "Removal and Installation of Fan Belt")

[2] Use a 17-mm wrench to remove the installation bolt (1), and then remove the negative terminal (2) of the battery.
- When removing the terminal and harness, secure them so that they do not interfere with the frame.
  Also, be sure to protect them with a rubber cap or other protective device, to prevent sparks.

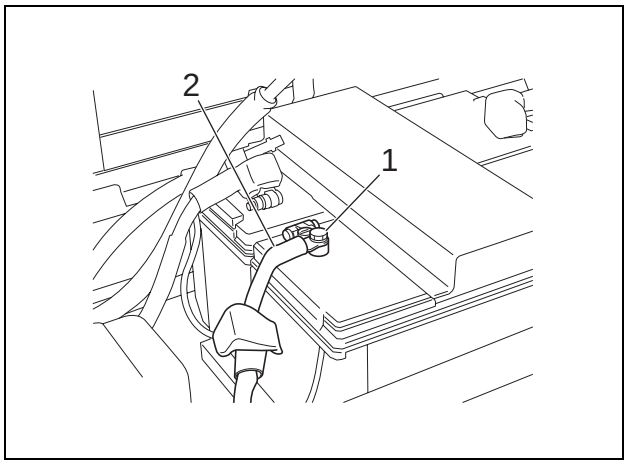

[3] Remove the connectors (1).

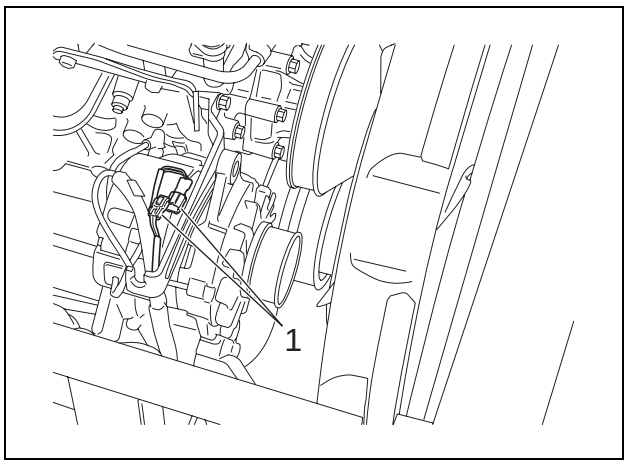

[4] Use a 10-mm wrench to remove the installation bolt (1), and then remove the wire (2).

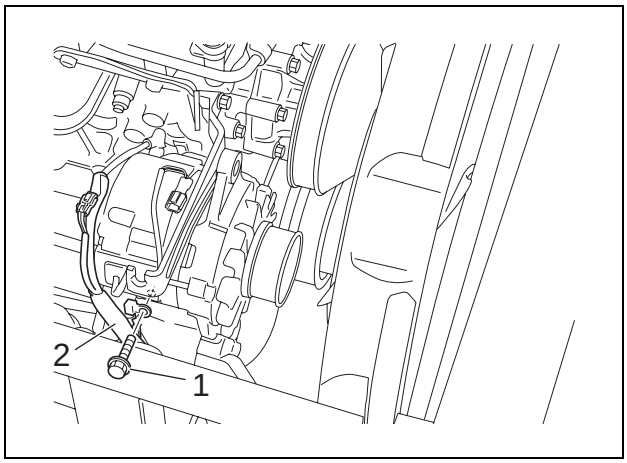

https://truckmanualshub.com/

[5] Use a 10-mm wrench to remove the installation nut (1), and then remove the wire (2).

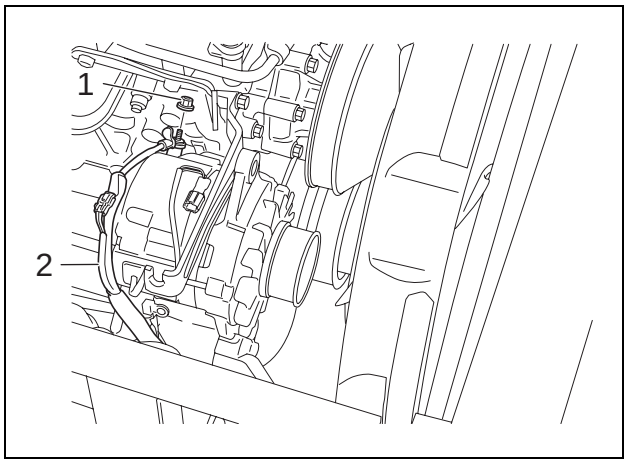

[6] Use a 20-mm wrench to remove the installation bolt (1), and then remove the alternator (2).

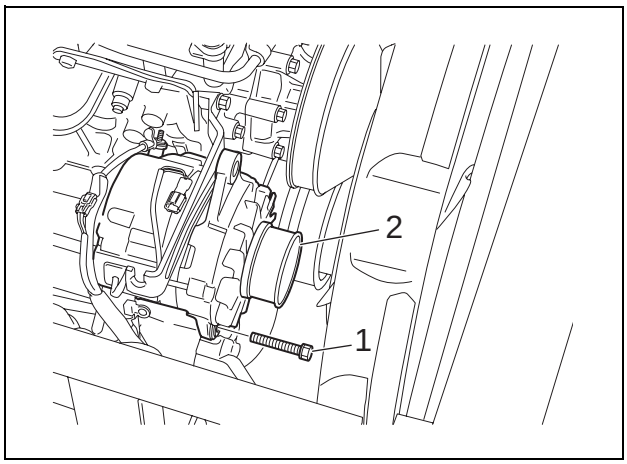

https://truckmanualshub.com/

5 Removal and Installation of Common Rail

Caution	• Be sure to stop the engine before beginning work.

Items to prepare

- Wrench (10 mm, 12 mm, 14 mm, 17 mm)
- Marking pen
- Caps
- Plugs
- Rags
- Cleaning fluid

[1] Remove the connector (1).

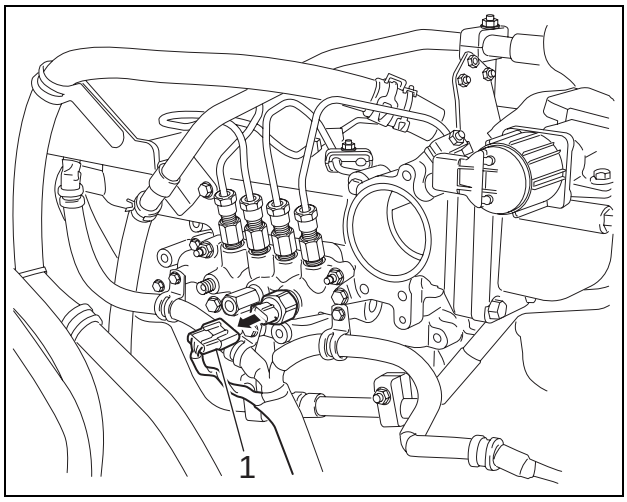

[2] Remove the mounting bolt (1) from the wiring harness clamp using a 12-mm wrench.

[3] Remove mounting bolts (2) and (3) from the wiring harness clamp using a 10-mm wrench.

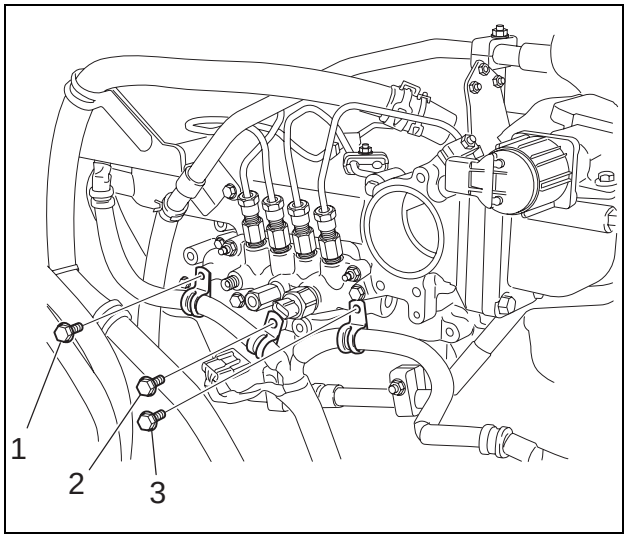

https://truckmanualshub.com/

[4] Remove mounting bolts (1) and (2) from pipes using a 14-mm wrench, and remove the leak-off pipe.

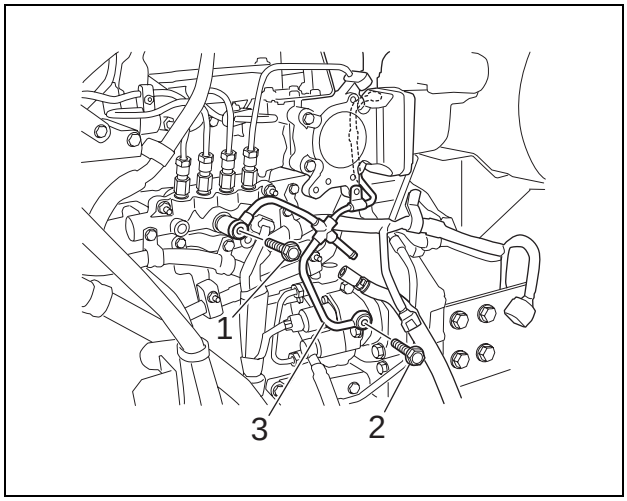

[5] Remove mounting nuts (4), (5) and (6) from wiring harness clamps (1), (2) and (3) using a 10-mm wrench.

[6] Remove 4 locknuts (7) using a 17-mm wrench.
- Replace the removed pipes in the similar way as for common rails.
- Use caps or plugs to cover the pipes to prevent the entry of water, dust or dirt.
- Clean the pipes by spraying with a parts cleaner to prevent scratches and prevent dirt from accumulating on the connectors.

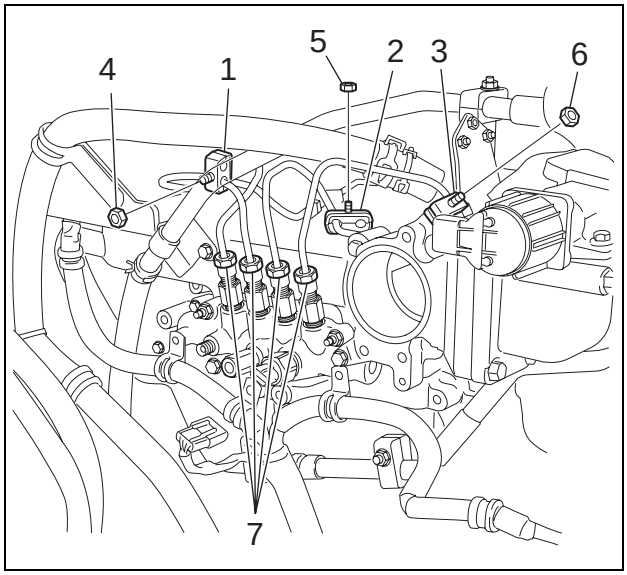

[7] Remove mounting nuts (1) and (2) using a 12-mm wrench.

[8] Remove mounting bolts (3) and (4) using a 12-mm wrench.

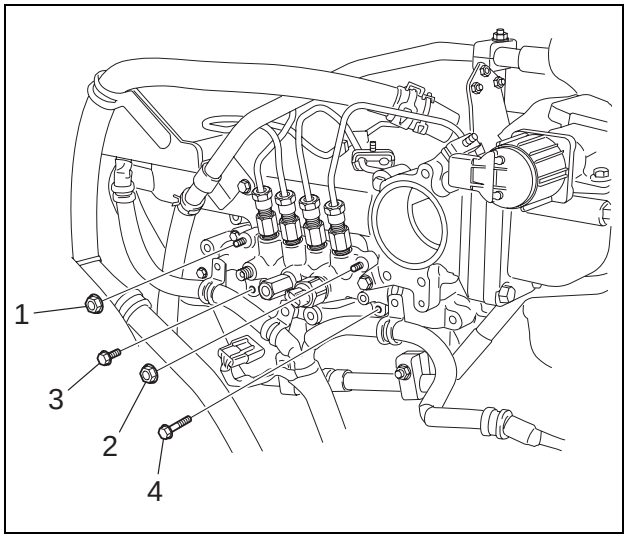

https://truckmanualshub.com/

[9] Remove common rail (1).

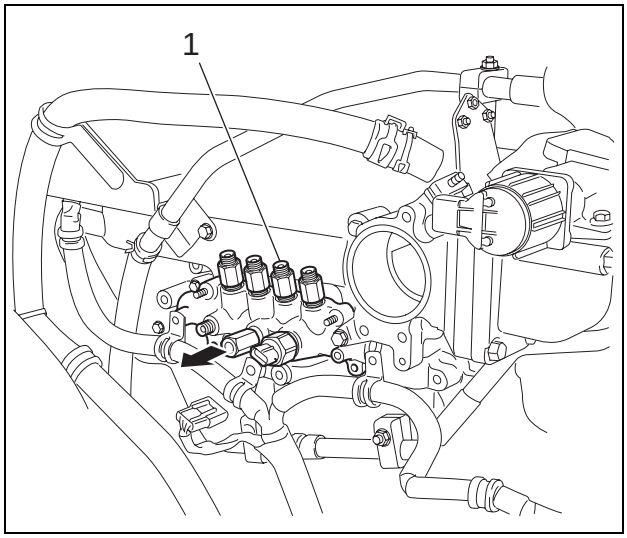

https://truckmanualshub.com/

6 Removal and Installation of Supply Pump

Warning	• Be sure to release the hydraulic pressure before beginning work.

Caution	• Be sure to stop the engine before beginning work.

Items to prepare

- Wrench (8 mm, 10 mm, 12 mm, 14 mm, 17 mm, 22 mm)
- Box wrench (14 mm)
- Hexagon wrench (4 mm)
- Caps
- Plugs
- Rags
- Cleaning fluid

[1] Remove the mounting bolt (1) using a 10-mm wrench, and remove the cap (2).

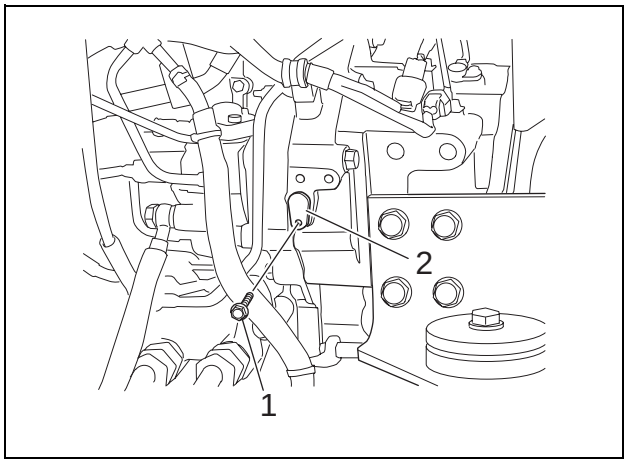

[2] Adjust the gear until the white mark (2) is aligned with the position (1).

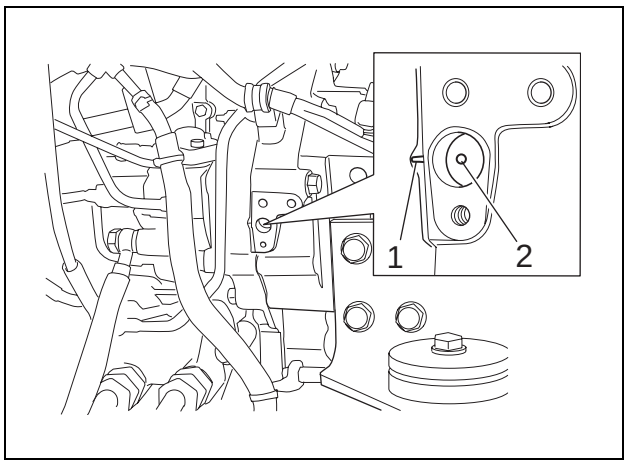

https://truckmanualshub.com/

[3] Rotate the crankshaft in forward direction to match the alignment mark to the position of top dead center (TDC) in the compression stroke.

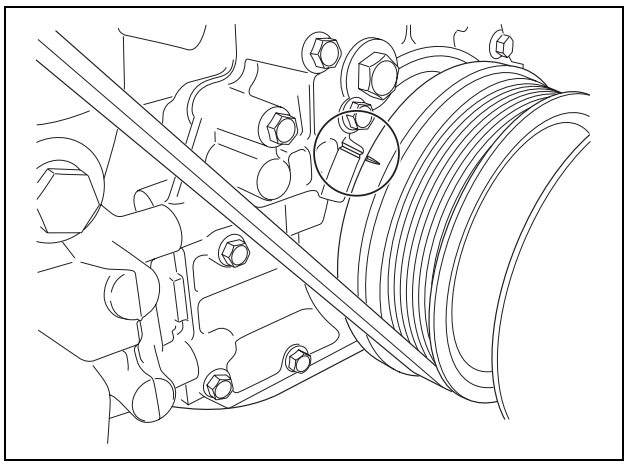

[4] Loosen hose bands (1) and (2) using a 8-mm wrench, and remove the hose (3).
- Use caps or plugs to cover the hoses and pipes to prevent the entry of water, dust or dirt.

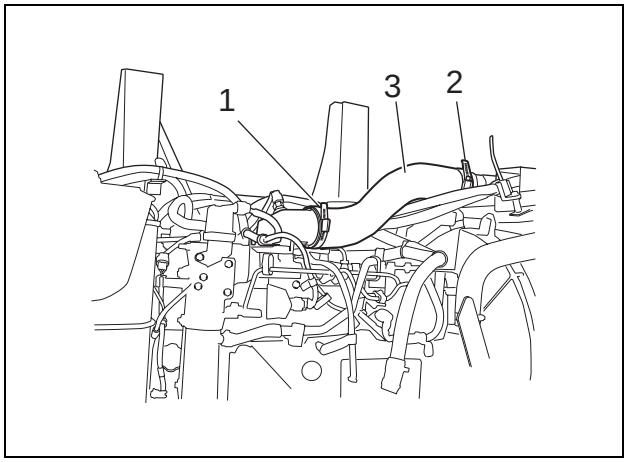

[5] Remove the connector (1).

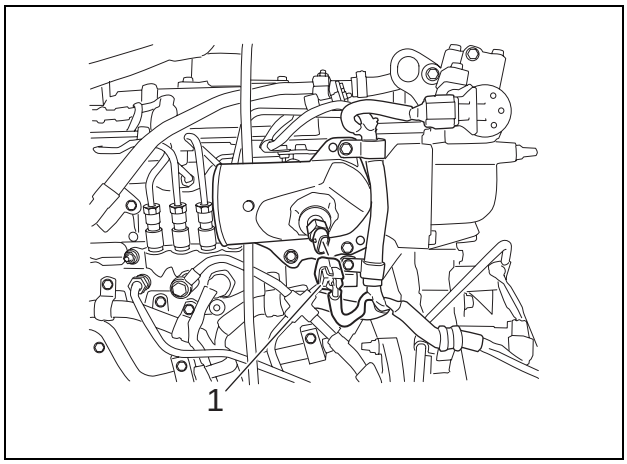

https://truckmanualshub.com/

[6] Remove 3 mounting bolts (1), (2) and (3), and remove the pipe (4).
- Use caps or plugs to cover the pipes to prevent the entry of water, dust or dirt.
- Clean the pipes by spraying with a parts cleaner to prevent scratches and prevent dirt from accumulating on the connectors.

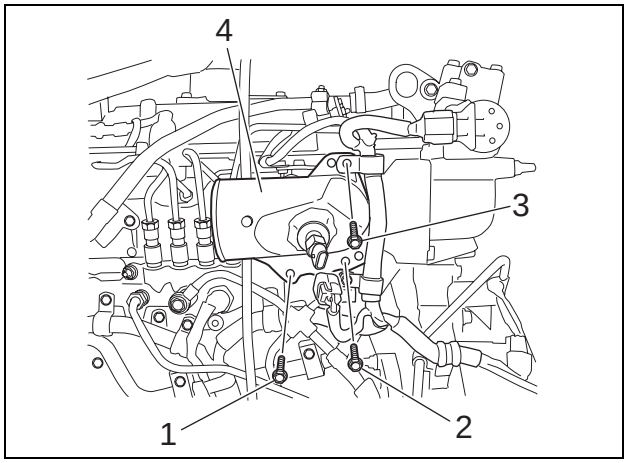

[7] Remove the mounting bolt (1) from the clamp using a 10-mm wrench.

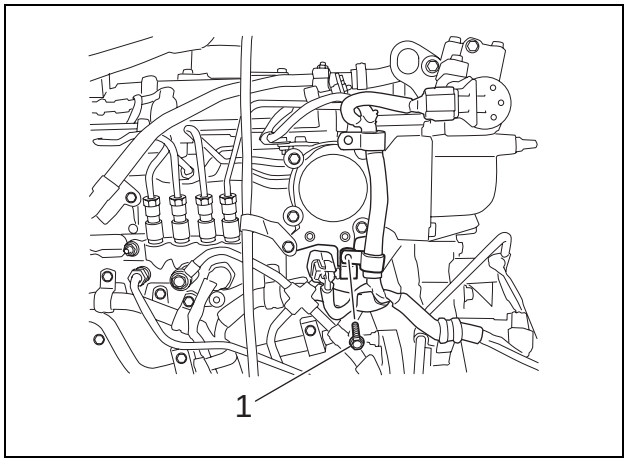

[8] Remove connectors (1) and (2).

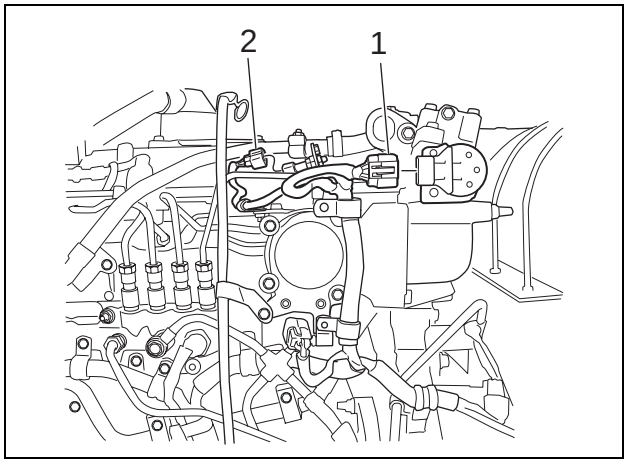

https://truckmanualshub.com/

[9] Remove the mounting bolt (1) from the clamp using a 4-mm hexagon wrench.

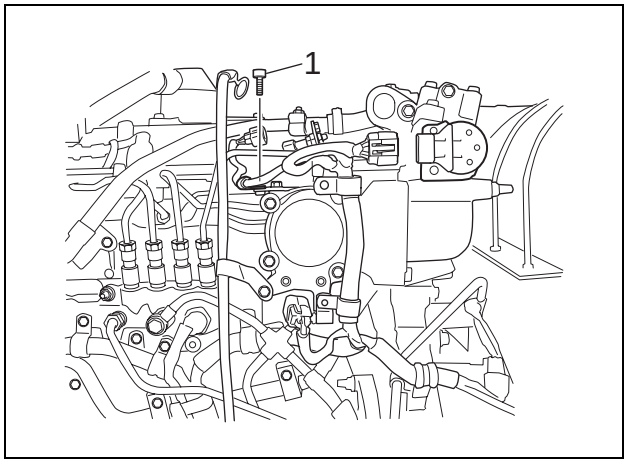

[10] Remove mounting bolts (1) and (2) using a 12-mm wrench, and remove the oil gauge pipe.
- Use caps or plugs to cover the pipes to prevent the entry of water, dust or dirt.
- Clean the pipes by spraying with a parts cleaner to prevent scratches and prevent dirt from accumulating on the connectors.

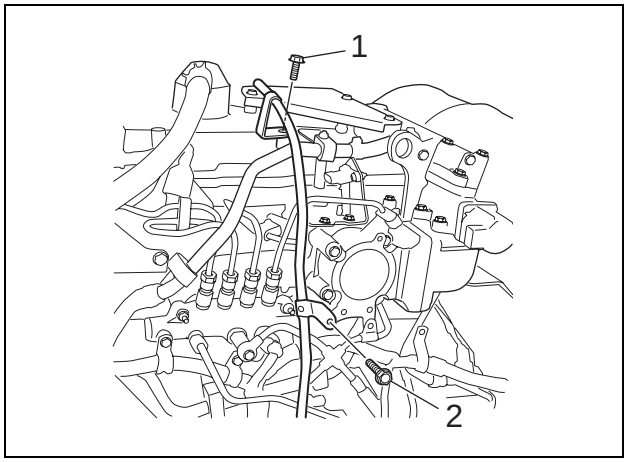

[11] Remove locknuts (1) and (2) using a 19-mm wrench, and remove the pipe.
- Use caps or plugs to cover the pipes to prevent the entry of water, dust or dirt.
- Clean the pipes by spraying with a parts cleaner to prevent scratches and prevent dirt from accumulating on the connectors.

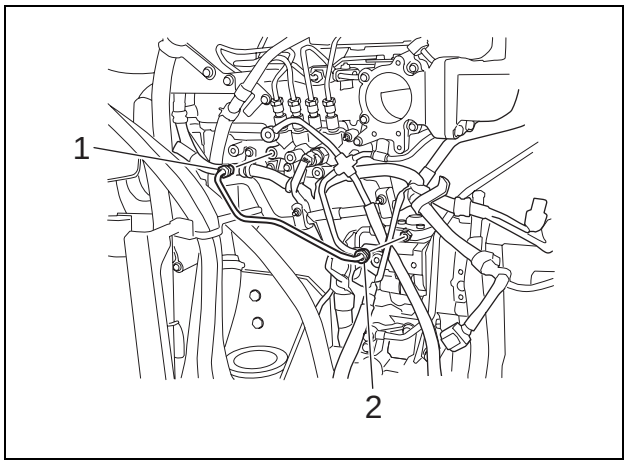

[12] Remove the hose (1).
- Use caps or plugs to cover the pipes to prevent the entry of water, dust or dirt.

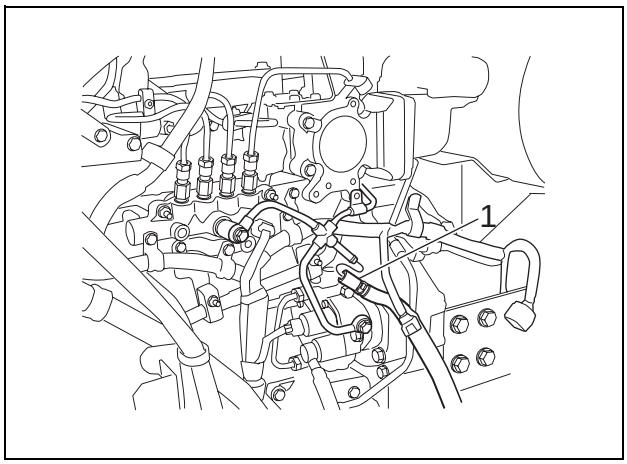

https://truckmanualshub.com/

[13] Remove the pipe mounting bolt (1) using a 10-mm wrench.

[14] Remove the pipe mounting bolt (1) using a 12-mm wrench.

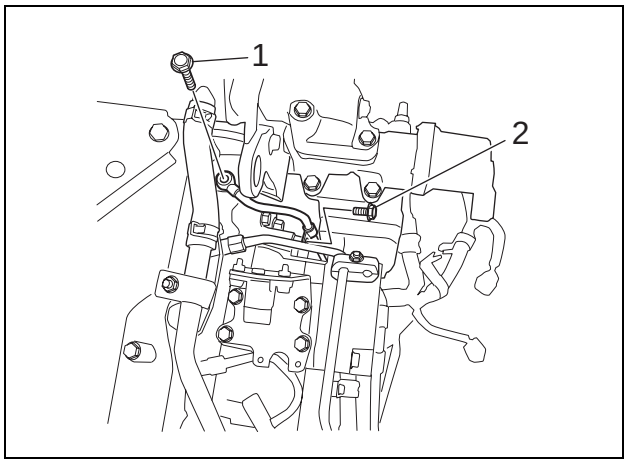

[15] Remove pipe mounting bolts (1) and (2) using a 14-mm wrench.

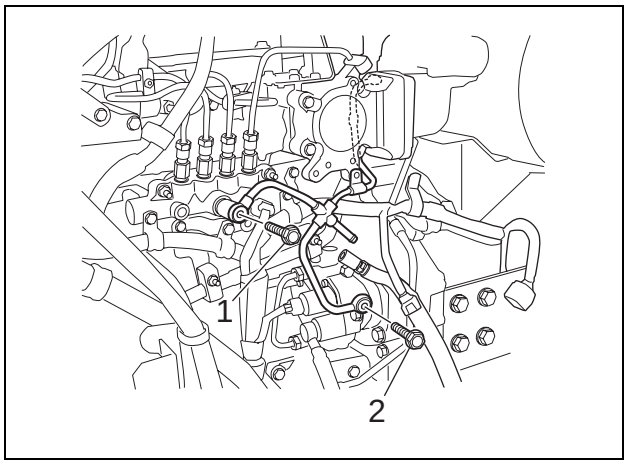

[16] Remove the pipe (1).
- Use caps or plugs to cover the pipes to prevent the entry of water, dust or dirt.
- Clean the pipes by spraying with a parts cleaner to prevent scratches and prevent dirt from accumulating on the connectors.

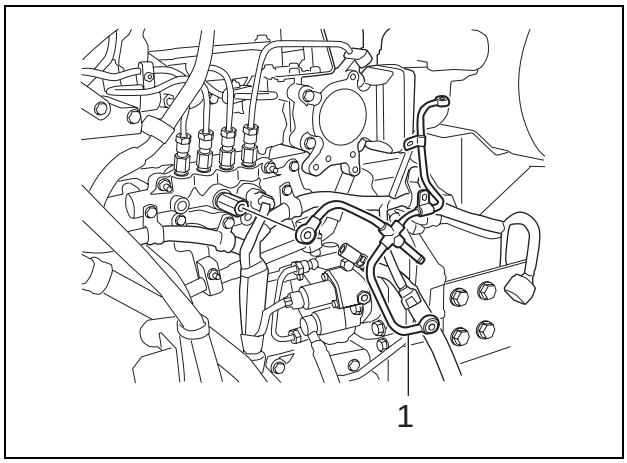

[17] Remove connectors (1) and (2).

[18] Remove the pipe mounting bolt (1) using a 22-mm wrench.

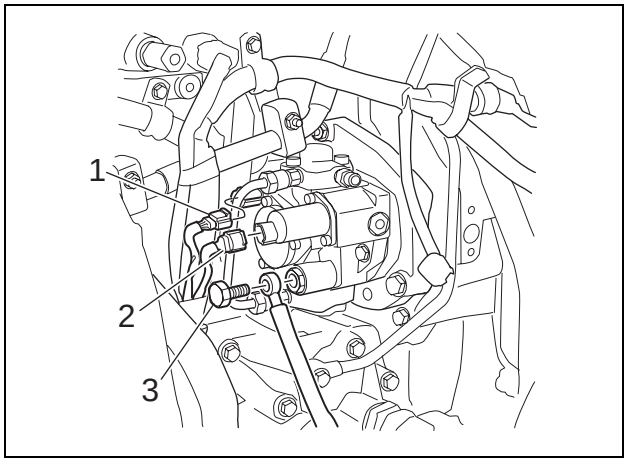

https://truckmanualshub.com/

[19] Remove mounting nuts (1) and (2) using a 14-mm wrench.

[20] Remove mounting bolts (3) and (4) using a 17-mm wrench.

[21] Remove the supply pump (5).
- Use caps or plugs to prevent the entry of water, dust or dirt.
- Clean each part of connectors by spraying with a parts cleaner to prevent scratches and prevent dirt from accumulating on the connectors.

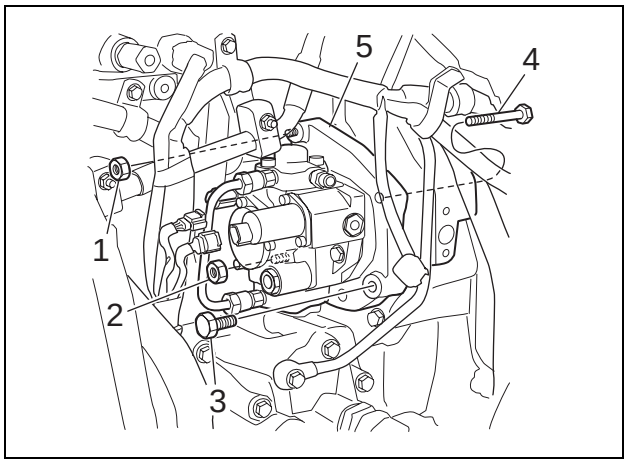

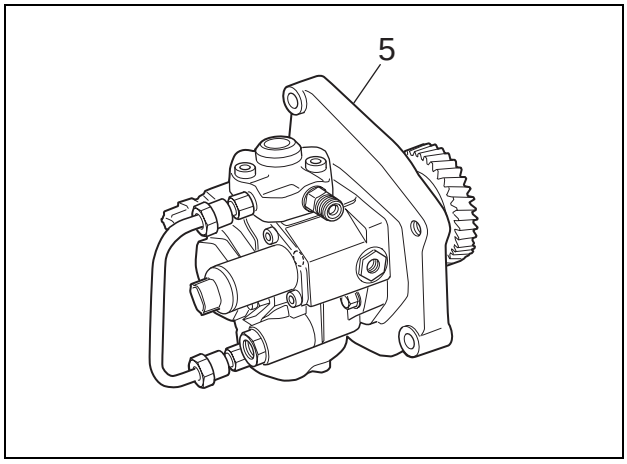

https://truckmanualshub.com/

7 Removal and Installation of Injector

Warning	• Do not use open flames and do not allow sparks near the battery.

Caution	• Be sure to stop the engine before beginning work.

Items to prepare

- Wrench (7 mm, 10 mm, 12 mm, 14 mm, 17 mm, 19 mm)
- Pliers
- Marking pen
- Torques (T40)
- Caps
- Plugs
- Waste oil can
- Rags
- Cleaning fluid

[1] Remove the mounting bolt (1) using a 17-mm wrench, and remove the negative terminal (2) from the battery cable.
- When removing the terminal and harness, secure them so that they do not interfere with the frame.
  Also, be sure to protect them with a rubber cap or other protective device, to prevent sparks.

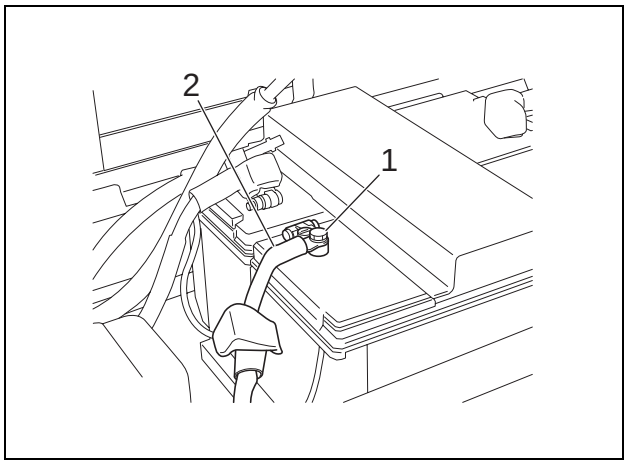

[2] Loosen the hose band using pliers or a similar tool, and remove the hose (1).
- Use caps or plugs to cover the hoses and pipes to prevent the entry of water, dust or dirt.

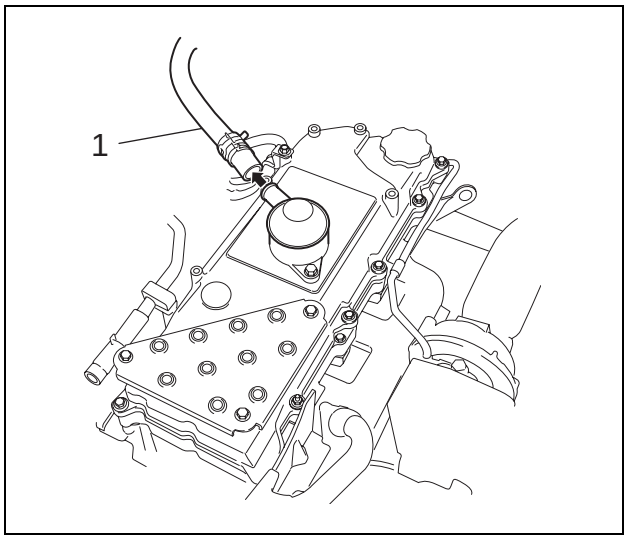

https://truckmanualshub.com/

[3] Remove the mounting bolt (1) from the hose clamp using a 12-mm wrench.

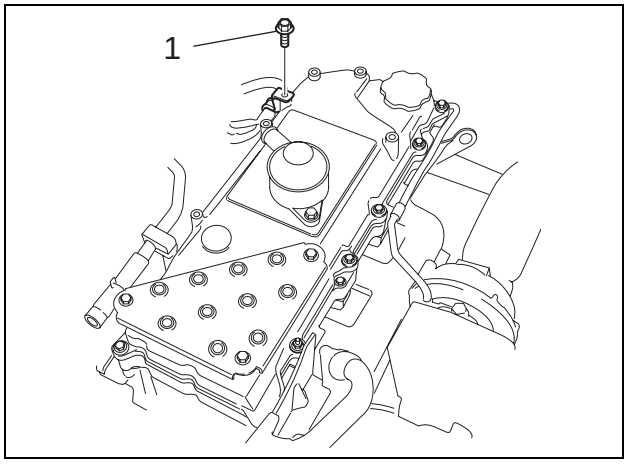

[4] Remove 9 mounting bolts (1) and 2 mounting nuts (2) from the cylinder head cover using a 12-mm wrench, and remove the cylinder head cover (3).

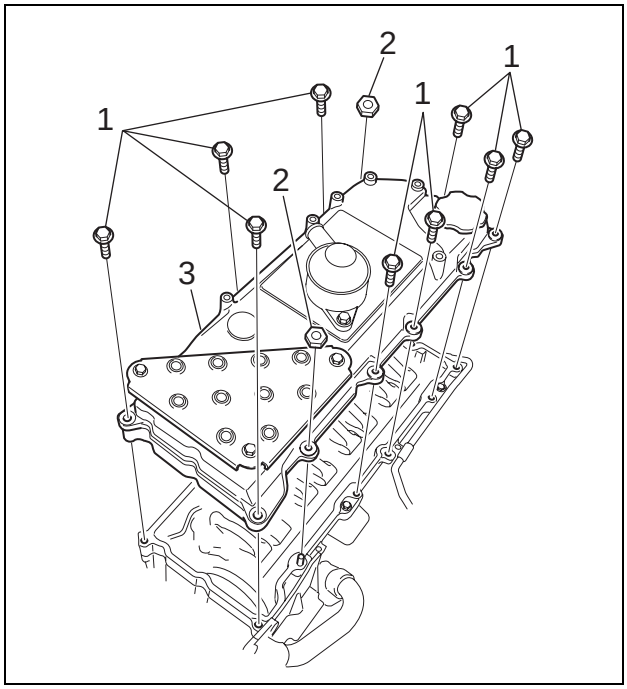

[5] Remove the connector (1).

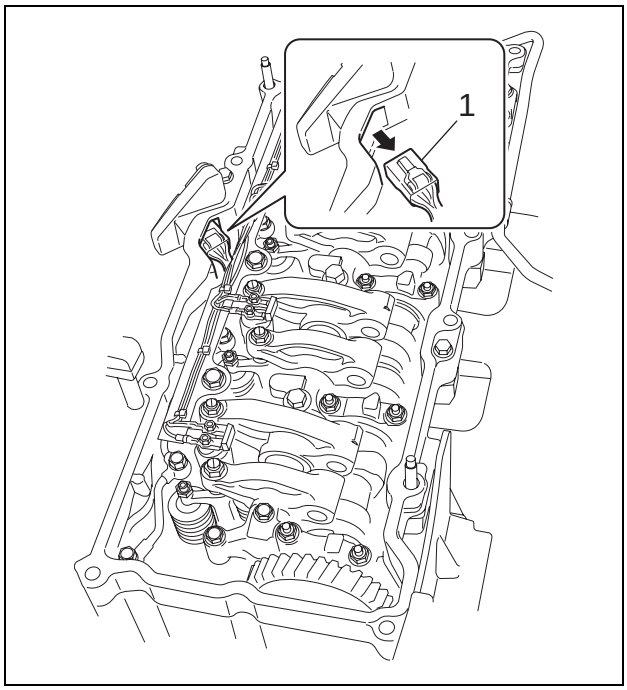

https://truckmanualshub.com/

[6] Remove 2 nuts (2) from each of four injector terminals (total of 8 nuts) using a 7-mm wrench.

[7] Loosen 3 mounting bolts (1) using a 14-mm wrench, and remove the harness bracket (3).
- Remove a pair of nuts (2) by gradually loosening them in several times.

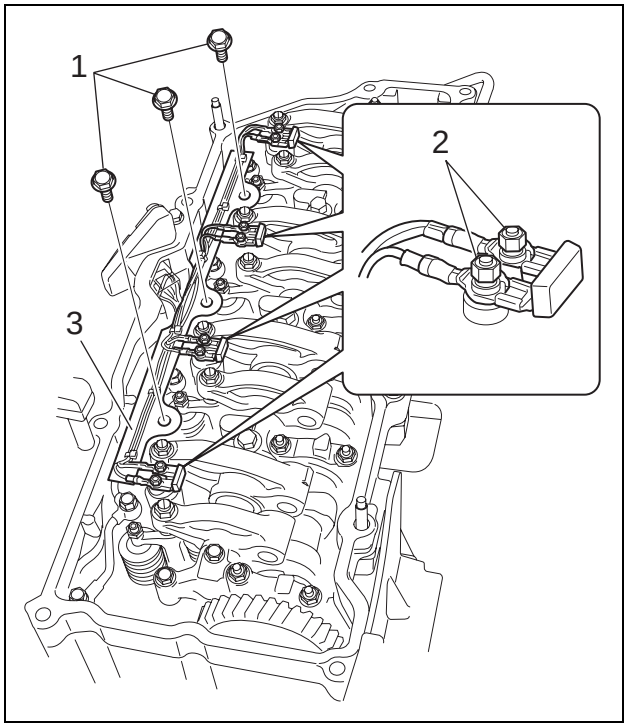

[8] Remove 4 bolts (1) using a 12-mm wrench, and remove the leak-off pipe (2).

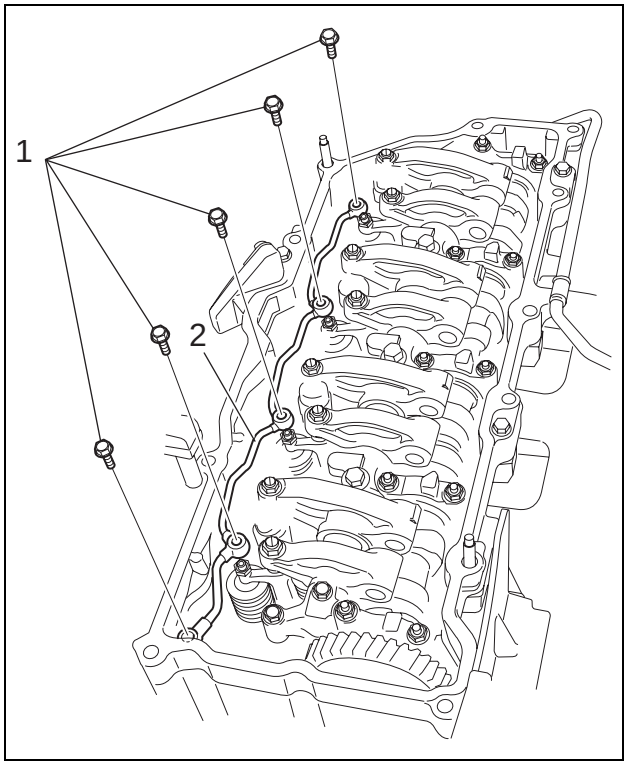

https://truckmanualshub.com/

[9] Remove the mounting bolt (1) from the pipe clip (4) using a 10-mm wrench.

[10] Remove the locknut (2) from the injector side pipe using a 17-mm wrench.

[11] Remove the locknut (3) from the common rail side pipe using a 19-mm wrench.
- Use caps or plugs to cover the pipes to prevent the entry of water, dust or dirt.
- Clean the pipes by spraying with a parts cleaner to prevent scratches and prevent dirt from accumulating on the connectors.

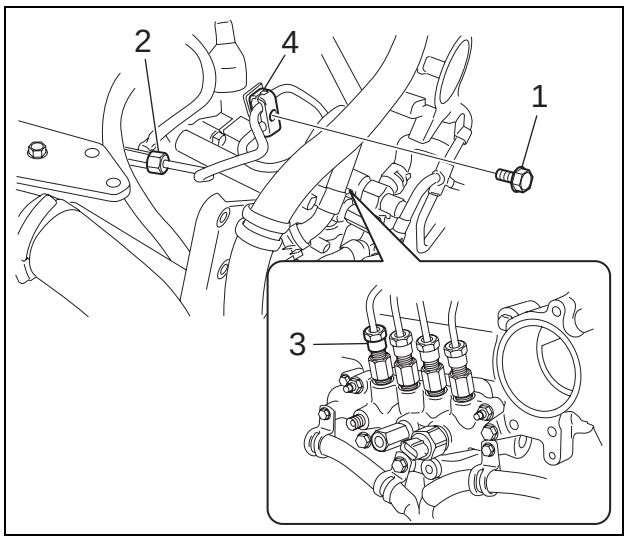

[12] Remove the mounting bolt (1) from the injector (2) using a T40 torques.

[13] Pull out the injector (2).

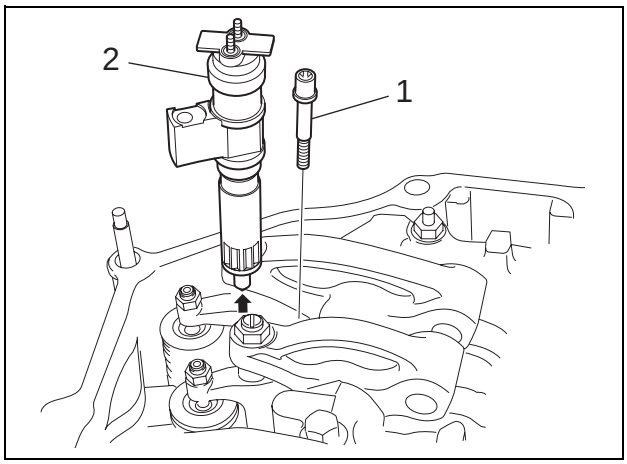

https://truckmanualshub.com/

8 Removal and Installation of Turbo

Caution	• Be sure to stop the engine before beginning work.

Items to prepare

- Wrench (7 mm, 10 mm, 14 mm, 17 mm)
- Caps
- Plugs
- Rags
- Cleaning fluid

[1] Remove the muffler.
(For details, see "Removal and Installation of Muffler")

[2] Use a 7-mm wrench to loosen the hoseband (1), and then remove the hose (2).
- Use caps to cover the turbo and hose to prevent the entry of water, dust or dirt.

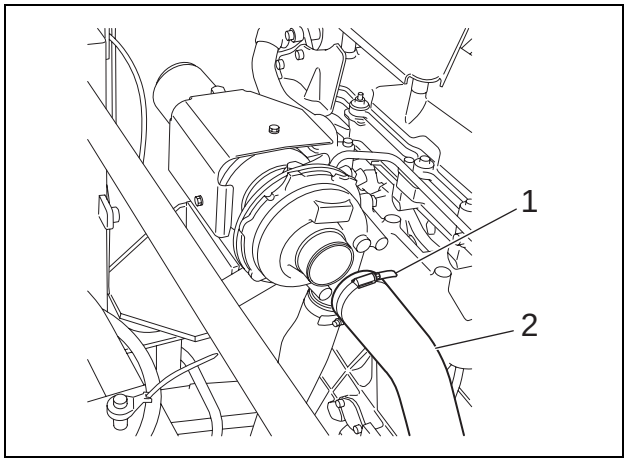

[3] Use a 7-mm wrench to loosen the hoseband (1), and then remove the hose (2).
- Use caps to cover the turbo and hose to prevent the entry of water, dust or dirt.

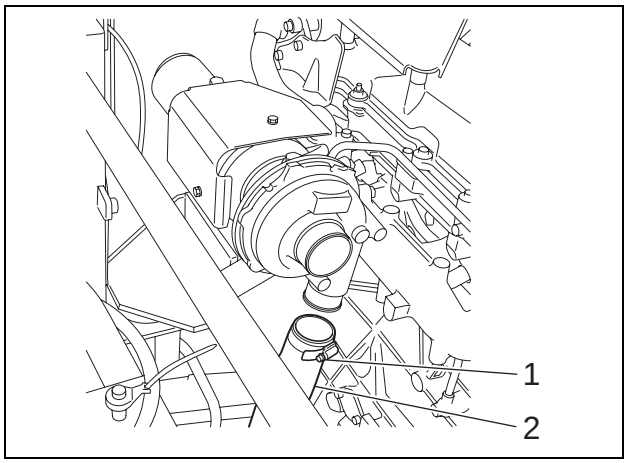

[4] Use a 10-mm wrench to remove the 4 installation bolts (1), and then remove the heat shield (2).

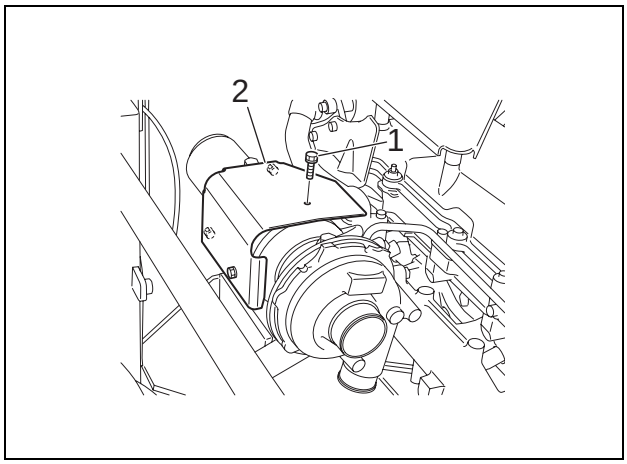

https://truckmanualshub.com/

[5] Use a 17-mm wrench to remove the installation bolt (1), and then remove the pipe (2).
- Use caps or plugs to cover the turbo and pipe to prevent the entry of water, dust or dirt.
- When removing the oil pipe, take care not to damage or lose the packing.

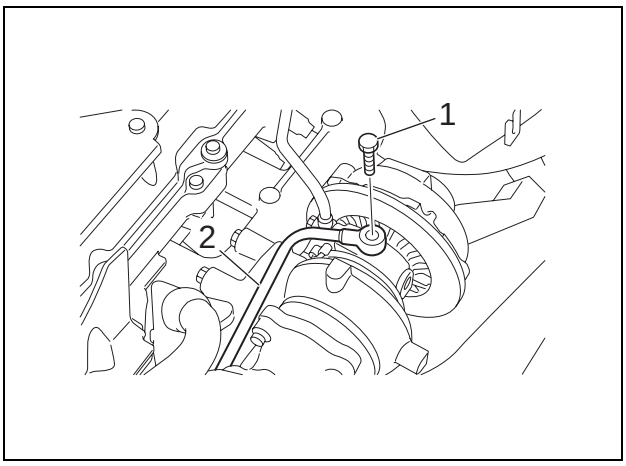

[6] Use a 14-mm wrench to remove the installation bolt (1), and then remove the pipe (2).
- Use caps or plugs to cover the turbo and pipe to prevent the entry of water, dust or dirt.

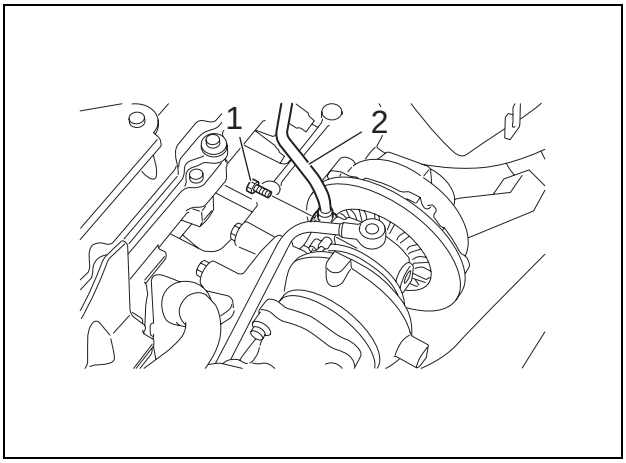

[7] Use a 14-mm wrench to remove 2 installation bolts (1), and then remove the pipe (2).
Use caps or plugs to cover the turbo and pipe to prevent the entry of water, dust or dirt.

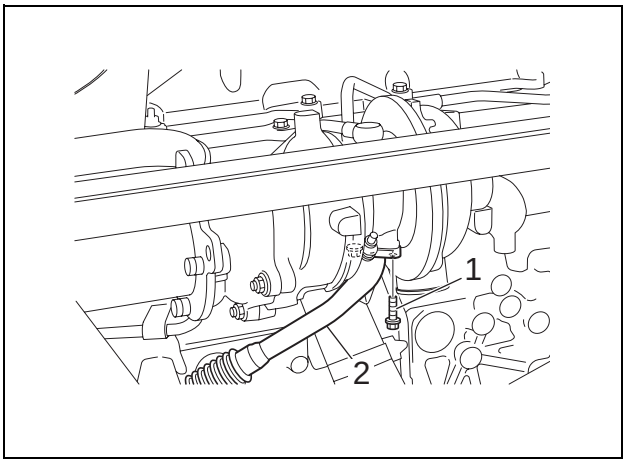

https://truckmanualshub.com/

[8] Use a 14-mm wrench to remove 2 installation nuts (1) and 2 installation bolts, and then remove the turbo (2).

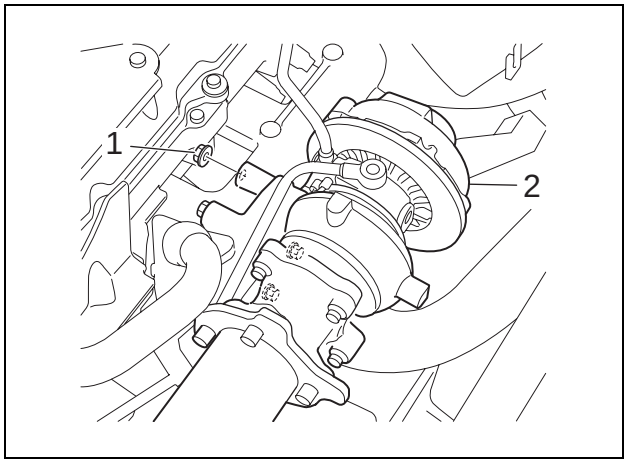

[9] Use a 13-mm wrench to remove 4 installation nuts (1), and then remove the pipe (2) from the turbo unit.

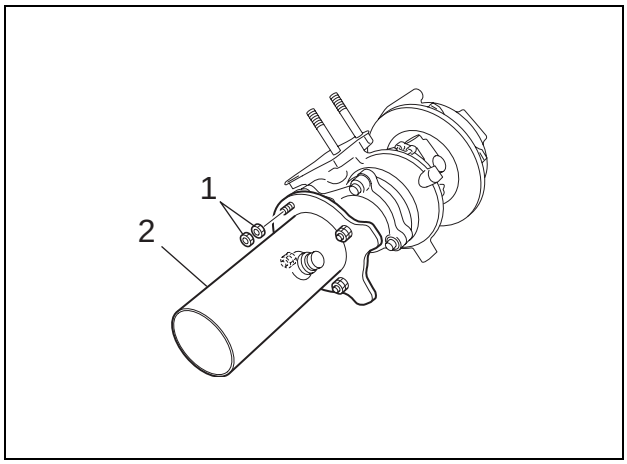

https://truckmanualshub.com/

9 Removal and Installation of Muffler

Caution	• Be sure to stop the engine before beginning work.

Items to prepare

- Wrench (14 mm)
- Caps
- Rags
- Cleaning fluid

[1] Use a 14-mm wrench to remove 9 installation bolts (1), and then remove the covers (2) and (3).

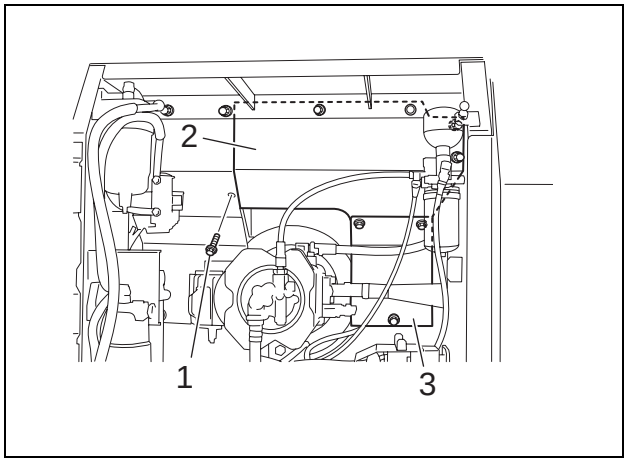

[2] Use a 14-mm wrench to remove 2 bolts (1), remove the seal clamp from the exhaust pipe, and then remove the pipe.
- Use caps to cover the pipe to prevent the entry of water, dust or dirt.

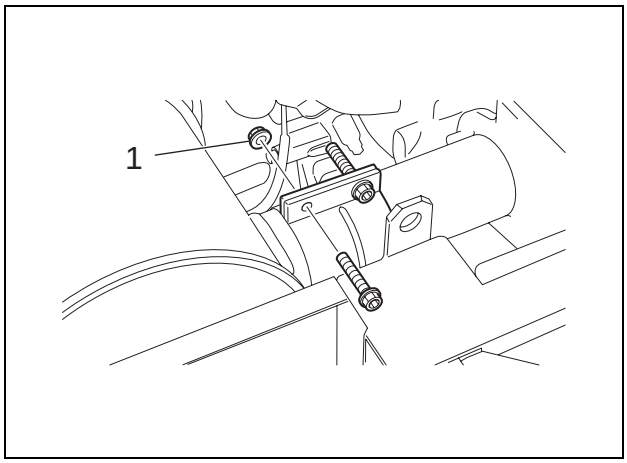

[3] Use a 14-mm wrench to remove 2 installation nuts (1).

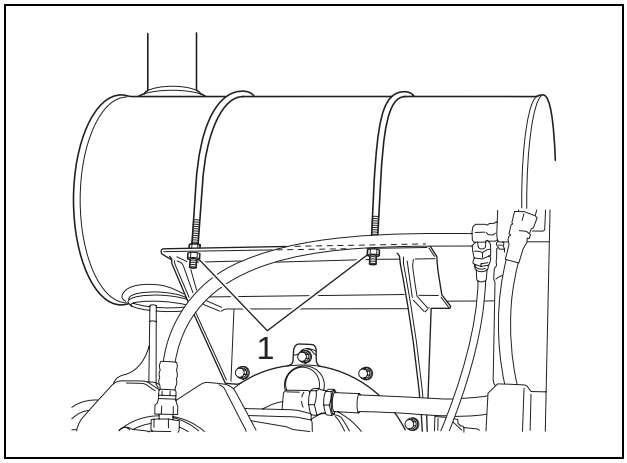

https://truckmanualshub.com/

[4] Use a 14-mm wrench to remove 2 installation nuts (1).

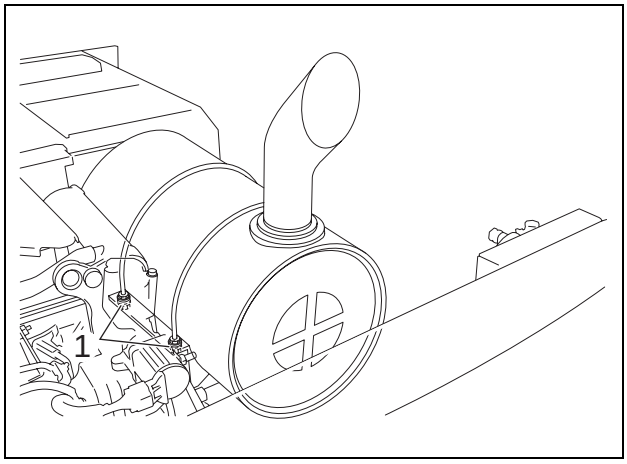

[5] Remove the fixing bars (1), and then remove the muffler (2) unit.

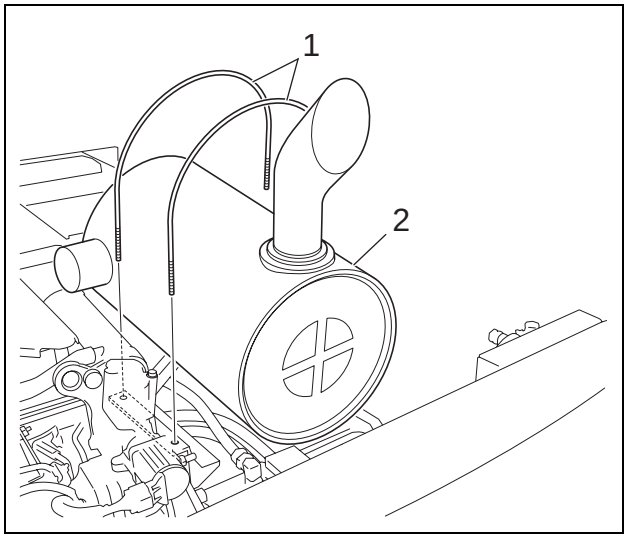

https://truckmanualshub.com/

10 Removal and Installation of EGR Cooler

Cautions	• Be sure to stop the engine before beginning work. • Be sure to drain the coolant before beginning work.

Items to prepare

- Wrench (12 mm)
- Pliers
- Caps
- Plugs
- Rags
- Cleaning fluid

[1] Remove mounting bolts (1) and (2) using a 12-mm wrench.

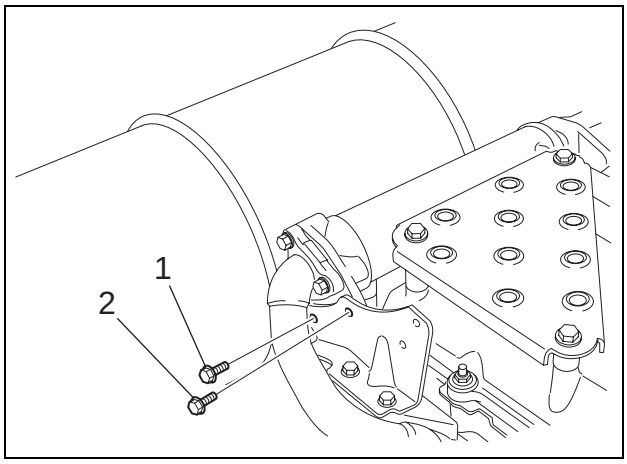

[2] Remove mounting bolts (1), (2) and (3) using a 12-mm wrench.

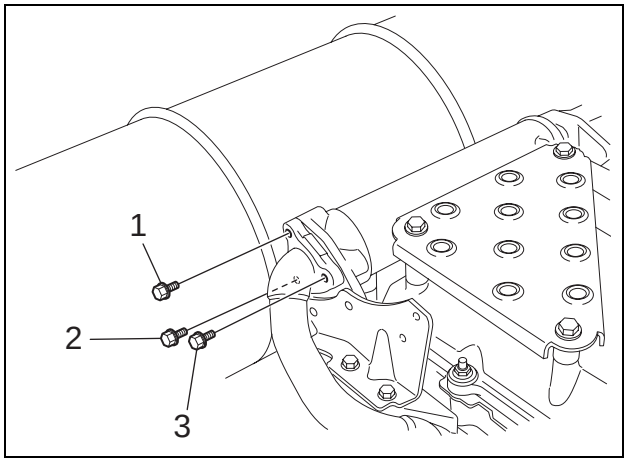

https://truckmanualshub.com/

[3] Loosen the hose band (1) using pliers or a similar tool, and remove the hose (2).
- Use caps or plugs to cover the pipes and hoses to prevent the entry of water, dust or dirt.

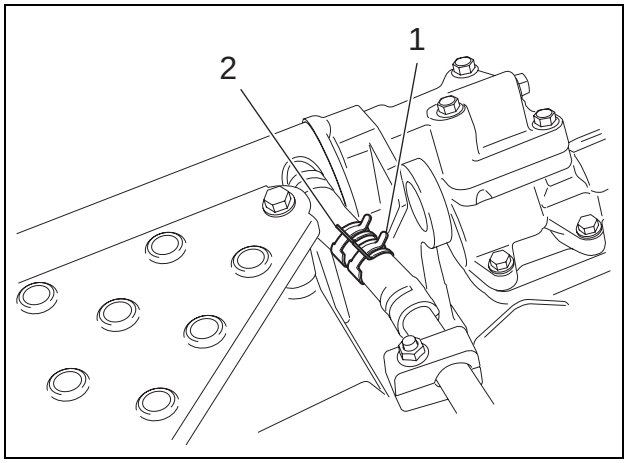

[4] Remove mounting bolts (1) and (2) using a 12-mm wrench.

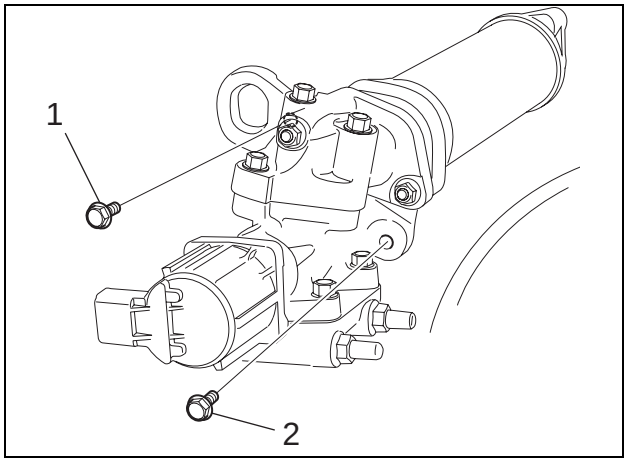

[5] Remove mounting bolts (1), (2) and (3) using a 12-mm wrench.

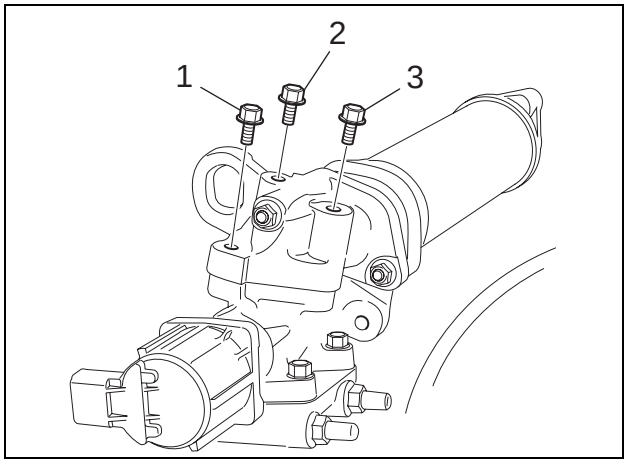

https://truckmanualshub.com/

[6] Loosen the hose band (1) using pliers or a similar tool, remove the hose (2), and remove EGR cooler (3).
- Use caps or plugs to cover the pipes and hoses to prevent the entry of water, dust or dirt.
- Clean the pipes by spraying with a parts cleaner to prevent scratches and prevent dirt from accumulating on the connectors.

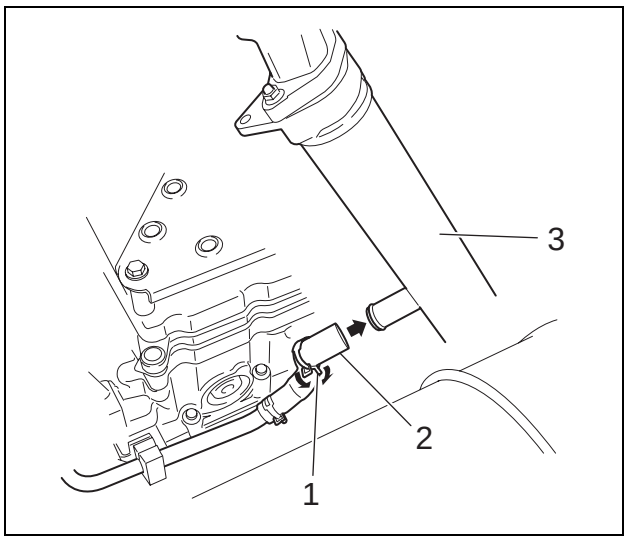

https://truckmanualshub.com/

11 Removal and Installation of Engine Sensors

	Sensor name	How to remove
1	Engine coolant temperature sensor	Remove the single locknut using a 19-mm wrench.
2	Boost pressure sensor	[1] Remove 2 mounting bolts using a 10-mm wrench. [2] Remove 2 band holders using a 5.5-mm box wrench or a Phillips screwdriver.
3	Overheat switch	[1] Remove the single locknut using a 22-mm wrench. [2] Remove the cable holder nut(s) using a 7-mm wrench.
4	Common rail pressure sensor	Remove the single locknut using a 27-mm wrench.
5	EGR valve	Remove four setscrews using a Phillips screwdriver.
6	Boost temperature sensor	Remove the locknut(s) using a 19-mm wrench.
7	Starter motor	Remove 2 mounting nuts using a 17-mm wrench.
8	Engine oil pressure sensor	Remove the single locknut using a 27-mm wrench.
9	Suction control valve	Remove 2 mounting bolts using a 5-mm hexagon wrench.
10	Fuel temperature sensor	Remove the single locknut using a 19-mm wrench.
11	Cam position sensor	Remove the single mounting bolt using a 10-mm wrench.
12	Crank position sensor	Remove the mounting bolt(s) using a 10-mm wrench.

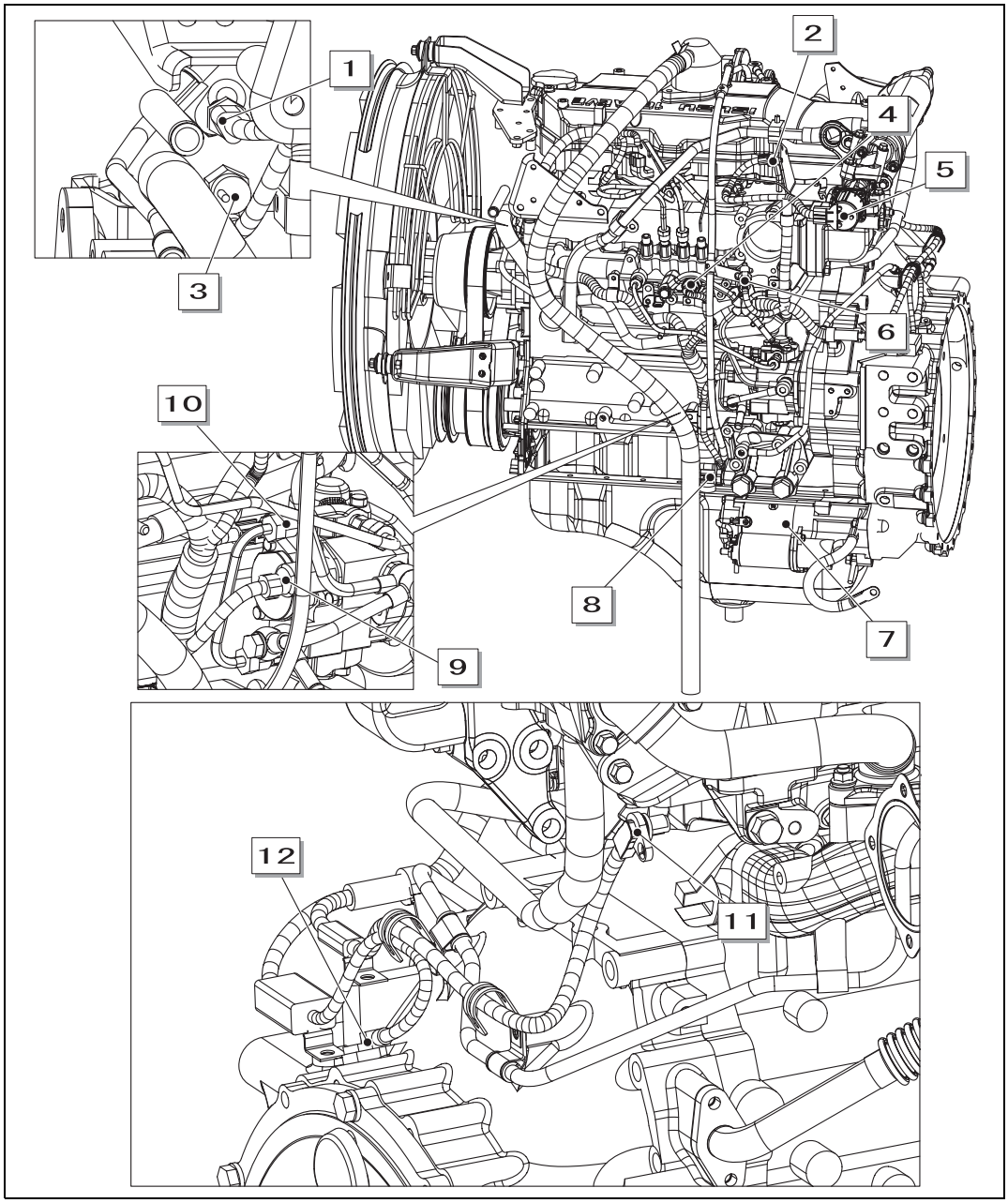

https://truckmanualshub.com/

12 Removal and Installation of Engine Inter Cooler

Caution	• Be sure to stop the engine before beginning work.

Items to prepare

- Wrench (8 mm, 14 mm)
- Pliers
- Caps
- Rags
- Cleaning fluid

[1] Remove the fuel cooler.
(For details, see "Removal and Installation of Fuel Cooler")

[2] Use pliers to cut the hoseband on the fuel cooler.

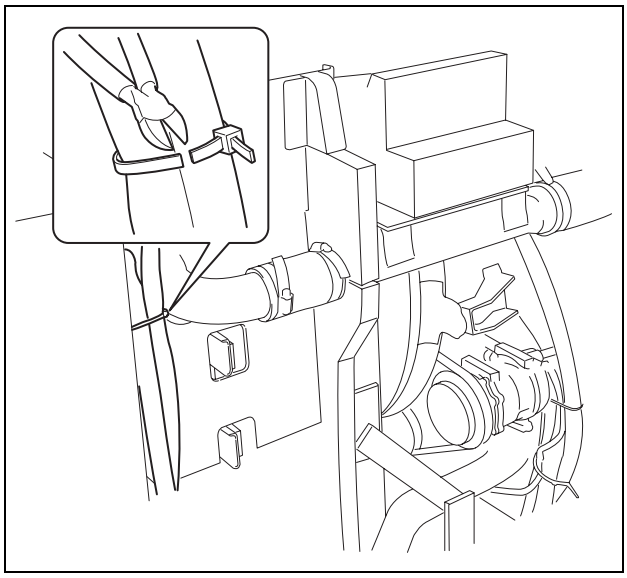

[3] Use a 14-mm wrench to remove 4 installation bolts (1), and then remove the bracket (2) from the fuel cooler.

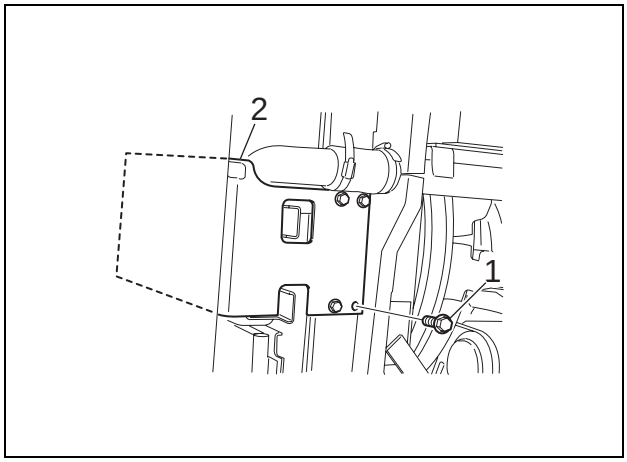

https://truckmanualshub.com/

[4] Use a 8-mm wrench to loosen the hosebands (1) in the two locations, and then remove the 2 hoses (2).
- Use caps to cover the inter cooler and hoses to prevent the entry of water, dust or dirt.

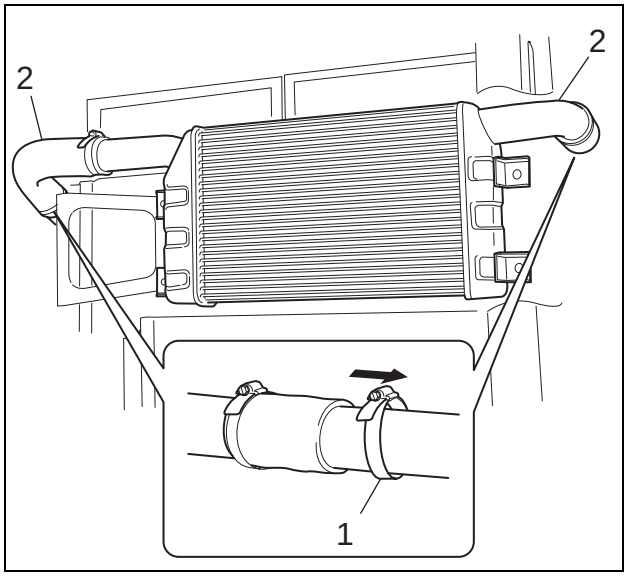

[5] Use a 14-mm wrench to remove 4 installation bolts (1), and then remove the inter cooler (2).

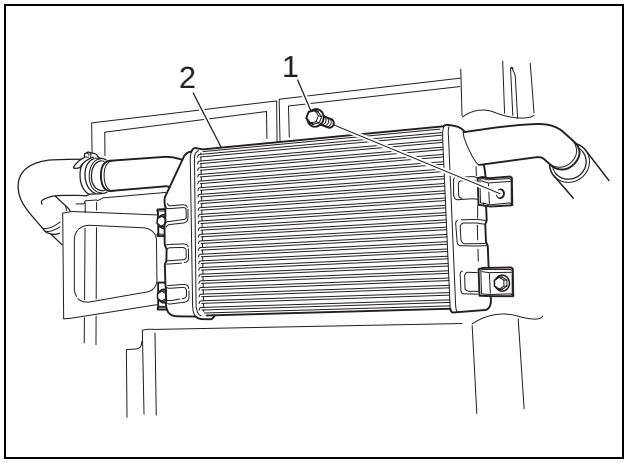

https://truckmanualshub.com/

13 Removal and Installation of Fuel Cooler

Caution	• Be sure to stop the engine before beginning work. • Flames and heat are strictly prohibited, because the fuel hose will be removed.

Items to prepare

- Wrench (12 mm)
- Screwdriver
- Pliers
- Marking pen
- Caps
- Plugs
- Rags
- Cleaning fluid

[1] After removing the hosebands with pliers, use a flathead screw driver to pull out the hoses (1) and (2).
- Mark the fuel cooler and hoses so that they can be connected correctly at the time of assembly.
- Attach caps or plugs to the fuel cooler and hoses to prevent the entry of water, dust or dirt.

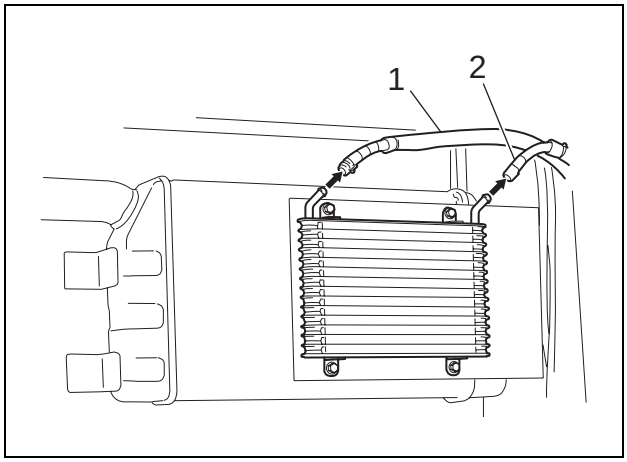

[2] Use a 12-mm wrench to remove the 4 installation bolts (1), and then remove the fuel cooler unit (2).

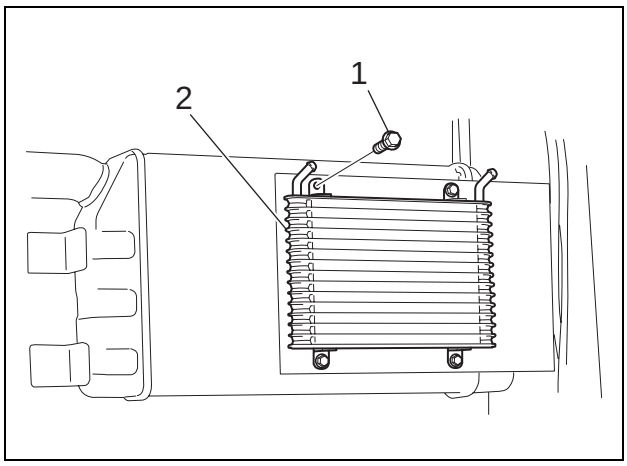

https://truckmanualshub.com/

3-6 Air Conditioner: Assembly and Disassembly

1 Removal and Installation of Compressor

Warning	• The air conditioner circuit is filled with high-pressure gas. Beware of the gas that is released when loosening the pipes.

Caution	• Be sure to stop the engine before beginning work.

Items to prepare

- Wrench (12 mm)
- Box wrench (12 mm)
- Rags
- Cleaning fluid

[1] Remove the counterweight.
(For details, see "Removal and Installation of Counterweight")

[2] Remove the connector (1).

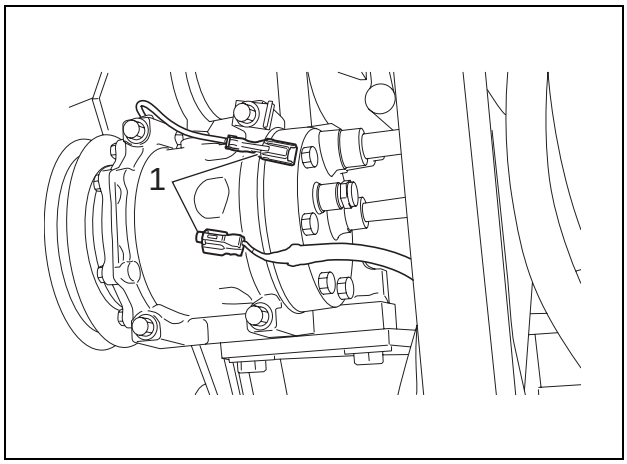

[3] Use a 12-mm box wrench to loosen the adjusting bolts (1) on the pipe in the 2 locations, and then remove 2 pipes (2).
- Always remove the low-pressure pipe first.
- Attach caps or plugs to the compressor and pipes to prevent the entry of water, dust or dirt.

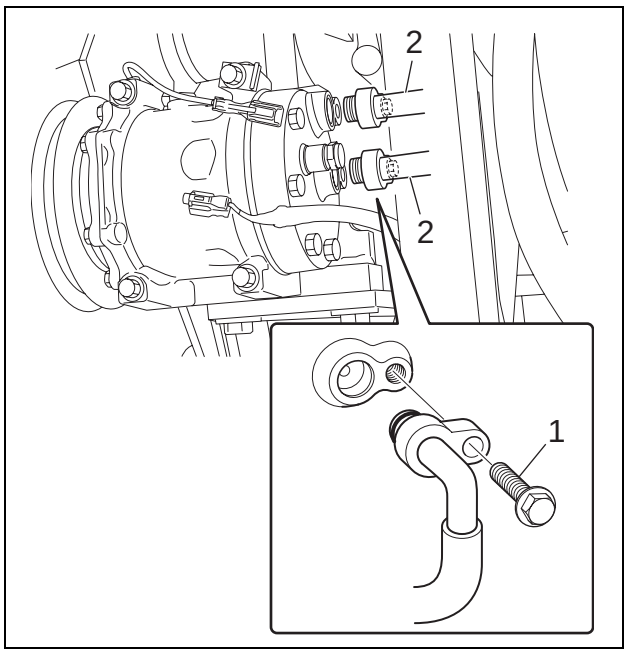

https://truckmanualshub.com/

[4] Use a 12-mm wrench to remove 4 installation bolts (1), and then remove the compressor (2).

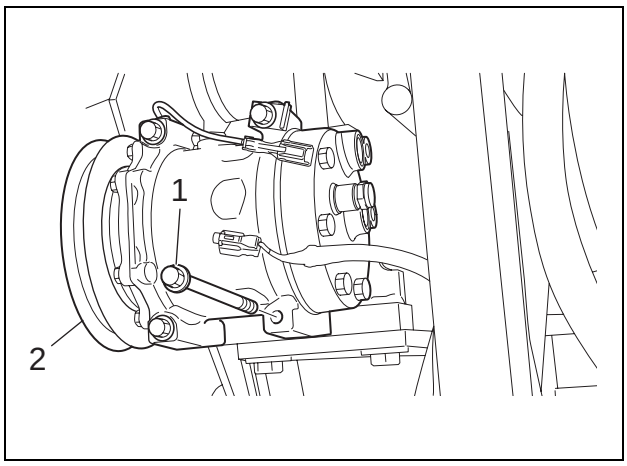

https://truckmanualshub.com/

2 Removal and Installation of Condenser

Warning	• The air conditioner circuit is filled with high-pressure gas. Beware of the gas that is released when loosening the pipes.

Caution	• Be sure to stop the engine before beginning work.

Items to prepare

- Wrench (13 mm, 17 mm, 19 mm, 22 mm)
- Caps
- Plugs
- Rags
- Cleaning fluid

[1] Use a 17-mm wrench to fasten the pipe (1), and then use a 19-mm wrench to loosen and remove the low-pressure pipe (2).
- Always remove the low-pressure pipe first.
- Attach caps or plugs to the condenser and pipes to prevent the entry of water, dust or dirt.
- Clean the pipes by spraying with a parts cleaner to prevent scratches and prevent dirt from accumulating on the connectors.

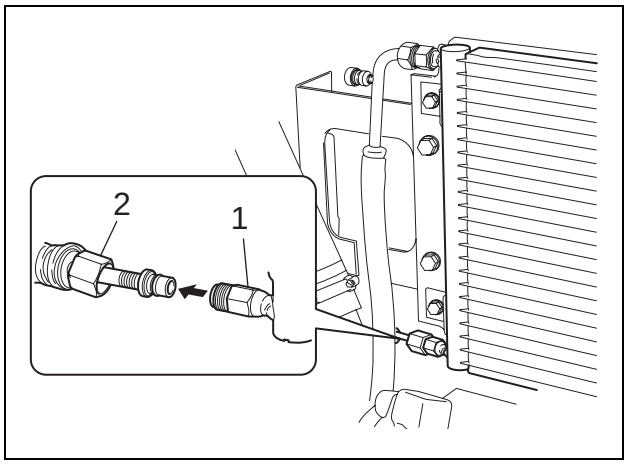

[2] Use a 22-mm wrench to fasten the pipe (1), and then use a 22-mm wrench to loosen and remove the high-pressure pipe (2).
- The cap with "H" indicates the high-pressure pipe.
- Attach caps or plugs to the condenser and pipes to prevent the entry of water, dust or dirt.
- Clean the pipes by spraying with a parts cleaner to prevent scratches and prevent dirt from accumulating on the connectors.

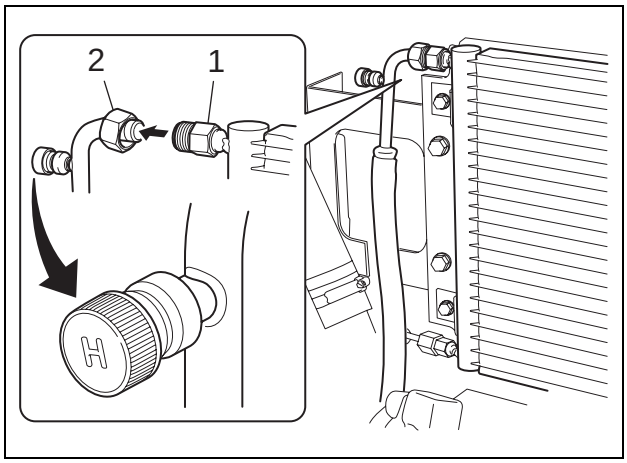

https://truckmanualshub.com/

[3] Use a 13-mm wrench to remove 4 installation bolts (1), and then remove the condenser unit (3).

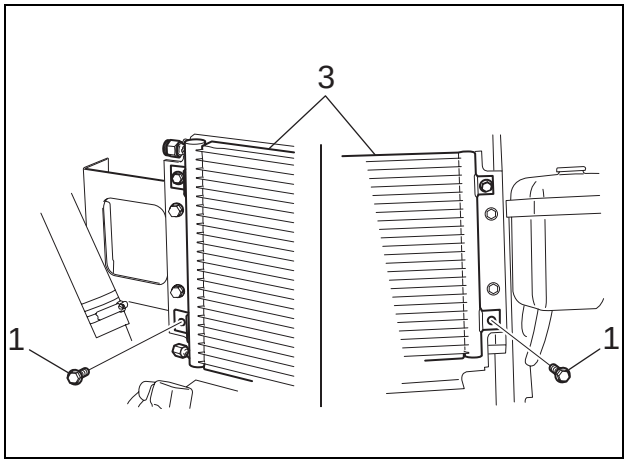

https://truckmanualshub.com/

3 Removal and Installation of Receiver Dryer

Warning	• The air conditioner circuit is filled with high-pressure gas. Beware of the gas that is released when loosening the pipes.

Caution	• Be sure to stop the engine before beginning work.

Items to prepare

- Wrench (10 mm)
- Caps
- Plugs
- Rags
- Cleaning fluid

[1] Use a 17-mm wrench to fasten the pipe (1), and then use a 19-mm wrench to loosen and remove the low-pressure pipe (2).
- Always remove the low-pressure pipe first.
- Attach caps or plugs to the condenser and pipes to prevent the entry of water, dust or dirt.
- Clean the pipes by spraying with a parts cleaner to prevent scratches and prevent dirt from accumulating on the connectors.

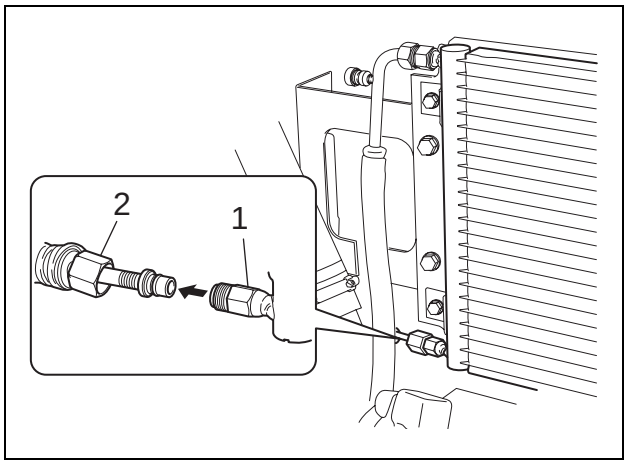

[2] Use a 22-mm wrench to fasten the pipe (1), and then use a 22-mm wrench to loosen and remove the high-pressure pipe (2).
- The cap with "H" indicates the high-pressure pipe.
- Attach caps or plugs to the condenser and pipes to prevent the entry of water, dust or dirt.
- Clean the pipes by spraying with a parts cleaner to prevent scratches and prevent dirt from accumulating on the connectors.

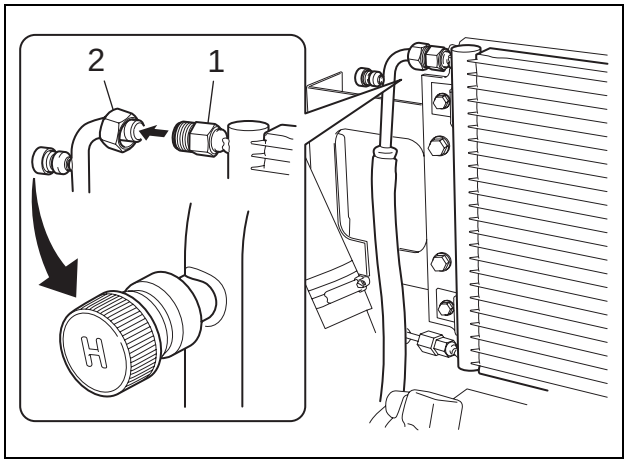

https://truckmanualshub.com/

[3] Remove the connector (1).

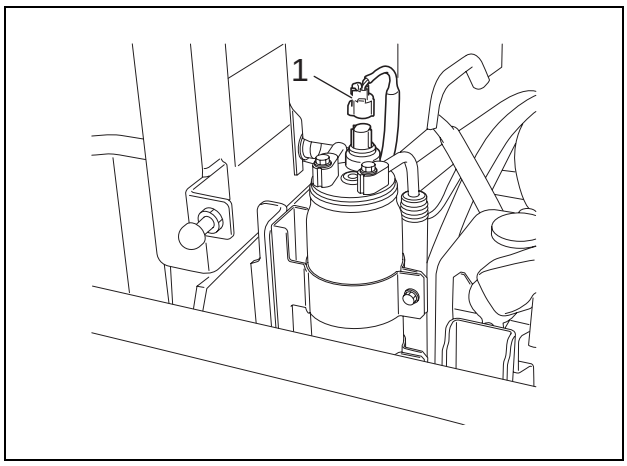

[4] Use a 10-mm wrench to remove 2 installation bolts (1) from the pipe.
- Attach caps or plugs to the receiver dryer and pipe to prevent the entry of water, dust or dirt.
- Clean the receiver dryer and pipe by spraying with a parts cleaner to prevent scratches and prevent dirt from accumulating on the connectors.

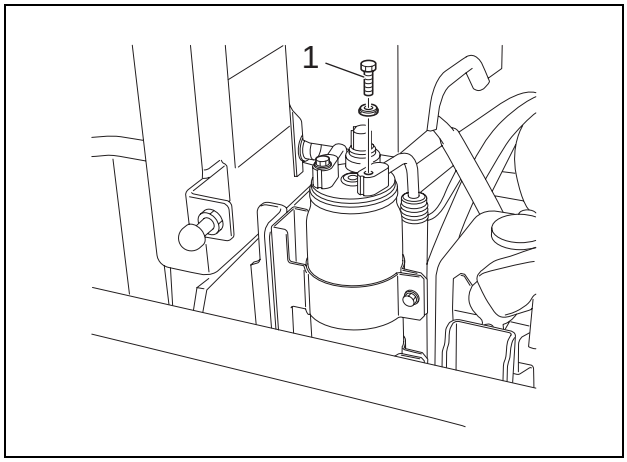

[5] Use a 10-mm wrench to remove the installation bolt (1), and then remove the receiver dryer (2).

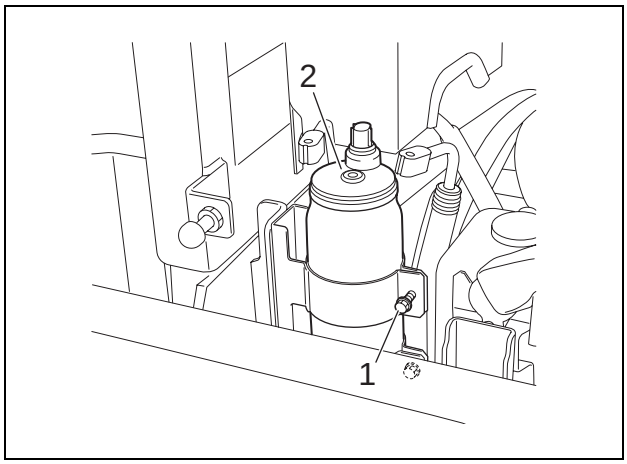

https://truckmanualshub.com/

1 Voltage Measurement Procedure

Items to prepare

- Service connectors
- Tester

[1] Use the service connector (female) (1) and the service connector (male) (2) for voltage measurement.

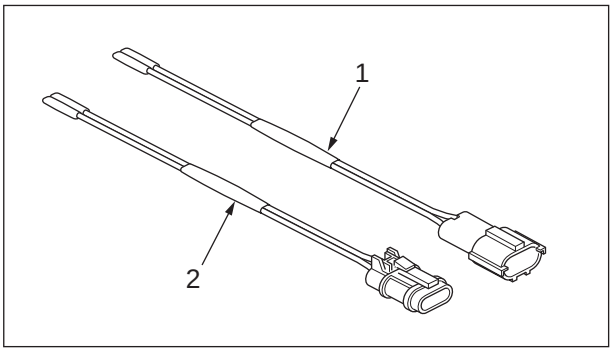

[2] Remove the connector (1) for voltage measurement.

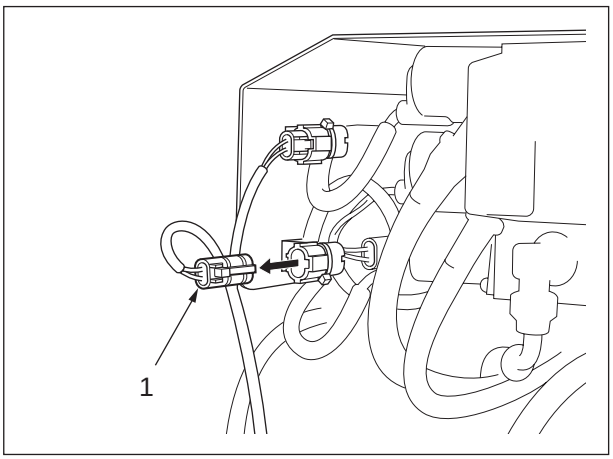

https://truckmanualshub.com/

[3] Connect the service connector (male) (1) to the connector you have removed. Connect the tester (2) to connector terminals and measure the voltage.

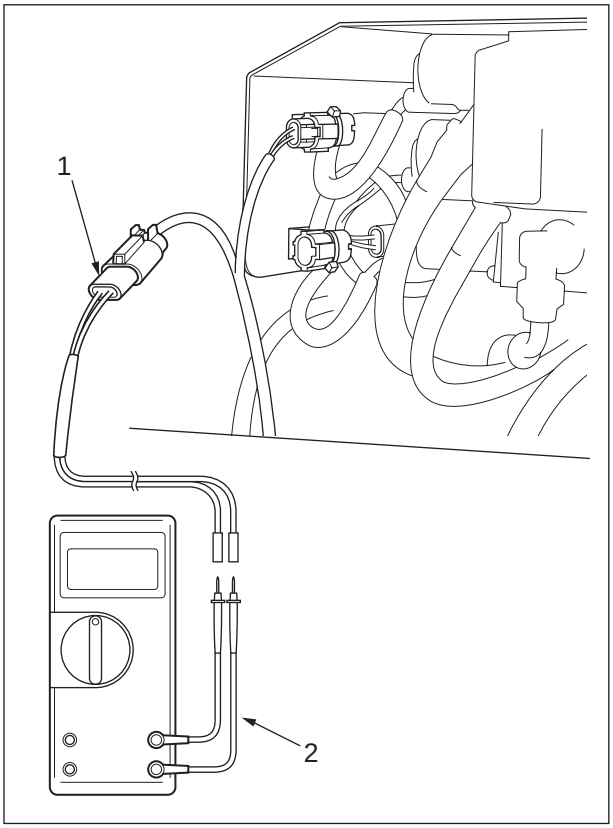

[4] Also connect the service connector (1) into the other socket of the connector you have removed, and measure the voltage using a tester (2).

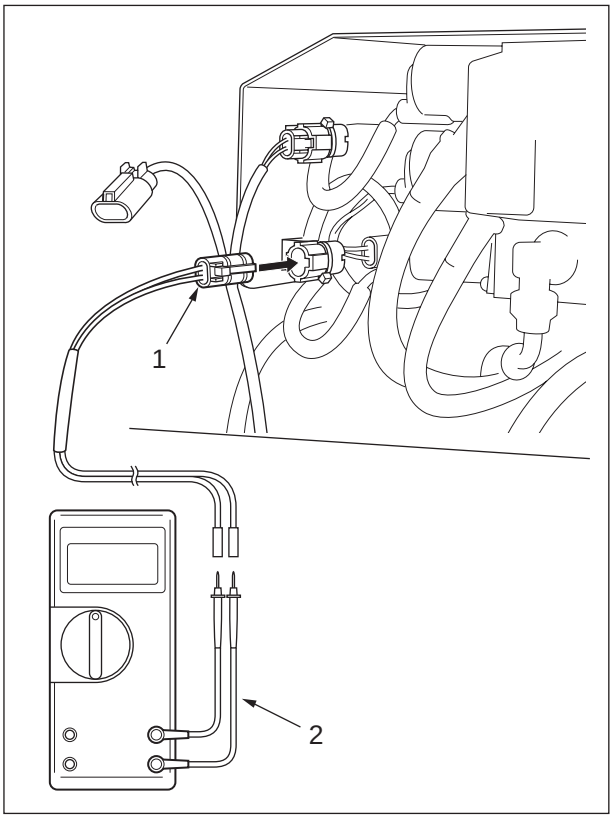

https://truckmanualshub.com/

5-1 Lower Mechanism: Track Shoe

1 Removal and Installation of Shoe Assembly

Warnings	• Gradually loosen the check valve when loosening it. • The hydraulic pressure inside the cylinder is very high. If the check valve is loosened too much, grease may come out or the plug may fly off. Never stand in front of the check valve when you adjust it.

Caution	• Be sure to stop the engine before beginning work.

Items to prepare

- Wrench (17 mm, 19 mm)
- Bar hammer
- Holding-up bar
- Pinch bar
- Rags

[1] Loosen the check valve (1) using a 19-mm box wrench to release the grease, and release the track shoe tension.

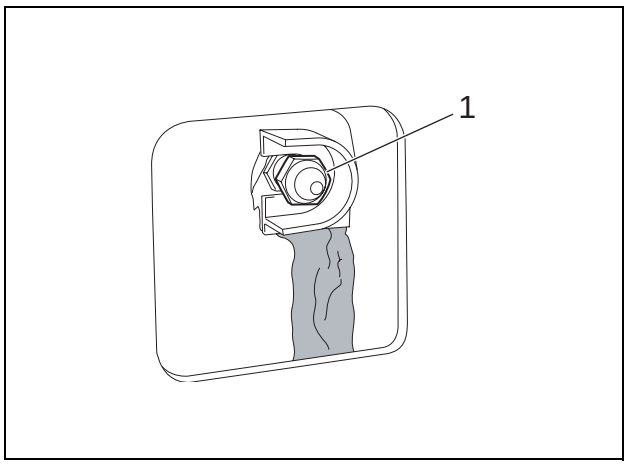

[2] Remove the stopper (1) from the check valve using a 17-mm wrench.
- The track shoe tension can easily be released with the check valve (2) removed.

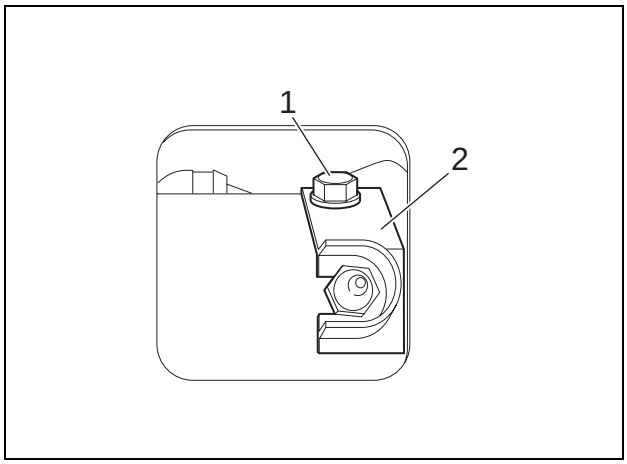

https://truckmanualshub.com/

[3] Straighten the S pin (1) mounted on the master pin by hammering, and pull it out using a pinch bar.

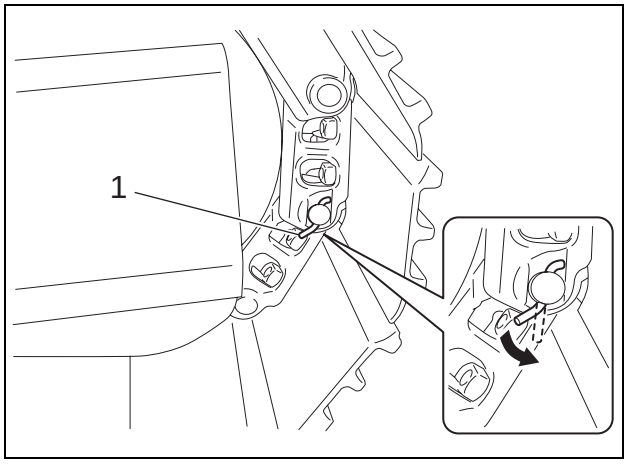

[4] Push the master pin (3) out using bar hammer (1) and holding-up bar (2).

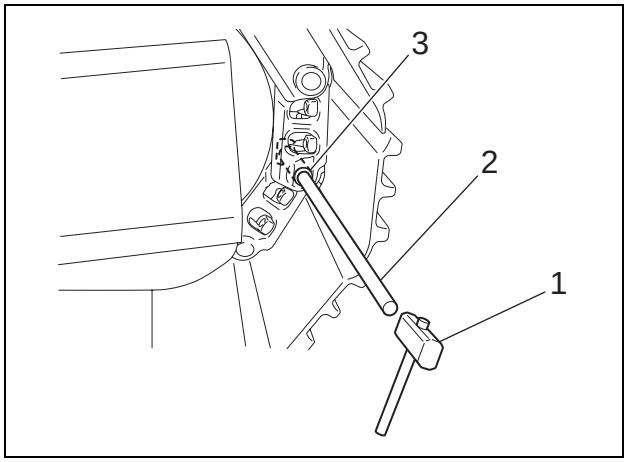

[5] Remove the track shoe (1).

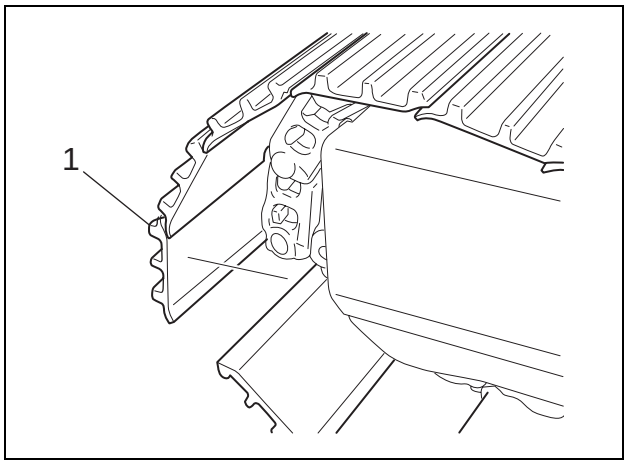

https://truckmanualshub.com/

2 Removal and Installation of Shoe Plates

Caution	• Be sure to stop the engine before beginning work.

Items to prepare

- Wrench (30 mm)
- Grease
- Rags
- Cleaning fluid

[1] Remove 4 shoe bolts (1) using a 30-mm box wrench, and remove the shoe plate (2).

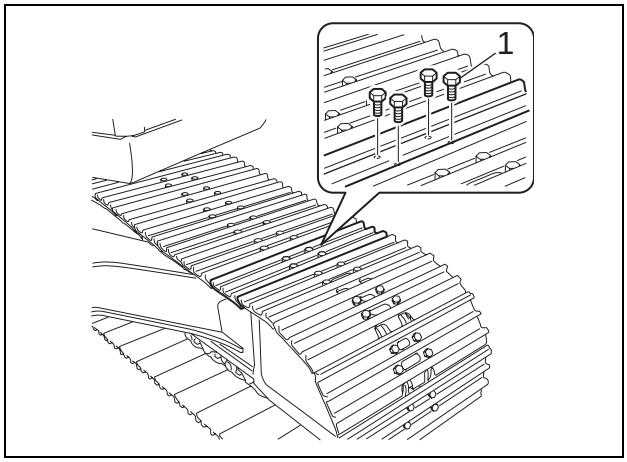

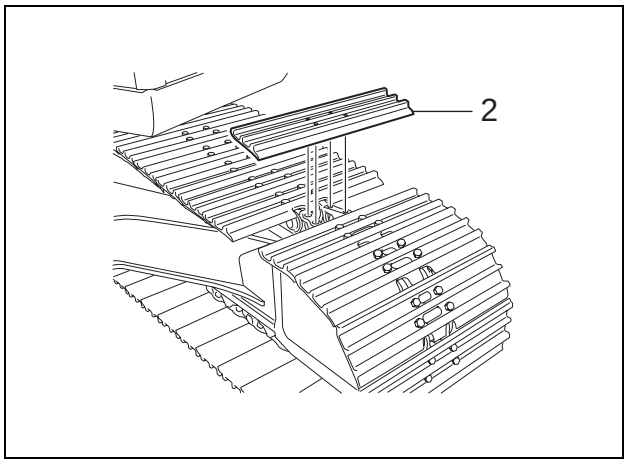

https://truckmanualshub.com/

1 Removal and Installation of Travel Motor Assembly

Warning	• When loosening the check valve, loosen it gradually and stop loosening when grease appears. (The pressure inside the cylinder is very high. If the check valve is loosened too much, grease may come out or the plug may fly off.)

Caution	• Before removing the shoes, be sure to bleed off any air in the hydraulic circuits. • Be sure to inspect the wire rope and other suspended items before beginning work. • Do not stand or pass under the suspended load (travel motor).

Items to prepare

- Box wrench (19 mm, 24 mm)
- Wrench (17 mm, 19 mm, 27 mm, 36 mm)
- Hammer (to remove the master pin)
- Pipe (to remove the master pin)
- Crane (that meets the lifting capacity)
- Wire (with the required breaking load)
- Crossties
- Rags
- Cleaning fluid

[1] Allow the bucket (1) to touch the ground so as to elevate one shoe (2) as in the figure on the right.

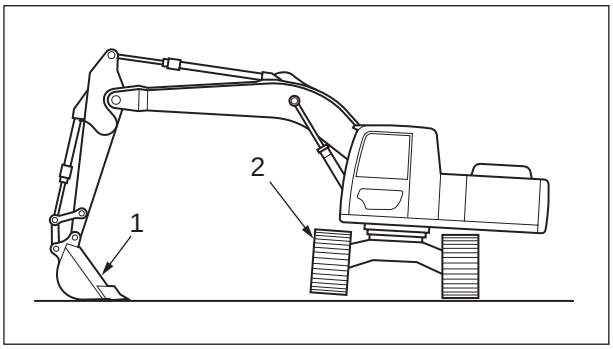

[2] Slowly rotate the shoe until the shoe joint section (1) is aligned as in the figure on the right.

[3] Place 2 crossties (2) under the shoe and bring the bucket to its original position.

[4] Bleed off air from all parts, referring to the Air Bleed Procedure.

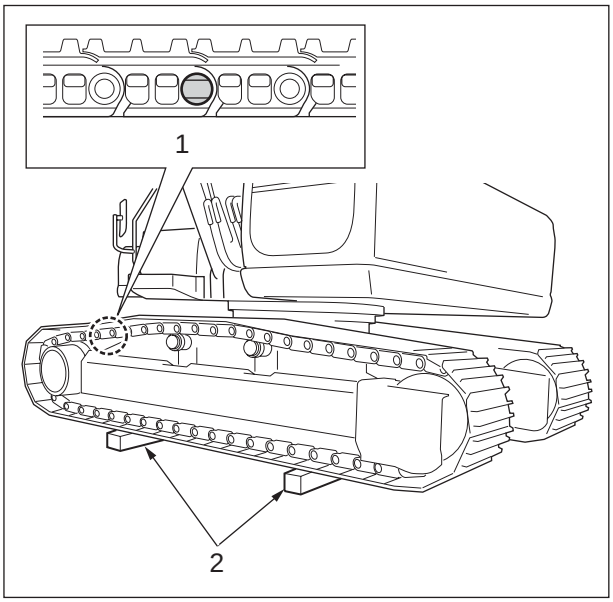

https://truckmanualshub.com/

[5] Use a 19-mm box wrench to rotate the grease cylinder check valve (1) and loosen the shoe tension.
- Grease flows out, so provide rags. If the check valve is loosened too much at this time, it may fly off. Be careful not to stand in front of the check valve.

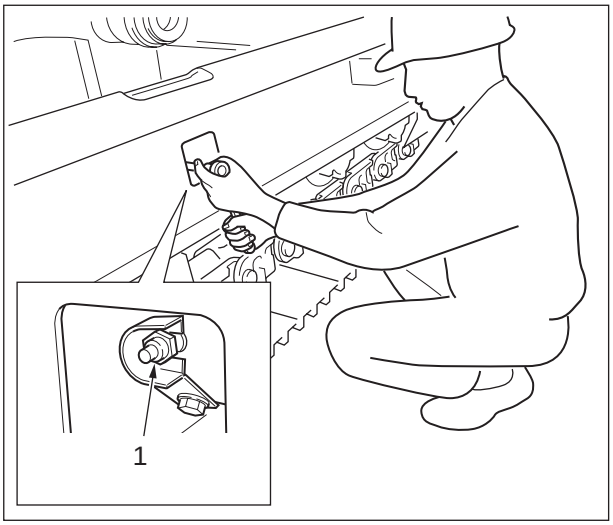

[6] Pull out the S pin (1) from the rear of the joint section.

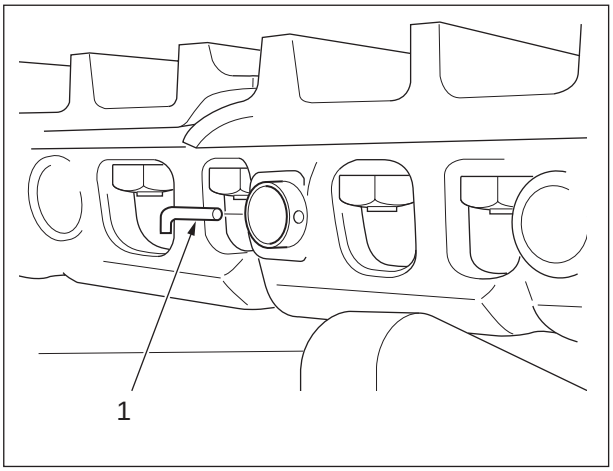

[7] Place a pipe or similar object against the master pin (1) and hit with a hammer (2) to remove the master pin (1) to the outside.

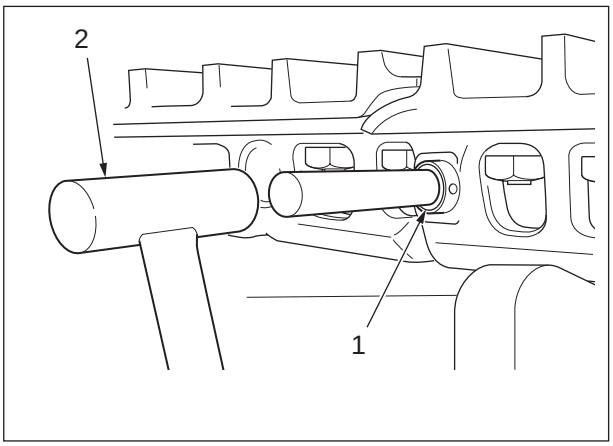

https://truckmanualshub.com/

[8] Open the shoe (1) to the rear.

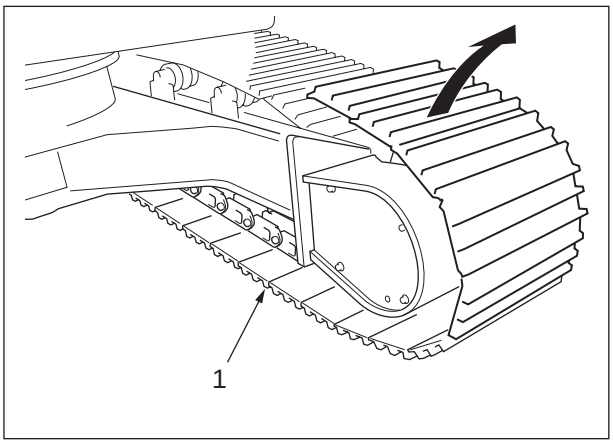

[9] Use a crane and wire to suspend the motor.

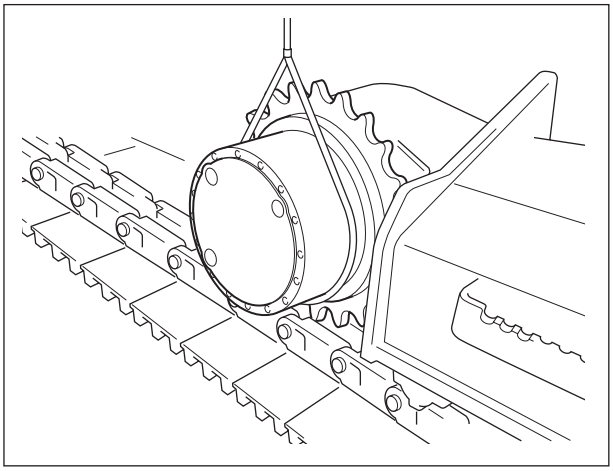

[10] Use a 19-mm wrench to remove the 4 bolts (1), and then remove the cover (2).

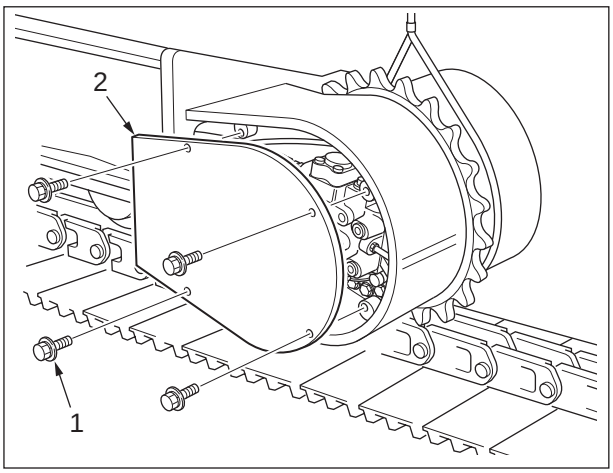

https://truckmanualshub.com/

[11] Use a wrench (27-mm for drain hose, 36-mm for main hose) to remove the 3 drain and main hoses (1).
- Be sure to use plugs on the removed drain and main hoses.

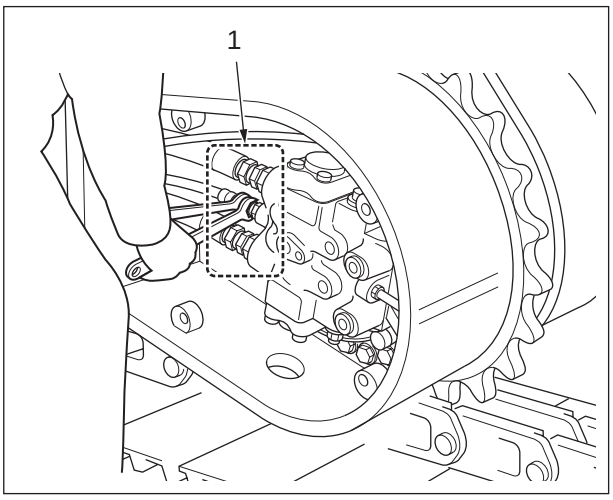

[12] Use a 17-mm wrench to remove the elbow joint (1) as in the figure on the right.

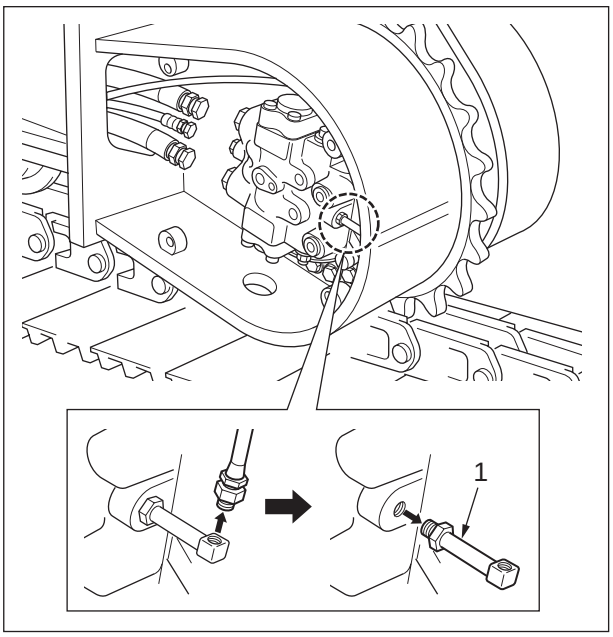

[13] Use a 24-mm box wrench to remove all 34 bolts (1).

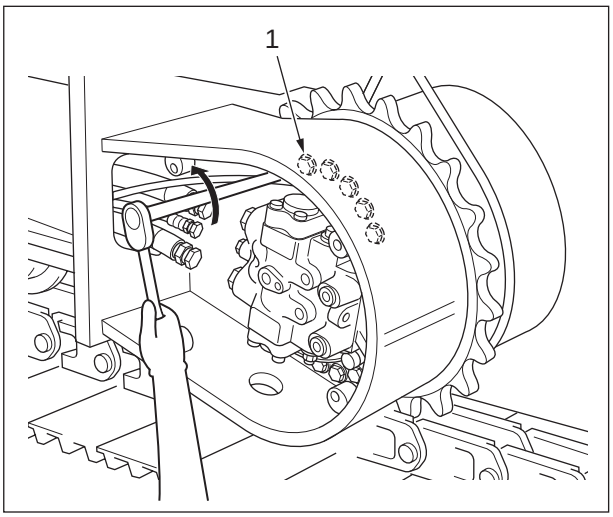

https://truckmanualshub.com/

[14] Remove the motor.

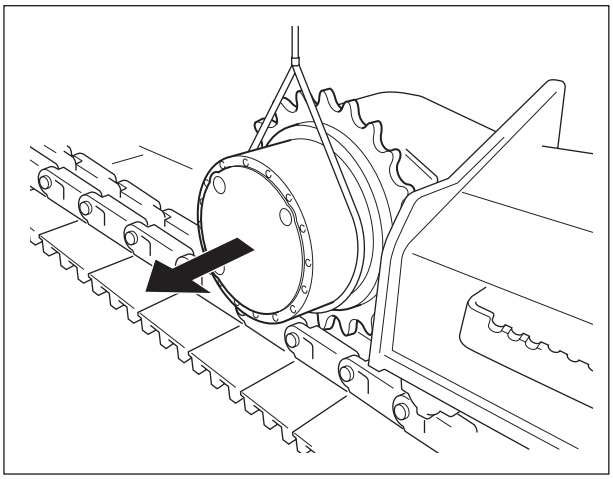

https://truckmanualshub.com/

2 Assembly and Disassembly of Travel Motor

1. Foreword

This manual provides instruction for maintenance of the swash plate-type piston motor with case rotation type reduction gear for the open circuit MAG-170VP-3800E series. This manual helps first-time users to understand maintenances issues as well as assists experienced users to review the swash plate-type piston motor with case rotation type reduction gear for the open circuit manufactured by KYB Co., Ltd. Read this maintenance procedures well and come to an understanding of its contents before beginning actual maintenance work. It is recommended that users keep this manual ready at hand during operation.

This maintenance procedures mainly consists of (1) the disassembling procedure, (2) maintenance standards (3) assembling procedure, and (4) post-assembly checking points for the MAG-170VP-3800E series, swash plate-type piston motor with case rotation type reduction gear for the open circuit.

MAG-170VP-3800E series, swash plate-type piston motor with case rotation type reduction gear for the open circuit produced by KYB Co., Ltd. is the actuator used in the hydraulic unit of the mother machine. Therefore, this maintenance procedures should be used along with the maintenance procedures of the mother machine. Always refer to the maintenance procedures of the mother machine when using this maintenance procedures.

https://truckmanualshub.com/

2. For Safety Operation

Safety Cautions

Be sure to follow the instructions below:

Warning	Never lift the motor by the tap on the base plate when transporting by crane. Doing so may cause the motor to fall, which may cause personal injury or damage to the machine. 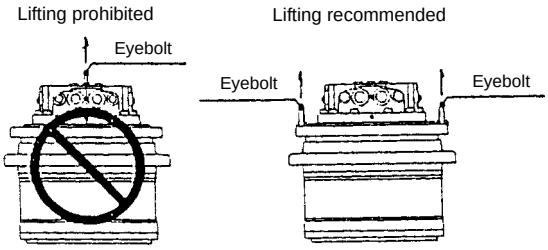

Warning	Always wear a helmet, safety shoes, gloves and protective goggles when disassembling the motor for transportation, installation, maintenance and inspection, etc.

https://truckmanualshub.com/

5-2 Lower Mechanism: Travel Drive Unit

Safety Cautions

Be sure to follow the instructions below:

Warning	Do not run the motor when the hydraulic oil level is low in the hydraulic tank (near the inlet), or when the hydraulic tank is empty. Doing so may cause air to enter the motor, and the motor may go out of control, which may cause personal injury or damage to the machine. 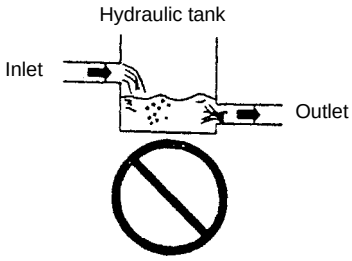

Warning	Do not run the motor when the pipe is empty. Doing so may cause air to enter the motor, and the motor may go out of control, which may cause personal injury or damage to the machine.

Warning	Never remove the oil fill, oil discharge or oil check ports of the reduction gear lubricating oil within 1 hour after the motor has stopped. Doing so may cause high-temperature lubricating oil to squirt out and may cause burns. High-temperature lubricating oil will squirt out and may cause loss of eyesight if it gets into the eyes. 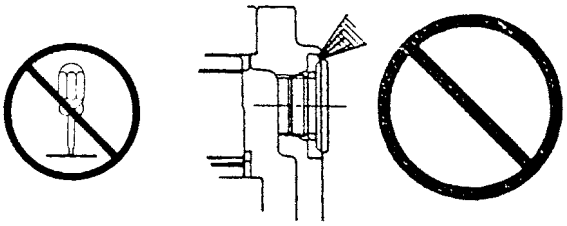

https://truckmanualshub.com/

Safety Cautions

Be sure to follow the instructions below:

Warning	Never remove the pressure detection port or oil drain port when the pipe is pressurized. Doing so may cause pressurized oil to squirt out and may cause loss of eyesight if it gets into the eyes. Always release the pressure inside the pipe to atmosphere level before removing. 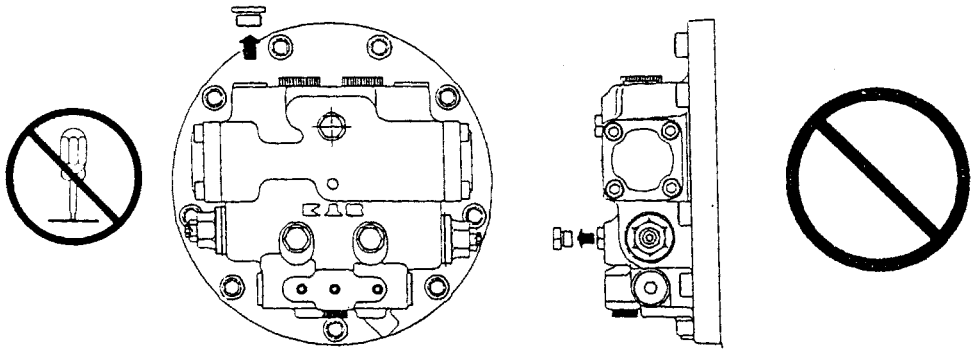
Warning	Do not remove the cover from the reduction gear with the motor attached to the machine body. Doing so may cause your fingers or hands to get pinched causing injury. 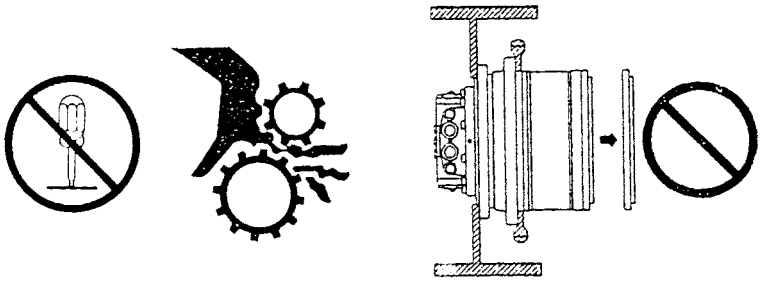
Warning	Do not disassemble the motor with the motor attached to the machine body. Doing so may cause the machine to go out of control resulting in personal injury. Always remove the motor from the machine body before disassembling.

https://truckmanualshub.com/

5-2 Lower Mechanism: Travel Drive Unit

Safety Cautions

Be sure to follow the instructions below:

Warning	Do not remove the spool from the double counter balance valve with the motor attached to the machine body. Doing so may cause the machine to go out of control causing personal injury or damage to the machine. 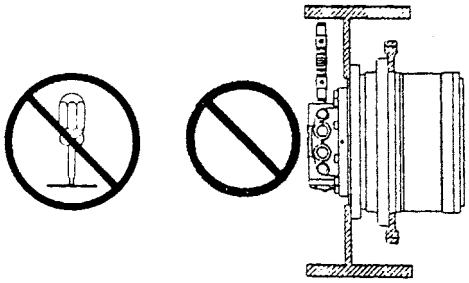

Warning	Never tamper with the relief valve adjuster. Doing so will change the set pressure of the relief valve, and the machine may go out of control causing personal injury or damage to the machine. 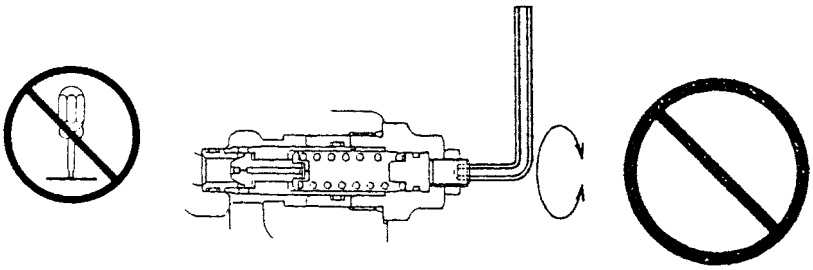

https://truckmanualshub.com/

Safety Cautions

Be sure to follow the instructions below:

Caution	Do not run the motor beyond the specified range. Doing so may cause damage to the machine.

Caution	Never touch the motor within 1 hour after the motor has stopped. The motor surface is very hot as it has been operating. Touching the motor can cause burn injuries. 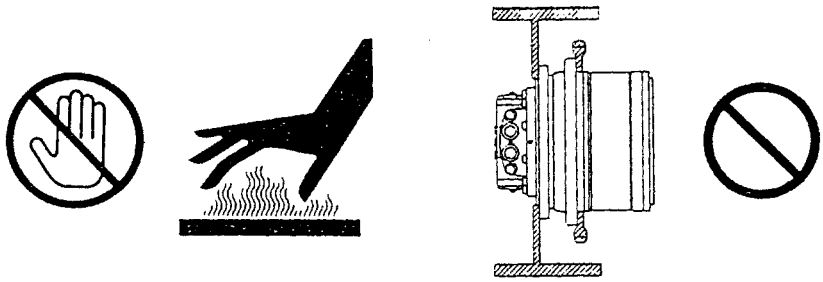

Caution	Never suddenly remove the oil fill, oil discharge or oil check port of the reduction gear. Doing so may cause the plug to pop out, causing injury. Align the ports to the specified positions, and slowly loosen the plugs, starting from the oil fill port on the top, to release the air inside the reduction gear. 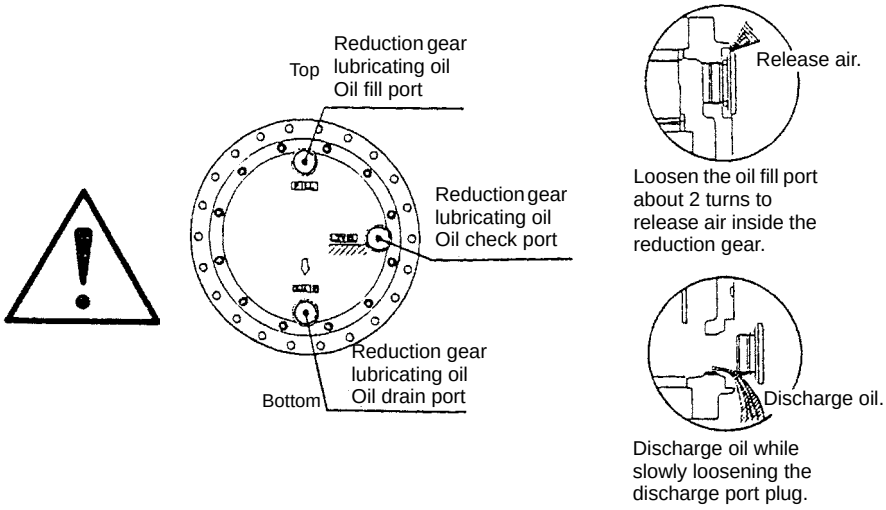

https://truckmanualshub.com/

5-2 Lower Mechanism: Travel Drive Unit

Safety Cautions

Be sure to follow the instructions below:

Caution	When connecting the pipe, make sure that the direction of hydraulic oil flow corresponds to that of the motor rotation. Failure to do so can reverse the motor rotation. 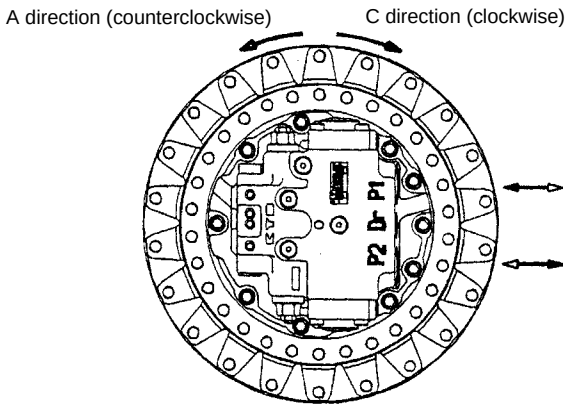

Caution	Use specified hydraulic oil only. Otherwise, the machine may be damaged.

Caution	Use specified hydraulic oil only. Otherwise, the machine may be damaged.

Caution	Do not allow foreign matter to enter inside the motor. Otherwise, the machine will be damaged.

Caution	Wait until the motor cools down before servicing or inspecting the motor.

https://truckmanualshub.com/

3. Tools for Assembly and Disassembly

To disassemble or re-assemble a motor, user the tools listed below.

[1] Standard tools

Table 1 shows the standard tools required for the disassembly and assembly of this motor.

Table 1. Standard Tools for Disassembly and Assembly

No.	Name of the Tool	Standard No. Manufacturer Name	Model or Dimensions	Applicable Part
1	Preset-type torque wrench	JIS B4650	Nominal size: 60	1-2-6-6, 1-2-17, -18, -19
2			Nominal size: 120	1-2-8
3			Nominal size: 230	1-2-6-5
4			Nominal size: 450	1-2-20
5			Nominal size: 900	24, 28
6			Nominal size: 1800	1-2-2-4, 1-2-6-3, 1-2-11, 1-2-14, 29
7			Nominal size: 2800	11
8			Nominal size: 4200	1-2-7
9			Nominal size: 5600	8, 14
10	Socket wrench Ratchet handle	JIS B4641		
11	Hexagon bit for socket wrench		Width across flat: 2.5	1-2-6-6, 1-2-17, -18, -19
12			Width across flat: 4	1-2-8
13			Width across flat: 6	1-2-20
14			Width across flat: 8	28
15			Width across flat: 10	1-2-6-3, 1-2-11
16			Width across flat: 12	11, 29
17			Width across flat: 14	1-2-2-4, 1-2-6-5
18	T-shaped bit for torque wrench	JASO F116-89	Size: T50	24
19			Size: T90	8, 14
20	Socket for socket wrench	JIS B4636	Width across flat: 10	1-2-14
21			Width across flat: 27	1-2-7
22	Hexagon bar wrench	JIS B4648	Width across flat: 2.5	1-2-6-6, 1-2-17, -18, -19
23			Width across flat: 4	1-2-8
24			Width across flat: 6	1-2-20
25			Width across flat: 8	28
26			Width across flat: 10	1-2-6-3, 1-2-11
27			Width across flat: 12	11, 29
28			Width across flat: 14	1-2-2-4, 1-2-6-5
29	Wrench	JIS B4630	Width across flat: 10	1-2-14
30			Width across flat: 27	1-2-7
31	Needle-nose pliers	JIS B4631		1-2-7
32	Snap ring pliers		Model S-2	1-4-5
33	Flathead screwdriver	JIS B4609	6x100	2, 1-27, 1-2, 1-21
34	Plastic hammer	OF-50	Nominal size: No.3	
35	Punch		About 10 mm in length	
36	Press		No less than 200 kgf	
37	Crane		For 400-kilogram load	
38	Eyebolt		For M20	
39			For M12	1-2
40	Chain string (wire)			

https://truckmanualshub.com/

[2] Auxiliary materials

Table 2 shows auxiliary materials required for the disassembly and assembly of this motor.

Table 2. Auxiliary Materials

No.	Auxiliary Material Name	Standard No. Manufacturer Name	Model or Dimensions	Applicable Part
1	Sealing tape			1-2-8
2	Adhesive	Locktite	271	8, 14
3	Gear oil	Equivalent to GL-4#90		1-1, 1-7, 1-6
4	Hydraulic oil	Equivalent to ISO VG46		1-2-1, 1-2-2, 1-2-9 1-4-1, 1-4-2, 1-21 1-4-4, 1-4-3 1-5, 1-4-2, 1-6
5	Grease	Lithium-based		1-2-2-5, 1-2-6-2, 1-2-6-4, 1-2-12, 1-2-21, 1-2-24, 1-16, 1-17, 1-231-12, 1-15, 1-21
6	White kerosene	Class 2-equivalent kerosene		
7	Liquid packing	Three Bond	1211	4, 27
8	Lapping plate		For repairing sliding surfaces	1-4-1, 1-4-2, 1-5, 1-21
9	Lapping agent	#1000	For repairing sliding surfaces	
10	Copper plate			
11	Tube brush		For washing	1-2-1, 1-4-1
12	Bamboo brush		For washing	
13	Oil pan		Oil catcher	
14	Polyethylene container		Grease container	
15	Rags			

[3] Special tools

Table 3 shows special tools required for the disassembly and assembly of this motor.

Table 3. Special Tools

No.	Name of the Tool	Standard No. Manufacturer Name	Model or Dimensions	Applicable Part
1	Pulley remover tool			1-8, 1-9
2	Bearing press-fit jig			1-8
3	Bearing press-fit jig			1-9
4	Floating seal application jig			2
5	Drill rod			3
6	Angular bearing press-fit jig			3
7	Shim thickness adjusting jig			5
8	Drill rod			1-2-2
10	Thrust plate selection jig			26
11	Oil seal press-fit jig			1-12
12	Brake piston locating jig			1-15
13	Snap ring handling jig			1-4-5

https://truckmanualshub.com/

[4] Measurement device

Table 4 shows measurement devices required to assemble this motor.

Table 4. Measurement Devices

No.	Name of the Tool	Standard No. Manufacturer Name	Model or Dimensions	Applicable Part
1	Dial gauge	JIS B7503		5, 26
2	Micrometer	JIS B7502		5, 26

https://truckmanualshub.com/

4. Disassembly of the Motor

[1] Precautions for the disassembly of the motor

Read the following precautions carefully prior to starting disassembly of the motor.

1. When starting the disassembly operation, be sure to wear safety shoes and other protective gear.
2. When disassembling the motor, use the specified tools.
3. After detaching the motor from the mother machine, place the mother machine on a level place in order to prevent the machine from going out of control, and check that any external force will not work on the rotating section. Then, remove the piping from the motor and remove the motor from the mother machine.
4. In order to prevent the intrusion of foreign matter into the internal section of the piping and the motor when detaching the motor from the mother machine, carefully remove all soil and contamination off the section around the motor, and then remove the piping connected to the motor.
5. Removing the piping connected to the motor may induce a blow out of the hydraulic oil inside the piping. To prevent that, remove the pressure from the inside of the piping, prepare an oil catcher, and then detach the piping. In order to prevent injuries caused should the motor fall when transporting it by crane, lift the motor with an eyebolt installed in the position shown in the figure below.
6. The internal space of the motor is filled with hydraulic oil. Prior to disassembling the motor, prepare an oil catcher and drain hydraulic oil from the motor.
7. In order to prevent injury during the disassembly work, prepare a stable workbench that is about waist height, and perform the disassembly on the workbench.
8. The motor is comprised of precision components. As such, any attachment of foreign matter must be avoided. Disassemble the motor in a dust-free room to prevent the components from becoming contaminated with soil or dust.
9. Each of the components of the motor is a precision part. Any denting or damaging of their surfaces must be avoided. While handling motor components in the disassembly process, be fully attentive not to dent or damage them.
10. In order to prevent damage to any component and avoid injury, do not attempt to disassemble firmly engaged sections where disassembly cannot be performed without extreme force.

https://truckmanualshub.com/

[2] Tightening torque

Table 4 shows tightening torques for respective joint sections.

Table 4. Tightening Torques

Reference Number	Part Name	Screw Dimensions	Width across Flat	Tightening Torque
1-2-2-4	Plug	M24 × 1.5	14	137±10 N•m
1-2-6-3	Socket head bolt	M12 × 1.75 × 40L	10	108±10 N•m
1-2-6-5	Plug	PF1/8	14	20.6±1.0 N•m
1-2-6-6	Orifice	M5 × 0.8 × 5L	2.5	2.45±0.49 N•m
1-2-7	Relief valve assembly	1-5/6 12UNF	27	373±20 N•m
1-2-8	Plug	NPTFR1/16	4	9.8±1.0 N•m
1-2-11	Plug	PF1/2	10	118±6 N•m
1-2-14	Plug	PF1/2	10	118±6 N•m
1-2-17	Orifice	M5 × 0.8 × 5L	2.5	2.45±0.49 N•m
1-2-18	Orifice	M5 × 0.8 × 5L	2.5	2.45±0.49 N•m
1-2-19	Orifice	M5 × 0.8 × 5L	2.5	2.45±0.49 N•m
1-2-20	Plug	PF1/4	6	36.8±2.5 N•m
1-11	Socket head bolt	M14 × 2.0 × 35L	12	205±10 N•m
8	Bolt	M20 × 2.0 × 70L	Torques: T90	539±28 N•m
14	Bolt	M20 × 2.0 × 130L	Torques: T90	539±28 N•m
24	Screw	M10 × 1.5	Torques: T50	58.8±4.9 N•m
28	Socket head bolt	M10 × 1.5 × 16L	8	73.4±3.63 N•m
29	Plugs	PF3/4	12	157±8 N•m

https://truckmanualshub.com/

[3] Disassembling procedure

Follow the procedure below to disassemble the motor, observing the precautions given in section 1.

1.) Removing the cap assembly (1-2-6)

Secure the motor in place on a stable workbench, loosen 8 socket head bolts (1-2-6-3), and remove the cap assembly (1-2-6).
Next, remove the spring seat (1-2-5), spring (1-2-4) and spring seat (1-2-3).
Next, remove the O-ring (1-2-24), spring (1-2-23) and check valve (1-2-24).

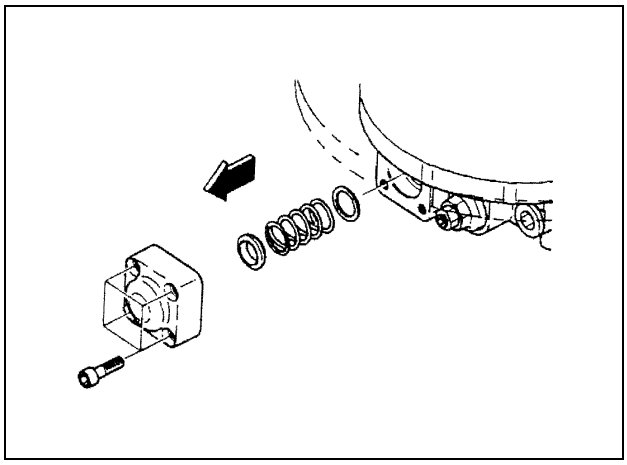

Note:
The spring (1-2-4) pushes out the cap assembly (1-2-6). Given that, the follow the instructions below.

a. When loosening socket head bolts evenly (1-2-6-3).
b. While holding down the cap assembly (1-2-6), loosen the socket head bolts (1-2-6-3).

2.) Removing the plunger assembly (1-2-2)

Lightly press the end section of the plunger assembly (1-2-2) and take part of the plunger assembly (1-2-2) out of the base plate (1-2-1). Next, while rotating the plunger assembly (1-2-2) by capturing it by hand, pull the plunger assembly (1-2-2) out of the base plate (1-2-1).

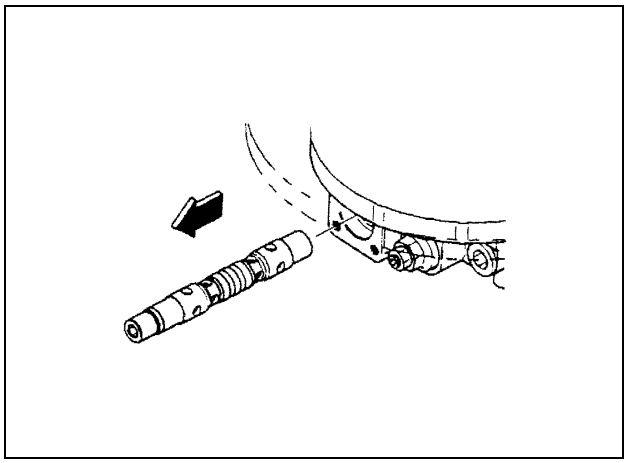

Note:
The plunger assembly (1-2-2) and the base plate (1-2-1) are engaged with a very narrow clearance. Given that, follow the instructions below.

a. When pulling out the plunger assembly (1-2-2), do not attempt to do so by imposing extra force on it if the operation does not go smoothly due to uneven force imposed on the assembly. Forcibly pulling out the assembly will damage the inside the hole of the base plate (1-2-1) and the side surface of the plunger assembly (1-2-2). If having trouble pulling out the assembly, follow the instructions below.
b. Do not disassemble the plunger assembly (1-2-2) unnecessarily. The disassembly work may cause damage to the side surface of the plunger assembly. Contact us should you need to have the assembly disassembled.

Softly tap the end surface of the plunger assembly (1-2-2) with a plastic hammer to put the plunger assembly (1-2-2) into the inside of the base plate (1-2-1). Then check that the plunger assembly (1-2-2) moves smoothly, and then pull out the plunger assembly (1-2-2) again while rotating it.

https://truckmanualshub.com/

3.) Removing relief valve assembly

Loosen the plug (1-2-7-6) and remove the relief valve assembly (1-2-7).
Then the poppet seat (1-2-7-3) will be found left inside the base plate (1-2-1).

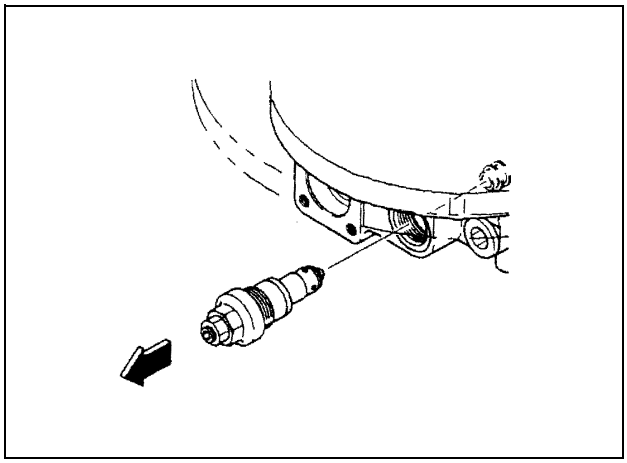

Note:
Pressure is preset for the relief valve assembly (1-2-7).
The preset pressure determines the starting and braking force for the motor.
For that reason, refrain from carrying out the following actions.

a. Loosen the nut (1-2-7-16), but do not tamper with the set screw (1-2-7-15). Tampering with this part will affect the set pressure for the relief valve, leading to failure of the design performance.
b. Do not disassemble the relief valve assembly. If disassembled, its set pressure will be affected, leading to failure of the design performance.

4.) Removing the poppet seat (1-2-7-3)

Remove the poppet seat (1-2-7-3) from the base plate (1-2-1), using the poppet seat (1-2-7-3) removal jig.

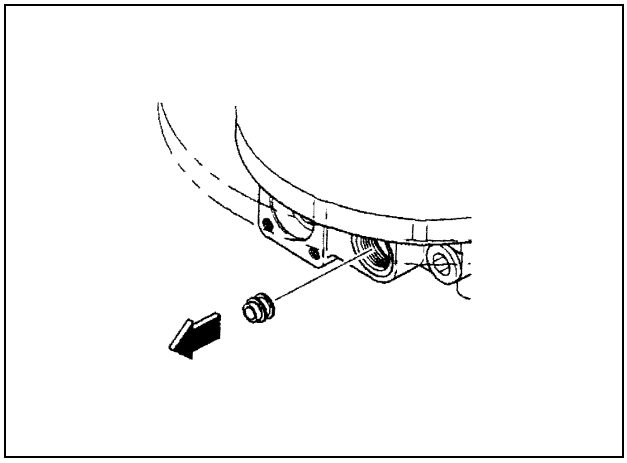

Note:
Do not undertake disassembly unnecessarily.

https://truckmanualshub.com/

5.) Removing the valve assembly (1-2-9)

Loosen the plugs (1-2-11, 1-2-12) and remove the plugs (1-2-11, 1-2-12) and spring (1-2-10).

Lightly press the end section of the valve assembly (1-2-9) and take part of the valve assembly (1-2-9) out of the base plate (1-2-1). Next, while rotating the valve assembly (1-2-9) by holding it by hand, pull it out of the base plate (1-2-1).

Note:

The valve assembly (1-2-9) and the base plate (1-2-1) are engaged with a very narrow clearance. Given that, follow the instructions below.

a. When pulling out the valve assembly (1-2-9), do not attempt to do so by imposing extra force on it if the operation does not go easily due to uneven force imposed on the assembly. Forcibly pulling out the assembly will damage the inside the hole of the base plate (1-2-1) and the side surface of the valve assembly (1-2-9). If having trouble pulling out the assembly, follow the instructions below.

b. Do not disassemble the valve assembly (1-2-9) unnecessarily. Contact us should you need to have the assembly disassembled.

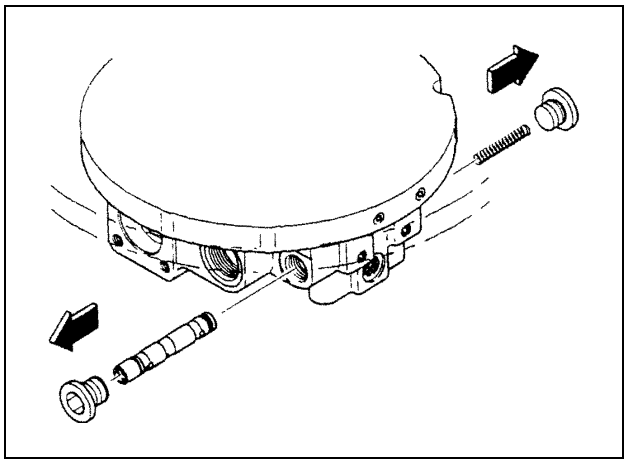

Softly tap the end surface of the valve assembly (1-2-9) with a plastic hammer to put the valve assembly(1-2-9) into the inside of the base plate (1-2-1). Then check that the valve assembly (1-2-9) moves smoothly, and then pull out the valve assembly (1-2-9) again while rotating it.

6.) Do not remove the plug (1-2-8) unnecessarily.

Caulking is applied to the orifices (1-2-17, 2-18, 2-19) to prevent them from being loosened.

Do not attempt to disassemble them.

https://truckmanualshub.com/

7.) Removing the base plate (1-2-1)

Loosen the socket head bolt (1-11) and remove the base plate (1-2-1).

Note:

When removing the base plate (1-2-1), follow the instructions below.

a. The base plate (1-2-1) is pushed up by the spring (1-18). Given that, loosen socket head bolts (1-11) evenly.

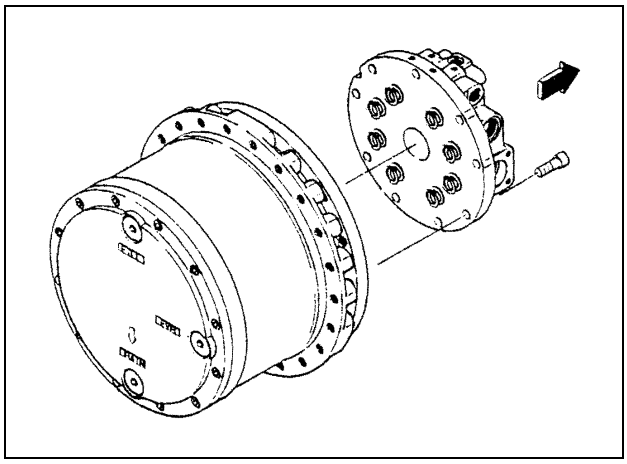

b. Between the base plate (1-2-1) and the main body, knock pin (1-19) for positioning is provided. When removing the base plate (1-2-1), remove it so that the knock pin (1-19) may be removed straight along the shaft center without being blocked. Should the pin be in a blocked position, pat the base plate (1-2-1) softly, restore the knock pin (1-19) to the normal position, and then attempt to remove it again.

c. When removing the base plate (1-2-1), the valve plate (1-21) accompanies the base plate (1-2-1). The sliding surface of the valve plate (1-21) is vulnerable to damage. Be careful not to allow the valve plate (1-21) to fall.

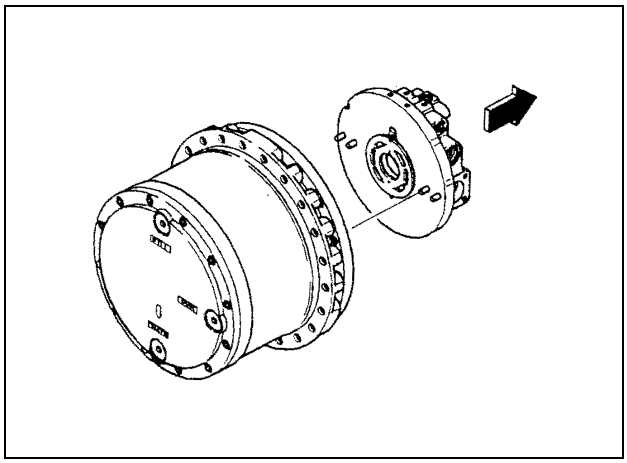

8.) Removing the valve plate (1-21)

Remove the valve plate (1-21) from the base plate (1-2-1).

Note:

When removing the valve plate (1-21), follow the instructions below.

a. The sliding surface of the valve plate (1-21) is vulnerable to damage. Since damage on the sliding surface causes the design performance to fail, ensure that it is not damaged.

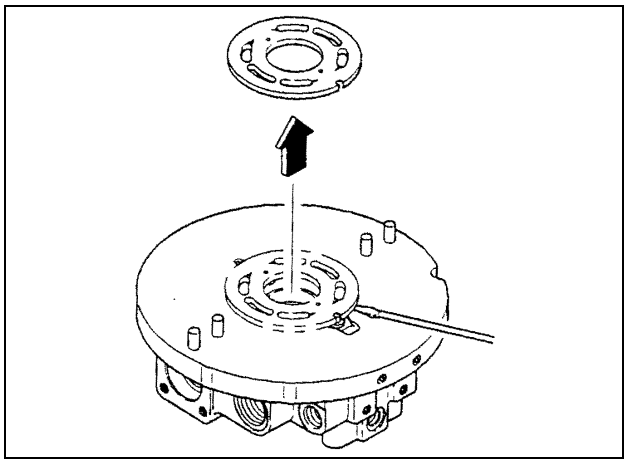

9.) Removing the O-rings, knock pin and spring

Remove the O-rings (1-22, 1-23), and knock pin (1-19). Also, remove the spring (1-18).

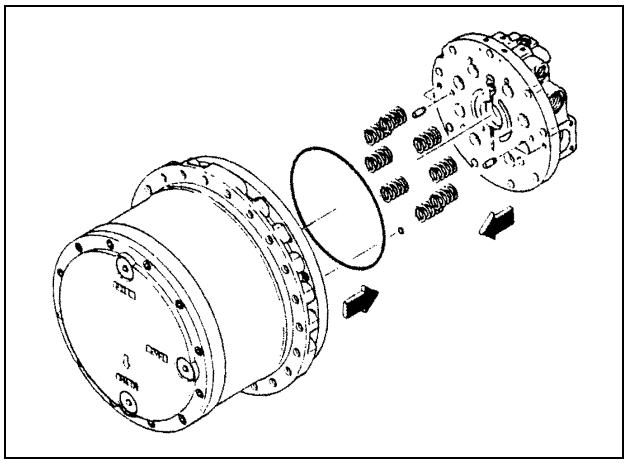

https://truckmanualshub.com/

10.) Removing the brake piston (1-15)

Attach a nozzle for compressed air to the oil channel for the parking brake located on the flange (1-1), blow in compressed air into the cylinder chamber for the parking lot to buoy up the brake piston (1-15), and remove it.

After removing the brake piston (1-15), remove the disk plate (1-13) and friction plate (1-14), and then remove the D-rings (1-16, 1-17) from the brake piston (1-15).

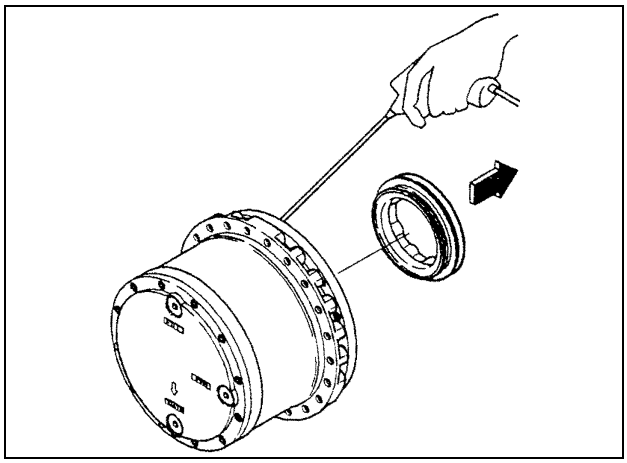

Note:

When removing the brake piston (1-15), follow the instructions below.

a. When blowing in compressed air via the oil channel for the parking brake on the flange (1-1), ensure that no compressed air leaks.

b. When blowing in compressed air via the oil channel for the parking brake on the flange (1-1), the brake piston (1-15) may come out if the compressed air pressure is excessively high, resulting in injury. To avoid this, set the compressed air pressure at 3 kgf/cm^2 or less and proceed with the work while holding down the brake piston (1-15) so that the brake piston (1-15) does not come out.

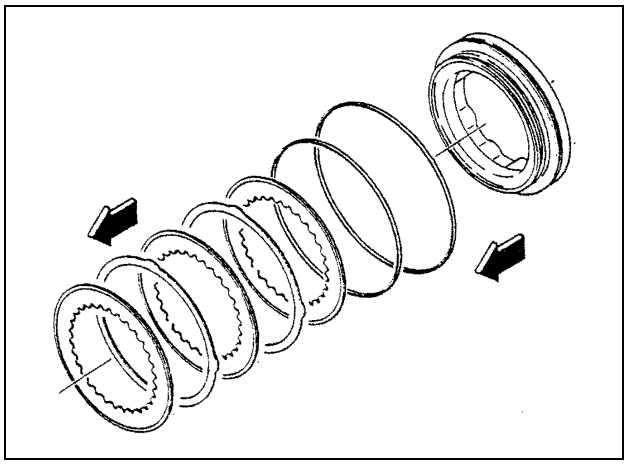

11.) Removing the cylinder block assembly (1-4)

Take the cylinder block assembly (1-4) out of the flange (1-1).

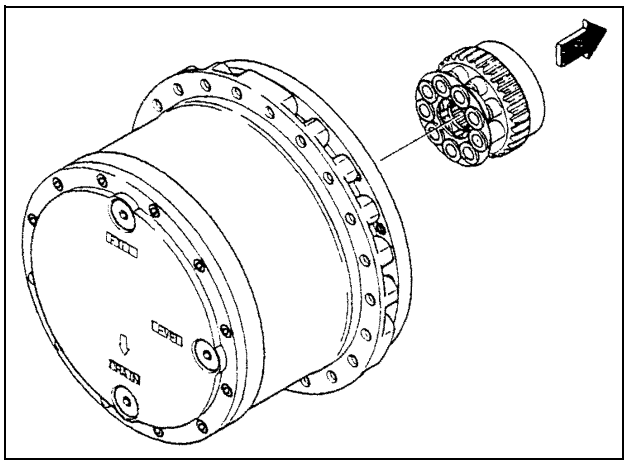

Note:

When taking out the cylinder block assembly (1-4), follow the instructions below.

a. Hold the cylinder block assembly (1-4) in both hands and slowly take it out while rotating it from side to side.

b. Take care not to damage the sliding surface of the cylinder block (1-4-1) against the valve plate (1-21). Damaging it would fail the design performance.

c. Take care not to damage the sliding surface of the shoe of the piston assembly (1-4-2). Damaging it would fail the design performance.

https://truckmanualshub.com/

12.) Disassembling the cylinder block assembly (1-4)

12-1.) In order to ensure correct re-assembling in the same relative positions, apply matching marks on the piston assembly (1-4-2) and cylinder block (1-4-1) in imperishable ink, and then remove the piston assembly (1-4-2) and retainer plate (1-4-3) from the cylinder block (1-4-1).

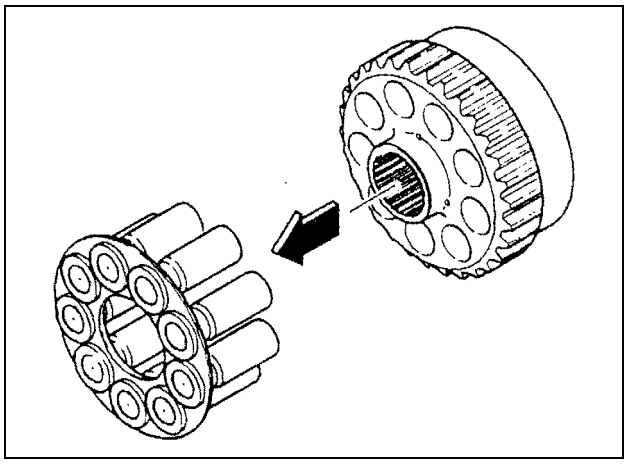

12-2.) In order to ensure correct re-assembling in the same relative positions, apply matching marks on the piston assembly (1-4-2) and retainer plate (1-4-3) in imperishable ink, and then remove the piston assembly (1-4-2) from the retainer plate (1-4-3).

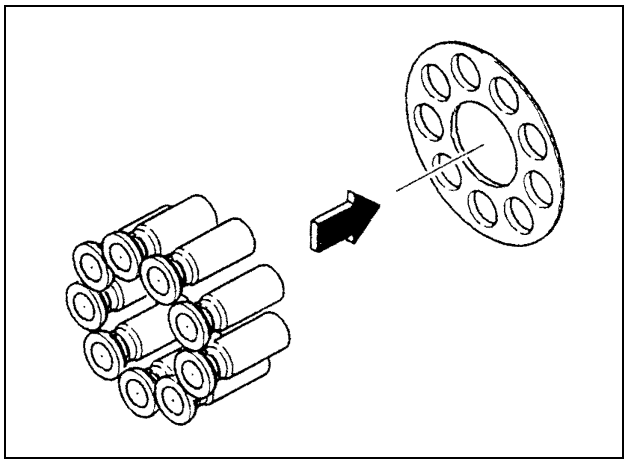

12-3.) Remove the retainer holder (1-4-4) from the cylinder block (1-4-1), and remove the pin (1-4-9) from the cylinder block (1-4-1).

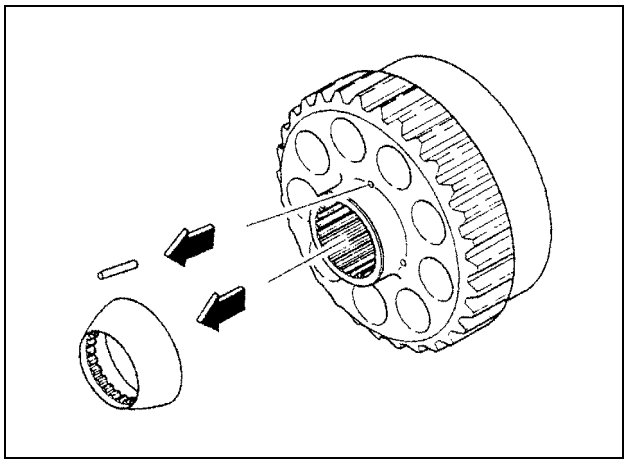

https://truckmanualshub.com/

12-4.) Secure the cylinder block (1-4-1) in place on the manual press deck with the sliding surface up. Press the collar (1-4-8) with the snap ring (1-4-5) removal jig to make the spring (1-4-7) deflect and remove the snap ring (1-4-5) using a snap ring pliers.

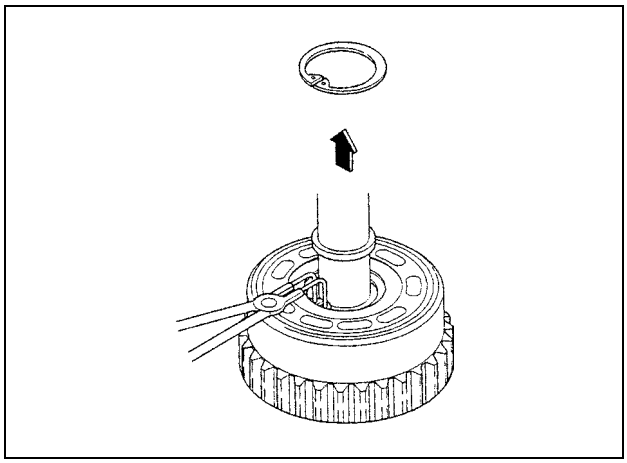

Note:
When removing the snap ring (1-4-5), follow the instructions below in order to avoid injuries.

a. When removing the snap ring (1-4-5) with snap ring pliers, the snap ring may drop out of the snap ring pliers due to its hardness, leading to injury. When removing the snap ring, always use the disassembling jig and check that the claws of the snap ring pliers are engaged in the snap ring hole before proceeding with the work.

12-5.) Remove the collar (1-4-8), spring (1-4-7) and collar (1-4-6) from the cylinder block (1-4-1).

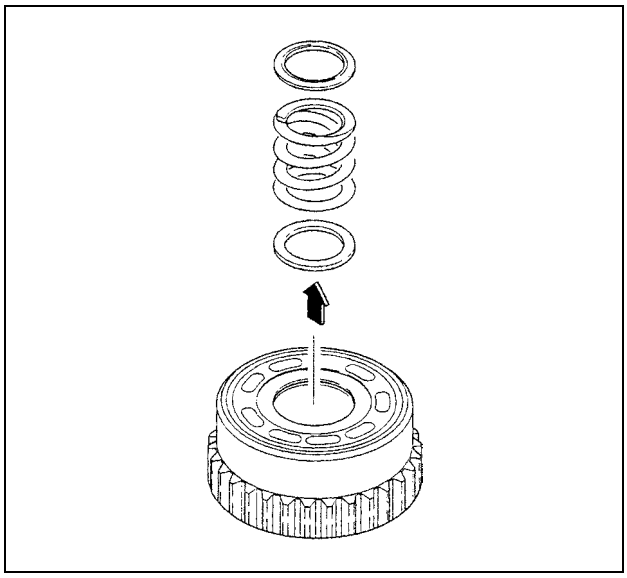

13.) Removing the swash plate (1-5)

Remove the swash plate (1-5) from the flange (1-1).

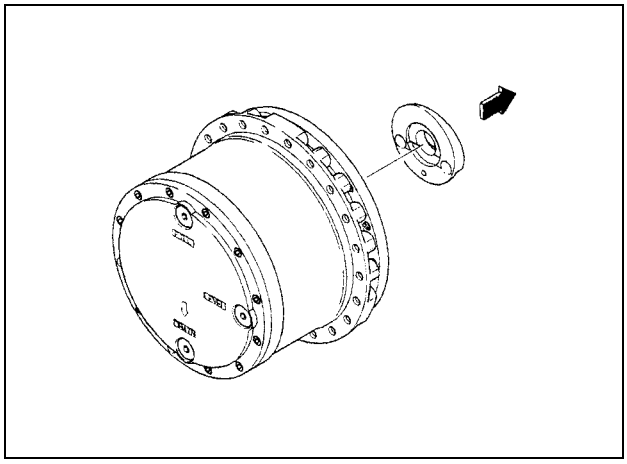

Note:
When removing the swash plate (1-5), follow the instructions below.

a. Take care not to damage the sliding surface of the swash plate (1-5). Damaging it would fail the design performance.

b. The swash plate (1-5) may come out with the piston assembly (1-7) and steel ball (1-6). In that case, take precautions to prevent the steel ball (1-6) from falling.

https://truckmanualshub.com/

14.) Removing the piston sssembly (1-7) and steel ball (1-6)

Remove the piston assembly (1-7) from the flange (1-1) and remove the spring (1-20).
Remove the steel ball (1-6) from the flange (1-1).

Note:

As the steel ball (1-6) is not easy to detach, follow the steps below to remove it.

a. As the steel ball (1-6) is mounted on the flange (1-1), degrease the unit with white kerosene, thinner or the like.
b. Remove the steel ball (1-6) from the flange (1-1), using magnet.

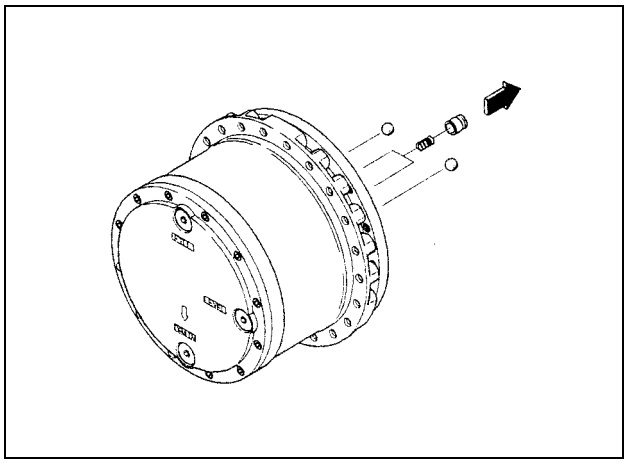

15.) Removing the shaft (1-3)

Remove the shaft (1-3) and ball bearing (1-8) from the flange (1-1).

Note:

When removing the shaft (1-3), follow the instructions below.

a. Take care not to damage the spline section of the shaft (1-3).
b. Take care not to damage the oil seal sliding section (1-12) of the shaft (1-3). Damaging will cause oil leakage.

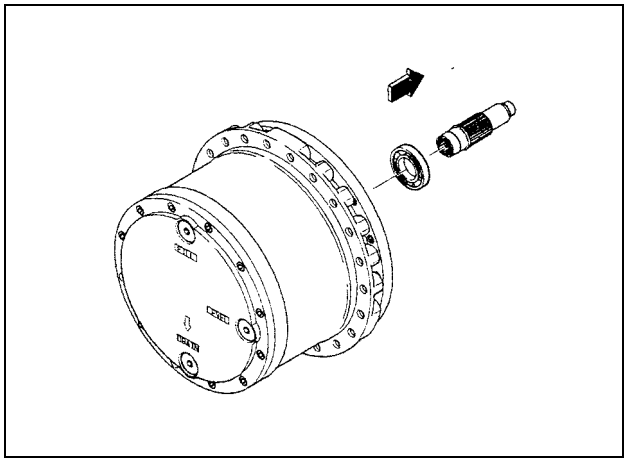

16.) Discharge lubricating oil from the reduction gear

Next, before disassembling the reduction gear section, install eyebolts at two locations opposed to each other by using the shave of the flange (1-1) and then lift the reduction gear with a crane. Remove 2 plugs (29) and discharge lubricating oil from the reduction gear.

Note:

a. Prepare an oil catcher prior to the operation.
b. When lifting with a crane, avoid lifting too high. Keep it as low as possible (around the knee level) during the operation.

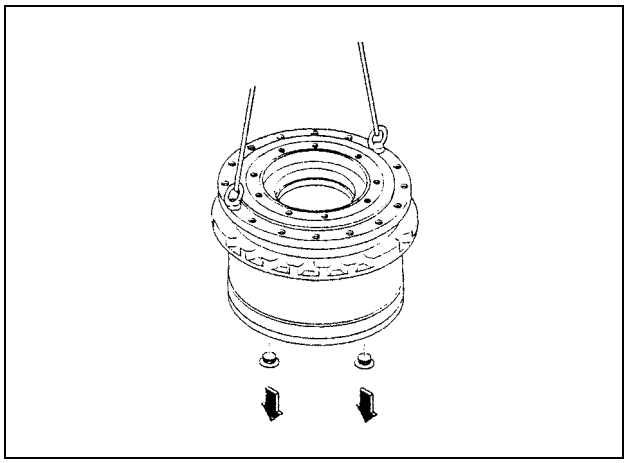

https://truckmanualshub.com/

17.) Removing the cover (27)

Loosen the socket head bolt (28) and remove it. After that, remove the cover (27).

Note:

When removing the cover (27), follow the steps below.

a. Liquid packing is applied between the cover (27) and housing (4). That is why the cover is not readily removed. Loosen the socket head bolt (28), remove it, and then tap the upper and side surfaces of the cover (27) with a plastic hammer.

b. Insert a flathead screwdriver between the cover (27) and housing (4) to remove the cover (27).

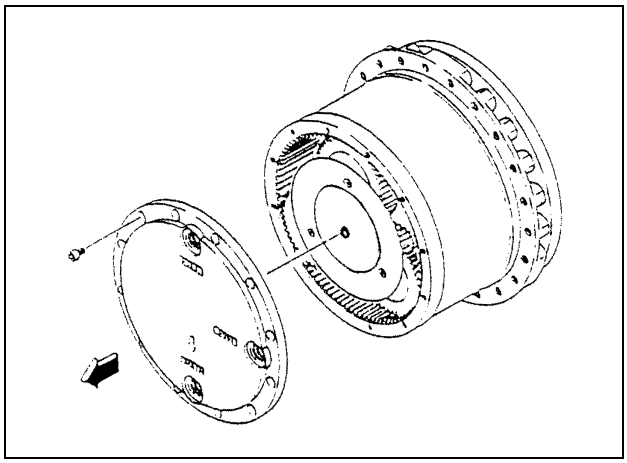

18.) Removing the thrust plate (26)

Remove the thrust plate (26) from the upper side of the thrust plate (23).

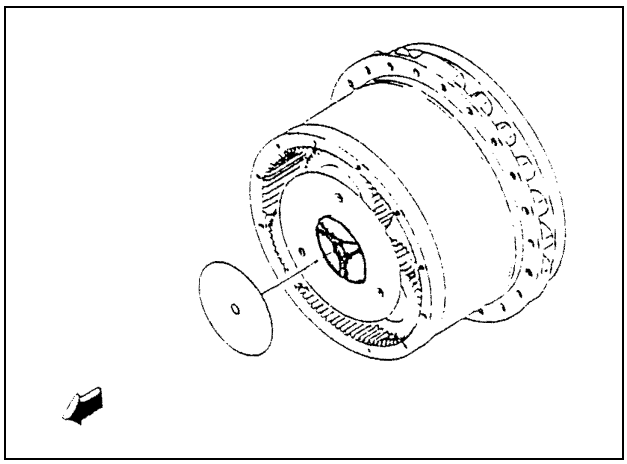

19.) Removing the drive gear (25)

Remove the drive gear (25).

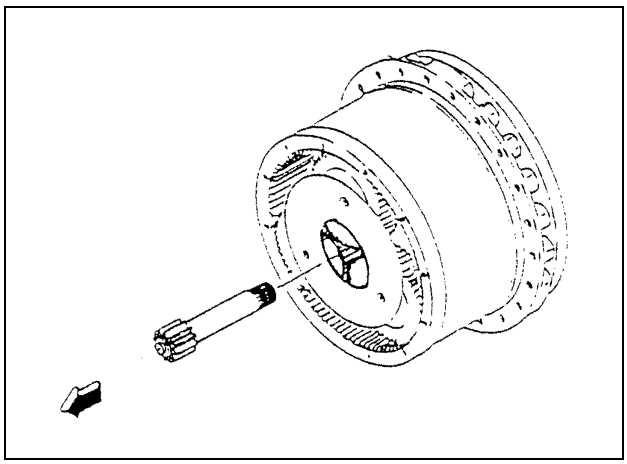

https://truckmanualshub.com/

20.) Removing 1st stage holder assembly

Remove the 1st stage holder assembly composed of the holder (17), planetary gear (21), needle bearing (20), inner lace (19), thrust plate (18), thrust plate (22), thrust plate (23) and screw (24).

Note:

To remove the 1st stage holder assembly, follow the instructions below.

Take care not to have the fingers caught while removing the assembly.

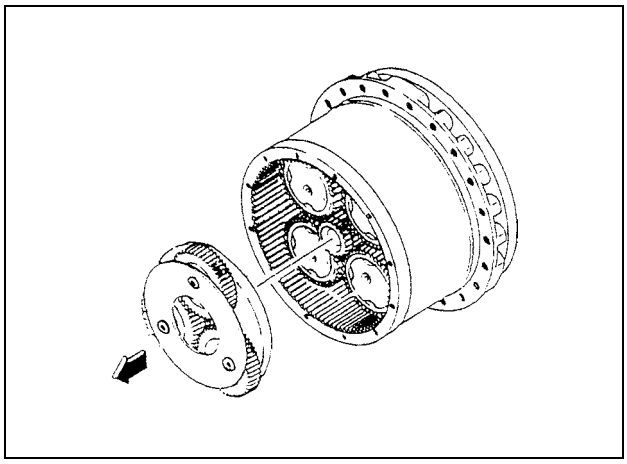

21.) Disassembling 1st stage holder assembly

Fix the 1st stage holder assembly in place with a vise, the heating screw (24) using a dryer, and then loosen the screw.

From holder B (17), remove the screw (24), thrust plate (23), thrust plate (22), planetary gear B (21), needle bearing (20), inner lace (19), thrust plate (18), in that order.

Note:

When loosening the screw (24), follow the instructions below.

A screw lock agent is applied on the screw (24). For that reason, it is not loosened readily.

An attempt to loosen it may cause damage to the screw, disabling reuse.

To loosen it, first heat up the screw adequately using a dryer.

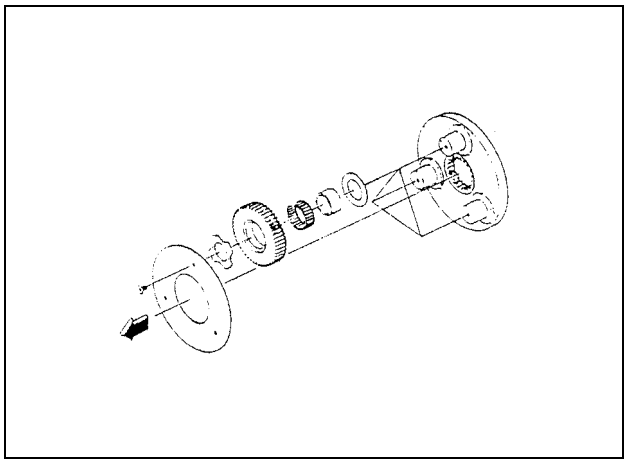

22.) Removing the sun gear B (15)

Remove the sun gear B (15).

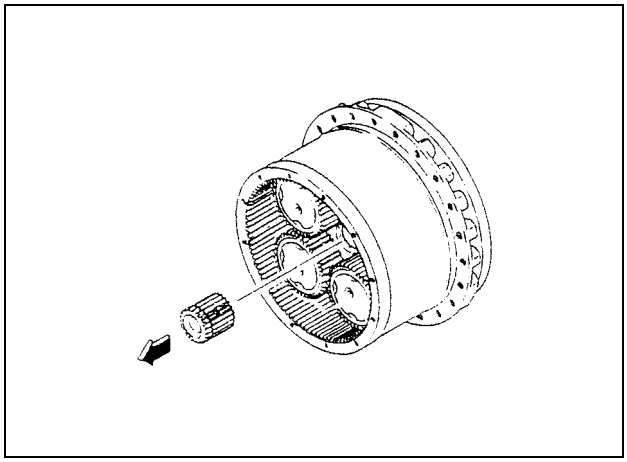

https://truckmanualshub.com/

23.) Removing the planetary gear C (12)

Fix the flange (1-1) in place, loosen the bolt (14) and then remove it. Remove the thrust plate (13), planetary gear C (12), needle bearing (11), inner lace (10) and thrust plate (9), in that order.

Note:

When loosening the bolt (14), follow the instructions below.

a. An anti-loosening screw lock agent is applied on the bolt (14). For that reason, ensure that the flange (1-1) is fixed in place.

b. When loosening the bolt (14), use a tool with an adequate arm length using an iron pipe, etc. Forcible operation may result in damage to the back or other injury to the operator.

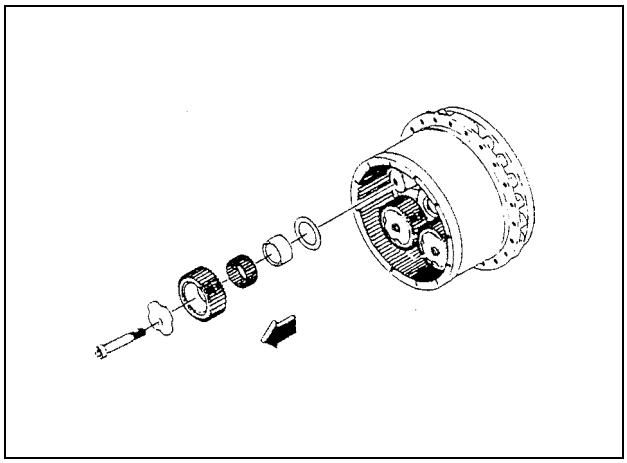

24.) Disassembling the holder C (6)

Fix the flange (1-1) in place, loosen the bolt (8) and then remove it.

The holder C (6) is fixed in place with the pin (31) on the flange (1-1). Remove the holder C (6) using a press by installing a removal jig from the motor side.

Note:

When loosening the bolt (14), follow the instructions below.

a. An anti-loosening screw lock agent is applied on the bolt (14). For that reason, ensure that the flange (1-1) is fixed in place.

b. When loosening the bolt (14), use a tool with an adequate arm length using an iron pipe, etc. Forcible operation may result in damage to the back or other injury to the operator.

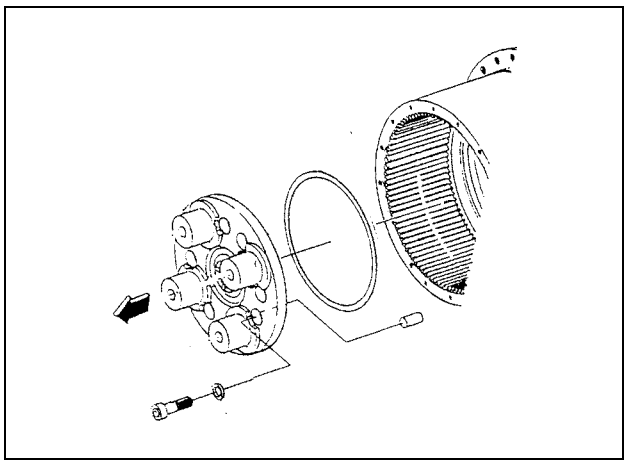

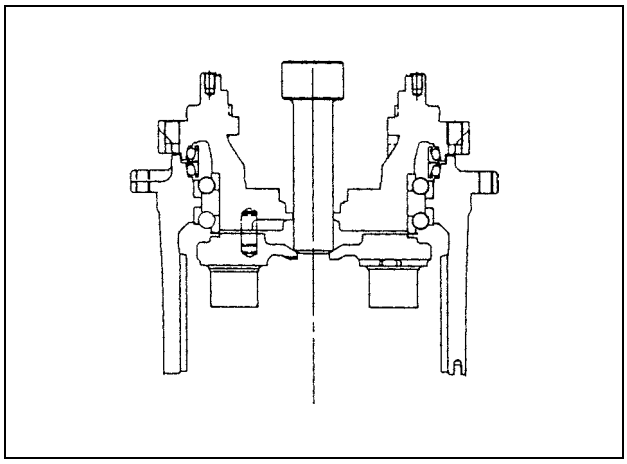

https://truckmanualshub.com/

25.) Separating the flange (1-1) and housing (4)

Mount a jig on the edge of the peripheral flange of the housing (4) and press the flange (1-1) with a press to separate the flange (1-1) from the housing (4).

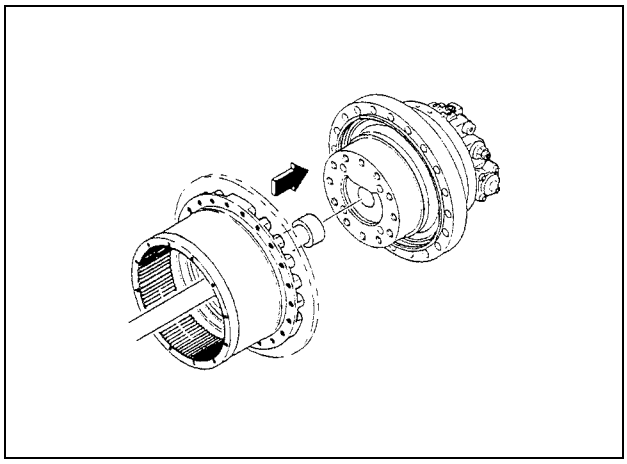

26.) Removing the floating seal (2)

Push up the periphery of floating seal (2) with a flathead screwdriver and remove the floating seal (2).

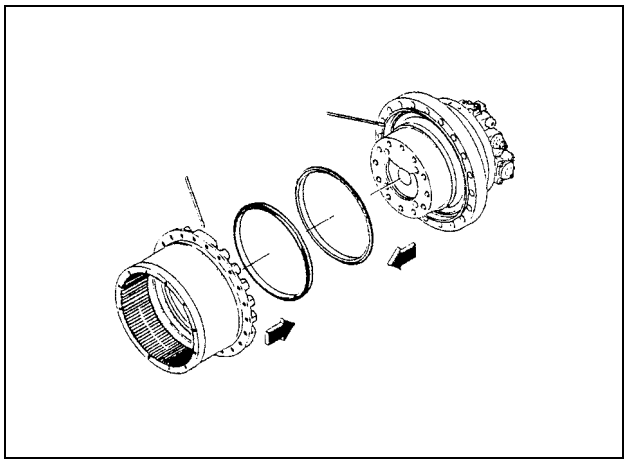

27.) Safekeeping of parts

The above completes the disassembly procedure. Wash and clean the disassembled parts and put them in plastic bags, etc. after applying generous amounts of anti-rust oil, and then keep them in a cool, dark and dry place.

High humidity and temperature may cause rust even anti-rust oil has been applied.

Also, store the parts as protected against dust attachment.

https://truckmanualshub.com/

5. Maintenance Standards

[1] Maintenance standards for motor components

Table 5 lists maintenance standards for motor components. Follow maintenance standards in Table 5 to check respective components. If the specified tolerance has been exceeded or almost exceeded, replace or repair the part according to the repair and solution procedure.

Table 5. Maintenance Standards for Motor Components

Applicable Part	Sections subject to Inspection and Measurement	Tolerance Limit Value	Repair and Solution Procedure
1-4-2 Piston assembly	1. Shoe sliding surface	Relative roughness 0.8 a or having a surface with a chap or scratch 0.02 mm deep or deeper	Lap the shoe sliding surface (#1000). If the scratch cannot be remedied, replace cylinder block assembly 4.
	2. External diameter of the piston	Relative roughness 1.2 a or having a surface with a chap or scratch 0.02 mm deep or deeper	Replace cylinder block assembly 4.
	3. External diameter of the piston and bore of the cylinder block (4-1)	Gap 0.060	
	4. Play of the shoe ball	Play amount 0.4	
1-4-1 Cylinder block	1. Sliding surface against the valve plate	Relative roughness 0.8 a or having a surface with a chap or scratch 0.02 mm deep or deeper	Lap the sliding surface (#1000). If the scratch cannot be remedied, replace cylinder block assembly (4).
	2. Bore	Relative roughness 1.6 a or having a surface with a chap or scratch 0.02 mm deep or deeper	Replace the cylinder block assembly (4).
	3. Bore dimension and external diameter of the piston assembly (4-2)	Gap 0.060	
1-4-1 Cylinder block	3. Spline in the shaft engagement section.	In-between distance 38.749 Measurement pin diameter ϕ3.333 (V1 = 2.80) or the pin is broken.	Replace cylinder block assembly (4).
1-21 Valve plate	1. Sliding surface	Relative roughness 0.8 a The sliding surface has a scratch of 0.02 mm deep or deeper. Or the surface has a mark from baking. Abnormal level of wear is detected on the sliding surface.	Lap the sliding surface (#1000). If the scratch cannot be remedied, replace valve plate (22).
1-4-3 Retainer plate 1-4-4 Retainer holder	1. Sliding surface	Relative roughness 0.8 a The sliding surface has a scratch 0.02 mm deep or deeper. Or the surface has a mark from baking.	Replace the retainer holder.

https://truckmanualshub.com/

Applicable Part	Sections subject to Inspection and Measurement	Tolerance Limit Value	Repair and Solution Procedure
1-5 Swash Place	1. Sliding surface	Relative roughness 0.8 a Abnormal level of wear or a scratch 0.02 mm deep or deeper is detected on the sliding surface.	Lap the sliding surface (#1000). If the scratch cannot be remedied, replace valve plate (22).
	2. Spherical-surface bore for installing the steel ball	Relative roughness 1.6 a The spherical surface has a scratch 0.02 mm deep or deeper, or the surface is chapped.	Replace the swash plate.
	3. Spherical-surface bore for installing the steel ball	Ball depth 14.5	
1-3 shaft	1. External diameter of the oil seal sliding section	Relative roughness 1.6 a In addition to the track of the oil seal sliding track, the ball surface has a scratch 0.02 mm deep or deeper or chapped.	Replace the shaft.
1-3 shaft	2. Spline in the cylinder block engagement section.	Over pin diameter 47.380 Measurement pin diameter ϕ3.00 or the pin is broken.	Replace the shaft.
	3. Spline in the drive gear engagement section.	In-between distance 30.498 Measurement pin diameter ϕ3.33 or the pin is broken.	
1-15 Brake piston	1. External dimensions	Height 38.2	Replace the brake piston.
	2. Sliding surface	Relative roughness 2.5a	
	3. External dimensions	The surface has a scratch 0.02 mm deep or deeper, or the surface is chapped.	
1-13 Disk plate	1. External dimensions	Thickness 3.2	Replace the disk plate.
	2. External dimensions	The sliding surface has a deep flaw or peeling off of the friction material.	
1-8 Ball bearing 1-9 Ball bearing	1. Rolling surface	Flaking or pressing is producing pressure marking.	Replace the ball bearing
	2. Operation	Abnormality is detected with the rotation (abnormal noise, uneven rotation)	
1-7 piston assembly	1. Shoe sliding surface	Relative roughness 1.6 or having a surface with a chap or scratch 0.02 mm deep or deeper	Lap the shoe sliding surface (#1000). If the scratch cannot be remedied, using the flange holder kit.
	2. Piston diameter	Relative roughness 1.2a or having a surface with a chap or scratch 0.02 mm deep or deeper	Perform replacement using the flange holder kit.
	3. External diameter of the piston and bore of the flange holder (1-1)	Gap 0.040	
	4. Play of the shoe ball	Play amount 1.0	

https://truckmanualshub.com/

5-2 Lower Mechanism: Travel Drive Unit

Applicable Part	Sections subject to Inspection and Measurement	Tolerance Limit Value	Repair and Solution Procedure
1-2-2 Plunger assembly	1. External diameter of the plunger	Relative roughness 0.8 a The surface has a scratch 0.02 mm deep or deeper, or the surface is chapped.	Replace with a base plate kit
	2. External diameters of the plunger and base plate	Gap 0.060	
1-2-1 Base plate	1. Hole for mounting the plunger assembly (2-2)	Relative roughness 0.8 a The surface has a scratch 0.02 mm deep or deeper, or the surface is chapped.	Replace with a base plate kit
	2. Internal diameter of the base plate and external diameter of the plunger	Gap 0.060	
	3. Hole for mounting the spool assembly (2-11)	Relative roughness 0.8 a The surface has a scratch 0.02 mm deep or deeper, or the surface is chapped.	
	4. Internal diameter of the base plate and external diameter of the spool	Gap 0.060	
	5. Free piston sliding section and the seat section of the relief valve assembly	The surface has a scratch 0.02 mm deep or deeper, or the surface is chapped.	
1-2-9 Spool assembly	1. External spool diameter	Relative roughness 0.8 a The surface has a scratch 0.02 mm deep or deeper, or the surface is chapped.	Replace with a base plate kit
	2. External diameter of the spool and internal diameter of the base plate	Gap 0.060	
1-2-7-9 Free piston	1. Sliding and seat sections of the base plate	The surface has a scratch 0.02 mm deep or deeper, or the surface is chapped.	Replace with the relief valve assembly.
1-2-7-1 Housing	1. Sliding section against the free piston (external diameter)	The surface has a scratch 0.02 mm deep or deeper, or the surface is chapped.	
1-4-7 spring	1. External dimensions	Free length: 61.0	
	2. External dimensions	Deformation is observed, and the coil surface is damaged.	
1-18 spring	1. External dimensions	Free length: 39.0	
	2. External dimensions	Deformation is observed, and the coil surface is damaged.	
1-20 spring	1. External dimensions	Free length: 41.5	

https://truckmanualshub.com/

Applicable Part	Sections subject to Inspection and Measurement	Tolerance Limit Value	Repair and Solution Procedure
	2. External dimensions	Deformation is observed, and the coil surface is damaged.	
1-2-4 spring	1. External dimensions	Free length: 48.5	
	2. Appearance	Deformation is observed, and the coil surface is damaged.	
1-2-10 spring	1. External dimensions	Free length: 28.3	
	2. Appearance	Deformation is observed, and the coil surface is damaged.	
Each O-ring and oil seal		When disassembling	Replace each O-ring and the oil seal.

https://truckmanualshub.com/

[2] Maintenance standards for reduction gear

Table 6 lists maintenance standards for reduction gear components. Check the respective parts by following the maintenance standards in Table 6. If any tolerance is exceeded, or almost exceeded, replace or repair the part concerned according to the repair and solution procedure.

Table 6. Maintenance Standards for Reduction Gear Components

Applicable Part	Sections subject to Inspection and Measurement	Tolerance Limit Value	Repair and Solution Procedure
21 Planetary gear	Tooth thickness	6-piece displacement 66.649	Replace the planetary gear.
	Tooth face	Pitching or breakage is detected on at least 10% of the tooth face.	
	Internal diameter	Flaking has been observed on thrust face at the internal diameter.	Replace the planetary gear, needle bearing and inner lace.
20 Needle Bearing	Roller rolling surface	Flaking has been observed on the surface.	
19 Inner lace	Side surface	Flaking has been observed on the surface.	
25 Drive gear	Tooth thickness	3-piece displacement 29.908	Replace the drive gear
	Tooth face	Pitching or breakage is detected on at least 10% of the tooth face.	
	Spline section	Over pin diameter 38.989 Measurement pin diameter ϕ3.00 or the pin is broken.	Replace the drive gear and at the same time check the shaft.
17 Holder	Inner tooth thickness	In-between distance 66.742 Measurement pin diameter ϕ7.00 or the pin is broken.	Replace the holder.
15 Sun gear	Tooth thickness	4-piece displacement 41.371	Replace the sun gear
	Tooth face	Pitching or breakage is detected on at least 10% of the tooth face.	

https://truckmanualshub.com/

Applicable Part	Sections subject to Inspection and Measurement	Tolerance Limit Value	Repair and Solution Procedure
12 Planetary gear	Tooth thickness	6-piece displacement 65.662	Replace the planetary gear.
	Tooth face	Pitching or breakage is detected on at least 10% of the tooth face.	
	Internal diameter	Flaking has been observed on thrust face at the internal diameter.	Replace the planetary gear, needle bearing and inner lace.
11 Needle Bearing	Roller rolling surface	Flaking has been observed on the surface.	
10 Inner lace	Side surface	Flaking has been observed on the surface.	
4 Housing	Tooth thickness	In-between distance 330.449 Measurement pin diameter ϕ7.000	Replace the housing.
	Tooth face	Pitching or breakage is detected on at least 10% of the tooth face.	
5 Shim		When disassembling	Replace the shim.
1-1 flange	2nd-speed piston bore and the external diameter of the piston assembly	Gap 0.040	Perform replacement using the flange kit.
	2nd-speed piston bore	Relative roughness 1.2 a or having a surface with a chap or scratch 0.02 mm deep or deeper	
26 Thrust Plate	Thickness	Plate thickness: 3.3, plate thickness: 2.5 Plate thickness: 2.9, plate thickness: 2.0 Plate thickness 2.7 or the sliding surface is severely damaged.	Replace the thrust plate.
3 Angular Bearing	Ball rolling surface	Flaking is observed on the surface.	Replace the angular bearing.
	Operation	Running causes abnormal noises and awkward rotation.	
2 Floating seal	Sliding surface	Serious damage has done, including deep scars that may cause oil leakage.	Replace the floating seal. Besides the above, perform replacement in disassembling situations; during the disassembly period, oil leakage may occur during re-assembling process because the landing tracks do not match.
	O-ring	Cracks are observed on the surface.	
Each O-ring		When disassembling,	replace each O-ring.

https://truckmanualshub.com/

6. Assembly of the Motor

[1] Precautions for the assembly of the motor

Read the following precautions carefully prior to start assembling the motor.

1. When starting the assembly operation, be sure to wear safety shoes and other protective gear.
2. When assembling the motor, use the specified tools.
3. In order to prevent injuries during the disassembly work, prepare a stable workbench that is about waist height, and perform the disassembly on the workbench.
4. The motor is comprised of precision components. As such, any attachment of foreign matter must be avoided. Assemble the motor in a dust-free room to prevent the components from becoming contaminated with soil or dust.
5. The motor is comprised of precision components. Any denting or damaging of its surface must be avoided. While handling motor components in the assembly process, be fully attentive not to dent or damage them.
6. Be sure to repair all damage detected in the disassembly process. Prepare all replacement parts needed beforehand, and then start assembling.
7. Remove metal chips and foreign matter from all parts and check that all parts are free from burrs and indentations before starting the assembling procedure. When detecting burrs or indentations, provide remedies by using a whetstone.
8. In the assembling procedure, apply clean hydraulic oil on respective sliding sections and rolling sections prior to the assembly work.
9. Fully degrease sections where a screw lock agent and liquid packing are applied and remove water prior to the assembly work.
10. Replace O-rings, backup rings and other sealing parts with new ones.
11. In the assembling procedure, take care not to allow O-rings and backup rings to be damaged. When assembling O-rings and backup rings, apply a small amount of grease before assembling.
12. When assembling, it is helpful to use vaseline, grease, etc., to prevent fall of parts involved.
13. Tighten bolts up to the torque specifications shown in Table 4 in Chapter 5, section 2 in the respective joins. Control tightening torque using a torque wrench.
14. After completing the assembly, stop all ports in order to block dust intrusion into the inside of the motor.

https://truckmanualshub.com/

[2] Assembling procedure

Follow the procedure below to assemble the motor, observing the precautions given in section 1.

1.) Assembly of reduction gear section

1.) Assembling the floating seal (2) onto the flange (1-1)

Check the following points for the floating seal (2), and then assemble the floating seal (2) onto the flange (1-1), using a floating seal assembly jig.

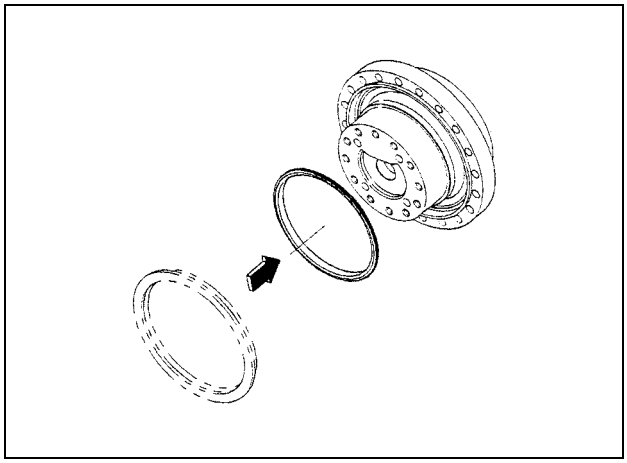

Confirmation:

a. Check that the mounting surface of the floating seal (2) on the flange (1-1) is free from soil or dust.
b. Fully degrease the mounting surface of the floating seal (2) on the flange (1-1).
c. Check that the surface of the O-ring of the floating seal (2) is free from soil or dust.
d. Fully degrease the surface of the O-ring of the floating seal (2).

2.) Assembly of the angular bearing (3) onto the housing (4)

Press fit the angular bearing (3) onto the housing (4), using a press-fit jig and a press.

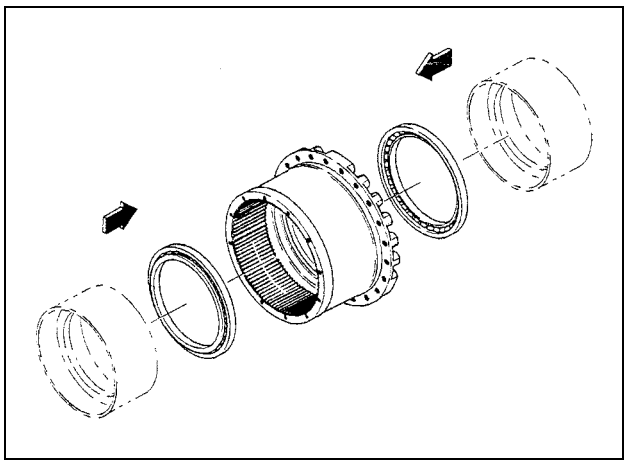

3.) Assembly of the angular bearing (2) onto the housing (4)

Check the following points for the floating seal (2), and then assemble the floating seal (2) onto the housing (4), using a floating seal assembly jig.

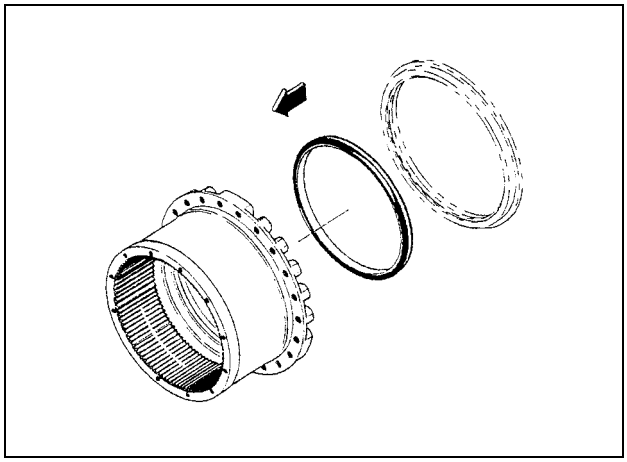

Confirmation:

a. Check that the mounting surface of the floating seal (2) on the housing (4) is free from soil or dust.
b. Fully degrease the mounting surface of the floating seal (2) on the housing (4).
c. Check that the surface of the O-ring of the floating seal (2) is free from soil or dust.
d. Fully degrease the surface of the O-ring of the floating seal (2).

https://truckmanualshub.com/

4.) Assembling the housing (4) onto the the flange (1-1)

Check the following points. Then assemble the housing (4) onto the flange (1-1) so that the floating seal (2) on the flange (1-1) falls on the floating seal (2) on the housing (4).

Confirmation:

a. Check that the sliding surface of the seal ring of the floating seal (2) is free from soil or dust.
b. Apply lubricating oil for the reduction gear or hydraulic oil all around the sliding surface of the seal ring of the floating seal (1-2).
c. When assembling the flange holder (1-1) on the housing (1-6), check that the shaft centers are aligned, and then proceed with the assembly.

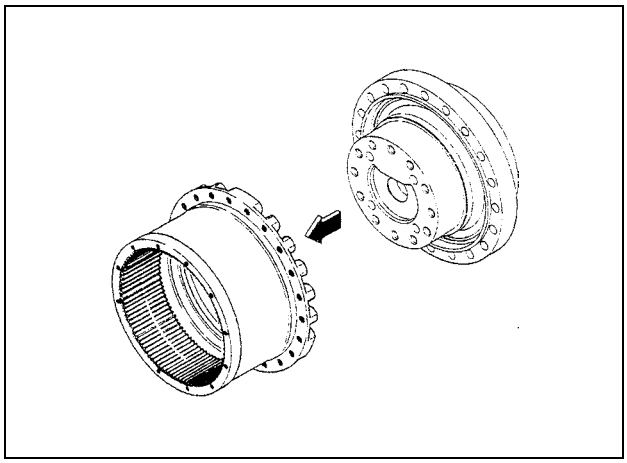

5.) Selecting the thickness of the shim (5)

According to the following procedure, select the shim thickness for pre-pressure adjustment.

5-1.) Using a shim thickness adjusting jig, apply load of 3000 kgf on the end surface of the inner race of the angular bearing (3).

5-2.) In this step, measure step dimension H between the inner race surface in the angular bearing (3) and the end surface of the flange (1-1).

5-3.) Measure step dimension “h” for the holder (6).

5-4.) Select the shim (5) and form a combination so that the shim thickness is appropriate for (H - h).

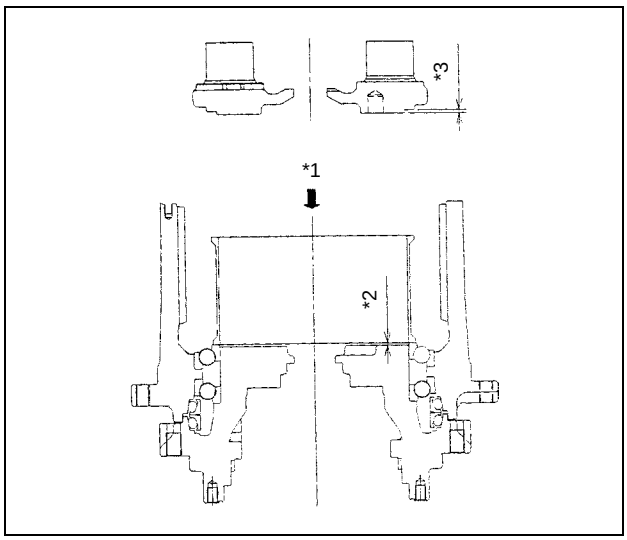

*1 Press load 300 kgf
*2 Dimension H
*3 Dimension h

Note:

a. Do not use the shim (5) that has been used once already.
b. Perform this procedure securely. Failure of pre-pressure adjustment leads to breakage of the reduction gear during operation.
c. Clean the surface subject to measurement and start measurement.

https://truckmanualshub.com/

6.) Assembling the holder (6)

Fix the flange (1-1) in place, and erect pins (31) (four locations) on the flange (1-1).

Using grease, bring the shim selected under step 5.) to adhere to the holder (6), adjust so that pin hole rests on it with pin holes aligned, and then press fit the shim onto the holder.

Mount the washer (7) onto the holder (8), and tighten the bolt (8) with locktite applied around its neck at the specified torque.)

Note:

a. Check that the pin (31) is not down.
b. The washer (7) is provided with a spike for resisting loosening. Install the washer with the spike on the washer side.
c. Wash the thread section of the bolt (8) degrease it and apply locktite on the bolt.
d. Clean the bore for the screw on the flange (1-1) and fully degrease it.

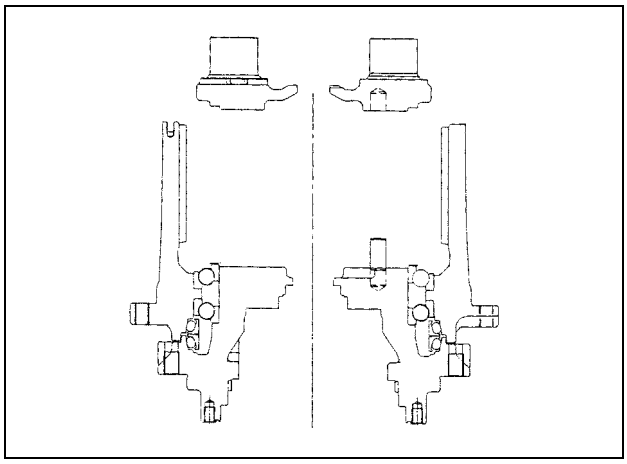

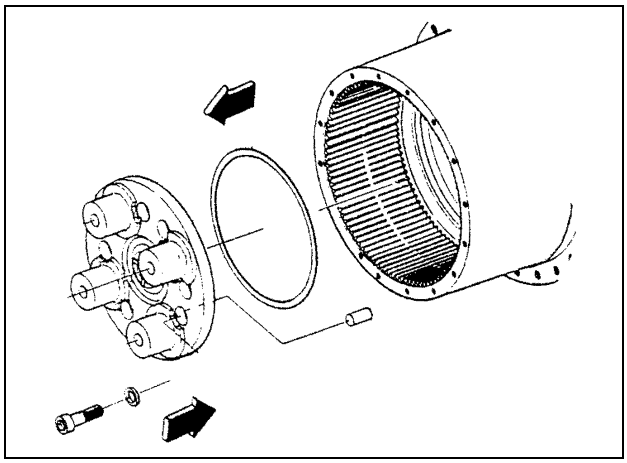

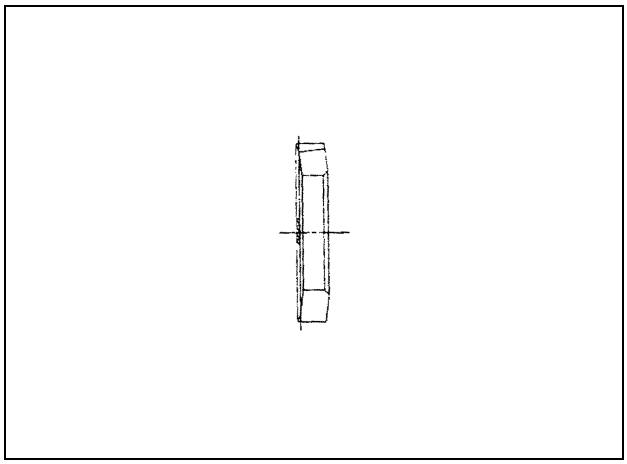

* Pay attention to the assembling direction for washer 7.
Assemble toward the direction shown in the figure on the right.

https://truckmanualshub.com/

7.) Assembling the planetary gear (12)

Assemble the thrust plate (9) onto the planetary gear (12).

Next, assemble the needle bearing (11) onto the planetary gear (12).

Lastly, after assembling the inner race (10), engage the bore section of the inner race (10) with the trunnion sections (at four locations) on the flange (1-1), and then assemble the planetary gear (12).

Note:

a. When assembling the thrust plate (9) onto the planetary gear (12), assemble so that the blanking mark on the thrust plate (9) left by the press comes on the flange (1-1) side.

b. In the last step for assembling the planetary gear (12) onto the flange (1-1), assemble so that the inner teeth of the housing (4) are engaged with those of the planetary gear (12).

c. Take care for the assembling direction for the planetary gear (12).

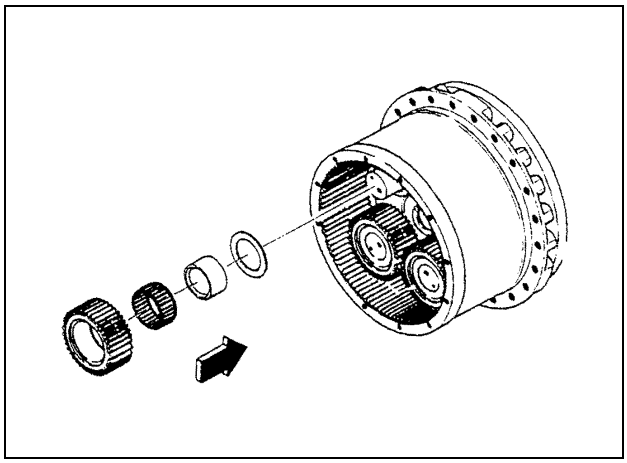

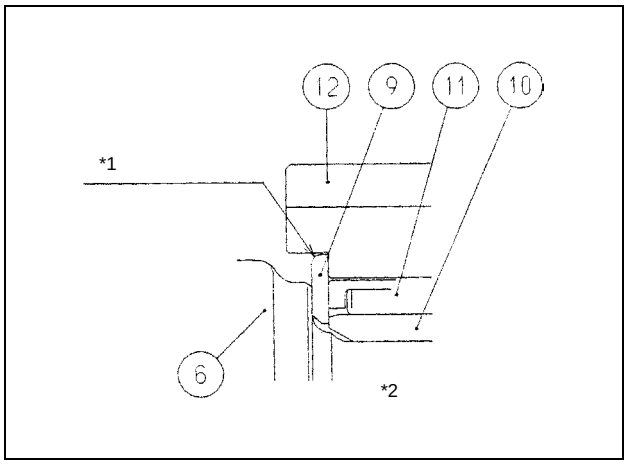

*1 Direct the blanking mark side to face holder C (6).

*2 Assembling direction for thrust plate (9)

https://truckmanualshub.com/

8.) Assembling the thrust plate (13)

Install the thrust plate (13) onto planetary gear (12) so that the chamfer at the bolt bore section comes under the neck section of the bolt (14).

After the installation, install the bolt (14) with locktite applied on the thread section, and then tighten it at the specified torque.

Note:

a. Check that the assembling direction for the thrust plate (13) is correct. Otherwise, the neck section of the bolt is damaged, and the bolt will be broken.
b. Wash the thread section of the bolt (14), degrease it and apply locktite on the bolt.
c. Clean the bore for the screw on the flange (1-1) and degrease it well.

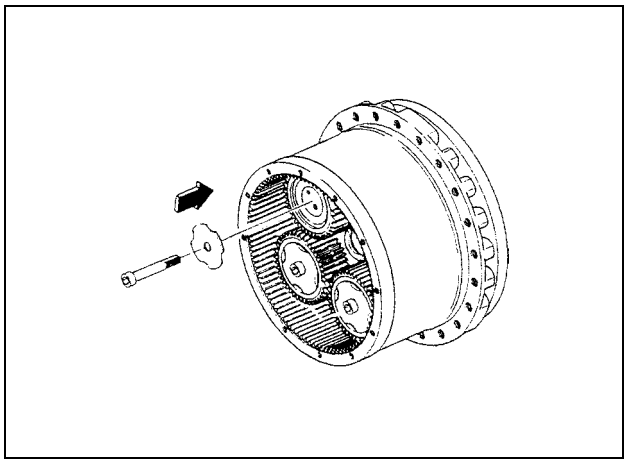

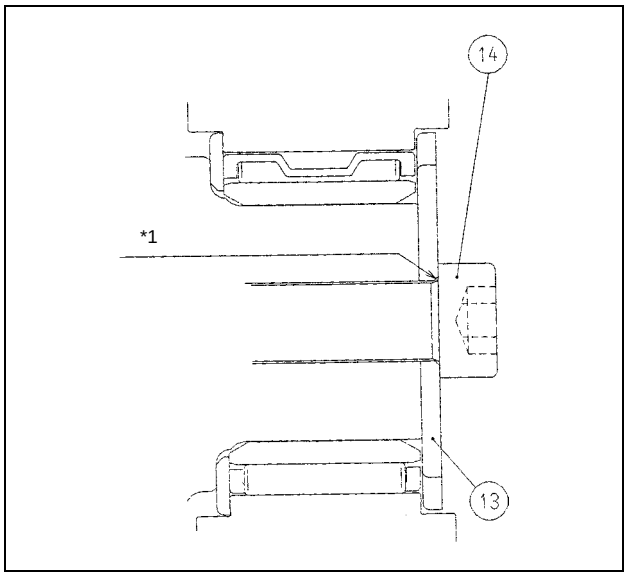

*1 Install so that the chamfer (C2) side comes on the socket head bolt (14) side.

9.) Assembling the sun gear (15)

After checking that the sun gear (15) has the snap ring (16) installed, install the sun gear (15) in the center of 4 planetary gears (12).

Note:

Assemble by engaging the teeth of the planetary gears (12) and those of the sun gear B (15).

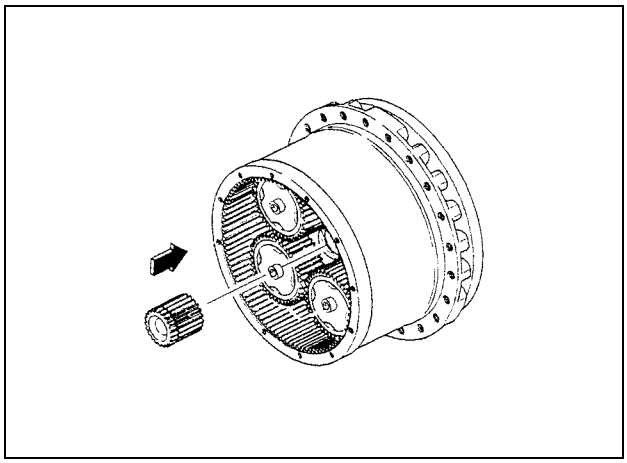

https://truckmanualshub.com/

10.) Assembling the holder (17)

Engage the inner teeth of the holder (17) with those of the sun gear (15), and then assemble the holder (17) onto the sun gear (15).

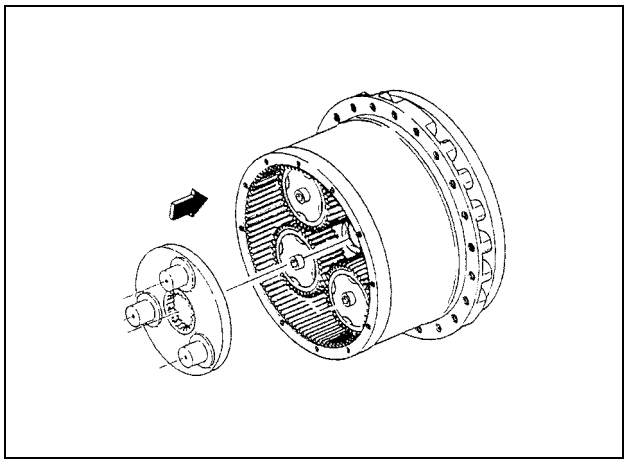

11.) Assembling the planetary gear (21)

Assemble the thrust plate (18) onto the planetary gear (21).

Next, assemble the needle bearing (20) onto planetary gear (21).

Lastly, after assembling the inner race (19), engage the bore section of the inner race (19) with the trunnion sections (at 3 locations) on the holder (17), and then assemble the planetary gear (21) onto the holder (17).

Note:

a. When assembling the thrust plate (18) onto the planetary gear (21), assemble so that the blanking mark on the thrust plate (18) left by the press comes on the side of the holder (17).
b. In the last step for assembling planetary gear (21) onto the holder (17), assemble so that the inner teeth of the housing (4) are engaged with those of the planetary gear (21).
c. Take care for the assembling direction for the planetary gear (21).

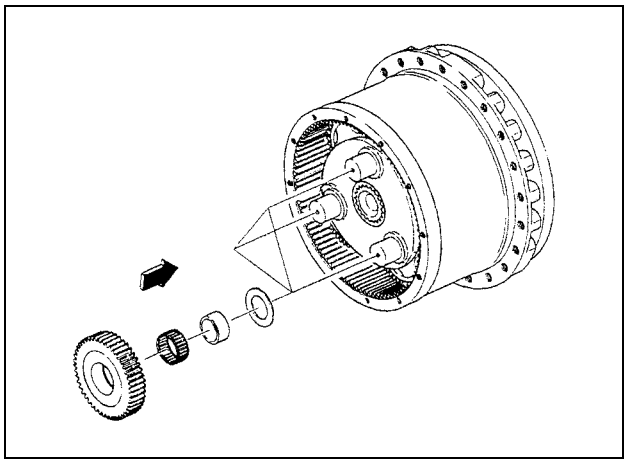

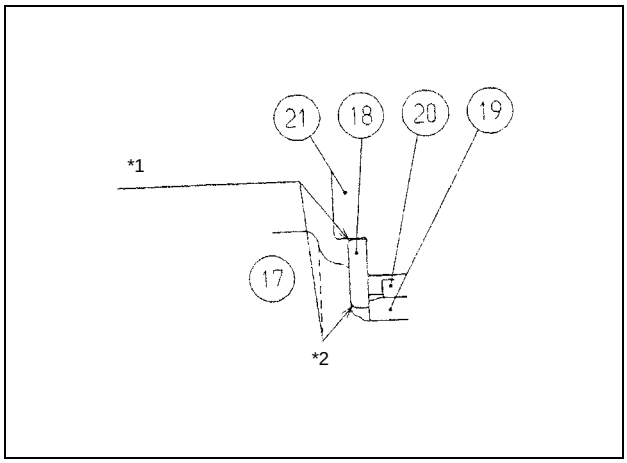

*1 Direct the blanking mark side to face holder B (17).
*2 Assembling direction for thrust plate (18)

https://truckmanualshub.com/

12.) Assembling the planetary gear (25)

Assemble the thrust plate (22) onto the planetary gear (21), and then assemble the thrust plate (23). Assemble the screw (24) with locktite applied on its thread section, and tighten to the specified torque.

Direct the spline side of the drive gear (25) to face the motor assembly. Assemble it in the center of 3 planetary gears (21) and engage the teeth of the planetary gear (21) with those of the drive gear (125).

Note:

a. Take care for the assembling direction for the planetary gear (22).
b. Wash and clean the bore of the holder (17) and the thread section of the screw (24), and degrease them well.

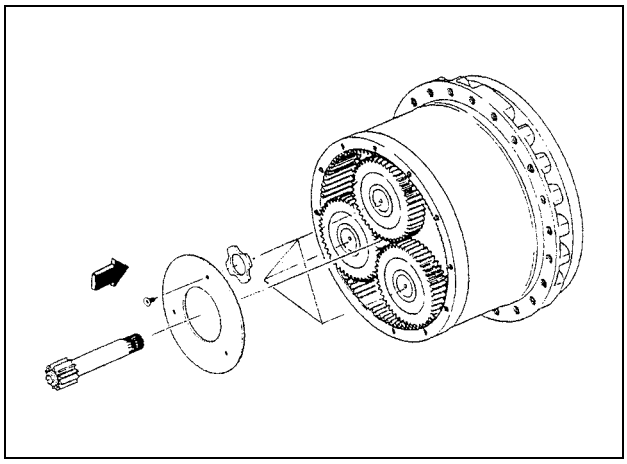

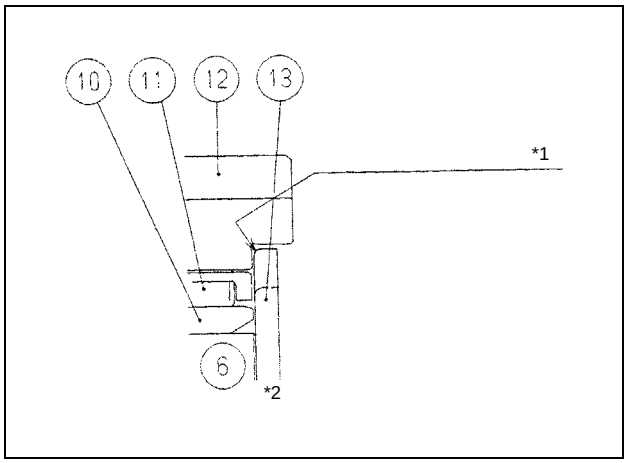

*1 Direct the blanking mark side to face the planetary gear C (12).
*2 Assembling direction for the thrust plate (13)

https://truckmanualshub.com/

13.) Assembling the thrust plate (26)

Measure the step between the end surface of the housing (4) and that of the thrust plate (23) using a thrust plate selecting jig, and select the thrust plate (26) according to the table below to assemble it.

Step Dimension	Applicable Thrust Plate
1.20 to 0.67	20941-62306
0.66 to 0.04	20941-62307
0.03 to -0.16	20941-62308
-0.17 to -0.41	20941-62309
-0.42 to -0.80	B0841-23017

Note:

Assemble the thrust plate (26) by aligning the central hole in the thrust plate with the convex section of the drive gear (25).

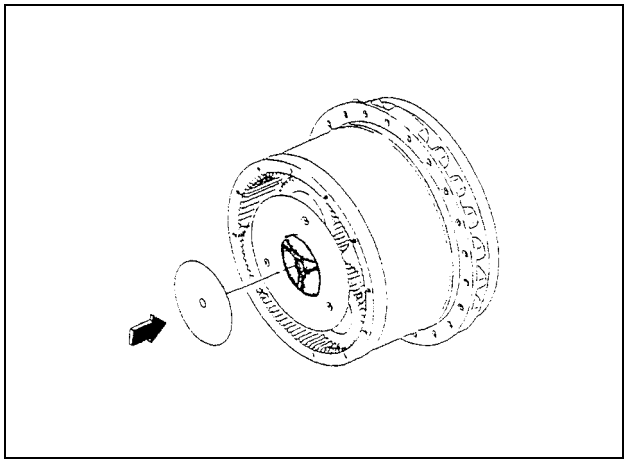

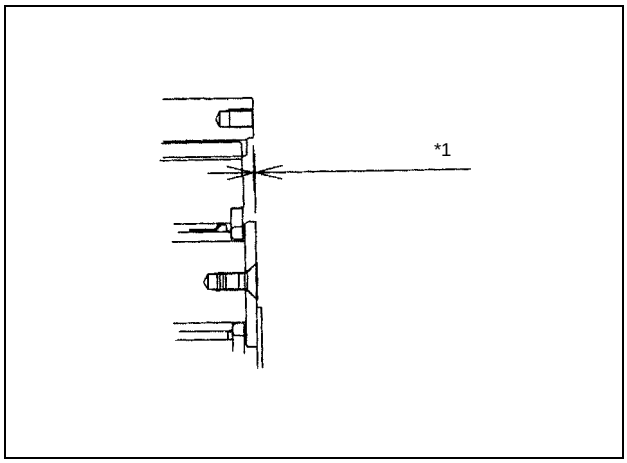

*1 Measuring the step

https://truckmanualshub.com/

14.) Assembling the holder (27)

Completely remove foreign matter on the alignment surface of the housing (4) and cover (27).

Next, degrease the alignment surface of the housing (4) and cover (27) well.

Next, apply liquid packing at the corner of the spigot joint portion of the cover (27) and housing (4) alignment surface. Then align the screw bore of the housing (4) with the bolt bore to install the cover (27) onto the housing (4).

Lastly, install the socket head bolt (28) and tighten the socket head bolt (28) at the specified torque.

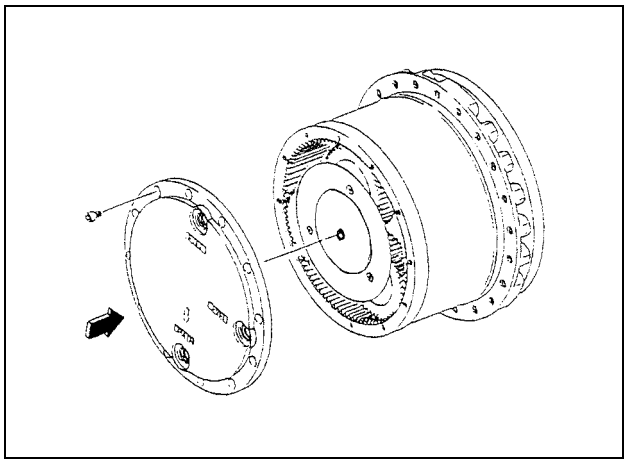

15.) Assembling the plug (29)

Remove the O-ring (30) attached to the plug (29). Replacing it, assemble a new O-ring onto the plug (29).

Next, assemble the plug (29) onto each of the oil fill, discharge and level ports (3 ports) of the cover (27) and tighten them at the specified torque.

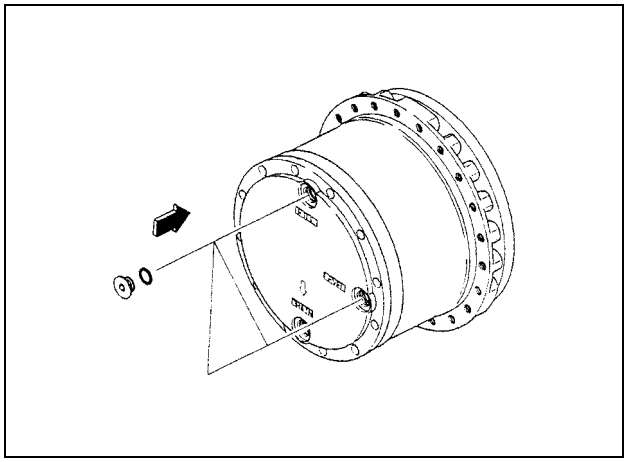

That completes the assembly of the reduction gear section.

The next section describes the assembly of the motor section. Refer to "(2) Assembly of Motor" to proceed with the assembling procedure.

https://truckmanualshub.com/

2.) Assembly of motor

1.) Assembling the oil seal (1-12)

Check that the oil seal (1-12) is not installed onto the flange (1-1). If not, press fit the oil seal (1-12) onto the flange (1-1), using an oil seal press-fit jig.

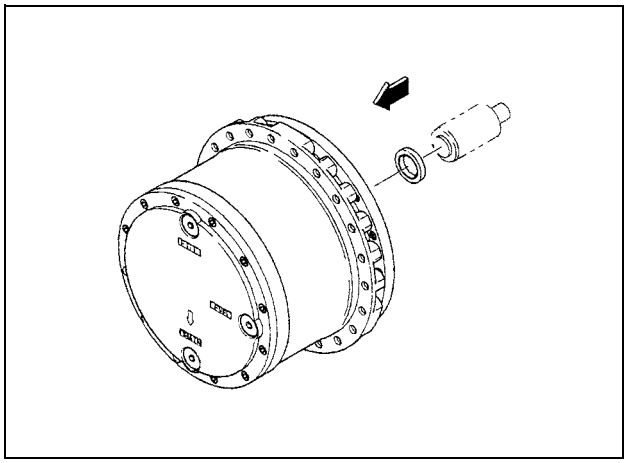

Note:

a. Prior to press-fit operation, apply grease on the bore section of the oil seal (1-12) press-fit section of the flange (1-1) and bore surface of the oil seal (1-12).
b. Press fit after applying grease on the lip section of the bore of the oil seal (1-12).
c. When press fitting, use a press at rights. Inclined press-fitting force damages the side surface of the oil seal (1-12).
d. When press fitting, take care not to damage the lip section of the bore of the oil seal (1-12). Damaging it may cause oil leakage, which could result in breakage of the interior of the reduction gear while the motor is operating.

2.) Assembling the piston assembly (1-7)

Assemble the spring (1-20) into the hole on the flange (1-1) provided for assembling the piston assembly (1-7).
Next, assemble the piston assembly (1-7) onto the flange (1-1).

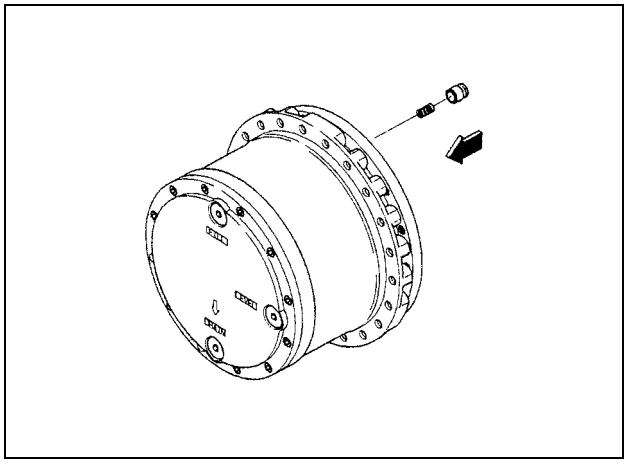

Note:

a. When assembling the spring (1-20), check that the spring is placed in the center of the hole.
b. When assembling the piston assembly (1-7), do so with the cylindrical section down.
c. Prior to assembling the piston assembly (1-7), apply hydraulic oil on the surface of the bore provided on the flange (1-1) for piston installation and the side surface of the cylindrical section of the piston assembly (1-7).
d. After assembling the piston assembly (1-7), check that the piston assembly (1-7) operates smoothly.

3.) Assembling the steel ball (1-6)

Assemble the steel ball (1-6) into the spherical-surface bore on the flange (1-1).

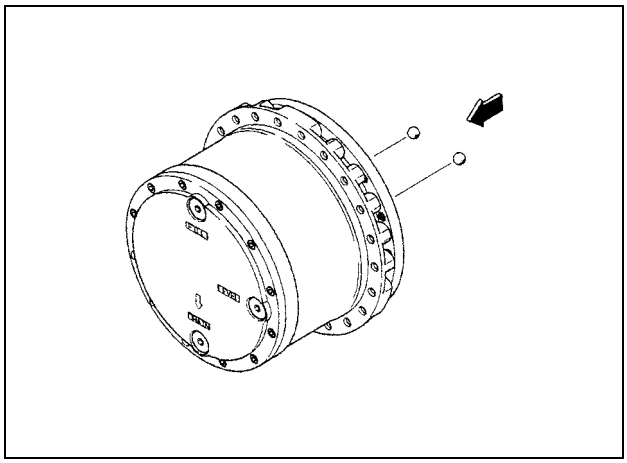

Note:

Prior to assembling the steel ball (1-6), apply hydraulic oil on the surface of the spherical-surface bore provided on the flange (1-1) and the steel ball (1-6).

https://truckmanualshub.com/

4.) Assembling the shaft (1-3)

Press fit the ball bearing (1-8) onto the shaft (1-3), using a bearing press-fit jig.

Next, assemble the shaft (1-3) in the center of the flange (1-1).

Note:

a. When assembling the ball bearing (1-8), check that it is installed at rights.

b. After assembling the shaft (1-3), check that the shaft rotates smoothly.

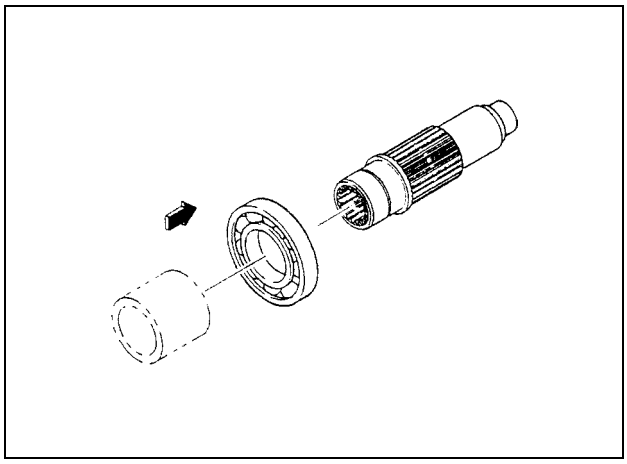

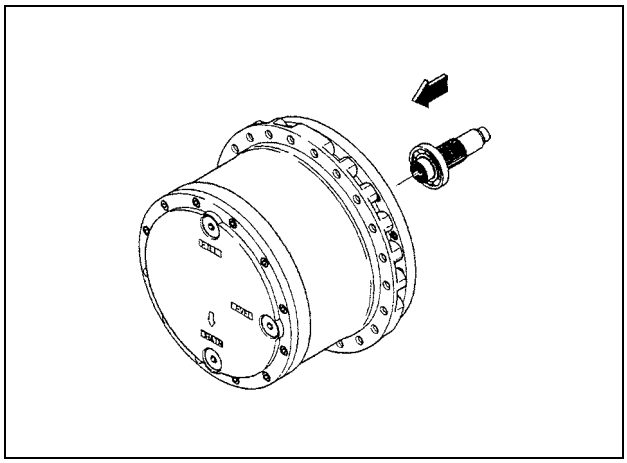

5.) Assembling the swash plate (1-5)

With the graded side up, assemble the swash plate (1-5) onto the flange (1-1).

Note:

a. Assemble so that the rear spherical -surface bore on the swash plate (1-5) is aligned with the steel ball (1-6).

b. After applying hydraulic oil on the steel ball (1-6), assemble the swash plate (1-5).

c. After assembling the swash plate (1-5), check that the swash plate operates smoothly.

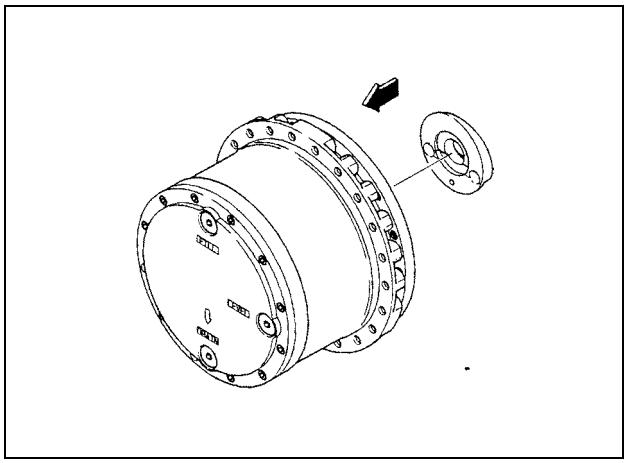

https://truckmanualshub.com/

6.) Assembling the cylinder block assembly (1-4)

6-1.) Place the cylinder block (1-4-1) on the work bench of a manual press with its surface sliding against the valve plate (1-21) up. With the graded side of the collar (1-4-6) down, assemble it into the cylinder block (1-4-1), and place the spring (1-4-7) and the collar (1-4-8), in that order, on the collar (1-4-6).

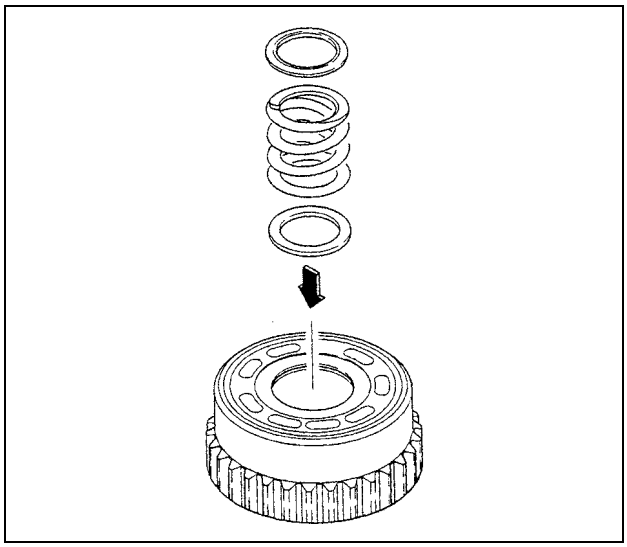

6-2.) Using a jig, press in the upper surface of the collar (1-4-8) and assemble the snap ring (1-4-5).

Note:

a. When assembling the snap ring (1-4-5) with snap ring pliers, the snap ring may drop out of the snap ring pliers due to its hardness, leading to injury. When assembling the snap ring, always use a jig and check that the claws of the snap ring pliers are engaged in the snap ring hole before proceeding with the work.
b. When it is difficult to contract the snap ring, use snap ring pliers that are one-size larger than required.
c. When pressing in the collar (1-4-8), be sure to align the center of the cylinder block with that of the press.

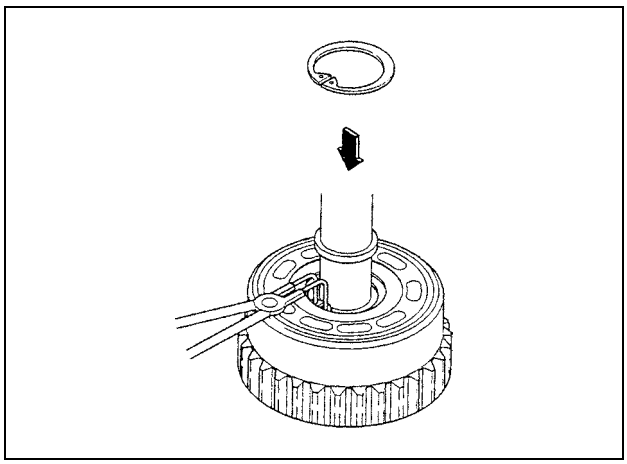

6-3.) Place the cylinder block (1-4-1) on the work bench with its surface sliding against the valve plate (1-21) down.

Assemble 3 pins (1-4-9) into the inclined holes of the cylinder block.

Note:

a. When placing the cylinder block (1-4-1) on the work bench, check that no foreign matter is present on it.
b. Take care not to damage the sliding surface of the cylinder block (1-4-1) that slides against the valve plate (1-21). Damaging the sliding surface may affect the motor performance, which may lead to early failure of the motor.
c. When assembling the pin (1-4-9), assemble it after applying grease in the pin halls.

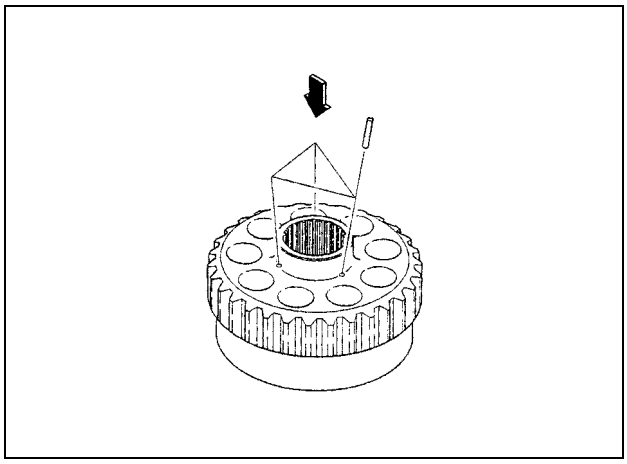

https://truckmanualshub.com/

6-4.) Assemble the retainer holder (1-4-4) onto the cylinder block (1-4-1).

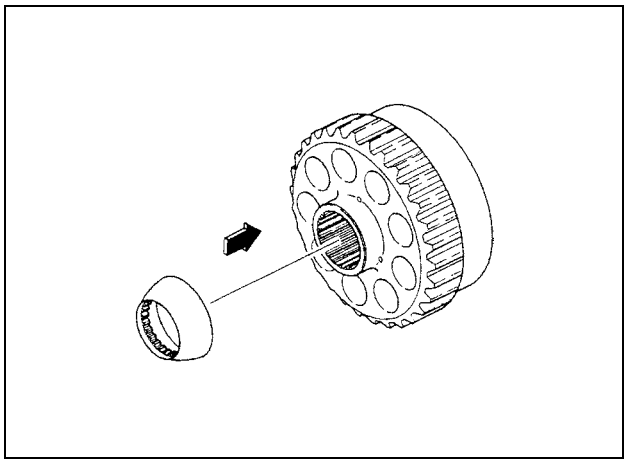

6-5.) With the surface having tapered surface on the side down, assembly 9 piston assembly (1-4-2) onto the retainer plate (1-4-3).

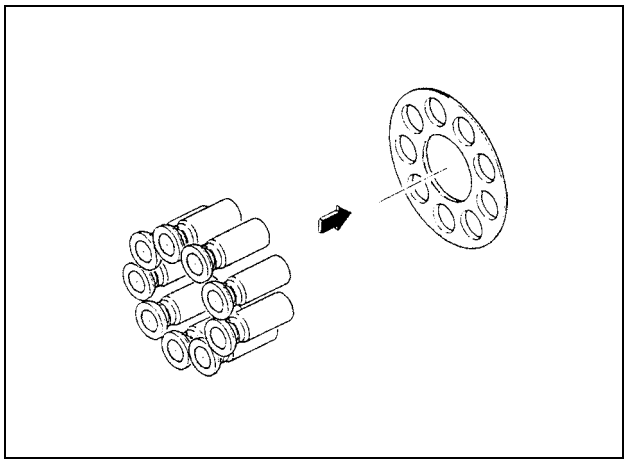

6-6.) Assembly the piston assembly (1-4-2) onto the cylinder block (1-4-1).

Note:

a. After applying hydraulic oil in the halls (at 9 locations) for assembling the cylinder block (1-4-1), assemble the piston assembly (1-4-2).

b. Apply hydraulic oil on the spherical surface of the retainer holder (1-4-4), and then proceed with the assembling procedure.

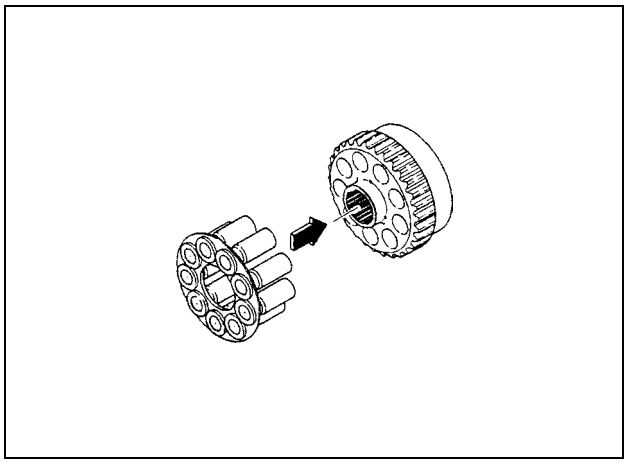

https://truckmanualshub.com/

7.) Assembling the cylinder block assembly (1-4)

With the sliding surface of the valve plate (1-21) of the cylinder block assembly (1-4) up, assemble the cylinder block assembly (1-4) into the flange (1-1) while engaging the inner teeth spline of the cylinder block (1-4-1) with the external teeth splines of the retainer holder (1-4-4) and shaft (1-3).

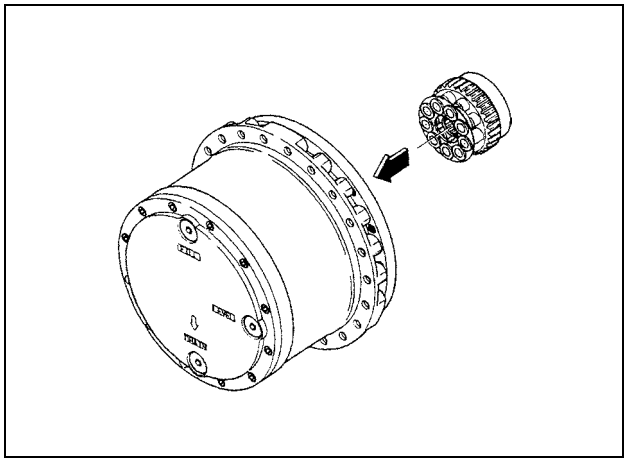

Note:

a. When assembling, take care not to allow the piston assembly (1-4-2), retainer plate (1-4-3), retainer holder (1-4-4), etc. to drop out of the cylinder block assembly (1-4).

b. Prior to the assembling procedure, apply hydraulic oil on the surface of the swash plate (1-5) and the sliding surface of the piston assembly (1-4-2).

8.) Assembling the disk plate (1-13)

While engaging the inner teeth of the disk plate (1-13) with the external teeth of the cylinder block (1-4-1), assemble the disk plate onto the flange (1-1).

Also, assemble it onto the flange (1-1) so that the peripheral arc section of the friction plate (1-14) is aligned with the notch section of the flange (1-1).

According to the procedures above, assemble the disk plate (1-13) and the friction plate (1-14), in that order.

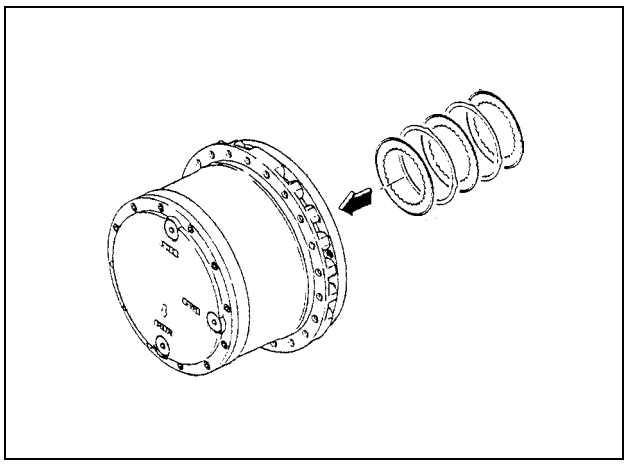

Note:

The disk plate (1-13) is a wet-type disk. Prior to the assembling procedure, soak the portion of friction material in hydraulic oil to let it absorb hydraulic oil adequately.

https://truckmanualshub.com/

9.) Assembling the brake piston (1-15)

Assemble the D-rings (1-16, 1-17) onto the brake piston (1-15).

With the side with the larger diameter of the brake piston (1-15) up, assemble it onto the flange (1-1).

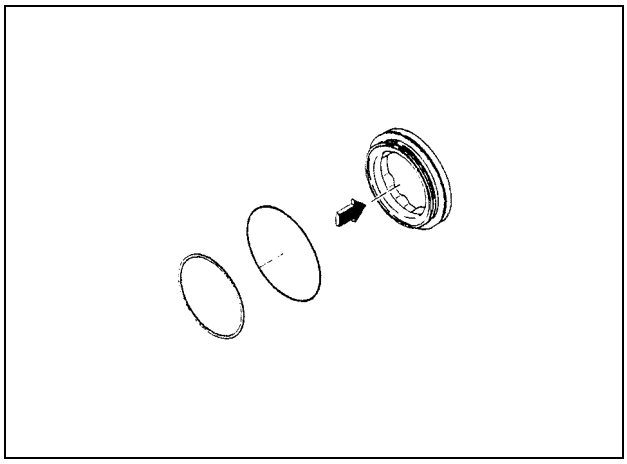

Note:

a. When installing the D-rings (1-16, 1-17), generously apply grease on the rings.
b. Using a positioning jig, align the knock pin holes of the base plate (1-2-1) on the flange (1-1) and the brake piston (1-15) so that they are arranged in line, and then assemble the brake piston (1-15).
c. When assembling the brake piston (1-15), apply grease on the external surface and inside the bore of the flange (1-1).
d. Assemble while evenly pressing down the brake piston (1-15) so that it may not incline. Assembling the piston as inclined may cause operational failure or ripping of a D-ring.

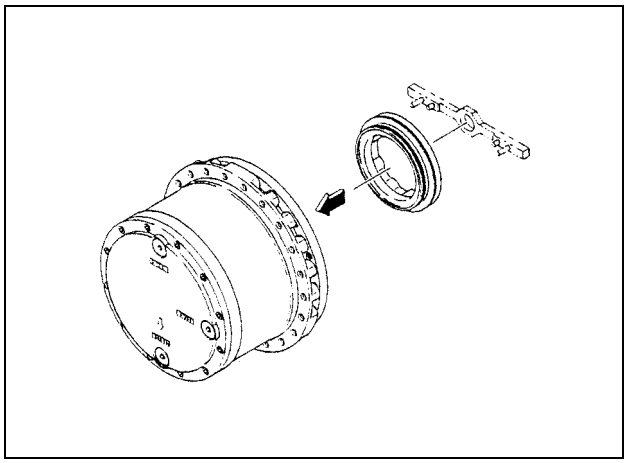

10.) Assembling the spring (1-18)

Assemble the springs (1-18) into the bores (at eight locations) provided for assembling the springs (1-18) on the brake piston (1-15).

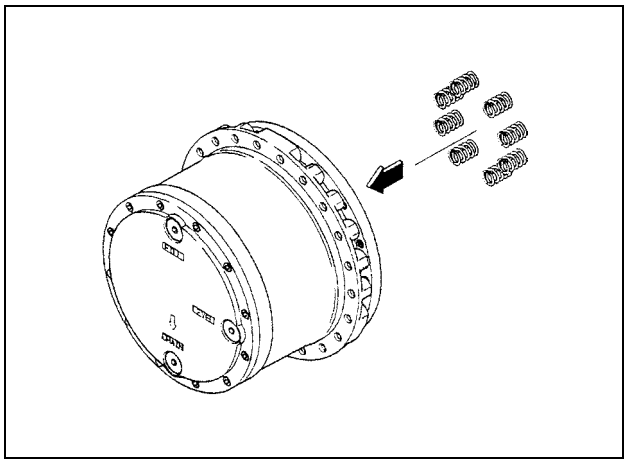

https://truckmanualshub.com/

11.) Assembling the valve plate (1-21)

Place the base plate (1-2-1) on a work bench and press fit the bearing (1-9) in the center of the base plate (1-2-1), using a bearing press-fit jig.

After checking that the knock pin (1-19) is installed on the base plate (1-2-1), assemble the valve plate (1-21) onto the base plate (1-2-1).

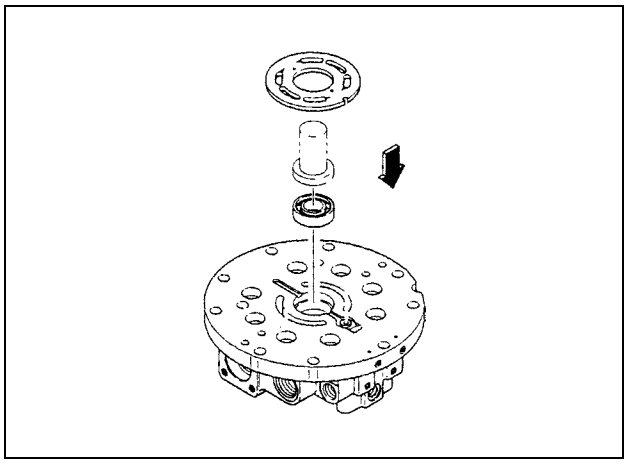

Note:

a. Assemble the valve plate (1-21) with its copper-base alloy side up.
b. In order to prevent falling of the valve plate (1-21), apply grease sufficiently on the alignment surface of the base plate (1-2-1) and the valve plate (1-21).
c. Take care not to damage the copper-base alloy surface of the valve plate (1-21).

12.) Assembling the base plate (1-2-1)

Assemble the O-rings (1-23) and O-rings (1-22) (at four locations) onto the upper surface of the flange (1-1).

Assemble the knock pin (1-19) on the base plate (1-2-1).

With the surface of the base plate (1-21) contacting the valve plate (1-21) when assembled down, assemble the base plate onto the flange (1-1) and tighten it using the socket head bolt (1-11).

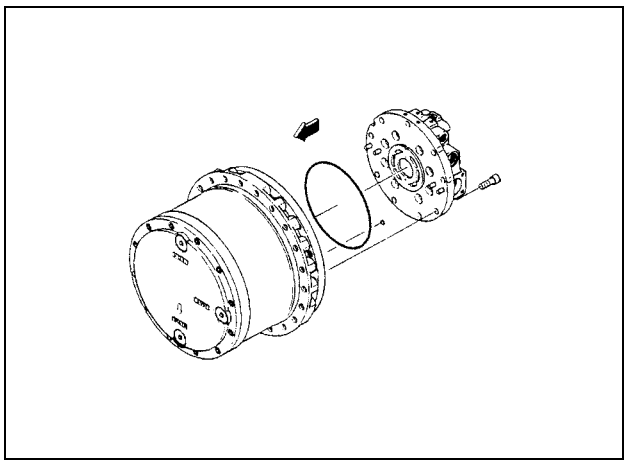

Note:

a. Apply grease on the O-ring (1-23).
b. Do not apply grease on the O-ring (1-22).
c. Assemble the knock pin (1-19) with its tapered section up.
d. After applying hydraulic oil on the surface of the valve plate (1-21) and the surface of the cylinder block (1-4-1), assemble the base plate (1-2-1).
e. When assembling the base plate (1-2-1), check that the valve plate will not fall even though the side having the valve plate (1-21) installed is oriented downward.
f. Check the location where the O-ring (1-22) is assembled and the location of the notch for the oil channel on the base plate (1-2-1).
g. Check for the locations of the knock pin (1-19) mounted on the base plate (1-2-1), the hole on the base plate (1-2-1) for installing the spring (1-18), and the knock pin hole on the flange (1-1) side as well as the location of the spring (1-18).
h. When tightening the socket head bolt (1-11), tighten it by applying force evenly along the periphery.

https://truckmanualshub.com/

13.) Assembling the valve assembly (1-2-9)

Assemble the spring (1-2-10) into the valve assembly (1-2-9), and then onto the base plate (1-2-1). After assembling the valve assembly (1-2-9), check that the O-ring (1-2-12) is installed onto the plug (1-2-11). Then, assemble the plug (1-2-11) onto the base plate (1-2-1) and tighten to the specified torque.

Next, check that the O-ring (1-2-12) is installed onto the plug (1-2-14), and assemble the washer (1-2-15) into the spring guide (1-2-13), assemble the plug (1-2-14) onto the base plate (1-2-1), and then tighten to the specified torque.

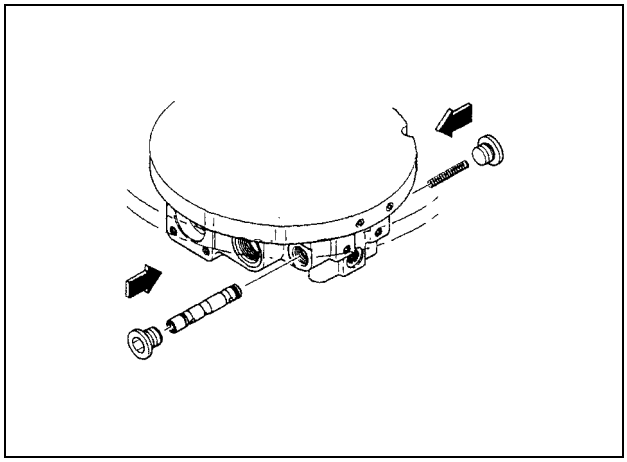

Note:

a. With the piping port side of the base plate (1-2-1) on the near side, assemble the valve assembly (1-2-9) onto the base plate (1-2-1) so that the side of the valve assembly (1-2-9) with the spring (1-2-10) installed comes on the right-hand side. Reverse assembly leads to trouble such as switching failure.
b. Apply hydraulic oil around the exterior of the valve assembly (1-2-9) and then proceed with the assembling procedure.
c. After assembling the valve assembly (1-2-9), check that the valve assembly (1-2-9) operates smoothly.

14.) Assembling the relief valve assembly (1-2-7)

Check that the poppet seat (1-2-7-3) is installed on the tip of the relief valve assembly (1-2-7), assemble the relief valve assembly (1-2-7) onto the base plate (1-2-1), and then tighten to the specified torque.

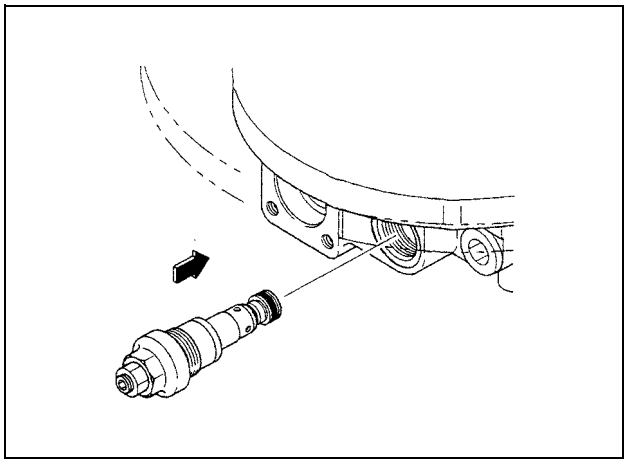

Note:

a. Replace the O-ring (1-2-7-7) with a new one before assembling the valve assembly.
b. Check that the O-ring (1-2-7-17) and the backup ring (1-2-7-18) are installed onto the poppet seat (1-2-7-3).
c. Apply grease on the O-ring (1-2-7-17) and the backup ring (1-2-7-18), and then assemble them.

https://truckmanualshub.com/

15.) Assembling the plunger assembly (1-2-2)

Assemble the plunger assembly (1-2-2) onto the base plate (1-2-1).

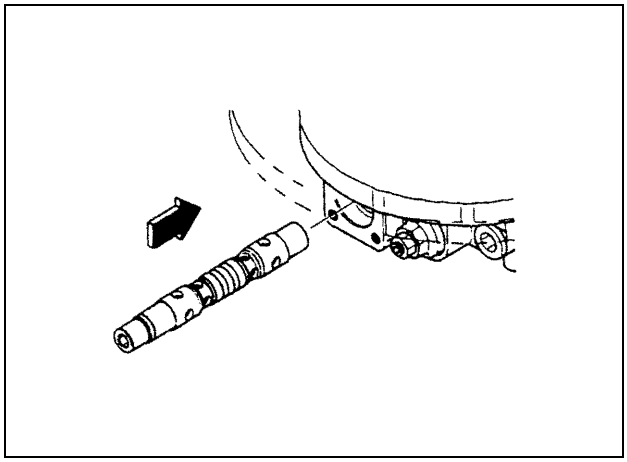

Note:

a. Slowly assemble the plunger assembly (1-2-2) while rotating it.
b. Assemble the plunger assembly (1-2-2) at rights.
c. When the plunger assembly (1-2-2) is stuck, do not attempt to move it forcibly. Instead, softly tap it with a plastic hammer, etc.
d. Apply hydraulic oil around the exterior of the plunger assembly (1-2-2) and then proceed with the assembling procedure.

16.) Assembling the cap assembly (1-2-6)

Assemble the spring seat (1-2-3) and the spring (1-2-4), in that order, into the plunger assembly (1-2-2).

Assemble the check valve (1-2-22) and the spring (1-2-23), in that order, into the hole next to the hole for assembling the cap assembly (1-2-6) on the base plate (1-2-1).

Check that the O-ring (1-2-6-2) is installed in the cap assembly (1-2-6) and that the O-ring (1-2-24) is installed onto the base plate (1-2-1), install the spring seat (1-2-5) into the cap assembly (1-2-6). Then assemble the cap assembly (1-2-6) onto the base plate (1-2-1).

Lastly, tighten the socket head bolt (1-2-6-3) at the specified torque.

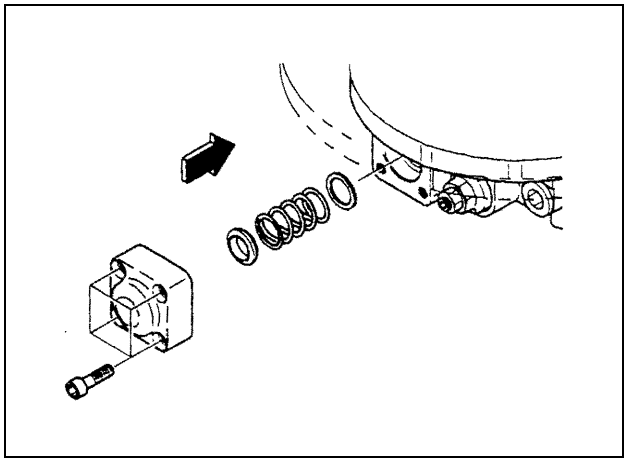

Note:

a. Apply grease on the O-ring (1-2-6-2).
b. The spring (1-2-4) is pushing up the cap assembly (1-2-6). When tightening the socket head bolt (1-2-6-3), hold down the cap assembly (1-2-6) by hand while tightening it.
c. When tightening the socket head bolt (1-2-6-3), proceed little by little while tightening at the four locations evenly. If the cap assembly (1-2-6) is tightened as inclined, the O-ring (1-2-6-2) may be damaged, leading to oil leakage.

https://truckmanualshub.com/

That completes the assembling procedure for this motor.
After completing the assembling procedure, follow Chapter 10 "Storing the Motor" of the operator's manual should the motor be stored.
Also, should the motor be mounted on the machine, follow Chapter 11 "Motor Installation," Chapter 12 "Confirmation," and Chapter 13 "Production Run" and the operator's manual for the machine well.

5-2 Lower Mechanism: Travel Drive Unit

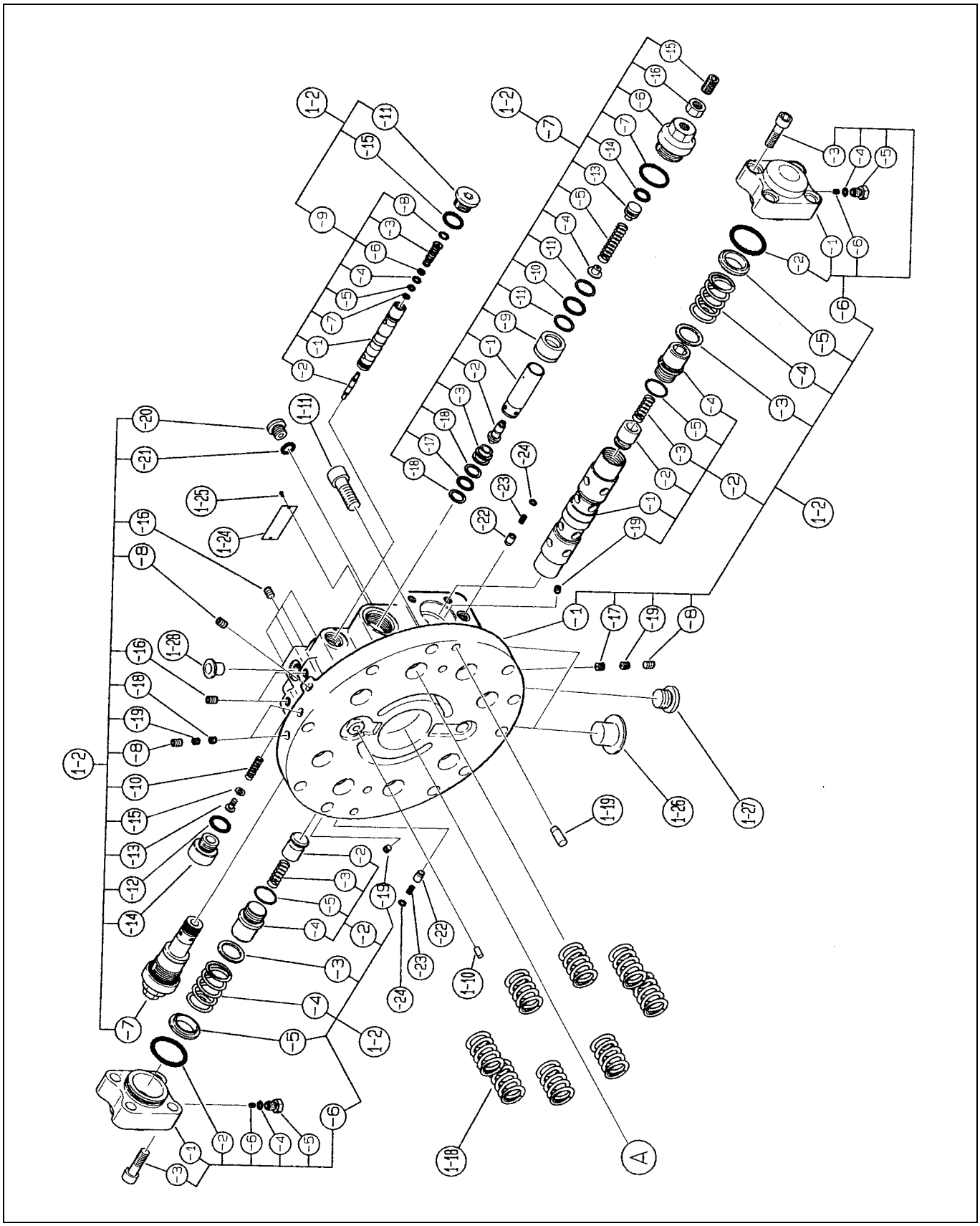

5-2 Lower Mechanism: Travel Drive Unit

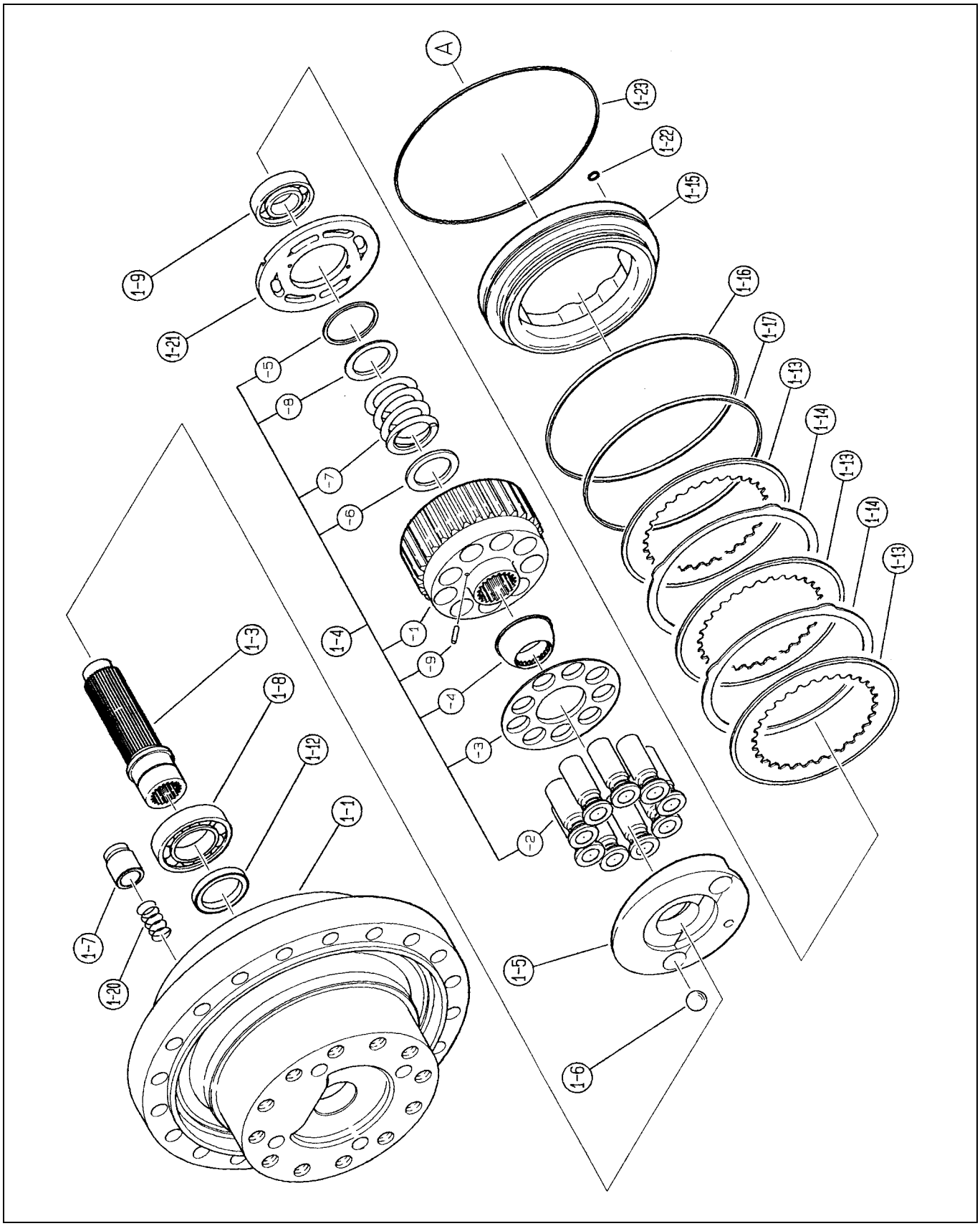

5-2 Lower Mechanism: Travel Drive Unit

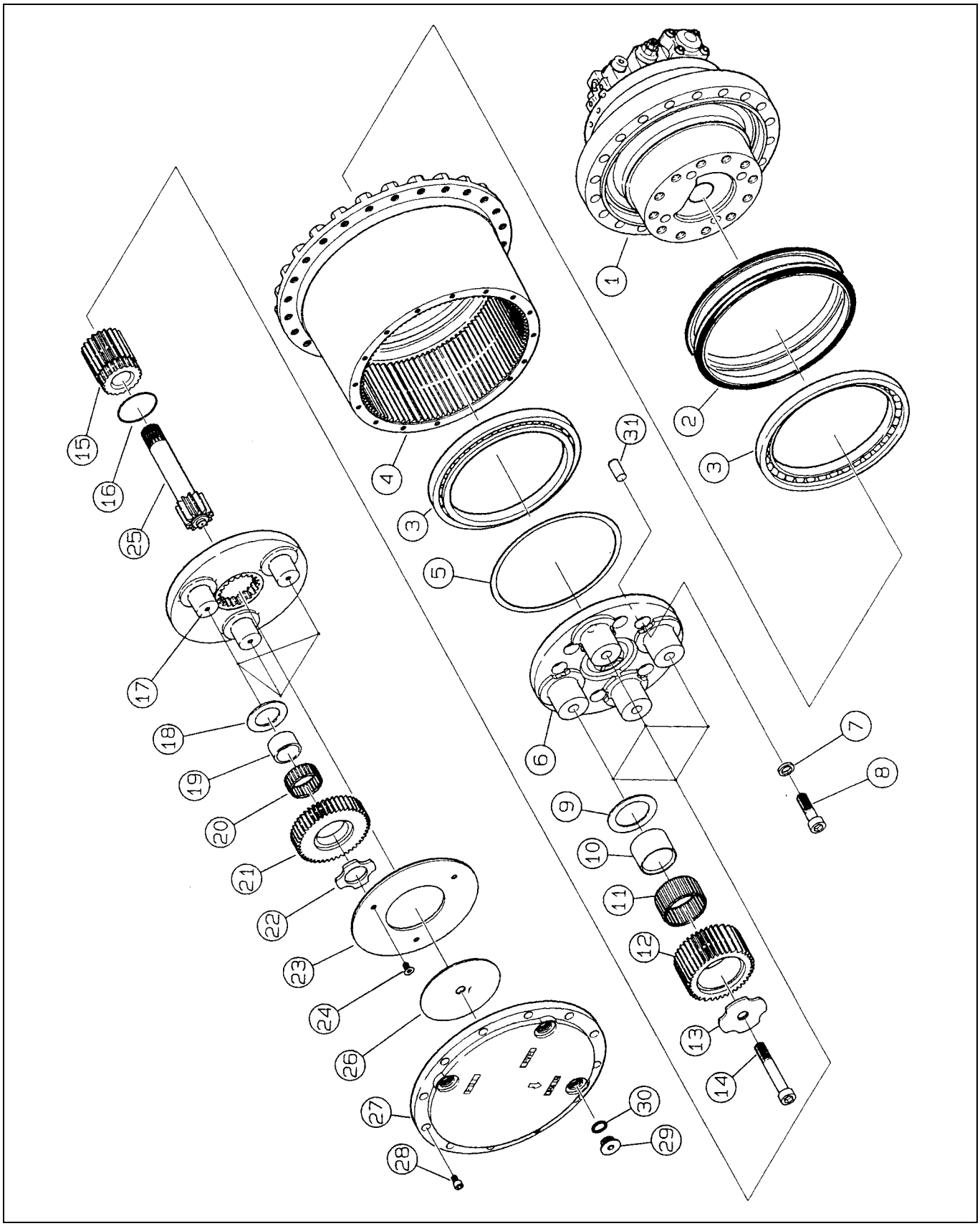

7. Hydraulic Oil

Hydraulic oil is essential for transmission of the drive force and lubrication of the hydraulic equipment parts. Improper selection or handling of the hydraulic oil may cause a problem, such as "expected performance of the hydraulic equipment cannot be achieved" or "the hydraulic equipment life is extremely shortened." Therefore, it is important to fully understand the following before selecting and handling the hydraulic oil.

[1] Required properties for the hydraulic oil

Hydraulic oil is used for drive force transmission and hydraulic equipment lubrication. In addition, it has a life. From these points, the following properties are required for the hydraulic oil:

(1) Drive force transmission
- (a) A viscosity appropriate for the hydraulic equipment and low viscosity change with temperature.
- (b) Good antifoam properties.
- (c) High ignition point.
- (d) Compatible with the packing and seal material.

(2) Hydraulic equipment lubrication
- (a) Good lubrication even when operational conditions, such as temperature and pressure, vary.
- (b) Good antirust properties.
- (c) Good water and contaminant separation.

(3) Hydraulic oil life
- (a) Chemically stable.
- (b) Good oxidation stability and less deterioration after long use.

(4) Others
- (a) Transparent color.

Select hydraulic oil that meets the requirements above.

https://truckmanualshub.com/

[2] Types of hydraulic oil and selecting appropriate one

There are various types of hydraulic oil. They can be systematically categorized as follows:

(1) Mineral-based hydraulic oil
This oil is generally used and can be easily obtained. Thus, most hydraulic equipment uses this type of hydraulic oil.

(2) Synthetic hydraulic oil
This oil been developed for aircraft-related uses that have special requirements, and has excellent temperature characteristics and low temperature fluidity. However, this type of hydraulic oil is expensive.
Phosphoric acid ester-based hydraulic oil, which is used as flame-resistant hydraulic oil, also belongs to this category.

(3) Aqueous hydraulic oil
This oil is used as flame-resistant hydraulic oil for those pieces of hydraulic equipment that are in extreme danger of fire that can be caused by oil leaking or other factors. Die casting machines, mills, and heating furnaces, for example, use this type of oil.

(4) Biodegradable hydraulic oil
This oil has been developed for the purpose of environmental conservation. This type of oil is decomposed by bacteria so that soil and rivers will not be contaminated by oil leaks.

Table 5 shows the compatibility of each type of oil with the motor. Select hydraulic oil by following this table.

Table 5. Compatibility of Hydraulic Oil with the Motor

Hydraulic Oil	Compatibility with the Motor
Mineral-based hydraulic oil	○
Synthetic hydraulic oil	×
Aqueous hydraulic oil	×
Biodegradable hydraulic oil	△

○ : This type of oil has no problem to be used.
△ : Please contact us if this type of oil needs to be used.
× : Do not use these types of oil as they can cause a problem.

[3] Selecting hydraulic oil appropriate for the operating temperature

The viscosity of hydraulic oil varies depending on the operating temperature. Since the viscosity of hydraulic oil significantly affects lubrication and drive force transmission of the motor, changing to hydraulic oil appropriate for the operating temperature is necessary.
Check the operating temperature of the mother machine and the management temperature of the hydraulic oil in the hydraulic equipment, and then select hydraulic oil to use based on Table 6.

https://truckmanualshub.com/

Table 6. Operating Temperature and Appropriate Hydraulic oil

Operating Environment	Cold Area	Warm Area	Hot Area
Environmental temperature	-10 to +25°C	0 to +35°C	
Appropriate hydraulic oil	ISO VG32 or equivalent	ISO VG46 or equivalent	ISO VG56 or equivalent

Note If the machine is used in an wide range of environmental temperatures from low to high, consult with your hydraulic oil manufacturer and use abrasion-resistant hydraulic oil with high viscosity (140 or higher) that can be used for all seasons.

Important Do not mix different types of hydraulic oil. To change to different hydraulic oil, flush the hydraulic circuit thoroughly before replacing.

[4] Managing the temperature of the hydraulic oil

1. Temperature of the hydraulic oil in operation

Hydraulic equipment is very sensitive to the viscosity of the hydraulic oil. In particular, when the temperature of the hydraulic oil becomes too high in the operating hydraulic equipment, deterioration of the oil will be accelerated and the extremely reduced viscosity of the oil will cause a malfunction or breakdown of the equipment. Table 7 shows the applicable viscosity range of the hydraulic oil used in the hydraulic equipment.

Table 7. Applicable Viscosity Range of the Hydraulic Oil

	Viscosity	Oil Temperature		
		ISO VG32	ISO VG46	
Appropriate range	25 to 100 cSt	+17 to +45°C	+23 to +55°C	
Allowable range	15 to 500 cSt	-7 to +60°C	0 to +70°C	

For continuous operation, use a cooler or other equipment to keep the temperature of the hydraulic oils between -10 to +80°C and within the viscosity range shown in Table 7.

Important When the viscosity of the oil is too low, the sliding section of the piston motor can be scorched or worn earlier and become unable to operate. Therefore, select hydraulic oil appropriate for the environmental temperature and the operating temperature.

2. Temperature of the hydraulic oil at low temperature

To start the motor at low temperature when the temperature of the hydraulic oil is below the allowable range shown in Table 7, raise the temperature of the hydraulic oil using a warm-up operation or a heater and slowly start the motor. When the temperature of the hydraulic oil is too low, the hydraulic pump suction may be weakened due to too high viscosity or oil may not circulate due to excessive resistance.

Important WAt low temperatures, do not rapidly start the operation after you have raised the temperature of the hydraulic oil. The rapid flow of warm hydraulic oil into the cold equipment rises the temperature of the equipment. This may cause the valves to malfunction because of the difference in thermal expansion between the parts. Therefore, start the operation slowly to gradually raise the temperature of the equipment.

https://truckmanualshub.com/

[5] Managing the degree of contamination in the hydraulic oil

The gap between the parts such as the piston motor and the double counter balance valve is very small, thus very sensitive to contamination in the hydraulic oil. Dirty hydraulic oil can cause a problem such as malfunction of valves and performance degradation. To prevent this problem, keep the degree of contamination in hydraulic oil within the level of NAS rank 9.

Note

To manage the contamination in the hydraulic oil, set a filter in the hydraulic circuit. (See Chapter 5.) A dirty filter may reduce the filtering performance of the hydraulic oil, or worse, contaminate the oil. Therefore, use a filter with an indicator that allows checking the filter clog from outside and a built-in relief valve that can bypass the flow according to clog state.

Important

To properly manage the degree of contamination in the hydraulic oil, the filter must also be managed. Regularly conduct maintenance checks for the filter.

8. Reduction Gear Lubricating Oil

Reduction gear lubricating oil is essential for drive force transmission and lubrication of reduction gear parts. Improper selection or handling of reduction gear lubricating oil may cause a problem, such as "expected performance of the reduction gear cannot be achieved" or "the reduction gear life is extremely shortened." Therefore, it is important to fully understand the following before selecting and handling reduction gear lubricating oil.

[1] Functions of and requirements for reduction gear lubricating oil

Reduction gear lubricating oil has the following functions:

(1) Forming oil film between metals to provide reduced friction and smooth lubrication between them so that the driving force will not be lost.
(2) Forming oil film between metals to provide smooth lubrication between them so that the gear will not be damaged by wear or scorching
(3) Providing smooth lubrication between metals to prevent temperature rise caused by frictional heat.
(4) Preventing rust and corrosion caused by entry of water or other reasons.

To fulfill all these functions, the following properties are required for the reduction gear lubricating oil.

(1) High oil film strength. (good extreme-pressure properties.)
(2) Appropriate viscosity and high viscosity index.
(3) Good oxidation stability.
(4) Good antifoam properties.
(5) Good antirust properties.
(6) Good low-temperature fluidity.
(7) Good water separation.
(8) Less corrosive.
(9) Does not affect on the seal material.

Select reduction gear lubricating oil that meets the requirements above.

https://truckmanualshub.com/

[2] Types of reduction gear lubricating oil and selecting appropriate one

Table 8 shows the API Service Categories for reduction gear lubricating oil.

Table 8. API Service Categories for Reduction Gear Lubricating Oil

Service Categories	Type of Service	Applications
GL-1	Spiral bevels or worm gears with small surface pressure and sliding velocity	Used for manual transmission on rare occasions and rarely used today.
GL-2	Slightly more demanding worm gears than above mentioned.	Used for industrial worm reducers.
GL-3	Slightly more demanding spiral bevels and manual transmission	Mainly used for manual transmission.
GL-4	Hypoid gears under high-speed and low-load or low-speed and high-load	Hypoid gear reducer under normal conditions. Also used for manual transmission.
GL-5	Much more demanding hypoid gear to which shock load is applied	Passenger cars, racing cars, and the track rear axle of the hypoid unit that have high requisite.

Use reduction gear lubricating oil equivalent to "GL-4 or GL-5".

[3] Reduction gear lubricating oil appropriate for the operating temperature

Table 9 shows JIS viscosity grades for reduction gear lubricating oil.

Table 9. JIS viscosity Grades for Reduction Gear Lubricating Oil

Type (Viscosity grade)	Kinematic Viscosity cSt (100°C)
SAE 75W	4.1 or higher
SAE 80W	7.0 or higher
SAE 85W	11.0 or higher
SAE 90	13.5 or higher and less than 24.0
SAE 140	24.0 or higher and less than 41.0

Higher viscosity provides more load bearing but may cause a problem with the starting performance if the viscosity is too high. Therefore, selecting reduction gear lubricating oil appropriate for the operating temperature is necessary.

https://truckmanualshub.com/

Table 10 shows selection criteria for the viscosity of the reduction gear lubricating oil for various operating temperatures. Select the viscosity of the reduction gear lubricating oil by following this table.
Note that a given amount of diamond hypoid gear oil 90 from Mitsubishi Oil has been fed by the factory setting.

Table 10. Selection Criteria for the Viscosity of the Reduction Gear Lubricating Oil for Various Operating Temperatures

Operating Temperature	Extremely Hot Area	Summer	Spring, Fall, Winter	Extremely Cold Area
Viscosity grade	SAE140	SAE90 or SAE140	SAE90	SAE80W

Important Do not mix different types of reduction gear lubricating oil when replacing the lubricating oil.

https://truckmanualshub.com/

9. Storing the Motor

[1] Immediately after purchase

The guaranteed storage period of the swash plate-type piston motor with case rotation type reduction gear for the open circuit is one year after shipment form the factory.Do not store the motor for longer than this period. In addition, do not disassemble the motor during the storage period or loosen the bolts.

How to store the motor

Some hydraulic oil is applied on the inside of the equipment because it is tested before the shipment. In addition, antirust agent is applied on each port section, the installation face of the mother machine, and the mounting tap section. Do not wipe off the antirust agent.
Storage period should be within three months. If longer storage is expected, please contact us in advance because the way to prevent rust is different.

For shipment, the product is covered with a plastic bag that prevents dust from entering. Do not remove the plastic bag when storing the product.

Store the product in an indoor area to protect it from rainwater etc. Avoid a place subject to high temperature and humidity. Store the product at ordinary temperature and humidity.

The product is shipped with the dedicated palette. Leave the packaging as it is not to damage the motor and store it in a stable place.

[2] Management method after maintenance check

When storing the motor after a maintenance check, follow the instructions below.
In this case, please be reminded that you are responsible for any problem (for example, scratches and rust) that occurs on the motor.

How to store the motor

When storing the motor after a maintenance check, make sure that fastening bolts of all sections are fastened to a given tightening torque and that air is not leaking from any sealed section, and then start and stop the motor before storing. (For the procedure to run the motor, see the operating method described elsewhere.) If it is impossible to run the motor, feed about 500 cc of hydraulic oil into the piston motor case and about 3.5 L of reduction gear lubricating oil into the reduction gear before storing.

Before storing, spray vaporizing antirust oil on the insides of the piston motor case, the piston motor circuit, and the reduction gear from the ports of the motor and then seal all the port sections with plugs by following the instructions below.

Apply antirust agent on the non-coated areas on the installation faces, screw sections, and port sections, etc.

To prevent dust from entering, cover the product with a plastic bag and then store it.
Store the product in a stable place, placing the reduction gear side down.
Store the product in an indoor area to protect it from rainwater etc. Avoid a place subject to high temperature and humidity. Store the product at ordinary temperature and humidity.

https://truckmanualshub.com/

Instructions for preventing rust

1. Preventing rust on the non-coated exterior areas
   To prevent rust on the non-coated exterior areas, apply antirust agent on them following the instructions below.
   (1) Areas that need antirust treatment
   The installation surface to the mother machine, the threaded section for connection, and the non-coated areas of the pipe port section or other sections
   (2) Applying method
   Apply agent once with a brush.
   (3) Recommended antirust agent
   Brand:NOX-RUST 366-30
   Manufacturer: Parker Industries, Inc.

2. Preventing rust on the interior areas of the piston motor and the reduction gear
   To prevent rust on the interior areas, spray vaporizing antirust oil on them following the instructions below.
   (1) Areas that need antirust treatment
   The oil paths in the piston motor including valves, the inside of the piston motor case, and the inside of the reduction gear
   (2) Spots to be sprayed
   The oil paths in the piston motor including valves: Main port (P1, 2)
   The inside of the piston motor case: Oil drain port (T)
   The inside of the reduction gear: Either the reduction gear lubricating oil feed/drain or the level port
   (3) Amount to be sprayed
   The oil paths in the piston motor including valves: 2 cc
   The inside of the piston motor case: 4 cc
   The inside of the reduction gear: 4 cc
   (4) Recommended vaporizing antirust oil
   Brand: APORRY VC200
   Manufacturer: SAN-AI OIL Co., Ltd.

https://truckmanualshub.com/

10. Names for Motor Sections

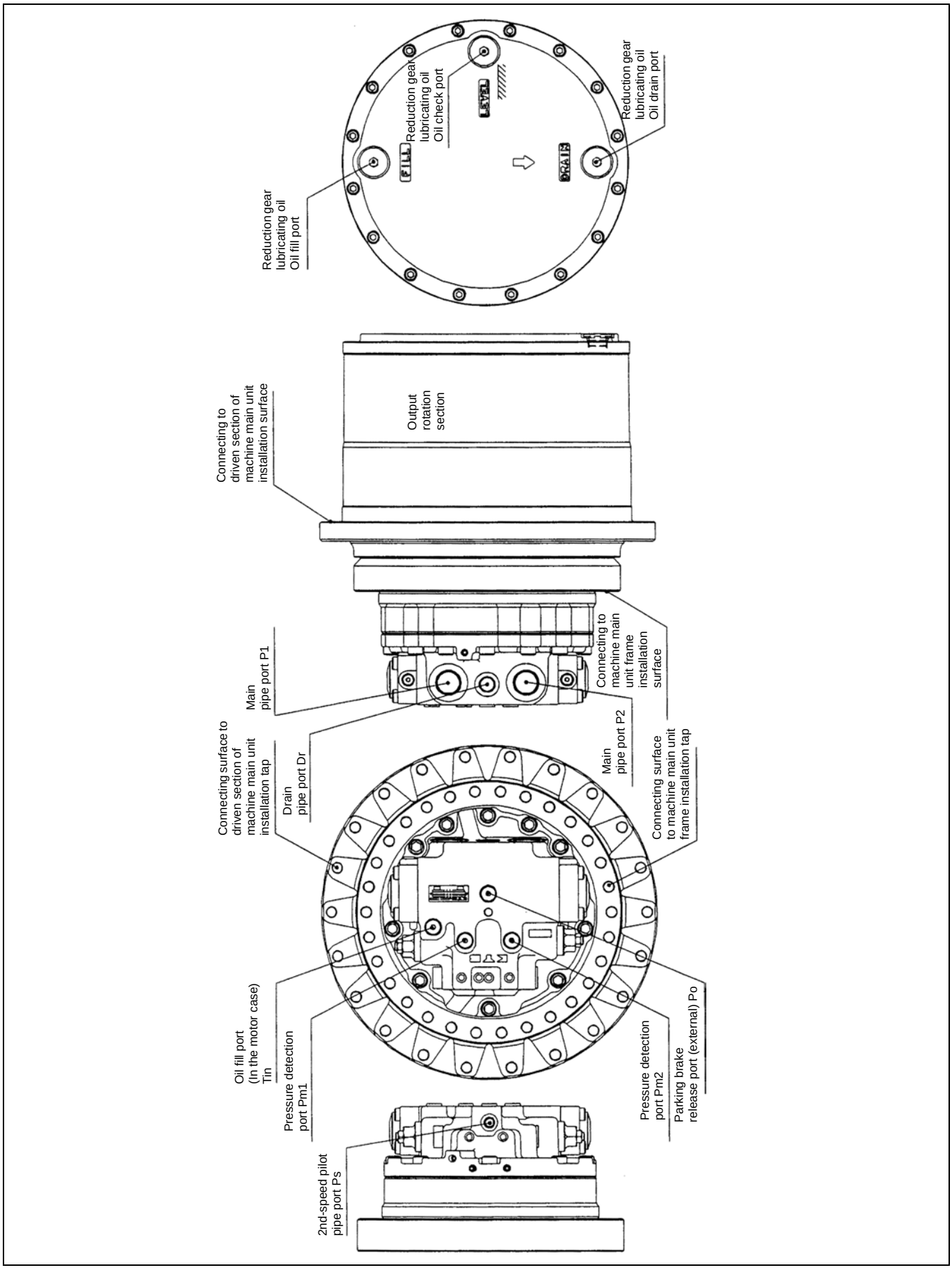

Figure 22. Names for motor sections

https://truckmanualshub.com/

11. Motor Installation

[1] Motor inspection

Before installing the motor on the mother machine, check the following items and apply the indicated solutions if there is any problem.

Table 11. Motor Inspection before Installation and Solutions for Problems

Items to be Checked before Installation	Solutions for Problems	
	When installing the motor after purchase	When installing the motor that has been stored after a maintenance check
Are there any damaged parts?	For parts damage during shipping, contact the following address. For parts damage during storage, replace the damaged parts with new ones.	Replace the damaged parts with new ones.
Are there any missing parts?	For parts missing during shipping, contact the following address. For parts missing during storage, purchase new ones.	Purchase new ones.
Have any bolt tightening sections not been loosened?	If any bolt has been loosened immediately after purchase, contact the following address and then retighten it to the specified torque. If any bolt has been loosened after storage, there may be rust on the inside. Contact the following address.	If any bolt has been loosened, disassemble the motor again to check for rust on the inside.
Dirt on the ports	If any pipe port is dirty, clean it by blowing it with compressed air, a high pressure jet, or vapor to remove the dirt.	If any pipe port is dirty, clean it by blowing it clean it by means of air blow with compressed air, a high pressure jet, or vapor to remove the dirt.
Are all port sections completely sealed?	Immediately after purchase: If any port plug has been loosened, remove dirt on the port before starting to use. If there is a port that does not have a plug, dirt may have entered inside. Contact the following address. After storage: There may be rust on the inside. Contact the following address.	If any port plug has been loosened or if there is a port that does not have a plug, disassemble the motor to check inside for dirt and rust.
Is there any rust on the port sections and the installation surface to the mother machine?	If there is any rust, contact the following address.	If there is a small amount of rust, remove the rust and use the motor. If there is a large amount of rust, replace the parts.
Oil leaking from the port sections and the joint surface	If there is oil leaking, contact the following address.	If there is oil leaking, there may be a problem relating to the sealing performance and rust may have occurred inside. Disassemble the motor again to check inside for rust.

https://truckmanualshub.com/

[2] Selecting pipes

1. Pipe size

When selecting pipes, check and determine the type of the hydraulic oil, temperature, maximum pressure, whether surge pressure is produced or not, maximum flow, and piping length to achieve full hydraulic circuit functions.
Use steel pipes for pressure piping and precision steel pipes for hydraulic piping. If equipment that involves position changes is included, use rubber hoses.
Select pipe size based on Table 12 "Required Pipe Size" and Table 13 "Required Flow Velocity in the Pipe".

Table 12. Required Pipe Size

Pipe Port Name	Pipe Size
Inflow port (P1 or P2)	1" or higher
Outflow port (P1 or P2)	1" or higher
Oil drain port (T1 or T2)	1/2" or higher
2nd-speed switching pilot port (Ps)	1/4" or higher

Do not use a pipe smaller than the size shown in the table. Otherwise, abnormally high pressure or other problems may occur.

Table 13. Required Flow Velocity in the Pipe

Position in a Pipe	Required Flow Velocity (m/s)
High pressure circuit	5.0 m/s
Low pressure return circuit	1.5 m/s
Pump suction circuit	1.0 m/s

In particular, when the piping length is large and the temperature of the hydraulic oil is low, pressure loss by flow will be large. In that case, a problem may have been caused. Choose larger pipes and reduce the flow velocity to minimize pressure loss.
For a drain pipe, select pipe size with which drain pressure in the motor oil drain port section does not exceed the tolerance range shown in Table 14.
For the low pressure return piping, select pipe size with which back pressure in the motor outflow port (P1 or P2) section will be equal or less than 2.0 MPa.

Table 14. Drain Pressure Tolerance Range

	Drain Pressure Tolerance Range
Normal use	0.2 MPa max.
Instant maximum	0.5 MPa max.

https://truckmanualshub.com/

2. Pipe wall thickness

It is important that the pipes can bear the maximum operating pressure including surge pressure. Therefore, select pipe wall thickness that complies with safety ratio 5 or higher for maximum pressure in the system including surge pressure. If your ship or other vessel specifies different safety factor, observe it.

[3] Motor transport

When transporting the motor, always use a crane or carrier.
Motor weight: About 290 kg

Important

- Lifting the motor by the hands may cause damage to your back or injury.
- When lifting the motor with a crane, use the eye bolts and the fixing taps on the fixed side frame installation surface of the machine main unit of the motor as shown in Figure 23.

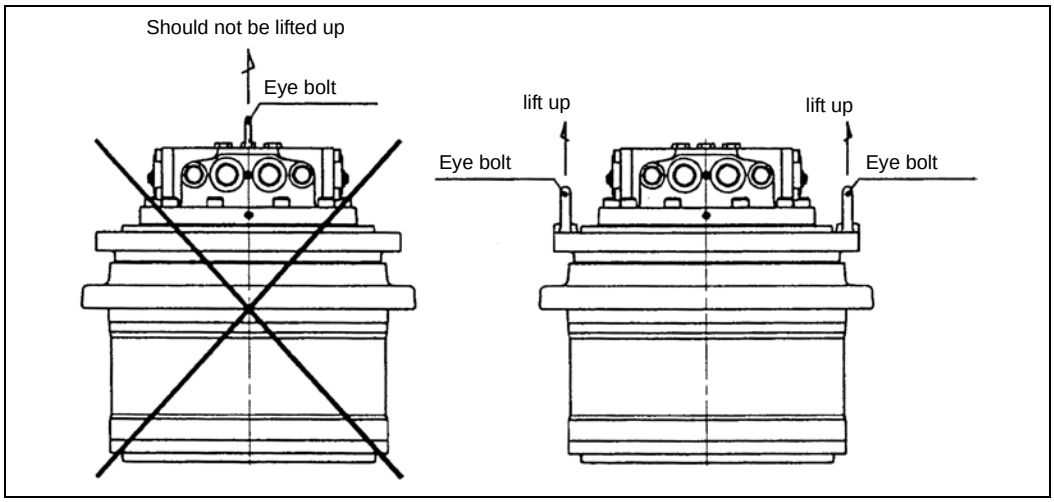

Figure 23. Hanging up the motor with a crane

https://truckmanualshub.com/

[4] Installation to the machine main unit

When installing the motor to the machine main unit, make sure that the pipe ports of the motor are in the correct orientation as shown Figure 24. Do not install the motor vertically to the ground.

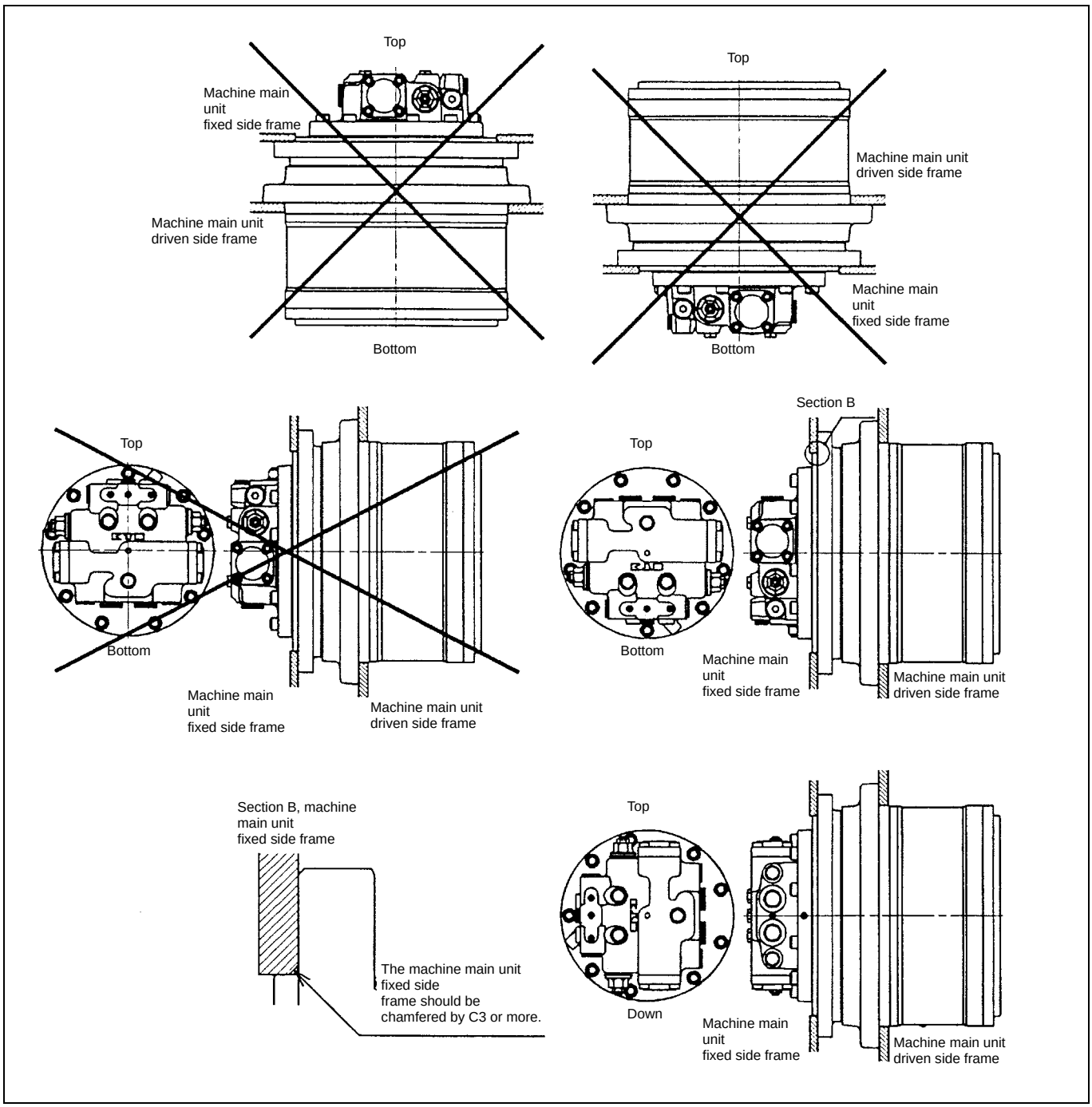

Figure 24. Installation to the machine main unit and the orientation of the motor pipe ports.

To install the motor to the machine main unit, mount the main unit frame on the fixed side installation surface and fasten the frame and the motor with bolts. Use a tightening torque that complies with the specifications defined by the manufacturer of the machine main unit.

https://truckmanualshub.com/

[5] Driven section installation

This motor employs a direct drive system where the motor drives the driven section directly. Therefore, the driven section should be directly mounted on the rotation side installation surface and tightened with bolts. Use a tightening torque that complies with the specifications defined by the manufacturer of the machine main unit.

Important Keep in mind the following guidelines when installing the driven section:

I. The eccentric amount between the motor rotation section and the driven shaft should be 0.1 mm (FIR) or less.

II. An external force working on the motor should not exceed the value shown in Table 2.

III. The working position of an external load on the motor should not exceed the range shown in Table 19.

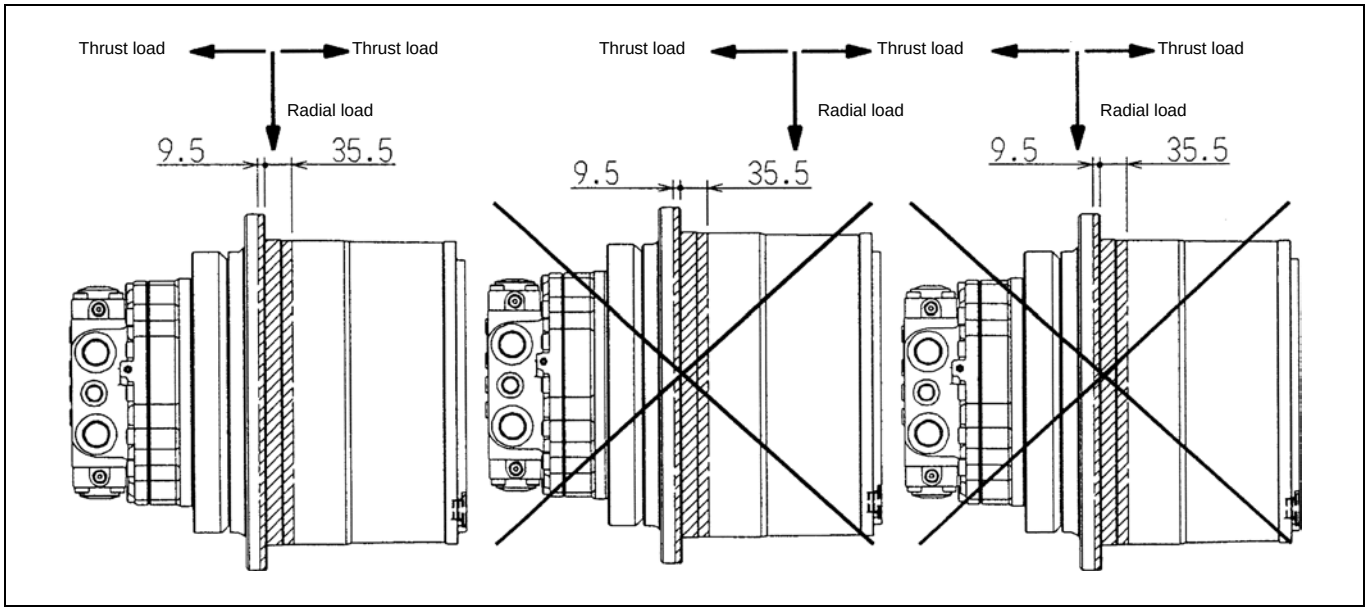

https://truckmanualshub.com/

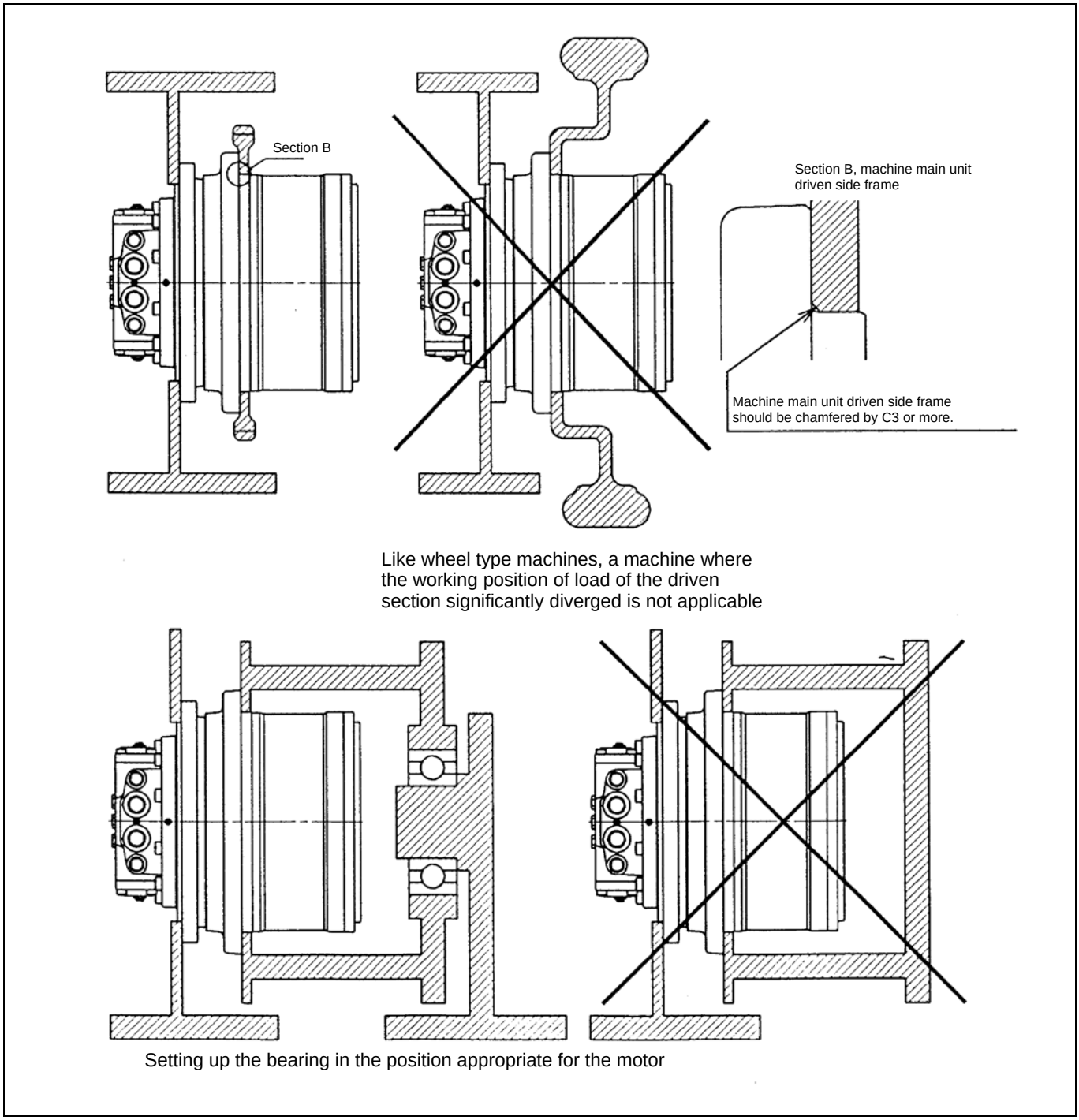

Figure 25. Installation of the machine main unit driven section

https://truckmanualshub.com/

[6] Pipe installation

1. Piping and the motor rotation direction

Before performing piping, make sure the motor rotation direction determined by the combination of the inflow port and the outflow port for hydraulic oil. Table 15 and Figure 26 show the motor rotation direction determined by the combination of the inflow port and the outflow port for hydraulic oil.

Table 15. Motor Rotation Direction Determined by the Combination of the Inflow Port and the Outflow Port for Hydraulic Oil

Hydraulic Oil Inflow Port	Hydraulic Oil Outflow Port	Motor Rotation Direction (Rotation direction viewed from →)
P1 port	P2 port	C direction (clockwise direction)
P2 port	P1 port	A direction (anticlockwise direction)

Important If the pipes are incorrectly installed, the motor will rotate in the unintended, opposite direction, creating a highly dangerous situation. Make sure to check the pipe port positions and the motor rotation direction before carrying out piping.

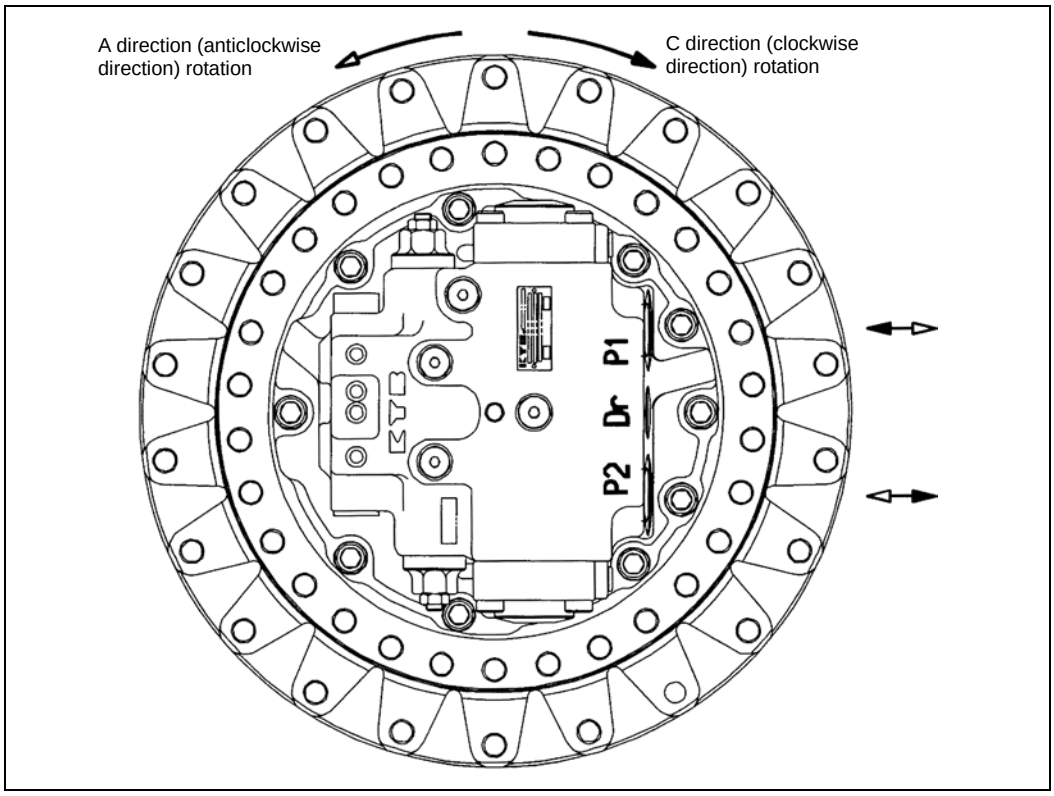

Figure 26. Motor rotation direction determined by the combination of the inflow port and the outflow port for hydraulic oil

https://truckmanualshub.com/

2. Positional relationship between the motor and the hydraulic tank

On valves such as the piston motor valves and the double counter balance valve, there are slight leaks from their slits. Therefore, leaving the motor stopped for a long period of time may cause the hydraulic oil to leak from and air to accumulate in the motor circuit or the hydraulic circuit. Air in the circuit may cause a malfunction such as runaway phenomena upon starting of the motor after a long period of neglect. To prevent such an accident, place the hydraulic tank above the hydraulic motor in order for the hydraulic oil not to leak from the circuit.

Important If the hydraulic tank needs to be placed below the motor due to space or other limitations, make sure to set up a self-supply circuit and fill it with hydraulic oil before running the motor.

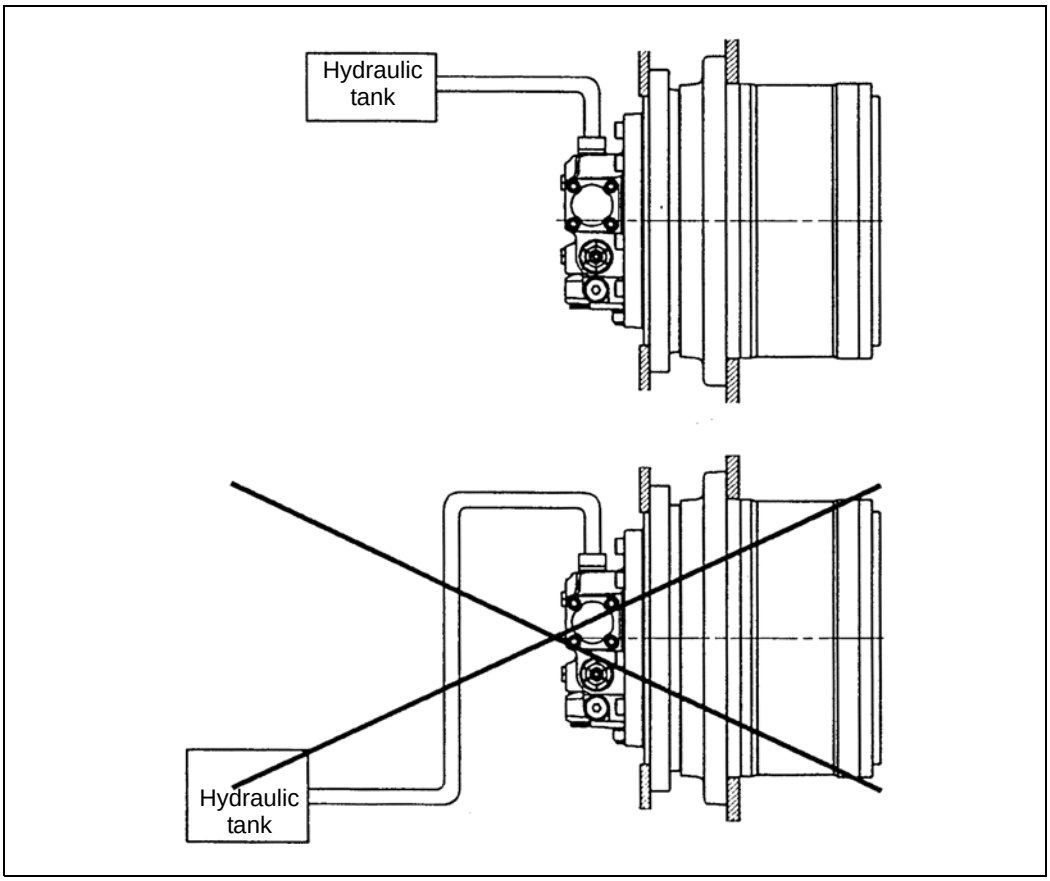

Figure 27. Positional relationship between the motor and the hydraulic tank

https://truckmanualshub.com/

3. Piping configuration

1) Main pipe

Set up the main pipe of the motor in the horizontal position or in the upright position. (See Figure 28). If the pipe is set up below the horizontal position and left stopped for a long period of time, the hydraulic oil may leaks from and air may accumulate in the motor circuit, causing aeration or cavitation resulting in a malfunction such as runaway phenomena on starting the motor.

2) Drain pipe

The piston motor case must always be filled with hydraulic oil. Therefore, If there are two oil drain ports, use the upper one for drain piping (See Figure 28). If there is only one oil drain port, use it for piping.

Important

Be sure to perform drain piping. Failing to do so may cause the following problems due to rising pressure in the motor case:

1. Parking brake cannot be released due to the pressure in the motor case. In this case, brake dragging will occur, causing fatal damage to the parking brake functions.
2. The pressure rise in the motor case will cause damage to the oil seals and fatal damage to the piston motor section.

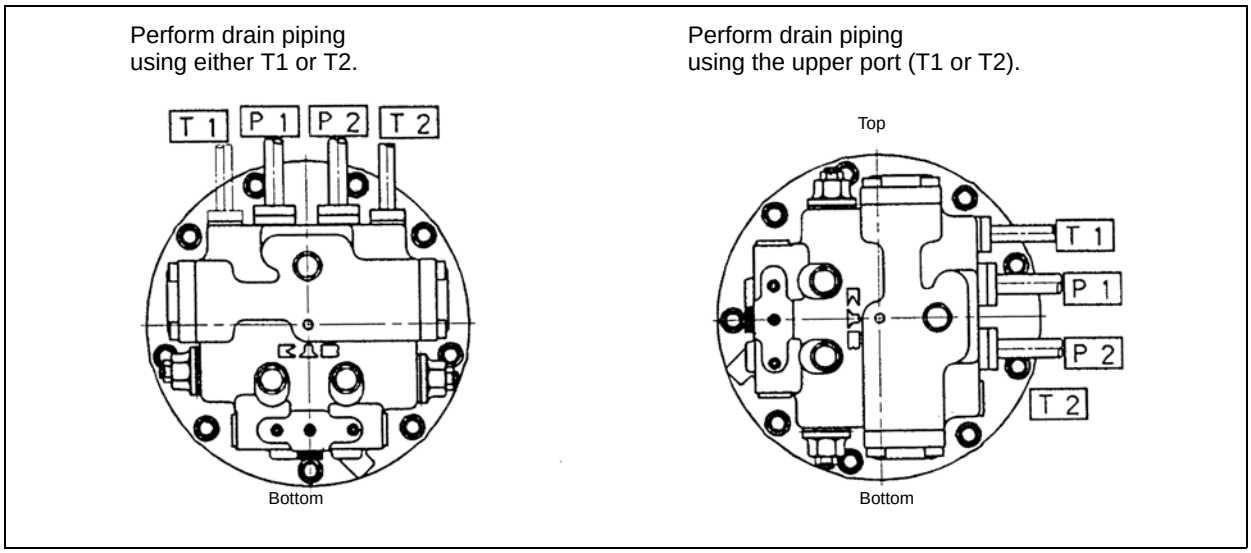

Figure 28. Piping to the motor

https://truckmanualshub.com/

3) Piping work

The piston motor is sensitive to foreign matter in the hydraulic oil. Therefore, acid wash inside the pipes to thoroughly eliminate the foreign matter such as scales in the pipes before starting piping work. Be careful not to let any foreign matter, such as dust and sand, enter into the piston motor from pipe port section during piping work.

Make sure to tighten each pipe with a torque specified in Table 16. If there are specifications defined by the manufacturer of the machine main unit, follow them.

Table 16. Tightening Torques for Pipe Ports

Pipe Port Name	Port Size	Specified Tightening Torque
Port P1 and P2	PF3/4	372±20 N•m
Port T1 and T2	PF1/2	92.2±3.9 N•m
Port Ps	PF1/4	22.6±1.0 N•m

After piping work, flush inside the pipe line.

12. Operation Check

After installing the new motor or the motor that had a maintenance check to the machine main unit and completing the piping work, perform an operation check using the following procedure before production run.

[1] Preparation for operation check

1. Feeding hydraulic oil into the piston motor case

Before performing an operation check, feed about 500 cc of hydraulic oil from the oil drain port of the piston motor into the piston motor case to prevent initial failure that could occur at the sliding sections of the piston motor.
If a hand pump or a low capacity electric pump is used for feeding, then the pressure in the piston motor case should be 0.3 MPa or lower.

2. Checking the reduction gear lubricating oil

Use the feed, drain, and oil check port shown in Figure 23 to make sure that the specified amount of lubricating oil is in the reduction gear case.

How to check the amount of the lubricating oil in the reduction gear of the new motor
Remove the plug form the oil check port for lubricating oil and check to see whether the lubricating oil flows off.
If the oil flows off, put the plug on the port and tighten to the specified torque.
If the oil does not flow off, open the oil fill port and feed reduction gear lubricating oil until the oil flows from the oil check port. After oil feeding, put the plugs on the feed and oil check port and tighten to the specified torque.
Caution
As the lubricating oil, a given amount (3.5 L) of diamond hypoid gear oil 90 from Mitsubishi Oil has been fed by the factory setting.

https://truckmanualshub.com/

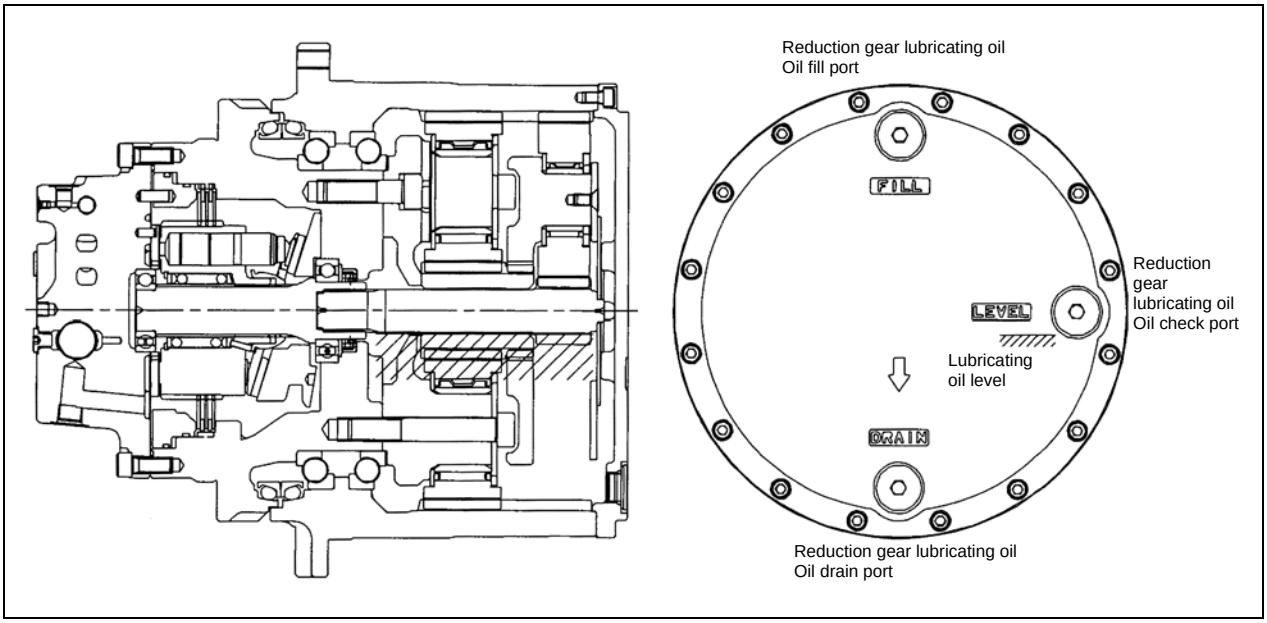

Figure 29. Feed, drain, and check ports for the reduction gear lubricating oil and specified oil amount

[2] Operation check for the motor

Following the instructions in the operator's manual for the machine main unit, slowly operate the machine and bleed off air from the motor circuit and the pipes.Start with a low speed rotation and repeat the operation of "C direction rotation, stop, A direction rotation, and stop" several times to check the operation. At this point of time, abnormal noise may come from valves or other parts due to the air left in the circuits but while repeating the operation at low speed, the air will be bled out and the noise will be stopped. If the abnormal noise stops and does not start again after repeating operations, then there is no problem and the motor can be used. If the abnormal noise does not stop after repeating operations, replace the motor because there may be a problem with it.

Check for any oil leaking from the motor, the pipe port sections, the pipe parts, and the equipment. If there is any oil leaking, tighten the bolts and pipe connections from which oil is leaking to the specified torque again.

After completing this check, rise the pressure for under-load operation and confirm that there is no abnormal noise or vibration coming from the motor.

Important

- If there is oil leaking and pipes or other parts need to be tightened, make sure to stop the operation of the hydraulic equipment before starting the work.
- Oil leaking should be checked for while the motor is under low pressure. If the pressure on the motor is high and there is oil leaking, oil blowing out will occur, resulting in a dangerous situation.

https://truckmanualshub.com/

13. Production Run

[1] Starting the motor

Start the motor by following the instructions for the machine main unit.

[2] Managing temperature of the hydraulic oil during a production run

During a production run, pay attention to the temperature of the hydraulic oil. When the temperature of the hydraulic oil becomes too high, deterioration of the oil will be accelerated and a malfunction or breakdown of the hydraulic equipment will be caused. Therefore, during continuous operation, keep the temperature of the hydraulic oils between -10 and +80°C. However, if the cumulative running time with above 80°C is within 100 hours, the motor can operate at up to 95°C.

Important When cumulative running time at over 80°C has reached 100 hours, be sure to replace the motor seal.

[3] Managing lubricating oil temperature during a production run

During a production run, the temperature of the lubricating oil will rise due to gear meshing, oil agitation, and parts sliding in the reduction gear. Running with high-temperature lubricating oil for a long period of time will cause earlier deterioration of the oil, shorter gear and bearing lives, and deterioration of the seal. Therefore, during continuous operation, keep the temperature on the surface of the reduction gear between -10 and +80°C (lubricating oil temperature: between -10 and +90°C).However, if the cumulative running time with a lubricating oil temperature of above 90°C is within 100 hours, the reduction gear can operate at up to 100°C.

Important When cumulative running time at over 90°C has reached 100 hours, be sure to replace the reduction gear seal.

https://truckmanualshub.com/

14. Maintenance and Inspection

Perform maintenance and inspection of the motor regarding the following items, as long as the motor has no problem in operation.

[1] Pre-operation Inspection

Perform a pre-operation inspection before starting the motor by using the information in Figure 30 and Table 17.

Table 17. Items and Tasks of a Pre-operation Inspection and Solutions

Inspection Item	Inspection Task	Solution
Oil leak from pipe parts	Clean the pipe port section and check for oil leak from the section.	If there is oil leaking, check to see whether the pipe ports have been tightened. If they have not been sufficiently tightened, tighten the pipe ports to the specified torque. In addition, check the oil amount in the hydraulic oil tank by following the instructions for the machine main unit. If the pipe ports are tightened enough, replace the pipe connections by following the instructions for the machine main unit.
Oil leak from alignment surface	1. Piston motor Clean the alignment surfaces of the piston motor (see Figure 24) and check for oil leak.	If there is oil leaking, check to see whether the bolts on the alignment surfaces are tightened. If the tightening is not enough, tighten bolts to the specified torque. In addition, check the amount of oil in the hydraulic oil tank by following the instructions for the machine main unit. If the bolts are tightened enough, disassemble the motor and replace the seal by following the maintenance procedures.
	2. Reduction gear Clean the alignment surfaces of the reduction gear (see Figure 24) and check for oil leak.	If there is oil leaking from the cover, remove the cover and apply liquid packing again by following the maintenance procedures. If there is oil leaking from the other parts, check the tightening for the parts. If the tightening is not enough, tighten them to the specified torque. If they are tightened enough, replace the seal. Check the amount of the lubricating oil in the reduction gear.
Leak of reduction gear lubricating oil	Clean the reduction gear floating seal section and check for oil leak.	If there is oil leak from the floating seal section, disassemble the reduction gear and replace the floating seal by following the maintenance procedures.

https://truckmanualshub.com/

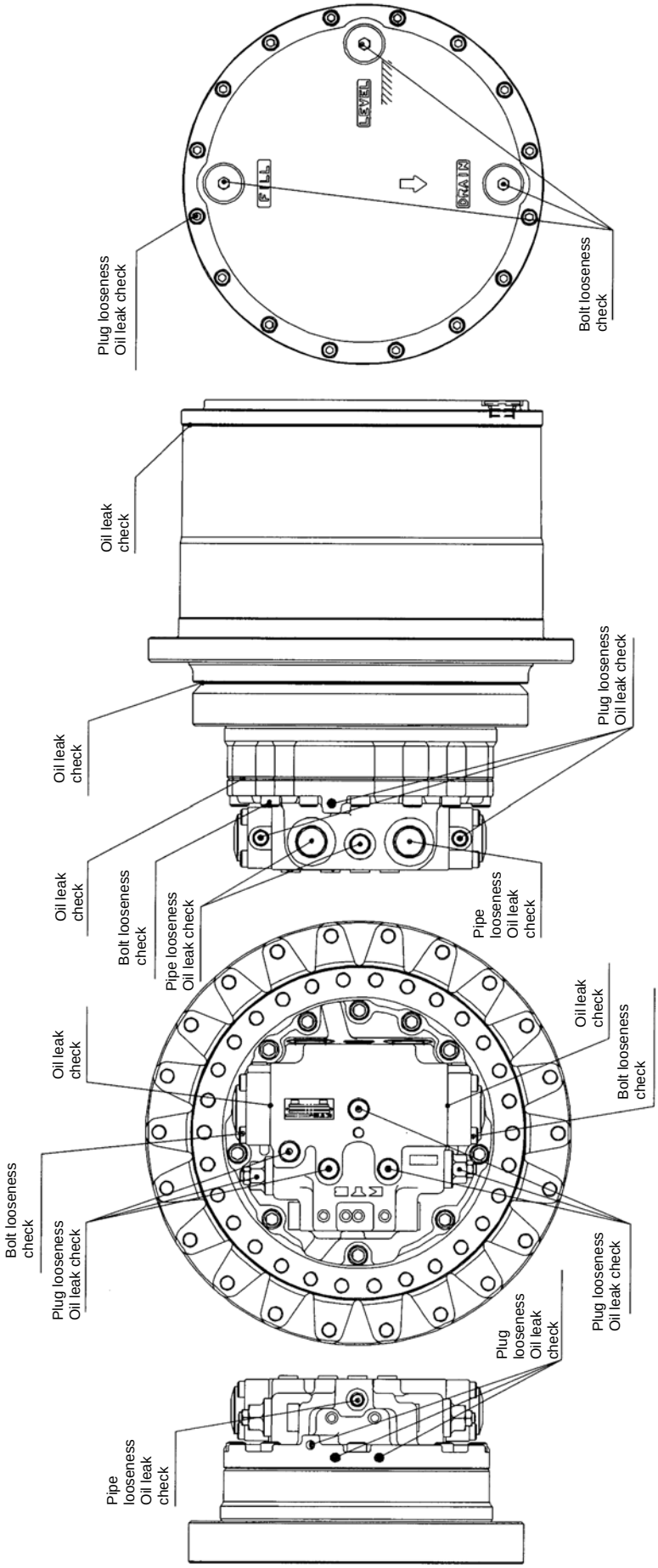

Figure 30. Points to be inspected before operation

https://truckmanualshub.com/

[2] Routine inspection

Important

- When starting routine inspection, make sure to stop the operation of the hydraulic device.
- Do not start inspection immediately after stopping the operation of the hydraulic device. During operation of the hydraulic device, the temperatures of the hydraulic oil and the hydraulic equipment rise. Therefore, touching the hydraulic oil and the hydraulic equipment immediately after operation can cause burns.

1. Routine inspection of temperature of the hydraulic oil

By nature, the hydraulic oil in the hydraulic device gradually deteriorates over time as it is used. In addition, once deterioration starts, it accelerates, which shortens the operation life of the hydraulic device and can cause more accidents. Therefore, for longer operation life of hydraulic device and trouble prevention, regularly check the deterioration of the hydraulic oil and replace the oil accordingly by following the instructions below.

◆ Initial replacement

During the operation of a new hydraulic device, sediments such as sludge is settled in the circuits and the tank. When hydraulic oil that has these sediments flows in the hydraulic device, the device may be damaged. Therefore, replace the hydraulic oil after around 500 hours have passed since the initial running.

◆ Regular check and hydraulic oil replacement

Then, regularly check the deterioration of the hydraulic oil at an interval of around 500 hours and replace the oil accordingly.

◆ Check method and replacement standards

There are two methods to check the deterioration of the hydraulic oil: an appearance check where the deterioration is judged from its appearance and property test where the deterioration is judged by analyzing the oil. For either method, to judge the condition of the oil, the used oil is compared with new oil.

◆ Appearance check

Perform an appearance check as part of a routine inspection performed at an interval of 500 hours.
This method involves the following procedure: Sample hydraulic oil from the hydraulic oil tank in operation and put it into a test tube. Sample hydraulic oil again after stopping the operation of the hydraulic device and waiting for 24 hours. By this time, oil should be sampled from about 5 cm above from the bottom of the tank. Then compare it with new oil. Table 18 shows how to judge from the appearance.

Table 18. How to Judge from the Appearance

Appearance	Smell	Condition	Solution
Transparent and no color change	Good	Good	Continue to use the oil
Transparent but light color	Good	Different oil is mixed	Check viscosity. If good, continue to use the oil.
Turned to milky white	Good	Water bubble or moisture is included	Separate the moisture (hydraulic oil manufacturer)
Turned to blackish brown	Bad	Deteriorated by oxidation	Replace the hydraulic oil
Transparent and has small black spots	Good	Foreign matter is included	Filter the oil and then use it

◆ Property test

Perform a property test as part of a routine inspection performed at an interval of 1000 hours.
In this test, the hue, specific gravity, ignition point, viscosity, and oxidation are measured. Because this test is difficult to perform in the field, it is recommended to sample 1 L of the hydraulic oil and ask the oil manufacturer or an analysis company to judge it.
Just for reference, Table 19 shows possible changes in hydraulic oil properties and their causes but actions to be taken, such as reuse or replace the oil, should be determined based on the results of a property test.

Table 19. Possible Changes in Hydraulic Oil Properties and their Causes

Properties	Changes Due to Deterioration and Contamination	Causes and Investigation Items
Specific gravity	Up	Deterioration of the hydraulic oil, inclusion of different oil
Ignition point	Drop	Deterioration of the hydraulic oil, inclusion of different oil
Hue	Darker and less transparent	Oxidation of the hydraulic oil, emulsification due to moisture inclusion, inclusion of metal powder
Viscosity	Up or down	Up by deterioration of the hydraulic oil, down by flushing oil or other substances
Oxidation	Up	Temperature rise of the hydraulic oil, inclusion of metal powder
Demulsification	The degree of vapor emulsification is up	Deterioration of the hydraulic oil
Antifoam	More bubbling, bad babble	Wear of the additive agent, deterioration of the hydraulic oil

◆ Cautions for the hydraulic oil replacement

When replacing the hydraulic oil, be careful not to leave the deteriorated oil and sludge or other sediments in the circuit and the tank. They can contaminate to the new oil. The same applies to a dirty filter. Therefore, when replacing the hydraulic oil, make sure to do all of these at the same time: cleaning the hydraulic tank, flushing the circuit, and replacing the filter.

2. Routine inspection of the filter

Many contaminating particles attach to the hydraulic device before and during installation of it, and dirt is produced by wear and cavitation during operation. In addition, foreign matter in the air comes in through the air breather or from the seal section of the cylinder rod. Because these dirt and foreign matter are removed by the filter, the filter element is getting dirty over time as the hydraulic device is used. When the filter element clogs, the filter performance decreases and the filter eventually becomes useless. Therefore regular inspection and replacement are necessary.
The filter should be replaced after 50 hours have passed since starting using the hydraulic device. After that, perform routine inspection at an interval of 250 hours, and replace the filter if it is severely clogged.
Note that if a filter that has no differential pressure indicator with which clog state of the element can be determined from outside is employed, replace the element after 50 hours have passed since starting using the hydraulic device. After that, replace the element every 250 hours.

https://truckmanualshub.com/

3. Routine inspection of the reduction gear lubricating oil

By nature the lubricating oil in the reduction gear gradually deteriorates over time as it is used. In addition, metal powder gradually accumulates in the lubricating oil due to the wear of the gear and the sliding sections in the reduction gear. Deterioration and foreign matter accumulation shorten the operation life of the reduction gear and cause more accidents. Therefore, to maintain the performance of the reduction gear for a long period of time, regularly inspect and replace the reduction gear lubricating oil.

Important Do not perform a routine inspection or replacement of the lubricating oil immediately after stopping the motor. The high temperatures of the reduction gear and the lubricating oil after running can cause burns. A routine inspection or replacement should be performed after three hours have passed since stopping the running.

Important Do not loosen the plugs for feed, drain, and inspection of the lubricating oil immediately after running. During running, the temperatures of the reduction gear and the lubricating oil rise and the air in the reduction gear expands. Therefore, when loosening any plug, hot lubricating oil can blow out, causing burns or blindness if it gets into the eye. In addition, the expanding air can pop out the plugs, causing injury or blindness if they hit the eyes.
When loosening the plugs, make sure to confirm that the temperature of the reduction gear is low and follow the procedure below:

1. Confirm the temperature of the reduction gear is low enough.

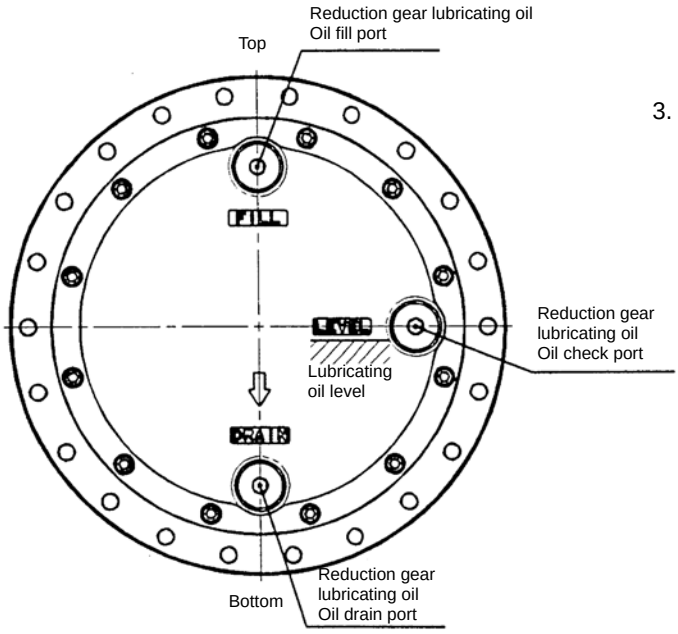

2. Align the positions of feed, drain, and check ports for the lubricating oil.

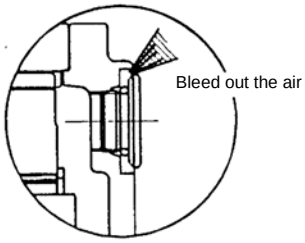

3. Loosen the oil fill port by turning around it twice to bleed out the air.

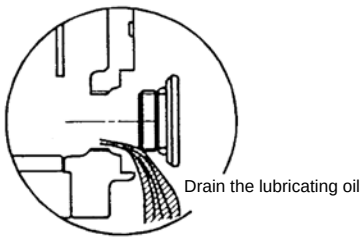

4. Slowly loosen the plug of the oil drain port to drain the lubricating oil.

https://truckmanualshub.com/

◆ Replacement timing for the reduction gear lubricating oil

Reduction gear lubricating oil deteriorates over time as it is used and as metal powder enters it due to the wear of the gear and sliding sections. Therefore, periodically replace the reduction gear lubricating oil according to the numerical indication shown in Table 20.

Table 20. Replacement Timing for the Reduction Gear Lubricating Oil

	Replacement Timing
Initial replacement	100 - 250 hours
Second time replacement	1000 - 1500 hours

When replacing the lubricating oil, be careful not to leave the deteriorated oil or metal powder in the reduction gear. They can be contaminants to the new oil. Therefore, before replacing the lubricating oil, thoroughly flush the inside of the reduction gear to remove the residual oil and metal powder.

◆ Routine inspection of the reduction gear lubricating oil

The degree of the deterioration of the reduction gear lubricating oil also depends on the operation environment and the operation frequency. Therefore, regularly inspect the lubricating oil in addition to the replacement described above.

As a way of performing a routine inspection, it is recommended to ask the lubricating oil manufacturer or an analysis company to analyze the used lubricating oil and comprehensively judge from the measured results of viscosity, total oxidation, iron, etc.

Table 21. Replacement Indication from the Results of Analysis

viscosity Change %	Total Oxidation	Heptane Insoluble Matter	Iron %
±15	>2.0	>0.5	>0.1

4. Routine inspection of the motor

Using the motor for a long period of time will cause parts to wear and may result in performance degradation or failure. Keep logs about the routine inspection of the hydraulic oil and the reduction gear lubricating oil. If the property values of the oil indicate abnormal rise in the amount of foreign matter or if there is unusual foreign matter, disassemble and inspect the motor.

In addition, disassemble and inspect the motor when the running time of it reaches 1000 hours or the number of start and stop times reaches 300000. Follow the maintenance procedures when disassembling and inspecting the motor. In particular, refer to the descriptions about wear of the parts including the parking brake disk in the maintenance procedures to replace the parts.

The parking brake disk should be replaced when the number of action times reaches 300000.

◆ Disassembly and inspection of the motor

Follow the maintenance procedures when disassembling and inspecting the motor. Follow the maintenance standards described in the maintenance procedures when inspecting the motor during disassembly. Be sure to replace the seals when disassembling the motor.

Important Follow the instructions for the machine main unit when removing the motor from the machine. Remove the pipes after stopping the operation of the hydraulic device and release the air pressure in the tank to make the pressure equal to the atmospheric pressure.

https://truckmanualshub.com/

<Company that can conduct property test for your routine inspection of the hydraulic oil and the reduction gear lubricating oil>
An affiliate of KYB Co., Ltd., Japan Analist Co., Ltd. conducts oil analysis.

Routine inspection and replacement timing

- Pre-operation Inspection
  Pipe looseness
  Bolt looseness
  Oil leaking

- Hydraulic oil

Initial replacement		500 hours
Routine inspection	Appearance check	Every 500 hours
	Property test	Every 1000 hours

- Filter

Initial replacement	50 hours
Routine replacement	Every 250 hours

- Reduction gear lubricating oil

Initial replacement	100 - 250 hours
Routine inspection	Every 1000 hours
Routine replacement	1000 - 1500 hours

- Motor

Routine inspection		Every 1000 hours
Seal replacement		During routine inspection When the cumulative running time at over 80°C has reached 100 hours
Parking brake disk replacement		After the brake has been operated 300000 times and depends on the maintenance procedures
Bearing replacement	Motor bearing	Depends on the maintenance procedures
	Needle bearing for the reduction gear	Depends on the maintenance procedures
	Angular bearing	Depends on the maintenance procedures
Other parts		Depends on the maintenance procedures

https://truckmanualshub.com/

15. Troubleshooting

If any kind of trouble occurs during a motor running, use the following troubleshooting information to investigate it and take countermeasure actions for it.

[1] Troubleshooting for piston motor

Trouble Description	Possible Cause	Countermeasure and Solution
Motor does not rotate.	Malfunction has occurred with equipment other than the piston motor and the reduction gear.	Check whether pressure has reached to the intake side of the motor and then inspect and repair the motor by identifying the causes of problems and countermeasures for it for each piece of equipment.
	The motor itself has a problem and the operation section is clogged up with dirt causing malfunction.	Disassemble and clean the unit to remove dirt and re-assemble it. If any part has been damaged by dirt, replace it.
	Pressure on the intake side of the motor is low.	Use the main relief of the circuit to rise the set pressure.
	The sliding section of the piston motor has abnormally worn and the pressurized oil is escaping.	Disassemble the unit to replace the abnormally worn part. Remove any scratches or burr on the surface, clean the part, and re-assemble the unit.
	The main part of the piston motor is damaged. In this case, abnormal noise comes from the piston motor.	Disassemble the unit to replace the damaged part. Clean the part, and re-assemble the unit.
	Too much load on the piston motor causes the relief valve to operate.	Investigate the load condition and adjust the load to the set pressure of the relief valve.
The rotation speed of the motor is not enough.	Due to a problem with hydraulic pump, the pressure control valve, the flow control valve, or other parts, the specified amount of flow does not enter into the piston motor, resulting in the insufficient rotation speed.	Check whether the specified amount of flow providos into the piston motor and then inspect and repair the motor by identifying the causes of problems and countermeasures for it for each piece of equipment.
	Wear of the sliding section of the piston motor causes the pressurized oil to flow from high-pressure side to low-pressure side (reduce volume efficiency), resulting in the insufficient rotation speed.	Disassemble the piston motor to check the wear state of the sliding section and repair or replace it by following the maintenance procedures.
	A loosened tightening bolt on the base plate of the piston motor increases internal leakage and results in the insufficient rotation speed.	Retighten the tightening bolt on the base plate to the specified torque.

https://truckmanualshub.com/

Trouble Description	Possible Cause	Countermeasure and Solution
The motor has a great rotation fluctuation.	A worn sliding section of the piston motor causes high-pressure oil to flow out from the oil drain port and the extremely reduced rotation speed results in the rotation fluctuation.	Disassemble the unit to check the wear state of the sliding section and repair or replace it by following the maintenance procedures.
	A hunting occurred at the double counter balance valve when going down a slope results in the rotation fluctuation.	Disassemble the unit to check the wear state of the double counter balance valve and repair or replace it by following the maintenance procedures.
Loud noise	The shaft axial alignment may have a problem and the driven part touching the shaft generates noise.	Precisely align the shaft axis.
	A worn or damaged bearing, spring, or other part of the piston motor generates noise.	Disassemble the unit to replace the damaged bearing, spring, or other part. Clean the parts and re-assemble the unit.
Oil leak	A loosened bolt on the alignment surface or other place causes oil leak.	Retighten the tightening bolt to the specified torque.
	A damaged oil seal, O-ring, packing, or other seal causes oil leak.	Disassemble the unit to replace the seal. Check the temperature of the hydraulic oil. When the temperature of the hydraulic oil in operation is above 80°C, review the cooler and reduce the temperature of the hydraulic oil to below 80°C.
	A worn sliding section of the piston motor increases drain volume and the damaged oil seal causes oil leak.	Disassemble the unit to check the wear state of the sliding section and repair or replace it by following the maintenance procedures. Replace the oil seal. Clean the part, and re-assemble the unit.
	A clogged or long and narrow drain pipe rises the drain pressure and the damaged oil seal causes oil leak.	Disassemble the unit to replace the oil seal. Clean the drain pipe to remove any foreign matter. Review the piping system and reduce the pipe line resistance.

https://truckmanualshub.com/

Trouble Description	Possible Cause	Countermeasure and Solution
Abnormal noise, rotation fluctuation, or pressure fluctuation occurs due to cavitation.	The volume of the hydraulic oil in the hydraulic tank has been reduced and air taken in it causes aeration.	Check the amount of the hydraulic oil in the hydraulic tank and feed hydraulic oil by following the instructions for the machine main unit.
	Improper orientation of the motor installation or improper position of the hydraulic tank causes hydraulic oil to bleed from the motor pipes or circuit while the hydraulic device stops operation and aeration occurs in the motor immediately after starting the motor.	Check the orientation of the motor installation and reinstall the motor in the correct orientation. Make sure that the oil level in the hydraulic tank is in an upper position than the motor. Change the position to the correct one. Alternatively, set up a self-supply circuit so that the motor circuit and the pipes will be filled with hydraulic oil.
	When pumping action occurs in the piston motor, malfunction of the double counter balance valve causes vacuum on the intake side and results in cavitation.	Disassemble the unit to repair or replace the double counter balance valve by following the maintenance procedures.
Motor rotation stopped during running.	Too much load caused the engine to stall.	Review load conditions and correct the value.
	Scorching on the sliding section of the piston motor causes the motor rotation to stop.	Refer to the specifications (especially for flow and motor speed). If the motor speed exceeds the limit, reduce the flow. Because the inside of the motor may be non-reusable state, replace the motor.

https://truckmanualshub.com/

[2] Troubleshooting for parking brake

Trouble Description	Possible Cause	Countermeasure and Solution
While the motor is stopped with an external load on it, the motor rotates.	A worn disk reduces the torque of the parking brake.	Disassemble the unit to replace the parking brake disk. Clean the part, and re-assemble the unit.
	Contact defect or other problem deteriorates the disk surface and reduces the parking brake torque.	Disassemble the unit to replace the disk. In addition, repair the surface of the counterpart of the disk and re-assemble the unit.
	A fatigued or damaged spring reduces the parking brake torque.	Disassemble the unit to replace the spring. Clean the part, and re-assemble the unit.
	The external load is too much for the parking brake capacity.	Review the external load and correct the value.
Motor drive force is not delivered. The motor section is abnormally hot.	A damaged O-ring causes the pressurized oil to escape and the parking brake cannot be released.	Disassemble the unit to replace the O-ring. Clean the part, and re-assemble the unit.
	A clogged orifice of the oil path for parking brake release prevents the pressurized oil from entering to the parking brake cylinder chamber and the parking brake cannot be released.	Disassemble the unit to remove the foreign matter in the orifice. Clean the part, and re-assemble the unit. In addition, flush inside the pipe.
	A clogged or long and narrow drain pipe rises the drain pressure and the parking brake cannot be released.	Clean the drain pipe. In addition, review the piping system and reduce the pipe line resistance.

https://truckmanualshub.com/

[3] Troubleshooting for relief valve

Trouble Description	Possible Cause	Countermeasure and Solution
Motor does not rotate. Or, the rotation is slow.	Foreign matter gotten in between the poppet seat and the poppet of the relief valve causes seat defect and high pressure oil leaks to the low-pressure side.	Disassemble the unit to remove the foreign matter. Clean the part, and re-assemble the unit.
	A broken spring of the relief valve causes the high pressure oil to leak to the low-pressure side.	Replace the relief valve. Disassemble the motor to clean the parts and re-assemble it.
	A fatigued spring of the relief valve reduces the set pressure and a relief operation occurs at a low pressure.	Replace the relief valve.
	Foreign matter gotten into the seat section between the free piston and the base plate of the relief valve reduces the set pressure.	Uninstall the relief valve to remove the foreign matter.
	A clogged orifice set to the poppet of the relief valve reduces the set pressure.	Uninstall the relief valve to remove the foreign matter.
Motor does not stop. Or, it takes a long time to stop.	Foreign matter gotten in between the poppet seat and the poppet of the relief valve causes seat defect and the relief valve cannot close.	Disassemble the unit to remove the foreign matter. Clean the part, and re-assemble the unit.
	The spring of the relief valve is broken and the relief valve cannot close.	Replace the relief valve. Disassemble the motor to clean the parts and re-assemble it.
	A fatigued spring of the relief valve reduces the set pressure and the brake capacity is lowered.	Replace the relief valve.
	Foreign matter gotten into the seat section between the free piston and the base plate of the relief valve reduces the set pressure and the brake capacity is lowered.	Uninstall the relief valve to remove the foreign matter.
	A clogged orifice set to the poppet of the relief valve reduces the set pressure and the brake capacity is lowered.	Uninstall the relief valve to remove the foreign matter.
Big shock occurs when stopping running.	Foreign matter gotten into the sliding section of the poppet prevents the poppet from moving.	Replace the relief valve.
	Foreign matter gotten into the free piston prevents it from moving.	Uninstall the relief valve to remove the foreign matter and re-assemble it.
	The set pressure of the relief is too high.	Replace the relief valve.

https://truckmanualshub.com/

[4] Troubleshooting for counter balance valve

Trouble Description	Possible Cause	Countermeasure and Solution
Motor does not rotate. Or, the rotation is slow.	Pressurized oil has not reached to the intake of the motor and the plunger does not switch.	Check whether pressurized oil has reached to the intake side of the motor and then inspect and repair the motor by identifying the causes of problems and countermeasures for it for each piece of equipment.
	Pressure has reached to the intake of the motor but a clogged orifice of the pilot oil path prevents the plunger from switching.	Measure the pressure on the return side of the motor circuit to make sure that the pressure has risen. Disassemble the unit to remove the foreign matter. Then re-assemble the unit.
	Foreign matter gotten into the plunger prevents it from switching.	Disassemble the unit to remove the foreign matter. Check the degree of the damage by following the maintenance procedures. If it is still usable, re-assemble it. If there is a serious damage, replace it by using the base plate kit.
Motor does not stop. Or, it takes a long time to stop.	Foreign matter gotten into the plunger prevents it from recovering and the brake capacity is lowered.	Disassemble the unit to remove the foreign matter. Check the degree of the damage by following the maintenance procedures. If it is still usable, re-assemble it. If it is no longer usable, replace it by using the base plate kit.
	A broken spring of the plunger prevents it from recovering and the brake capacity is lowered.	Disassemble the unit to remove the foreign matter and then replace the spring.
	A clogged orifice of the pilot oil path prevents the plunger from recovering or makes it take longer time to recover.	Disassemble the unit to remove the foreign matter. Then re-assemble the unit.
	No spring is set in the plunger.	Assemble a spring appropriately.
	No check valve is set in the plunger.	Assemble a check valve appropriately.
	The spring of the check valve is damaged.	Disassemble the unit to remove the foreign matter and then replace the spring.
	No spring is set in the check valve.	Assemble a spring appropriately.
External load works on the motor and rotation fluctuation arises when a pumping action is performed.	Foreign matter gotten into the plunger prevents it from moving smoothly.	Disassemble the unit to remove the foreign matter. Clean and re-assemble the unit.
	The orifice bore of the pilot oil path is wrong.	Assemble an appropriate orifice in the pilot oil path.
	No orifice is set in the pilot oil path.	Assemble an orifice in place.

https://truckmanualshub.com/

Trouble Description	Possible Cause	Countermeasure and Solution
External load works on the motor and cavitation and abnormal noise occur when a pumping action is performed.	Foreign matter gotten into the plunger prevents it from moving smoothly and providing counter balance function.	Disassemble the unit to remove the foreign matter. Check the degree of the damage by following the maintenance procedures. If it is still usable, re-assemble it. If it is no longer usable, replace it by using the base plate kit.
	The spring of the plunger is damaged and the counter balance function is not provided.	Disassemble the unit to remove the foreign matter, replace the spring, and re-assemble the unit.
	No spring is set in the plunger and the counter balance function is not provided.	Assemble a spring appropriately.
	The spring of the check valve is damaged and the counter balance function is not provided.	Disassemble the unit to remove the foreign matter and then replace the spring.
	No spring is set in the check valve and the counter balance function is not provided.	Assemble a spring appropriately.
	The orifice of the pilot oil path is clogged with foreign matter and the counter balance function is not provided.	Disassemble the unit to remove the foreign matter and re-assemble it.

https://truckmanualshub.com/

[5] Troubleshooting for 2nd-speed control function section

Trouble Description	Possible Cause	Countermeasure and Solution
Does not switch to the high-speed rotation.	Pilot pressure oil has not reached to Ps port.	Check whether pilot pressurized oil has reached to the Pa port and then inspect and repair the motor by identifying the Causes of problems and countermeasures for it for each piece of equipment.
	Foreign matter gotten into between the spool and the base plate prevents the spool from switching.	Disassemble the unit to remove the foreign matter. Check the degree of the damage by following the maintenance procedures. If it is still usable, re-assemble it. If it is no longer usable, replace it by using the base plate kit.
	Abnormal wear in the 2nd-speed control piston section causes pressurized oil leak in the case.	Disassemble the unit to replace by using the flange holder kit.
	No 2nd-speed control piston is set.	Assemble a 2nd-speed control piston in place.
	A clogged orifice of the 2nd-speed oil path prevents pressurized oil from reaching to the 2nd-speed control piston.	Disassemble the unit to remove the foreign matter and re-assemble it.
It switches to the high-speed rotation but switches to the low-speed rotation when the temperature of the hydraulic oil rises.	Abnormal wear in the 2nd-speed control piston section causes pressurized oil leak in the case.	Disassemble the unit to replace by using the flange holder kit.

https://truckmanualshub.com/

Does not switch to the low-speed rotation.	The pressure of the Ps port dose not decrease after setting the speed control switch to low speed.	Make sure that the pressure of the Ps port is 0.5 MPa or less and review the piping system.
	The spring of the 2nd-speed valve is damaged.	Disassemble the unit to remove the foreign matter and then replace the spring.
	No spring is set in the 2nd-speed control valve.	Assemble a spring in place.
	Foreign matter gotten into between the spool and the base plate prevents the spool from returning.	Disassemble the unit to remove the foreign matter. Check the degree of the damage by following the maintenance procedures. If it is still usable, re-assemble the unit. If it is no longer usable, replace it by using the base plate kit.
	A clogged orifice of the 2nd-speed oil path prevents the pressure in the 2nd-speed piston chamber from being released.	Disassemble the unit to remove the foreign matter and re-assemble it.
	A fatigued spring of the 2nd-speed valve reduces the switchover pressure.	Disassemble the unit to replace the spring.
It switches to the low-speed rotation but switches to the high-speed rotation during running.	A clogged pilot pipe causes leak from 2nd-speed control valve and the pilot pressure rises to the switchover pressure.	Clean the inside of the pipe to remove the foreign matter. In addition, review the piping system.

https://truckmanualshub.com/

[6] Troubleshooting for reduction gear

Trouble Description	Possible Cause	Countermeasure and Solution
No rotation.	Malfunction has occurred with equipment other than the piston motor and the reduction gear.	Check whether pressure has reached to the intake side of the motor and then inspect and repair the motor by identifying the causes of problems and countermeasures for it for each piece of equipment.
	Malfunction has occurred with the motor except the reduction gear.	See the above-mentioned troubleshooting 1 through 5.
	A load that exceeds the motor output torque is working on the motor.	Check the load working on the motor and remove it.
	The angular bearing of the reduction gear is damaged and does not rotate.	Replace the reduction gear. Check whether too much external load is working on it. If so, remove the load.
	The gear in the reduction gear is damaged and does not rotate.	Replace the reduction gear.
	The bearing in the reduction gear is damaged and does not rotate.	
	The spline in the reduction gear is damaged and does not rotate.	
Abnormal noise comes from the reduction gear during running.	The gear in the reduction gear is damaged.	Replace the reduction gear.
	The bearing in the reduction gear is damaged.	
	The sliding section of the reduction gear has worn and interference has occurred among the parts.	Disassemble the unit to check the damage. If damaged, replace the reduction gear. If it is not damaged, replace the worn parts. Clean the reduction gear and re-assemble it.
The attachment section of the reduction gear is abnormally hot.	The reduction gear lubricating oil is not enough.	Check whether there is any oil leak point. Disassemble the reduction gear to check internal damage. If damaged, replace the reduction gear. Feed the specified amount of lubricating oil.
	The reduction gear lubricating oil is too much.	Adjust the amount of the lubricating oil to the specified amount.
	The bearing in the reduction gear is damaged.	Replace the reduction gear.
	Wrong selection of a thrust plate causes abnormal thrust load in the reduction gear.	Disassemble the reduction gear to check internal damage. If damaged, replace the reduction gear. If not damaged, replace the thrust plate with one with appropriate thickness.

https://truckmanualshub.com/

Trouble Description	Possible Cause	Countermeasure and Solution
There is oil leaking.	A loosened tightening bolt on the reduction gear cover causes oil leak.	Remove the cover to apply liquid packing again and then tighten the cover to the specified torque. Feed the specified amount of lubricating oil.
	A loosened plug of the feed, drain, or oil check port on the reduction gear cover causes oil leak.	Retighten the plug to the specified torque. After that, feed the specified amount of lubricating oil.
	A deteriorated O-ring of the feed, drain, or oil check port on the reduction gear cover causes oil leak.	Replace the O-ring of the plug. After that, retighten the plug to the specified torque and feed the specified amount of lubricating oil.
	cracks on the housing causes oil leak.	Replace the reduction gear.
	Foreign matter gotten into the sliding surface of the floating seal causes oil leaking.	Disassemble the unit to remove the foreign matter from the floating seal and re-assemble it.
	Corrosion on the sliding surface of the floating seal causes oil leak.	Disassemble the reduction gear to replace the floating seal.
	A deteriorated or damaged O-ring of the floating seal causes oil leaking.	
	A cracked seal collar of the floating seal causes oil leak.	

https://truckmanualshub.com/

16. Motor Repair Kit

See the attached parts list for the content of the repair kit.

5-2 Lower Mechanism: Travel Drive Unit

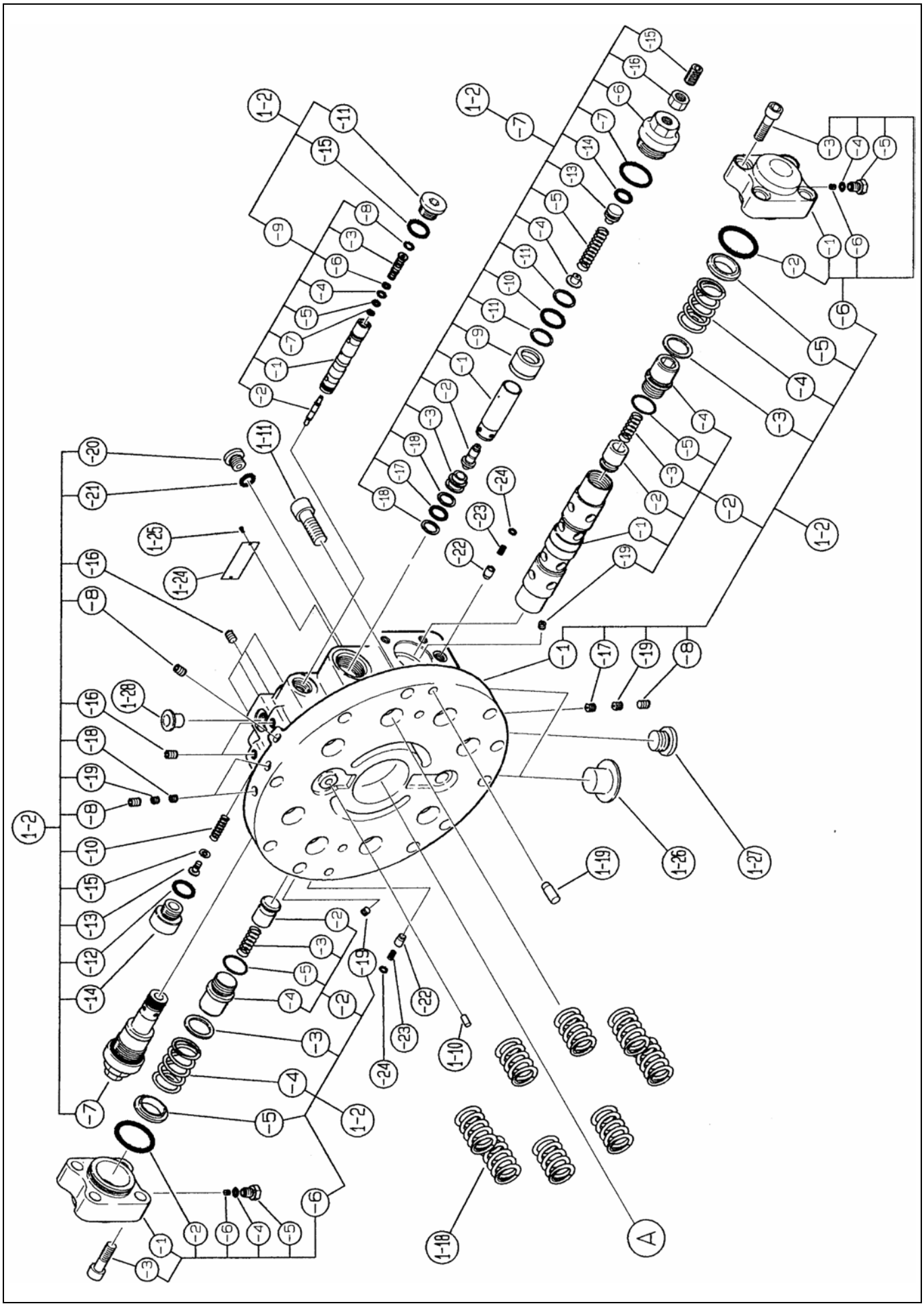

https://truckmanualshub.com/

5-2 Lower Mechanism: Travel Drive Unit

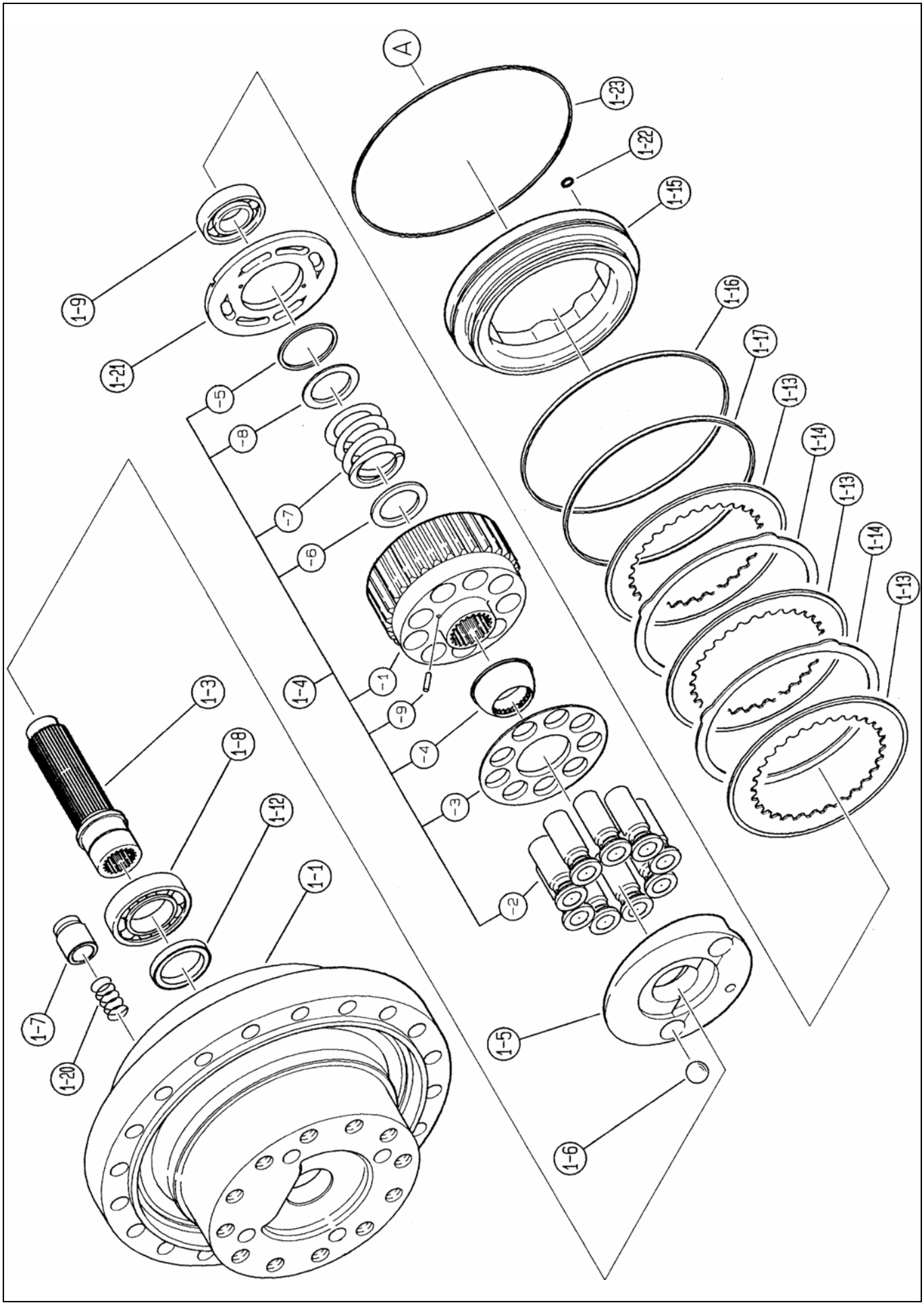

5-2 Lower Mechanism: Travel Drive Unit

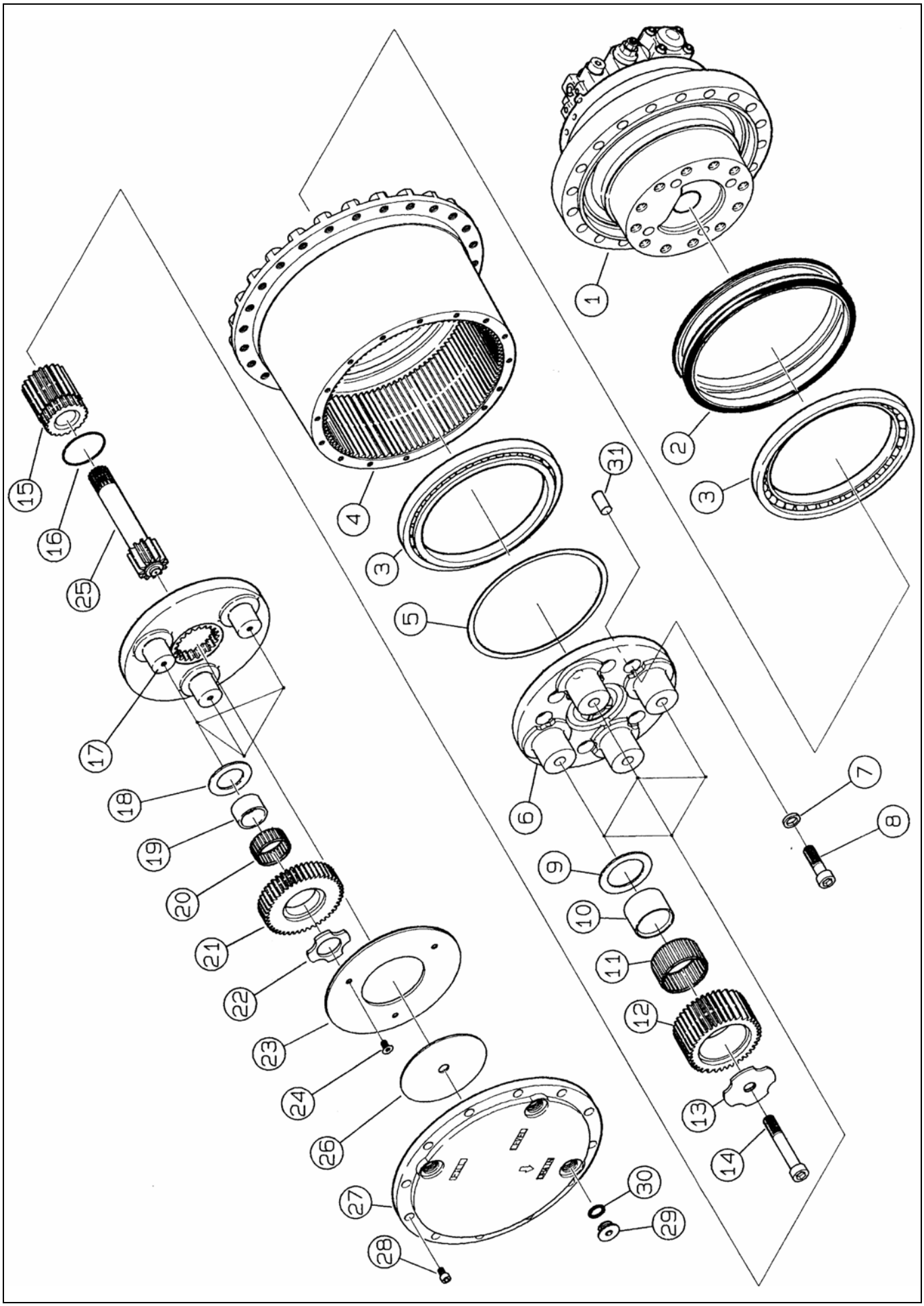

5-2 Lower Mechanism: Travel Drive Unit

3 Travel Motor Operator's Manual

1. Foreword

This manual provides instruction for handling the swash plate-type piston motor with case rotation type reduction gear for the open circuit MAG-170VP-3800E series. This manual helps first-time users to understand handling issues as well as assists experienced users to review the swash plate-type piston motor with case rotation type reduction gear for the open circuit manufactured by KYB Co., Ltd. Read this operator's manual well and come to an understanding of its contents before operating the motor. It is recommended that users keep this manual ready at hand during operation.

This manual mainly explains (1) basic functions and component functions, (2) explanation of component operation, (3) operation procedures, (4) troubleshooting, (5) daily maintenance and inspection of the MAG-170VP-3800E series, swash plate-type piston motor with case rotation type reduction gear for the open circuit.

The MAG-170VP-3800E series, swash plate-type piston motor with case rotation type reduction gear for the open circuit produced by KYB Co., Ltd. is the actuator used in the hydraulic unit of the mother machine. Therefore, this operator's manual should be used along with the operator's manual of the mother machine. Always refer to the operator's manual of the mother machine when using this operator's manual.

https://truckmanualshub.com/

2. For Safety Operation

Safety Cautions

Be sure to follow the instructions below:

Warning	Never lift the motor by the tap on the base plate when transporting by crane. Doing so may cause the motor to fall, which may cause personal injury or damage to the machine. 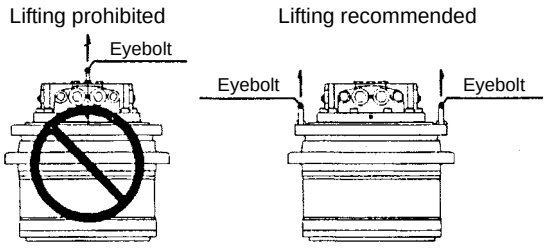

Warning	Always wear a helmet, safety shoes, gloves and protective goggles when disassembling the motor for transportation, installation, maintenance and inspection, etc.

https://truckmanualshub.com/

5-2 Lower Mechanism: Travel Drive Unit

Safety Cautions

Be sure to follow the instructions below:

Warning	Do not run the motor when the hydraulic oil level is low in the hydraulic tank (near the outlet port), or when the hydraulic tank is empty. Doing so may cause air to enter the motor, and the motor may go out of control, which may cause personal injury or damage to the machine. 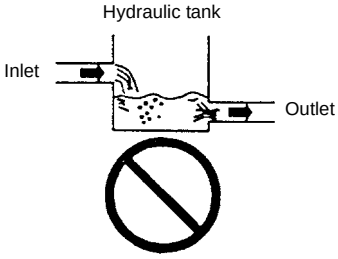

Warning	Do not run the motor when the pipe is empty. Doing so may cause air to enter the motor, and the motor may go out of control, which may cause personal injury or damage to the machine.

Warning	Never remove the oil fill, oil discharge or oil check ports of the reduction gear lubricating oil within 1 hour after the motor has stopped. Doing so may cause high-temperature lubricating oil to squirt out and may cause burns. High-temperature lubricating oil will squirt out and may cause loss of eyesight if it gets into the eyes. 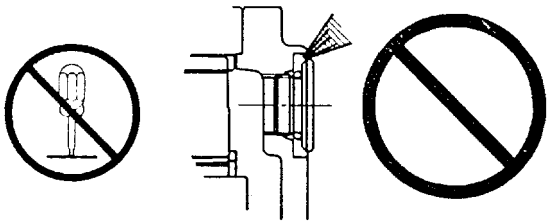

https://truckmanualshub.com/

Safety Cautions

Be sure to follow the instructions below:

Warning	Never remove the pressure detection port or oil drain port when the pipe is pressurized. Doing so may cause pressurized oil to squirt out and may cause loss of eyesight if it gets into the eyes. Always release the pressure inside the pipe to atmosphere level before removing it. 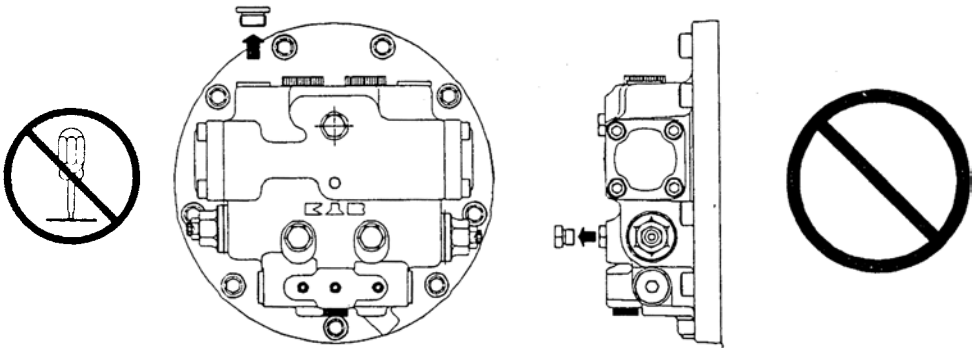
Warning	Do not remove the cover from the reduction gear with the motor attached to the machine body. Doing so may cause your fingers or hands to get pinched causing injury. 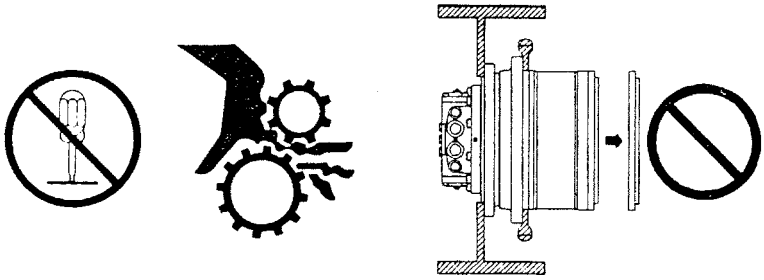
Warning	Do not disassemble the motor with the motor attached to the machine body. Doing so may cause the machine to go out of control resulting in personal injury. Always remove the motor from the machine body before disassembling.

https://truckmanualshub.com/

5-2 Lower Mechanism: Travel Drive Unit

Safety Cautions

Be sure to follow the instructions below:

Warning	Do not remove the spool from the double counter balance valve with the motor attached to the machine body. Doing so may cause the machine to go out of control causing personal injury or damage to the machine. 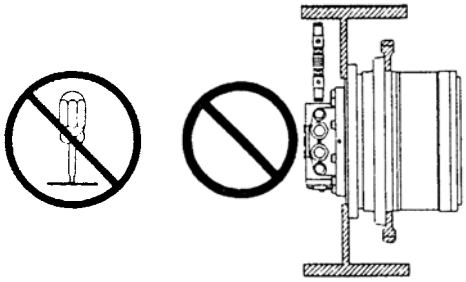

Warning	Never tamper with the relief valve adjuster. Doing so will change the set pressure of the relief valve, and the machine may go out of control causing personal injury or damage to the machine. 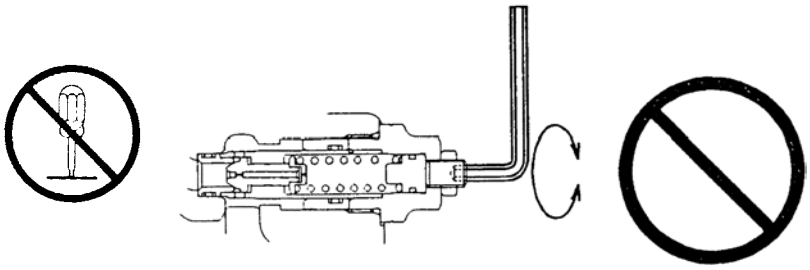

https://truckmanualshub.com/

Safety Cautions

Be sure to follow the instructions below:

Caution	Do not run the motor beyond the specified range. Doing so may cause damage to the machine. 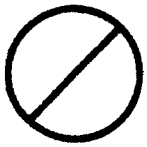
Caution	Never touch the motor within 1 hour after the motor has stopped. The motor surface is very hot as it has been operating. Touching the motor can cause burn injuries. 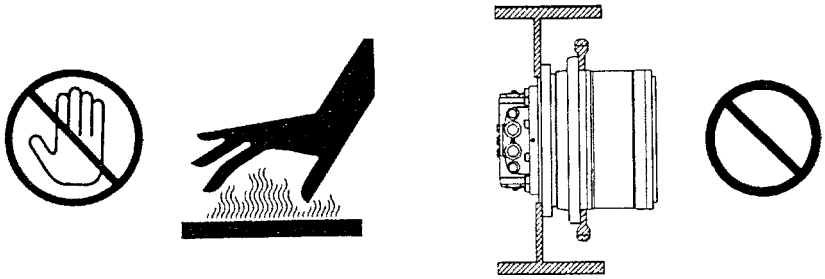
Caution	Never suddenly remove the oil fill, oil discharge or oil check port of the reduction gear. Doing so may cause the plug to pop out, causing injury. Align the ports to the specified positions, and slowly loosen the plugs, starting from the oil fill port on the top, to release the air inside the reduction gear. 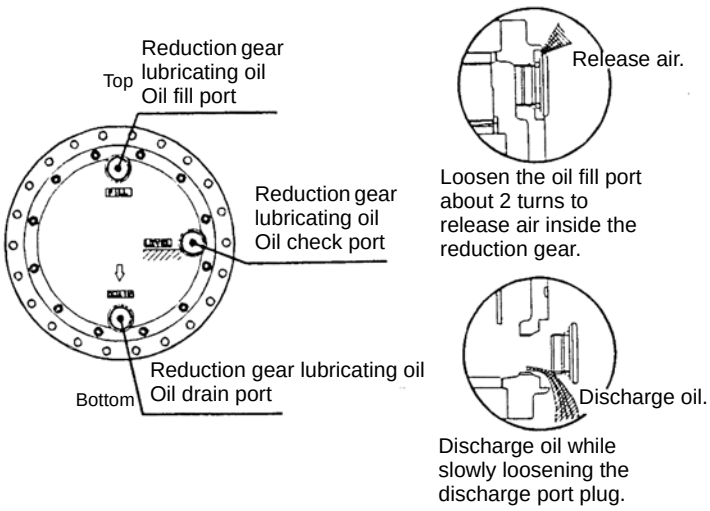

https://truckmanualshub.com/

5-2 Lower Mechanism: Travel Drive Unit

Safety Cautions

Be sure to follow the instructions below:

Caution	When connecting the pipe, make sure that the direction of hydraulic oil flow corresponds to that of the motor rotation. Failure to do so can reverse the motor rotation. 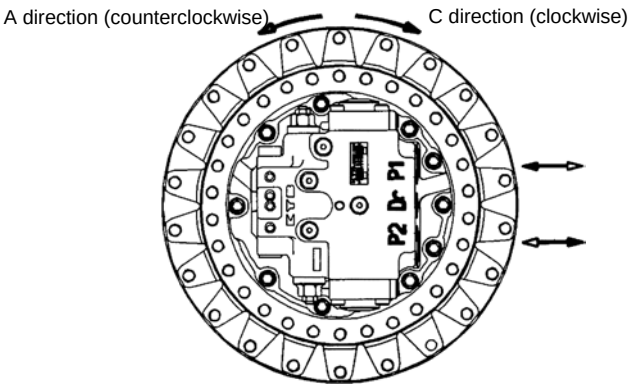

Caution	Use specified hydraulic oil only. Otherwise, the machine may be damaged.

Caution	Use specified hydraulic oil only. Otherwise, the machine may be damaged.

Caution	Do not allow foreign matter to enter inside the motor. Otherwise, the machine will be damaged.

Caution	Wait until the motor cools down before servicing or inspecting the motor.

https://truckmanualshub.com/

3. Purpose of Motor

This motor is exclusive for open circuit. Do not use it for closed circuit.
This motor employs a direct drive. The reduction gear housing (output part) must be directly installed to the driven part of the machine main unit. Also, this motor should be used with a sprocket drive mechanism. Therefore, the driven part must conform to this mechanism. Do not use this motor when the motor installed position is significantly displaced from the load-operating position, or when a large bending moment is applied to the motor from the driven part.
This motor should only be used when the motor shaft is horizontal.
Do not use this motor when the driven part is held horizontal.
This motor can be used storing inside the drum. In that case, install the roller bearing on the side opposite the motor.
Although the double counter balance valve and the parking brake function come equipped with this motor, it cannot be used as a winch.

https://truckmanualshub.com/

4. Motor Specifications

[1] Specifications

Table 1 shows specifications of the motor.

Table 1. Motor Specifications

Equivalent capacity			cm^3/rev	q × i
Motor capacity q	High capacity	q_1	cm^3/rev	129.3 to 181.3
	Low capacity	q_2	cm^3/rev	q_1 × 0.5 or more
Reduction ratio		i		43.246, (50.579)
2nd-speed pilot pressure	Low speed to high speed		MPa	1.5 or more
	High speed to low speed		MPa	0.4 or less
Parking brake			N•m	581 × i
Operating flow			L/min.	270 or less
Operating pressure			MPa	34.3 or less
Surge pressure			MPa	44.1 or less
Number of times operated when the pressure is greater than 34.3 MPa or less than 44.1 MPa			Times	1.20M or less
Rotation speed	Motor shaft	High capacity	rpm	
		Low capacity	rpm	2500 or less
	Reduction gear	High capacity	rpm	
		Low capacity	rpm	60 or less
Output torque			kN•m	37.3 or less
Input horsepower	Normal use		PS	
	Max.		PS	210 or less (30 or less consecutive seconds)
Drain pressure	Normal use		MPa	0.2 or less
	Moment max.		MPa	0.5 or less (0.3M pulse or less)
Mass			kg	250

Important Set the operating conditions within the above specifications. Use beyond the specified range will shorten the motor life.

Table 1 shows general specifications of the motor. Refer to the external shape diagrams at the end of the book for the specifications of individual models.

https://truckmanualshub.com/

[2] Allowable external load

Table 2 shows allowable external load for this motor.

Table 2. Allowable External Load

External Load	Reverse input torque		kN•m	35.3 or less
	Radial load	Normal use	N	111266 or less
		Moment max.	N	222532 or less
	Thrust load	Normal use	N	18152 or less
		Moment max.	N	27228 or less
	Rolling moment	Normal use	N•m	7174 or less
		Moment max.	N•m	10762 or less
	Gravity acceleration			10 G or less
	Vibration		Hz	30 or less

Figure 1 shows the operation range of the external load.

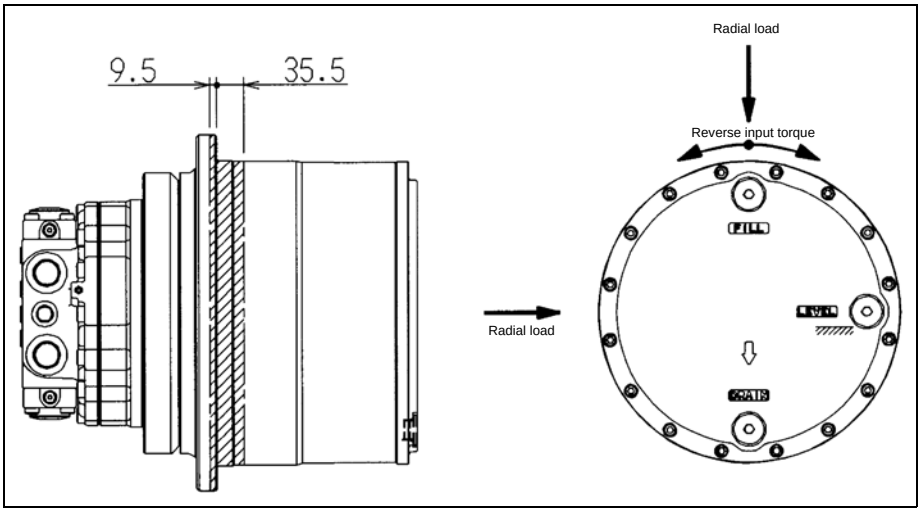

Important The external load must be limited within the allowable load shown in Table 2 within the operating range shown in Figure 1. If the external load exceeds the limit, the reduction gear main bearing will not be able to hold the external load. This may damage the reduction gear, and cause damage to the machine main unit.

https://truckmanualshub.com/

[3] Temperature conditions

1.) Ambient temperature

This motor is intended for use based on -20 to +40°C temperature ranges. For this reason, if the motor is used at ambient temperatures outside this range, degradation of the seals will be accelerated. Should you use the motor at ambient temperatures outside this range, the seals must be changed. Contact us at the address shown in Section 1.

2.) Temperature of the hydraulic oil

The temperature of the hydraulic oil rises as the motor runs. Using the motor for long periods of time when the hydraulic oil is at high temperatures may accelerate the degradation of the hydraulic oil and cause the hydraulic equipment to fail. Run the motor at the temperature of the hydraulic oils within -10 to +80°C.
Also, read "Hydraulic Oil" in Section 7 carefully to learn about controlling the temperature of the hydraulic oil.

3.) Reduction gear lubricating oil temperature

The reduction gear lubricating oil temperature rises as the motor runs and the gear meshes. Using the motor for long periods of time when the lubricating oil is at high temperatures may accelerate the degradation of the lubricating oil and result in a mechanical failure of the reduction gear. Run the motor at the temperature of the lubricating oil within -10 to +80°C.
Also, read "Reduction Gear Lubricating Oil" in Section 8 carefully to learn about controlling the temperature of the reduction gear lubricating oil.

[4] Model code

MAG — 170VP — 3800 E — 1
(1) (2) (3) (4) (5) (6) (7)

1	In-shoe design motor with travel reduction gear
2	Piston motor series
3	2nd-speed function V: With 2nd-speed function
4	Parking brake function P: With parking brake function
5	Output torque
6	Motor type
7	Additional number for design change

https://truckmanualshub.com/

5. Hydraulic Circuits

The hydraulic pump, directional control valve, and pressure control valve are required to operate this motor. This motor is exclusive for open circuit. Figure 2 shows the basic hydraulic circuits. Other items of equipment are connected as necessary to make up the hydraulic circuits. Should you have any questions or require further information about the hydraulic circuits, contact us at the address shown in Section 1.

Important Be sure to observe the instructions of Items 1 - 7 below. Failure to observe the instructions will degrade the performance of the motor. Also, damage or malfunction of the equipment may result.

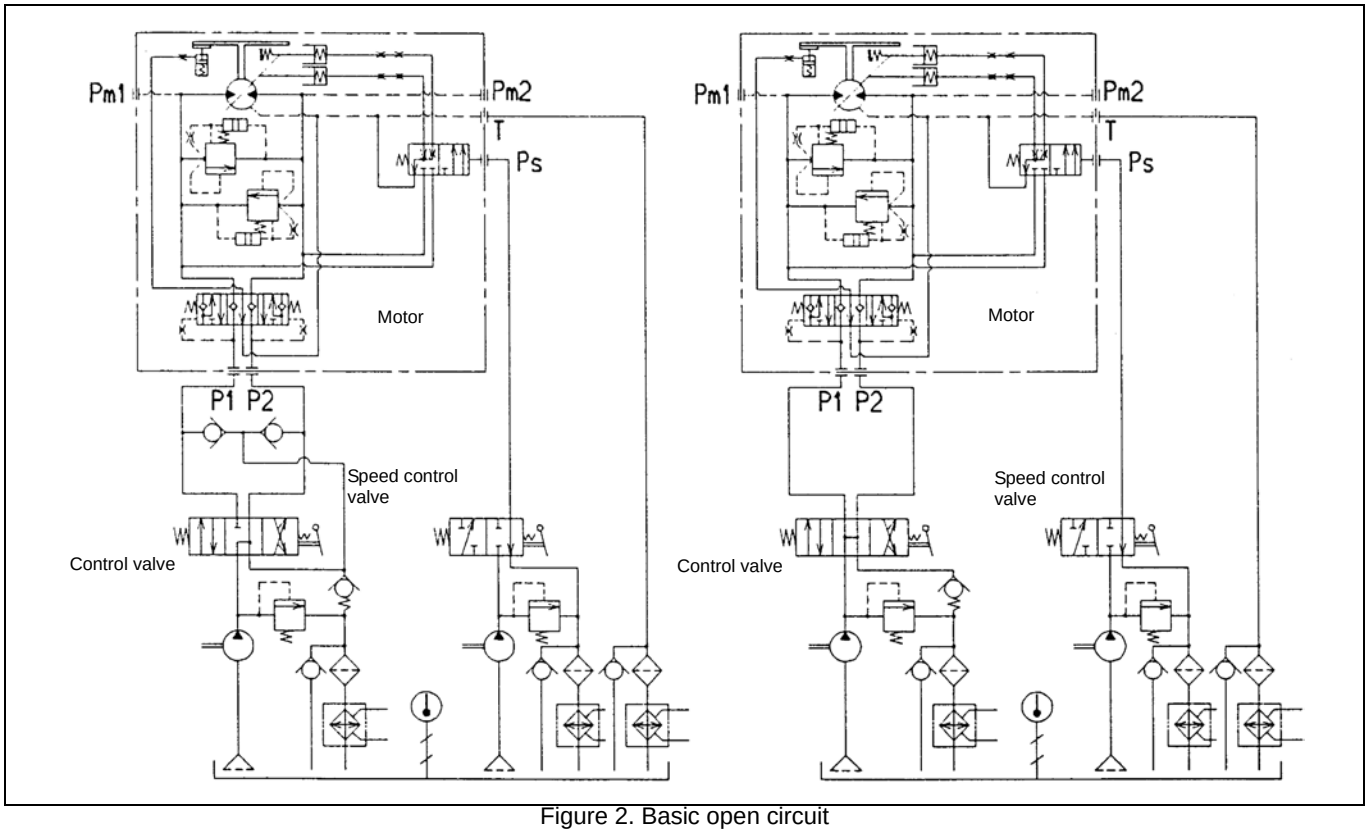

Figure 2. Basic open circuit

https://truckmanualshub.com/

[1] Installation of relief valve

Be sure to provide the relief valve on the discharge circuit of the hydraulic pump in the hydraulic circuits for hydraulic circuit protection. Otherwise, it may cause the pipe to rupture or damage to the hydraulic equipment if the hydraulic equipment is operated abruptly, stopped suddenly, or overload is applied from an external source and the pressure inside the circuit rises. The relief valve on the motor is designed for determining the motor starting force and braking force and is not for hydraulic circuit protection.

[2] Installation of filter and strainer

Be sure to provide a 150-mesh strainer on the suction circuit from the tank and a 10-micron filter on the return charge circuit in the hydraulic circuits. The hydraulic equipment is extremely sensitive to hydraulic oil contamination. Contamination of the hydraulic oil may result in damage or lead to improper operation of the hydraulic equipment, and induce malfunctioning of the machine. To prevent this, it is important to control the contamination level of the hydraulic oil. Read "Hydraulic Oil" in Section 7 carefully to learn about and understand for controlling the hydraulic oil contamination level.

[3] Installation of cooler and heater

Be sure to provide the cooler and heater (designed for cold regions) on the hydraulic circuits. The hydraulic equipment is extremely sensitive to hydraulic oil viscosity. If the temperature of the hydraulic oil inside the hydraulic equipment rises causing low viscosity of the hydraulic oil, it may result in damage or improper operation of the hydraulic equipment, and induce malfunctioning of the machine. If the temperature of the hydraulic oil lowers causing abnormally high viscosity of the hydraulic oil, it may disable the hydraulic equipment operation. To prevent such failure, it is important to control the temperature of the hydraulic oil.
Read "Hydraulic Oil" in Section 7 carefully to learn about controlling the temperature of the hydraulic oil.

[4] Pressure inside the drain pipe

Choose the appropriate equipment such as pipe size, filter, strainer, cooler to keep the drain pressure within the pressure range shown in Table 3. Also, return the drain pipe alone directly to the hydraulic tank.
The allowable drain pressure is determined based on the compression strength of the oil seal in the piston motor and the strength of the piston motor components. Table 3 shows the allowable drain pressure.

Table 3. Allowable Drain Pressure

Drain Pressure	Normal use	MPa	0.2 or less
	Moment max.	MPa	0.5 or less (30M pulse or less)

https://truckmanualshub.com/

[5] Hydraulic pressure of return oil low-pressure circuit

Keep the hydraulic pressure of the return oil low-pressure circuit at 2.0 MPa or less in regard to the service life of the piston motor roller bearing and strength of other parts. Use beyond this pressure will shorten the piston motor life. Therefore, carefully consider the pressure strength when choosing pipe size, valves, etc.

[6] Pressure inside the 2nd-speed pilot pipe

To select the motor speed to high or low, the switchover pressure shown on Table 4 is required.

Table 4. Required Pilot Pressure for Selecting Motor Speed

2nd-speed Pilot Pressure	Low speed to high speed	MPa	1.5 or more
	High speed to low speed	MPa	0.4 or less

To switch the speed from low to high, apply the 2nd-speed pilot pressure of 1.5 MPa or more. To switch the speed from high to low, apply a pilot pressure of 0.4 MPa or less. When running the motor at low speed in particular, the pressure leaks from the 2nd-speed control valve. This leak will flow into the 2nd-speed pilot pipe. For this reason, design the circuit so as not to increase the pressure in the 2nd pilot pipe during low-speed rotation. Increasing the pressure inside the pilot pipe may cause motor malfunction and the motor speed may switch over from low to high.

[7] Installation of self-supplied circuit

The motor circuit and the pipe must be filled with oil before starting the motor. Install the self-supplied circuit on the hydraulic pressure circuit, based on careful consideration of the positional relationship of the motor and hydraulic tank. When the hydraulic motor is turned off, a trace of oil will leak from the piston motor, double counter balance valve and other valves. For this reason, if the motor is turned off for a long period of time, air will accumulate inside the motor circuit and pipe. This may cause aeration or cavitations directly after the motor starts, causing the motor to go out of control.

https://truckmanualshub.com/

6. Components and Basic Functions

[1] Motor components and basic functions

The swash plate-type piston motor with case rotation type reduction gear for the open circuit comprises the following components:

1. The double counter balance valve for controlling the speed of the motor according to the feed flow
2. The crossover relief valve for determining the motor drive force and braking force
3. The 2nd-speed switching mechanism for switching the motor speed between 2 speeds, low speed and high speed
4. The parking brake function that locks the motor shaft with a mechanical brake when the motor is stopped.
5. The piston motor that converts the fluid energy of the pressurized oil sent from the hydraulic pump into mechanical energy and outputs high-speed, low-torque power.
6. The reduction gear that converts the high-speed, low-torque power output from the piston motor into low-speed, high-torque power and outputs it.

The fluid energy of the pressurized oil sent from the hydraulic pump is converted into mechanical energy by the piston motor and the high-speed, low-torque rotation power is transmitted to the reduction gear.
At the reduction gear, the rotation power transmitted from the piston motor is converted into low-speed, high-torque rotation power and this power is transmitted to the devices that use the MAG-170VP-3800E series for open circuit.

[2] Component functions

Following describes the features of each component.

1. Double counter balance valve
   The purpose of this valve is to control the speed of the motor according to the feed flow. This valve prevents the motor rotation from running away when an external load is applied.

Important This motor cannot be used as a winch.

https://truckmanualshub.com/

2. Crossover relief valve
   The purpose of this valve is to determine the motor drive force and braking force. Therefore, this valve has a shockless function to soften the shock when the motor starts and stops and provide good operability. Also, this valve is formed into one compact unit with the double counter balance valve to make up the brake circuit.

Important This relief valve is not designed for hydraulic circuit protection.
Install another relief valve to protect the hydraulic circuits.

3. 2nd-speed switching mechanism
   This motor has a 2nd-speed switching mechanism that can switch the motor speed between 2 speeds, low speed and high speed. Automatic 2nd-speed function is also available as an option.

Supplement About automatic 2nd-speed function
The low-speed mode fixed position and automatic 2nd-speed position can be selected. When the automatic 2nd-speed position is selected, the motor capacity is selected according to the motor load pressure and the motor is switched automatically between low speed and high speed.

4. Parking brake
   The parking brake function is built into the piston motor. When the motor is stopped, the mechanical brake operates to prevent the motor from being rotated by external load.

Important This brake is not intended to apply braking force when the motor is running. Use of this brake for braking will accelerate disk wear, causing poor braking performance or damage to the shaft. Never use this brake for braking the running motor.

5. Piston motor
   A swash plate-type piston motor is used. This piston motor converts the fluid energy of the pressurized oil sent from the hydraulic pump into mechanical energy and outputs high-speed, low-torque power.

6. Reduction gear
   A simple planetary 2-stage reduction gear structure of the casing rotation type is used. This reduction gear converts the high-speed, low-torque power output from the piston motor into low-speed, high-torque power and outputs it from the reduction gear casing.
   Also, a floating seal is used to prevent mud, sand, water, etc. from infiltrating from the outside.

The component devices above are formed into one compact unit that provides high reliability and superior performance.

https://truckmanualshub.com/

7. Component Configuration and Operation

[1] Component configuration

Figure 3 shows a structural diagram of the motor, and Figure 4 shows a hydraulic circuit diagram of the motor. This motor integrates the various components described in Section 5 in a compact unit. See Figure 3 and 4 for each component part.

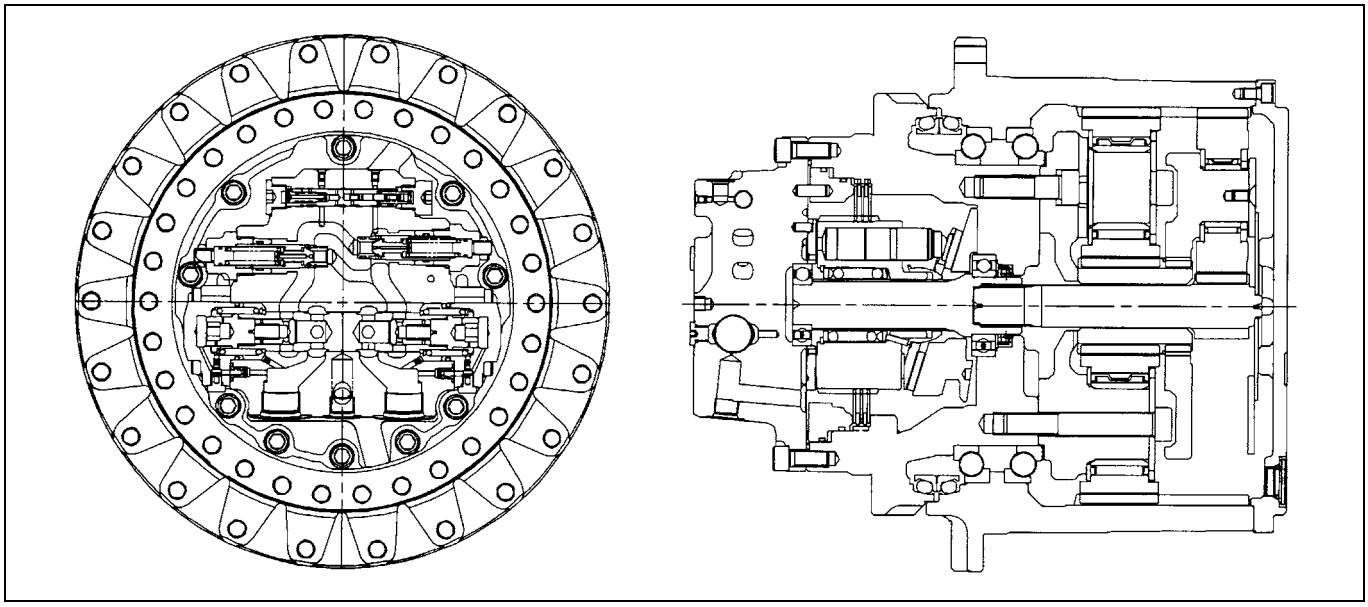

Figure 3. Motor structural diagram

https://truckmanualshub.com/

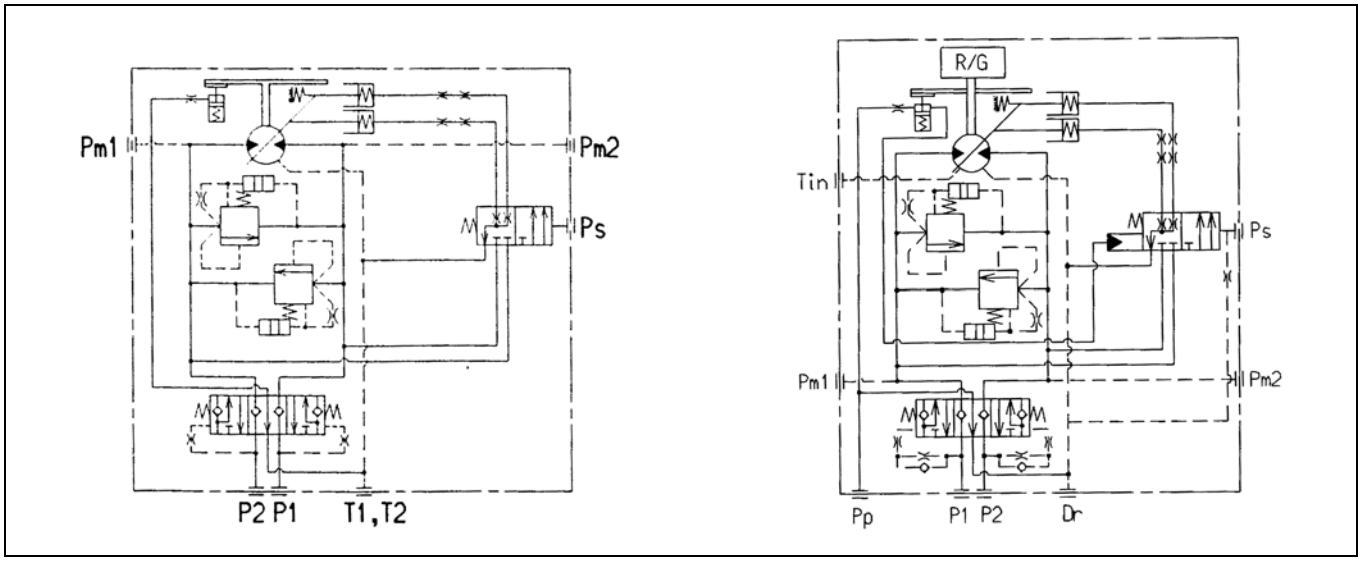

Manual 2nd-speed type

Automatic 2nd-speed type

Figure 4. Hydraulic circuit diagram

https://truckmanualshub.com/

[2] Operation explanation of each component

1. Double counter balance valve

The double counter balance valve serves the following functions.

1. The overrun prevention function that controls the piston motor speed to match the feed quantity when an external load is applied and that drives the motor higher speed than that is determined by the flow feed (below, pumping action).
2. The brake function used together with the crossover relief valve to make up the brake circuit that gradually stops the rotation of the piston motor by applying braking force to the piston motor rotation.
3. The high-pressure selection shuttle valve function for releasing the parking brake through its own pressure.

Figure 5 shows a structural diagram of the standard double counter balance valve. This section explains the operations of each function using this standard double counter balance valve.

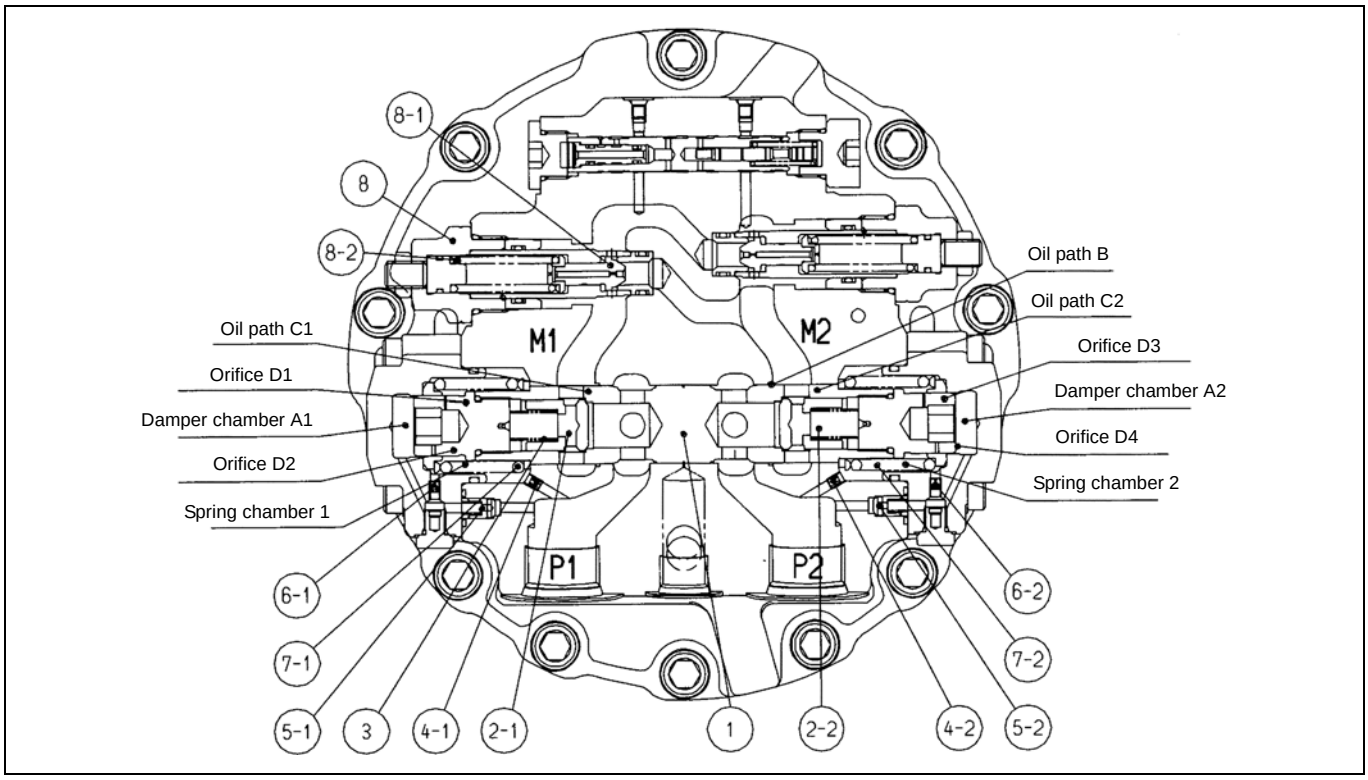

Figure 5. Double counter balance valve structural diagram (stopped state)

A. Stopped state (Figure 5)

When the control valve is in neutral (the motor stopped), since pressure is generated at neither the P1 port nor the P2 port, the M1 and M2 ports are locked (hydraulically) with the spool (1) and the check valve (2) and the piston motor does not rotate.

B. When motor starts (Figure 6)

When the pressurized oil discharged from the hydraulic pump is led to the double counter balance valve P1 port, the check valve (2-1) moves to the left against the spring (3), the oil path C1 is opened. And the pressurized oil flows from the M1 port into the piston motor and attempts to rotate the piston motor.

On the other hand, the return oil from the piston motor flows from the M2 port into the double counter balance valve, but the flow is prevented by the check valve (2-2) and the hydraulic pump discharge pressure rises.

Therefore, the P1 port side goes to high pressure, the pressurized oil operates through the orifice (4-1) and the check valve (5-1) on the spring chamber 1 and the damper chamber A1, and that oil pressure moves the plunger (1) to the right against the opposite side spring (7-2) with force proportional to the pressure.

At this time, the M2 port return oil flows through the oil path B in the circumferential notch section of the plunger (1) and into the P2 port while generating back pressure at the M2 port. This return oil returns to the tank through the control valve and the piston motor starts rotating.

C. Counter balance function (Figure 6)

During piston motor rotation, if the piston motor is forced to rotate by the external load, a pumping action occurs in the piston motor, and the motor may go out of control. In this case, since the P1 port section becomes the suction side of the pump action, that pressure drops. At the same time, the pressure also drops in the spring chamber 1 and the damper chamber A1. Therefore, the plunger (1) is moved to the left by the spring (7-2), oil path B is closed, and when the return oil flow stops, the suction side flow stops at the same time.

When the flow of oil through oil path B is stopped, in an instant, the P1 port side pressure rises again due to the hydraulic pump discharge oil and this moves the plunger (1) to the right.

In this way, the plunger (1) moves in small steps when there is pumping action due to the external load to hold the opening surface area of oil path B in an appropriate state. Therefore, rotation of the piston motor at a speed appropriate to the feed flow from the hydraulic pump is maintained and vacuum in the hydraulic circuit is prevented. This prevents the piston motor from going out of control.

5-2 Lower Mechanism: Travel Drive Unit

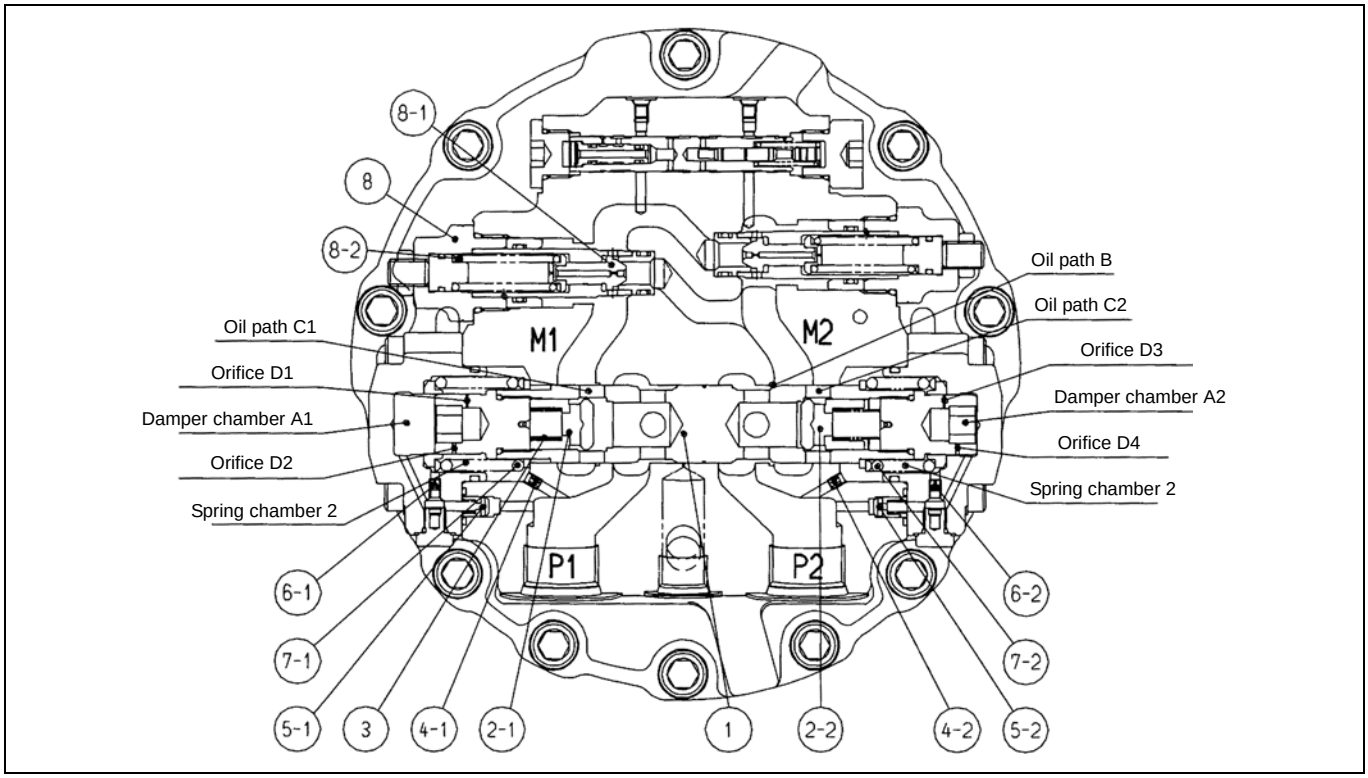

Figure 6. Double counter balance valve when motor rotating

https://truckmanualshub.com/

D. Piston motor braking (Figure 7)
The double counter balance valve makes up the brake circuit together with the crossover relief valve.
When the control valve is returned to neutral, the pressurized oil from the hydraulic pump is cut off and the P1 and P2 ports go to the same pressure. Therefore, the plunger (1) moves to the neutral position, and the oil path B opening surface area becomes small.
On the other hand, because the piston still attempts to rotate due to the inertial energy of the external load (piston motor pumping action), the M2 port pressure rises and acts as a braking force on the rotation of the piston motor.
At this time, when the M2 port side pressure reaches the set pressure for the relief valve (8), the M1 port side poppet (8-1) moves to the left against the spring (8-2) and the pressurized oil escapes to the M1 port side. In this way, the shock pressure due to the M2 port side inertial energy is controlled and at the same time the occurrence of a vacuum on the M1 port side is prevented.

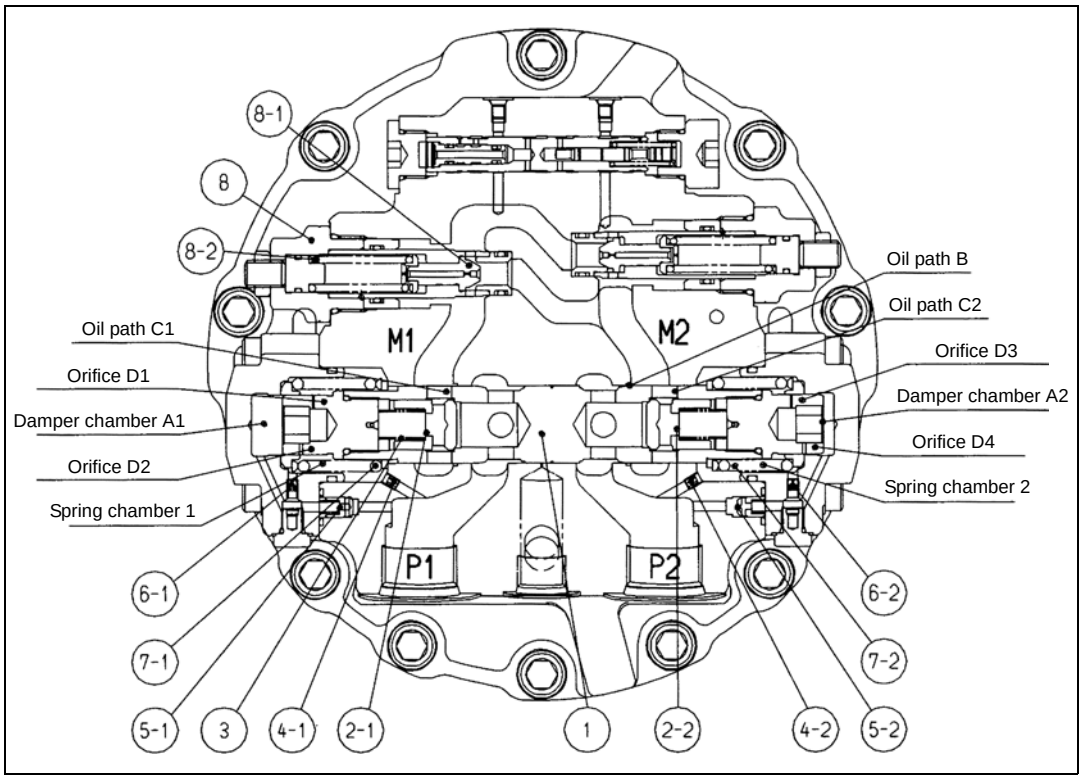

Figure 7. Double counter balance valve and relief valve during braking piston motor

E. High-pressure selection shuttle valve function (Figure 8 and Figure 9)
The double counter balance valve has a high-pressure selection shuttle valve function added for releasing the parking brake through its own pressure.
When pressurized oil is fed from the P1 port, the plunger (1) moves to the right side creating the state in Figure 8. Therefore, the motor case drain oil path F is closed, the oil path D to the parking brake cylinder chamber E is opened, the pressurized oil is led into oil path G via the orifice and flows into the parking brake cylinder chamber E, releasing the parking brake.
Also, when the piston motor stops, the plunger (1) returns to the neutral state of Figure 9, the oil path D closes, and the motor case oil path F opens, so the oil in the parking brake cylinder chamber E is led to the motor case drain and the parking brake operates.

https://truckmanualshub.com/

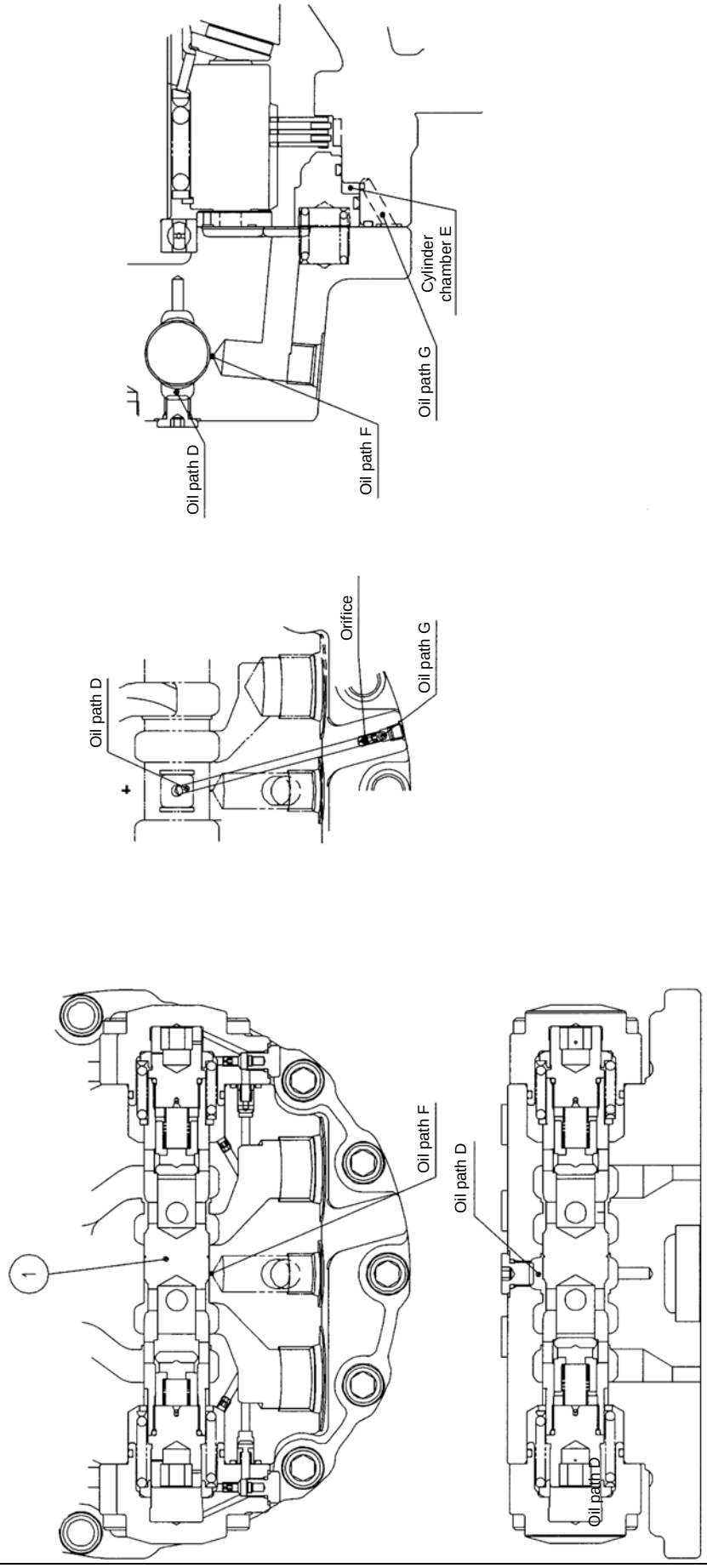

Figure 8. High-pressure selection function; High-pressure selection

https://truckmanualshub.com/

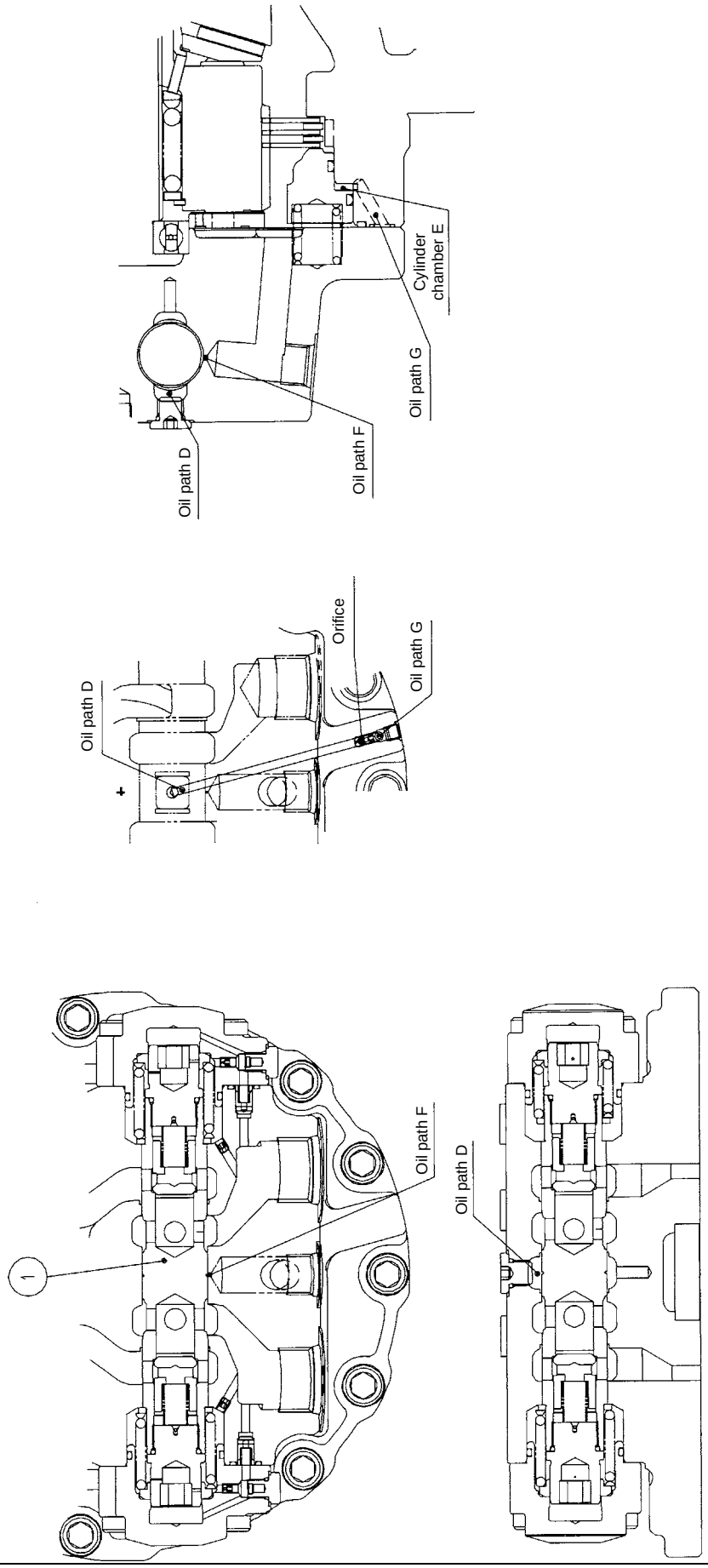

Figure 9. High-pressure selection function; Release to motor case drain

https://truckmanualshub.com/

2. Crossover relief valve

Figure 10 shows the structure of the relief valve. The differential surface area type direct action relief valve is used which equips a shockless function for reducing the shock that occurs at the start of startup and at the start of braking.

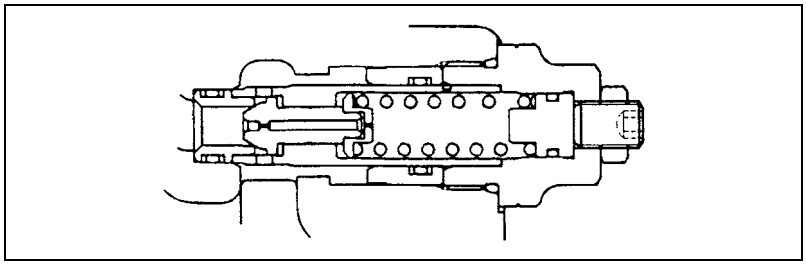

Figure 10. Structure of relief valves

A. Relief valve operation and functions

When the control valve is moved to start or brake the piston motor, the poppet (2-9-2) front surface pressure rises. When the pressure exceeds the set value, this pressure overcomes the spring (2-9-5) force, and the poppet (2-9-2) moves to the right, away from the poppet (2-9-3), and the high-pressurized oil at the poppet (2-9-2) front surface bypasses to the low-pressure oil path. In this way, by allowing the high-pressurized oil to bypass to the low-pressure oil path, the shock pressure due to the inertial energy of the high-pressure oil path is controlled and at the same time the occurrence of a vacuum in the low-pressure oil path is prevented.

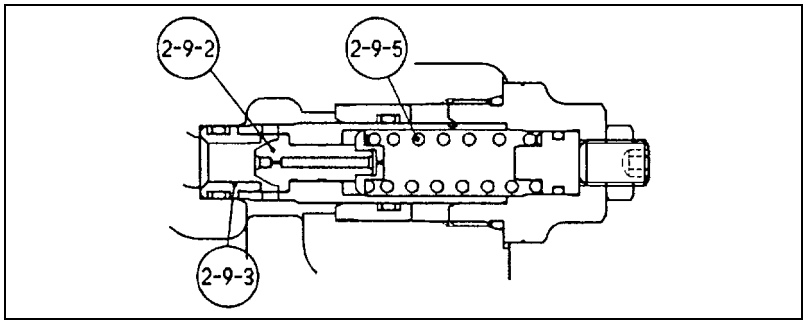

B. Shockless function (Figure 11)

When the relief valve starts to operate, the shockless piston (2-9-9) moves to the left. Therefore, inside the spring chamber D, the pressure is held low. Therefore, the surface of the poppet (2-9-2) pressurized area becomes S1, a quite large pressurized area compared to the pressurized area S1-S2 for the normal relief valve setting.

Therefore, while the shockless piston (2-9-9) movement is completing, the relief valve operating pressure is held to about 1/3 of the normal set pressure, absorbing the shock pressure due to the inertial energy of the high-pressure oil path.

When the shockless piston movement is complete, the pressure inside the spring chamber D rises, the pressure in front and behind the poppet (2-9-2) become equal, and the relief valve operates with its normal set pressure.

Operating the relief valve in 2 stages in this way reduces the shock that occurs when the piston motor is started or braked and provides good operability. Figure 11 compares the pressure waveforms of the conventional type and the shockless type.

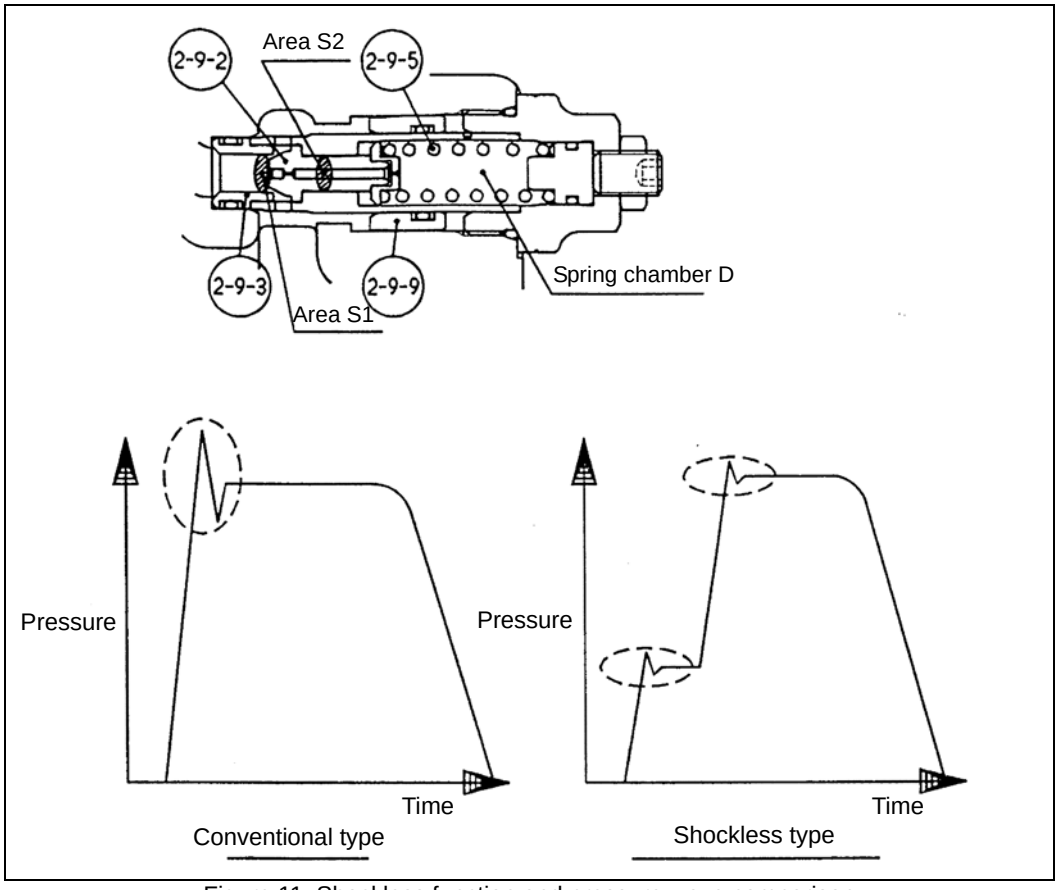

Figure 11. Shockless function and pressure wave comparison

https://truckmanualshub.com/

3. Manual 2nd-speed selector mechanism

Figure 12 shows the state when the motor capacity is large (low-speed).
The swash plate (5) has 3 surfaces, shown as A to C. The swash plate (5) is assembled in such a way that it can be rotated inside the flange holder (1-1) with 2 steel balls (6).
The 2nd-speed control piston (7) is assembled to the flange holder (1-1), and the 2nd-speed control piston (7) contacts to the surface B of the swash plate (5).
Also, the 2nd-speed control valve (2-11) is assembled to the base plate (2-1).

A. To switch the motor capacity to low (high-speed rotation mode) (Figure 12)
When the speed control switch is set to high speed, the pilot pressure oil operates on the Ps port, and the 2nd-speed control valve (2-11) moves to the right against the spring (2-12) until it contacts the plug (2-13). This connects the M1 and M2 ports of the motor to the oil paths A1 and A2 being connected to the 2nd-speed control piston chamber F, and the motor drive pressure is led to the 2nd-speed control piston chamber F. The drive pressure drives the 2nd-speed control piston (7) to push up the surface B of the swash plate (5) until the surface A contacts with the flange holder (1-1), reduces the revolution tilt angle of the swash plate (5), and switches the piston motor to high speed.

Important Apply the pilot pressure more than necessary for switching the 2nd-speed control valve.

B. To switch the motor capacity to high (high-speed rotation mode) (Figure 13)
When the speed control switch is set to low speed and the pilot pressurized oil acting on the Ps port is released to the tank, the 2nd-speed control valve (2-11) moves to the left with the force of spring (2-12) until it contacts the plug (2-13). Then, the M1 and M2 ports of the motor close, and the oil paths A1 and A2 being connected to the 2nd-speed control piston chamber F connect to the motor case drain oil paths Dr1 and Dr2. The pressurized oil in the 2nd-speed control piston chamber F is released to the motor case drain, drives the piston (4-2) and spring (4-7) to push the surface C of the swash plate (5) until the surface B contacts with the flange holder (1-1), increases the revolution tilt angle of the swash plate (5), and switches the piston motor to low speed.

Important Apply the pilot pressure less than the switching pressure of the 2nd-speed control valve. Also, design the circuit so as not to increase the pressure in the 2nd pilot pipe during low-speed rotation mode.

Supplement The motor with the 2nd-speed switching function can also be used by setting it to the large capacity (low-speed rotation mode). In this case, connect the 2nd-speed switching pilot pipe and connect the pilot port Ps to the hydraulic tank. Also, design the circuit so that it can hold the pipe pressure less than the switching pressure of the 2nd-speed control valve.

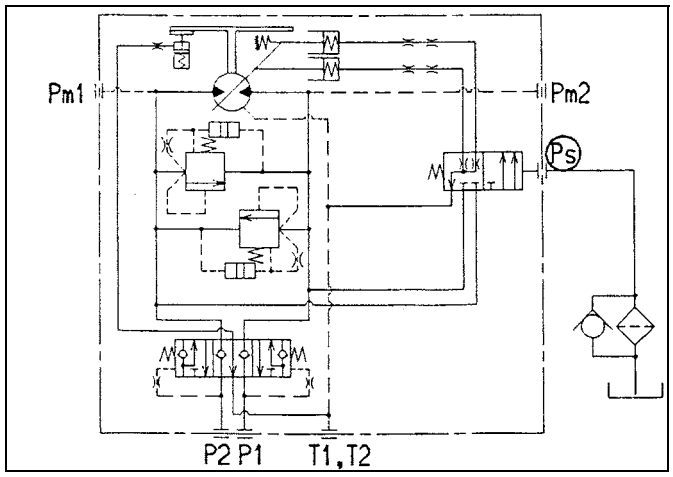

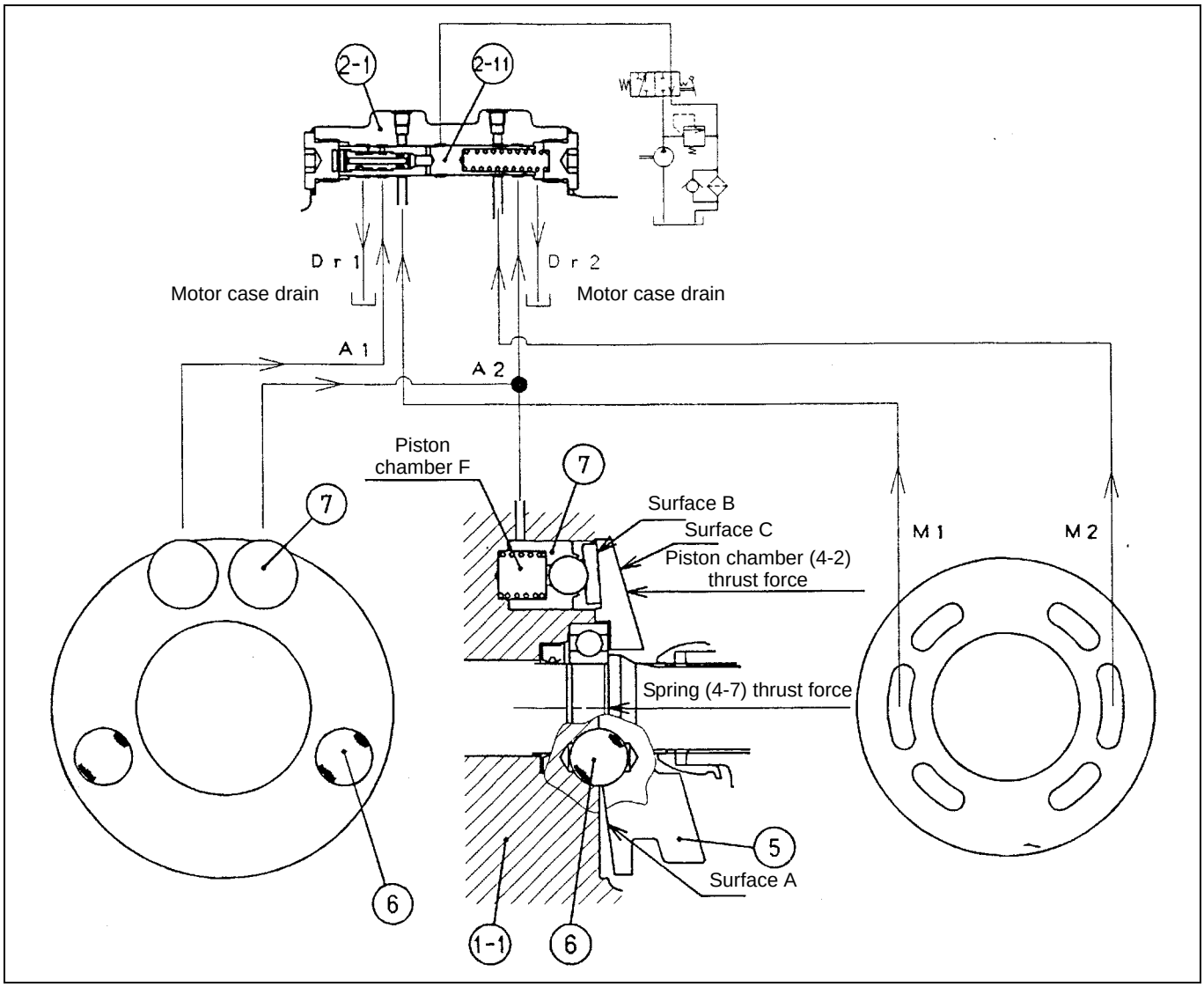

Figure 12. Low-speed rotation mode

https://truckmanualshub.com/

5-2 Lower Mechanism: Travel Drive Unit

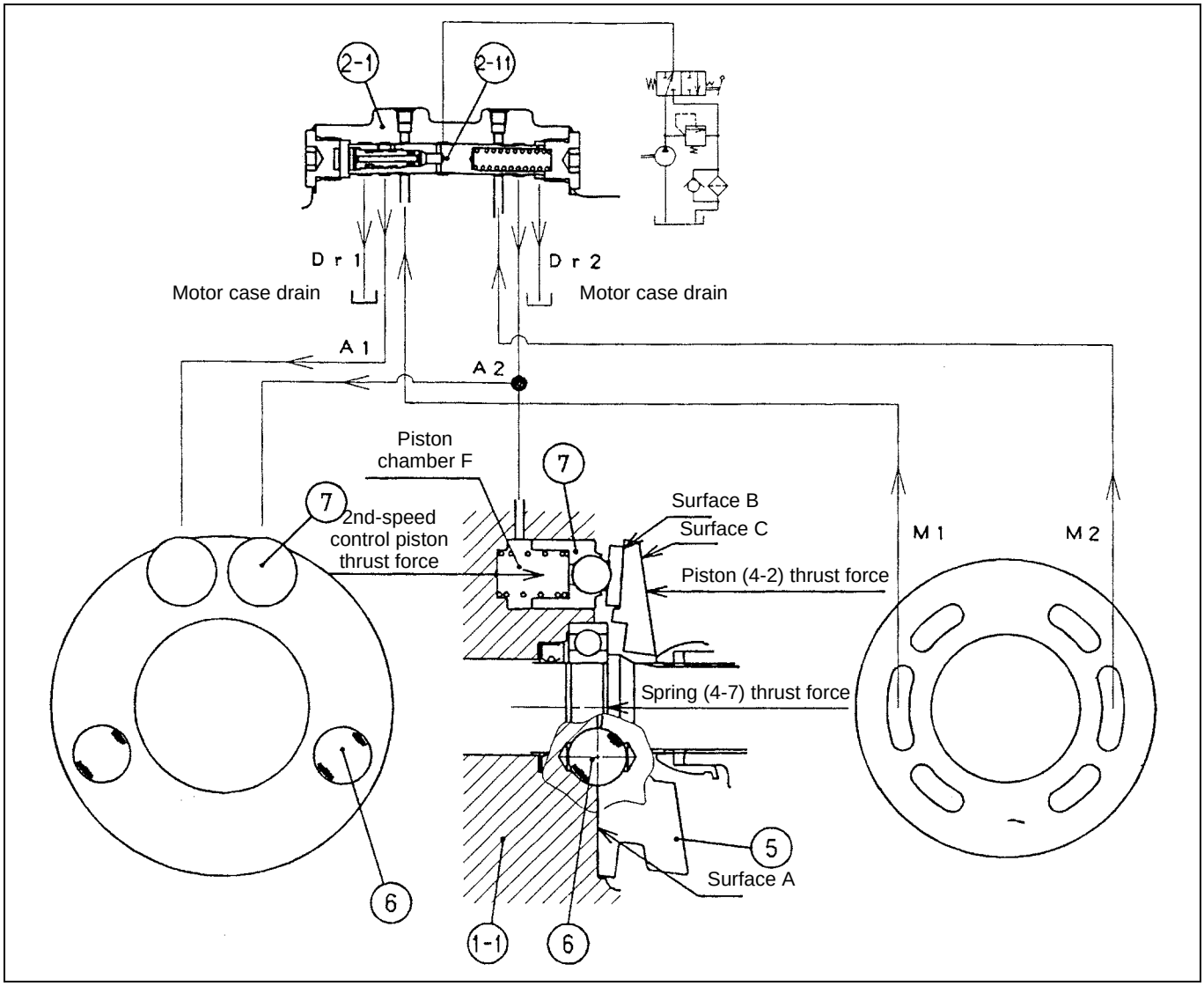

Figure 13. High-speed rotation mode

4. Automatic 2nd-speed function

Based on the manual 2nd-speed function described in the previous, by replacing the 2nd-speed control valve, the automatic 2nd-speed position can be selected which equips the position that can fix the motor capacity to low speed (large capacity) and the function that can select the motor capacity according to the load pressure on the motor.

A. Motor low-speed (high-capacity) position

Figure 14 shows the state with the motor capacity fixed to the low-speed (high-capacity) position. When the speed control switch is set to low speed and the pilot pressure acting on the Ps port is released to the tank, the motor capacity control valve built into the motor is fixed to the low-speed (high-capacity) position.

B. Automatic 2nd-speed position that selects the motor capacity according to the load pressure

Figure 15 shows the state of the automatic 2nd-speed position that selects the motor capacity according to the load pressure. When the speed control switch is set to high speed and the regulation pressure is allowed to operate on the Ps port, the pressurized oil operating on the Ps port operates on the front surface of the motor capacity control valve built into the motor and the position becomes the automatic 2nd-speed position that switches the motor capacity according to the load pressure on the motor.

Figure 16 shows the high-speed motor state for the automatic 2nd-speed position.

When the regulation pilot pressure is allowed to operate on the Ps port, the pilot pressurized oil operates on the pilot hydraulic chamber on the motor capacity control valve front surface via oil path A and this pushes the motor capacity control valve to the right. Also, the load pressure Pin on the motor operates on the motor load pressure chamber via oil path B and pushes the motor capacity control valve to the left. When Pin is lower than the motor capacity control pressure P determined by the ratio of the pilot pressure pressurized area and the motor load pressure pressurized area, the motor capacity control valve is held in the state in Figure 16 and the motor operates in high-speed (low-capacity) mode.

Figure 17 shows the low-speed motor state for the automatic 2nd-speed position.

When the load pressure Pin on the motor rises and becomes higher than the motor capacity control pressure P discussed above, the motor capacity control valve moves to the left, switching the motor to low-speed (high-capacity) mode, so the motor operates at low speed.

https://truckmanualshub.com/

5-2 Lower Mechanism: Travel Drive Unit

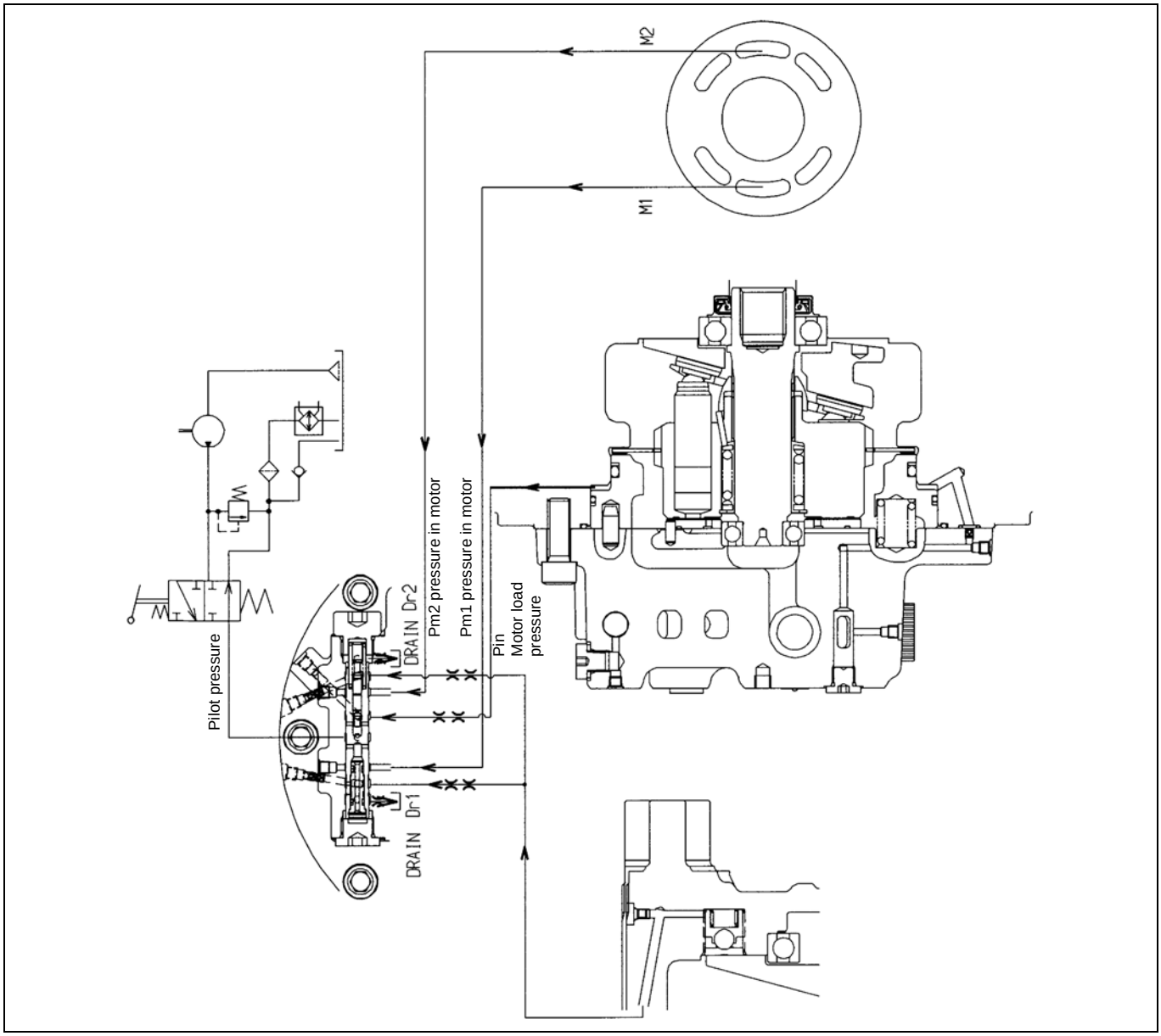

Figure 14. Motor high-speed (high-capacity) fixed mode

https://truckmanualshub.com/

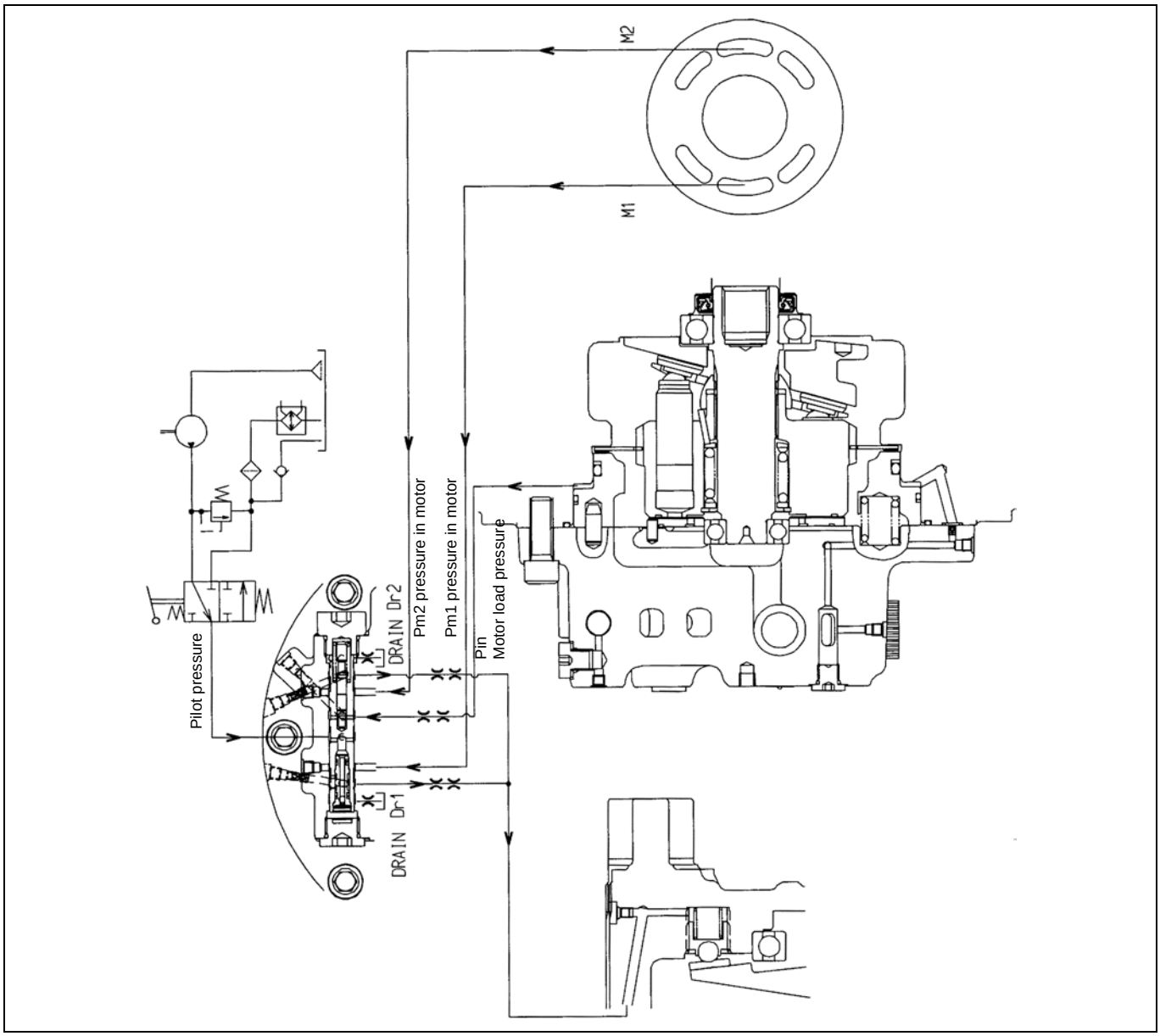

Figure 15. Automatic 2nd-speed control mode using load pressure

5-2 Lower Mechanism: Travel Drive Unit

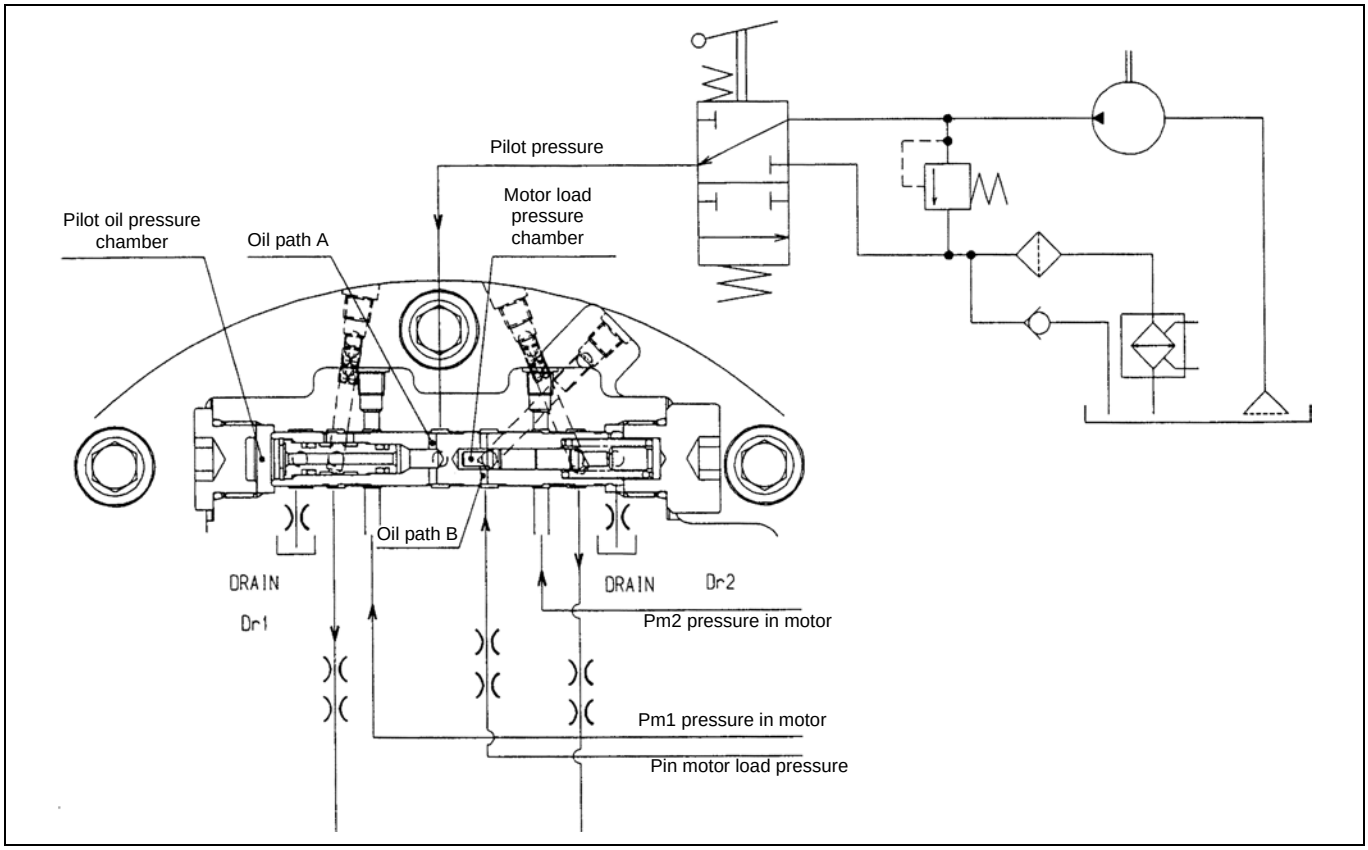

Figure 16. Motor high-speed (low-capacity) position for automatic 2nd-speed mode

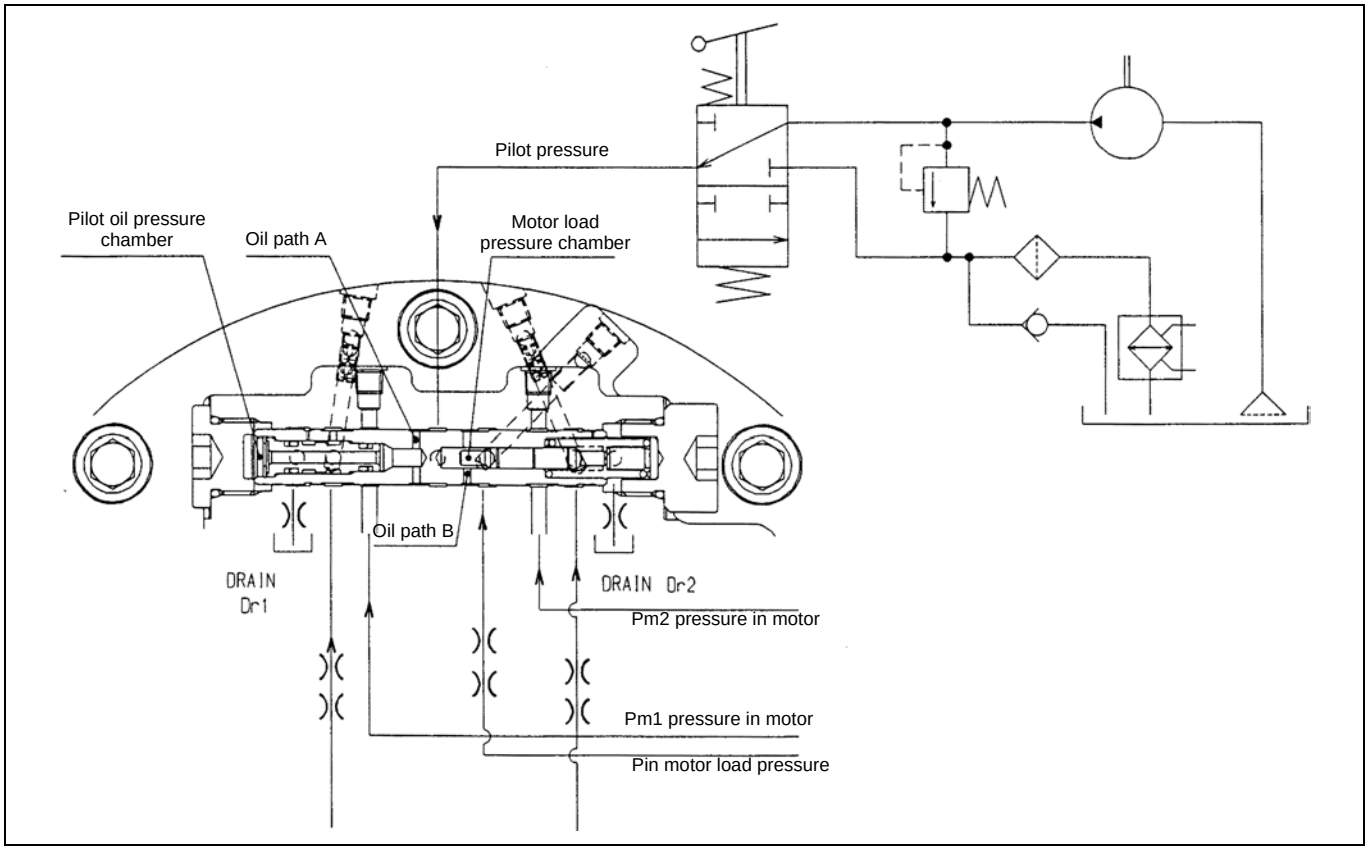

Figure 17. Motor low-speed (high-capacity) position for automatic 2nd-speed mode

https://truckmanualshub.com/

5. Parking brake function

Figure 18 shows a structural diagram of the parking brake section.
The parking brake is made up of the disks (1) coupled with the cylinder block, the friction plate (2) mounted between the disks, brake piston (3), and spring (4) that applies force to the brake piston.

A. Releasing the parking brake (Figure 18)
When pressurized oil is fed from the P1 port and attempts to start driving the piston motor, when the “high-pressure selection shuttle valve function” explained in Item E of “1. Double counter balance valve” in Item 2, Section 7 leads pressurized oil to the parking brake cylinder chamber E via oil path D, the hydraulic pressure force operates on the brake piston (3) and moves it to the left against the spring (4). As a result, the force pressing the disks (1) disappears, the disks (1) enter the free state, and the parking brake is released.

B. Operating the parking brake (Figure 19)
When the control valve is returned to the neutral position, the feed of pressurized oil to the P1 port is cut off, and an attempt is made to stop the piston motor, because the “high-pressure selection shuttle valve function” explained in Item E of “1. Double counter balance valve” in Item 2, Section 7 connects oil path D to motor case drain oil path F, the pressurized oil in the parking brake cylinder chamber E is led to the motor case drain and the pressure drops. Therefore, the brake piston (3) is moved to the right side by the spring (4), disks (1) are tightened with the force of the spring (4) by the brake piston (3) and motor case, so the piston motor shaft is locked and the parking brake operates.

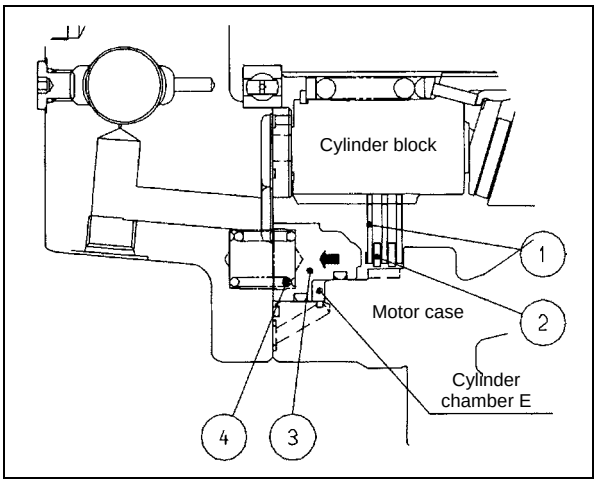

Figure 18. Parking brake released state

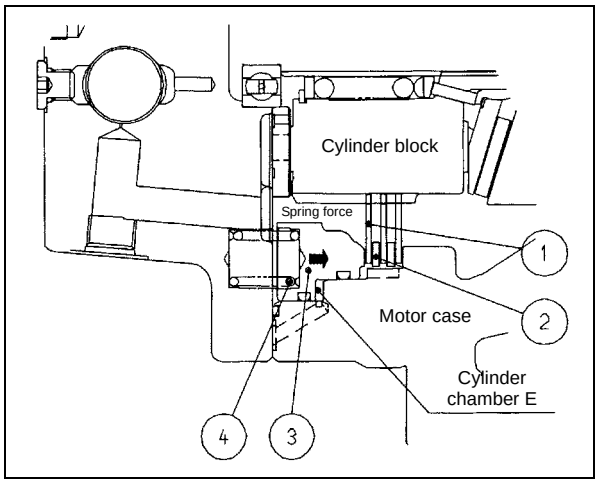

Figure 19. Parking brake engaged state

https://truckmanualshub.com/

6. Piston motor

A swash plate-type piston motor is used as the piston motor.
Figure 20 shows a structural diagram of the piston motor.
9 pistons (4-2) are incorporated in the cylinder block (4-1) and the end of the cylinder block (4-1) touches valve plate (22) that has 2 sausage-shaped ports, B and C. The pressurized oil discharged from the hydraulic pump flows in from the P1 port or the P2 port and while the piston motor rotates, flows out from the P2 port or P1 port. Also, the drain oil in the case that has leaked from the sliding sections and the gap returns to the hydraulic tank from the base plate (2-1) T1 or T2 port.

(1) The high-pressurized oil from the P1 port enters the valve plate (22) sausage-shaped B port, the piston (4-2) is pressurized, and the top of the swash plate (5) rotates and moves from top dead center to bottom dead center.
(2) The P2 port becomes the low-pressure side and while the piston (4-2) rotates and moves from bottom dead center to top dead center, the oil is discharged to the P2 port via the valve plate (22) sausage-shaped C port.
(3) Accompanying the reciprocal movement of the piston (4-2), cylinder block (4-1) and shaft (3) spline coupled to it rotate in the counter-clockwise direction of the arrow in the figure.
(4) When the piston motor rotates clockwise, the P1 port side becomes the low-pressure side and the P2 port side becomes the high-pressure side.

In this way, the piston motor converts the fluid energy of the pressurized oil sent from the hydraulic pump into mechanical energy and outputs high-speed, low-torque rotation power. Also, the piston motor torque and speed are determined by the pressure and flow. Therefore, the larger the pressure and flow, the higher the piston motor torque and speed.

Important

- Do not run the motor beyond the specified range shown in Section 4.
- If the motor speed exceeds the specified range, it may cause seizure or wear of the sliding part, rendering the motor unable to rotate.
- If the pressure exceeds the specified range, it may cause problems such as acceleration of damage to the piston motor bearing, rendering the motor unable to rotate.
- If the input horsepower exceeds the specified range, it may cause the temperature of the hydraulic oil to abnormally rise on the motor circuit, causing seizure or abnormal wear of the sliding part, or breakage of the reduction gear parts.

https://truckmanualshub.com/

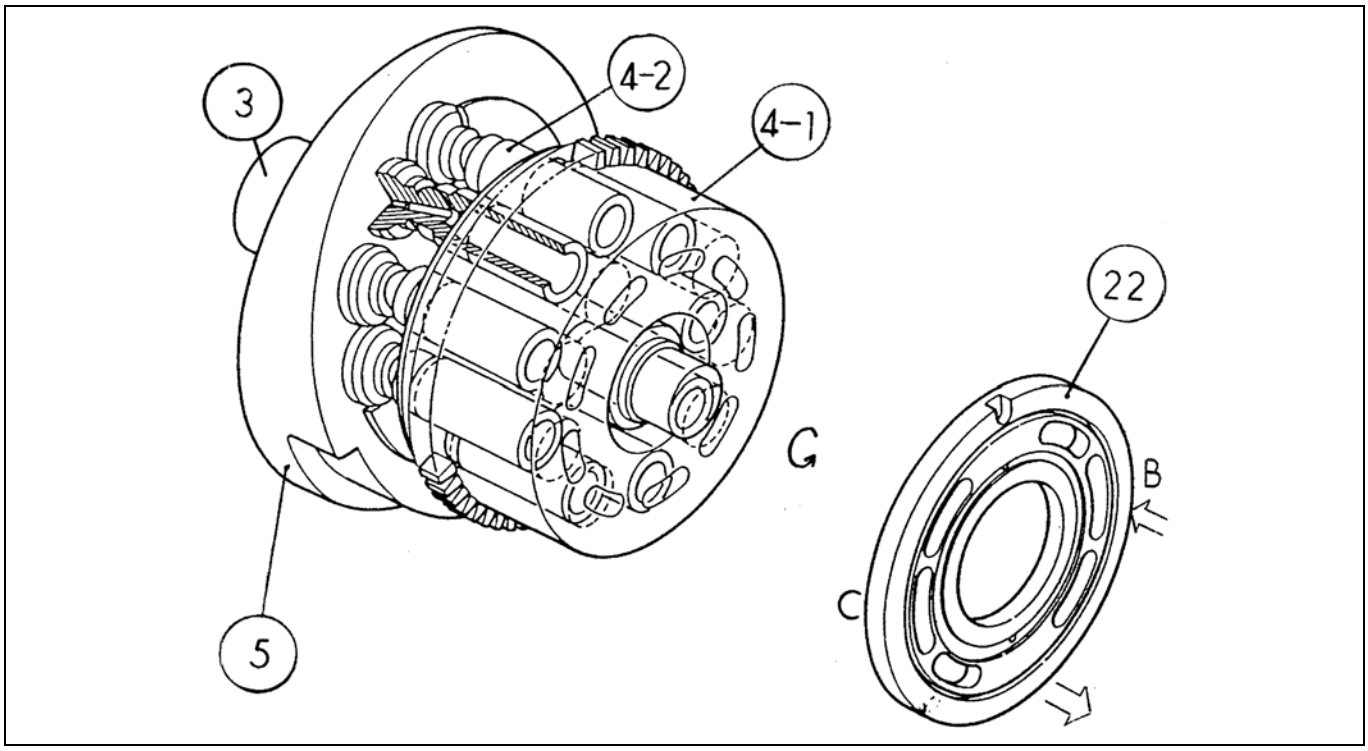

Figure 20. Piston motor structural diagram

5-2 Lower Mechanism: Travel Drive Unit

7. Reduction gear

Figure 21 shows a structural diagram of the reduction gear.
The reduction gear structure combines in two stages the simply planetary reduction gear unit made up of the drive gear, sun gear, holder, planetary gear, and ring gear (with teeth cut in the inner diameter of the housing).

When pressurized oil flows into the piston motor, the piston motor shaft rotates at high speed and power is input to the reduction gear section. In the reduction gear section, this high-speed rotation has its speed reduced in 2 stages by the simple planetary 2-stage reduction system. Low-speed, high-torque output is obtained from the rotation of the housing with ring gears (1-3) and (2-3).

A. 1st stage reduction section operation

The 1st stage reduction section comprises the drive gear (1-1), planetary gear A (1-2), ring gear (1-3), holder (1-4), needle bearing (1-5), and inner race (1-6).

The planetary gear A (1-2) meshes with the drive gear (1-1). When the drive gear (1-1) rotates clockwise, the planetary gear A (1-2) rotates counter-clockwise. On the other hand, since it meshes with the ring gear, it kicks the ring gear and tries to revolve clockwise around the circumference of the drive gear (1-1).

Because the planetary gear (1-2) is fixed in a state in which it rotates freely on the holder (1-4) via the needle bearing (1-5), this clockwise revolution movement is transmitted to the holder (1-4) and holder (1-4) starts to rotate in the clockwise direction.

Also, since the holder (1-4) is spline coupled with the 2nd stage sun gear (2-1), this holder (1-4) rotation is transmitted to the 2nd stage sun gear (2-1).

B. 2nd stage reduction section operation

The 2nd stage reduction section comprises the sun gear (2-1), planetary gear B (2-2), ring gear (2-3), holder (2-4), needle bearing (2-5), and inner race (2-5).

The planetary gear B (2-2) meshes with the sun gear (2-1). When the sun gear (2-1) rotates clockwise, the planetary gear B (2-2) rotates counter-clockwise.

The planetary gear B (2-2) is fixed in a state in which it rotates freely on the holder (2-4) via the needle bearing (2-5). Furthermore, the holder (2-4) is coupled to the flange (5) by bolts (3) and (4), and the flange (5) is fastened to the frame of the machine main unit, so it cannot rotate.

Therefore, the planetary gear B (2-2) cannot revolve as in the 1st stage reduction section and rotates counter-clockwise at the position at which it was incorporated. Also, because the planetary gear B (2-2) is meshed with the ring gear, the counterclockwise revolution of the planetary gear B (2-2) is transmitted to the ring gear and the ring gear is rotated counter-clockwise.

https://truckmanualshub.com/

Through the above action, housings (1-3) and (2-3) with the ring gear cut into their inner diameters receive the force of planetary gears (2-2) and (1-2), and rotate. This transmits power to the driven section of the machine main unit which is coupled with housings (1-3) and (2-3).

Important

- Do not run the motor beyond the specified range shown in Section 4.
- If the torque exceeds the specified range, it may cause breakage of gears or other connecting parts, rendering the motor unable to rotate.
- If the motor speed exceeds the specified range, it may cause seizure on the seal surface of the floating seal, resulting oil leaks.

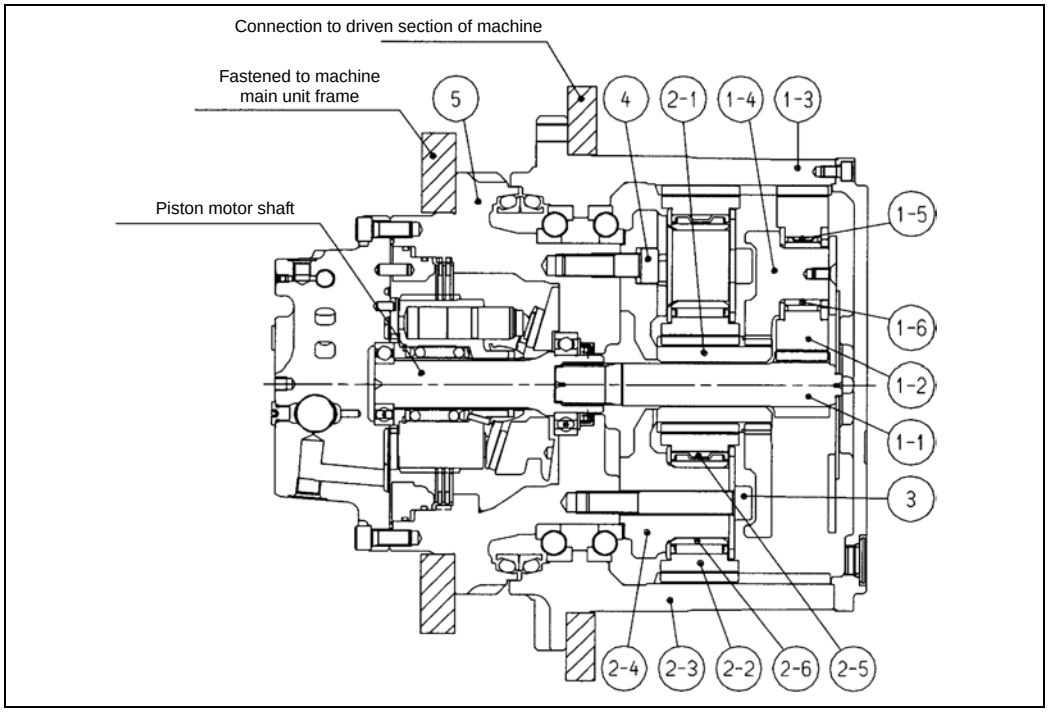

Figure 21. Reduction gear structural diagram

https://truckmanualshub.com/

5-3 Lower Mechanism: Take-up Roller

1 Take-up Roller Disassembly and Assembly

Caution	• To ensure safe operations, wear protective devices before beginning work and follow all precautions.
	• When removing devices or positioning devices at the time of installation, use a removal jig and a hammer or steel rod.
	• Follow the precautions below when suspending the load.
	  • The crane must be operated by a qualified operator.
	  • Do not stand or pass under the suspended load.
	  • Check the weight of the roller to determine whether it can be carried by hand or whether a crane must be used.
	• Fix the roller to a level surface so it does not roll.
	• Be sure to repair any parts damaged during disassembly, and prepare replacement parts in advance.
	• If any parts are significantly rusted or dirty, clean them before disassembling.
	• Any foreign matter entering the equipment during assembly can create a malfunction. Therefore, after thoroughly cleaning the equipment with cleaning oil, air blow the equipment, and assemble in a clean location.
	• When assembling touching parts, be sure to coat them with new hydraulic oil.
	• As a rule, replace all O-rings and other seal parts with new parts.
	• The take-up roller is a heavy object and requires at least 2 workers to handle.
	
	General cautions
	• Be careful not to drop or impact precision parts with other parts during disassembly or assembly.
	• Do not forcefully open or hit parts in an effort to speed up operations. Pay careful attention and proceed slowly so as not to damage any parts, create any oil leaks, or compromise the efficiency of the equipment.
	• Disassembled parts can easily rust or collect dust. Therefore, take precautions to prevent the parts from rusting or collecting dust, immediately after disassembling parts.

Items to prepare

- Hexagon wrench (6 mm)
- Hammer
- Wire clips
- Pliers
- Gear puller
- Screwdriver
- Engine oil (Shell Rimula Oil #30)
- Specialized jig
- Pressing machine
- Locktite
- Special fiber cloth(s) (Kimwipes)
- Micrometer
- Caliper

https://truckmanualshub.com/

Configuration diagram

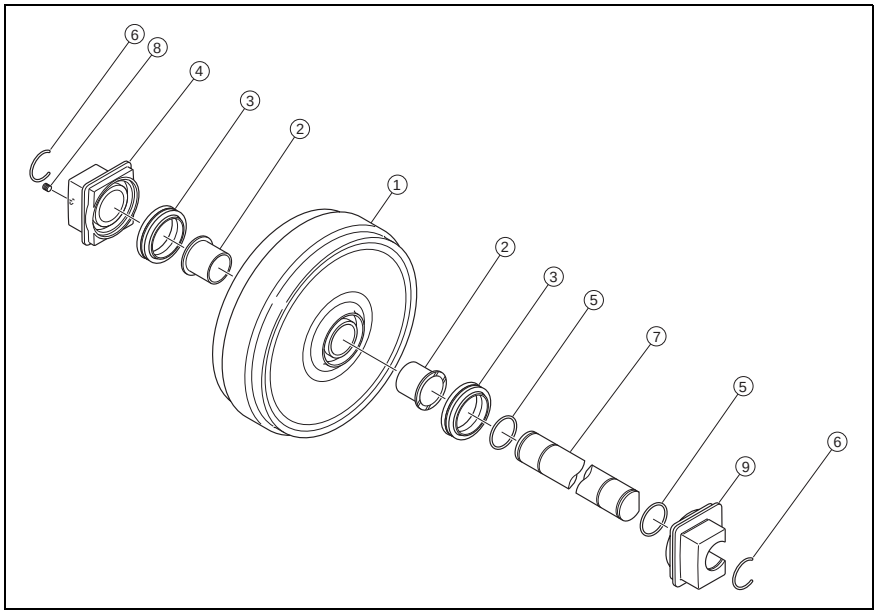

	Part name	Part No.	Q' ty
(1)	Take-up roller	KRA1768	1
(2)	Wrapping bearing	KRA1201	2
(3)	Floating seal	BLA2371	2
(4)	Hub	KRA1200	1
(5)	O-ring 1A-G50	BHA0863	2
(6)	Wire clip	KNA0180	2
(7)	Roller shaft	KRA0988	1
(8)	Plug with seal nylon	KHJ0300	1
(9)	Hub (without plug)	KRA1594	1

Dimension diagram

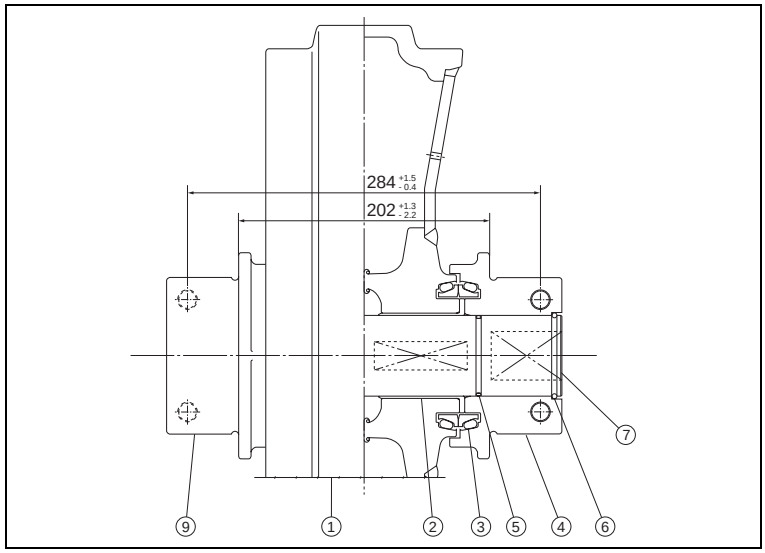

Jig dimension diagram

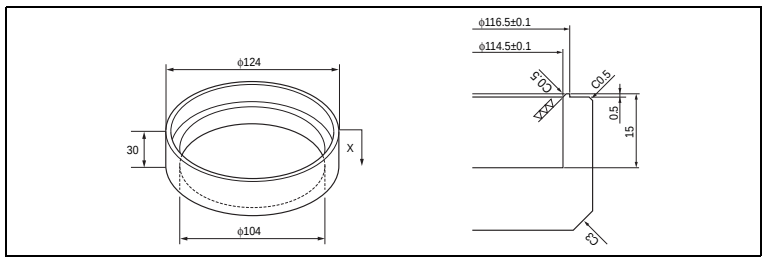

https://truckmanualshub.com/

5-3 Lower Mechanism: Take-up Roller

Disassembly procedure

[1] Place the roller vertically and use a 6-mm hexagon wrench (T1) to remove the plug (8).
- The plug (8) is coated with seal nylon, which comes off when the plug is removed. To reuse the plug, be sure to use seal tape.

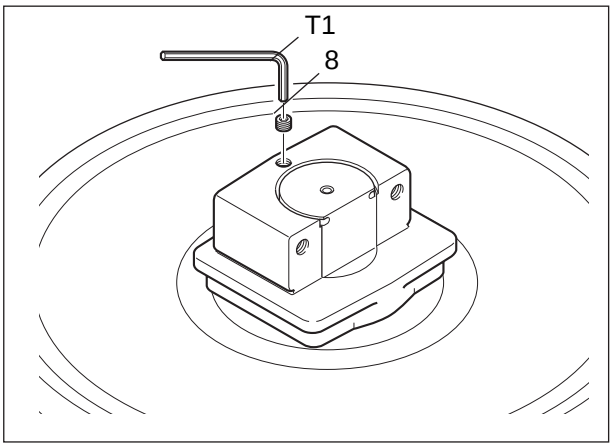

[2] Face down the part of the roller from which the plug was removed and empty the hydraulic oil from within the roller.
- It may take several hours to completely empty the hydraulic oil from the roller.
- Place an oil pan or a similar object under the roller to catch grease.

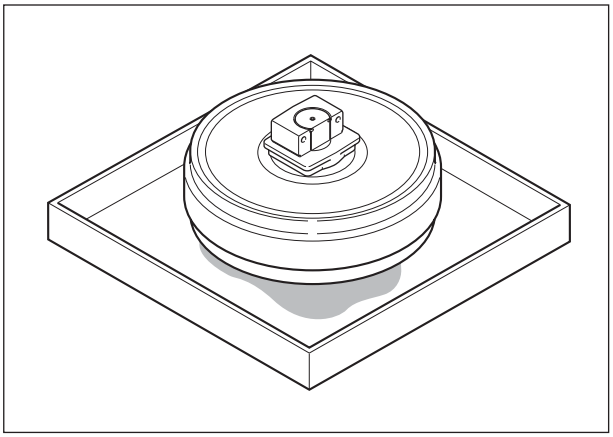

[3] Remove the wire clip (6). Use another wire (T2) to push out the wire (6) that is in the roller from outside.
- The roller can be very unstable, so pay attention to secure it.

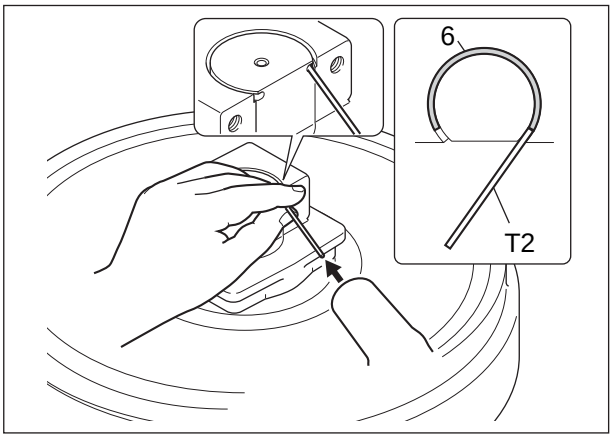

[4] Use pliers or a similar tool to remove the pushed out wire.

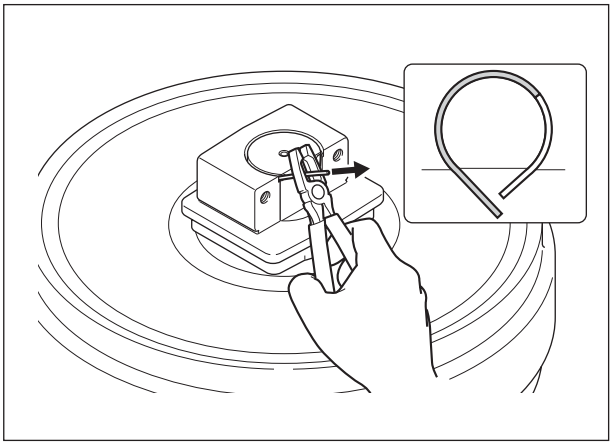

https://truckmanualshub.com/

[5] Use a gear puller (T3) or a similar tool to remove the hub (9).
- If the hub is rusty or is difficult to remove due to an accumulation of debris, hit it with a hammer and apply a shock to make it easier to move.

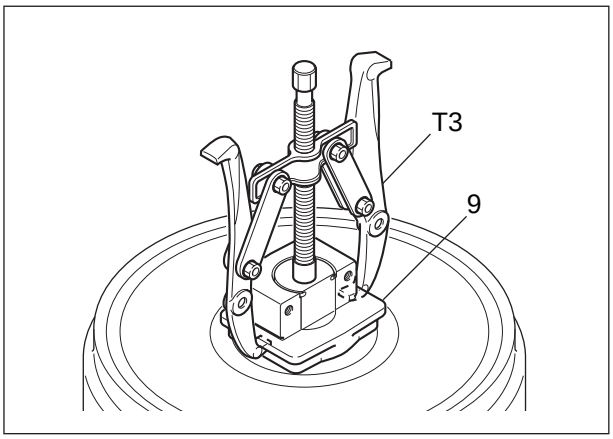

[6] Check whether the surface of the floating seal (3) contacting the removed hub has rusted or damaged. Also check whether the O-ring is twisted.
- The O-ring cannot be reused. Replace it with a new O-ring.

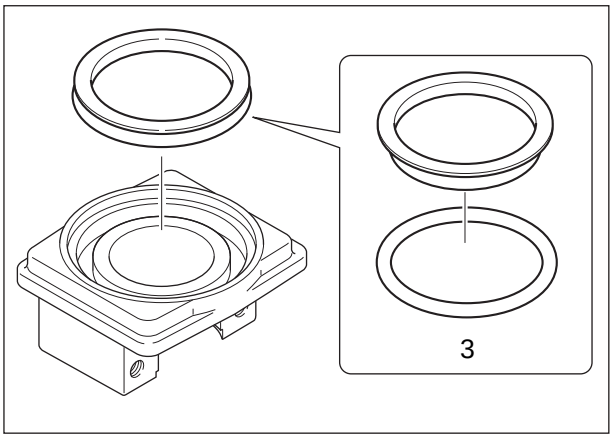

[7] Remove the floating seal (3) on the roller. As described in Step [6] above, check whether the surface of the floating seal contacting the roller has rusted or damaged. Also check whether the O-ring is twisted.

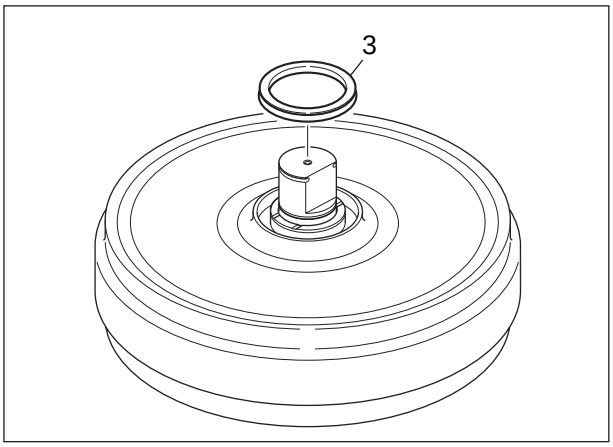

[8] Remove the O-ring (5) on the roller shaft.
- The O-ring (5) cannot be reused. Replace it with a new O-ring.

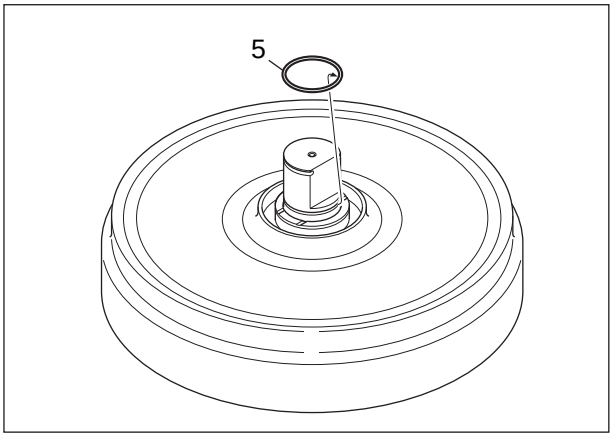

https://truckmanualshub.com/

[9] Remove the roller shaft.

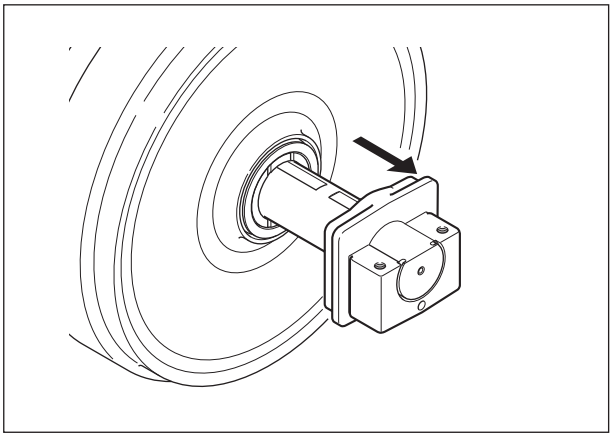

[10] As described in Step [7], remove the floating seal (3) on the opposite side.

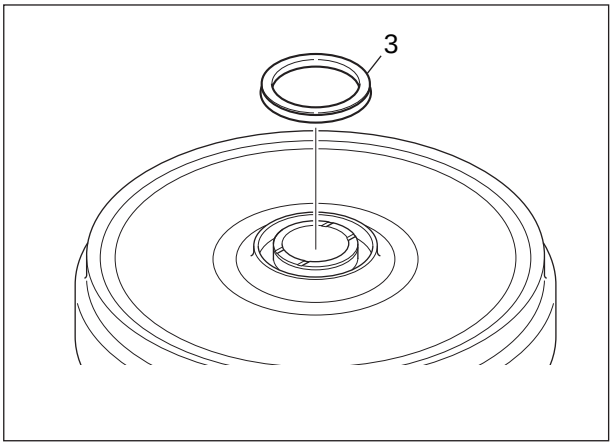

[11] Use a micrometer or a similar tool to measure wear or deformation of the take-up roller (with wrapping bearing) (1), hubs (4) and (9), and roller shaft (7). Replace with new parts as necessary.

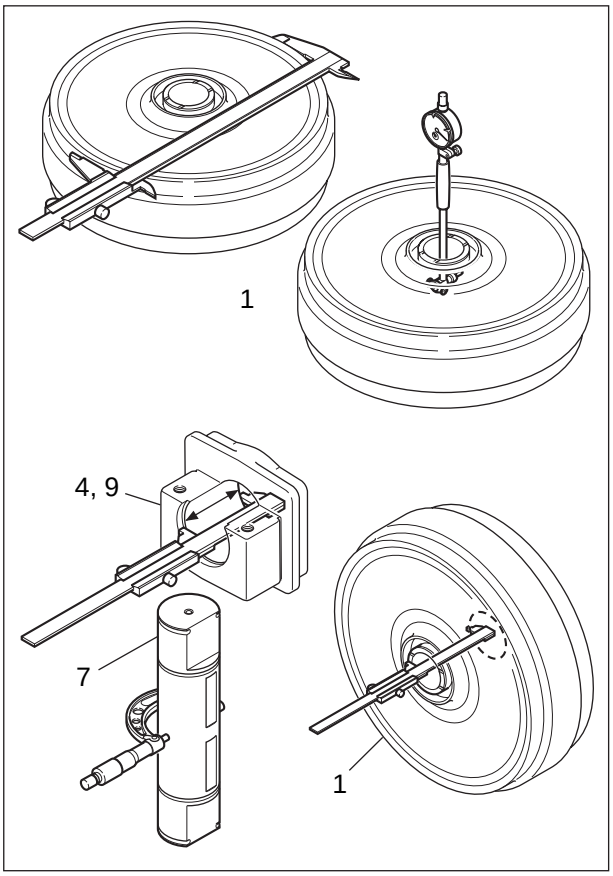

https://truckmanualshub.com/

Assembly procedure

[1] Clean all parts.
- Find a clean location to assemble the parts.
- Place a rubber plate or a cloth on the work table to prevent damaging the parts.

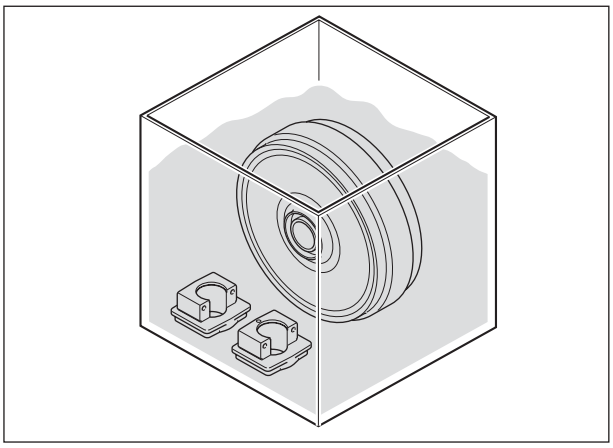

[2] After cleaning the parts, air blow them to remove remaining cleaning fluid or debris.

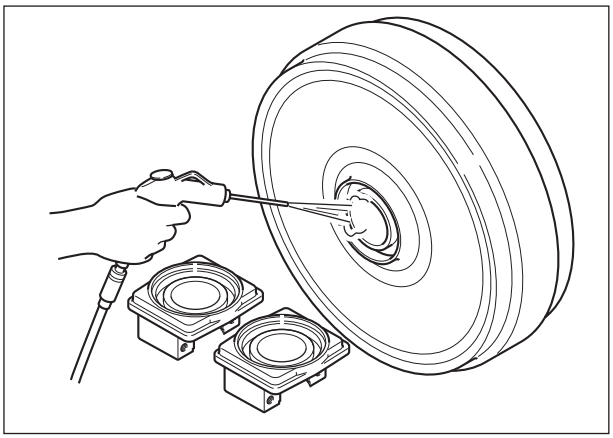

[3] Insert the take-up roller (1) into the wrapping bearing (2). Use a pressing machine (T4) to press in both left and right sides.

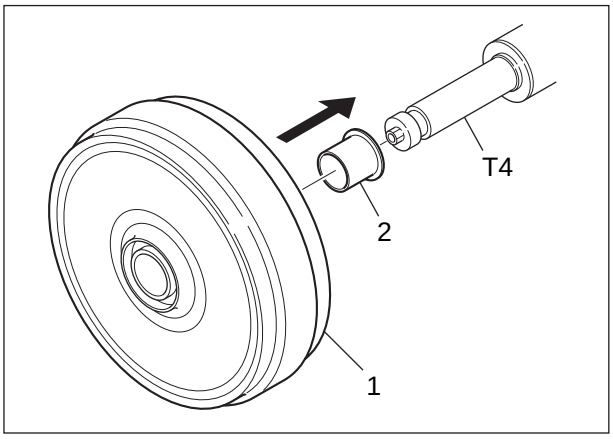

[4] Use the jigs (T5) and (T6) attached to the pressing machine to attach the wrapping bearing (2). Use the pressing machine to press from the opposite side. Use a special fiber cloth or similar item and completely remove all dust and debris.

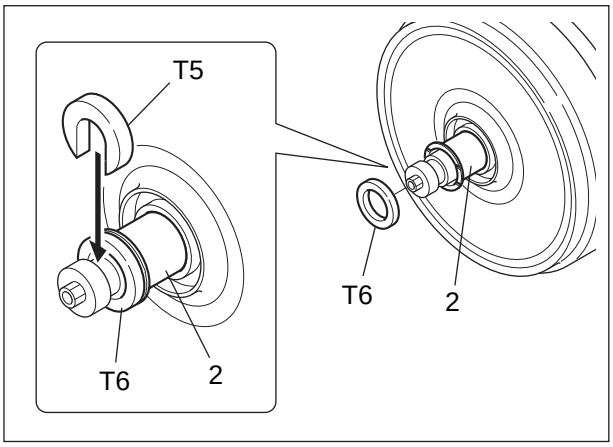

https://truckmanualshub.com/

[5] Attach the floating seal (3) to the hub. Use a jig (A) to press the floating seal into position.

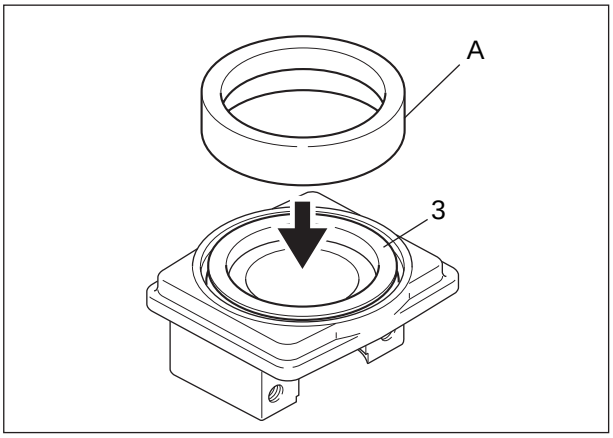

[6] Use a jig (A) to attach the floating seal (3) on the main unit.

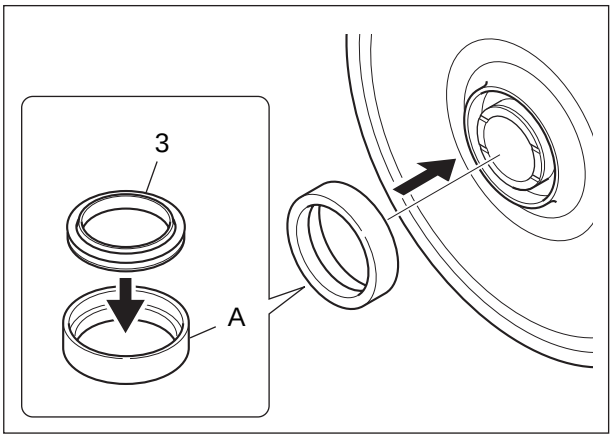

[7] Use a special fiber cloth to thoroughly wipe the contact surface of the floating seal to prevent dust or scratches.

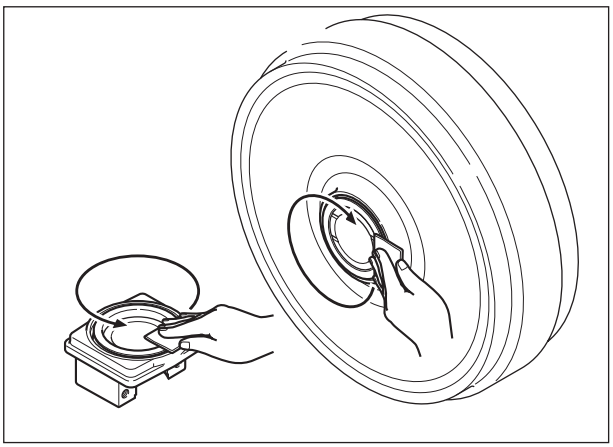

[8] Apply engine oil to the floating seals on the hubs.

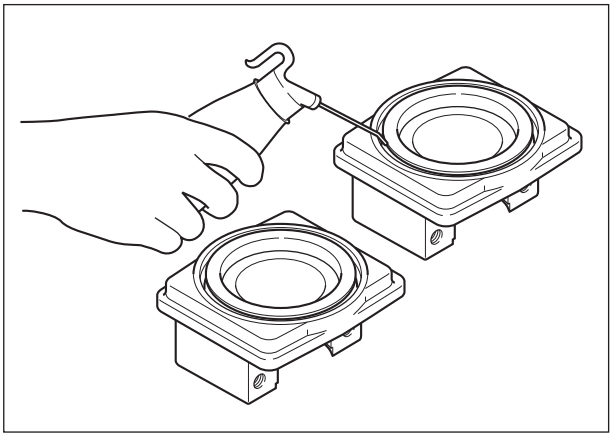

https://truckmanualshub.com/

[9] Attach O-rings (5) to the roller shaft (7) and mount them to the roller main unit.

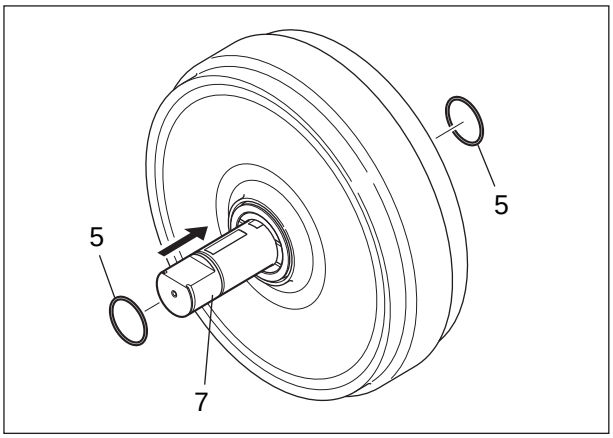

[10] Attach the hubs to both sides of the roller shaft.

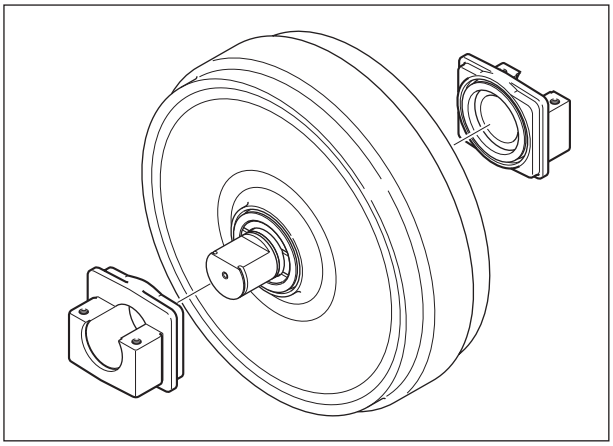

[11] Attach the wire clip (6) to the hub.

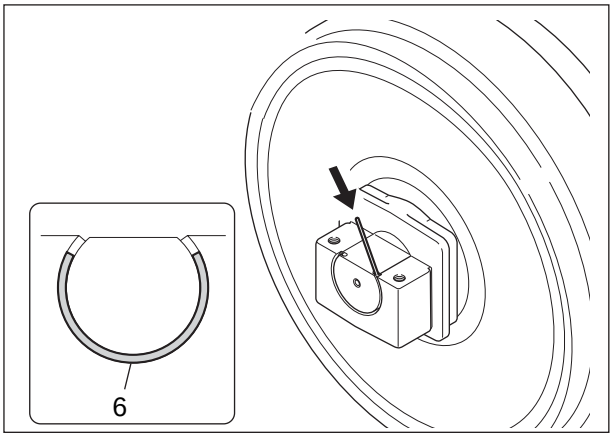

https://truckmanualshub.com/

[12] Inject compressed air (0.2 MPa) from the oil injection port, and immerse in water to check that there are no leaks.

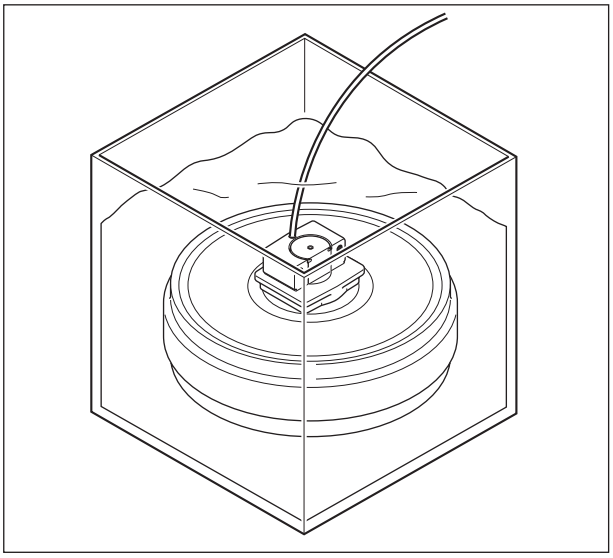

[13] Insert a wire clip and inject the engine oil (120 cc) to the roller main unit.
- The roller main unit can be very unstable, so pay attention to secure it.

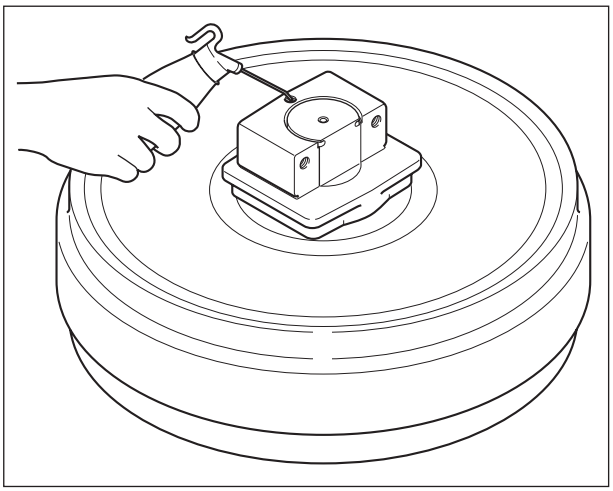

[14] After injecting the hydraulic oil, use a 6-mm hexagon wrench (T1) to tighten the plug (8) with seal nylon applied.
- To reuse a plug, wrap it with seal tape.

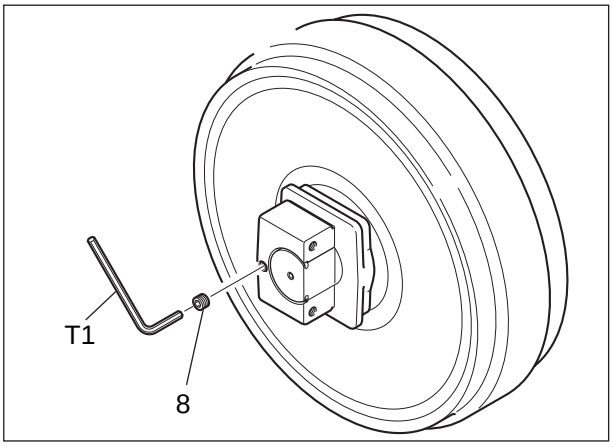

https://truckmanualshub.com/

1 Removal and Installation of Upper Roller

Warning	• When loosening the check valve, loosen it a gradually and stop loosening when grease appears. (The pressure inside the cylinder is very high. If the check valve is loosened too much, grease may come out or the plug may fly off.)

Caution	• Be sure to stop the engine before beginning work.

Items to prepare

- Box wrench (19 mm, 30 mm)
- Jack (that meets the lifting weight)
- Rags
- Cleaning fluid
- Square wooden pieces

[1] Use a 19-mm box wrench to loosen the check valve (1), and then loosen the shoe tension.
- Grease drains out, so provide rags (2) close to the oil drain port.

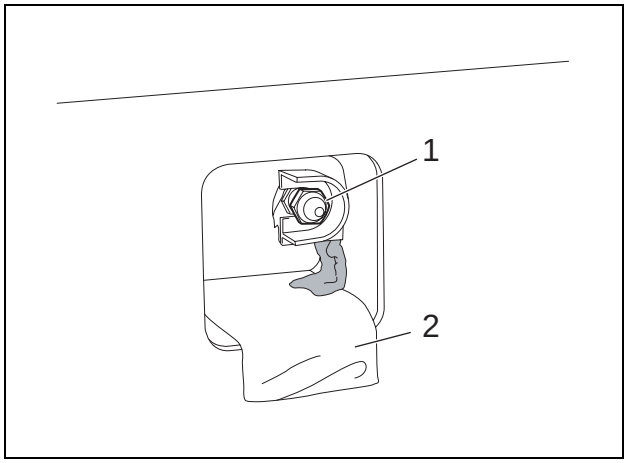

[2] Use a jack (1) to lift the top of the shoe, and then insert square wooden pieces (2) to separate the shoe and top roller by about 10 mm.

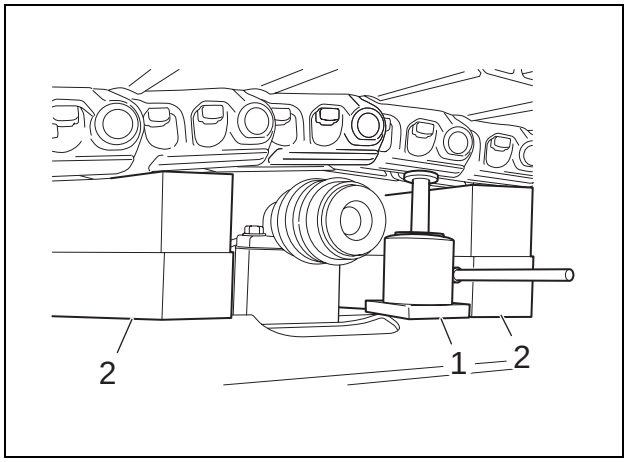

https://truckmanualshub.com/

[3] Use a 30-mm box wrench to remove the 2 installation bolts (1), and then remove the upper roller (2).

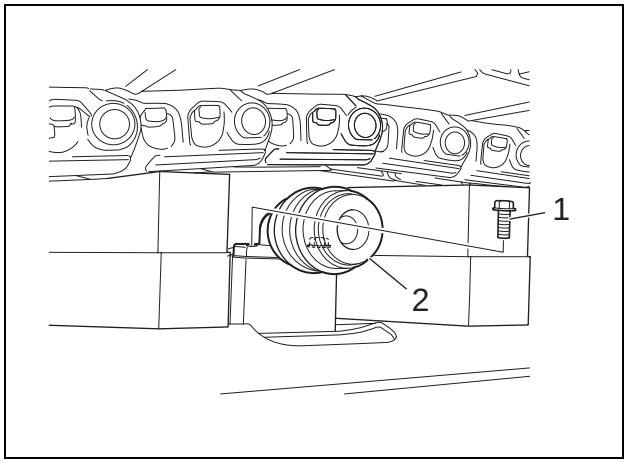

https://truckmanualshub.com/

2 Assembly and Disassembly of Carrier Roller

Caution	• To ensure safe operations, wear protective devices before beginning work and follow all precautions.
	• When removing devices or positioning devices at the time of installation, use a removal jig and a hammer or steel rod.
	• Follow the precautions below when suspending the load.
	  • The crane must be operated by a qualified operator.
	  • Do not stand or pass under the suspended load.
	  • Check the weight of the roller to determine whether it can be carried by hand or whether a crane must be used.
	• Fix the roller to a level surface so it does not roll.
	• Be sure to repair any parts damaged during disassembly, and prepare replacement parts in advance.
	• If any parts are significantly rusted or dirty, clean them before disassembling.
	• Any foreign matter entering the equipment during assembly can create a malfunction. Therefore, after thoroughly cleaning the equipment with cleaning oil, air blow the equipment, and assemble in a clean location.
	• When assembling touching parts, be sure to coat them with new hydraulic oil.
	• As a rule, replace all O-rings and other seal parts with new parts.
	
	General cautions
	• Be careful not to drop or impact precision parts with other parts during disassembly or assembly.
	• Do not forcefully open or hit parts in an effort to speed up operations. Pay careful attention and proceed slowly so as not to damage any parts, create any oil leaks, or compromise the efficiency of the equipment.
	• Disassembled parts can easily rust or collect dust. Therefore, take precautions to prevent the parts from rusting or collecting dust, immediately after disassembling parts.

Items to prepare

- Hexagon wrench (6 mm)
- Hammer
- Wrench (13 mm, 17 mm)
- Screwdriver
- Engine oil (Shell Rimula Oil #30)
- Specialized jig
- Pressing machine
- Locktite 262
- Special fiber cloth(s) (Kimwipes)
- Marking pen
- Micrometer
- Caliper

https://truckmanualshub.com/

5-4 Lower Mechanism: Upper Roller

Configuration diagram

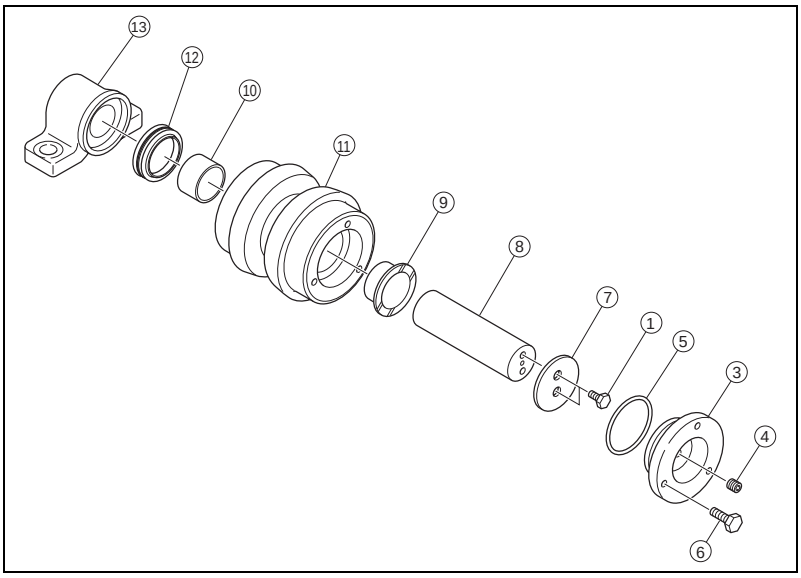

	Part name	Part No.	Q' ty
(1)	High strength bolt M10 × 16	102R010Y016N	2
(2)	Locktite# 262	KRC5007	No. reqd.
(3)	Cover (bolt stopper)	KRA1719	1
(4)	Plug with seal nylon	KHJ0300	1
(5)	O-ring	UHA0049	1
(6)	High strength bolt M8 × 25	102R008	3
(7)	Thrust plate	KRA1123	1
(8)	Roller shaft	KRA1252	1
(9)	Wrapping bearing	KRA1248	1
(10)	Wrapping bearing	KRA1249	1
(11)	Carrier roller (bolt stopper)	KRA1718	1
(12)	Floating seal	KBA0783	1
(13)	Bracket	KRA1305	1

Dimension diagram

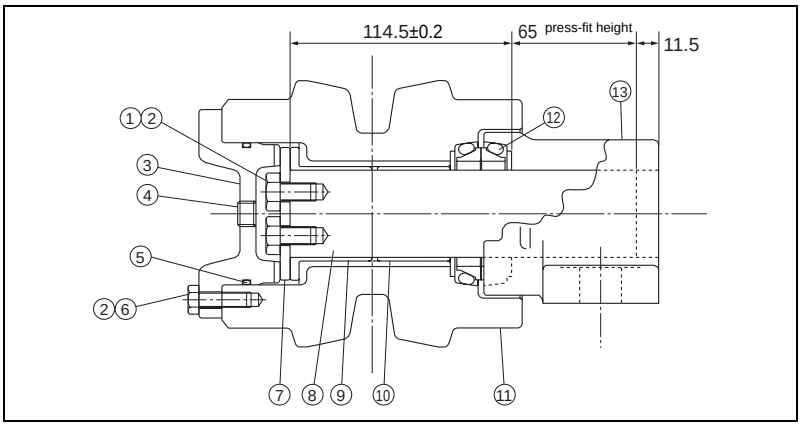

Jig dimension diagram

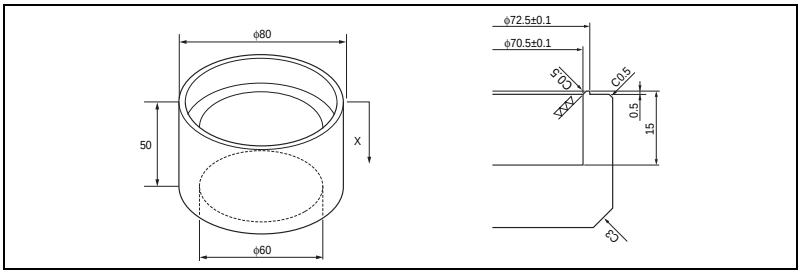

https://truckmanualshub.com/

Disassembly procedure

[1] Place the roller vertically and use a 6-mm hexagon wrench (T1) to remove the plug (4).
- The plug (4) is coated with seal nylon, which comes off when the plug is removed. To reuse the plug, be sure to use seal tape.

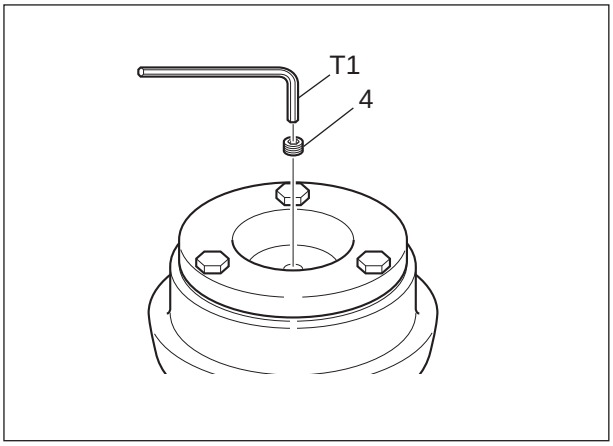

[2] Face down the part of the roller from which the plug was removed and empty the hydraulic oil from within the roller.
- It may take several hours to completely empty the hydraulic oil from the roller.
- Place an oil pan or a similar object under the roller to catch grease.

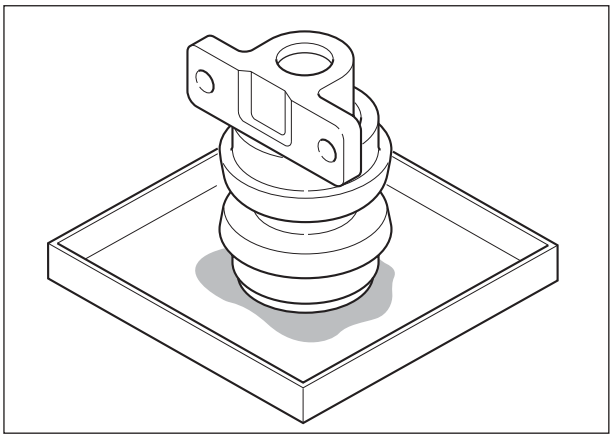

[3] Use a 13-mm wrench to remove the 3 bolts (6) from the cover.

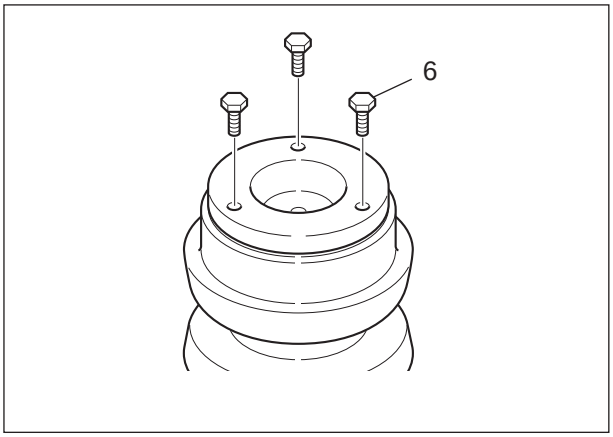

[4] Remove the cover (3).
If the cover (3) is difficult to remove, it is possible to use an air hose (T2) with an adapter or to pry it open by inserting a flathead screwdriver into either end of the cover.
- When using an air hose, be careful of flying parts.

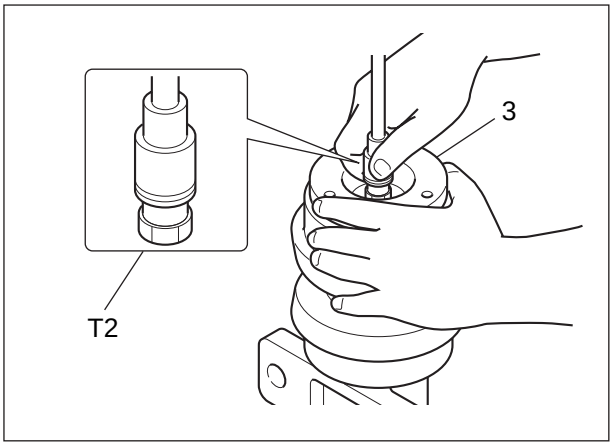

https://truckmanualshub.com/

[5] Use a 17-mm box wrench to remove the 2 bolts (1) inside the cover, and then remove the thrust plate (7).

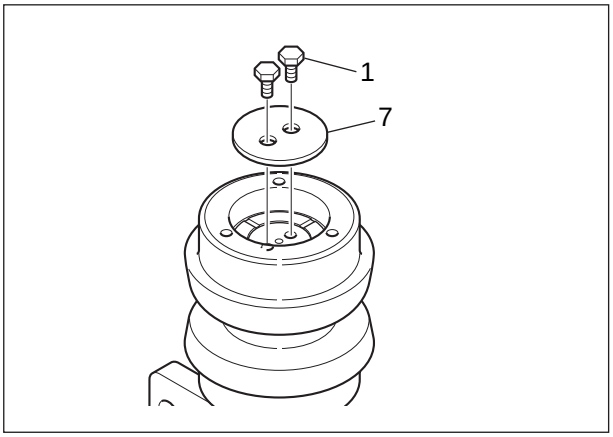

[6] Lift the carrier roller (11) and remove the roller shaft.

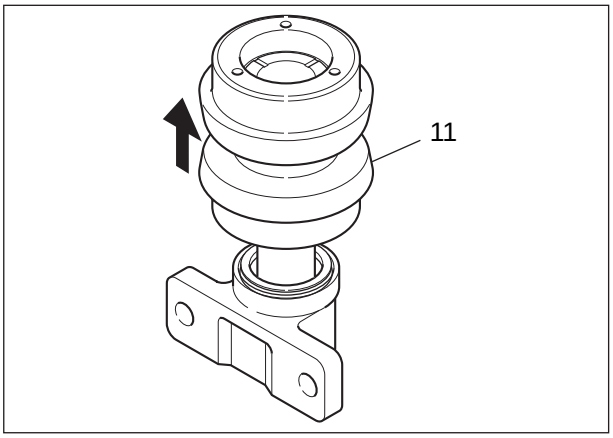

[7] Remove the floating seal (12) on the roller. Check whether the surface of the floating seal contacting the roller has rusted or is damaged. Also check whether the O-ring (12-2) is twisted.

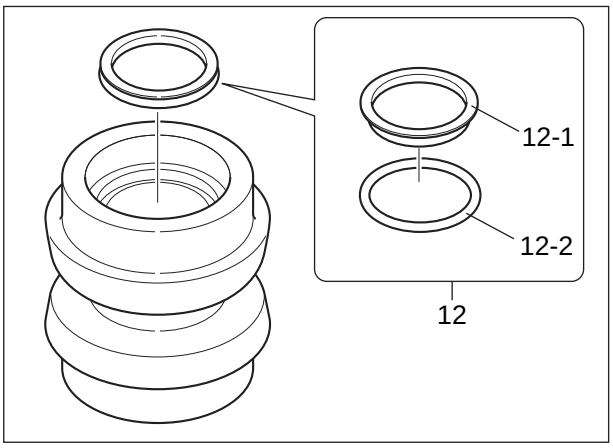

[8] Remove the floating seal (12) attached to the roller shaft.
- The roller shaft and bracket cannot be removed.

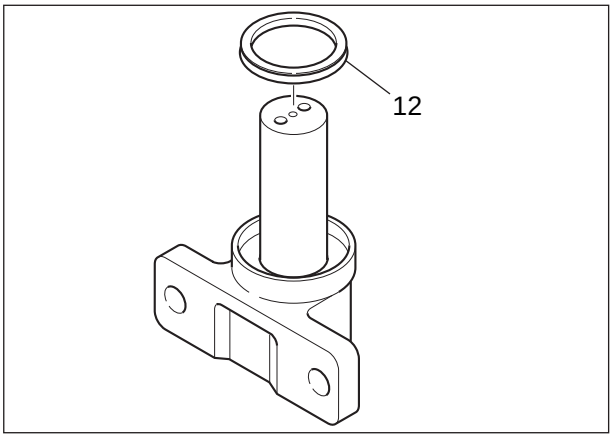

https://truckmanualshub.com/

[9] Remove the O-ring (5) on the cover.
- Also check whether the O-ring (5) is twisted. If it is twisted, replace it with a new O-ring.

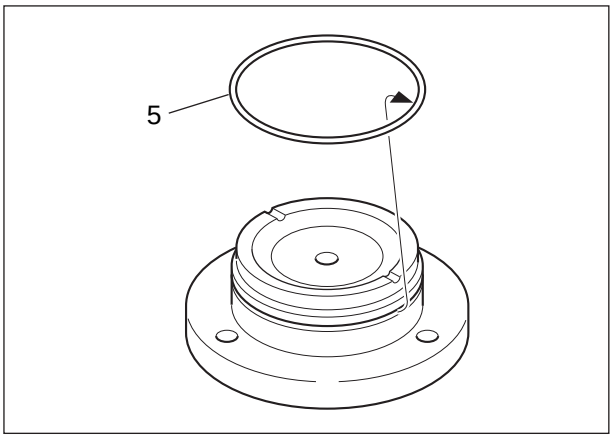

Assembly procedure

[1] Clean all parts.
- Find a clean location to assemble the parts.
- Place a rubber plate or a cloth on the work table so as not to damage the parts.

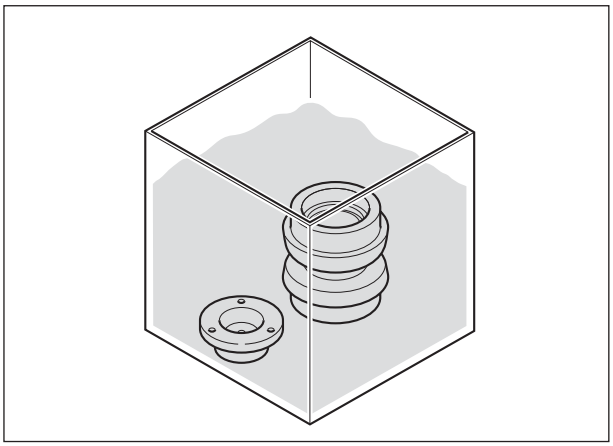

[2] After cleaning the parts, air blow them to remove any remaining cleaning fluid or debris.

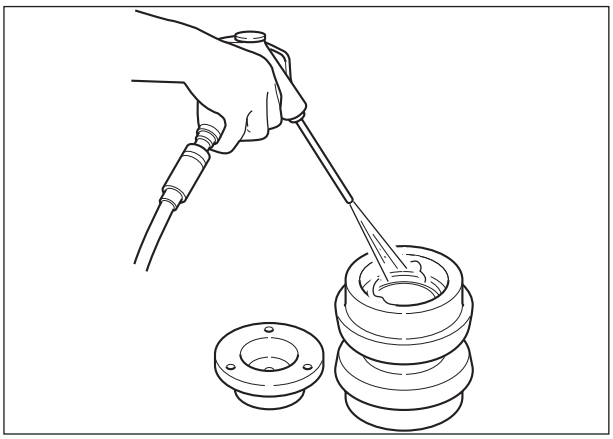

[3] Insert the floating seal (12) into the carrier roller. Use a jig (A) to press the floating seal into position.

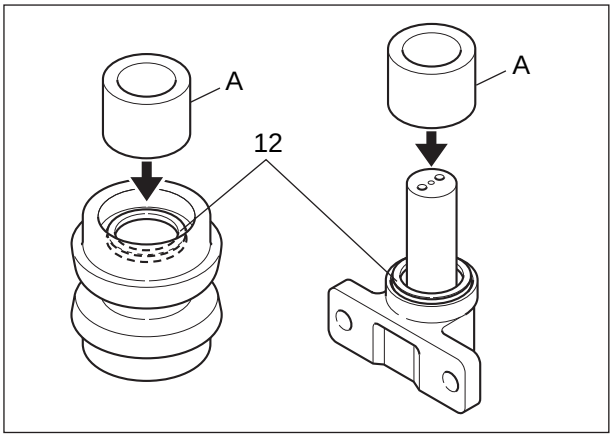

https://truckmanualshub.com/

[4] Use a special fiber cloth to wipe the surfaces of the floating seals to increase adhesion and prevent dust from entering.

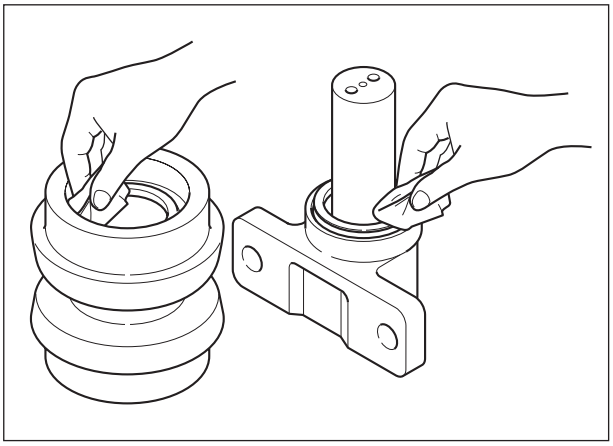

[5] Apply hydraulic oil to the carrier roller.

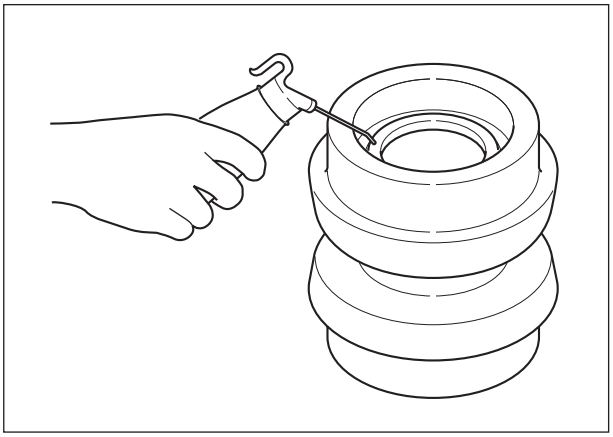

[6] Install the roller shaft into the carrier roller.

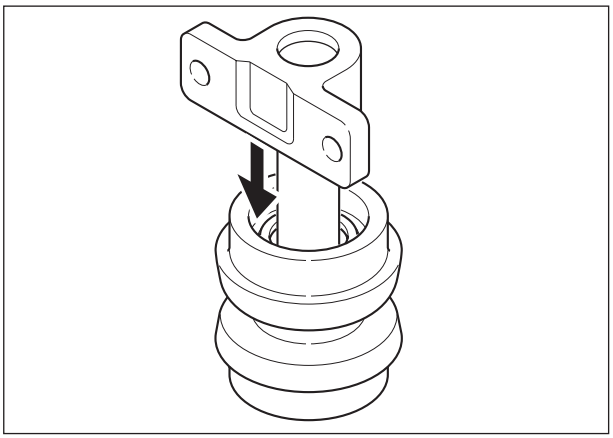

[7] Use a special fiber cloth to thoroughly wipe the surface of the thrust plate (7) to prevent any dust or scratches.

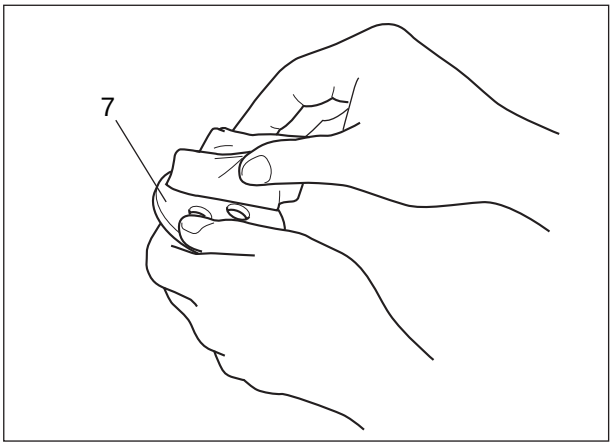

https://truckmanualshub.com/

[8] Use a 17-mm wrench to fasten the thrust plate (7) with 2 bolts (1). Completely degrease the bolts (1), apply Locktite (2) to the bolt openings, and tighten the bolts. After tightening the bolts, mark them (M).
- The bolt tightening torque is 62.8 - 72.6 Nm.

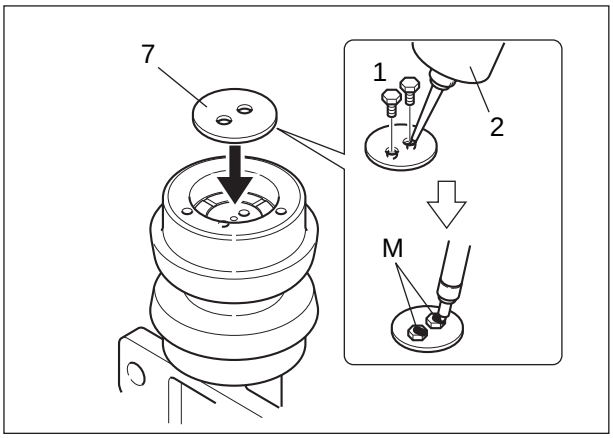

[9] Use a 13-mm wrench to fasten the cover (3) with 3 bolts (6). Degrease the bolts, apply Locktite (2) to the bolt openings, and tighten the bolts. After tightening the bolts, mark them (M).
- The bolt tightening torque is 31.4 - 37.2 Nm.

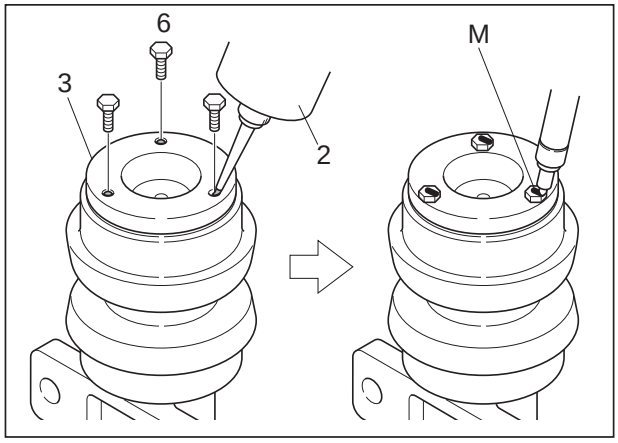

[10] Rotate the roller in the direction of the arrow, and check that it rotates smoothly.

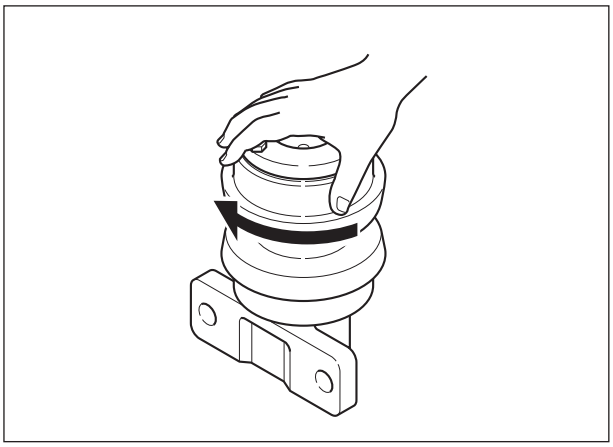

https://truckmanualshub.com/

[11] Inject compressed air (0.2 MPa) from the oil injection port, and immerse in water to check that there are no leaks.

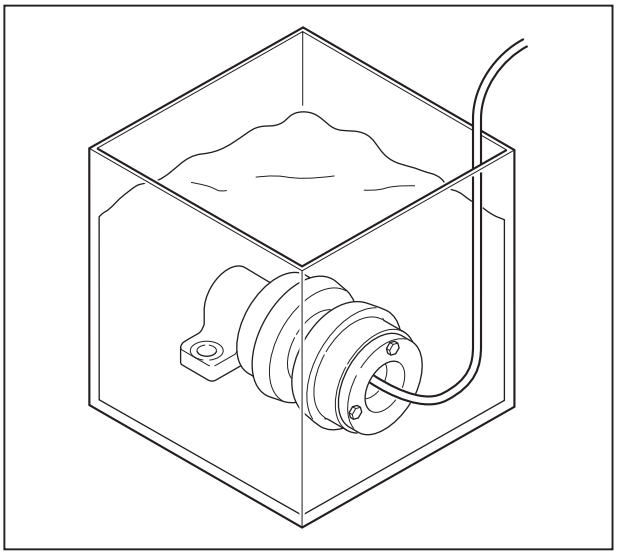

[12] Inject engine oil (50 - 55 cc) into the roller. After injecting the engine oil, use a hexagon wrench (T1) to tighten the plug (coated with seal nylon) (4). After tightening the bolts, mark them (M).
- To reuse a plug, wrap it with seal tape.

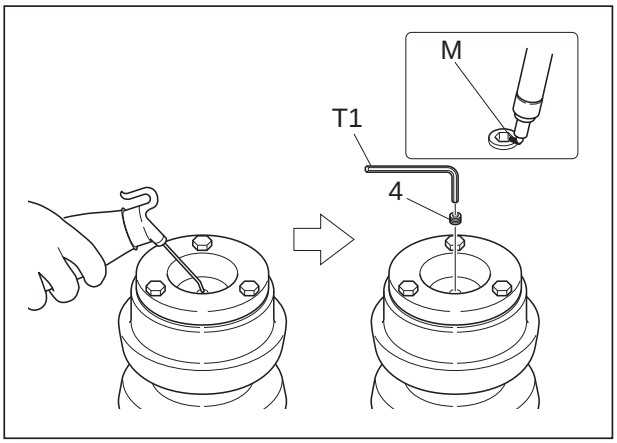

https://truckmanualshub.com/

1 Removal and Installation of Lower Roller

Warning	• When loosening the check valve, loosen it gradually and stop loosening when grease appears. (The pressure inside the cylinder is very high. If the check valve is loosened too much, grease may come out or the plug may fly off.)

Caution	• Be sure to stop the engine before beginning work.

Items to prepare

- Box wrench (19 mm, 27 mm)
- Jack (that meets the lifting weight)
- Rags
- Cleaning fluid
- Square wooden pieces

[1] Use a 19-mm box wrench to loosen the check valve (1), and then loosen the shoe tension.
- Grease drains out, so provide rags (2) close to the oil drain port.

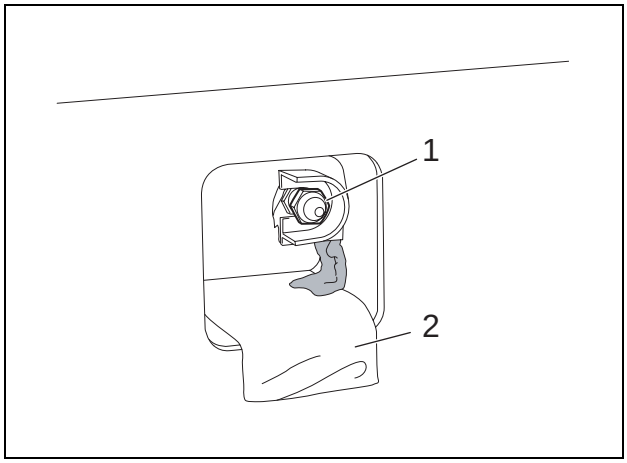

[2] Use a jack (1) to lift the track frame, and then insert square wooden pieces (2) to separate the shoe and lower roller by about 15 mm.

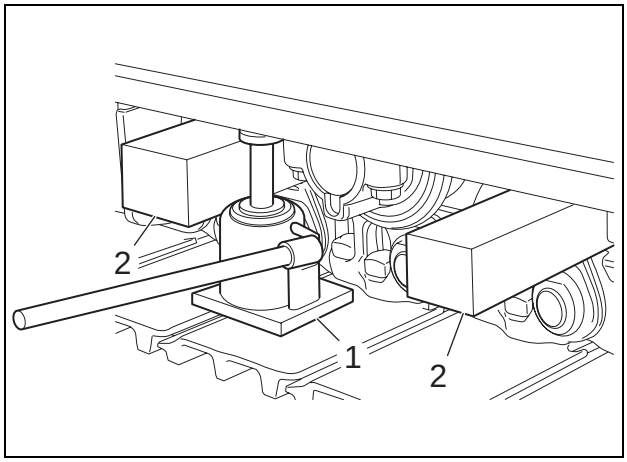

https://truckmanualshub.com/

[3] Use a 27-mm box wrench to remove the 2 installation bolts (1), and then remove the lower roller (2).

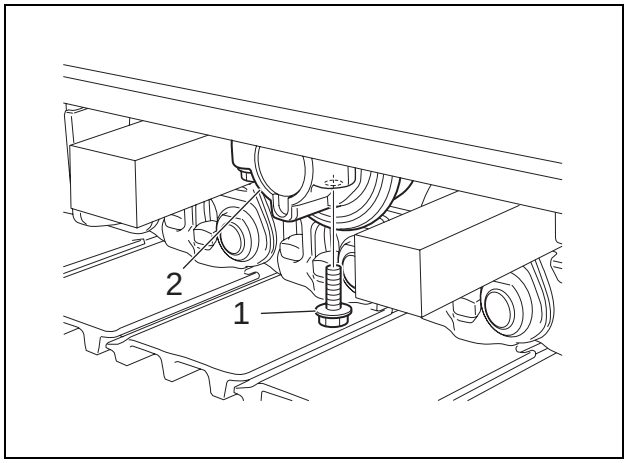

https://truckmanualshub.com/

2 Assembly and Disassembly of Track Roller

Caution	• To ensure safe operations, wear protective devices before beginning work and follow all precautions.
	• When removing devices or positioning devices at the time of installation, use a removal jig and a hammer or steel rod.
	• Follow the precautions below when suspending the load.
	  • The crane must be operated by a qualified operator.
	  • Do not stand or pass under the suspended load.
	  • Check the weight of the roller to determine whether it can be carried by hand or whether a crane must be used.
	• Fix the roller to a level surface so it does not roll.
	• Be sure to repair any parts damaged during disassembly, and prepare replacement parts in advance.
	• If any parts are significantly rusted or dirty, clean them before disassembling.
	• Any foreign matter entering the equipment during assembly can create a malfunction. Therefore, after thoroughly cleaning the equipment with cleaning oil, air blow the equipment, and assemble in a clean location.
	• When assembling touching parts, be sure to coat them with new hydraulic oil.
	• As a rule, replace all O-rings and other seal parts with new parts.
	
	General cautions
	• Be careful not to drop or impact precision parts with other parts during disassembly or assembly.
	• Do not forcefully open or hit parts in an effort to speed up operations. Pay careful attention and proceed slowly so as not to damage any parts, create any oil leaks, or compromise the efficiency of the equipment.
	• Disassembled parts can easily rust or collect dust. Therefore, take precautions to prevent the parts from rusting or collecting dust, immediately after disassembling parts.

Items to prepare

- Hexagon wrench (6 mm)
- Hammer
- Wire clips
- Pliers
- Gear puller
- Screwdriver
- Gear oil (Mobile Gear Oil SHC320)
- Specialized jig
- Pressing machine
- Locktite
- Special fiber cloth(s) (Kimwipes)
- Micrometer
- Caliper

https://truckmanualshub.com/

5-5 Lower Mechanism: Lower Roller

Configuration diagram

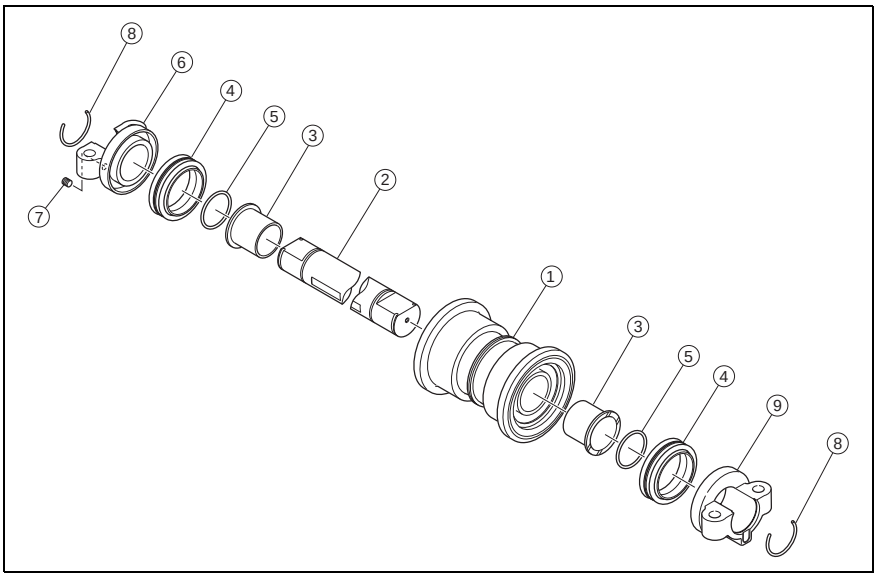

	Part name	Part No.	Q'ty
(1)	Track roller	KRA10370	1
(2)	Roller shaft	KRA11260	1
(3)	Wrapping bearing	KRA1197	2
(4)	Floating seal	BHA1099	2
(5)	O-ring 1A-G60	BHA0863	2
(6)	Collar	KRA1196	1
(7)	Plug with seal nylon	KHJ0300	1
(8)	Wire clips	KNA0180	2
(9)	Collar (without plug)	KRA1595	1

Dimension diagram

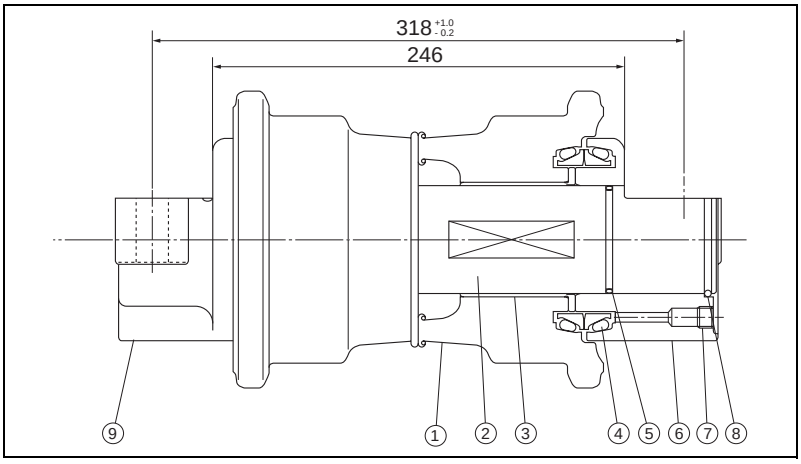

Jig dimension diagram

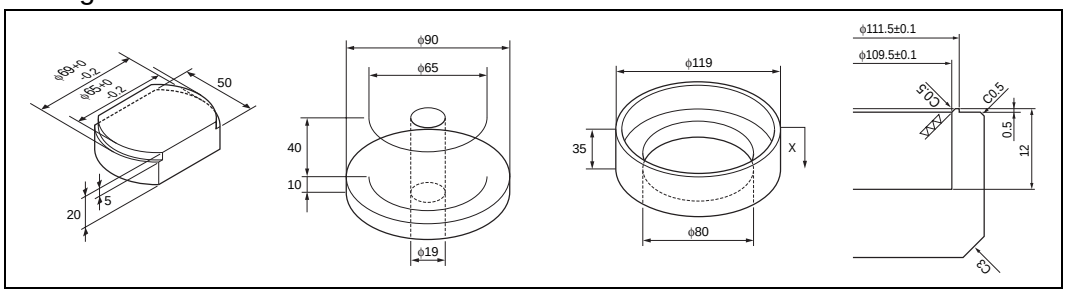

https://truckmanualshub.com/

Disassembly procedure

[1] Place the roller vertically and use a 6-mm hexagon wrench (T1) to remove the plug.
- The plug (7) is coated with seal nylon, which comes off when the plug is removed. To reuse the plug, be sure to use seal tape.

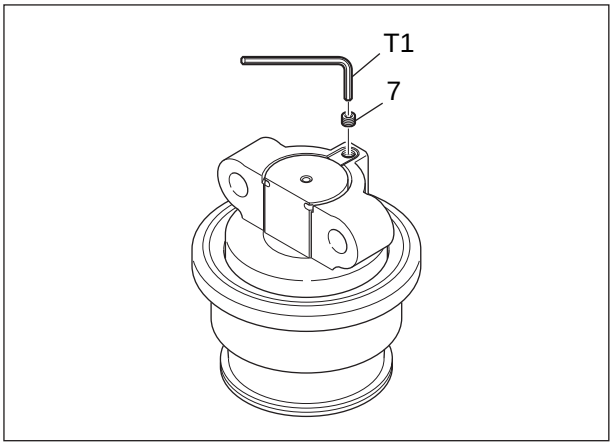

[2] Face down the part of the roller from which the plug was removed and empty the hydraulic oil from within the roller.
- It may take several hours to completely empty the hydraulic oil from the roller.
- Place an oil pan or a similar object under the roller to catch grease.
- Fasten the roller so it does not fall down.

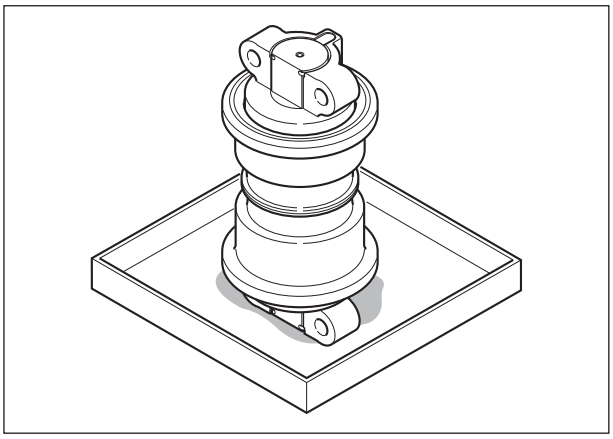

[3] Remove the wire clip (8). Use a hammer (T3) to hit another wire (T2) to push out the wire (8) that is in the roller from outside.
- Place the roller horizontally and secure it so it does not roll before removing the wire clip.
- The wire in the roller is very securely fixed, so prepare several wire clips (T2). A lubricating oil can also be used.

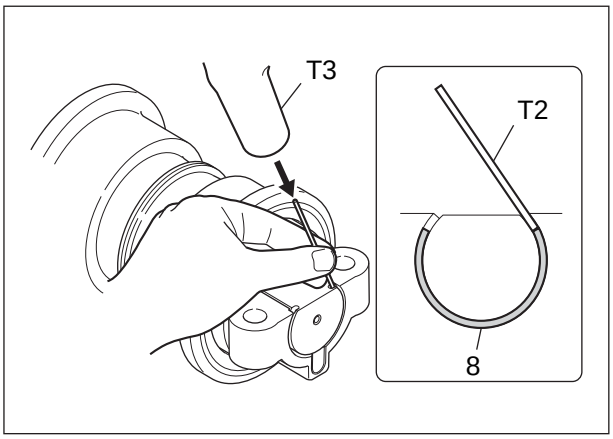

[4] Use pliers or a similar tool to remove the pushed out wire.

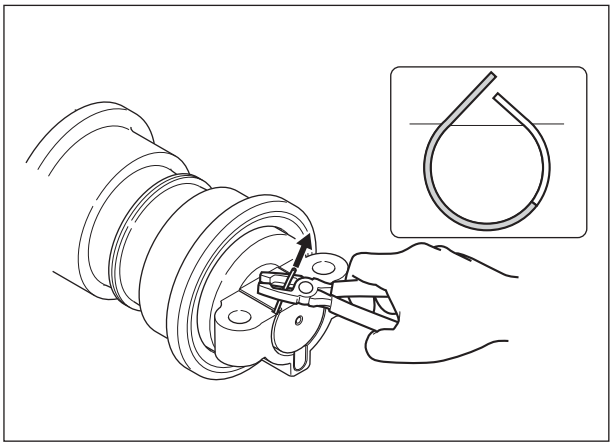

https://truckmanualshub.com/

[5] Use a gear puller (T4) or a similar tool to remove the collar (9). If the collar is difficult to remove, hook the collar on the bolt and catch the puller on that part.
- If the collar (9) is rusty or is difficult to remove due to an accumulation of debris, hit it with a hammer and apply a shock to make it easier to move.
- When hitting the collar with a hammer, be careful not to dent it.

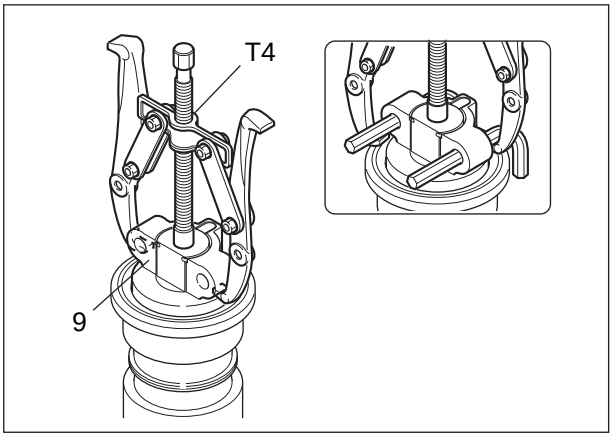

[6] Check whether the surface of the floating seal (4) contacting the removed collar has rusted or damaged. Also check whether the O-ring is twisted.
- The O-ring cannot be reused. Replace it with a new O-ring.

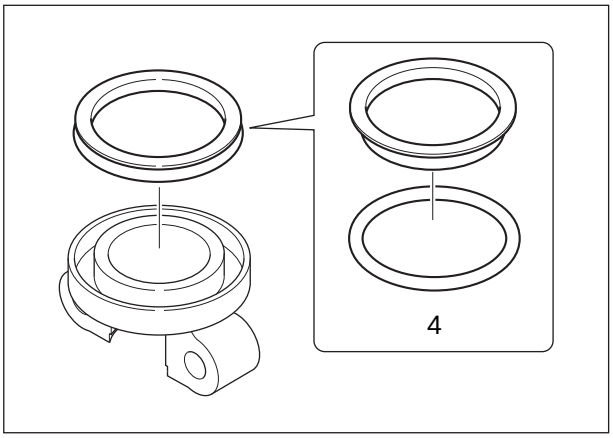

[7] Remove the floating seal (4) on the roller. As described in Step [6] above, check whether the surface of the floating seal contacting the roller has rusted or damaged. Also check whether the O-ring is twisted.

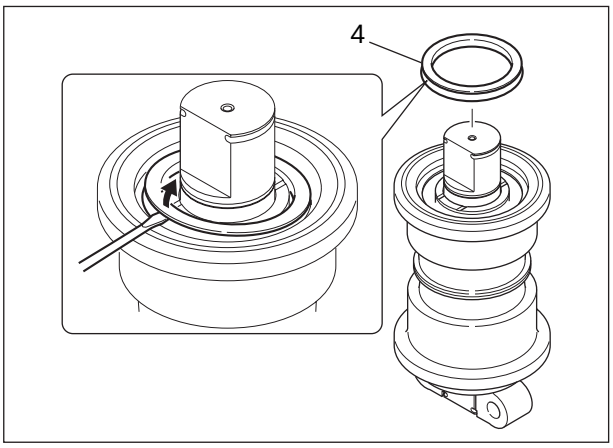

[8] Remove the O-ring (5) on the roller shaft.
- The O-ring cannot be reused. Replace it with a new O-ring.

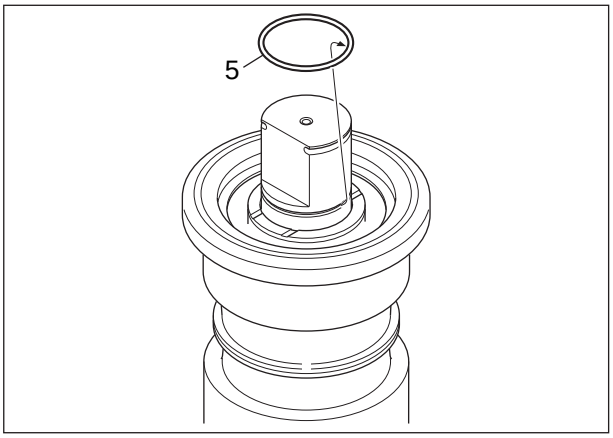

https://truckmanualshub.com/

[9] Remove the roller shaft.

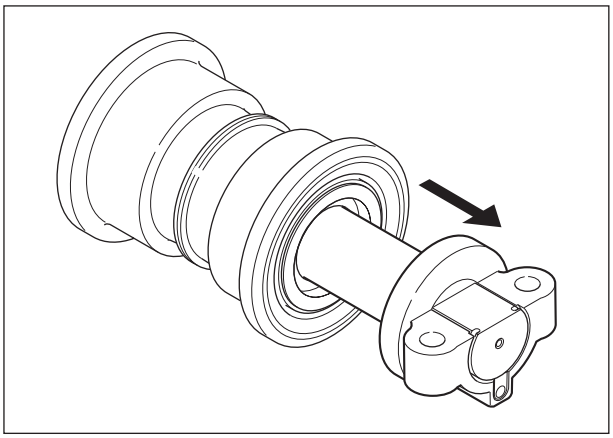

[10] As described in Step [7], remove the floating seal (4) on the opposite side.

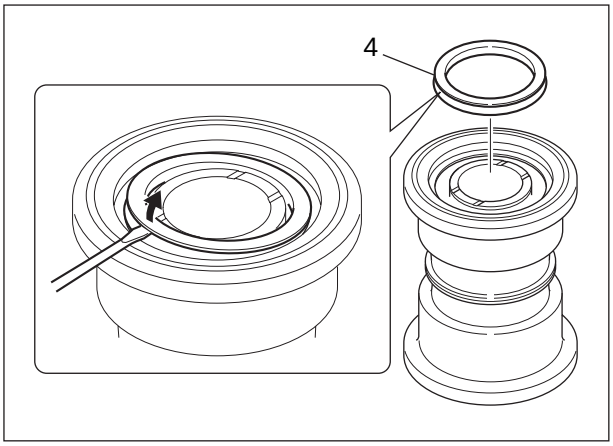

[11] Insert the specialized jig (A) into the wrapping bearing, and use a cylindrical object, such as a shaft, to push it from the top.
The wrapping bearing comes off.

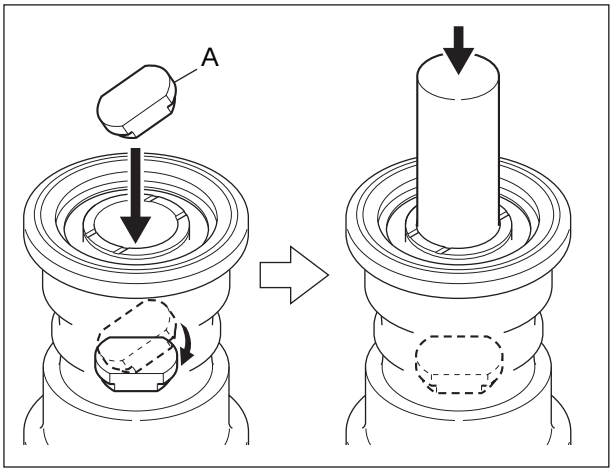

https://truckmanualshub.com/

[12] Use a micrometer or a similar tool to measure wear or deformation of the track roller (with wrapping bearing) (1), the collars (6) and (9), and roller shaft (2). Replace with new parts as necessary.

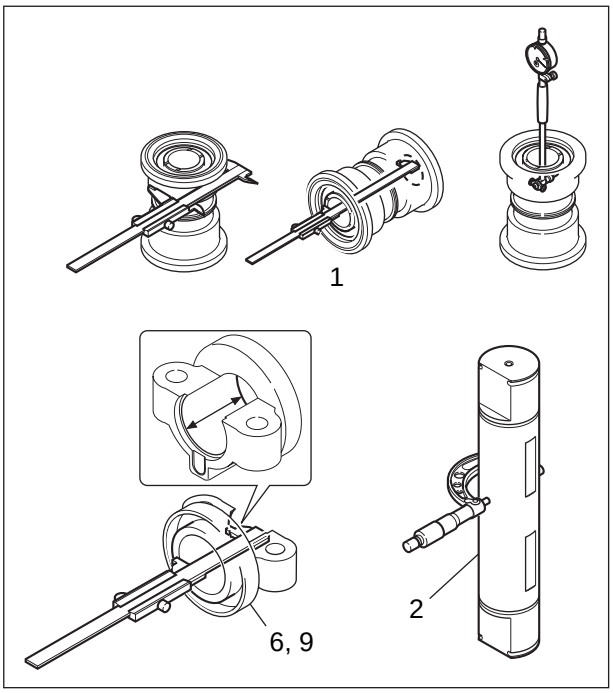

Assembly procedure

[1] Clean all parts by immersing them in cleaning fluid (1).
- Find a clean location to assemble the parts.
- Place a rubber plate or a cloth on the work table to prevent damaging the parts.

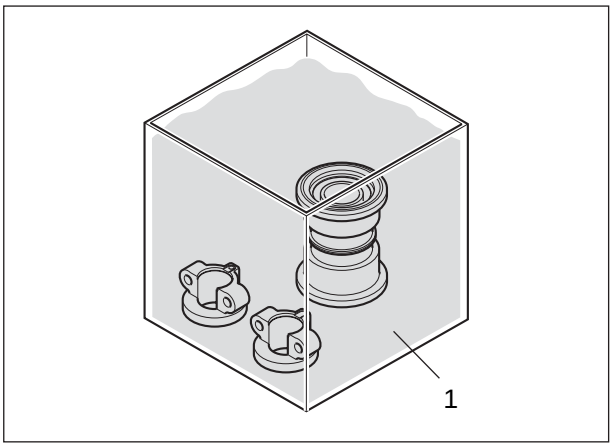

[2] After cleaning the parts, air blow them to remove remaining cleaning fluid or debris.

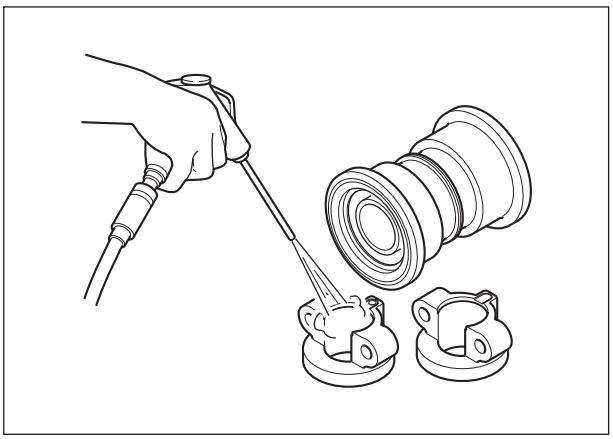

https://truckmanualshub.com/

[3] Insert the track roller into the wrapping bearing (3). Use a jig (B) to press from above, and use a pressing machine (T5) to press into position.

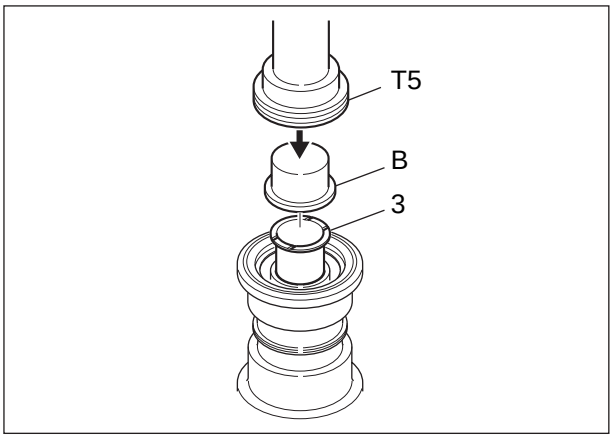

[4] Attach the floating seals (4) to the collars. Use a jig (C) to press them into position by hand.

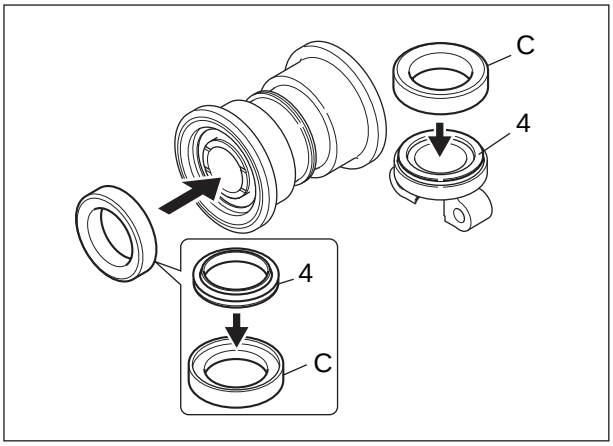

[5] Use a special fiber cloth to wipe the surfaces of the floating seals to increase adhesion and prevent dust from entering.

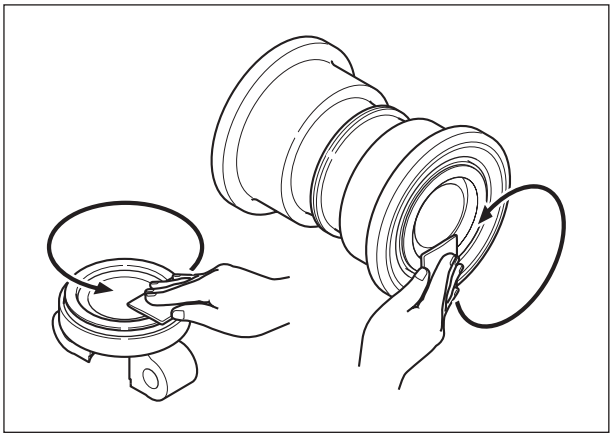

[6] Apply gear oil to the floating seals on the collars.

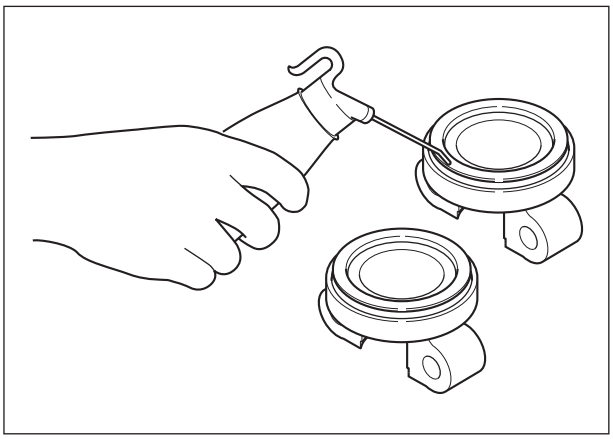

https://truckmanualshub.com/

[7] Attach O-rings (5) to the roller shaft (2) and mount them to the track roller.

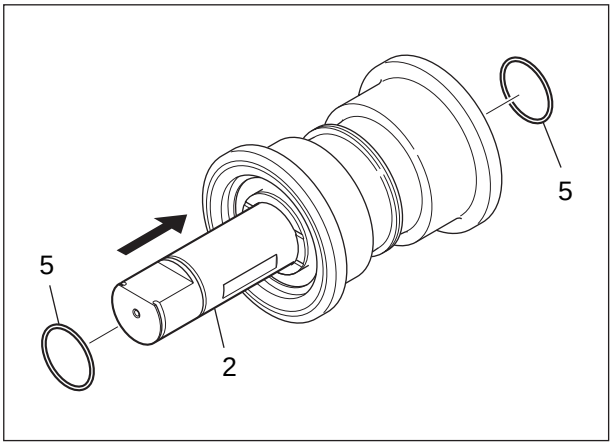

[8] Attach the collars to both sides of the roller shaft.

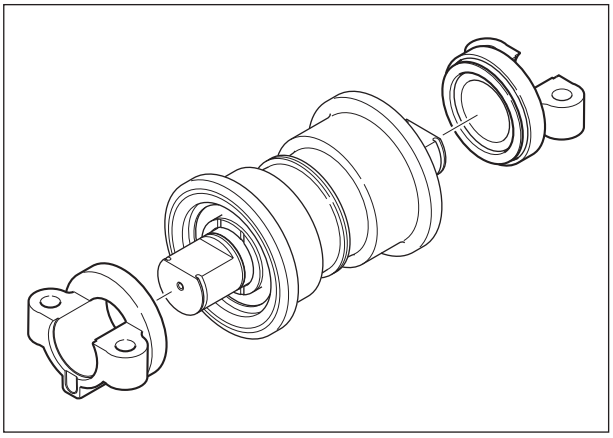

[9] Attach the wire clip (8).
- When attaching the wire clip, secure the roller main unit so that it does not roll.

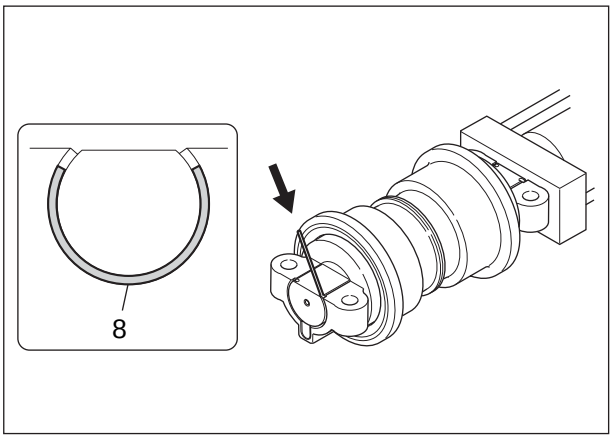

[10] Turn the main unit and check that the roller rotates properly.

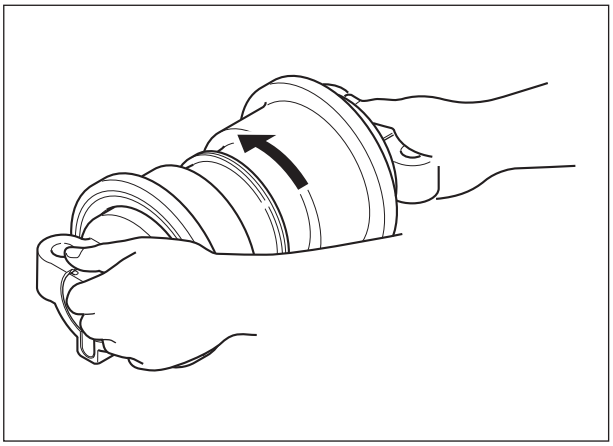

https://truckmanualshub.com/

[11] Inject compressed air (0.2 MPa) from the oil injection port, and immerse in water to check that there are no leaks.

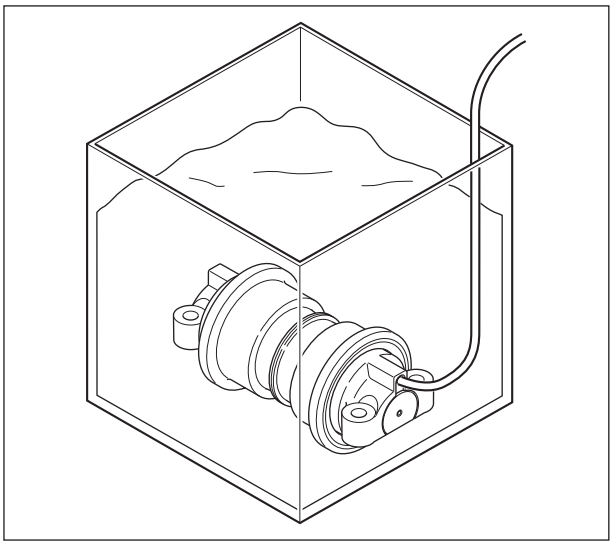

[12] Inject gear oil (125 cc) into the roller. Use a 6-mm hexagon wrench (T1) to tighten the plug (7) with a nylon seal applied.
- Mobile Gear Oil SHC320 is recommended for use.
- The plug tightening torque is 24.5 Nm.
- To reuse a plug, wrap it with seal tape.

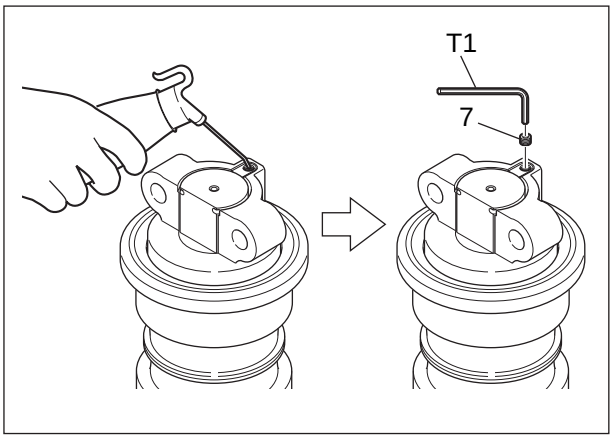

https://truckmanualshub.com/

5-7 Swing Body: Swing Driving Unit

1 Removal and Installation of Swing Motor Assembly

Warning	• Be sure to release the hydraulic pressure before beginning work.

Caution	• Be sure to stop the engine before beginning work. • Be sure to inspect the wire rope and other suspended items before beginning work. • Do not stand or pass under the suspended load (swing motor assembly).

Items to prepare

- Wrench (14 mm, 19 mm, 22 mm, 27 mm, 36 mm, 40 mm)
- Box wrench (30 mm)
- Pliers
- Hammer
- Grease
- Wire rope (with the required breaking load)
- Crane (that meets the lifting capacity)
- Marking pen
- Caps
- Plugs
- Rags
- Cleaning fluid
- Crossties

[1] Use a 19-mm wrench to remove the 6 installation bolts (1), and then remove the center cover (2).

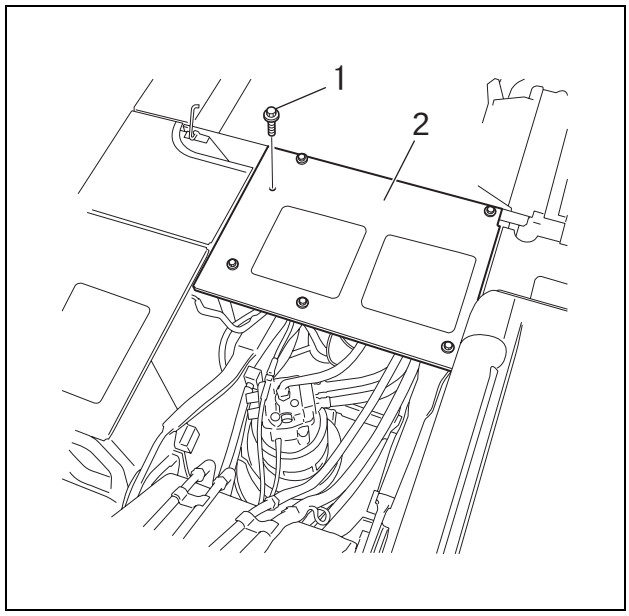

https://truckmanualshub.com/

[2] Use a wrench [40 mm (1), 36 mm (2), 27 mm (3), 22 mm (4)] to remove the hoses from the swing motor.
- Mark the swing motor and hoses so that they can be connected correctly at the time of assembly.
- Attach caps and plugs to the swing motor and hoses to prevent any entry of water, dust, or dirt.
- Clean the swing motor and hoses by spraying with a parts cleaner to prevent scratches and prevent dirt from accumulating on the connectors.

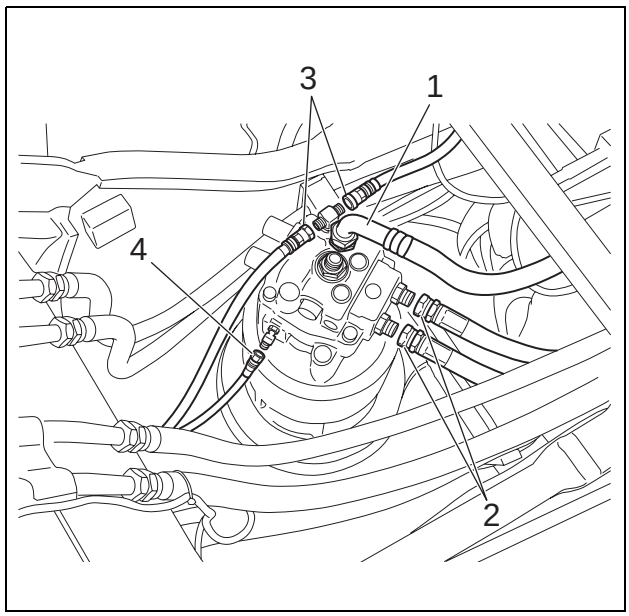

[3] Use a 19-mm wrench to remove the grease hose (1) that feeds grease to the swing motor reduction gear bearing.

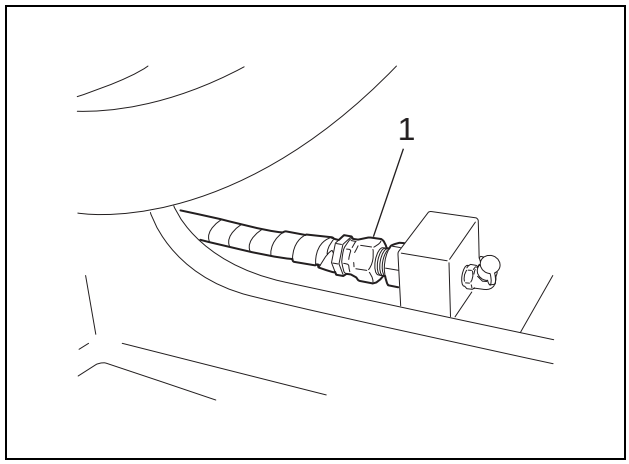

[4] Use a 19-mm wrench to remove the 3 installation bolts (1), and then remove the under cover (2).

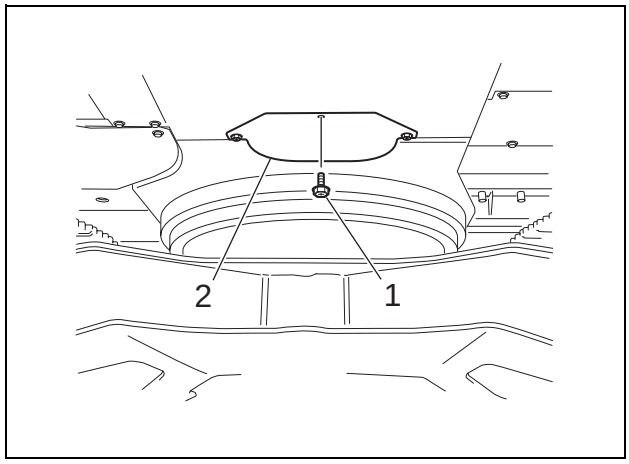

https://truckmanualshub.com/

[5] Use a 14-mm wrench to remove the installation bolt (1), and then remove the gear oil hose (2) of the swing reduction gear.

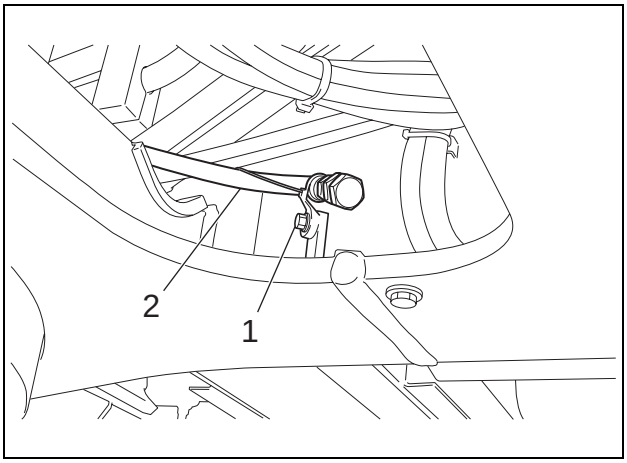

[6] After removing all the hoses, use pliers to cut the tie wrap (1) that binds the hoses.

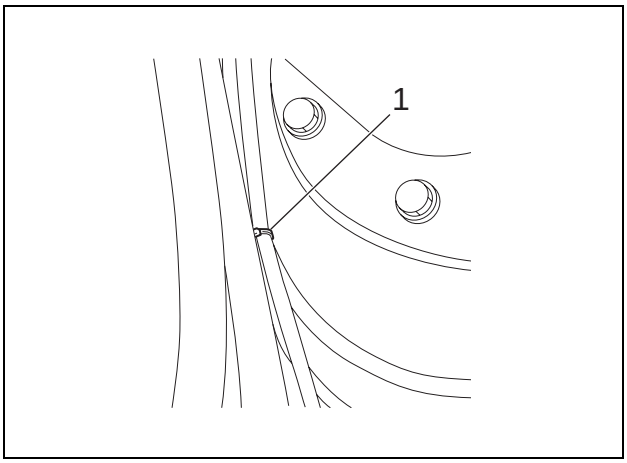

[7] Use a 30-mm box wrench to remove the 11 installation bolts (1) on the swing motor.

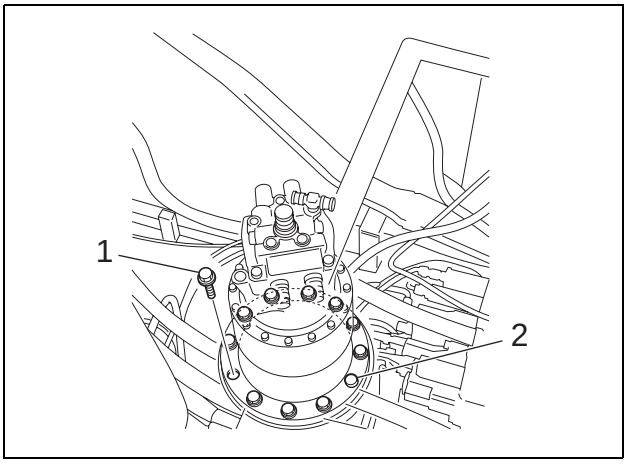

https://truckmanualshub.com/

[8] Wrap the wire rope around the swing motor and lift it with a crane.
- A knock pin (2) is driven into the installed part of the swing motor. Apply lubricating oil to the knock pin and pull it out together with the main unit of the swing motor while hitting with a hammer.

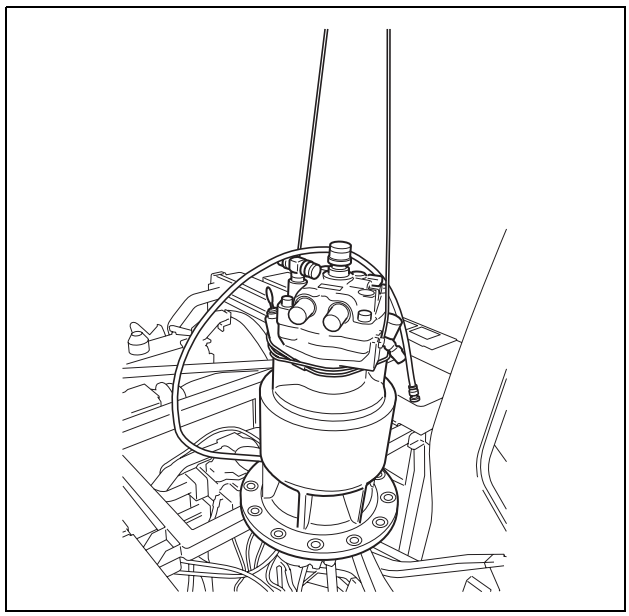

[9] Thoroughly check that the location is safe before lowering the swing motor on a pair of crossties.
- Thoroughly secure the swing motor so that it does not fall down.

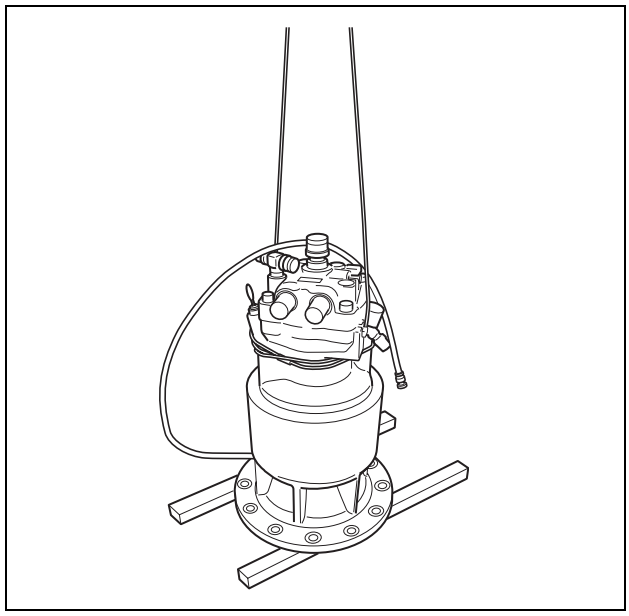

https://truckmanualshub.com/

2 210 X2 Assembly and Disassembly of Swing Unit

Caution	1. Before starting disassembly, re-assembly, inspection or repair work, read this maintenance manual thoroughly and be sure you understand its contents. 2. Handle this product according to the separate "Usage Precautions". 3. Stop the equipment system this product is mounted on and wait for the surface temperature of this product to fall to about 40°C or less before removing this product from the equipment it is mounted on. Working on this product while it is still hot may result in burns. Whenever removing a pipe from this product, be sure to bleed the pressure. Removing a pressurized pipe without bleeding pressure inside can induce a blow out of oil, resulting in personal injury and oil leakage. 4. Use the special tools and measuring instruments when disassembling, re-assembling, inspecting or repairing this product. Using an inappropriate tool may result in burns and damage to the product. 5. Be careful not to drop parts when assembling, re-assembling, inspecting or repairing this product. Otherwise, personal injury or property damage may result. 6. Do not touch machined edges or threaded sections of parts directly with your bare hands when disassembling, re-assembling, inspecting or repairing this product. Doing so may result in personal injury. 7. After re-assembly, check the performance of the product. Do not use the product unless the performance has fully recovered. Otherwise, damage may result to the equipment. 8. The caution (mark !) in this maintenance manual does not encompass all cases. Be sure to act on the safety-first principle whenever disassembling, re-assembling, inspecting, repairing, etc. this product.

1. Usage Precautions

(1) How to Handle the Product

When transporting or storing this product, be sure to handle it with the output shaft directing downward and placing the product in an upright position.

Whenever lifting a unit, screw in a clean lifting tool to the make-up port (G1) at the motor cover center to lift the unit using this lifting tool. In particular, do not try to lift the relieve valve by hanging a wire on it. Otherwise, excessive load will be applied to the valve, deforming it and, thus inducing its malfunction.

(2) Pipes

Dimensions required for the pipe fittings are previously determined from the external shape diagram. A hose or steel pipe must be used as the pipe. Make sure it is shaped in such a way that excessive force is not applied to the pipe installation position.

In addition, before laying a pipe, be sure to remove the rubber cap seal on the port. A large diameter pipe must be used for the drain pipe in order to reduce pressure in the motor case.

Reasonable care must be exercised when connecting the drain pipe to a return pipe of another piece of equipment, since a sudden inflow or outflow of oil can induce abnormal back pressure in the motor case, damaging the oil seal and other components.

Set the pressure in the motor case in such a way that the peak pressure remains at a maximum of 0.3 MPa.

(3) Hydraulic Oil, Grease and Gear Oil

Hydraulic oil

Recommended hydraulic oil:	ISO VG#32 - 56 or equivalent wear-resistant mineral oil type hydraulic oil that satisfies the following viscosity and temperature requirements.
Recommended operating viscosity range:	10 - 200 mm^2/s
Maximum allowable viscosity at start:	1000 mm^2/s
Allowable operating temperature range:	-30 - +95°C

Note: Contact us when using biodegradable hydraulic oil. Biodegradable hydraulic oil or hydraulic oil of low friction type can reduce the performance and durability.

Grease

About 1 L of Shell Albania EP2 is filled in the delivered product.

Be sure to use the above or equivalent when refilling or replacement is required.

Refilling timing:250 hours for the first time

It is recommended that grease is replaced every 1000 hours after that.

Note: In the process of filling the grease, internal pressure can damage the oil seal on the reduction gear. Thus, it is necessary to open the plug of the air bleed port before beginning the filling.

Gear oil

About 5 L of Hypoid Gear 90 from Shin Nihon Sekiyu is filled in the delivered product.

(Up to the center of the level gauge)

Be sure to use the above or equivalent when refilling or replacement is required.

Allowable minimum viscosity:30 mm^2/s

Refilling timing:250 hours for the first time

It is recommended that grease is replaced every 1000 hours after that.

https://truckmanualshub.com/

(4) Preliminary Run

As the pipe laying is completed, flush the pipe sufficiently and then reconfirm the state of the installed parts along the circuit. Bleed air in the motor case and then fill it with hydraulic oil. Running the motor leaving the motor case empty may result in internal damage. After making sure that every thing is acceptable, run the motor without load and at a low speed for 10 to 15 minutes to make sure abnormal noises or vibrations do not occur. Then gradually increase the speed while applying load.

(5) Mechanical Brake

Use the mechanical brake as the parking brake.
Its kinetic use or using it from a slipped state may result in abnormal wear on the brake plate.

(6) Relief Valve

The following shows the relation between the relief valve set pressure and adjusting shims. If, however, confirmation of the set pressure is not available, do not try to make any adjustment.
Amount of adjustment available from shim of 0.1 mm → Approximately 0.5 MPa

https://truckmanualshub.com/

2. Equipment Configuration

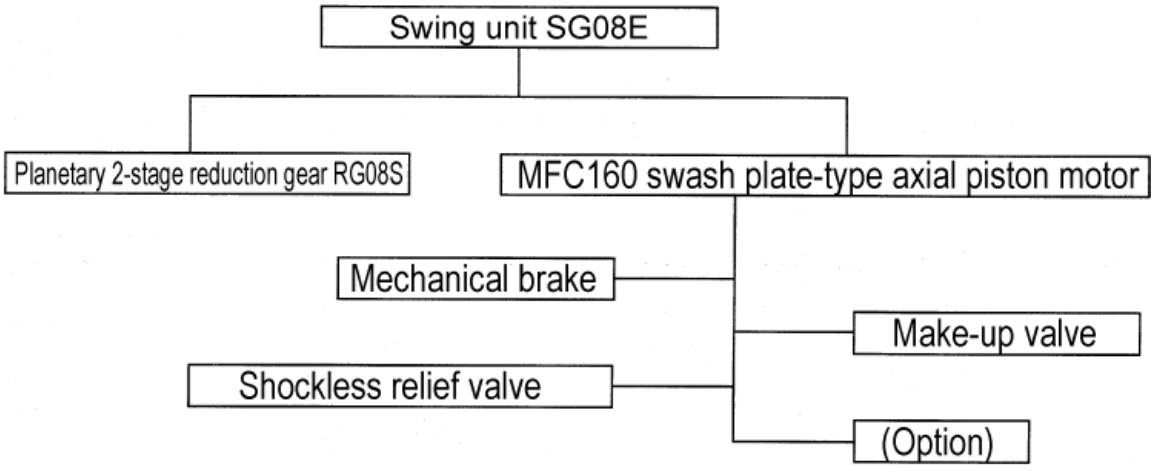

3. Structure and Operating Principles (The numbers in parentheses correspond to those in the sectional structural diagram.)

[1] Hydraulic motor

The rotary group is made up of one-piece drive shaft and the cylinder (24) and 9 pistons assembly (7) positioned on the cylinder (24). Also, the cylinder (24) is supported at both ends with bearings (3) and (22). The piston assembly (7) is guided by the return plate (6) and receiving spring (4) so that it slides smoothly on the cam plate (5).

Also, the balance plate (21) is pressed against the end of the cylinder (24) by the hydraulic pressure operating on the force of the Scrowave spring (18) and bushing (20).

The mechanical brakes (8), (9), (11) and (13), that are used as the parking brakes, are provided in the space between the perimeter of the cylinder (24) and housing (25).

And the relief valve (35) for the cushioning function and make up valves (38), (39) and (40) for the cavitation prevention are built in the cover (32).

5-7 Swing Body: Swing Driving Unit

[2] Explanation of hydraulic motor operation

Pressurized oil fed by the pump through the control valve or the like enters from A port (or B port) on the cover (32) and is discharged from the B port (or A port).

Also, the oil that has leaked through the sliding sections and the gap is returned to the hydraulic tank from the oil drain port "a" on the cover (32).

The pressurized oil fed to the A port is fed to cylinder (24) piston hole "f" through path "b" in the cover (32), path "c" of the bushing (20) section in the cover (32), the balance plate (21) path "d" that has a crescent shaped port that switches between feed and discharge every 180° of rotation of the motor, and the cylinder (24) path "e".

The pressurized oil operates on the piston assembly (7) and the piston assembly (7) is pressed against the cam plate (5) through the shoe. The cam plate (5) shoe sliding surface has a constant angle of inclination. Thus, the piston assembly (7) pressing force generated by the pressurized oil is converted into the force that slides the shoe on the swash plate. The piston assembly (7) shoe spherical section is coupled as a free joint, so the force that slides the shoe on the swash plate is transmitted to the motor output shaft section as rotation force through the cylinder (24).

In this way, each the piston assembly (7), receiving pressurized oil during its stroke from the top dead center to bottom dead center of the slope face, converts this hydraulic pressure force to rotation force to rotate the cylinder (24) and then discharge oil in the stroke from the bottom dead center to the top dead center. The discharge path is the reverse of the above pressurized oil feed path. Namely the oil is discharged from the B port.

In this way, the hydraulic motor is operated. The hydraulic motor output torque is determined by the hydraulic pressure force and speed is determined by the quantity of oil being supplied.

[3] Explanation of reduction gear structure and operation

The power transmitted from the hydraulic motor output shaft is transmitted to the 2nd stage sun gear (72) through the 1st stage sun gear (76), planetary gear (79), and holder 1 (81). At the same time, the power is transmitted to the output shaft (61) via 2nd stage sun gear (72), planetary gear (84), and holder 2 (87). The output shaft (61) is supported in the gear case (66) by 2 bearings (65) and (71).

Also, in order to protect the output side bearing (65), which is exposed to severe load conditions, from gear wear powder, the oil seal (70) is provided at the center ion of the gear case (66). A chamber side is lubricated with gear oil, and the B chamber side is lubricated with grease.

[4] Explanation of mechanical brake operation

The friction plate (8) is spline coupled with the periphery of the cylinder (24). Also, partner plate (9) is coupled with housing (25). When the mechanical brake release chamber pressure is zero, the brake piston (11) presses the friction plate (8) and partner plate (9) with the force of the spring (13) to lock rotation of the cylinder (24) (output shaft).

On the other hand, as oil pressurized to 3.2 - 4.9 MPa worked on the brake release chamber, the brake piston (11), overcoming the spring force, extends its stroke up to the cover (32) end face. This stroke generates a clearance between the friction plate (8) and partner plate (9), thereby releasing the mechanical brake.

[5] Explanation make-up valve operation

(1) Half-brake state (The state in which the shockless relief valve (35) is disabled)
Decelerating the currently accelerated swing body by setting the control valve to the half lever position reduces supply of oil from the pump to the A port. However, if the swing body was rotating at a relatively high speed, the pressure comes close to negative at the "c" section due to the motor pump operation, so oil supply becomes necessary. However, if the B port pressure is lower than the operating pressure of the shockless relief valve (35), all the oil flowing into the "c" section from the A port is drained to the control valve via the B port, so with just the quantity of oil from the control valve, the quantity of oil is insufficient for what is absolutely required at the "c" section. (Since the valve is at the half lever position, the quantity of oil from the pump is restricted.) In order to prevent this, the make-up check valve (38) is provided so that the shortfall is supplied to the "c" section from the make-up port.

(2) When the brake operates (The state in which the shockless relief valve (35) is enabled)
In the state of (1), if the lever is sharply operated to neutral, the quantity of oil fed from the pump to the A port becomes zero, but the swing body rotates due to inertial force. In this case, B port side the shockless relief valve (35) is enabled. The oil blown by the relief valve passes through oil paths "i" and "h"and pushes open A port side the make-up check valve (38), and is fed to oil paths "b" and "c", but the quantity of this oil falls short by the quantity of oil that leaked down the motor case drain. In order to prevent this from occurring, the make-up check valve (38) is opened from the make-up port to supply oil to oil paths "b" and "c" to prevent cavitation.

[6] Explanation of relief valve operation (Relief valve internal structure diagram)

(1) At starting
The pressurized oil fed to the A port by the control valve does not run the motor at the constant rotation because the swing body inertial force is large. And part of the oil flows to B port passing through the shockless relief valve (35), which operates as a safety valve, oil paths "g" and "h" and pushing open B port side check valve (38). A port oil, overcoming the force of spring (47), flows to path "h" pushing open the poppet (46) and passing through path "g" between the seat (45) and poppet (46).

(2) When brake is applied (When the cushioning function is turned on)
When the control valve is returned to neutral, the motor discharge oil return path is closed. Immediately after this operation, the motor is rotated with a large inertial force, causing it to function as a pump. This pumping action suctions oil from A port and then tries to discharge it from B port. But discharge of oil is not possible because the control valve return path is closed and, as the result, the B port pressure rises. The increased B port pressure pushes open the poppet (46) resisting the force of the spring (47). Thus, oil from B port flows through oil paths "i" and "h" and then flows into path "c" pushing open the make-up check valve (38). Through these processes the motor gradually comes to a stop absorbing inertial force of the swing body.
Also, in the above pressure rise process, the pressurized oil in B port passes through the poppet (46) outer circumference orifice "j", through the small hole path at the center of the piston (51), and then enters the piston chamber, moving the piston (51) to the position where it contacts the end face of the liner (50). Since the poppet (46) has already been pushed open up to this point, the cushion action operates at first with somewhat low pressure and, within a very short span of time, rises to the specified pressure. This 2-stage operation provides the function for reducing the shocks resulting from starting or stopping the motor.

https://truckmanualshub.com/

4. Disassembly

[1] Apply an alignment mark on the unit alignment surface.

It will facilitate re-assembling to apply an alignment mark on the alignment surface of the housing (25) and ring gear (73) by use of paint.

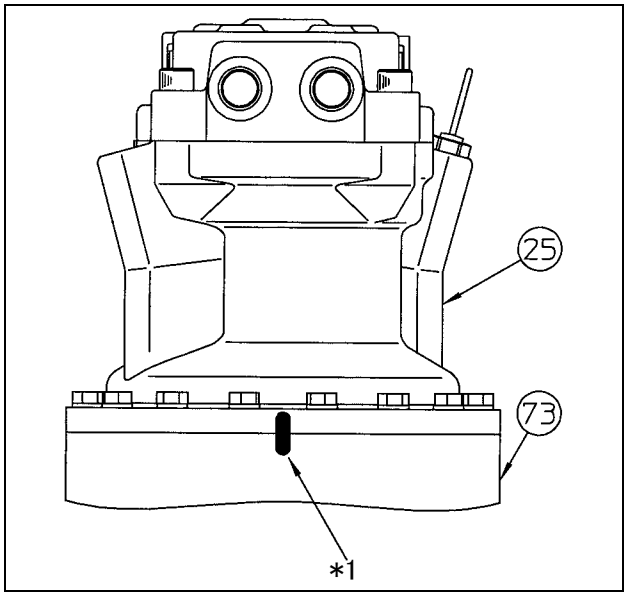

*1 Alignment mark

[2] Removal of level gauge assembly

Remove the level gauge assembly (42), cap (44) (27 mm diagonal hexagon socket head) and cap (34) (10 mm diagonal hexagon socket head).

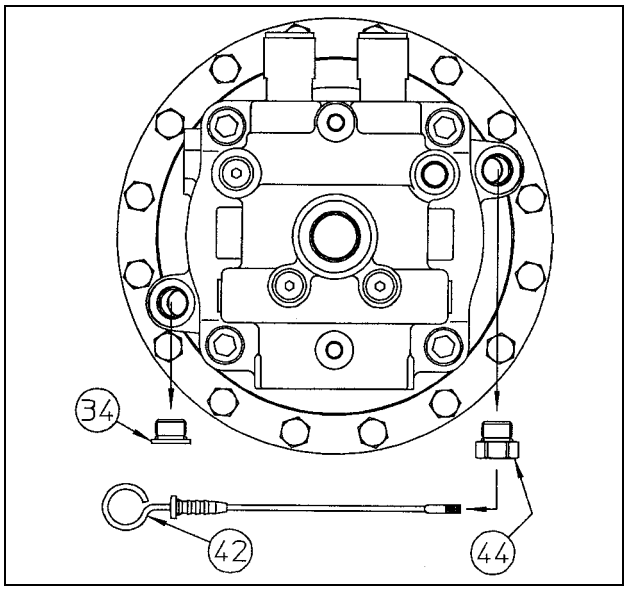

https://truckmanualshub.com/

[3] Draining of gear oil

Loosen the cap (90) (10 mm diagonal hexagon socket head) to drain gear oil.

- Gear oil is not reusable.

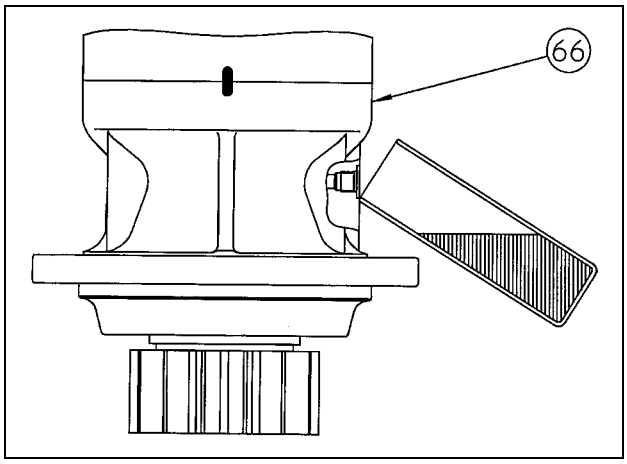

[4] Removal of motor

Loosen the hexagon socket head bolt (75) (6 mm diagonal hexagon socket head) to remove the motor along with the washer (74).
Lift and remove the motor by use of the make-up port (G1).

- The alignment surface of the housing (25) and ring gear (73) is coated with liquid packing. Thus, when removing the motor, use the notch shown in the figure to the right.

The above completes the disassembly procedure.

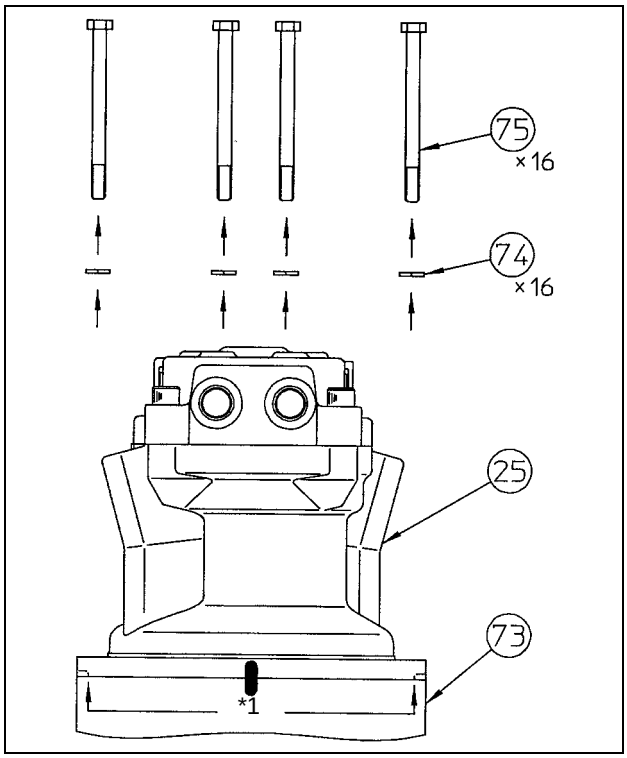

*1 Notch

https://truckmanualshub.com/

5. Assembly

[1] Coating with liquid packing

Clean and degrease the respective alignment surfaces of the ring gear (73) and motor housing (25), and then coat the surfaces with liquid packing ("1215" Gray from Three Bond or equivalent).

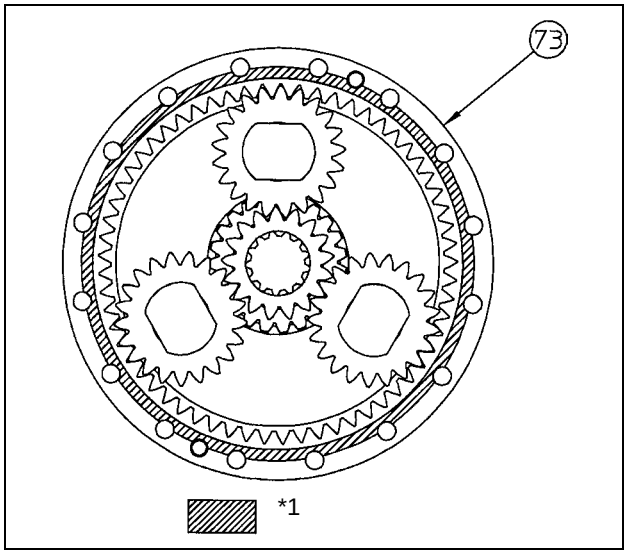

*1Liquid packing application position

[2] Installation of motor

Lift the motor gently and assemble it to the reduction gear. Then tighten them using the hexagon socket head bolt (75) (19 mm diagonal hexagon) assembled with washer (74) at a tightening torque of 103 N•m.

- Assemble the housing (25) and ring gear (73) aligning their phase to the alignment mark that was applied prior to disassembly.

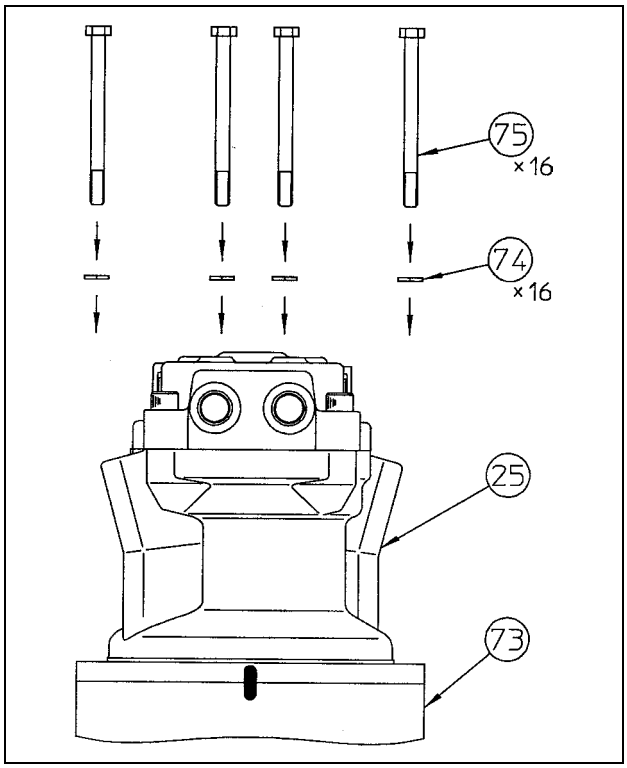

https://truckmanualshub.com/

[3] Installation of level gauge assembly

Assemble the cap (44) (27 mm diagonal hexagon) to the housing (25) using a tightening torque of 49 N•m and then insert the level gauge assembly (42).

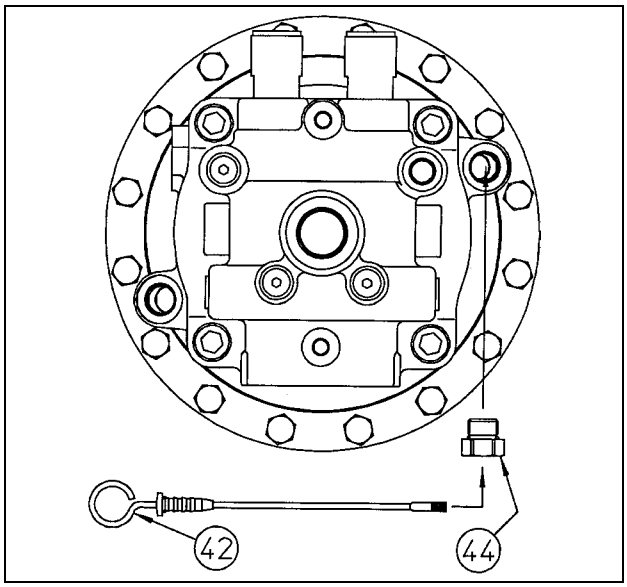

[4] Gear oil filling

Tighten the cap (90) (10 mm diagonal hexagon) to the gear case (66) using a tightening torque of 49 N•m.

Fill oil through the gear oil filler port on the housing (25).

- Filling volume and brand of oil must conform to 1-(3).

Tighten the cap (34) (10 mm diagonal hexagon) to the housing (25) using a tightening torque of 49 N•m.

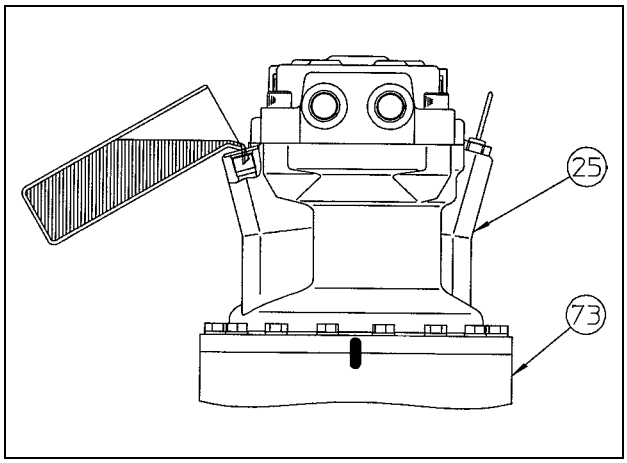

https://truckmanualshub.com/

[5] Grease up

Remove the cap (92) (6 mm diagonal hexagon) and the sunk plug (68) (5 mm diagonal hexagon) from the gear case (66) and then fill grease.

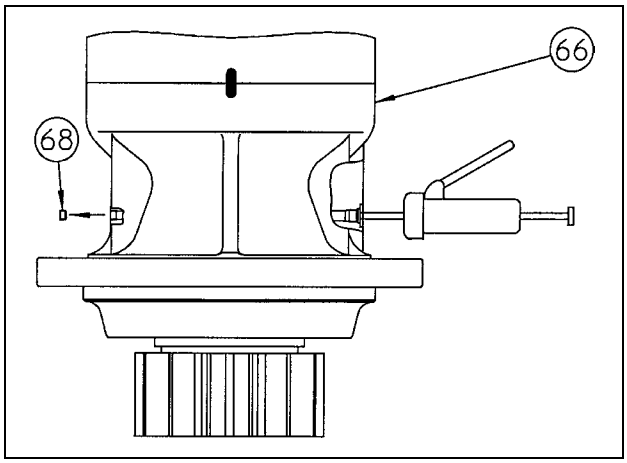

- Filling volume and brand of oil must conform to 1-(3).
- In the process of filling the grease, internal pressure can damage the oil seal on the reduction gear. Thus, it is required to open the sunk plug (68) of the air bleed port before beginning the filling.

Tighten the cap (92) (6 mm diagonal hexagon) to the gear case (66) using a tightening torque of 29 N•m. Tighten the sunk plug (68) (5 mm diagonal hexagon) to the gear case (66) using a tightening torque of 20 N•m.

The above completes the assembly.

https://truckmanualshub.com/

6. Maintenance Standard Table

Table 1

Part name	Inspection and Measurement Location	Reference Value (Tolerance Limit Value)	Measurement Device	Repair and Solution Procedure
Piston assembly (7)	Shoe sliding surface roughness	0.8 S	Surface roughness gauge	Repair with sandpaper lapping
	Shoe sliding surface groove depth	0.4 mm min.	Micrometer	Replace with a new part.
	Play in piston and shoe spherical coupling section	0.4 mm max.	Dial gauge	Replace with a new part.
	Piston bore	Wear does not essentially occur. If damage or seizing is recognized, replace with a new part.		
Cam plate (5)	Surface roughness	0.8 S	Surface roughness gauge	Lap
Cylinder (24)	End surface roughness	0.4 S	Surface roughness gauge	Lap
	Piston hole	Wear does not essentially occur. If damage or seizing is recognized, replace the motor.		
Balance plate (21)	Surface roughness	0.8 S	Surface roughness gauge	Lap
Piston assembly (7) Cylinder (24)	Gap between piston bore and cylinder hole	0.04 mm max.	Micrometer Air micrometer	Replace the motor.

Table 2

Part Name	Inspection and Maintenance Standard
Tapered roll bearing (3) Needle bearing (22) Self-aligning roller bearing (65) Self-aligning roller bearing (71)	The bearing must be replaced with a new one after every 3000 hours even if it is operating normally. And it must also be replaced with a new one when re-assembled after disassembly.
Oil seals (2) and (70)	If there is any damage to the lip, replace it with a new part. Even if the oil seal is free from leakage or damage to the lip, it must be replaced with a new one after every 3000 hours. And it must also be replaced with a new one when re-assembled after disassembly.
O-rings (10), (12), (16), (30), (31), (36), (43), (91) and (93)	If any damage is recognized on an O-ring, replace it with a new part. Even if the O-ring is normal, it must be replaced with a new one after every 3000 hours. And it must also be replaced with a new one when re-assembled after disassembly.
Backup rings (29) and (41)	They must be replaced with new part when re-assembling after disassembly.

5-7 Swing Body: Swing Driving Unit

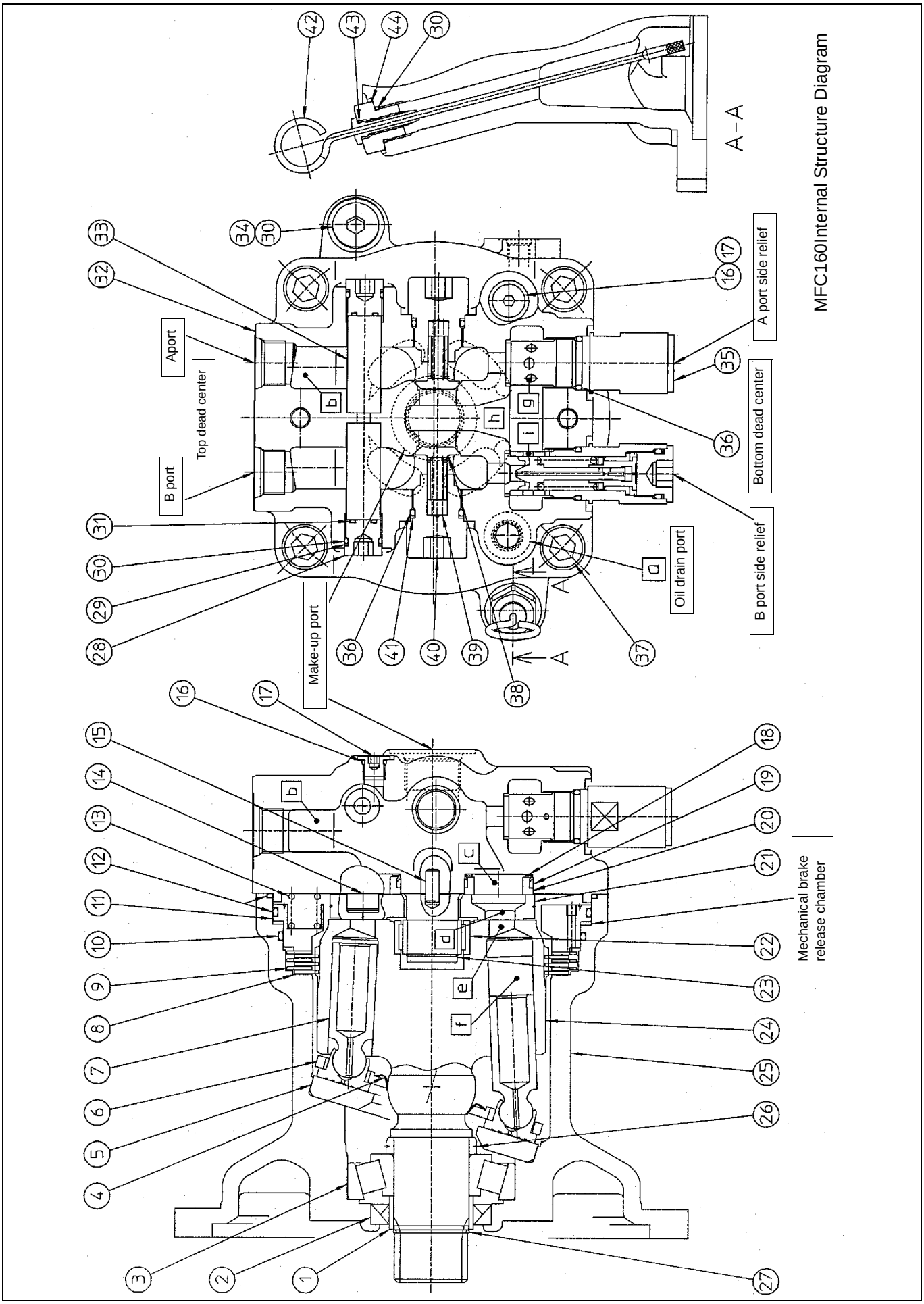

https://truckmanualshub.com/

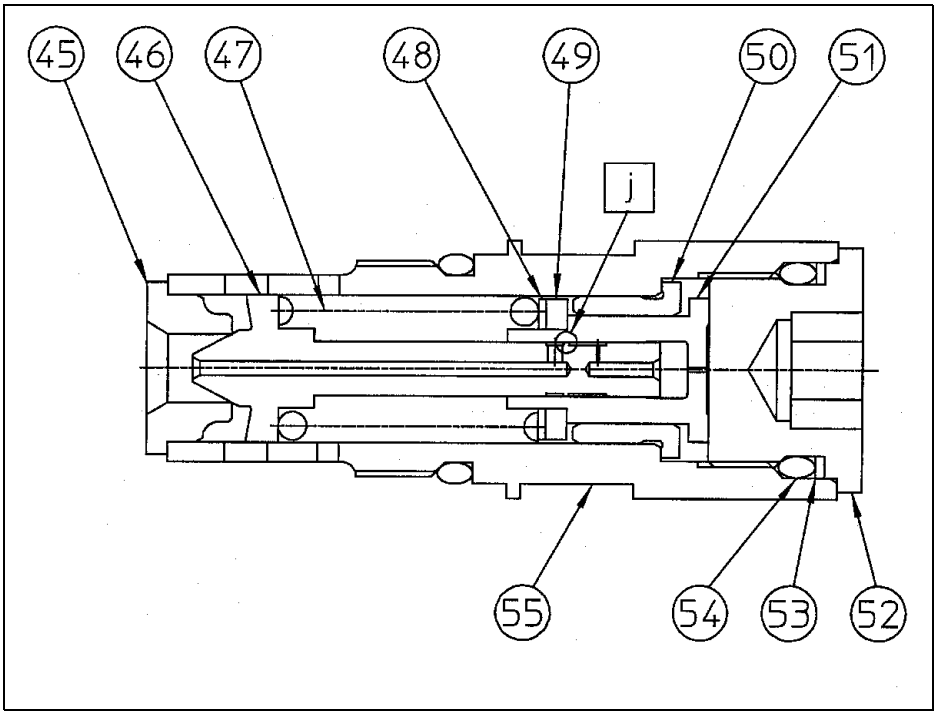

Relief Valve Internal Structure Diagram

https://truckmanualshub.com/

5-7 Swing Body: Swing Driving Unit

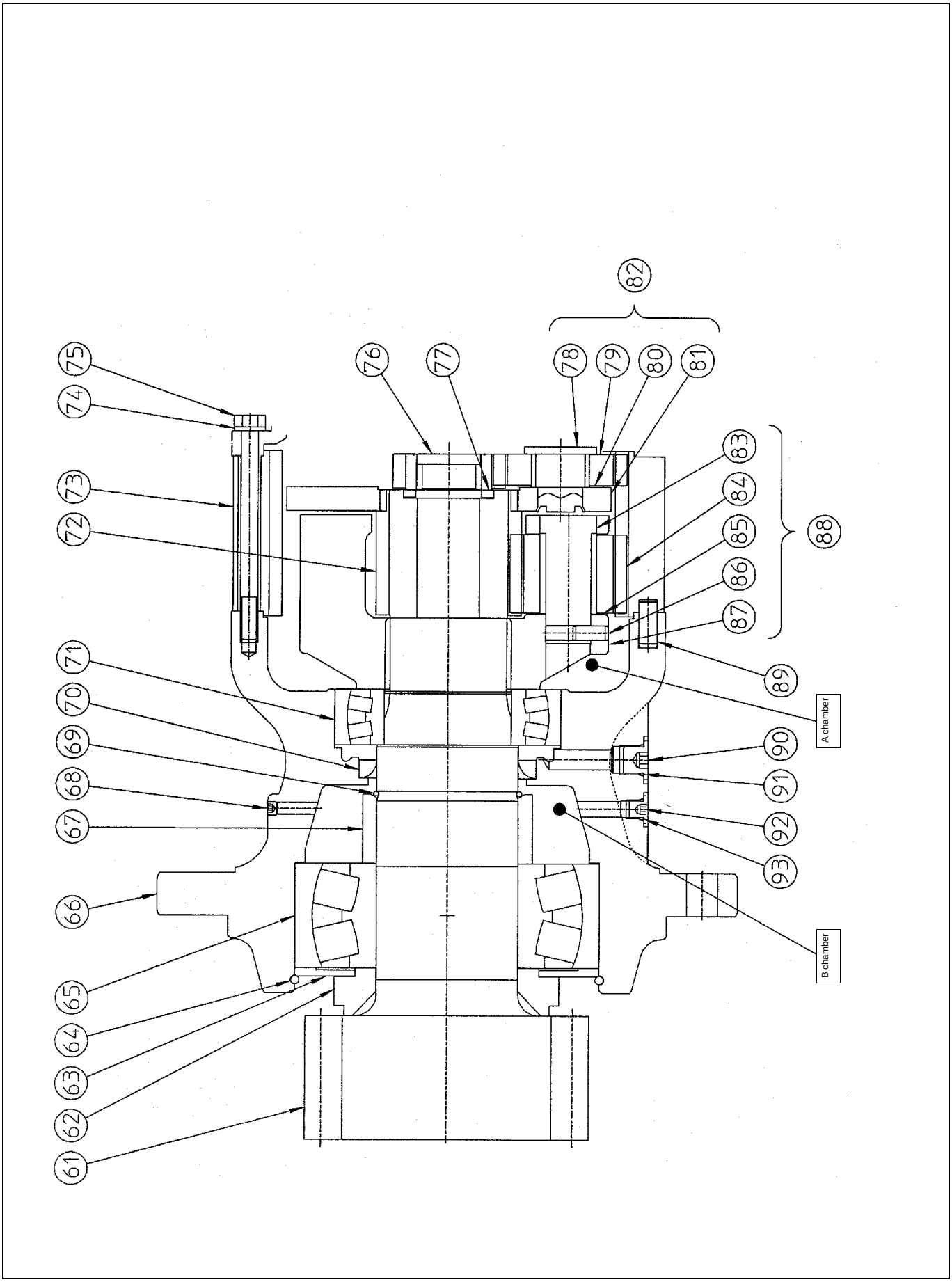

RG08S Internal Structure Diagram

https://truckmanualshub.com/

3 210 X2 Assembly and Disassembly of Swing Motor

Caution	1. Before starting disassembly, re-assembly, inspection or repair work, read this maintenance manual thoroughly and be sure you understand its contents. 2. Handle this product according to the separate "Usage Precautions". 3. Stop the equipment system this product is mounted on and wait for the surface temperature of this product to fall to about 40°C or less before removing this product from the equipment it is mounted on. Working on this product while it is still hot may result in burns. Always bleed the pressure before removing any pipe from this product. Removing a pressurized pipe without bleeding pressure inside may induce a blow out of oil, resulting in personal injury and oil leakage. 4. Use the special tools and measuring instruments when disassembling, re-assembling, inspecting or repairing this product. Using an inappropriate tool may result in burns and damage to the product. 5. Be careful not to drop parts when assembling, re-assembling, inspecting, repairing, etc. this product. Otherwise, personal injury or property damage may result. 6. Do not touch machined edges or threaded sections of parts directly with your bare hands when disassembling, re-assembling, inspecting or repairing this product. Doing so may result in personal injury. 7. After re-assembly, check the performance of the product. Do not use the product unless the performance has fully recovered. Otherwise, damage may result to the equipment. 8. The caution (mark !) in this maintenance manual does not encompass all cases. Be sure to act on the safety-first principle whenever disassembling, re-assembling, inspecting, repairing, etc. this product.

https://truckmanualshub.com/

5-7 Swing Body: Swing Driving Unit

1. Usage Precautions

(1) How to handle the product

When transporting or storing this product, be sure to handle it with the output shaft directing downward and placing the product in an upright position.

Whenever lifting the motor, screw in a clean lifting tool to the make-up port (G1) at the motor cover center to lift the unit using this lifting tool. In particular, do not try to lift the relieve valve by hitching a wire on it. Otherwise, excessive load will be applied to the valve, deforming it and, thus inducing its malfunction.

(2) Pipes

Dimensions required for the pipe fittings are previously determined from the external shape diagram. A hose or steel pipe must be used as the pipe. Make sure it is shaped in such a way that excessive force is not applied to the pipe installation position.

In addition, before laying a pipe, be sure to remove the rubber cap seal on the port. A large diameter pipe must be used for the drain pipe in order to reduce pressure in the motor case.

Reasonable care must be exercised when connecting the drain pipe to a return pipe of another piece of equipment, since a sudden inflow or outflow of oil can induce abnormal back pressure in the motor case, damaging the oil seal and other components.

Set the pressure in the motor case in such a way that the peak pressure remains at a maximum of 0.3 MPa.

(3) Hydraulic oil

Recommended oil:	ISO VG#32 - 56 or equivalent wear resistant mineral oil type hydraulic oil that satisfies the following viscosity and temperature requirements.
Recommended operating viscosity range:	10 - 200 mm^2/s
Maximum allowable viscosity at start:	1000 mm^2/s
Allowable operating temperature range:	-30 - +95°C

Note: Contact us when using biodegradable hydraulic oil or low friction type hydraulic oil. Biodegradable hydraulic oil or hydraulic oil of low friction type can reduce the performance and durability.

(4) Preliminary run

As the pipe laying is completed, flush the pipe sufficiently and then reconfirm the state of the installed parts along the circuit. Bleed air in the motor case and then fill it with hydraulic oil. Operating the motor leaving the motor case empty may result in internal damage. After making sure that every thing is acceptable, run the motor without load and at a low speed for 10 - 15 minutes to make sure abnormal noises or vibrations do not occur. Then gradually increase the speed while applying load.

(5) Mechanical brake

Use the mechanical brake as the parking brake.

Its kinetic use or using it from a slipped state may result in abnormal wear on the brake plate.

(6) Relief valve

The following shows the relation between the relief valve set pressure and adjusting shims. If, however, confirmation of the set pressure is not available, do not try to make any adjustment.

Amount of adjustment available from shim of 0.1 mm → Approximately 0.5 MPa

https://truckmanualshub.com/

2. Cause of Problem and Solution

The following describes the corrective actions that are required to be taken when an abnormality or malfunction is recognized on the hydraulic motor currently in motion. Detailed procedure of the disassembly, inspection and re-assembly are to be described later. Care must be exercised when handling the motor's sliding parts during these procedures so that parts are not damaged.

Table 1

Symptom	Cause	Inspection from Outside	Solution	Repair
Does not rotate	Internal damage of motor	Measure drain volume	If the supply volume to the motor is almost identical to the drain volume, damage on the sliding section will be suspected. Thus, an overhaul inspection is necessary.	See Table 2
	Internal damage of motor	Release the motor inlet and outlet ports and apply pilot pressure of 3.2 - 4.9 MPa to the brake release port. Then try to rotate the output shaft at a torque in the range of about 30 - 40 N•m.	If the output shaft did not rotate smoothly with the above torque, internal damage will be suspected. In this case, an overhaul inspection is necessary.	Replace the damaged parts or the motor assembly.
	Inappropriate setting of the relief valve in the circuit	Measure the load pressure using the pressure gauge.	Set the specified pressure again.	
Excessive slippage	Wear or damage on the motor' sliding section or the highly pressurized sealing section	Measure draining volume	If the draining volume is 2.5 L/min. or larger, significant leakage will be present. In this case, an overhaul inspection is necessary.	See Table 2
	Leakage inside the motor is significant because of high oil temperature.	Measure oil temperature.	Decrease oil temperature.	

https://truckmanualshub.com/

5-7 Swing Body: Swing Driving Unit

Symptom	Cause	Inspection from Outside	Solution	Repair
Insufficient torque	Wear or seizing on the motor's sliding section	Release the motor inlet and outlet ports and apply pilot pressure of 3.2 - 4.9 MPa to the brake release port. Then try to rotate the output shaft at a torque in the range of about 30 - 40 N•m.	If the output shaft did not rotate smoothly with the above torque, internal damage will be suspected. In this case, an overhaul inspection is necessary.	Inspect the parts and bearings listed in a - e in Table 2, and replace the part or bearing on which a problem is discovered.
	Inappropriate setting of the relief valve in the circuit	Measure the load pressure using the pressure gauge.	Set the specified pressure again.	
Abnormal sounds	Internal damage of motor	Check the motor drain oil and return filter for presence of foreign metallic substances.	If foreign metallic substances were found, internal damage of the motor is most probably the cause. In this case, an overhaul inspection is necessary.	Repair or replace the damaged parts or replace the motor assembly.
	Commingling of large amounts of air in the oil	Inspect oil in the tank and motor case.	Bleed air completely.	
	Looseness in the fastening section	Check the pipe fitting, pipe fitting mounting bolt, motor mounting bolt and bolts on the motor for looseness.	If loosening is discovered, tighten using an appropriate torque.	
Abnormal heating	Seizing on the motor's sliding section or rotating section	Check the motor drain oil and return filter for presence of foreign metallic substances. And also try to rotate the output shaft at a torque in the range of about 30 - 40 N•m while applying pilot pressure of 3.2 - 4.9 MPa.	If foreign metallic substances are found or the output shaft did not rotate smoothly with the above torque, internal damage of the motor will be suspected. In this case, an overhaul inspection is necessary.	Repair or replace the damaged parts Replace the motor assembly.
Oil leakage from mating surface	Damage on O-ring			Replace the O-ring
	Damage on sealing surface			Repair or replace the sealing surface
	Looseness of bolt	Check the bolt for looseness	Tighten the bolt at an appropriate torque.	
Oil leakage from oil seal	Damage or wear on the oil seal lip			Replace the oil seal
	Damage or wear on the shaft sealing section			Repair the damage or replace the motor assembly.
	Abnormal pressure in the case	Inspect the pressure in the case and the draining volume	Set the pressure in the case to 0.3 MPa or below. If excessive draining volume is recognized, an overhaul inspection is necessary.	Replace the oil seal, repair the damaged part, or replace the motor assembly.

Table 2

No.	Target Part of Inspection	Repair
a	Wear on sliding section of balance plate (21)	Repair or replace the part
b	Damage on the sidling section of cam plate (5)	Repair the part or replace the motor
c	Damage on the sliding section of piston assembly (7)	Repair the part or replace the motor

https://truckmanualshub.com/

No.	Target Part of Inspection	Repair
d	Wear on the outside of the piston of piston assembly (7)	Repair the part or replace the motor
e	Wear on the piston hole of cylinder (24)	Replace the motor
f	Damage on the Teflon ring (19)	Replace the part

https://truckmanualshub.com/

3. Disassembly

[1] Removal of relief assembly

Remove the relief assembly (35) (14 mm diagonal hexagon), cap (40) (14 mm diagonal hexagon), spring (39), check valve (38), cap (28) (10 mm diagonal hexagon) and plug (33) from the cover (32).

- Be sure to re-assemble the currently disassembled relief assembly (35), cap (40), spring (39), check valve (38), cap (28) and plug (33) precisely in their original positions.

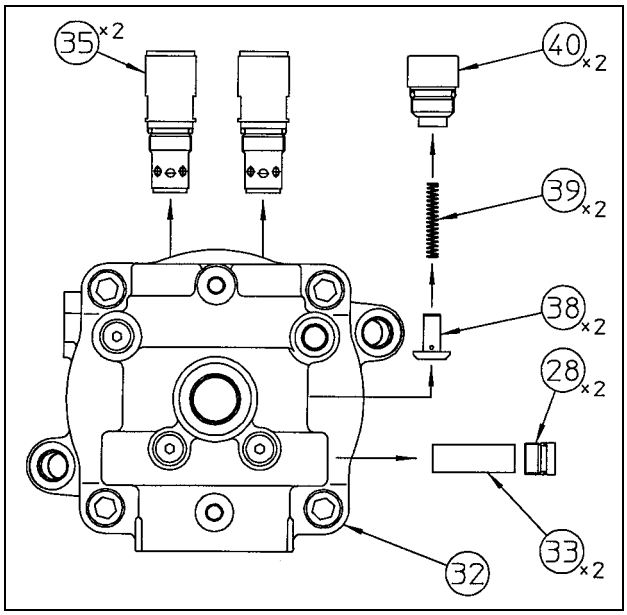

[2] Applying an alignment mark to the motor alignment surface

It will facilitate re-assembling to apply an alignment mark on the alignment surface of the cover (32) and housing (25) by use of paint.

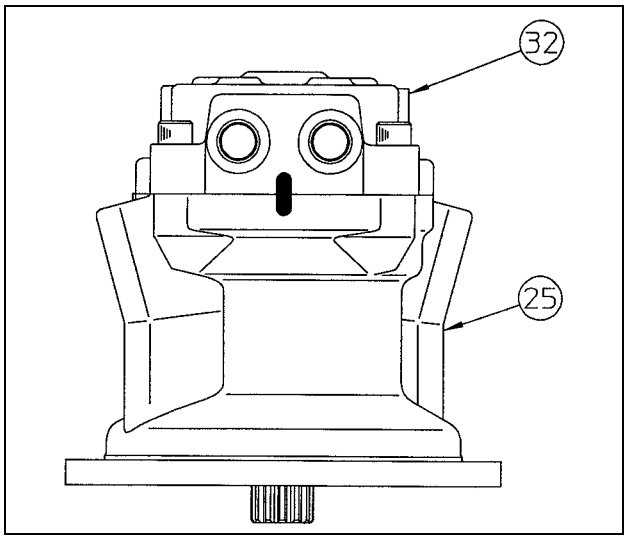

https://truckmanualshub.com/

[3] Loosening the bolt

Loosen Allen bolts (37) (14 mm diagonal hexagon), place the motor output shaft directing it downward, and then lift and remove the cover (32).

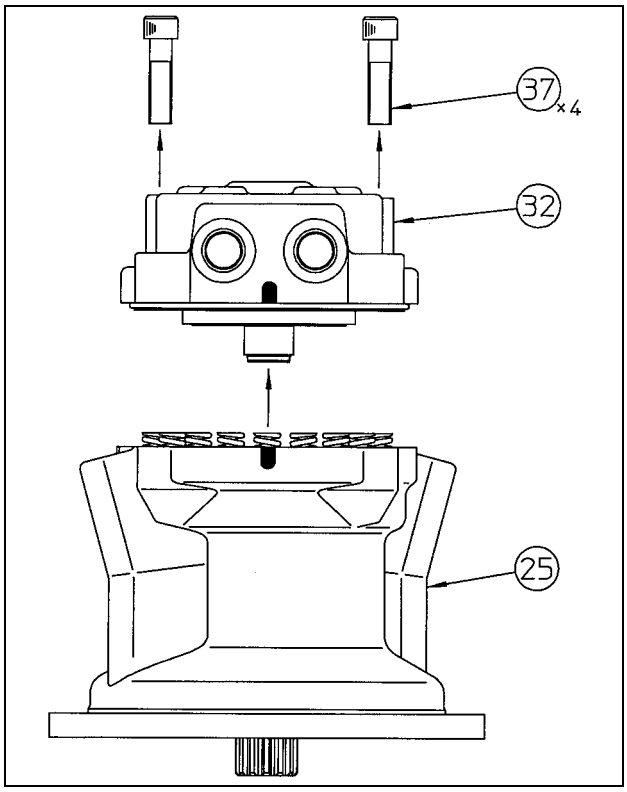

[4] Removal of inner race

Remove the snap ring (23) using the mark-off pin and then remove the inner race of the needle bearing (22) and balance plate (21).

The inner race of the needle bearing (22) is press fitted to the male shaft of the cover (32). Thus, remove the inner race by hitching the gear puller on the cocoon groove and the male shaft of the cover (32).

Then remove pistons (14) from the balance plate (21).

- Care must be exercised in this operation so that the sliding surface of the balance plate (21) is not damaged or deformed due to excessive force.

- The assembling direction of the balance plate (21) to the cover (32) is predetermined. Thus, it is necessary to apply a mark on the balance plate to help identify its assembling direction of the cover (32) during the re-assembly procedure.

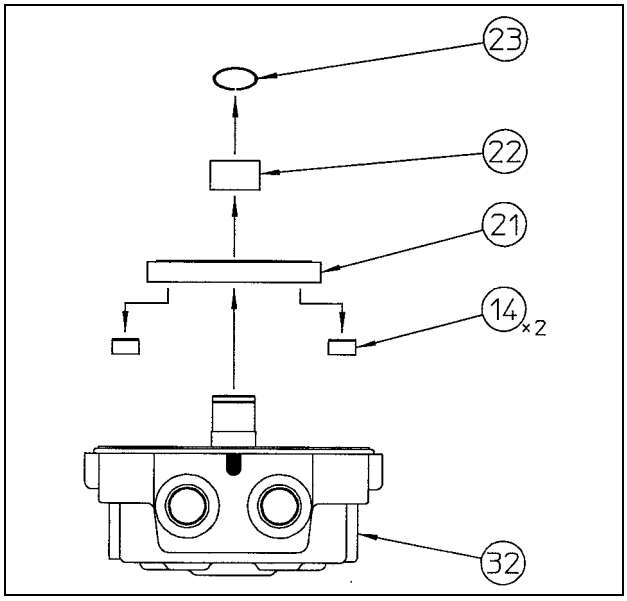

https://truckmanualshub.com/

[5] Removal of O-ring

Remove the O-ring (12) from the cover (32).

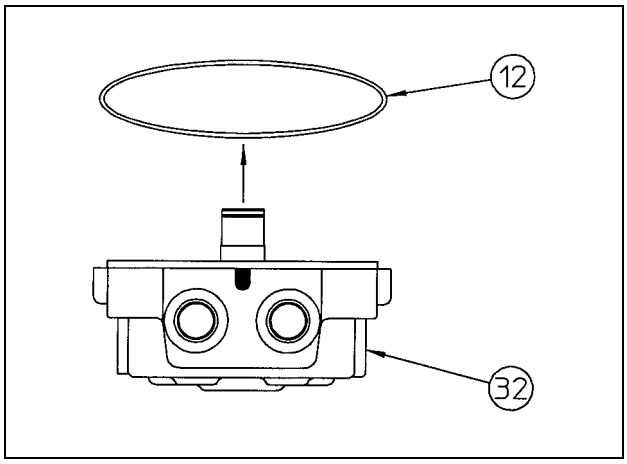

[6] Removal of bushing

Remove bushings (20) with Teflon rings (19) and Scrowaves (18) from the cover (32).

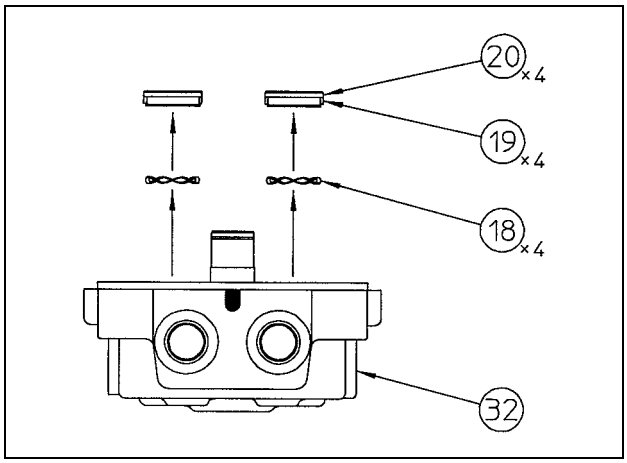

https://truckmanualshub.com/

[7] Removal of the spring

Remove spring (13) from brake section piston (11).

- A marking and the like should be applied on springs (13) to help identify its assembly position on the piston (11).

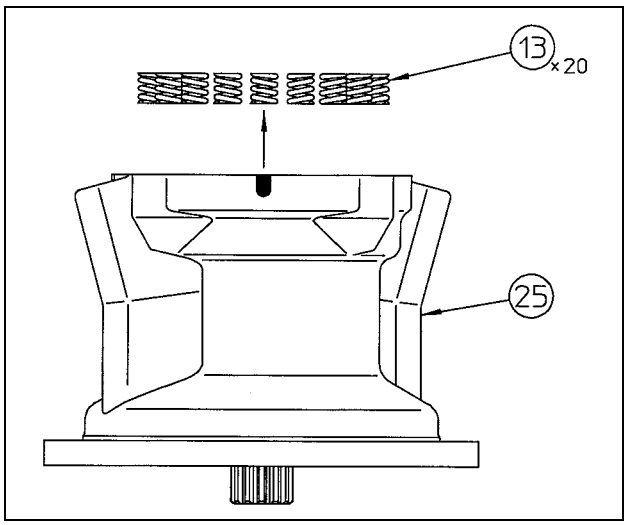

[8] Removal of the piston in brake section

It is not easy to pull the piston (11) out of the housing (25) because of the sliding resistance resulting from the exposed thread of O-rings (10) and (12). It is advisable to pull the piston (11) out using the tap hole (M6) provided on its side as shown in the figure to the right.
Then remove the O-ring (10) from the housing (25) and O-ring (12) from the piston (11).

- Place the dolly block outside of the housing (25) bore.

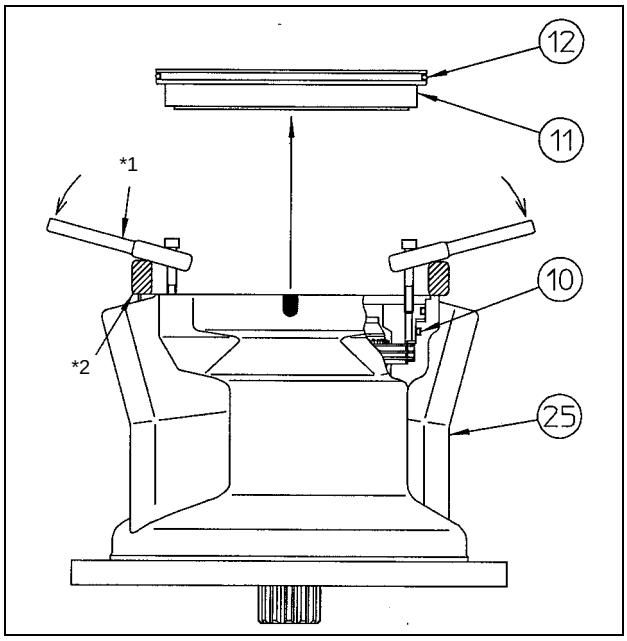

*1 Crescent wrench and the like
*2 Dolly block

https://truckmanualshub.com/

[9] Removal of the friction plate and partner plate

Removal of the friction plates (8) and partner plates (9).

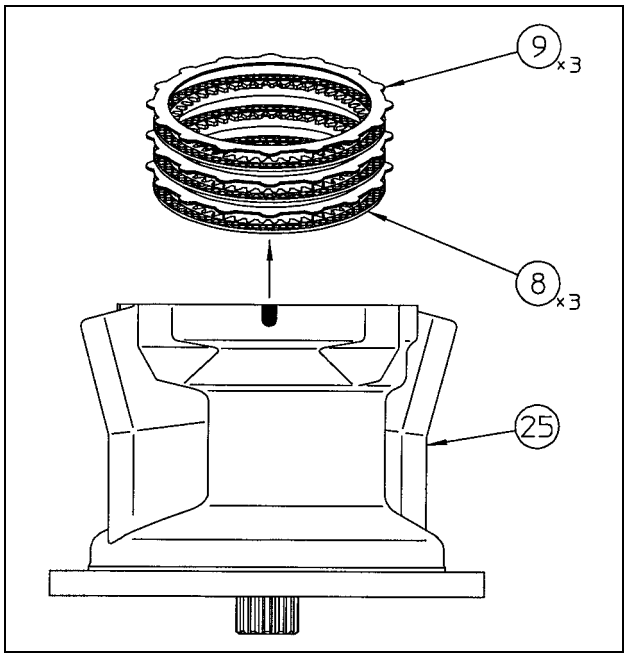

[10] Removal of the cylinder assembly

Hold the end of the cylinder (24) with your hand and remove the cylinder assembly out of the housing (25).

- The cylinder (24) is slippery with oil. Reasonable care must be exercised so it is not dropped.
- At this stage, the outer race and oil seal (2) of the tapered roller bearing (3) alone are left in the housing (25).
- End face "A" of the cylinder (24) is sliding surface. Protect it from damage by using a soft rag.
- Apply an alignment mark to the piston hole and piston assembly (7) of the cylinder (24) so that the piston assembly (7) may be inserted in the same hole in re-assembling as the hole from which the assembly had been removed during disassembly.

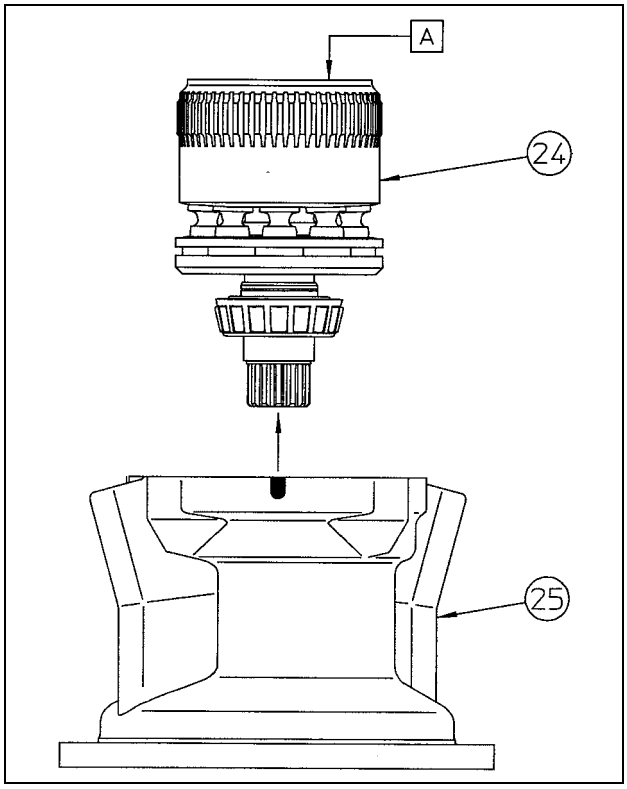

https://truckmanualshub.com/

[11] Removal of the tapered roller bearing

Remove the outer race of the tapered roller bearing (3) from the housing (25).
Then drive out the oil seal (2) using a screwdriver and hammer.

- The oil seal (2) is not reusable.

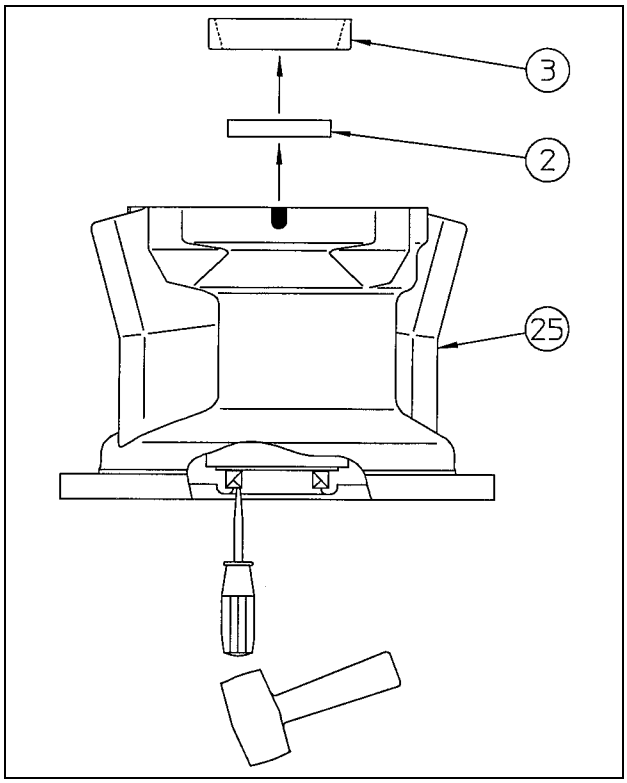

[12] Disassembly of the cylinder assembly

1) (Removal of the Inner Race and Tapered Roller Bearing)

Remove the snap ring (27) using the mark-off pin. Then hitch the gear puller on 2 places of the inner race of the tapered roller bearing (3) and the spline-coupled end of the cylinder (24) to pull it out along with the inner race (1).

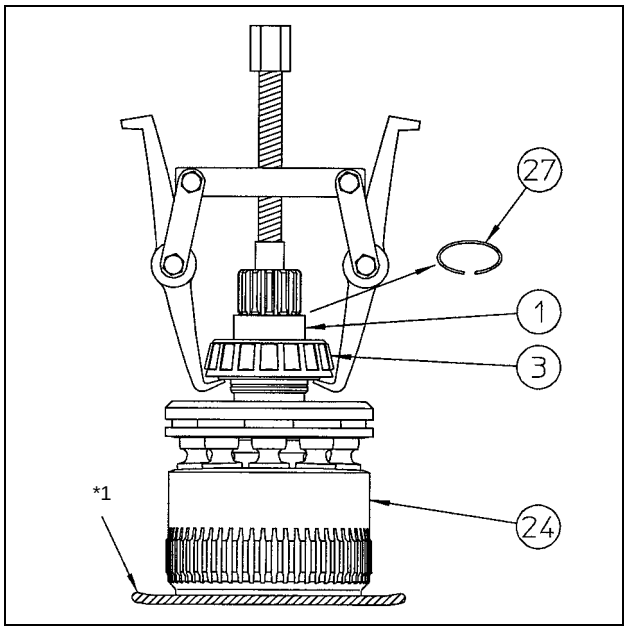

*1 Rag and the like

https://truckmanualshub.com/

2)
Pull the collar (26) out of the cylinder (24). Pull out the cam plate (5), return plate (6) and piston assemblies (7) together from the cylinder (24).

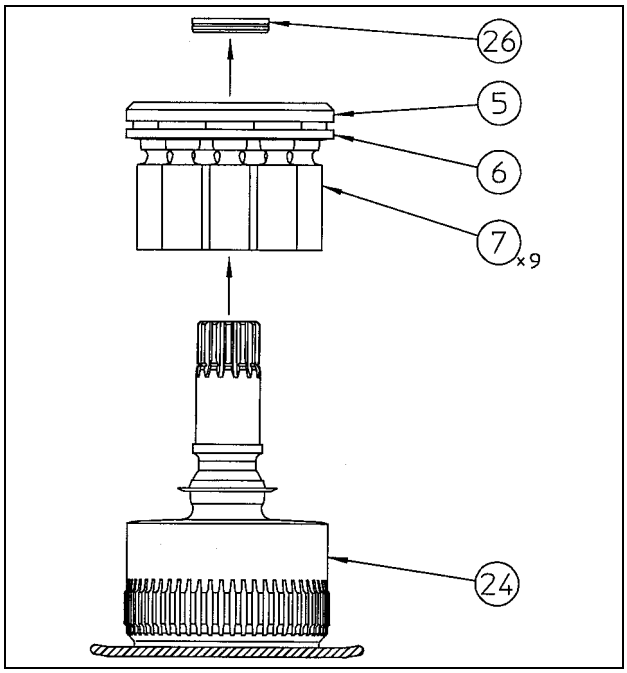

3)
Remove the cam plate (5) by sliding it on the sliding surface of piston assemblies (7).

- Care must be exercised when handling them so that the cam plate (5) and the sliding surface of piston assemblies (7) is not damaged.

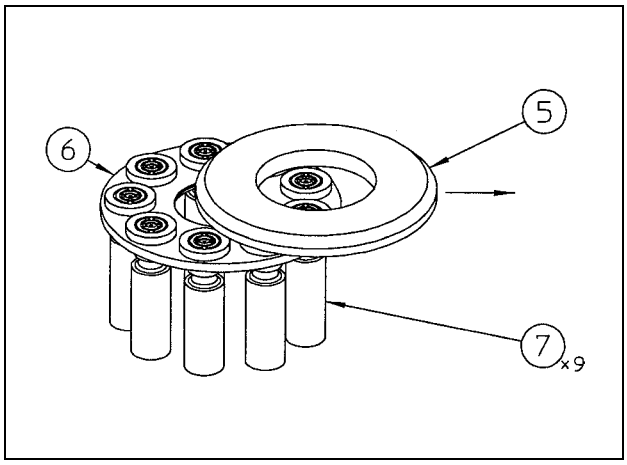

https://truckmanualshub.com/

4)
Pull the receiving spring (4) out of the cylinder (24).

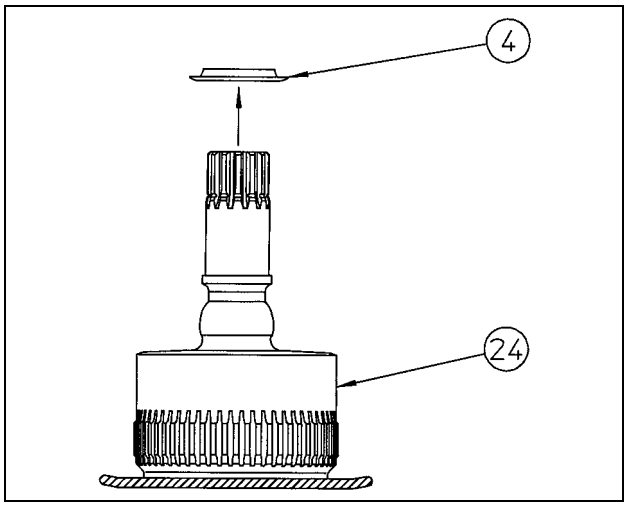

The above completes the disassembly procedure.

https://truckmanualshub.com/

4. Assembly

[1] Preparations

Execute the following items before re-assembling.

1) Check each part for scratches from use or the disassembly procedure. If scratches are discovered, remove them with a whetstone or sandpaper of the necessary grain, clean with cleaning oil, and then dry with an air blower.

2) Replace seal parts with new ones.

3) Lap the sliding surface of the piston assembly (7), cam plate (5) and balance plate (21) with #2000 sandpaper on the surface plate.

4) Coat the sliding sections with clean hydraulic oil before assembling them.

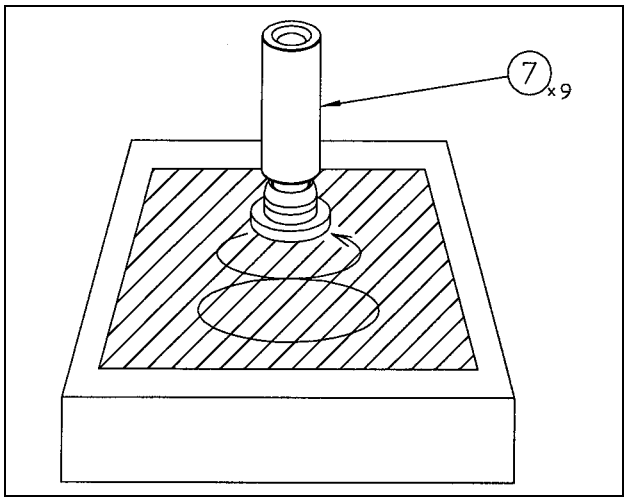

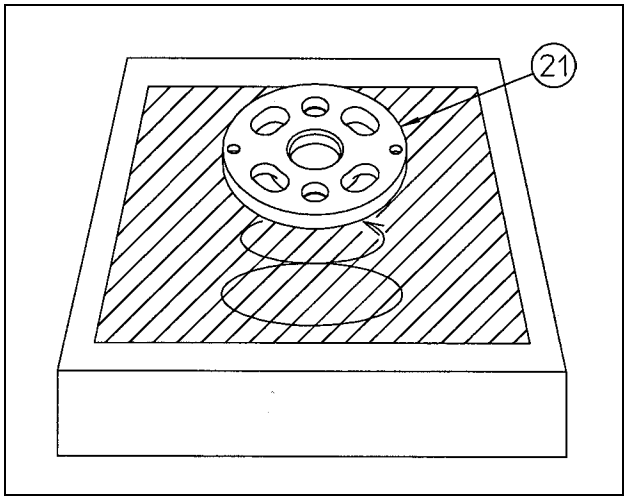

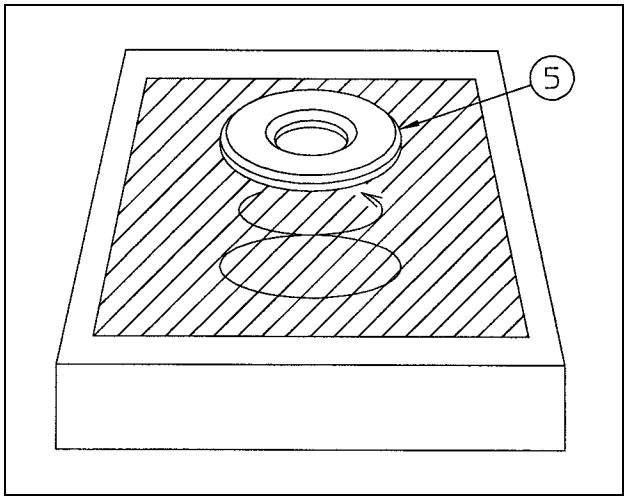

https://truckmanualshub.com/

[2] Assembly of cylinder assembly

1)
Coat the spherical section (to be contacted against the receiving spring (4)) of the cylinder (24) with hydraulic oil and then assemble the receiving spring (4) to it.

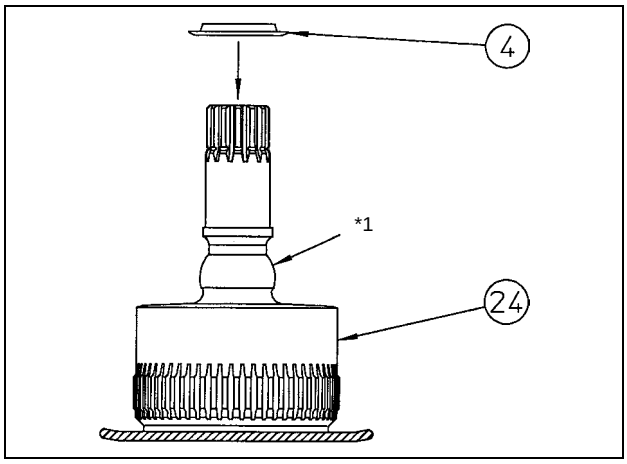

*1 Spherical section

2)
Insert piston assemblies (7) into the hole on the return plate (6).

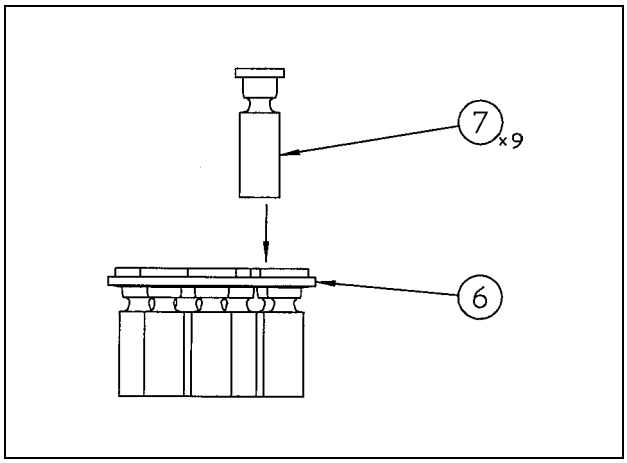

3)
Assemble piston assemblies (7) together with the return plate (6) to the cylinder (24).

- Be sure to assemble piston assemblies (7) at the same hole as that to which it had been assembled prior to disassembly.
- Before assembling, coat the piston hole of the cylinder (24) with hydraulic oil.

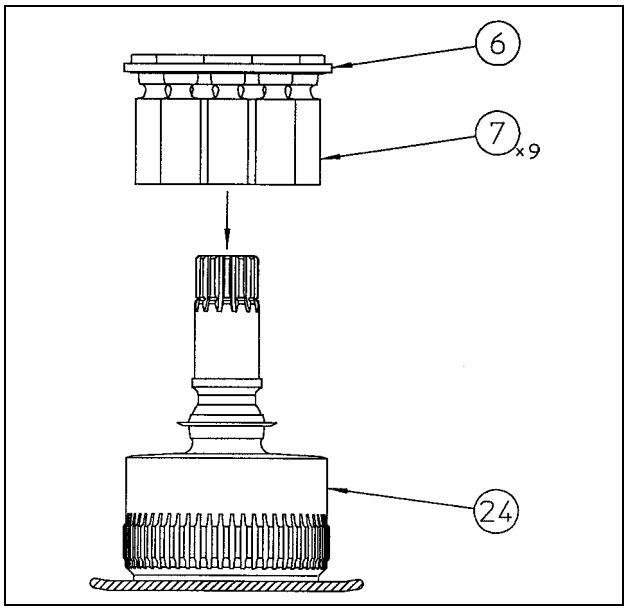

https://truckmanualshub.com/

4)
Coat the shoe sliding surface of the piston assembly (7) with hydraulic oil and then assemble the cam plate (5) at the cylinder (24).
Then assemble the collar (26) to the cylinder (24).

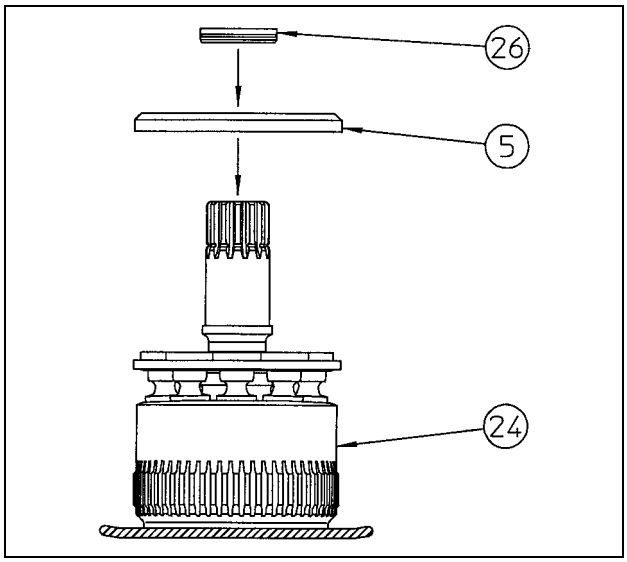

5)
Manually press the inner race of tapered roller bearings (3) to the cylinder (24) using the press-fit jig.

- When press fitting the inner race, protect the end face of the cylinder (24) from damage by using a soft rag.

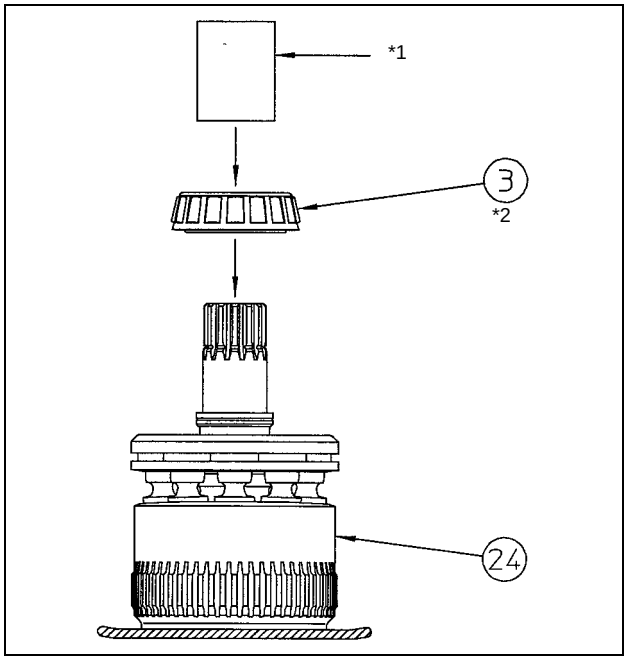

*1 Jig1
*2 (Inner race)

https://truckmanualshub.com/

6)
Clean and degrease the section on the cylinder (24) to which the inner race is to be assembled at. Then coat the section with a small amount of sealing material (Locktite 515, 518 or equivalent) and then assemble the cleanly degreased inner race (1) using the press-fit jig. Then assemble the snap ring (28).

- Exercise care so that sealing material is not deposited on the roller of the tapered roller bearing (3).
- If any sealing material is deposited, clean off any that has run off from the space between the inner race (1) and the tapered roller bearing (3).

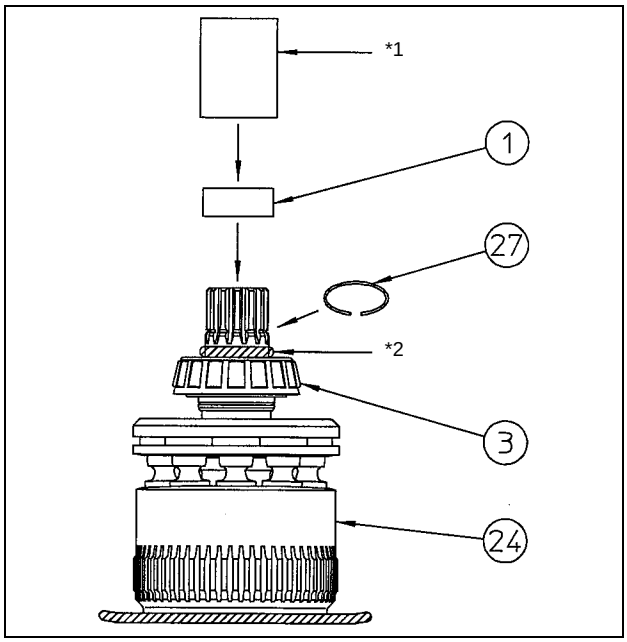

*1 Jig1
*2 The section to be coated with Locktite

[3] Assembly of oil seal

Clean and degrease the section on the housing (25) to which the oil seal is to be assembled.
Degrease and coat the perimeter of the oil seal (2) with liquid packing (Three Bond "1211" White or equivalent). Then assemble the oil seal to the housing (25) using the press-fit jig.

- Make sure the assembling direction of the oil seal (2) is correct.

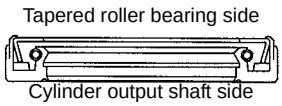

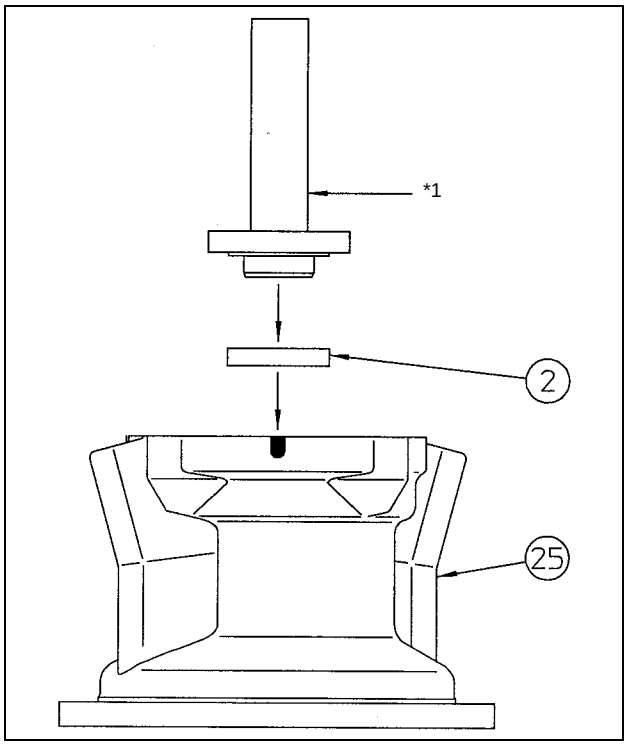

*1 Jig2

https://truckmanualshub.com/

[4] Assembly of tapered roller bearing outer race

Assemble the outer race of the tapered roller bearing (3) to housing (25).

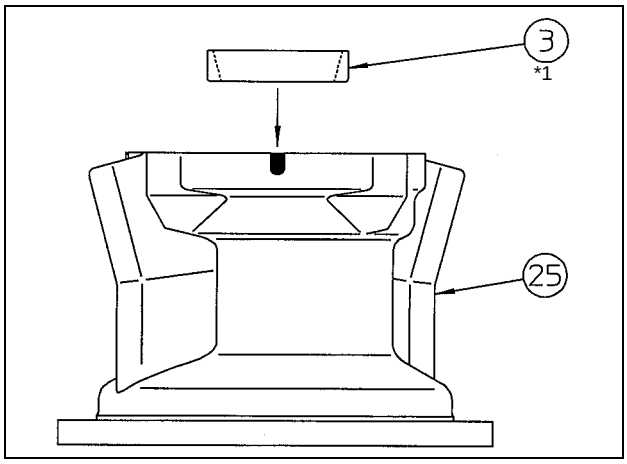

*1 (Outer race)

[5] Assembly of cylinder assembly

Coat the lip face of the oil seal (2) with a small amount of grease and then, holding the end face of the cylinder (24), assemble the cylinder assembly gently at the housing (25).

- The cylinder (24) is slippery with oil. Reasonable care must be exercised so it is not dropped.
- Before assembling the cylinder assembly, make sure the receiving plate (4) is placed in the counterbore of the return plate (6).
- After the cylinder assembly is assembled, the spline shaft of the cylinder (24) protrudes out of the end face of the housing (25). So apply a pad of 30 - 40 mm in length to the bottom face of the housing (25).
- Make sure the end face of the cylinder (24) is lower than that of the housing (25) by about 15.5 mm. If the difference is smaller than the above, the cam plate (5) is not appropriately placed in the counterbore of the housing (25). In this case, lay down the housing (25) gently in such a way that the higher portion on the slope face comes to the lower side and then shake the cylinder (24) gently up and down to place the cam plate (5) in the counterbore.

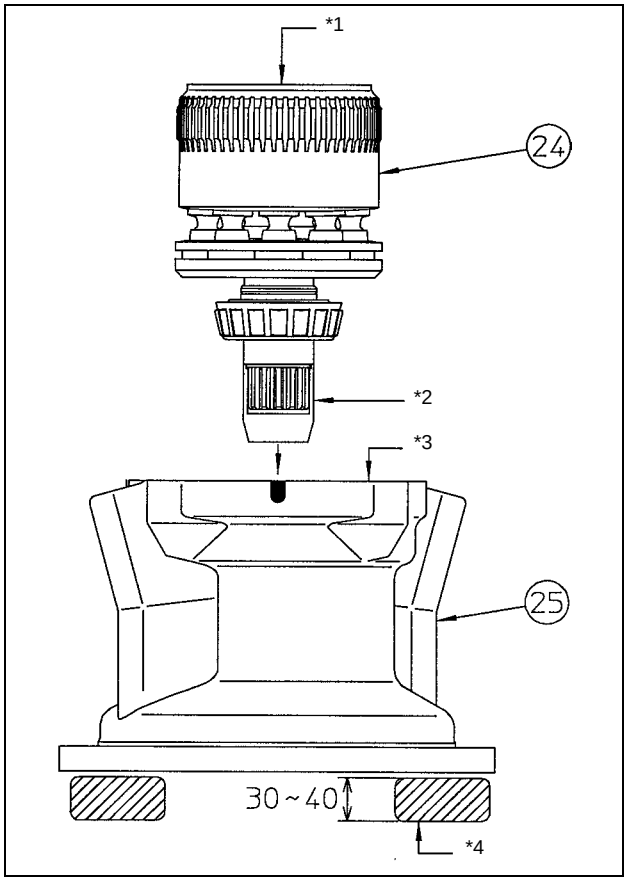

*1 Cylinder end face
*2 Jig 3
*3 Housing end face
*4 Pad

https://truckmanualshub.com/

[6] Assembly of friction plate and partner plate

Assemble friction plates (8) and partner plates (9).

- Coat both sides of these plates with hydraulic oil.

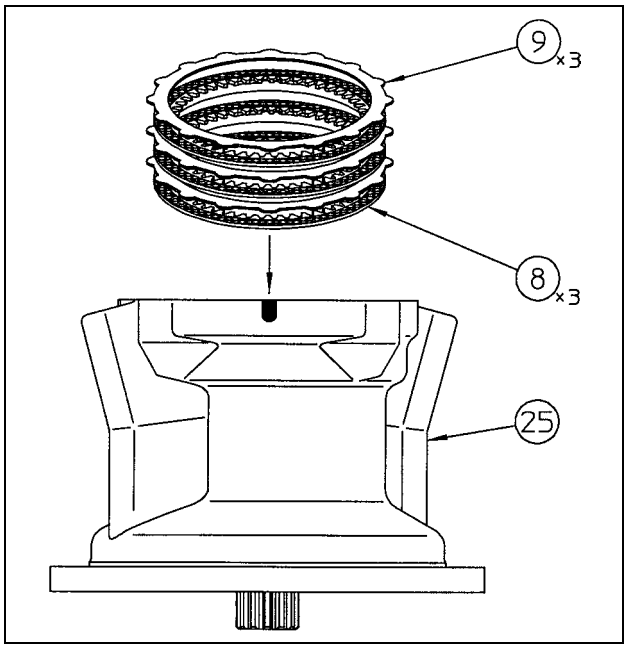

[7] Installation of O-ring

Install the O-ring (10) to the housing (25). Install the O-ring (12) to the piston (11).

- Coat O-rings (10) and (12) with grease.

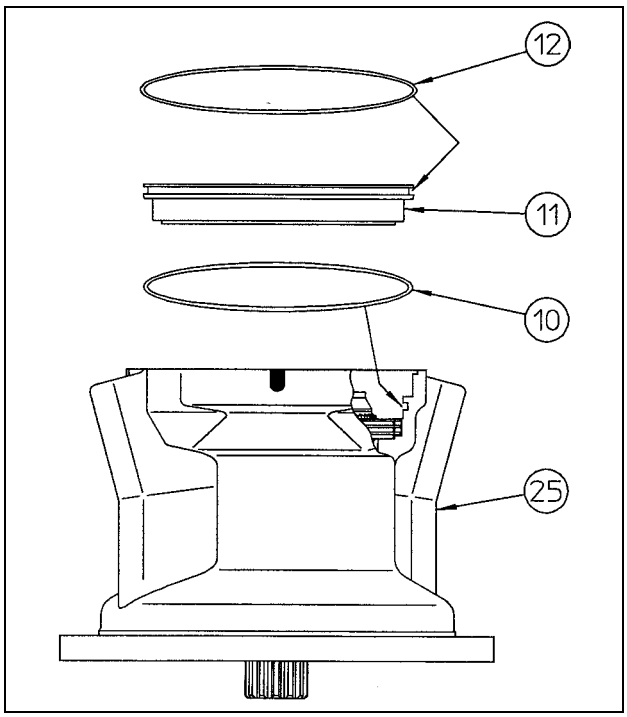

https://truckmanualshub.com/

[8] Assembly of brake piston

Coat the perimeter of the piston (11) with hydraulic oil and then assemble the housing (25).

- The piston (11) is securely held in place because of the exposed thread of O-rings (10) and (12). Thus, when assembling the piston (11), place it horizontally and then push it quickly with your hands using the assembly jig.

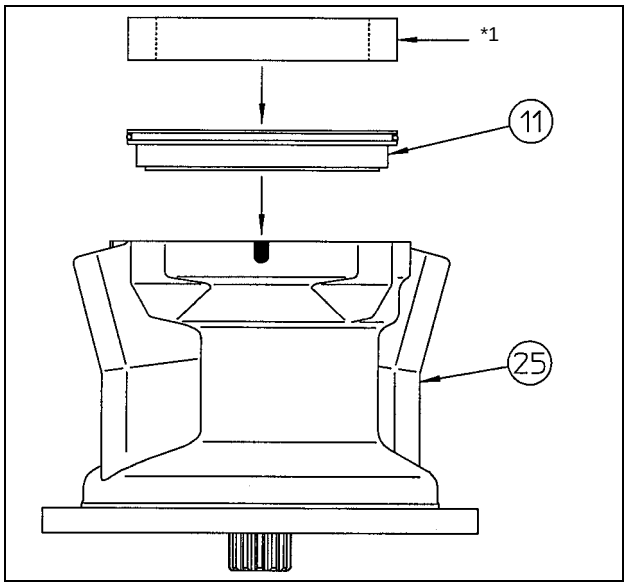

*1 Jig4

[9] Assembly of spring

Assemble springs (13) at the piston (11) in the brake section.

- Be sure to assemble the spring (13) at the same position as that on which it had been assembled prior to the disassembly.

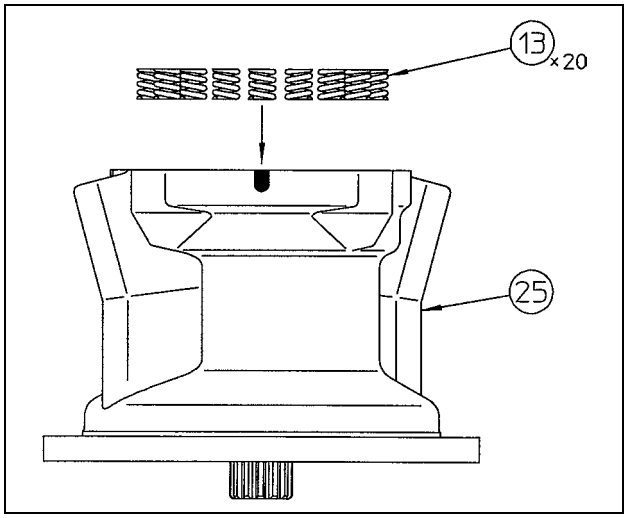

https://truckmanualshub.com/

[10] Assembly of balance plate

Assemble Scrowaves (18) and bushings (20) with the Teflon ring (19) to the bushing hole on the cover (32).

Coat pistons (14) with grease. Assemble pistons (14) at the balance plate (21).

Assemble the balance plate (21) at the cover (32).

- Reference the mark being applied prior to disassembly in order to indicate the assembling direction of the balance plate (21) and the cover (32).

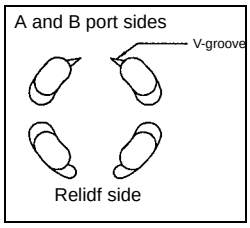

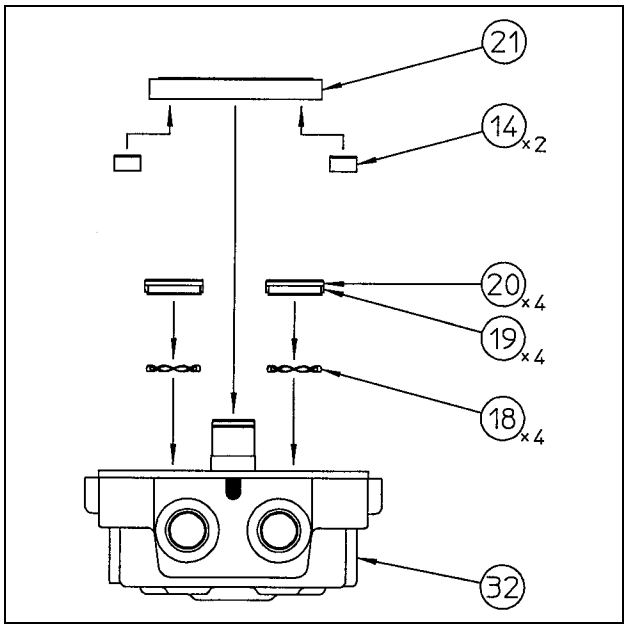

[11] Assembly of inner race

Press-fit the inner race of the needle bearing (22) to the cover (32) and then assemble the snap ring (23) to them.

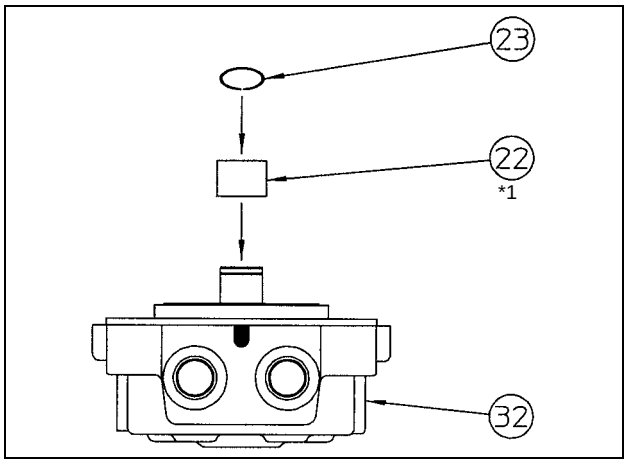

*1 (Inner race)

https://truckmanualshub.com/

[12] Installation of O-ring

Install the O-ring (12) at the cover (32).

- Coat the O-ring (12) with grease.

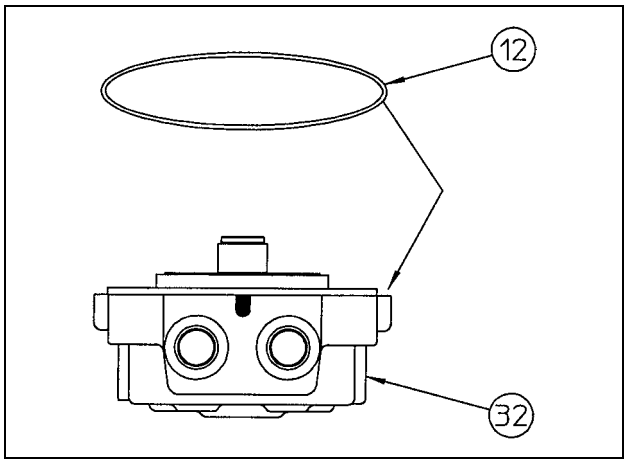

https://truckmanualshub.com/

[13] Installation of cover

Clean the alignment surface of the cover (32) and housing (25), and then lift the cover (32) gently with hand and assemble it at the housing (25).

- When assembling them, align their phase to the alignment mark that was applied to the housing (25) and cover (32) prior to disassembly.
- Here, a clearance of about 4.5 mm is provided between the housing (25) and cover (32).

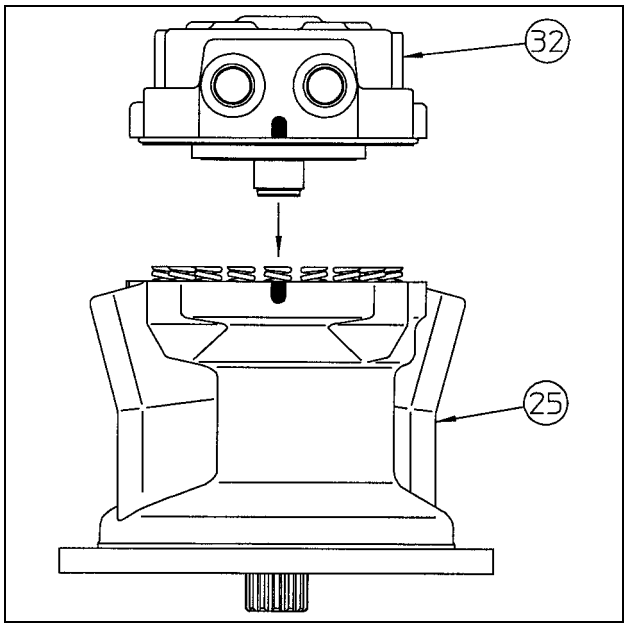

[14] Bolt tightening

(Tightening across the cover (32) and housing (25)) Tighten bolts (37) (14 mm diagonal hexagon) with a tightening torque of 284 N•m.

- Tighten 4 bolts (37) uniformly and gradually so that the housing (25) and cover (32) may be assembled at a straight angle.

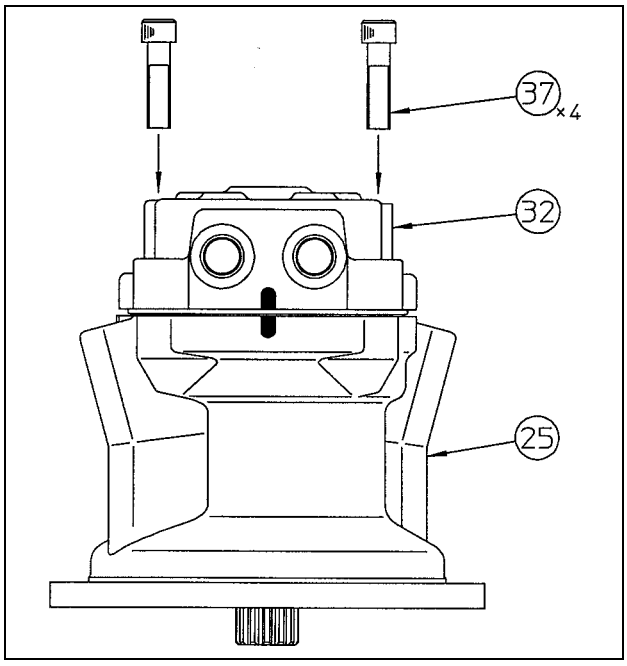

https://truckmanualshub.com/

[15] Assembly of relief assembly

Assemble relief assemblies (35) (14 mm diagonal hexagon) at the cover (32) with a tightening torque of 78 N•m. Assemble check valves (38) and spring (39) to the cover (32), an then assemble caps (40) (14 mm diagonal hexagon) to the cover (32) with a tightening torque of 137 N•m. Assemble the plug (33) and cap (28) (10 mm diagonal hexagon) to the cover (32) with a tightening torque of 78 N•m.

- Be sure to assemble relief valve assemblies (35), caps (40), springs (39), check valve (38), plugs (33) and caps (28) precisely in their original positions.

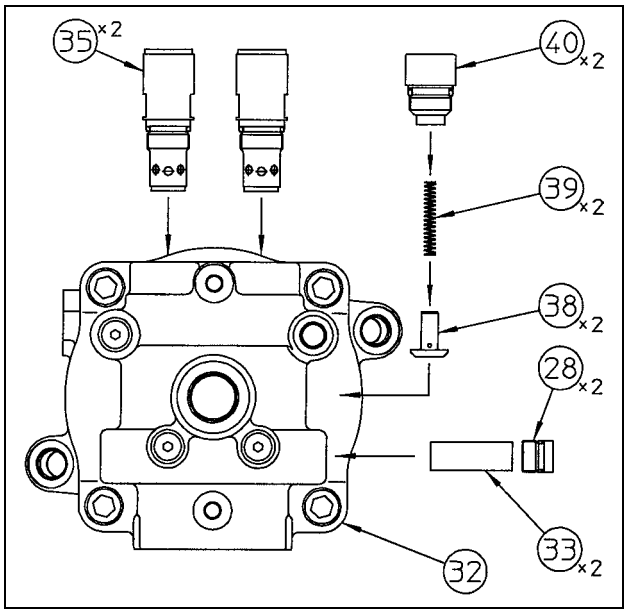

[16] Assembly check

Release the inlet and outlet ports. Then make sure the output shaft rotate smoothly for a minimum of one turn with a torque of about 30 - 40 N•m when a pilot pressure of 3.2 - 4.9 MPa is applied to the brake release port. If the output shaft fails to rotate, defective assembly is the case. Disassemble the assembly again for adjustment.

- In this case, the oil drain port must be released.

The above completes the assembly.

- After assembling the hydraulic motor, make sure the set pressure of the relief valve assembly (35) on an actual machine is consistent with the specified pressure.

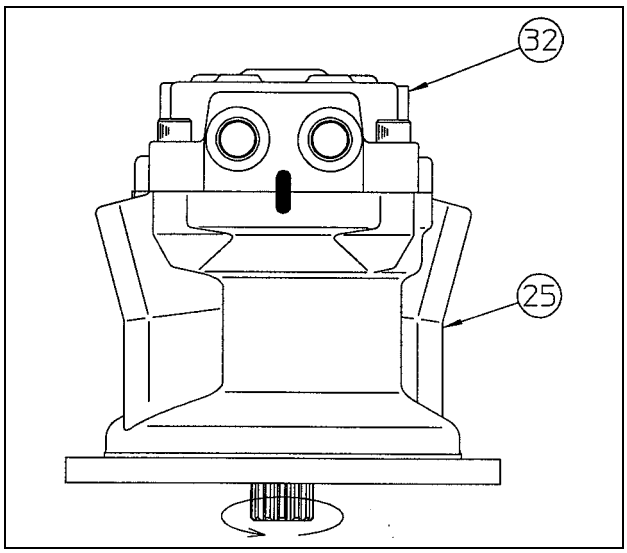

Jig 1
(For assembly of the tapered roller bearing (3), inner race (1))

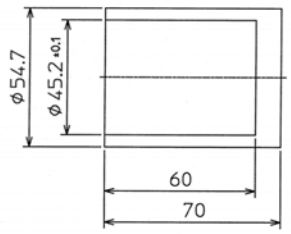

Jig 2
(For assembly of the oil seal (2))

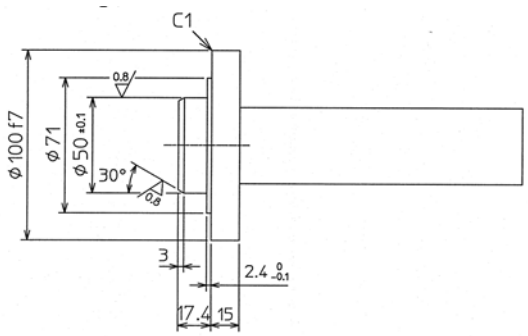

Jig 3
(For assembly of the cylinder assembly (24))

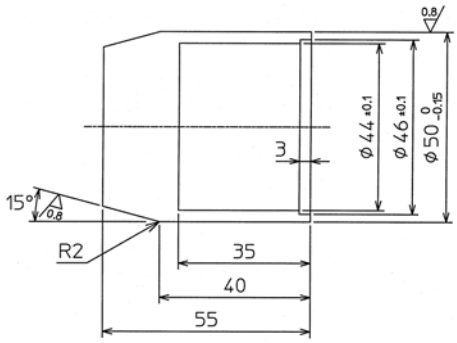

Jig4
(For assembly of the brake piston (11))

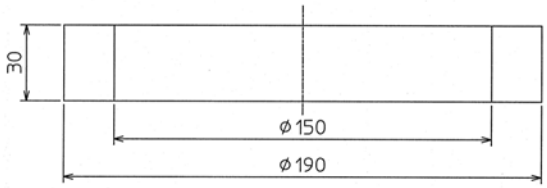

5-7 Swing Body: Swing Driving Unit

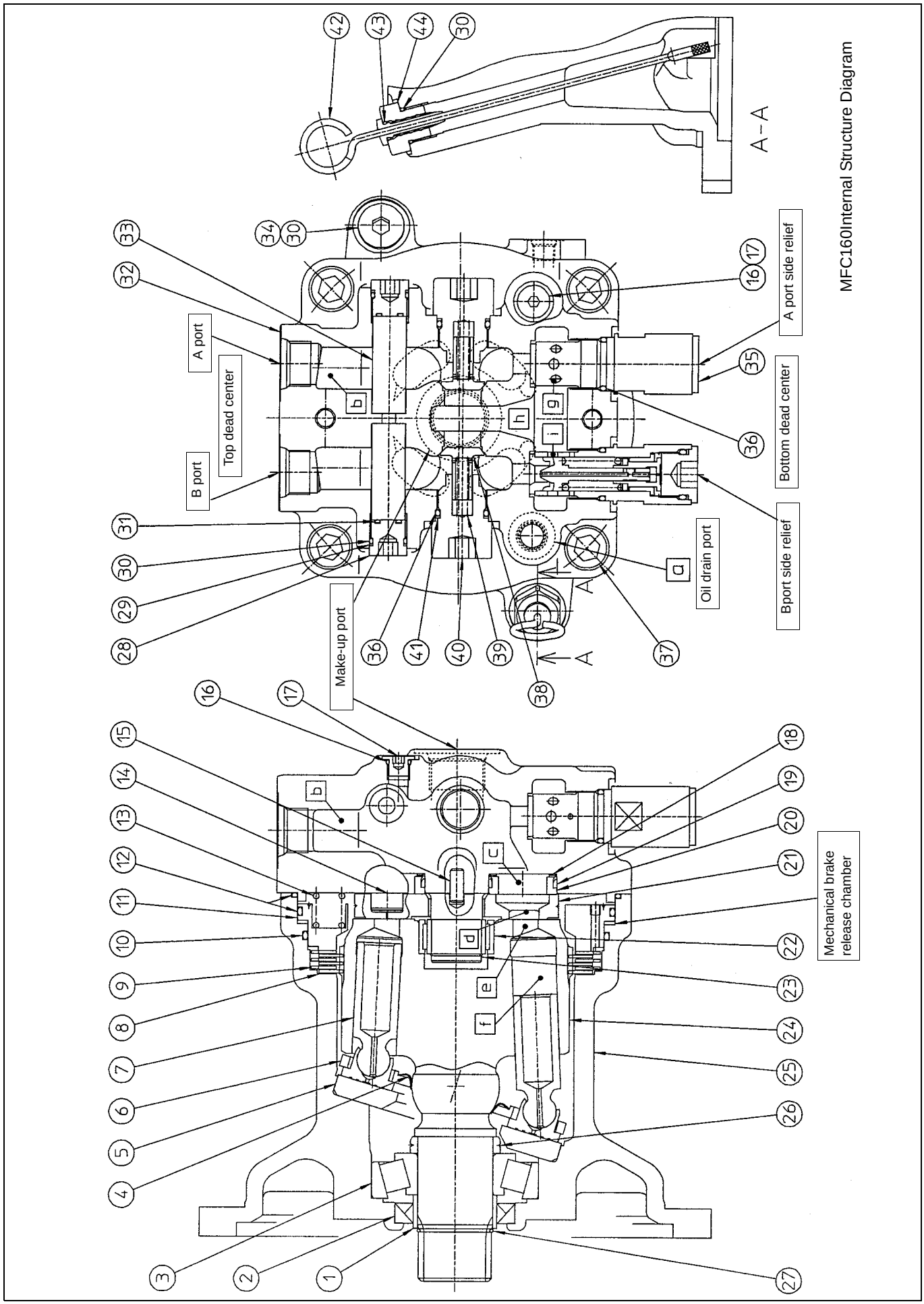

https://truckmanualshub.com/

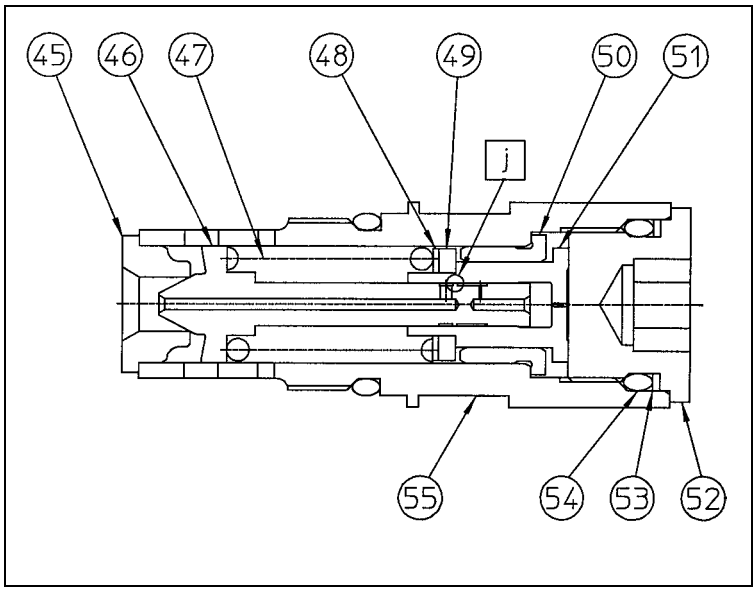

Relief Valve Internal Structure Diagram

https://truckmanualshub.com/

4 240 X2 Assembly and Disassembly of Swing Motor

1. Type Indication

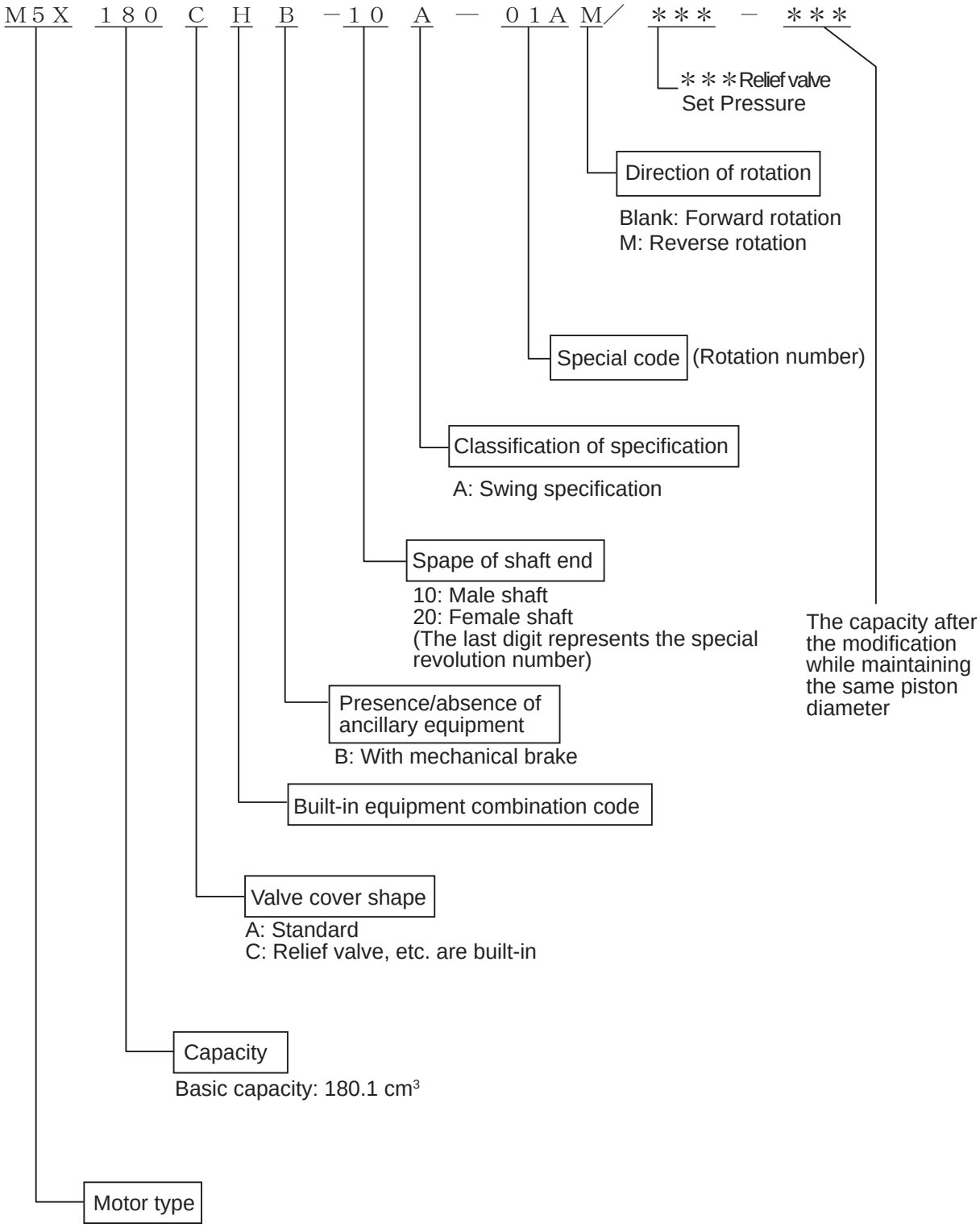

https://truckmanualshub.com/

2. Specification

Table 1. Equipment Specification

Theoretical capacity cm^3		180.1
Pressure MPa	Rating	32.4
	Maximum	39.2
Revolution ($min.^{-1}$)	Maximum	1680
Theoretical output torque N•m		928Note)
Brake torque N•m		1250
Brake release pressure MPa		3.4
Weight (kg)		71

The above are typical values. For more information, see the dimensional outline drawing.
Note) The theoretical value does not include the machine efficiency at the rated pressure.

5-7 Swing Body: Swing Driving Unit

3. Structure and Operating Principles

[1] Structure

1) Structural diagram
Reference the drawing delivered.

2) Part codes and part names
Reference the drawing delivered.

[2] Operating principles

1) Hydraulic motor section
As the high-pressure oil passes through the valve plate (1), intake side port (a) and flows into the cylinder, the hydraulic pressure works on the piston and a force F is generated in the axial direction. See the figure below. This force F is divided into 2 vectors through the shoe (2) - the force F1 perpendicular to the swage plate (3) and the force perpendicular to the shaft. This force F2 is transmitted to the cylinder block (4) via the piston, generating a rotational couple around the output shaft.

Nine pistons are arrayed at evenly spaced intervals in the cylinder block. Rotary torque is transmitted to the output shaft by multiple pistons sequentially linked with the high-pressure oil intake side port.
As the oil in and out directions are reversed, the rotation of the output shaft also reverses.
The theoretical output torque [Nm] is given by the following equation.

$$T = \frac{p \times q}{2\pi}$$

p: Effective differential pressure [MPa]
q: 1Capacity per rotation [cm^3]

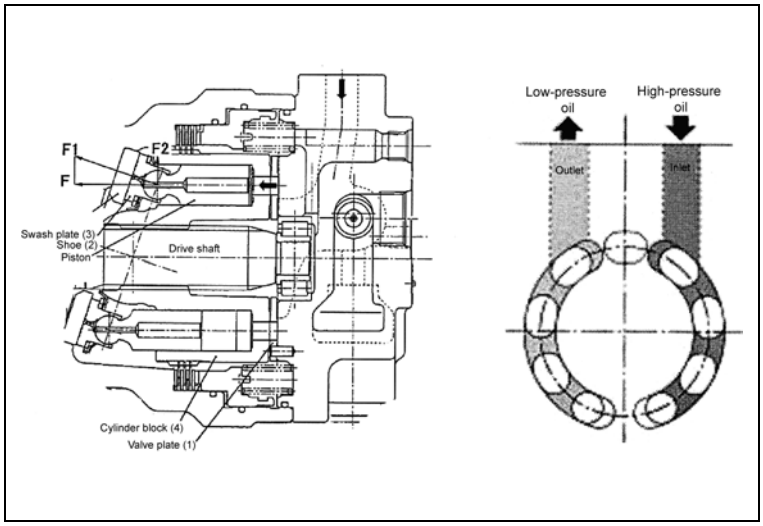

Figure 2. Motor section operation explanation diagram

https://truckmanualshub.com/

2) Valve casing section

2)-1 Anti-cavitation check valve section

The system that uses this type of motor does not have a valve with a counter-balance function. Thus, the motor is sometimes forced to rotate more times than the quantity of oil fed usually allows it.

In order to prevent cavitation due to insufficient oil, a check valve is provided to take in the oil shortfall.

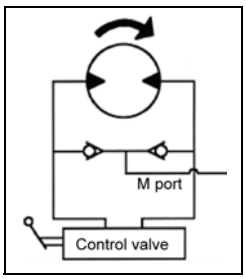

Figure 3. Hydraulic circuit diagram

3) Brake section

The cylinder (111) is coupled with the drive shaft (101) by the gear. And circumferential rotation of the separator plate (743) is constrained by the arc groove being cut on the casing (301).

As the friction plate (742), which is gear coupled to the cylinder outer circumference section, is pressed to the casing (301) by the brake spring (712) via the separator (743) and the brake piston (702), frictional force is generated between the friction plate and casing and between the separator plate and the brake piston. This frictional force constrains the drive shaft, applying the braked.

The frictional force on the other hand, applies brake release pressure to the oil chamber being formed between the brake piston and the casing. And if the hydraulic pressure overcomes the spring force, the brake piston is moved, eliminating the force pressing the friction plate against the casing and, thus, releasing the brake.

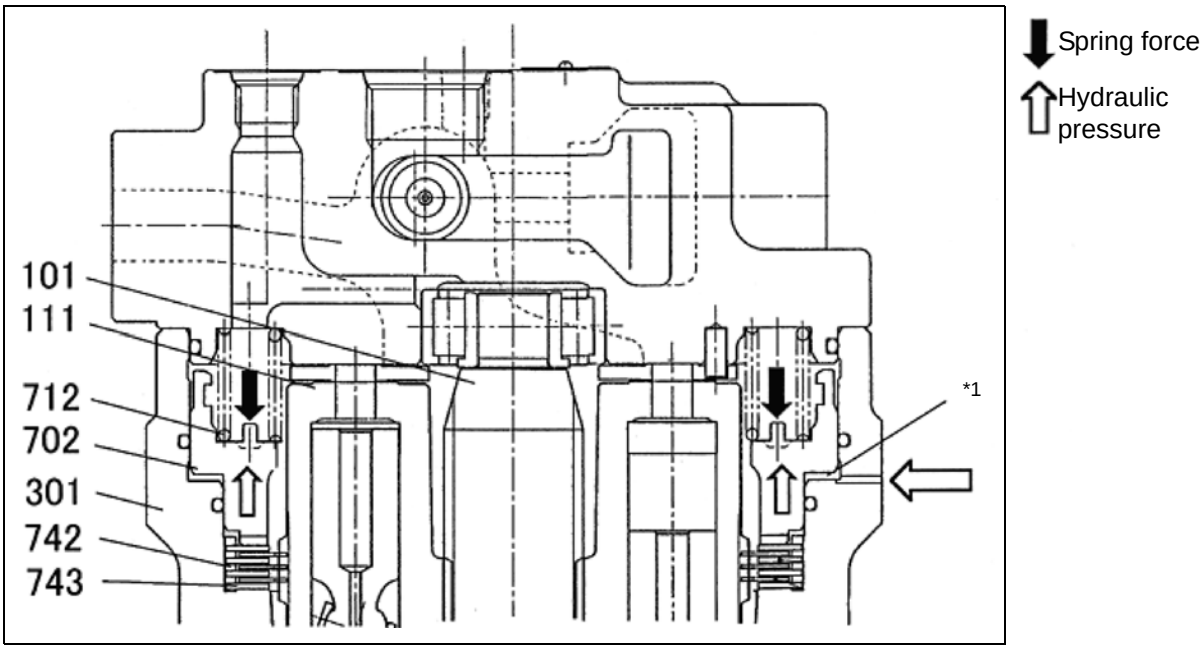

*1 Oil chamber

Figure 4. Brake hydraulic oil

https://truckmanualshub.com/

4. Usage Precautions

[1] Inspection

Check the followings before installing a new motor.

1) Check the motor for damage during transportation and missing parts.
2) Check respective fastening portions for looseness.
3) Check the cover for flanged surface and oil drain port for completeness. And also check the motor for intrusion of dust.

[2] Direction of rotation

Figure 5 and Table 3 show the relation between the oil flow direction and shaft rotation direction. The direction of rotation depends on the tilt revolution direction of the casing slope face. Attentions must be paid to the tilt rotation direction. This direction is identifiable from the shape of the casing (concave portion) and the direction of the flange.

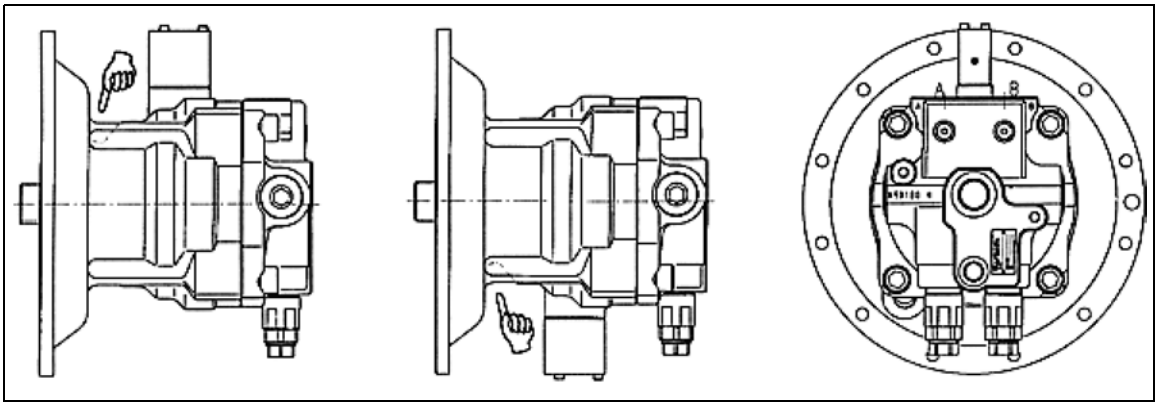

Forward rotation | Reverse rotation (Mis added to the end of the type name) | Layout of A and B ports

Figure 5. Difference in casing resulting from tilt rotation direction (Casing in this figure is not provided with the reverse prevention valve)

Table 3

	Inlet	Outlet	Rotation Direction Viewed from Shaft Side
Forward rotation	A	B	Right rotation (Clockwise direction)
Reverse rotation (M is added to the end of the type name)	B	A	Left rotation (Counterclockwise direction)

[3] Load at shaft end

Make sure radial and thrust load are not applied to the motor shaft end.

[4] Hydraulic oil and temperature range

1) Oil Type
The oil used should be mineral type hydraulic oil with a high viscosity index that has been added with extreme-pressure additives, foam inhibitor, antioxidants, and anti-corrosives.

2) Optimum Viscosity and Temperature of Hydraulic Oil (Figure 6)
The oil is usable in the viscosity range of 10 - 1000 cst. It is, however, recommended that oil in the range of 10 - 200 cs be used in order to ensure the optimum efficiency.
The temperature range is limited to -25°C to 100°C by the oil and O-ring used. Use of the oil at a temperature of 60°C or below is recommended in order to avoid potential deterioration of the hydraulic oil and seals.

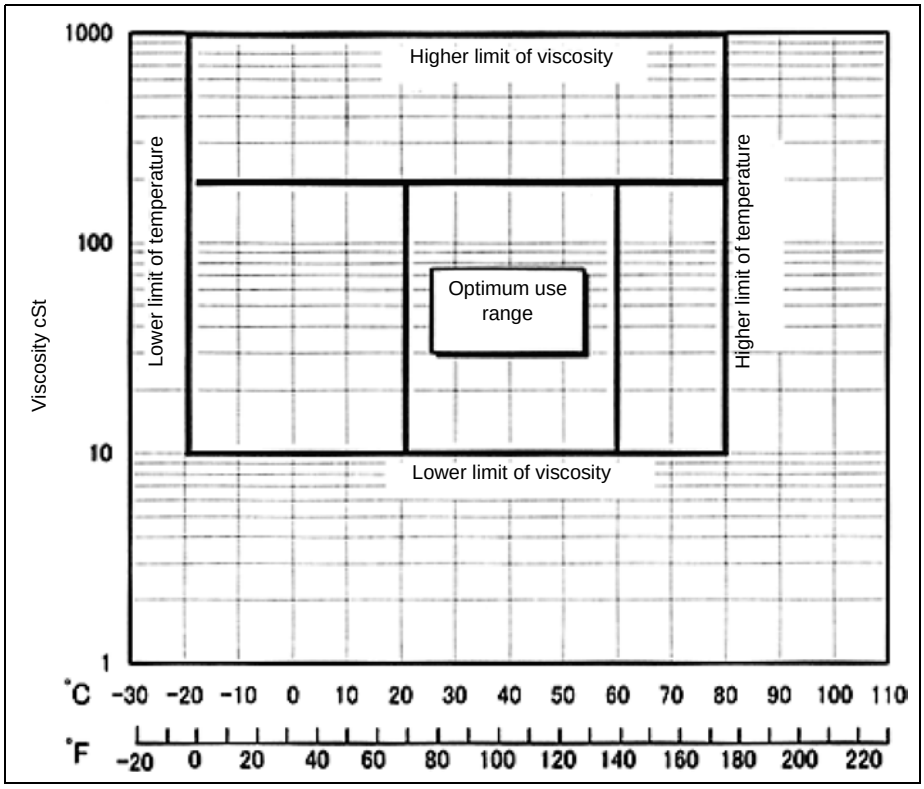

Figure 6. Optimum viscosity range and temperature range

3) Non-mineral Oil Type Hydraulic Oil
When use of hydraulic oil of either ester phosphate, water-glycol or fatty ester types is planned, contact us before using it.

[5] On filter

Intrusion of fine grains of soil or metal powers into the oil accelerates friction on the sliding surface and sometimes causes sticking and seizing. It is, therefore necessary to prevent intrusion of such foreign substances, and at the same time, to provide a 10-micron filter in the circuit.
Contamination should be Rank 9 or below in the NAS rank and 2 - 4 mmg/100 cc or below in the millipore pollution level.

https://truckmanualshub.com/

[6] Installation and piping

1) Install the motor, as a general rule, in such a way that its shaft comes to the bottom.
2) Make sure the centering with the driven part is precise. Make sure the displacement at the center is a maximum of 0.05 mm.
3) For the tightening torque to be used for installing the motor to the bracket, reference the dimensional outline drawing.
4) Make sure to constantly fill the casing with oil. The motor draining position must be set in such a way that the casing is filled with oil. See Figure 7.

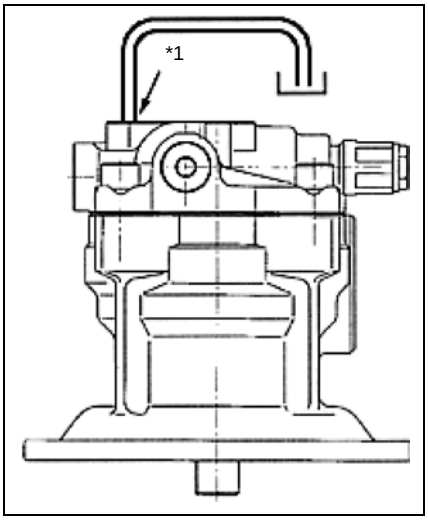

*1 Oil drain port

Figure 7. Example of correct drain piping (The casing in the figure is not provided with the reverse prevention valve.)

5) Pressure in the casing is allowed up to a maximum of 0.3 MPa. Normally, however, it should be set to 0.2 MPa or below.
6) The pipe must be sufficiently acid washed and flushed.
7) The piping work should not apply extra force to the pipe.
8) The size of the drain pipe must be thicker than the motor port size and it must be routed as short as possible.

[7] Filling of oil and air bleeding

1) Before operating the motor, be sure to fill up the casing with oil from the oil drain port. High-speed sliding parts such as the bearing, piston/shoe and spherical bushing are provided in the motor. Problems such as seizing and damage can occur on these parts if the casing is not filled with oil. Thus, it is crucial to fill up the casing with oil. Volume of necessary oil 1000 cc
2) Bleed air completely from the circuit and motor. Otherwise, malfunctioning or damage can occur on them.

[8] Precautions for starting the operation

1) Make sure necessary piping is completed.
2) Make sure the rotating direction is correct.
3) Make sure the motor is completely free from oil leakages.
4) Make sure the motor is free from significant vibrations during operation or when the direction selector valve is operated.
5) Make sure the oil temperature does not rise abnormally during operation of a limited duration.
6) Make sure the pressure is not substantially deviating from the planned value.

https://truckmanualshub.com/

5. Cause of Problem and Solution

[1] General cautions

The following describes the corrective actions that are required to be taken if abnormality is recognized while operating the hydraulic motor.
The following lists the general cautions.

1) Points to consider before taking actions
   Before proceeding to troubleshooting, try to remember whether a similar event has occurred before. Think again if the motor is really the cause.
2) Pay attention to dust.
   Wear is often caused by dust. Thus, reasonable care must be exercised during disassembly to prevent intrusion of dust.
3) Handling of parts
   Parts are precision-finished. Exercise care when handling them so that they are not damaged.
4) Care must be exercised in the corrective actions so as not to damage the surface of the O-rings and gaskets. It is recommended that O-rings are replaced when disassembling the motor.

[2] Procedure for inspecting motor unit problems

It is very difficult to locate the cause of a problem in the hydraulic circuit. Check the following items to determine whether or not the motor is actually responsible for the trouble.

1) Inspecting oil in the casing
   Remove the drain plug and check hydraulic oil in the casing. If a large quantity of metal powder is contained in the oil, failure on the internal parts of the motor should be suspected.
2) Presence/absence of abnormal sounds
   Check the motor unit for any abnormal sounds.
3) Measure pressure of respective components.
   Do not rush into the overhaul inspection but measure pressure of the respective components first to locate the failed section.
4) Measurement draining volume from the motor
   i) Lock the swing and apply pressurized oil to the motor. In this case, if the draining volume measured is approximately 30 L/min. or less, the motor should be considered to be normal.
   ii) And the motor is also considered normal if the draining volume during the constant swing is 2 L/min. or less.

https://truckmanualshub.com/

[3] Mode of failure and corresponding corrective measures

1) Hydraulic motor does not rotate.

Phenomena	Cause	Measures Taken
Pressure does not rise.	1. Safety valve in the path is not correctly set. 2. Malfunctioning of relief valve (1) Sticking of plunger (2) Clogging on plunger 3. Defective plunger seat	1. Set it to the correct value. 2. (1) Repair or replace the stick section (2) Disassemble and clean 3. Check the seat and replace it if damaged.
Pressure rise is available	1 Overload 2. Seizing on the moving part 3. Release pressure is not working on brake. 4. Piston is stuck to brake. 5. Brake releasing spool is stuck. 6. Friction plate is seized.	1 Eliminate the load 2. Inspect and repair piston/shoe and cylinder/valve plate. 3. Inspect and repair the circuit. 4. Disassemble and Inspect 5. Disassemble and inspect 6. Disassemble and inspect Replace the seized plate.

2) Rotating direction is the opposite to the specified direction.

Phenomena	Cause	Measures Taken
Rotating direction is the opposite to the specified direction	1. Motor rotating direction is opposite 2. Inlet and outlet of the pipe are set inversely.	1. Reference Figure 5 and assemble motor correctly. 2. Install pipe correctly

3) Revolution does not reach the specified value.

Phenomena	Cause	Measures Taken
Revolution does not reach the specified value.	1. Volume of incoming oil is insufficient. 2. Leakage of abnormally large volumes is induced by high oil temperature. 3. Friction or damage of sliding parts	1. Check pump discharge volume as well as the state of the circuit to the motor. 2. Reduce the oil temperature. 3. Replace the failed sliding part.

4) Hydraulic motor does not rotate

Phenomena	Cause	Measures Taken
Brake torque tends to go short.	1. Wear on the friction plate. 2. Brake piston is stuck. 3. Brake release pressure is not able to be relieved. 4. Brake releasing spool is stuck. 5. The spline of the friction plate is damaged.	1. Disassemble and inspect the plate. Replace it if wear is more severe than the level allowed in the standard. 2. Disassemble and inspect 3. Inspect and repair the circuit. 4. Disassemble and inspect 5. Disassemble and inspect the plate. Replace a damaged spline.

https://truckmanualshub.com/

5) Significant slippage is observed on the hydraulic motor.
Inspect the draining volume from the hydraulic motor. If it is around 500 cc/min., the motor is free from problems.

Phenomena	Cause	Measures Taken
Significant slippage results as the external motor driving force is turned on.	1. Malfunctioning of relief valve Same as 1) above. 2. Defective plunger seat	1. Replace the valve. Same as 1) above. 2. Replace the seat.

6) Oil leakage

i) Oil leakage from oil seal

Phenomena	Cause	Measures Taken
Oil leakage from oil seal	1. Lip is damaged by dust being bitten. 2. Shaft is damaged or worn. 3. Abnormally high pressure inside the casing flipped the lip up. 4. Shaft is rusted.	1. Replace oil seal. 2. Move the position of lip and shaft or replace the shaft. 3. Repair drain pipe if clogged. 4. Disassemble and repair

ii) Oil leakage from the alignment surface

Phenomena	Cause	Measures Taken
Oil leakage from the alignment surface	1. O-ring is not fitted. 2. O-ring is damaged. 3. Sealing surface is damaged. 4. Bolt is loose or damaged.	1. Insert and assemble O-ring correctly. 2. Replace the O-ring. 3. Disassemble and repair the sealing surface. 4. Tighten the bolt to the specified torque or replace it.

https://truckmanualshub.com/

6. Assembly and Disassembly

[1] Bolt tightening torque

Table 1 shows the tightening torque for the bolts used on the motor. When assembling the motor, tighten the bolts securely referencing Table 1.

Table 1.

Screw Size	Name	Tightening Torque N•m	Applicable Part Code
M 20	Hexagon socket head bolt	431	401
M 33 × P 1.5	Relief valve	177	051
M 36 × P 1.5	ROMH plug	539	469
PF1/4	ROH plug	36	467

If the part in hand is not consistent with the above part code, reference the assembly cross-section diagram.

https://truckmanualshub.com/

[2] Tools for assembly and disassembly

Table 2 and Table 3 list the tools needed for assembly and disassembly. Bolt and plugs used depend on the given motor type. Check the type beforehand to prepare the necessary tools.

Table 2. Wrenches

Name	Size	Width Across Flats	Applicable Part Code	Tool
Hexagon socket head bolt	M 20	17	401	Hexagon bar wrench
Relief valve	M 33 × P 1.5	41	051	Hexagon wrench and socket wrench
ROMH plug	M 36 × P 1.5	17	469	Hexagon bar wrench
ROH plug	PF1/4	6	467	Hexagon bar wrench

If the part in hand is not consistent with the above plugs and bolts, reference the assembly cross-section diagram.

Table 3. Others

Tool \ Specification	Dimension
Screwdriver	Medium-sized flathead screwdriver × 2
Steel rod	About 10 × 8 × 200
Hammer	Plastic hammer Hammer 1 each
Torque wrench	Torque adjustment range • For 5 - 10 N•m • For 10 - 45 N•m • For 40 - 275 N•m • For 75 - 550 N•m
Slide hammer bearing puller	
Brake piston pulling jig	See the next page

https://truckmanualshub.com/

5-7 Swing Body: Swing Driving Unit

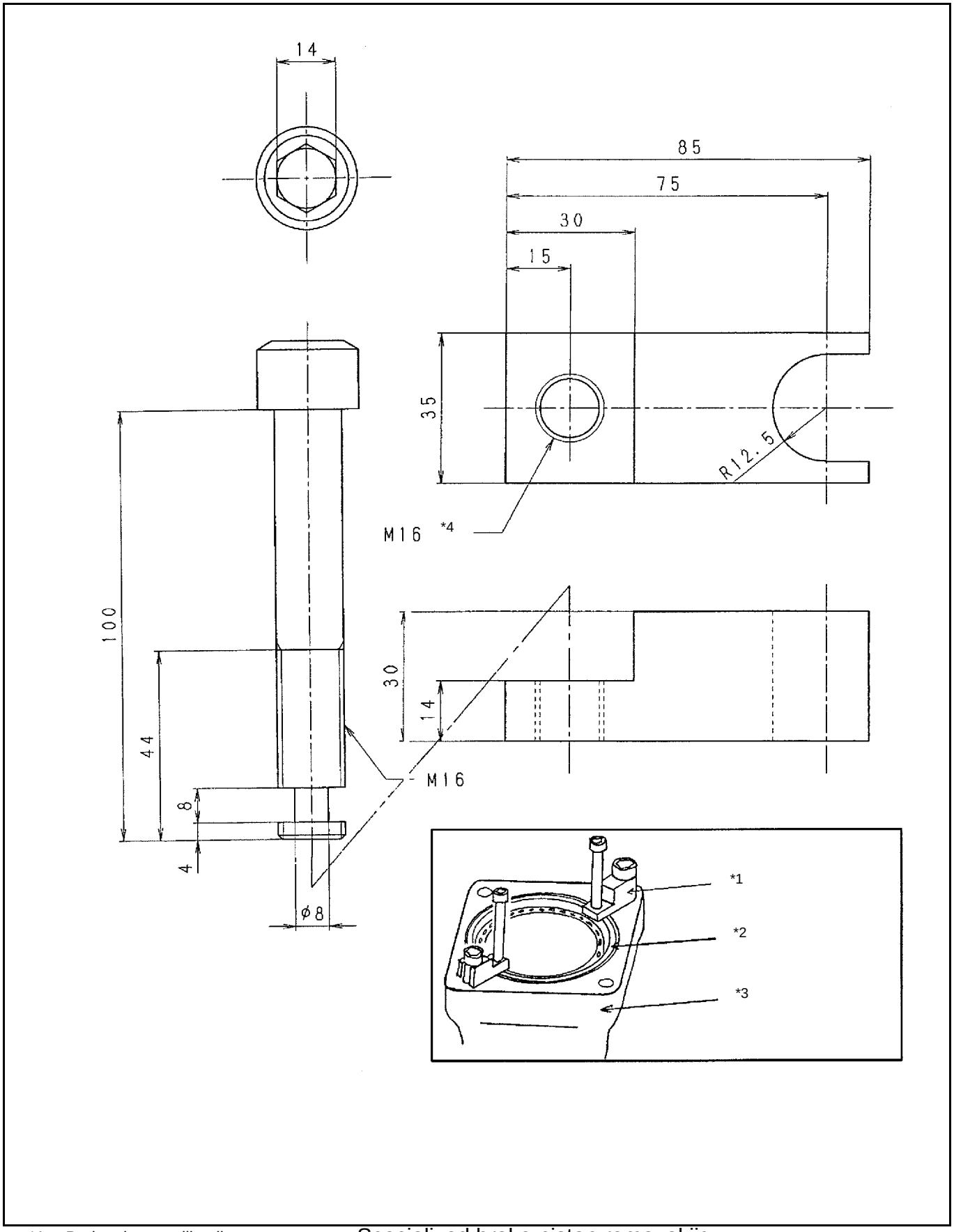

Specialized brake piston removal jig

*1 Brake piston pulling jig
*2 Brake piston
*3 Casing
*4 Through hole

https://truckmanualshub.com/

[3] Disassembly procedure

Disassemble the motor in the following order. The number in parentheses shown after the part name indicates the code used in the structural diagram.

1) Wrap the wire rope around the motor, lift it with a crane and wash it using white kerosene. After washing, dry the motor with compressed air.
   - Mask the ports using a piece of tape to prevent intrusion of foreign substances to the motor, and then wash away any deposited dirt and dust.

2) Drain the oil in the casing (301) through the drain plug.

3) Set the end of the driving shaft (101) downward and then place the motor on a bench that allows easier disassembly. When disassembling, apply an alignment mark to the mating surface of the casing (301) and valve casing (303).
   - Select a clean place. Spread a rubber plate of piece of cloth on the disassembling bench to protect the parts from damage.

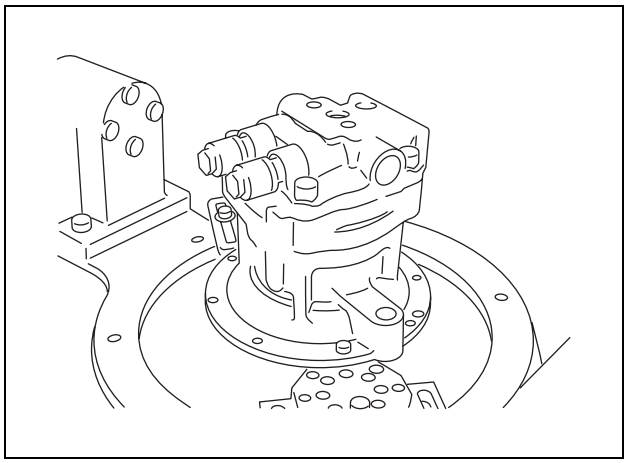

4) Loosen the relief valve (051) and remove it from the valve casing (303).
   - Loosening the relief valve inevitably damage the O-ring. Thus, the O-ring must be replaced with a new one.

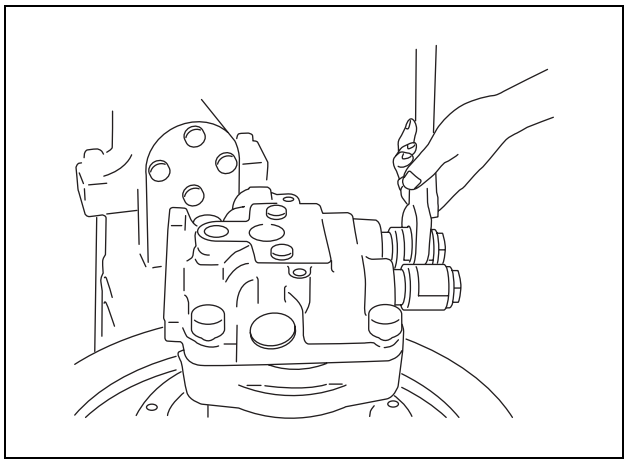

https://truckmanualshub.com/

5) Remove the ROMH plug (469) from the valve casing (303) and then remove the spring (355) and plunger (351).
   - Care must be exercised in this operation to protect the plunger seat from damage.

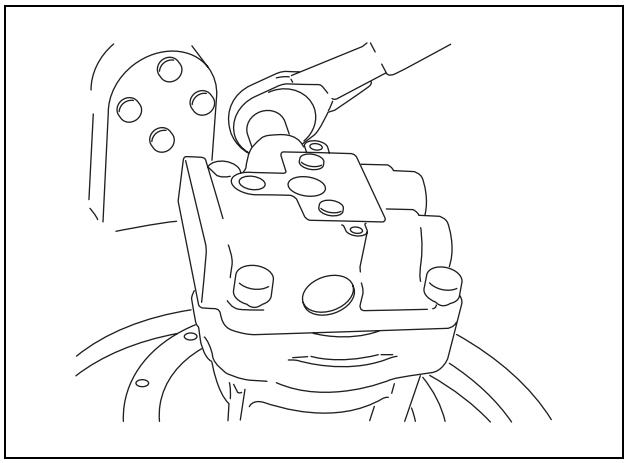

6) Loosen the hexagon socket head bolt (401) to remove the valve casing (303) from the casing (301).
   (As the bolt is removed, force of the brake spring (712) lifts the valve casing from the casing.)
   Remove the valve plate (131) from the valve casing (303).
   - Care must be exercised in this operation so the valve plate is not dropped from the valve casing.
     (The valve plate is sometimes provided on the cylinder side.)
     When prying the alignment surface using a screwdriver, reasonable care must be exercised so as not to damage the surface.

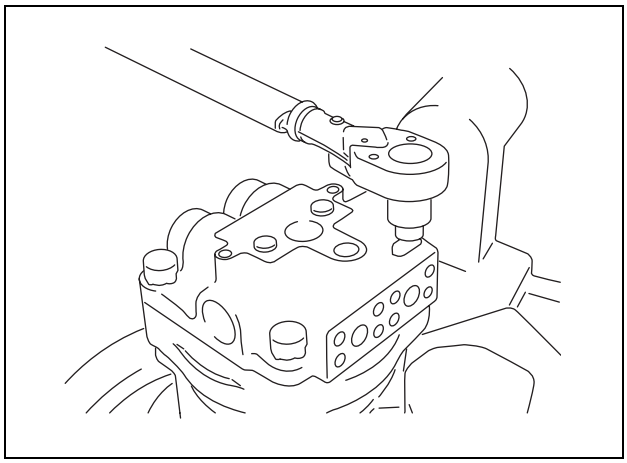

7) Remove the brake spring (712) from the brake piston (702).

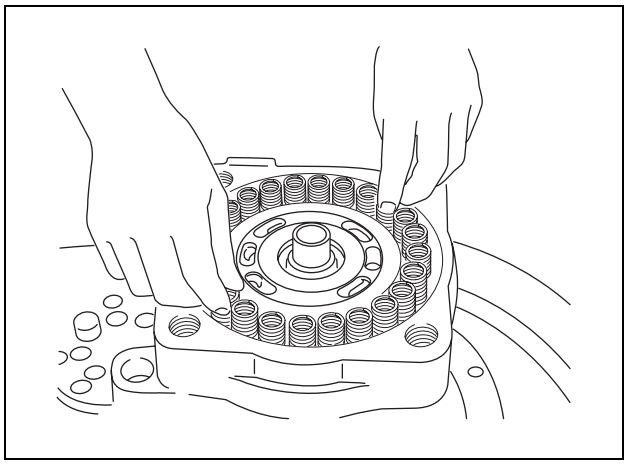

https://truckmanualshub.com/

8) Using the jig, remove the brake piston (702) from the casing (301).
   - Hitch the toe of the jig on the side face of the brake piston and pull it up straight.

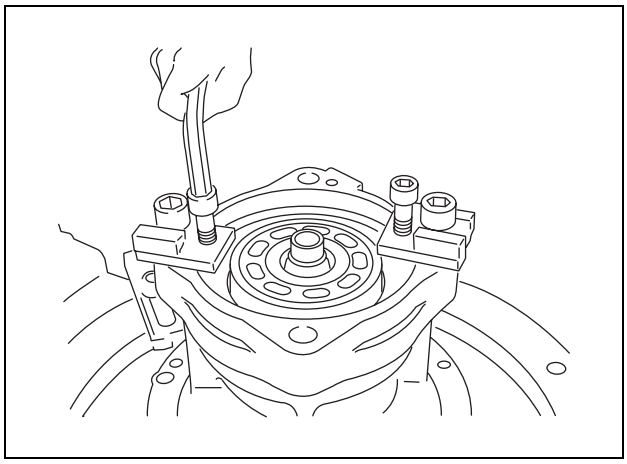

9) Re-place the motor horizontally to remove the cylinder (111) from the drive shaft (101). Then remove the piston (121), holder plate (123), plate spring (114) and shoe plate (124).
   - Care must be exercised so as not to damage the sliding surface of the cylinder and shoe.
     If the shoe plate is unable to be removed, remove it using work step 12).

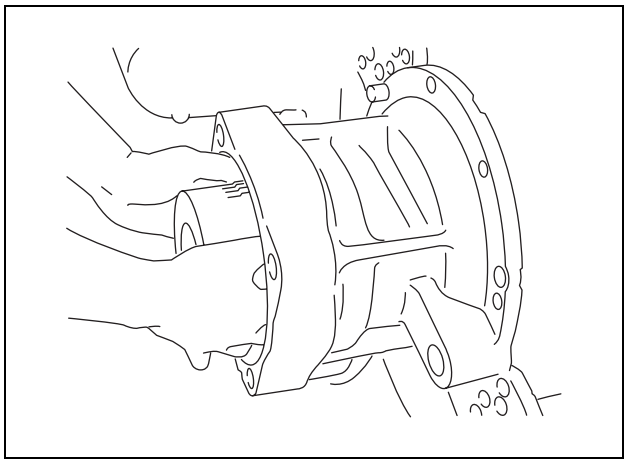

10) Remove the friction plate (742) and separator plate (743) from the casing (301).

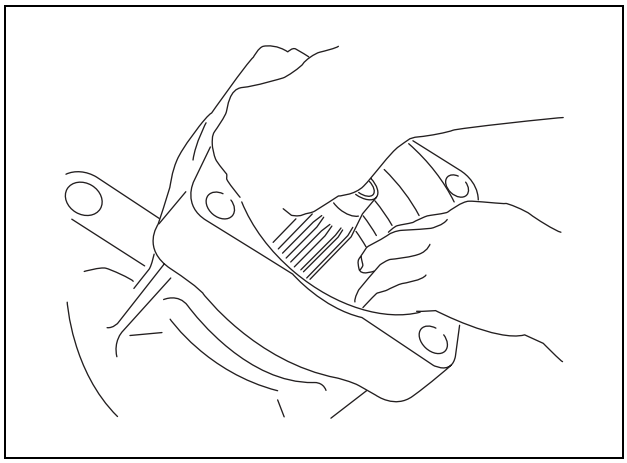

https://truckmanualshub.com/

11) Remove the drive shaft (101) and shoe plate (124).
    - The oil seal will inevitably be damaged by the spline when removing the drive shaft. To avoid the above problem, wrap vinyl tape or similar material around the drive shaft spline.

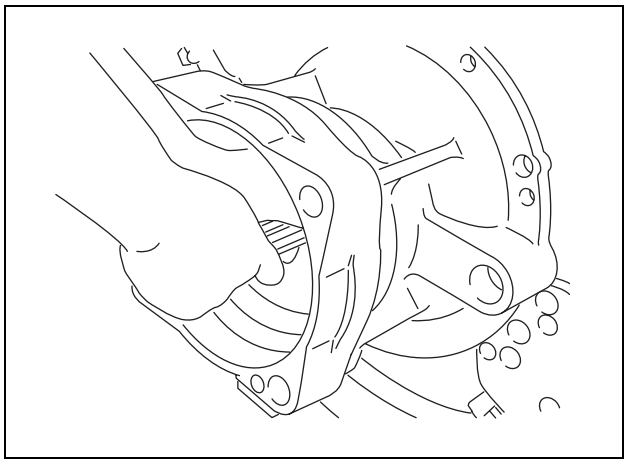

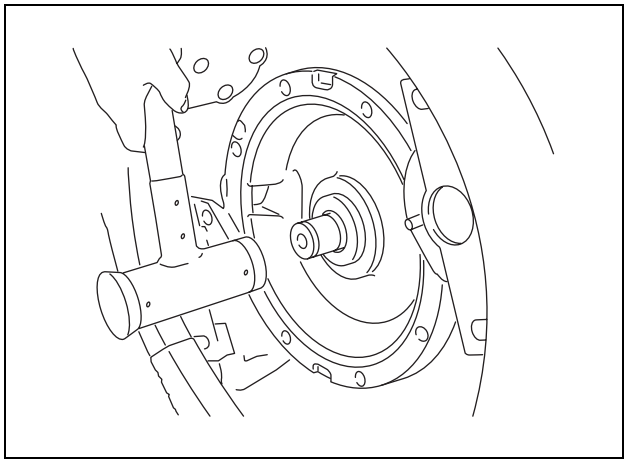

https://truckmanualshub.com/

12) Implement the following work as needed.

(1) Remove the inner race of the cylindrical roller bearing (443) from the drive shaft (101) using the press.

- It is safe to strike the inner race of the cylindrical roller bearing with a steel rod, however care must be exercised so as to strike it uniformly so that the bearing is not damaged.
  It is prohibited to reuse a once removed bearing.

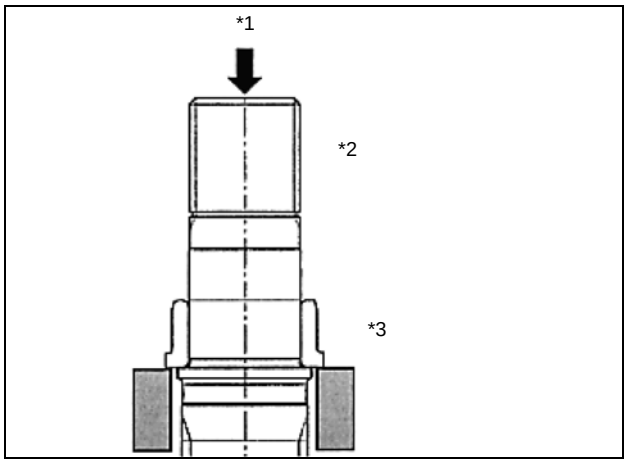

*1 Press
*2 Drive shaft
*3 Hitch the bench of the press on the inner race.

(2) Remove the outer race of the cylindrical roller bearing (443) from the drive shaft (301) by striking it lightly from the housing side with a steel rod.

- Do not reuse a bearing that has already been removed.

(3) Using the slide hammer bearing puller, remove the cylindrical roller bearing (444) from the valve casing (303).

- It is prohibited to reuse a once removed bearing.

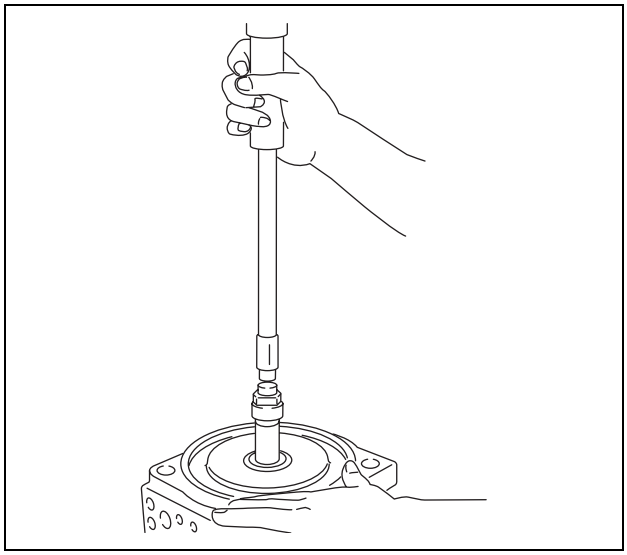

The above completes the disassembly. Check respective components for any problems.

https://truckmanualshub.com/

[4] Assembly procedure

The assembly is carried out in the reverse order of the disassembly procedure. However, follow the precautions below.

(1) Be sure to repair any parts damaged during disassembly, and prepare replacement parts in advance.

(2) Clean the parts sufficiently with cleaning liquid and then dry them using compressed air.

(3) Be sure to coat sliding parts and bearings with clean hydraulic oil before assembling.

(4) It is necessary, as a general rule, to replace the sealed portion of O-rings and oil seals.

(5) When tightening the mounting bolts and plugs, tighten them to the torque listed in Table 1 by use of the torque wrench.

The following describes the assembly procedure.

1) Place the casing (301) on an appropriate bench in such a way that the valve casing (303) side comes to the top.

2) (This work step is required only when the cylindrical roller bearing is remove.) Thermal-insert the inner race of the cylindrical roller bearing (443) to the drive shaft (101).
   - Pay attention to the direction of the collar of the cylindrical roller bearing.

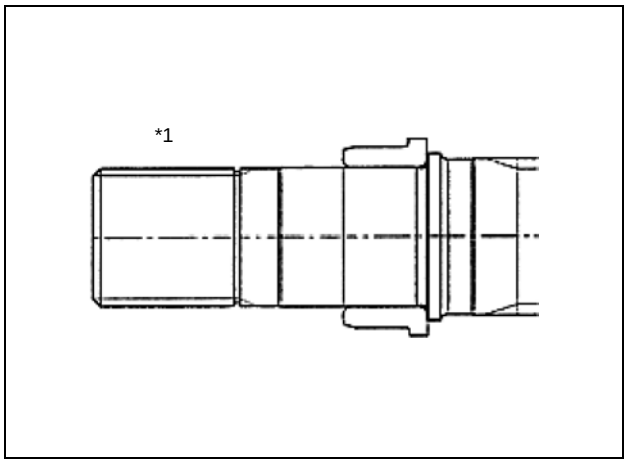

*1 Output shaft side

3) Using the jig, insert the oil seal (491) to the casing (301).
   - Pay attention to the direction of the oil seal.
     (Refer to the assembly cross-section diagram)
     Coat the oil seal lip with a small amount of grease.
     Strike it uniformly so the perimeter is not damaged.

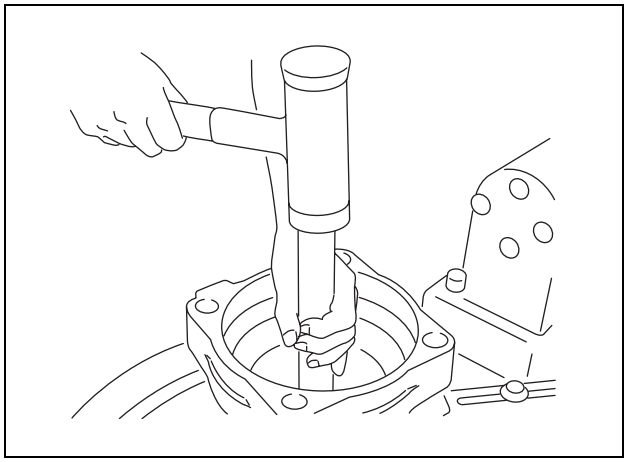

https://truckmanualshub.com/

4) Assemble the outer race of the cylindrical roller bearing (443) to the casing (301) by hammering it lightly with a steel rod.

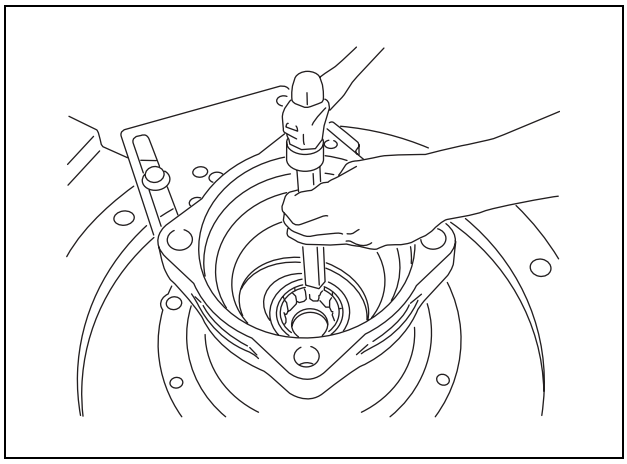

5) Install the rive shaft (101) to the casing (301).
   - Care must be exercised during installation so as not to damage the oil seal lip.
     It is advisable to wrap vinyl tape around the shaft spline section.

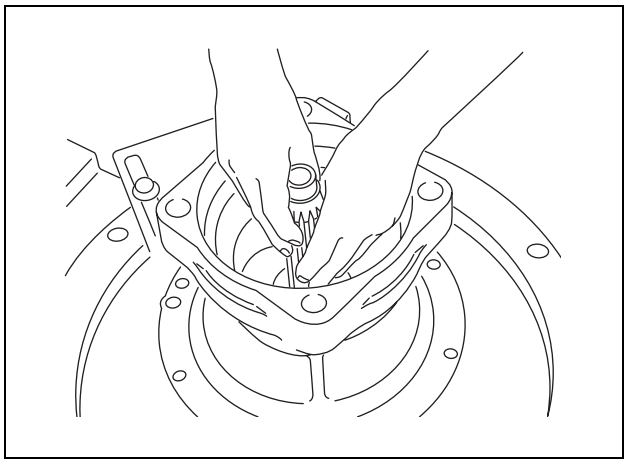

6) Place the casing (301) horizontally and then insert the shoe plate (124).
   - The side with the wider chamfering area on the shoe plate is assembled to the casing.
     In order to prevent detachment, it is advisable to coat the alignment surface with a small amount grease.

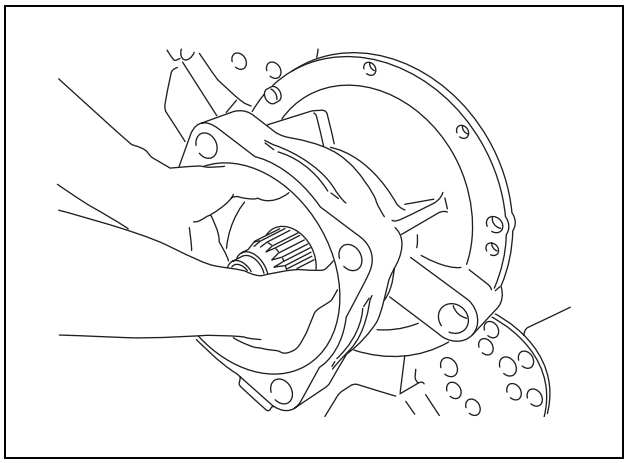

7) Set the holder plate (123) and plate spring (114), then set the piston sub-assembly (121,122).

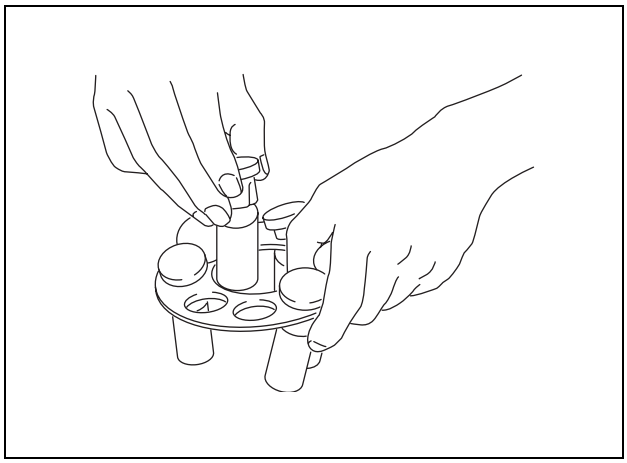

https://truckmanualshub.com/

8) Assemble the piston sub-assembly (121, 122) being set on the holder plate (123) to the cylinder (111) and then insert them into the casing while aligning them with the spline of the drive shaft (101).

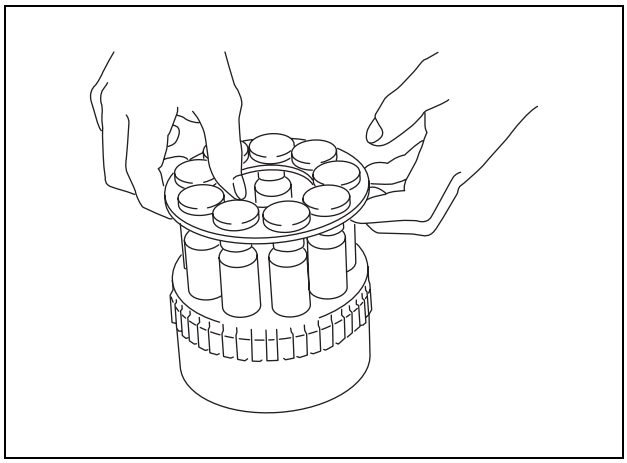

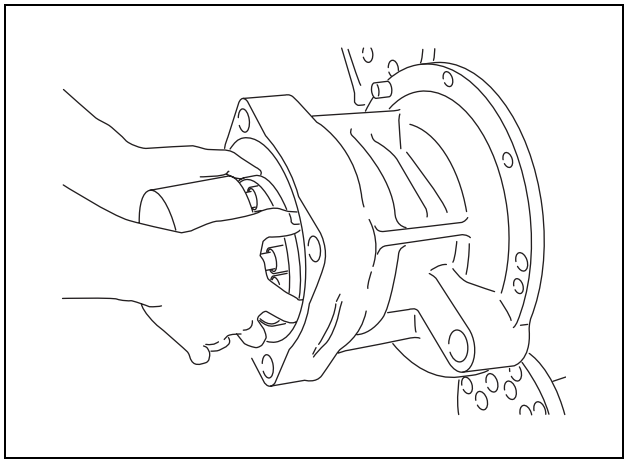

https://truckmanualshub.com/

9) Re-set the casing (301) in such a way that the oil seal (491) faces downwards and then assemble separator plates (743) and friction plates (742) alternately to the casing in this order.
   4 separator plates and 3 friction plates are assembled.

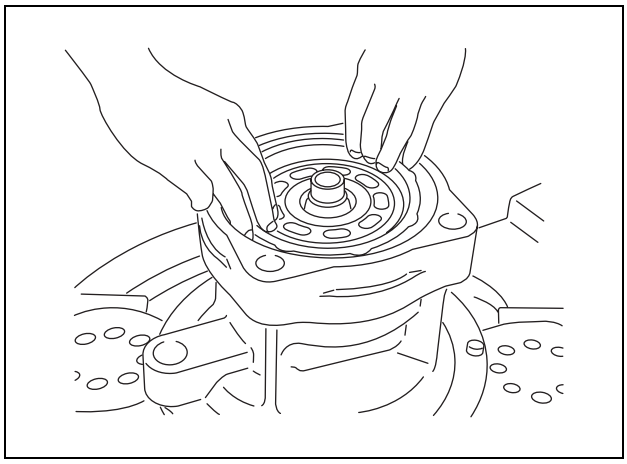

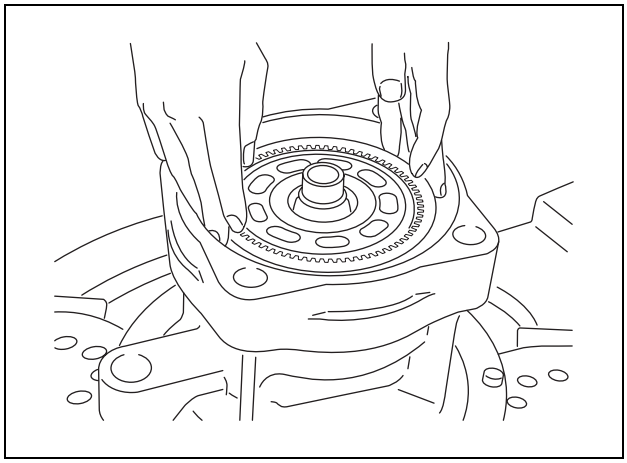

10) Install O-rings (706) and (707) on the casing (301).
   - It is advisable to coat the O-rings with a small amount of grease to protect them from being cut off as the brake piston is inserted.

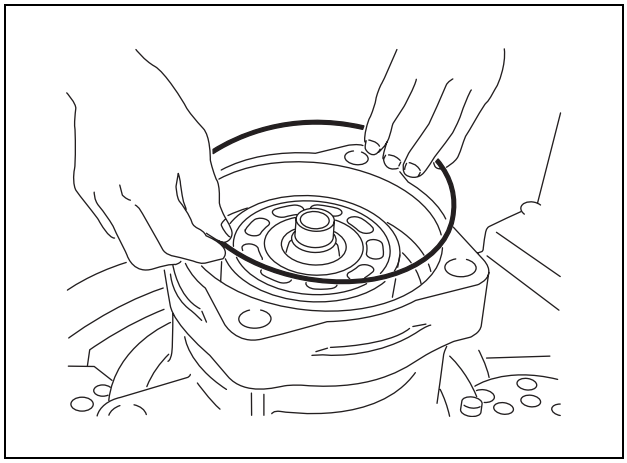

https://truckmanualshub.com/

11) Assemble the brake piston (702) to the casing (301).

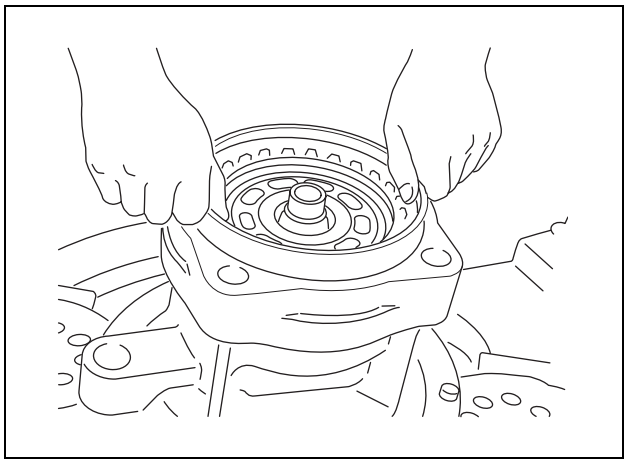

12) Assemble the brake spring (712) to the brake piston (702).

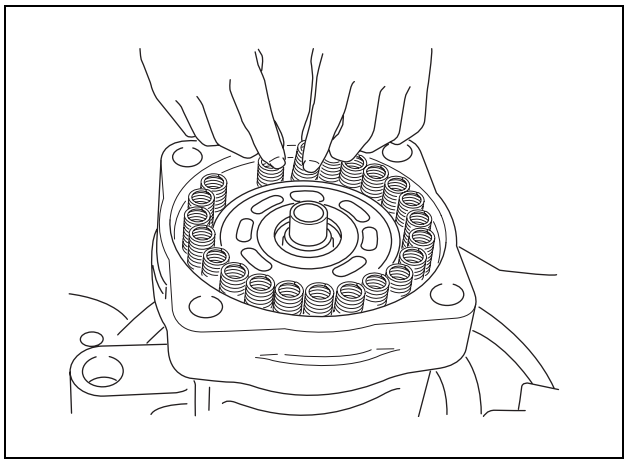

13) (This work step is required only when the cylindrical roller bearing (444) has been removed)
Insert the outer race of the cylindrical roller baring (444) to the valve casing (303) hammering the outer race lightly with a steel rod.
- Hammer the perimeter of the outer race evenly until it is stopped at the stepped section of the valve casing.

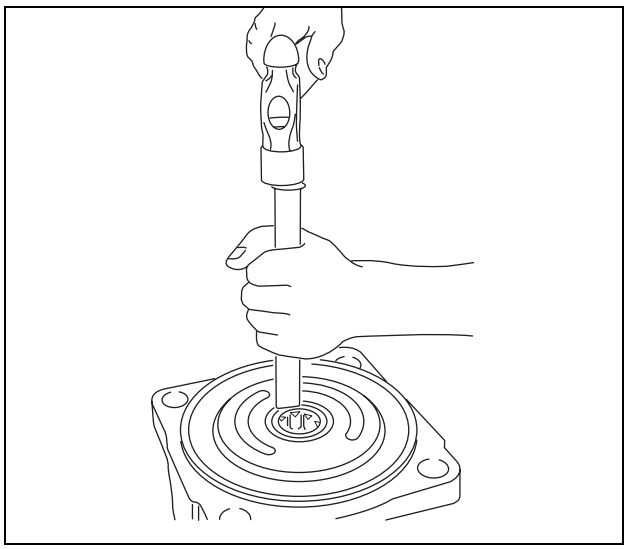

https://truckmanualshub.com/

14) Assemble the valve plate (131) at the valve casing (303) and then install the O-ring (472) onto them.
   - Coat the mating face of the valve plate with a small amount of grease. (To prevent detachment)

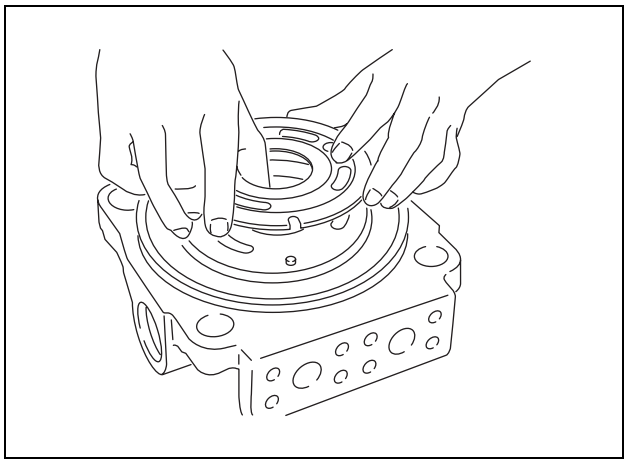

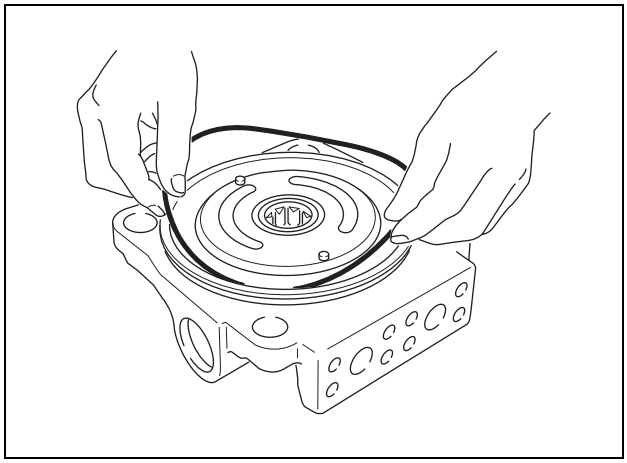

15) Install the valve casing (303) on the casing (301) and then tighten them with the hexagon socket head bolt (401).
   - Pay attention to the mounting direction of the valve casing. (Refer to the dimensional outline drawing)
     Exercise care to prevent the valve plate from detaching.
     Be sure to prevent the brake spring from falling over.
     The hexagon socket head bolt must be uniformly tightened.

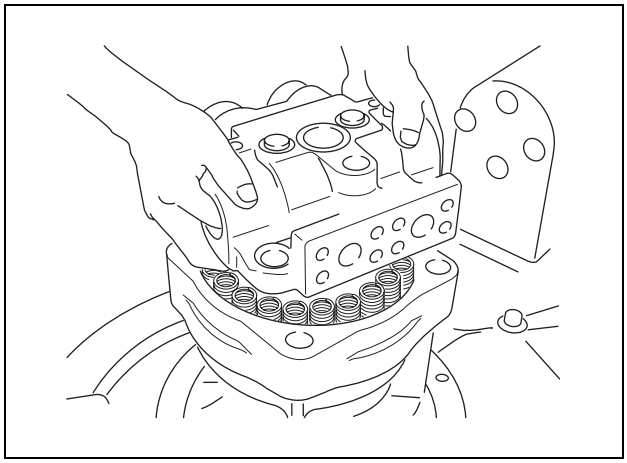

16) Insert the plunger (351) and spring (355) into the valve casing (303) and then fasten the ROMH plug (469) installed with the O-ring (488) to the valve casing (303).
   - Make sure that the plunger moves smoothly.

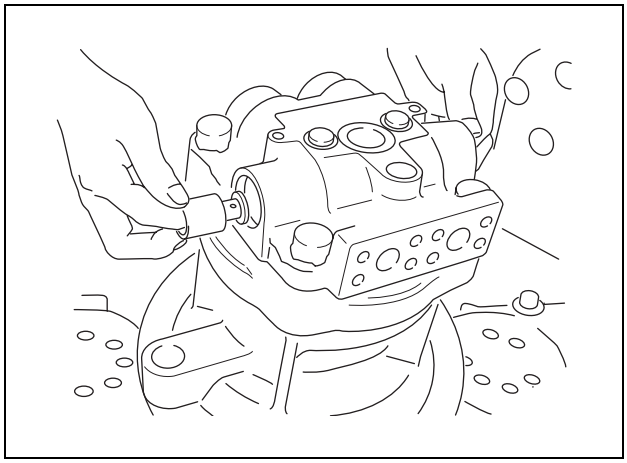

https://truckmanualshub.com/

17) Install the relief valve (051) on the valve casing (303).

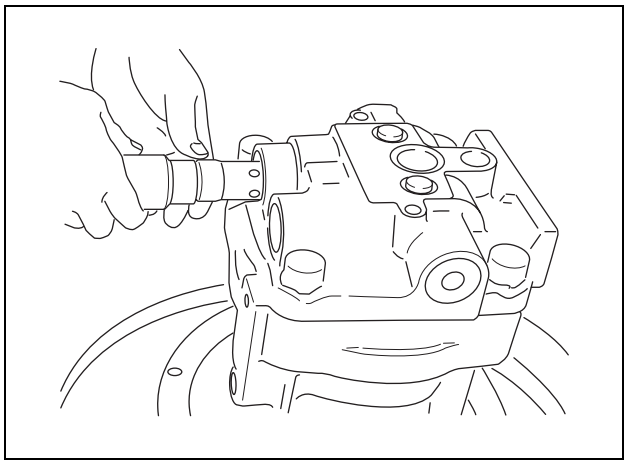

The above completes the assembly.

https://truckmanualshub.com/

7. Maintenance Procedure

[1] Friction parts replacement standard

If wear on the following parts is more severe than the value permitted in the standard, applicable parts must be repaired or readjusted.
The above, however, is not applicable when serious external damage has been recognized.

Table 4. Part Replacement Standard

Item	Standard Dimension (mm)	Recommended Value for Replacement (mm)	Measures Taken
Clearance between piston and cylinder bore (D-d)	0.028	0.058	Replace piston or cylinder
Play in the piston and shoe caulking section (δ)	0	0.3	Replace piston and shoe assembly.
Shoe thickness (t)	5.5	5.3	Replace piston and shoe assembly.
Friction plate thickness	2.0	1.6	Replace the plate.

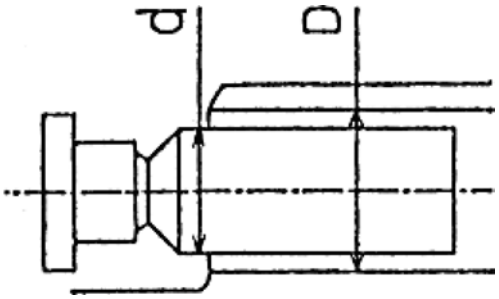

Clearance (D-d)

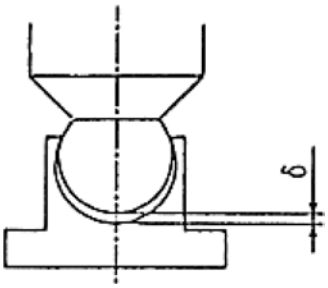

Play in piston and shoe (δ)

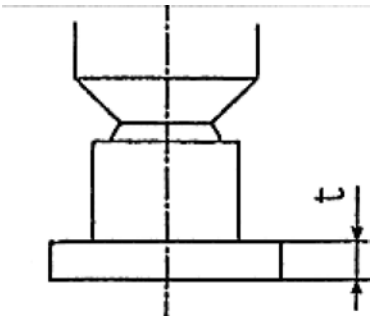

Shoe thickness (t)

https://truckmanualshub.com/

[2] Sliding surface repairing standard

If the sliding surface of respective components has become roughened beyond the level permitted in the standard, they must be repaired or replaced.

Table 5. Siding Surface Repairing Standard

Part name	Standard Surface Roughness	Surface Roughness that Requires Repair
Shoes	0.8-Z (Ra=0.2) (Lapping)	3-Z (Ra=0.8)
Shoe plate	0.4-Z (Ra=0.1) (Lapping)	3-Z (Ra=0.8)
Cylinder	1.6-Z (Ra=0.4) (Lapping)	12.5-Z (Ra=3.2)
Valve plate	0.8-Z (Ra=0.2) (Lapping)	6.3-Z (Ra=1.6)

Note 1. Surface roughness of each sliding surface must be repaired until it is below the standard surface roughness through the lapping process.

2. If spherical sliding section of the plate spring or cylinder has become roughened, the part must be replaced as a set.

Explanation of Relief Valve Operation (Relief valve model: KRD22EK10)

1. Explanation of Relief Valve Operation under Pressure

The following outlines the case where the valve is pressurized by the P port tank pressure.
Initially the P and R ports are set to the tank pressure as shown in Figure 1-(1).
The relief valve starts operating at a pressure level at which the hydraulic pressure force to be determined by the product of pressurized area A_1 the plunger (301) and pressure P balances with the hydraulic pressure force to be determined by the product of load F_{SP} of the spring (321), pressurized are A_2 on the plunger (301) and pressure of g chamber P_g.
After that, the g chamber pressure rises and the piston 1 (302) starts its stroke. Accompanying this movement, the load on the spring (321) increases.
Through the above operation, relief pressure P is controlled to rise from P_1 to P_S in the pressure rise time t_1.
The following explains this process using the relationship between the moving parts shown in Figures 1-(2) - (4) and the relief pressure.

(1) The state shown in Figure1-(2)

As the relief valve P port is pressurized, pressure is generated in the g chamber via the metering valve m of the plunger (301).
If the hydraulic pressure operating on the plunger (301) increases up to a level where it balances load F_{SP} of the spring (321), the relief valve starts the relief operation at pressure P_1.
The relationship at this point is expressed by the following equation.

$$P_1 \times A_1 = F_{SP1} + P_{g1} \times A_2 \qquad F_{SP1}\text{: Initially set load of the spring (321)}$$

(2) The state shown in Figure 1-(3)

The g chamber pressure operates on pressurized areas A_3-A_4 of the piston (1) (302). As this hydraulic pressure force outgrows the load on the spring (321), piston 1 starts its leftward movement.
At this time, piston 1 moves leftward discharging oil in h chamber, which is formed between the piston 1 and adjusting plug (401), to g chamber via the metering valve n provided on the piston (302). Thus, chamber h functions as a damping chamber.
Through this, the spring load gradually increases and relief pressure P also increases smoothly until piston 1 reaches the adjusting plug end section.

(3) The state shown in Figure 1-(4)

As the piston 1 (302) reaches the adjusting plug (401) end section, its leftward movement is stopped there. Thus the constant relief state is turned on and relief pressure is held at P_2.

Through the processes (1) - (4) above, the relief pressure varies as shown in Figure 2.

2. Explanation of Operation of Relief Valve under Depressurization

The following describes the case where the P port pressure is decreased.
As pressure to P port is removed, pressure in g chamber also decreases to the tank pressure. Because of the above change in pressure, the currently opened plunger (301) is moved leftward until it is seated on the seat (341). At the same time, the piston (1) (302) also is moved rightward by spring (321), resulting in the restoration of the state shown in Figure 1-(1).

5-7 Swing Body: Swing Driving Unit

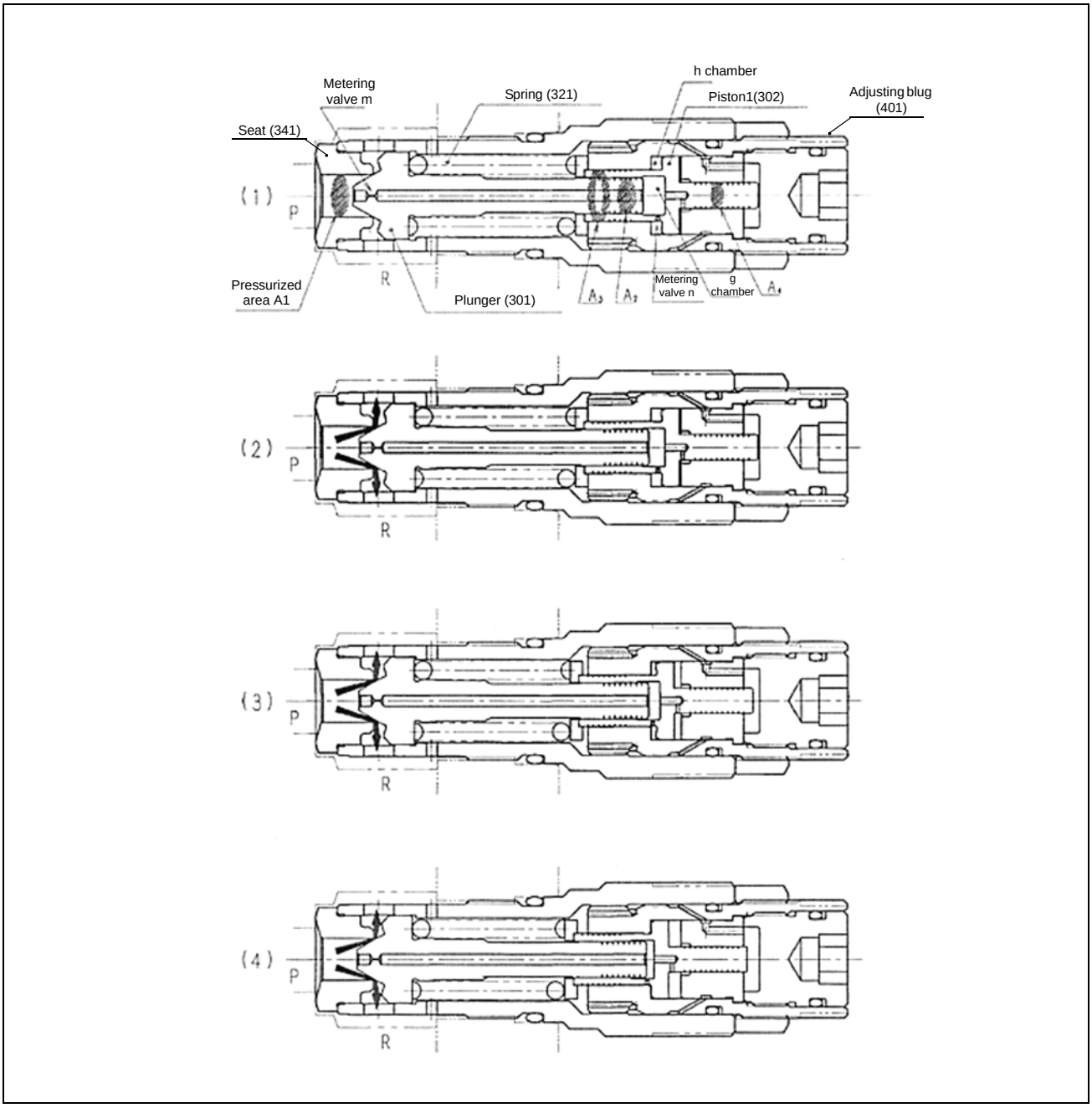

Figure 1. Relief valve operation explanation diagram

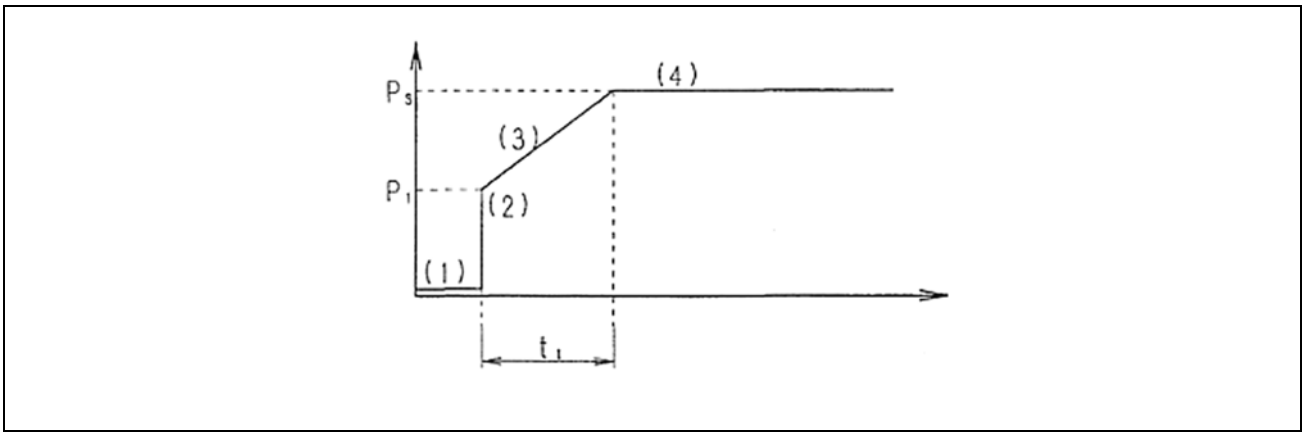

Figure 2. Boosted pressure characteristics

https://truckmanualshub.com/

5 210 X2 Assembly and Disassembly of Swing Reduction Gear

Caution	1. Before starting disassembly, re-assembly, inspection or repair work, read this maintenance manual thoroughly and be sure you understand its contents. 2. Handle this product according to the separate "Usage Precautions". 3. Stop the equipment system this product is mounted on and wait for the surface temperature of this product to fall to about 40°C or less before removing this product from the equipment it is mounted on. Working on this product while it is still hot may result in burns. Always bleed the pressure before removing any pipe from this product. Removing a pressurized pipe without bleeding pressure inside can induce a blow out of oil, resulting in personal injury and oil leakage. 4. Use the special tools and measuring instruments when disassembling, re-assembling, inspecting or repairing this product. Using an inappropriate tool may result in burns and damage to the product. 5. Be careful not to drop parts when assembling, re-assembling, inspecting, repairing, etc. this product. Otherwise, personal injury or property damage may result. 6. Do not touch machined edges or threaded sections of parts directly with your bare hands when disassembling, re-assembling, inspecting or repairing this product. Doing so may result in personal injury. 7. After re-assembly, check the performance of the product. Do not use the product unless the performance has fully recovered. Otherwise, damage may result to the equipment. 8. The caution (mark !) in this maintenance manual does not encompass all cases. Be sure to act on the safety-first principle whenever disassembling, re-assembling, inspecting, repairing, etc. this product.

https://truckmanualshub.com/

1. Disassembly

[1] Removal of the sun gear (76), thrust plate (77) and holder 1 assembly (82)

- After being press fitted to the holder 1 (82), the mouth of the shaft 1 assembly (78) is caulked with the press. Thus, further disassembly of this part will not be possible.

[2] Removal of the spur gear 4 (72) and holder 2 assembly (88)

[3] Driving in the spring pin

Drive the spring pin (86) into the shaft 2 assembly (83).

- Spring pin (86) is not reusable.

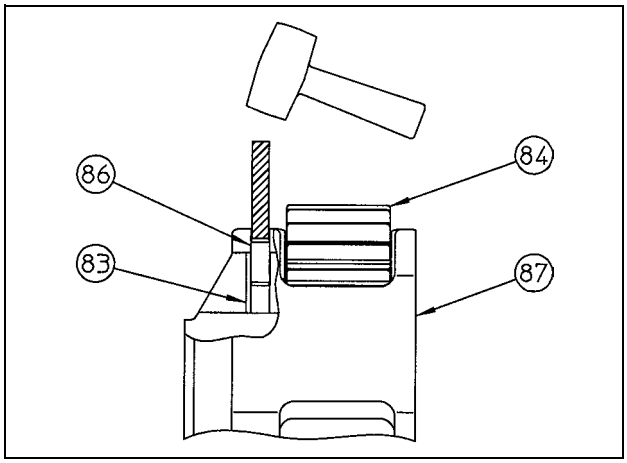

[4] Disassembly of holder 2 assembly

Holding the spur gear 5 (84) with one hand, pull the shaft 2 assembly (83) out of the holder 2 (87). Then pull out the thrust plate 2 (85) and spur gear 5 (84). Pull the spring pin (86) out of the shaft 2 assembly (83) beforehand.

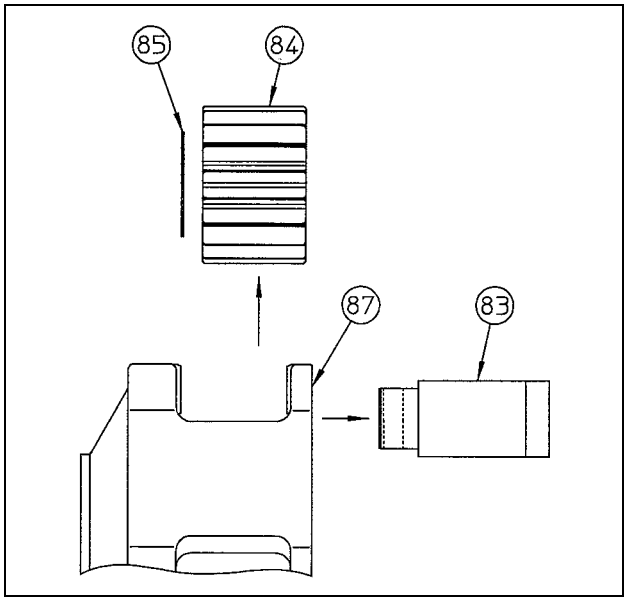

https://truckmanualshub.com/

[5] Removal of ring gear

Remove the ring gear (73) from the gear case (66). The alignment surface of the ring gear (73) and gear case (66) is coated with liquid packing (Three Bond "1215" Gray) to prevent leakage of gear oil. Thus, when removing the ring gear (73), use the notch of the gear case (66).

- Apply an alignment mark to the alignment surface of the ring (73) and gear case (66) so that the assembling phase may be identified in re-assembly.

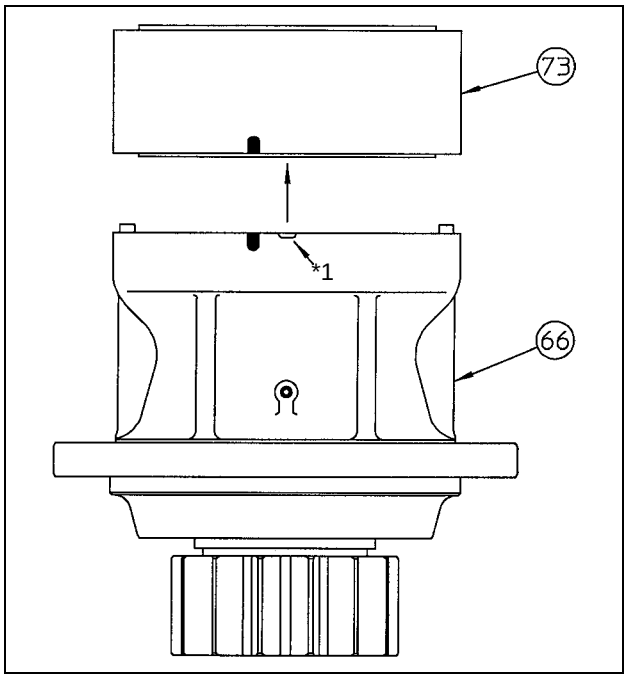

*1 Notch

[6] Removal of snap ring

Using a flathead screwdriver, remove the snap ring (64) through the notch of the gear case (66).

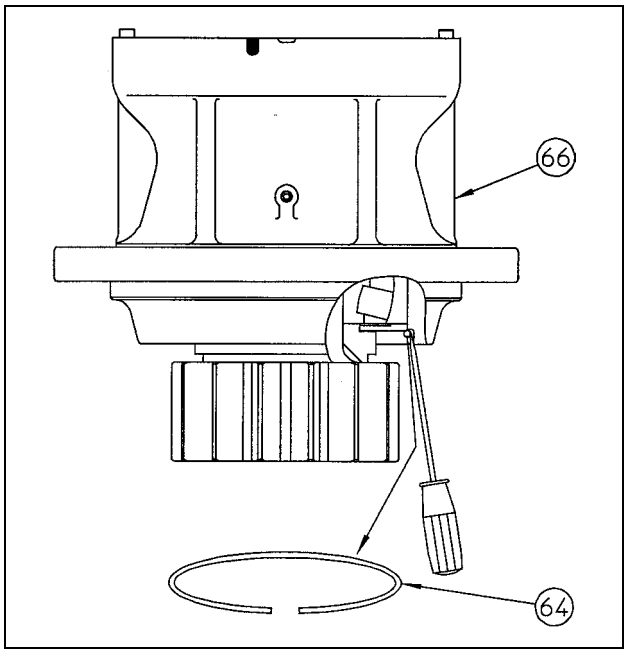

https://truckmanualshub.com/

[7] Removal of shaft assembly

Secure the draft for the pinion shaft (61) by applying a pad of approximately 300 mm in length to the flanged portion of the gear case (66). Then remove the pinion shaft (61), collar (62), plate (63), self-adjusting roller bearing (65), collar (67) and snap ring (69) assemblies by pushing the shaft end face using the hydraulic press.

- The oil seal (70) is not reusable.
- When removing the pinion shaft (61), place a piece of rag under it to act as cushioning material.

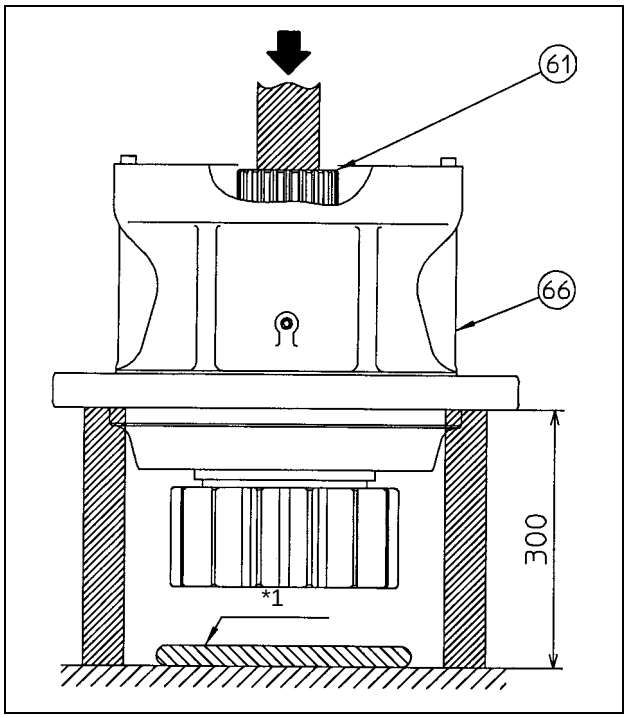

*1 Rag and the like

[8] Removal of self-adjusting roller nap bearing

Remove the self-adjusting roller bearing (71) from the gear case (66).

[9] Removal of oil seal

Strike the gear case (66) with a hammer and a screwdriver to remove the oil seal (70) out of it.

- The oil seal (70) is not reusable.

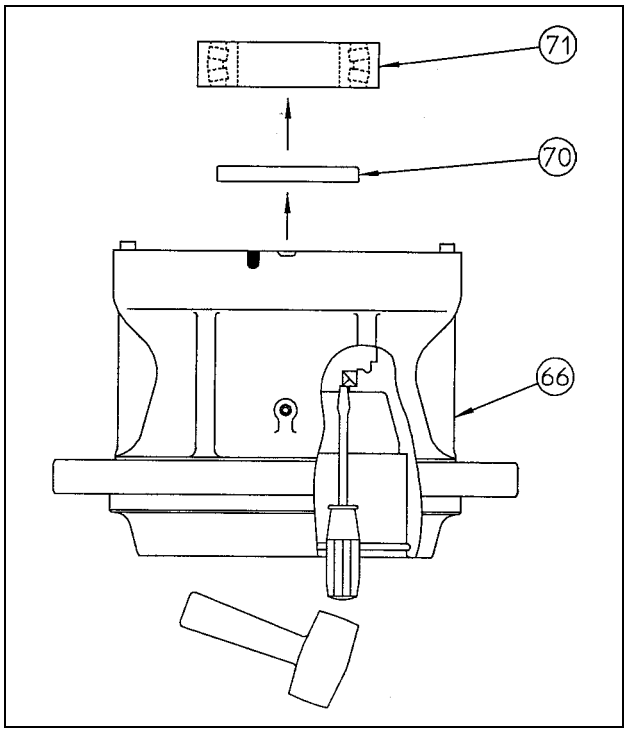

https://truckmanualshub.com/

[10] Removal of collar

Remove the snap ring (69) from the pinion shaft (61) using a mark-off pin, and then remove the collar (67).

- Do not try to further disassemble the pinion shaft assembly. If a problem is recognized on a part of the pinion assembly, the entire assembly must be replaced.

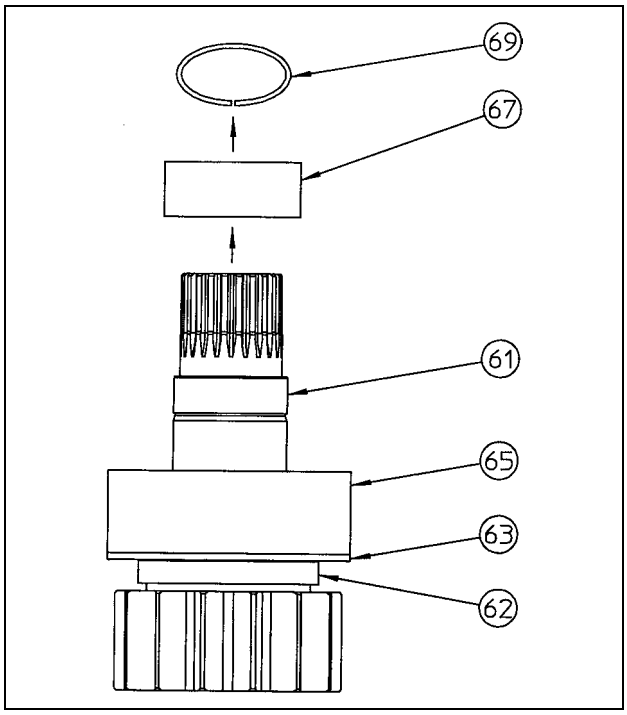

The above completes the disassembly procedure.

https://truckmanualshub.com/

2. Assembly

[1] Preparations

Execute the following items before re-assembly.

1) Check the parts for damage resulting from use or disassembly. If any part is damaged, eliminate it using a whetstone or sandpaper of the necessary grain, clean with cleaning oil, and then dry off the part using an air blower.

2) Replace seal parts with new ones.

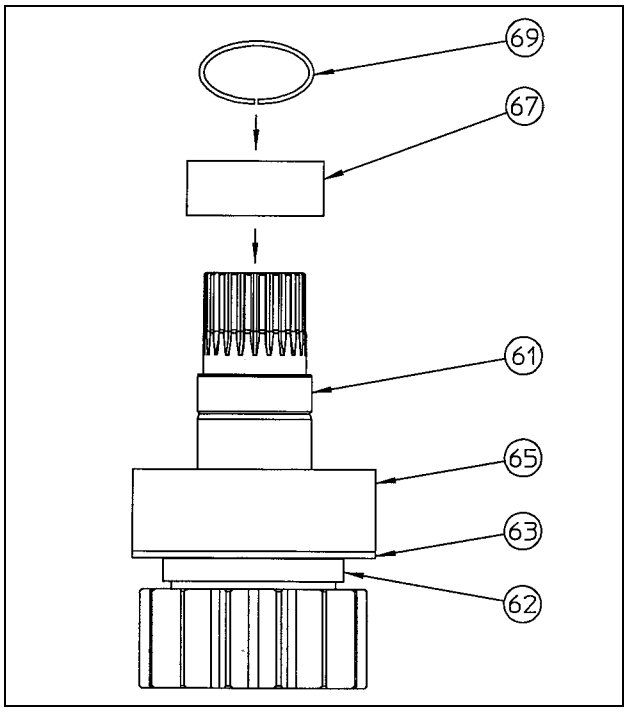

[2] Assembly of collar

Assemble the collar (67) to the pinion shaft (61) and then install the snap ring (69).

- Make sure the assembling direction of the collar (67) is correct. (See the figure below)

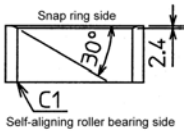

[3] Coating with grease

Coat the roller section and the perimeter of the self-adjusting roller bearing (65) with grease.
Brand: Shell Albania EP2 or equivalent
Capacity: 400 cm^3

- About 1000 cm^3 of grease is containable. Remainder is filled at the unit assembly process.

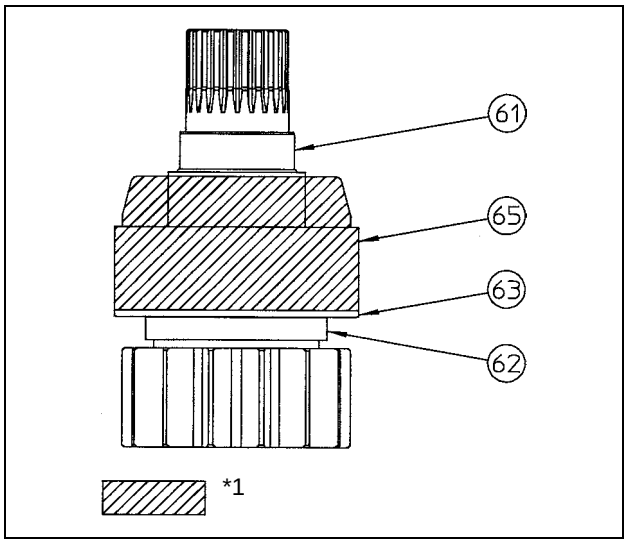

*1 Positions to be coated with grease

https://truckmanualshub.com/

[4] Press-fitting of oil seal

Degrease the oil seal (70) and the oil seal assembling position on the gear case (66). Then coat the outside of the oil seal (70) with liquid packing (Three Bond "1211" White or equivalent). Using the press fitting jig, assemble the oil seal to the gear case (66). After the press fitting, coat the oil seal (70) lip with a small amount of grease.

- Make sure the assembling direction of the oil seal (70) is correct. (See the figure below)

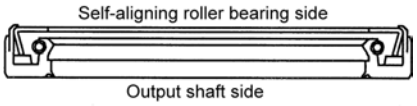

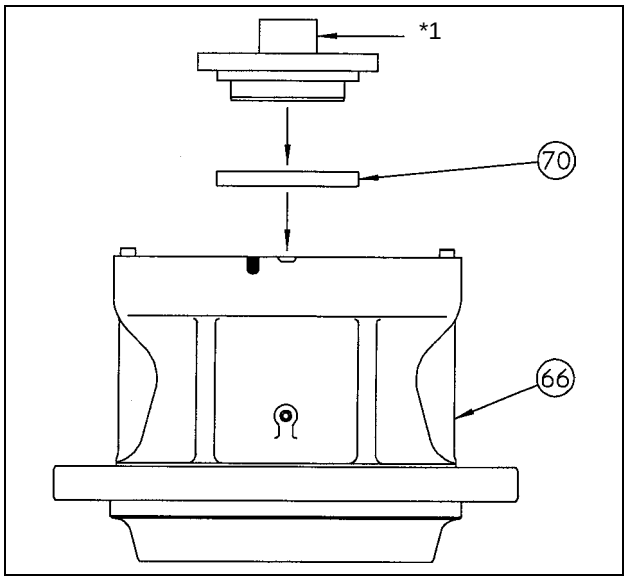

*1 Jig 1

[5] Assembly of pinion shaft assembly

Place the gear case (66) with its output shaft at the top. Then screw the eyebolt into the tap hole (M8) on the output shaft end face of the pinion shaft (61) to lift up and assemble the pinion shaft assembly to the gear case (66).
Attach the seal protector on the spline-coupled portion so that the spline of the pinion shaft (61) may not damage the oil seal (70).

- When assembling the pinion shaft assembly, the bottom face of the gear case (66) must be protected with a pad of approximately 130 mm in length.

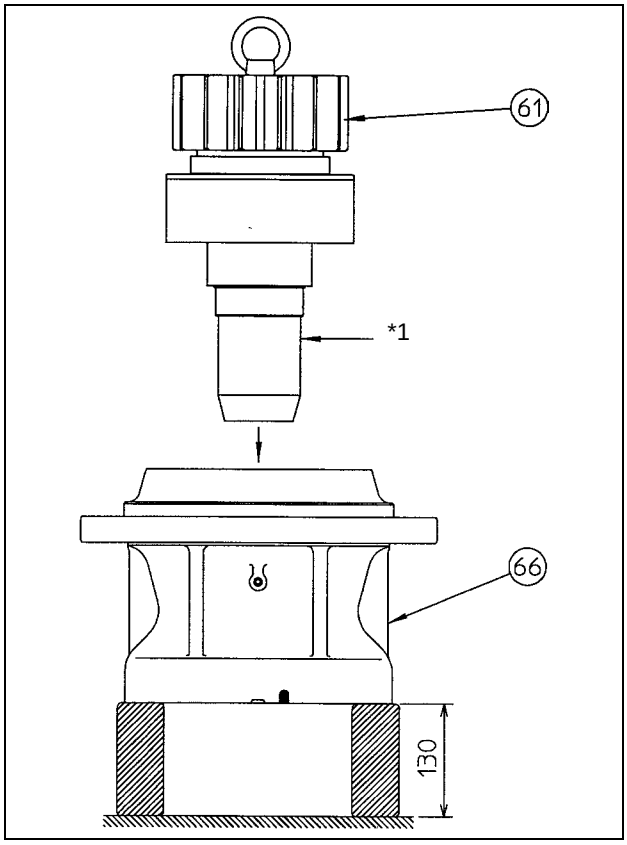

*1 Jig 2
Seal protector

https://truckmanualshub.com/

[6] Assembly of snap ring

Assemble the snap ring (64) to the gear case (66).

- In order to facilitate the succeeding disassembly, assemble the snap ring (64) keeping its line about 30 mm away from the notch of the gear case (66).

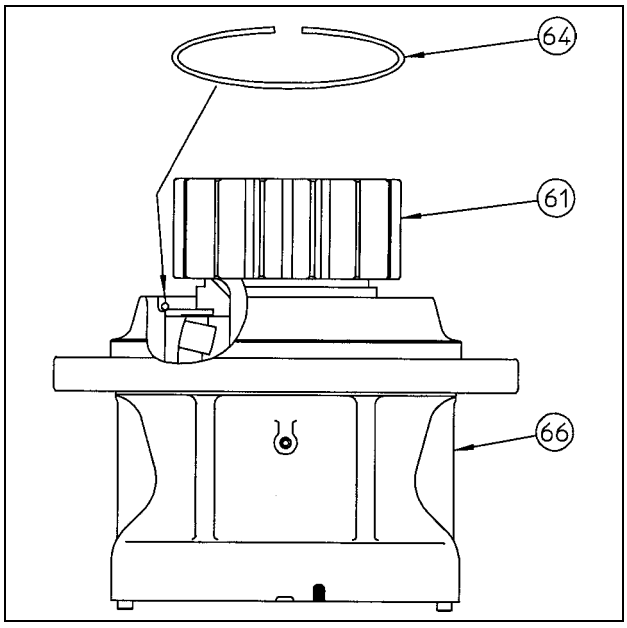

[7] Assembly of self-aligning roller bearing

Place the entire gear case (66) setting its output shaft at the bottom. Then, warm the self-adjusting roller bearing (71) to +50°C atmospheric temperature and assemble it to the pinion shaft (61).

- Whenever handling the heated self-adjusting roller bearing (71), be sure to wear heat resistant gloves. Touching it without wearing gloves may result in burns to the hands.

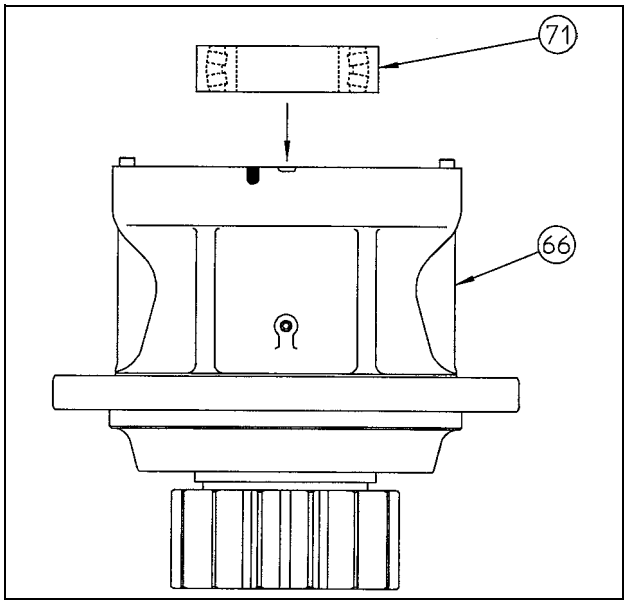

https://truckmanualshub.com/

[8] Coating with liquid packing

Degrease the alignment surface of the gear case (66). Coat the ring gear (73) along the spigot joint portion with liquid packing (Three Bond "1215" or equivalent). Coat the portion uniformly so that the diameter of the packing derived from the nozzle becomes ϕ1.5.

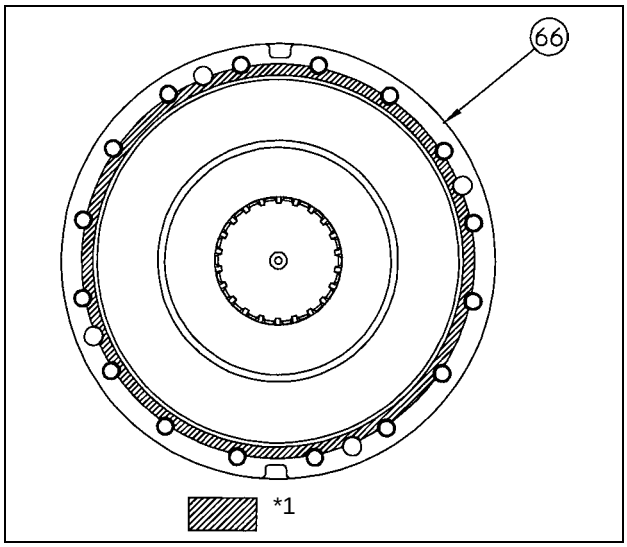

*1 Liquid packing application position

[9] Installation of ring gear

Degrease the alignment surface of the ring gear (73). Install the ring gear (73) gently on the gear case (66) aligning the phase of the parallel pin assembling hole, position of the parallel pin (89) and the bolt hole.

- Align the phase of the gear case (66) and ring gear (73) to alignment mark that was applied prior to disassembly.

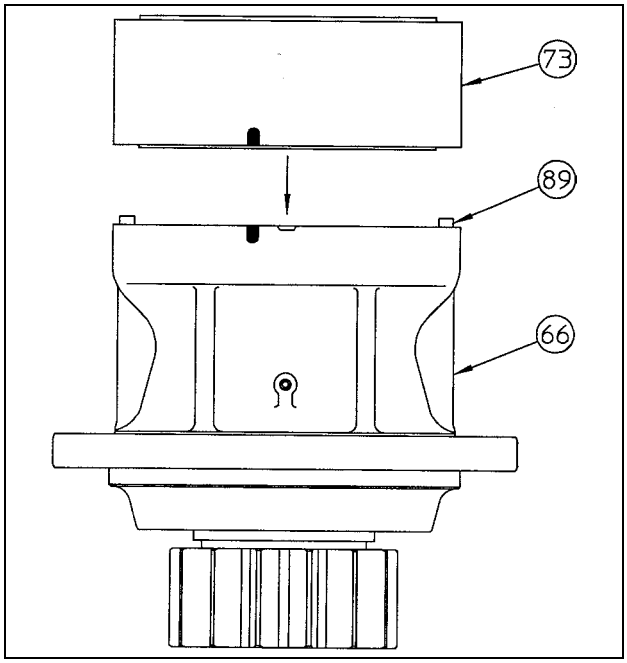

https://truckmanualshub.com/

[10] Assembly of holder 2 assembly

Assemble the spur gear 5 (84) and thrust plate 2 (85) to the holder 2 (87). Then assemble the holder 2 (87) to the shaft 2 assembly (83).

- In the above step, coat the inside of the spur gear 5 (84) and the outside of the shaft 2 (83) with gear oil (Hypoid Gear 90 from Shin Nihon or equivalent).
- Be sure to align phase of the pin hole of the shaft 2 assembly (83) and that of the holder 2 (87).

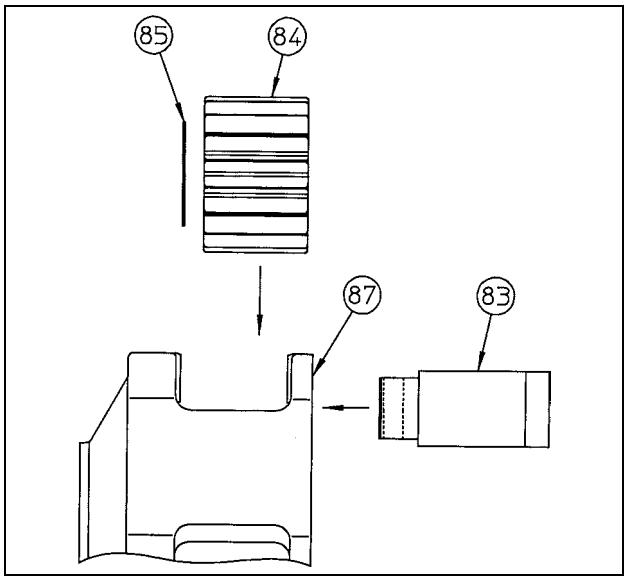

[11] Assembly of spring pin

Drive in the spring pin (86) to the shaft 2 assembly (83).

- When doing so, direct the split line of the spring pin (86) toward the spur gear 5 (84).
- After driving in the spring pin (86), caulk the mouth of the holder 2 (87) in 2 places using the punch. (To prevent detachment of the spring pin (86))

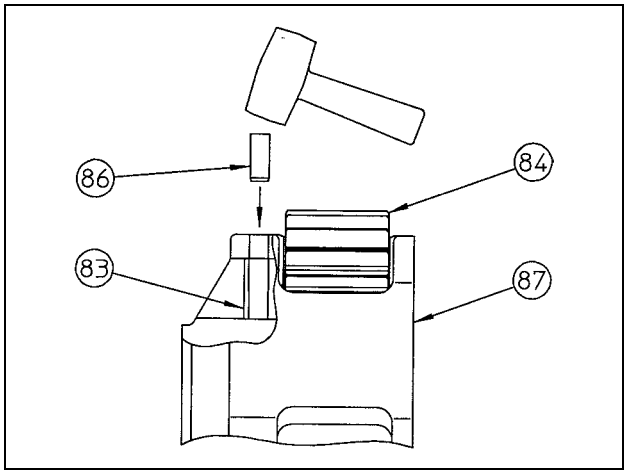

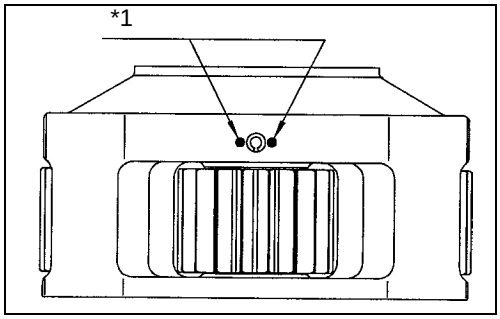

*1 Caulking of mouth

https://truckmanualshub.com/

[12] Assembly of holder 2 assembly and spur gear 4

Insert the holder 2 assembly (88), which has been assembled in 2-11, into the ring gear (73) gently engaging it with the internal teeth of the ring gear (73). Then insert the holder 2 assembly (88) lightly turning it until the spline of the pinion shaft (61) is engaged.

Insert the spur gear 4 (72) while engaging it lightly with the spur gear 5 (84).

Insert thrust plate (77) into the spur gear 4 (72) directing its groove toward the spur gear 4 (72).

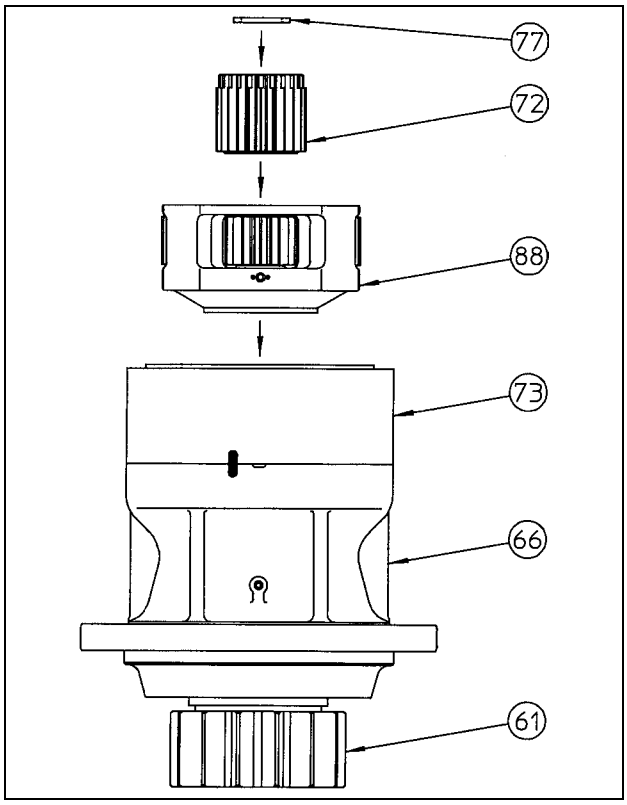

[13] Assembly of holder 1 assembly and sun gear

Insert the holder 1 assembly (82) into the ring gear (73) gently engaging it with the internal teeth of ring gear (73). Then insert the holder 1 assembly (82) lightly turning it until its teeth engage with the teeth of the spur gear 4 (72).

Insert the sun gear (76) into holder 1 assembly directing its groove toward the thrust plate (77) and engaging it gently with the spur gear 2 (79).

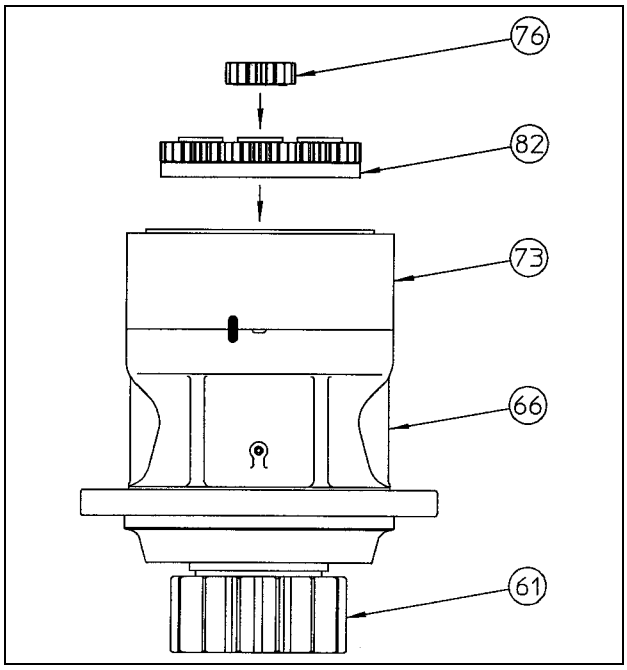

[14] Assembly check

Rotate the holder 1 assembly (82) with your hands to make sure the output shaft rotates smoothly at the same time.

The above completes the assembly.

https://truckmanualshub.com/

5-7 Swing Body: Swing Driving Unit

Jig 1
(For assembly of the oil seal (70))

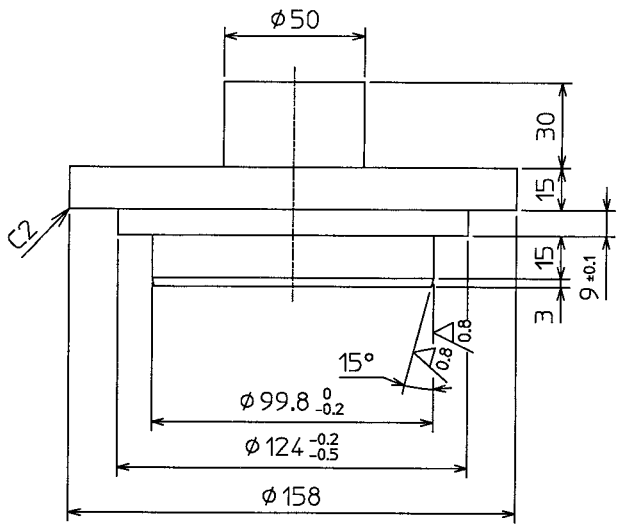

Jig 2
(For assembly of the pinion shaft (61))

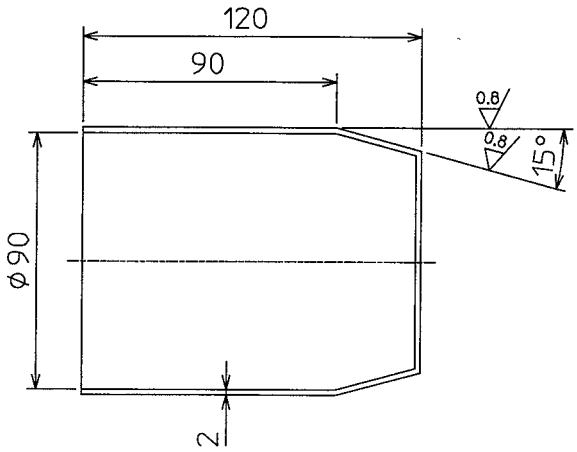

https://truckmanualshub.com/

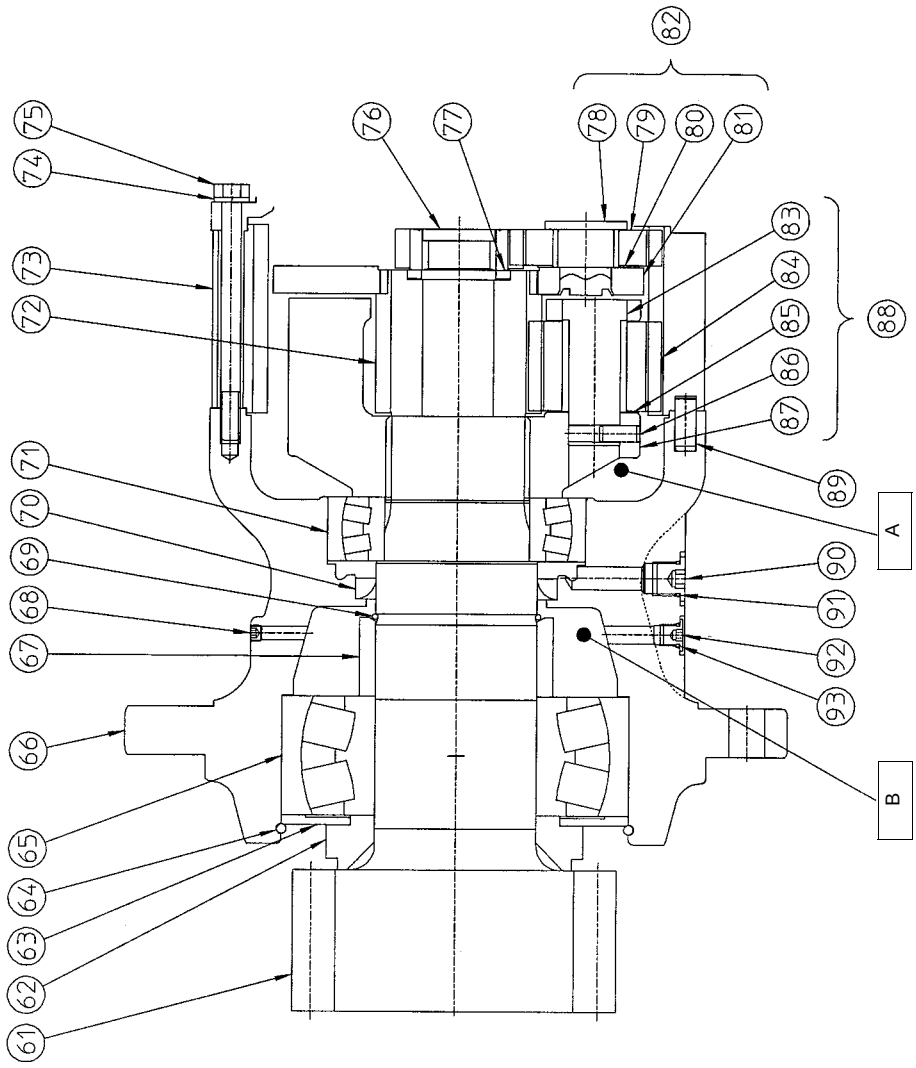

RG08S internal structure diagram

https://truckmanualshub.com/

6 240 X2 Assembly and Disassembly of Swing Reduction Gear

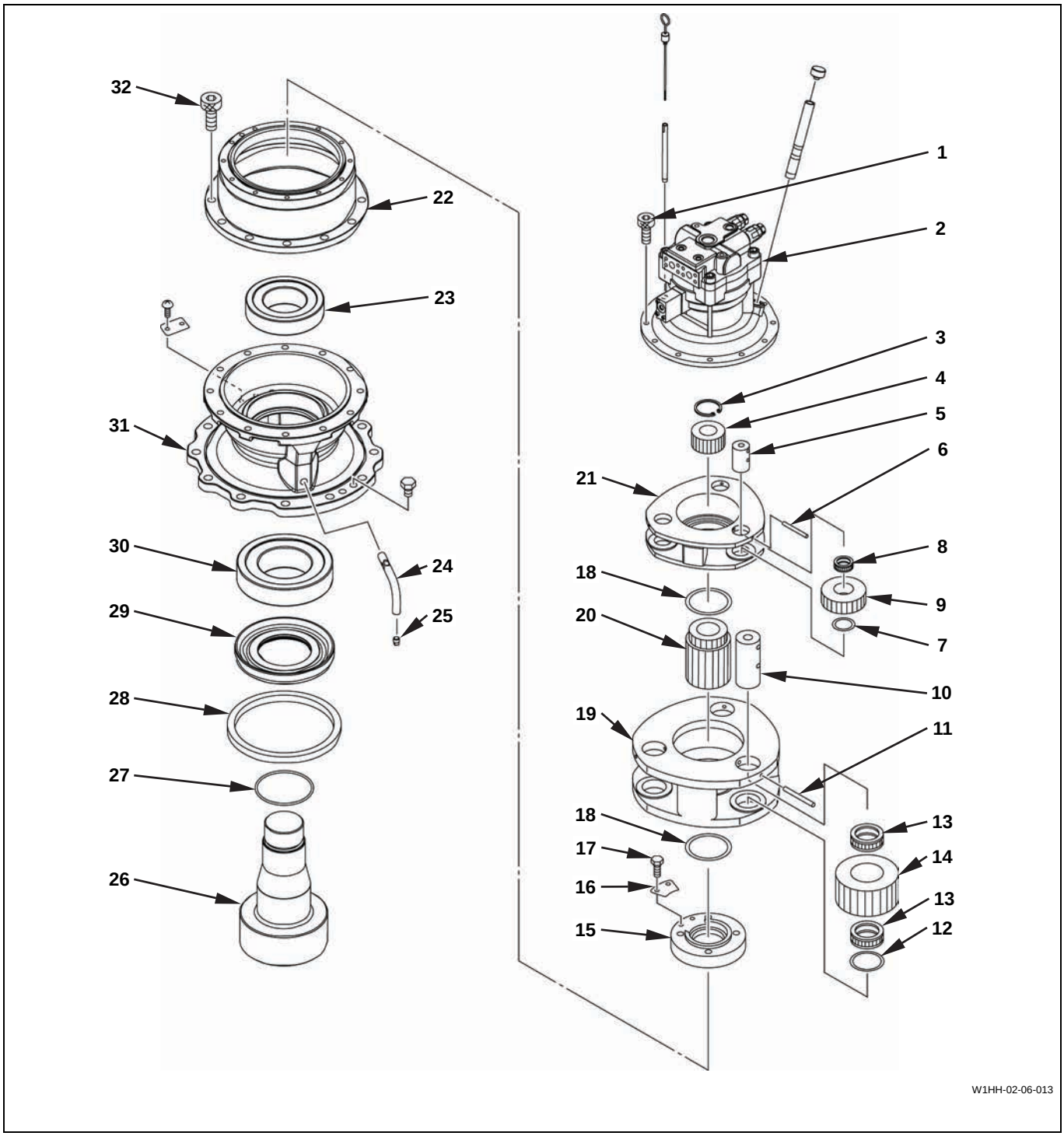

1- Socket bolt (12)
2- Motor
3- Retaining ring
4- 1st stage sun gear
5- Pin (3)
6- Spring pin (3)
7- Thrust plate (3)
8- Needle bearing (3)
9- 1st stage planetary gear (3)
10- Pin (3)
11- Spring pin (3)
12- Thrust plate (3)
13- Needle bearing (6)
14- 2nd stage planetary gear (3)
15- Nut
16- Lock plate
17- Bolt (2)
18- Thrust plate (2)
19- 2nd stage carrier
20- 2nd stage sun gear
21- 1st stage carrier
22- Ring gear
23- Roller bearing
24- Hose
25- Drain plug
26- Shaft
27- O-ring
28- Oil seal
29- Sleeve
30- Roller bearing
31- Housing
32- Socket bolt (12)

https://truckmanualshub.com/

Note: Mass of swing unit: About 301 kg

[1] Hitch nylon sling on the swing motor section and then lift the unit using a crane.

[2] Place the swing unit on the bracket (8098413) and then fix it with 2 bolts (M24). Fix the bracket to the work table to eliminate its reactive force.

: 36 mm

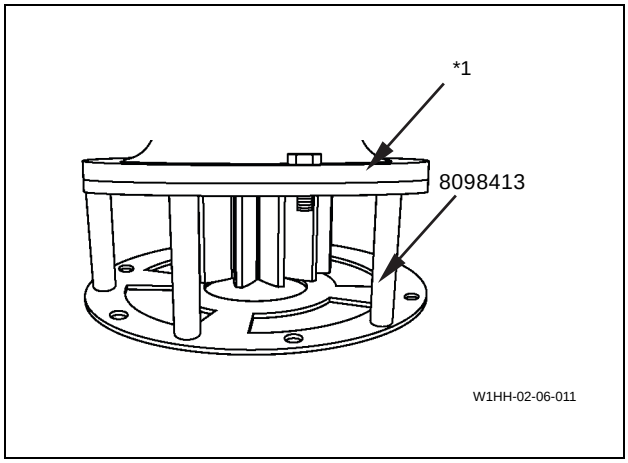

*1 Swing unit

[3] Remove the drain plug (25) to drain oil.

: 22 mm

[4] Remove the hose (24) from the housing (31).

: 22 mm

Note: Mass of motor 71 kg

[5] Make an alignment mark to the joining area of motor (2), ring gear (22) and housing (31). Loosen the socket bolt (1) and lift motor (2) using the crane.

: 10 mm

Reference: Detach the motor (2) inserting a flathead screwdriver between the motor (2) and ring gear (22). This makes removal of the motor (2) easier.

[6] Remove the 1st stage sun gear (4) and then remove the 1st stage carrier (21) assembly from the ring gear (22).

: 8 mm

Note: Mass of ring gear: 27 kg

[7] Loosen and remove the socket bolt (32) and then attach the eyebolt (M12, pitch 1.75 mm) to the motor mounting thread of the ring gear (22). Lift the ring gear with the crane to remove it from the housing (31).

: 14 mm

Reference: The mating face of the housing (31) and ring gear (22) is coated with Three Bond. Detach the ring gear by applying a flathead screwdriver to the notch in the periphery of the joining area. This makes removal of the ring gear easier.

Note: Mass of 2nd stage carrier assembly: 32 kg

[8] Remove the assembly of the 2nd stage sun gear (20) and 2nd stage carrier (19).

https://truckmanualshub.com/

5-7 Swing Body: Swing Driving Unit

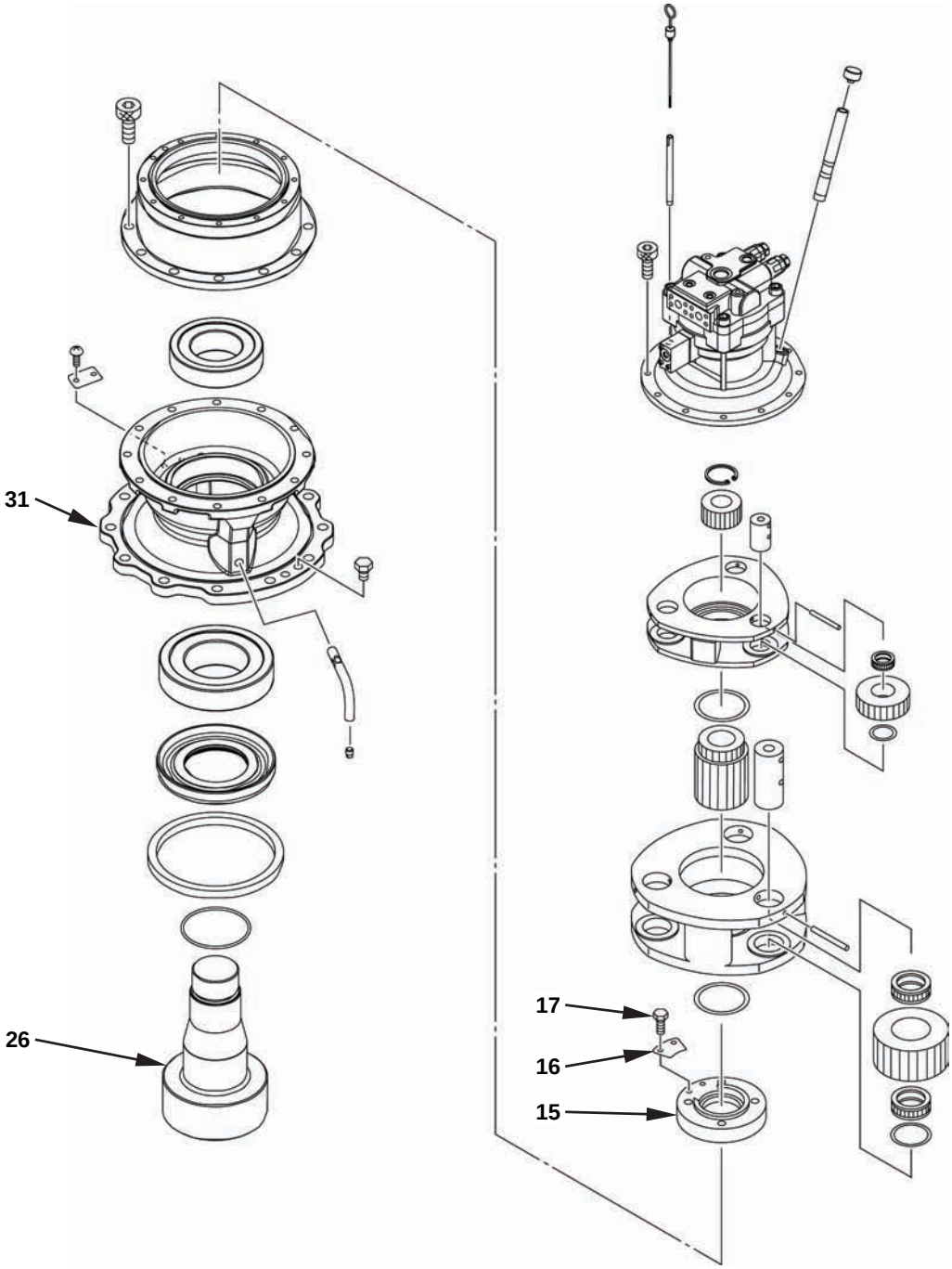

W1HH-02-06-013

https://truckmanualshub.com/

Note: **Mass of the housing (31) assembly: 148 kg**

[9] Remove the bolt (17) and remove the lock plate (16).

[10] Using the nut installing and removing jig (8083297), remove the nut (15) from the shaft (26).

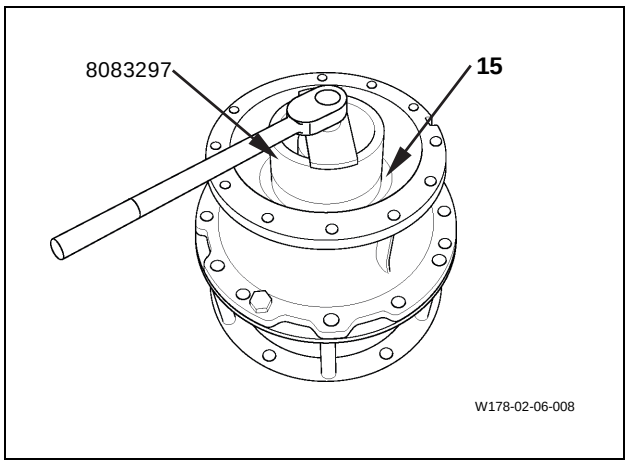

https://truckmanualshub.com/

5-7 Swing Body: Swing Driving Unit

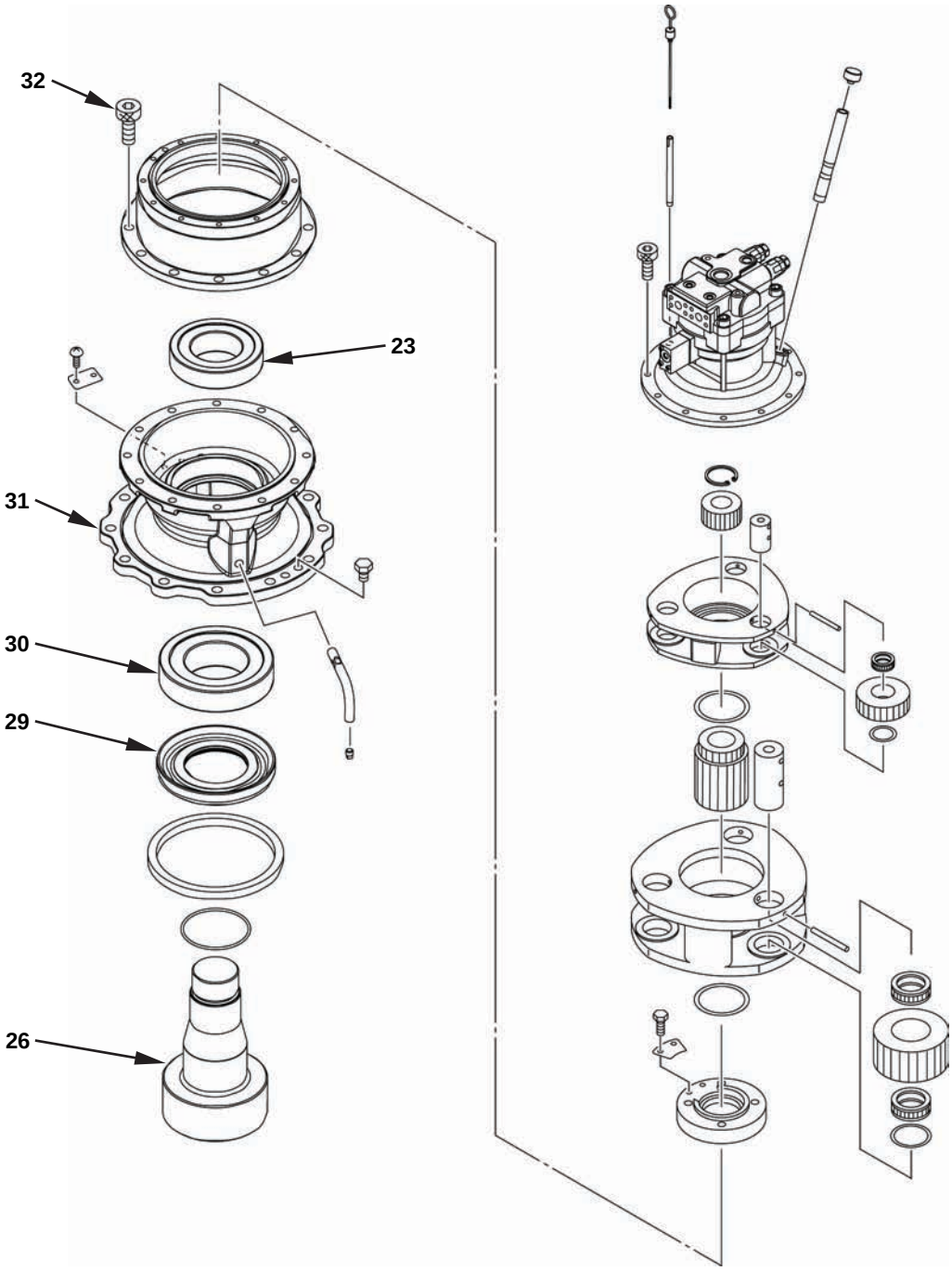

W1HH-02-06-013

https://truckmanualshub.com/

[11] Install the eyebolt (M18, pitch 2.5 mm) to the bolt (32) hole of the housing (31).
Remove 2 bolts (M24) fixing the housing and bracket.
Lift the housing (31) assembly using the crane and then remove the bracket.

[12] Set the housing (31) assembly on the block being set on the press bench.

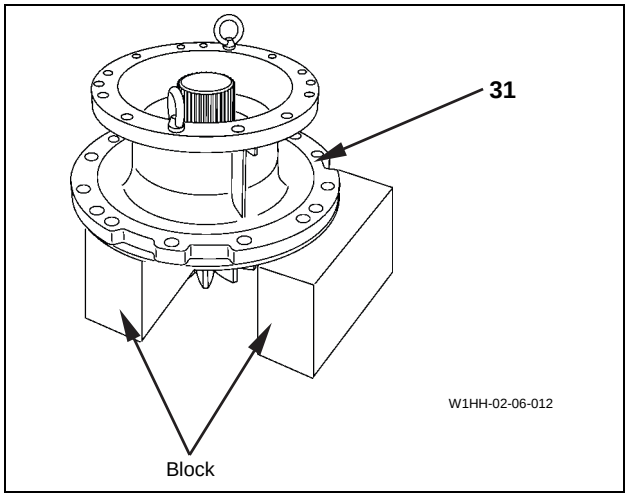

Note: **Whenever pressing the shaft (26) using the press machine, an upper lid (outer diameter 369 mm, inner diameter 90 mm and thickness 25 - 30 mm) must be prepared. Be sure to apply the upper lid before pressing the shaft (26). Otherwise, broken pieces of the housing (31) and roller bearing (23) may fly apart resulting in personal injury. And set the upper limit of the press to 30 tons.**
Before heating the roller bearing (23), be sure to sufficiently degrease the inside of the housing. Otherwise, fire may result.

[13] Cover the housing (31) with the upper lid and then drive out the shaft (26) using the press. The inner race and sleeve (29) of the roller bearing (30) are removed along with the shaft.

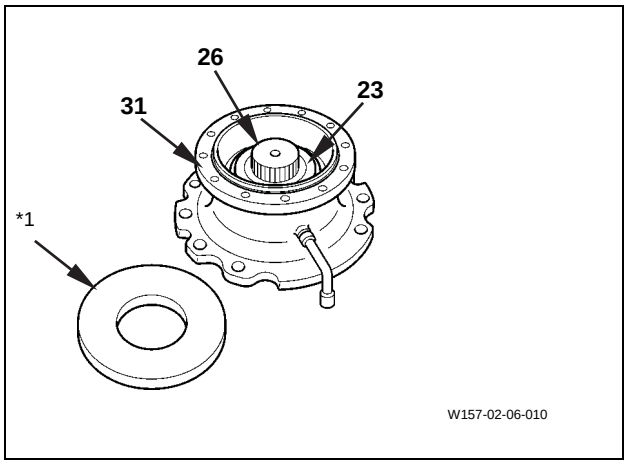

*1 Upper lid

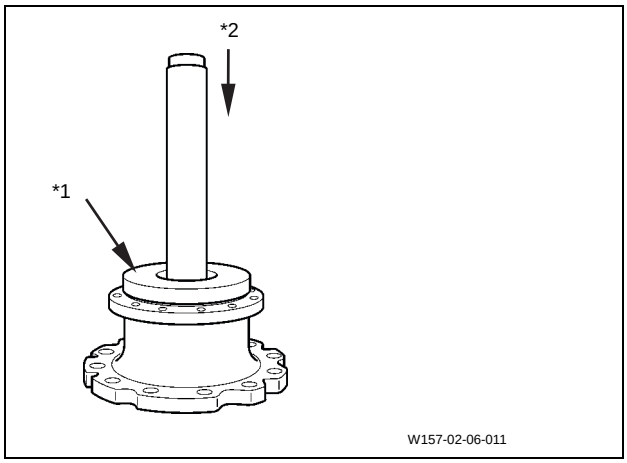

*1 Upper lid
*2 Press

[14] Remove the inner race of the roller bearing (23) from the housing (31).

https://truckmanualshub.com/

5-7 Swing Body: Swing Driving Unit

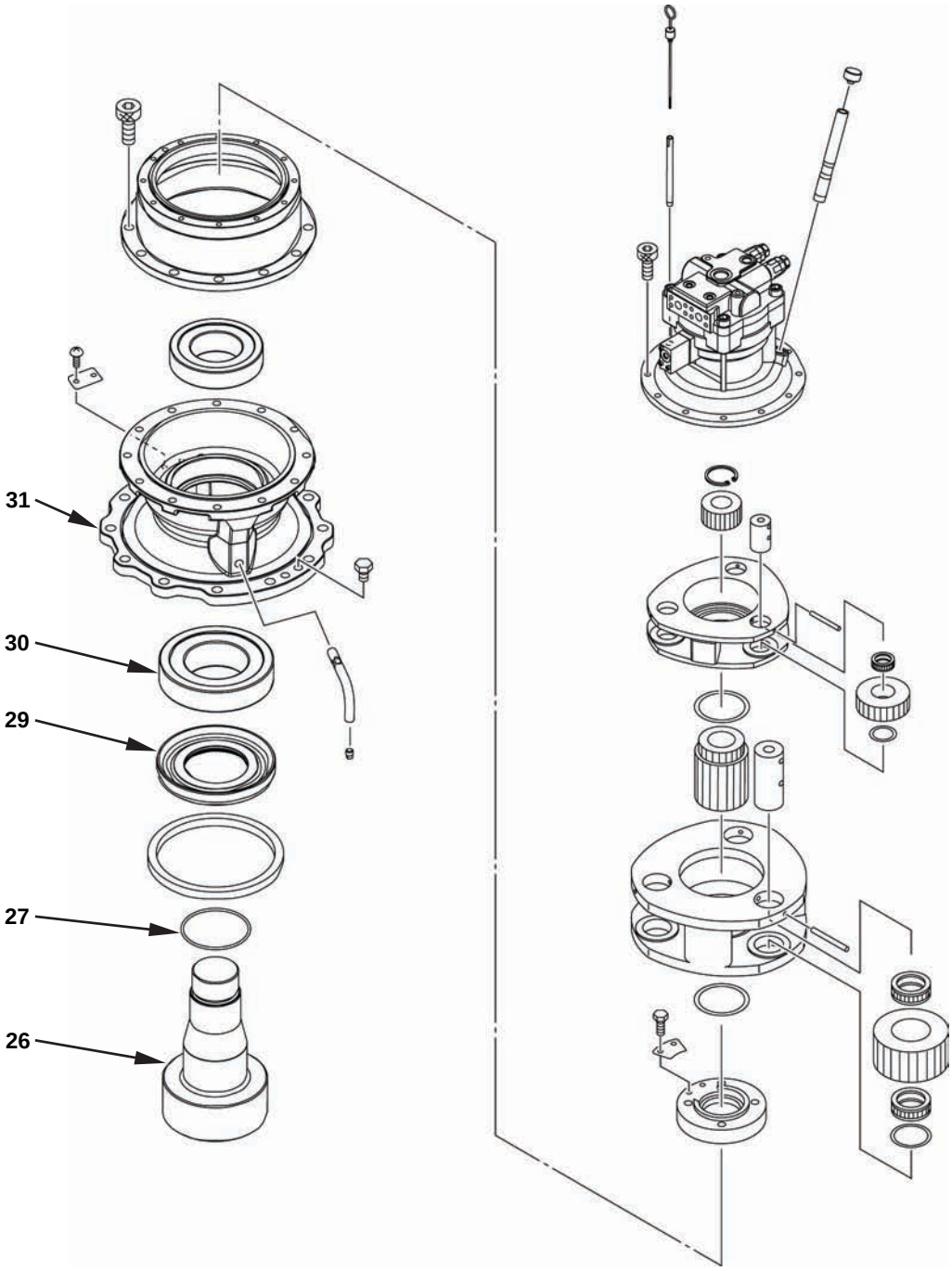

W1HH-02-06-013

https://truckmanualshub.com/

[15] Set jig on the shaft (26) assembly.

Reference: Use the following jig for pulling out the roller bearing (30).
Shaft (Bolt is acceptable, too): 8 shafts, 220 mm in length and 19 mm in diameter (Their length must be the same and both ends must be free from deformations.) Material: S35C
Hose clamp: (Standard diameter 8-1/2 inches, Clamping range 185 - 215 mm) × 2
Guide: Height 160 mm, outer diameter 250 mm, inner diameter 230 mm

Bearing pulling jig

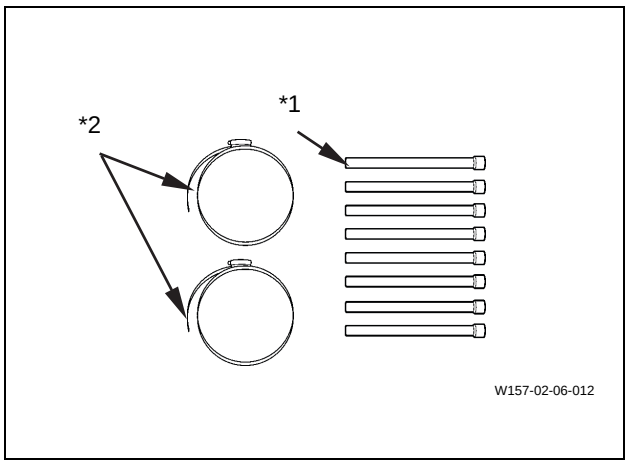

*1 Shaft
*2 Hose clamp

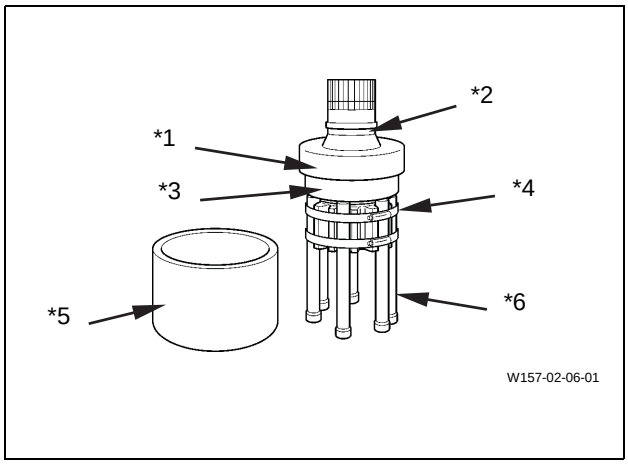

*1 Roller bearing (30)
*2 Shaft (26)
*3 Sleeve (29)
*4 Hose clamp
*5 Guide
*6 Shaft

Note: Whenever pressing the shaft (26) using the press, it must be done inside the guide.

[16] Set the shaft (26) attached with the jig on the press to pull out the roller bearing (30).

[17] Pull the sleeve (29) out of the shaft (26) and then remove the O-ring (27) from the sleeve (29).

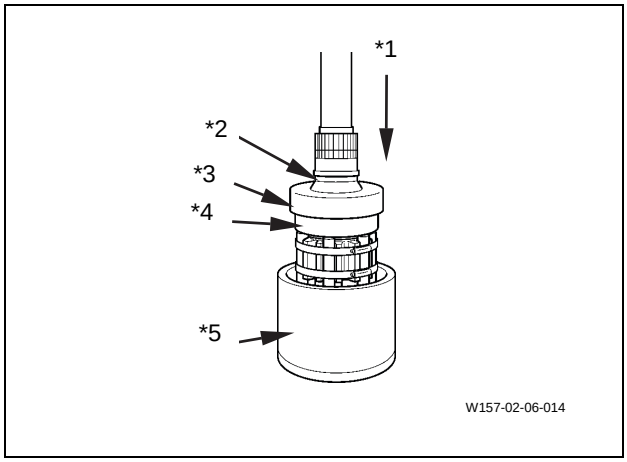

*1 Press
*2 Shaft (26)
*3 Roller bearing (30)
*4 Sleeve (29)
*5 Guide

[18] Insert a round bar into the oil path in the housing (31) to drive out the outer race of the roller bearing (30).

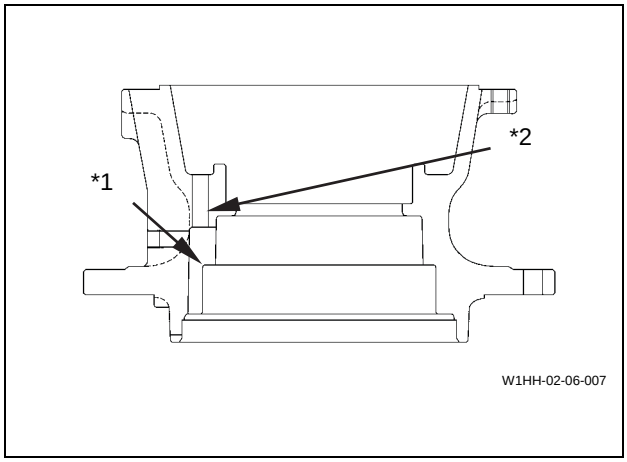

*1 Outer race
*2 Round bar insertion hole

https://truckmanualshub.com/

5-7 Swing Body: Swing Driving Unit

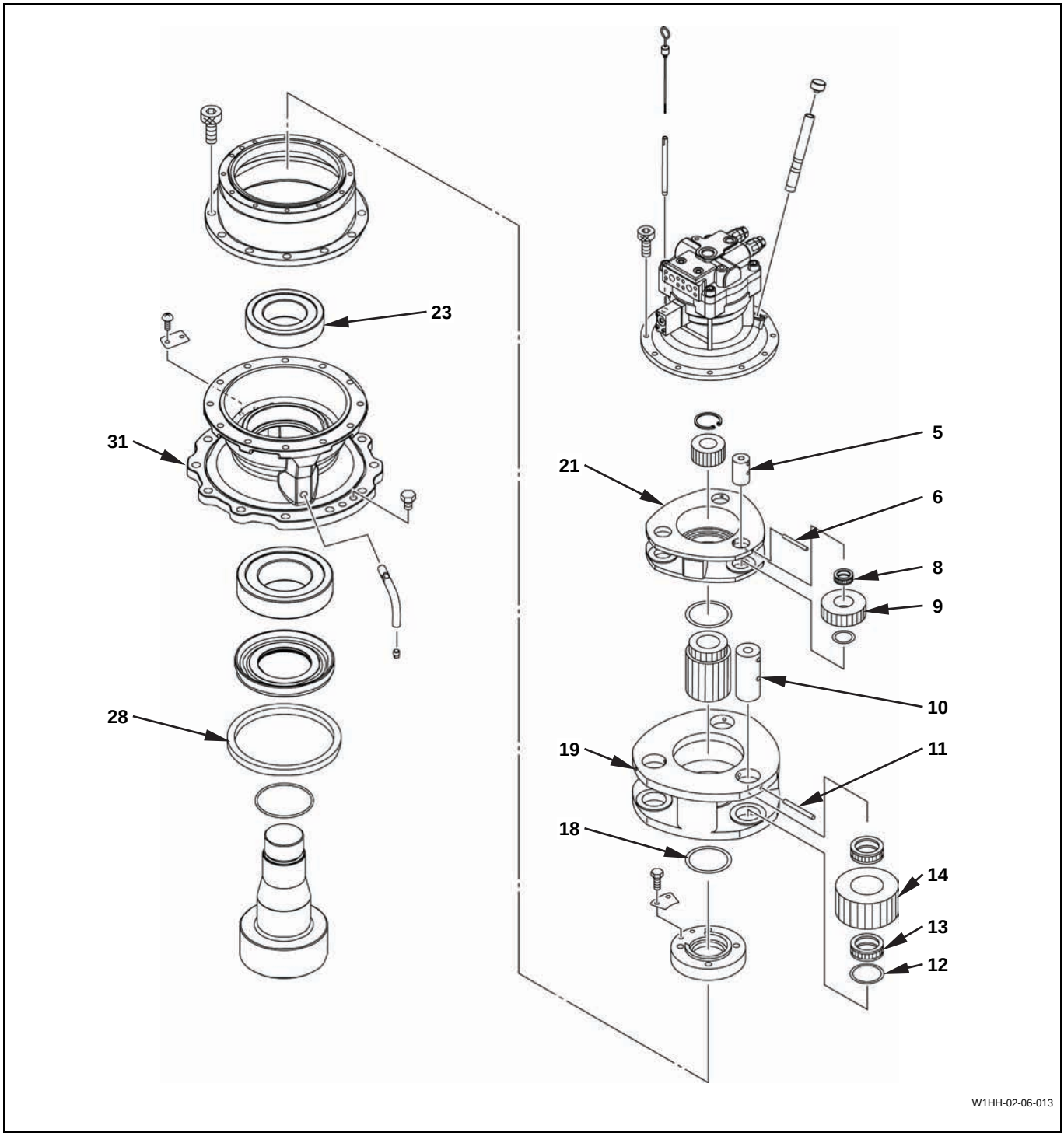

https://truckmanualshub.com/

Note: Mass of the housing (31): 104 kg

[19] Tie the body of the housing (31) with a nylon sling and then lift and invert it using the crane. Remove the oil seal (28) by inserting a screwdriver into the notch in the oil seal (28) installation position on the housing.

Reference: The periphery of the oil seal (28) is coated with Three Bond. Thus, the oil seal is not reusable.

[20] Remove the outer race from the housing (31) by striking the back face of the outer race of the roller bearing (23) using the holding-up bar and hammer.

[21] Using a round bar and hammer, pull spring pin (6) out of the 1st stage carrier (21).

[22] From the 1st stage carrier (21), remove 3 pins (5) , 3 1st stage planetary gears (9), 3 thrust plates (7), and 3 needle bearings (8).

[23] Remove the thrust plate (18) from the 1st stage carrier (21).

[24] Using a round bar and hammer, pull out the spring pin (11) from the 2nd stage carrier (19).

[25] From the 2nd stage carrier (19), remove 3 pins (10) , 3 2nd stage planetary gear (14), 3 thrust plate (12) and 6 needle bearings (13).

[26] Remove the thrust plate (18) from the 2nd stage carrier (19).

https://truckmanualshub.com/

5-7 Swing Body: Swing Driving Unit

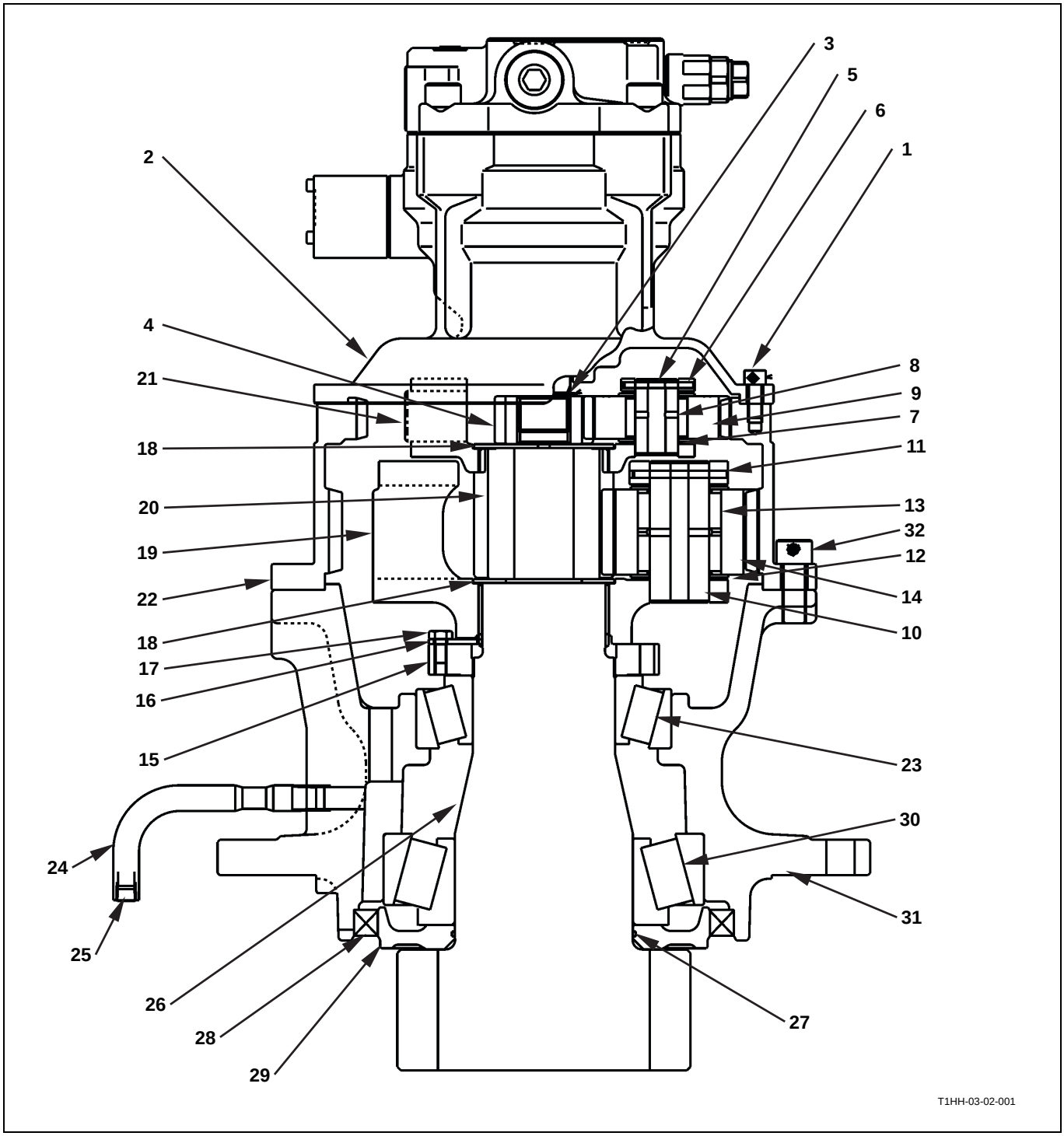

1- Socket bolt (12)
2- Motor
3- Retaining ring
4- 1st stage sun gear
5- Pin (3)
6- Spring pin (3)
7- Thrust plate (3)
8- Needle bearing (3)
9- 1st stage planetary gear (3)
10- Pin (3)
11- Spring pin (3)
12- Thrust plate (3)
13- Needle bearing (6)
14- 2nd stage planetary gear (3)
15- Nut
16- Lock plate
17- Bolt (2)
18- Thrust plate (2)
19- 2nd stage carrier
20- 2nd stage sun gear
21- 1st stage carrier
22- Ring gear
23- Roller bearing
24- Pipe
25- Drain plug
26- Shaft
27- O-ring
28- Oil seal
29- Sleeve
30- Roller bearing
31- Housing
32- Socket bolt (12)

https://truckmanualshub.com/

Assembly of swing reduction gear

[1] Assemble the needle bearing (8) to each of the 3 1st stage planetary gears (9).

[2] Assemble the thrust plate (18) to the 1st stage carrier (21) setting the oil groove side at the top.

[3] Assemble 3 1st stage planetary gears (9) and 3 thrust plates (7) to the 1st stage carrier (21).

[4] Assemble 3 pins (5) to the spring pin holes of the 1st stage carrier (21) by use the hammer.

Important: Attention must be paid to the direction of the spring pin.

[5] Using the hammer, drive in the spring pin (6) to the 1st stage carrier (21) and pin (5) setting its slit toward the end face of the pin (5).

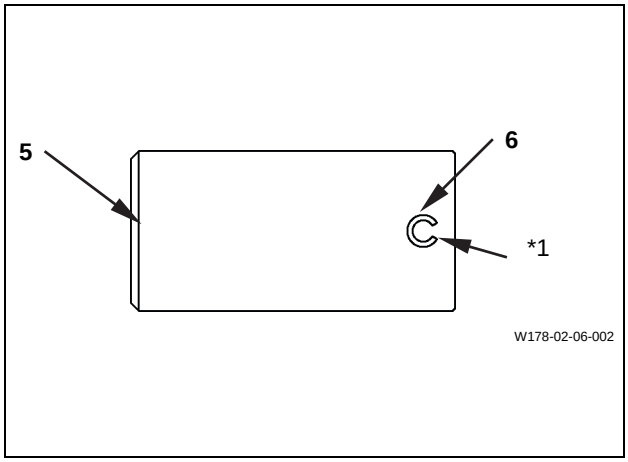

*1 Slit

[6] Assemble the 2nd stage carrier (19) in the same order as above 1 - 5. Assemble 3 2nd stage planetary gears (14), 6 needle bearings (13), 3 thrust plates (12), thrust plate (18), 3 pins (10), and 3 spring pins (11).

[7] Assemble the O-ring (27) to the sleeve (29).

[8] Assemble the inner race of the sleeve (29) and roller bearing (30) to the shaft (26). Using the bearing press fitting jigs (ST A) and (ST B), press fit the sleeve (29) and the inner race with the press.

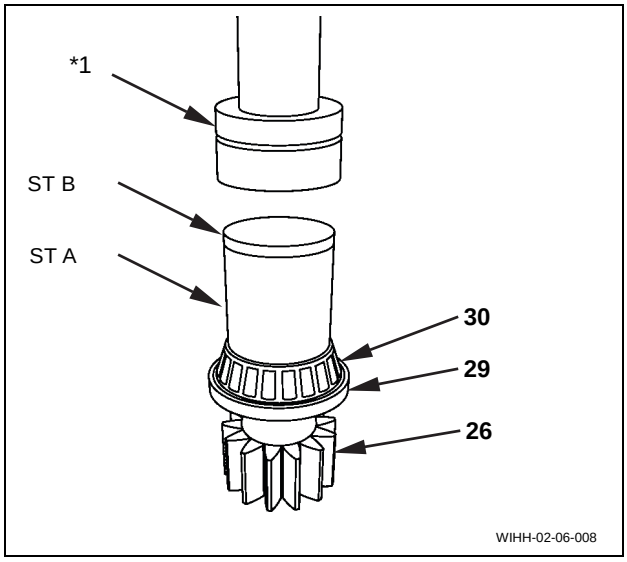

*1 Press

Reference: Using the press fitting jig allows securing a sufficient press fitting depth for the bearing inner race.

Note: Mass of housing: 104 kg

[9] Tie the body of the housing (31) with the nylon sling. Lift it up using the crane and then place the sleeve (29) setting its installation side at the top.

[10] Assemble the outer race of the roller bearing (30) to the housing (31) by striking it with the holding-up bar and hammer. Make sure by listening to the sounds of the hammer that the outer race has been driven in deep enough.

https://truckmanualshub.com/

5-7 Swing Body: Swing Driving Unit

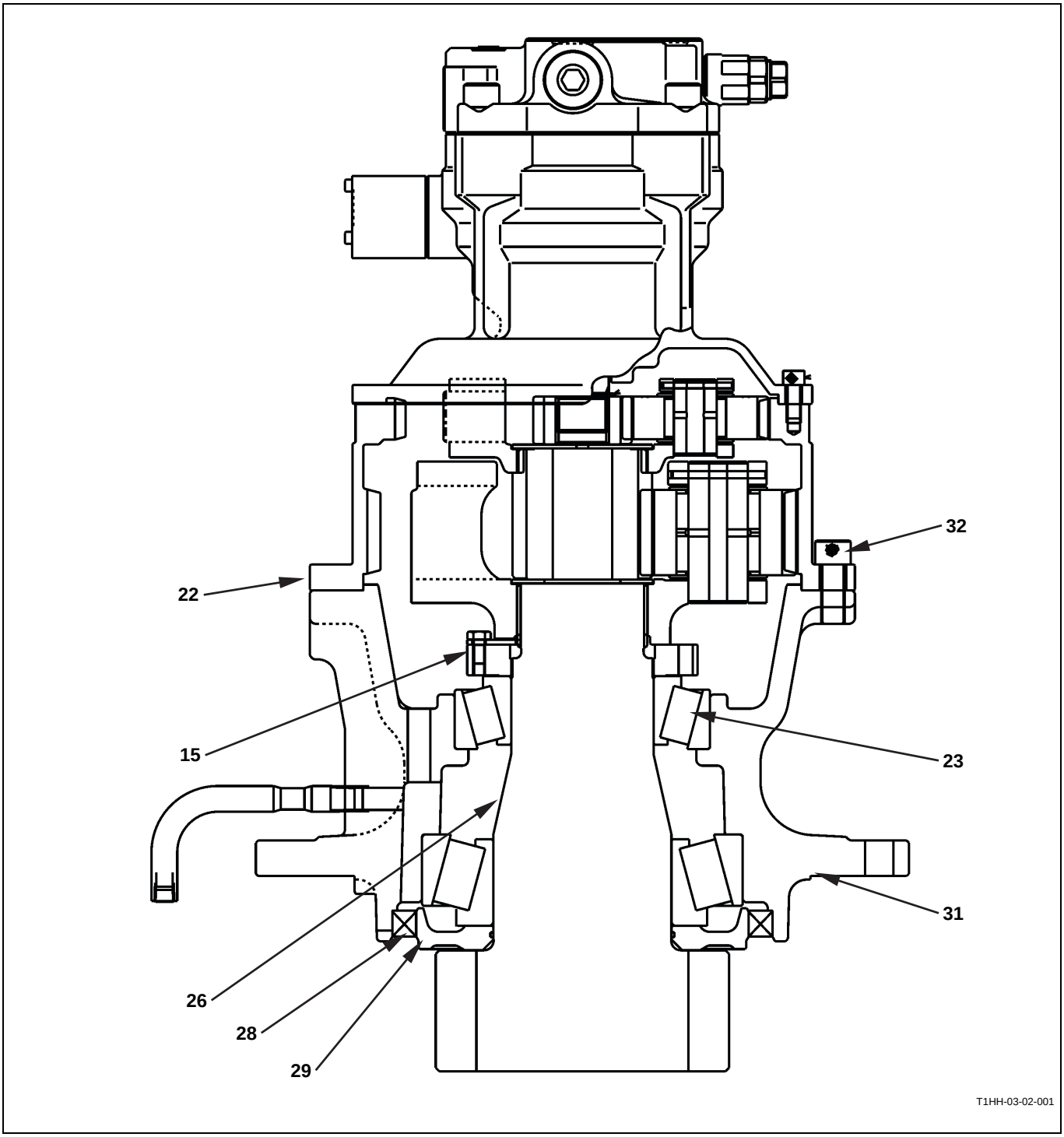

https://truckmanualshub.com/

[11] Coat the periphery of the oil seal (28) with Three Bond #1205. Place oil seal (28) flat on the housing (31) and then push it in slightly with your hand. Place the seal assembling jig (8026527) on the oil seal and then drive it in straight using a hammer.

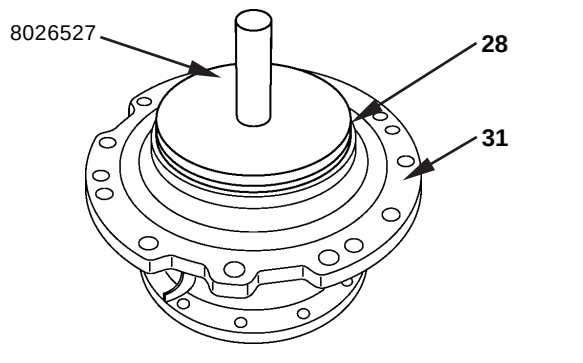

[12] Coat the inner periphery of the oil seal with grease. Coat the outer periphery of the sleeve (29) being attached to the shaft (26) with grease.

[13] Install the eyebolt (M18, pitch 2.5 mm) to the bolt (32) hole of the housing (31). Lift the housing and then lower it gradually onto the shaft (26) for assembly. Assembling must be done carefully in this step paying attention to the centering so that the lip of the oil seal (28) does not ride up.

[14] Assemble the outer race of the roller bearing (23) to the housing (31) by striking it with the holding-up bar and hammer. Make sure by listening to the sounds of the hammer that the outer race has been driven in deep enough.

[15] Assemble the inner race of the roller bearing (23) to the shaft (26) by striking it with the holding-up bar and hammer. Drive in the inner race until its top face is driven deeper by 2 screw threads from the thread for the nut (15) of the shaft.

[16] Tighten the shaft (26) with the nut (15) up to the limit available for hand-tightening.

Reference: The above is necessary to prevent detachment of the shaft (26) when the housing (31) is lifted.

Note: Mass of housing + shaft + bearing: 148 kg

[17] Attach the eyebolt (M18, pitch 2.5 mm) to the bolt (32) hole of the housing (31), and then lift it with crane and set it on the press.

[18] Remove the nut (15) from the shaft (26).

[19] Place the inner race press fitting jig (ST C) on the inner race of the roller bearing (23) and then press fit the inner race using the press.

Reference: Using the press fitting jig allows the securing of a sufficient pressing depth of the inner race.

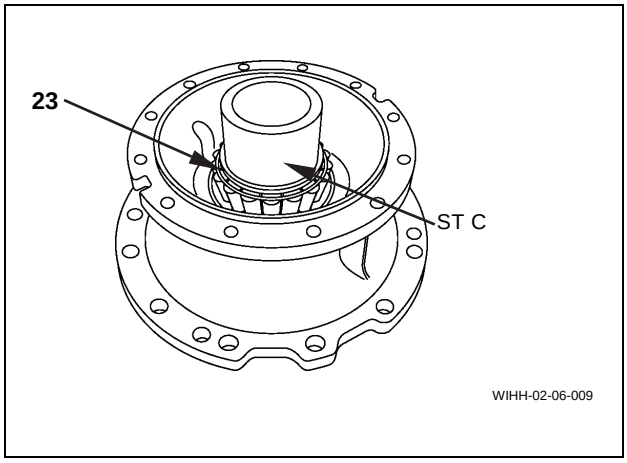

https://truckmanualshub.com/

5-7 Swing Body: Swing Driving Unit

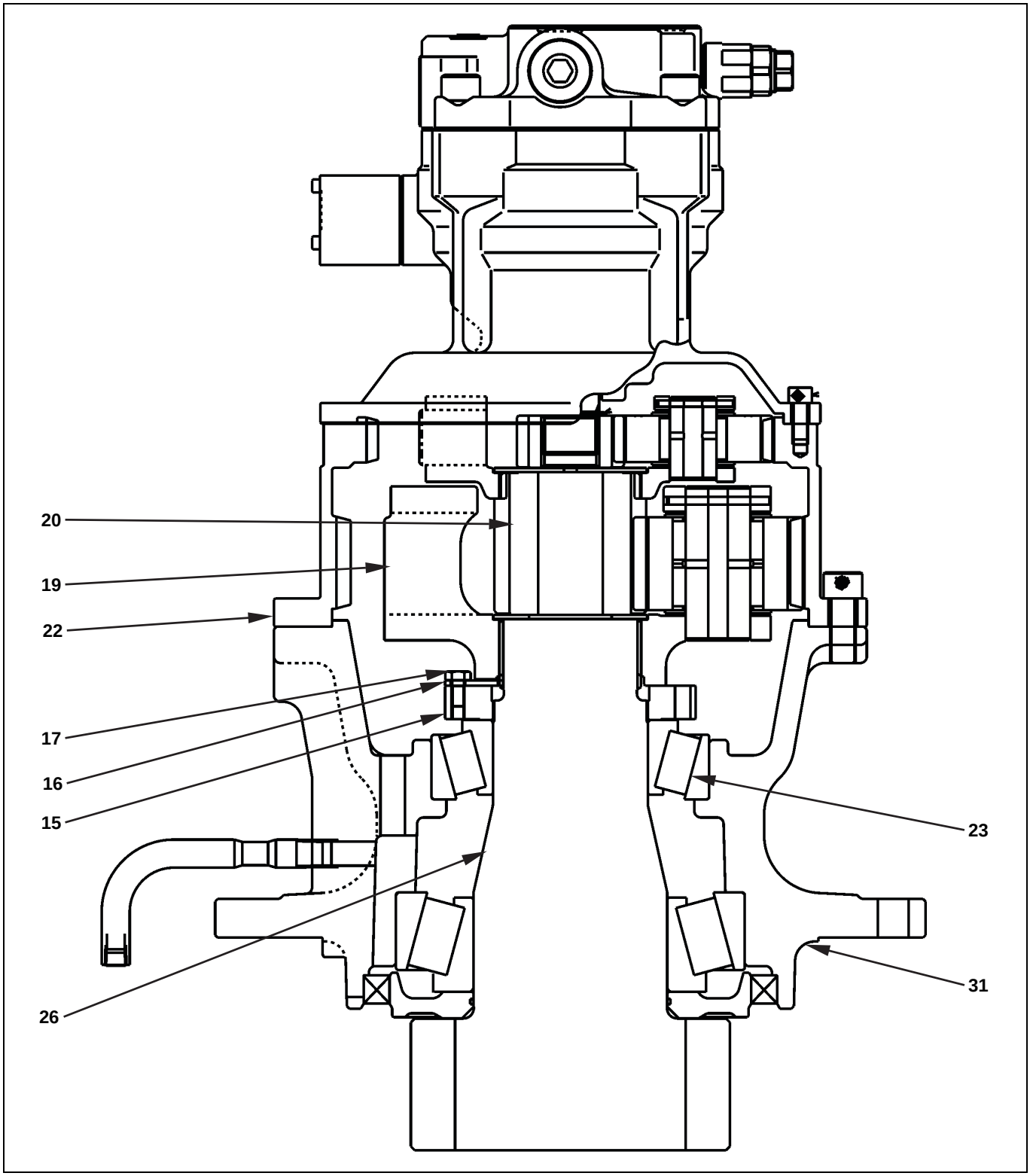

https://truckmanualshub.com/

[20] Lift the housing (31) assembly using the crane, place it on the bracket (8098413) and then install it using 2 bolts (M24). In this operation, insert the stopper at the bottom of the bracket between the pinion gear teeth. And in order to the eliminate reactive force, fix the bracket to the work table.

: 36 mm

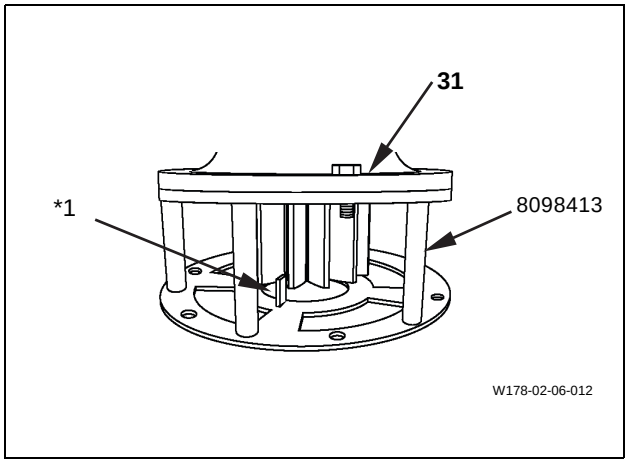

*1 Stopper

Important: Attention must be paid to the assembling direction of the bearing nut.

[21] Coat the threaded portion of the nut (15) with a small amount of grease and install it on the shaft (26). When installing, set the stepped end face side of the nut toward the roller bearing (23). Using the nut tightening jig (8083297), tighten above with the specified torque.

: 735 N•m (75 kgf•m)

Reference: Coating with the grease is a must in order to ensure the correct tightening torque.

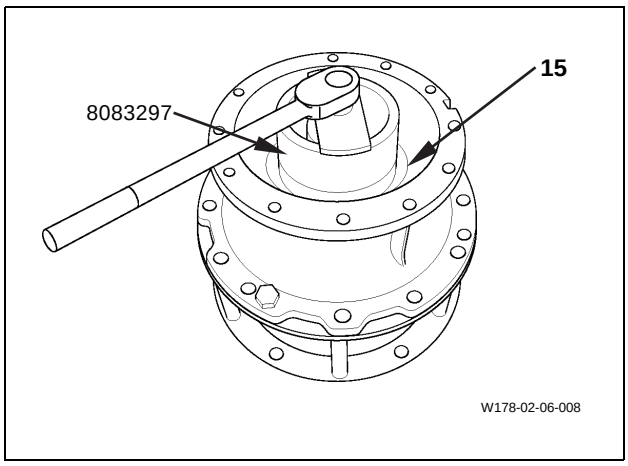

[22] Using the bolt (17), install the lock plate (16) on the nut (15). If the spline of the lock plate (16) does not fit the spline of the shaft (26), try to fit it by re-tightening the lock plate in the tightening direction of the nut (15).

: 17 mm

: 50 N•m (5 kgf•m)

Note: Mass of 2nd stage carrier: 32 kg

Important: Attention must be paid to the carrier assembling direction.

[23] Assemble the 2nd stage carrier (19) assembly to the spline of the shaft (26).

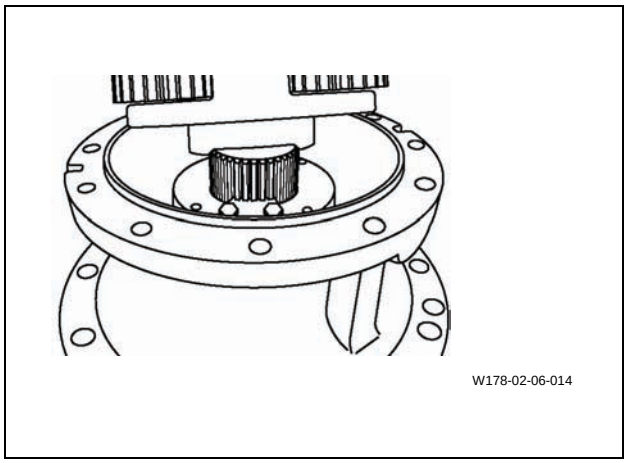

[24] Assemble the 2nd stage sun gear (20) to the 2nd stage carrier (19) assembly.

[25] Coat the ring gear (22) mounting surface on the housing (31) with Three Bond #1215. Before coating, cleanly eliminate the old adhesive.

https://truckmanualshub.com/

5-7 Swing Body: Swing Driving Unit

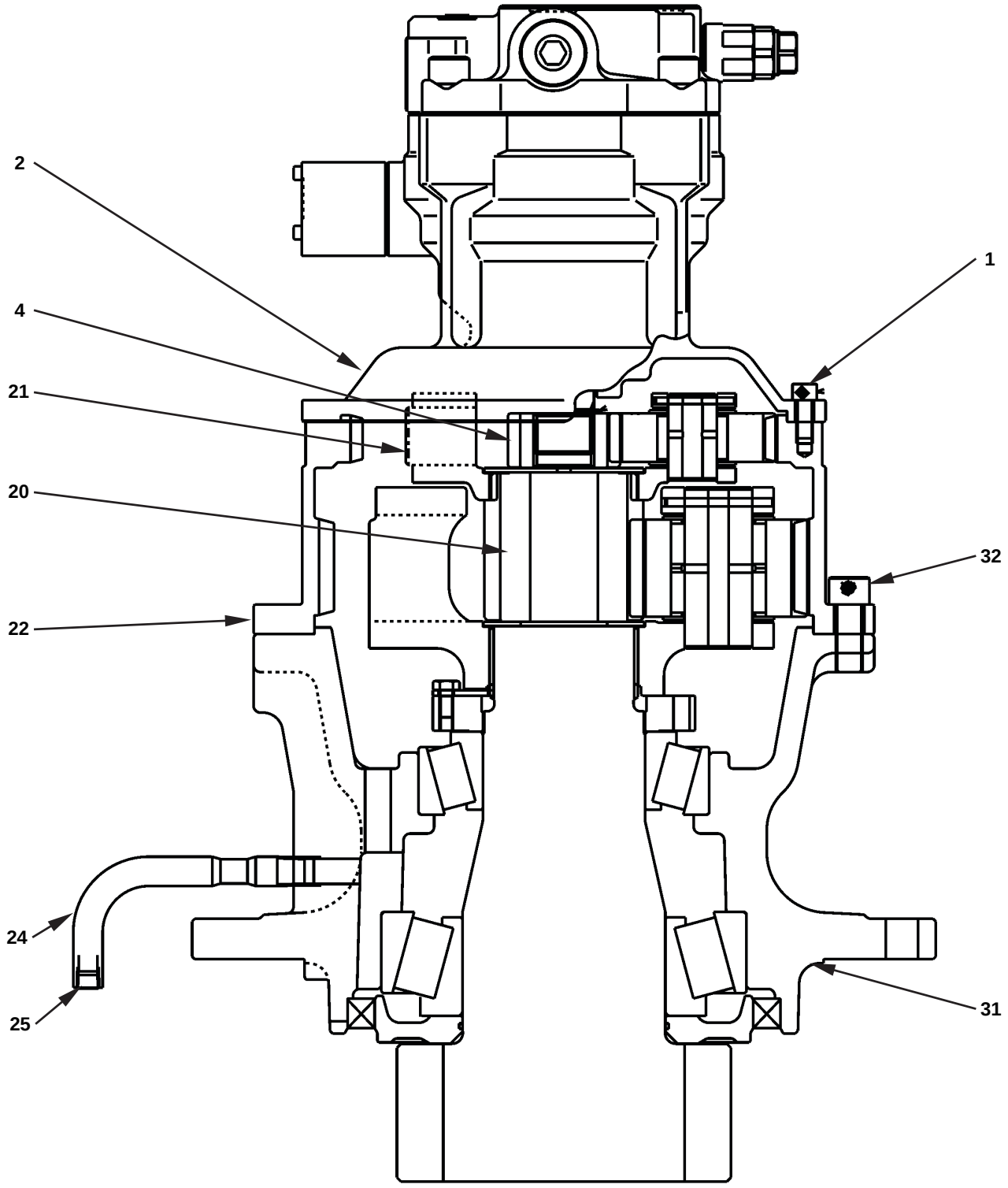

T1HH-03-02-001

https://truckmanualshub.com/

Note: Mass of ring gear: 27 kg

[26] Attach the eyebolt (M12, pitch 1.75 mm) to the motor mounting thread on the ring gear (22), lift the ring gear with the crane and then install it on the housing (31) aligning it to the alignment mark that was made in the disassembly process.
Tighten 12 socket bolts (32).
: 14 mm
: 300 N•m (30 kgf•m)

[27] Assemble the 1st stage carrier (21) assembly aligning it to the spline of the 2nd stage sun gear (20).

Important: Attention must be paid to the sun gear assembling direction.

[28] Assemble the 1st stage sun gear (4) to the 1st stage carrier (21) assembly setting the stepped end face side downward.

[29] Wrap the threaded portion of the hose (24) with sealing tape and install it on the housing (31).
: 22 mm

[30] Install the drain plug (25) on the hose (24).
: 22 mm
: 50 N•m (5 kgf•m)

[31] Fill gear oil (9.7 L).

[32] Coat the motor mounting surface on the ring gear (22) with liquid packing (Three Bond #1215).

Note: Mass of motor: 71 kg

[33] Lift the motor (2) using the crane and then, aligning it to the alignment mark that was made in the disassembly process, install it on the ring gear (22) with 12 socket bolts (1).
: 10 mm
: 90 N•m (9 kgf•m)

https://truckmanualshub.com/

5-9 Swing Body: Center Joint

1 Removal and Installation of Center Joint

Cautions	• Be sure to stop the engine before beginning work. • Be sure to inspect the wire rope and other suspended items before beginning work. • Do not stand or pass under the suspended load (center joint).

Items to prepare

- Wrench (17 mm, 19 mm, 27 mm, 36 mm)
- Hexagon wrench (5 mm)
- Box wrench (19 mm)
- Specialized jig
- Vacuum pump (vacuum pump power supply)
- Extension cord
- Marking pen
- Caps
- Plugs
- Wire rope (with the required breaking load)
- Crane (that meets the lifting capacity)
- Crossties
- Rags
- Cleaning fluid

[1] Use a 5-mm hexagon wrench to remove the 4 installation bolts (1), and then remove the air breather (2) on the hydraulic oil tank.

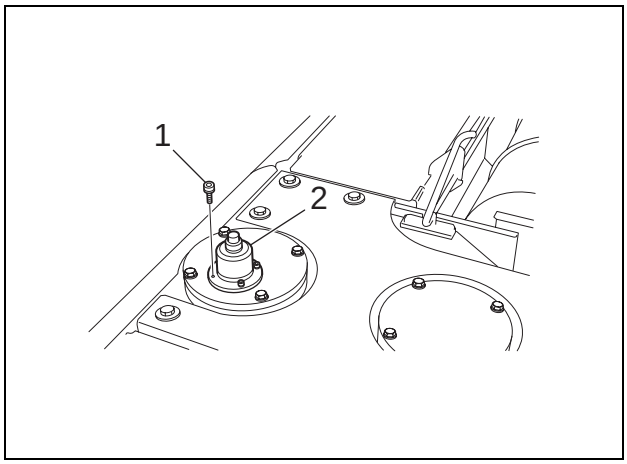

[2] Attach the specialized jig (1) to the area where the air breather was removed, and set the vacuum pump (2).

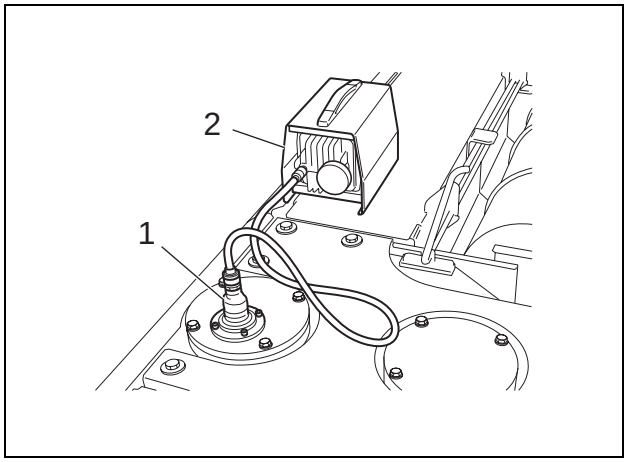

https://truckmanualshub.com/

[3] Use a 19-mm box wrench to remove the 8 installation bolts (1), and then remove the lower under cover (2).

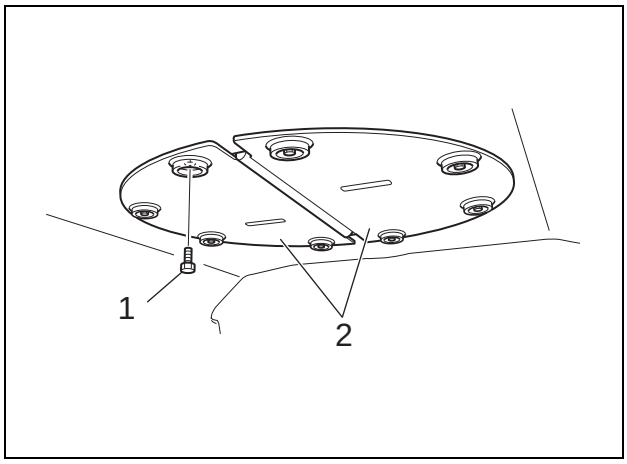

[4] Put a waste oil can underneath the center joint.

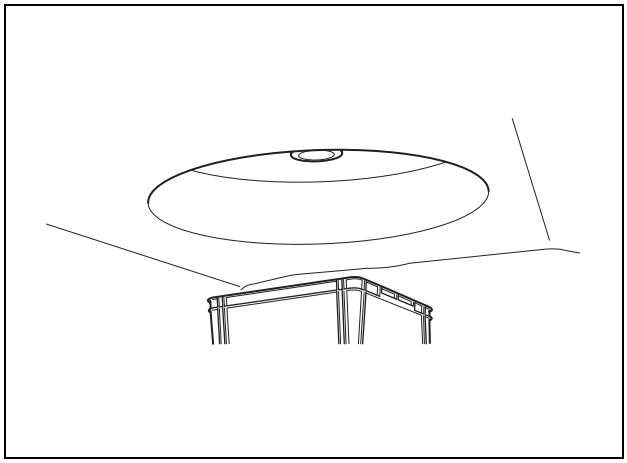

[5] Use a wrench [19 mm (1), 27 mm (2)] to remove the hoses.
- Mark the center joint and hoses so that they can be connected correctly at the time of assembly.
- Attach caps and plugs to the center joint and hoses to prevent entry of water, dust, or dirt.
- Clean the center joint and hoses by spraying with a parts cleaner to prevent scratches and prevent dirt from accumulating on the connectors.

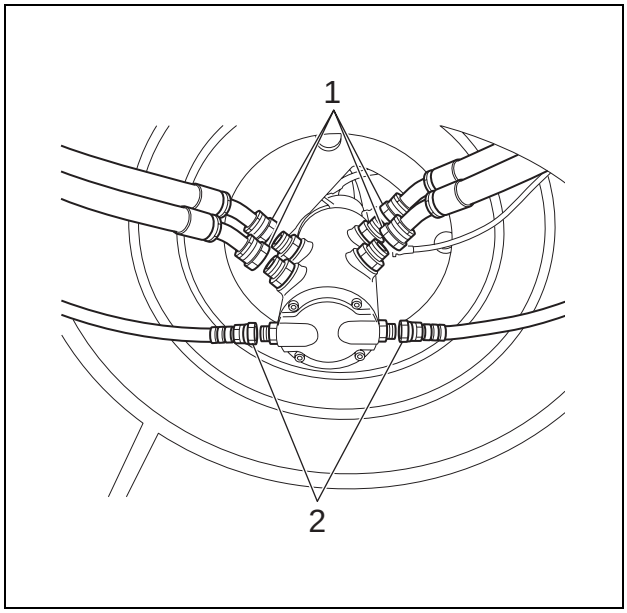

https://truckmanualshub.com/

[6] Use a wrench [36 mm (1), 27 mm (2)] to remove the hoses.
- Attach caps and plugs to the center joint and hoses to prevent entry of water, dust, or dirt.
- Clean the center joint and hoses by spraying with a parts cleaner to prevent scratches and prevent dirt from accumulating on the connectors.

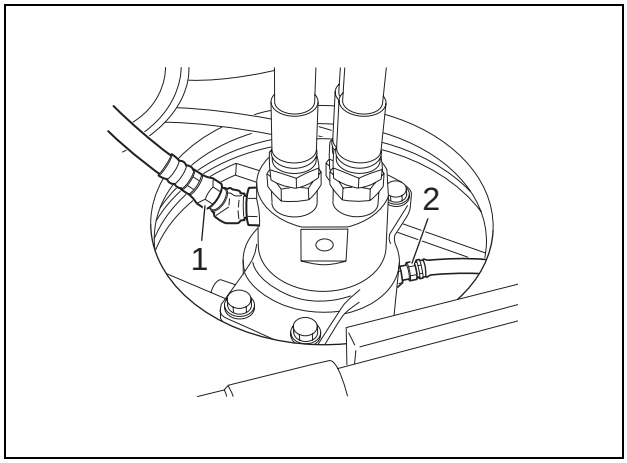

[7] Use a 19-mm wrench to remove the 2 installation bolts (1), and then remove the center joint bracket (2).

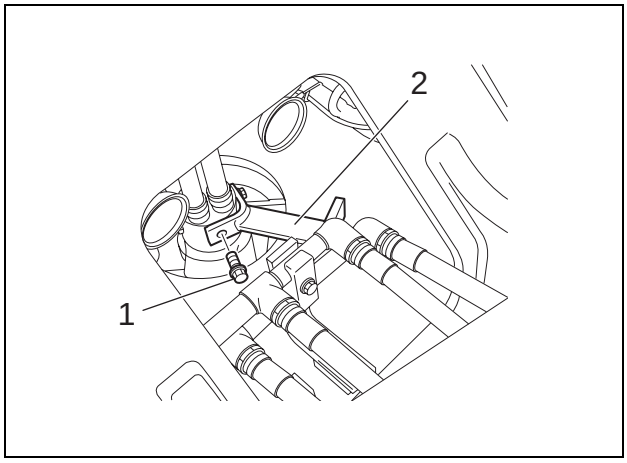

[8] Use a 36-mm wrench (1) to remove the 4 hoses.
- Mark the hoses so that they can be connected correctly at the time of assembly.
- Attach caps and plugs to the hoses to prevent entry of water, dust, or dirt.
- Clean the hoses by spraying with a parts cleaner to prevent scratches and prevent dirt from accumulating on the connectors.

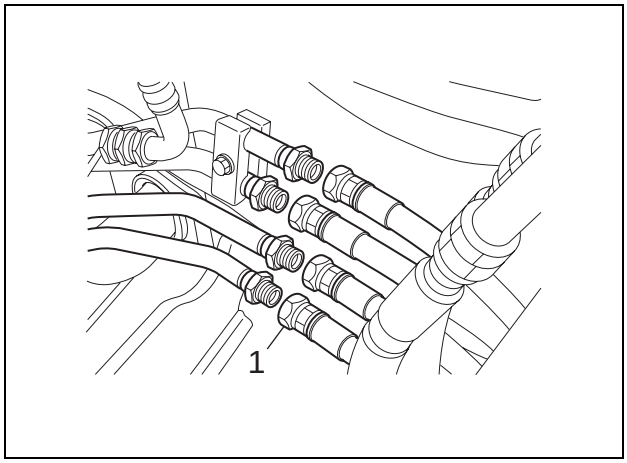

[9] Wrap a wire rope around the center joint and secure it with a crane so that the center joint does not fall during removal and installation operations.

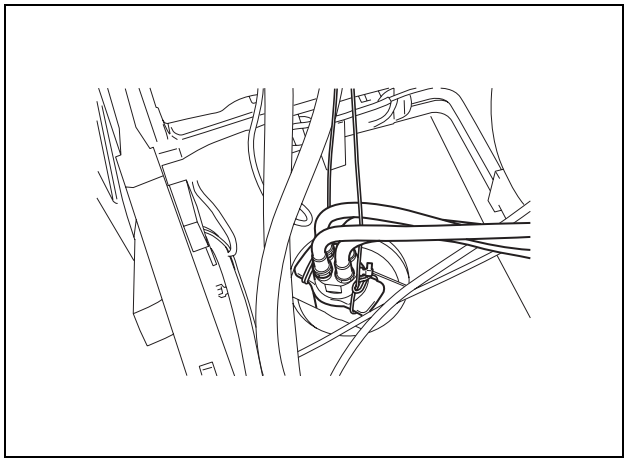

https://truckmanualshub.com/

[10] Use a 17-mm wrench to remove the 4 installation bolts (1) on the center joint.

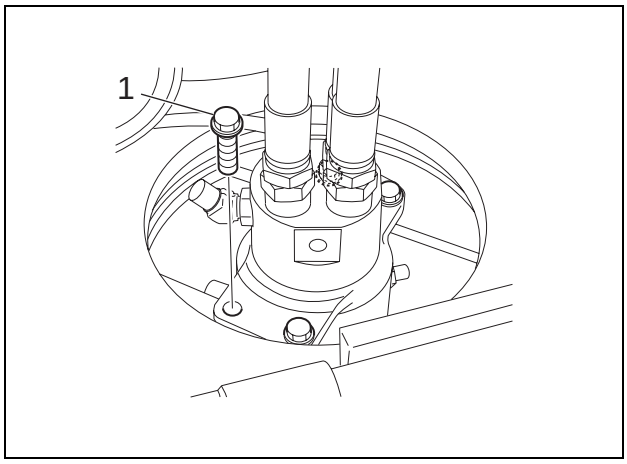

[11] Use the wire rope and crane to suspend the center joint.

[12] Thoroughly check that the location is safe before lowering the center joint on a pair of crossties.
- Apply Locktite to the center joint when assembling.
- During a test run, check that there are no oil leaks, and then install the lower under cover.

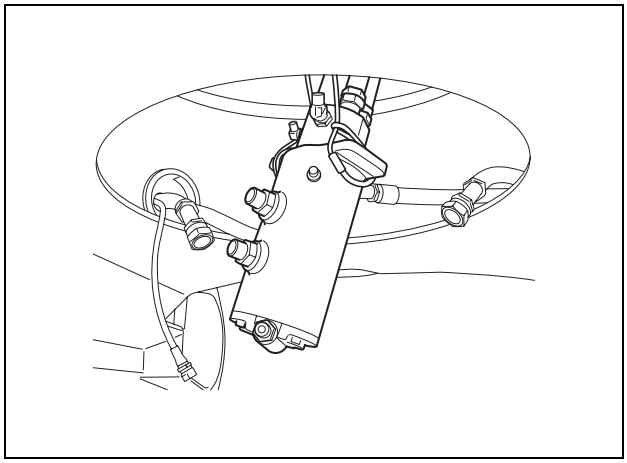

https://truckmanualshub.com/

1 Removal and Installation of Counterweight

Cautions	• Be sure to stop the engine before beginning work. • Be sure to inspect the wire rope and other suspended items before beginning work. • Do not stand or pass under the suspended load (counterweight). • Thoroughly secure the removed counterweight with the wire ropes and crane so that it does not fall down.

Items to prepare

- Box wrench (50 mm)
- Eyebolts (36 mm × 2)
- Shackles (with the required lifting capacity × 2)
- Wire rope (with the required breaking load)
- Crane (that meets the lifting capacity)
- Crossties
- Rags
- Cleaning fluid

[1] Remove the 2 caps (2) from the top of the counterweight (1).

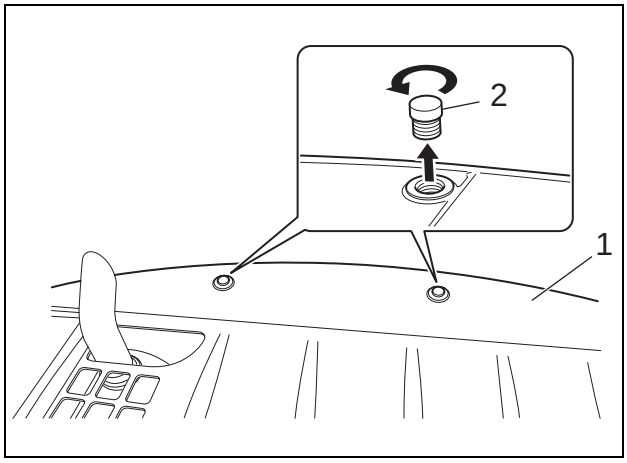

[2] Install 2 36-mm eyebolts (1) in place of the removed caps.
- Spray lubricating oil on the eyebolts.
- Fully tighten the eyebolts, and then loosen them by a half turn.

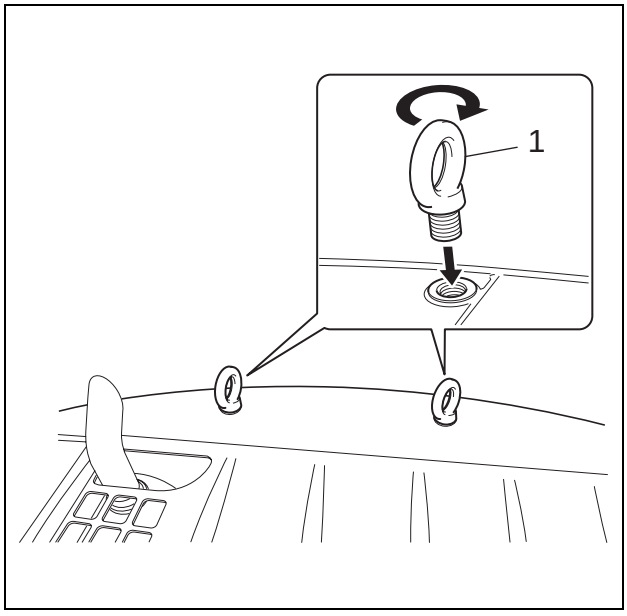

https://truckmanualshub.com/

[3] Connect the shackle (1) to the eyebolts, and then use the wire ropes and crane to secure the counterweight so that it does not fall during removal and installation operations.

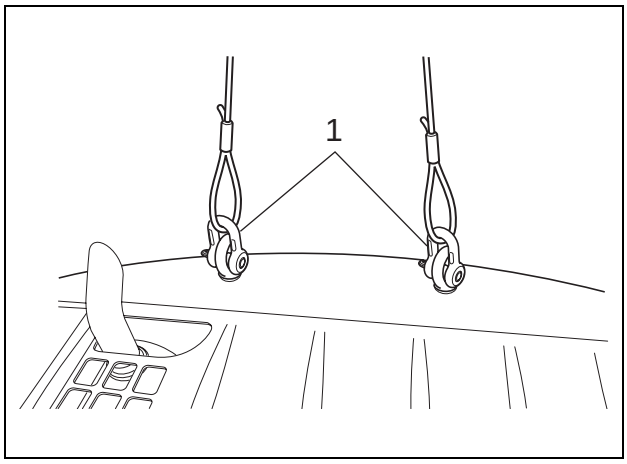

[4] Use a 50-mm box wrench to remove the 4 installation bolts (1) from the counterweight.

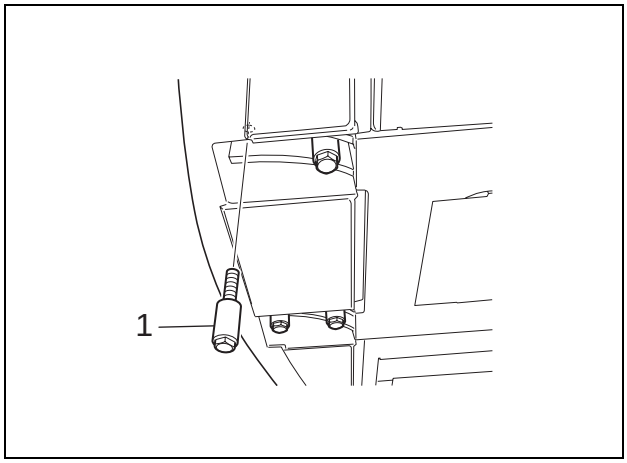

[5] Use the wire ropes and crane to lift and remove the counterweight.
- Move the counterweight about 50 cm to the rear while lifting it so that it does not interfere with the pipes.

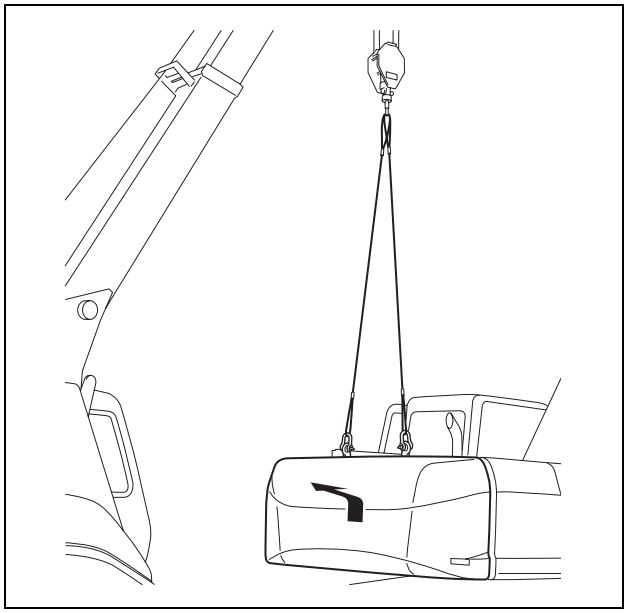

https://truckmanualshub.com/

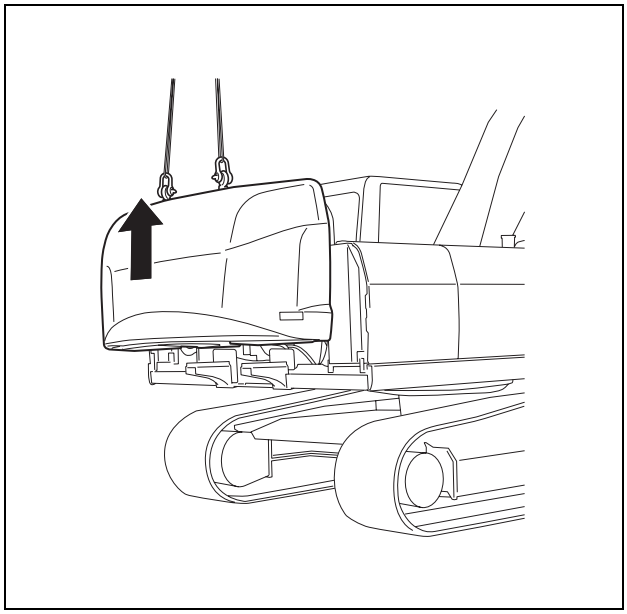

[6] Thoroughly check that the location is safe before lowering the counterweight on a crosstie.
- Thoroughly secure the counterweight with the wire ropes and crane so that it does not fall down.

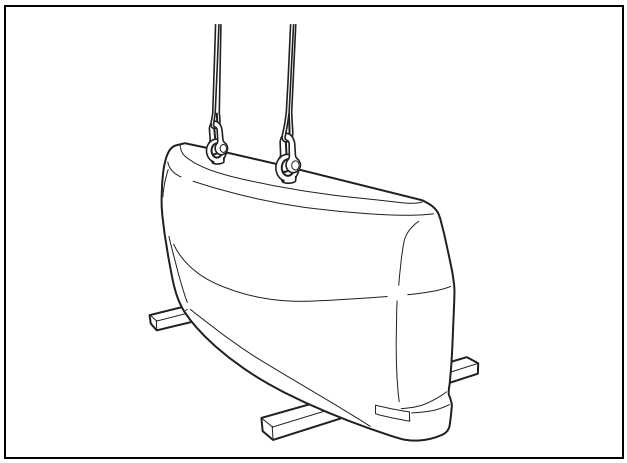

https://truckmanualshub.com/

1 Removal and Installation of Pump

Warning	• Be sure to release the hydraulic pressure before beginning work.

Cautions	• Be sure to stop the engine before beginning work. • Be sure to inspect the wire rope and other suspended items before beginning work. • Do not stand or pass under the suspended load (pump).

Items to prepare

- Wrench (13 mm, 14 mm, 17 mm, 19 mm, 22 mm, 36 mm)
- Hexagon wrench (8 mm, 10 mm)
- Nylon sling (with the required breaking load)
- Crane (that meets the lifting capacity)
- Marking pen
- Caps
- Plugs
- Rags
- Cleaning fluid
- Crossties

[1] Use a 19-mm wrench to remove the 6 installation bolts (1), and then remove the under cover (2).

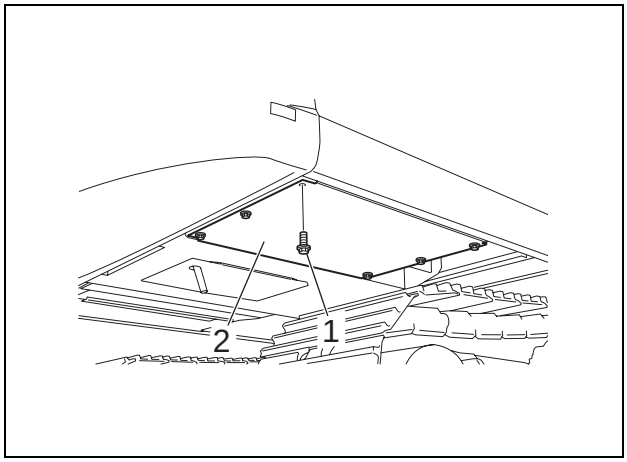

[2] Use a 19-mm wrench to remove the 4 installation bolts (1) from the top cover.

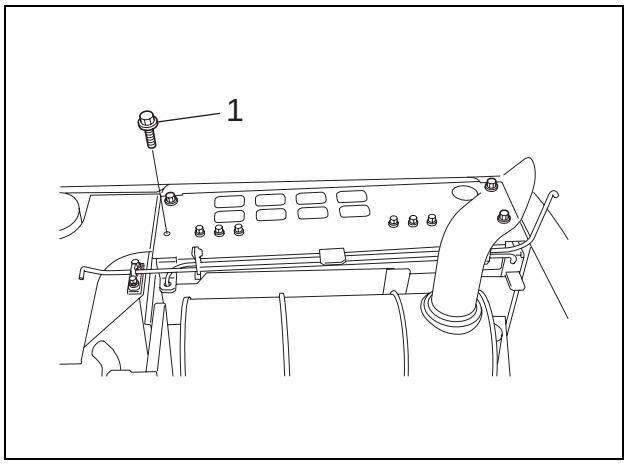

https://truckmanualshub.com/

[3] Use a 13-mm wrench to remove the 2 installation bolts (1), and then remove the spring bracket for the engine hood.

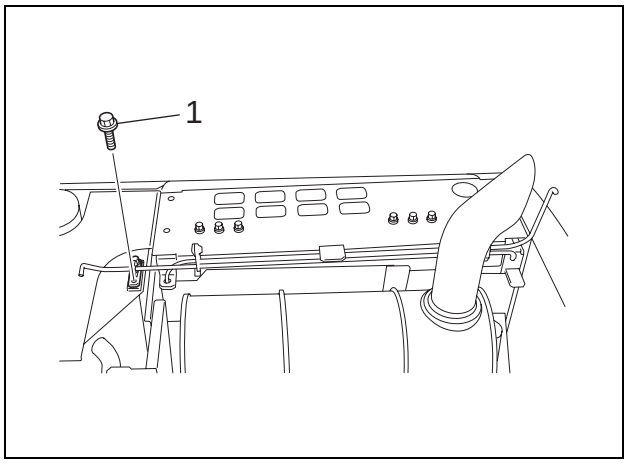

[4] Use a 19-mm wrench to remove the 4 bolts (1).

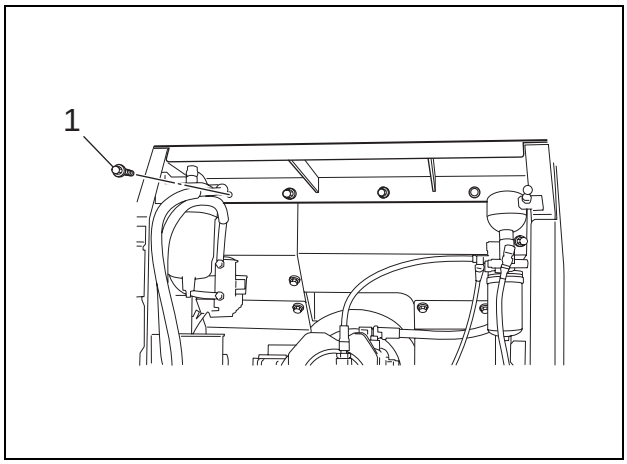

[5] Remove the top cover (1).

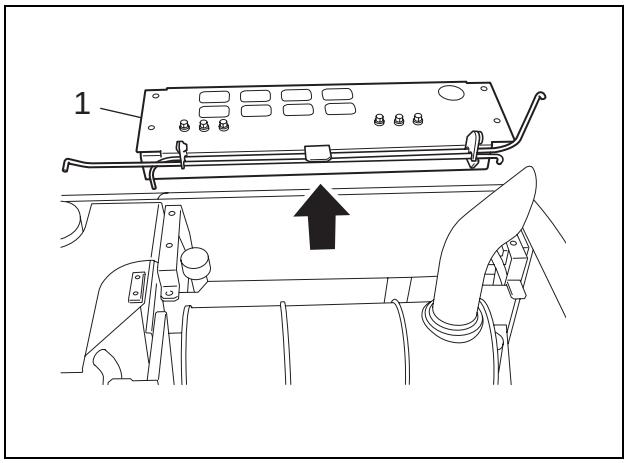

[6] Use a 19-mm wrench to remove the 9 bolts (1), and then remove the 4 covers (2).

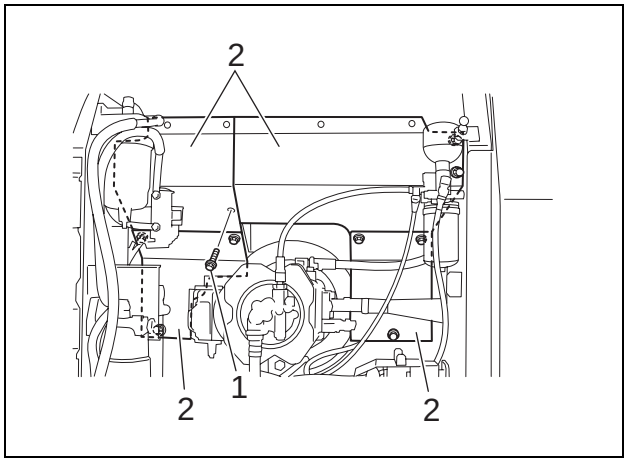

https://truckmanualshub.com/

[7] Use a 14-mm wrench to remove the 2 bolts (1), and then remove the seal clamp from the exhaust pipe.

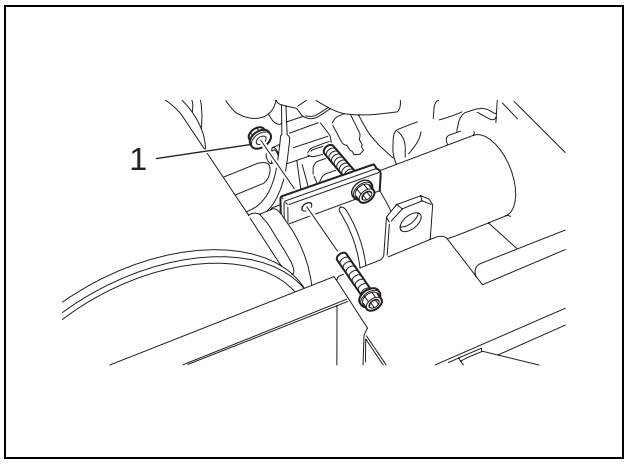

[8] Use a 17-mm wrench to remove the 3 bolts (1), and then remove the installation bracket (2) from the muffler.

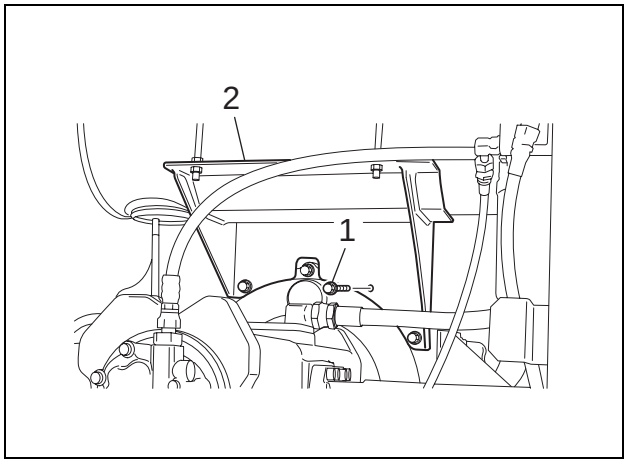

[9] Remove the muffler (1).

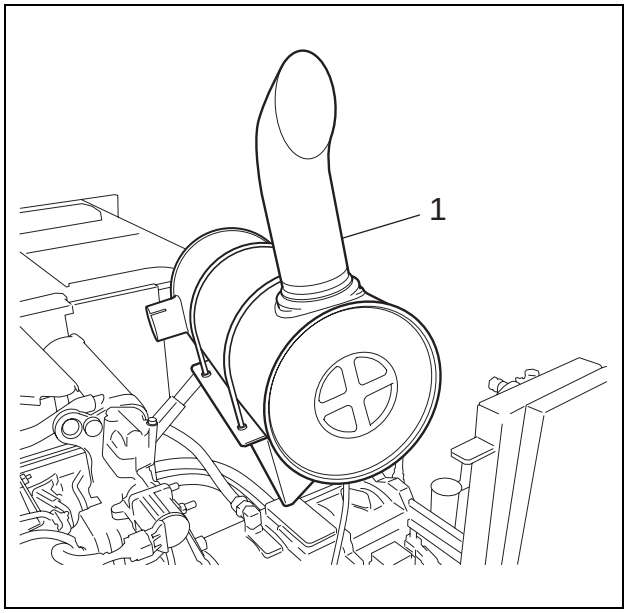

https://truckmanualshub.com/

[10] Remove the hoses and connectors that are connected to the pump.
Use a hexagon wrench (8 mm) to remove the 4 installation bolts from the hoses, and then remove the hoses (1).
Use a wrench (36 mm) to remove the hoses (2).
Use a wrench (22 mm) to remove the hoses (3).
Use a wrench (19 mm) to remove the hose (4).
Remove the connectors (5).
Use a wrench (19 mm) to remove the hoses (6).
Remove the connectors (7).
Use a hexagon wrench (10 mm) to remove the installation bolts (8) (2 in the front and 2 in the rear) from the hoses.

- Mark the pump and hoses so that they can be connected correctly at the time of assembly.
- Attach caps or plugs to the pump and hoses to prevent any entry of water, dust or dirt.
- Clean the pump and hoses by spraying with a parts cleaner to prevent scratches and prevent dirt from accumulating on the connectors.

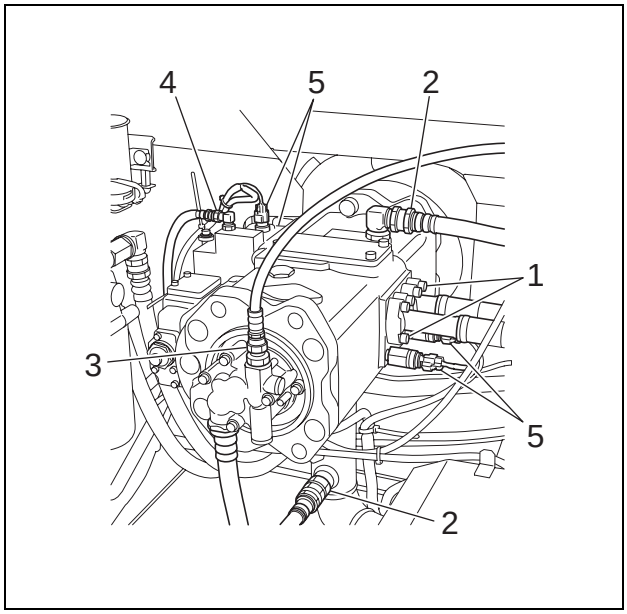

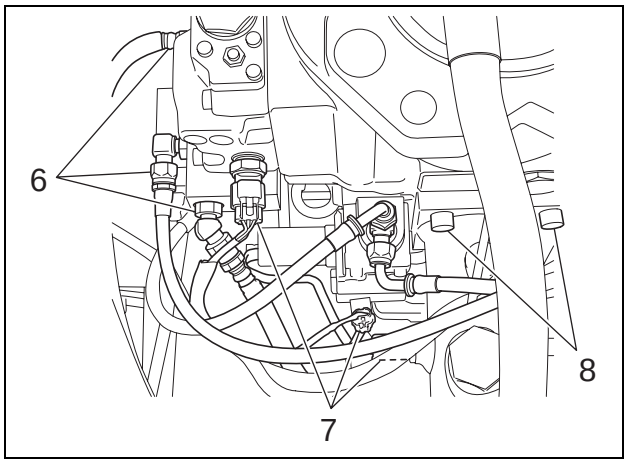

[11] Secure the pump with a crane and nylon sling (1) so that it does not fall during removal and installation operations.

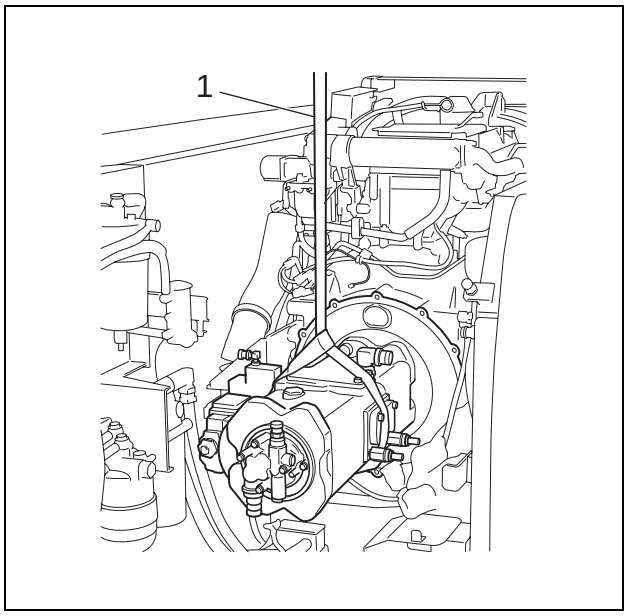

https://truckmanualshub.com/

[12] Use a 17-mm wrench to remove the 9 installation bolts (1) from the pump.

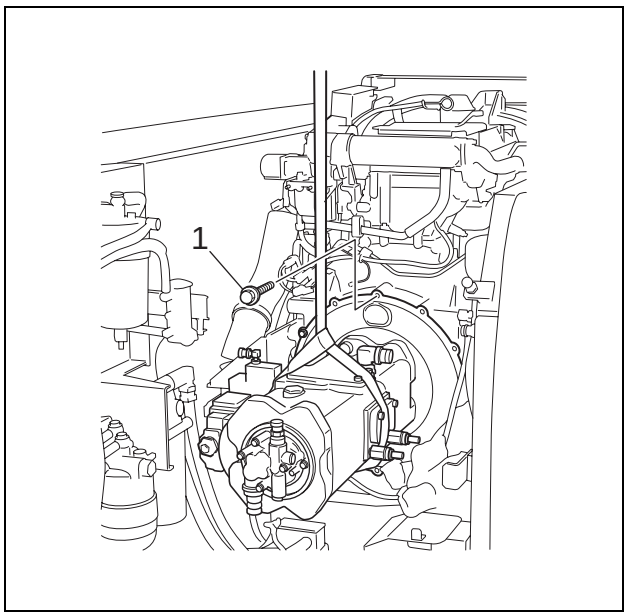

[13] Use the crane and nylon sling to lift the pump.

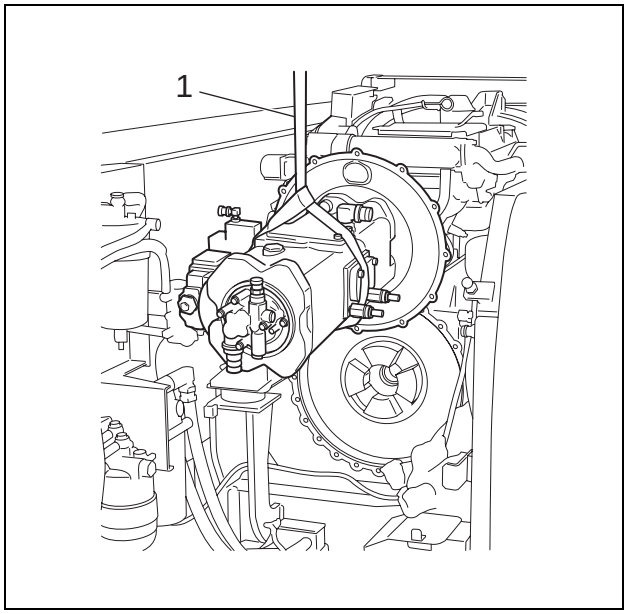

[14] Thoroughly check that the location is safe before lowering the pump on a crosstie.
- Thoroughly secure the pump so that it does not fall down.

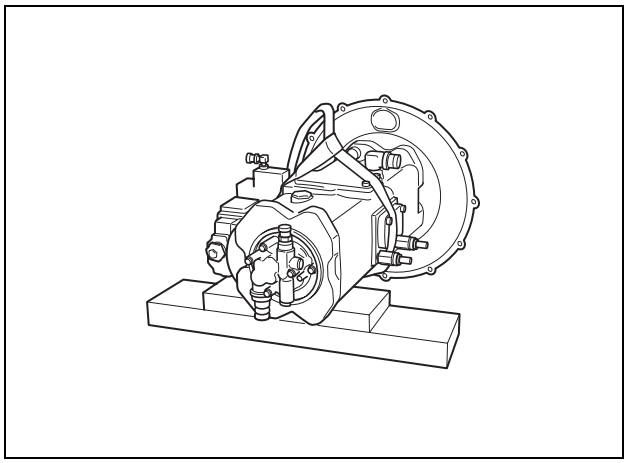

https://truckmanualshub.com/

2 Assembly and Disassembly Procedures of Pump Main Unit

1. Tools

The table below shows the tools required for the assembly and disassembly of the K3V pump. The bolts and plugs may vary by pump type.

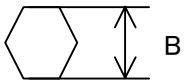

Tool name and dimensions		Required tools are indicated with ○			Part name			
		Hydraulic pump type						
Name	B	K3V63 K5V80	K3V112 K5V140	K3V140/180 K5V200	Hexagon socket head bolt	PT mounted valve (PT screw)	PO plug (PF screw)	Hexagon socket head stop screw
Hexagon bar wrench	2				-	-	-	M4
	2.5				-	-	-	M5
	3				-	-	-	M6
	4	○	○	○	M5	BP-1/16	-	M8
	5	○	○	○	M6	BP-1/8	-	M10
	6	○	○	○	M8	BP-1/4	PO-1/4	M12 M14
	8	○	○	○	M10	BP-3/8	PO-3/8	M16 M18
	10				M12	BP-1/2	PO-1/2	M20
	12				M14	-	-	-
	14	○			M16 M18	BP-3/4	PO-3/4	-
	17		○	○	M20 M22	BP-1	PO-1,$1^1/_4$,$1^1/_2$	-
	19				M24 M27	-	-	-
	21				-	-	-	-
	22				M30	-	PO-2	-
Closed wrench Socket wrench Double-head (single-head) wrench	19	○	○	○	M12	M12	VP-1/4	-
	22		○		-	-	VP-3/8	-
	24		○	○	M16	M16	-	-
	27	○		○	M18	M18	VP-1/2	-
	30		○	○	M20	M20	-	-
	36		○	○	-	-	VP-3/4	-
	41				-	-	VP-1	-
	50				-	-	VP-11/4	-
	55				-	-	VP-11/2	-
Monkey wrench	-	○	○	○	Medium-sized × 1			
Screwdriver	-	○	○	○	Medium-sized flathead screwdriver × 2			
Hammer	-	○	○	○	Plastic hammer × 1			
Pliers	-	○	○	○	For stop ring, TSR-160			
Steel rod	-	○	○	○	Key material steel rod, 10 × 8 × 200			
Torque wrench	-	○	○	○	With adjustable specified torque tightening			

https://truckmanualshub.com/

2. Disassembly Procedure

Read the entire section below on the disassembly procedure, and follow the procedure for disassembling the pump. The numbers in parentheses on the rear of each part correspond to the part numbers in Figure 3. Pump assembly cross-section diagram.

[1] Select the location for disassembling the pump.
- Find a clean location to disassemble the pump.
- Place a rubber plate or cloth on the work table so as not to damage the parts.

[2] Use cleaning oil to remove any dirt or rust from the surface of the pump.

[3] Remove the oil drain port plug (468) and drain the oil from the pump casing (271).
- Remove the plugs from both the front and rear pumps.

[4] Remove the hexagon socket head bolts (412, 413) and the regulator, and then remove the hexagon socket head bolt (414) and the cover (326).
Loosen the 3 hexagon socket head bolts (M6-60) securing the electromagnetic proportional pressure reducing valve and casing subassembly (079), and remove the electromagnetic proportional pressure reducing valve and casing subassembly.
- See the Explanation of Regulator Operation for how to disassemble the regulator.

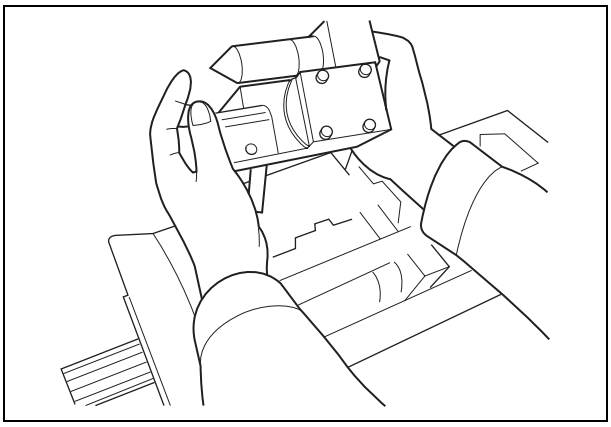

[5] Loosen the flange socket (435), and remove the gear pump (04).

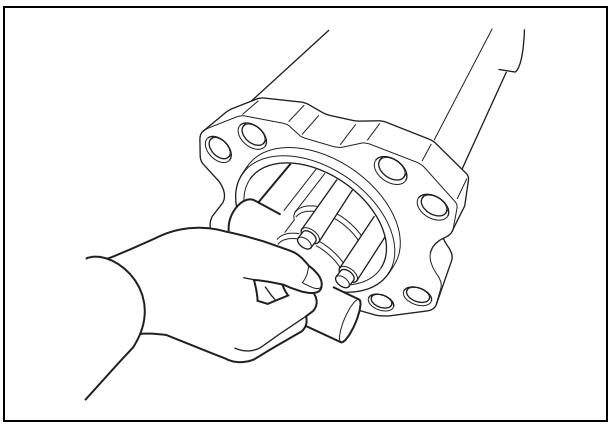

[6] Loosen the hexagon socket head bolt (401) that fastens together the swash plate support board (251), pump casing (271), and valve block (312).

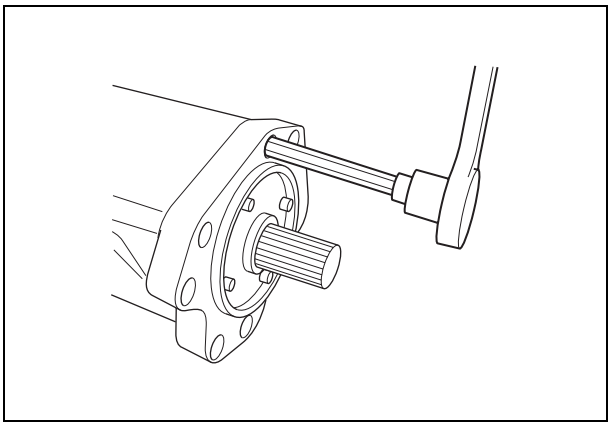

https://truckmanualshub.com/

[7] Face down the pump regulator installation surface horizontally on the work table, and separate the pump casing (271) and valve block (312).
- When facing down the regulator installation surface, be sure to place a rubber plate or similar material on the work table so as not to damage the regulator installation surface.
- When separating the pump casing and valve block, remove the 1st gear (116) at the same time.

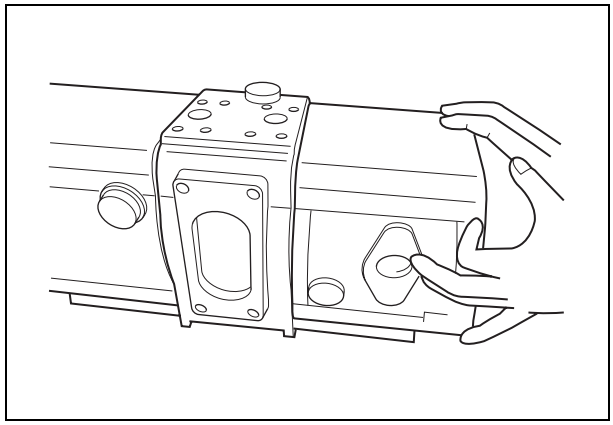

[8] Remove the cylinder (141) straight out from the pump casing (271) toward the drive shaft (111, 113), and remove the piston subassembly (151, 152), holder plate (153), spherical bush (156), and cylinder spring (157) at the same time.
- Be careful not to damage the sliding surfaces of the cylinder, spherical bush, shoes, and swash plate.

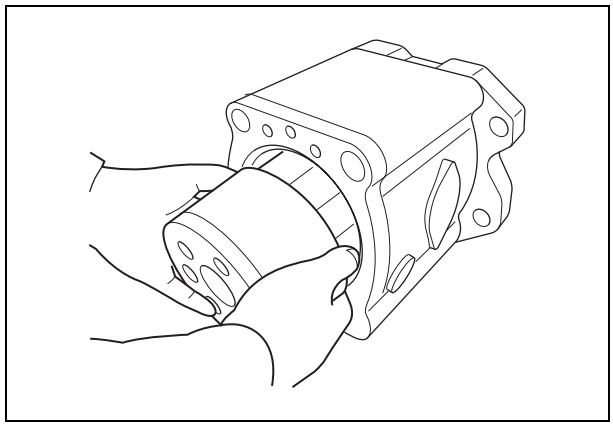

[9] Remove the hexagon socket head bolt (406), and remove the seal cover (F) (261).
- The seal cover (F) can be easily removed by inserting a bolt into the hole (M6 tap) on the seal cover (F) and pulling it out.
- The seal cover (F) has an oil seal, so be careful not to damage the oil seal when removing the seal cover (F).

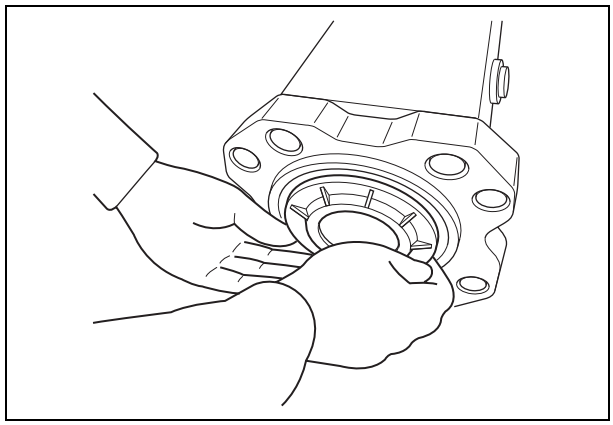

[10] Tap the rear of the drive shaft (111, 113), and separate it from the swash plate support board (251).

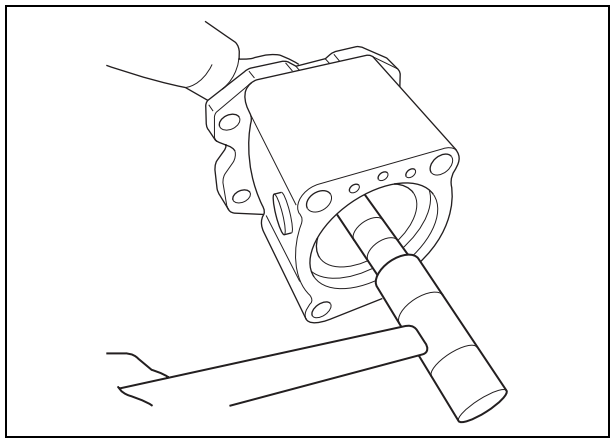

https://truckmanualshub.com/

[11] Remove the shoe plate (211) and swash plate (212) from the pump casing (271).

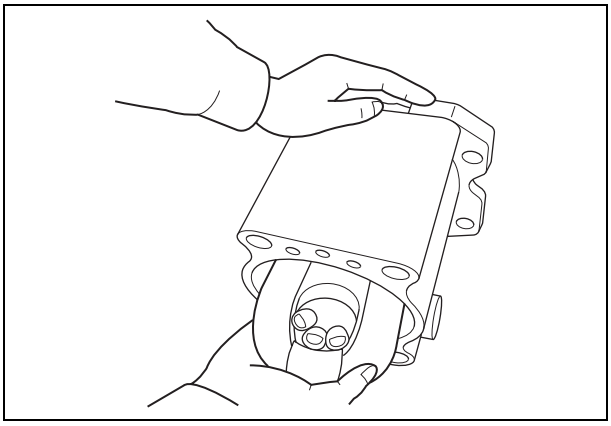

[12] Tap the mounting flange section of the swash plate support board (251) on the pump casing side, and separate the swash plate support board and the pump casing.

[13] Remove the valve plate (313, 314) from the valve block (312).
- This can also be removed in Step [7].

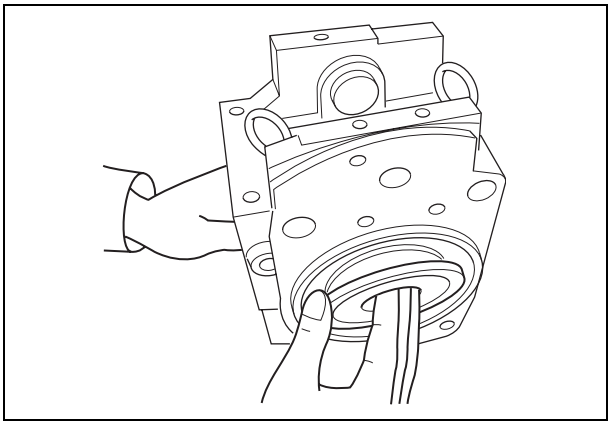

[14] If necessary, remove the stopper (L) (534), stopper (S) (535), servo piston (532), and tilting pin (531) from the pump casing (271), and remove the needle bearing (124) from the valve block (312).
- To avoid damaging the head of the tilting pin, use a jig when removing the tilting pin.
- The section where the tilting pin and servo piston are bonded is coated with Locktite, so be careful not to damage the servo piston.
- Do not remove the needle bearing unless it is at the end of its service life.
- Do not loosen the hexagon nut of the valve block or swash plate support board. This changes the flow volume setting.

https://truckmanualshub.com/

3. Assembly Procedure

The assembly procedure is the reverse of the disassembly procedure. However, follow the precautions below.

1) Be sure to repair any parts damaged during disassembly, and prepare replacement parts in advance.

2) Thoroughly clean all parts with cleaning oil and air blow before assembling.

3) Be sure to coat sliding parts and bearings with clean hydraulic oil before assembling.

4) As a rule, replace all O-rings, oil seals, and other seal parts with new parts.

5) Use a torque wrench to tighten all installation bolts and plugs to the torque specified in the Maintenance Standards.

6) Be careful not to mix up the pump parts for the front and rear of the tandem pump.

[1] Install the pump casing (271) by tapping the swash plate support board (251) with a hammer.
- If the servo piston, tilting pin, stopper (L), and stopper (S) have been removed, assemble these parts in the pump casing in advance.
- To avoid damaging the tilting pin head and feedback pin, use a jig when tightening the servo piston and tilting pin. Also be sure to coat the screw sections with Locktite (moderate strength).

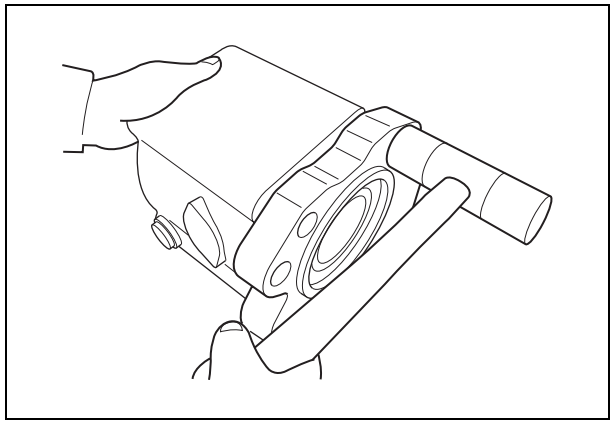

[2] Attach the shoe plate (211) to the swash plate (212). Face down the regulator installation surface of the pump casing, insert the tilting bush of the swash plate into the tilting pin (531), and correctly mount the swash plate and shoe plate on the swash plate support board (251).
- Use the tips of both fingers to check that swash plate moves smoothly.
- Coat the swash plate, swash plate support board, and all sliding sections with grease for easier installation of the drive shaft.
- Be careful not to damage the sliding surface of the shoe plate.

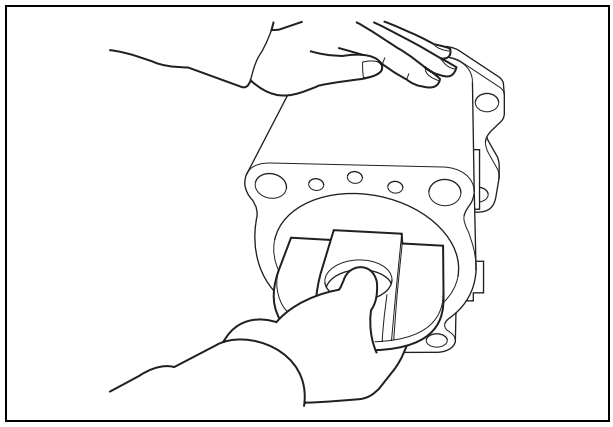

https://truckmanualshub.com/

[3] Install the drive shaft (111, 113) with attached cylinder roller bearing (123), bearing spacer (127), and stop spring (824) to the swash plate support board (251).

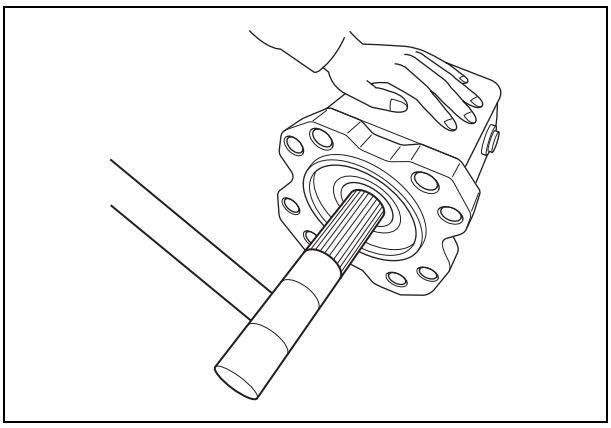

[4] Attach the seal cover (F) (261) to the pump casing (271), and secure with the hexagon socket head bolt (406).
- Lightly coat the oil seal of the seal cover (F) with grease.
- Attach the oil seal while being careful not to damage it.

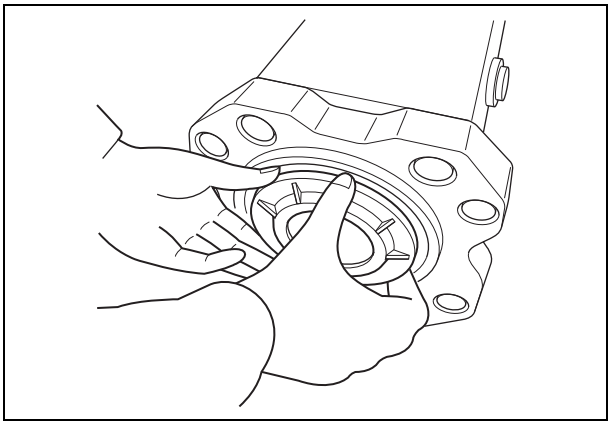

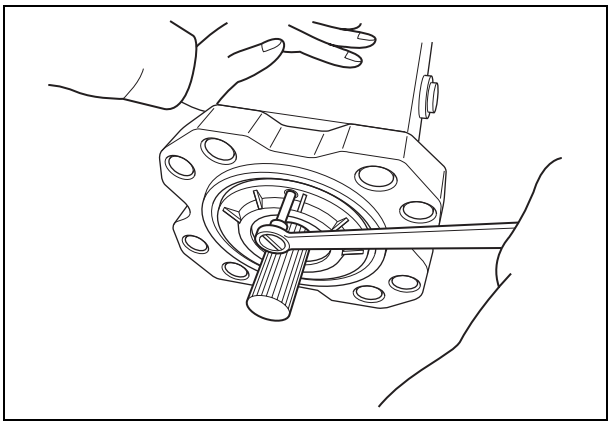

[5] Assemble the piston cylinder subassembly [cylinder (141), piston subassembly (151, 152), holder plate (153), spherical bush (156), spacer (158), cylinder spring (157)], and insert it into the pump casing in alignment with the phase of the spherical bush and cylinder spline.

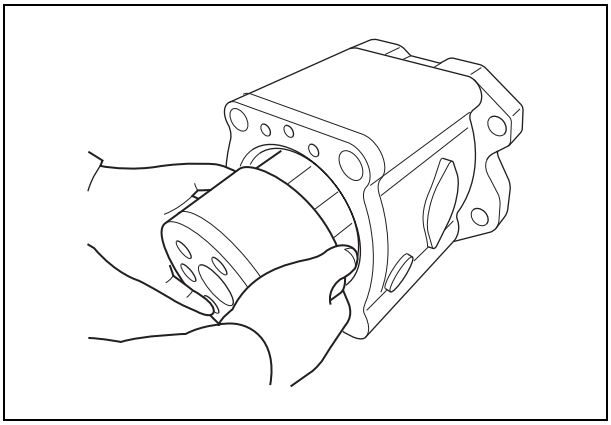

https://truckmanualshub.com/

[6] Install into the valve block (312) while aligning the valve plate (313, 314) with the pin (885).
- Be careful not to mistake the intake and discharge directions of the valve plate.

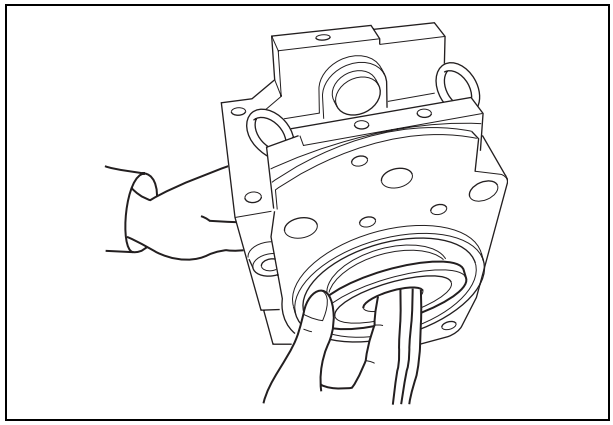

[7] Face down the pump regulator installation surface horizontally on the work table, and install the pump casing (271) and valve block (312).
- When facing down the regulator installation surface, be sure to place a rubber plate or similar material on the work table so as not to damage the regulator installation surface.
- Install the valve block in the correct direction. (Install the valve block with the regulator facing up and the suction flange facing to the right when looking at the valve block from the front.)
- When installing the pump casing and valve block, install the 1st gear at the same time.

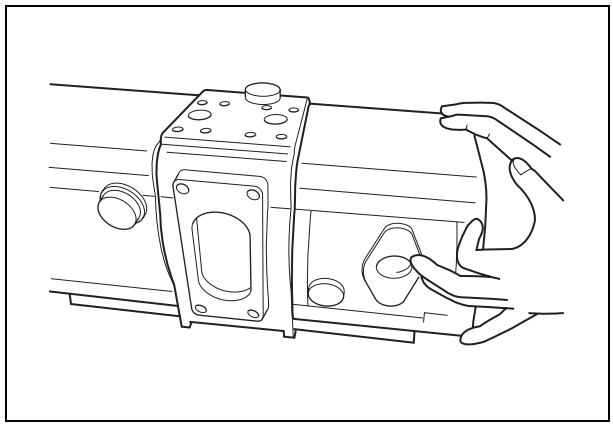

[8] Tighten the flange socket (435), and install the gear pump (04).

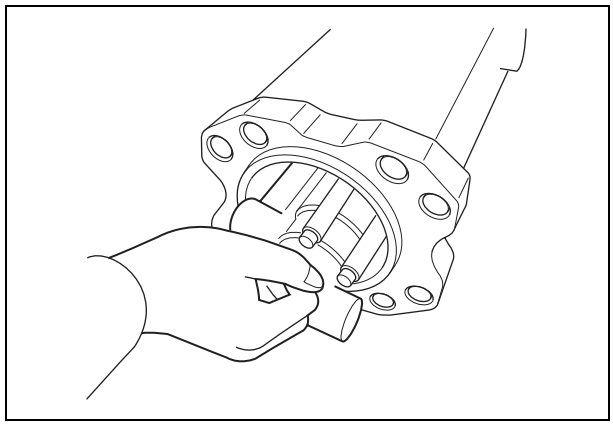

[9] Tighten the valve block (312) and pump casing (271) with the hexagon socket head bolt (401).
- It is easier to assemble when starting with the rear pump.

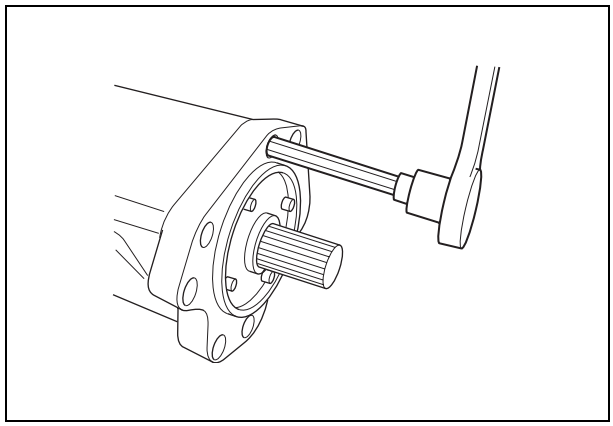

https://truckmanualshub.com/

[10] Tighten the hexagon socket head bolt (414) to the valve block (312), and install the cover (326).

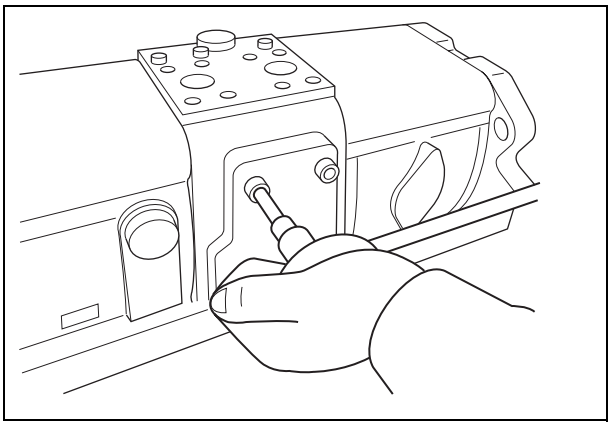

[11] Insert the feedback pin of the tilting pin into the feedback lever of the regulator, install the regulator, and tighten the hexagon socket head bolts (412, 413).
- Install the regulator, making sure not to mistake the front and the rear of the regulator.

[12] Tighten the 3 hexagon socket head bolts (M6-60) to the valve block (312), and install the electromagnetic proportional pressure reducing valve and casing subassembly (079).

[13] Attach the oil drain port plug (467) to finish assembly.

5-11 Upper Swing Body: Pump

Figure 1. Pump parts breakdown

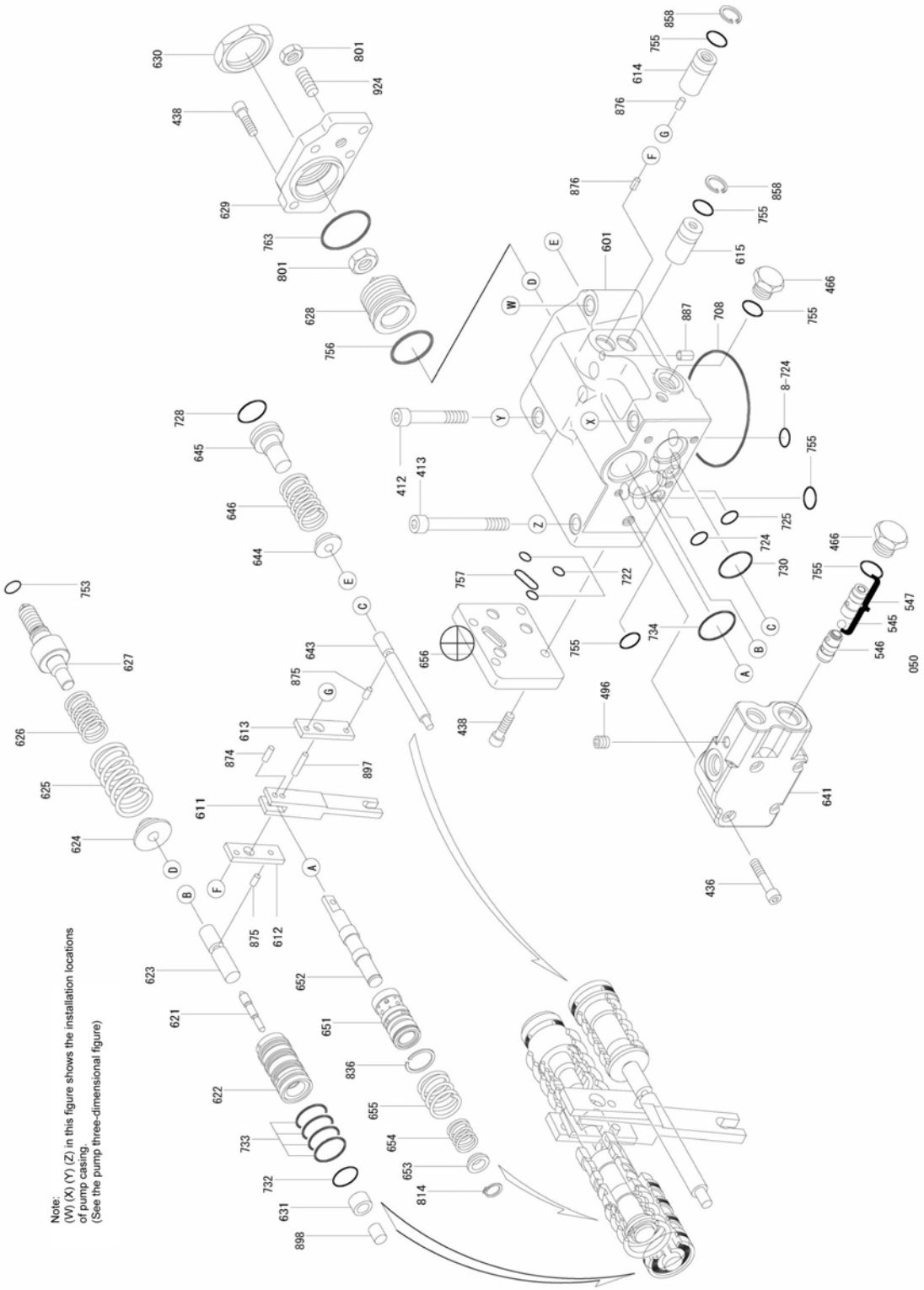

https://truckmanualshub.com/

Pump main unit: Maintenance standards

1. Standards for Replacing Worn Parts

If any part exceeds the standard values below and is worn, replace or readjust that part. If, however, the appearance of the part shows significant damage, replace that part.

Part name and inspection item	Standard dimensions/recommended replacement value				Measure
	Hydraulic pump type				
	K3V63, K5V80	K3V112	K5V140, K3V140	K5V200, K3V180	
Piston to cylinder bore clearance (D-d)	0.028 / 0.056	0.039 / 0.067	0.043 / 0.070	0.0375 / 0.078	Replace piston or cylinder
Piston, shoes, and caulking section backlash (δ)	0 - 0.1 / 0.3	0 - 0.1 / 0.3	0 - 0.1 / 0.3	0 - 0.1 / 0.35	Replace piston and shoe assembly
Shoe thickness (t)	3.9 / 3.7	4.9 / 4.7	5.4 / 5.0	5.4 / 5.0	Replace piston and shoe assembly
Free height of cylinder spring (L)	31.3 / 30.2	41.1 / 40.3	47.9 / 47.1	40.9 / 40.1	Replace cylinder spring
Assembled height of holder plate and spherical bush (H-h)	19.0 / 18.2	23.0 / 22.0	23.8 / 22.8	23.8 / 22.8	Replace holder plate or spherical bush
Cylinder over-pin-diameter (spline in cylinder) Spline in spherical bush			35.17 (ϕ5)/35.57		Replace cylinder and spherical bush

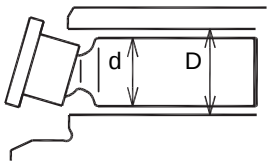

Piston to cylinder bore clearance (D-d)

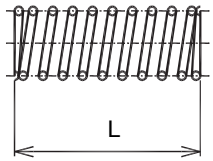

Free heigh of cylinder spring (L)

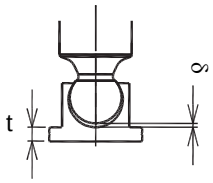

Piston, shoes, and caulking section backlash (δ)
Shoe thickness (t)

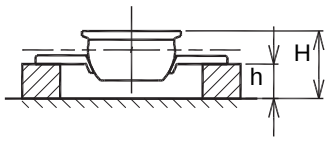

Assembled height of holder plate and spherical bush (H-h)

https://truckmanualshub.com/

2. Standards for Replacing the Cylinder, Valve Plate, and Swash Plate (shoe plate)

Valve plate (sliding section) Swash plate (shoe plate section) Cylinder (sliding section) Surface roughness	Surface roughness requiring repair	3-Z
	Standard surface roughness (repair value)	0.4Z or lower (lapping)

3. Tightening Torque

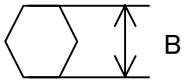

Part name	Size	Tightening torque (N•m)	Tool name (mm)	
Hexagon socket head bolt (material SCM435)	M5 M6 M8 M10 M12 M14 M16 M18 M20	6.9 12 29 57 98 160 240 330 430	B= 4 5 6 8 10 12 14 14 17	Hexagon bar wrench
PT plug (material S45C) Note: Wrap the seal tape 1.5 - 2 times.	R_C1/16 R_C1/8 R_C1/4 R_C3/8 R_C1/2	6.9 10 17 34 49	4 5 6 8 10	Same as above
PO plug (material S45C)	G1/4 G1/2 G3/4 G1 G 1 1/4 G 1 1/2	29 98 150 190 260 270	6 10 14 17 17 17	Same as above

https://truckmanualshub.com/

Figure 2. Pump dimensional outline diagram

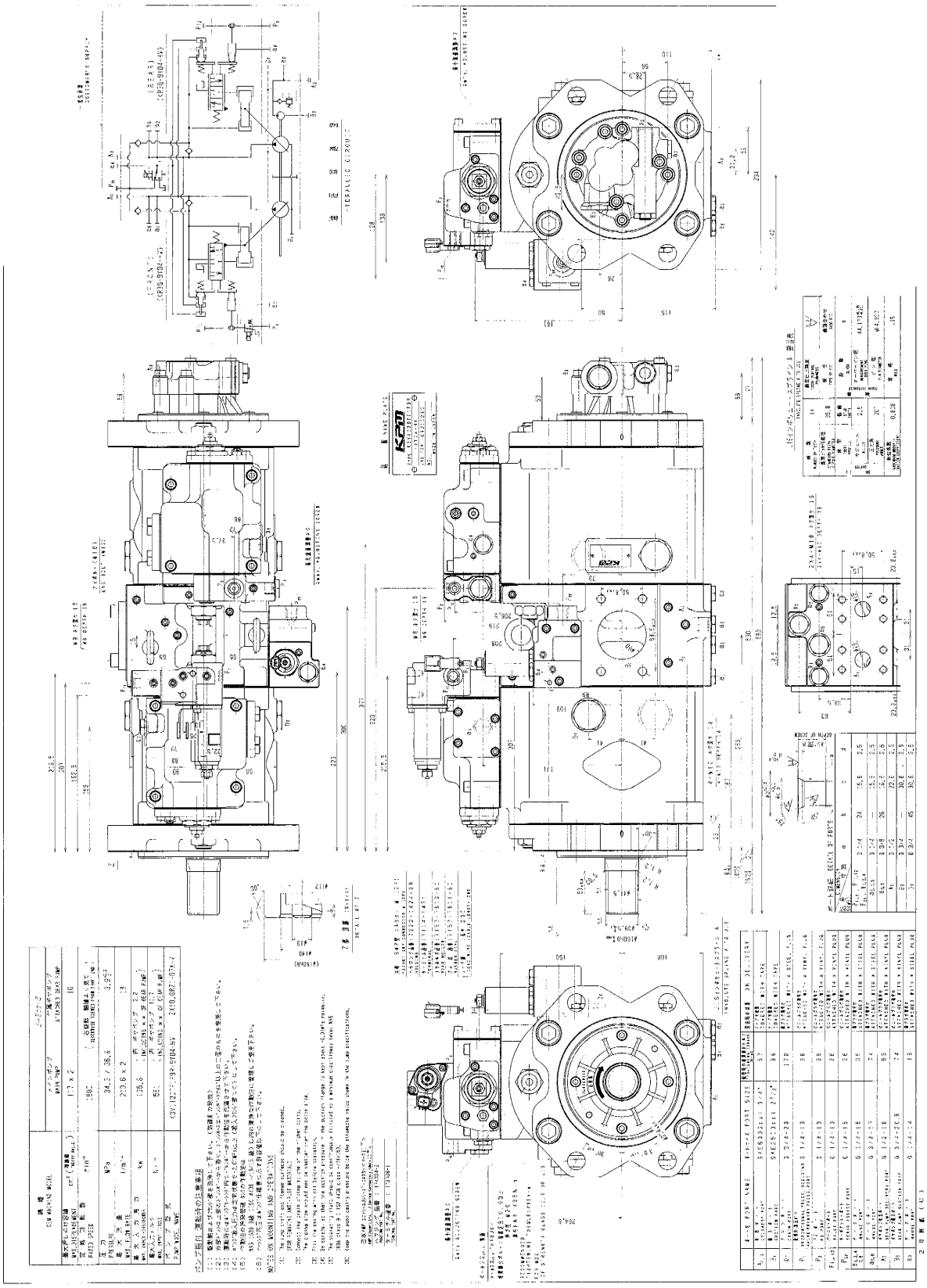

https://truckmanualshub.com/

5-11 Upper Swing Body: Pump

Figure 3. Pump assembly cross-section diagram

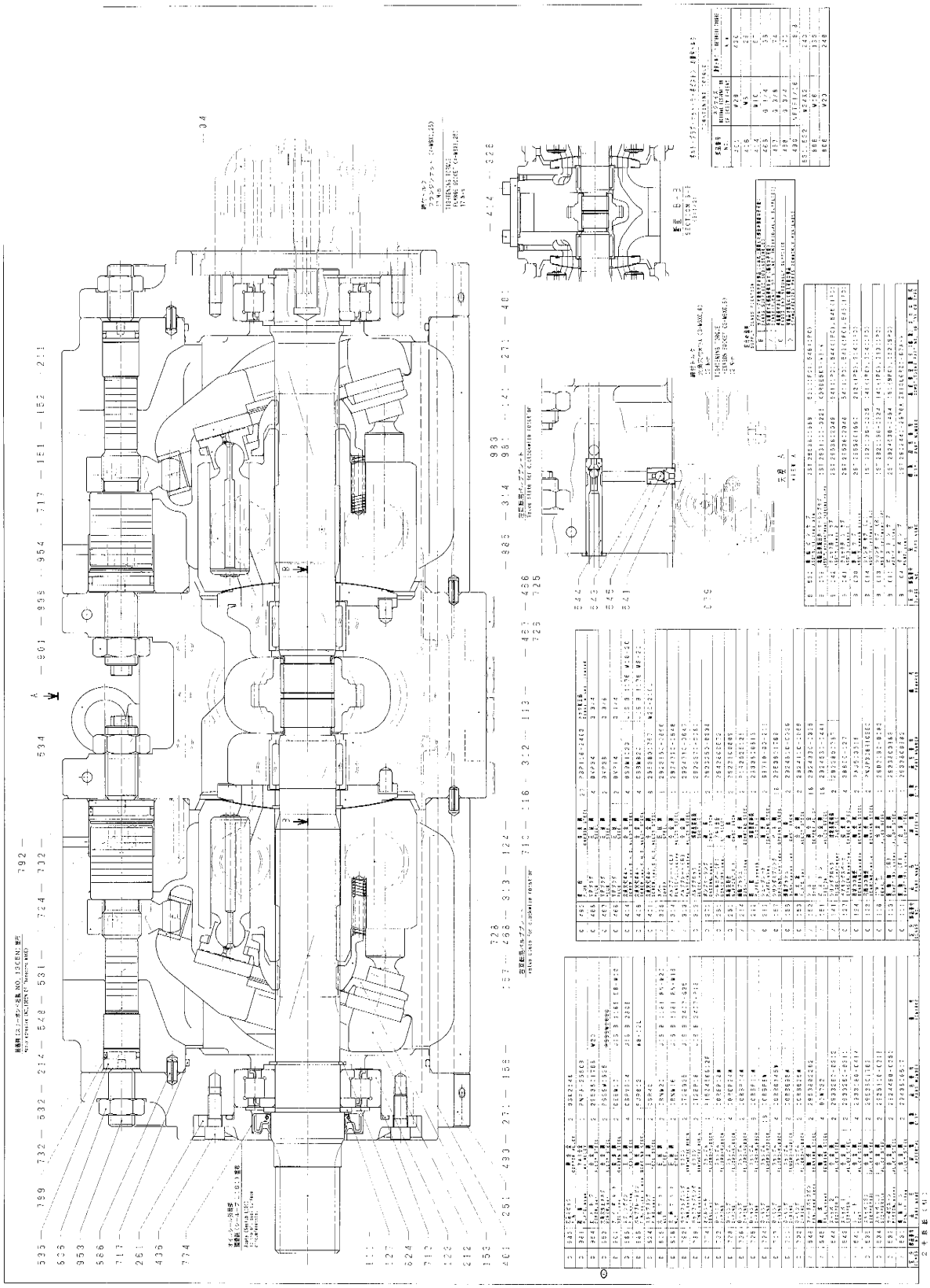

https://truckmanualshub.com/

3 Explanation of Regulator Operation

1. Model Display

KR3 G - 9 Y 04 - H V

- V: O-ring fluorine
- H: Efficiency improvement model
- Regulator design series number
- Indicates flow control details
  - O: No flow control
  - N: Negative flow control
  - P: Positive flow control
  - M: Manual flow control
  - E: Electrical flow control
  - C: Negative flow control (with maximum flow cut function)
  - X: Negative flow control (with multiple external command high-pressure selection function)
  - Y: Negative flow control (with proportional valve secondary pressure/external command high-pressure selection function)
- Indicates horsepower control details
  - 1: Constant horsepower control
  - 2: Added full-horsepower control
  - 4: Pressure cutoff control
  - 5: Constant horsepower control and pressure cutoff control
  - 6: Added full-horsepower control and pressure cutoff control
  - 9: Added full-horsepower control and power shift control (only decreased horsepower)
  - H: Added full-horse power control and power shift control (decreased horsepower and increased horsepower)
- Size
  - 6: K3V63
  - 8: K5V80
  - G: K3V112
  - S: K5V140
  - H: K3V140, K3V180
  - K: K5V200DT/DTP/DTH/S
  - D: K3V280, K5V200DP (H)
- K3V and K5V series pump regulator

https://truckmanualshub.com/

2. Specifications

Hydraulic oil . . . . . Abrasion-resistant hydraulic oil ISO VG 32, 46, 68

Temperature range . . . . . -20 - 95°C

Viscosity range . . . . . 10 - 1000cSt (10 - 200 cSt during actual operation)

3. Summary

Kawasaki swash plate-type axial piston pump K3V series regulator
KR3G-9X04-HV/9Y04-HV is configured with the control mechanisms below.

[1] Horsepower control
The pump tilting angle (discharge flow) is automatically decreased and the input torque is controlled to or below a constant value according to the rise in the self pump discharge pressure P_{d1} and the counterpart pump discharge pressure P_{d2} (When the engine speed is constant, the input horsepower is constant.
When a tandem-type double pump is used, the simultaneous full-horsepower method, which operates with the sum of the load pressure of the 2 pumps, is used. Therefore, when horsepower is controlled, the regulator of each pump is controlled to the same tilting angle (discharge flow). For this reason, when horsepower is controlled, the overload of the engine automatically stops regardless of the load of the 2 pumps.

[2] Power shift control
As the power shift command pressure Pf or the electromagnetic proportional pressure reducing valve current value is changed, the horsepower setting value shifts. The power shift pressure Pf (secondary pressure of the electromagnetic proportional pressure reducing valve) passes through the internal pump path and is guided to the horsepower control section of the regulator of each pump, and the horsepower setting value for each pump shifts to the same value.
This mechanism enables the operator to arbitrarily change the pump output power to achieve optimal power according to the operating status.

[3] Flow control
Changing the pilot pressure Pi enables arbitrary control of the pump tilting angle (discharge flow). There are 2 control methods: positive flow control (positive control), in which the discharge flow Q increases as the pilot pressure Pi increases, and negative flow control (negative control), in which the discharge flow Q decreases as the pilot pressure Pi increases. This regulator uses negative flow control.
This mechanism can be used to direct the pilot pressure according to the required flow, thereby enabling the pump to discharge only the required flow and avoiding a needless consumption of power.

This regulator uses the 3 control mechanisms described above, but when combining each of the controls, low tilting (low flow) commands are given priority due to later mechanical additions.

4. Operation Explanation (See Figure 1.)

4-1. Flow control

Use the pilot pressure P_i to arbitrarily control the pump discharge flow as in the figure below.

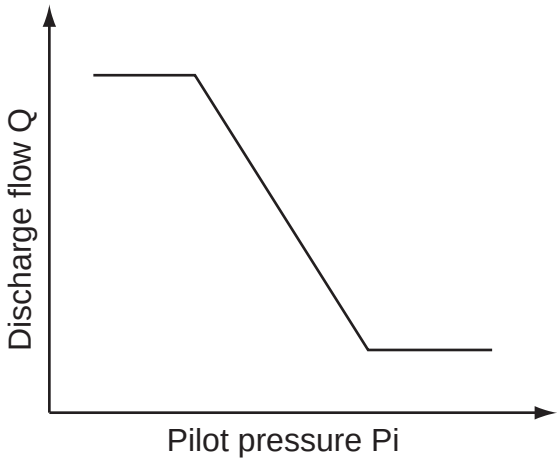

[1] Flow reduction operation

As the pilot pressure Pi increases, the pilot piston (643) moves in the direction of R and stops at the point where the hydraulic pressure force equals the pilot spring (646) force. The pin (875) fixed to the lever (2) (613) is bonded to the grouped groove section of the pilot piston (643). Therefore, as the pilot piston (643) moves, the lever (2) rotates with section B (fixed by the fulcrum plug (614) and pin (876)), as the fulcrum. The pin (897) fixed to the feedback lever (611) protrudes into the large opening (section C) of the lever (2) (613). Therefore, as the lever (2) (613) is rotated, the pin (897) moves in the direction of R. The pin (548) fixed to the tilting pin (531) that shakes the swash plate (212) is bonded to the the 2-side width section (section D) of the feedback lever (611). Therefore, as the pin (897) moves, the feedback lever (611) rotates with section D as the fulcrum. The spool (652) is coupled to the feedback lever (611) via the pin (874), so the spool (652) moves in the direction of R.

As the spool (652) moves, the discharge pressure P_{d1} is guided to the servo piston large-diameter compartment via the spool and C1 port. The discharge pressure P_{d1} is constantly guided to the servo piston small-diameter compartment, resulting in the servo piston moving in the direction of R, depending on the difference in surface area, and a reduction in the flow.

When the servo piston (532) moves in the direction of R, section D also moves in the direction of R. A return spring (654) is mounted on the spool (652), and the spool constantly uses a pulling force in the direction of L. Therefore, the pin (897) is pressed into the large opening (section C) of the lever (2) (613). Consequently, the feedback lever (611) rotates with section C as the fulcrum in accordance with the movement of section D, and the spool (652) moves in the direction of L. Through this movement, the opening between the sleeve (651) and spool (652) gradually starts to close. At the location where it is completely closed, the servo piston (532) stops.

https://truckmanualshub.com/

[2] Flow increase operation

As the pilot pressure Pi decreases, the pilot piston (643) moves in the direction of L according to the force of the pilot spring (646), and the lever (2) (613) rotates with section B as the fulcrum. The pin (897) is pressed into the large opening (section C) of the lever (2) (613) by the return spring (654) via the spool (652), pin (874), and feedback lever (611). Therefore, in accordance with the rotation of the lever (2) (613), the feedback lever (611) rotates with section D as the fulcrum, and the spool (652) moves in the direction of L.

As the spool (652) moves, the CI port opens into the tank port. As a result, the pressure in the servo piston large-diameter compartment bleeds, the servo piston (532) moves in the direction of L in accordance with the discharge pressure P_{d1} of the small-diameter compartment, and the flow increases.

Section D also moves in the direction of L in accordance with the movement of the servo piston (532), the feedback lever (611) rotates with section C as the fulcrum, and the spool (652) moves in the direction of R. This operation continues until the open section between the spool (652) and sleeve (651) closes, and then the servo piston stops at the point the open section fully closes.

[3] High-pressure selection function

The pilot pressure Pi, which serves as the flow control signal, is the pressure for which high pressure is selected from among multiple command pressures via the shuttle valve subassembly (050).

The high pressure is selected from P_{i1} and the secondary pressure of the proportional valve for KR3G-9Y04-HV and from P_{i2} and the external command-pressure P_2 for KR3G-9X04-HV.

4-2. Horsepower control

As the load pressure increases, the pump tilting angle decreases and the overload of the engine stops as in the figure below. This regulator uses the simultaneous full-horsepower control method. Therefore, the tilting angles (displacement) of the 2 pumps are controlled to the same value as indicated in the equation below.

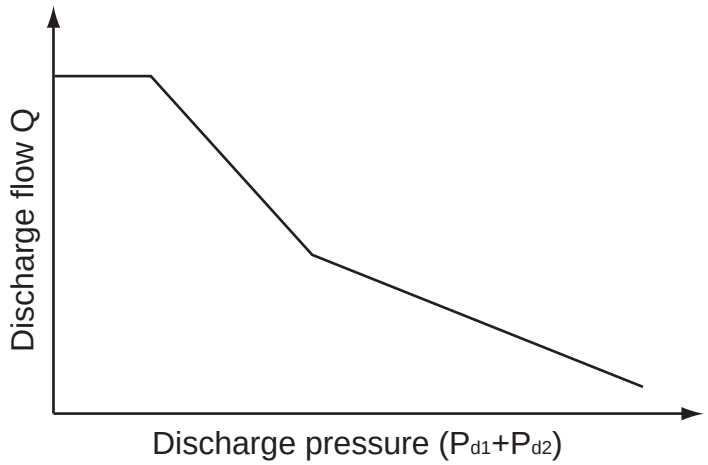

$Tin = P_{d1} \times q/2\pi + P_{d2} \times q/2\pi = (P_{d1} + P_{d2}) \times q/2\pi$ (q: Displacement)

Horsepower control is the same as flow control and is briefly explained below. (For detailed operation of each part, see the Flow control item.)

https://truckmanualshub.com/

[1] Overload prevention operation

When the self pump discharge pressure P_{d1} or the counterpart pump discharge pressure P_{d2} rises, P_{d1} and P_{d2} are used in the stepped section of the compensation piston (621). Therefore, the compensation rod (623) is pressed in the direction of R and moves to the point where the hydraulic pressure force equals the spring force of the outer spring (625) and inner spring (626). The movement of the compensation rod (623) is transmitted to the lever (1) (612) via the pin (875), and the lever (1) (612) rotates around the pin (876) (section E) fixed to the casing (601). The pin (897) fixed to the feedback lever (611) protrudes into the large opening (section F) of the lever (1) (612). Therefore, as the lever (1) (612) is rotated, the feedback lever (611) rotates with section D as the fulcrum, and the spool (652) moves in the direction of R.

As the spool (652) moves, the discharge pressure P_{d1} is guided to the servo piston large-diameter compartment via the CI port, the servo piston (532) moves in the direction of R, the pump discharge flow decreases, and the overload of the engine stops.

The movement of the servo piston (532) is transmitted to the feedback lever (611) via section D, the feedback lever (611) rotates with section F as the fulcrum, and the spool (652) moves in the direction of L. The spool (652) moves until the open section between the spool (652) and sleeve (651) closes, and then the servo piston stops at the point the open section fully closes.

[2] Flow return operation

As the self pump discharge pressure P_{d1} or the counterpart pump discharge pressure P_{d2} decreases, the compensation rod (623) is pressed back by the outer spring (625) and inner spring (626), and the lever (1) (612) rotates around section E. The feedback lever (611) rotates with section D as the fulcrum in accordance with the rotation of the lever (1) (612), and the spool (652) moves in the direction of L. Consequently, the C1 port opens into the tank port, the pressure in the servo piston large-diameter compartment bleeds, the servo piston (532) moves in the direction of L, and the pump discharge flow increases.

The movement of the servo piston (532) is transmitted to the spool (652) by the feedback mechanism, and this operation continues until the open section between the spool (652) and the sleeve (651) closes.

4-3. Low tilting (low flow) command priority mechanism

As described above, the tilting commands of flow control and horsepower control are transmitted to the feedback lever (611) and spool (652) via the large opening (section C and F) of the lever (1) (612) and lever (2) (613). Because section C and F are configured with the pin (ϕ5) protruding into the large opening (ϕ9), the pin (897) only comes in contact with the lever with less tilting, and the ϕ9 opening on the side with greater tilting command remains free without coming into contact with the pin (897). This type of mechanical selection method gives priority to flow control and horsepower control commands with low tilting.

https://truckmanualshub.com/

4-4. Power shift control (decreased horsepower control)

Use the power shift pressure Pf to arbitrarily control the pump set horsepower as in the figure below.

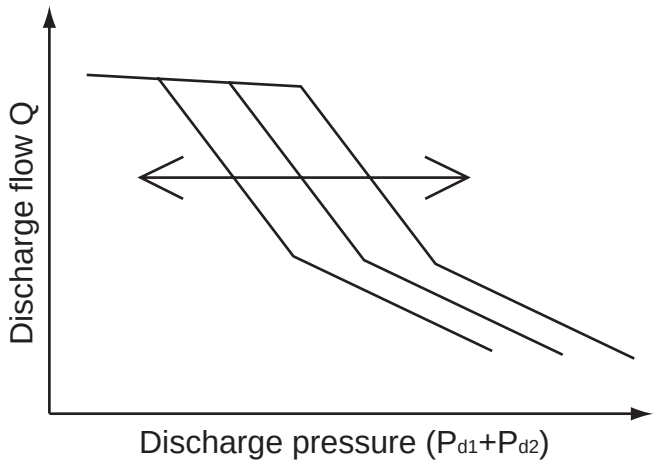

As the power shift pressure Pf increases, the compensation rod (623) moves in the direction of R via the pin (898) and compensation piston (621). Therefore, the pump tilting angle decreases and the horsepower setting decreases as described in the overload protection operation for horsepower control. By contrast, as the power shift pressure Pf decreases, the horsepower setting increases.

https://truckmanualshub.com/

5. Regulator Adjustment

The adjusting screws (953, 954) on this regulator can be used to adjust the maximum flow, minimum flow, horsepower control properties, and flow control properties. (Table 1 shows the adjustments and changes that can be made.

5-1. Maximum flow adjustment (on the pump main unit)

Loosen the hexagon nut (806) and tighten (or loosen) the locking screw (954) to adjust the maximum flow. This only changes the maximum flow. It does not change the other control properties.

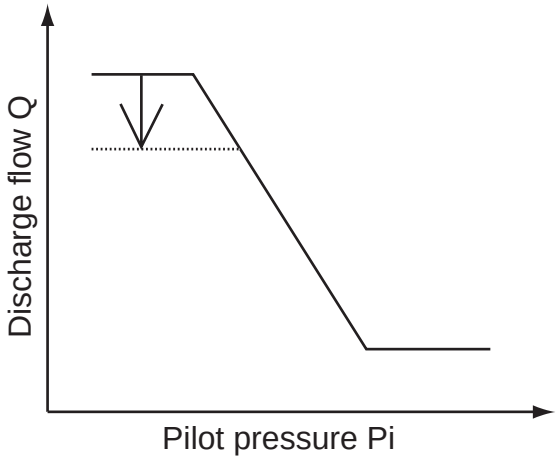

5-2. Minimum flow adjustment (on the pump main unit)

Loosen the hexagon nut (807) and tighten (or loosen) the hexagon socket head locking screw (953) to adjust the flow control properties. Similar to the maximum flow adjustment, this does not change other control properties. However, if the hexagon socket locking screw is loosened too much, the required power may increase at the time of maximum discharge pressure (during relief), so adjust this carefully.

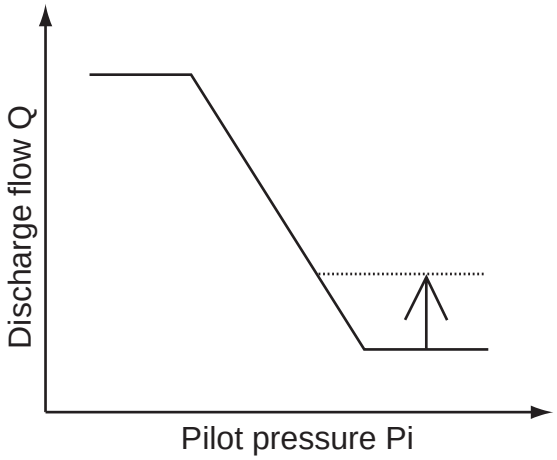

https://truckmanualshub.com/

5-3. Input horsepower adjustment

This regulator uses the simultaneous full-horsepower method. Therefore, when changing the horsepower setting, adjust the adjusting screw (C) (628) of both the front and rear pumps to the same amount. The adjusted pressure value is the value when both pumps are simultaneously increased.

[1] Outer spring adjustment

Loosen the hexagon nut (630) and tighten (or loosen) the adjusting screw (C) (628) to adjust the outer spring. As the adjusting screw (C) (628) is tightened, the control diagram shifts to the right, as in the figure below, and the input horsepower increases. When the adjusting screw (C) (628) is rotated N, the inner spring (626) setting also changes. Therefore, return the adjusting ring (C) (627) by rotating it N × A in the opposite direction.

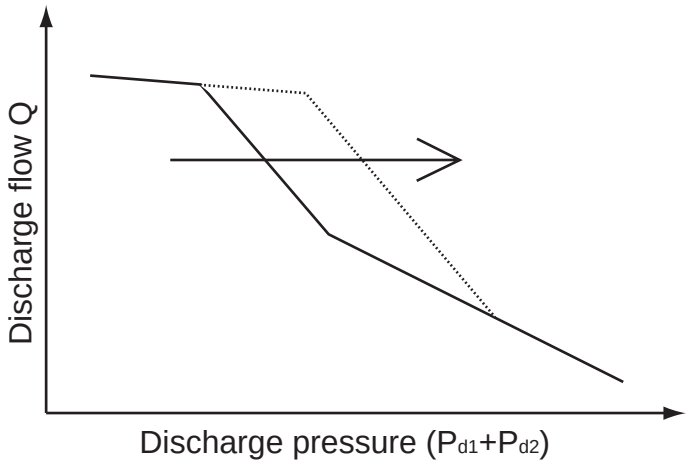

[2] Inner spring adjustment

Loosen the hexagon nut (802) and tighten (or loosen) the adjusting ring (C) (627) to adjust the inner spring. As the adjusting ring (C) (627) is tightened, the flow increases, as in the figure below, and the input horsepower increases.

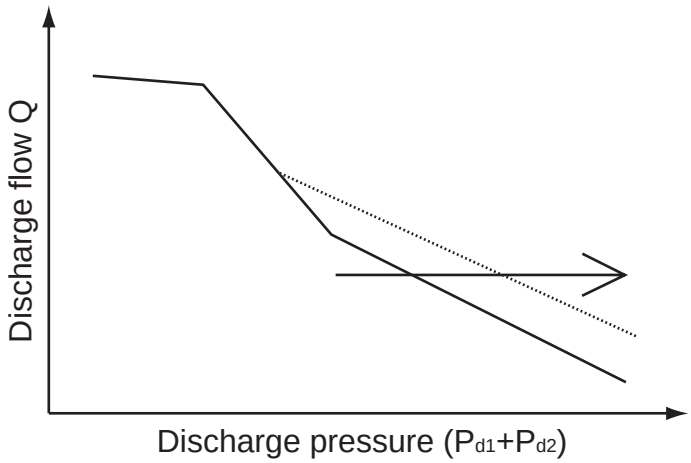

https://truckmanualshub.com/

5-4. Flow control properties adjustment

Loosen the hexagon nut (801) and tighten (or loosen) the hexagon socket head locking screw (924) to adjust the flow control properties. As the hexagon socket head locking screw (924) is tightened, the control diagram shifts to the right as in the figure below.

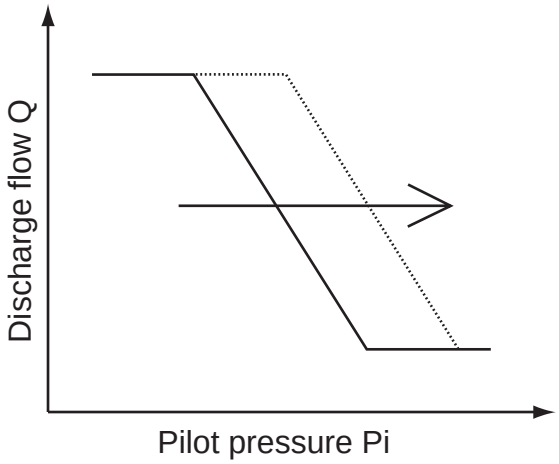

https://truckmanualshub.com/

6. Causes and Solutions for Regulator Trouble

If a malfunction occurs that is thought to be a result of the regulator, disassemble and inspect the regulator while referring to the maintenance procedures.

6-1. Flow control properties adjustment

Apply a single load to each pump and investigate whether there is a problem with the front or rear pump. If there is a problem with both pumps, see steps (1) and (2) below. If there is a problem with only per side, start from step (3).

(1) Inspect whether the power shift command current value $_I$ is correct.

(2) Power shift pressure (Pf) is low. → Inspect the amp dither.
→ Replace the electromagnetic proportional pressure reducing valve.

(3) Sticking of the compensation piston (621) and compensation rod (623) → Disassemble and clean.

(4) Sticking of the pin (898) → Disassemble and clean.

6-2. When no maximum flow is output

(1) Check whether the pilot pressure P_i is correct.

(2) Sticking of the pilot piston (643) → Disassemble and clean.

(3) Sticking of the spool (652) → Disassemble and clean.

(Note) If any parts have deep scratches, replace those parts.

https://truckmanualshub.com/

7. Figures and Tables

Table 1. Regulator adjustment amount table

Flow control properties adjustment		Flow change (l/min.)	+11.7
		Flow control start pressure change MPa	+0.15
		Adjusting screw (924) Tightening amount (rotation)	+1/4
Input horsepower adjustment	Inner spring adjustment	Input torque change N•m	+44.2
		Flow change (l/min.)	+8.5
		Adjusting ring (627) Tightening amount (rotation)	+1/4
	Outer spring adjustment	A	1.87
		Input torque change N•m	+57.9
		Compensation control start pressure change MPa	+1.88
		Adjusting screw (628) Tightening amount (rotation)	+1/4
Minimum flow adjustment		Flow change (l/min.)	+4.1
		Adjusting screw (953) Tightening amount (rotation)	+1/4
Maximum flow adjustment		Flow change (l/min.)	-5.2
		Adjusting screw (954) Tightening amount (rotation)	+1/4
Engine speed ($min.^{-1}$)			1800

5-11 Upper Swing Body: Pump

Figure 1. Regulator operation explanation diagram

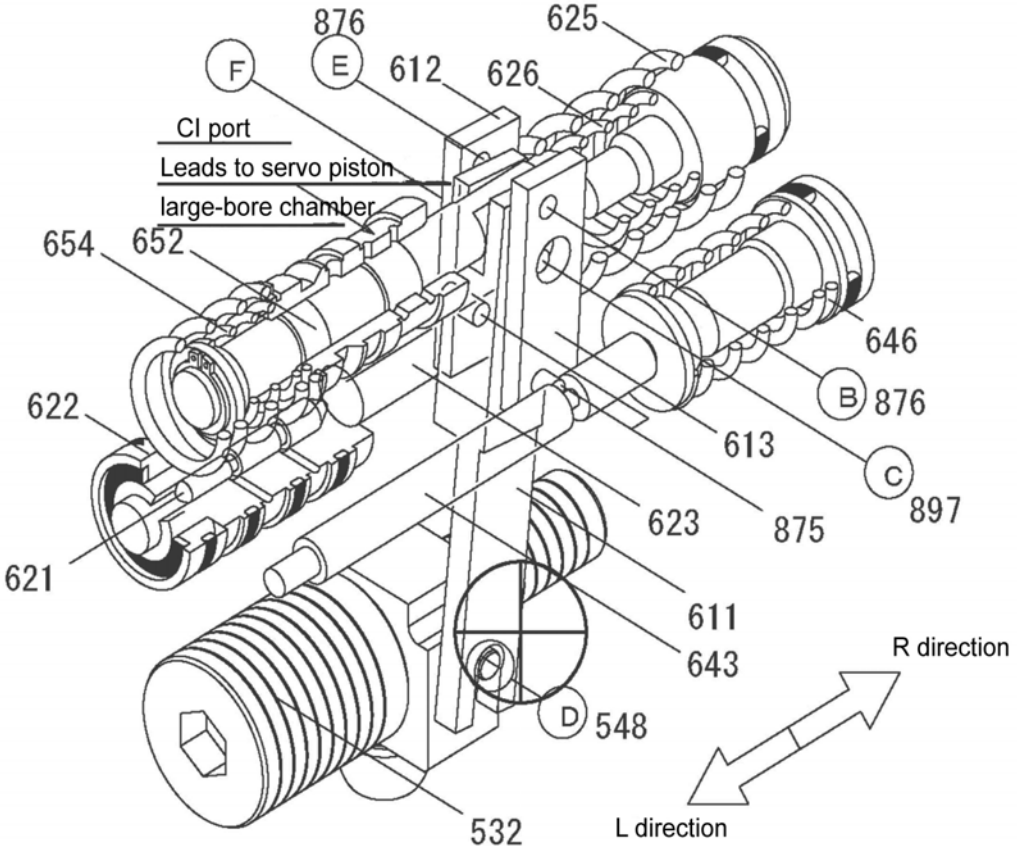

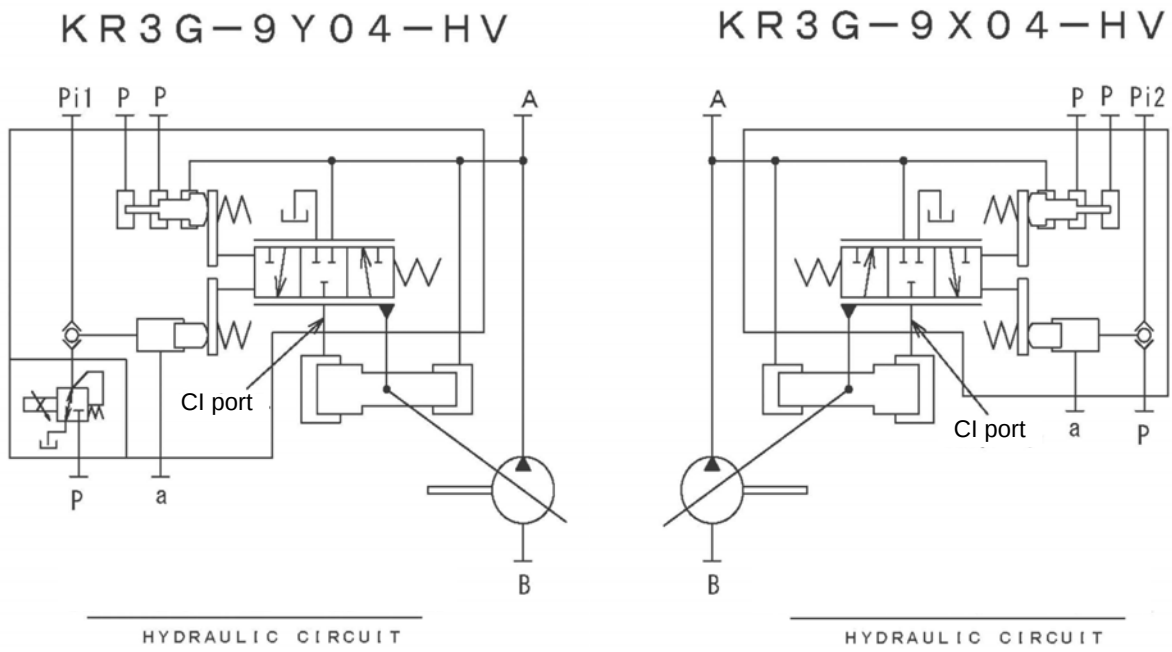

https://truckmanualshub.com/

Figure 2-1. Regulator assembly cross-section diagram (KR3G-9X04-HV)

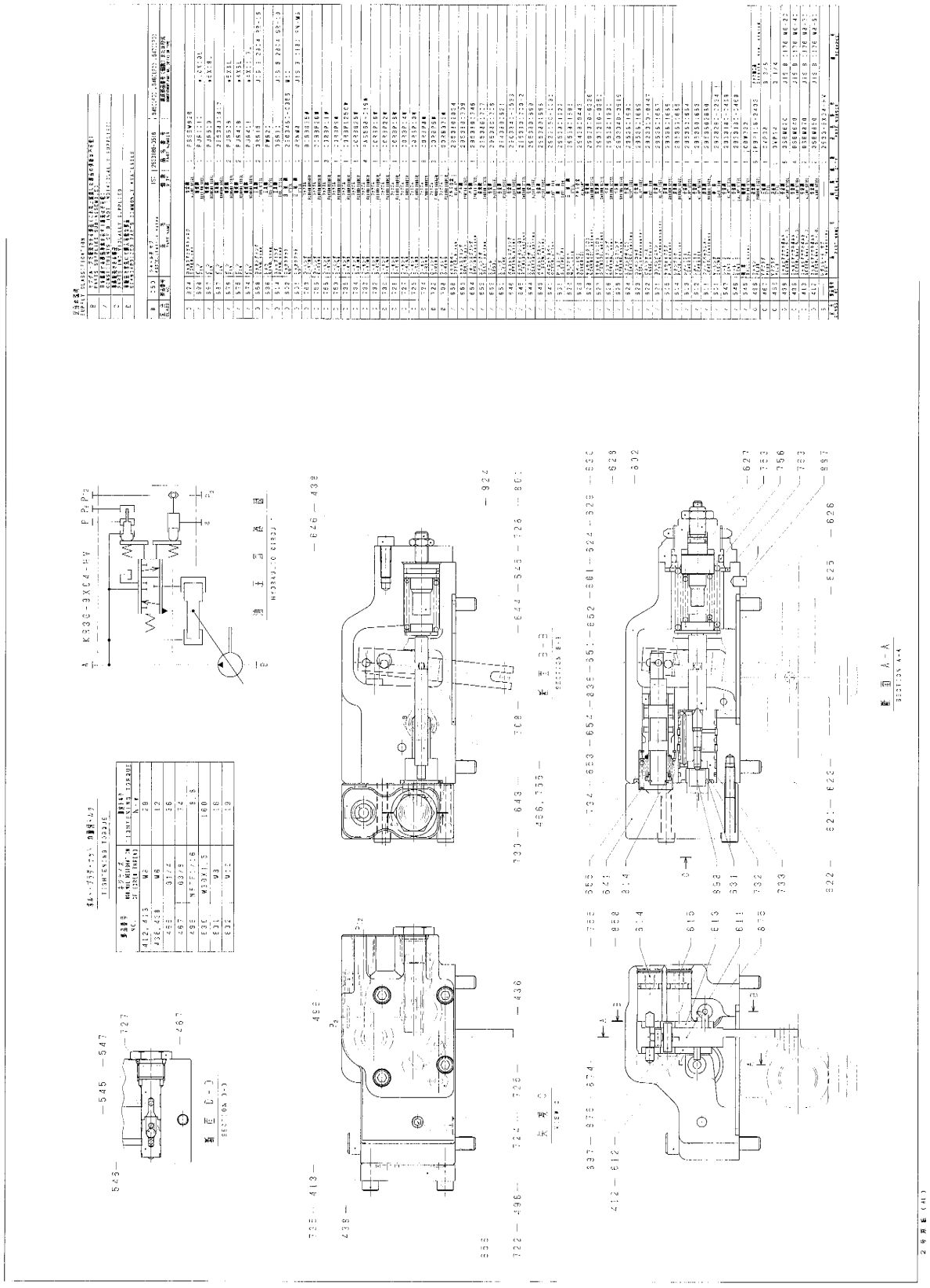

5-11 Upper Swing Body: Pump

Figure 2-2. Regulator assembly cross-section diagram (KR3G-9Y04-HV)

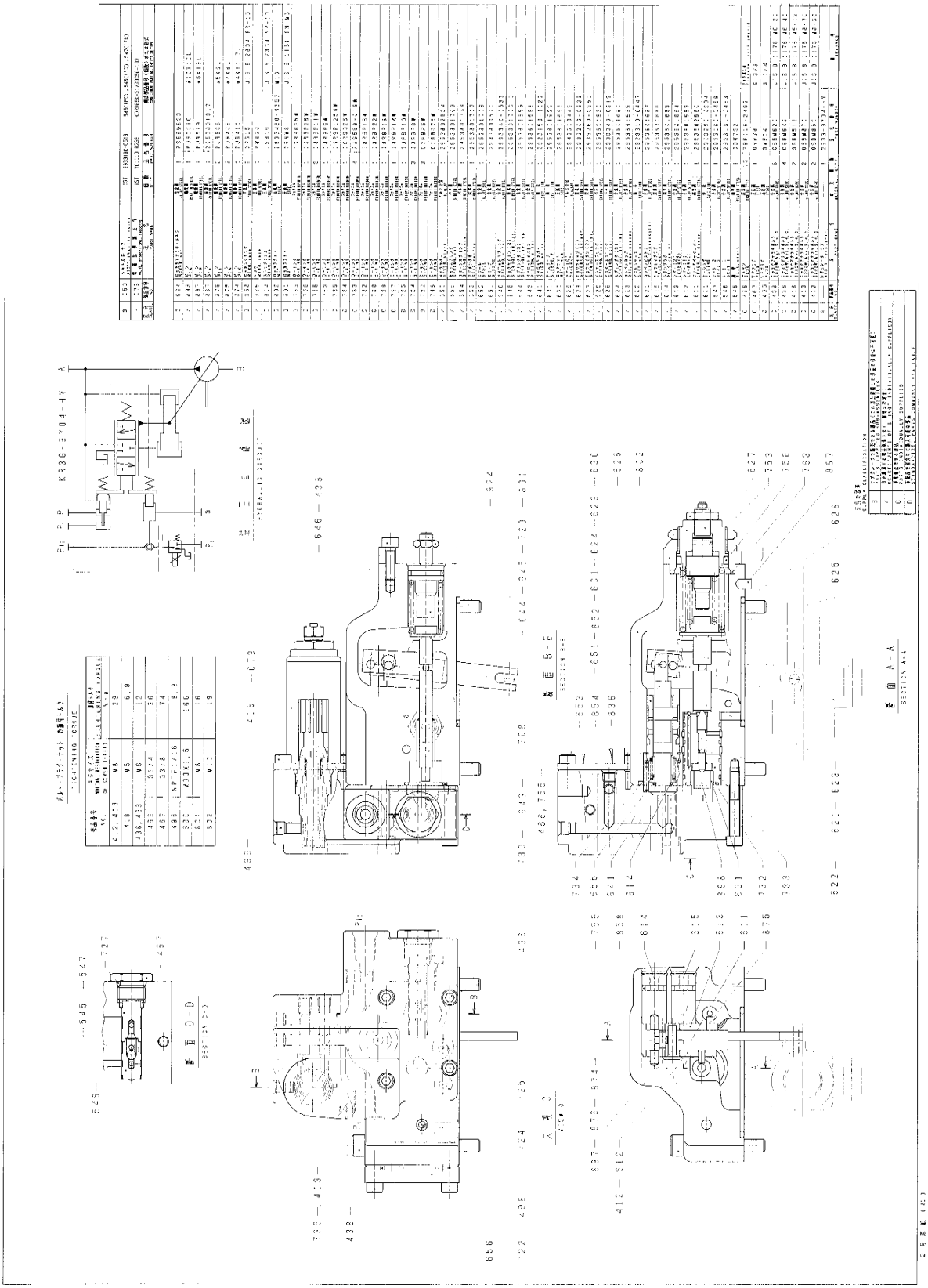

Figure 3-1. Regulator breakdown (KR3G-9X04-HV)

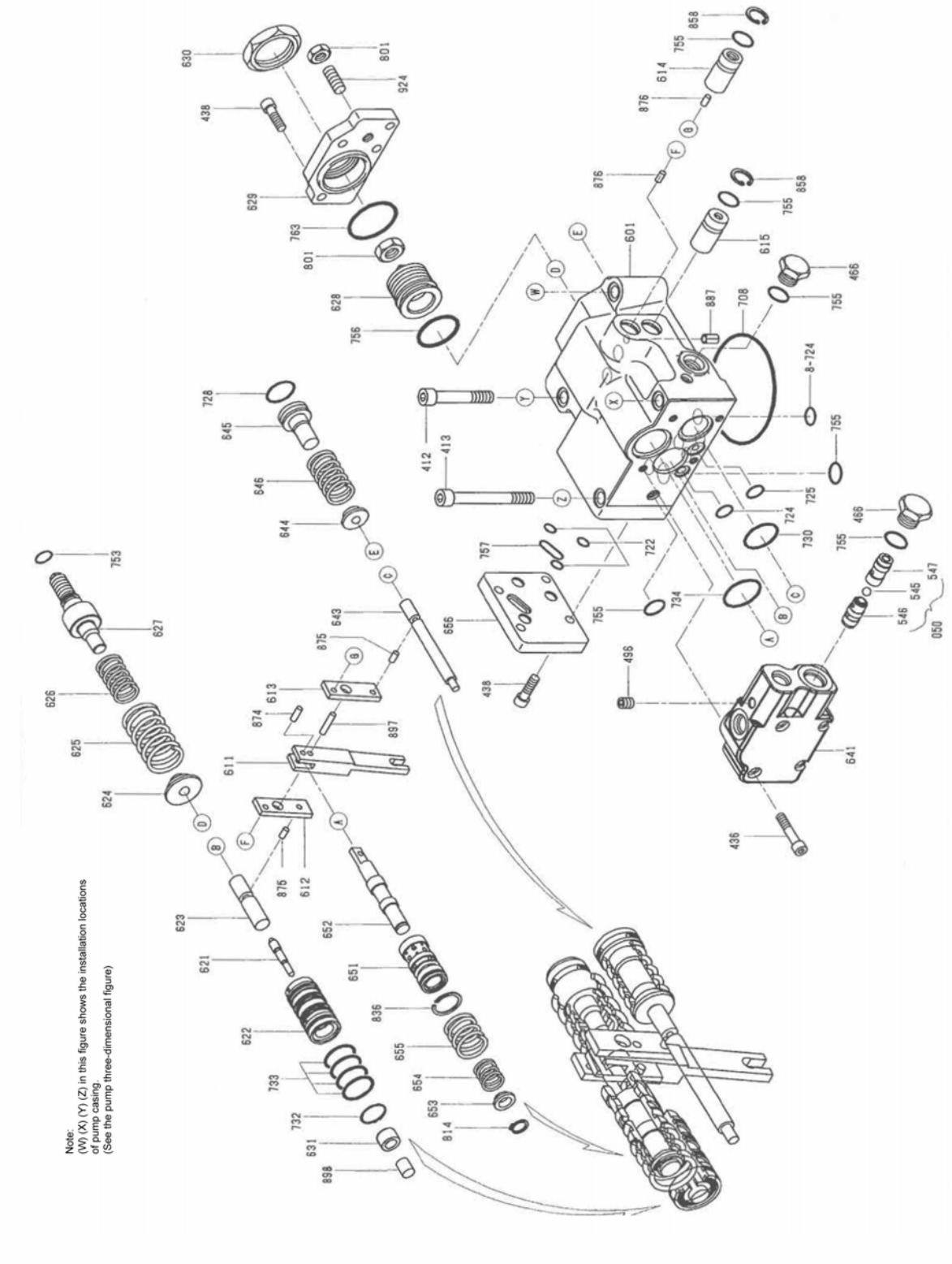

5-11 Upper Swing Body: Pump

Figure 3-2. Regulator breakdown (KR3G-9Y04-HV)

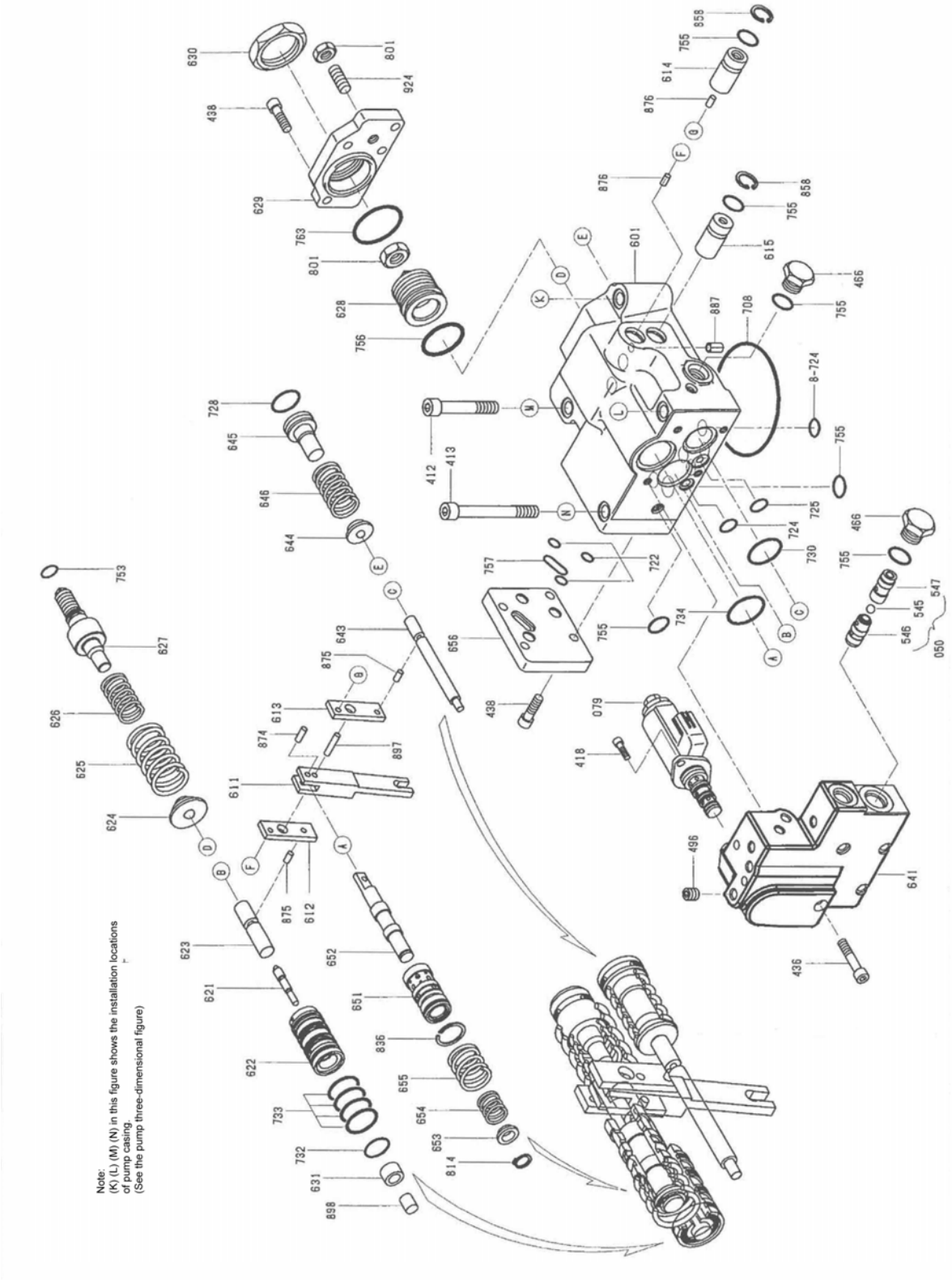

https://truckmanualshub.com/

4 Regulator Disassembly and Assembly Procedures

1. Tools

The table below shows the tools required for the disassembly and assembly of KR3G-9*04-HV.

Tool name and dimensions		Required tools are indicated with ○	Part name			
Name	B		Hexagon socket head bolt (shouldered bolt)	PT mounted valve (PT screw)	ROH plug (PF screw)	Hexagon socket head stop screw
Hexagon bar wrench	2		-	-	-	M4
	2.5		-	-	-	M5
	3		-	-	-	M6
	4	○	M5	BP-1/16	-	M8
	5	○	M6	BP-1/8	-	M10
	6	○	M8	BP-1/4	ROH-1/4	M12 M14
	8		M10	BP-3/8	ROH-3/8	M16 M18
	10		M12	BP-1/2	ROH-1/2	M20
	12		M14	-	-	-
	14		M16 M18	BP-3/4	ROH-3/4	-
	17		M20 M22	BP-1	ROH-1	-
	19		M24 M27	-	-	-
Closed wrench Socket wrench Double-head (single-head) wrench	22		-	-	VP-3/8	-
	24		M16	M16		-
	27		M18	M18	VP-1/2	-
	30		M20	M20		-
	36		-	-	VP-3/4	-
	41		-	-	VP-1	-
	46		M30	M30	-	-
	50		-	-	VP-11/4	-
	55		-	-	VP-11/2	-
Monkey wrench	-	○	Medium-sized × 1			
Screwdriver	-	○	Medium-sized flathead screwdriver × 1			
Pliers	-	○	For stop ring TSR-150			
	-	○	For locking ring TRR-150			
Torque wrench	-	○	With adjustable specified torque tightening			
Steel rod	-	○	Diameter ϕ4 or less L = 100			
Hexagon socket head bolt	-	○	For pulling out adjusting ring M4, L = approximately 50			

https://truckmanualshub.com/

2. Disassembly Preparations

[1] These regulators are configured with small precision parts, so disassembly and assembly requires rather complex operations. Read the entire section below on the maintenance procedures, and follow the procedure for disassembling the pump.

[2] The pressure-flow settings of the front side regulator and rear side regulator differ, so mark the regulators when disassembling to differentiate between the drive side and the driven side.

[3] The numbers in parentheses after the part names indicate the codes in the cross-section diagrams of Figures 1 and 2 (pages 9 and 10).

https://truckmanualshub.com/

3. Disassembly Procedure

[1] Select the location for disassembling the regulator.
- Find a clean location to disassemble the regulator.
- Place a rubber plate or cloth on the work table so as not to damage the parts.

[2] Use cleaning oil to remove any dirt or rust from the surface of the regulator.

[3] Remove the hexagon socket head bolt (438), and remove the cover (C) (629).
- The cover (C) is assembled with an adjusting screw (C) (628), adjusting ring (C) (627), lock nut (630), hexagon nut (801), and hexagon socket head stop screw (924). Do not loosen these screws and nuts. Doing so changes the adjusted pressure-flow setting.

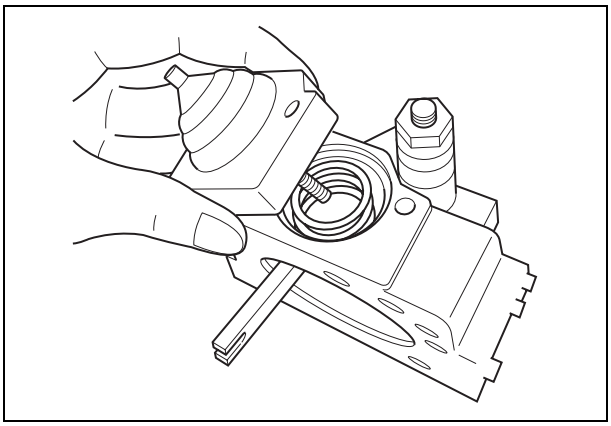

[4] After removing the cover (C) (629) subassembly, remove the outer spring (625), inner spring (626), and spring seat (C) (624) from the compensation section, and pull out the adjusting ring (Q) (645), pilot spring (646), and spring seat (644) from the pilot section.
- The adjusting ring (Q) (645) can be easily removed by pulling it out with an M4 bolt.

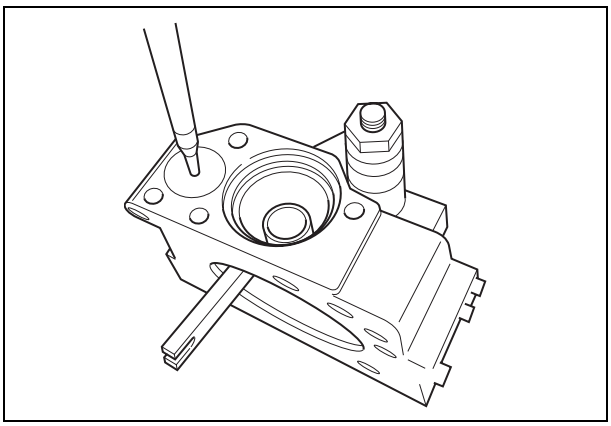

[5] Remove the hexagon socket head bolt (439), and remove the pilot cover (641).
Remove the pilot cover (641), and remove the pin 2 (898) and Pf sleeve (631) from the compensation section and the set spring (655) from the pressure adjustment section.

[6] Remove the stop ring (814), and remove the spring seat (653), return spring (654), and sleeve (651).
- The sleeve (651) is assembled with a snap ring (836).
- When removing the stop ring (814), the return spring (654) flies out, so be careful not to lose this part.

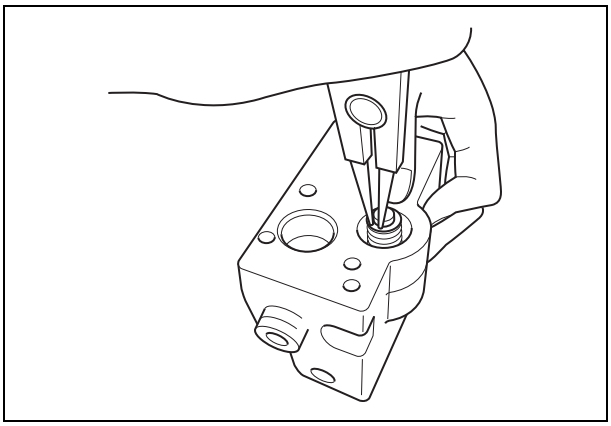

https://truckmanualshub.com/

[7] Remove the locking ring (858), and remove the fulcrum plug (614) and adjusting plug (615).
- The fulcrum plug (614) and adjusting plug (615) can be easily removed by pulling them out with an M6 bolt.

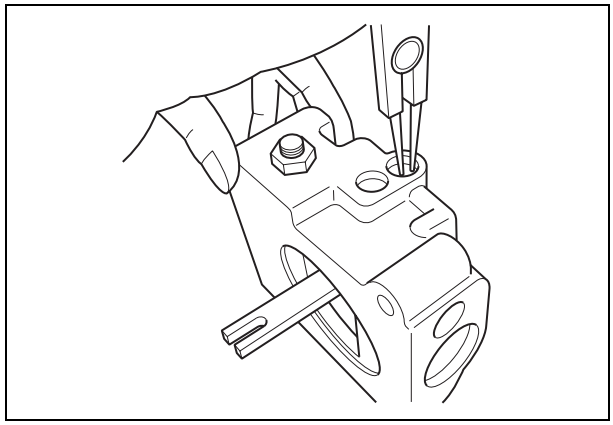

[8] Remove the lever (2) (613). Do not pull out the pin (875).
- This can be easily removed by using a pair of tweezers.

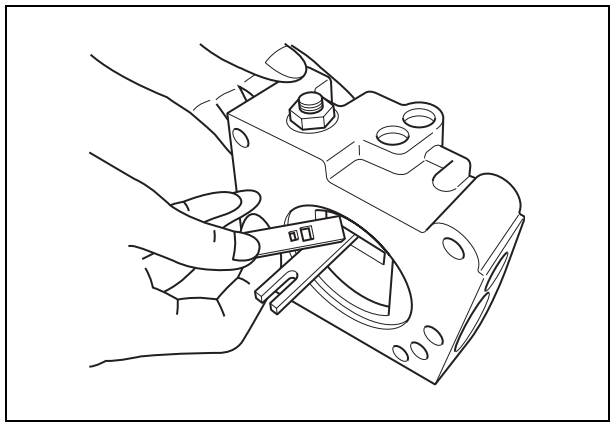

[9] Pull out the pin (874), and remove the feedback lever (611).
- Use a fine steel rod to push out the pin (874) (pin diameter ϕ4) from above without touching the lever (1) (612).

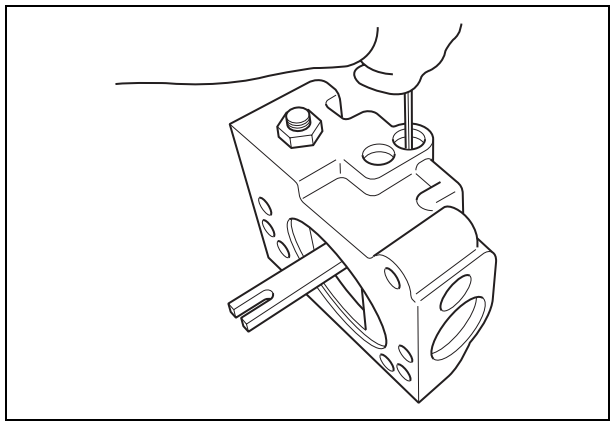

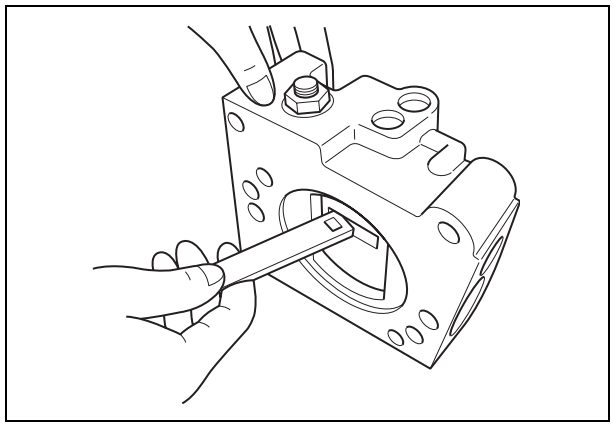

https://truckmanualshub.com/

[10] Remove the lever (1) (612). Do not pull out the pin (875).

[11] Pull out the pilot piston (643) and spool (652).

[12] Pull out the piston case (622), compensation piston (621), and compensation rod (623).
- The piston case (622) can be removed by pushing out the compensation rod (623) from the opposite side of the piston case (622).

[13] Remove the hexagon socket head bolt (418), and remove the electromagnetic proportional pressure reducing valve (079) from the pilot cover (641). The regulator main unit is now disassembled.
- This operation is only for KR3G-9Y04-HV.
- Be careful not to damage the connector of the electromagnetic proportional pressure reducing valve (079).

(Caution) (1) The component parts are small, so be very careful not to lose them.

https://truckmanualshub.com/

4. Assembly Procedure

The assembly procedure is the reverse of the disassembly procedure. However, follow the precautions below.

1) Be sure to repair any parts damaged during disassembly, and prepare replacement parts in advance.

2) Any foreign matter entering the equipment can create a malfunction. Therefore, after thoroughly cleaning the equipment with cleaning oil, air blow the equipment, and assemble in a clean location.

3) Be sure to coat sliding parts with clean hydraulic oil before assembling.

4) As a rule, replace all O-rings and other seal parts with new parts.

5) Use a torque wrench to tighten all installation bolts and plugs to the standard torque specified in the "Maintenance Standards".

[1] Select the location for assembling the regulator.
- Find a clean location to assemble the regulator.
- Place a rubber plate or cloth on the work table so as not to damage the parts.

[2] Assemble the compensation rod (623) into the compensation opening on the casing (601).

[3] Insert the pin (875) injected in the lever (1) (612) into the groove on the compensation rod (623), and assemble the lever (1) (612) to the pin (875) injected in the casing (601).

[4] Assemble the spool (652) and sleeve (651) into the casing (601) and spool (652) opening.
- Check that the spool (652) and sleeve (651) slide smoothly into the casing (601) without catching.
- Be careful to assemble the spool (652) in the correct direction.

[5] Assemble the feedback lever (611), and insert the pin (874) while aligning it with the pin opening on the feedback lever (611).
- This is easier to assemble by inserting the pin (874) into the feedback lever (611) in advance.
- Be careful to assemble the feedback lever (611) in the correct direction.

[6] Assemble the pilot piston (643) into the pilot (643) opening on the casing (601).
- Check that the pilot lever (643) slides smoothly without catching.

https://truckmanualshub.com/

[7] Insert the pin (875) press fitted in the lever (2) (613) into the groove on the pilot piston (643), and assemble the lever (2) (613).

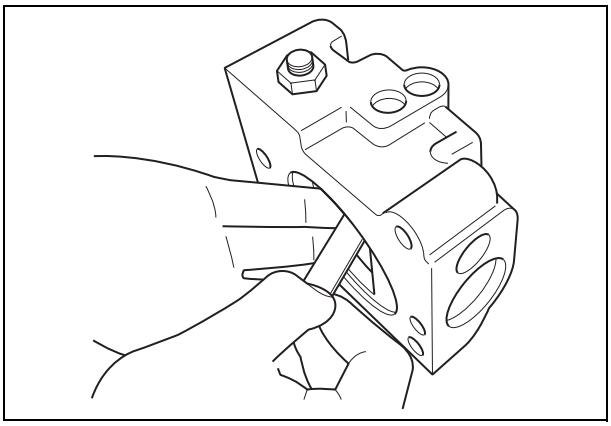

[8] Assemble the fulcrum plug (614) and install the locking ring (858) so that the pin (875) press fitted in the fulcrum plug (614) is inserted into the pin opening on the lever (2) (613).

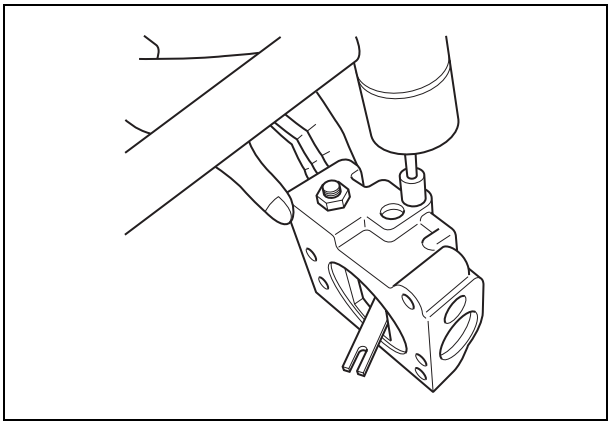

[9] Insert the adjusting plug (615), and install the locking ring (858).
- Be careful to insert the fulcrum plug (614) and adjusting plug (615) into the correct insertion hole.
- At this time, check that play of the feedback lever (611) movement is not too great and that the feedback lever (611) does not catch on anything.

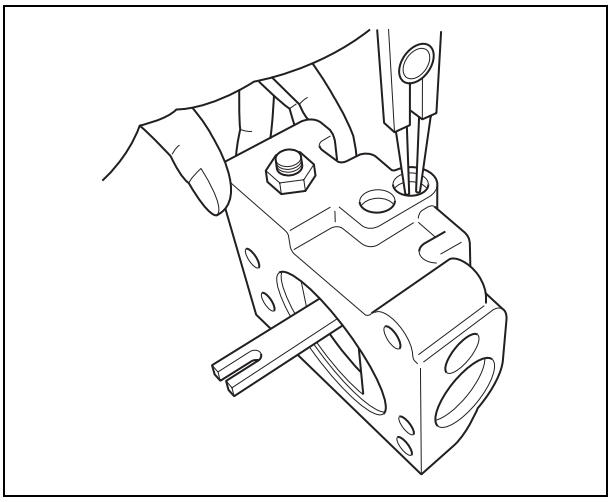

[10] Assemble the return spring (654) and spring seat (653) into the spool (652) opening, and install the stop ring (814).

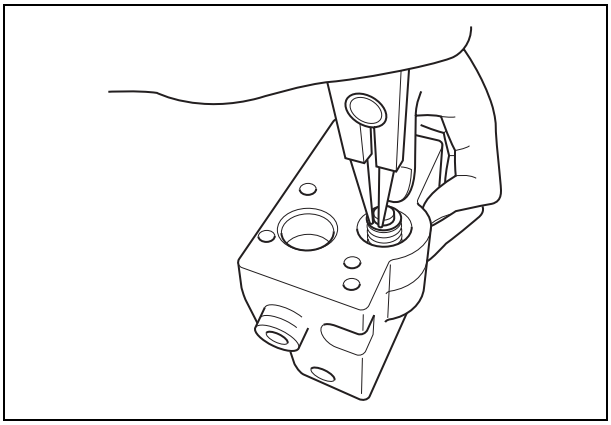

https://truckmanualshub.com/

[11] Assemble the set spring (655) into the spool (652) opening, and assemble the compensation piston (621), piston case (622), Pf sleeve (631), and pin (898) into the compensation opening.
- Check that the Pf sleeve (631) and pin 2 (898) move smoothly.

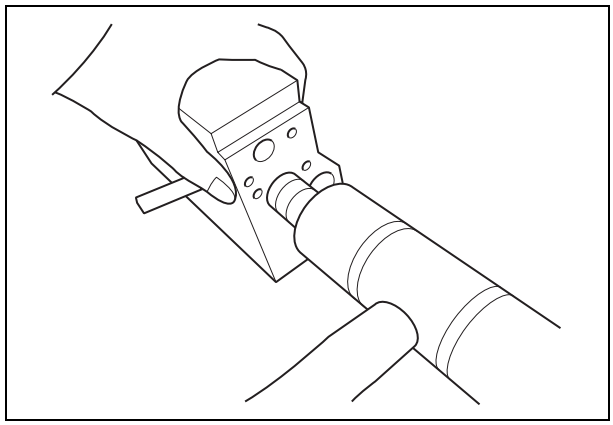

[12] Assemble the electromagnetic proportional pressure reducing valve (079) to the pilot cover (641), and tighten the hexagon socket head bolt (418).
- This operation is only for KR3G-9Y04-HV.
- Be careful not to damage the connector of the electromagnetic proportional pressure reducing valve (079).

[13] Assemble the pilot cover (641), and tighten the hexagon socket head bolt (439).

[14] Assemble the spring seat (Q) (644), pilot spring (646), and adjusting ring (Q) (645) into the pilot opening, and assemble the spring seat (Q) (644), inner spring (626), and outer spring (625) into the compensation opening.
- Be careful to assemble the spring seat (Q) (644) in the correct direction.

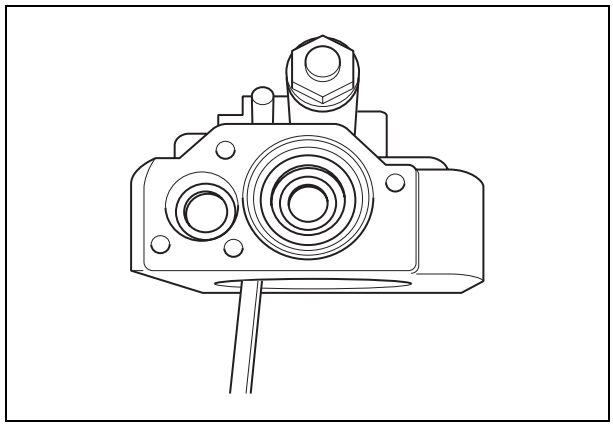

[15] Assemble the cover (C) (629) with the set adjusting screw (C) (628), adjusting screw (Q) (925), adjusting ring (C) (627), lock nut (630), hexagon nut (801), and hexagon socket head screw (924), and tighten the hexagon socket head bolt (438). The regulator main unit is now assembled.

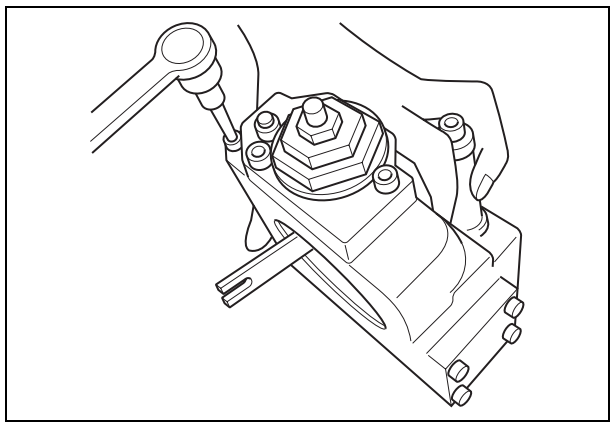

Figure 1. Regulator assembly cross-section diagram (KR3G-9X04-HV)

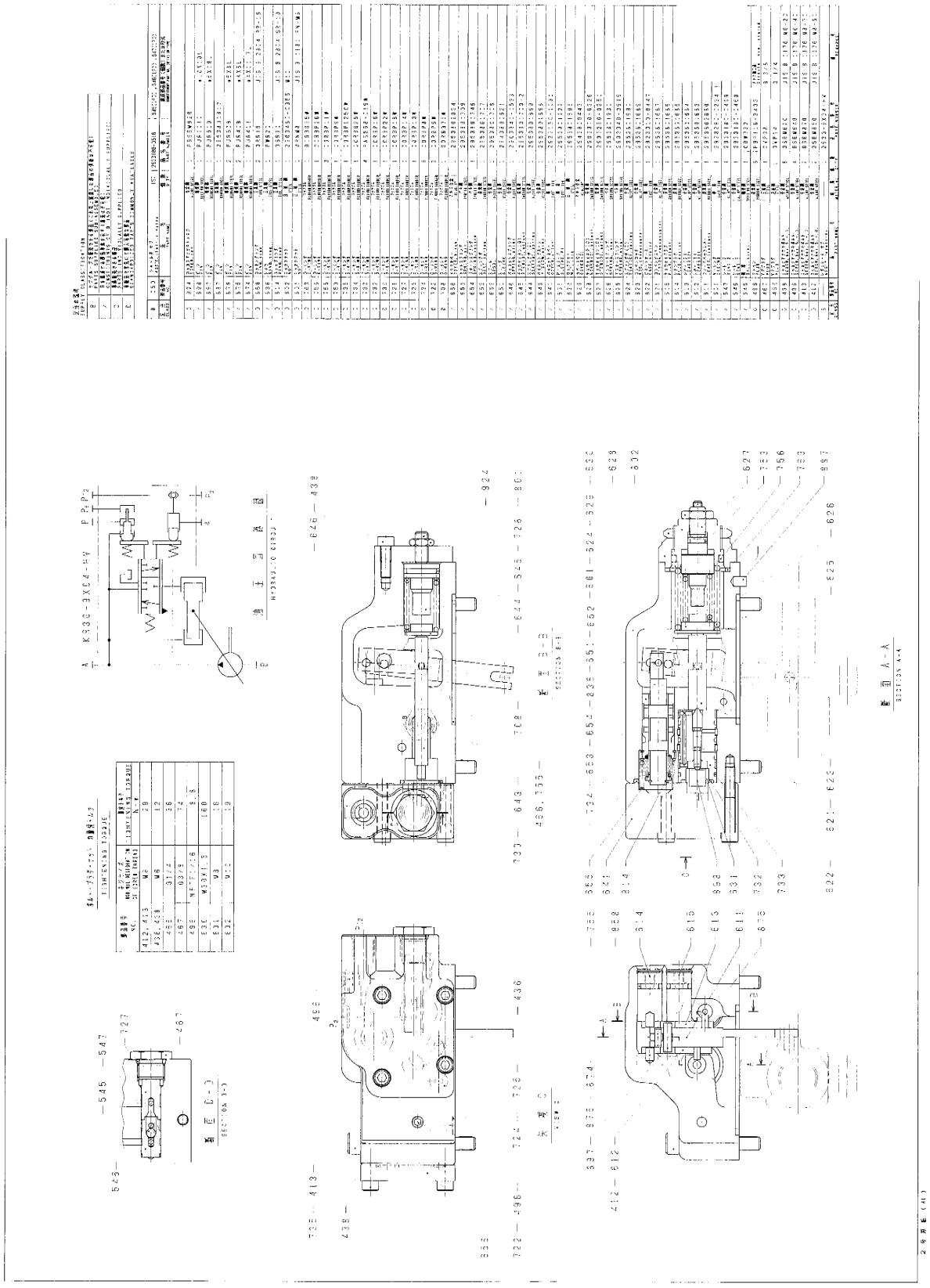

5-11 Upper Swing Body: Pump

Figure 2. Regulator assembly cross-section diagram (KR3G-9Y04-HV)

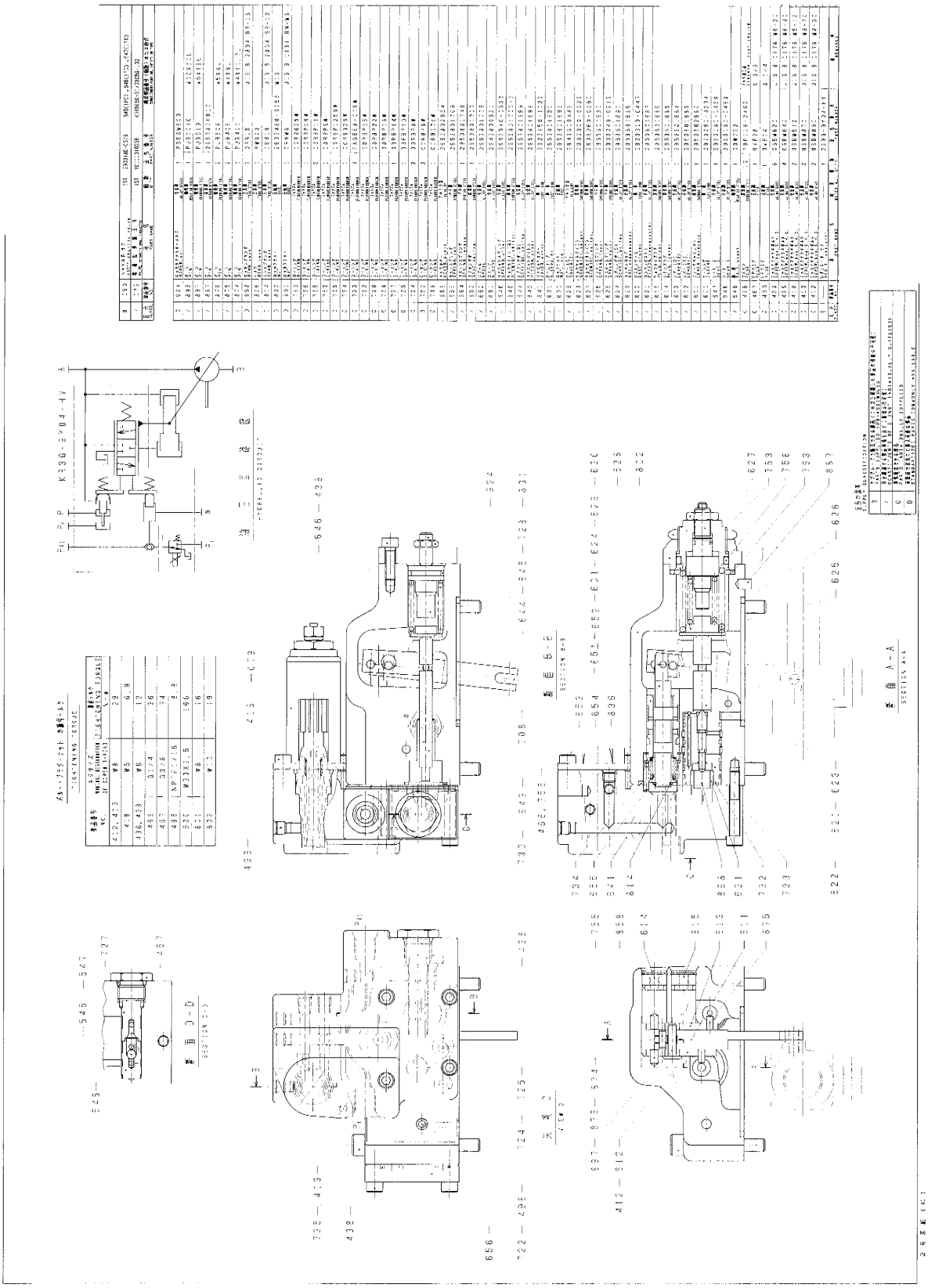

Figure 3. Regulator parts breakdown (KR3G-9X04-HV)

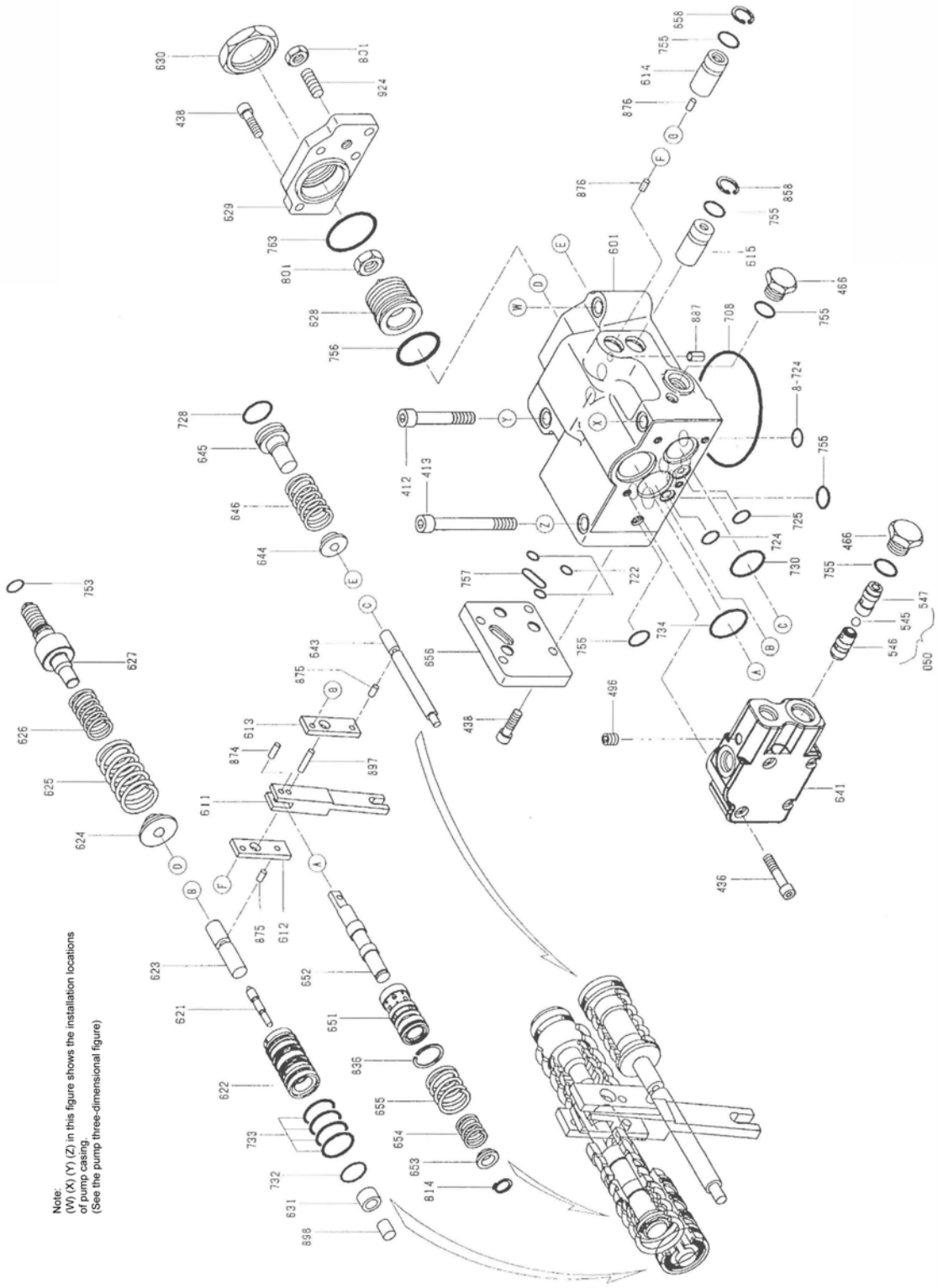

5-11 Upper Swing Body: Pump

Figure 4. Regulator parts breakdown (KR3G-9Y04-HV)

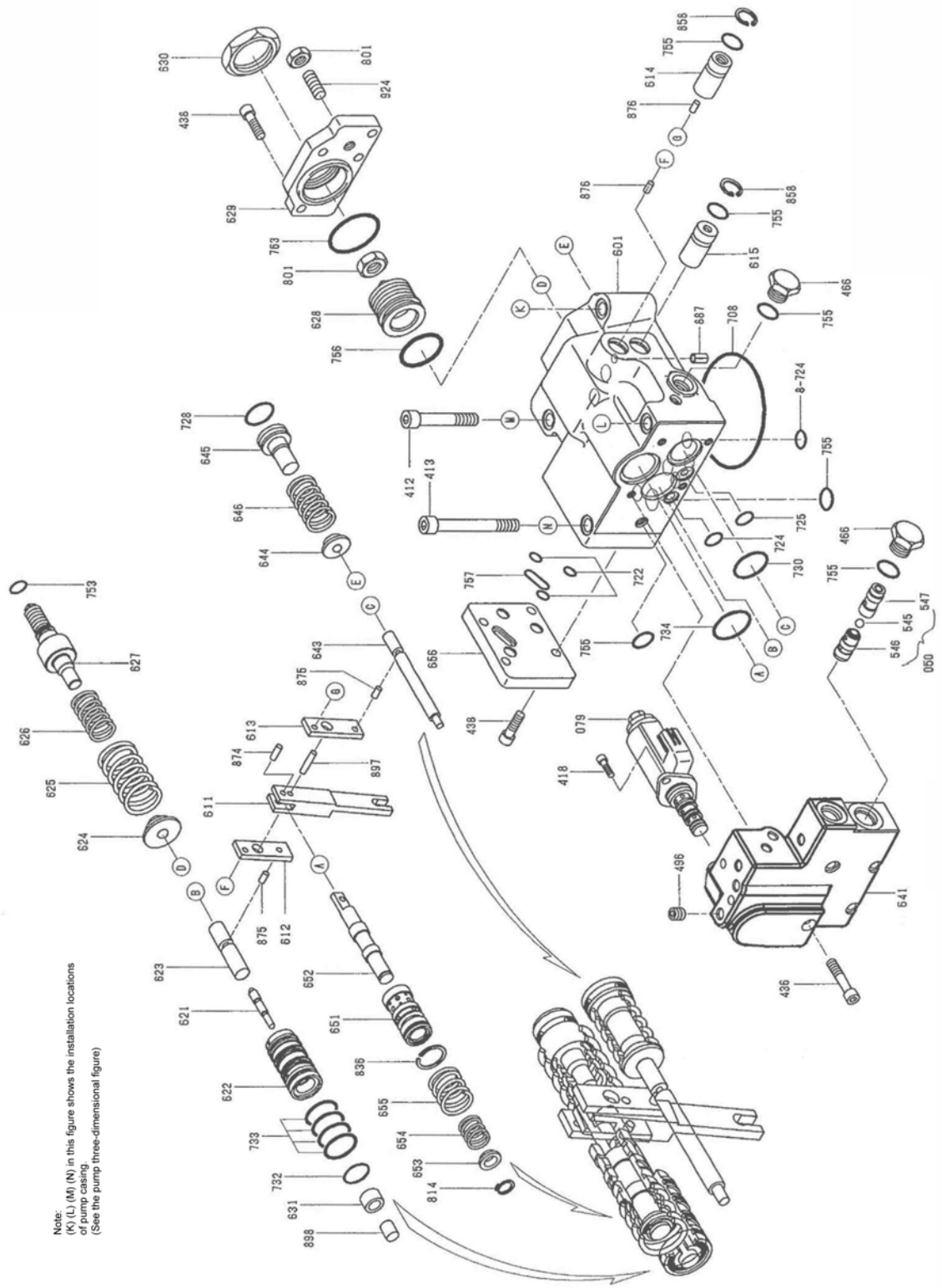

https://truckmanualshub.com/

1 Explanation of Pilot Valve Operation

1. Safety instructions

[1] Note on operation manual

To use this device or equipment safely, throughy read this Operation Manual and understand its contents before starting the device, operating equipment or before starting inspection or maintenance. Always read and follow instructions in the "Safety Precautions" section.

Keep the Operation Manual close at hand during operation. Also, keep it in a safe place if the machine is in storage.

[2] Safety precautions

Before using this device or equipment, read and follow the instructions in the "Safety Precautions" sections.

This cautionary information is given to allow operator or service person to use this device or equipment safely and correctly and to prevent injury to the operator or other people and any damage to the device or equipment. Also, the cautionary information is given in either of two categories: **"Warnings"** and **"Cautions"** so that the operator or service person can easily identify the degree of danger or damage if the device or equipment is handled incorrectly. Always follow these precautions as they contain important safety information.

Warning	Death or severe injury to the operator may result due to incorrect operation of the device or equipment.

Caution	Injury to the operator or physical damage may result due to incorrect operation of the device or equipment.

1) Safety instructions during device/equipment operation

Always follow the instructions below when operating or using the device or equipment.

Warnings	(1) Make sure that there is no person or obstacle in the working area of the machine equipment before operating the device or equipment. (2) If the machine equipment seems to operate abnormally or in a dangerous manner, immediately shut the hydraulic system down. (3) If abnormal conditions (such as abnormal noise or oil leakages) are found, immediately stop the machine operation and take appropriate corrective actions. Otherwise, personal injury or damage to the machine may result.

Cautions	(1) When you operate the device or equipment for the first time, make sure that the hydraulic circuit and electric wiring are correctly connected, and that connectors and joints are secured. (2) Do not use the device or equipment if its specifications differ from those given on the dimensional outline drawing. (3) Protect the skin from direct contact. It may result in injury. The device or equipment can become hot due to the increased oil temperature during machine operation. (4) Always use the specified grade of hydraulic oils and replace the contaminated oils as recommended. Otherwise, operation failure or damage may result in machine. (5) Be sure to install the filter that has been specified on the dimensional outline drawing, at the inlet of device or equipment.

https://truckmanualshub.com/

2) Safety instructions during device/equipment operation

Always follow the instructions below when operating or using the device or equipment.

⚠ **Cautions**	(1) To prevent injury when handling the device or equipment, wear the protective gear if necessary. (2) Carefully operate or service the device or equipment because as the equipment is heavy, incorrect use may result in backache or your fingers being pinched. (3) Do not get onto the device or equipment. Also, do not hit, drop or apply external forces. It may result in operation failure, damage, or oil leakage. (4) If the device, equipment or the floor is contaminated with hydraulic oil, wipe and clean it away. Otherwise, people may slip and hurt themselves or the device or equipment may fall to the floor.

3) Cautions during installation or removal of device/equipment

⚠ **Cautions**	(1) Before operating or servicing the device or equipment, be sure to turn the power OFF and make sure that the electric motor, engine and other machinery has stopped. Also, make sure that the pressure inside the hydraulic pipe has dropped to zero (0). Release the residual pressure of the accumulator circuit by operating its control lever more than 10 times. (2) Only authorized people should carry out the installation, removal, piping, wiring and other tasks related to the device or equipment. (Authorized people refers to Japanese Class-2 qualified engineers, or technicians who has a basic knowledge of hydraulic system adjustment, or who has completed the Service Training Course of our Department.) (3) Clean the parts mounting holes and surfaces. Otherwise, the bolts may not be secured, or a seal may be damaged, which may result in damage to the device or equipment, or oil leakage. (4) When installing the device or equipment, always use the specified bolts and tighten them to the specified torque, otherwise an operation failure, part damage, or oil leakage may occur.

4) Cautions for maintenance and storage

⚠ **Cautions**	(1) The customer must not modify the device or equipment. (2) Do not disassemble or reassemble the device or equipment without permission. If so, the product may not perform properly and failure or accidents may occur. Only qualified engineers or technicians should disassemble or reassemble the device or equipment if required. As stated in Section 2.5 of this Manual, performance and functions of the device or equipment are warranted only when it has been tested and passed during shipment from our plant. (3) When transporting or storing the device or equipment, be careful to observe the appropriate environment conditions such as ambient temperature and humidity. Also, take measures to prevent rusting and entry of dust. (4) You may need to replace the sealing when using the device or equipment after you have stored it for a long period of time.

5) Cautions on performance and functions

⚠ **Caution**	Because this is an important device or equipment for safety, its performance and functions are warranted only when it has been tested and passed during shipment from our plant. The customer must understand this limitation of the warranty when disassembling or re-assembling the device or equipment.

https://truckmanualshub.com/

[3] Limitations of Warranty

The device or equipment warranty is limited in the following cases:

(1) External factors such as natural disasters, accidents or other accidental force
(2) Misuse or abuse
- Use for unintended purposes
- Use in unspecified conditions
- Inhibited operation
- Violation of (operation, maintenance, or inspection sequence) instructions given in the Operation Manual
- Skip of (operation, maintenance, or inspection sequence) instructions given in the Operation Manual

(3) Unsafe actions
(4) Performance and functions of the device or equipment if disassembled or re-assembled by your company or by a third party.

2. Summary

The PV48K2 pilot valve is a remote control valve which has a pressure reducing valve system, and it has four pressure reducing valves in a single valve casing to control the secondary pressure of hydraulic circuit. The output pressure of the hydraulic circuit is controlled by the tilt adjustment of the operation section.

3. Specifications

Primary pressure	Up to 6.9 MPa
Secondary pressure	0 - 4.4 MPa (Maximum control pressure)
Backpressure tolerance	Up to 0.3 MPa
Rated flow	20 L/min.
Operating angle	±19°, ±25° (alone)
Mass	1.9 kg
Pipes	An approximately 3-meter long pipe having the 8-mm internal diameter is appropriate for the best operation response. The returned oil must be fed directly to the hydraulic tank to avoid the influence of backpressure.

4. Structure

The pilot valve has the structure as shown in the assembly section diagram (Page 14). There is a longitudinal axial hole in the casing and the pressure reducing valve is installed in it.
The pressure reducing valve consists of the spool (201), secondary pressure setting spring (241), return spring (221), spring seat (216), and washer 2 (217). The secondary pressure setting spring (241) is set to 0.5 to 1 MPa converted to secondary pressure (depending on the model). The spool (201) is pressed against the pushrod (212) by the return spring (221).
When the operation section such as the handle is tilted and the pushrod (212) is pushed down, the spring seat goes down at the same time, and the hydraulic pressure being set by the secondary pressure setting spring (241) is changed.
The casing (101) has oil inlet port P (for primary pressure oil) and oil outlet port T (to hydraulic tank), and the secondary pressure oil appears at ports 1, 2, 3 and 4.

https://truckmanualshub.com/

5. Functions

[1] Basic functions

The pilot valve controls the amount of stroke, direction and others of the control valve spool. This control is done by the output pressure of pilot valve that is applied to the end of control valve spool.
In order to satisfy this function, the pilot valve consists of the following elements.

(1) Inlet port (P) to which the oil is supplied from the hydraulic pump
(2) Multiple outlet ports (1, 2, 3, 4) through which to apply the feed pressure from the inlet port is applied to the end of control valve spool
(3) Tank port (T) required for controlling the above-mentioned output pressure
(4) Spool that connects outlet ports to inlet or tank ports
(5) Mechanical means (including the spring operating on the above-mentioned spool) to control the output pressure

[2] Main part functions

When hydraulic oil is fed to the P port by the hydraulic pump, the spool (201) switches the oil flow from P port to outlet ports (1, 2, 3 and 4) or from outlet ports to the T port. This spool is operated by the secondary pressure setting spring (241) and the hydraulic oil pressure is determined.
In order to change the deflection amount of the secondary pressure setting spring (241), push rod (212) is inserted into the plug (211) so that it can slide.
The return spring (221) operates on the casing (101) and the spring seat (216) so that the pushrod (212) is returned into the zero-displacement direction regardless of the output pressure. It assures spool (201) to return to neutral position. It also has the effect of a counter-force spring for giving an operator an appropriate operation feel.

https://truckmanualshub.com/

6. Operation

The following explains the pilot valve operation using the hydraulic circuit diagram (Figure 1) and operation diagrams (Figures 2 - 4). Figure 1 gives the typical application example of the pilot valve.

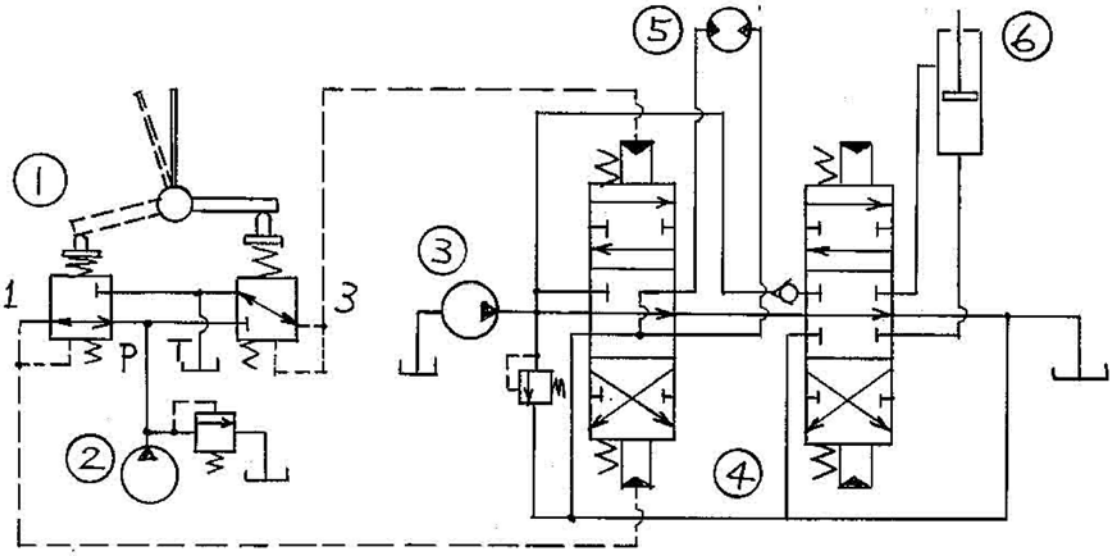

(1) Pilot valve (2) Pilot pump (3) Main pump
(4) Control valve (5) Hydraulic motor (6) Hydraulic cylinder

Figure 1. Application example of pilot valve

[1] When the handle is in neutral (See Figure 2.)
The force of secondary pressure setting spring (241) that determines the output pressure of pilot valve is not applied to the spool (201). Therefore, the spool (201) is pushed up by the return spring (221) (and the spring seat (216)) and outlet port (2, 4) are connected to the T port. Therefore, the output pressure is the same as the tank pressure.

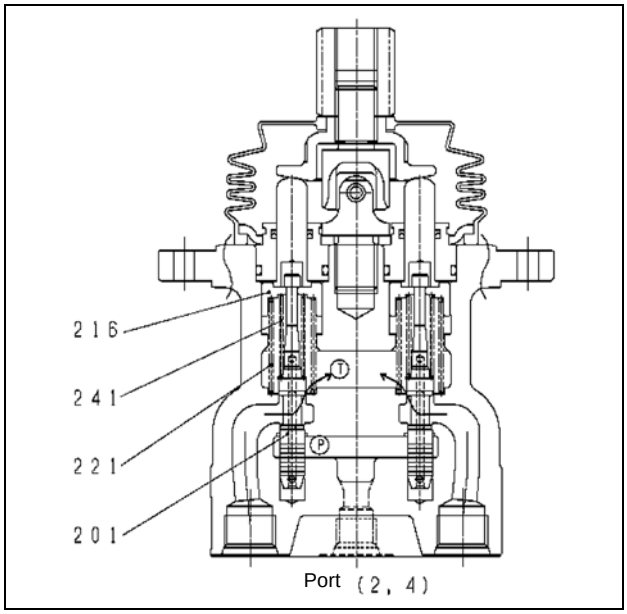

Figure 2. When the handle is in neutral

https://truckmanualshub.com/

[2] When the handle is tilted (See Figure 3.)

When the handle is tiled, the pushrod (212) strokes and the spool (201) (and the spring seat (216)) moves downward. The P port is connected to the port (2, 4), and hydraulic oil from the pilot pump is fed to the port (2, 4) and the hydraulic pressure is generated.

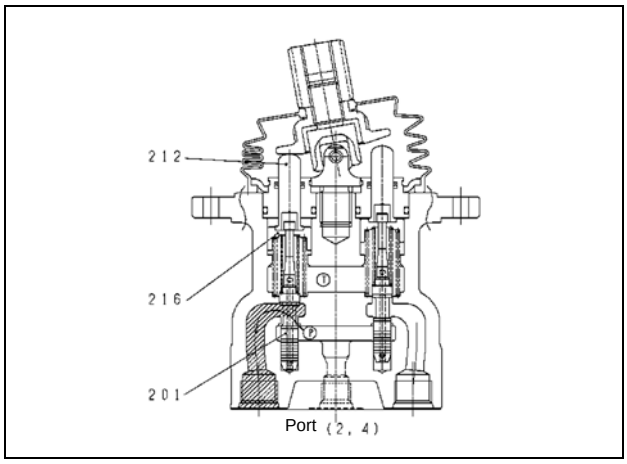

Figure 3. When the handle is tilted

[3] When the handle is held (See Figure 4.)

When the handle is tilted and when hydraulic pressure at the port (2, 4) increases to the same level as the force of the spring (241), the hydraulic oil pressure and the spring force are balanced. When the pressure at the port (2, 4) increases above the preset level, both port (2, 4) and P port are closed but T port is opened. When the pressure at the port (2, 4) drops below the preset level, both port (2, 4) and P port are opened but T port is closed. Therefore, the secondary hydraulic pressure is held constant.

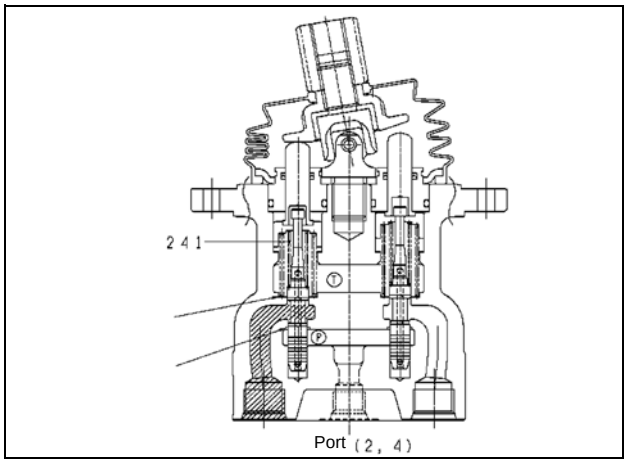

Figure 4. When the handle is held
(Secondary pressure is higher than the preset level)

[4] When the handle is tilted largely (depends on the model)

In some models, if the handle is largely tilted, the pushrod end may touch the spool top end and the output pressure may be kept to the same pressure as the P port.

Also, if the spring seat and the spring have been built into the pushrod and if the handle is tilted largely, the pushrod end may touch the spring. This spring force may change the secondary pressure gradient, and the pushrod end may touch the upper end of spring seat. As the result, the output pressure may be kept to the same level as the P port.

https://truckmanualshub.com/

7. Maintenance Procedure

[1] Required tools and tightening torque

Tools	Dimensions (mm)	Part number	Part name	Screw size	Tightening torque (N•m)
Wrench	22	312	Adjusting nut	M14	68.6±4.9
	32	302	Disk	M14	
Special tool (Drawing page 15)	24	301	Joint	M14	47.1±2.9

Others

- Vapor phase corrosion inhibitor
- White kerosene
- Anti-seize compound
- Sandpapers (#1000 and #2000)
- Oilstone
- Vice

[2] Maintenance standards

Checkpoints	Standard	Remarks
Leakage amount	When handle is in neutral: 1000 cc/min. or more When operating: 2000 cc/min. or more If either of them has occurred, replace the entire pilot valve assembly.	Conditions Primary pressure: 2.94 MPa Viscosity of oil: 23 mm^2/s
Spool	If abrasion of sliding part is 10μm or more than non-sliding part, replace the entire pilot valve assembly.	This large abrasion is almost the same as the large oil leakage as described above.
Pushrod	If the pushrod end is worn 1 mm or more, replace it. 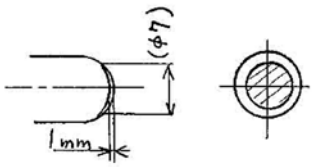	
Looseness of operation section	If a 2 mm or larger looseness of the operation section is found due to the worn disk (302) or joint (301), replace it.	If the looseness is caused by the unsecured fasteners, retighten and adjust them.
Operation stability	If abnormal noise, hunting, dropped primary pressure or other problem has occurred during operation and if it cannot be solved by troubleshooting as described in Chapter 8 "Causes of problems and countermeasures", replace the entire pilot valve assembly.	

Note 1) O-rings and other sealing can be reused if not damaged although it is desirable to replace them during disassembly.

https://truckmanualshub.com/

[3] Disassembly procedure

(1) Preparation

(1) Prepare the workbench that has an enough space for parts handling and that is rigid and stable for services.

(2) Prepare the required tools and materials listed in Section 7-1.

(2) General notes on operations

(1) Because machine parts are very accurate and sensitive, handle them with care. Do not hit or drop them.

(2) If parts are secured and if you forcibly remove them (using a hammer or a lever), the metal surface may be burred or damaged. Such damage may lead to oil leakage or decrease performance. Disassemble parts with patience even if you have difficulty.

(3) If you leave the disassembled parts on the workbench or if you stop disassembling parts along the way, the parts may rust due to the high humidity or become contaminated by foreign materials. Take appropriate measures to prevent rust and contamination.

(3) Disassembling procedure

1. Wash and clean the pilot valve using the white kerosene.
   - Cover each port (or opening) using a plug.

2. Hold and fix the pilot valve together with copper plates (or lead plates) on the vice.

3. Remove bellows (501) carefully.
   - Take care not to damage bellows (501) when removing them.

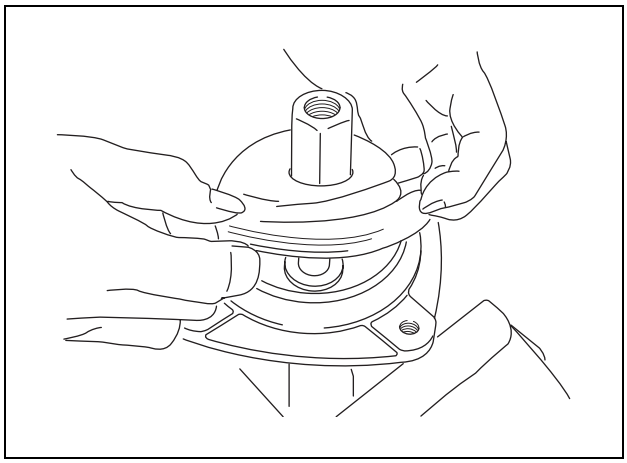

https://truckmanualshub.com/

4. Hold the disk (302) using a wrench, and rotate and loosen adjusting the nut (312) using another wrench. Then, remove the adjusting nut and the disk.

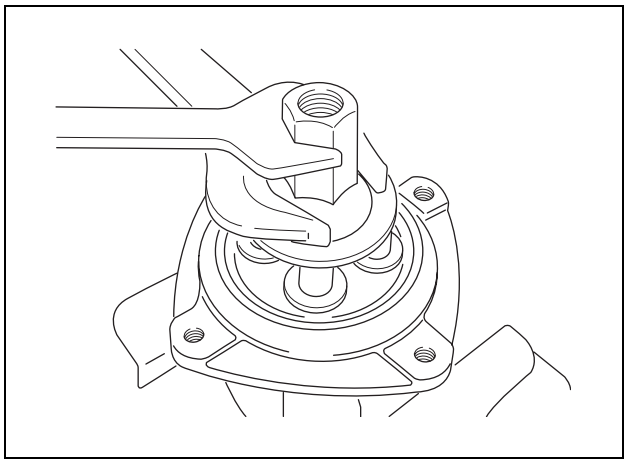

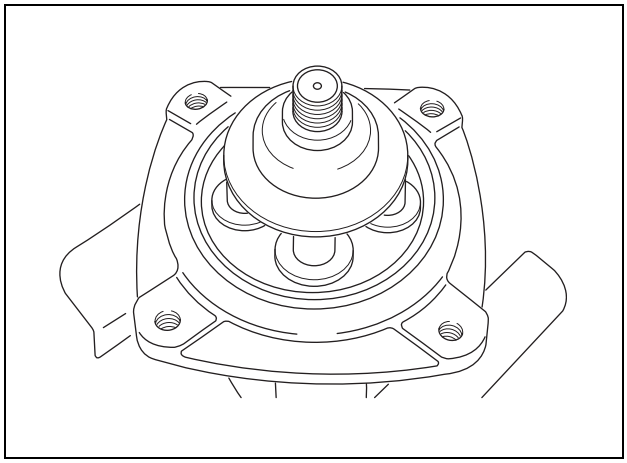

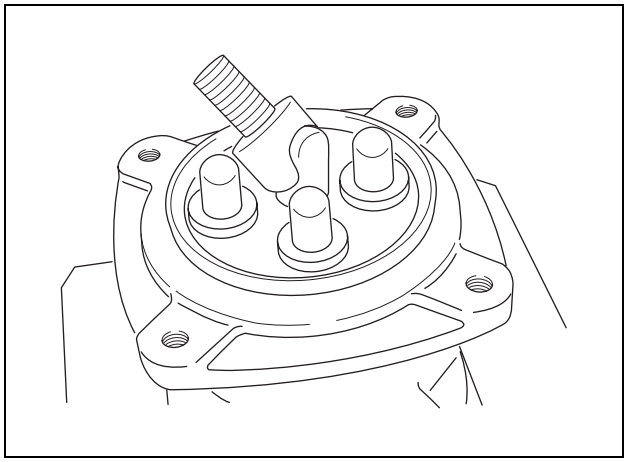

https://truckmanualshub.com/

5. Rotate to the left and loosen the joint (301) using the jig.

   - Photo 7-5 shows how to use the jig.
   - CAUTION: If the force of the return spring (221) is strong, plate (151), plug (211) and pushrod (212) may jump out when you loosen the joint (301). Therefore, take care when you loosen the joint.

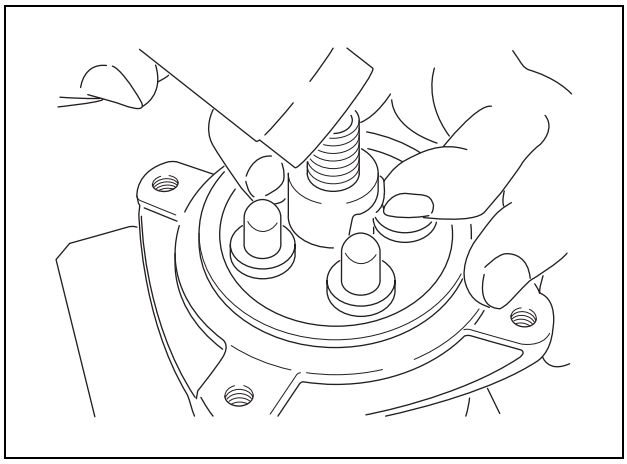

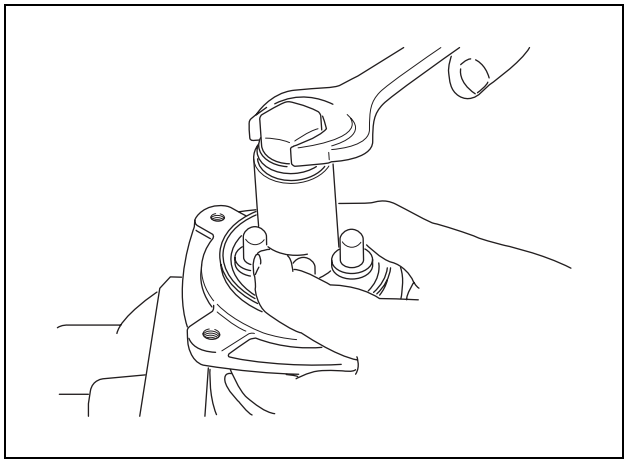

6. Remove the plate (151).

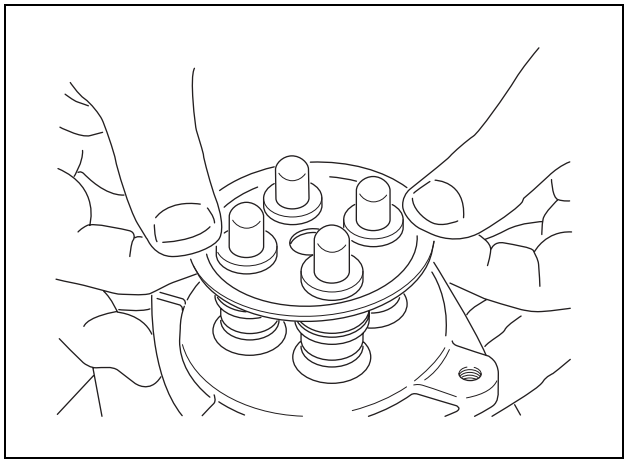

7. If the force of the return spring (221) is weak, plug (211) may remain in the casing (101) due to the sliding resistance of O-ring. If so, remove the plug using a flathead screwdriver.
   - When you remove the plug (211), take care not to damage it. Gradually move up the plug by pressing its outer groove using a flathead screwdriver.
   - When you remove the plug (211), it may jump out due to the return spring (221). Therefore, take care when removing the plug.

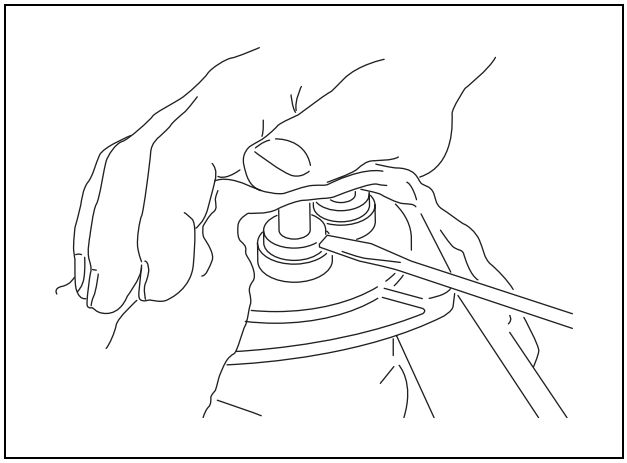

https://truckmanualshub.com/

8. Remove the pushrod (212), plug (211), pressure reducing valve assembly, and return spring (221) from the casing (101).
   - Keep a record showing their mounting positions on the casing.

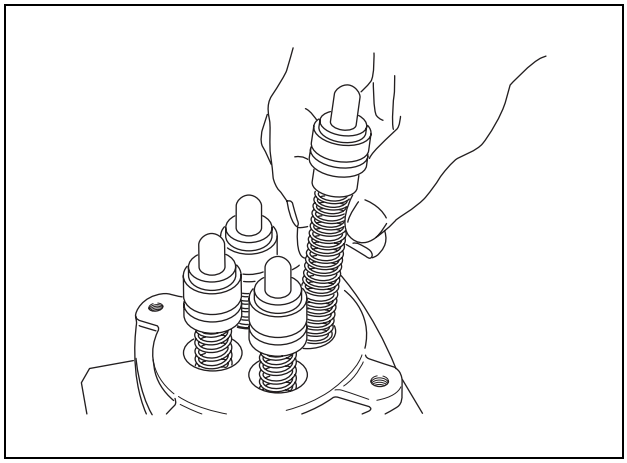

9. When disassembling the pressure reducing valve, push down the spring seat (216) to deform the secondary pressure spring (241), slide the spring seat (216) in a transverse direction, and remove the spool (201) from the larger hole.
   Then, separate the spool (201), spring seat (216), secondary pressure setting spring (241), and washer 2 (217) from each other.
   - Handle the spool (201) taking care not to scratch it.
   - Do not push down the spring seat (216) more than 6 mm.
   - Handle these parts as an assembly.

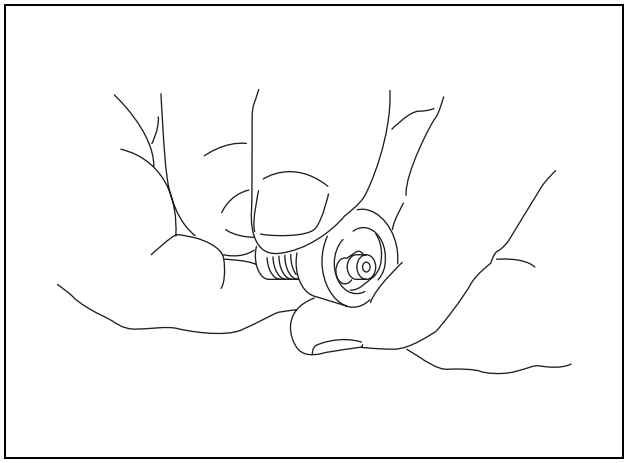

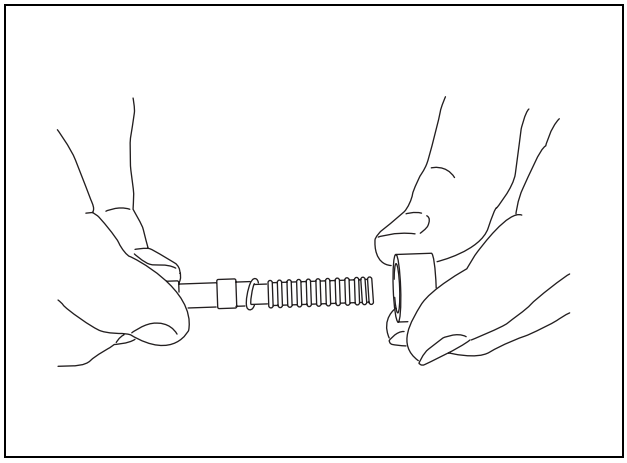

https://truckmanualshub.com/

10. If the two-step folding the spring (246) and the spring seat (218) are used, remove them from the pushrod (212).

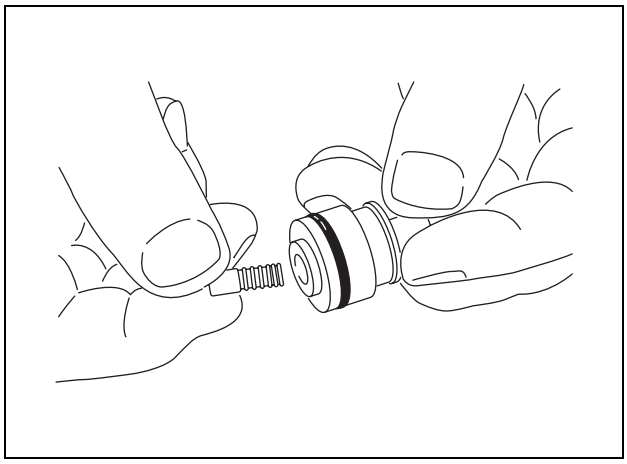

11. Pull out the pushrod (212) from the plug (211).

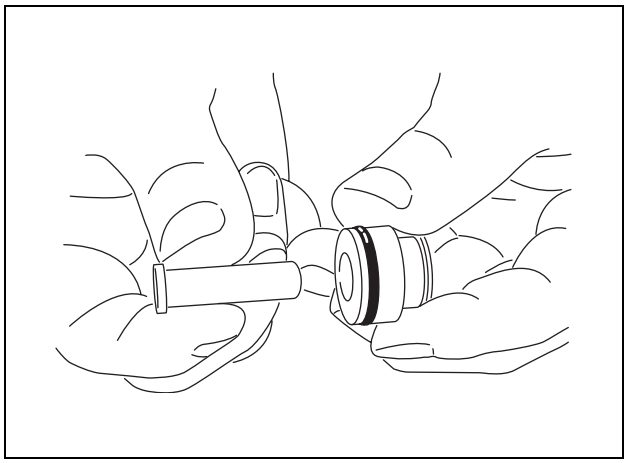

12. Remove the O-ring (214) and seal (213) from the plug (211). Use a small flathead screwdriver to remove the seal (213).

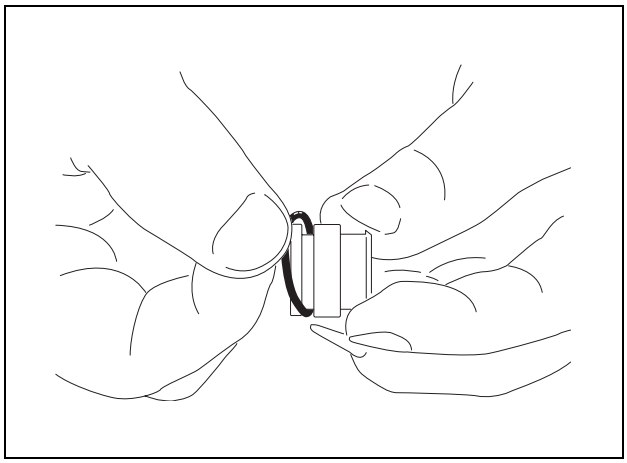

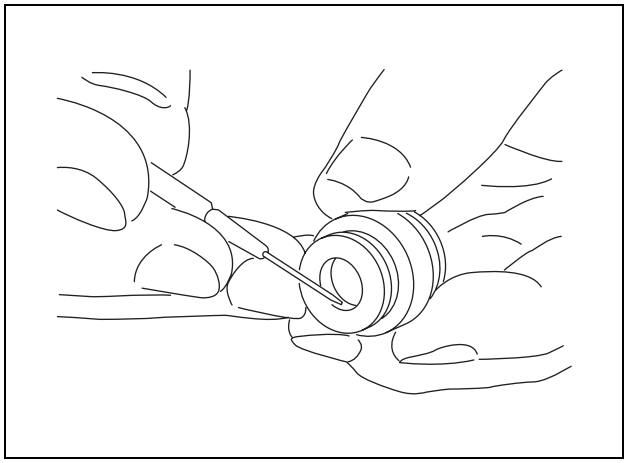

https://truckmanualshub.com/

13. Cleaning of parts
    1) Wash and clean each part using the white kerosene in a washing container. (Rough cleaning)
    2) Immerse each part in the white kerosene in the finish washing container, slightly rotate and clean both the inside and outside of each part.
       (Finish cleaning)
       Using clean rags, wipe and remove the white kerosene from each part.

    - Leave the parts in the white kerosene until dirt and fats have dissolved, and wash and clean them. If you quickly wash the dirty parts, the part surfaces may become scratched.
    - Always use clean white kerosene. If it is dirty, the parts may be scratched by dirt and the reassembled parts may not have the desired performance.
    - Do not use compressed air to dry parts because the part surfaces may become scratched or rusted by dust or water contained in the compressed air.

14. Corrosion protection of parts
    Coat each part with a corrosion inhibitor.

    - If the washed parts are left exposed to air, they will not provide the desired functions when re-assembled.

https://truckmanualshub.com/

[4] Assembly procedure

(1) Preparation

(1) Prepare the workbench and the required tools and materials as with disassembly procedure.

(2) General notes on operations

(1) Follow the general notes on operations the same as the disassembly procedure.
(2) Before re-assembling the parts, remove metal chips and foreign materials from all parts, and make sure that all parts are free from defects such as burrs and dents. If parts have burrs or dents, remove them using an oilstone.
(3) Replace O-rings and backup rings with new ones as a general rule.
(4) Take care not to damage O-rings and backup rings when mounting them. (Apply small amount of grease for lubrication.)
(5) Apply grease to the parts when mounting them so that they do not fall.
(6) Tighten bolts and fasteners with the torque defined in the tightening torque table of Section 7-1. Use a torque wrench to measure the tightening torque.
(7) When you have assembled all the parts, cover all ports and openings using plugs to prevent the entry of dust.

(3) Assembling procedure

1. Insert and mount the washer 2 (217), secondary pressure setting spring (241), and spring seat (216) in this order in the spool (201).

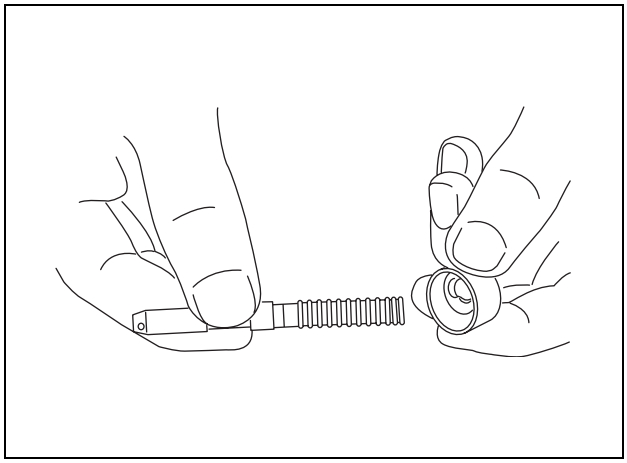

Then, push down the spring seat (216) to deform the secondary pressure setting spring (241), slide the spring seat (216) in a transverse direction, and mount the spool (201) through the larger hole.

- Do not push down the spring seat more than 6 mm.

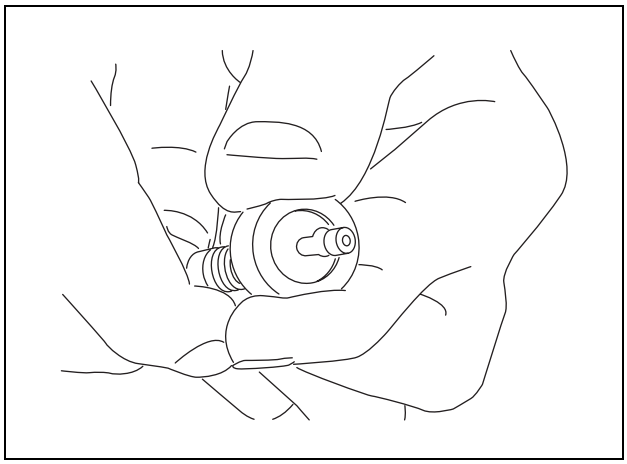

https://truckmanualshub.com/

2. Install the return spring (221) in the casing (101).
   Install the pressure reducing valve assembly in the casing (101).

   - The parts must be installed in the same position as before disassembly.

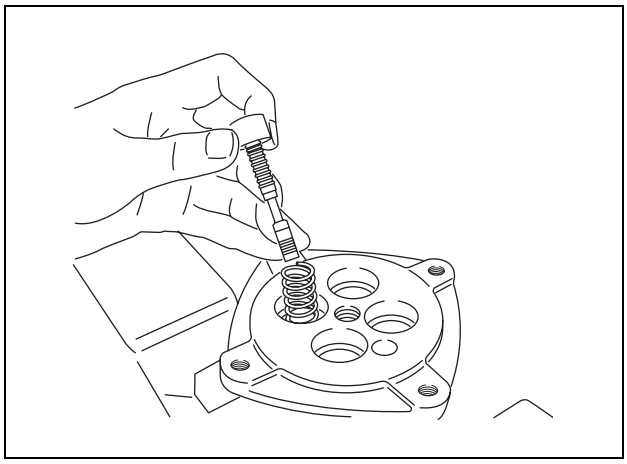

3. Mount the O-ring (214) on the plug (221).

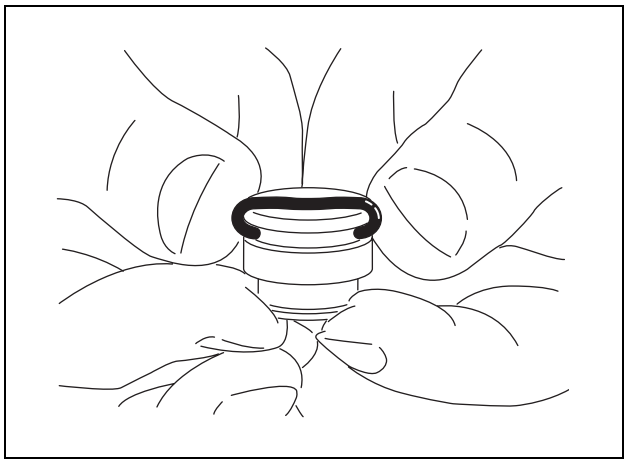

4. Mount the seal (213) on the plug (211).

   - The lip of the seal (213) must be as shown below.

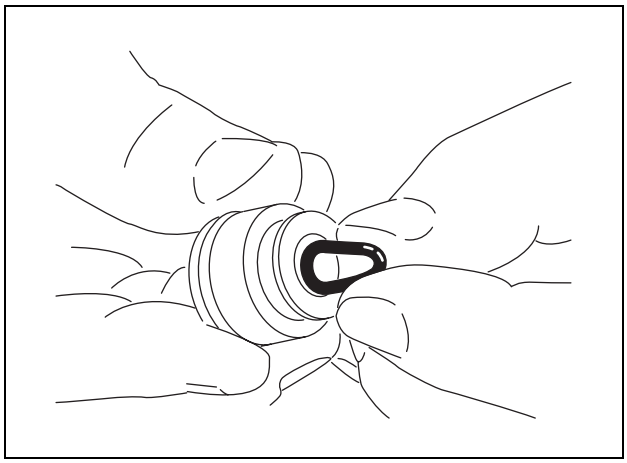

https://truckmanualshub.com/

5. Insert the pushrod (212) into the plug (211).

   - Coat the pushrod surface with hydraulic oil.

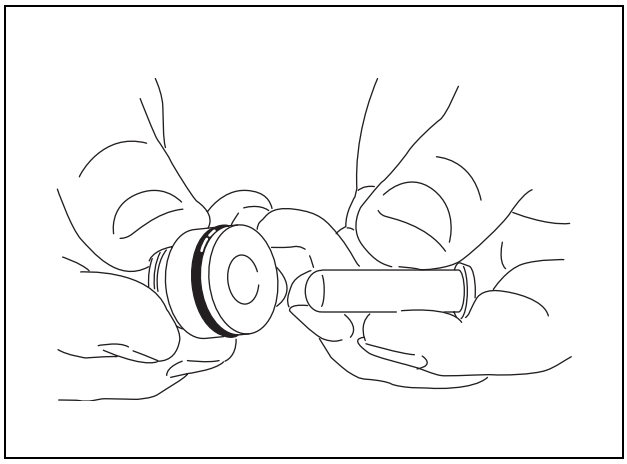

If the two-step folding spring (246) and spring seat (218) are used, mount them in the pushrod (212).

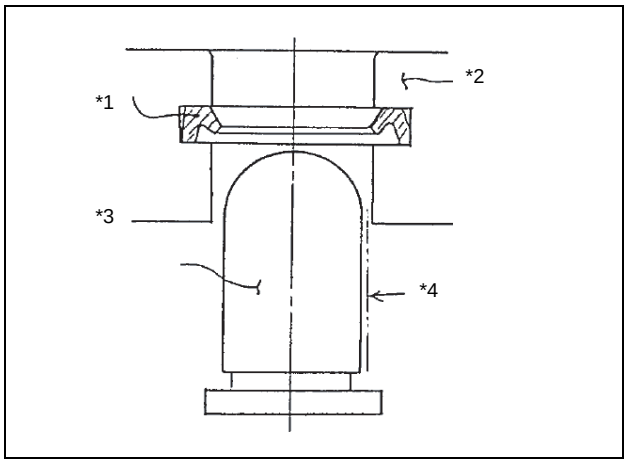

*1 Seal
*2 Plug
*3 Pushrod
*4 Apply hydraulic oil.

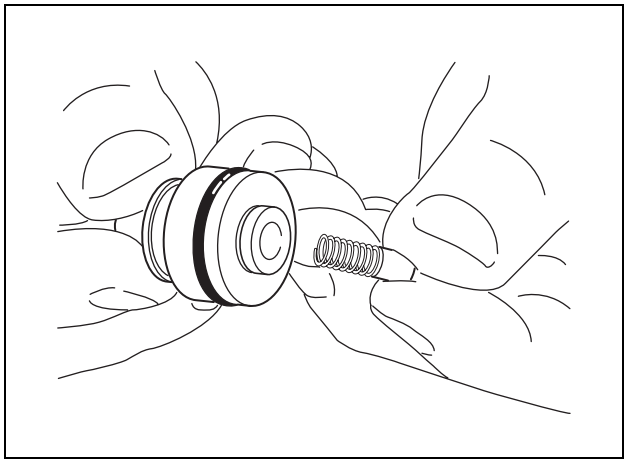

https://truckmanualshub.com/

6. Install the plug assembly in the casing (101).
   If the force of the return spring (221) is weak, the plug may remain in the casing due to the sliding resistance of the O-ring (214).

   - Take care not to scratch casing hole (101) when handling the spool (201) using a metal tool.

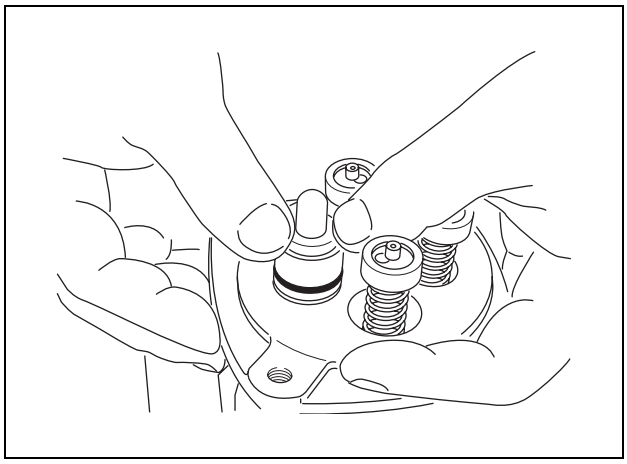

   If the force of the return spring (221) is strong, use the plate (151) and mount four plugs simultaneously, and temporarily fix them using assembly joint (301).

   - Take care so that the plug assemblies and the plate (151) do not fly out.

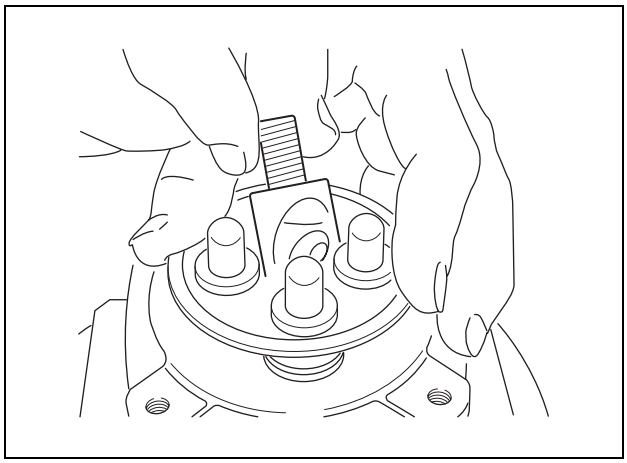

7. Mount the plate (151).

8. Using the jig, mount and secure the joint (301) to the casing (101) to the specified torque.

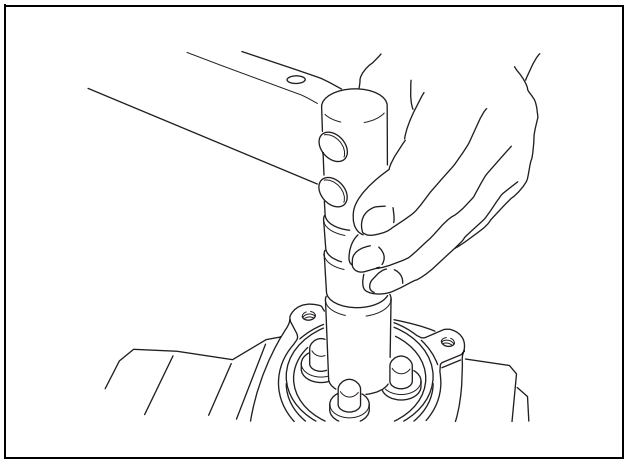

https://truckmanualshub.com/

9. Install the disk (302) in the joint (301).

   - Rotate the disk until it evenly contacts with 4 pushrods (212).
     If you rotate and mount the disk excessively, a secondary pressure may arise with the lever in the neutral position, and it may cause malfunction. Take care to rotate and mount the disk (302) to the correct depth.

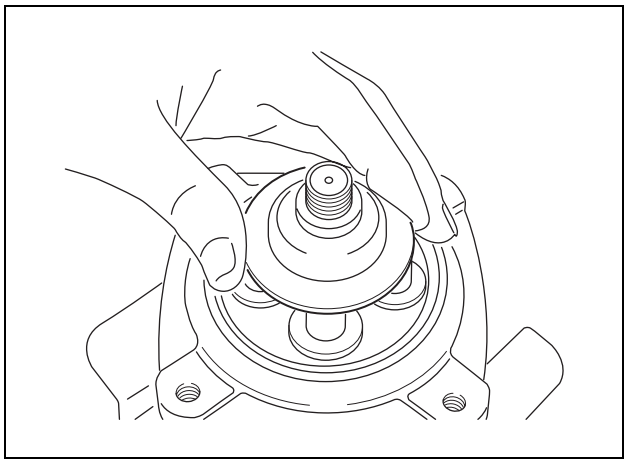

10. Hold the disk (302) using a wrench, and tighten adjusting nut (312) to the specified torque using another wrench.

    - Do not change the position of disk (302) when tightening it using a wrench.

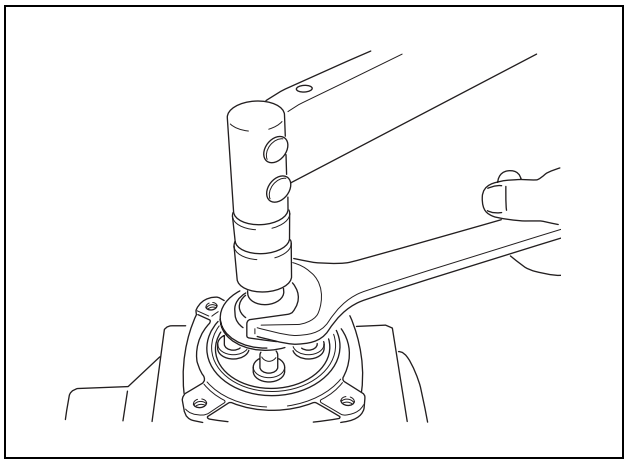

11. Apply grease to the rotating part of joint (301) and the top of pushrod (212).

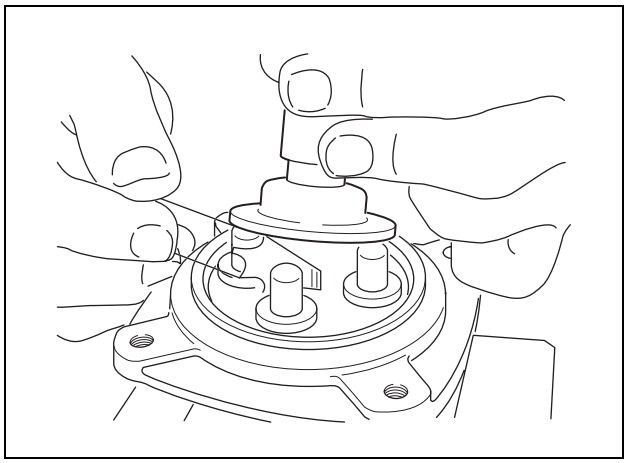

12. Mount the bellows (501).

    - Take care not to damage the bellows (501) when mounting them.

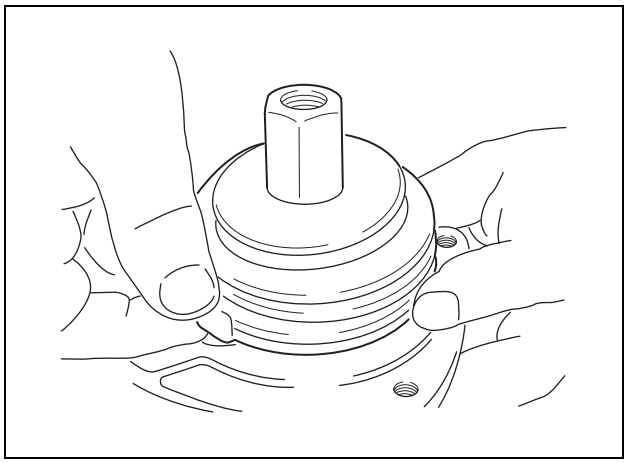

13. Spray vapor phase corrosion inhibitor into each port (or opening) and close it using a plug.

https://truckmanualshub.com/

8. Causes of problems and countermeasures

It is not easy to locate the failure in the field. The troubleshooting table below lists the possible causes of failure. Because the repair work is difficult, take the "corrective actions" given by referring to the "possible causes" column.

The troubleshooting table lists the typical failure, possible causes, and corrective actions taken. However, machine failure is often caused by a combination of problematic parts rather than a problem with a single part. You should remember that you may need to carry out more corrective actions than those given on the table.

The following troubleshooting table does not cover all possible causes or all countermeasures required. The repair manager should locate the actual cause of the failure and take appropriate actions when necessary.

Symptom	Possible causes	Solution
Secondary pressure is low.	(1) Primary pressure is insufficient. (2) The secondary pressure setting spring (241) is broken or deteriorated. (3) Clearance between the spool (201) and the casing (101) is too large. (4) The handle is excessively loose.	(1) Apply the primary pressure. (2) Replace the spring with the new one. (3) Replace the entire pilot valve assembly with the new one. (4) Replace the handle by disassembling and reassembling it.
Secondary pressure is unstable.	(1) The sliding parts do not slide smoothly. (2) The pressure of tank line is unstable. (3) Air has entered the hydraulic piping.	(1) Repair the sliding parts. (2) Return the oil directly to the hydraulic tank. (3) Remove the air from the hydraulic line by carrying out deaeration several times.
Secondary pressure is too high.	(1) The pressure of hydraulic tank line is high. (2) The sliding parts do not slide smoothly.	(1) Return the oil directly to the hydraulic tank. (2) Repair the sliding parts.

5-12 Upper Swing Body: Remote Control Valve

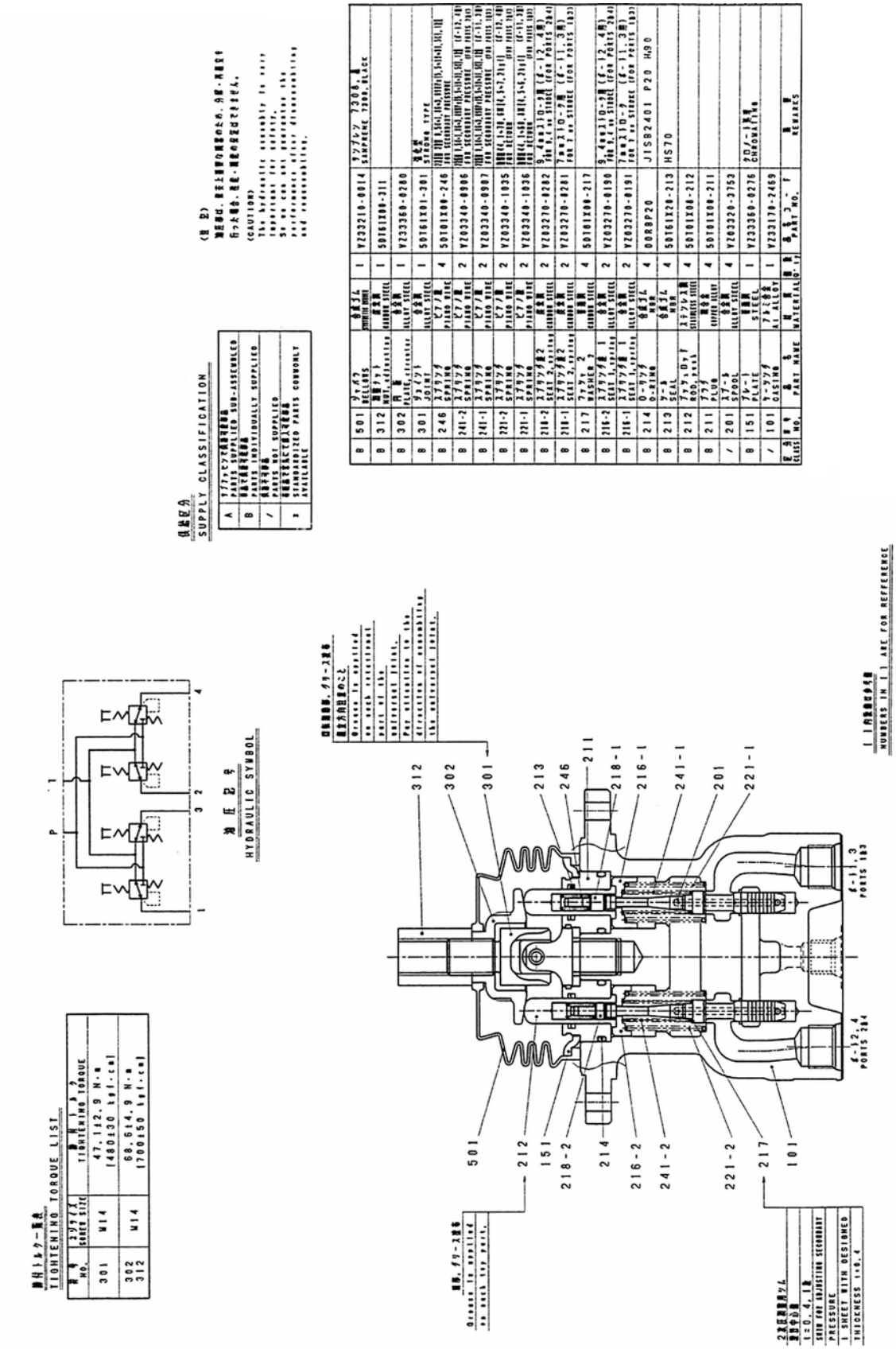

5-12 Upper Swing Body: Remote Control Valve

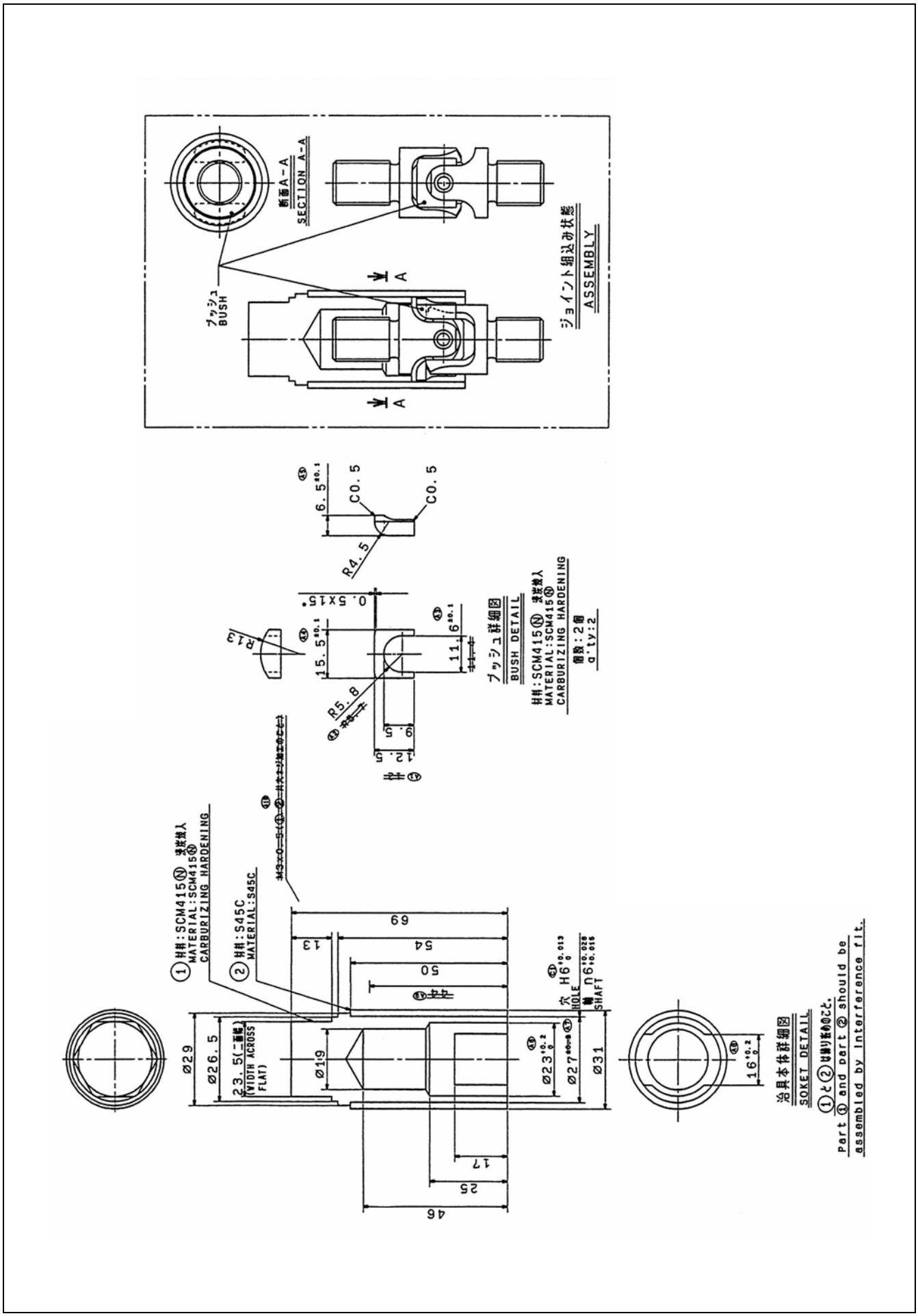

https://truckmanualshub.com/

2 Removal and Installation of Joystick Remote Control Valve Assembly

Warning	• Be sure to release the hydraulic pressure before beginning work.

Caution	• Be sure to stop the engine before beginning work.

Items to prepare

- Wrench (19 mm, 22 mm)
- Box wrench (10 mm)
- Hexagon wrench (5 mm)
- Phillips screwdriver
- Marking pen
- Caps
- Plugs
- Rags
- Cleaning fluid

[1] Roll up the boot (1) of the control lever, and remove 2 mounting bolts (2) from the console top cover using a Phillips screwdriver or a 10-mm box wrench.

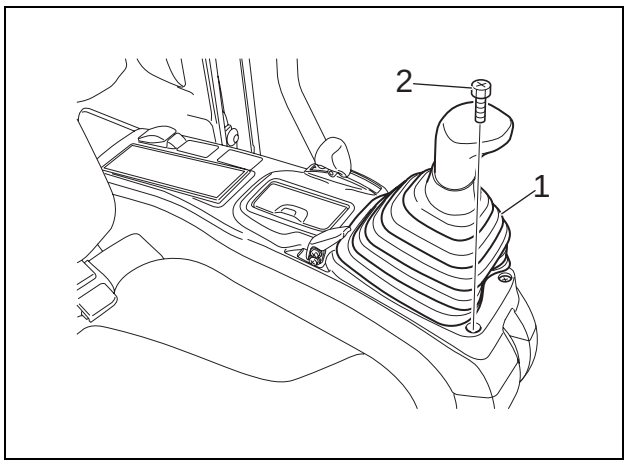

[2] Remove 2 setscrews (1) using a Phillips screwdriver, and remove handle (2) of the tilt lever.

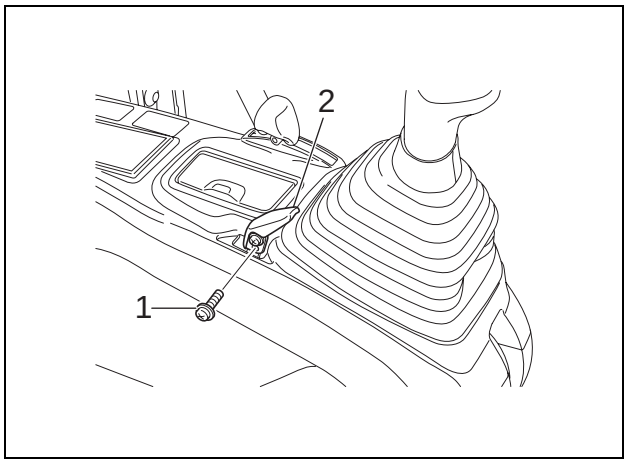

https://truckmanualshub.com/

[3] Remove 2 mounting bolts (1) using a 5-mm hexagon wrench, and remove the grip (2) of the gate lock lever.

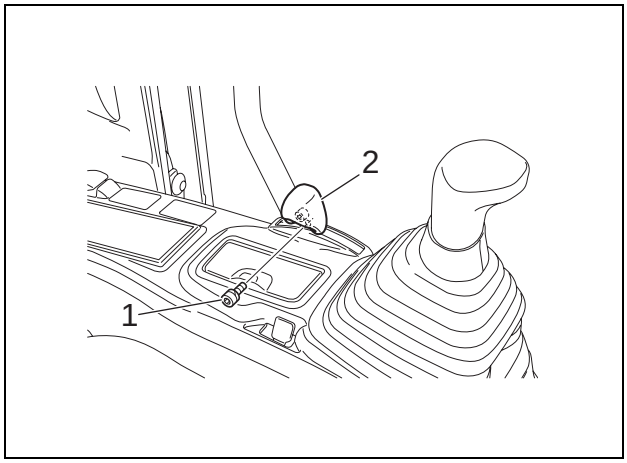

[4] Remove 2 setscrews (1) of the console top cover using a Phillips screwdriver.

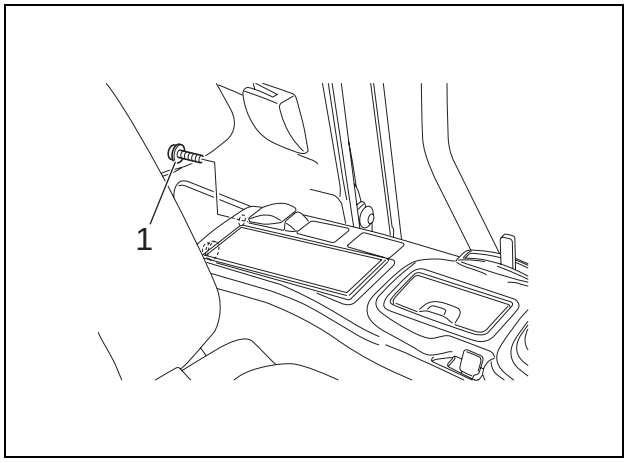

[5] Remove 3 connectors (1) and remove the console top cover (2).

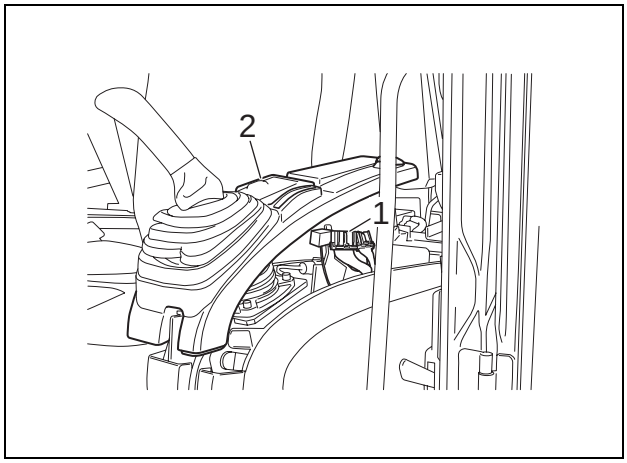

https://truckmanualshub.com/

[6] Remove 2 mounting bolts (1) using a Phillips screwdriver or a 10-mm box wrench.

[7] Remove single mounting bolt (2) using a Phillips screwdriver or a 10-mm box wrench.

[8] Remove 2 mounting bolts (3) using a Phillips screwdriver or a 10-mm box wrench.

[9] Remove cover (4).

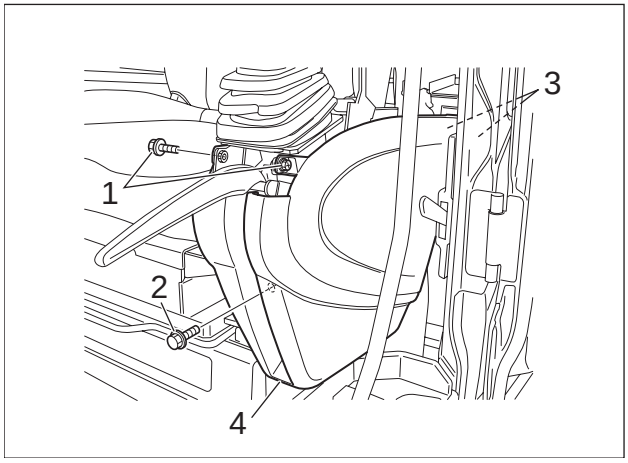

[10] Roll up the boot (1) of the control lever, remove the connector (2) of the horn switch, and cut and remove the tie wrap (3).

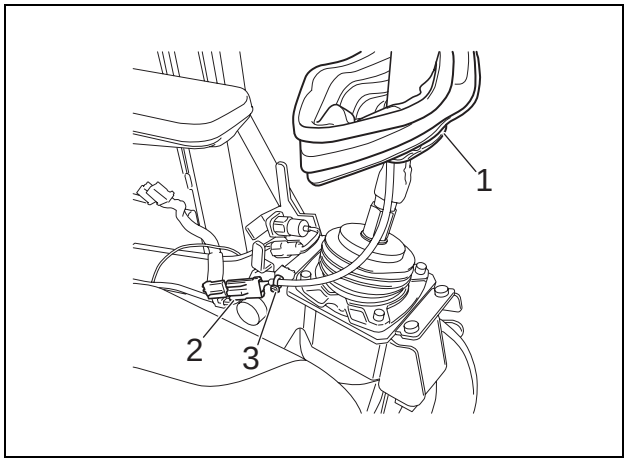

[11] Remove the locknut (2) using a 19-mm wrench while holding the rod (1) using a 22-mm wrench, and remove the control lever (3).

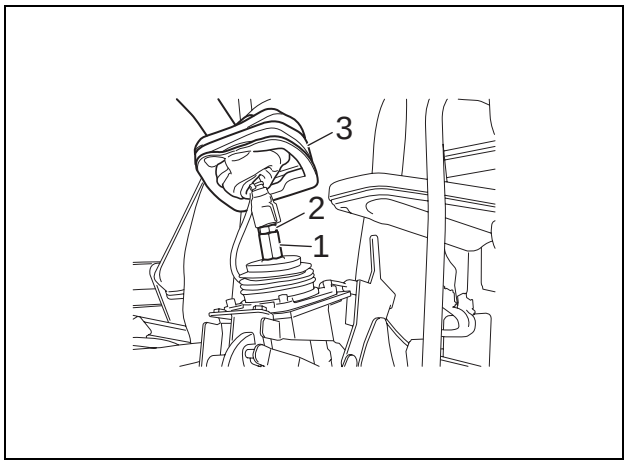

https://truckmanualshub.com/

[12] Roll up and open the hose cover (1).

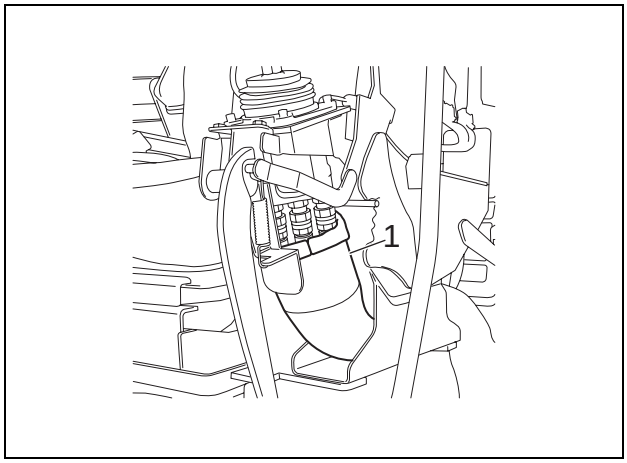

[13] Remove 6 hoses (1) using a 22-mm wrench.
- Mark the joystick remote control valve and hose joints so that they can be connected correctly at the time of assembly.
- Use caps or plugs to cover the joystick remote control valve and hoses to prevent the entry of water, dust or dirt.
- Clean the joystick remote control valve and hoses by spraying with a parts cleaner to prevent scratches and prevent dirt from accumulating on the connectors.

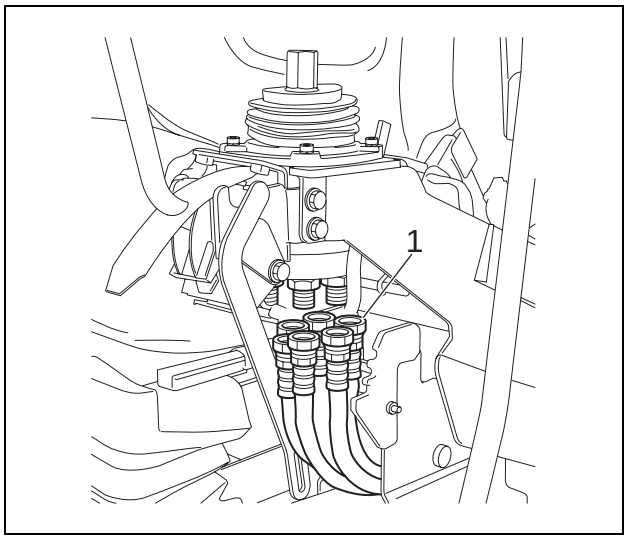

[14] Remove 4 mounting bolts (1) using a 5-mm hexagon wrench.

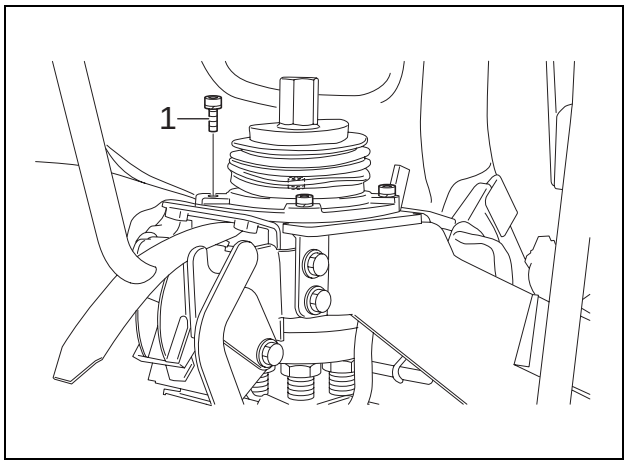

https://truckmanualshub.com/

[15] Remove joystick remote the control valve (1).

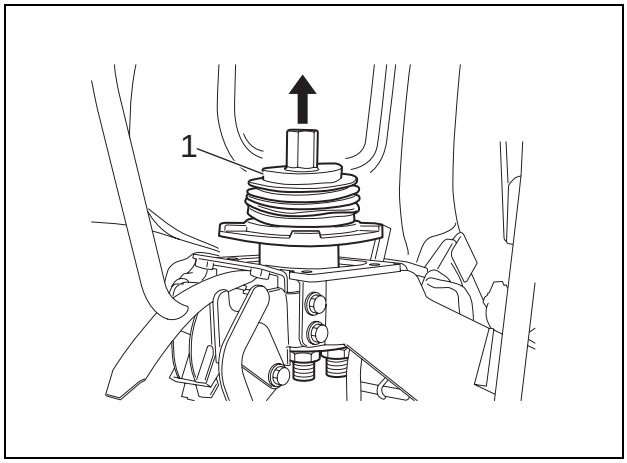

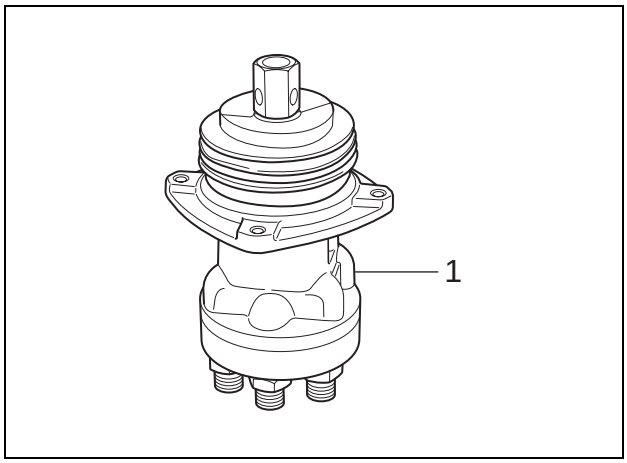

https://truckmanualshub.com/

3 Removal and Installation of Travel Remote Control Valve Assembly

Warning	• Be sure to release the hydraulic pressure before beginning work.

Caution	• Be sure to stop the engine before beginning work.

Items to prepare

- Wrench (17 mm, 19 mm)
- Hexagon wrench (8 mm)
- Phillips screwdriver
- Marking pen
- Caps
- Plugs
- Rags
- Cleaning fluid

[1] Use the screwdriver to remove the 3 screws (1), and then remove the cover (2).

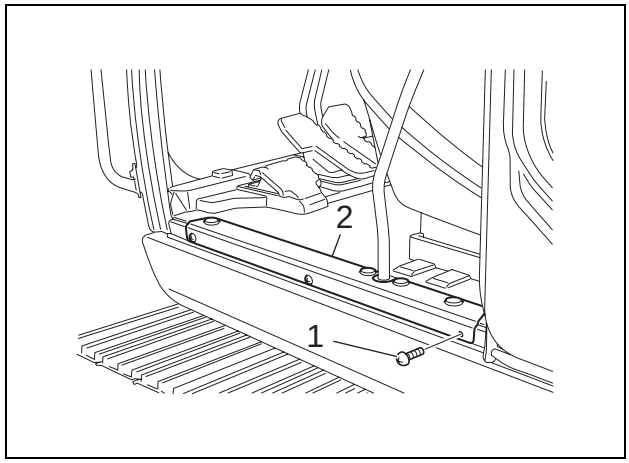

[2] Remove the floor mat (1).

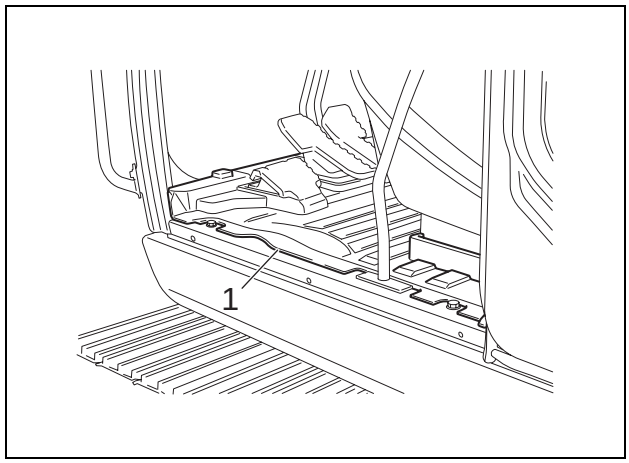

https://truckmanualshub.com/

[3] Use a 8-mm hexagon wrench to remove the 2 installation bolts (1) on both sides, and then remove the left and right travel pedals (2).

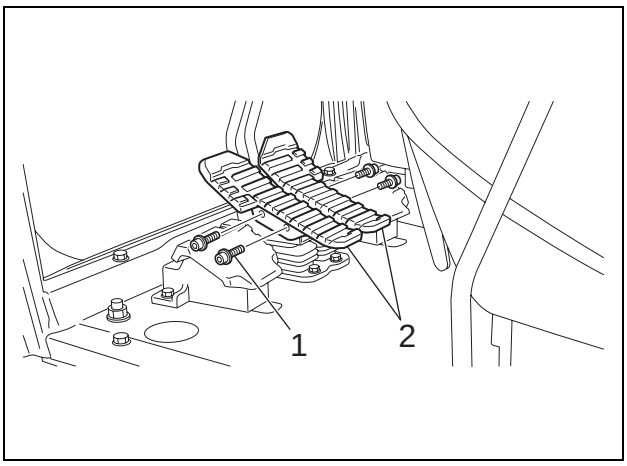

[4] Use a 19-mm wrench to remove the 5 bolts (1), and then remove the under cover (2).

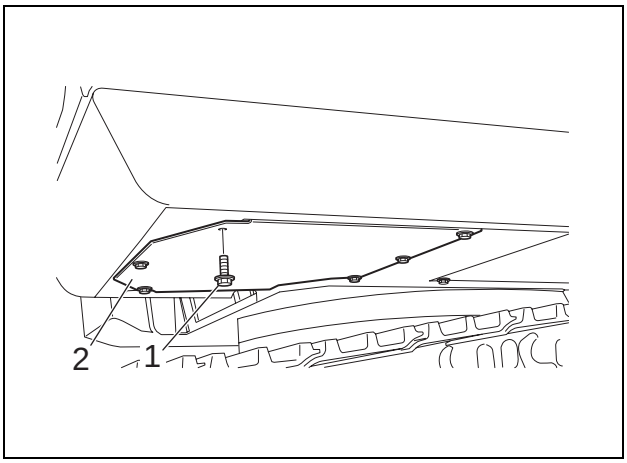

[5] Use a 19-mm wrench to remove the 6 hoses (1).
- Mark the valve and hoses so that they can be connected correctly at the time of assembly.
- Attach caps and plugs to the valves and hoses to prevent entry of water, dust, or dirt.
- Clean the valves and hoses by spraying with a parts cleaner to prevent scratches and prevent dirt from accumulating on the connectors.

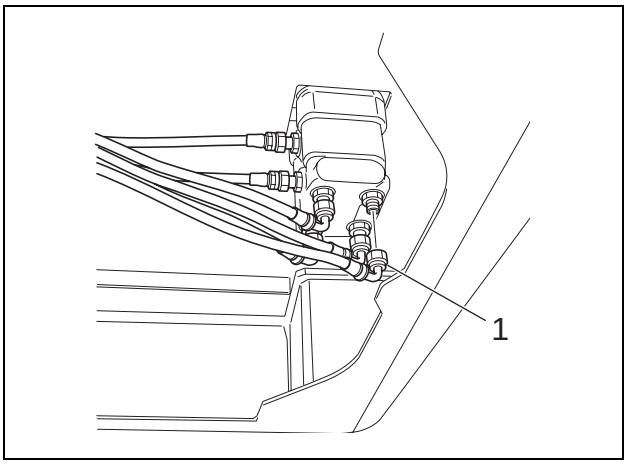

https://truckmanualshub.com/

[6] Use a 19-mm wrench to remove the 2 hose adaptors (1).

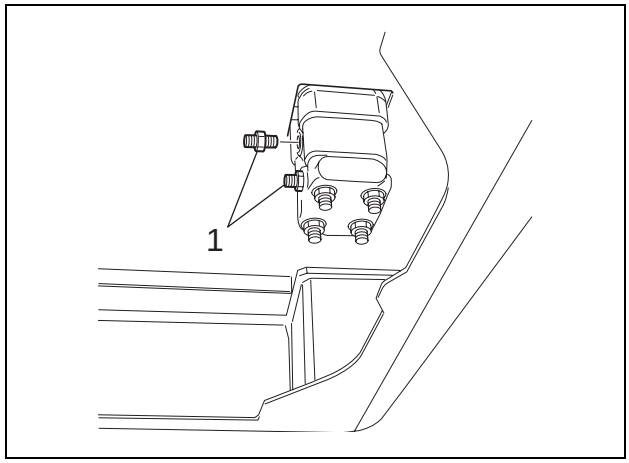

[7] Use a 8-mm hexagon wrench to remove the 2 installation bolts (1) on both sides of the lever, and then remove the lever.

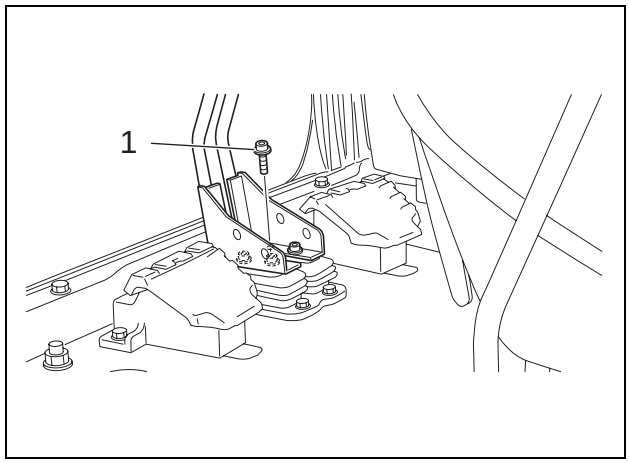

[8] Use a 17-mm wrench to remove the 2 fixing bolts (1) on both sides of the travel lever.

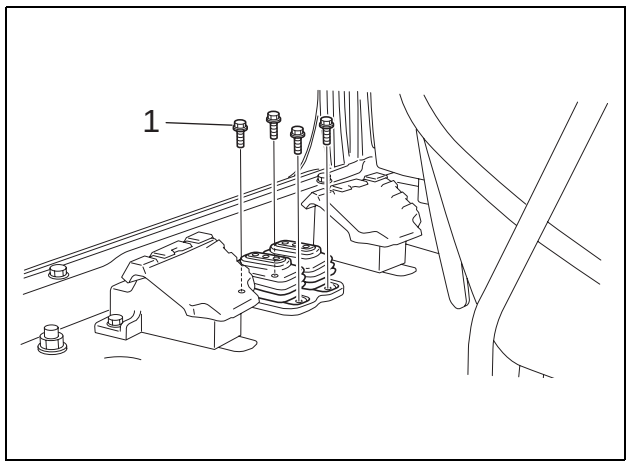

https://truckmanualshub.com/

[9] Pull up the travel remote control valve into the cab, and then remove the travel remote control valve.

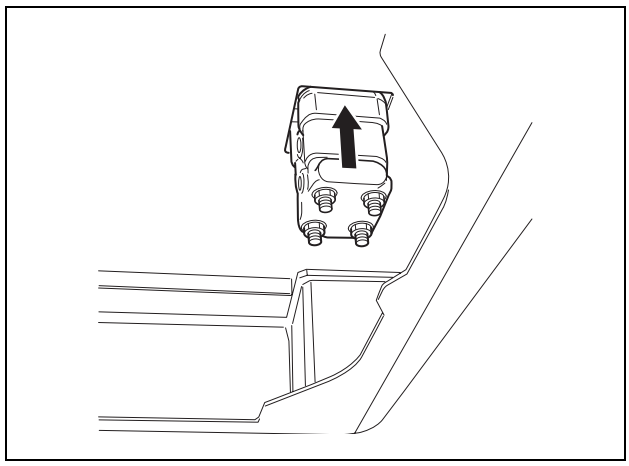

https://truckmanualshub.com/

4 4-Way Selector Valve Installation Procedure

Install the 4-way selector valve to enable one-touch changing of the lever pattern operating method (4 patterns).

Items to prepare

- Wrench (13 mm, 17 mm, 19 mm, 22 mm)
- Rags
- Cleaning fluid

Parts table

Part name	Installation ports	Part No.	Q'ty
4-way selector valve		KHJ 10470	1
Hydraulic pipe	(Port: 1 → E)	KHJ 11270	1
Hydraulic pipe	(Port: 2 → M)	KHJ 11290	1
Hydraulic pipe	(Port: 3 → G)	KHJ 11230	1
Hydraulic pipe	(Port: 4 → O)	KHJ 11250	1
Hydraulic pipe	(Port: 5 → I)	KHJ 11280	1
Hydraulic pipe	(Port: 6 → A)	KHJ 11260	1
Hydraulic pipe	(Port: 7 → K)	KHG 14390	1
Hydraulic pipe	(Port: 8 → C)	KHJ 11220	1
Hydraulic pipe	(Port: E → bracket)	KHG 14380	1
Hydraulic pipe	(Port: D, H, B → bracket)	KHJ 14370	1
Nipple	(Port: 8, 6, 3, 1, 2, 5)	KHJ 1390	6
Nipple	(Port: H)	KHJ 1390	1
Nipple	(Port: A, E, I, M, C, K, O)	KHJ 1821	8
Elbow	(Port: 4, 7)	KHJ 1391	2
Elbow	(Port: A, C)	KHJ 0605	2
90° Elbow	(Port: E)	KHJ 1391	1
45° Elbow	(Port: D, B)	KHJ 11360	2
Stud	(Port: F)	KHJ 13640	1
Elbow		KHJ 3560	1
Adapter	(Port: G)	KNJ 1106	1
Cover			
Bolt (M8 × 25)		105R008Y025R	4
Cover		KHJ 14350	1
High strength bolt (M10 × 75)		102R010Y075R	3
High strength washer (M10)		KEH0114	3
Bolt (M12 × 30)		105R012Y03R	4
4-way selector valve installation bracket		KHJ14340	1

Cushion valve port number

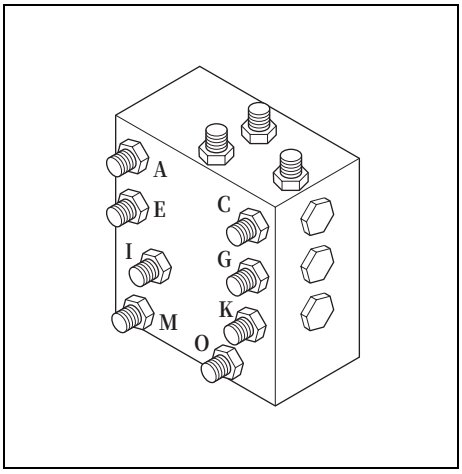

4-way selector valve port number

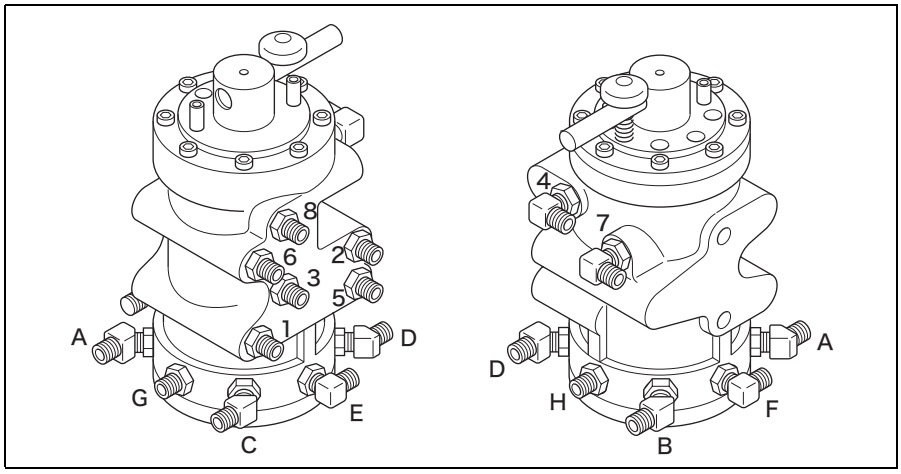

https://truckmanualshub.com/

4-way selector valve installation

Caution	• Before installation, bleed out the pressure from inside the circuits and the hydraulic oil tank.

[1] Use a 19-mm wrench to remove the bolts (1), and then remove the under cover (2) from the bottom of the cab rear.

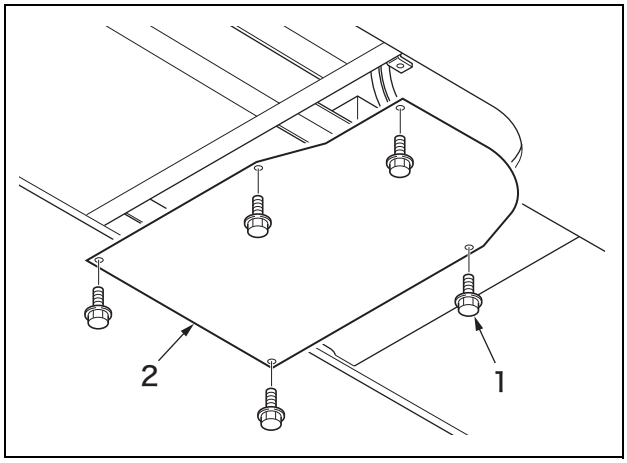

[2] Use a 17-mm wrench to remove the bolts (1), and then remove the cushion valve (2).

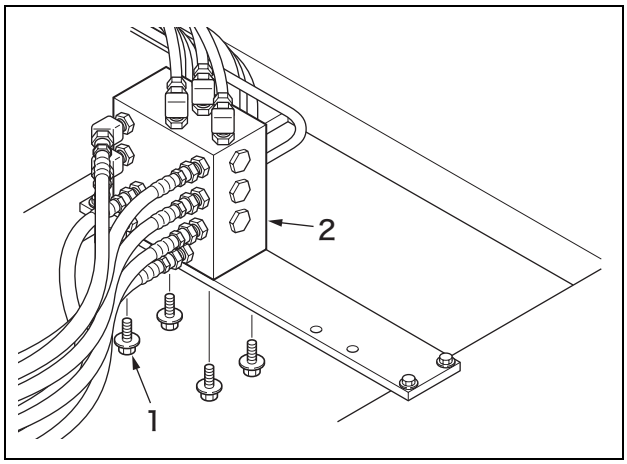

[3] Use a 19-mm wrench to remove the bolts (1), and then remove the bracket (2).

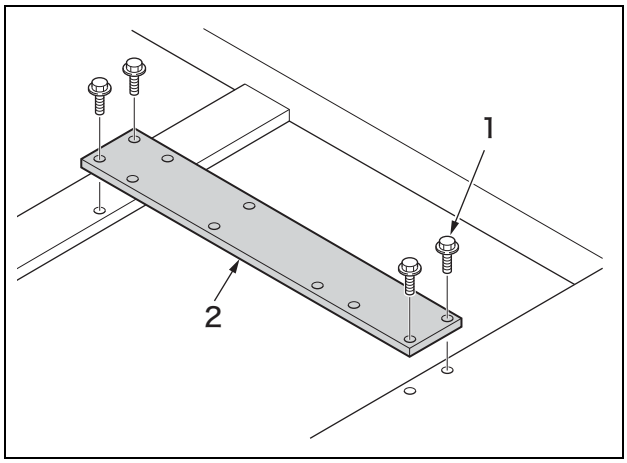

https://truckmanualshub.com/

[4] Use the bolts (1) removed from the bracket to install the 4-way selector valve installation bracket (2).

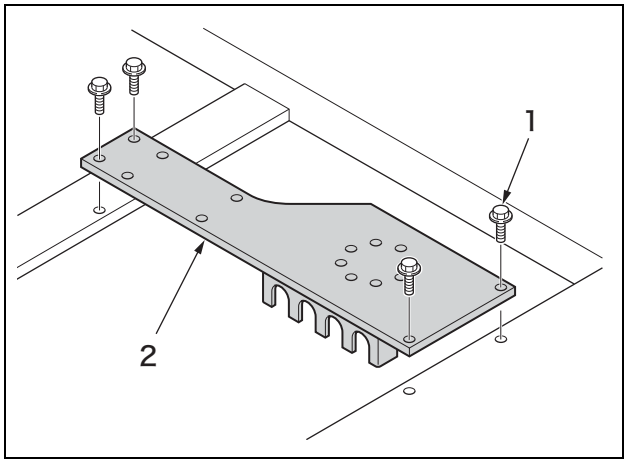

[5] Use the bolts (1) to reinstall the cushion valve (2).

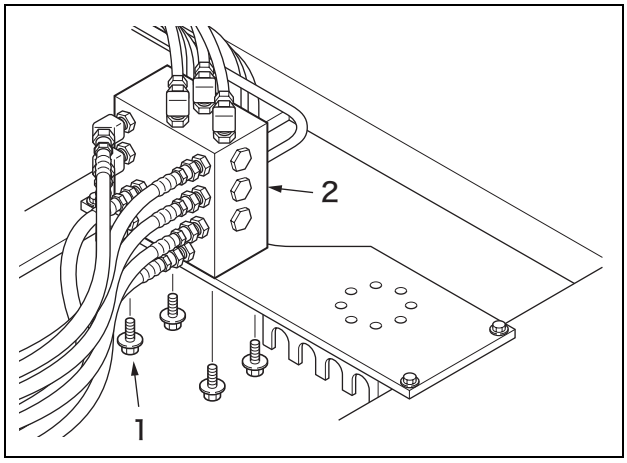

[6] Use a 22-mm wrench to remove the hydraulic hoses (2) connected to the cushion valve (1). Prevent oil from leaking by attaching plugs (3) to the removed hoses.

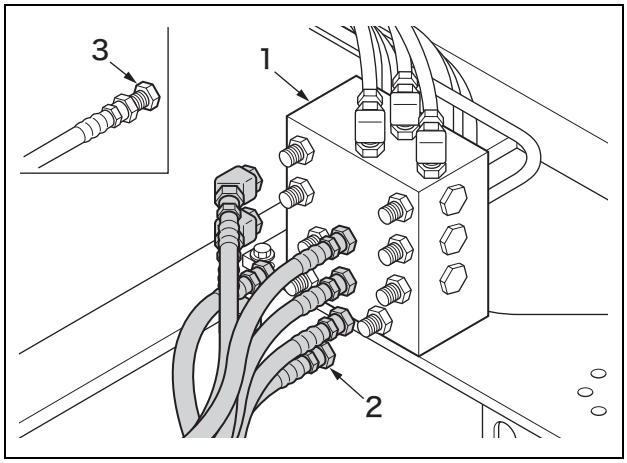

https://truckmanualshub.com/

[7] Replace all of the adaptors (2) attached to the cushion valve (1) with the supplied nipples (3) (KHJ 1821).

[8] Attach the supplied nipples (10), elbows (11), 45° elbows (12), 90° elbows (13), stud (14), and adapter (15) while paying attention to the direction of each port on the 4-way selector valve (KHJ 14700). (See the figure below.)

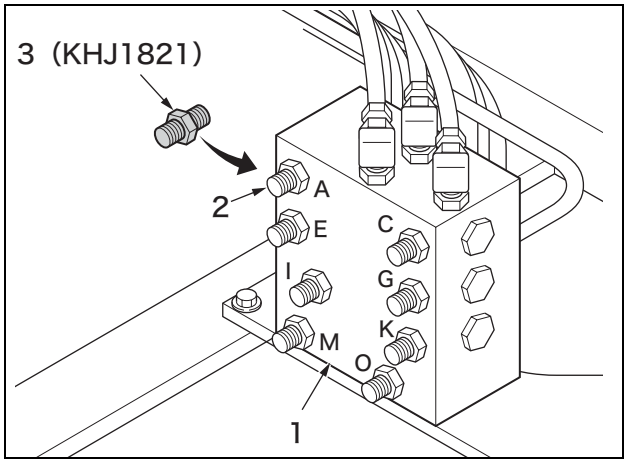

4-way selector valve (KHJ 14700)

*The port numbers are indicated on the 4-way selector valve.

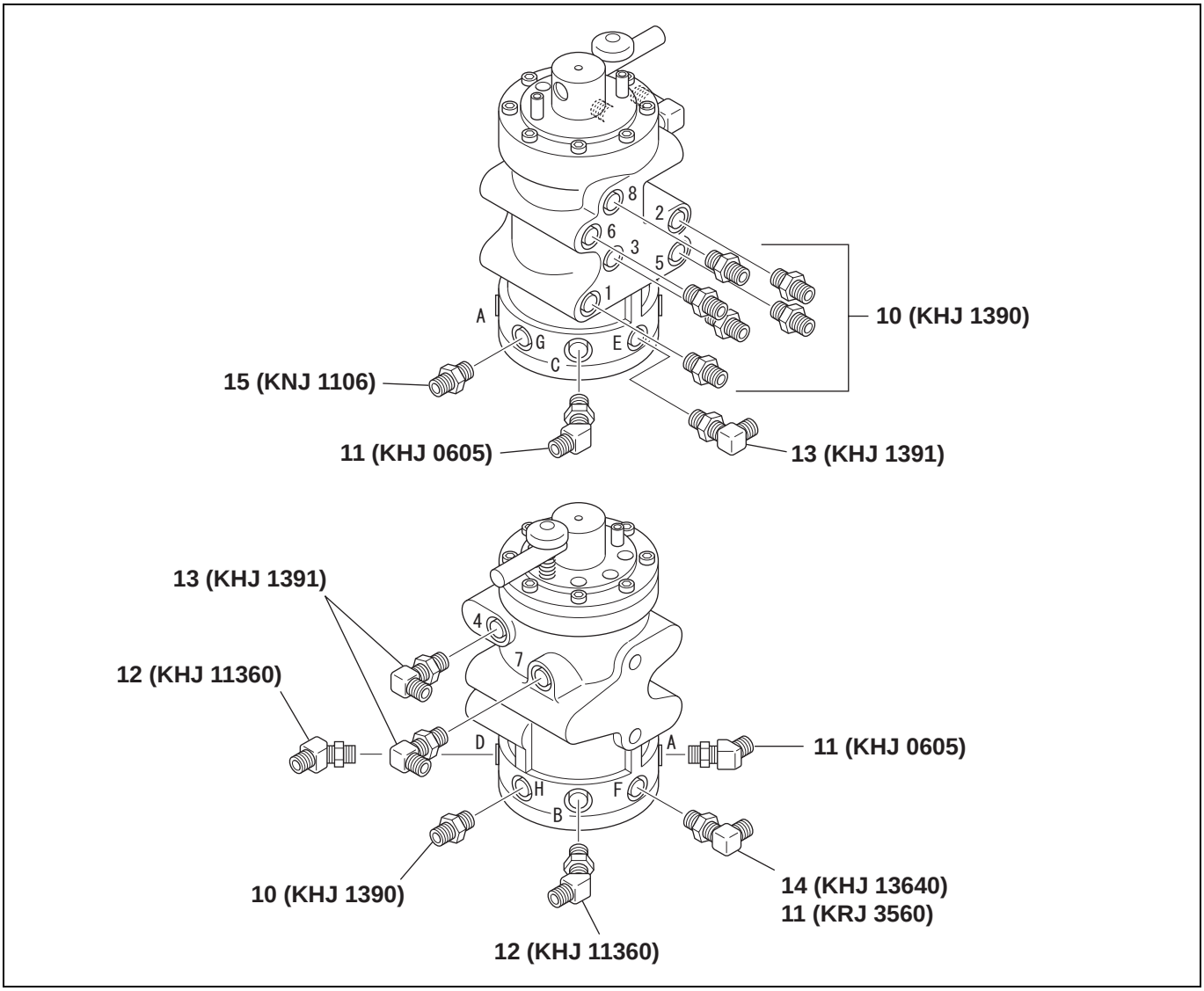

https://truckmanualshub.com/

[9] Use the supplied bolts (2) (M8 × 25) (105R008Y025R) applied with Locktite to install the 4-way selector valve (1). (* Make sure to install the 4-way selector valve in the correct direction.)

[10] Fasten with a 17-mm wrench.

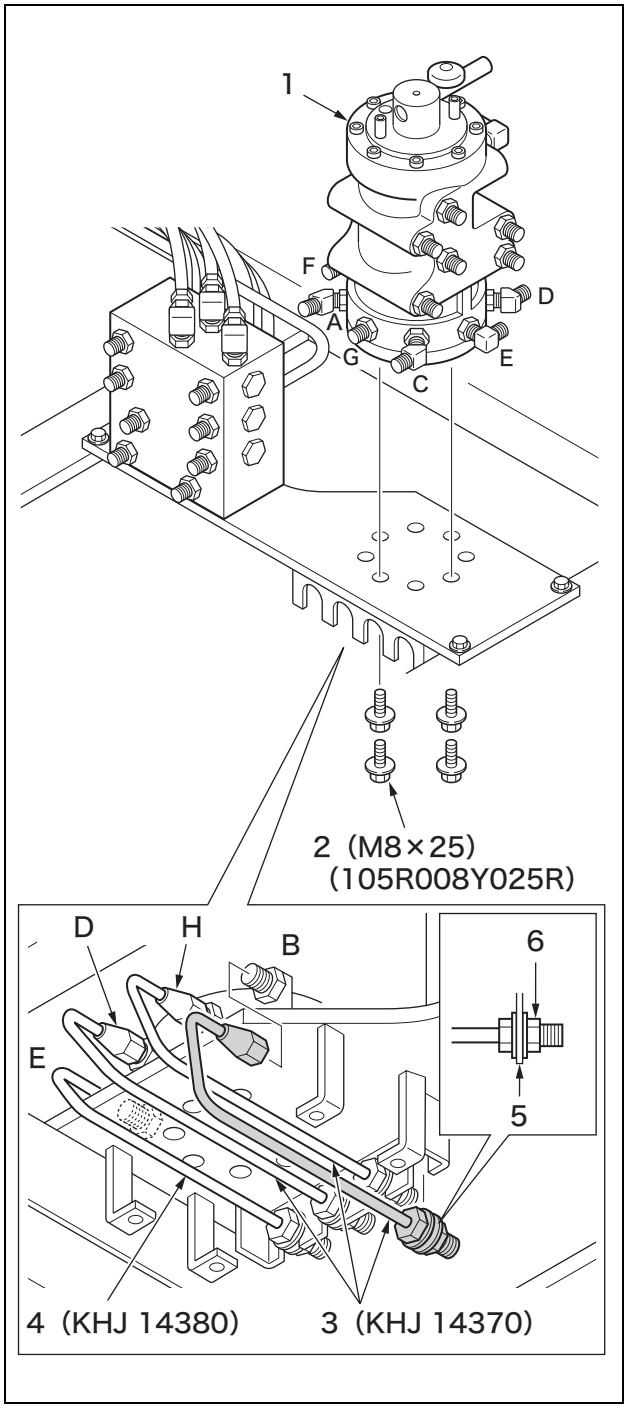

[11] Beginning with leftmost hydraulic pipe, attach the hydraulic pipes (3) and (4) to the 4-way selector valve (1) and the bracket (5) from the bottom.

[12] Use the nut (6) to secure the bracket (5) as in the figure on the left.
- Hydraulic pipe (3) (KHJ 14370) × 3
- Hydraulic pipe (4) (KHJ 14380) × 1

https://truckmanualshub.com/

[13] Fasten with a 17-mm wrench (1) and a 17-mm wrench (2).

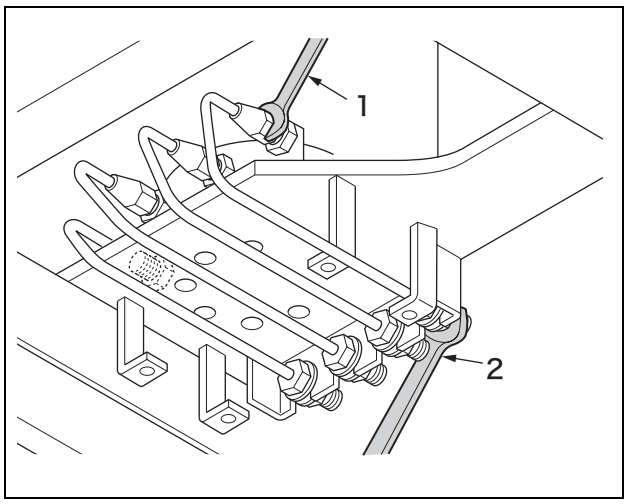

[14] Attach the hydraulic pipes (1) to the 4-way selector valve (2) and cushion valve (3). (See the next page for details.)

- Hydraulic pipe (KHJ 14370)
- Hydraulic pipe (KHJ 14380)

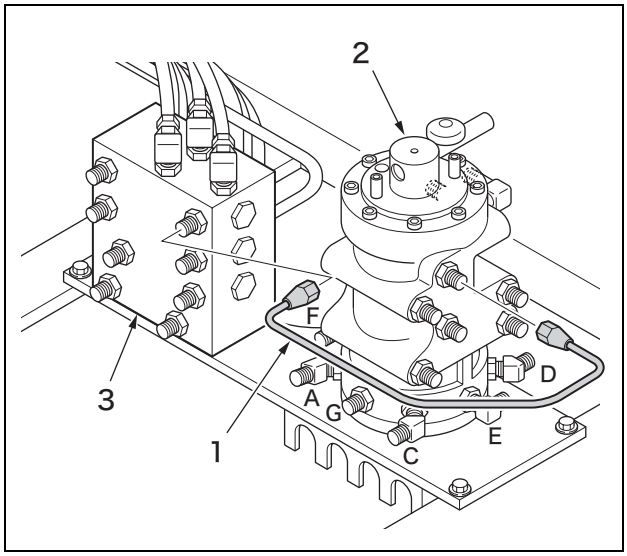

https://truckmanualshub.com/

5-12 Upper Swing Body: Remote Control Valve

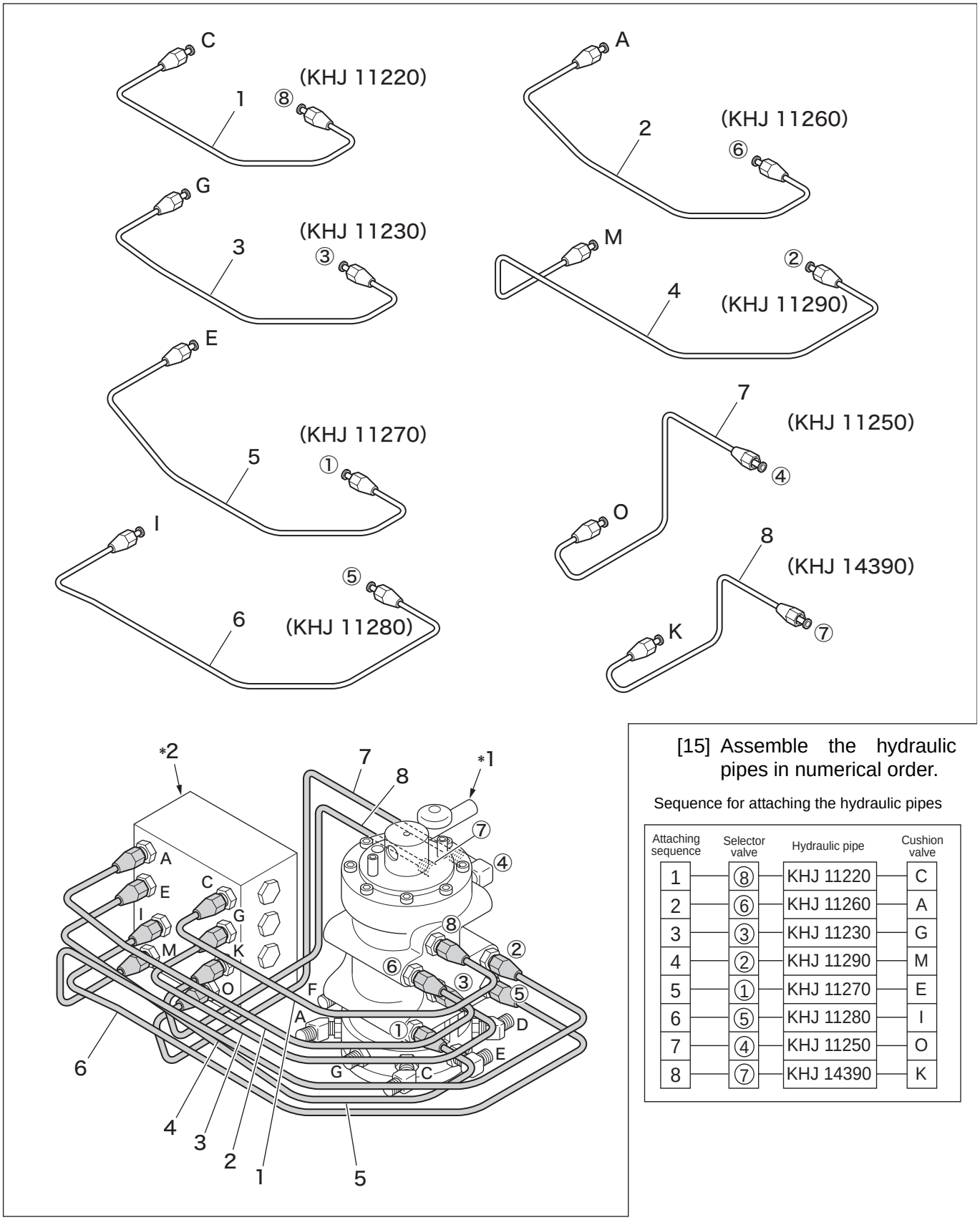

[15] Assemble the hydraulic pipes in numerical order.

Sequence for attaching the hydraulic pipes

Attaching sequence	Selector valve	Hydraulic pipe	Cushion valve
1	⑧	KHJ 11220	C
2	⑥	KHJ 11260	A
3	③	KHJ 11230	G
4	②	KHJ 11290	M
5	①	KHJ 11270	E
6	⑤	KHJ 11280	I
7	④	KHJ 11250	O
8	⑦	KHJ 14390	K

*1 Selector valve
*2 Cushion valve

https://truckmanualshub.com/

[16] Attach the hydraulic hoses removed in Step [6] to the ports on the 4-way selector valve as in the figure on the left.

4-way selector valve port	Hydraulic hose (hose mark)
B	B2
H	S1
D	B1
E	A1

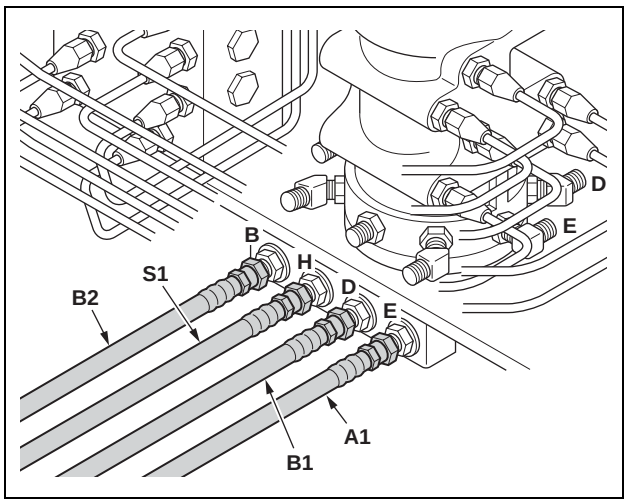

[17] Attach the hydraulic hoses removed in Step [6] to the ports on the 4-way selector valve as in the figure on the left.

4-way selector valve port	Hydraulic hose (hose mark)
F	S2
A	V2
G	A2
C	V1

Refer to the next page for information on how to connect the hoses.

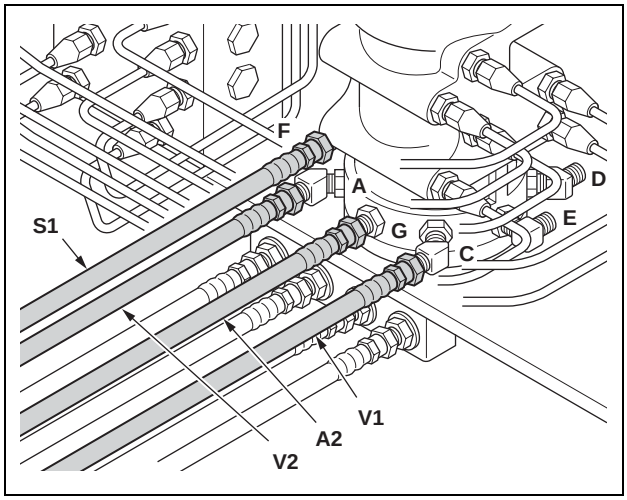

https://truckmanualshub.com/

5-12 Upper Swing Body: Remote Control Valve

■ Hose connection table (Hydraulic piping diagram for 4-way selector valve)

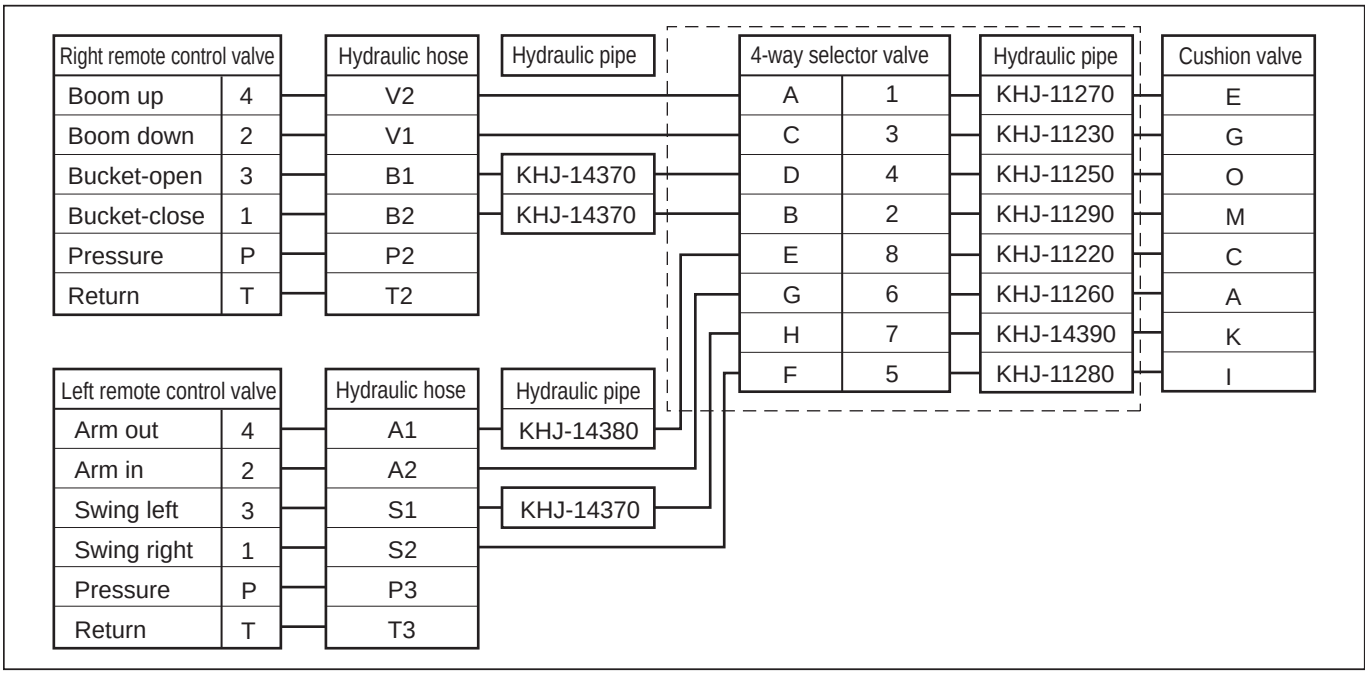

* This is an ISO type piping diagram.

[18] After installing the 4-way selector valve, install the cover (1).

[19] Use a 13-mm wrench to fasten the supplied bolts (2).

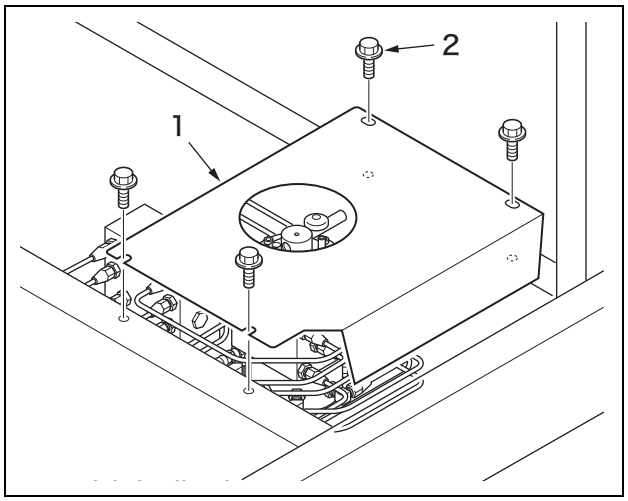

[20] Install the cover on the bracket.
- Cover (1) (KHJ 14350) × 1
- High strength bolt (2) (M10 × 75) (102R010Y075R) × 3
- High strength washer (3) (M10) (KEH0114) × 3

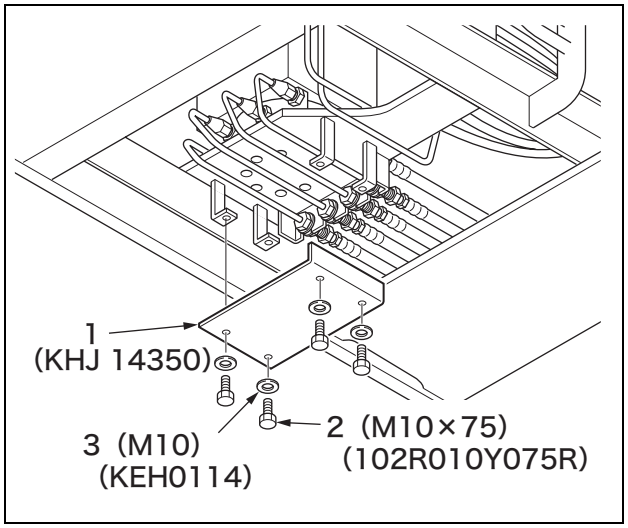

https://truckmanualshub.com/

Diagram of installed 4-way valve

* (1) Operation switching knob

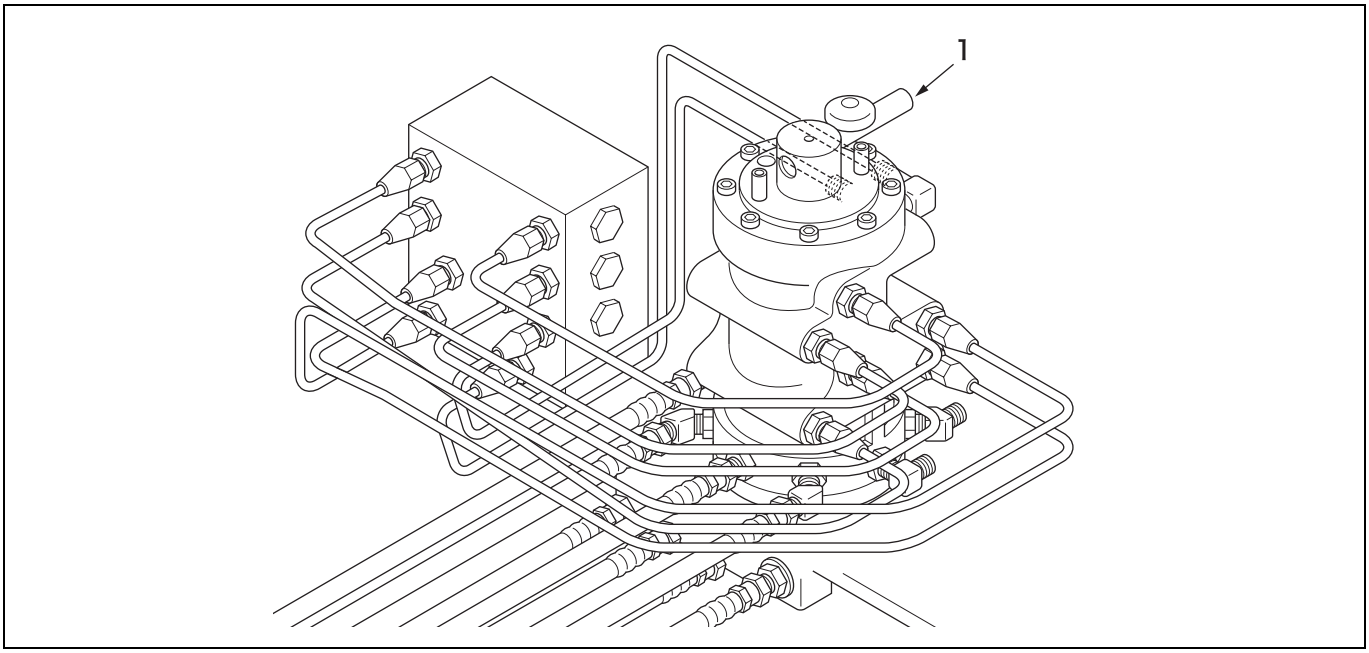

https://truckmanualshub.com/

5-12 Upper Swing Body: Remote Control Valve

Operation labels on 4-way selector valve (4 operations)

I

Warning

Before starting the engine, check that the position of the operation switching knob on the selector valve is set to I.

When the operation switching knob is set to I as in the figure on the right, the operating method is as shown in the figure below.

(Operating method: ISO)

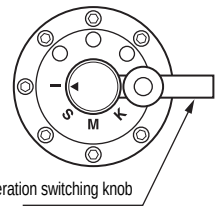

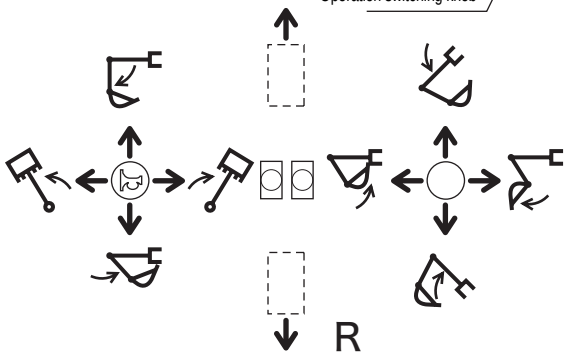

S

Warning

Before starting the engine, check that the position of the operation switching knob on the selector valve is set to S.

When the operation switching knob is set to S as in the figure on the right, the operating method is as shown in the figure below.

(Operating method: Sumitomo)

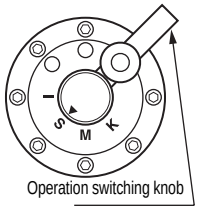

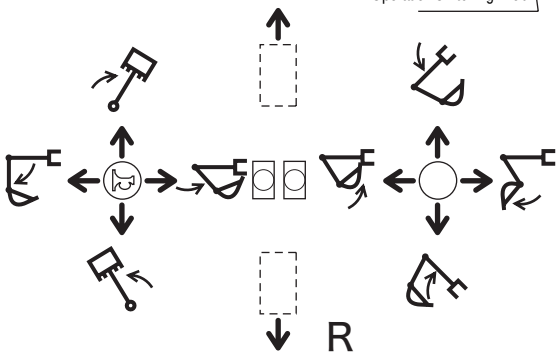

K

Warning

Before starting the engine, check that the position of the operation switching knob on the selector valve is set to K.

When the operation switching knob is set to K as in the figure on the right, the operating method is as shown in the figure below.

(Operating method: Kobelco)

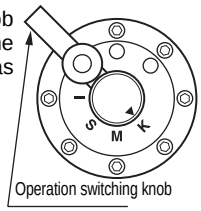

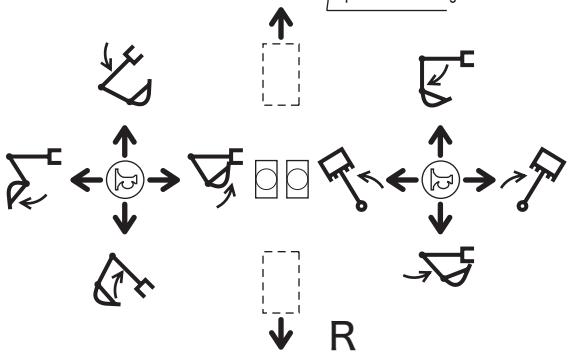

M

Warning

Before starting the engine, check that the position of the operation switching knob on the selector valve is set to M.

When the operation switching knob is set to M as in the figure on the right, the operating method is as shown in the figure below.

(Operating method: Mitsubishi)

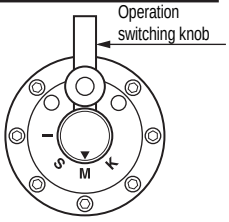

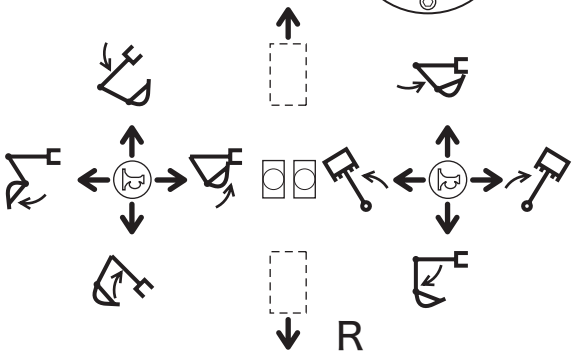

https://truckmanualshub.com/

Operation labels on 4-way selector valve (4 operations)

[1] While lifting the lock (1) up, rotate the operation switching knob (2).

[2] The lock lowers at each switching point (3).

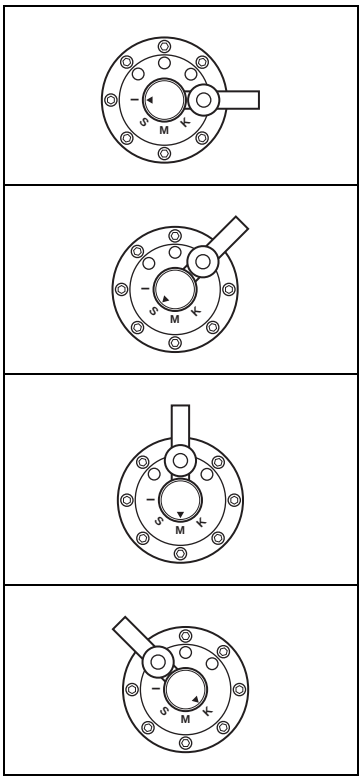

Operating method I

Operating method S

Operating method M

Operating method K

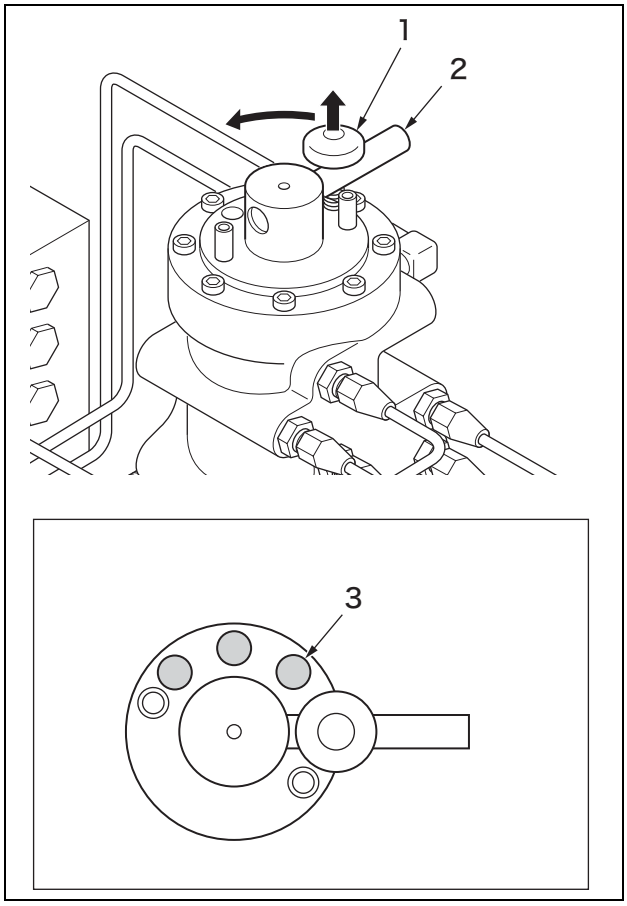

https://truckmanualshub.com/

5-13 Upper Swing Body: Control Valve

1 Removal and Installation of Control Valve Assembly

Warnings	• Keep away from fire. • Be sure to release the hydraulic pressure before beginning work.

Cautions	• Be sure to stop the engine before beginning work. • Be sure to inspect wire ropes and other lifting equipment before beginning work. • Do not stand on or pass under the suspended load (control valve).

Items to prepare

- Wrench (7 mm, 8 mm, 10 mm, 13 mm, 17 mm, 19 mm, 22 mm, 41 mm)
- Nippers
- Eyebolts (10 mm × 2)
- Shackles (that meets the required lifting capacity × 2)
- Wire ropes (that meets the required lifting capacity)
- Crane (that meets the required lifting capacity)
- Marking pen
- Caps
- Plugs
- Rags
- Cleaning fluid
- Crossties

[1] Extract and lower the attachments onto the secure ground.

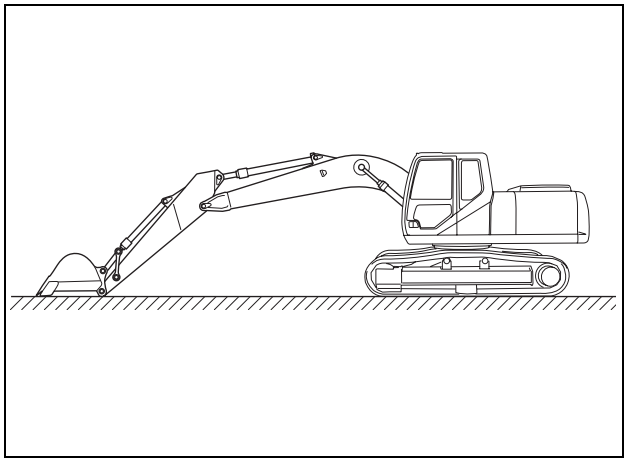

[2] Drain the oil from the hydraulic oil tank.
(For details, see "Draining Oil from Hydraulic Oil Tank.")
- Otherwise, connect a vacuum pump and release the hydraulic pressure.

https://truckmanualshub.com/

[3] Remove 6 mounting bolts (1) using a 19-mm wrench, and remove the center cover (2).

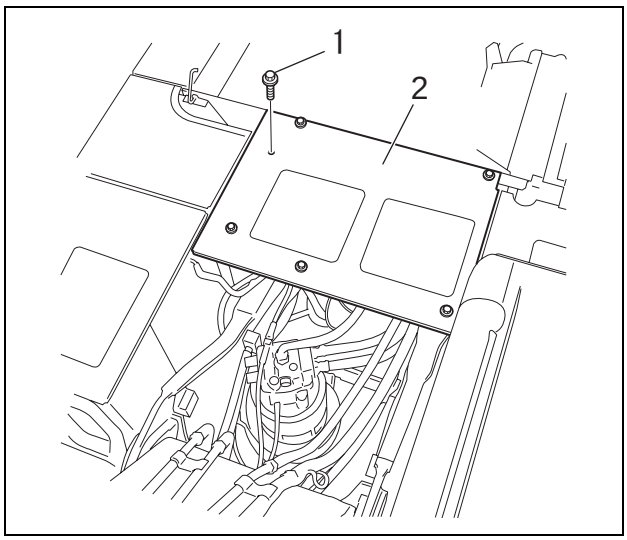

[4] Remove 3 mounting bolts (1) using a 19-mm wrench, and remove the under cover (2).

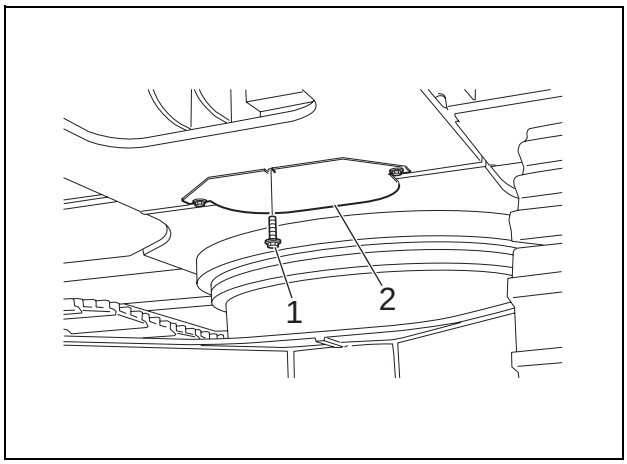

[5] Cut the hose band (1) using a nipper.

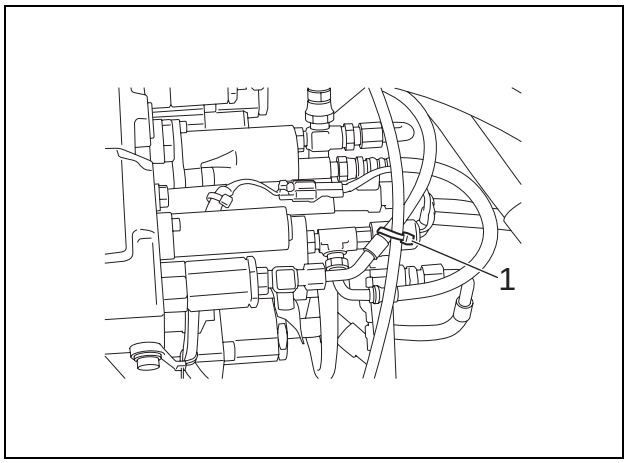

https://truckmanualshub.com/

[6] Cut the hose band (1) using a nipper.

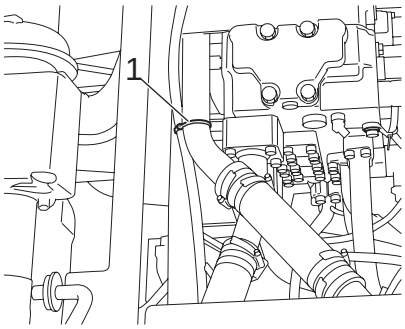

[7] Remove the connector (1) and cut the hose band (2) using a nipper.

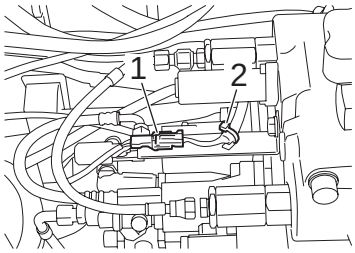

[8] Remove the bolt (1) using a 17-mm wrench, and remove the band holder (2).

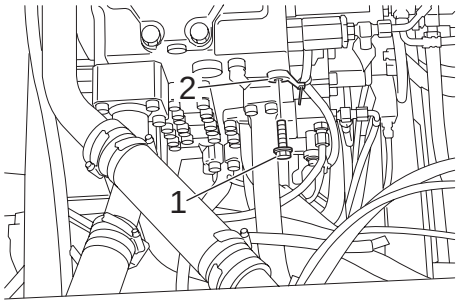

[9] Remove the bolt (1) using a 13-mm wrench, and remove the band clamp (2).

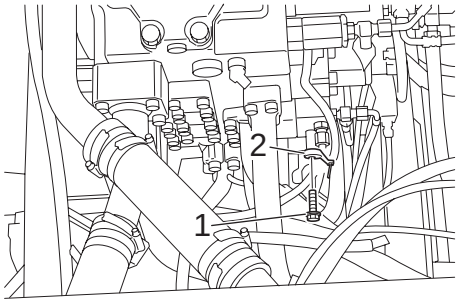

https://truckmanualshub.com/

[10] Remove the connector (1).

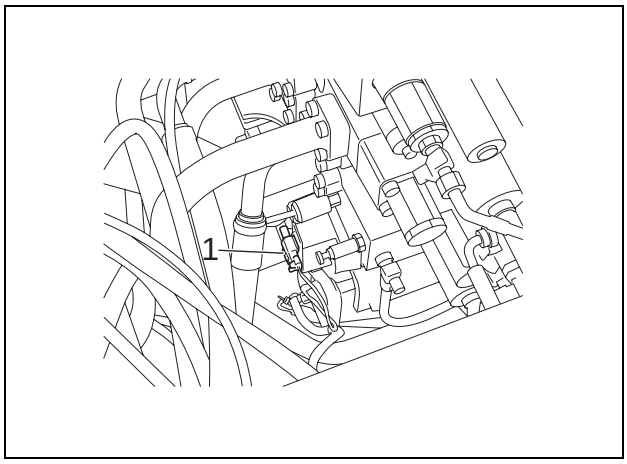

[11] Cut the hose band (1) using a nipper.

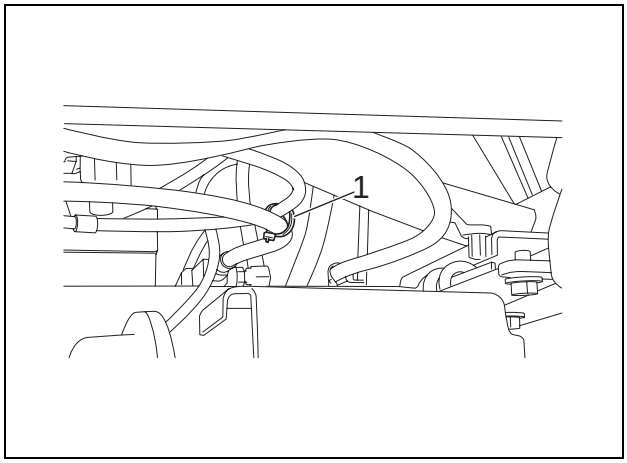

[12] Remove the mounting bolt (1) using a 19-mm wrench, and remove the clamp (2).

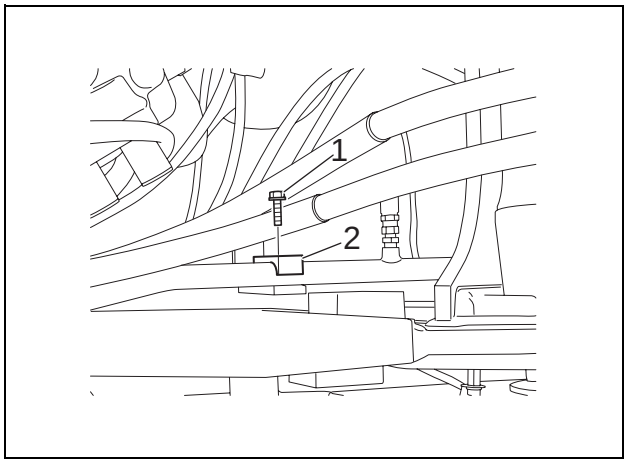

[13] Remove the mounting bolt (1) using a 19-mm wrench, and remove the clamp (2).

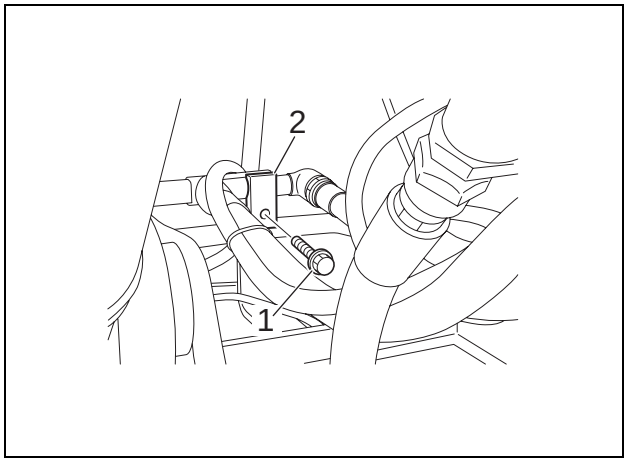

https://truckmanualshub.com/

[14] Remove the mounting bolt (1) using a 19-mm wrench, and remove the clamp (2).

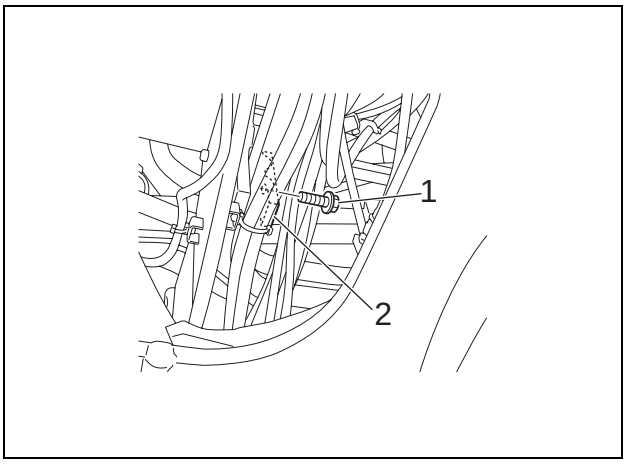

[15] Loosen the hose band (1) using a 7-mm wrench.

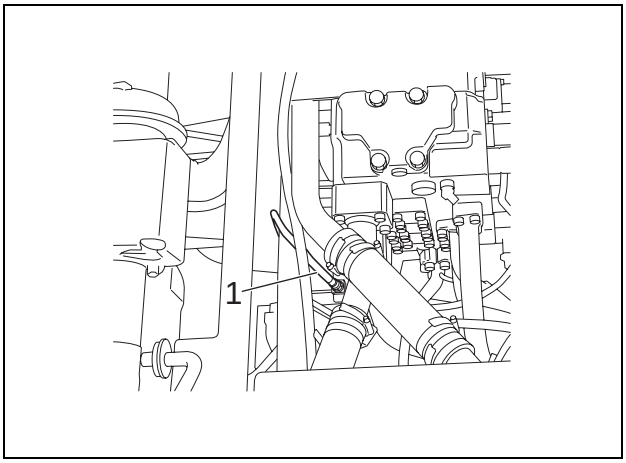

[16] Remove the piping anchor bolt (1) using a 19-mm wrench.

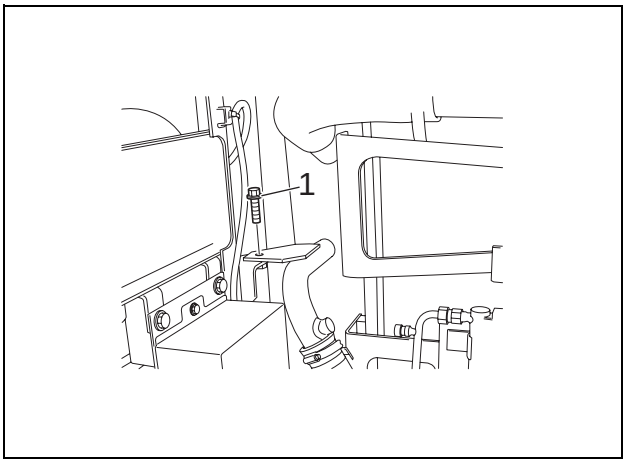

https://truckmanualshub.com/

[17] Remove the mounting bolt (1) using a 17-mm wrench, and remove the clamp (2).

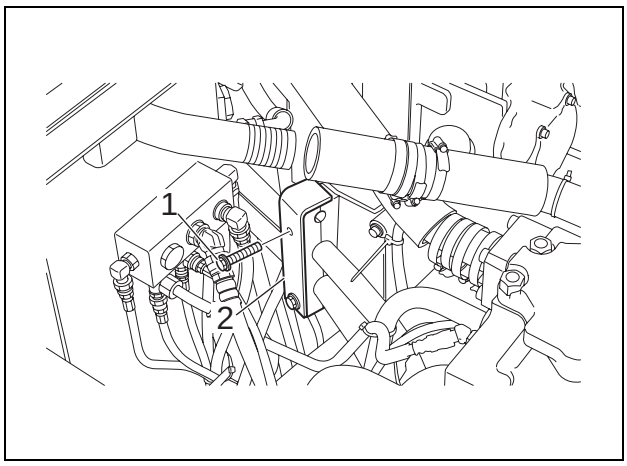

[18] Remove the piping anchor bolt (1) using an 8-mm wrench.

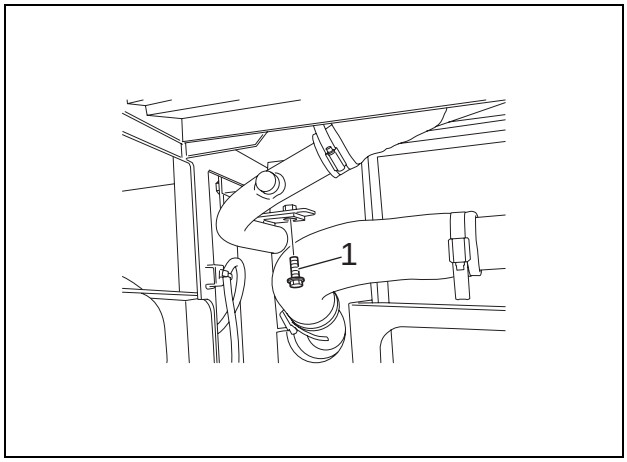

[19] Remove 2 mounting bolts (1) using a 17-mm wrench, and remove the clamp holder (2).

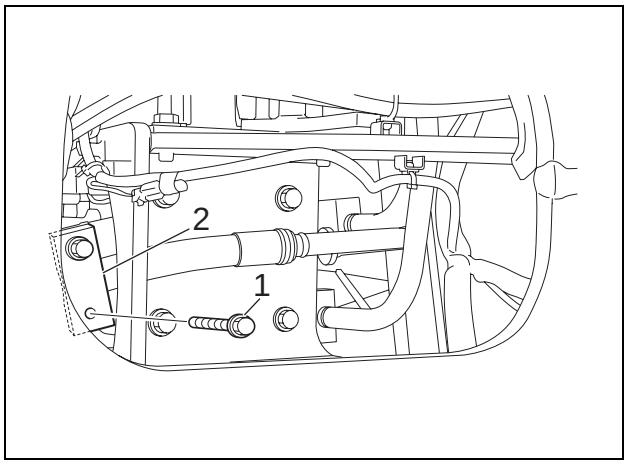

https://truckmanualshub.com/

[20] Remove pipes and hoses of the control valve using a wrench (7, 8, 10, 17, 19, 22 and 41 mm).
- Mark the pipes and hoses so that they can be connected correctly at the time of assembly.
- Use caps or plugs to cover the pipes and hoses to prevent the entry of water, dust or dirt.
- Clean the pipes by spraying with a parts cleaner to prevent scratches and prevent dirt from accumulating on the connectors.

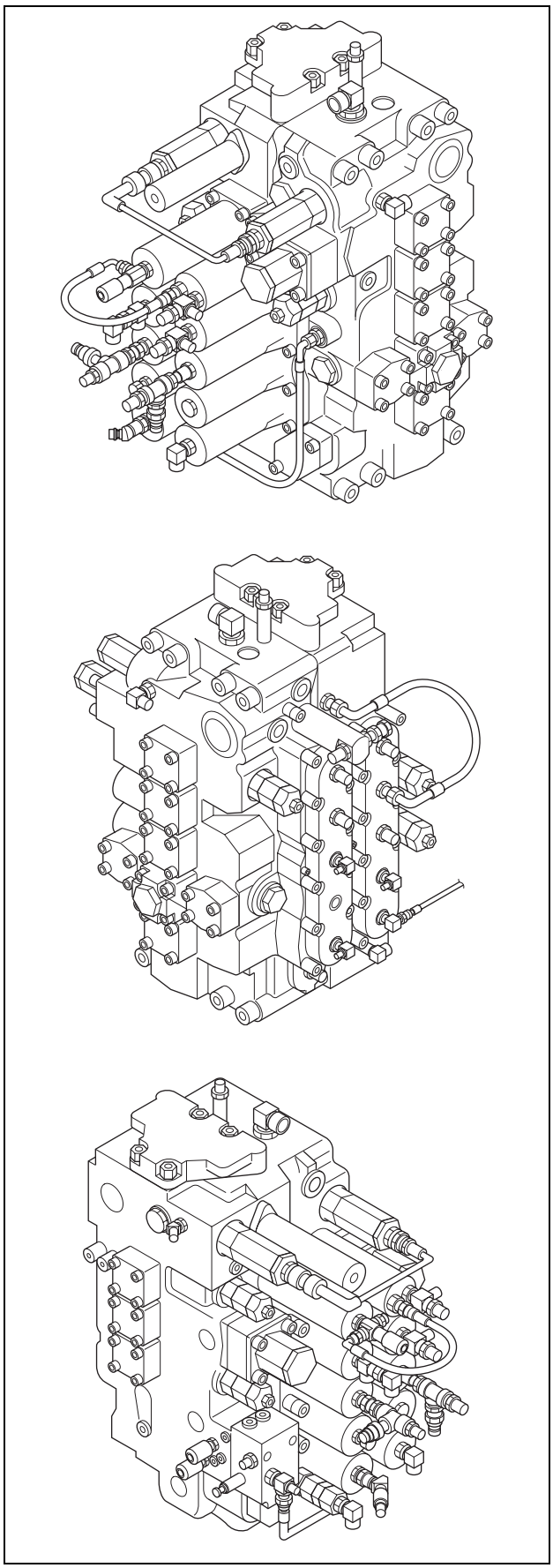

https://truckmanualshub.com/

[21] Remove 4 mounting bolts (1) from the control valve using a 24-mm wrench.

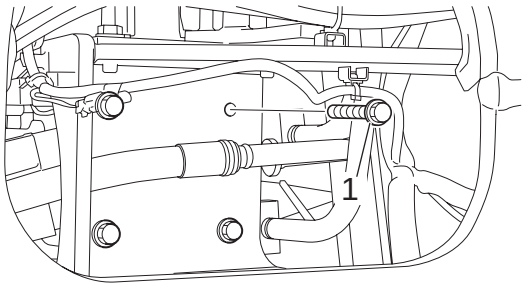

[22] Install 2 10-mm eyebolts (1) on the control valve.

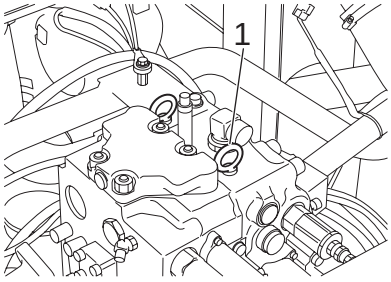

[23] Securely mount the shackle (1) on each eyebolt, and lift the control valve (3) using wires (2) and the crane.

[24] Place the control valve (3) on the crossties.

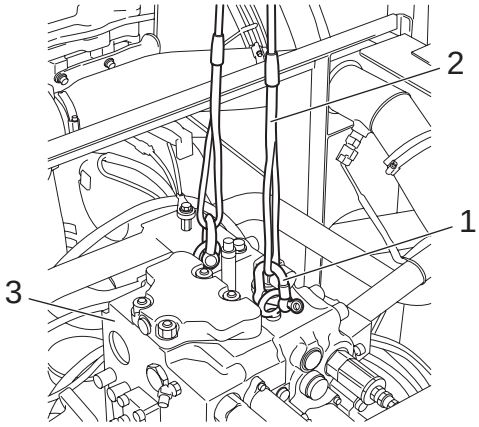

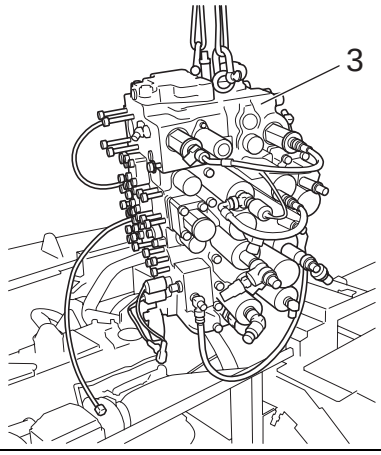

https://truckmanualshub.com/

1 Removal and Installation of 5-Stack Solenoid Valve

Warning	• Be sure to release the hydraulic pressure before beginning work.

Caution	• Be sure to stop the engine before beginning work.

Items to prepare

- Wrench (17 mm, 19 mm, 22 mm)
- Marking pen
- Caps
- Plugs
- Rags
- Cleaning fluid

[1] Remove 2 mounting bolts (1) using a 13-mm wrench, and remove the cover.

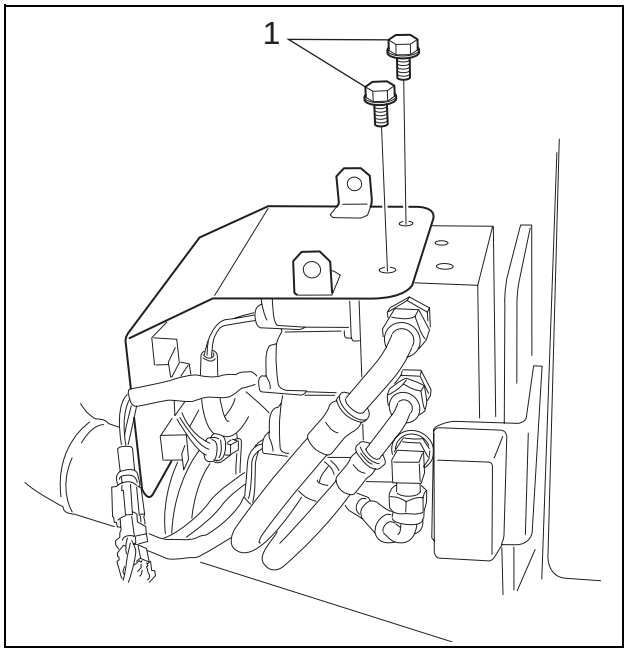

[2] Remove 5 connectors including (1), (2) and (3).

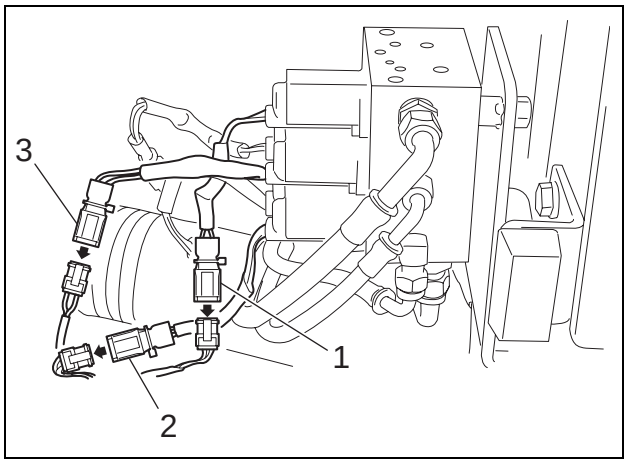

https://truckmanualshub.com/

[3] Remove hoses using a wrench [(22 mm (1), 19 mm (2), 19 mm (3))].
- Mark the solenoid valve and hoses so that they can be connected correctly at the time of assembly.
- Use caps or plugs to cover the solenoid valve and hoses to prevent the entry of water, dust or dirt.
- Clean the solenoid valve and hoses by spraying with a parts cleaner to prevent scratches and prevent dirt from accumulating on the connectors.

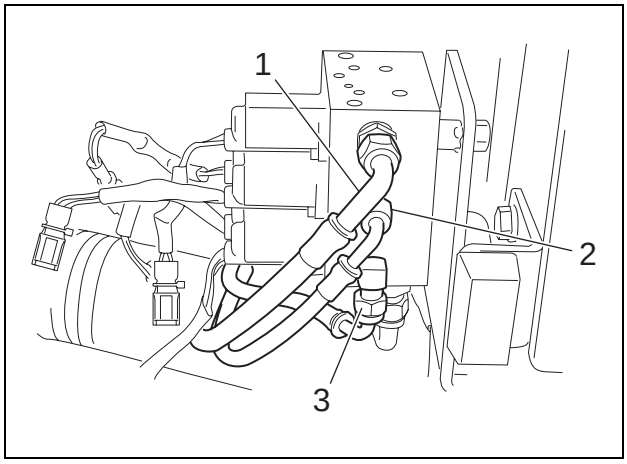

[4] Remove hoses (4) and (5) using a 22-mm wrench.
- Mark the solenoid valve and hoses so that they can be connected correctly at the time of assembly.
- Use caps or plugs to cover the solenoid valve and hoses to prevent the entry of water, dust or dirt.
- Clean the solenoid valve and hoses by spraying with a parts cleaner to prevent scratches and prevent dirt from accumulating on the connectors.

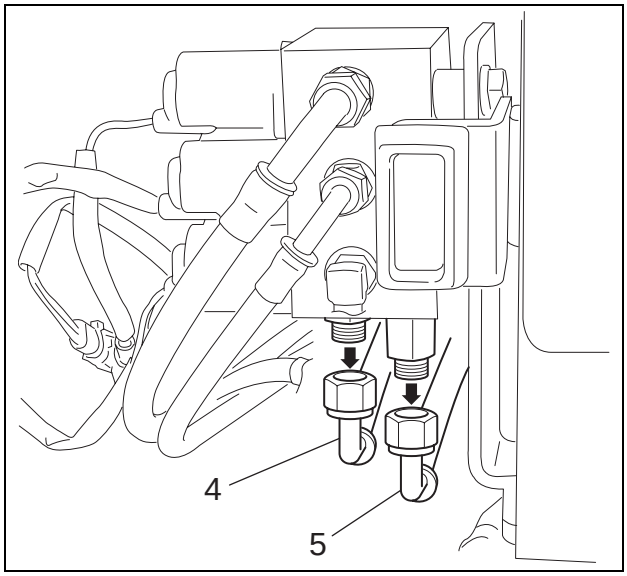

[5] Remove hoses using a wrench [19 mm (6), 19 mm (7), 22 mm (8)].
- Mark the solenoid valve and hoses so that they can be connected correctly at the time of assembly.
- Use caps or plugs to cover the solenoid valve and hoses to prevent the entry of water, dust or dirt.
- Clean the solenoid valve and hoses by spraying with a parts cleaner to prevent scratches and prevent dirt from accumulating on the connectors.

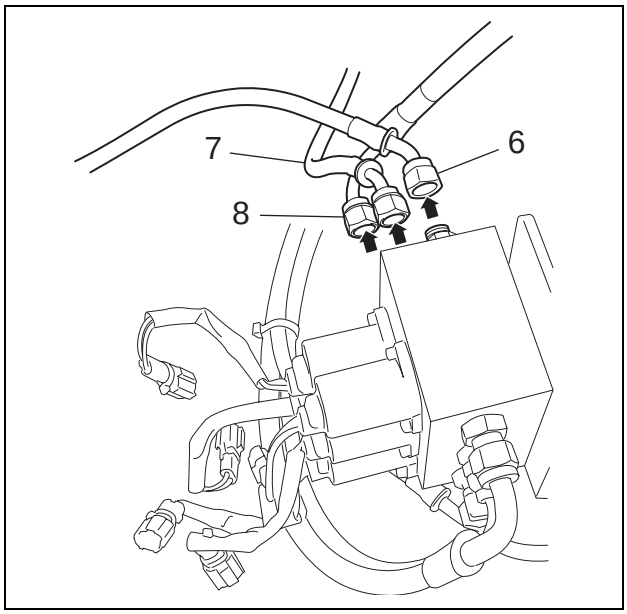

https://truckmanualshub.com/

[6] Remove 2 mounting bolts (1) using a 17-mm wrench, and remove 5-stack solenoid valve (2).

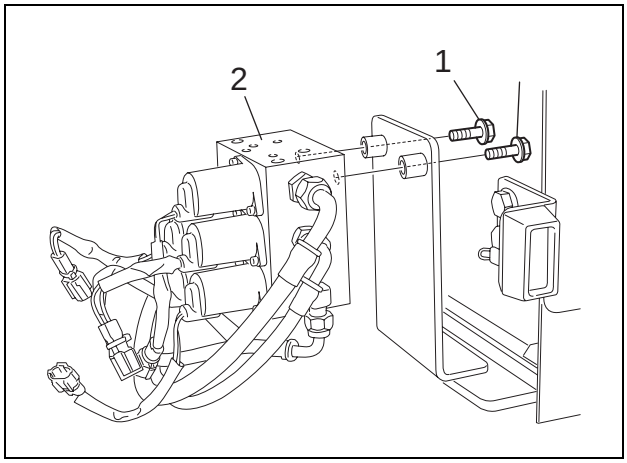

https://truckmanualshub.com/

2 Removal and Installation of Cushion Valve

Warning	• Be sure to release the hydraulic pressure before beginning work.

Caution	• Be sure to stop the engine before beginning work.

Items to prepare

- Wrench (17 mm, 19 mm, 22 mm)
- Marking pen
- Caps
- Plugs
- Waste oil can
- Rags
- Cleaning fluid

[1] Remove 5 mounting bolts (1) using a 19-mm wrench, and remove the under cover (2).

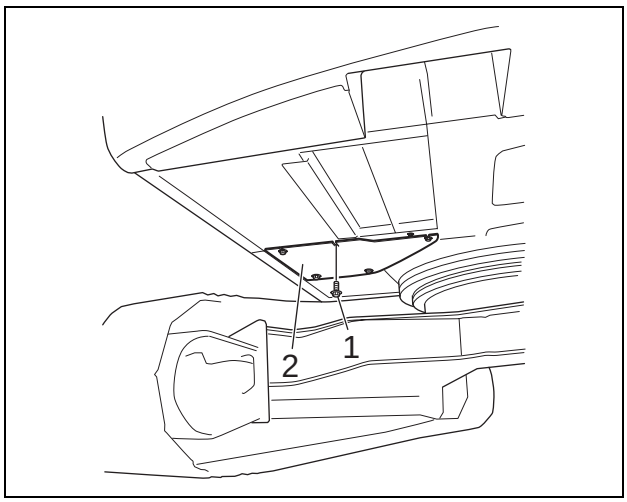

[2] Prepare the waste oil can (1).

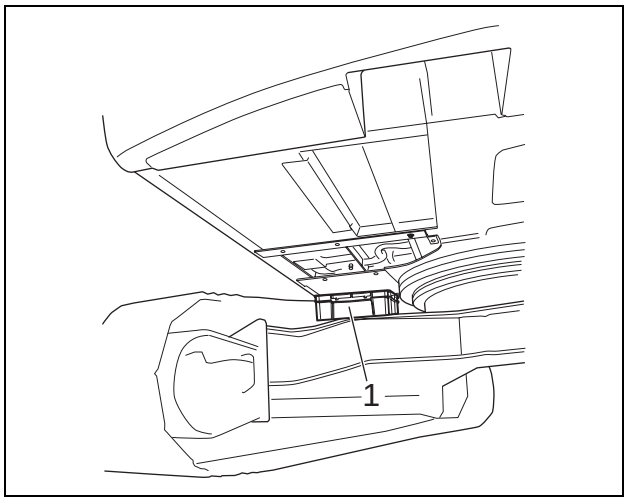

https://truckmanualshub.com/

[3] Remove hoses and pipes using a wrench (17-mm wrench for pipes (13) to (20); a 19-mm wrench for the pipes (1), (2), (3), (7) and (10); and a 22-mm wrench for pipes (4) to (6), (8), (9), (11), and (12)).
- Mark the cushion valve, hoses and pipes so that they can be connected correctly at the time of assembly.
- Use caps and plugs to cover the cushion valve, hoses and pipes to prevent the entry of water, dust or dirt.
- Clean the cushion valve, hoses and pipes by spraying with a parts cleaner to prevent scratches and prevent dirt from accumulating on the connectors.

[4] Remove the connector (21).

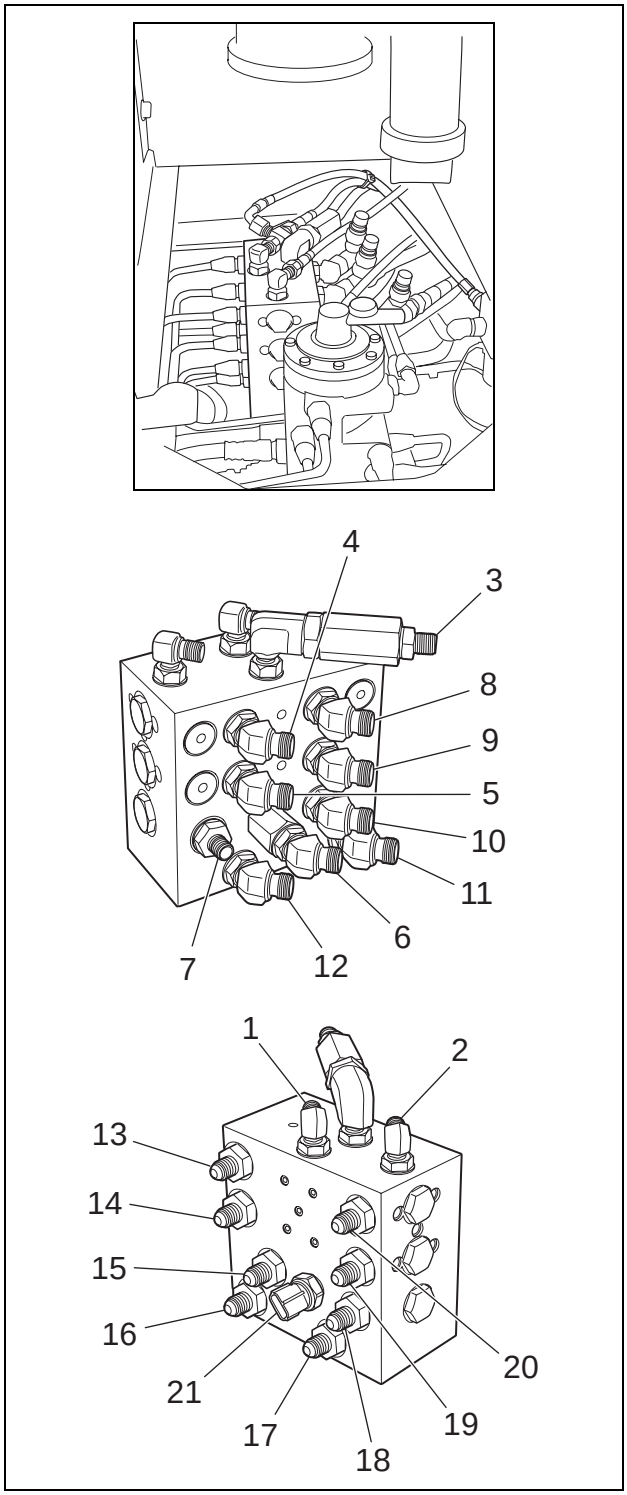

https://truckmanualshub.com/

[5] Remove 4 mounting bolts (1) using a 17-mm wrench, and remove the cushion valve.

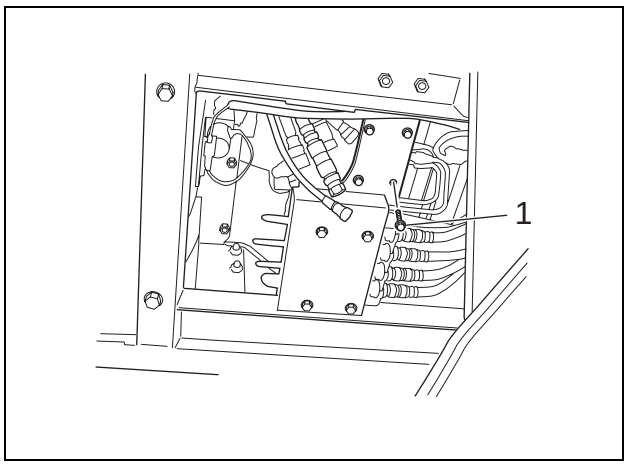

https://truckmanualshub.com/

3 Assembly and Disassembly of Cushion Valve

1. Valve summary

This valve is made up of a shuttle valve section and a cushion valve section with a heat circuit.
The cushion valve with a heat circuit is connected between the hydraulic shovel control valve and the pilot operation valve to reduce shaking of the body (cushion function) caused by the emergency stop operations of the operator. This valve is equipped with a circuit with which the operator can deliberately disable the cushion function for reverse operations.
The shuttle valve selects the high-pressure signal pressure from 2 signal pressure systems. This valve has 2 circuits.

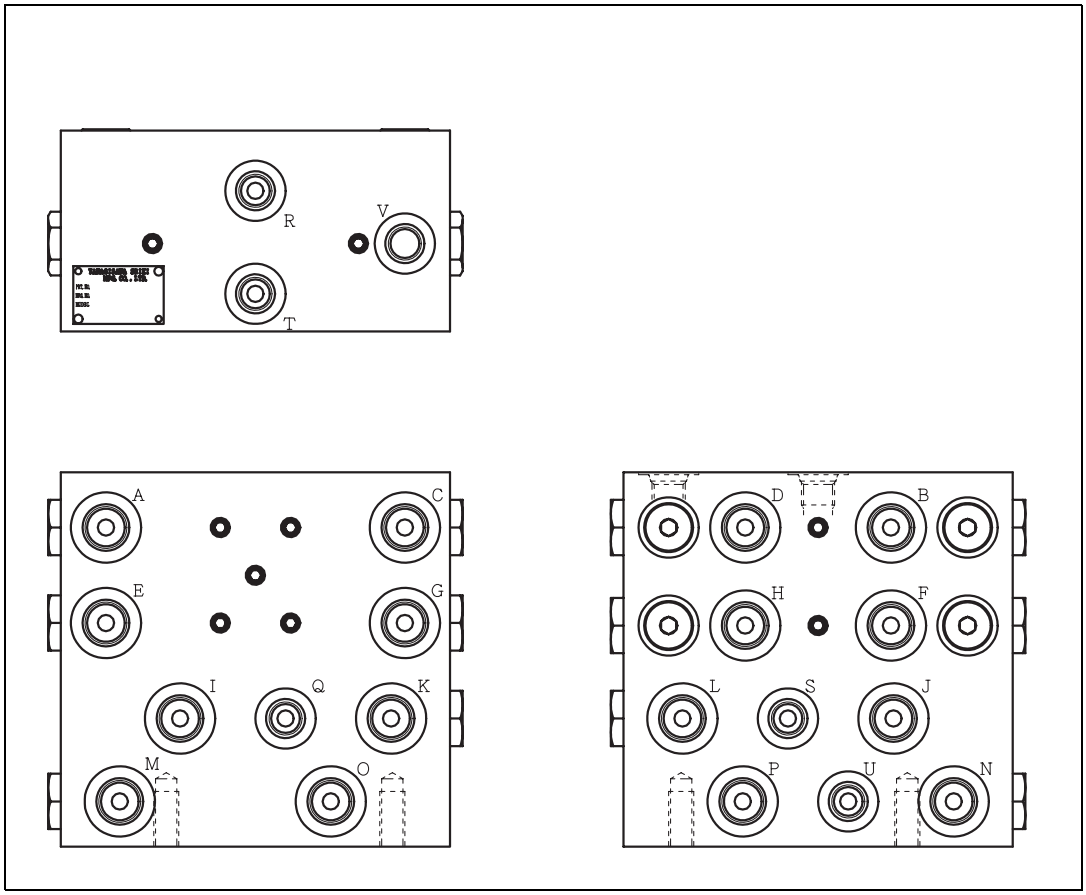

Figure 1

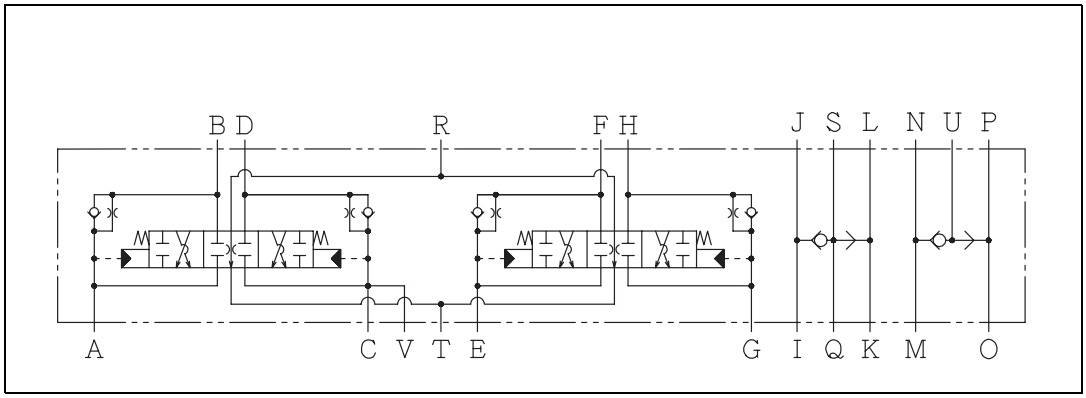

Figure 2

https://truckmanualshub.com/

2. Explanation of operations

[1] Normal operation

The pressurized oil fed to the A port (or C, E, or G port) from the pilot operation valve pushes up the check plunger and is sent to the B port (or D, F, or H port). The pressurized oil that has passed through the B port operates on the spool of control valve and operates the actuator. The oil pushed out from the control valve spool passes through the D port (or B, F, or H port) and flows out to the T port.

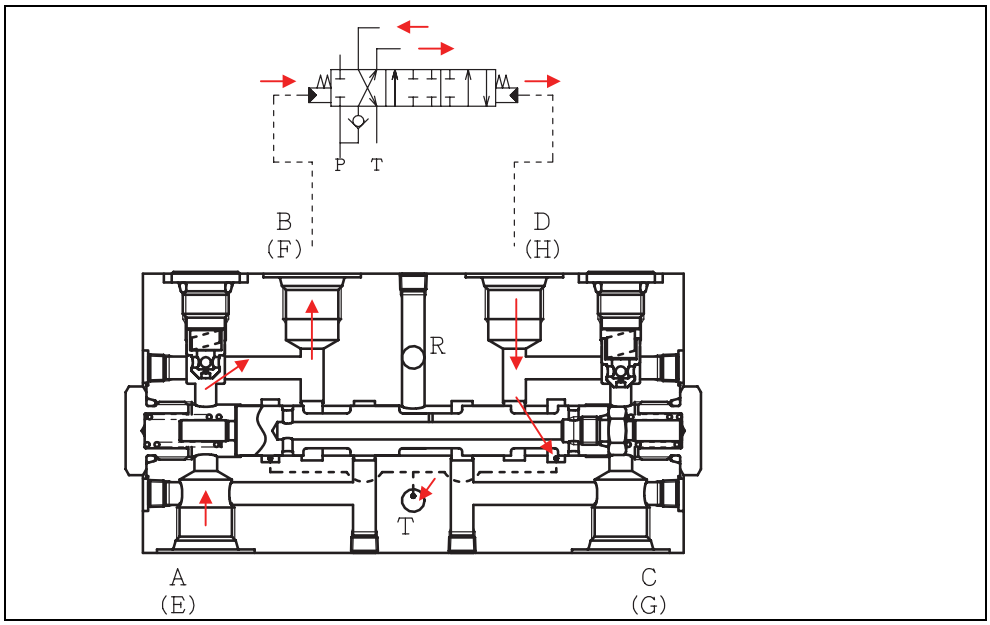

Figure 3

[2] Cushion operation

When the pressurized oil fed from the pilot operation valve to the A port (or C, E, or G port) is closed by the pilot operation valve, the pressurized oil that has operated on the control valve spool is pushed back to the B port (or the D, F, or H port) by the return spring of the spool. The returned oil is sent to the A port (or C, E or G port) through the metering orifice of check plunger, and drained from the pilot operation valve. At this time, by passing through the metering orifice, the pressurized oil holds down the control valve spool speed and reduces shaking of the body. (Cushion function)

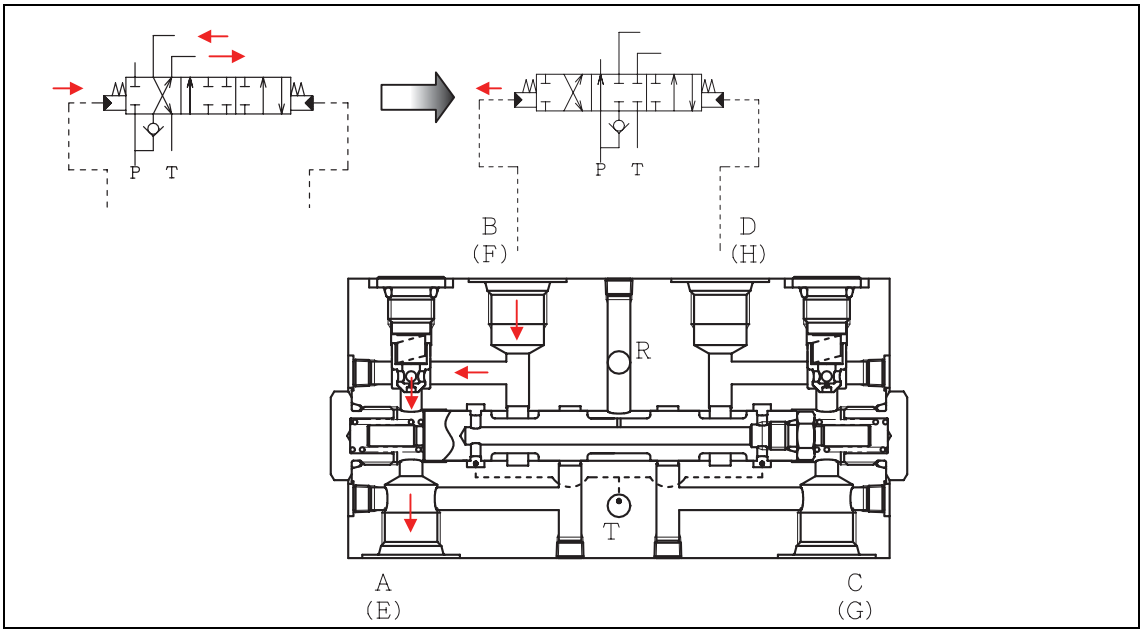

Figure 4

https://truckmanualshub.com/

[3] Reverse operation

When the pressurized oil fed from the pilot operation valve to the A port (or C, E, or G port) is switched to the C port (or A, E, or G port), the pressurized oil that has operated on the control valve spool is pushed back to the B port. Because the pushed back oil flows out to the T port without passing through the check plunger metering orifice, it does not hold down the control valve spool speed, so the cushion function does not work.

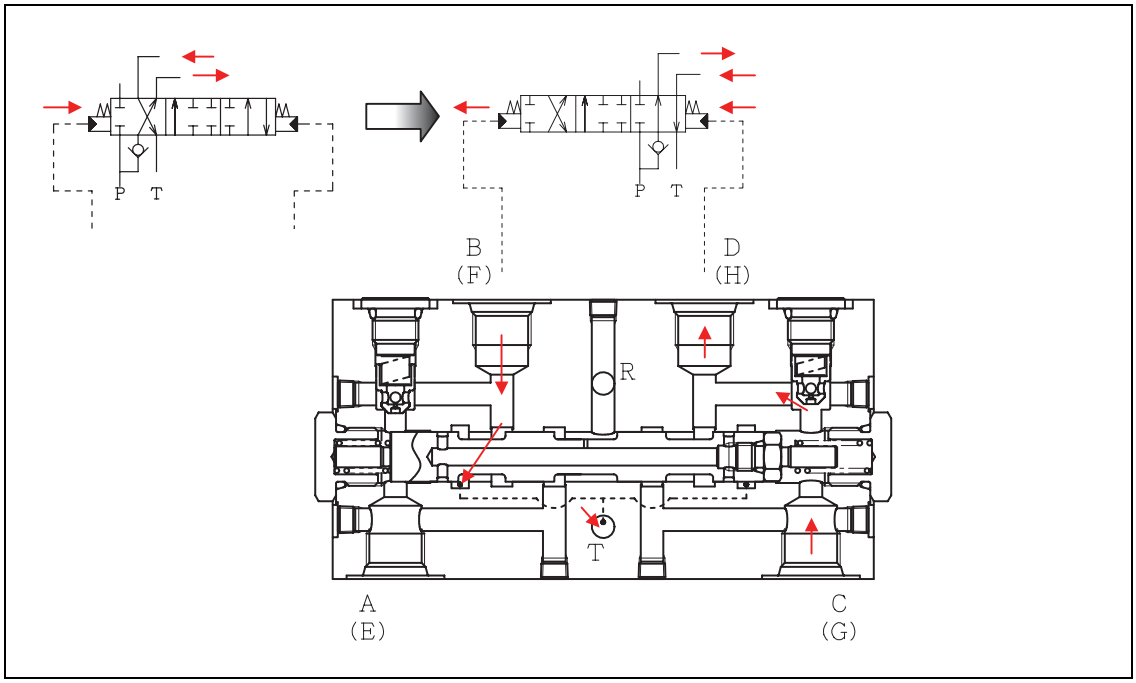

Figure 5

[4] Heat circuit

When the pilot operation valve is in the neutral position, the oil fed to the R port passes through the inside of reverse operation spool, flows out to the T port, and heats up the inside of the valve.

When pressurized oil is being fed from the pilot operation valve to the A port (or C, E, or G port), the oil fed to the R port flows out to the C port (or A, E, or G port) and heats up both the circuit to the pilot operation valve and inside the valve.

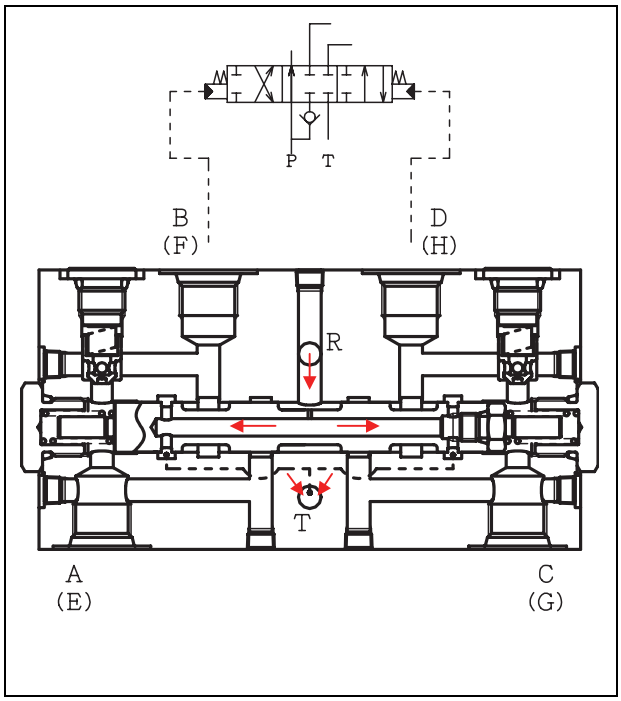

Figure 6

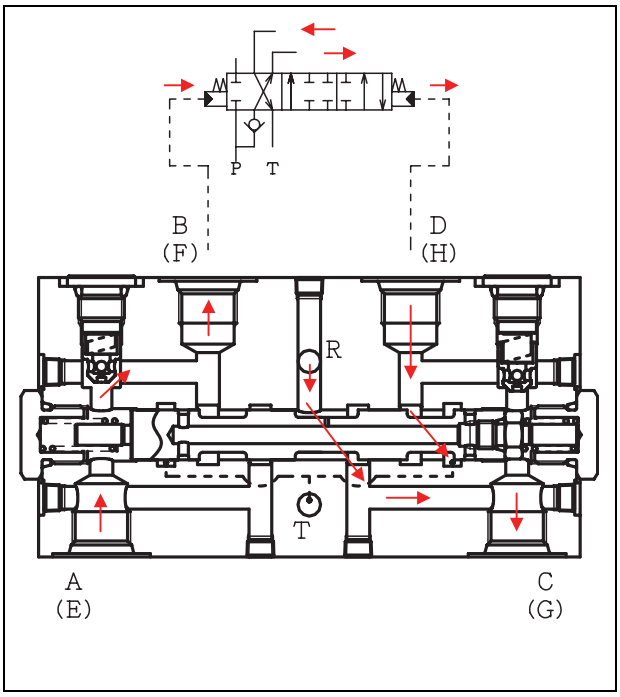

Figure 7

https://truckmanualshub.com/

[5] Shuttle valve

Because the steel ball is pressed by the higher pressure of either the pressure between I and J ports or the pressure between K and L ports, the high pressure oil is fed to the S or Q port. Similarly, the higher pressure oil of either the pressure between M and N ports or the pressure between O and P ports is fed to the U port.

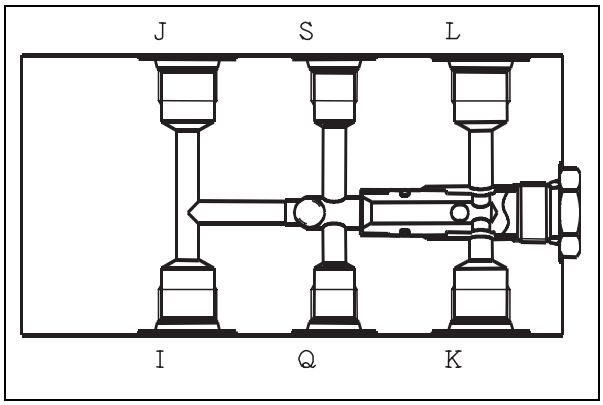

Figure 8

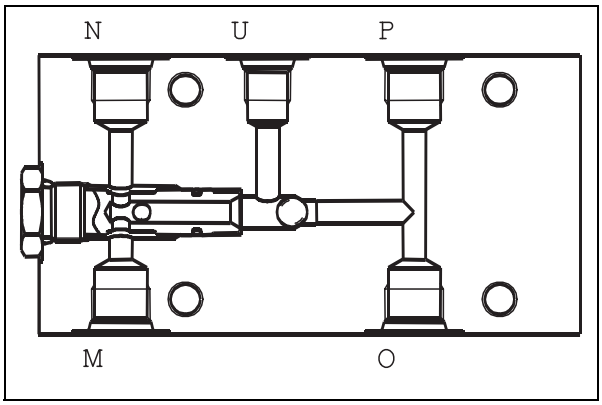

Figure 9

https://truckmanualshub.com/

3. Disassembly procedure

Because this valve comprises a structure with minimum clearance between parts, the parts have been produced using high-precision processing technology, and as these parts are selected and tightly assembled, try to avoid disassembling the valve as much as possible. If you need to disassemble or reassemble the valve, use the following notes. (Remember that the product warranty may be voided.)

(1) Service (disassembling or reassembling) the valve in a clean place where there is minimal dust.
(2) Use clean tools and oils only, and handle the valve with care.
(3) Wash and clean the outside of the assembly by taking care to prevent any foreign materials enter its ports.
(4) Before starting the service, check the internal structure of the assembly and determine the purpose and area of parts to be disassembled.

[1] Reverse operation spool

(1) Remove the plug (4) and O-ring (5).
(2) Remove the spring (3).
(3) Remove the spool (2) which consists of the cap screw (6) and O-ring (7).

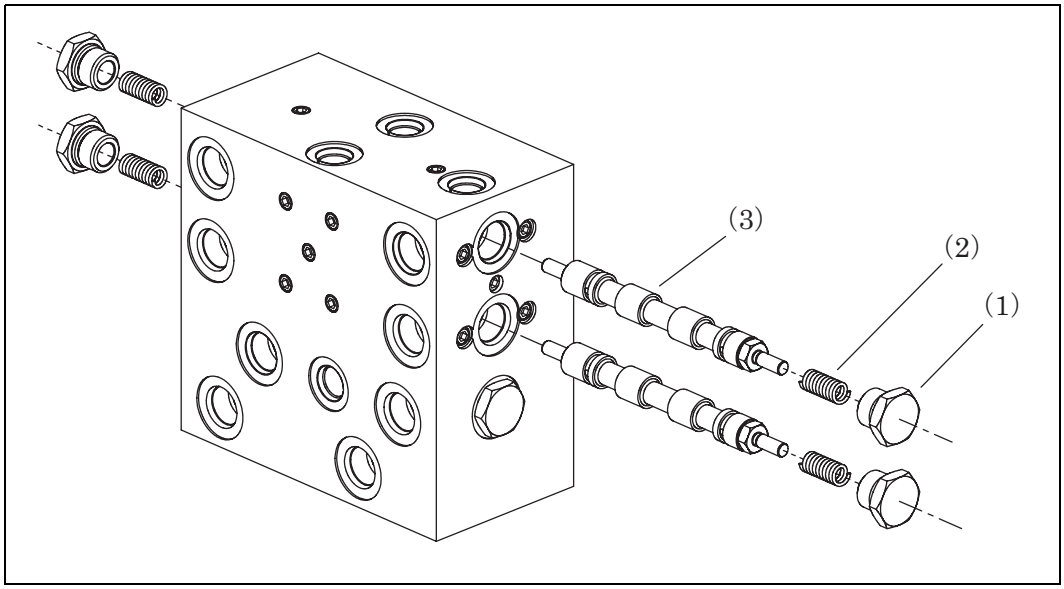

Figure 10

(4) Hold and clamp the spool assembly, you have removed in Step (3), in the vise.
Caution: Use a wooden chip (a jig) or other object so as not to scratch the spool assembly.
(5) Remove the cap screw (6) and O-ring (7).

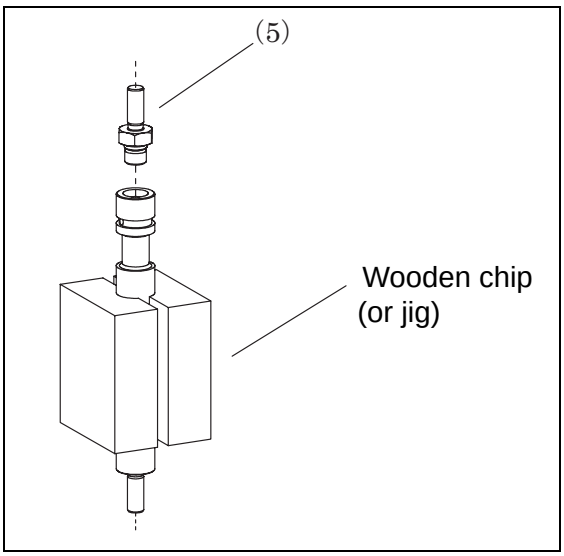

Figure 11

https://truckmanualshub.com/

[2] Check plunger with an orifice

(1) Remove the plug (14) and O-ring (15).

(2) Remove springs (13) and remove check plungers (9) to (12).

Caution: Because the check plungers have different shapes, clearly identify and store them separately.

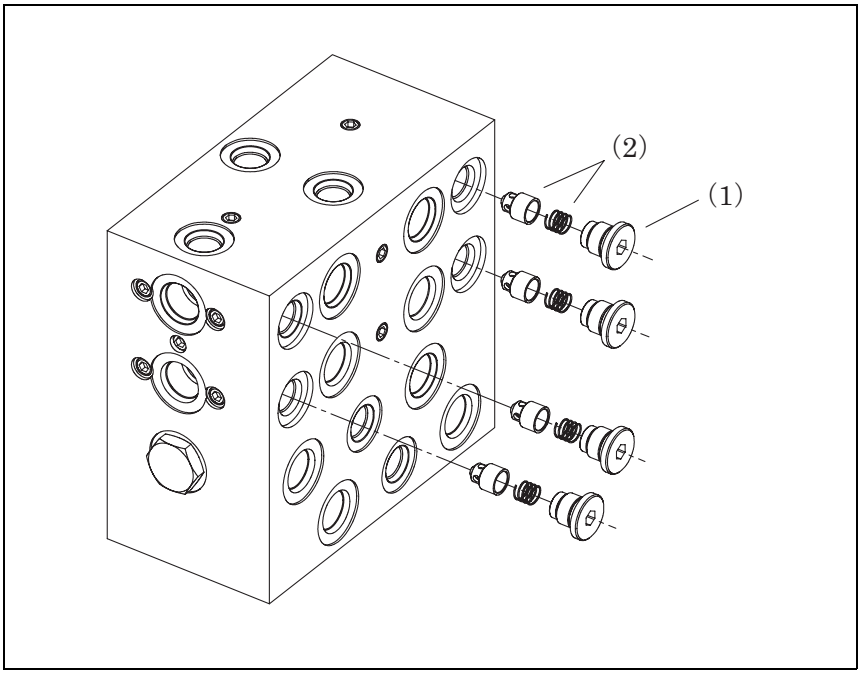

Figure 12

[3] Shuttle valve section

(1) Remove plugs (17) and O-rings (5) and (18).

(2) Remove steel balls (16).

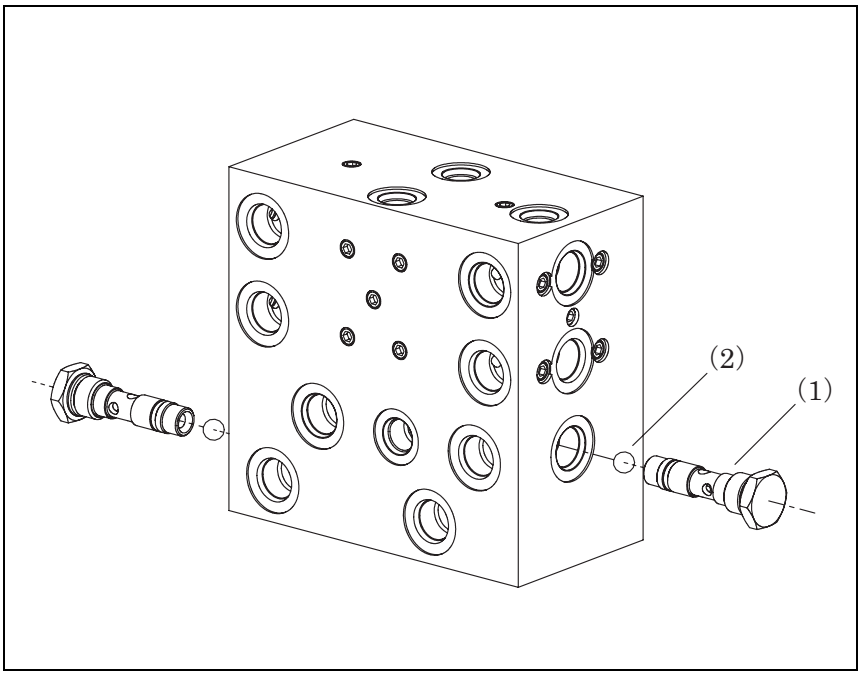

Figure 13

https://truckmanualshub.com/

4. Assembly procedure

Because this valve comprises a structure with minimum clearance between parts, the parts have been produced using high-precision processing technology, and as these parts are selected and tightly assembled, try to avoid disassembling the valve as much as possible. If you need to disassemble or reassemble the valve, use the following notes. (Remember that the product warranty may be voided.)

(1) Re-assemble the valve in a clean place where there is minimal dust.
(2) Use clean tools and oils only, and handle the valve with care.
(3) Wash and clean the disassembled and prepared parts using a clean oil.
(4) Before starting the service, check the internal structure of the assembly and prepare the required parts based on the purpose of the disassembly and the area of parts to be disassembled.

[1] Reverse operation spool

(1) Install the cap screw (6) having the O-ring (7) into the spool (2).
Tightening torque: 9.8 to 14.7 N•m
Caution: Use a wooden chip (jig) (1) or other similar object so as not to scratch the spool assembly.

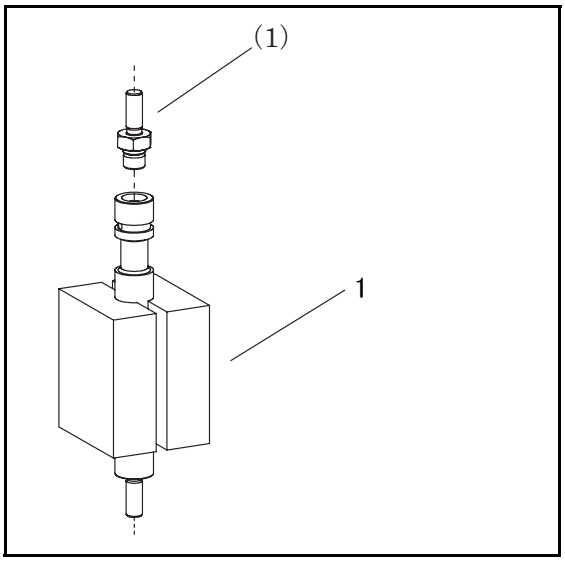

Figure 14

(2) Insert the spool assembly (1) into the body (1).
Caution: As the spool assembly has a bilaterally symmetrical structure, it can be inserted in any lateral direction.
(3) Insert springs (3), and install plugs (4) having O-rings (5).
Tightening torque: 39.2 - 49.0 N•m

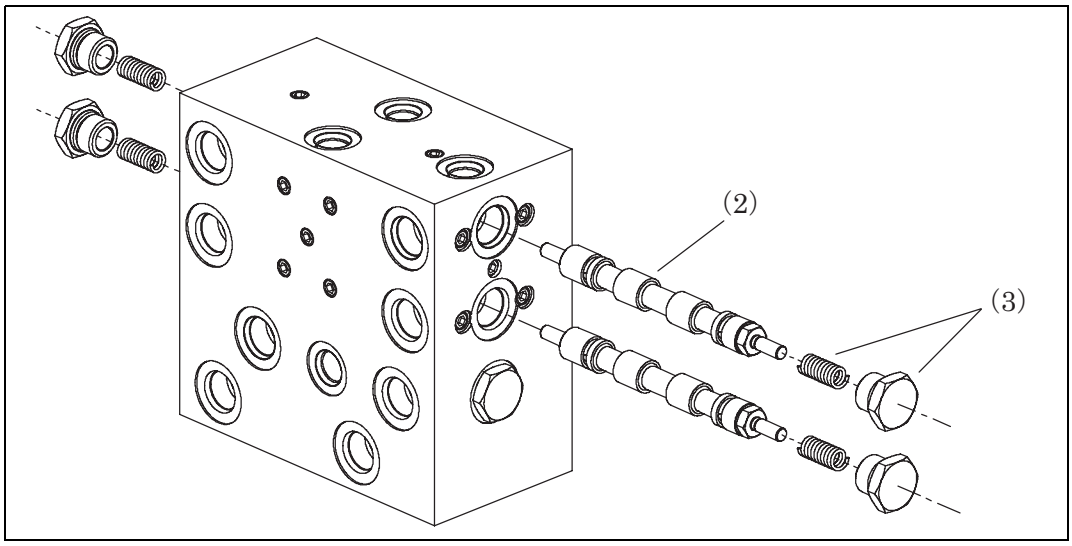

Figure 15

https://truckmanualshub.com/

[2] Check plunger with an orifice

(1) (1) Insert check plungers (9) to (12) into each port.
Caution: Because the check plungers have similar but different shapes, take care not to insert them into incorrect ports.

(2) Insert springs (13), and install plugs (14) having O-rings (15).
Tightening torque: 29.4 - 31.4 N•m

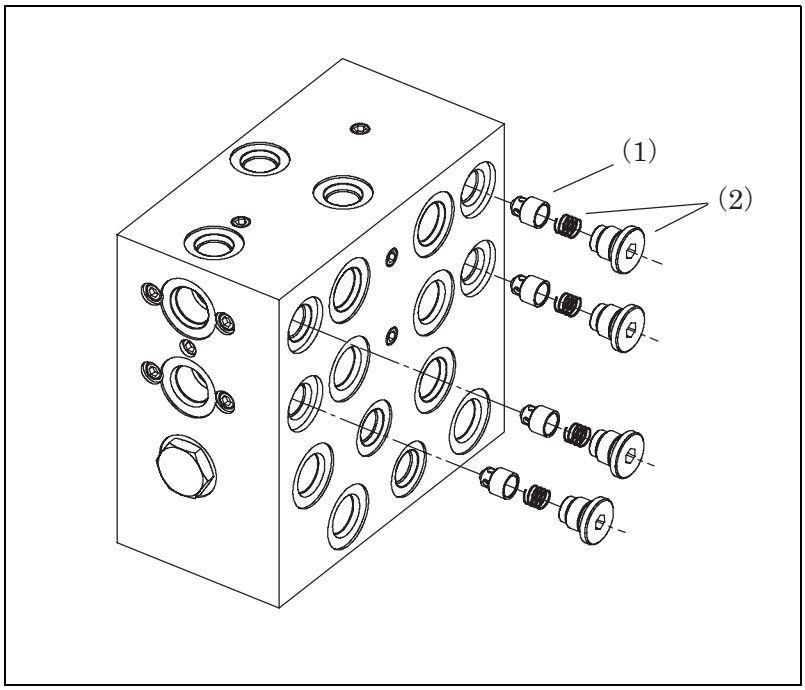

Figure 16

[3] Shuttle valve section

(1) (1) Insert steel balls (16).

(2) (2) Install plugs (17) having O-ring (5) and (18).
Tightening torque: 39.2 - 49.0 N•m

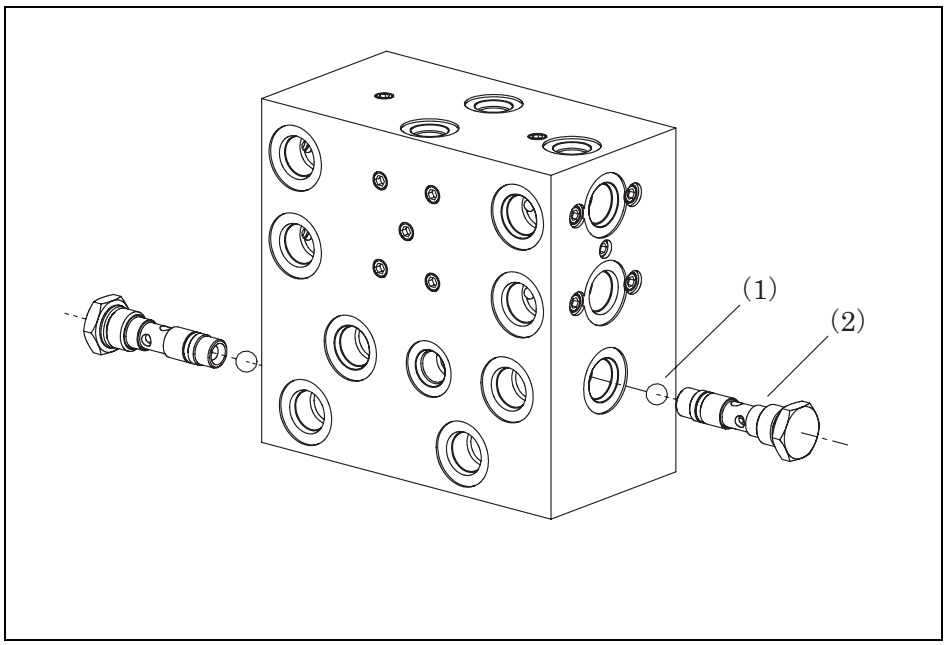

Figure 17

https://truckmanualshub.com/

5. Data

[1] Service parts list 1

Identification Number	Repair Category Symbol	Part Number	Name	Remarks
1	D	65301−11701	Body	
2	D	65301−11702	Spool	
3	C	65306−04004	Spring	
4	C	65306−04005	Plug	
5	A	95111−01400	O-ring	
6	C	65306−04003	Cap screw	
7	A	95111−00600	O-ring	
8	C	T1151−07901	Plug	
9	C	(Given on the separate table)	Check plunger	
10	C	(Given on the separate table)	Check plunger	
11	C	(Given on the separate table)	Check plunger	
12	C	(Given on the separate table)	Check plunger	
13	C	65006−01404	Spring	
14	C	65301−11703	Plug	
15	A	95113−01100	O-ring	
16	C	96321−08730	Steel ball	
17	C	65301−11704	Plug	
18	A	95111−01000	O-ring	
19	D	95301−11716	Nameplate	
20	C	91911−01489	Drive screw	
21	C	99001−04030	Shipping plug	
22	C	99001−04020	Shipping plug	

Repair category symbol

A: The parts that MUST be replaced during disassembling or re-assembling.

B: The combination parts that are delivered together with other parts to assure quality or due to reassembling reasons.

C: The parts that are delivered separately.

D: Unavailable parts

[2] Service parts list 2

Repair Category Symbol	Part Number	Name	Metering Orifice Diameter (ϕ)	Remarks
C	65301−11705	Check plunger	0.5	
C	65301−11706	Check plunger	0.6	
C	65301−11707	Check plunger	0.7	
C	65301−11708	Check plunger	0.8	
C	65301−11709	Check plunger	0.9	
C	65301−11710	Check plunger	1.0	
C	65301−11711	Check plunger	1.1	
C	65301−11712	Check plunger	1.2	
C	65301−11713	Check plunger	1.3	
C	65301−11714	Check plunger	1.4	
C	65301−11715	Check plunger	1.5	

Repair category symbol

A: The parts that MUST be replaced during disassembling or re-assembling.

B: The combination parts that are delivered together with other parts to assure quality or due to reassembling reasons.

C: The parts that are delivered separately.

D: Unavailable parts

https://truckmanualshub.com/

1 Removal and Installation of Radiator

Warning	• Do not remove the radiator cap when the radiator coolant temperature is high. Hot liquid could spray out.

Cautions	• Be sure to release the hydraulic pressure before beginning work. • Be sure to stop the engine before beginning work. • Be sure to inspect the wire rope and other suspended items before beginning work. • Do not stand or pass under the suspended load (radiator).

Items to prepare

- Wrench (7 mm, 8 mm, 13 mm, 14 mm, 19 mm)
- Box wrench (8 mm, 12 mm)
- Pliers
- Shackles (with the required lifting capacity × 2)
- Wire rope (with the required breaking load)
- Crane (that meets the lifting capacity)
- Caps
- Plugs
- Drain tank
- Drain hose
- Rags
- Cleaning fluid
- Crossties

[1] Use a 19-mm wrench to remove the 3 installation bolts (1), and then remove the under cover (2).

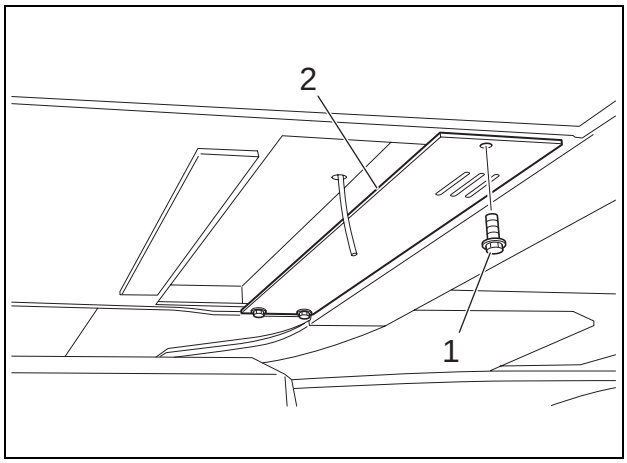

[2] Install the drain hose (1), and then prepare the drain tank (2).

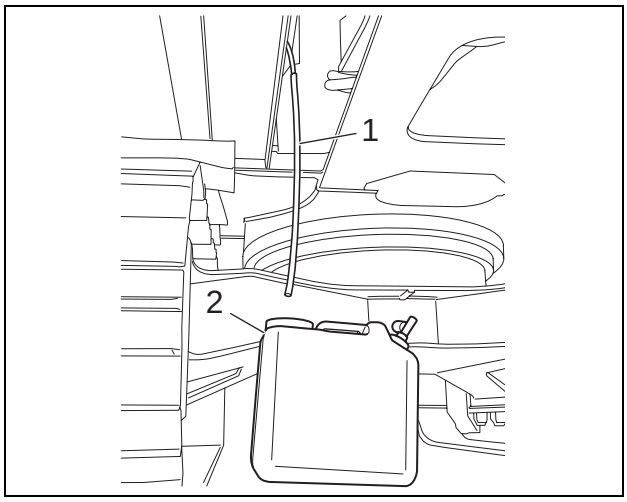

https://truckmanualshub.com/

[3] To make it easier to drain the coolant, remove the radiator cap.

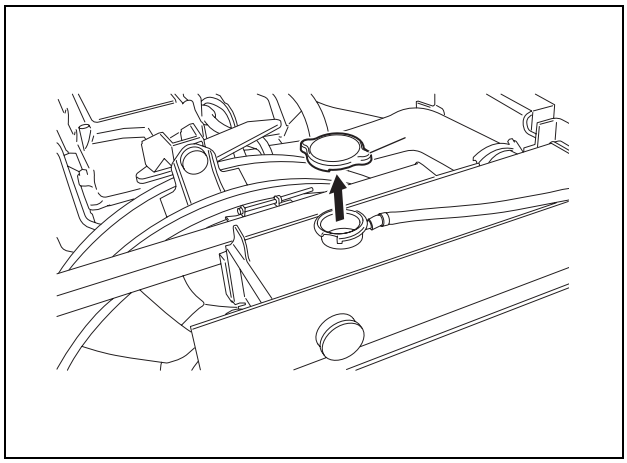

[4] Loosen the drain plug (1), and then drain the coolant.

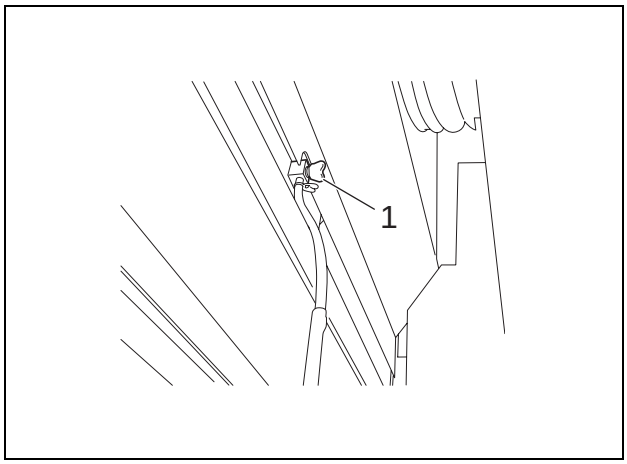

[5] Use a 8-mm wrench to loosen the hoseband (1), and then remove the hose (2).
- Use caps to cover the pipe and hose and prevent the entry of water, dust or dirt.

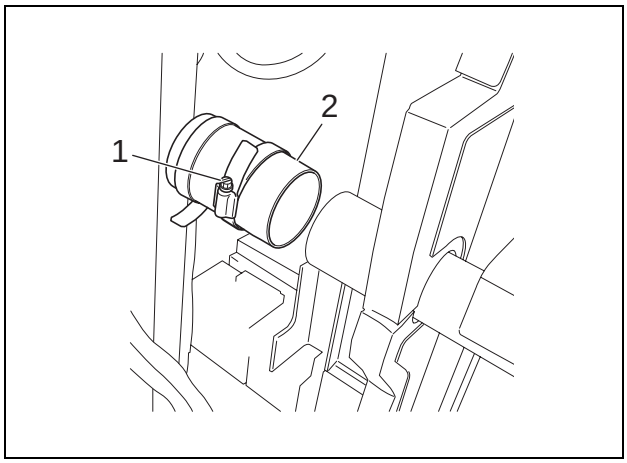

[6] Use a 8-mm box wrench to loosen the hoseband (1), and then remove the hose (2).
- Use caps to cover the pipe and hose and prevent the entry of water, dust or dirt.

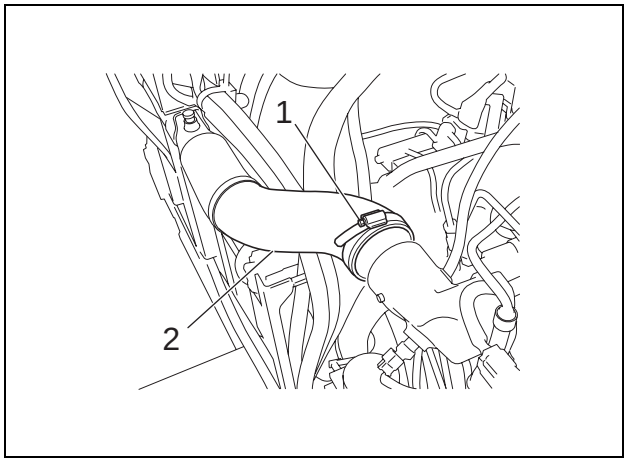

https://truckmanualshub.com/

[7] Use a 19-mm wrench to remove the 2 installation bolts (1), and then remove the wiring box (2).

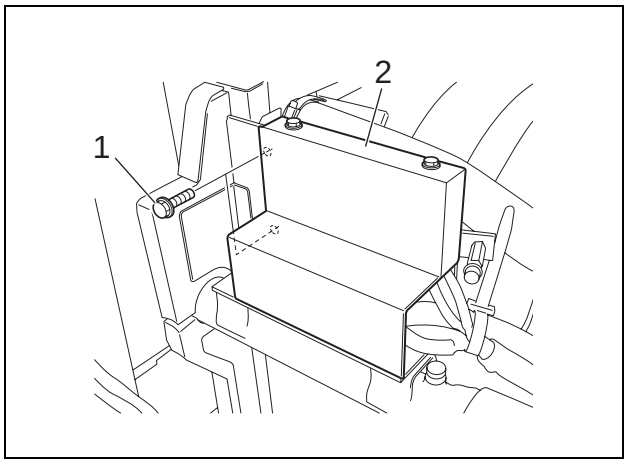

[8] Use a 13-mm wrench to remove the 3 installation bolts (1), and then remove the cover (2).

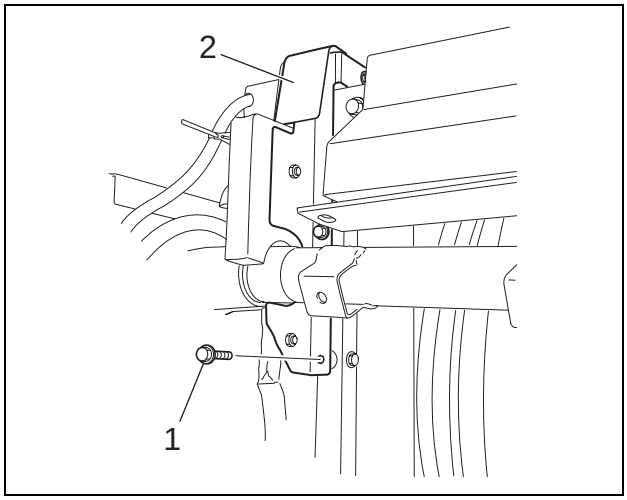

[9] Use a 13-mm wrench to remove the 3 installation bolts (1), and then remove the cover (2).

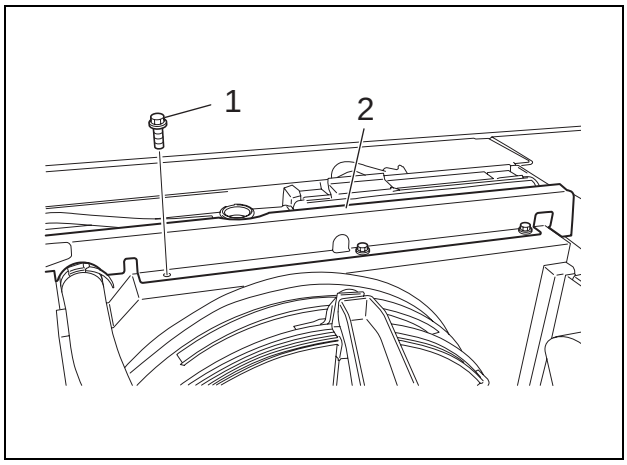

https://truckmanualshub.com/

[10] Use a 12-mm box wrench to remove the 8 installation bolts (1) from the radiator cover.

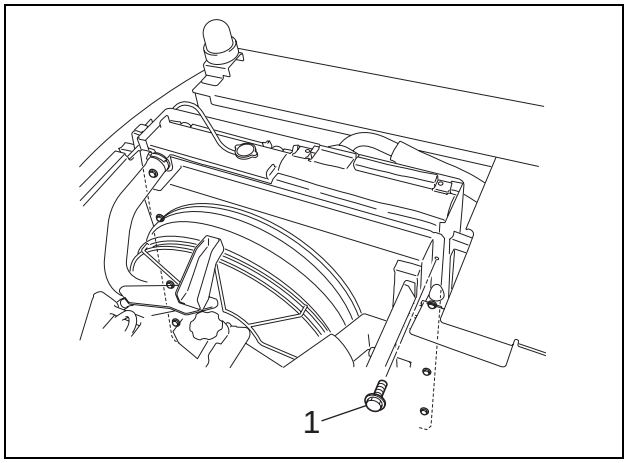

[11] Use a 7-mm wrench to loosen the hoseband (1), and then remove the upper hose (2) from the radiator.

[12] Use a 7-mm wrench to loosen the hoseband (3), and then remove the lower hose (4) from the radiator.

- Use caps to cover the radiator and hoses and prevent the entry of water, dust or dirt.

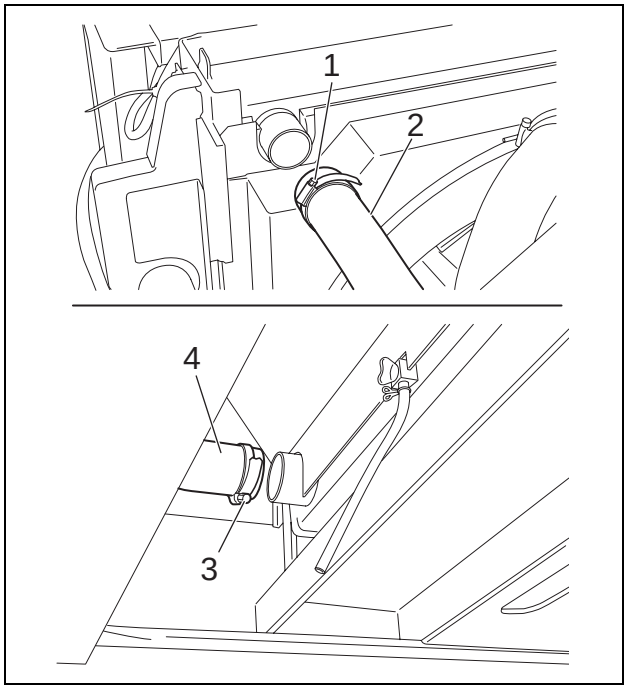

[13] Remove the drain plug (1), and then remove the hose (2).

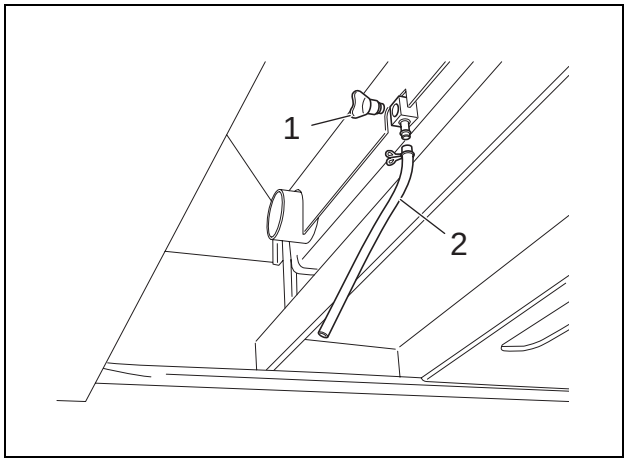

https://truckmanualshub.com/

[14] Remove the hose (1) from the radiator cap.
- Attach caps or plugs to the hoses to prevent entry of water, dust or dirt.

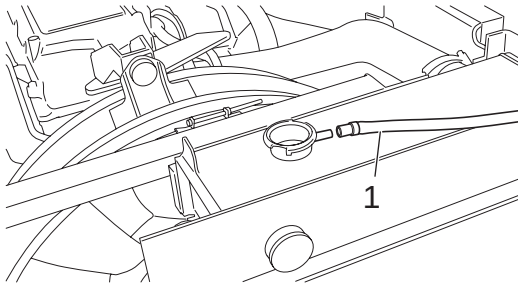

[15] Turn up the rubber band on the fan.

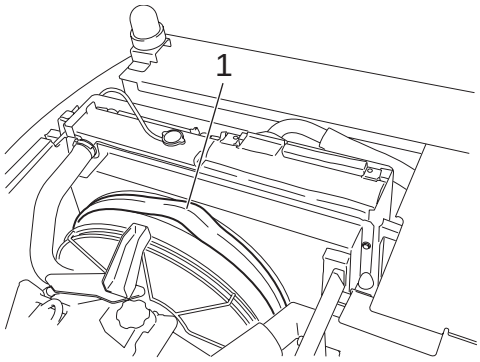

[16] Use a 7-mm wrench to loosen the hosebands (1) and (2), and then remove the hoses (3) and (4).
- Use caps to cover the hoses and pipes and prevent the entry of water, dust or dirt.

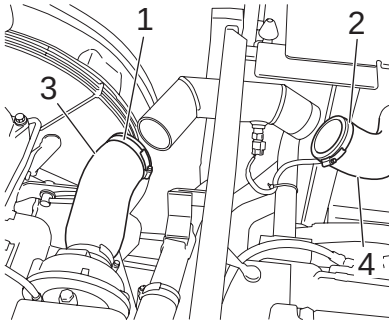

[17] Remove the plug (1).

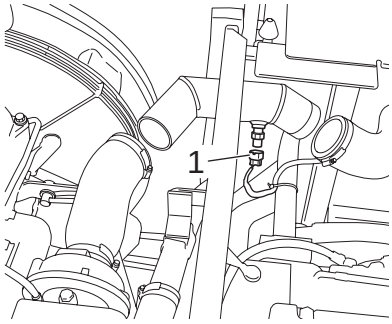

https://truckmanualshub.com/

[18] Use a 19-mm wrench to remove the 4 installation bolts (1), and then remove the pipe (2).

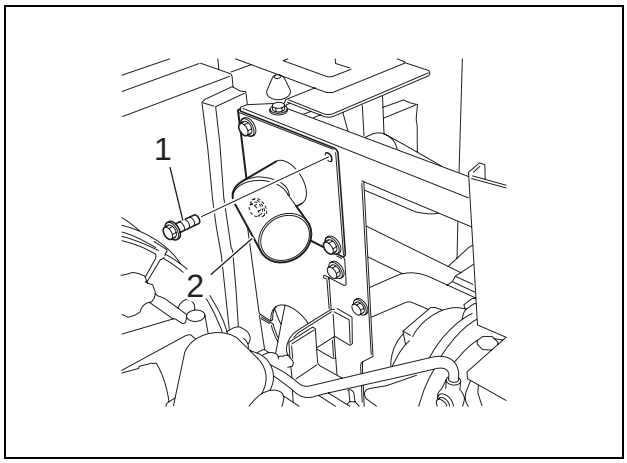

[19] Use a 19-mm wrench to remove the 3 installation bolts (1), and then remove the cover (2).

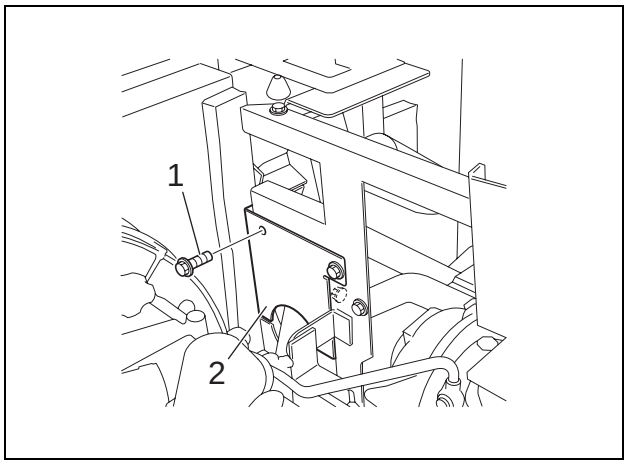

[20] Move the radiator cover towards the cover removed in step [19].

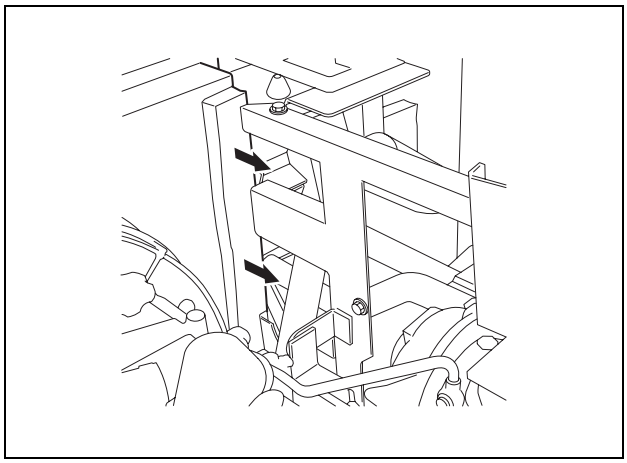

[21] Use a 14-mm wrench to remove the installation bolts (1), (2) and (3), and then remove the fan shroud.

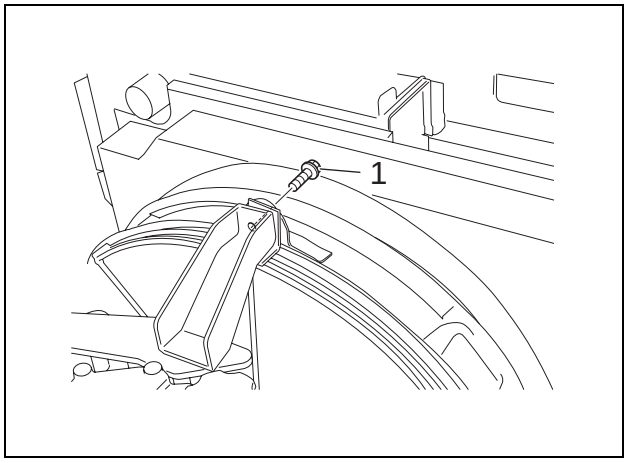

https://truckmanualshub.com/

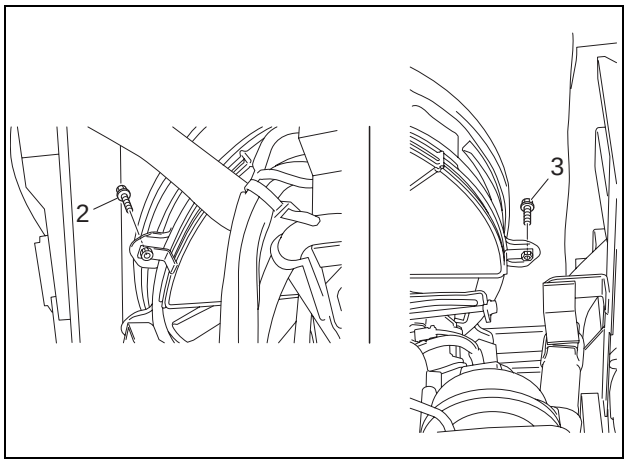

[22] Use a 14-mm wrench to remove the installation bolts (1) and (2) from the fan guard, and then move the fan guard towards the engine.

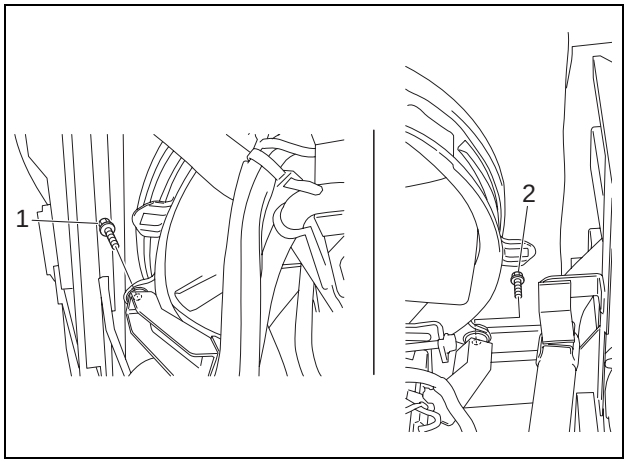

[23] Use a 14-mm wrench to remove the 2 installation bolts (1), and then remove the radiator cover.

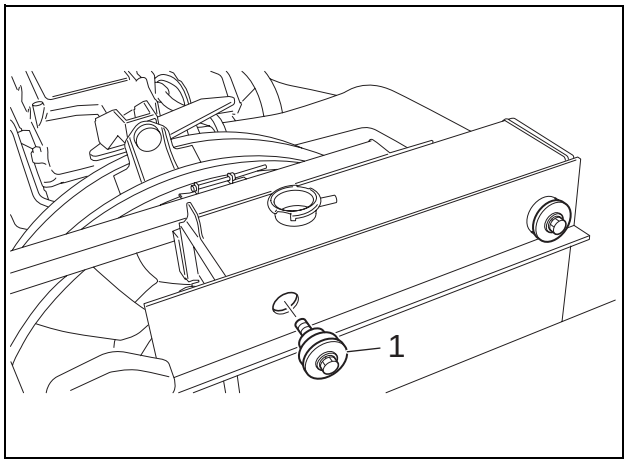

[24] Use pliers to remove the 2 butterfly bolts (1), and then remove the net (2) from the oil cooler.

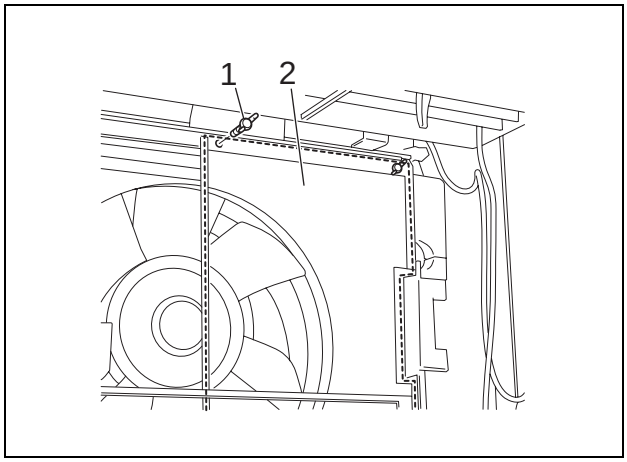

https://truckmanualshub.com/

[25] Connect the 2 shackles to the top of the radiator, and then use the wires and crane to lift the radiator.

[26] Lift the radiator together with the radiator cover until the fixtures (1) at the bottom of the radiator is disconnected.

[27] Thoroughly check that the location is safe before lowering the radiator on a crosstie.

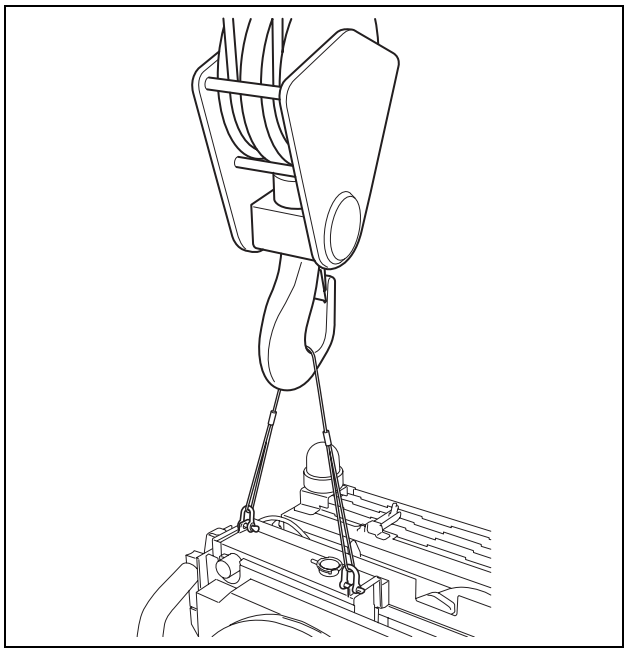

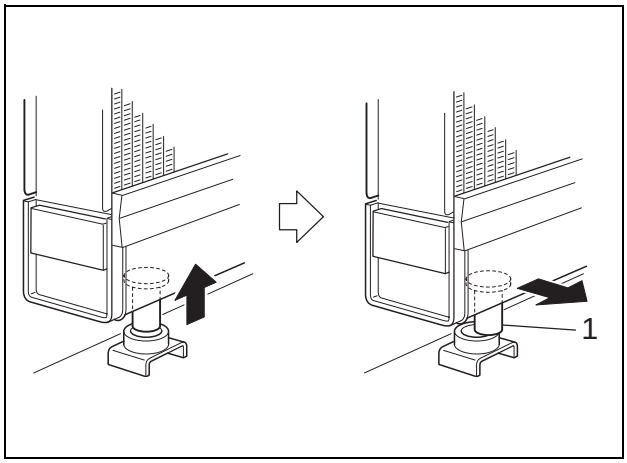

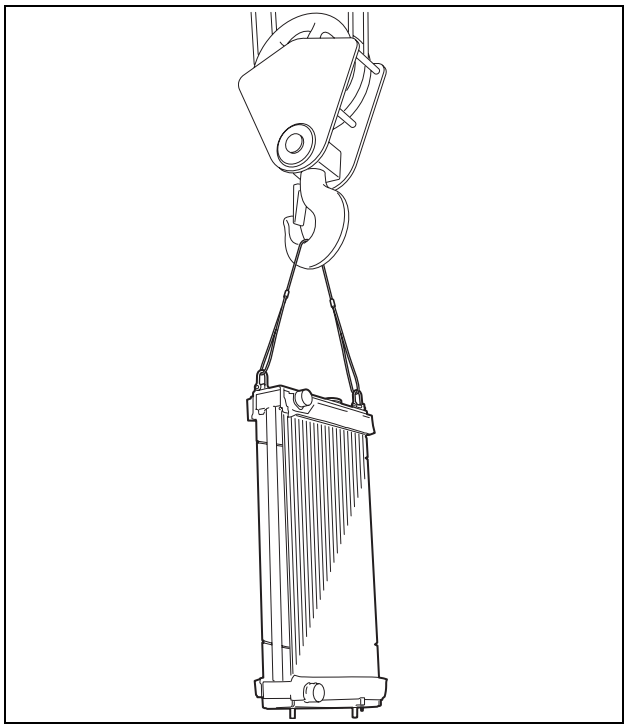

https://truckmanualshub.com/

2 Removal and Installation of Oil Cooler

Warning	• Keep away from fire.

Cautions	• Be sure to stop the engine before beginning work. • Be sure to inspect the wire rope and other suspended items before beginning work. • Do not stand or pass under the suspended load (oil cooler).

Items to prepare

- Wrench (17 mm, 19 mm)
- Pliers
- Screwdriver
- Eyebolts (12 mm × 2)
- Shackles (with the required lifting capacity × 2)
- Wire rope (with the required breaking load)
- Crane (that meets the lifting capacity)
- Caps
- Waste oil can
- Rags
- Cleaning fluid
- Crossties

[1] Use a 19-mm wrench to remove the 2 installation bolts (1), and then remove the under cover (2).

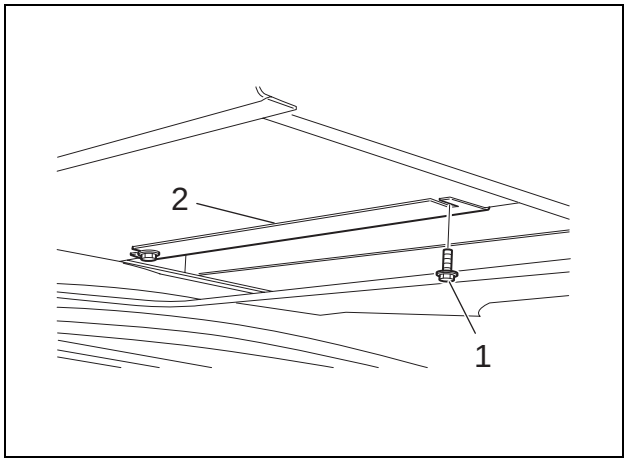

[2] Prepare a waste oil can (1).

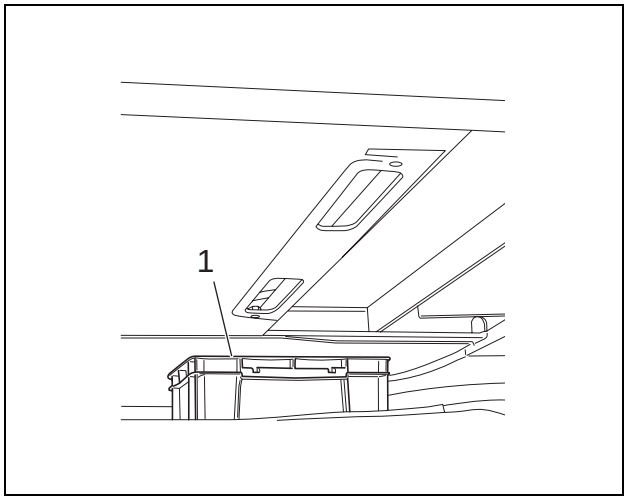

https://truckmanualshub.com/

[3] Use pliers to remove the 2 butterfly screws (1), and then remove the filter (2).

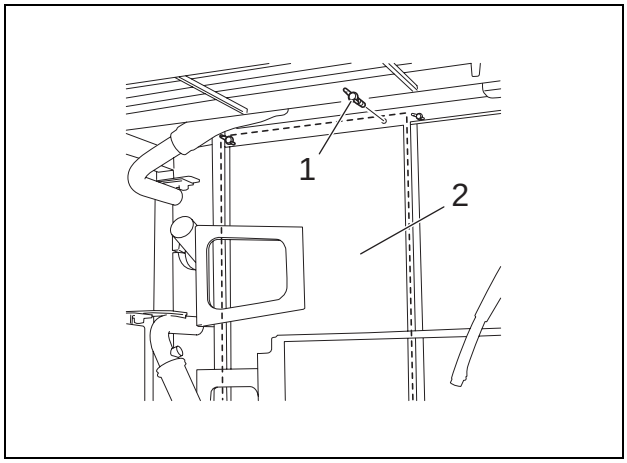

[4] Use a 17-mm wrench to remove the 2 installation bolts (1) and 2 installation bolts (3), and then remove the pipes (2) and (4).
- Use caps to cover the oil cooler and pipes and prevent the entry of water, dust or dirt.

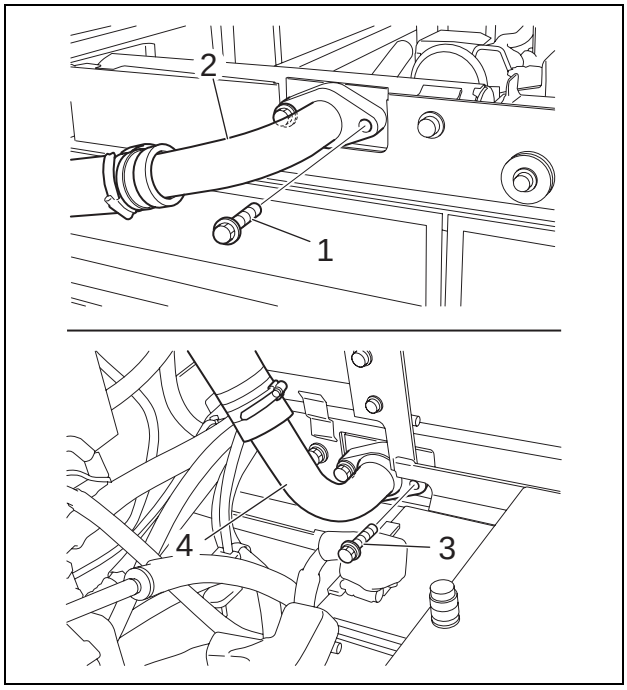

[5] Use a 17-mm wrench to remove the 2 installation bolts (1) and 2 installation bolts (2).

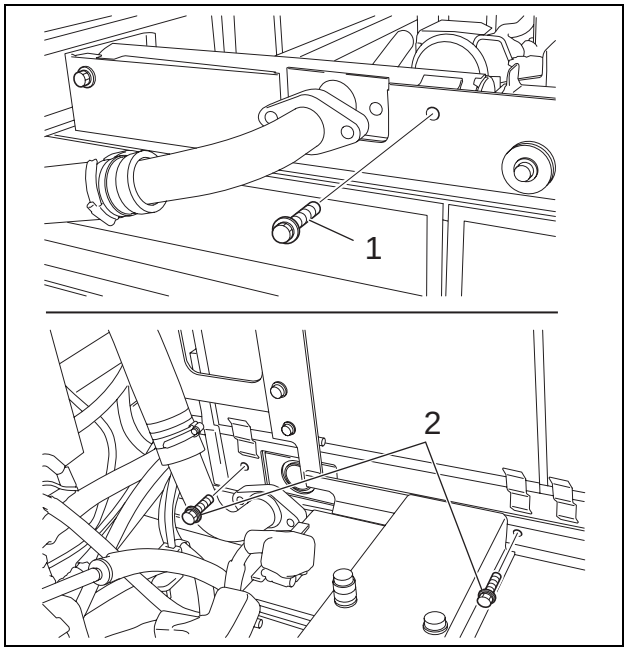

https://truckmanualshub.com/

[6] Install 2 12-mm eyebolts (1) on the top of the oil cooler.
- Spray lubricating oil on the eyebolts.
- Fully tighten the eyebolts, and then loosen them by a half turn.

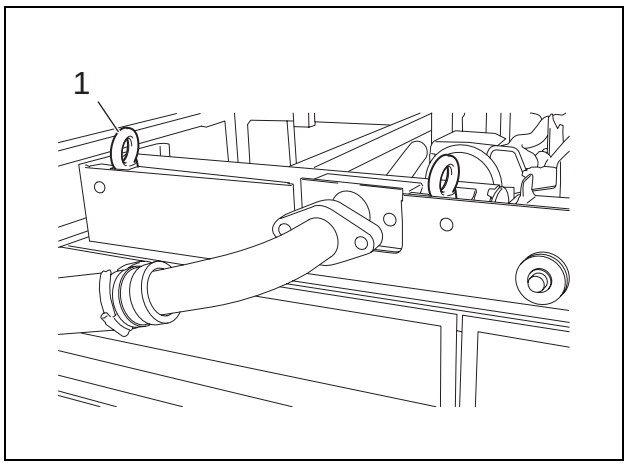

[7] Use a screwdriver to push in the connecting part of the pipe at the bottom of the oil cooler by about 5 cm.

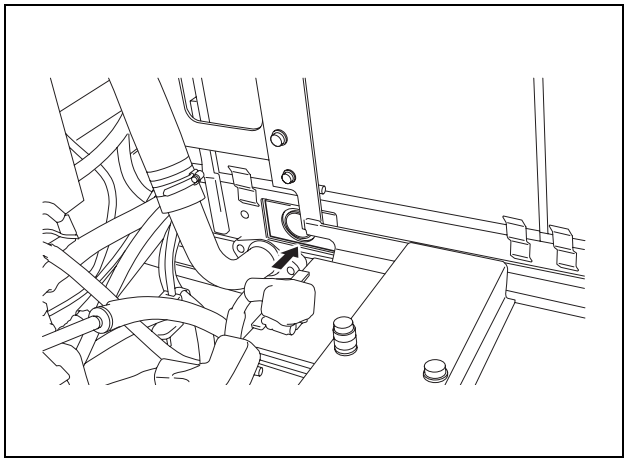

[8] Connect the 2 shackles to the eyebolts, and then use the wires and crane to lift the oil cooler unit.

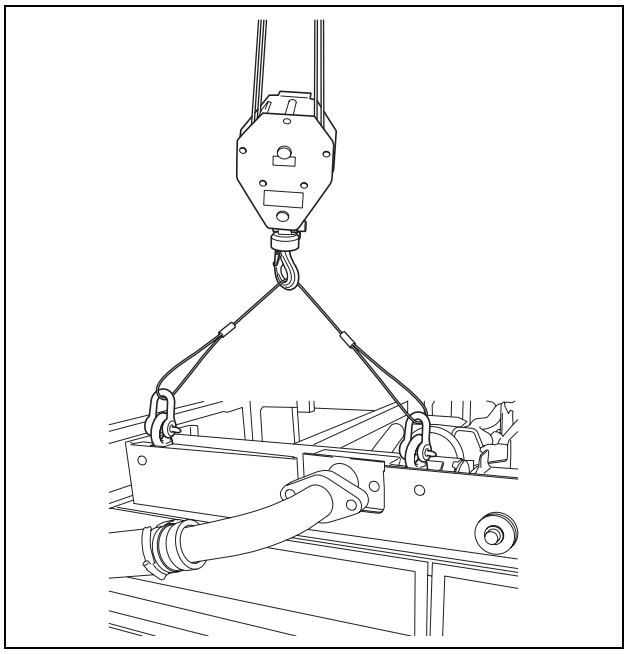

https://truckmanualshub.com/

[9] Thoroughly check that the location is safe before lowering the oil cooler on a crosstie.

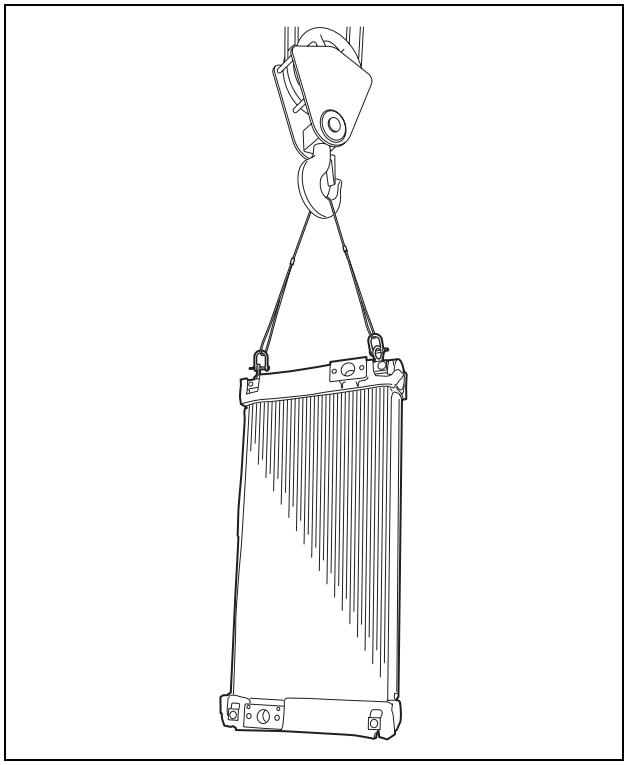

https://truckmanualshub.com/

1 Removal and Installation of Hydraulic Oil Tank

Warnings	• Keep away from fire. • Bleed off the pressure in the hydraulic oil tank before beginning work. • The temperature of the hydraulic oil is high immediately after stopping the engine. Wait until the hydraulic oil temperature has decreased (40°C or less) before beginning work.

Cautions	• Be sure to stop the engine before beginning work. • Be sure to inspect the wire rope and other suspended items before beginning work. • Do not stand or pass under the suspended load (hydraulic oil tank).

Items to prepare

- Wrench (7 mm, 19 mm, 22 mm, 27 mm, 36 mm)
- Eyebolts (12 mm × 2)
- Shackles (with the required lifting capacity × 2)
- Wire rope (with the required breaking load)
- Crane (that meets the lifting capacity)
- Marking pen
- Caps
- Plugs
- Waste oil can
- Rags
- Cleaning fluid
- Crossties

[1] Drain the oil from the hydraulic oil tank. (For details, see "Draining Oil from Hydraulic Oil Tank")

[2] Use a 19-mm wrench to remove the 6 installation bolts (1), and then remove the under cover (2).

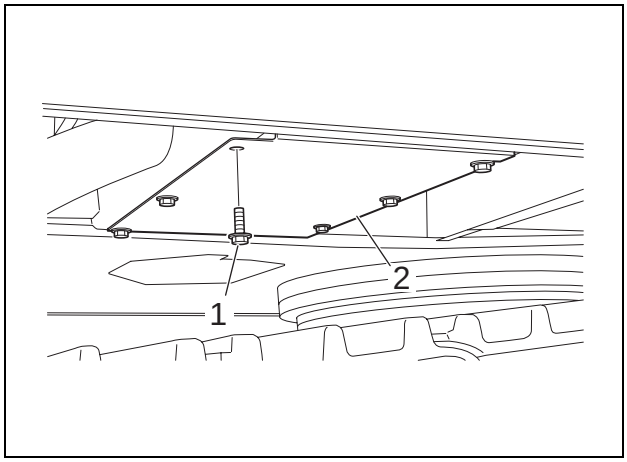

https://truckmanualshub.com/

[3] Prepare a waste oil can (1) under the hydraulic oil tank.

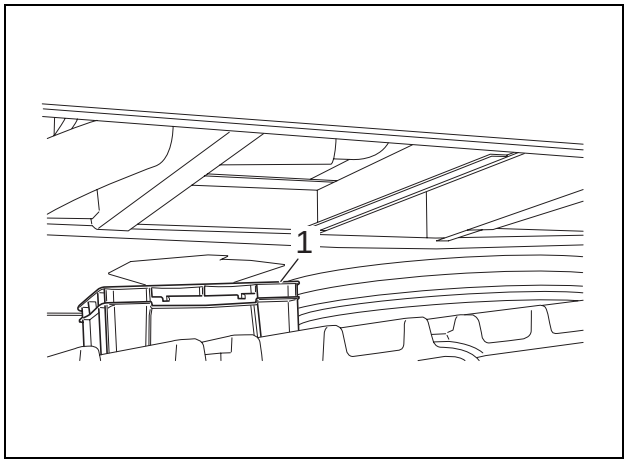

[4] Use a 7-mm wrench to loosen the hosebands (1), and then remove the hose (2).
- Use caps to cover the hoses and prevent the entry of water, dust or dirt.

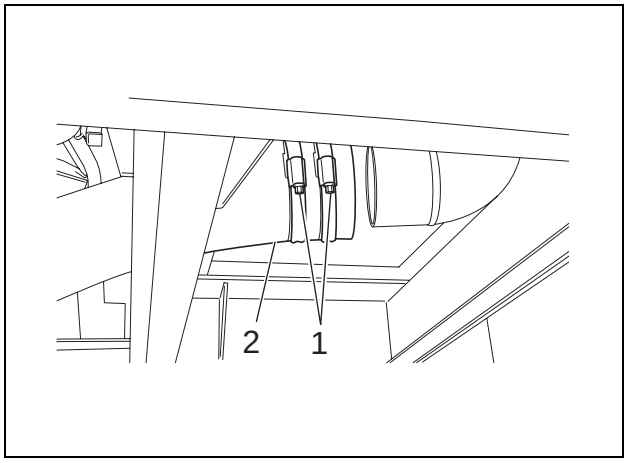

[5] Use a 19-mm wrench to remove the 6 installation bolts (1), and then remove the center cover (2).

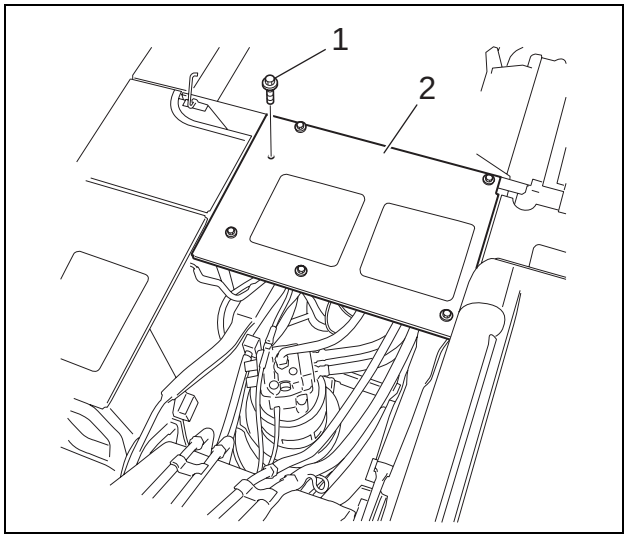

https://truckmanualshub.com/

[6] Use a 7-mm wrench to loosen the hosebands (1), and then remove the hoses (2).
- Use caps to cover the pipes and prevent the entry of water, dust or dirt.

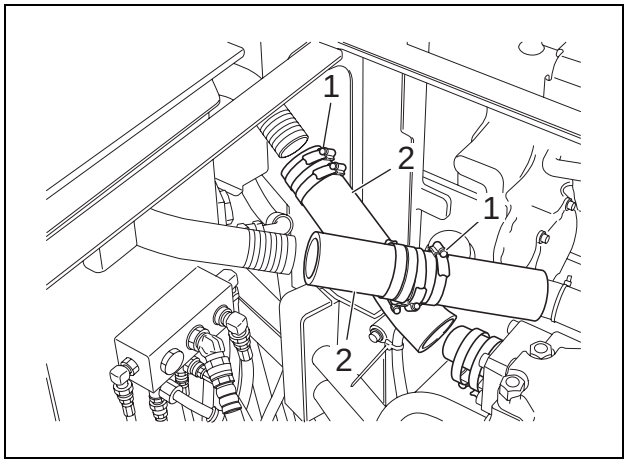

[7] Use a wrench [36 mm (10), 27 mm (1) and (2), 22 mm (3) and (9), 19 mm (4), (5), (6), (7) and (8)] to remove the hoses.
- Mark the hydraulic oil tank and hoses so that they can be connected correctly at the time of assembly.
- Attach caps or plugs to the hydraulic oil tank and hoses to prevent entry of water, dust or dirt.
- Clean the hydraulic oil tank and hoses by spraying with a parts cleaner to prevent scratches and prevent dirt from accumulating on the connectors.

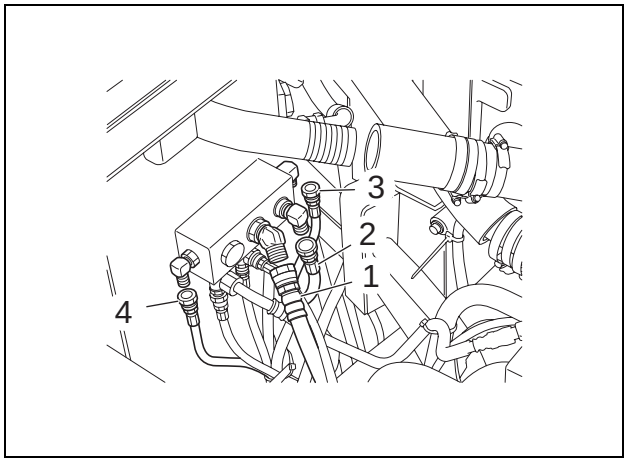

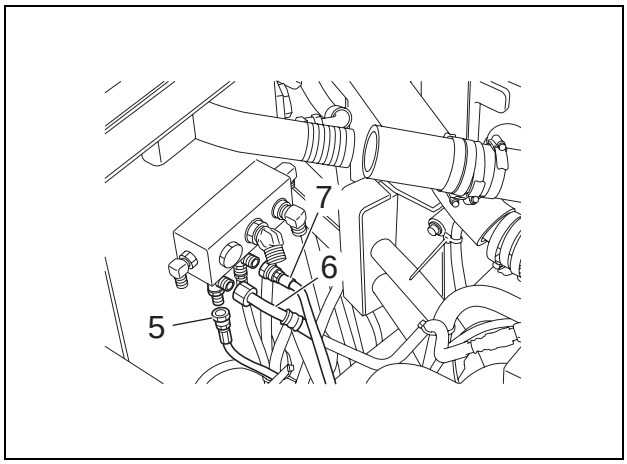

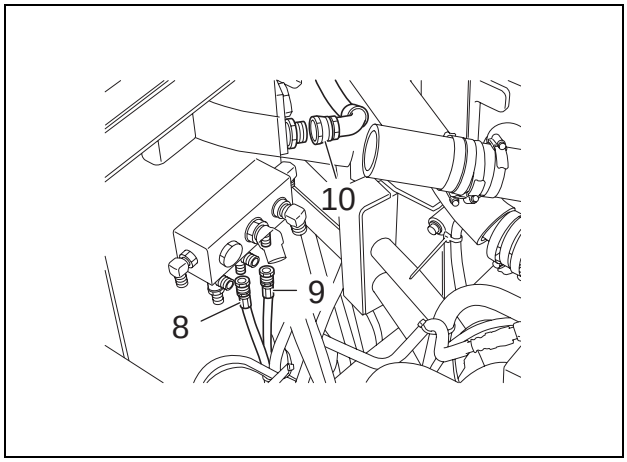

https://truckmanualshub.com/

[8] Cut the hosebands on the tank side, and tie the hoses together.

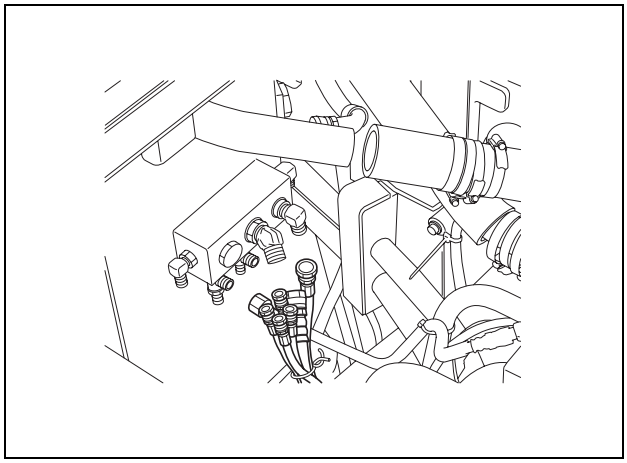

[9] Use a 19-mm wrench to remove the 6 installation bolts (1), and then remove the top cover (2) from the hydraulic oil tank.

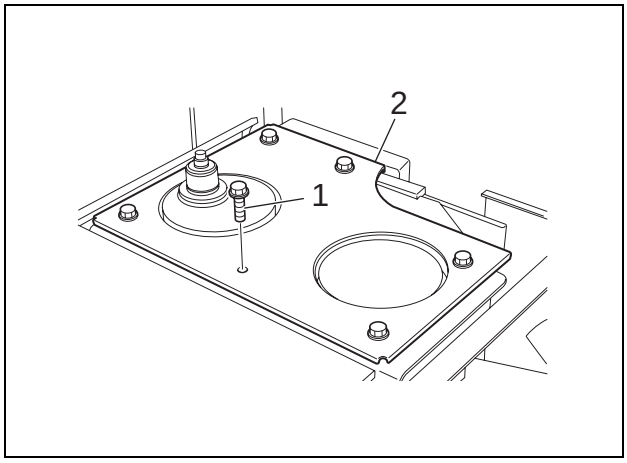

[10] Use a 22-mm wrench to remove the installation bolt (1) and 3 installation bolts (2), and then remove the L-shaped frame (3).

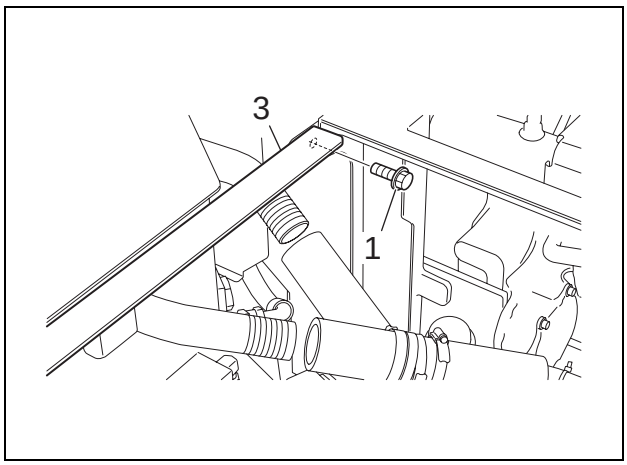

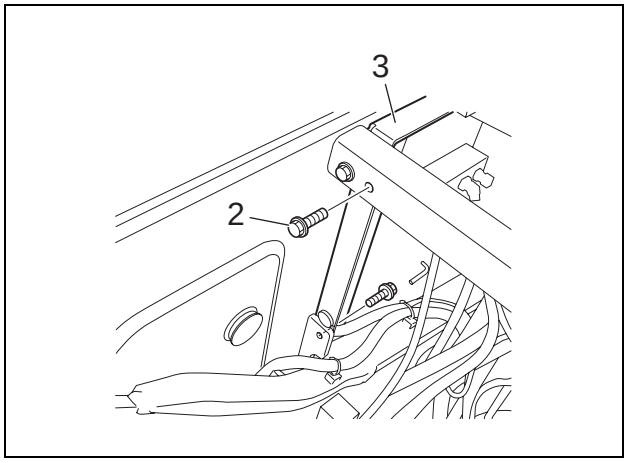

https://truckmanualshub.com/

[11] Use a 22-mm wrench to remove the 2 installation bolts (1) and 2 installation bolts (2).

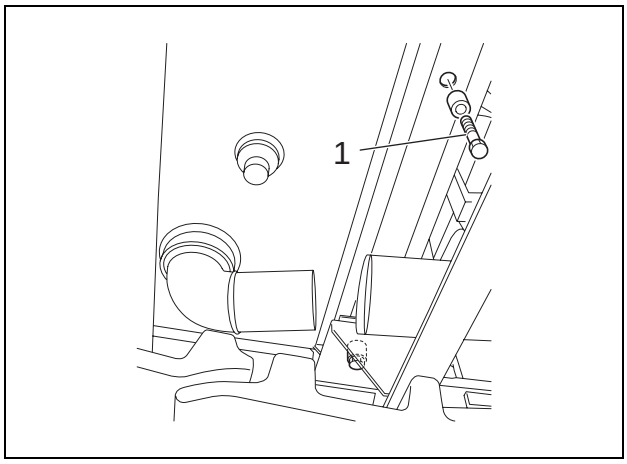

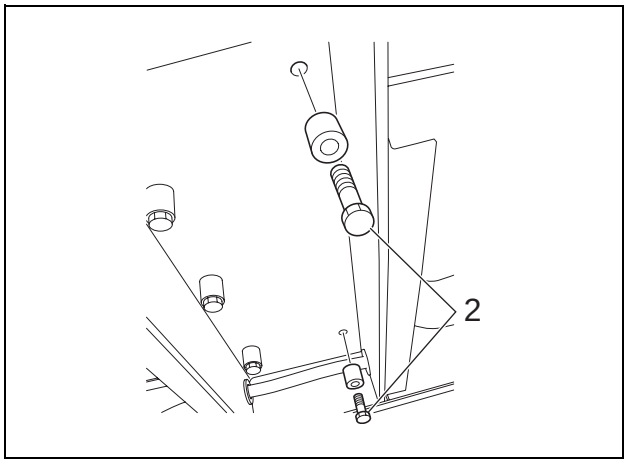

[12] Use a 19-mm box wrench to remove the 2 installation bolts (1), and then remove the cover (2).

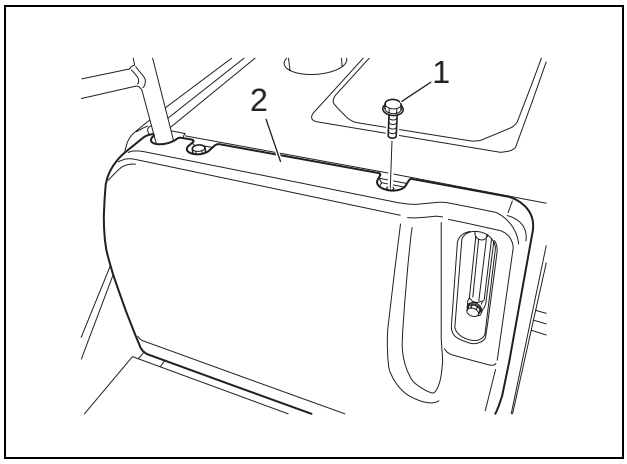

[13] Use a 19-mm box wrench to remove the installation bolt (1) and 4 installation bolts (2), and then remove the side cover (3).

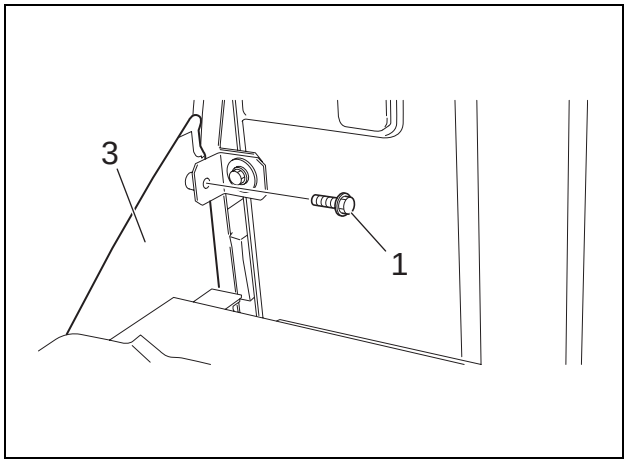

https://truckmanualshub.com/

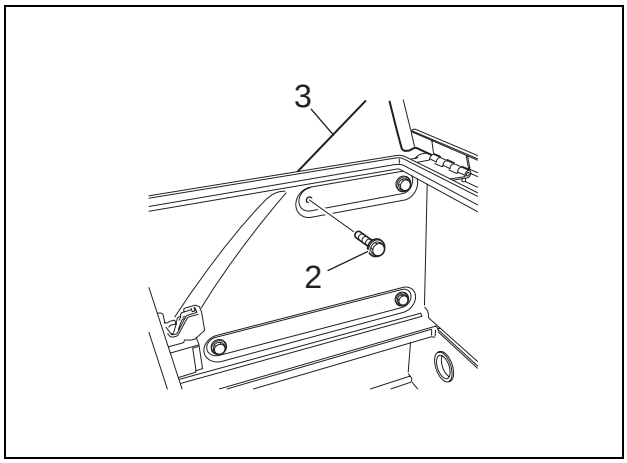

[14] Use a 19-mm box wrench to remove the 2 installation bolts (1) and 2 installation bolts (2), and then remove the side cover.

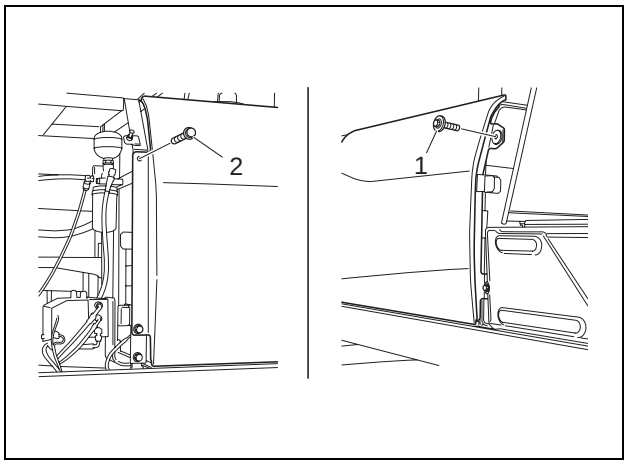

[15] Connect the 12-mm 2 eyebolts to the top of the hydraulic oil tank, and then use the shackles, wires and crane to lift the hydraulic oil tank (1).
- When lifting, be careful that the level gauge (2) does not interfere with the frame at the side of the hydraulic oil tank.
- Spray lubricating oil on the eyebolts.
- Fully tighten the eyebolts, and then loosen them by a half turn.

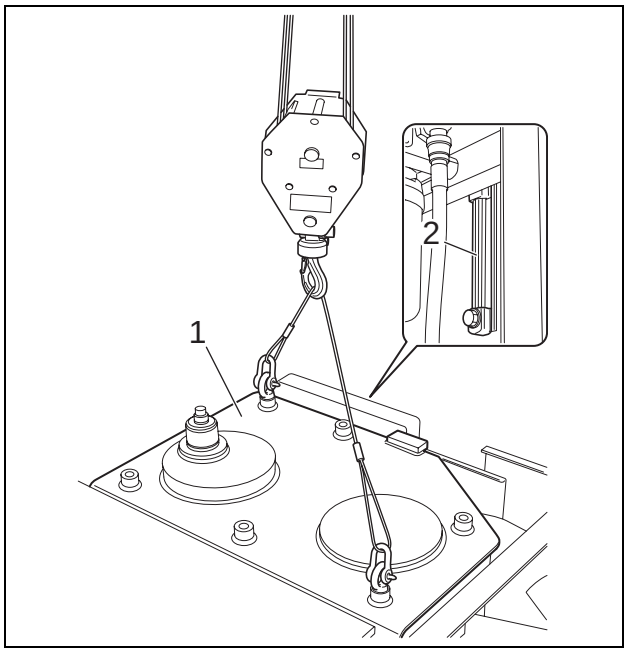

https://truckmanualshub.com/

[16] Thoroughly check that the location is safe before lowering the hydraulic oil tank on a crosstie.
- Thoroughly secure the hydraulic oil tank so that it does not fall down.

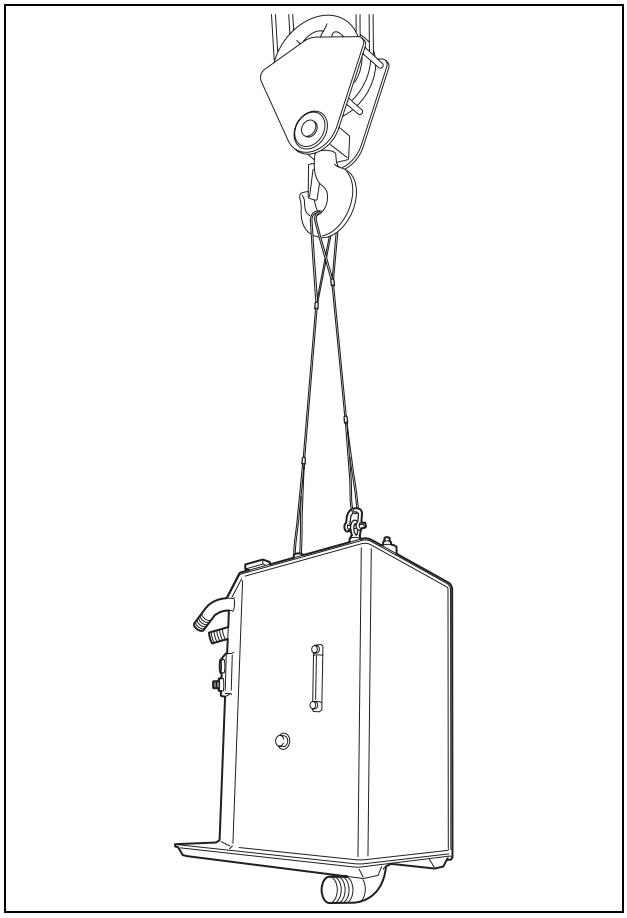

https://truckmanualshub.com/

2 Removal and Installation of Fuel Tank

Warning	• Keep away from fire.

Cautions	• Be sure to stop the engine before beginning work. • Be sure to inspect the wire rope and other suspended items before beginning work. • Do not stand or pass under the suspended load (fuel tank).

Items to prepare

- Wrench (19 mm, 24 mm)
- Eyebolts (12 mm × 4)
- Shackles (with the required lifting capacity × 4)
- Wire rope (with the required breaking load)
- Crane (that meets the lifting capacity)
- Caps
- Plugs
- Waste oil can
- Rags
- Cleaning fluid
- Crossties

[1] Remove the cap (1).

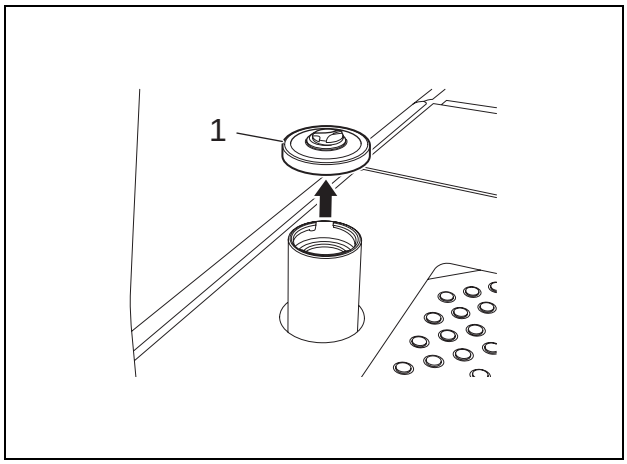

[2] Remove the filter (1).

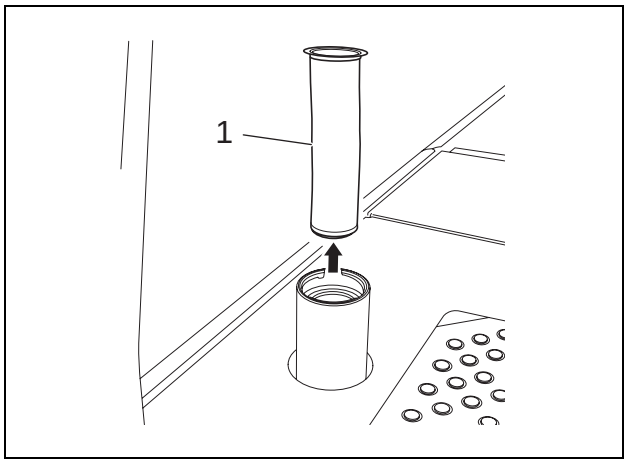

https://truckmanualshub.com/

[3] Drain the fuel.

[4] Use a 19-mm wrench to remove the 7 installation bolts (1), and then remove the top cover (2).

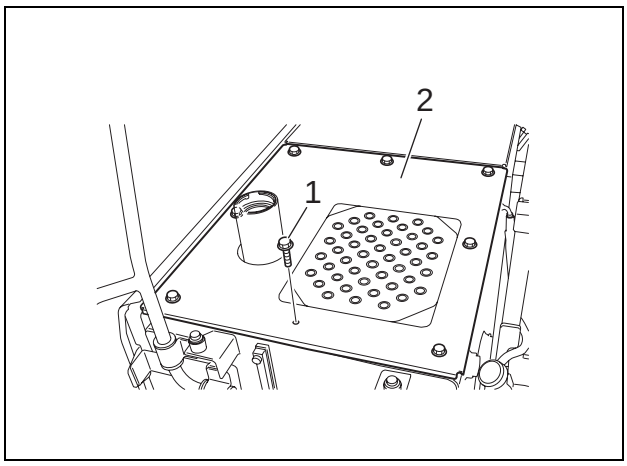

[5] Use a 19-mm box wrench to remove the 2 installation bolts (1), and then remove the cover (2).

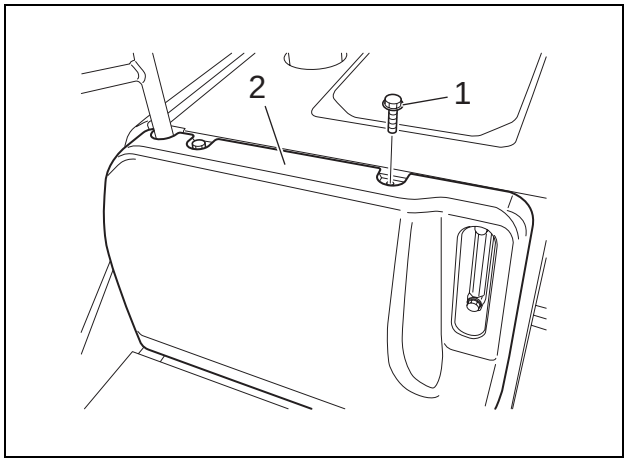

[6] Use a 19-mm wrench to remove the 4 installation bolts (1) and 2 installation bolts (2), and then remove the handle (3).

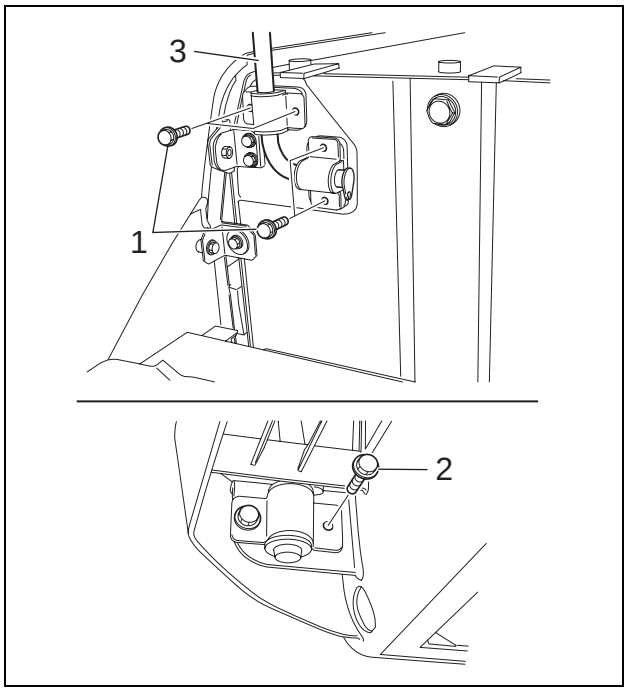

https://truckmanualshub.com/

[7] Use a 19-mm wrench to remove the installation bolt (1) and 4 installation bolts (2), and then remove the side cover (3).

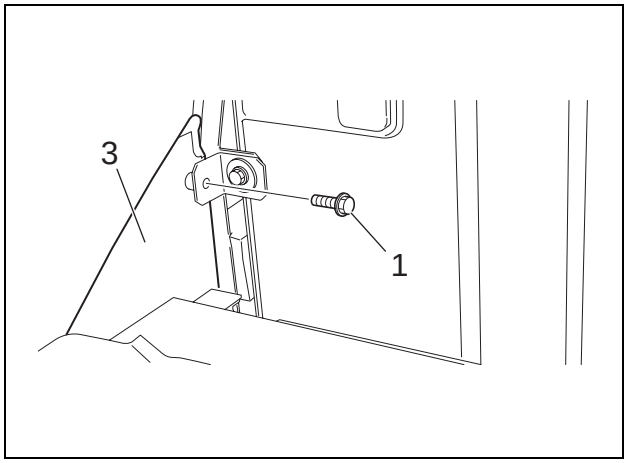

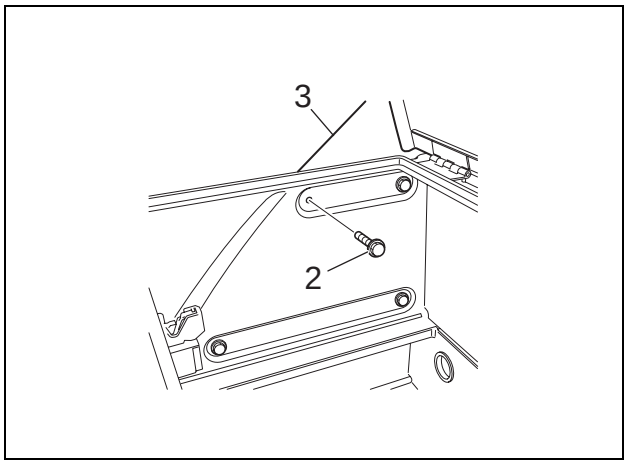

[8] Use a 19-mm wrench to remove the 5 installation bolts (1), and then remove the under cover (2).

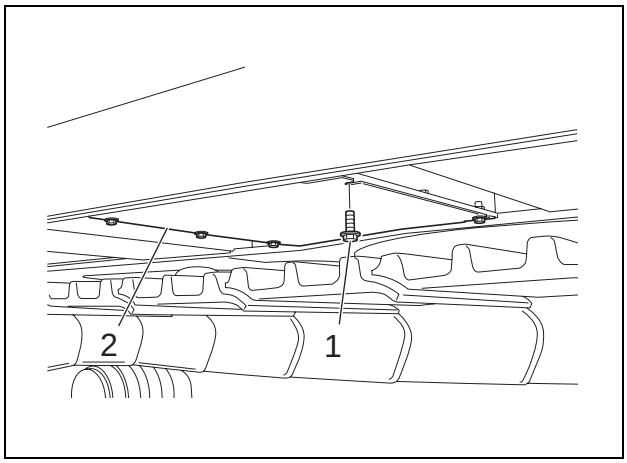

[9] Loosen the hosebands, and then remove the hoses (1) and (2).
- Mark the fuel tank and hoses so that they can be connected correctly at the time of assembly.
- Attach caps or plugs to the fuel tank and hoses to prevent entry of water, dust or dirt.

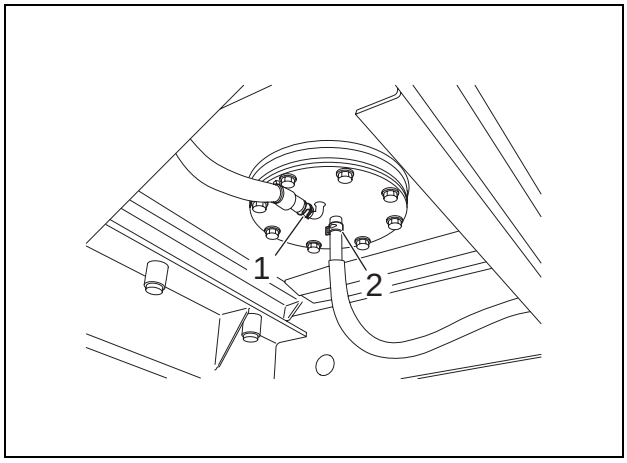

https://truckmanualshub.com/

[10] Remove the connector (1).

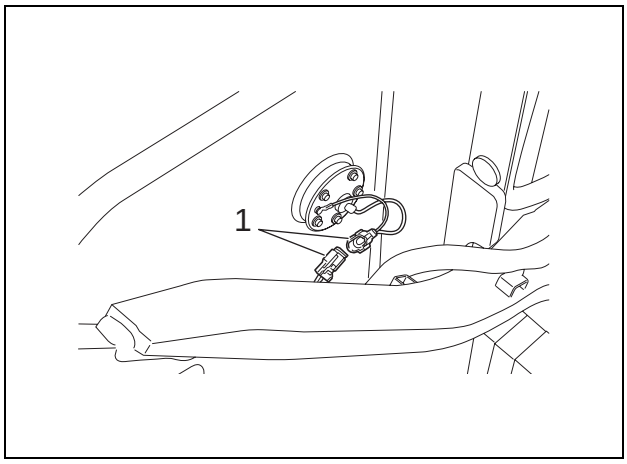

[11] Use a 24-mm wrench to remove the 6 installation bolts (1).

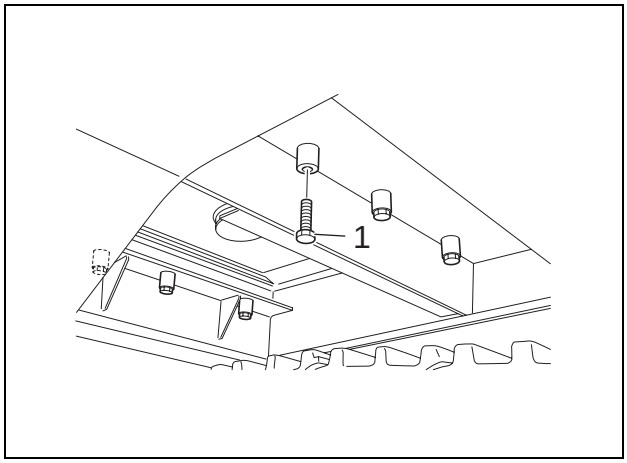

[12] Use a 19-mm wrench to remove the 2 installation bolts (1) and 2 installation bolts (2), and then remove the side cover.

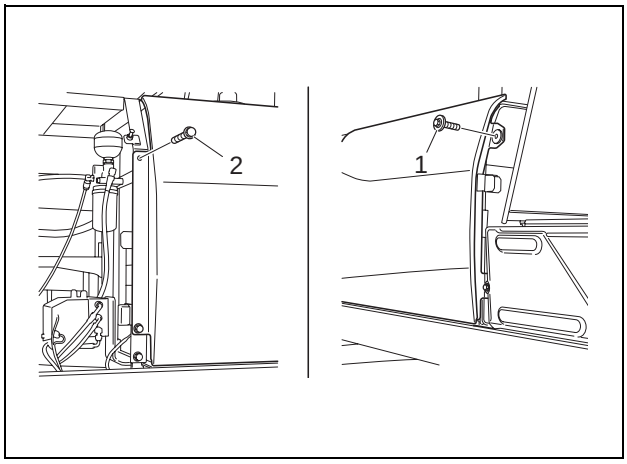

[13] Install 4 12-mm eyebolts (1) on top of the fuel tank.
- Spray lubricating oil on the eyebolts.
- Fully tighten the eyebolts, and then loosen them by a half turn.

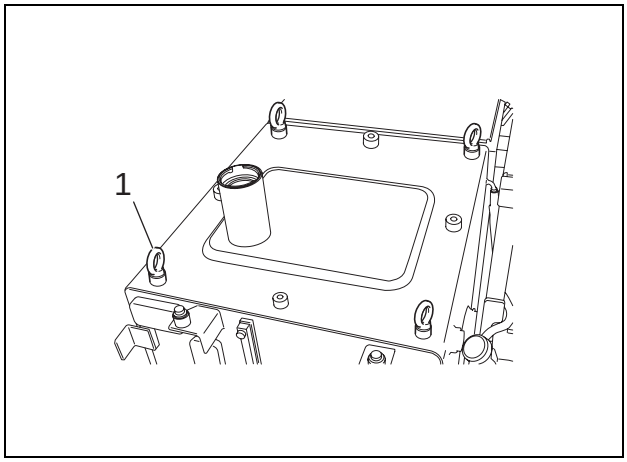

https://truckmanualshub.com/

[14] Connect the 4 shackles to the eyebolts, and then use the wires and crane to lift the fuel tank.

[15] Thoroughly check that the location is safe before lowering the fuel tank on a crosstie.

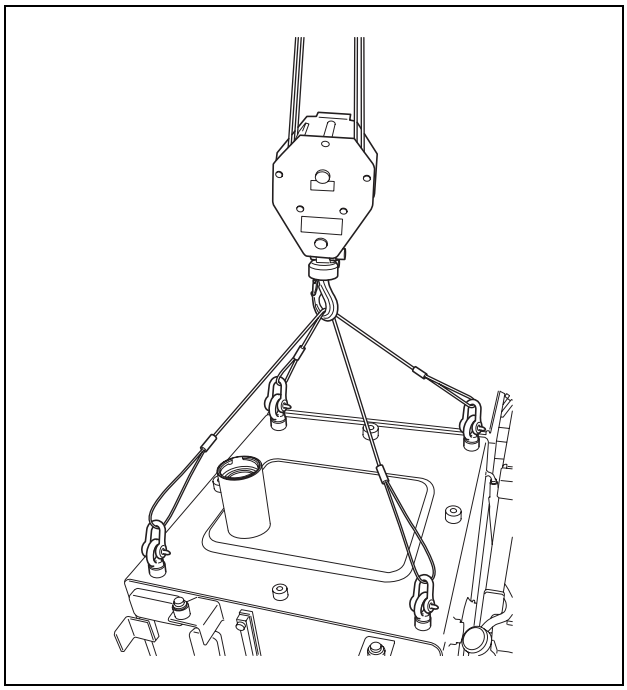

https://truckmanualshub.com/

1 Removal and Installation of Bucket

Cautions	• Park the machine on a solid and level position. • Be sure to stop the engine before beginning work. • When working cooperatively with others, take great care to follow safety procedures while giving clear signals to each other. • Wear protective devices (safety glasses, safety shoes, etc.) when working with hammers.

Items to prepare

- Bar hammer
- Holding-up bar
- Screwdriver
- Grease
- Rags
- Cleaning fluid

[1] Place the back surface of the bucket parallel to the ground.

[2] Remove the ring of lock pin (1) using a screwdriver, and pull out the lock pin (2) in the bucket side and the lock pin (3) in the arm side.

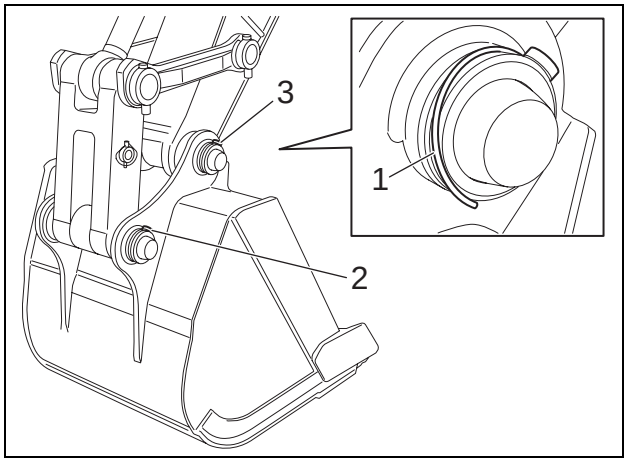

[3] Use a bar hammer (1) and holding-up bar (2) to push out the pin (3) in the bucket side and pin (4) in the arm side, and remove bucket (5).
- If it is difficult to pull out the pin, it is being loaded.
- When pulling out the pin, take care not to damage the installed O-ring and dust seal.
- When installing parts, clean the pin and pin opening of each part, and firmly rub them with grease.

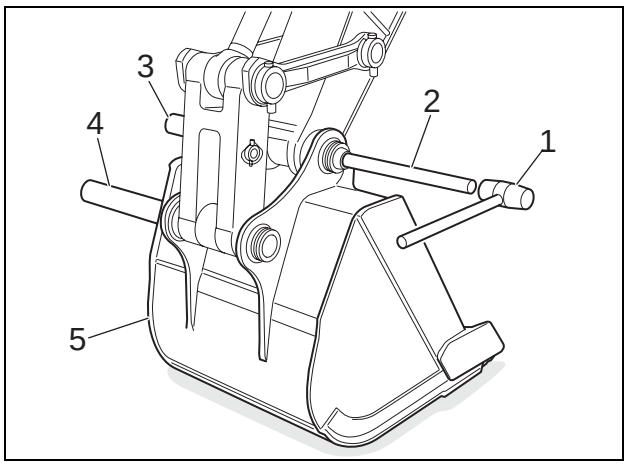

https://truckmanualshub.com/

5-17 Structure: Attachment

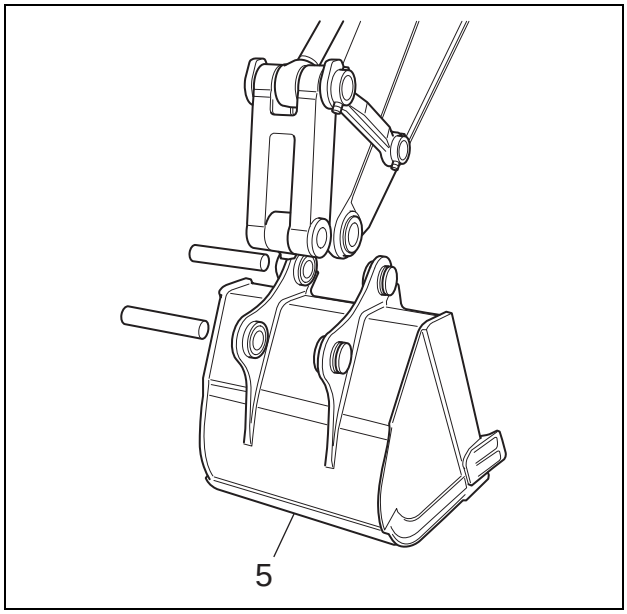

https://truckmanualshub.com/

2 Removal and Installation of Bucket Link

Cautions	• Park the machine on a solid and level position. • Be sure to stop the engine before beginning work. • When working cooperatively with others, take great care to follow safety procedures while giving clear signals to each other. • Wear protective devices (safety glasses, safety shoes, etc.) for when working with hammers.

Items to prepare

- Wrench (30 mm)
- Bar hammer
- Holding-up bar
- Grease
- Rags
- Cleaning fluid

[1] Remove the bucket. (For details, see "Removal and Installation of Bucket".)

[2] Place the bucket link (1) parallel to the ground.

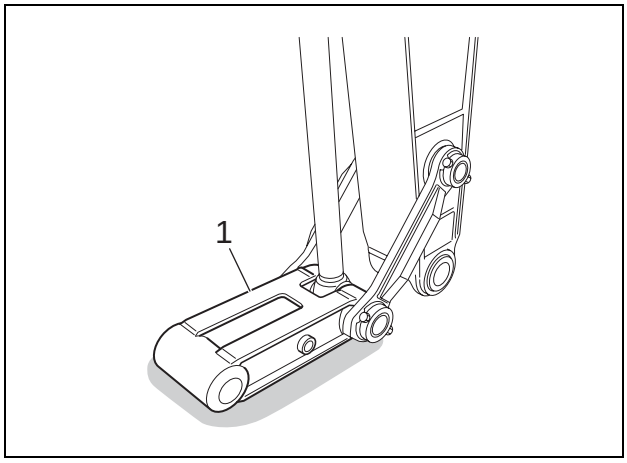

[3] Use a 30-mm wrench to remove double nuts (1) and (2), and then pull out bolts (3) and (4).

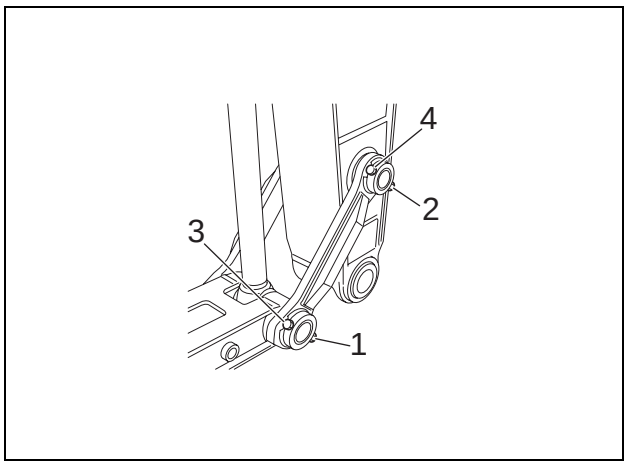

https://truckmanualshub.com/

[4] Use the bar hammer (1) and the holding-up bar (2) to push out the pin (3), and remove the bucket link (4).

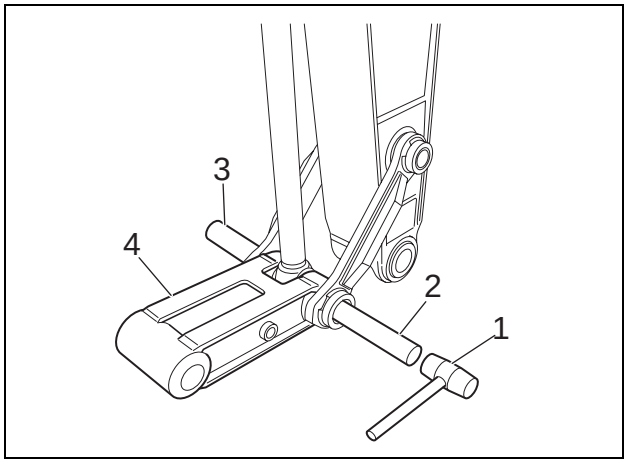

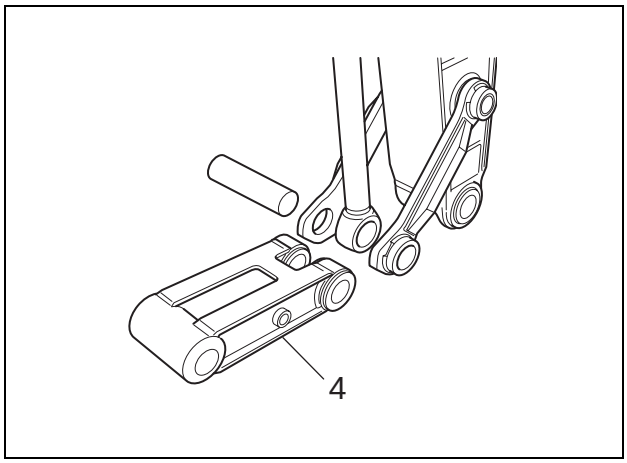

[5] Use a bar hammer (1) and the holding-up bar (2) to push out the pin (3), and remove arm links (4) and (5).
- If it is difficult to pull out the pin, it is being loaded.
- When pulling out the pin, take care not to damage the installed O-ring and dust seal.
- When installing parts, clean the pin and pin opening of each part, and firmly rub them with grease.

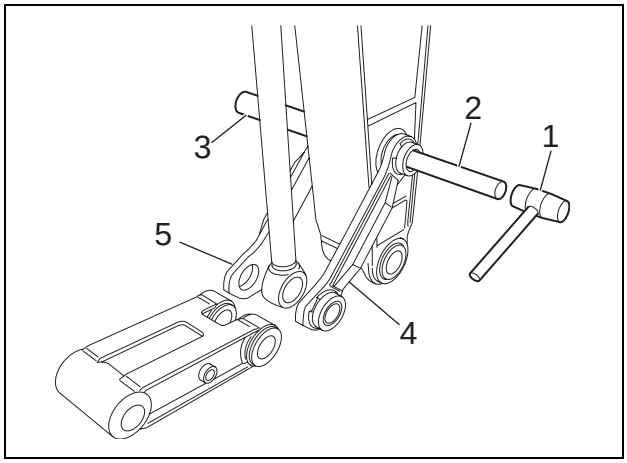

https://truckmanualshub.com/

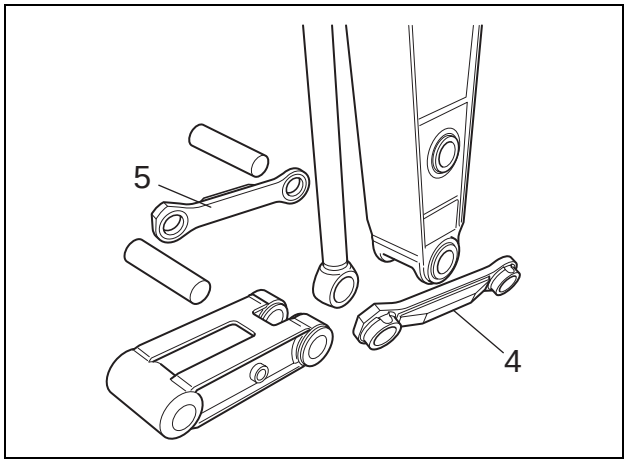

https://truckmanualshub.com/

3 Installation of Bucket Cylinder

Cautions	• Park the machine on a solid and level position. • Be sure to stop the engine before beginning work. • When working cooperatively with others, take great care to follow safety procedures while giving clear signals to each other. • Wear protective devices (safety glasses, safety shoes, etc.) for when working with hammers. • Be sure to inspect the nylon slings and other lifting equipment before beginning work. • Do not stand on or pass under the suspended load (bucket cylinder).

Items to prepare

- Wrench (19 mm, 36 mm)
- Bar hammer
- Holding-up bar
- Crane (that meets the required lifting capacity)
- Nylon sling (that meets the required lifting capacity)
- Grease
- Rags
- Cleaning fluid
- Crossties

[1] Remove the bucket. (For details, see "Removal and Installation of Bucket".)

[2] Remove the bucket link. (For details, see "Removal and Installation of Bucket Link".)

[3] Allow the tip of arm (1) to touch the ground.

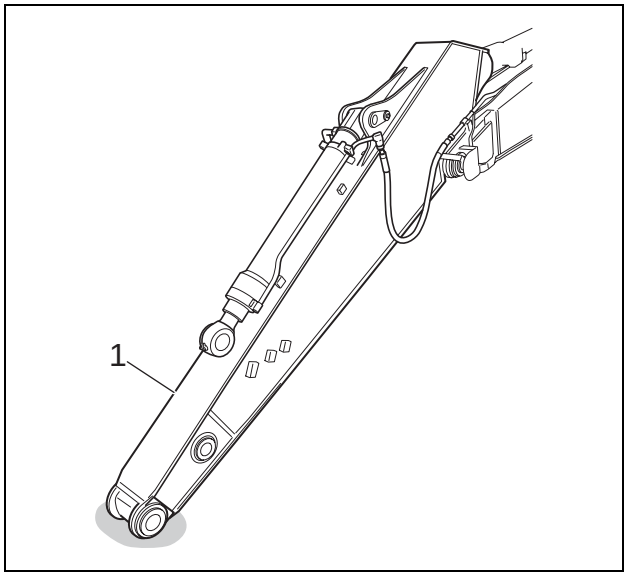

[4] Turn the key switch (1) OFF to stop the engine. Then turn the key switch (1) ON again and turn the control lever (2) about 10 times to bleed out the pressure.

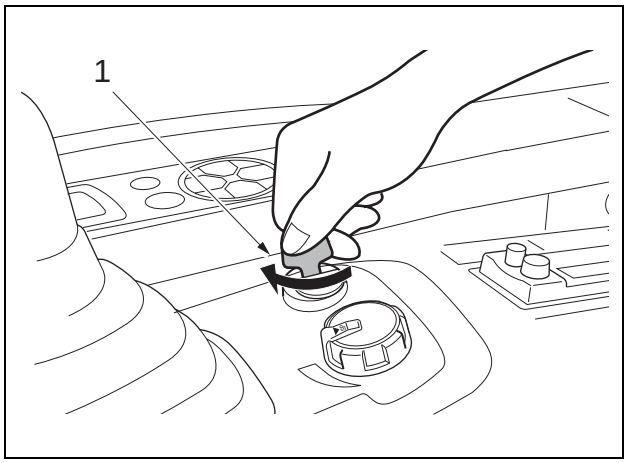

https://truckmanualshub.com/

[5] Move the travel lever (1) back and forth about 5 times to bleed out pressure.

[6] Return the key switch to OFF.

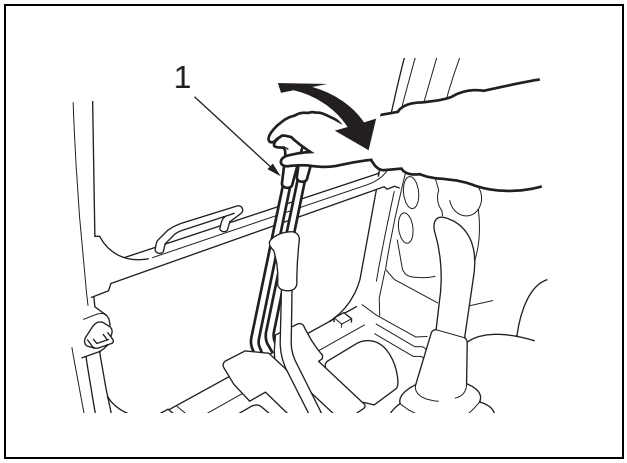

[7] Press the air breather button (1) on top of the hydraulic oil tank to release the pressure inside the tank.

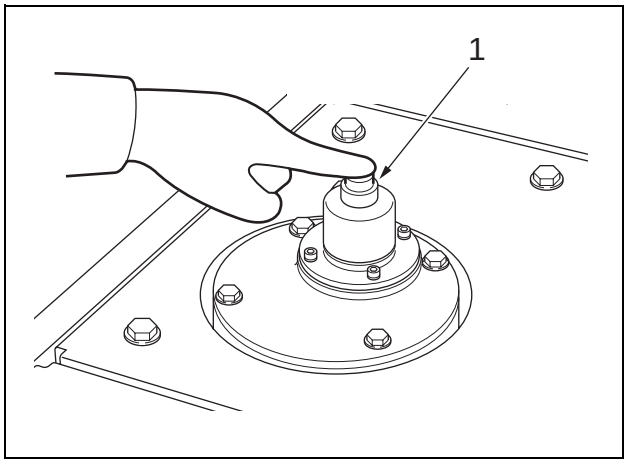

[8] Use 2 36-mm wrenches to remove hoses (1) and (2) while fixing the pipe.
- Use caps or plugs to cover the hoses and pipes to prevent the entry of water, dust or dirt.
- Clean the hoses and pipes by spraying with a parts cleaner to prevent scratches and prevent dirt from accumulating on the connectors.

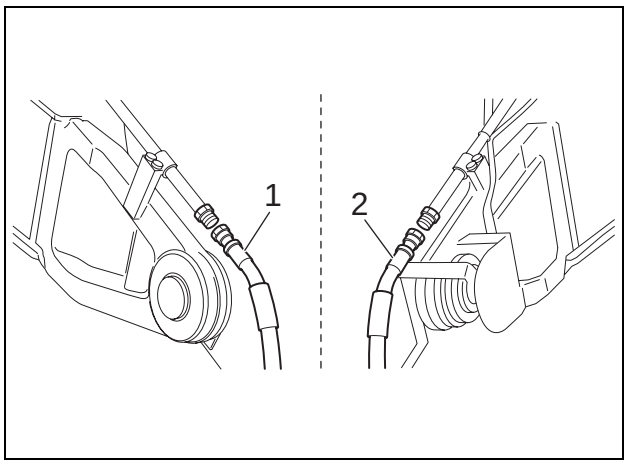

https://truckmanualshub.com/

[9] Use a crane and nylon sling (1) to secure the bucket cylinder (2).
- Wrap the nylon sling inside the pipes to prevent them from getting crushed.

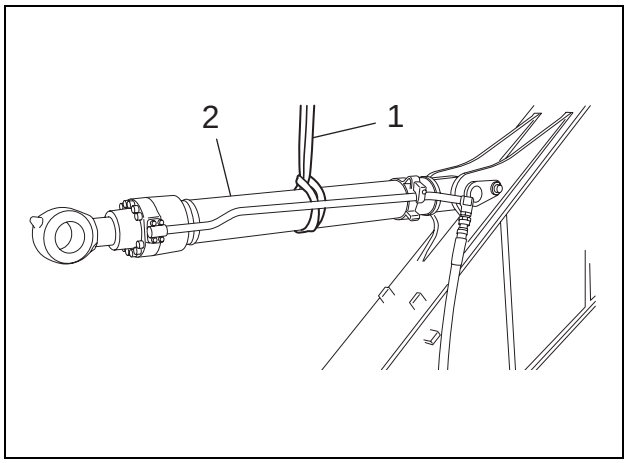

[10] Use a 19-mm wrench to remove the lock bolt (1).

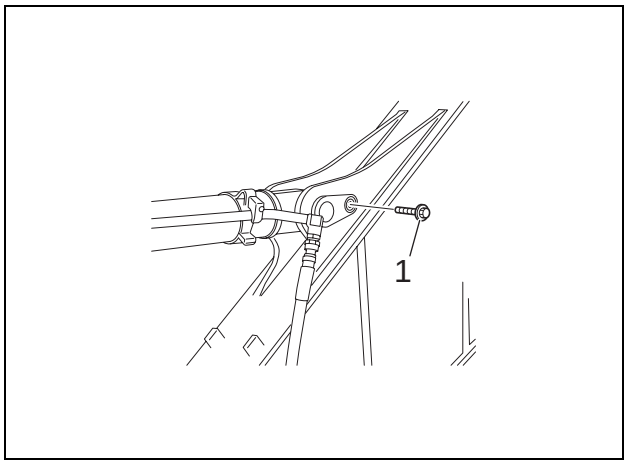

[11] Use the bar hammer (1) and holding-up bar (2) to push out the pin (3).
- If it is difficult to pull out the pin, it is being loaded.
- When pulling out the pin, take care not to damage the installed O-ring and dust seal.
- When installing parts, clean the pin and pin opening of each part, and firmly rub them with grease.

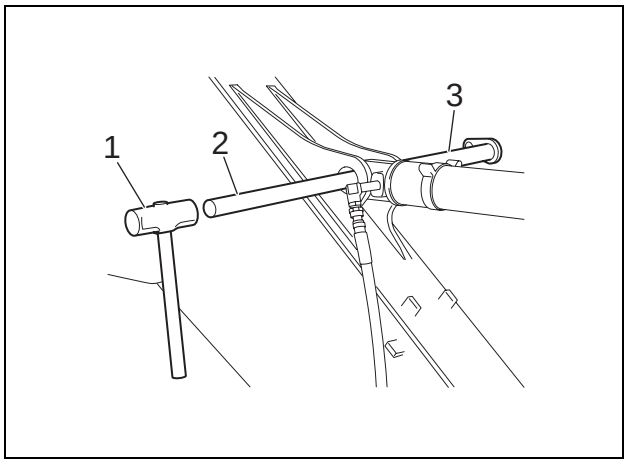

[12] Lift the bucket cylinder (2).

[13] Place the bucket cylinder (2) on crossties.

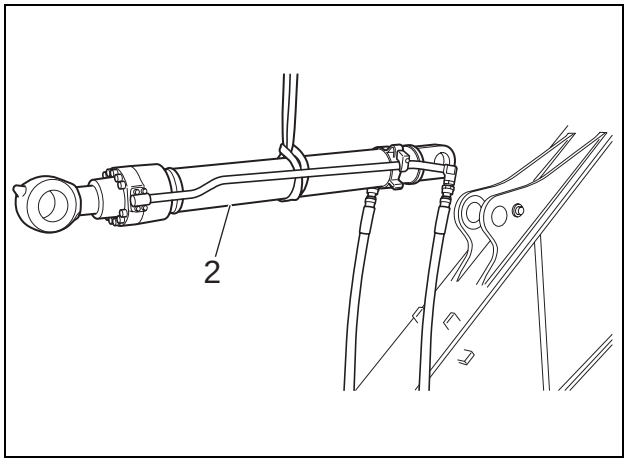

https://truckmanualshub.com/

4 Removal and Installation of Arm

Cautions	• Park the machine on a solid and level position. • Be sure to stop the engine before beginning work. • When working cooperatively with others, take great care to follow safety procedures while giving clear signals to each other. • Wear protective devices (safety glasses, safety shoes, etc.) for when working with hammers. • Be sure to inspect the nylon slings and other lifting equipment before beginning work. • Do not stand on or pass under the suspended load (arm).

Items to prepare

- Wrench (19 mm)
- Bar hammer
- Holding-up bar
- Nylon sling (that meets the required lifting capacity)
- Crane (that meets the required lifting capacity)
- Grease
- Rags
- Cleaning fluid
- Crossties

[1] Remove and install the bucket. (For details, see "Removal and Installation of Bucket".)

[2] Remove and install the bucket cylinder. (For details, see "Removal and Installation of Bucket Cylinder".)

[3] Allow the tip of arm (1) to touch the ground and fix the arm with crane and nylon sling (2).

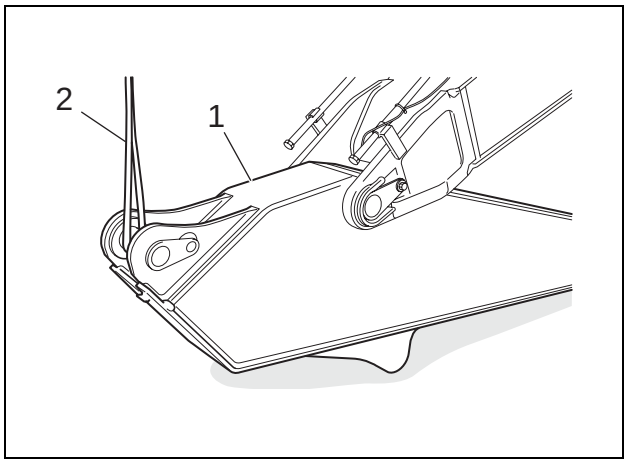

[4] Use a 19-mm wrench to remove the lock bolt (1).

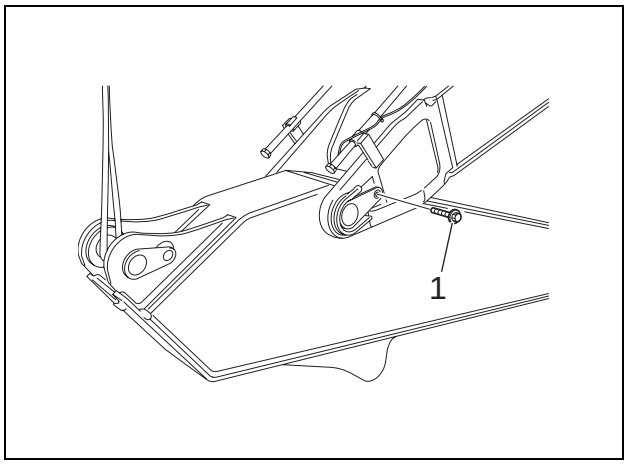

https://truckmanualshub.com/

[5] Use a bar hammer (1) and the holding-up bar (2) to push out the pin (3) and remove the arm (4).
- If the pin is difficult to pull out, it is being loaded.
- When pulling out a pin, take care not to damage the installed O-ring and dust seal.
- When installing parts, clean the pin and pin opening of each part, and firmly rub them with grease.

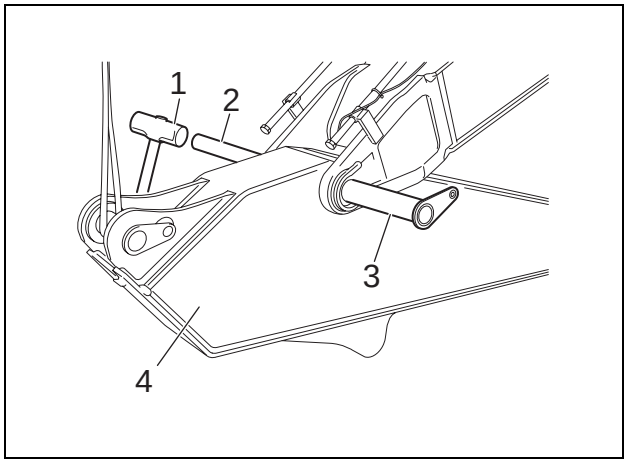

https://truckmanualshub.com/

5 Removal and Installation of Arm Cylinder

Cautions	• Park the machine on a solid and level position. • Be sure to stop the engine before beginning work. • When working cooperatively with others, take great care to follow safety procedures while giving clear signals to each other. • Wear protective devices (safety glasses, safety shoes, etc.) for when working with hammers. • Be sure to inspect the nylon slings and other lifting equipment before beginning work. • Do not stand on or pass under the suspended load (arm cylinder).

Items to prepare

- Wrench (19 mm, 36 mm, 41 mm)
- Nylon sling (that meets the required lifting capacity)
- Crane (that meets the required lifting capacity)
- Caps
- Plugs
- Bar hammer
- Holding-up bar
- Grease
- Rags
- Cleaning fluid
- Crossties

[1] Use a crane and nylon sling (1) to secure the arm cylinder (2).

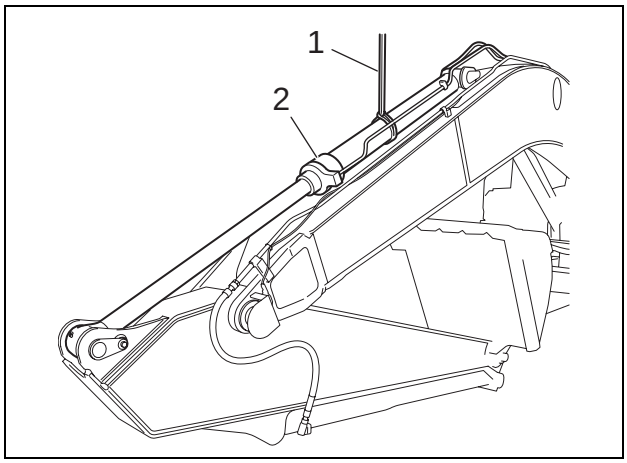

[2] Use a 19-mm wrench to remove the lock bolt (1).

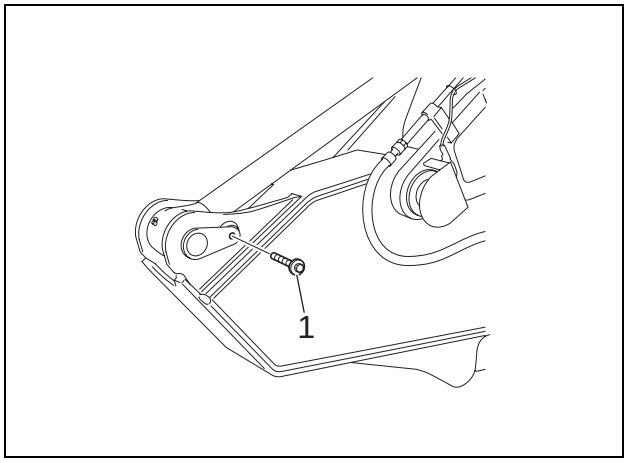

https://truckmanualshub.com/

[3] Use a bar hammer (1) and the holding-up bar (2) to push out the pin (3).

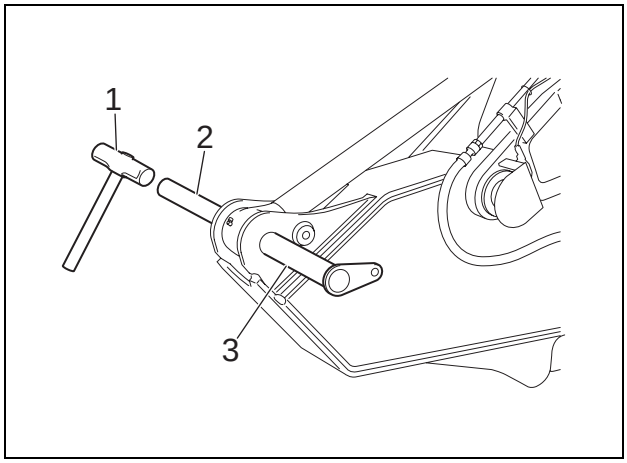

[4] Start the engine and perform the arm-out operation at idling rotation to retract the rod of the arm cylinder.

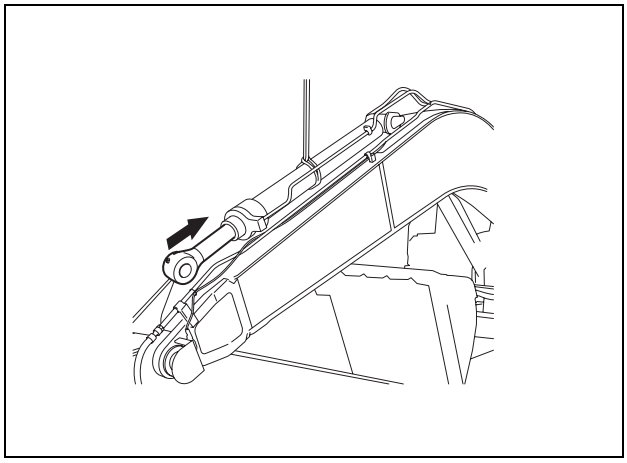

[5] Turn the key switch (1) OFF to stop the engine. Then turn the key switch (1) ON again and turn the control lever (2) about 10 times to bleed out pressure.

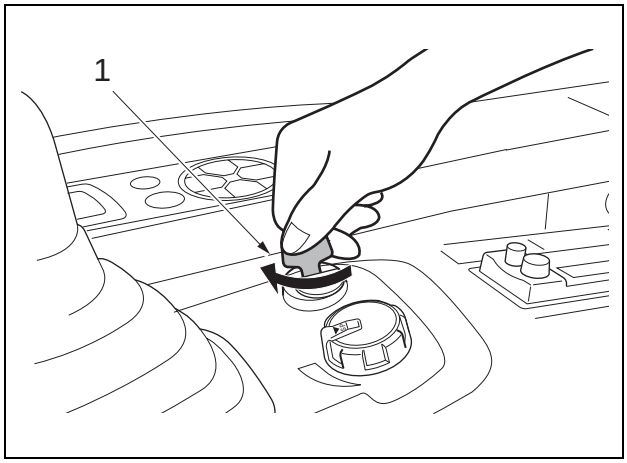

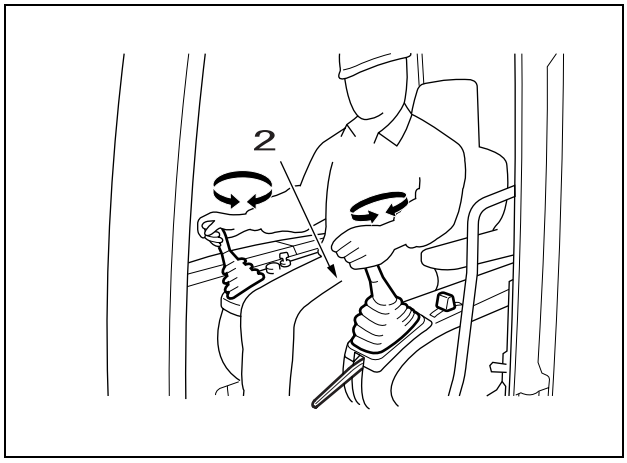

https://truckmanualshub.com/

[6] Move the travel lever (1) back and forth about 5 times to bleed out the pressure.

[7] Return the key switch to OFF.

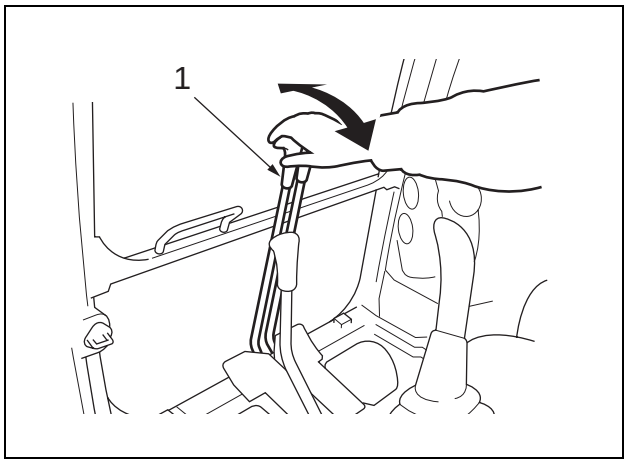

[8] Press the air breather button (1) on top of the hydraulic oil tank to release the pressure inside the tank.

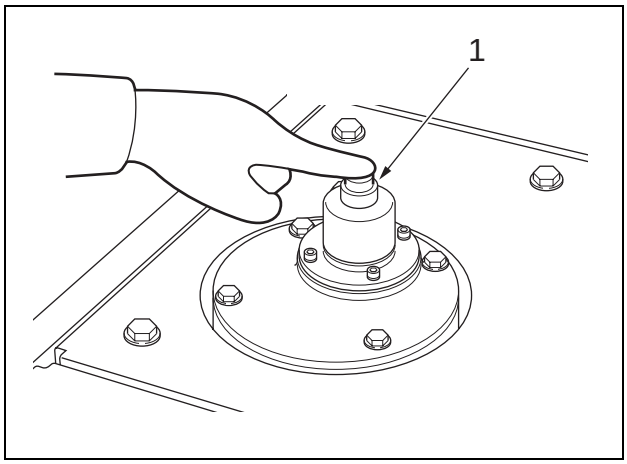

[9] Use a 41-mm wrench to remove the hose (1).

[10] Use a 36-mm wrench to remove the hose (2).
- Use caps or plugs to cover the hoses and pipes to prevent the entry of water, dust or dirt.
- Clean the hoses and pipes by spraying with a parts cleaner to prevent scratches and prevent dirt from accumulating on the connectors.

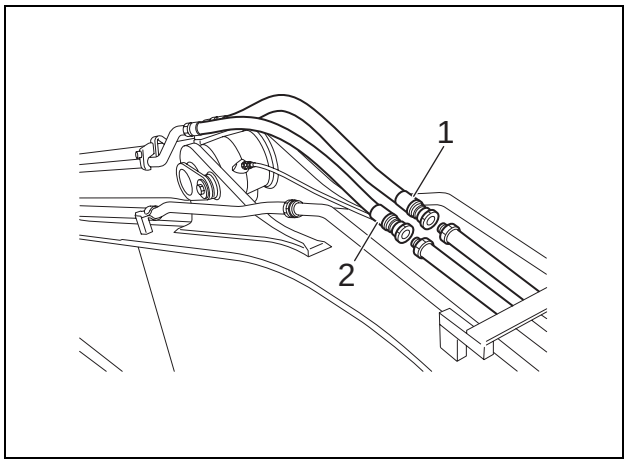

[11] Use a 19-mm wrench to remove the grease hose (1).
- Use a caps or plugs to prevent the entry of water, dust or dirt.

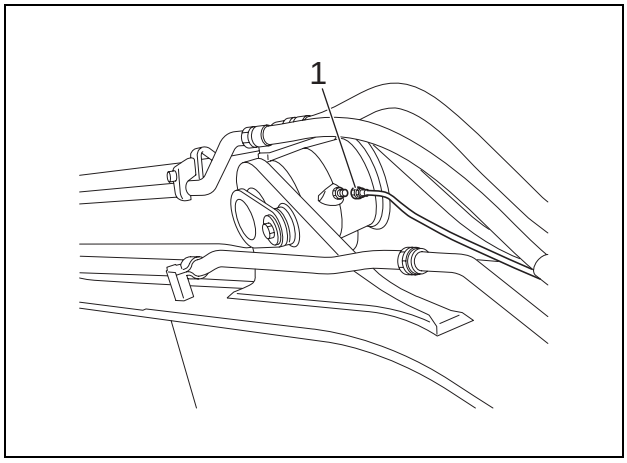

https://truckmanualshub.com/

[12] Use a 19-mm wrench to remove the lock bolt (1).

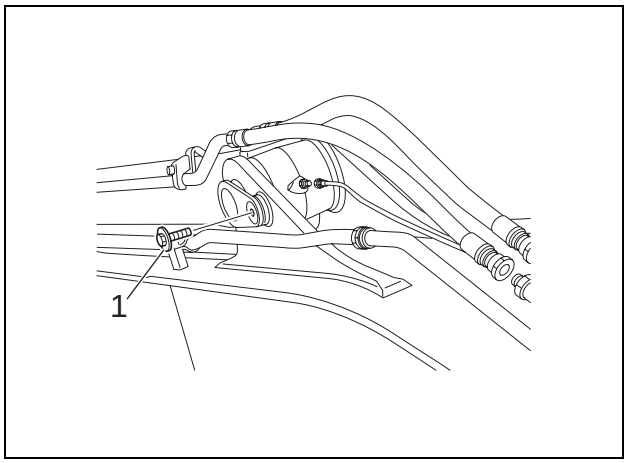

[13] Use a bar hammer (1) and the holding-up bar (2) to push out the pin (3).
- If it is difficult to pull out the pin, it is being loaded.
- When pulling out the pin, take care not to damage the installed O-ring and dust seal.
- When installing parts, clean the pin and pin opening of each part, and firmly rub them with grease.

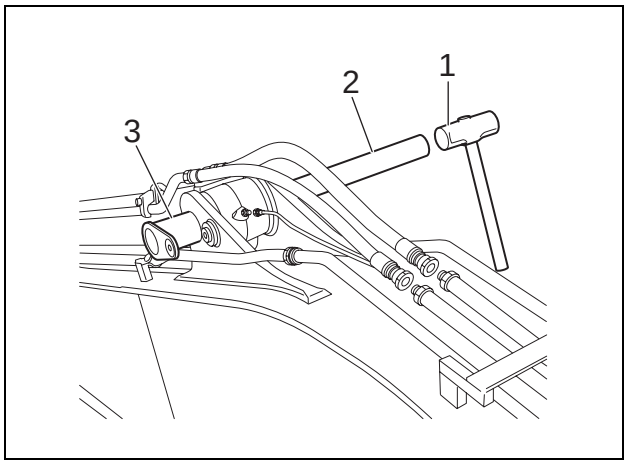

[14] Use a crane and nylon sling (1) to lift the arm cylinder (2).

[15] Place the arm cylinder on crossties.

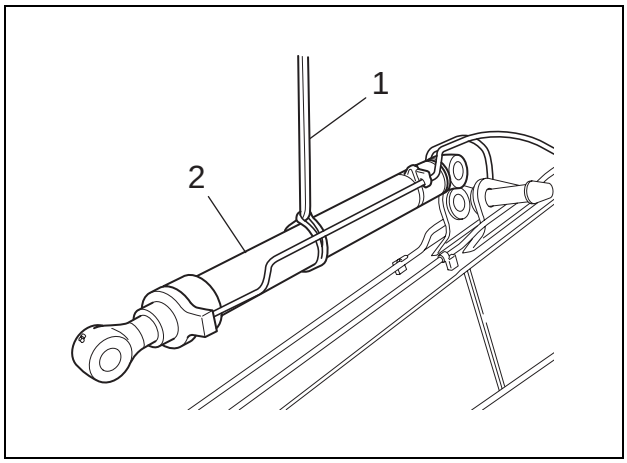

https://truckmanualshub.com/

6 Removal and Installation of Boom

Cautions	• Park the machine on a solid and level position. • Be sure to stop the engine before beginning work. • When working cooperatively with others, take great care to follow safety procedures while giving clear signals to each other. • Wear protective devices (safety glasses, safety shoes, etc.) for when working with hammers. • Be sure to inspect the nylon slings and other lifting equipment before beginning work. • Do not stand on or pass under the suspended load (boom).

Items to prepare

- Wrench (10 mm, 19 mm, 22 mm, 30 mm, 36 mm, 41 mm)
- Slide hammer (24 mm)
- Nylon sling (that meets the required lifting capacity)
- Crane (that meets the required lifting capacity)
- Marking pen
- Caps
- Plugs
- Rags
- Cleaning fluid
- Batten
- Crossties

[1] Remove and install the bucket. (For details, see "Removal and Installation of Bucket".)

[2] Remove and install the bucket cylinder. (For details, see "Removal and Installation of Bucket Cylinder".)

[3] Remove and install the arm cylinder. (For details, see "Removal and Installation of Arm Cylinder".)

[4] Remove and install the arm. (For details, see "Removal and Installation of Arm".)

[5] Allow the tip of boom (1) to touch the ground.

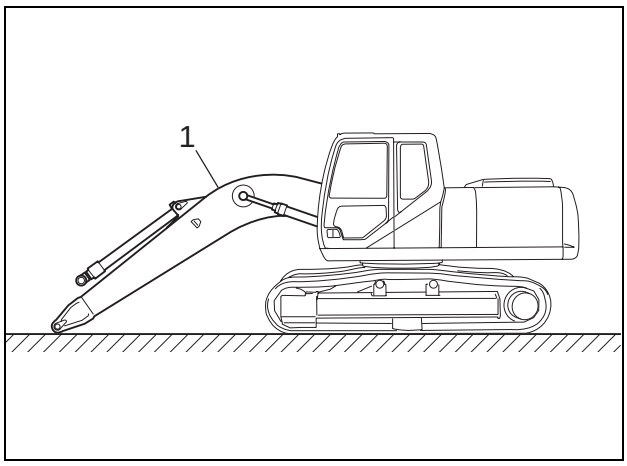

https://truckmanualshub.com/

[6] Use a 19-mm wrench to remove the grease hose (1).
- Use a caps or plugs to prevent the entry of water, dust or dirt.

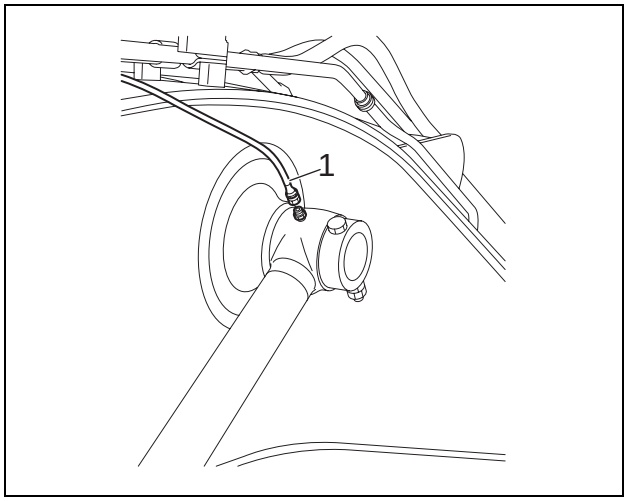

[7] Use a 30-mm wrench to remove 2 lock nuts (1). Then pull out the bolt (2) and then remove the securing ring (3).

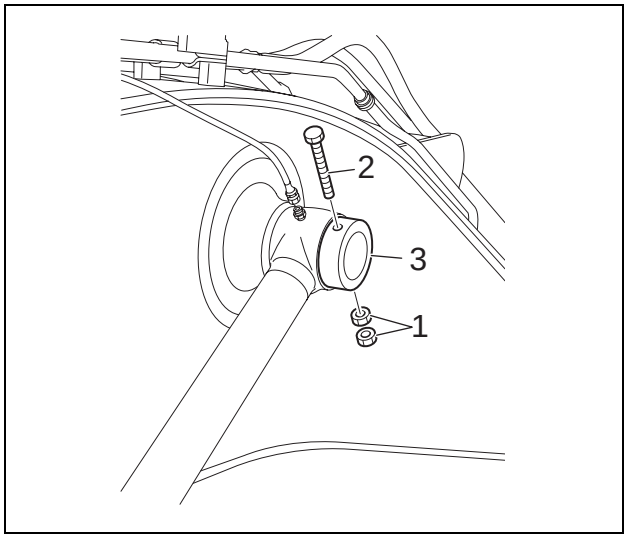

[8] Use a bar hammer (1) and the holding-up bar (2) to push out the pin (3).

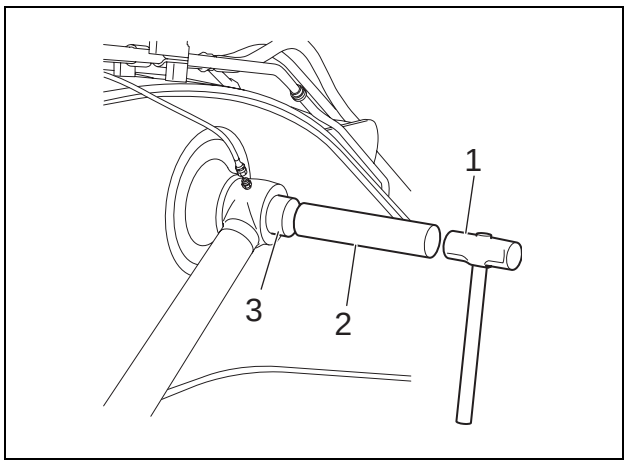

https://truckmanualshub.com/

[9] Install the pin (1) that was removed in step [8].

[10] Use a 30-mm wrench to install the bolt (3) with 2 lock nuts (2) and also install the securing ring (4).

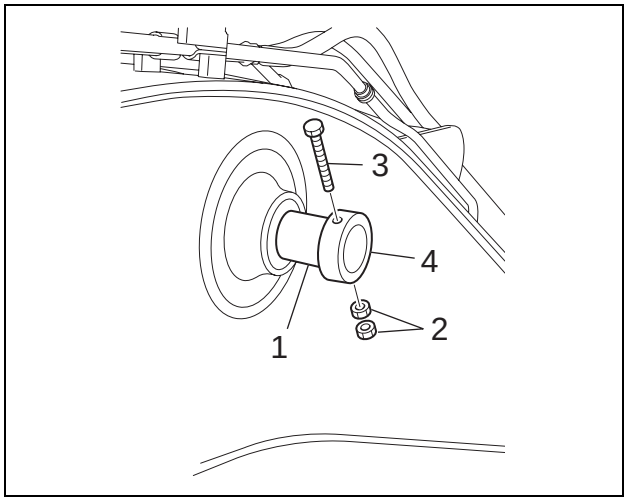

[11] Wrap a nylon sling (1) around the pin that was installed in step [9], and secure it with the crane.

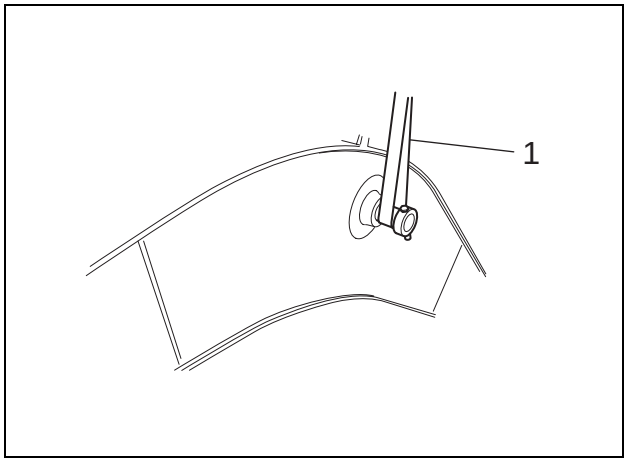

[12] Use a 10-mm wrench to remove the grease nipple (1) and insert a batten (2) to the root of the boom cylinder.

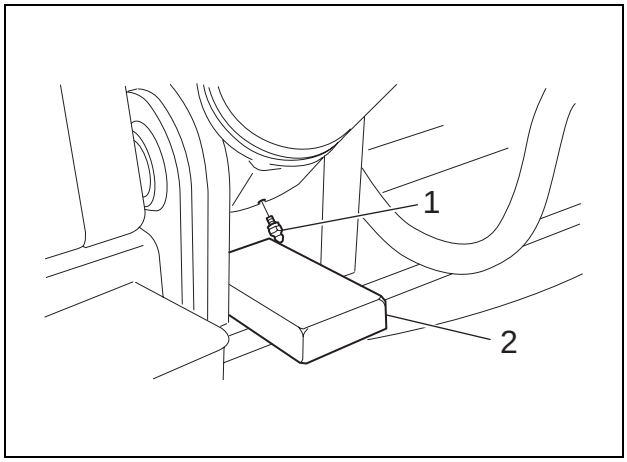

https://truckmanualshub.com/

[13] Use a 19-mm wrench to remove the lock bolt (1).

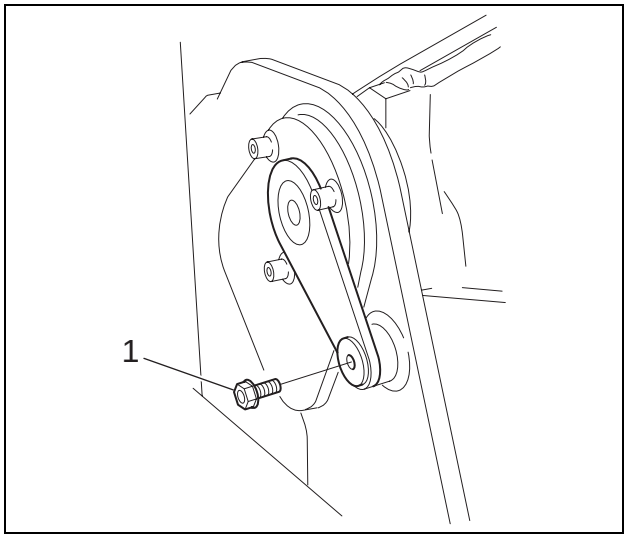

[14] Use a 24-mm slide hammer (1) to remove the pin (2).

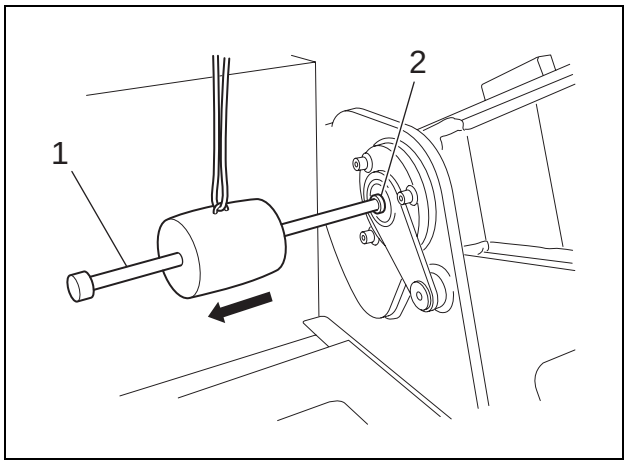

[15] Use wrench [36 mm (1), (2), and (3), 41 mm (4), 22 mm (5) and (6)] to remove the hoses.
- Mark the hoses and pipes so that they can be connected correctly at the time of assembly.
- Use caps or plugs to cover the hoses and pipes to prevent the entry of water, dust or dirt.
- Clean the hoses and pipes by spraying with a parts cleaner to prevent scratches and prevent dirt from accumulating on the connectors.

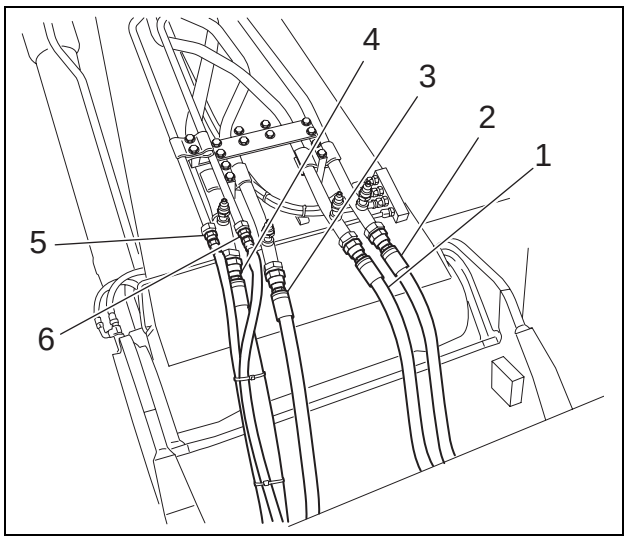

https://truckmanualshub.com/

[16] Reverse the machine and remove the boom (1).

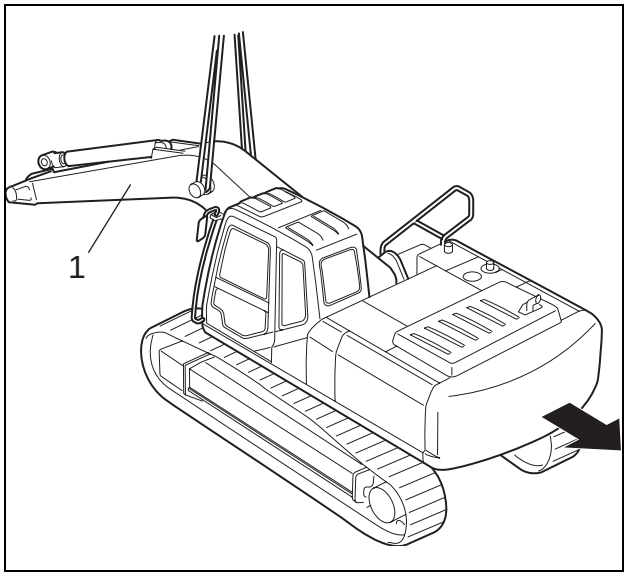

https://truckmanualshub.com/

7 Removal and Installation of Boom Cylinder

Cautions	• Park the machine on a solid and level position. • Be sure to stop the engine before beginning work. • When working cooperatively with others, take great care to follow safety procedures while giving clear signals to each other. • Wear protective devices (safety glasses, safety shoes, etc.) for when working with hammers. • Be sure to inspect the nylon slings and other lifting equipment before beginning work. • Do not stand on or pass under the suspended load (boom cylinder).

Items to prepare

- Wrench (19 mm, 30 mm, 36 mm)
- Pinch bar
- Wire ropes (that meet the required lifting capacity)
- Crane (that meets the required lifting capacity)
- Marking pen
- Caps
- Plugs
- Bar hammer
- Holding-up bar
- Grease
- Rags
- Cleaning fluid
- Crossties

[1] Use a crane and nylon sling (1) to secure the boom cylinder (2).

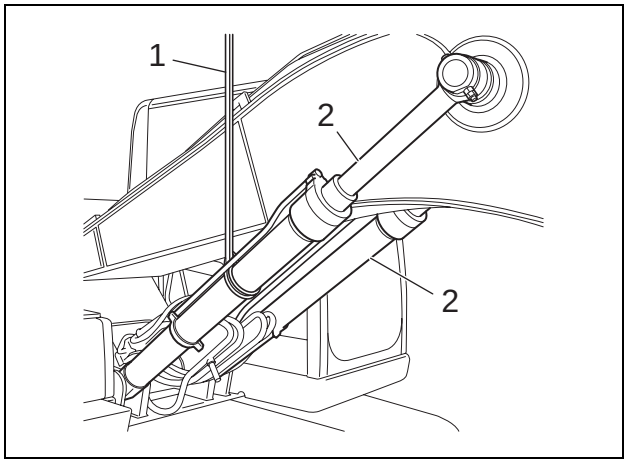

[2] Use a 19-mm wrench to remove the grease hose (1).
- Use caps or plugs to prevent the entry of water, dust or dirt.

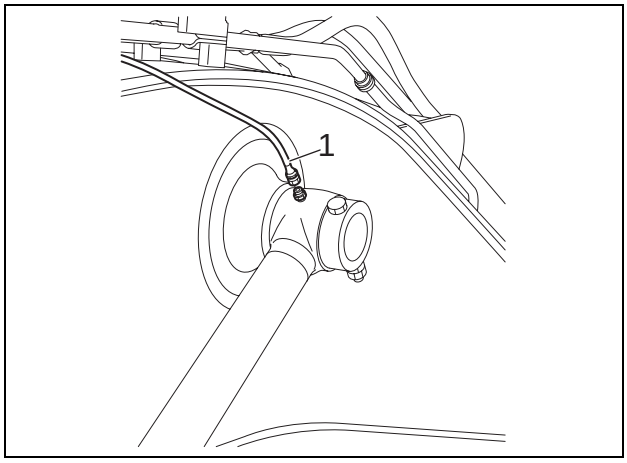

https://truckmanualshub.com/

[3] Use a 30-mm wrench to remove 2 lock nuts (1), pull out the bolt (2), and then remove the securing ring (3).

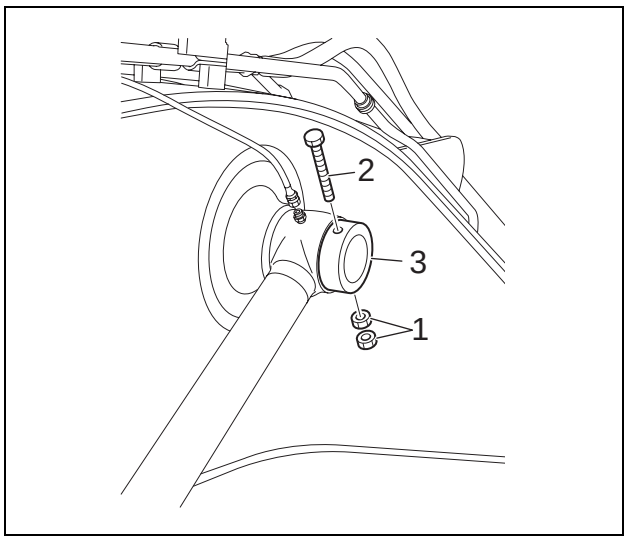

[4] Use a bar hammer (1) and the holding-up bar (2) to push out the pin (3).

[5] Start the engine to perform the boom-down operation at idling rotation, and retract the rod of the boom cylinder.

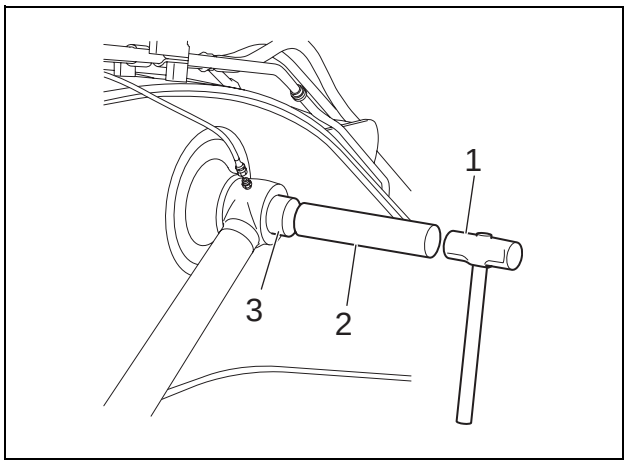

[6] Turn the key switch (1) OFF to stop the engine. Then turn the key switch (1) ON again and also turn the control lever (2) about 10 times to bleed out the pressure.

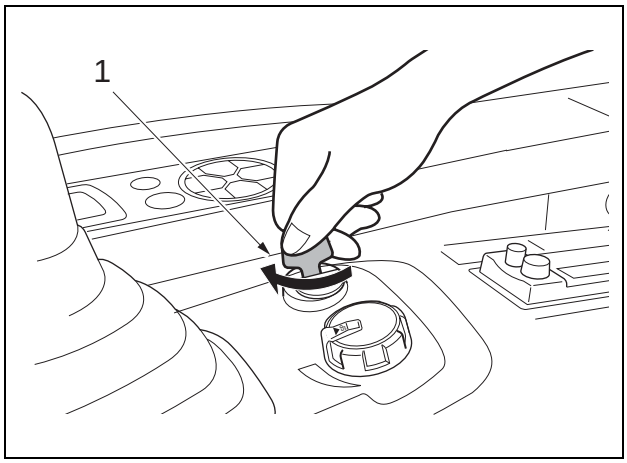

https://truckmanualshub.com/

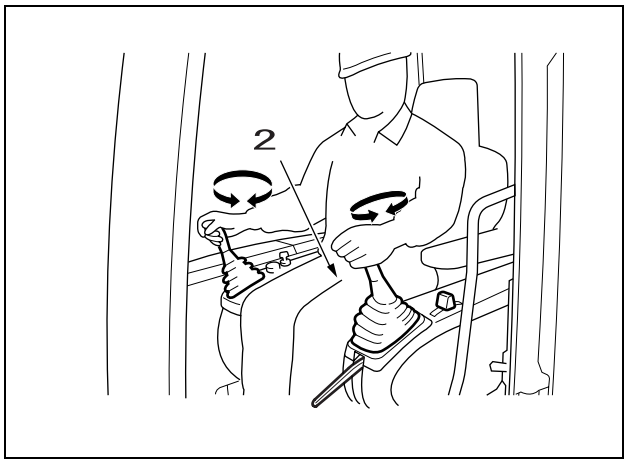

[7] Move the travel lever (1) back and forth about 5 times to bleed out the pressure.

[8] Turn the key switch to OFF.

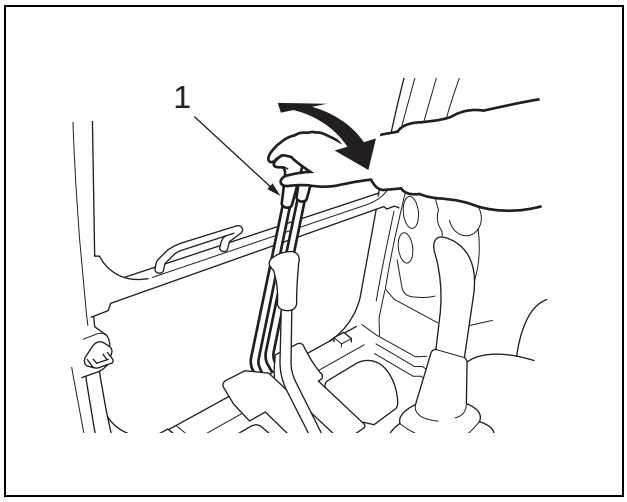

[9] Press the air breather button (1) on top of the hydraulic oil tank to release the pressure inside the tank.

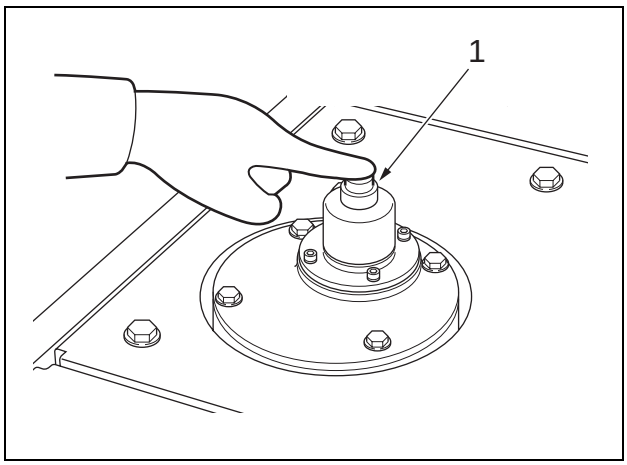

https://truckmanualshub.com/

[10] Use a 36-mm wrench to remove hoses (1) and (2).
- Mark the pipes and hoses so that they can be connected correctly at the time of assembly.
- Use caps or plugs to cover the hoses and pipes to prevent the entry of water, dust or dirt.
- Clean the hoses and pipes by spraying with a parts cleaner to prevent scratches and prevent dirt from accumulating on the connectors.

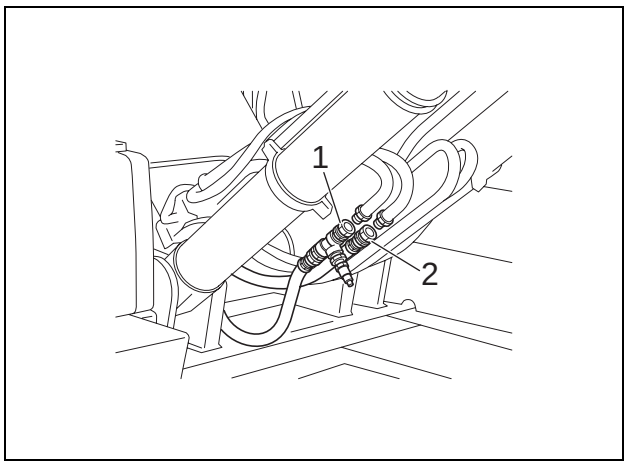

[11] Use a 19-mm wrench to remove the lock bolt (1).

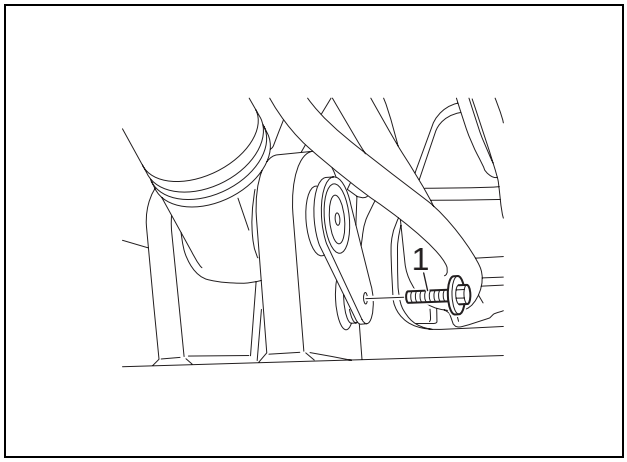

[12] Use a pinch bar to remove the pin (1).

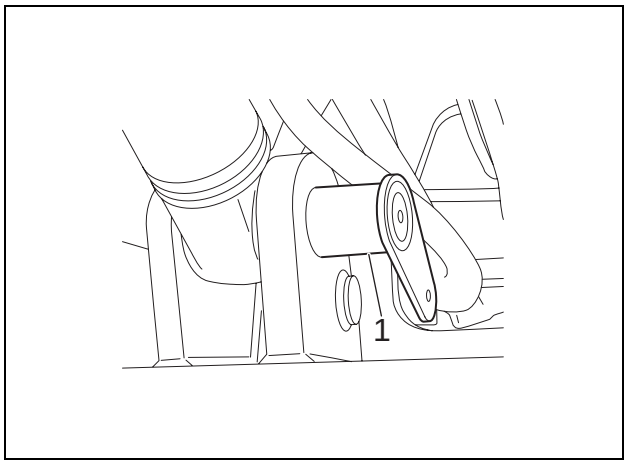

[13] Use a crane and nylon sling (1) to lift the boom cylinder (2).

[14] Place the boom cylinder on crossties.

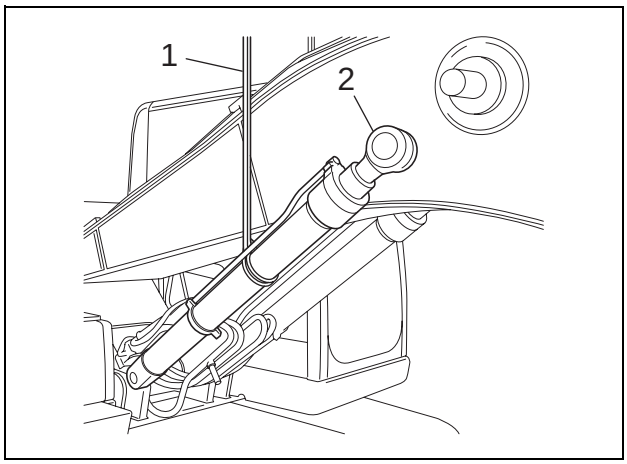

https://truckmanualshub.com/

8 Removal and Installation of Arm HBCV

Cautions	• Park the machine on a solid and level position. • Be sure to stop the engine before beginning work. • When working cooperatively with others, take great care to follow safety procedures while giving clear signals to each other. • Be sure to release the hydraulic pressure before beginning work.

Items to prepare

- Wrench (22 mm)
- Hexagon wrench (10 mm)
- Marking pen
- Caps
- Plugs
- Rags
- Cleaning fluid

[1] Use a 22-mm wrench to remove hoses (1) and (2).
- Mark the HBCV and hose joints so that they can be connected correctly at the time of assembly.
- Use caps or plugs to cover the hoses and HBCV to prevent the entry of water, dust or dirt.
- Clean the hoses and HBCV by spraying with a parts cleaner to prevent scratches and prevent dirt from accumulating on the connectors.

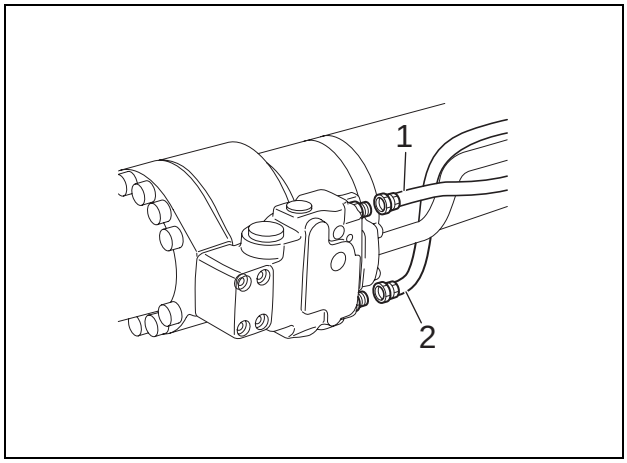

[2] Remove 4 cap bolts (1) using a 10-mm hexagon wrench, and remove the pipe (2).
- Use caps or plugs to cover HBCV and the pipes to prevent the entry of water, dust or dirt.
- Clean each of HBCV and pipe connections by spraying with a parts cleaner to prevent scratches and prevent dirt from accumulating on the connectors.

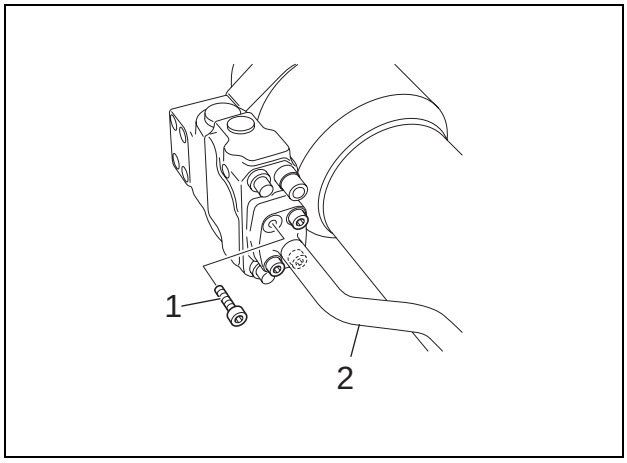

https://truckmanualshub.com/

[3] Remove 4 cap bolts (1) using a 10-mm hexagon wrench, and remove the arm HBCV (2).

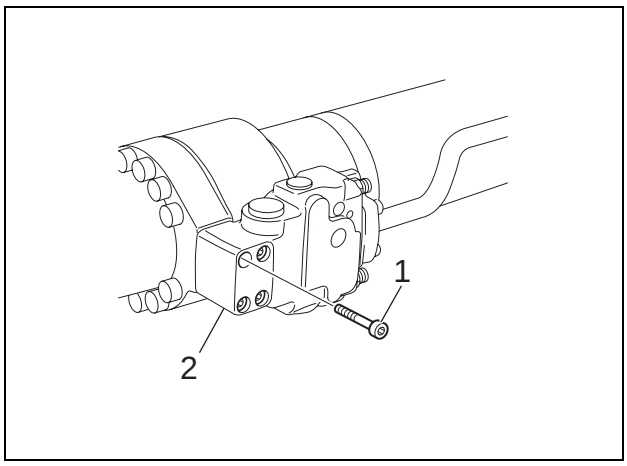

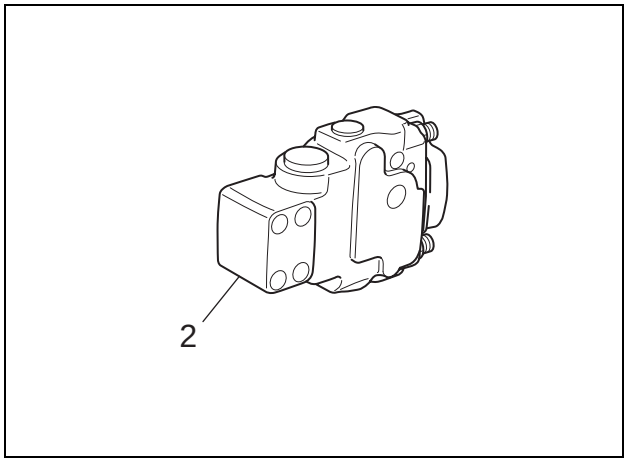

https://truckmanualshub.com/

9 Removal and Installation of Boom HBCV

Cautions	• Park the machine on a solid and level position. • Be sure to stop the engine before beginning work. • When working cooperatively with others, take great care to follow safety procedures while giving clear signals to each other.

Items to prepare

- Wrench (19 mm, 22 mm, 27 mm)
- Hexagon wrench (10 mm)
- Marking pen
- Caps
- Plugs
- Rags
- Cleaning fluid
- Crossties

[1] Remove the hose (1) using a 19-mm wrench. Also remove hoses (2), (3) and (4) using a 22-mm wrench.
- Mark the HBCV and hose joints so that they can be connected correctly at the time of assembly.
- Use caps or plugs to cover HBCV and the pipes to prevent the entry of water, dust or dirt.
- Clean each of HBCV and pipe connections by spraying with a parts cleaner to prevent scratches and prevent dirt from accumulating on the connectors.

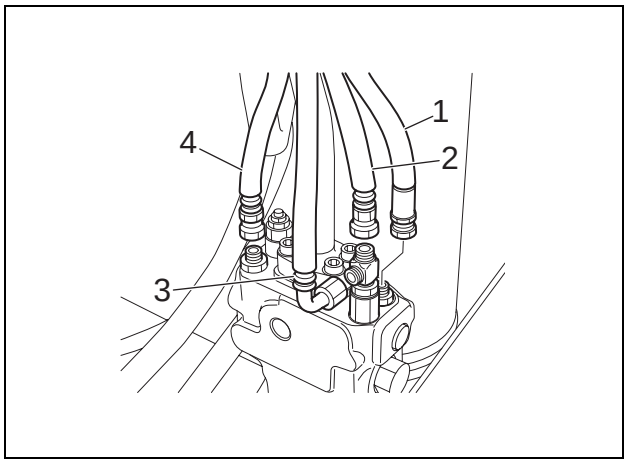

[2] Remove 4 cap bolts (1) using a 10-mm wrench, and remove the pipe (2).
- Use caps or plugs to cover HBCV and the pipes to prevent the entry of water, dust or dirt.
- Clean each of HBCV and pipe connections by spraying with a parts cleaner to prevent scratches and prevent dirt from accumulating on the connectors.

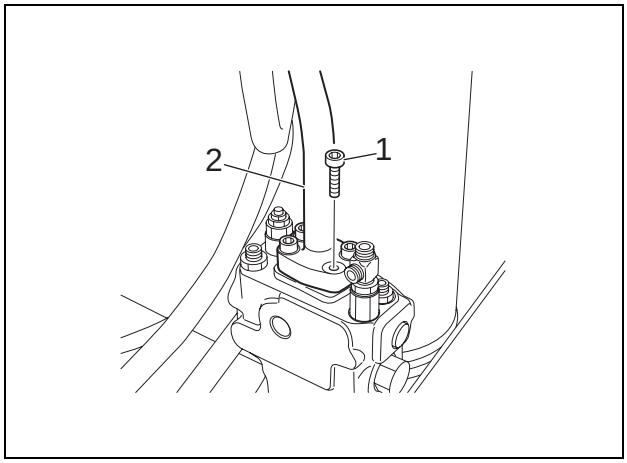

https://truckmanualshub.com/

[3] Remove 4 cap bolts (1) using a 10-mm wrench, and remove the boom HBCV (2).

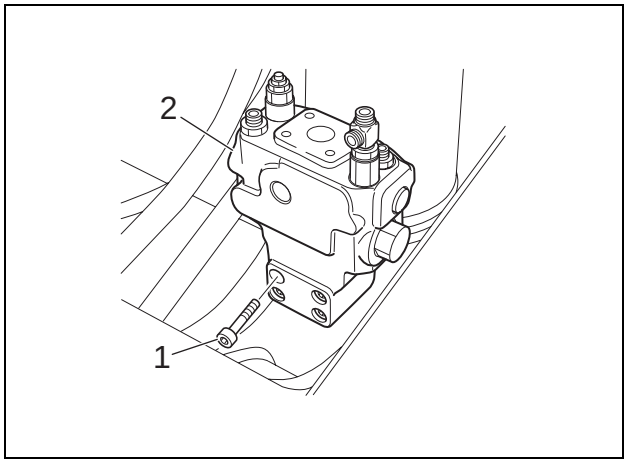

[4] Remove the hose (1) on the other boom HBCV using a 19-mm wrench. Also remove hoses (2), (3) and (4) using a 22-mm wrench.

[5] Remove the boom bottom sensor (5) using a 27-mm wrench.
- Mark the HBCV and hose joints so that they can be connected correctly at the time of assembly.
- Use caps or plugs to cover HBCV and the pipes to prevent the entry of water, dust or dirt.
- Clean each of HBCV and pipe connections by spraying with a parts cleaner to prevent scratches and prevent dirt from accumulating on the connectors.

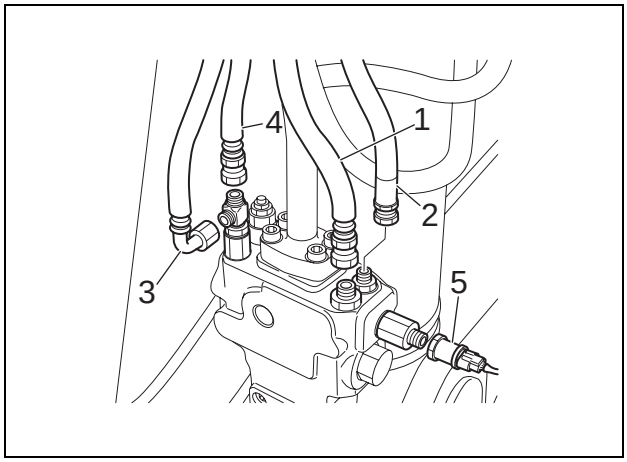

[6] Remove 4 cap bolts (1) using a 10-mm wrench, and remove the pipe (2).
- Use caps or plugs to cover HBCV and the pipes to prevent the entry of water, dust or dirt.
- Clean each of HBCV and pipe connections by spraying with a parts cleaner to prevent scratches and prevent dirt from accumulating on the connectors.

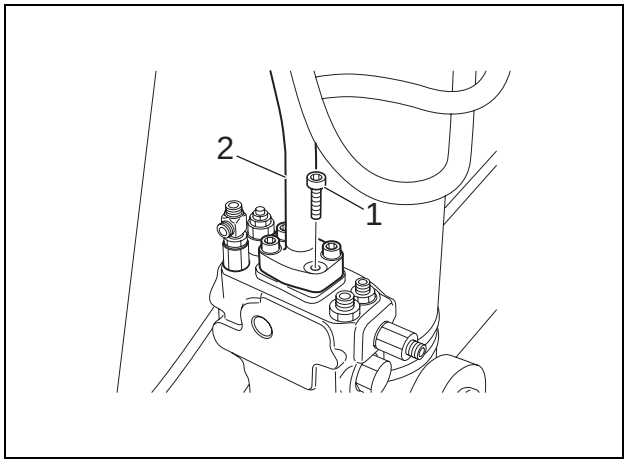

https://truckmanualshub.com/

[7] Remove 4 cap bolts (1) using a 10-mm wrench, and remove the boom HBCV (2).

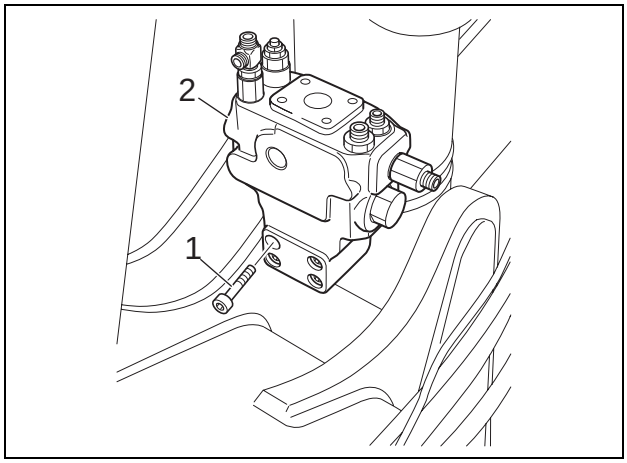

https://truckmanualshub.com/

1 Removal and Installation of Boom Light

Cautions	• Be sure to stop the engine before beginning work.

Items to prepare

- Wrench (19 mm)
- Rags
- Cleaning fluid

[1] Remove the connector (1).

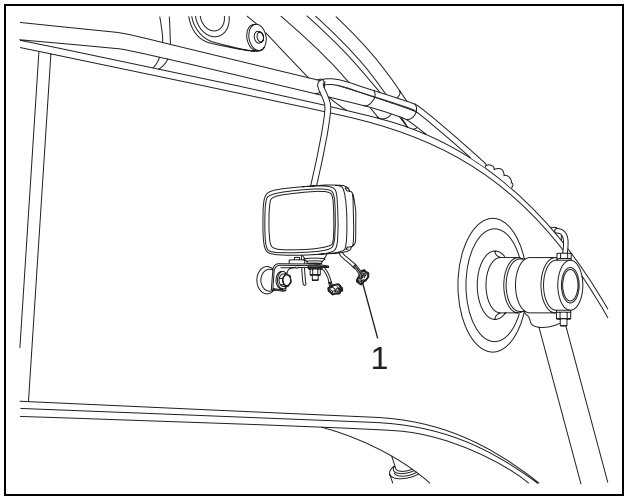

[2] Use a 19-mm wrench to remove the nut (1), and then remove the boom light (2).

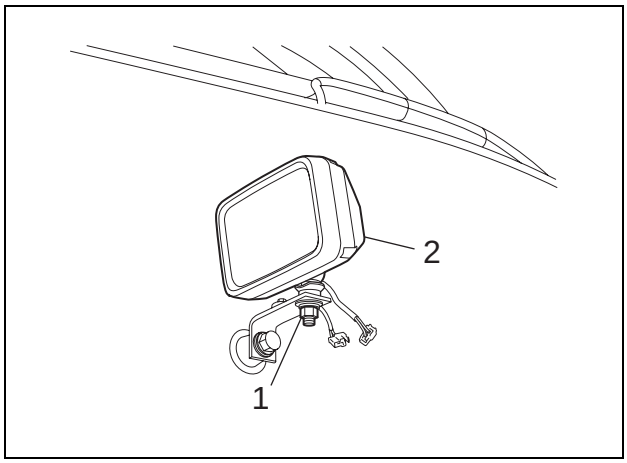

https://truckmanualshub.com/

2 Removal and Installation of Tool Box Light

Items to prepare

- Wrench (13 mm)
- Rags
- Cleaning fluid

[1] Open the tool box (1).

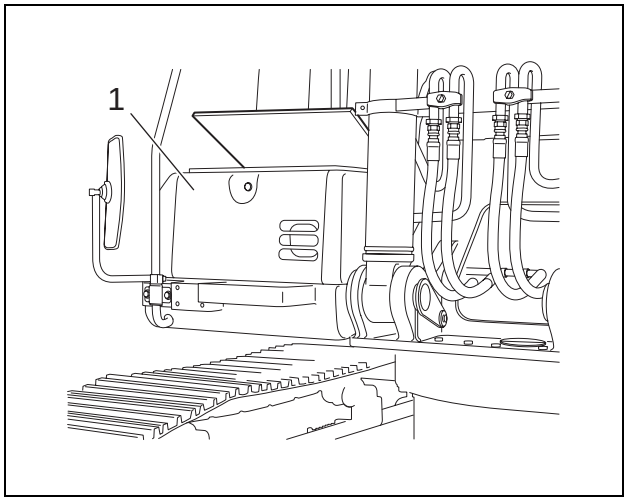

[2] Remove the connector (1).

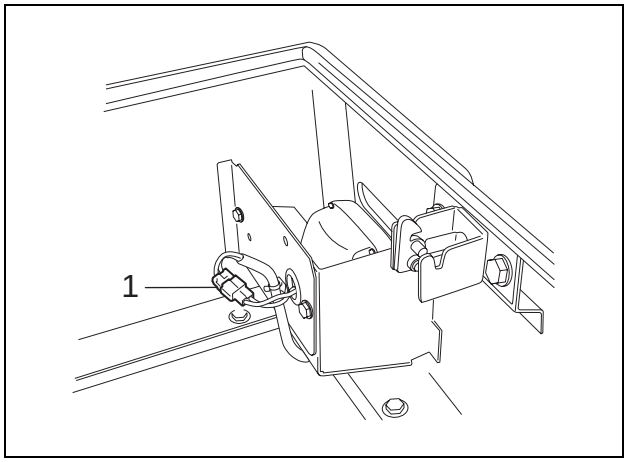

[3] Use a 13-mm wrench to remove the nut (1), and then remove the tool box light (2).

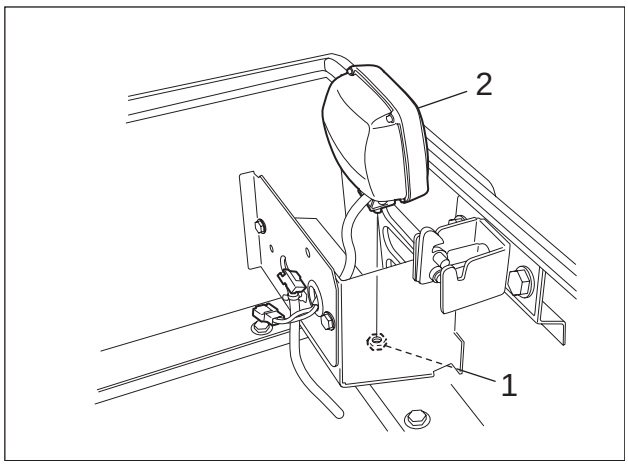

https://truckmanualshub.com/

1 Removal and Installation of Cab Assembly

Caution	• Be sure to stop the engine before beginning work. • Be sure to inspect the wire rope and other suspended items before beginning work. • Do not stand or pass under the suspended load (cab assembly).

Items to prepare

- Wrench (13 mm, 19 mm)
- Box wrench (10 mm, 19 mm)
- Eyebolts (24 mm × 4)
- Chain (wire rope) (with the required breaking load)
- Crane (that meets the lifting capacity)
- Lubricating oil
- Rags
- Cleaning fluid
- Crossties

[1] Remove the operator's seat.
(For details, see "Removal and Installation of Operator's Seat".)

[2] Use a 10-mm box wrench to remove the 4 bolts (1), a 13-mm box wrench to remove the 2 bolts (2), and then remove the rear cover (3).

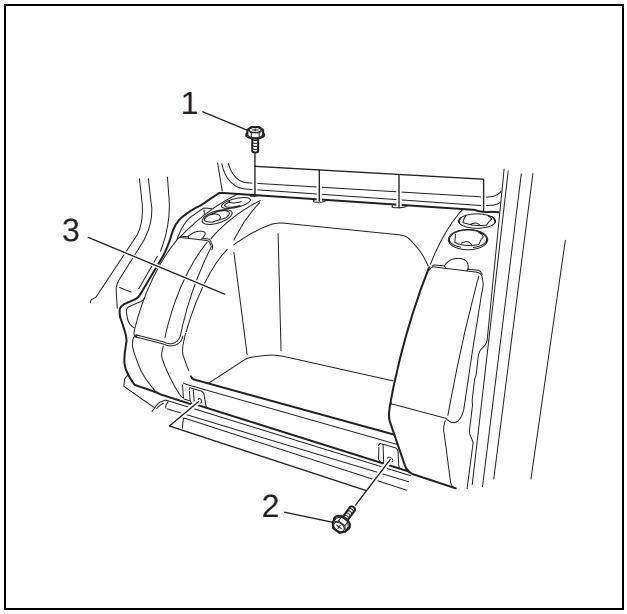

[3] Use a 10-mm box wrench to remove the 2 bolts (1), and then remove the air conditioner ducts on both sides (2).

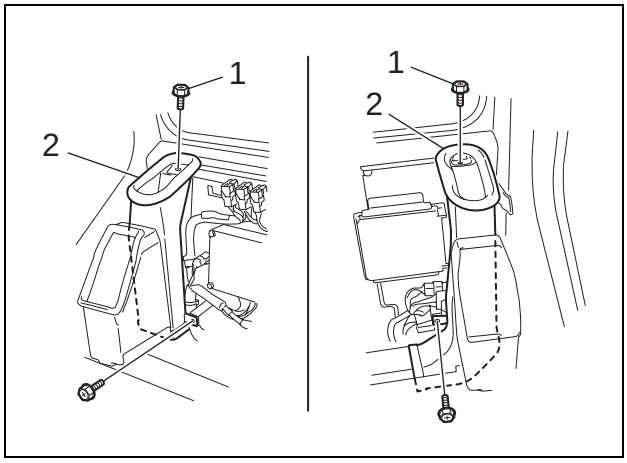

https://truckmanualshub.com/

[4] Remove the air conditioner ducts (1) and (2) by pulling them forward.

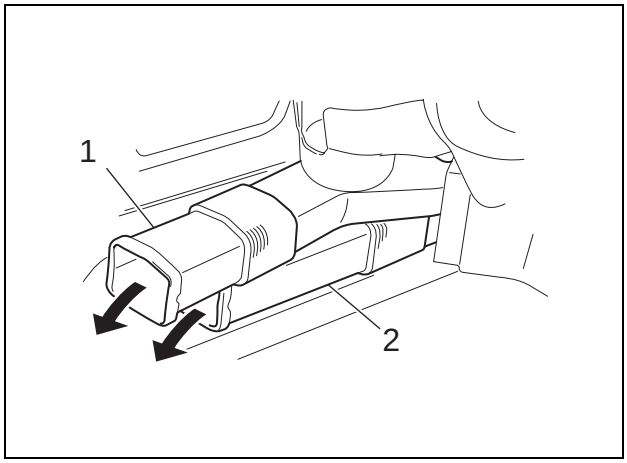

[5] Use a 13-mm wrench to remove the 4 bolts (1), and then remove the bracket (2).

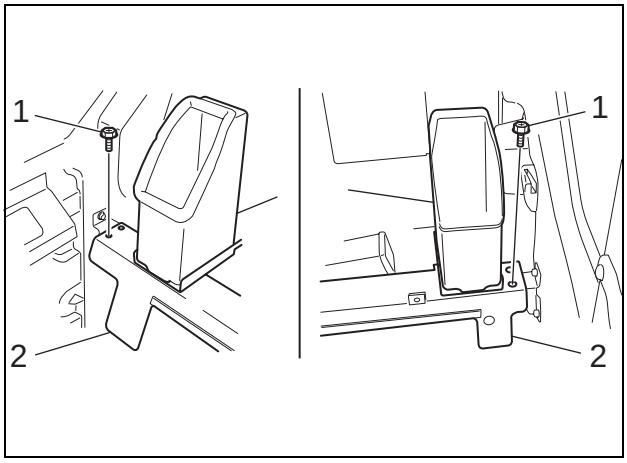

[6] Remove the air conditioner duct (1).

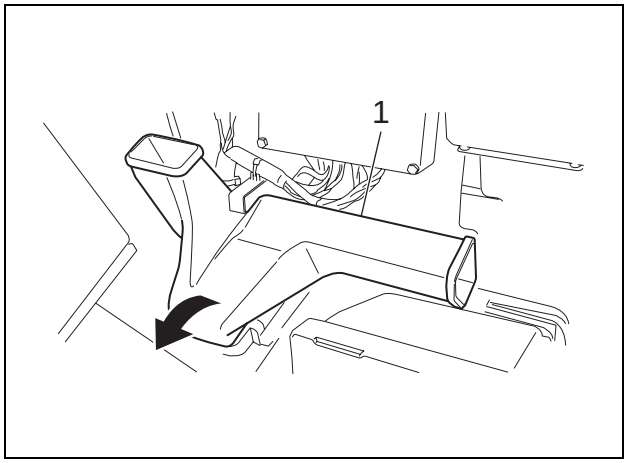

[7] Remove the radio antenna.

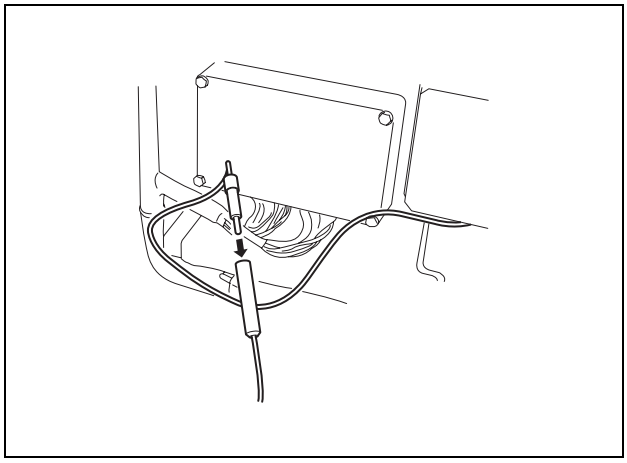

https://truckmanualshub.com/

[8] Use a 13-mm wrench to remove the ground wire connecting the cab and frame.

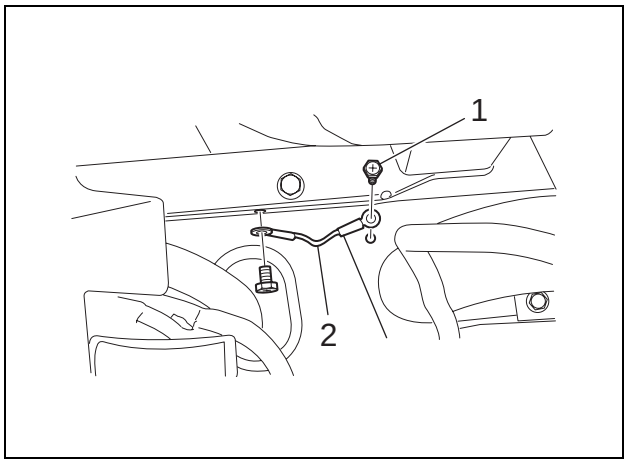

[9] Remove the connectors (1) and (2).

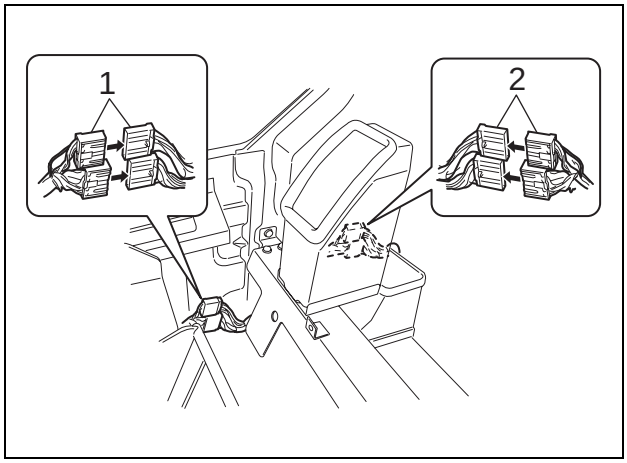

[10] Remove the washer fluid hose.

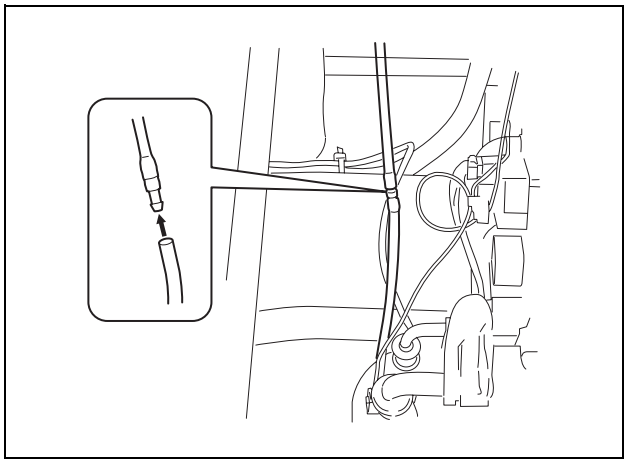

[11] Use a 13-mm wrench to remove the 4 bolts (1), and then remove the bracket rear (right) (2).

[12] Use a 13-mm wrench to remove the 4 bolts (3), and then remove the bracket rear (left) (4).

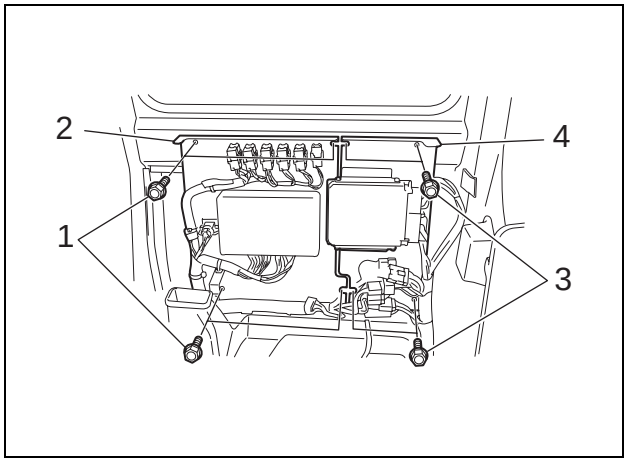

https://truckmanualshub.com/

[13] Remove the 3 butterfly screws (1), and then remove the cover (2).

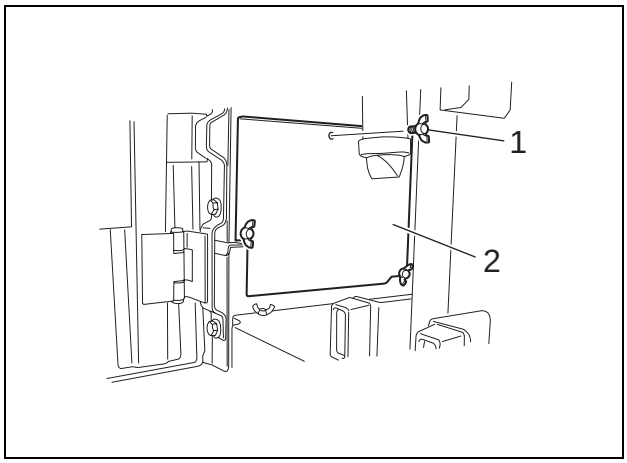

[14] Remove the 2 butterfly screws (1), and then open the cover of the outside air filter.

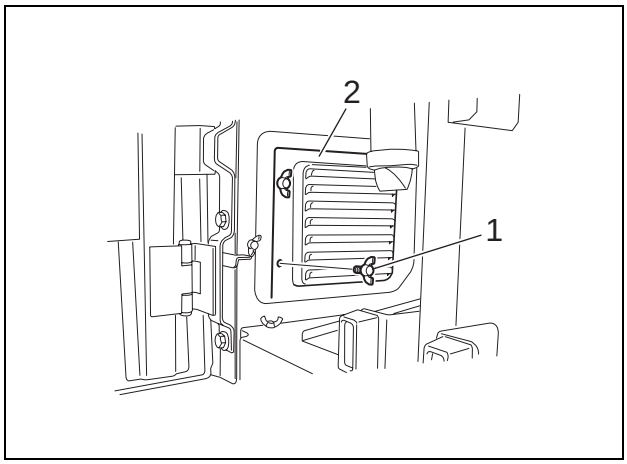

[15] Remove the outside air filter.

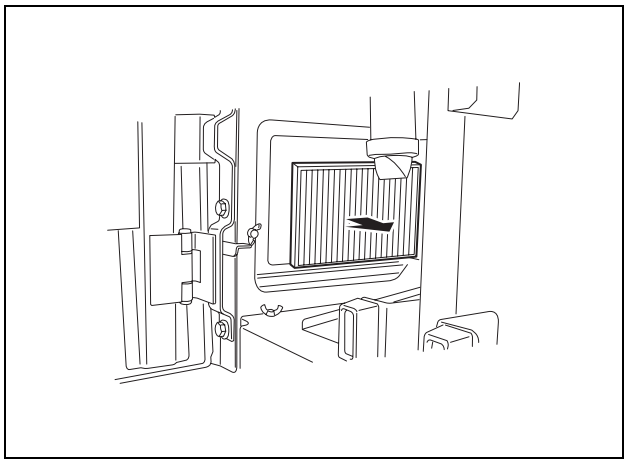

https://truckmanualshub.com/

[16] Remove the 4 caps (1) from the top of the cab.

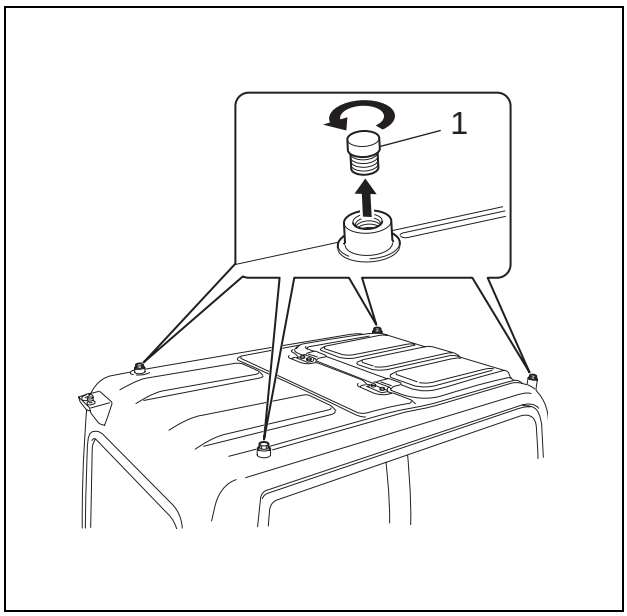

[17] Install 4 24-mm eyebolts in place of the removed caps.
- Spray lubricating oil on the eyebolts.
- Fully tighten the eyebolts, and then loosen them by a half turn.

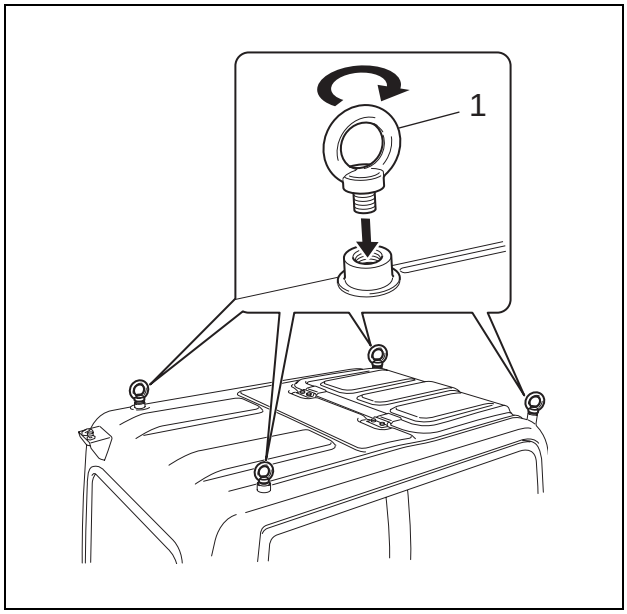

[18] Use a chain and crane to secure the cab.

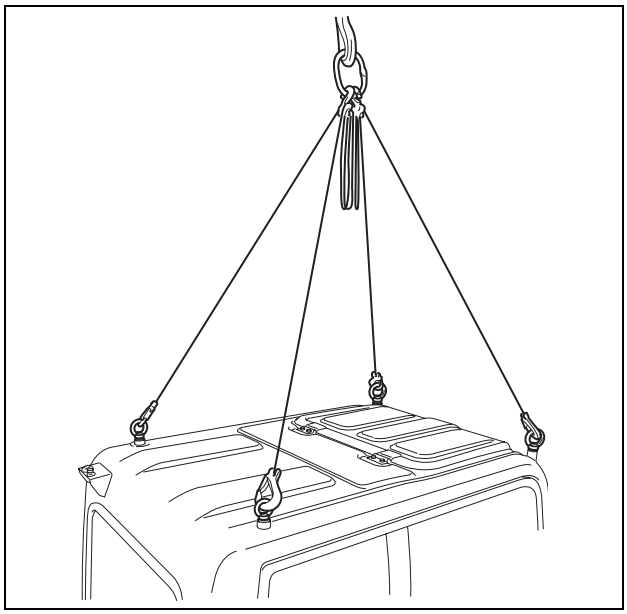

https://truckmanualshub.com/

[19] Use a screwdriver to remove the 2 screws (1), and then remove the cover (2).

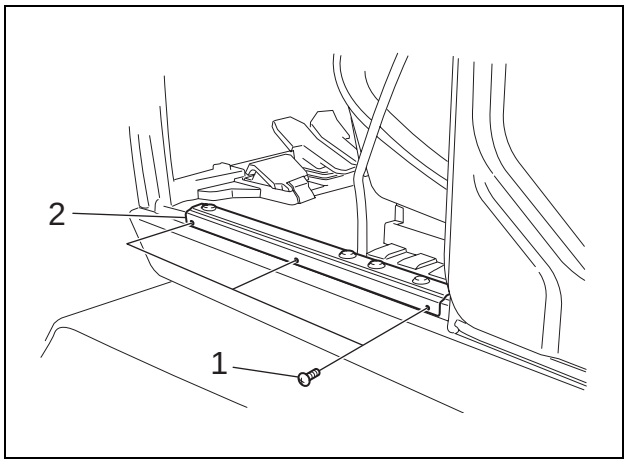

[20] Use a 19-mm box wrench to remove the 2 installation nuts (1) from the cab.

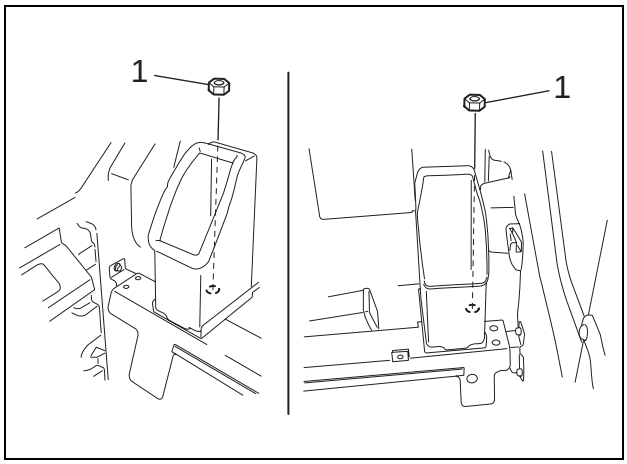

[21] Use a 19-mm wrench to remove the 7 installation bolts (1) and 2 nuts (2) from the cab.

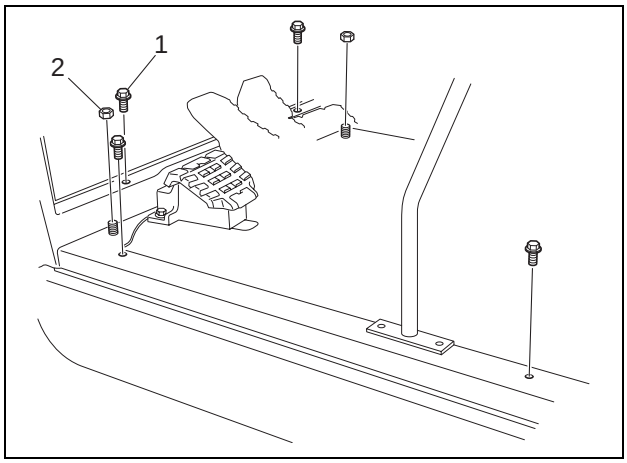

https://truckmanualshub.com/

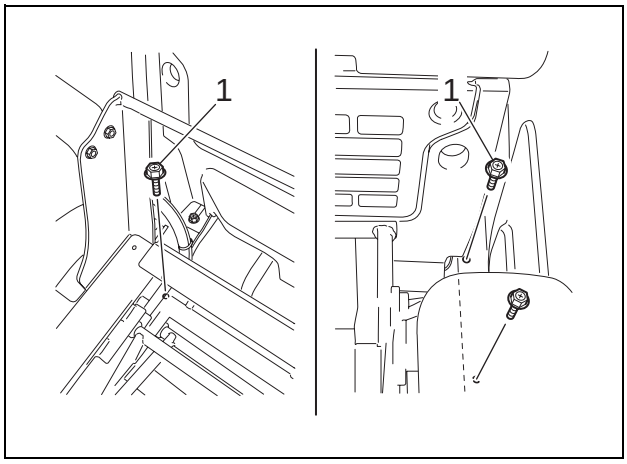

[22] Use the chain and crane to lift and remove the cab.

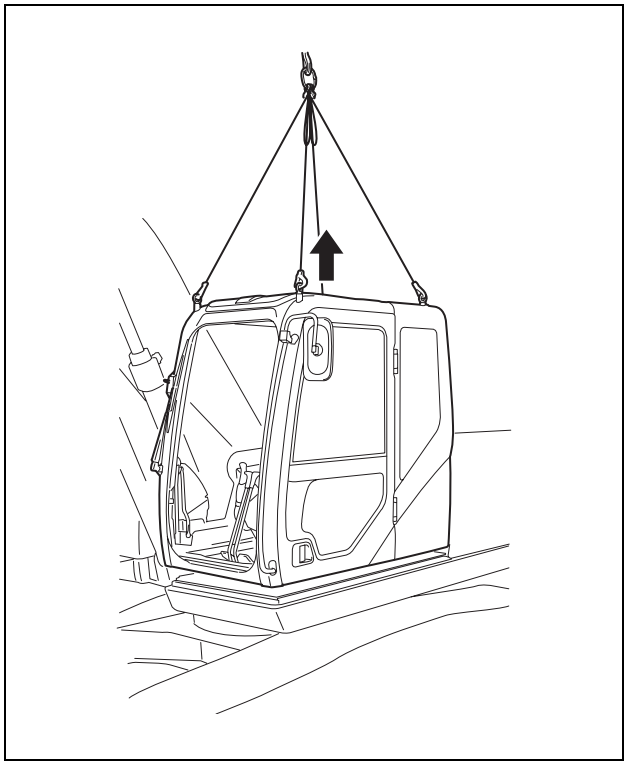

[23] Thoroughly check that the location is safe before lowering the cab on a crosstie.
- Thoroughly secure the cab with the chain and crane so that it does not fall down.

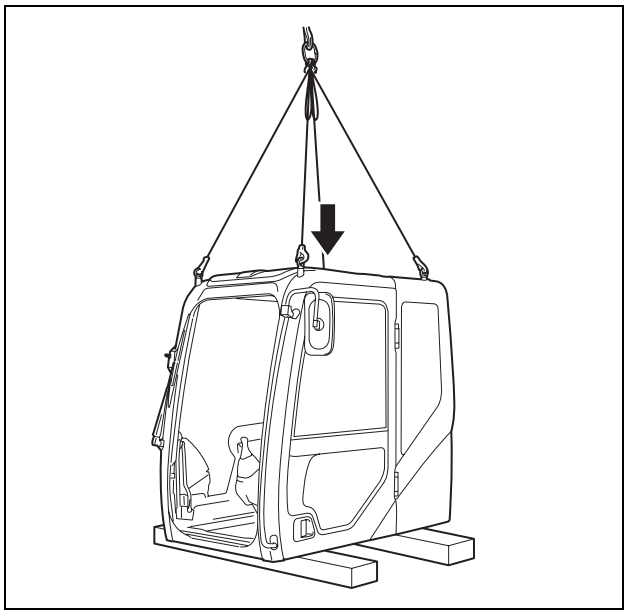

https://truckmanualshub.com/

2 Removal and Installation of Operator's Seat

Items to prepare

- Wrench (13 mm)

[1] Pull the slide lever (1) to slide the seat (2) to the rear.

[2] Use a 13-mm wrench to remove the 2 installation bolts (3) from the front of the seat.

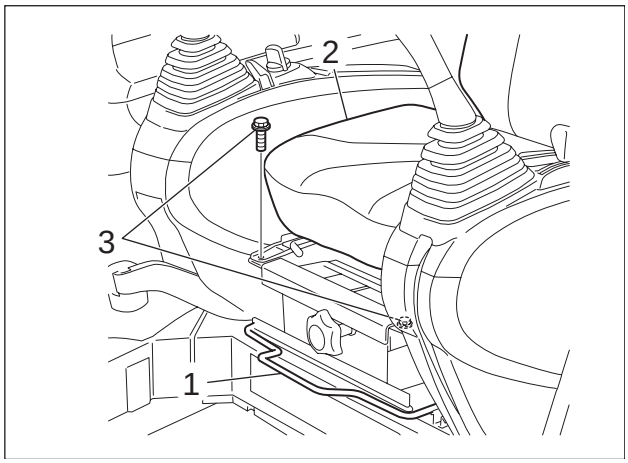

[3] Pull the slide lever to slide the seat forward, and then pull the reclining adjustment lever to fold the seatback forward.

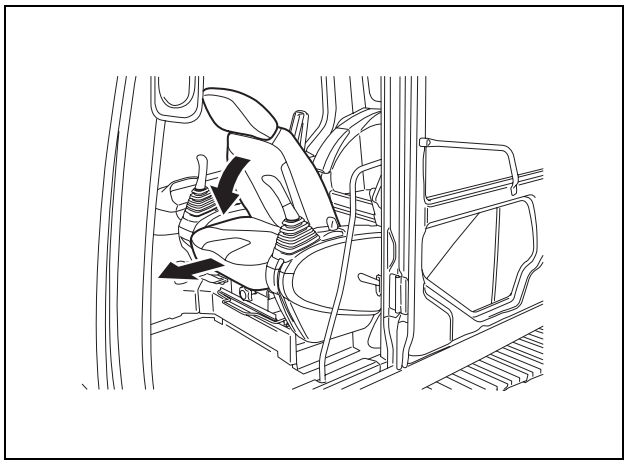

[4] Use a 13-mm wrench to remove the 2 installation bolts (1) from the rear of the seat.

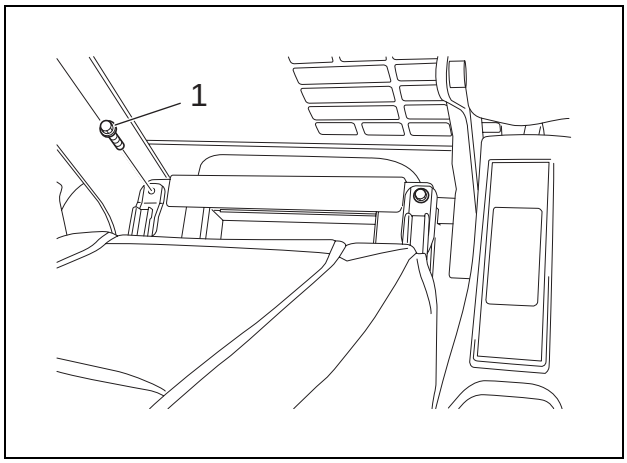

https://truckmanualshub.com/

[5] Remove the operator's seat.

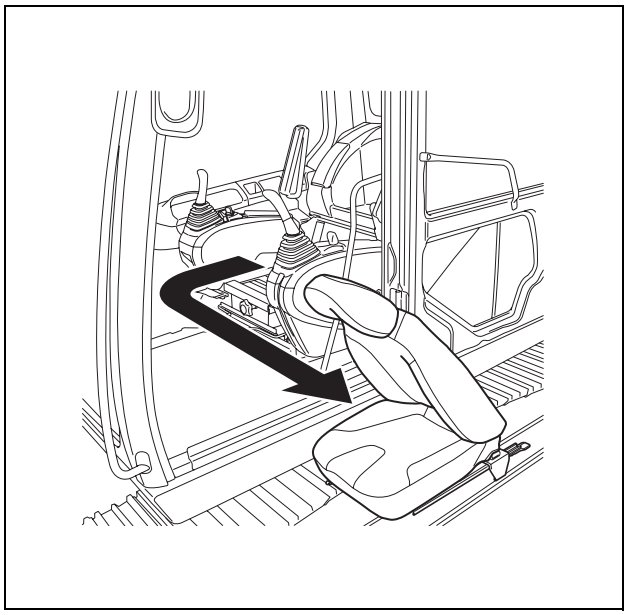

https://truckmanualshub.com/

3 Removal and Installation of Wiper

Items to prepare

- Wrench (17 mm)
- Phillips screwdriver

[1] Use a 17-mm wrench to remove the nut (1), and then remove the wiper arm (2).

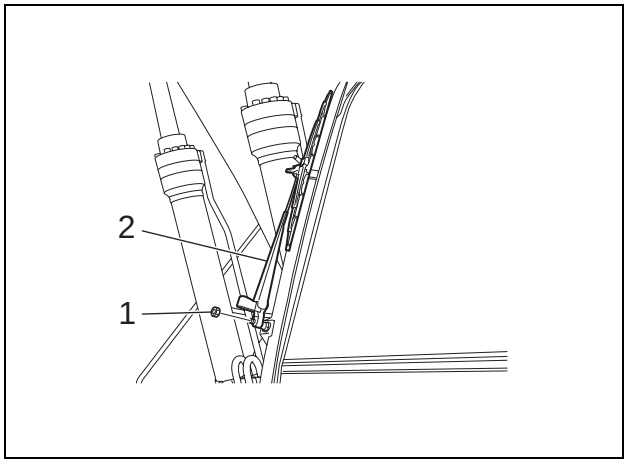

[2] Use a Phillips screwdriver to remove the screw (1), and then remove the wiper (2).

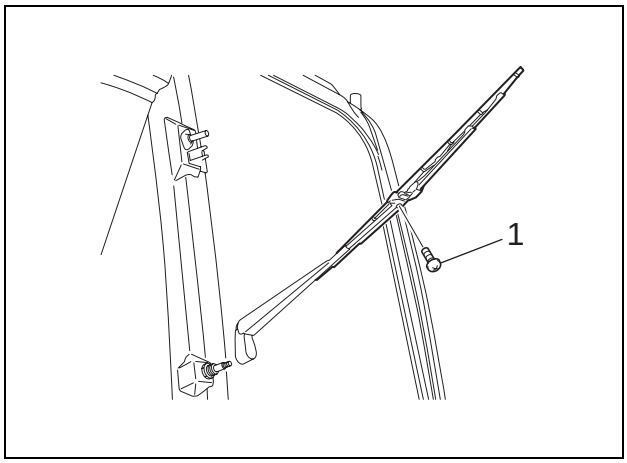

https://truckmanualshub.com/

4-1 Removal and Installation of Wiper Controller

Items to prepare

- Wrench (10 mm)
- Box wrench (10 mm, 13 mm)
- Phillips screwdriver
- Flathead screwdriver

[1] Use a Phillips screwdriver to remove the side upper trim (1) and the 2 installation screws (2).

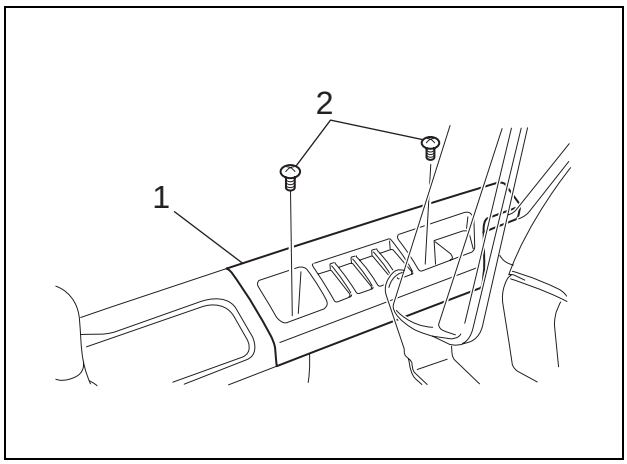

[2] Lift the side upper trim (1), remove the connector (2), and then remove the side upper trim (1).

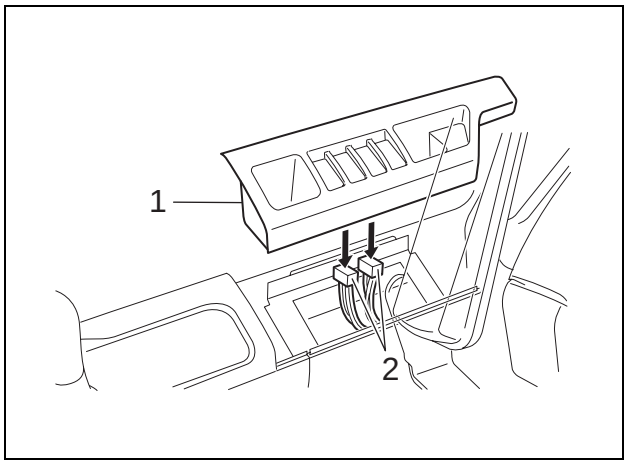

[3] Use a 13-mm box wrench to remove the 2 installation bolts (1) and 2 installation bolts (2), and then remove the side rear trim (3).

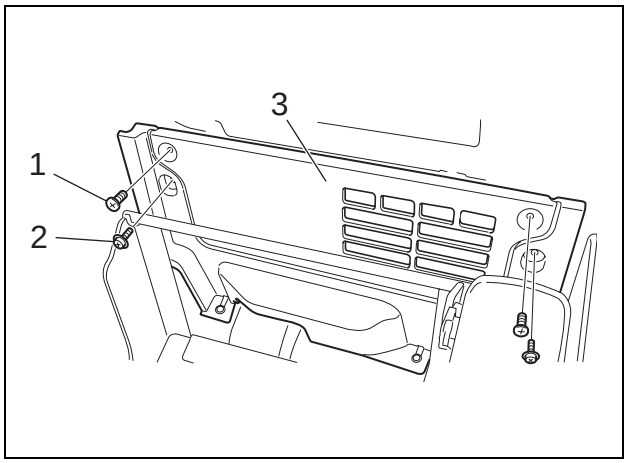

https://truckmanualshub.com/

[4] Use a Phillips screwdriver or 10-mm box wrench to remove the 4 installation bolts (1), and then remove the side rear B trim (2).

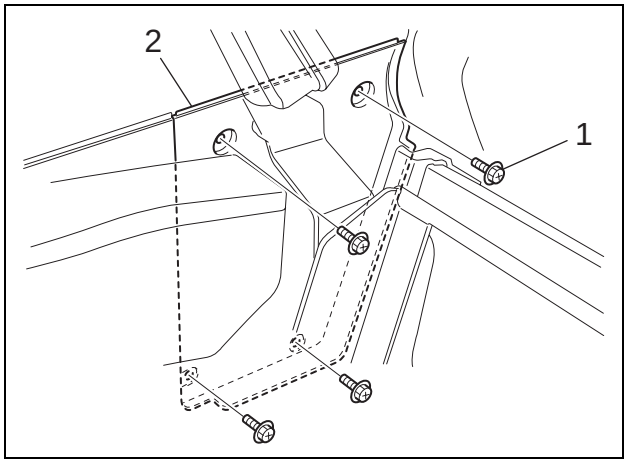

[5] Use a 10-mm wrench to remove the 3 installation bolts (1), and then remove the side lower trim (2).

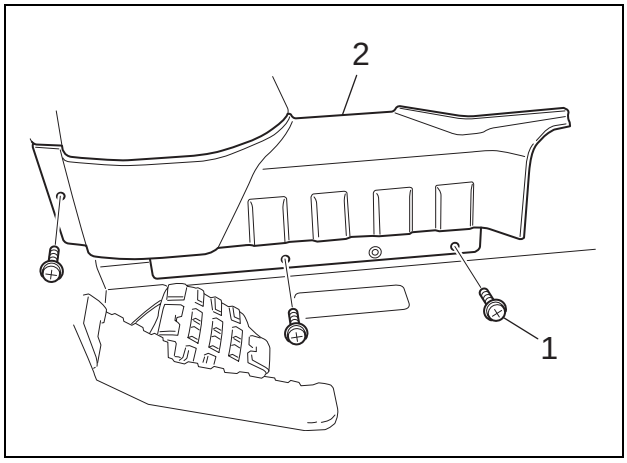

[6] Use a Phillips screwdriver or 10-mm box wrench to remove the 4 installation bolts (1), and then remove the side rear A trim (2).

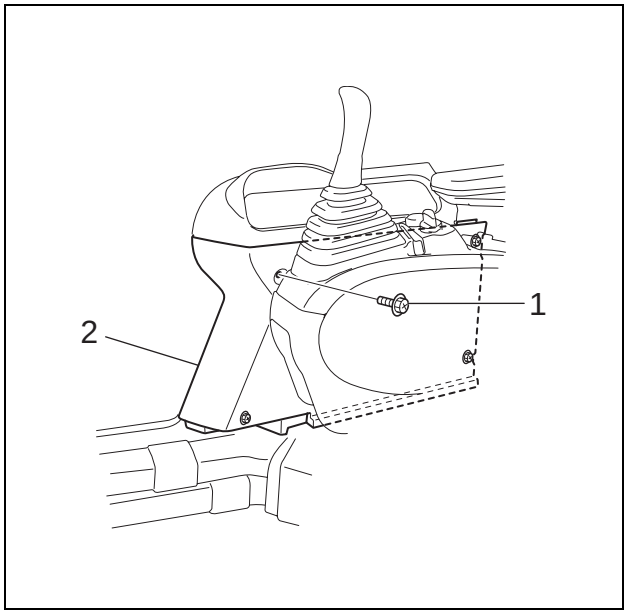

https://truckmanualshub.com/

[7] Remove the connector (2) from the wiper controller (1).

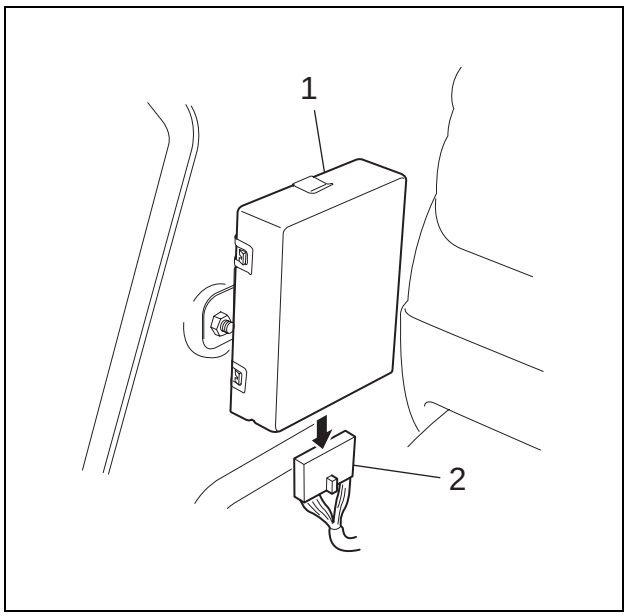

[8] Use a flathead screwdriver to slightly bend the 4 installation clips (1), and then remove the wiper controller (2).

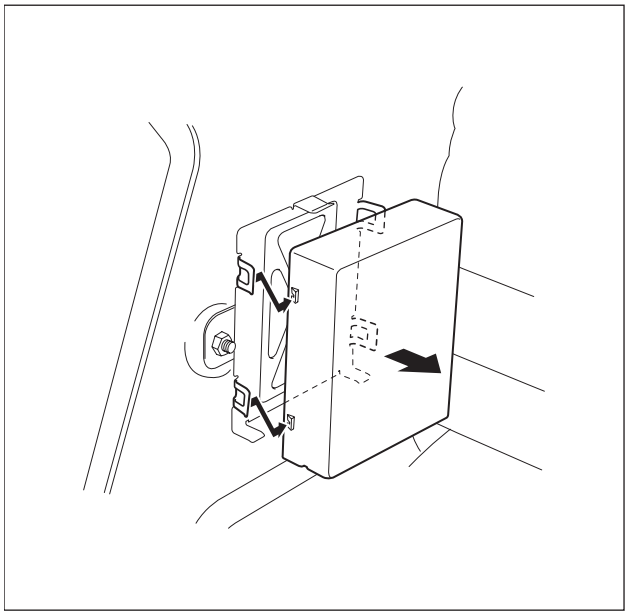

https://truckmanualshub.com/

4-2 Removal and Installation of Wiper Motor

Items to prepare

- Hexagon wrench (4 mm)
- Wrench (10 mm, 17 mm)
- Box wrench (10 mm)
- Flathead screwdriver (longnose pliers)
- Phillips screwdriver

[1] Use a 10-mm wrench to remove the 3 bolts (1), and then remove the side lower trim (2).

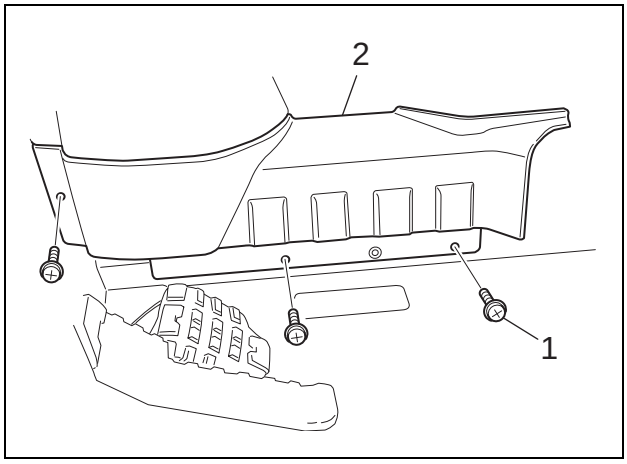

[2] Use a flathead screwdriver or longnose pliers to remove the clip pins (3), and then remove ducts B (2).

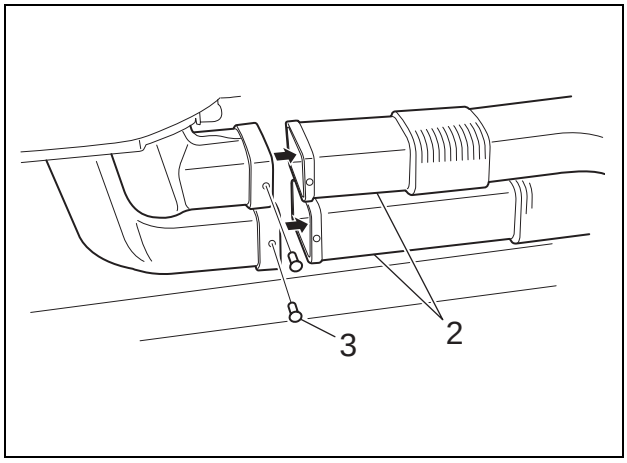

[3] Use a Phillips screwdriver or 10-mm box wrench to remove the 3 bolts (1).

[4] Use a 4-mm hexagon wrench to remove the 3 bolts (2).

[5] Remove the front upper trim assembly (3).

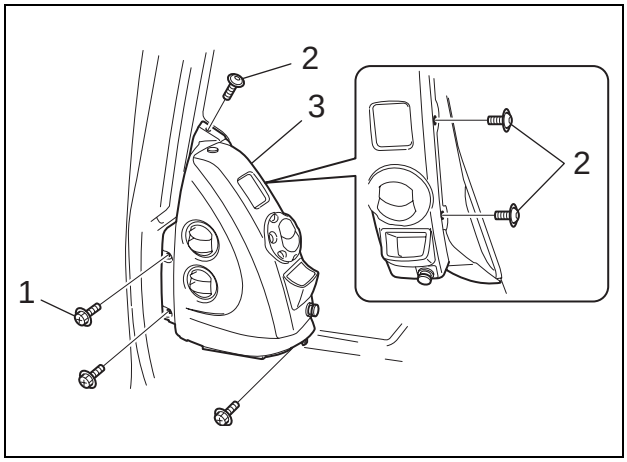

https://truckmanualshub.com/

[6] Lift the front upper trim assembly (1), and then remove the connector (2).

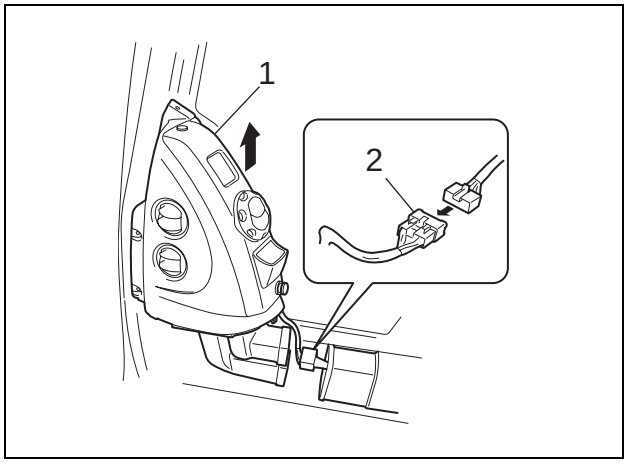

[7] Remove the connector (1).

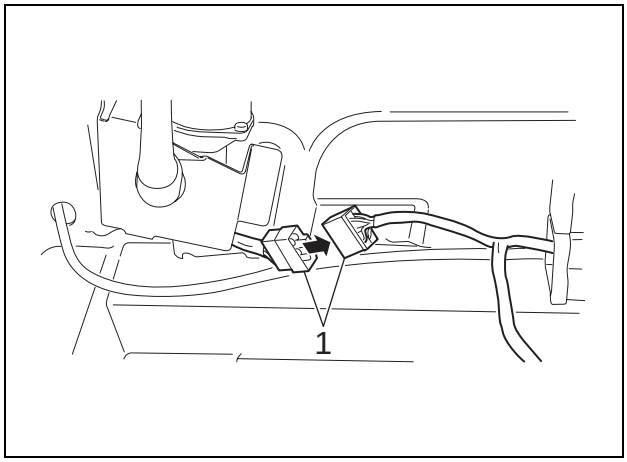

[8] Use a 10-mm wrench to remove the 3 bolts (1), and then remove the cover (2).

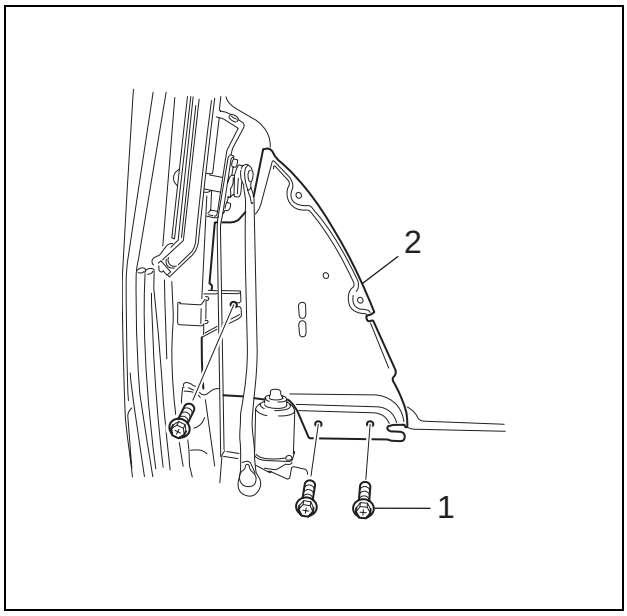

https://truckmanualshub.com/

[9] Use a 17-mm wrench to remove the nut (1), and then remove the wire arm (2).

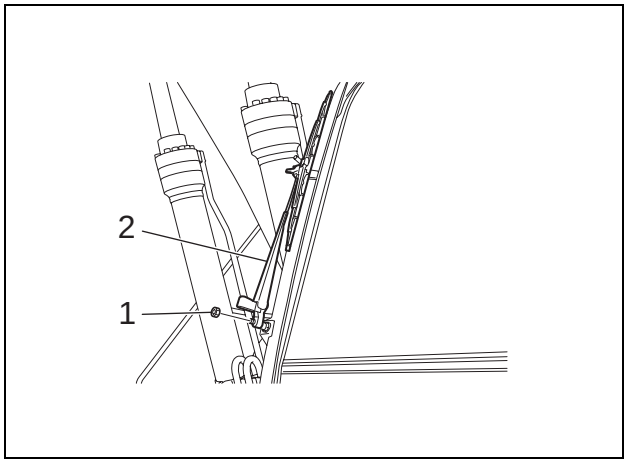

[10] Use a 17-mm wrench to remove the installation nut (1).

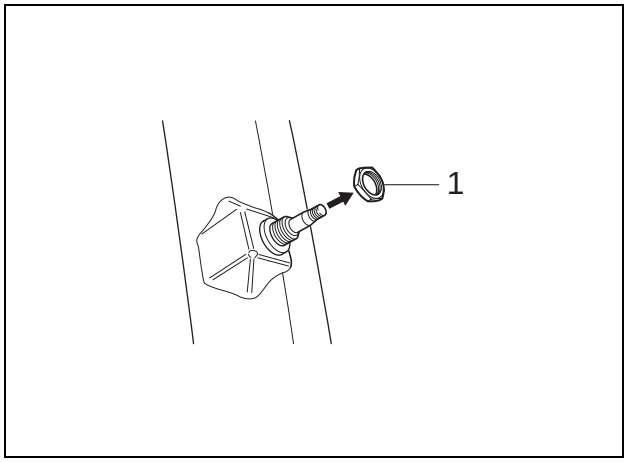

[11] Use a 10-mm box wrench to remove the 2 bolts (1) and 2 nuts (2), and then remove the wiper motor assembly (3).

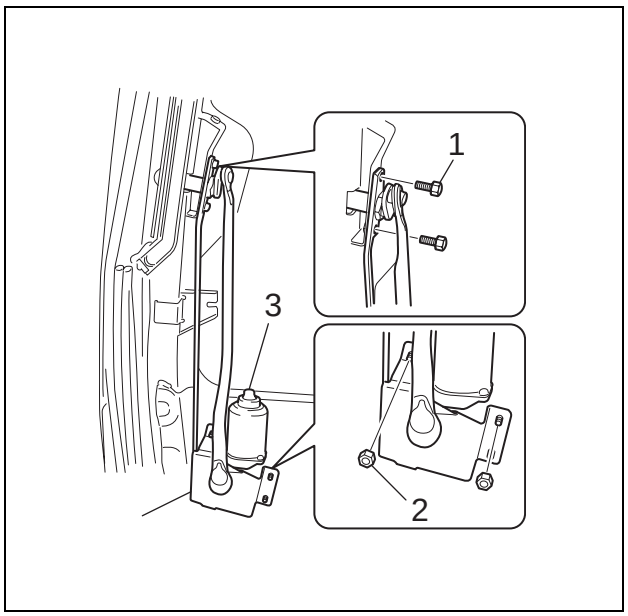

https://truckmanualshub.com/

5 Removal and Installation of Monitor

Items to prepare

- Wrench (10 mm)

[1] Use a 10-mm wrench to remove the installation bolts (1) from the monitor.

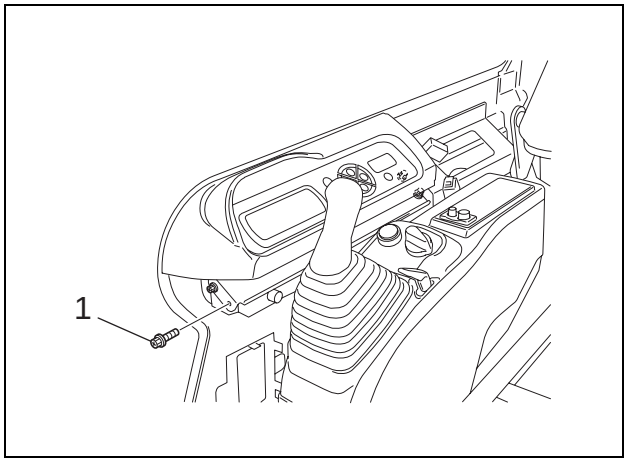

[2] Lift the monitor unit, and then remove the connector (1) underneath.

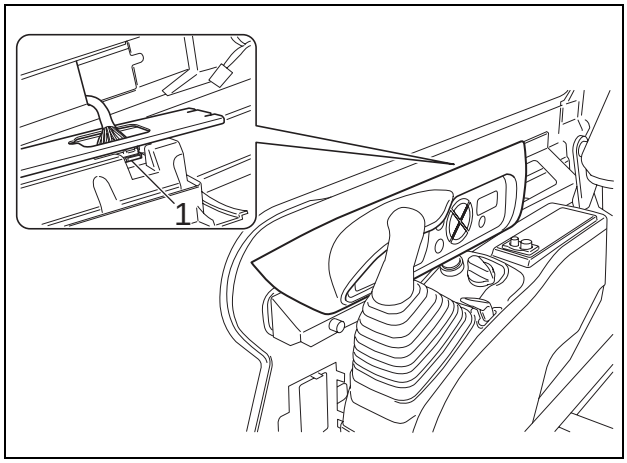

https://truckmanualshub.com/

6 Removal and Installation of Cab Front Glass

Items to prepare

- Wrench (10 mm)
- Rags
- Cleaning fluid

[1] Remove 2 mounting bolts (1) and (2) from each bracket (total of 4 bolts) using a 10-mm wrench, and remove brackets (3) and (4).

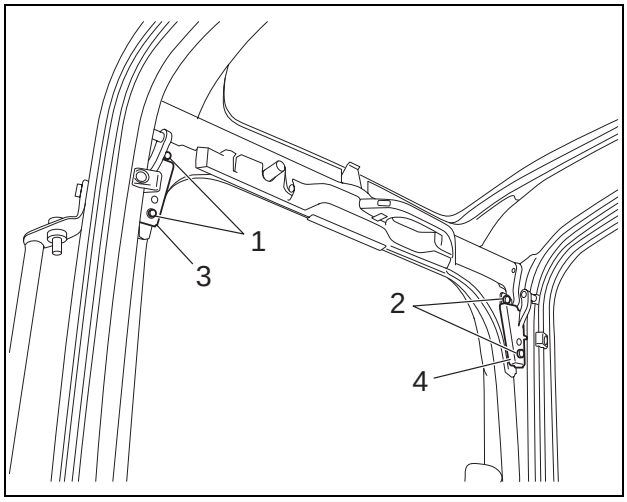

[2] Remove bracket covers (1) and (2).

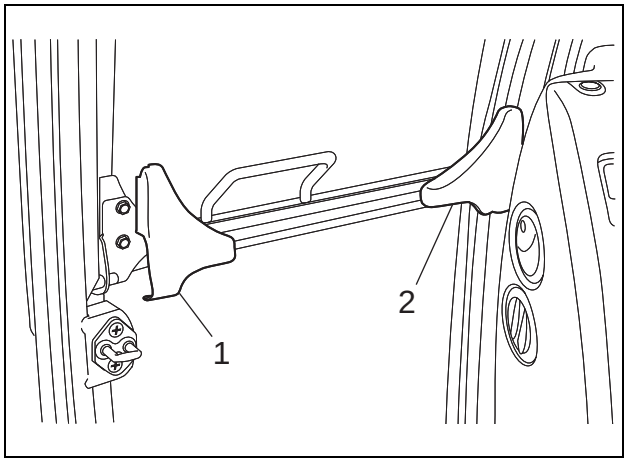

[3] Remove 3 mounting bolts (1) using a 10-mm wrench, and remove the bracket (2).

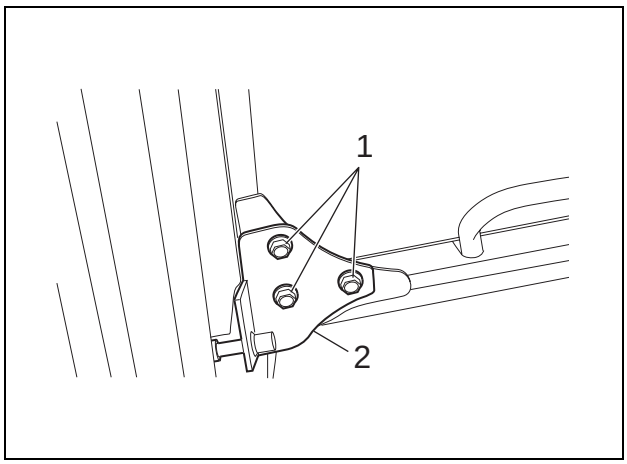

https://truckmanualshub.com/

[4] Remove 3 mounting bolts (1) using a 10-mm wrench, and remove the bracket (2).

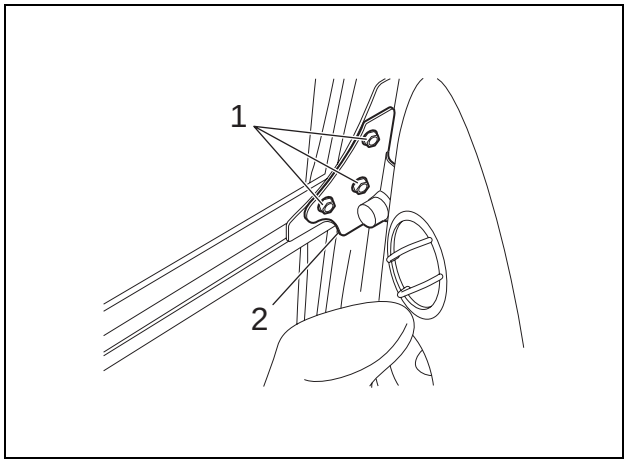

[5] Shift the bracket (2) to the position until wire (1) has no tension.

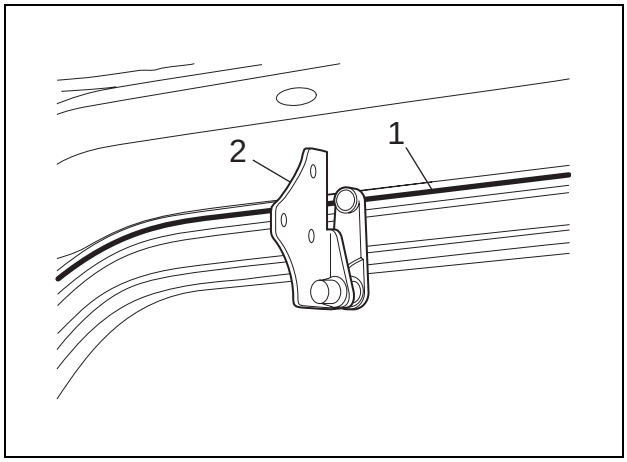

[6] Remove the cab front glass (1).

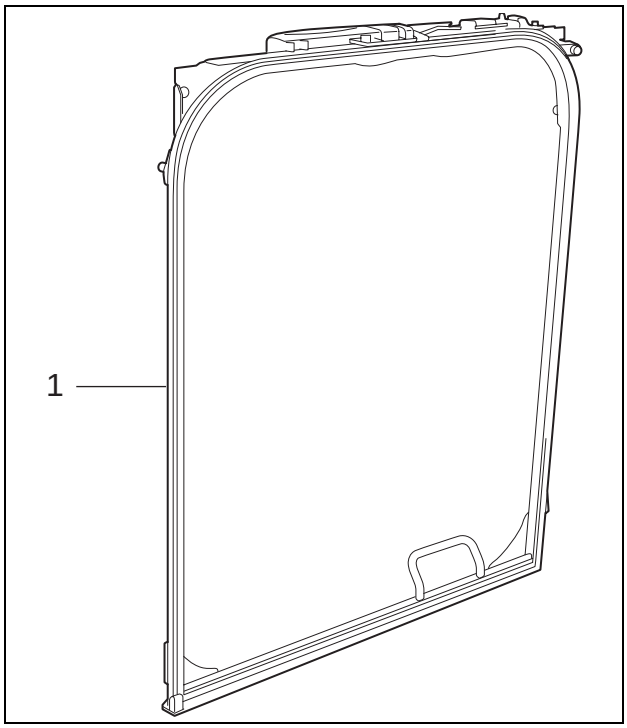

https://truckmanualshub.com/

7 Adjustment Procedure of Window Lock

Items to prepare

- Wrench (10 mm)
- Rags
- Cleaning fluid

[1] Remove the cover (1).

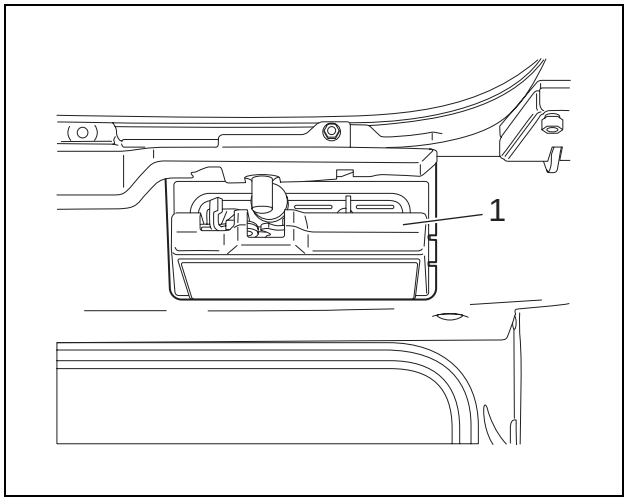

[2] Loosen 3 adjusting bolts (1) using a 10-mm wrench.

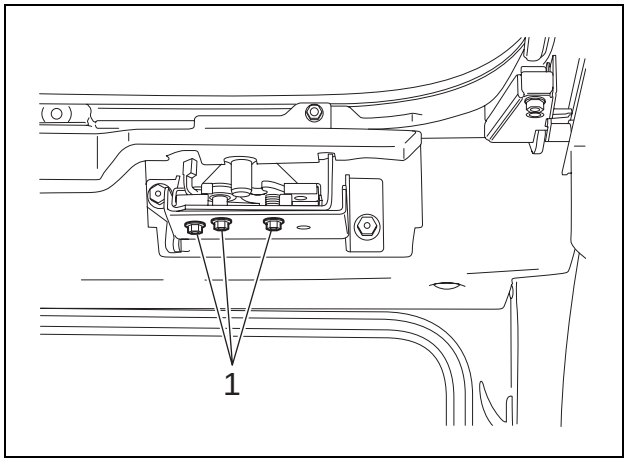

[3] Install the cab front glass (1).

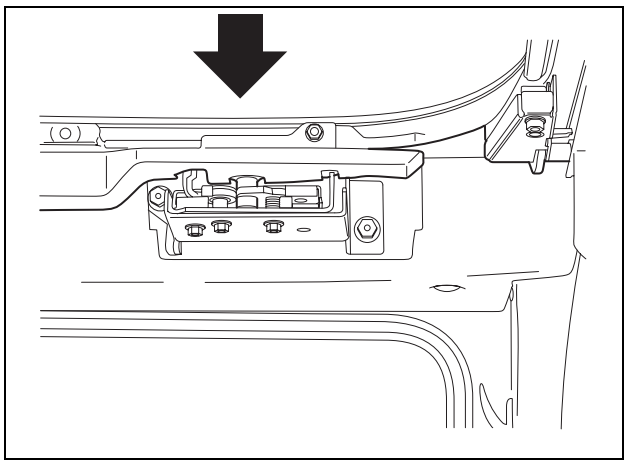

https://truckmanualshub.com/

[4] Securely tighten 3 adjusting bolts (1) using a 10-mm wrench.

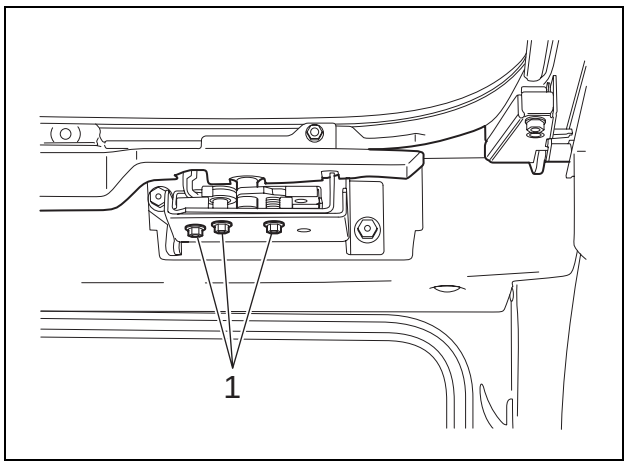

https://truckmanualshub.com/

1 Accumulator

Warning	• Be sure to release the hydraulic pressure in the circuit.

Items to prepare

- Wrench (30 mm)
- Rags
- Cleaning fluid

[1] Remove the accumulator (1) using a 30-mm wrench.

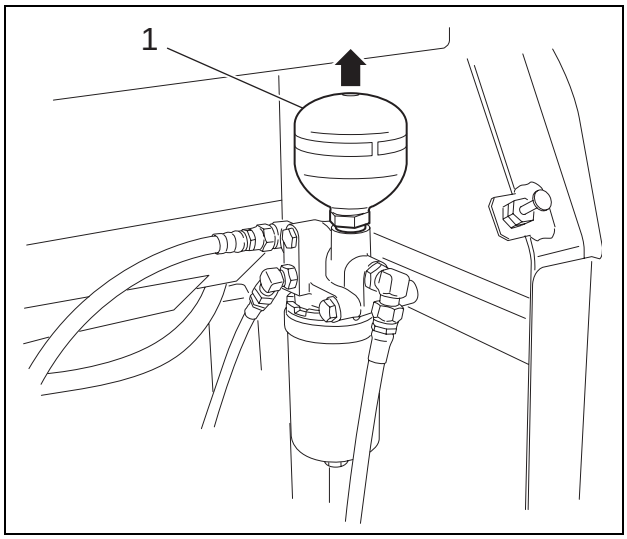

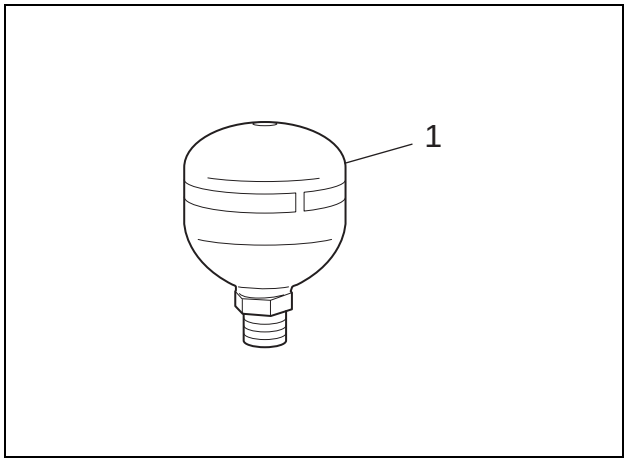

https://truckmanualshub.com/

2 Suction Filter

Cautions	• Be careful to keep dirt, water, sand, and all other foreign matter out of the tank. • When replacing the hydraulic oil, always replace with new ones.

Items to prepare

- Wrench (17 mm)
- Rags
- Cleaning fluid

[1] Press the air breather button (1) on top of the hydraulic oil tank to release the pressure inside the tank.

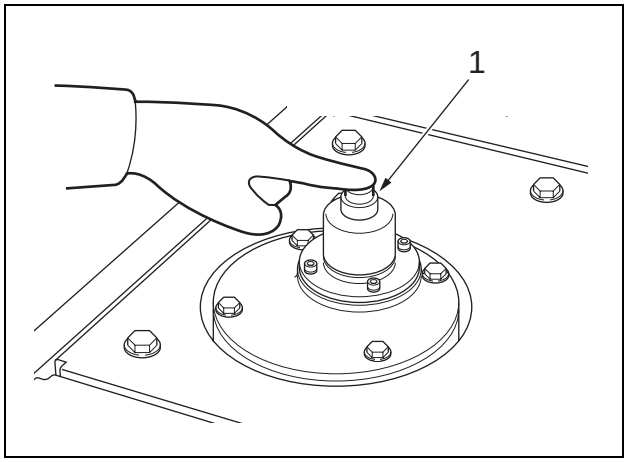

[2] Remove 4 mounting bolts (1) using a 17-mm wrench, and remove the oil fill port cover (2).

[3] Drain the oil from the hydraulic oil tank. (For details, see "Draining Oil from Hydraulic Oil Tank.")

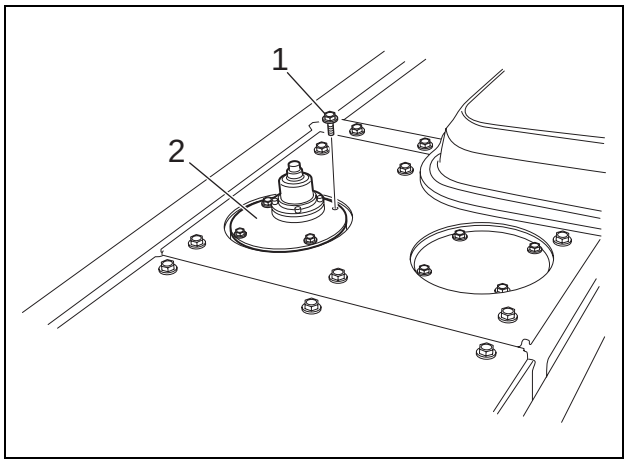

[4] Remove the O-ring (1).

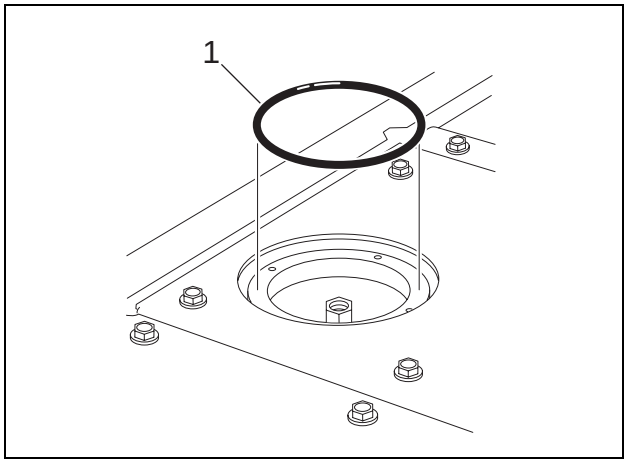

https://truckmanualshub.com/

[5] Pull out the suction filter (1).

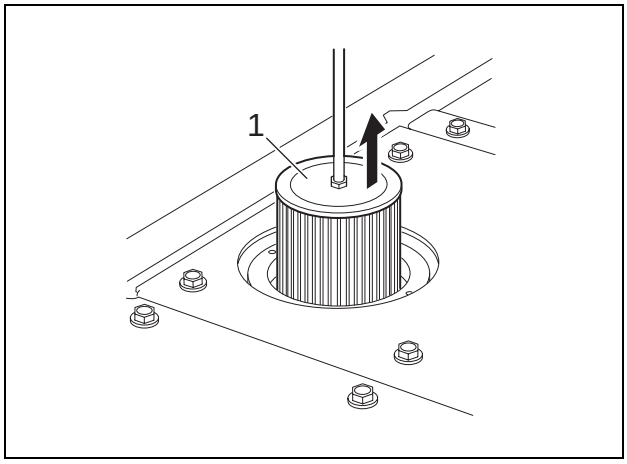

[6] Clean the suction filter sufficiently with cleaning fluid and dry it well before checking the filter. If there is any damage on the surface, replace with a new one.
- If the O-ring on the rear of the cover is worn or damaged, replace it.
- The installation procedure is the reverse of the removal procedure.
- Replace the suction filter every 5000 hours. When replacing the hydraulic oil, replace it with new one.

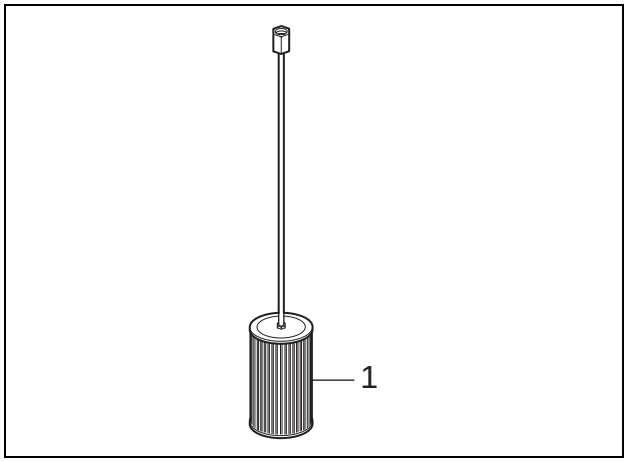

https://truckmanualshub.com/

3 Return Filter

Cautions	• Be careful to keep dirt, water, sand, and all other foreign matter out of the tank. • When replacing the hydraulic oil, always replace with new ones.

Items to prepare

- Wrench (17 mm)
- Rags
- Cleaning fluid

[1] Press the air breather button (1) on top of the hydraulic oil tank to release the pressure inside the tank.

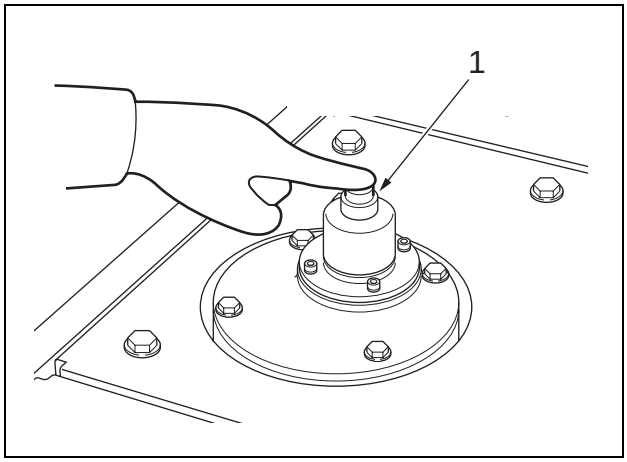

[2] Remove 4 mounting bolts (1) using a 17-mm wrench, and remove the cover (2).
- Hold the cover with your hands when removing the cover as the spring is installed underneath.

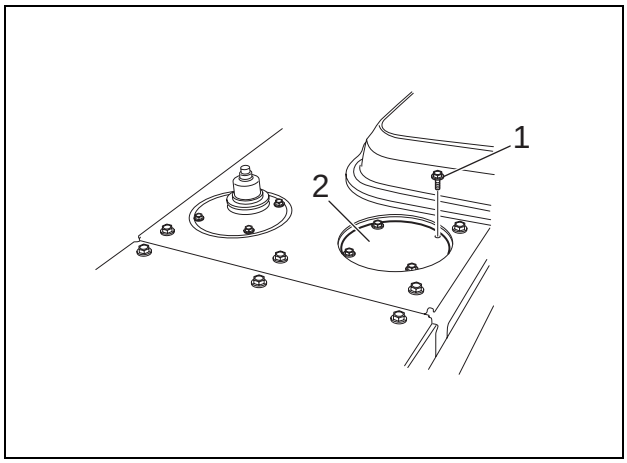

[3] Remove the O-ring (1).

[4] Pull out the spring (2) and valve (3) from the tank.

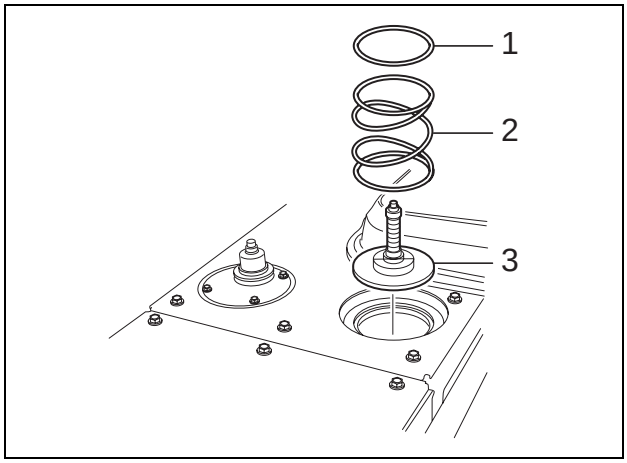

https://truckmanualshub.com/

[5] Pull out the return filter (1) from the tank.

[6] Replace the return filter (1).
- If the O-ring on the rear of the cover is worn or damaged, replace it.
- The installation procedure is the reverse of the removal procedure.

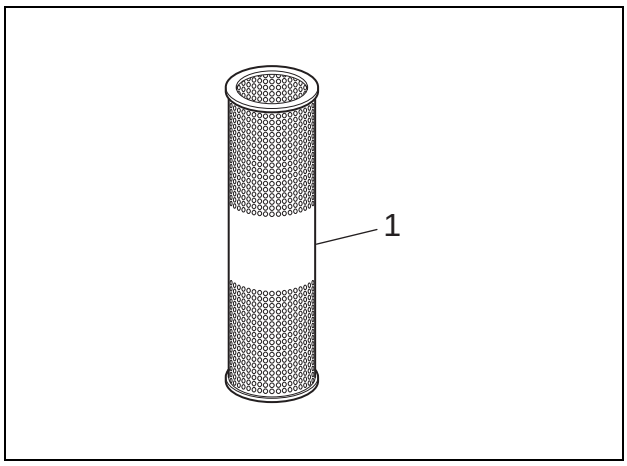

https://truckmanualshub.com/

4 Pilot Filter

Warning	• Be sure to release the hydraulic pressure in the circuit.

Items to prepare

- Wrench (19 mm)
- Rags
- Cleaning fluid

[1] Remove the pilot filter (1) using a 19-mm wrench.

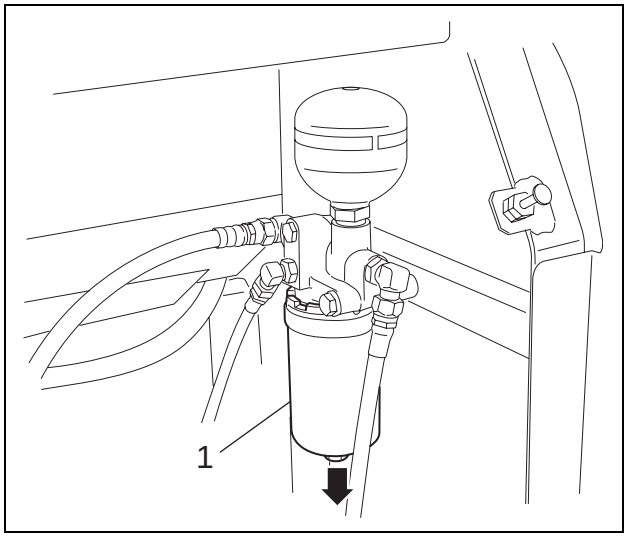

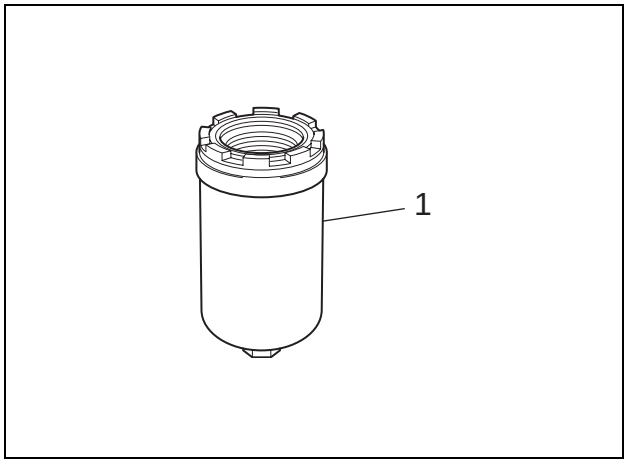

https://truckmanualshub.com/

1 Removal and Installation of Side Door

Items to prepare

- Wrench (19 mm)

[1] Use a 19-mm wrench to remove the 4 installation bolts (1), and then remove the side door (left rear).

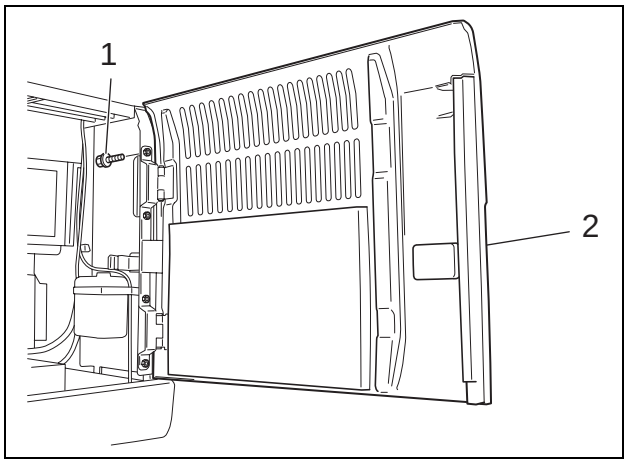

https://truckmanualshub.com/

2 Draining Oil from Hydraulic Oil Tank

Warnings	• Keep away from fire. • Be sure to stop the engine before beginning work. • The temperature of the hydraulic oil is high immediately after stopping the engine. Wait until the hydraulic oil temperature has decreased (40°C or less) before beginning work.

Items to prepare

- Wrench (17 mm, 19 mm, 36 mm)
- Feed pump (power source for feed pump)
- Extension cord
- Waste oil can
- Rags
- Cleaning fluid

[1] Press the air breather button (1) on top of the hydraulic oil tank to bleed off the pressure in the tank.

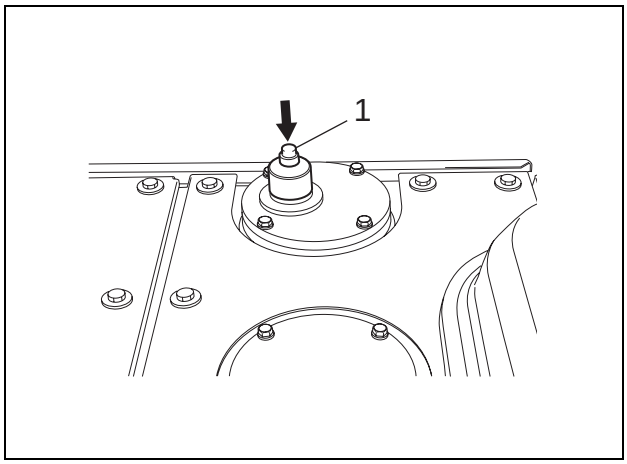

[2] Use a 17-mm wrench to remove the 4 installation bolts (1), and then remove the oil fill port cover (2).

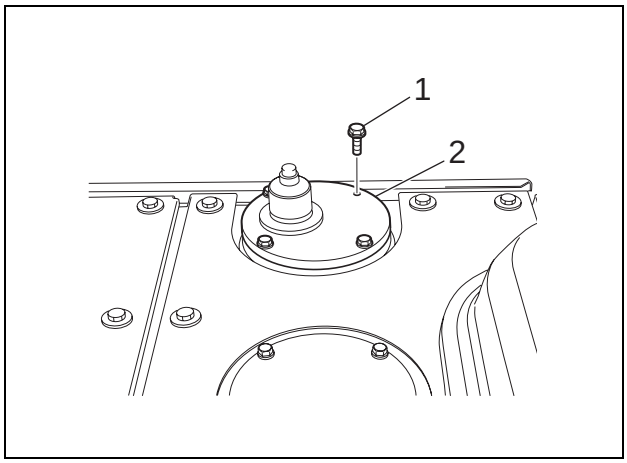

https://truckmanualshub.com/

[3] Insert the feed pump into the oil fill port.

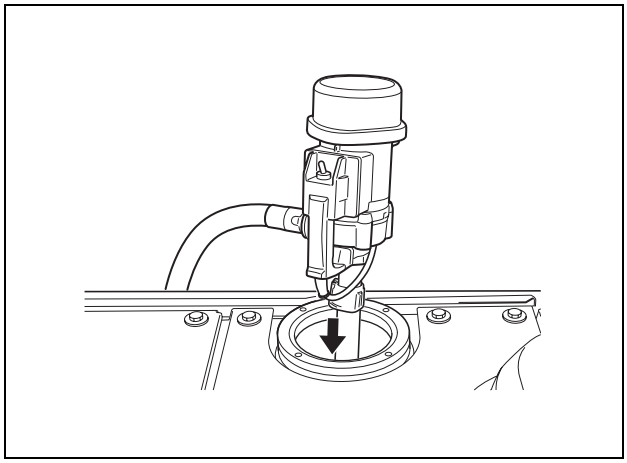

[4] Transfer the oil inside the hydraulic oil tank to the waste oil can.

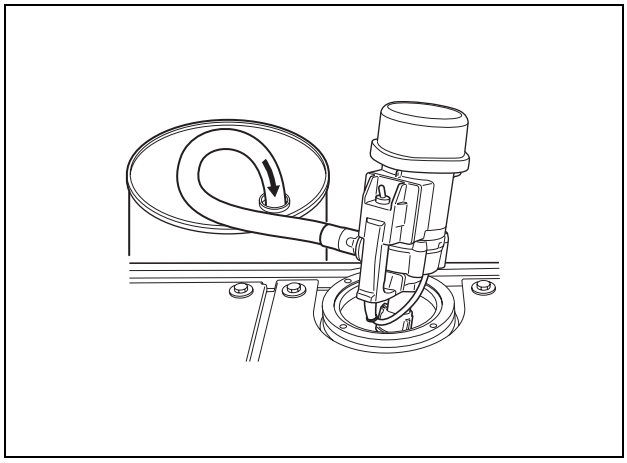

[5] Use a 19-mm wrench to remove the 6 installation bolts (1), and then remove the under cover (2).

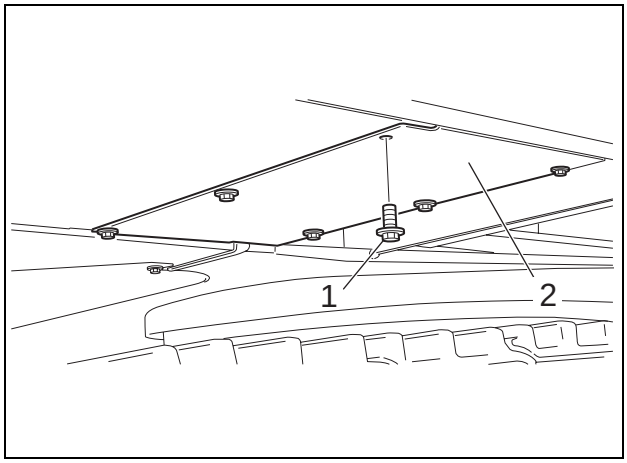

https://truckmanualshub.com/

[6] Prepare a waste oil can under the hydraulic oil tank.

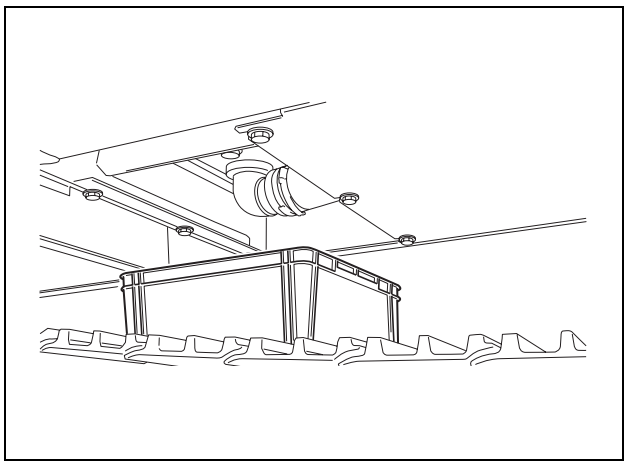

[7] Use a 36-mm wrench to remove the drain plug (1).

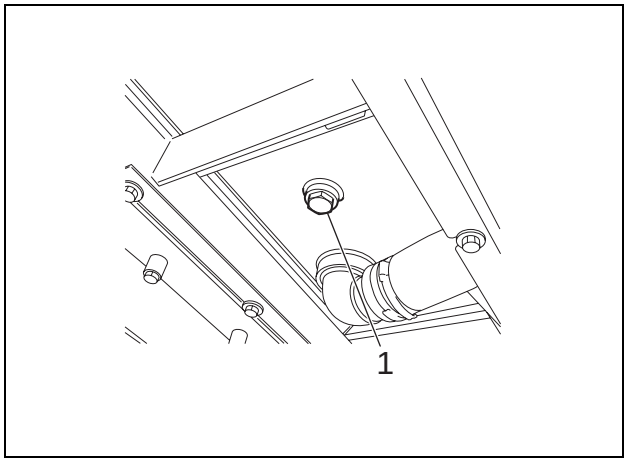
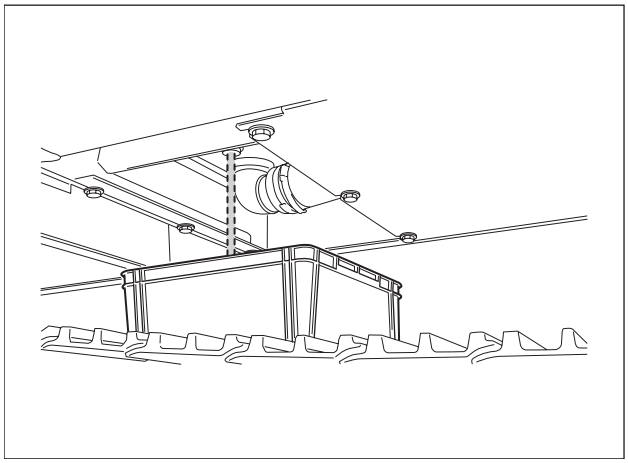
[8] Drain sediment that has settled at the bottom of the hydraulic oil tank.