https://truckmanualshub.com/

SAMPO ROSENLEW

FR68

https://truckmanualshub.com/

FR68

ENGINE	AGCO Power 74 AWF	
Max. power	210	kW @ 1 900 rpm
Torque	1 100	Nm @ 1 500 rpm
Fuel tank	360	l
DEF tank	30	l

TRACTIVE FORCE	180	kN
Gear 1	0 - 8	km/h
Gear 2	0 - 20	km/h

TYRES		
Front axle (balanced bogies)	26.5	in.
Rear axle (balanced bogies)	26.5	in.

STEERING	Proportional	
Turning angle	+/-43,5	deg.

HYDRAULICS		
Pump capacity	165	cm^3
Flow	165	l/min @ 1 000 rpm
Operating pressure	24	MPa
Hydraulic tank	145	l

ELECTRIC SYSTEM		
Voltage	24	V
Batteries	2 x 180	Ah
Alternator	2 x 100	A
Lights	10	pcs.

BOOM	Mesera 92F	
Max. reach	10	m
Gross lifting torque	130	kNm
Slewing torque	39	kNm
Slewing angle	360	deg.

GRAPPLE	0,36	m^2

CABIN	Rotating	
Rotating angle	350	deg

MEASUREMENTS		
Length (A)	10 005 / 10 605	mm
Bogie centre - middle joint (B)	2 036	mm
Middle joint - bogie centre (C)	3 407 / 4 007	mm
Wheelbase (B+C)	5 443 / 6 043	mm
Width - 710 tyres (D)	2 890	mm
Outer turning radius - 710 tyres	8 662 / 9 524	mm
Transport height (E)	3 975	mm
Ground clearance (F)	625	mm
Min. machine weight	18 000	kg

LOAD SPACE OPTIONS		
Load rating	14 000	kg
Total length (H)	4 355 (4 955)	mm
Load space extension	0 - 600	mm
Load space width (G)	2 814 (3 344)	mm
Load space cross sectional area	4,3–5,2	m^2

Please note: this information is nominal and exact numbers may vary according to manufacturing deviation.

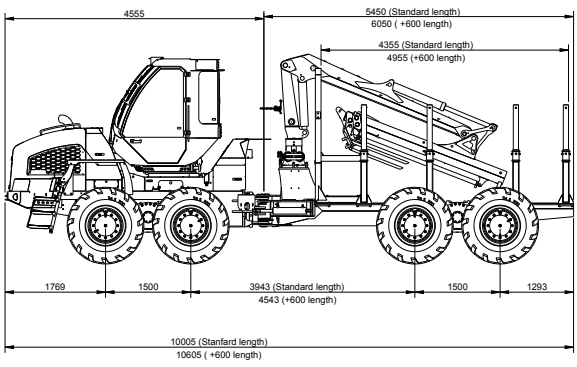

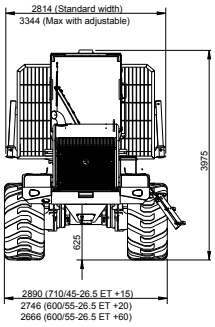

www.sampo-rosenlew.fi