https://truckmanualshub.com/

Husqvarna

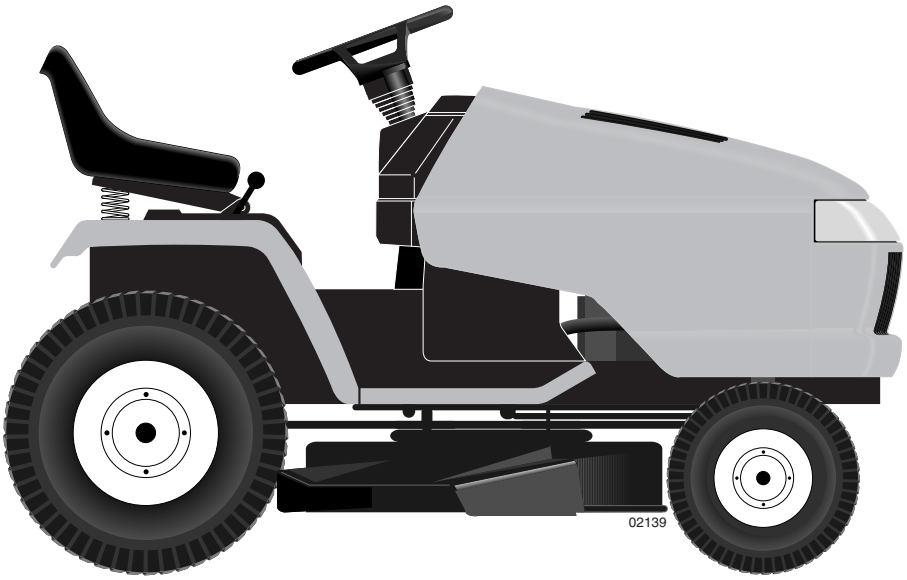

GT2254

Owner's Manual

https://truckmanualshub.com/

SAFETY RULES

Safe Operation Practices for Ride-On Mowers

IMPORTANT: THIS CUTTING MACHINE IS CAPABLE OF AMPUTATING HANDS AND FEET AND THROWING OBJECTS. FAILURE TO OBSERVE THE FOLLOWING SAFETY INSTRUCTIONS COULD RESULT IN SERIOUS INJURY OR DEATH.

WARNING: In order to prevent accidental starting when setting up, transporting, adjusting or making repairs, always disconnect spark plug wire and place wire where it cannot contact spark plug.

WARNING: Do not coast down a hill in neutral, you may lose control of the tractor.

WARNING: Tow only the attachments that are recommended by and comply with specifications of the manufacturer of your tractor. Use common sense when towing. Operate only at the lowest possible speed when on a slope. Too heavy of a load, while on a slope, is dangerous. Tires can lose traction with the ground and cause you to lose control of your tractor.

WARNING

Engine exhaust, some of its constituents, and certain vehicle components contain or emit chemicals known to the State of California to cause cancer and birth defects or other reproductive harm.

WARNING

Battery posts, terminals and related accessories contain lead and lead compounds, chemicals known to the State of California to cause cancer and birth defects or other reproductive harm. Wash hands after handling.

I. GENERAL OPERATION

- Read, understand, and follow all instructions on the machine and in the manual before starting.
- Do not put hands or feet near rotating parts or under the machine. Keep clear of the discharge opening at all times.
- Only allow responsible adults, who are familiar with the instructions, to operate the machine.
- Clear the area of objects such as rocks, toys, wire, etc., which could be picked up and thrown by the blades.
- Be sure the area is clear of bystanders before operating. Stop machine if anyone enters the area.
- Never carry passengers.
- Do not mow in reverse unless absolutely necessary. Always look down and behind before and while backing.
- Never direct discharged material toward anyone. Avoid discharging material against a wall or obstruction. Material may ricochet back toward the operator. Stop the blades when crossing gravel surfaces.
- Do not operate machine without the entire grass catcher, discharge guard, or other safety devices in place and working.
- Slow down before turning.
- Never leave a running machine unattended. Always turn off blades, set parking brake, stop engine, and remove keys before dismounting.
- Disengage blades when not mowing. Shut off engine and wait for all parts to come to a complete stop before cleaning the machine, removing the grass catcher, or unclogging the discharge guard.
- Operate machine only in daylight or good artificial light.
- Do not operate the machine while under the influence of alcohol or drugs.
- Watch for traffic when operating near or crossing roadways.
- Use extra care when loading or unloading the machine into a trailer or truck.
- Always wear eye protection when operating machine.
- Data indicates that operators, age 60 years and above, are involved in a large percentage of riding mower-related injuries. These operators should evaluate their ability to operate the riding mower safely enough to protect themselves and others from serious injury.
- Follow the manufacturer's recommendation for wheel weights or counterweights.
- Keep machine free of grass , leaves or other debris build-up which can touch hot exhaust / engine parts and burn. Do not allow the mower deck to plow leaves or other debris which can cause build-up to occur. Clean any oil or fuel spillage before operating or storing the machine. Allow machine to cool before storage.

II. SLOPE OPERATION

Slopes are a major factor related to loss of control and tip-over accidents, which can result in severe injury or death. Operation on all slopes requires extra caution. If you cannot back up the slope or if you feel uneasy on it, do not mow it.

- Mow up and down slopes, not across.
- Watch for holes, ruts, bumps, rocks, or other hidden objects. Uneven terrain could overturn the machine. Tall grass can hide obstacles.
- Choose a low ground speed so that you will not have to stop or shift while on the slope.
- Do not mow on wet grass. Tires may lose traction. Always keep the machine in gear when going down slopes. Do not shift to neutral and coast downhill.
- Avoid starting, stopping, or turning on a slope. If the tires lose traction, disengage the blades and proceed slowly straight down the slope.
- Keep all movement on the slopes slow and gradual. Do not make sudden changes in speed or direction, which could cause the machine to roll over.
- Use extra care while operating machine with grass catchers or other attachments; they can affect the stability of the machine. Do no use on steep slopes.
- Do not try to stabilize the machine by putting your foot on the ground.
- Do not mow near drop-offs, ditches, or embankments. The machine could suddenly roll over if a wheel is over the edge or if the edge caves in.

https://truckmanualshub.com/

SAFETY RULES

Safe Operation Practices for Ride-On Mowers

III. CHILDREN

Tragic accidents can occur if the operator is not alert to the presence of children. Children are often attracted to the machine and the mowing activity. *Never* assume that children will remain where you last saw them.

- Keep children out of the mowing area and in the watchful care of a responsible adult other than the operator.
- Be alert and turn machine off if a child enters the area.
- Before and while backing, look behind and down for small children.
- Never carry children, even with the blades shut off. They may fall off and be seriously injured or interfere with safe machine operation. Children who have been given rides in the past may suddenly appear in the mowing area for another ride and be run over or backed over by the machine.
- Never allow children to operate the machine.
- Use extra care when approaching blind corners, shrubs, trees, or other objects that may block your view of a child.

IV. TOWING

- Tow only with a machine that has a hitch designed for towing. Do not attach towed equipment except at the hitch point.
- Follow the manufacturer's recommendation for weight limits for towed equipment and towing on slopes.
- Never allow children or others in or on towed equipment.
- On slopes, the weight of the towed equipment may cause loss of traction and loss of control.
- Travel slowly and allow extra distance to stop.

V. SERVICE

SAFE HANDLING OF GASOLINE

To avoid personal injury or property damage, use extreme care in handling gasoline. Gasoline is extremely flammable and the vapors are explosive.

- Extinguish all cigarettes, cigars, pipes, and other sources of ignition.
- Use only approved gasoline container.
- Never remove gas cap or add fuel with the engine running. Allow engine to cool before refueling.
- Never fuel the machine indoors.
- Never store the machine or fuel container where there is an open flame, spark, or pilot light such as on a water heater or other appliances.
- Never fill containers inside a vehicle or on a truck or trailer bed with plastic liner. Always place containers on the ground away from your vehicle when filling.
- Remove gas-powered equipment from the truck or trailer and refuel it on the ground. If this is not possible, then refuel such equipment with a portable container, rather than from a gasoline dispenser nozzle.
- Keep the nozzle in contact with the rim of the fuel tank or container opening at all times until fueling is complete. Do not use a nozzle lock-open device.
- If fuel is spilled on clothing, change clothing immediately.
- Never overfill fuel tank. Replace gas cap and tighten securely.

GENERAL SERVICE

- Never operate machine in a closed are.
- Keep all nuts and bolts tight to be sure the equipment is in safe working condition.
- Never tamper with safety devices. Check their proper operation regularly.
- Keep machine free of grass, leaves, or other debris build-up. Clean oil or fuel spillage and remove any fuel-soaked debris. Allow machine to cool before storing.
- If you strike a foreign object, stop and inspect the machine. Repair, if necessary, before restarting.
- Never make any adjustments or repairs with the engine running.
- Check grass catcher components and the discharge guard frequently and replace with manufacturer's recommended parts, when necessary.
- Mower blades are sharp. Wrap the blade or wear gloves, and use extra caution when servicing them.
- Check brake operation frequently. Adjust and service as required.
- Maintain or replace safety and instruction labels, as necessary.

- Be sure the area is clear of bystanders before operating. Stop machine if anyone enters the area.
- Never carry passengers.
- Do not mow in reverse unless absolutely necessary. Always look down and behind before and while backing.
- Never carry children, even with the blades shut off. They may fall off and be seriously injured or interfere with safe machine operation. Children who have been given rides in the past may suddenly appear in the mowing area for another ride and be run over or backed over by the machine.
- Keep children out of the mowing area and in the watchful care of a responsible adult other than the operator.
- Be alert and turn machine off if a child enters the area.
- Before and while backing, look behind and down for small children.
- Mow up and down slopes (15° Max), not across.
- Choose a low ground speed so that you will not have to stop or shift while on the slope.
- Avoid starting, stopping, or turning on a slope. If the tires lose traction, disengage the blades and proceed slowly straight down the slope.
- If machine stops while going uphill, disengage blades, shift into reverse and back down slowly.
- Do not turn on slopes unless necessary, and then, turn slowly and gradually downhill, if possible.

https://truckmanualshub.com/

PRODUCT SPECIFICATIONS

Gasoline Capacity and type:	5.0 Gallons Unleaded Regular		
Oil Type (API-SG-SL):	SAE 30 (above 32°F) SAE 5W-30 (below 32°F)		
Oil Capacity:	W/ Filter: 4.0 Pints W/O Filter: 3.75 Pints		
Spark Plug: (Gap: .040")	Champion QC12YC		
Ground Speed (MPH):	Forward	LO	HI
	1st	0.7	1.7
	2nd	1.4	3.3
	3rd	2.3	5.4
	Reverse	0.9	2.1
Tire Pressure:	Front:	14 PSI	
	Rear:	10 PSI	
Charging System:	16 AMPS @ 3600 RPM		
Battery:	AMP/HR:	35	
	MIN. CCA:	280	
	CASE SIZE:	U1R	
Blade Bolt Torque:	45–55 FT. LBS.		

CUSTOMER RESPONSIBILITIES

- Read and observe the safety rules.
- Follow a regular schedule in maintaining, caring for and using your tractor.
- Follow the instructions under “Maintenance” and “Storage” sections of this owner’s manual.

WARNING: This tractor is equipped with an internal combustion engine and should not be used on or near any unimproved forest-covered, brush-covered or grass-covered land unless the engine’s exhaust system is equipped with a spark arrester meeting applicable local or state laws (if any). If a spark arrester is used, it should be maintained in effective working order by the operator.

A spark arrester for the muffler is available through your nearest authorized service centre/department (See REPAIR PARTS section of this manual).

CONGRATULATIONS on your purchase of a new tractor. It has been designed, engineered and manufactured to give you the best possible dependability and performance.

Should you experience any problem you cannot easily remedy, please contact your nearest authorized service center/department We have competent, well-trained technicians and the proper tools to service or repair this tractor.

Please read and retain this manual. The instructions will enable you to assemble and maintain your tractor properly. Always observe the “SAFETY RULES”.

TABLE OF CONTENTS

SAFETY RULES 2-3
PRODUCT SPECIFICATIONS 4
CUSTOMER RESPONSIBILITIES 4
ASSEMBLY 6-9
OPERATION 10-15
MAINTENANCE SCHEDULE 16
MAINTENANCE 16-19
SERVICE AND ADJUSTMENTS 20-25
STORAGE 26
TROUBLESHOOTING 27-28
REPAIR PARTS - TRACTOR 30-47
WARRANTY 51

https://truckmanualshub.com/

UNASSEMBLED PARTS

Steering Wheel

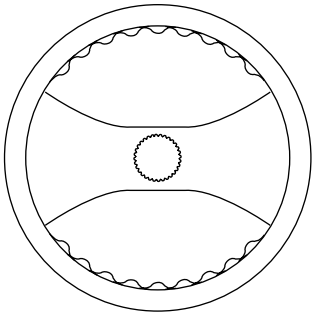

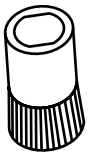

Steering
Wheel Adapter

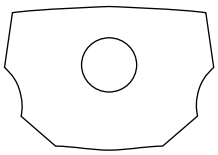

Steering
Wheel Insert

Steering Sleeve

Gauge Wheel

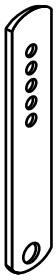

(4) Adjusting Bar

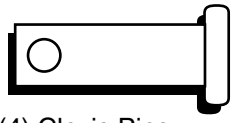

(4) Clevis Pins

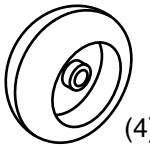

(4) Wheels

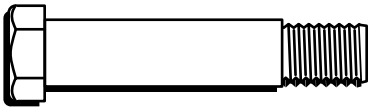

(4) Shoulder Bolt

(4) Locknut
3/8-16

(4) Retainer Springs
(double loop)

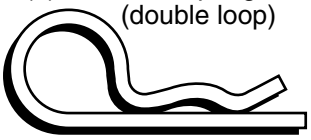

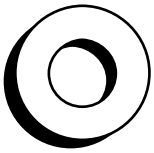

(4) Washers
3/8 x 3/4 x 14 Ga.

Seat

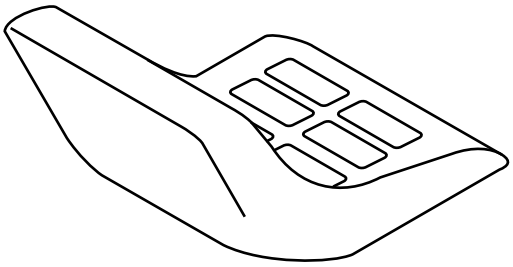

(1) Washer
17/32 x 1-3/16 x 12 Gauge

(1) Knob

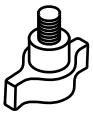

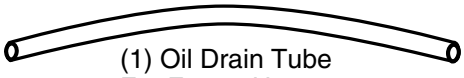

(1) Oil Drain Tube
For Future Use

Keys

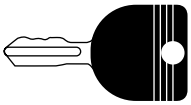

(2) Keys

Slope Sheet

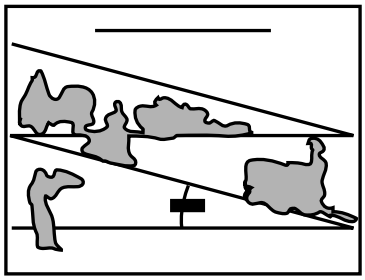

Mower

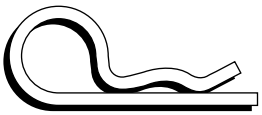

(2) Retainer Springs
(double loop)

(2)Flanged
Pins

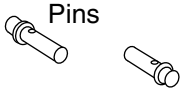

https://truckmanualshub.com/

ASSEMBLY

Your new tractor has been assembled at the factory with exception of those parts left unassembled for shipping purposes. To ensure safe and proper operation of your tractor all parts and hardware you assemble must be tightened securely. Use the correct tools as necessary to insure proper tightness.

TOOLS REQUIRED FOR ASSEMBLY

A socket wrench set will make assembly easier. Standard wrench sizes are listed.

(1) Pliers	(1) Tire pressure gauge
(2) 9/16" wrench	(1) Utility knife
(1) 1/2" wrench	(1) 3/4" socket w/drive ratchet

When right or left hand is mentioned in this manual, it means when you are in the operating position (seated behind the steering wheel).

TO REMOVE TRACTOR FROM CARTON

UNPACK CARTON

- Remove all accessible loose parts and parts cartons from carton .
- Cut along dotted lines on all four panels of carton. Remove end panels and lay side panels flat.
- Remove mower and packing materials.
- Check for any additional loose parts or cartons and remove.

BEFORE REMOVING TRACTOR FROM SKID

ATTACH STEERING WHEEL (See Fig. 1)

- Remove locknut and large flat washer from steering shaft.
- Position front wheels of the tractor so they are pointing straight forward.
- Slide the steering sleeve over the steering shaft.
- Position steering wheel so cross bars are horizontal (left to right) and slide onto steering wheel adapter.
- Secure steering wheel to steering shaft with locknut and large flat washer previously removed. Tighten securely.
- Snap steering wheel insert into center of steering wheel.
- Remove protective materials from tractor hood and grill.

IMPORTANT: CHECK FOR AND REMOVE ANY STAPLES IN SKID THAT MAY PUNCTURE TIRES WHERE TRACTOR IS TO ROLL OFF SKID.

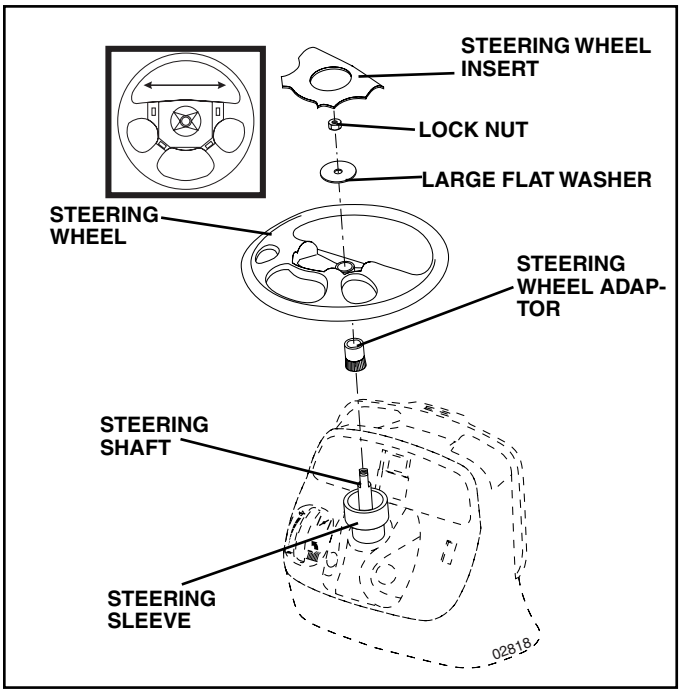

FIG. 1

CHECK BATTERY (See Fig. 2)

- Lift hood to raised position.
- If this battery is put into service after month and year indicated on label (label located between terminals) charge battery for minimum of one hour at 6-10 amps. (See "BATTERY" in the Maintenance section of this manual for charging instructions).

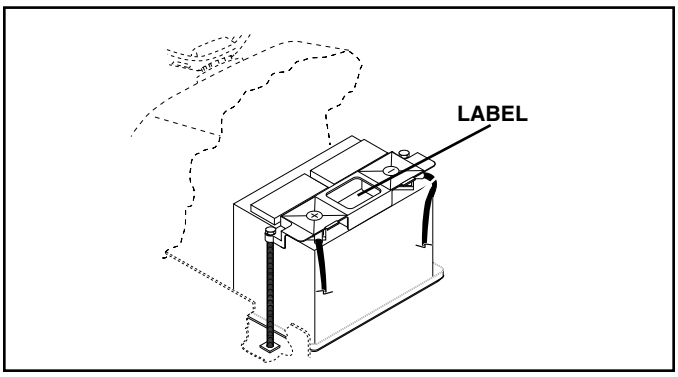

FIG. 2

INSTALL SEAT (See Fig. 3)

Adjust seat before tightening adjustment knob.

- Remove adjustment knob and flat washer securing seat to cardboard packing and set aside for assembly of seat to tractor.
- Pivot seat upward and remove from the cardboard packing. Remove the cardboard packing and discard.
- Place seat on seat pan so head of shoulder bolt is positioned over large slotted hole in pan.

https://truckmanualshub.com/

ASSEMBLY

- Push down on seat to engage shoulder bolt in slot and pull seat towards rear of tractor.
- Pivot seat and pan forward and assemble adjustment knob and flat washer loosely. Do not tighten.
- Lower seat into operating position and sit on seat.
- Slide seat until a comfortable position is reached which allows you to press clutch/brake pedal all the way down.
- Get off seat without moving its adjusted position.
- Raise seat and tighten adjustment knob securely.

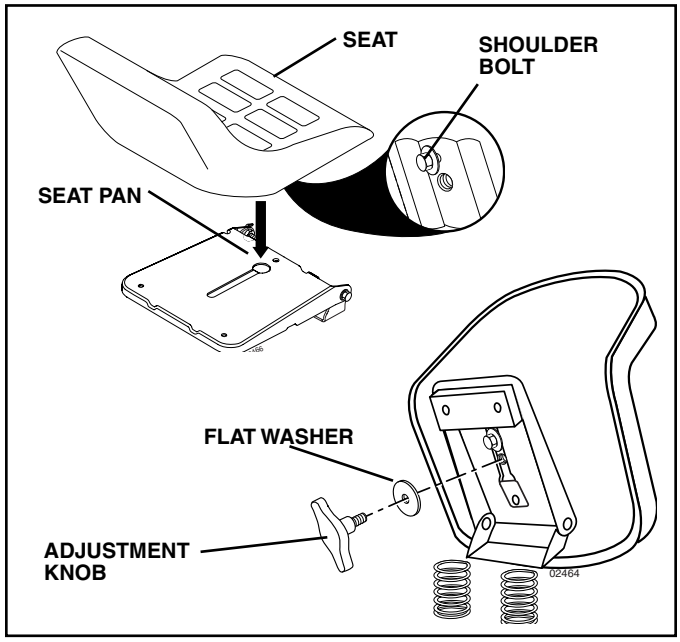

FIG. 3

NOTE: You may now roll or drive your tractor off the skid. Follow the appropriate instruction below to remove the tractor from the skid.

TO ROLL TRACTOR OFF SKID (See Operation section for location and function of controls)

- Press lift lever plunger and raise attachment lift lever to its highest position.
- Release parking brake by depressing clutch/brake pedal.
- Place gearshift lever in neutral (N) position.
- Roll tractor forward off skid.

TO DRIVE TRACTOR OFF SKID (See Operation section for location and function of controls)

WARNING: Before starting, read, understand and follow all instructions in the Operation section of this manual. Be sure tractor is in a well-ventilated area. Be sure the area in front of tractor is clear of other people and objects.

- Be sure all the above assembly steps have been completed.
- Check engine oil level and fill fuel tank with gasoline.
- Sit on seat in operating position, depress clutch/brake pedal and set the parking brake.
- Place gear shift lever in neutral (N) position.
- Press lift lever plunger and raise attachment lift lever to its highest position.
- Start the engine. After engine has started, move throttle control to idle position.
- Depress clutch/brake pedal into full "BRAKE" position and hold. Move gearshift lever to 1st gear.
- Slowly release clutch/brake pedal and slowly drive tractor off skid.
- Apply brake to stop tractor, set parking brake and place gearshift lever in neutral position.
- Turn ignition key to "STOP" position.

Continue with the instructions that follow.

ASSEMBLE GAUGE WHEELS TO MOWER DECK (See Figs. 4 and 5)

The gauge wheels are designed to keep the mower deck in proper position when operating mower.

- Slide gauge wheel bar down into bracket channel, Be sure that gauge wheel bar aligning holes are on top. Assemble gauge wheels as shown using shoulder bolts, 3/8 washers and 3/8-16 center locknuts and tighten securely.
- For ease of mower to tractor assembly, set all the gauge wheels in the fourth hole from top. Retain with clevis pins and spring retainers.

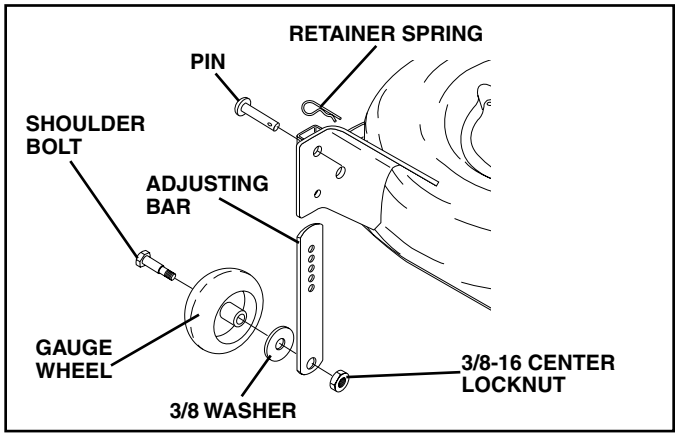

FIG. 4

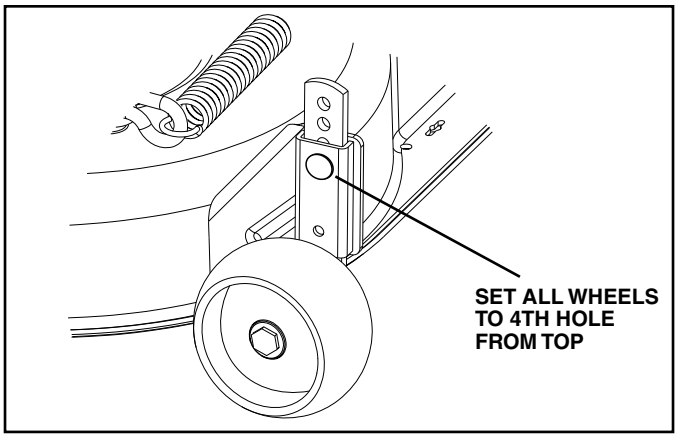

FIG. 5

https://truckmanualshub.com/

ASSEMBLY

INSTALL MOWER AND DRIVE BELT (See Fig. 6)

See MOWER AND DRIVE BELT ASSEMBLY Supplement Sheet for additional guidance on this assembly.

Be sure tractor is on level surface and mower suspension arms are raised with attachment lift control. Engage parking brake.

- Turn steering wheel to the left as far as it will go and position mower on right side of tractor with deflector shield to the right.
- Remove plastic tie strap from mower belt and check belt for proper routing in all mower pulley grooves.
- Slide mower under tractor until it is centered under tractor. DO NOT connect any pins. When properly centered the front mower brackets should be aligned so when the front suspension plate is lowered it should slide between the mower brackets.
- Lower attachment lift lever to lowest position.
- Cut plastic tie and lower front suspension plate.
- ATTACH FRONT PLATE - From left side of mower, position front plate assembly between front mower brackets, align holes, position flanged pin notch horizontally and insert the pin all the way. The notch is in line with the hole in pin.
- Secure pin with double loop retainer spring between the plate and mower bracket. If necessary, move mower side-to-side to give space between plate and mower bracket.
- Go to right hand side of mower and insert pin and retainer spring in the same manner.
- CONNECT REAR PINS - Connect right hand side first. Pull out and hold the spring loaded pin, align hole in suspension arm and release pin. Be sure pin returns to fully seated position and is attached to the suspension arm.
- Go to left side of mower and connect rear pin in the same manner.
- Disengage belt tension rod.
- From right side of tractor, install belt onto engine clutch pulley.

IMPORTANT: CHECK BELT FOR PROPER ROUTING IN ALL MOWER PULLEY GROOVES.

- Engage belt tension rod on locking bracket.

CAUTION: Belt tension rod is spring loaded. Have a tight grip on rod and engage slowly.

- Raise attachment lift lever to highest position.
- Adjust gauge wheels before operating mower as shown in the Operation section of this manual.

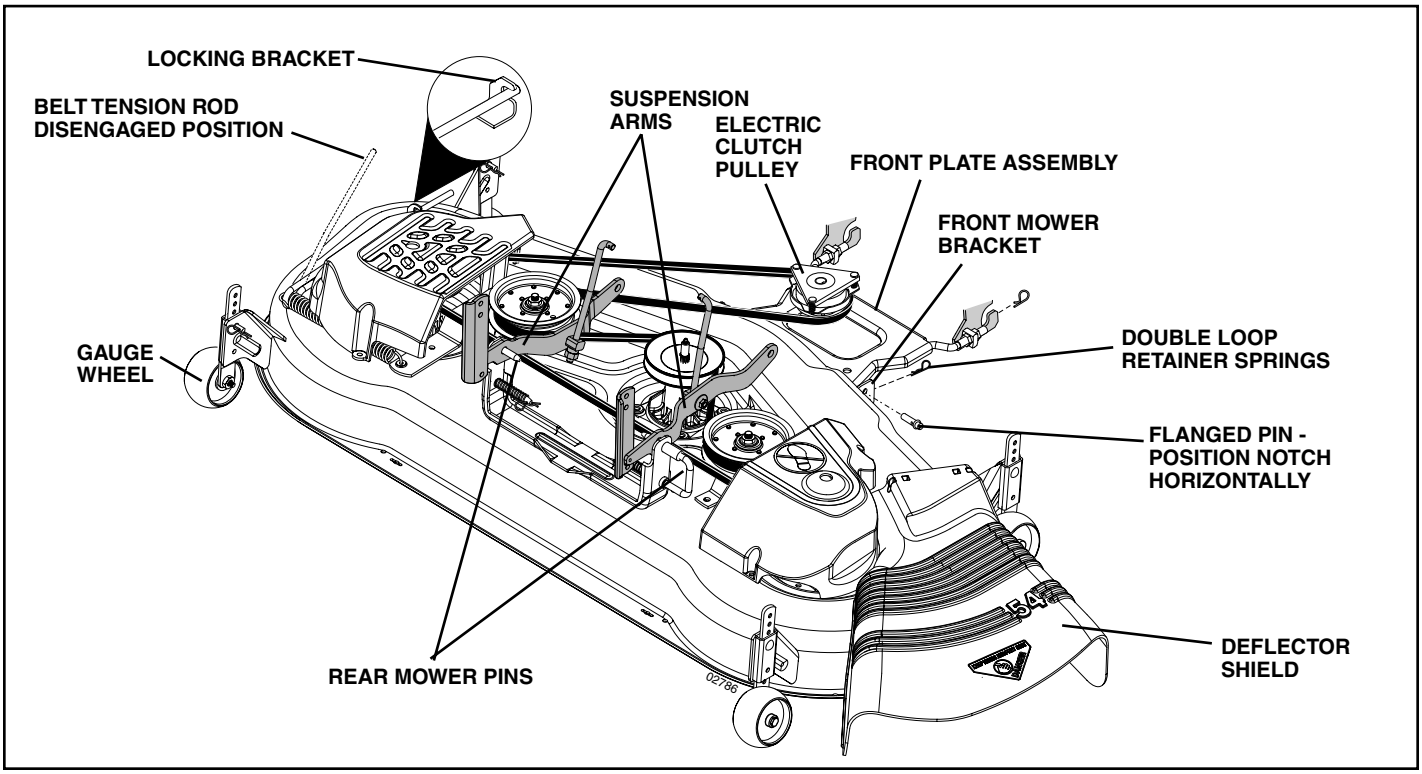

FIG. 6

https://truckmanualshub.com/

ASSEMBLY

CHECK TIRE PRESSURE

The tires on your tractor were overinflated at the factory for shipping purposes. Correct tire pressure is important for best cutting performance.

- Reduce tire pressure to PSI shown in “PRODUCT SPECIFICATIONS” section of this manual.

CHECK MOWER LEVELNESS

For best cutting results, mower should be properly leveled. See “TO LEVEL MOWER HOUSING” in the Service and Adjustments section of this manual.

CHECK FOR PROPER POSITION OF ALL BELTS

See the figures that are shown for replacing motion, mower drive, and mower blade drive belts in the Service and Adjustments section of this manual. Verify that the belts are routed correctly.

CHECK BRAKE SYSTEM

After you learn how to operate your tractor, check to see that the brake is properly adjusted. See “TO ADJUST BRAKE” in the Service and Adjustments section of this manual.

✓CHECKLIST

BEFORE YOU OPERATE YOUR NEW TRACTOR, WE WISH TO ASSURE THAT YOU RECEIVE THE BEST PERFORMANCE AND SATISFACTION FROM THIS QUALITY PRODUCT.

PLEASE REVIEW THE FOLLOWING CHECKLIST:

- ✓ All assembly instructions have been completed.
- ✓ No remaining loose parts in carton.
- ✓ Battery is properly prepared and charged. (Minimum 1 hour at 6 amps).
- ✓ Seat is adjusted comfortably and tightened securely.
- ✓ All tires are properly inflated. (For shipping purposes, the tires were overinflated at the factory).
- ✓ Be sure mower deck is properly leveled side-to-side/ front-to-rear for best cutting results. (Tires must be properly inflated for leveling).
- ✓ Check mower and drive belts. Be sure they are routed properly around pulleys and inside all belt keepers.
- ✓ Check wiring. See that all connections are still secure and wires are properly clamped.

WHILE LEARNING HOW TO USE YOUR TRACTOR, PAY EXTRA ATTENTION TO THE FOLLOWING IMPORTANT ITEMS:

- ✓ Engine oil is at proper level.
- ✓ Fuel tank is filled with fresh, clean, regular unleaded gasoline.
- ✓ Become familiar with all controls, their location and function. Operate them before you start the engine.
- ✓ Be sure brake system is in safe operating condition.
- ✓ Be sure Operator Presence System and Reverse Operation System (ROS) are working properly (See the Operation and Maintenance sections in this manual).

https://truckmanualshub.com/

OPERATION

These symbols may appear on your tractor or in literature supplied with the product. Learn and understand their meaning.

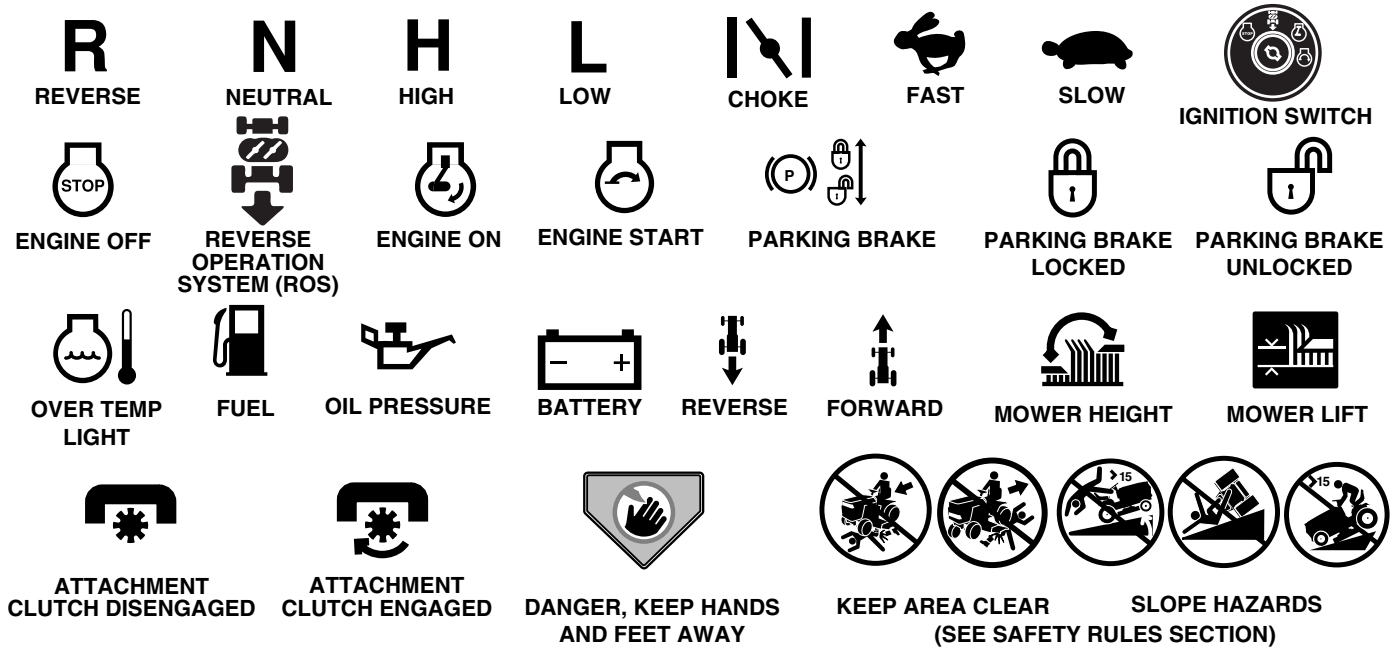

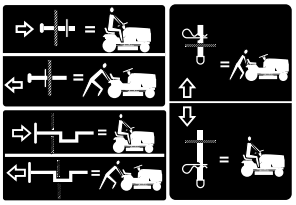

FREE WHEEL
(Automatic Models only)

LIGHTS ON

Failure to follow instructions could result in serious injury or death. The safety alert symbol is used to identify safety information about hazards which can result in death, serious injury and/or property damage.

DANGER indicates a hazard which, if not avoided, **will result in death or serious injury.**

WARNING indicates a hazard which, if not avoided, **could result in death or serious injury.**

CAUTION indicates a hazard which, if not avoided, **might result in minor or moderate injury.**

CAUTION when used **without** the alert symbol, indicates a situation that **could result in damage to the tractor and/or engine.**

HOT SURFACES indicates a hazard which, if not avoided, **could result in death, serious injury and/or property damage.**

FIRE indicates a hazard which, if not avoided, **could result in death, serious injury and/or property damage.**

https://truckmanualshub.com/

OPERATION

KNOW YOUR TRACTOR

READ THIS OWNER'S MANUAL AND SAFETY RULES BEFORE OPERATING YOUR TRACTOR.

Compare the illustrations with your tractor to familiarize yourself with the location of various controls and adjustments. Save this manual for future reference.

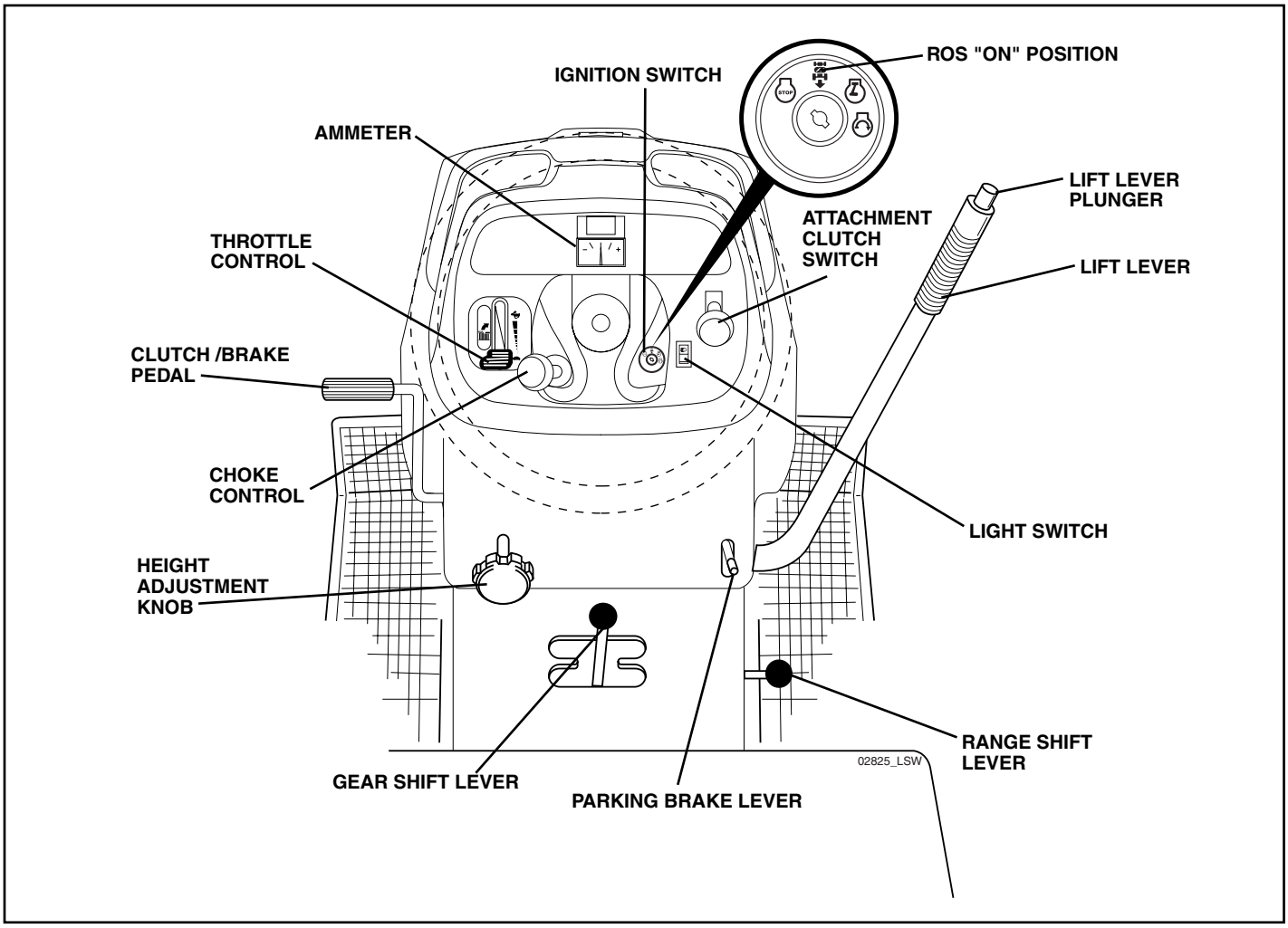

FIG. 7

Our tractors conform to the safety standards of the American National Standards Institute.

AMMETER - Indocates charging (+) or discharging (-) of battery.

ATTACHMENT CLUTCH SWITCH - Used to engage mower blades or other attachments mounted to your tractor.

CHOKE CONTROL - Used when starting a cold engine.

CLUTCH/BRAKE PEDAL - Used for declutching and braking the tractor and starting the engine.

GEARSHIFT LEVER - Selects the speed and direction of tractor.

HEIGHT ADJUSTMENT KNOB - Used to adjust the mower height.

IGNITION SWITCH - Used to start and stop the engine.

LIFT LEVER - Used to raise and lower mower deck or other attachments mounted to your tractor.

LIFT LEVER PLUNGER - Used to release attachment lift lever when changing its position.

LIGHT SWITCH - Turns the headlights on and off.

PARKING BRAKE LEVER - Locks brake pedal into the brake position.

RANGE SHIFT LEVER - Allows high (H) or low (L) speed for all forward and reverse gears.

REVERSE OPERATION SYSTEM (ROS) "ON" POSITION - Allows operation of mower deck or other powered attachment while in reverse.

THROTTLE CONTROL - Used to control engine speed.

https://truckmanualshub.com/

OPERATION

The operation of any tractor can result in foreign objects thrown into the eyes, which can result in severe eye damage. Always wear safety glasses or eye shields while operating your tractor or performing any adjustments or repairs. We recommend a wide vision safety mask over spectacles or standard safety glasses.

HOW TO USE YOUR TRACTOR

TO SET PARKING BRAKE (See Fig. 8)

Your tractor is equipped with an operator presence sensing switch. When engine is running, any attempt by the operator to leave the seat without first setting the parking brake will shut off the engine.

- Depress clutch/brake pedal into full “BRAKE” position and hold.
- Place parking brake lever in “ENGAGED” position and release pressure from clutch/brake pedal. Pedal should remain in “BRAKE” position. Make sure parking brake will hold tractor secure.

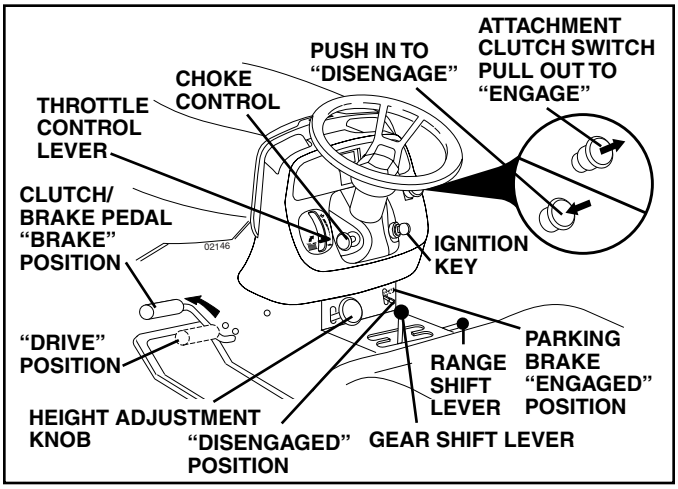

FIG. 8

STOPPING (See Fig. 8)

MOWER BLADES -

- To stop mower blades,move attachment clutch switch to “DISENGAGED” position.

GROUND DRIVE -

- To stop ground drive, depress clutch/brake pedal into full “BRAKE” position.
- Move gearshift lever to neutral (N) position.

ENGINE -

- Move throttle control between half and full speed (fast) position.

NOTE: Failure to move throttle control between half and full speed (fast) position, before stopping may cause engine to “backfire”.

- Turn ignition key to “STOP” position and remove key. Always remove key when leaving tractor to prevent unauthorized use.
- Never use choke to stop engine.

IMPORTANT: LEAVING THE IGNITION SWITCH IN ANY POSITION OTHER THAN "STOP" WILL CAUSE THE BATTERY TO BE DISCHARGED, (DEAD).

NOTE: Under certain conditions when tractor is standing idle with the engine running, hot engine exhaust gases may cause “browning” of grass. To eliminate this possibility, always stop engine when stopping tractor on grass areas.

CAUTION: Always stop tractor completely, as described above, before leaving the operator's position; to empty grass catcher, etc.

TO USE THROTTLE CONTROL (See Fig. 8)

Always operate engine at full throttle.

- Operating engine at less than full throttle reduces the battery charging rate.
- Full throttle offers the best mower performance.

TO USE CHOKE CONTROL (See Fig. 8)

Use choke control whenever you are starting a cold engine. Do not use to start a warm engine.

- To engage choke control, pull knob out. Slowly push knob in to disengage.

TO MOVE FORWARD AND BACKWARD (See Fig. 8)

The direction and speed of movement is controlled by the gearshift lever.

- Start tractor with clutch/brake pedal depressed and gearshift lever in neutral (N) position.
- Move gearshift and range shift levers to desired position.
- Slowly release clutch/brake pedal to start movement.

IMPORTANT: BRING TRACTOR TO A COMPLETE STOP BEFORE SHIFTING OR CHANGING GEARS. FAILURE TO DO SO WILL SHORTEN THE USEFUL LIFE OF YOUR TRANSAXLE.

TO ADJUST MOWER CUTTING HEIGHT (See Fig. 8)

The cutting height is controlled by turning the height adjustment knob in desired direction.

- Turn knob clockwise (↻) to raise cutting height.
- Turn knob counterclockwise (↺) to lower cutting height.

The cutting height range is approximately 1-1/2" to 4-1/2". The heights are measured from the ground to the blade tip with the engine not running. These heights are approximate and may vary depending upon soil conditions, height of grass and types of grass being mowed.

- The average lawn should be cut to approximately 2-1/2 inches during the cool season and to over 3 inches during hot months. For healthier and better looking lawns, mow often and after moderate growth.
- For best cutting performance, grass over 6 inches in height should be mowed twice. Make the first cut relatively high; the second to desired height.

https://truckmanualshub.com/

OPERATION

TO ADJUST GAUGE WHEELS (See Fig. 9)

Gauge wheels are properly adjusted when they are slightly off the ground when mower is at the desired cutting height in operating position. Gauge wheels then keep the deck in proper position to help prevent scalping in most terrain conditions.

NOTE: Adjust gauge wheels with tractor on a flat level surface.

- Adjust mower to desired cutting height (See "TO ADJUST MOWER CUTTING HEIGHT" in the Operation section of this manual).
- Remove retainer spring and clevis pin which secure each gauge wheel bar.
- Lower gauge wheels to ground. Raise gauge wheels slightly to align holes in bracket and gauge wheel bar and insert clevis pin. Gauge wheels should be slightly off the ground.
- Replace retainer spring into clevis pin.
- Be sure all gauge wheels are in the same setting.

IMPORTANT: BE SURE TO READJUST GAUGE WHEELS IF YOU CHANGE THE CUTTING HEIGHT OF THE MOWER DECK.

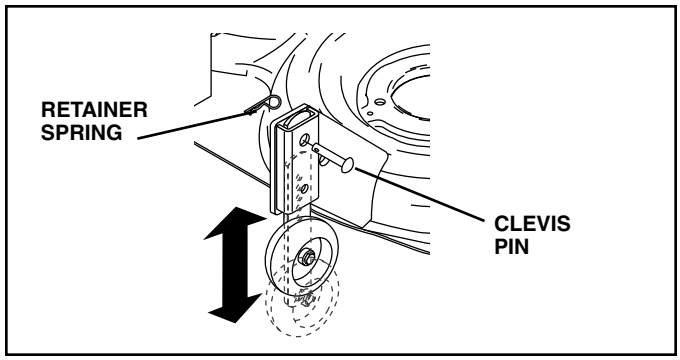

FIG. 9

TO OPERATE MOWER (See Fig. 10)

Your tractor is equipped with an operator presence sensing switch. Any attempt by the operator to leave the seat with the engine running and the attachment clutch engaged will shut off the engine. You must remain fully and centrally positioned in the seat to prevent the engine from hesitating or cutting off when operating your equipment on rough, rolling terrain or hills.

- Select desired height of cut.
- Lower mower with attachment lift control.
- Start mower blades by engaging attachment clutch control.
- TO STOP MOWER BLADES - disengage attachment clutch control.

CAUTION: Do not operate the mower without either the entire grass catcher, on mowers so equipped, or the deflector shield in place.

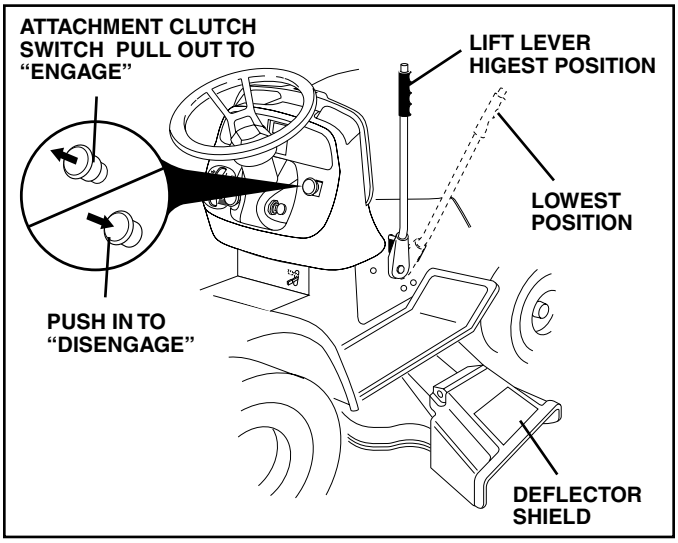

FIG. 10

REVERSE OPERATION SYSTEM (ROS)

Your tractor is equipped with a Reverse Operation System (ROS). Any attempt by the operator to travel in the reverse direction with the attachment clutch engaged will shut off the engine unless ignition key is placed in the ROS "ON" position.

WARNING: Backing up with the attachment clutch engaged while mowing is strongly discouraged. Turning the ROS "ON", to allow reverse operation with the attachment clutch engaged, should only be done when the operator decides it is necessary to reposition the machine with the attachment engaged. **Do not mow in reverse unless absolutely necessary**.

USING THE REVERSE OPERATION SYSTEM -

- Depress clutch/brake pedal all the way down and hold.
- With engine running, turn ignition key counterclockwise to ROS "ON" position.
- Look down and behind before backing.
- Move gear shift lever to reverse (R) position and slowly release clutch/brake pedal to start movement.
- When use of the ROS is no longer needed, turn the ignition key clockwise to engine "ON" position.

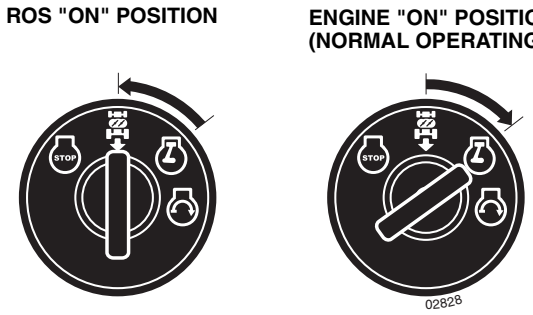

https://truckmanualshub.com/

OPERATION

TO OPERATE ON HILLS

CAUTION: Do not drive up or down hills with slopes greater than 15° and do not drive across any slope.

- Choose the slowest speed before starting up or down hills.
- Avoid stopping or changing speed on hills.
- If slowing is necessary, move throttle control lever to slower position.
- If stopping is absolutely necessary, push clutch/brake pedal quickly to brake position and engage parking brake.
- Move gearshift lever to 1st gear and range shift lever to low (L) position. Be sure you have allowed room for tractor to roll slightly as you restart movement.
- To restart movement, slowly release parking brake and clutch/brake pedal.
- Make all turns slowly.

TO TRANSPORT

- Raise attachment lift to highest position with attachment lift control.
- When pushing or towing your tractor, be sure gearshift lever is in neutral (N) position.
- Do not push or tow tractor at more than five (5) MPH.

NOTE: To protect hood from damage when transporting your tractor on a truck or a trailer, be sure hood is closed and secured to tractor. Use an appropriate means of tying hood to tractor (rope, cord, etc.).

TOWING CARTS AND OTHER ATTACHMENTS

Tow only the attachments that are recommended by and comply with specifications of the manufacturer of your tractor. Use common sense when towing. Too heavy of a load, while on a slope, is dangerous. Tires can lose traction with the ground and cause you to lose control of your tractor.

BEFORE STARTING THE ENGINE

CHECK ENGINE OIL LEVEL

The engine in your tractor has been shipped, from the factory, already filled with summer weight oil.

- Check engine oil with tractor on level ground.
- Remove oil fill cap/dipstick and wipe clean, reinsert the dipstick and screw cap tight, wait for a few seconds, remove and read oil level. If necessary, add oil until "FULL" mark on dipstick is reached. Do not overfill.
- For cold weather operation you should change oil for easier starting (See "OIL VISCOSITY CHART" in the Maintenance section of this manual).
- To change engine oil, see the Maintenance section in this manual.

ADD GASOLINE

- Fill fuel tank to bottom of filler neck. Do not overfill. Use fresh, clean, regular unleaded gasoline with a minimum of 87 octane. (Use of leaded gasoline will increase carbon and lead oxide deposits and reduce valve life). Do not mix oil with gasoline. Purchase fuel in quantities that can be used within 30 days to assure fuel freshness.

CAUTION: Wipe off any spilled oil or fuel. Do not store, spill or use gasoline near an open flame.

IMPORTANT: WHEN OPERATING IN TEMPERATURES BELOW32°F(0°C), USE FRESH, CLEAN WINTER GRADE GASOLINE TO HELP INSURE GOOD COLD WEATHER STARTING.

CAUTION: Alcohol blended fuels (called gasohol or using ethanol or methanol) can attract moisture which leads to separation and formation of acids during storage. Acidic gas can damage the fuel system of an engine while in storage. To avoid engine problems, the fuel system should be emptied before storage of 30 days or longer. Drain the gas tank, start the engine and let it run until the fuel lines and carburetor are empty. Use fresh fuel next season. See Storage Instructions for additional information. Never use engine or carburetor cleaner products in the fuel tank or permanent damage may occur.

TO START ENGINE (See Fig. 8)

When starting the engine for the first time or if the engine has run out of fuel, it will take extra cranking time to move fuel from the tank to the engine.

- Sit on seat in operating position, depress clutch/brake pedal and set parking brake.
- Place gear shift lever in neutral (N) position.
- Move attachment clutch to "DISENGAGED" position.
- Move throttle control to fast position
- Pull choke control out for a cold engine start attempt. For a warm engine start attempt the choke control may not be needed.

NOTE: Before starting, read the warm and cold starting procedures below.

- Insert key into ignition and turn key clockwise to "START" position and release key as soon as engine starts. Do not run starter continuously for more than fifteen seconds per minute. If the engine does not start after several attempts, push choke control in, wait a few minutes and try again. If engine still does not start, pull the choke control out and retry.

WARM WEATHER STARTING (50° F and above)

- When engine starts, slowly push choke control in until the engine begins to run smoothly. If the engine starts to run roughly, pull the choke control out slightly for a few seconds and then continue to push the control in slowly.

https://truckmanualshub.com/

- The attachments and ground drive can now be used. If the engine does not accept the load, restart the engine and allow it to warm up for one minute using the choke as described above.

COLD WEATHER STARTING (50° F and below)

- When engine starts, slowly push choke control in until the engine begins to run smoothly. Continue to push the choke control in small steps allowing the engine to accept small changes in speed and load, until the choke control is fully in. If the engine starts to run roughly, pull the choke control out slightly for a few seconds and then continue to push the control in slowly. This may require an engine warm-up period from several seconds to several minutes, depending on the temperature.
- The attachments can be used during the engine warm-up period and may require the choke control be pulled out slightly.

NOTE: If at a high altitude (above 3000 feet) or in cold temperatures (below 32 F) the carburetor fuel mixture may need to be adjusted for best engine performance. See "TO ADJUST CARBURETOR" in the Service and Adjustments section of this manual.

MOWING TIPS

- Tire chains cannot be used when the mower housing is attached to tractor.
- Mower should be properly leveled for best mowing performance. See "TO LEVEL MOWER HOUSING" in the Service and Adjustments section of this manual.
- The left hand side of mower should be used for trimming.
- Drive so that clippings are discharged onto the area that has been cut. Have the cut area to the right of the tractor. This will result in a more even distribution of clippings and more uniform cutting.
- When mowing large areas, start by turning to the right so that clippings will discharge away from shrubs, fences, driveways, etc. After one or two rounds, mow in the opposite direction making left hand turns until finished (See Fig. 11).

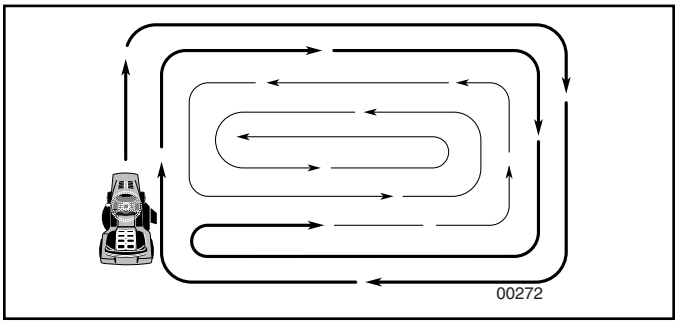

FIG. 11

- If grass is extremely tall, it should be mowed twice to reduce load and possible fire hazard from dried clippings. Make first cut relatively high; the second to the desired height.
- Do not mow grass when it is wet. Wet grass will plug mower and leave undesirable clumps. Allow grass to dry before mowing.
- **Always operate engine at full throttle when mowing** to assure better mowing performance and proper discharge of material. Regulate ground speed by selecting a low enough gear to give the mower cutting performance as well as the quality of cut desired.
- When operating attachments, select a ground speed that will suit the terrain and give best performance of the attachment being used.

https://truckmanualshub.com/

MAINTENANCE

MAINTENANCE SCHEDULE

FILL IN DATES AS YOU COMPLETE REGULAR SERVICE

		BEFORE EACH USE	EVERY 8 HOURS	EVERY 25 HOURS	EVERY 50 HOURS	EVERY 100 HOURS	EVERY SEASON	BEFORE STORAGE	SERVICE DATES		
TRACTOR	Check Brake Operation	✔	✔								
	Check Tire Pressure	✔	✔								
	Check Operator Presence and ROS Systems	✔									
	Check for Loose Fasteners	✔				✔ 5		✔			
	Sharpen/Replace Mower Blades			✔ 3							
	Lubrication Chart			✔				✔			
	Check Battery Level			✔ 4							
	Clean Battery and Terminals			✔				✔			
	Check Transaxle Cooling			✔							
	Check V-Belts					✔					
ENGINE	Check Engine Oil Level	✔	✔								
	Change Engine Oil (with oil filter)				✔ 1,2			✔			
	Change Engine Oil (without oil filter)			✔ 1,2				✔			
	Clean Air Filter			✔ 2							
	Clean Air Screen			✔ 2							
	Inspect Muffler/Spark Arrester				✔						
	Replace Oil Filter (If equipped)					✔ 1, 2					
	Clean Engine Cooling Fins					✔ 2					
	Replace Spark Plug					✔	✔				
	Replace Air Filter Paper Cartridge					✔ 2					
	Replace Fuel Filter						✔				

maint_sch-tractore_ROS.e

1 - Change more often when operating under a heavy load or in high ambient temperatures.
2 - Service more often when operating in dirty or dusty conditions.
3 - Replace blades more often when mowing in sandy soil.
4 - Not required if equipped with maintenance-free battery.
5 - Tighten front axle pivot bolt to 35 ft.-lbs. maximum. Do not overtighten.

GENERAL RECOMMENDATIONS

The warranty on this tractor does not cover items that have been subjected to operator abuse or negligence. To receive full value from the warranty, operator must maintain tractor as instructed in this manual.

Some adjustments will need to be made periodically to properly maintain your tractor.

At least once a season, check to see if you should make any of the adjustments described in the Service and Adjustments section of this manual.

- At least once a year you should replace the spark plug, clean or replace air filter, and check blades and belts for wear. A new spark plug and clean air filter assure proper air-fuel mixture and help your engine run better and last longer.

BEFORE EACH USE

- Check engine oil level.
- Check brake operation.
- Check tire pressure.
- Check operator presence and ROS systems for proper operation.
- Check for loose fasteners.

LUBRICATION CHART

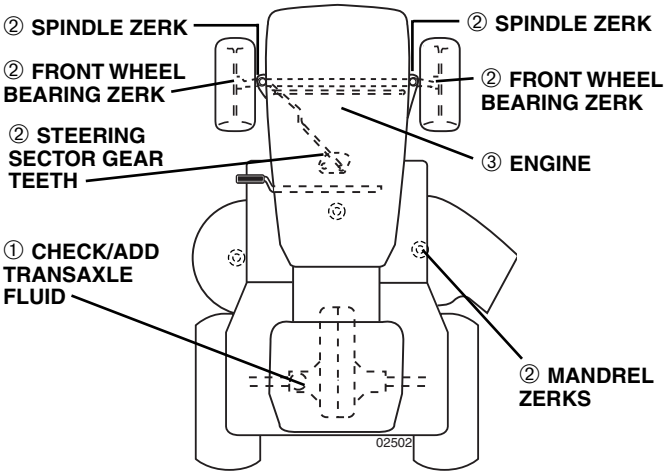

① SAE 30 Motor Oil
② GENERAL PURPOSE GREASE
③ REFER TO MAINTENANCE"ENGINE" SECTION

IMPORTANT: DO NOT OIL OR GREASE THE PIVOT POINTS WHICH HAVE SPECIAL NYLON BEARINGS. VISCOUS LUBRICANTS WILL ATTRACT DUST AND DIRT THAT WILL SHORTEN THE LIFE OF THE SELF-LUBRICATING BEARINGS. IF YOU FEEL THEY MUST BE LUBRICATED, USE ONLY A DRY, POWDERED GRAPHITE TYPE LUBRICANT SPARINGLY.

https://truckmanualshub.com/

MAINTENANCE

TRACTOR

Always observe safety rules when performing any maintenance.

BRAKE OPERATION

If tractor requires more than five (5) feet to stop at highest speed in highest gear on a level, dry concrete or paved surface, then brake must be checked and adjusted. (See "TO ADJUST BRAKE" in the Service and Adjustments section of this manual).

TIRES

- Maintain proper air pressure in all tires (See "PRODUCT SPECIFICATIONS" section of this manual).
- Keep tires free of gasoline, oil, or insect control chemicals which can harm rubber.
- Avoid stumps, stones, deep ruts, sharp objects and other hazards that may cause tire damage.

NOTE: To seal tire punctures and prevent flat tires due to slow leaks, tire sealant may be purchased from your local parts dealer. Tire sealant also prevents tire dry rot and corrosion.

OPERATOR PRESENCE SYSTEM AND REVERSE OPERATION SYSTEM (ROS)

Be sure operator presence and reverse operation systems are working properly. If your tractor does not function as described, repair the problem immediately.

- The engine should not start unless the brake pedal is fully depressed, and the attachment clutch control is in the disengaged position.

CHECK OPERATOR PRESENCE SYSTEM

- When the engine is running, any attempt by the operator to leave the seat without first setting the parking brake should shut off the engine.
- When the engine is running and the attachment clutch is engaged, any attempt by the operator to leave the seat should shut off the engine.
- The attachment clutch should never operate unless the operator is in the seat.

CHECK REVERSE OPERATION (ROS) SYSTEM

- When the engine is running with the ignition switch in the engine "ON" position and the attachment clutch engaged, any attempt by the operator to shift into reverse should shut off the engine.
- When the engine is running with the ignition switch in the ROS "ON" position and the attachment clutch engaged, any attempt by the operator to shift into reverse should NOT shut off the engine.

ROS "ON" POSITION

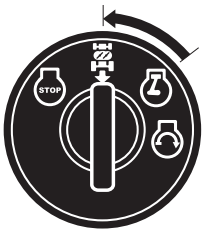

ENGINE "ON" POSITION (NORMAL OPERATING)

BLADE CARE

For best results mower blades must be kept sharp. Replace bent or damaged blades.

CAUTION: Use only a replacement blade approved by the manufacturer of your tractor. Using a blade not approved by the manufacturer of your tractor is hazardous, could damage your tractor and void your warranty.

BLADE REMOVAL (See Fig. 12)

- Raise mower to highest position to allow access to blades.

NOTE: Protect your hands with gloves and/or wrap blade with heavy cloth.

- Remove blade bolt by turning counterclockwise.
- Install new or resharpened blade with stamped "THIS SIDE UP" facing deck and mandrel assembly.

IMPORTANT: TO ENSURE PROPER ASSEMBLY, CENTER HOLE IN BLADE MUST ALIGN WITH STAR ON MANDREL ASSEMBLY.

- Install and tighten blade bolt securely (45-55 Ft. Lbs. torque).

IMPORTANT: SPECIAL BLADE BOLT HEAT TREATED.

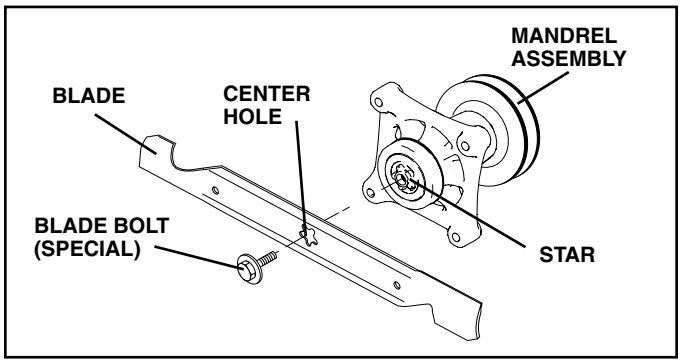

FIG. 12

TO SHARPEN BLADE (See Fig. 13)

NOTE: We do not recommend sharpening blade - but if you do, be sure the blade is balanced.

Care should be taken to keep the blade balanced. An unbalanced blade will cause excessive vibration and eventual damage to mower and engine.

- The blade can be sharpened with a file or on a grinding wheel. Do not attempt to sharpen while on the mower.
- To check blade balance, you will need a 5/8" diameter steel bolt, pin, or a cone balancer. (When using a cone balancer, follow the instructions supplied with balancer.)

NOTE: Do not use a nail for balancing blade. The lobes of the center hole may appear to be centered, but are not.

- Slide blade on to an unthreaded portion of the steel bolt or pin and hold the bolt or pin parallel with the ground. If blade is balanced, it should remain in a horizontal position. If either end of the blade moves downward, sharpen the heavy end until the blade is balanced.

https://truckmanualshub.com/

MAINTENANCE

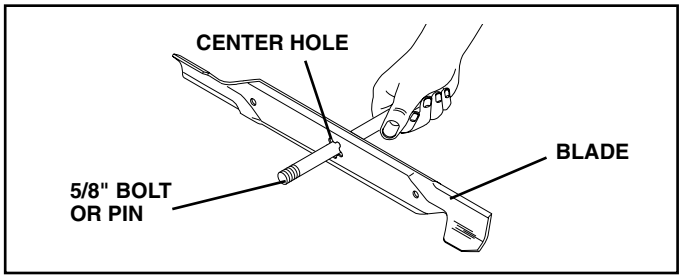

FIG. 13

BATTERY

Your tractor has a battery charging system which is sufficient for normal use. However, periodic charging of the battery with an automotive charger will extend its life.

- Keep battery and terminals clean.
- Keep battery bolts tight.
- Keep small vent holes open.
- Recharge at 6-10 amperes for 1 hour.

NOTE: The original equipment battery on your tractor is maintenance free. Do not attempt to open or remove caps or covers. Adding or checking level of electrolyte is not necessary.

TO CLEAN BATTERY AND TERMINALS

Corrosion and dirt on the battery and terminals can cause the battery to “leak” power.

- Remove terminal guard.
- Disconnect BLACK battery cable first then RED battery cable and remove battery from tractor.
- Rinse the battery with plain water and dry.
- Clean terminals and battery cable ends with wire brush until bright.
- Coat terminals with grease or petroleum jelly.
- Reinstall battery (See “REPLACING BATTERY" in the SERVICE AND ADJUSTMENTS section of this manual).

V-BELTS

Check V-belts for deterioration and wear after 100 hours of operation and replace if necessary. The belts are not adjustable. Replace belts if they begin to slip from wear.

TRANSAXLE COOLING

Keep transaxle free from build-up of dirt and chaff which can restrict cooling.

CHECK TRANSAXLE OIL LEVEL (See Fig. 14)

- Block up rear axle securely.
- Remove left rear wheel by removing hub bolts.
- Remove filler plug from transaxle. Oil level must be even with plug threads. If necessary, fill with SAE 30 motor oil, API SF-SJ. Replace filler plug.
- Reassemble wheel to hub.

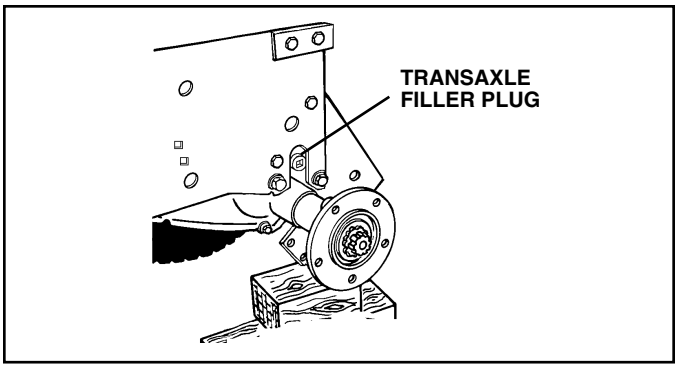

FIG. 14

TRANSAXLE PUMP FLUID

The transaxle was sealed at the factory and fluid maintenance is not required for the life of the transaxle. Should the transaxle ever leak or require servicing, contact your nearest authorized service center/department.

ENGINE

LUBRICATION

Only use high quality detergent oil rated with API service classification SG-SL. Select the oil’s SAE viscosity grade according to your expected operating temperature.

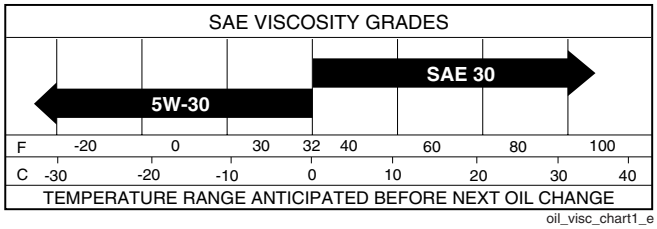

FIG. 15

NOTE: Although multi-viscosity oils (5W30, 10W30 etc.) improve starting in cold weather, they will result in increased oil consumption when used above 32°F. Check your engine oil level more frequently to avoid possible engine damage from running low on oil.

Change the oil after every 50 hours of operation or at least once a year if the tractor is not used for 50 hours in one year.

Check the crankcase oil level before starting the engine and after each eight (8) hours of operation. Tighten oil fill cap/dipstick securely each time you check the oil level.

TO CHANGE ENGINE OIL (See Figs. 15 and 16)

Determine temperature range expected before oil change. All oil must meet API service classification SG-SL.

- Be sure tractor is on level surface.
- Oil will drain more freely when warm.
- Catch oil in a suitable container.
- Remove oil fill cap/dipstick. Be careful not to allow dirt to enter the engine when changing oil.
- Install the drain tube onto the valve.
- Open drain valve by using a 7/16" (11mm) wrench turning counterclockwise.

https://truckmanualshub.com/

MAINTENANCE

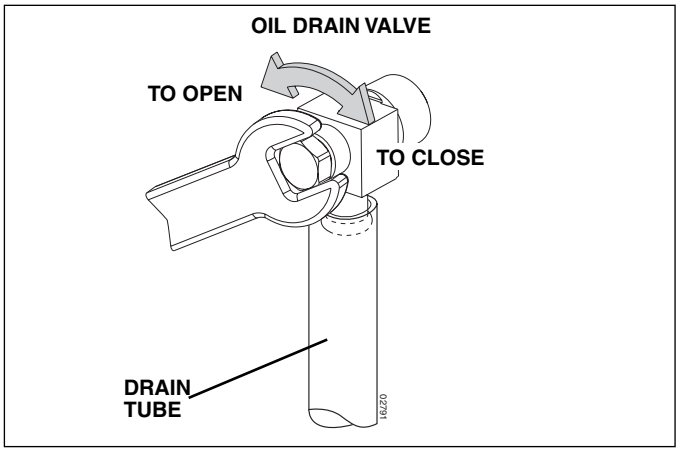

FIG. 16

- After oil has drained completely, close the drain valve turning clockwise. Use the 7/16" (11mm) wrench to apply a small amount of torque to keep it closed. Do not over tighten.
- Remove the drain tube and store in a safe place.
- Refill engine with oil through oil fill dipstick tube. Pour slowly. Do not overfill. For approximate capacity see "PRODUCT SPECIFICATIONS" section of this manual.
- Use gauge on oil fill cap/dipstick for checking level. Be sure dipstick cap is tightened securely for accurate reading. Keep oil at "FULL" line on dipstick. Tighten cap onto the tube securely when finished.

CLEAN AIR INTAKE/COOLING AREAS

To insure proper cooling, make sure the grass screen, cooling fins, and other external surfaces of the engine are kept clean at all times.

Every 100 hours of operation (more often under extremely dusty, dirty conditions), remove the blower housing and other cooling shrouds. Clean the cooling fins and external surfaces as necessary. Make sure the cooling shrouds are reinstalled.

NOTE: Operating the engine with a blocked grass screen, dirty or plugged cooling fins, and/or cooling shrouds removed will cause engine damage due to overheating.

CLEAN AIR SCREEN

Air screen must be kept free of dirt and chaff to prevent engine damage from overheating. Clean with a wire brush or compressed air to remove dirt and stubborn dried gum fibers. See engine manual.

AIR FILTER

Your engine will not run properly using a dirty air filter. Service air cleaner more often under dusty conditions. See engine manual.

ENGINE OIL FILTER

Replace the engine oil filter every season or every other oil change if the tractor is used more than 100 hours in one year. See engine manual.

MUFFLER

Inspect and replace corroded muffler and spark arrester (if equipped) as it could create a fire hazard and/or damage.

SPARK PLUGS

Replace spark plugs at the beginning of each mowing season or after every 100 hours of operation, whichever occurs first. Spark plug type and gap setting are shown in "PRODUCT SPECIFICATIONS" section of this manual.

IN-LINE FUEL FILTER (See Fig. 17)

The fuel filter should be replaced once each season. If fuel filter becomes clogged, obstructing fuel flow to carburetor, replacement is required.

- With engine cool, remove filter and plug fuel line sections.
- Place new fuel filter in position in fuel line with arrow pointing towards carburetor.
- Be sure there are no fuel line leaks and clamps are properly positioned.
- Immediately wipe up any spilled gasoline.

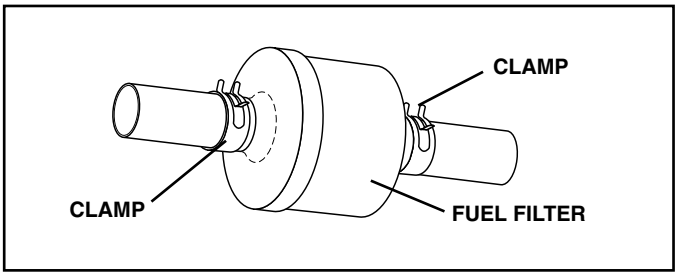

FIG. 17

CLEANING

- Clean engine, battery, seat, finish, etc. of all foreign matter.
- Keep finished surfaces and wheels free of all gasoline, oil, etc.
- Protect painted surfaces with automotive type wax.

We do not recommend using a garden hose or pressure washer to clean your tractor unless the engine and transmission are covered to keep water out. Water in engine or transmission will shorten the useful life of your tractor. Use compressed air or a leaf blower to remove grass, leaves and trash from tractor and mower.

https://truckmanualshub.com/

SERVICE AND ADJUSTMENTS

WARNING: TO AVOID SERIOUS INJURY, BEFORE PERFORMING ANY SERVICE OR ADJUSTMENTS:

- **Depress clutch/brake pedal fully and set parking brake.**
- **Place gearshift lever in neutral (N) position.**
- **Place attachment clutch in "DISENGAGED" position.**
- **Turn ignition key to "STOP" and remove key.**
- **Make sure the blades and all moving parts have completely stopped.**
- **Disconnect spark plug wire from spark plug and place wire where it cannot come in contact with plug.**

TRACTOR

TO REMOVE MOWER (See Fig. 18)

- Place attachment clutch in "DISENGAGED" position.
- Lower attachment lift lever to its lowest position.
- Disengage belt tension rod from lock bracket.

CAUTION: Belt tension rod is spring loaded. Have a tight grip on rod and release slowly.

- Remove mower belt from electric clutch pulley.
- DISCONNECT REAR MOWER PINS - Pull out the spring loaded pin, disconnect suspension arm from pin and release pin.
- Go to other side of mower and disconnect rear pin in the same manner.
- Remove the four retainer springs and two flanged pins from front plate assembly and remove plate.
- Raise attachment lift lever to its highest position.
- Turn tractor steering wheel to the left as far as it will go.
- Slide mower out from under right side of tractor.

TO INSTALL MOWER

Follow procedure described in "INSTALL MOWER AND DRIVE BELT" in the Assembly section of this manual. **NOTE:** You will need to reattach front plate assembly to tractor after sliding mower under the tractor.

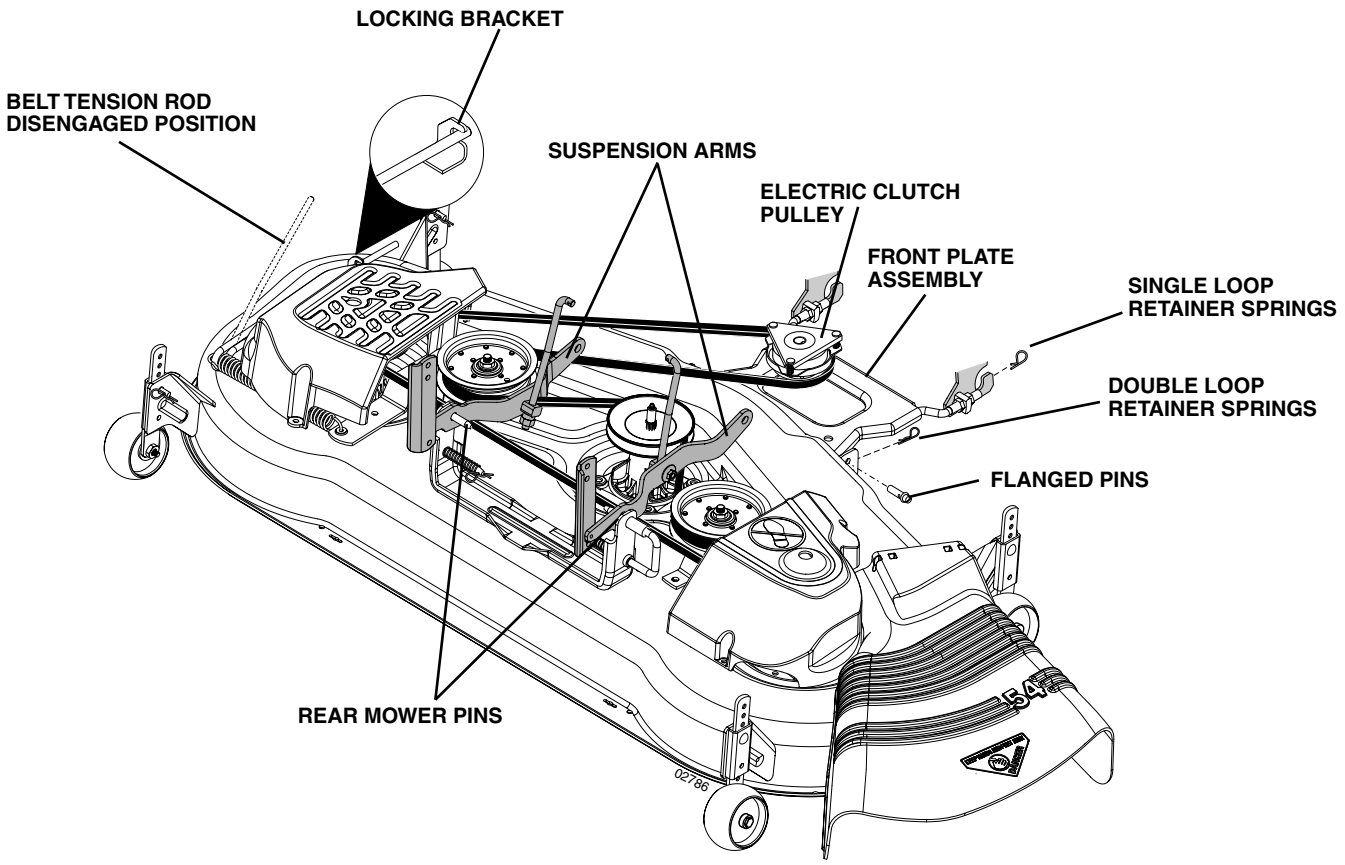

FIG. 18

https://truckmanualshub.com/

SERVICE AND ADJUSTMENTS

TO LEVEL MOWER HOUSING

Adjust the mower while tractor is parked on level ground or driveway. Make sure tires are properly inflated (See "PRODUCT SPECIFICATIONS" section of this manual). If tires are over or underinflated, you will not properly adjust your mower.

SIDE-TO-SIDE ADJUSTMENT (See Figs. 19 and 20)

- Raise mower to its highest position.
- Measure height from bottom edge of mower to ground level at front corners of mower. Distance "A" on both sides of mower should be the same.
- If adjustment is necessary, make adjustment on one side of mower only.
- To raise one side of mower, tighten lift link adjustment nut on that side.
- To lower one side of mower, loosen lift link adjustment nut on that side.

NOTE: Each full turn of adjustment nut will change mower height about 3/16".

- Recheck measurements after adjusting.

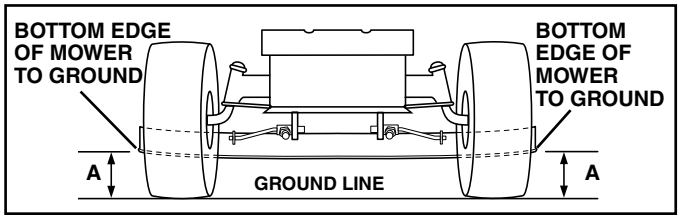

FIG. 19

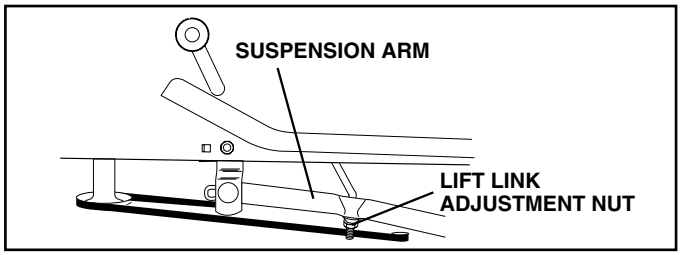

FIG. 20

FRONT-TO-BACK ADJUSTMENT (See Figs. 21 and 22)

IMPORTANT: DECK MUST BE LEVEL SIDE-TO-SIDE. IF THE FOLLOWING FRONT-TO-BACK ADJUSTMENT IS NECESSARY, BE SURE TO ADJUST BOTH FRONT LINKS EQUALLY SO MOWER WILL STAY LEVEL SIDE-TO-SIDE.

To obtain the best cutting results, the mower blades should be adjusted so the front tip is approximately 1/8" to 1/2" lower than the rear tip when the mower is in its highest position.

CAUTION: Blades are sharp. Protect your hands with gloves and/or wrap blade with heavy cloth.

Check adjustment on right side of tractor. Position any blade so the tip is pointing straight forward. Measure distance "B" at front and rear tip of the blade.

- Before making any necessary adjustments, check that both front plate links are equal in length.
- If links are not equal in length, adjust one link to same length as other link.
- To lower front of blade, loosen nut "C" on both front links an equal number of turns.

NOTE: Each full turn of nut "C" will change distance. "B" by approximately 3/16".

- When distance "B" is 1/8" to 1/2" lower at front than rear, tighten nut "D" against trunnion on both front links.
- To raise front of blade, loosen nut "D" from trunnion on both front links. Tighten nut "C" on both front links an equal number of turns. The two front links must remain equal in length.
- When distance "B" is 1/8" to 1/2" lower at front than rear, tighten nut "D" against trunnion on both front links.
- Recheck side-to-side adjustment.

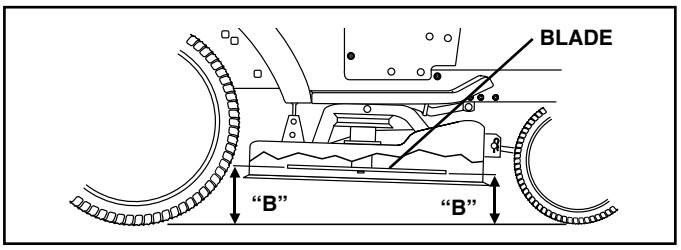

FIG. 21

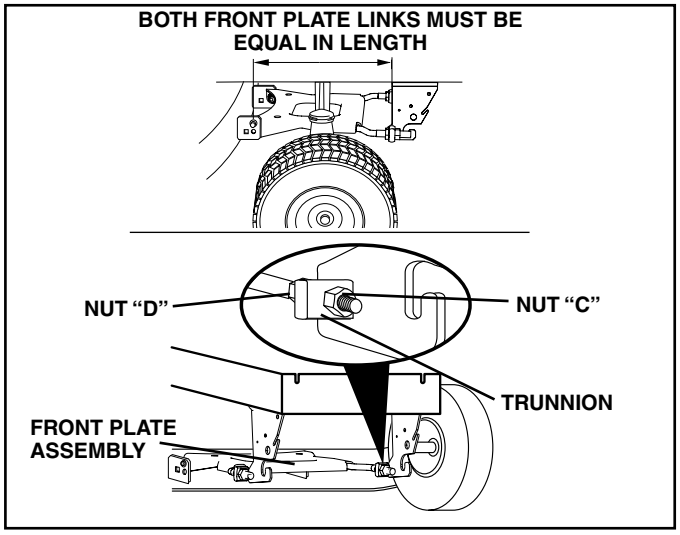

FIG. 22

TO REPLACE MOWER DRIVE BELT (See Fig. 23)

MOWER DRIVE BELT REMOVAL

- Park tractor on a level surface. Engage parking brake.
- Lower attachment lift lever to its lowest position.
- Disengage belt tension rod from lock bracket.

CAUTION: Belt tension rod is spring loaded. Have a firm grip on rod and release slowly.

- Remove screws from R.H. and L.H. mandrel covers and remove covers.
- Remove any dirt or grass clippings which may have accumulated around mandrels and entire upper deck surface.

https://truckmanualshub.com/

- Remove belt from electric clutch pulley, both mandrel pulleys and all idler pulleys.

MOWER DRIVE BELT INSTALLATION

- Install belt around both mandrel pulleys and around idler pulleys as shown.
- Install belt onto electric clutch pulley.

IMPORTANT: CHECK BELT FOR PROPER ROUTING IN ALL MOWER PULLEY GROOVES.

- Reassemble R.H. and L.H. mandrel covers. Securely tighten all screws.
- Engage belt tension rod on locking bracket.

CAUTION: Belt tension rod is spring loaded. Have a tight grip on rod and engage slowly.

- Raise attachment lift lever to highest position.

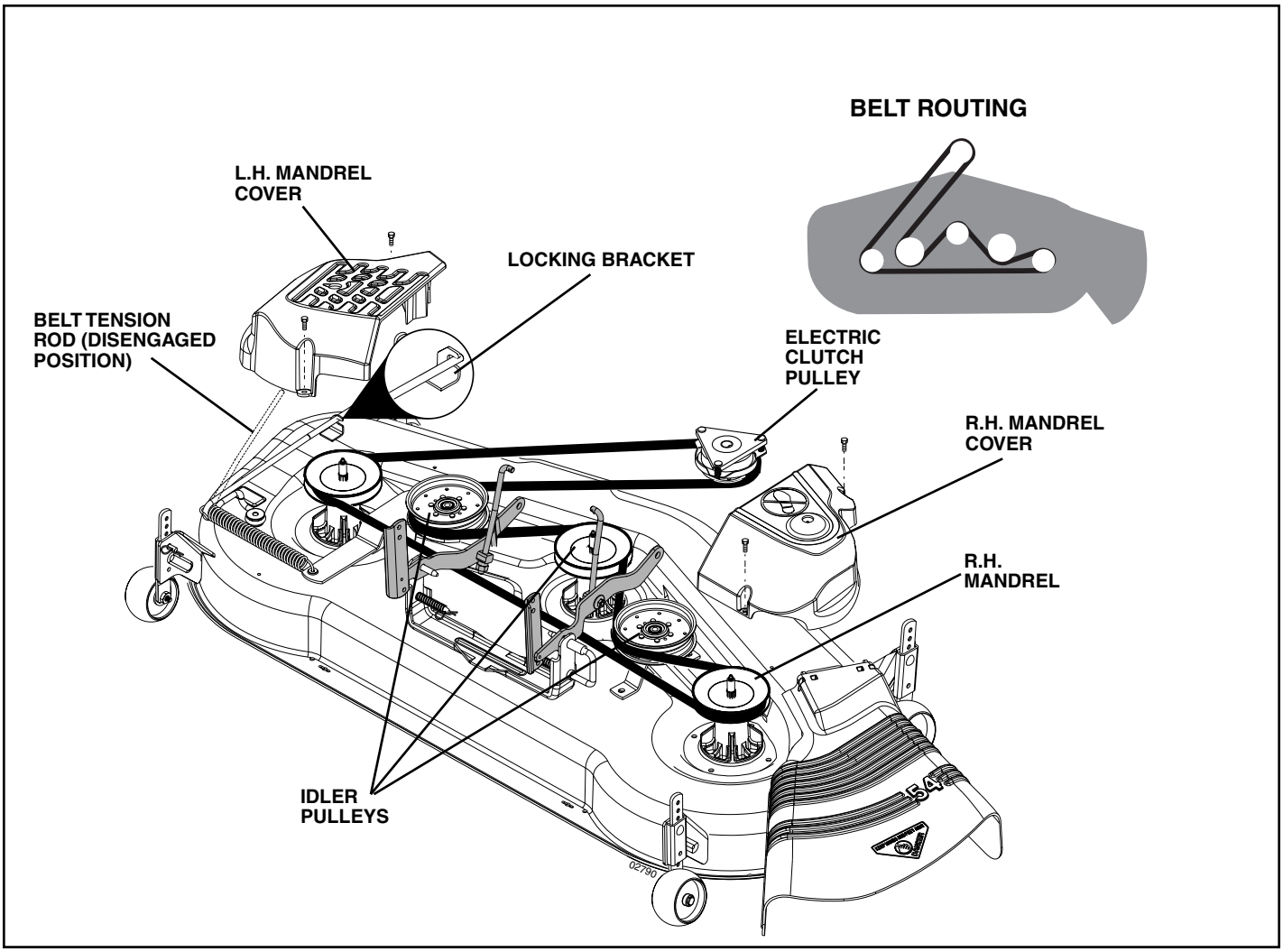

FIG. 23

TO ADJUST ATTACHMENT CLUTCH (See Fig. 24)

The electric clutch should provide years of service. The clutch has a built-in brake that stops the pulley within 5 seconds. Eventually, the internal brake will wear which may cause the mower blades to not engage, or, to not stop as required. Adjustments should be made by your nearest authorized service center/department.

- Make sure attachment clutch and ignition switches are in “OFF” position.
- Adjust the three nylon locknuts until space between clutch plate and rotor measures .012" at all three slot locations cut in side of brake plate.

NOTE: After installing a new electric clutch, run tractor at full throttle and engage and disengage electric clutch 10 cycles to wear in clutch plate.

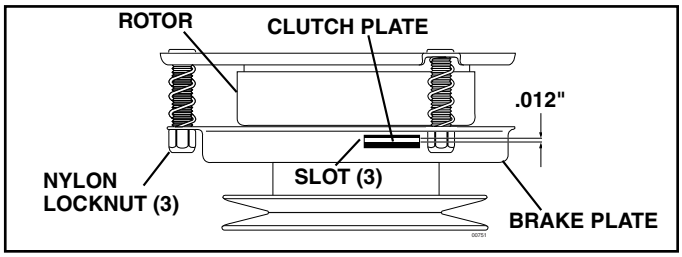

FIG. 24

https://truckmanualshub.com/

SERVICE AND ADJUSTMENTS

TO CHECK AND ADJUST BRAKE (See Fig. 25)

Your tractor is equipped with an adjustable brake system which is mounted on the right side of the transaxle.

If tractor requires more than five (5) feet to stop at highest speed in highest gear on a level, dry concrete or paved surface, then brake must be checked and adjusted.

TO CHECK BRAKE

- Park tractor on a level, dry concrete or paved surface, depress clutch/brake pedal all the way down and engage parking brake.
- Place gear shift lever in neutral (N) position.

The rear wheels must lock and skid when you try to manually push the tractor forward. If the rear wheels rotate, the brake needs to be adjusted or the pads need to be replaced.

TO ADJUST BRAKE

- Depress clutch/brake pedal all the way down and engage parking brake.
- Measure distance between brake operating arm and nut “A” on brake rod.
- If distance is other than 1-3/4", loosen jam nut and turn nut “A” until distance becomes 1-3/4". Retighten jam nut against nut “A”.
- Road test tractor for proper stopping distance as stated above. Readjust if necessary. If stopping distance is still greater than five (5) feet in highest gear, further maintenance is necessary. Replace brake pads or contact a qualified service center.

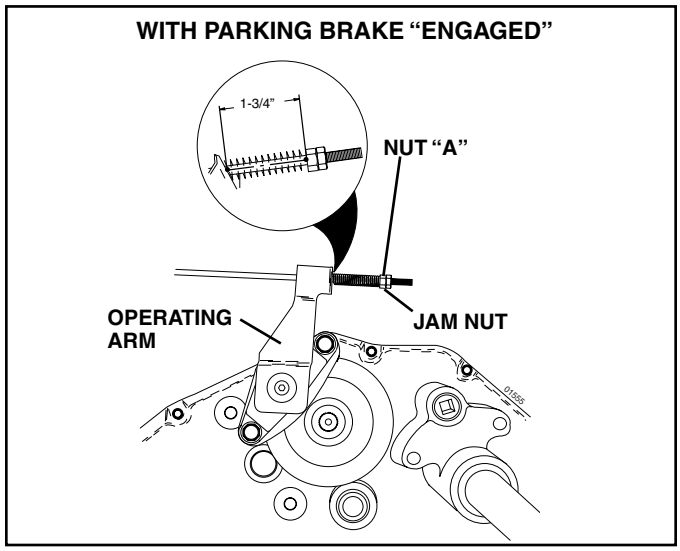

FIG. 25

TO REPLACE MOTION DRIVE BELT (See Fig. 26)

Park the tractor on level surface. Engage parking brake. For ease of service there is a belt installation guide decal on bottom of left footrest. It is not necessary to remove mower.

BELT REMOVAL -

- Engage parking brake (creates slack in belt).
- Remove mower drive belt from electric clutch pulley only (See “TO REPLACE MOWER DRIVE BELT” in this section of this manual).
- Roll motion drive belt off transaxle pulley.
- Roll belt off clutching idler pulleys, then off engine pulley and front V-idler pulley.
- Pull belt out of all belt keepers.

BELT INSTALLATION -

- Place V part of belt into grooves on engine pulley and front V-idler, making sure to route belt inside of belt keepers.
- Put belt coming from V-idler above midspan belt keeper, then onto clutching idler pulleys as shown.
- Make sure V part of belt engages V-idler.
- Place belt around transaxle pulley, beginning at top. V part of belt should engage transaxle pulley.
- Place long lower section of belt through loop in midspan belt keeper.
- Check to be sure belt is on proper side of all belt keepers.
- Reinstall mower drive belt onto electric clutch pulley.

IMPORTANT: CHECK BRAKE ADJUSTMENT.

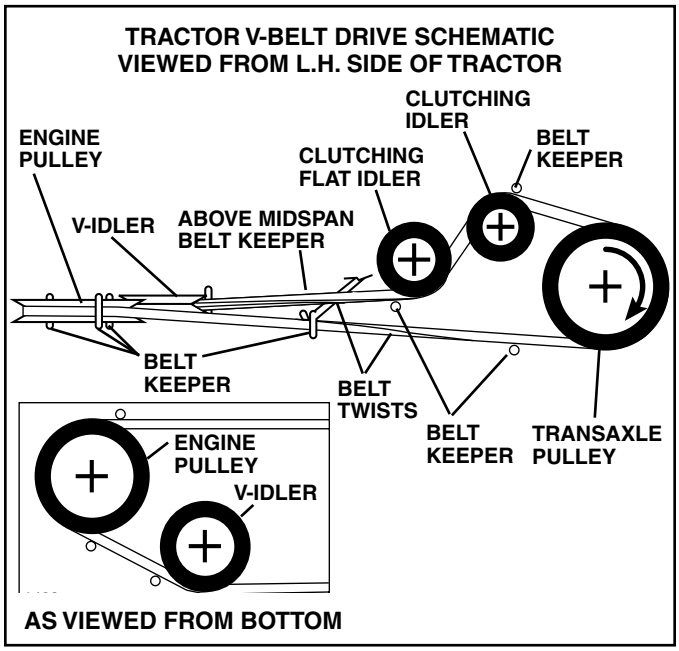

FIG. 26

TO ADJUST STEERING WHEEL ALIGNMENT

If steering wheel crossbars are not horizontal (left to right) when wheels are positioned straight forward, remove steering wheel and reassemble per instructions in the Assembly section of this manual.

FRONT WHEEL TOE-IN/CAMBER

The front wheel toe-in and camber are not adjustable on your tractor. If damage has occurred to affect the front wheel toe-in or camber, contact your nearest authorized service center/department.

https://truckmanualshub.com/

TO REMOVE WHEEL FOR REPAIRS

FRONT WHEEL (See Fig. 27)

- Block up axle securely.
- Remove axle cover, retaining ring and washers to allow wheel removal.
- Repair tire and reassemble.
- Replace washers and snap retaining ring securely in axle groove.
- Replace axle cover.

REAR WHEEL -

- Block rear axle securely.
- Remove five (5) hub bolts to allow wheel removal.
- Repair tire and reassemble. Replace and tighten hub bolts securely.

NOTE: To seal tire punctures and prevent flat tires due to slow leaks, tire sealant may be purchased from your local parts dealer. Tire sealant also prevents tire dry rot and corrosion.

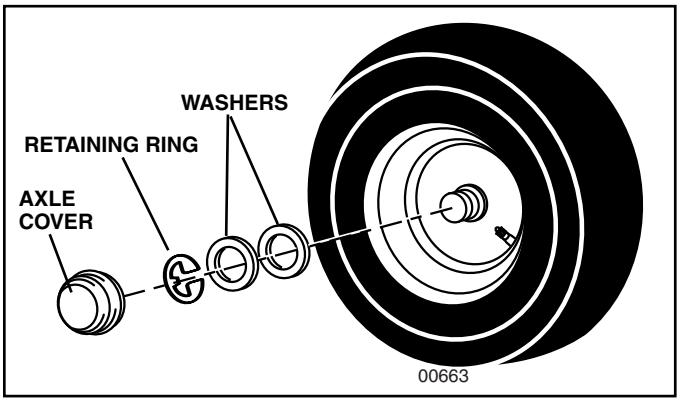

FIG. 27

TO START ENGINE WITH A WEAK BATTERY (See Fig. 28)

WARNING: **Lead-acid batteries generate explosive gases. Keep sparks, flame and smoking materials away from batteries. Always wear eye protection when around batteries.**

If your battery is too weak to start the engine, it should be recharged. (See "BATTERY" in the Maintenance section of this manual).

If “jumper cables” are used for emergency starting, follow this procedure:

IMPORTANT: YOUR TRACTOR IS EQUIPPED WITH A 12 VOLT SYSTEM. THE OTHER VEHICLE MUST ALSO BE A 12 VOLT SYSTEM. DO NOT USE YOUR TRACTOR BATTERY TO START OTHER VEHICLES.

TO ATTACH JUMPER CABLES -

- Connect one end of the RED cable to the POSITIVE (+) terminal of each battery(A-B), taking care not to short against tractor chassis.
- Connect one end of the BLACK cable to the NEGATIVE (-) terminal (C) of fully charged battery.
- Connect the other end of the BLACK cable (D) to good chassis ground, away from fuel tank and battery.

TO REMOVE CABLES, REVERSE ORDER -

- BLACK cable first from chassis and then from the fully charged battery.
- RED cable last from both batteries.

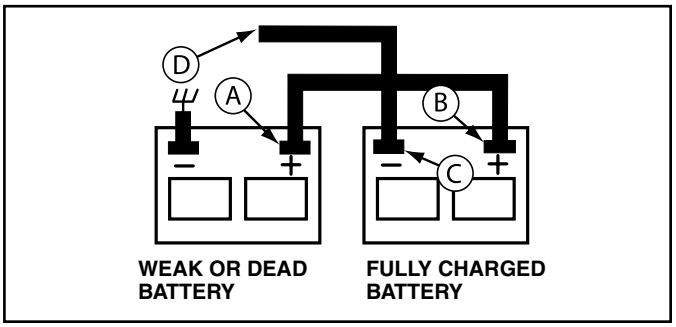

FIG. 28

REPLACING BATTERY (See Fig. 29)

WARNING: Do not short battery terminals by allowing a wrench or any other object to contact both terminals at the same time. Before connecting battery, remove metal bracelets, wristwatch bands, rings, etc. Positive terminal must be connected first to prevent sparking from accidental grounding.

- Lift hood to raised position.
- Remove terminal guard.
- Disconnect BLACK battery cable then RED battery cable and carefully remove battery from tractor.
- Install new battery with terminals in same position as old battery.
- Reinstall terminal guard.
- First connect RED battery cable to positive (+) battery terminal with hex bolt and keps nut as shown. Tighten securely.
- Connect BLACK grounding cable to negative (-) battery terminal with remaining hex bolt and keps nut. Tighten securely
- Close terminal access doors.
- Close hood.

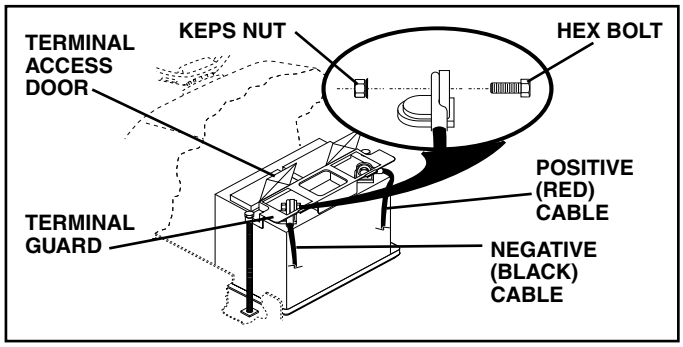

FIG. 29

https://truckmanualshub.com/

TO REPLACE HEADLIGHT BULB

- Raise hood.
- Pull bulb holder out of the hole in the backside of the grill.
- Replace bulb in holder and push bulb holder securely back into the hole in the backside of the grill.
- Close hood.

INTERLOCKS AND RELAYS

Loose or damaged wiring may cause your tractor to run poorly, stop running, or prevent it from starting.

- Check wiring. See electrical wiring diagram in the Repair Parts section of this manual.

TO REPLACE FUSE

Replace with 30 amp automotive-type plug-in fuse. The fuse holder is located behind the dash.

TO REMOVE HOOD AND GRILL ASSEMBLY (See Fig. 30)

- Raise hood.
- Unsnap headlight wire connector.
- Stand in front of tractor. Grasp hood at sides, tilt toward engine and lift off of tractor.
- To replace, reverse above procedure.

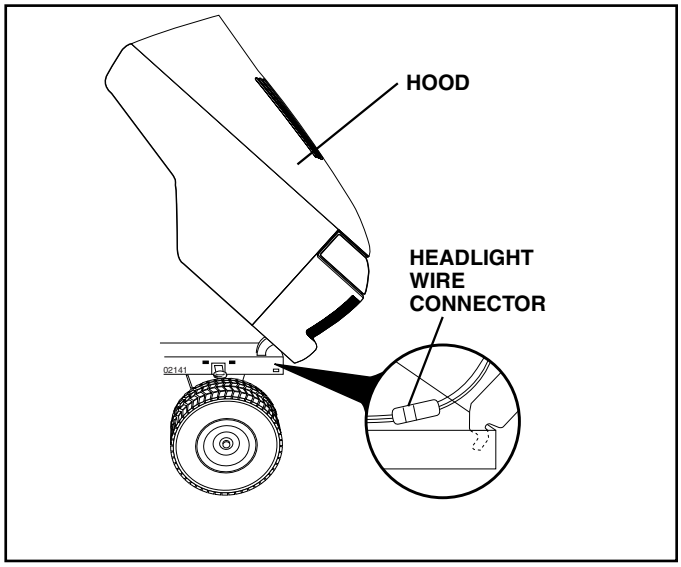

FIG. 30

ENGINE

TO ADJUST THROTTLE CONTROL CABLE

The throttle control has been preset at the factory and adjustment should not be necessary. If adjustment is necessary, see engine manual.

TO ADJUST CHOKE CONTROL

The choke control has been preset at the factory and adjustment should not be necessary. If adjustment is necessary, see engne manual.

TO ADJUST CARBURETOR

Your carburetor is not adjustable. If your engine does not operate properly due to suspected carburetor problems, take your tractor to an authorized service center for repair and/or adjustment.

https://truckmanualshub.com/

STORAGE

Immediately prepare your tractor for storage at the end of the season or if the tractor will not be used for 30 days or more.

WARNING: Never store the tractor with gasoline in the tank inside a building where fumes may reach an open flame or spark. Allow the engine to cool before storing in any enclosure.

TRACTOR

Remove mower from tractor for winter storage. When mower is to be stored for a period of time, clean it thoroughly, remove all dirt, grease, leaves, etc. Store in a clean, dry area.

- Clean entire tractor (See "CLEANING" in the Maintenance section of this manual).
- Inspect and replace belts, if necessary (See belt replacement instructions in the Service and Adjustments section of this manual).
- Lubricate as shown in the Maintenance section of this manual.
- Be sure that all nuts, bolts and screws are securely fastened. Inspect moving parts for damage, breakage and wear. Replace if necessary.
- Touch up all rusted or chipped paint surfaces; sand lightly before painting.

BATTERY

- Fully charge the battery for storage.
- After a period of time in storage, battery may require recharging.
- To help prevent corrosion and power leakage during long periods of storage, battery cables should be disconnected and battery cleaned thoroughly (see "TO CLEAN BATTERY AND TERMINALS" in the Maintenance section of this manual).
- After cleaning, leave cables disconnected and place cables where they cannot come in contact with battery terminals.
- If battery is removed from tractor for storage, do not store battery directly on concrete or damp surfaces.

ENGINE

FUEL SYSTEM

IMPORTANT: IT IS IMPORTANT TO PREVENT GUM DEPOSITS FROM FORMING IN ESSENTIAL FUEL SYSTEM PARTS SUCH AS CARBURETOR, FUEL FILTER, FUEL HOSE, OR TANK DURING STORAGE. ALSO, EXPERIENCE INDICATES THAT ALCOHOL BLENDED FUELS (CALLED GASOHOL OR USING ETHANOL OR METHANOL) CAN ATTRACT MOISTURE WHICH LEADS TO SEPARATION AND FORMATION OF ACIDS DURING STORAGE. ACIDIC GAS CAN DAMAGE THE FUEL SYSTEM OF AN ENGINE WHILE IN STORAGE.

- Empty the fuel tank by starting the engine and let it run until the fuel lines and carburetor are empty.
- Never use engine or carburetor cleaner products in the fuel tank or permanent damage may occur.
- Use fresh fuel next season.

NOTE: Fuel stabilizer is an acceptable alternative in minimizing the formation of fuel gum deposits during storage. Add stabilizer to gasoline in fuel tank or storage container. Always follow the mix ratio found on stabilizer container. Run engine at least 10 minutes after adding stabilizer to allow the stabilizer to reach the carburetor. Do not empty the gas tank and carburetor if using fuel stabilizer.

ENGINE OIL

Drain oil (with engine warm) and replace with clean engine oil. (See "ENGINE" in the Maintenance section of this manual).

CYLINDER(S)

- Remove spark plug(s).
- Pour one ounce of oil through spark plug hole(s) into cylinder(s).
- Turn ignition key to "START" position for a few seconds to distribute oil.
- Replace with new spark plug(s).

OTHER

- Do not store gasoline from one season to another.
- Replace your gasoline can if your can starts to rust. Rust and/or dirt in your gasoline will cause problems.
- If possible, store your tractor indoors and cover it to give protection from dust and dirt.
- Cover your tractor with a suitable protective cover that does not retain moisture. Do not use plastic. Plastic cannot breathe which allows condensation to form and will cause your tractor to rust.

IMPORTANT: NEVER COVER TRACTOR WHILE ENGINE AND EXHAUST AREAS ARE STILL WARM.

https://truckmanualshub.com/

TROUBLESHOOTING POINTS

PROBLEM	CAUSE	CORRECTION
Will not start	1. Out of fuel. 2. Engine not “CHOKED” properly. 3. Engine flooded. 4. Bad spark plug. 5. Dirty air filter. 6. Dirty fuel filter. 7. Water in fuel. 8. Loose or damaged wiring. 9. Carburetor out of adjustment. 10. Engine valves out of adjustment.	1. Fill fuel tank. 2. See “TO START ENGINE” in Operation section. 3. Wait several minutes before attempting to start. 4. Replace spark plug. 5. Clean/replace air filter. 6. Replace fuel filter. 7. Empty fuel tank and carburetor, refill tank with fresh gasoline and replace fuel filter. 8. Check all wiring. 9. See “To Adjust Carburetor” in Service Adjustments section. 10. Contact an authorized service center/department.
Hard to start	1. Dirty air filter. 2. Bad spark plug. 3. Weak or dead battery. 4. Dirty fuel filter. 5. Stale or dirty fuel. 6. Loose or damaged wiring. 7. Carburetor out of adjustment. 8. Engine valves out of adjustment.	1. Clean/replace air filter. 2. Replace spark plug. 3. Recharge or replace battery. 4. Replace fuel filter. 5. Empty fuel tank and refill tank with fresh, clean gasoline. 6. Check all wiring. 7. See “To Adjust Carburetor” in Service Adjustments section. 8. Contact an authorized service center/department.
Engine will not turn over	1. Clutch/brake pedal not depressed. 2. Attachment clutch is engaged. 3. Weak or dead battery. 4. Blown fuse. 5. Corroded battery terminals. 6. Loose or damaged wiring. 7. Faulty ignition switch. 8. Faulty solenoid or starter. 9. Faulty operator presence switch(es).	1. Depress clutch/brake pedal. 2. Disengage attachment clutch. 3. Recharge or replace battery. 4. Replace fuse. 5. Clean battery terminals. 6. Check all wiring. 7. Check/replace ignition switch. 8. Check/replace solenoid or starter. 9. Contact an authorized service center/department.
Engine clicks but will not start	1. Weak or dead battery. 2. Corroded battery terminals. 3. Loose or damaged wiring. 4. Faulty solenoid or starter.	1. Recharge or replace battery. 2. Clean battery terminals. 3. Check all wiring. 4. Check/replace solenoid or starter.
Loss of power	1. Cutting too much grass/too fast. 2. Throttle in “CHOKE” position. 3. Build-up of grass, leaves and trash under mower. 4. Dirty air filter. 5. Low oil level/dirty oil. 6. Faulty spark plug. 7. Dirty fuel filter. 8. Stale or dirty fuel. 9. Water in fuel. 10. Spark plug wire loose. 11. Dirty engine air screen/fins. 12. Dirty/clogged muffler. 13. Loose or damaged wiring. 14. Carburetor out of adjustment. 15. Engine valves out of adjustment.	1. Raise cutting height/reduce speed. 2. Adjust throttle control. 3. Clean underside of mower housing. 4. Clean/replace air filter. 5. Check oil level/change oil. 6. Clean and regap or change spark plug. 7. Replace fuel filter. 8. Empty fuel tank and refill tank with fresh, clean gasoline. 9. Empty fuel tank and carburetor, refill tank with fresh gasoline and replace fuel filter. 10. Connect and tighten spark plug wire. 11. Clean engine air screen/fins. 12. Clean/replace muffler. 13. Check all wiring. 14. See “To Adjust Carburetor” in Service Adjustments section. 15. Contact an authorized service center/department.
Excessive vibration	1. Worn, bent or loose blade. 2. Bent blade mandrel. 3. Loose/damaged part(s).	1. Replace blade. Tighten blade bolt. 2. Replace blade mandrel. 3. Tighten loose part(s). Replace damaged parts.

https://truckmanualshub.com/

TROUBLESHOOTING POINTS

PROBLEM	CAUSE	CORRECTION
Engine dies when tractor is shifted into reverse	1. Reverse operation system (ROS) is not "ON" while mower or other attachment is engaged.	1. Turn ignition key to ROS "ON" position. See Operation section.
Engine continues to run when operator leaves seat with attachment clutch engaged	1. Faulty operator-safety presence control system.	1. Check wiring, switches and connections. If not corrected, contact an authorized service center/ department.
Poor cut - uneven	1. Worn, bent or loose blade. 2. Mower deck not level. 3. Buildup of grass, leaves, and trash under mower. 4. Bent blade mandrel. 5. Clogged mower deck vent holes from buildup of grass, leaves, and trash around mandrels.	1. Replace blade. Tighten blade bolt. 2. Level mower deck. 3. Clean underside of mower housing. 4. Replace blade mandrel. 5. Clean around mandrels to open vent holes.
Mower blades will not rotate	1. Obstruction in clutch mechanism. 2. Worn/damaged mower drive belt. 3. Frozen idler pulley. 4. Frozen blade mandrel.	1. Remove obstruction. 2. Replace mower drive belt. 3. Replace idler pulley. 4. Replace blade mandrel.
Poor grass discharge	1. Engine speed too slow. 2. Travel speed too fast. 3. Wet grass. 4. Mower deck not level. 5. Low/uneven tire air pressure. 6. Worn, bent or loose blade. 7. Buildup of grass, leaves and trash under mower. 8. Mower drive belt worn. 9. Blades improperly installed. 10. Improper blades used. 11. Clogged mower deck vent holes from buildup of grass, leaves, and trash around mandrels.	1. Place throttle control in “FAST” position. 2. Shift to slower speed. 3. Allow grass to dry before mowing. 4. Level mower deck. 5. Check tires for proper air pressure. 6. Replace/sharpen blade. Tighten blade bolt. 7. Clean underside of mower housing. 8. Replace mower drive belt. 9. Reinstall blades sharp edge down. 10. Replace with blades listed in this manual. 11. Clean around mandrels to open vent holes.
Headlight(s) not working (if so equipped)	1. Light switch is “OFF”. 2. Bulb(s) or lamp(s) burned out. 3. Faulty light switch. 4. Loose or damaged wiring. 5. Blown fuse.	1. Turn light switch “ON”. 2. Replace bulb(s) or lamp(s). 3. Check/replace light switch. 4. Check wiring and connections. 5. Replace fuse.
Battery will not charge	1. Bad battery cell(s). 2. Poor cable connections. 3. Faulty regulator (if so equipped). 4. Faulty alternator.	1. Replace battery. 2. Check/clean all connections. 3. Replace regulator. 4. Replace alternator.
Engine “backfires” when turning engine “OFF”	1. Engine throttle control not set between half and full speed (fast) position before stopping engine.	1. Move throttle control between half and full speed (fast) position before stopping engine.

https://truckmanualshub.com/

TRACTOR - - MODEL NO. GT2254 (96025000201), PRODUCT NO. 960 25 00-02

SCHEMATIC

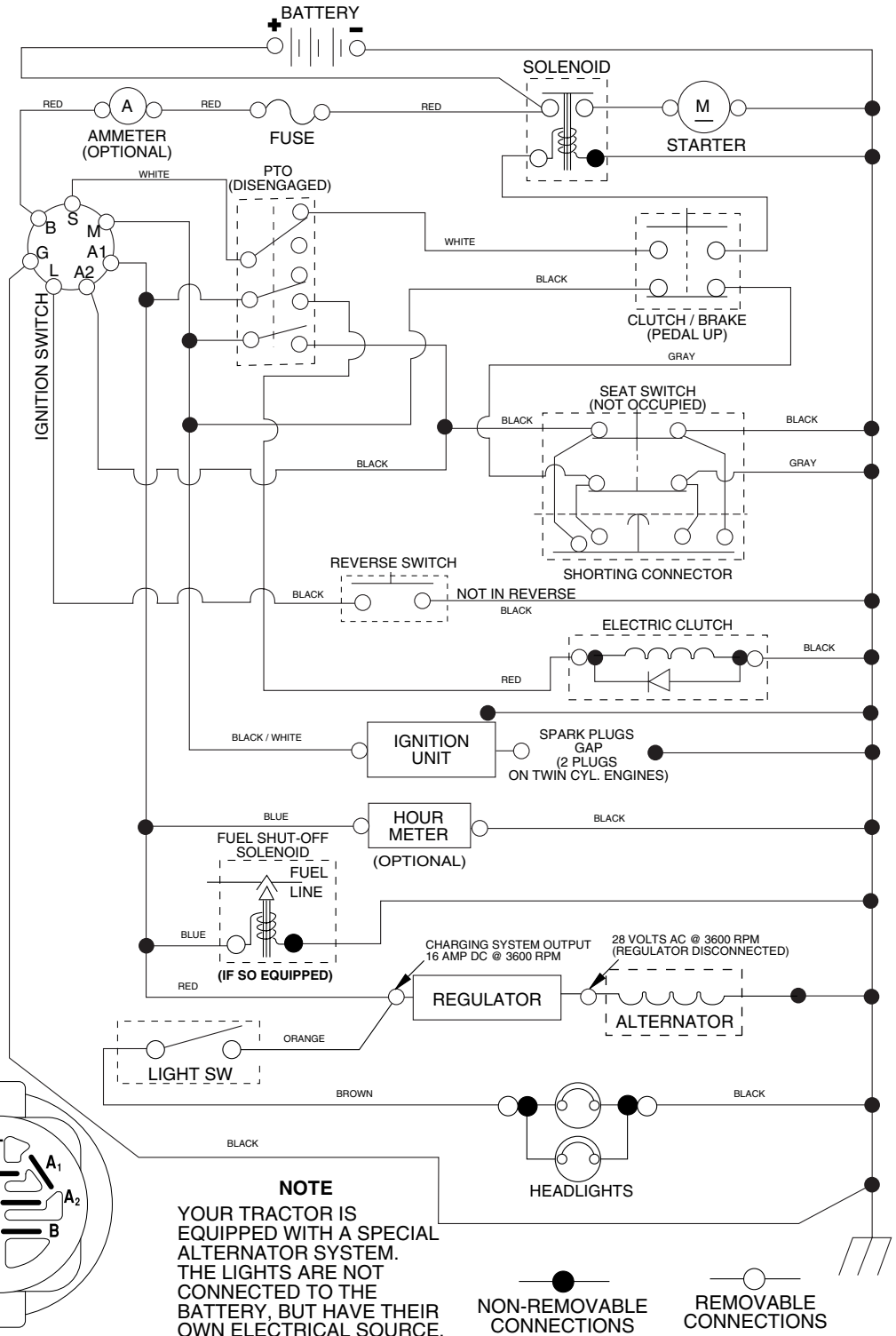

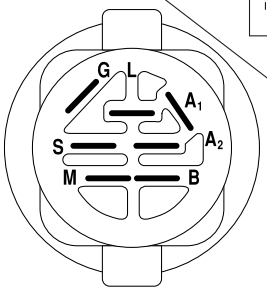

IGNITION SWITCH

POSITION	CIRCUIT	"MAKE"
OFF	M+G+A1	
RUN/OVERRIDE	B+A1	
RUN	B+A1	L+A2
START	B + S + A1	

02832

NOTE

YOUR TRACTOR IS EQUIPPED WITH A SPECIAL ALTERNATOR SYSTEM. THE LIGHTS ARE NOT CONNECTED TO THE BATTERY, BUT HAVE THEIR OWN ELECTRICAL SOURCE. BECAUSE OF THIS, THE BRIGHTNESS OF THE LIGHTS WILL CHANGE WITH ENGINE SPEED. AT IDLE THE LIGHTS WILL DIM. AS THE ENGINE IS SPEEDED UP, THE LIGHTS WILL BECOME THEIR BRIGHTEST.

WIRING INSULATED CLIPS

NOTE: IF WIRING INSULATED CLIPS WERE REMOVED FOR SERVICING OF UNIT, THEY SHOULD BE REPLACED TO PROPERLY SECURE YOUR WIRING.

https://truckmanualshub.com/

REPAIR PARTS

TRACTOR - - MODEL NO. GT2254 (96025000201), PRODUCT NO. 960 25 00-02

ELECTRICAL

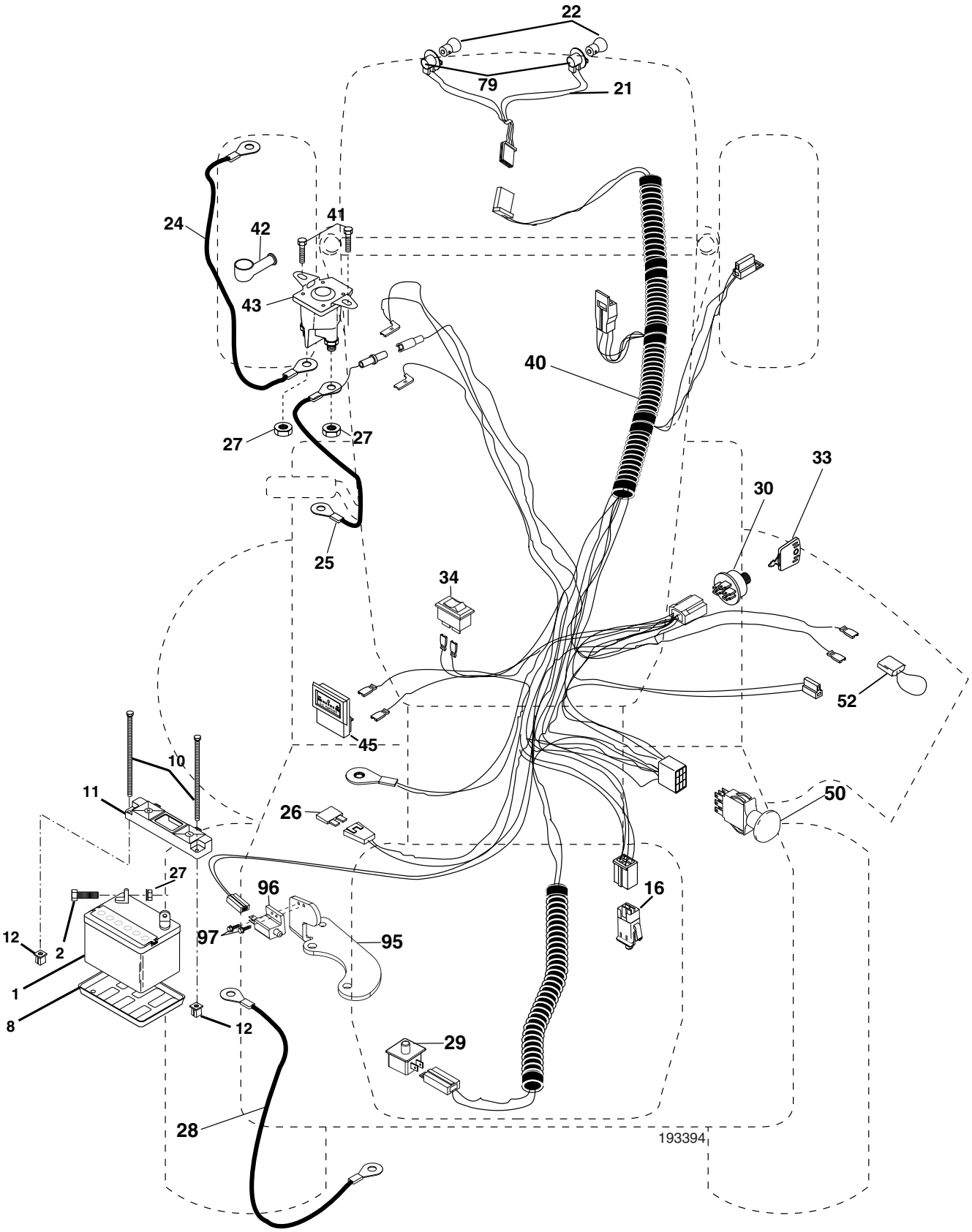

https://truckmanualshub.com/

REPAIR PARTS

TRACTOR - - MODEL NO. GT2254 (96025000201), PRODUCT NO. 960 25 00-02

ELECTRICAL

KEY NO.	PART NO.	DESCRIPTION
1	532 14 49-27	Battery
2	874 76 04-12	Bolt Hex Head 1/4-20 x 3/4
8	532 12 48-86	Tray, Battery
10	532 14 52-11	Bolt, Battery Front 1/4-20 x 7.5 Zinc
11	532 15 01-09	Holddown Battery Front Mount
12	532 14 57-69	Nut, Push Nylon 1.4" Battery Front
16	532 17 61-38	Switch Interlock
21	532 17 56-88	Harness Socket Light w/4152J
22	532 00 41-52	Bulb Light
24	532 18 54-64	Cable Starter
25	532 14 61-49	Cable, Battery
26	532 10 88-24	Fuse
27	873 51 04-00	Nut Keps Hex 1/4-20
28	532 17 06-97	Cable, Ground
29	532 19 27-49	Switch, Plunger
30	532 19 33-50	Switch, Ign
33	532 14 04-01	Key
34	532 11 07-12	Switch Light/Reset
40	532 19 33-94	Harness Ign.
41	817 72 04-08	Screw Thd Cut 1/4-20 x 1/2
42	532 13 15-63	Cover, Terminal Red
43	532 17 88-61	Solenoid
45	532 12 28-22	Ammeter
50	532 19 61-12	Switch, PTO
52	532 14 19-40	Protection Wire Loop
79	532 17 52-42	Bulbholder Asm
95	532 19 36-66	Bracket ROS
96	532 10 44-45	Switch Intek
97	532 15 29-27	Screw

NOTE: All component dimensions given in U.S. inches
1 inch = 25.4 mm

https://truckmanualshub.com/

REPAIR PARTS

TRACTOR - - MODEL NO. GT2254 (96025000201), PRODUCT NO. 960 25 00-02

CHASSIS AND ENCLOSURES

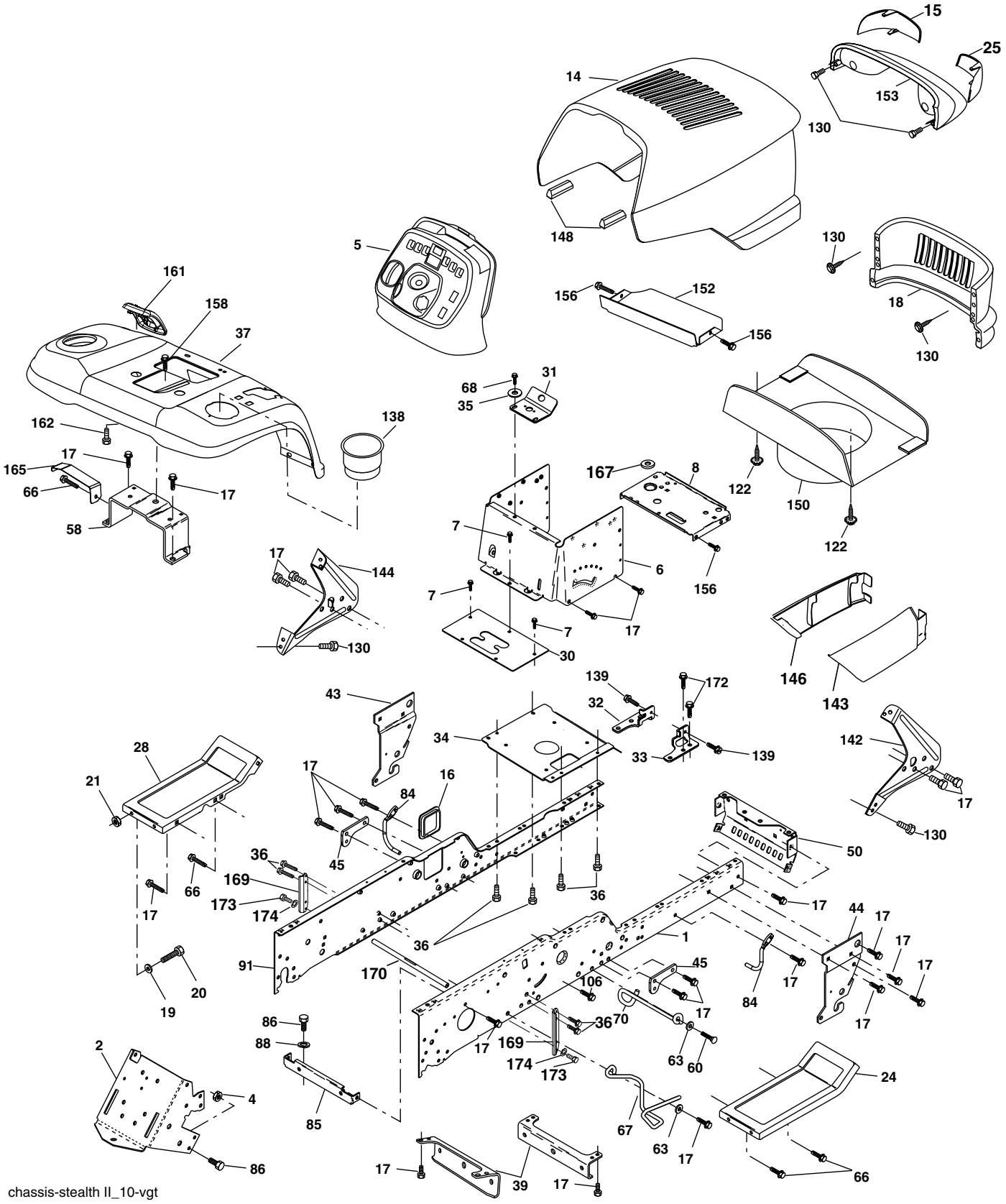

https://truckmanualshub.com/

REPAIR PARTS

TRACTOR - - MODEL NO. GT2254 (96025000201), PRODUCT NO. 960 25 00-02

CHASSIS AND ENCLOSURES

KEY NO.	PART NO.	DESCRIPTION
1	532 18 03-75	Rail, Frame RH
2	532 17 52-82	Drawbar, Gt
4	873 68 07-00	Nut, Crownlock Hex 7/16-14 unc
5	532 19 61-37	Dash
6	53215 78-82	Dash, Lower Vgt One Piece
7	817 72 04-08	Screw, Thd Cut 1/4-20 x 1/2
8	532 18 46-68	Support, Battery
14	532 19 00-55	Hood Asm
15	532 16 18-41	Lens LH
16	532 12 17-94	Cover, Access
17	817 00 06-12	Screw 3/8-16 x 3/4 Zc
18	532 18 28-73	Grille
19	819 13 13-12	Washer 13/32 x 13/16 x 12 Ga.
20	874 78 06-16	Bolt Fin Hex 3/8-16 x 1 Gr. 5
21	873 80 06-00	Nut Lock 3/8-16 unc
24	532 18 10-58	Footrest, RH
25	532 16 18-42	Lens RH
28	532 18 10-57	Footrest, LH
30	532 14 84-11	Saddle, Slkscr Vgt
31	532 16 14-19	Bracket Support 1-pc
32	532 16 13-27	Bracket, Pivot Chassis Lh
33	532 16 13-26	Bracket, Pivot Chassis Rh
34	532 17 70-18	Plate Asm Engine Chassis
35	819 11 11-16	Washer 11/32 x11/16 x 16 Ga.
36	817 06 05-12	Screw 5/16-18 x 3/4
37	532 19 48-68	Fender
39	532 17 52-78	Bracket, Axle Front
43	532 13 69-39	Bracket, Spnsn Front Lh
44	532 13 69-40	Bracket, Spnsn Front Rh
45	532 18 72-70	Bracket Chassis
50	532 17 54-76	Bracket, Chassis Front
58	532 18 35-69	Bracket Fender
60	817 06 06-20	Screw 3/8-16 x 1-1/4
63	819 13 16-14	Washer 13/32 x 1 x 14 Ga.
66	817 49 06-08	Screw 3/8-16 x 1/2
67	532 15 69-73	Guide, Belt Gear Drive
68	817 49 05-08	Screw Thdrol. 5/16-18 x 1/2
70	532 18 85-78	Guide, Belt
84	532 18 81-64	Up Stop
85	532 19 39-23	Bracket, Support Transaxle
86	874 78 07-16	Bolt Fin Hex 7/16-14 unc x 1
88	810 04 07-00	Washer, Lock Hvy Hlcl Spr 7/16
91	532 18 03-74	Rail, Frame Lh
106	817 58 05-20	Screw Thdrol 5/16-18 x 1.25
122	532 19 25-12	Screw Wshd Hex 10-32 x 5/8
130	532 19 16-11	Screw 10 x 3/4 Single Lead-Hex
137	874 78 07-16	Bolt Fin Hex 7/16-14 x1 Gr. 5
138	532 19 48-69	Cupholder YTGT
139	532 17 18-73	Bolt Shoulder 5/16-18 TT
142	532 16 18-97	Bracket Dash Rh
143	532 17 75-86	Skirt Grille RH
144	532 16 19-00	Bracket Dash Lh
146	532 17 75-87	Skirt Grille LH
148	532 16 46-55	Extrusion Bumper
150	532 19 03-09	Duct Heat Hood
152	532 17 79-56	Shield Browning
153	532 18 82-12	Light Box Asm w/Lens
156	817 00 05-12	Screw 5/16-18 x 3/4. Blk
158	817 67 06-08	Screw Thdrol. 3/8-16 x 1/2
161	532 18 17-87	Console Fuel Window
162	532 14 24-32	Screw Hex Wsh Hi-Lo 1/4-1/2
165	532 18 35-54	Bracket Support Tank
169	532 18 85-98	Bracket Chassis Sway
170	532 19 46-67	Rod Bracket Sway Brace
171	532 18 46-72	Bushing Snap
172	817 12 06-14	Screw 3/8-16 x .875
173	874 78 05-12	Bolt Fin Hex 5/16-18 unc x 3/4
174	810 04 05-00	Washer Lock Hvy Hlcl Spr. 5/16

NOTE: All component dimensions given in U.S. inches
1 inch = 25.4 mm

https://truckmanualshub.com/

REPAIR PARTS

TRACTOR - - MODEL NO. GT2254 (96025000201), PRODUCT NO. 960 25 00-02

GROUND DRIVE

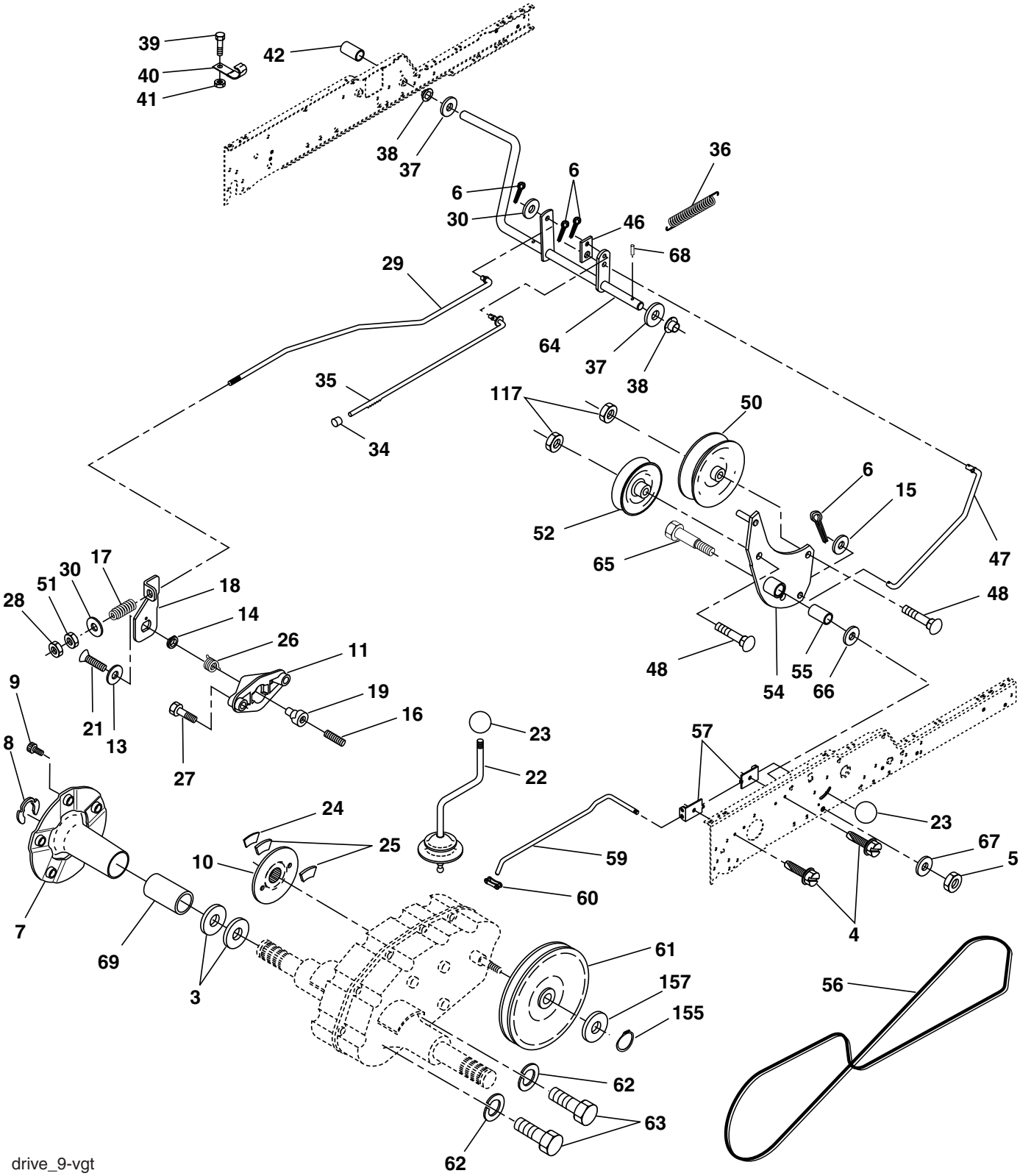

https://truckmanualshub.com/

REPAIR PARTS

TRACTOR - - MODEL NO. GT2254 (96025000201), PRODUCT NO. 960 25 00-02

GROUND DRIVE

KEY NO.	PART NO.	DESCRIPTION
3	532 00 75-63	Washer, Thrust, Axle
4	817 49 05-08	Screw Thdrol 5/16-18 x 3/4
5	873 68 06-00	Nut, Crownlock 3/8-16
6	876 02 04-12	Pin, Cotter
7	532 14 91-76	Wheel, Hub Assembly
8	812 00 00-34	Klip, Ring
9	532 14 00-80	Bolt, Hub
10	532 14 25-09	Disc, Brake
11	532 13 69-27	Yoke, Brake Disc
13	532 13 94-19	Washer, Special
14	532 13 89-01	Bushing
15	819 13 13-16	Washer 13/32x13/16 x 16 Ga.
16	532 14 30-12	Set, Screw 1/4-28 x 3/4
17	532 12 69-09	Spring
18	532 13 71-04	Lever, Brake
19	532 13 69-26	Cam, Brake Disc
21	823 26 04-12	Screw, Flat Head 1/4-28 x 3/4
22	532 19 41-21	Gearshift, Lever Assembly
23	532 10 69-32	Knob
24	532 13 69-25	Support, Puck Brake
25	532 13 69-23	Puck, Brake Top
26	532 13 75-52	Spring, Return
27	532 19 31-35	Screw, Hexwsh Thd. 5/16-18 x 1-3/4
28	873 35 06-00	Nut, Hex Jam 3/8-16
29	532 13 72-13	Brake, Rod
30	819 13 16-16	Washer 13/32 x 1 x 16 Ga.
34	532 07 16-73	Cap, Plunger
35	532 13 76-48	Rod, Parking Brake
36	532 14 94-12	Spring, Drive Ground
37	532 12 17-49	Washer 25/32 x 1-1/4 x 16 Ga.
38	532 15 00-35	Nyliner
39	874 32 10-16	Screw, Fin. #10-24 x 1
40	532 17 85-75	Actuator, Interlock Switch
41	873 93 10-00	Nut, Centerlock #10-24
42	532 12 48-72	Cover, Pedal
46	532 14 51-70	Retainer, Spring
47	532 13 82-28	Clutch Rod
48	872 11 06-12	Bolt, Carr. 3/8-16 x 1-1/2 Gr. 5
50	532 13 14-94	Pulley, Idler, Flat
51	873 80 06-00	Nut, Crownlock 3/8-16 unc
52	532 13 91-23	Pulley, Idler, Grooved
54	532 16 15-90	Clutch, Arm Assembly
55	532 10 57-06	Bearing, Idler
56	532 13 71-53	V-Belt
57	532 14 17-56	Bracket, Shift Rod, Hi-Lo
59	532 12 22-53	Shift Rod, Hi-Lo
60	532 12 22-68	Spring Clip, Connecting Link
61	532 18 47-87	Pulley, Transaxle
62	810 04 07-00	Washer, Lock 7/16
63	874 78 07-20	Bolt, Fin Hex 7/16-14 x 1-1/4
64	532 15 47-52	Shaft, Clutch/Brake Pedal
65	532 17 96-13	Bolt, Shoulder
66	532 14 02-96	Washer, Hardened
67	819 13 13-12	Washer, Flat
68	532 00 51-42	Pin, Roll
69	532 13 63-27	Hub, Cover
117	873 90 06-00	Nut, Lock Flg. 3/8-16 unc
155	812 00 00-28	Ring Retainer
157	532 00 13-70	Washer Thrust 5/8 x 1.10 x 1/32

NOTE: All component dimensions given in U. S. inches 1 inch = 25.4 mm

https://truckmanualshub.com/

REPAIR PARTS

TRACTOR - - MODEL NO. GT2254 (96025000201), PRODUCT NO. 960 25 00-02

STEERING ASSEMBLY

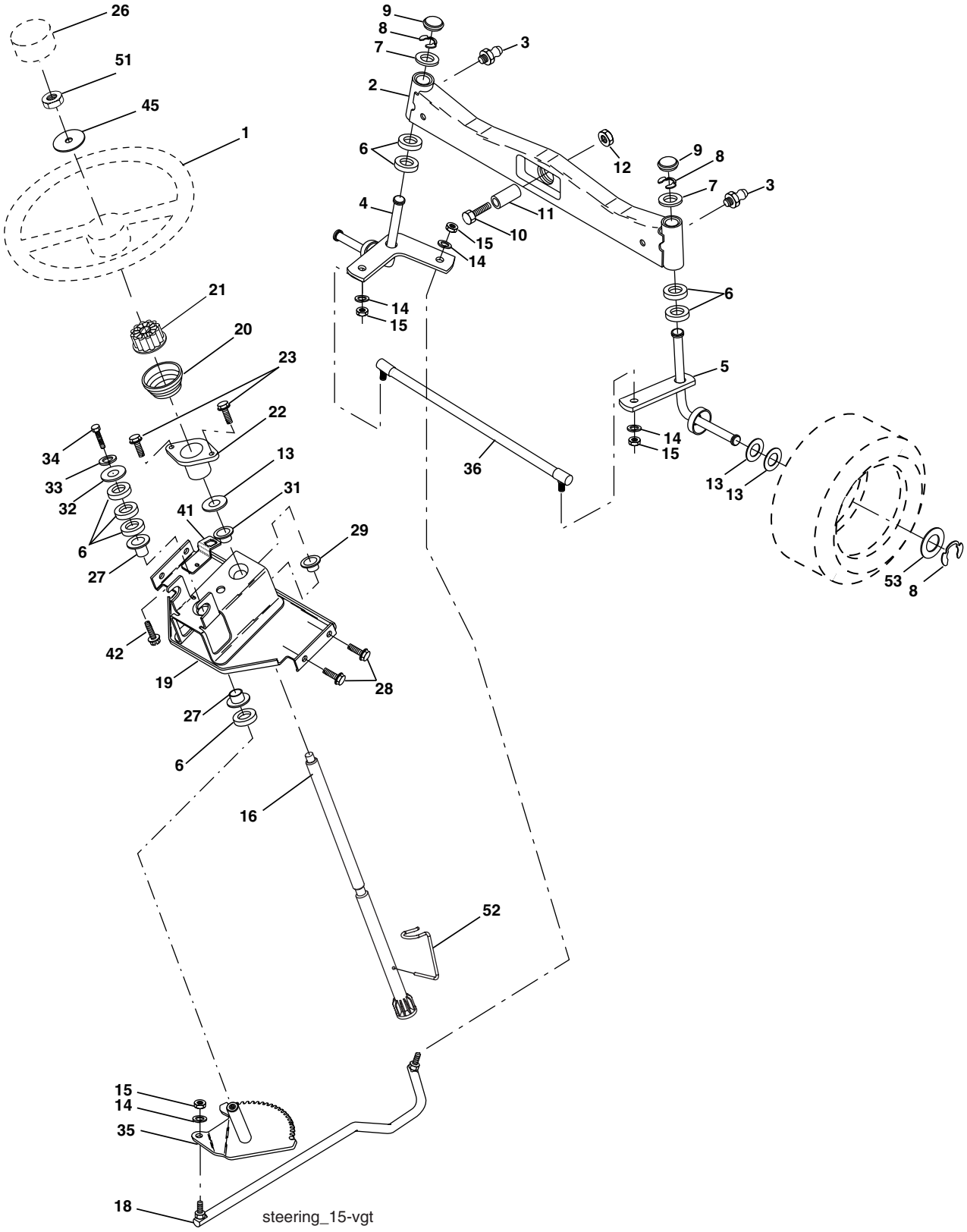

https://truckmanualshub.com/

REPAIR PARTS

TRACTOR - - MODEL NO. GT2254 (96025000201), PRODUCT NO. 960 25 00-02

STEERING ASSEMBLY

KEY NO.	PART NO.	DESCRIPTION
1	532 19 39-43	Wheel, Steering
2	532 17 85-57	Axle Asm., Front
3	532 18 32-26	Fitting, Grease
4	532 16 18-49	Spindle Asm, LH
5	532 16 18-48	Spindle Asm., RH
6	532 12 49-31	Bearing, Race Thrust Harden
7	532 12 17-48	Washer 25/32 x 1-5/8 x 16 Ga.
8	812 00 00-29	Ring, Klip #T5304-75
9	532 12 12-32	Cap, Spindle
10	874 78 10-44	Bolt, Fin Hex 5/8-11 x 2-3/4
11	532 13 65-18	Spacer Brg Axle Front 1.570
12	873 90 10-00	Nut, Lock Flange 5/8-11 unc
13	532 12 17-49	Washer 25/32 x 1-1/4 x 16 Ga.
14	810 04 06-00	Washer, Lock Hvy Hlcl Spr 3/8
15	873 54 06-00	Nut Crownlock 3/8-24
16	532 18 68-14	Shaft Asm., Steering
18	532 18 77-99	Draglink
19	532 15 60-11	Support Asm., Steering Vgt
20	532 17 75-92	Boot Steering
21	532 18 67-37	Adapter, Wheel Steering
22	532 15 51-05	Bushing, Strg.
23	532 15 29-27	Screw
26	532 19 36-52	Cap , Wheel Steering
27	532 12 49-37	Bearing, Col. Strg.
28	817 00 06-12	Screw 3/8-16 x 3/4
29	532 10 42-39	Bearing, Flange
31	532 13 81-36	Bushing, Nyliner Snap
32	819 11 16-10	Washer 11/32 x 1 x 10 Ga.
33	810 04 05-00	Washer, Lock Hvy Hlcl Spr 5/16
34	874 78 05-12	Bolt, Hex Hd 5/16-18 x 3/4
35	532 18 70-39	Gear, Sector Steering
36	532 18 67-99	Tie Rod
41	532 15 52-46	Bracket Switch Inerlock VGT97
42	817 49 05-08	Screw 5/16-18 x 1/2
44	532 17 75-93	Extension Steering Premium
45	819 18 38-12	Washer 9/16 ID x 2-3/8 OD 12 Ga.
51	873 94 08-00	Nut Hex Jam Toplock 1/2-20 unf
52	532 17 55-53	Clip Steering
53	532 18 89-67	Washer Hardened

NOTE: All component dimensions given in U.S. inches
1 inch = 25.4 mm

https://truckmanualshub.com/

REPAIR PARTS

TRACTOR - - MODEL NO. GT2254 (96025000201), PRODUCT NO. 960 25 00-02

ENGINE

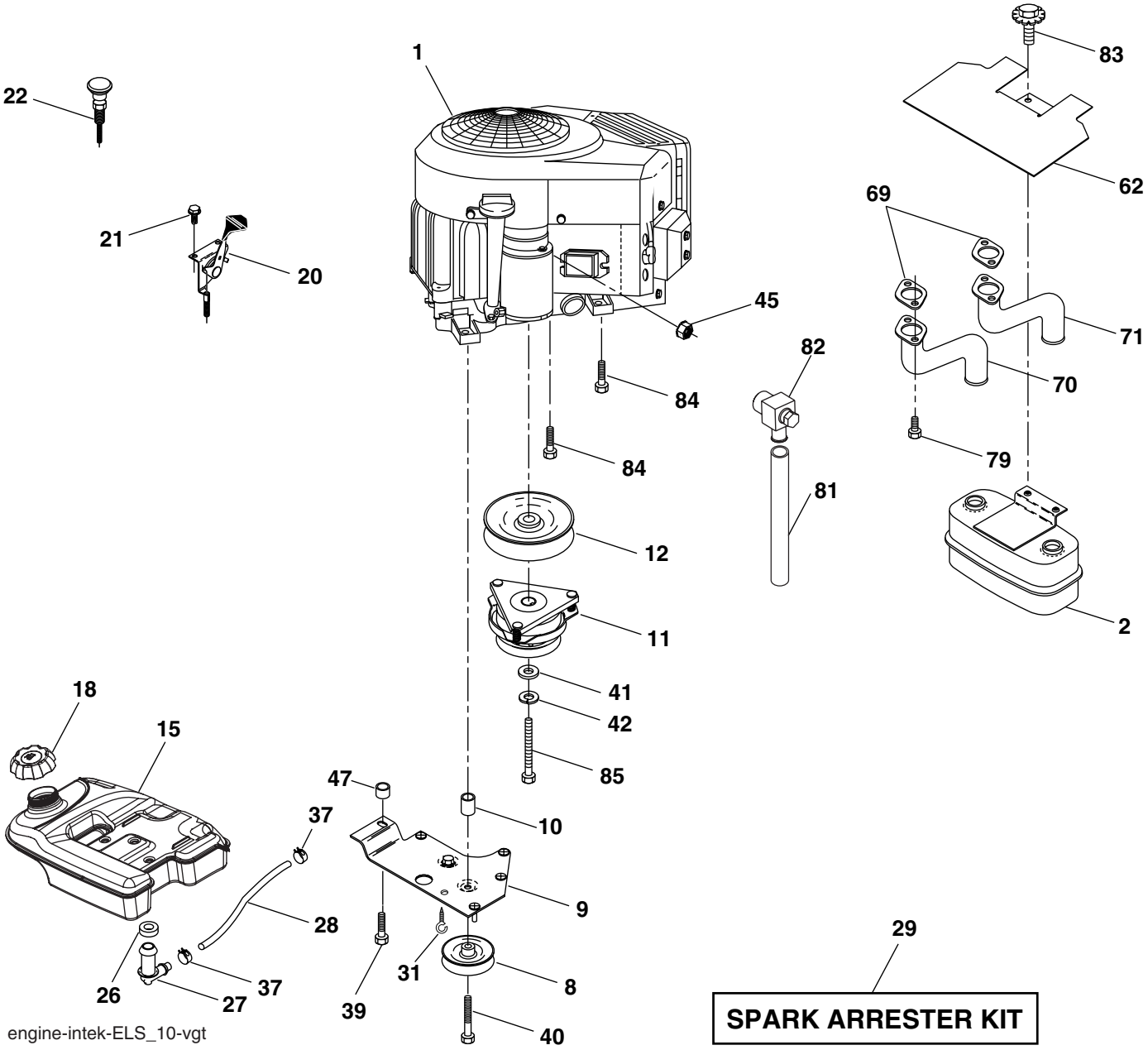

https://truckmanualshub.com/

REPAIR PARTS

TRACTOR - - MODEL NO. GT2254 (96025000201), PRODUCT NO. 960 25 00-02

KEY NO.	PART NO.	DESCRIPTION
1	- - - - - -	Engine Briggs, Model No. 40H777(Order parts from engine manufacturer)
2	532 14 97-23	Muffler Side
8	532 12 13-61	Pulley V-Idler
9	532 17 77-48	Keeper Asm. Belt Engine VGT
10	532 17 52-87	Bushing
11	532 17 93-35	Clutch Electric
12	532 14 39-96	Pulley Engine VGT Elect Clutch
15	532 17 91-15	Tank Fuel
18	532 18 18-03	Cap Fuel
20	532 17 83-85	Control Throttle
21	532 19 16-11	Screw 10 x 3/4 Single Lead Hex
22	532 19 15-96	Control Choke
26	532 12 49-52	Bushing
27	532 13 92-77	Stem Tank Fuel
28	532 18 86-69	Fuel Line
29	532 13 71-80	Spark Arrester Kit
31	532 14 50-06	Clip Push-In Hinged
37	532 12 34-87	Clamp Hose
39	817 49 06-36	Screw TT 3/8-16 x 2-1/4 unc
40	817 49 06-64	Screw TT 3/8-16 x 4 unc
41	532 12 61-97	Washer 1-1/2 OD x 15/32 ID x .250
42	810 04 07-00	Washer Lock 7/16
45	873 51 04-00	Nut Keps Hex 1/4-20 unc
47	532 17 52-88	Bushing
62	532 14 66-29	Shield Heat Muffler
69	532 16 53-91	Gasket
70	532 17 60-69	Tube Exhaust LH
71	532 17 60-70	Tube Exhaust RH
79	532 18 39-06	Screw Socket Head 5/16-18 x 1
81	532 18 88-00	Tube Drain
82	532 18 87-99	Valve Oil Drain
83	532 17 18-77	Bolt 5/16-18 unc x 1-3/4 W/Sems
84	817 06 06-24	Screw 3/8-16 x 1-1/2
85	532 17 99-53	Bolt Hex 7/16-20 X 3.75 Gr. 5

NOTE: All component dimensions given in U.S. inches
1 inch = 25.4 mm

For engine service and replacement parts, call the toll free number for your engine manufacturer listed below:

Briggs & Stratton	1-800-233-3723
Kohler Co.	1-800-544-2444
Tecumseh Products	1-800-558-5402
Honda Engines	1-800-426-7701
Kawasaki	1-800-460-5688

https://truckmanualshub.com/

REPAIR PARTS

TRACTOR - - MODEL NO. GT2254 (96025000201), PRODUCT NO. 960 25 00-02

SEAT ASSEMBLY

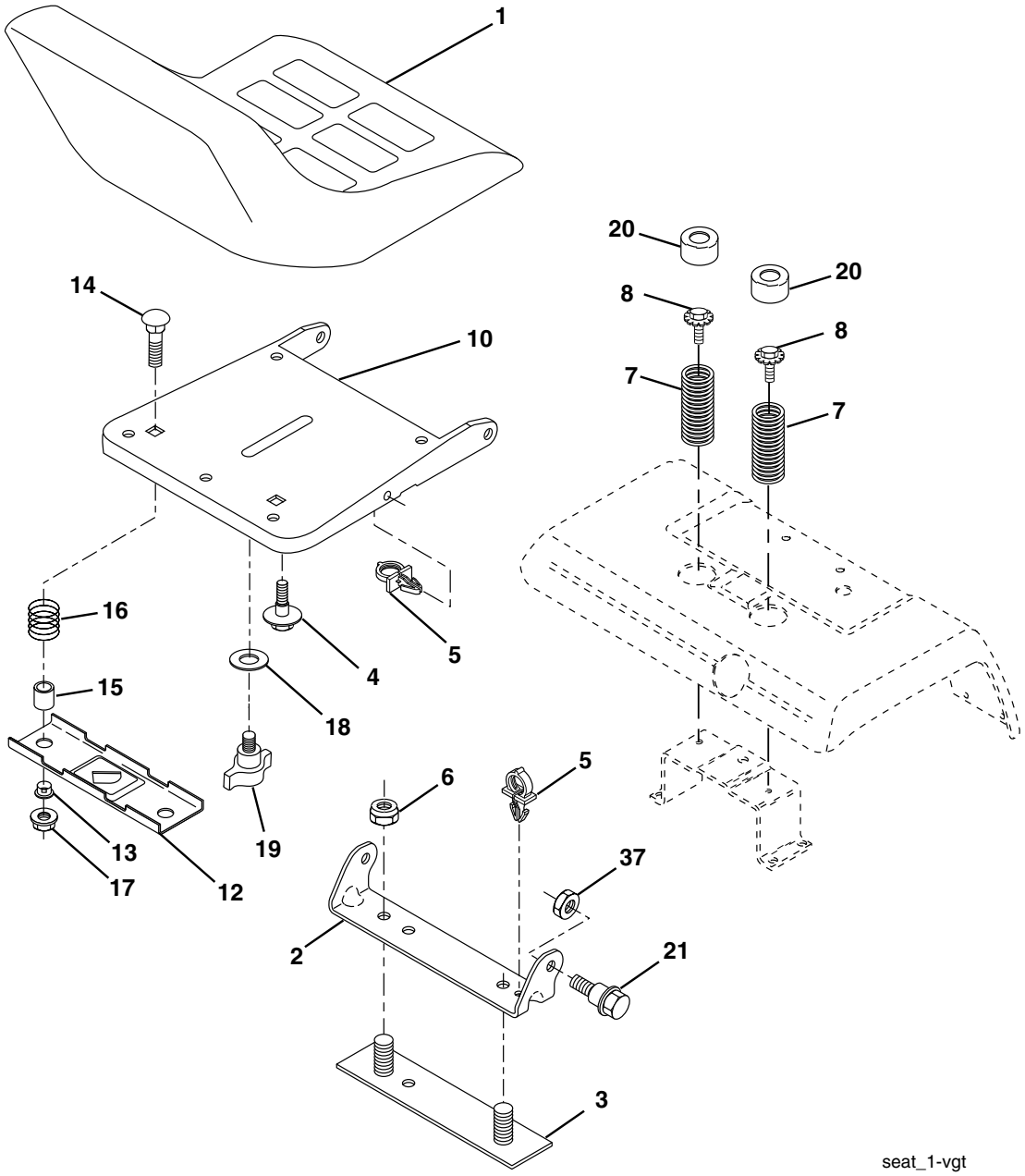

KEY NO.	PART NO.	DESCRIPTION
1	532 19 01-20	Seat
2	532 14 05-51	Bracket, Pivot Seat
3	532 14 06-75	Strap Asm Fender
4	532 12 70-18	Bolt Shoulder 5/16-18 x .62
5	532 14 50-06	Clip, Push In Hinged
6	873 80 06-00	Nut, Crownlock 3/8-16
7	532 12 41-81	Spring, Seat Cprsn
8	532 17 18-77	Bolt 5/16-18 Unc x 3/4
10	532 18 24-93	Pan, Seat
12	532 17 46-48	Bracket, Mounting Switch
13	532 12 12-48	Bushing, Snap
14	872 05 04-12	Bolt, Carriage 1/4-20 x 1-1/2
15	532 13 43-00	Spacer, Split
16	532 12 12-50	Spring, Cprsn
17	532 12 39-76	Nut, Lock 1/4 Lge Flg Gr. 5
18	819 17 19-12	Washer 17/32 x 1-3/16 x 12 Ga.
19	532 16 63-69	Knob Seat
20	532 12 42-38	Cap, Spring Seat
21	532 17 18-52	Bolt, Shoulder 5/16-18
22	873 68 05-00	Nut Crownlock 5/16-18
37	873 80 05-00	Nut, Crownlock 5/16-18

NOTE: All component dimensions given in U.S. inches
1 inch = 25.4 mm

https://truckmanualshub.com/

REPAIR PARTS

TRACTOR - - MODEL NO. GT2254 (96025000201), PRODUCT NO. 960 25 00-02

DECALS

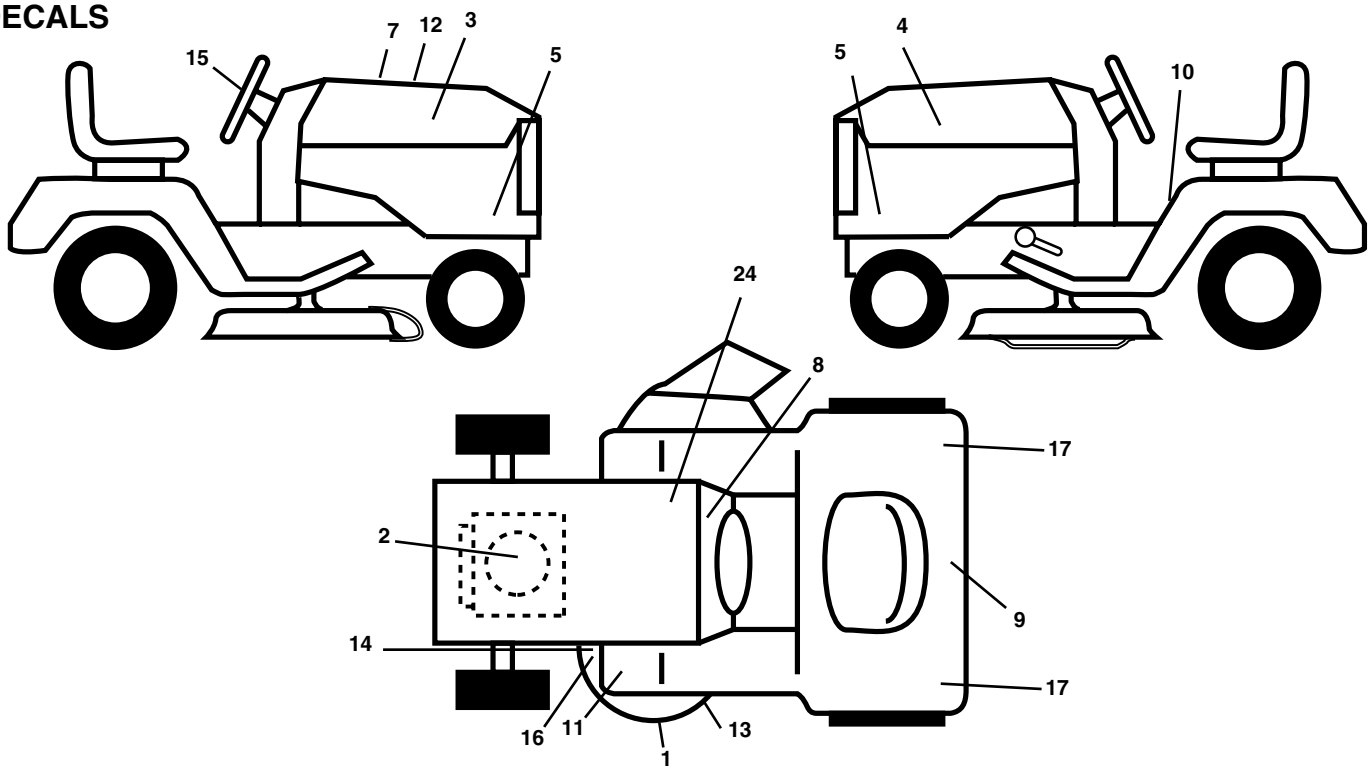

KEY NO.	PART NO.	DESCRIPTION
1	532 17 84-82	Decal, Deck heavy Duty
2	532 19 16-51	Decal, Engine
3	532 18 89-47	Decal, Hood, RH
4	532 18 89-48	Decal, Hood, LH
5	532 19 42-81	Decal, Side Panel
7	532 18 09-41	Decal, Customer Resp.
8	532 19 60-44	Decal, Dash
9	532 19 15-54	Decal, Fender
10	532 15 70-02	Decal, Danger
11	532 18 12-49	Decal, Clutch/Brake
12	532 19 43-63	Decal, Replacement
13	532 18 82-98	Decal, V-Belt Sch
14	532 17 84-55	Decal, Caution
15	532 18 89-25	Decal, Ins. Strg Whl
16	532 19 30-63	Decal, Mower Upstop
17	**532 10 62-02**	Reflector
24	532 14 50-05	Decal, Btry Dngr/Psn
- -	532 18 19-17	Pad, Footrest, RH
- -	532 18 19-16	Pad, Footrest, LH
- -	532 19 65-04	Manual, Owner's (English)

WHEELS & TIRES

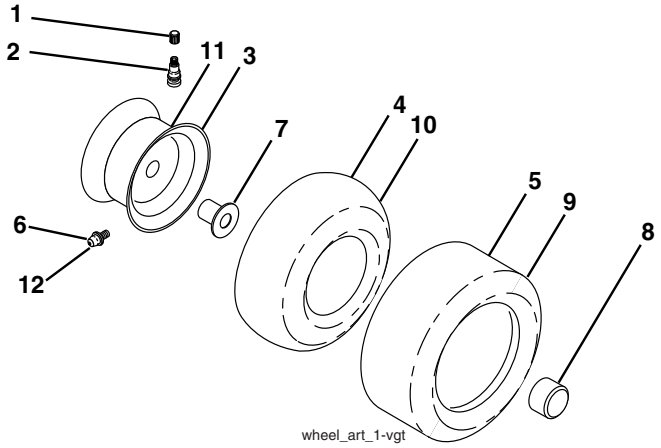

KEY NO.	PART NO.	DESCRIPTION
1	532 05 91-92	Cap, Valve, Tire
2	532 06 51-39	Stem, Valve
3	532 14 45-09	Rim Assembly, Front
4	532 00 81-34	Tube, Front (Service Item Only)
5	532 10 62-30	Tire, Front
6	532 12 49-57	Fitting, Grease
7	532 12 49-59	Bearing, Flange (Front Wheel Only)
8	532 17 50-39	Cap, Hub
9	532 10 55-88	Tire, Rear
10	532 00 71-54	Tube, Rear (Service Item Only)
11	532 14 45-10	Rim Assembly, Rear
12	532 12 48-60	Fitting, Grease
- -	532 14 43-34	Sealant, Tire (10 oz. Tube)

NOTE: All component dimensions given in U.S. inches
1 inch = 25.4 mm

https://truckmanualshub.com/

REPAIR PARTS

TRACTOR - - MODEL NO. GT2254 (96025000201), PRODUCT NO. 960 25 00-02

LIFT ASSEMBLY

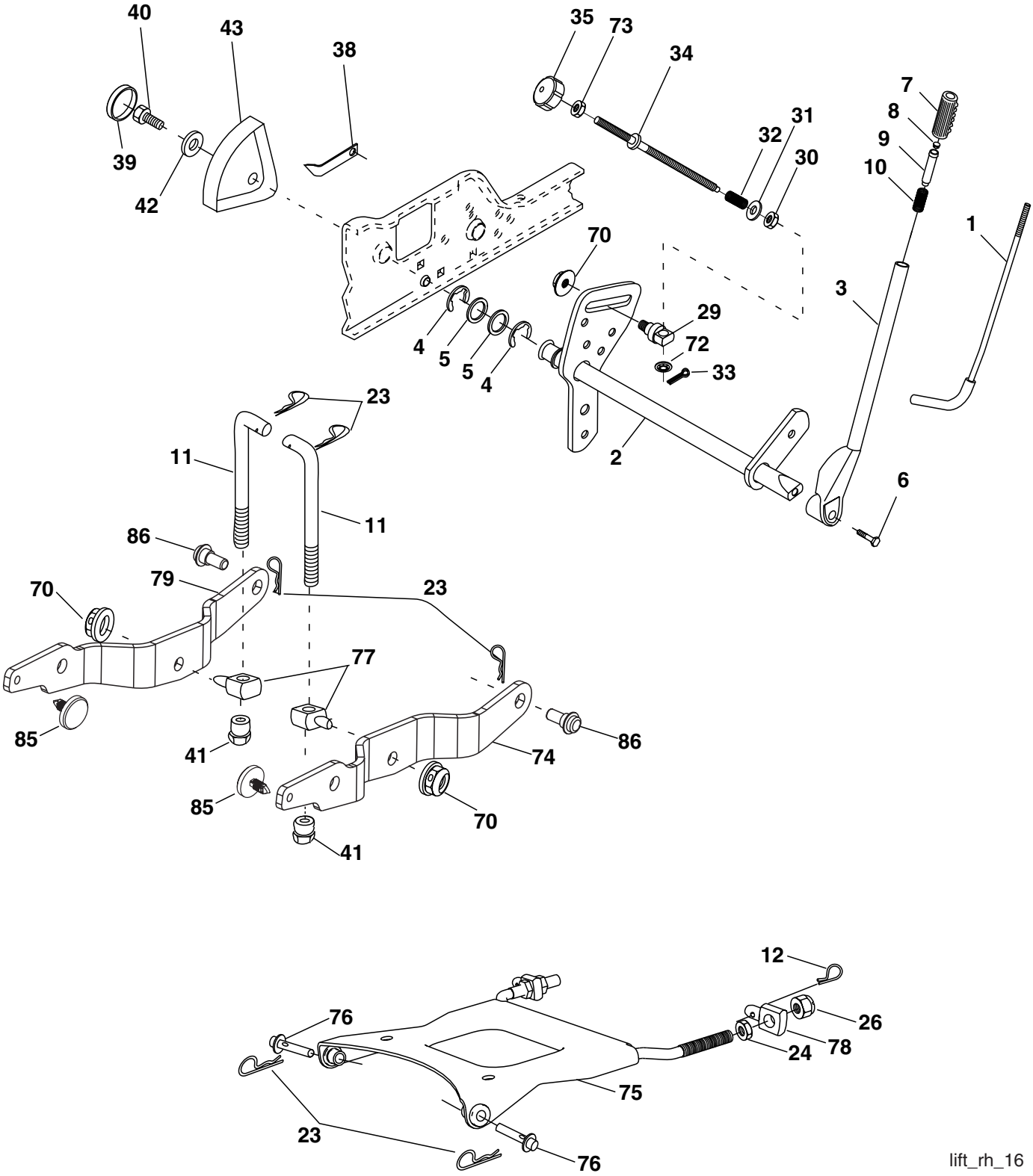

https://truckmanualshub.com/

REPAIR PARTS

TRACTOR - - MODEL NO. GT2254 (96025000201), PRODUCT NO. 960 25 00-02

LIFT ASSEMBLY

KEY NO.	PART NO.	DESCRIPTION
1	532 12 10-06	Rod Asm., Lever
2	532 18 00-45	Shaft Asm., Lift Vgt
3	532 15 91-89	Lever Asm., Lift Rh
4	812 00 00-22	E-Ring Truarc #5133-87
5	819 29 20-16	Washer 29/32 x 1-1/4 x 16 Ga.
6	871 11 06-24	Bolt, Fin Hex 3/8-16 x 1-1/2
7	532 12 56-31	Grip, Handle
8	532 12 45-26	Button, Plunger
9	532 12 23-64	Plunger, Lever Lift
10	532 18 38-94	Spring 0.620D x 2.125
11	532 17 53-75	Link Lift
12	532 16 35-52	Retainer, Spring
23	532 12 46-70	Retainer, Spring
24	873 35 08-00	Nut, Jam Hex 1/2-13 unc
26	873 80 08-00	Nut, Lock W/Wsh 1/2-13 unc
29	532 15 02-33	Trunnion Infin Height
30	532 11 08-07	Nut, Special
31	819 13 10-16	Washer 13/32 x 5/8 x 16 Ga.
32	532 13 71-50	Spring, Compression Inf Hgt
33	876 02 03-08	Pin, Cotter 3/32 x 1/2
34	532 13 71-67	Rod, Adj Lift
35	532 13 80-57	Knob, Inf 3/8-16 unc
38	532 15 50-97	Pointer Height Indicator
39	532 12 39-35	Plug, Hole Blk. 1.485/1.515 Dia.
40	817 06 05-16	Screw 5/16-18 x 1
41	532 17 59-94	Nut, Lift Link 7/16-20
42	819 11 24-10	Washer 11/32 x 1-1/2 x 10 Ga.
43	532 12 39-34	Scale, Indicator Height
70	532 14 52-12	Nut Hex Flange Lock
72	532 11 04-52	Nut Push Phos & Oil
73	873 35 06-00	Nut, Hex Jam 3/8-16 unc
74	532 18 72-77	Arm Suspension Rear RH
75	532 17 58-05	Plate, Asm, Susp, Front
76	532 17 55-60	Pin Flange
77	532 17 62-05	Trunion Susp Arm
78	532 17 56-89	Trunnion, Front, Susp
79	532 18 72-76	Arm, Suspension LH
85	532 18 90-13	Insert Wear
86	532 18 85-28	Bolt Shoulder

NOTE: All component dimensions given in U.S. inches
1 inch = 25.4 mm

https://truckmanualshub.com/

REPAIR PARTS

TRACTOR - - MODEL NO. GT2254 (96025000201), PRODUCT NO. 960 25 00-02

MOWER DECK

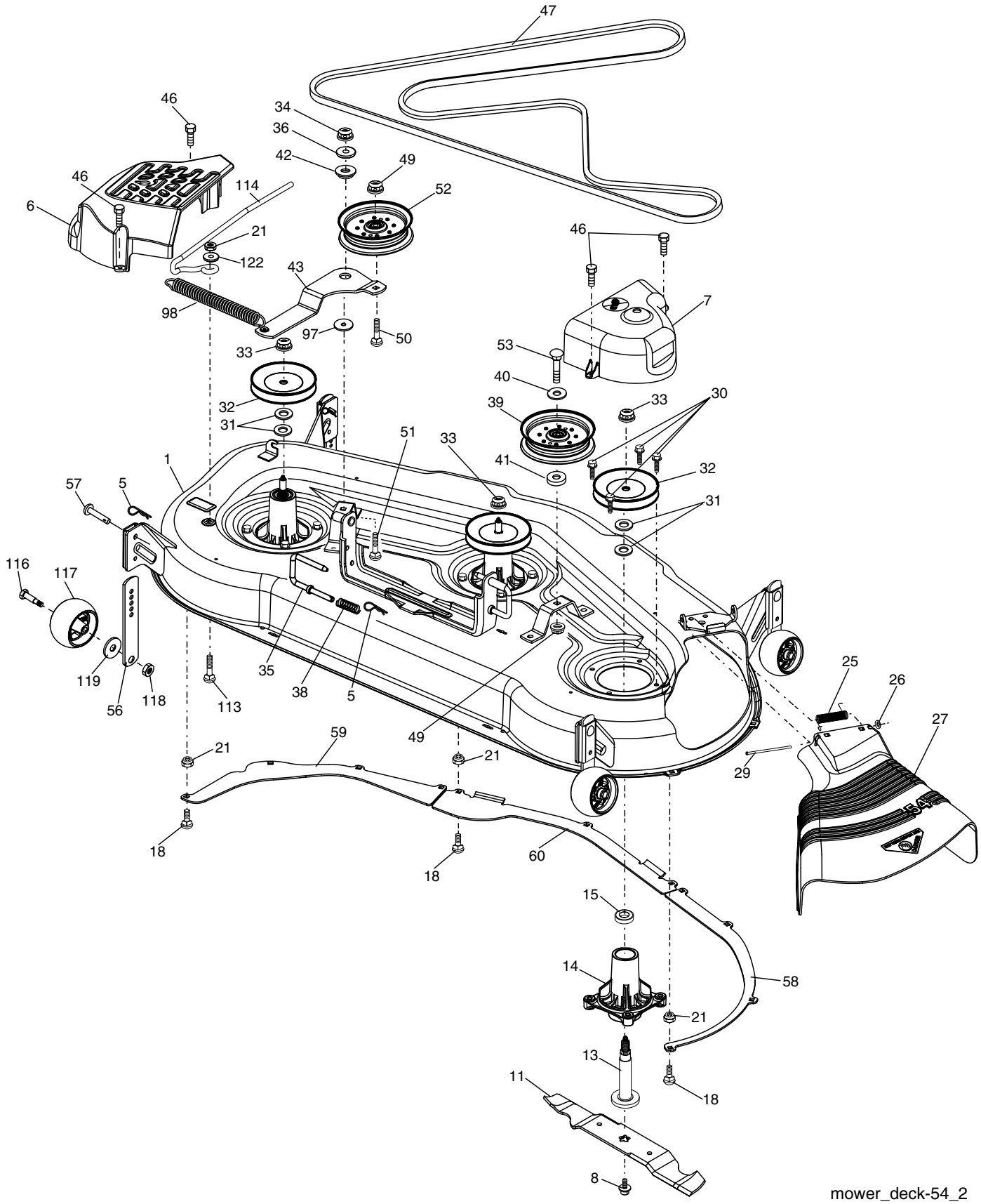

mower_deck-54_2

https://truckmanualshub.com/

REPAIR PARTS

TRACTOR - - MODEL NO. GT2254 (96025000201), PRODUCT NO. 960 25 00-02

MOWER DECK

KEY NO.	PART NO.	DESCRIPTION
1	**532 19 68-38**	Deck Weldment Mower
5	532 12 46-70	Retainer Spring
6	532 18 72-97	Cover Mandrel LH
7	532 18 81-87	Cover Mandrel RH
8	532 17 43-65	Bolt 7/16 Asm. Blade
11	532 18 72-54	Blade Standard
13	532 18 72-91	Shaft Asm. w/Lower Bearing
14	532 18 72-81	Mandrel Housing
15	532 11 04-85	Bearing, Ball, Mandrel
18	872 14 05-05	Bolt Rdhd Sqnk 5/16-18 x 5/8
21	873 68 05-00	Nut, Crownlock 5/16-18 unc
25	532 17 81-02	Spring Torsion
26	532 11 04-52	Nut, Push
27	532 18 89-38	Deflector Shield
29	532 13 14-91	Rod, Hinge
30	532 17 39-84	Screw Thd Roll
31	532 18 76-90	Washer, Spacer Mower Vented
32	532 17 34-36	Pulley, Mandrel
33	532 17 83-42	Nut, Flg. Top Lock Cntr. 9/16
34	873 68 06-00	Nut
35	532 18 86-35	Pin Suspension Rear
36	819 13 13-16	Washer 13/32 x 13/16 x 16 Ga.
38	532 18 86-57	Spring Compression
39	532 18 72-84	Pulley, Idler, Stationary
40	819 13 22-03	Washer 13/32 x 1-3/8 x 3 Ga.
41	819 13 13-12	Washer 13/32 x 13/16 x 12 Ga.
42	532 12 20-52	Spacer, Retainer
43	532 19 62-16	Arm, Idler
46	532 13 77-29	Screw, Thdroll. 1/4-20 x 5/8
47	532 19 12-73	V-Belt, Mower, Secondary
49	873 90 06-00	Nut, Lock Flg. 3/8-16 unc
50	872 11 06-16	Bolt, Carr. 3/8-16 x 2
51	872 11 06-10	Bolt 3/8-16 x 1-1/4 Gr. 5
52	532 18 84-60	Pulley Idler clutching
53	874 78 06-36	Bolt Fin Hex 3/8-16 unc x 2-1/4
56	532 15 59-86	Bar Pnt Adj.
57	532 15 69-41	Pin Head Rivet
58	532 18 73-42	Baffle Right
59	532 18 73-44	Baffle Left
60	532 18 76-07	Baffle Center
97	819 13 32-10	Washer Hardened
98	532 18 72-82	Spring Clutch Drive
113	872 11 05-08	Bolt Rdhd Sqnk 5/16-18 unc x 3/4
114	532 18 75-56	Rod Tension Relief
116	532 19 34-06	Bolt, Shoulder
117	532 17 48-73	Gauge Wheel
118	873 93 06-00	Nut, Centerlock 3/8-16 unc
119	819 12 14-14	Washer 3/8 x 7/8 x 14 Ga.
122	532 18 75-57	Bushing Tension Relief
- -	532 18 72-92	Mandrel Asm. Service (Includes Key Nos. 13-15 and 33)
- -	532 19 60-99	Replacement Mower, Complete

NOTE: All component dimensions given in U.S. inches
1 inch = 25.4 mm

https://truckmanualshub.com/

REPAIR PARTS

TRACTOR - - MODEL NO. GT2254 (96025000201) PRODUCT NO. 960 25 00-02

GEAR DRIVE TRANSAXLE

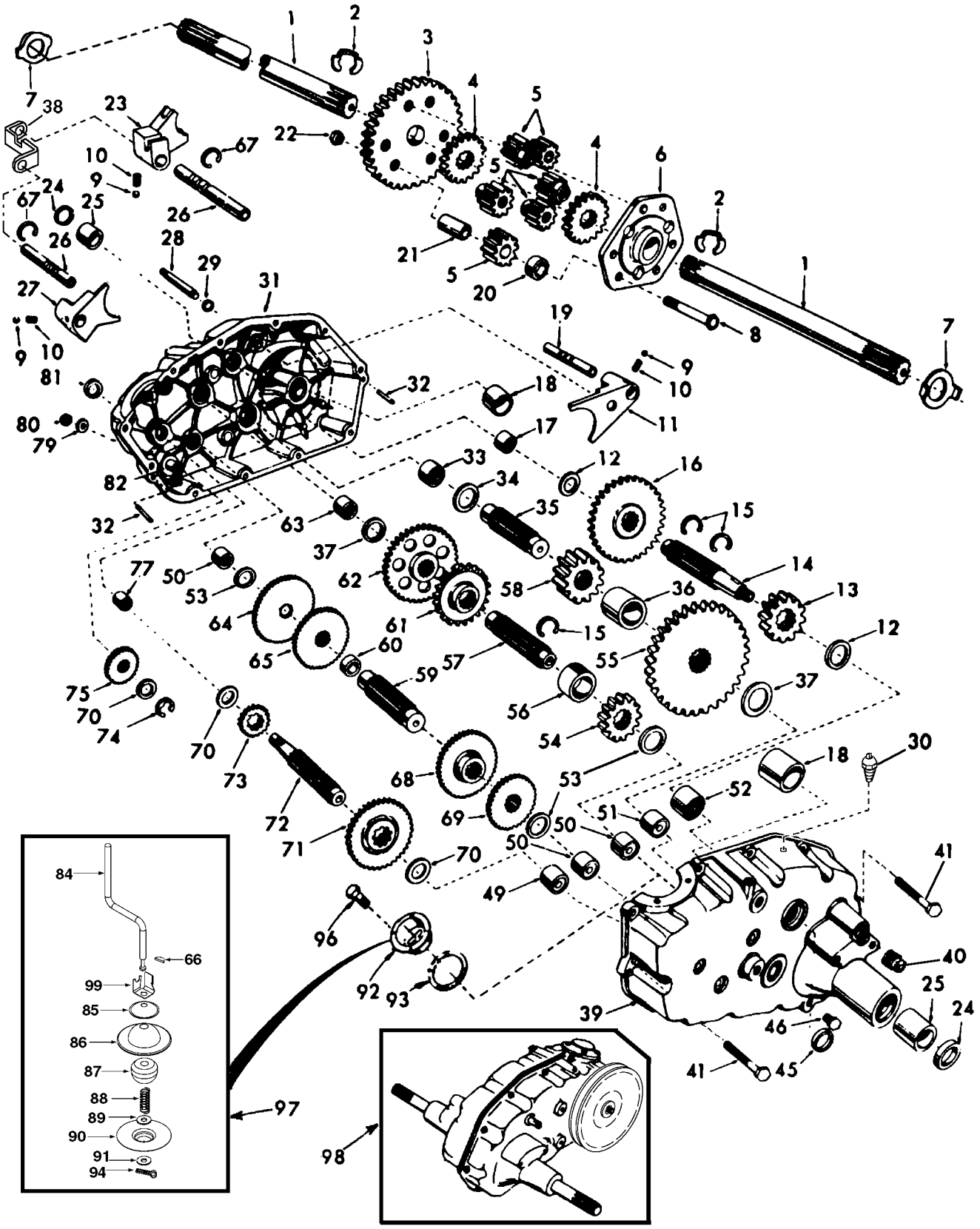

https://truckmanualshub.com/

REPAIR PARTS

TRACTOR - - MODEL NO. GT2254 (96025000201) PRODUCT NO. 960 25 00-02

GEAR DRIVE TRANSAXLE

KEY NO.	PART NO.	DESCRIPTION
1	532 12 46-62	Axle Shaft
2	812 00 00-34	Retaining Ring
3	532 00 41-99	Final Drive Gear
4	532 00 42-16	Differential Gear
5	532 00 42-15	Differential Pinion
6	532 00 42-17	Differential Carrier
7	532 17 47-28	Axle Thrust Washer
8	874 02 06-52	Bolt, Hex Head 3/8-24 x 3-1/4 (1" Thread Length)
9	532 12 46-97	Steel Ball
10	532 13 72-61	Spring Shift Fork Detent
11	532 00 49-85	Shift Fork, High-Low Range
12	532 12 49-31	Thrust Bearing Race
13	532 12 46-67	4th Reduction Pinion
14	532 13 71-25	3rd Reduction Gear Shaft
15	532 12 46-77	Snap Ring, Crescent Type
16	532 12 46-79	High-Low Range Gears
17	532 00 81-18	Needle Bearing
18	532 12 47-05	Sintered Iron Bearing
19	532 12 22-38	Shift Fork Shaft, High-Low Range
20	532 00 42-18	Differential Pinion Spacer
21	532 12 46-73	Differential Pinion Bushing
22	532 12 47-01	Gripco Centerlock Nut 3/8-24
23	532 00 62-62	Shift Fork, R.H.
24	532 12 46-98	Oil Seal
25	532 12 47-09	Sintered Iron Bearing
26	532 13 91-11	Shift Fork Shaft
27	532 00 49-86	Shift Fork, L.H.
28	532 12 22-54	Shift Shaft, High-Low Range
29	532 00 62-69	Oil Seal
30	532 00 58-55	Pressure Relief Valve
31	532 17 47-31	Gearcase, Reverse Idler Shaft and Bearings, R.H. (Includes Key No.'s 17,18, 25, 33, 50, 63, 77 and 82)
32	532 00 62-77	Dowel Pin
33	532 00 42-25	Needle Bearing
34	532 00 73-96	Thrust Bearing Race
35	532 00 41-98	4th Reduction Gear Shaft
36	532 12 46-63	4th Reduction Gear Spacer
37	532 00 73-95	Thrust Bearing Race
38	532 16 07-89	Gate, Lower, Shift
39	532 17 47-29	Gearcase and Bearings, L.H. (Includes key Numbers 18, 25, 49, 50 (2), 51and 52)
40	813 32 04-00	Pipe Plug 1/2-14 N.P.T.
41	817 58 05-20	Bolt, Hex 5/16-18 UNC x 1-1/4
45	532 00 62-71	Oil Seal
46	813 06 02-00	Pipe Plug 1/4-18 N.P.T.
49	532 12 47-92	Needle Bearlng
50	532 00 42-22	Needle Bearing
51	532 00 15-29	Needle Bearing
52	532 00 81-19	Needle Bearing
53	532 00 42-20	Thrust Bearing Race
54	532 00 42-09	3rd Reduction Pinion, Low
55	532 12 46-68	4th Reduction Gear
56	532 00 44-42	3rd Reduction Pinion Spacer
57	532 00 41-95	2nd Reduction Gear Shaft
58	532 00 42-14	Final Drive Pinion
59	532 00 41-94	1st Reduction Gear Shaft
60	532 00 75-28	1st Reduction Shaft Spacer
61	532 12 46-66	3rd Reduction PInion HIgh
62	532 12 46-65	2nd Reduction Gear
63	532 00 73-98	Needle Bearlng
64	532 12 46-64	Low Speed Gear and 2nd Reduction Pinion Cluster
65	532 00 42-04	Reverse Gear
66	532 00 28-98	Key, Hi-Pro 1/8 x 17/32
67	812 00 00-33	Snap Ring, Crescent Type
68	532 00 42-05	Intermediate Speed Gear
69	532 12 50-99	High Speed Gear
70	532 00 13-70	Thrust Bearing Race
71	532 12 46-81	Intermediate and High Speed Cluster Pinions
72	532 13 91-20	Input Shaft
73	532 00 42-01	Low Speed Pinion
74	812 00 00-08	E-Ring
75	532 00 11-53	Reverse Idler Gear
77	532 00 68-03	Needle Bearing
79	532 00 11-67	Sealing Washer
80	873 36 07-00	Nut, Hex, Jam 7/16-20
81	532 12 46-75	Oil Seal
82	532 13 69-84	Reverse Idler Shaft
84	532 00 53-84	Gearshift Lever, Bent
85	532 00 29-78	Gearshift Cap
86	532 12 46-82	Gearshift Ball Cover and Pin
87	532 12 47-04	Shift Lever Guide Ball, Keyed
88	532 00 49-24	Spring
89	819 15 15-16	Washer 15/32 x 15/16 x 16 Gauge
90	532 11 05-42	Shift Mechanism Seal
91	819 18 15-11	Washer 9/16 x 15/16 x 12 Gauge
92	532 00 00-75	Gearshift Gate and Reinforcement
93	532 00 62-74	Shift Ball Cover Gasket
94	876 02 04-12	Cotter Pin 1/8 x 3/4
96	532 19 40-36	Bolt, Hex, 5/16-18X1 Epoxy Patch
97	532 19 41-21	Lever Assembly ROS Gear Shift
98	532 18 49-56	Transaxle, 6 Speed, Complete Assembly
99	532 19 38-33	Actuator, Shift Lever

NOTE: All component dimensions given in U.S. inches
1 inch = 25.4 mm

https://truckmanualshub.com/

SERVICE NOTES

https://truckmanualshub.com/

SERVICE NOTES

https://truckmanualshub.com/

SUGGESTED GUIDE FOR SIGHTING SLOPES FOR SAFE OPERATION

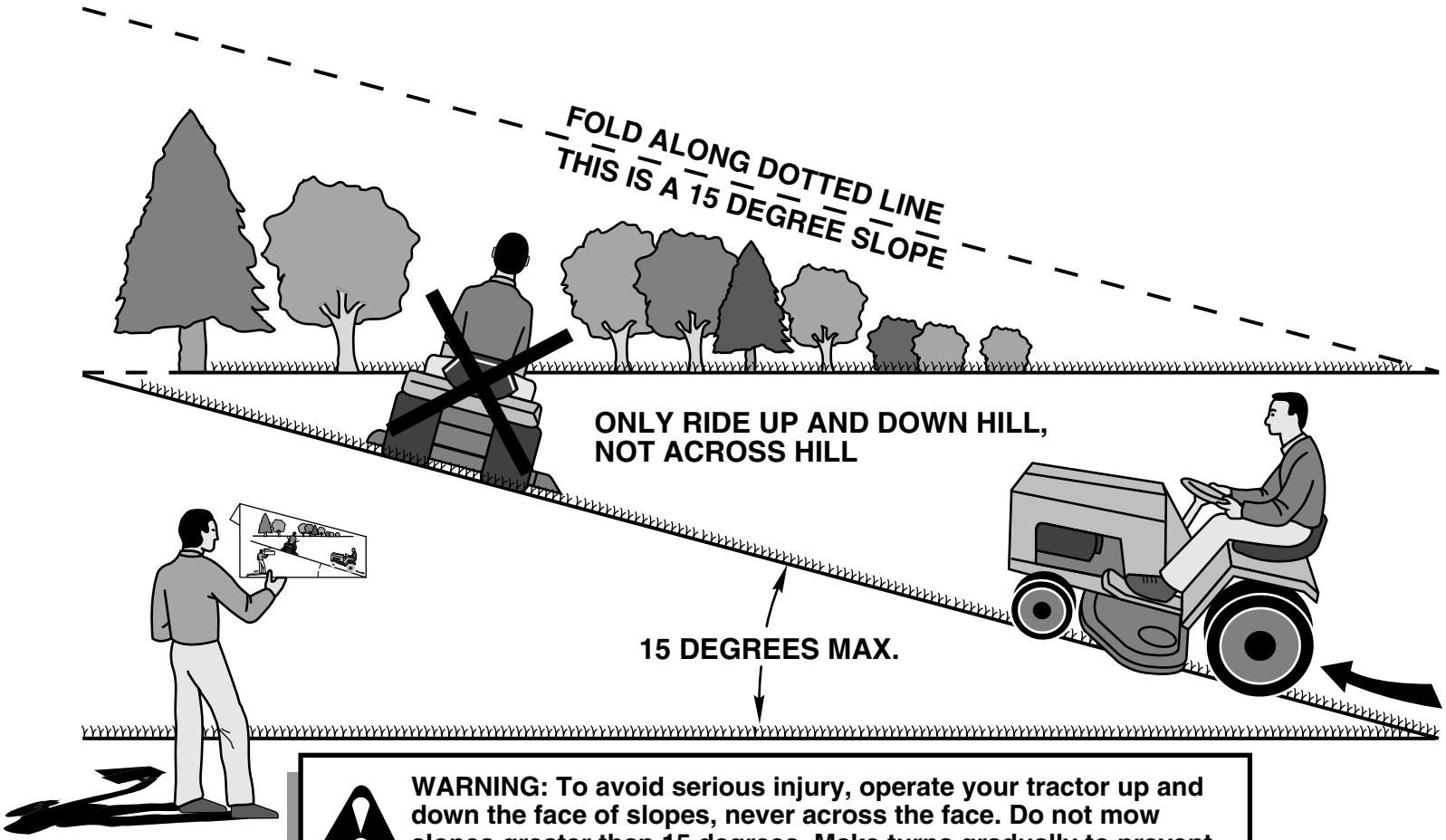

WARNING: To avoid serious injury, operate your tractor up and down the face of slopes, never across the face. Do not mow slopes greater than 15 degrees. Make turns gradually to prevent tipping or loss of control. Exercise extreme caution when changing direction on slopes.

1. Fold this page along dotted line indicated above.
2. Hold page before you so that its left edge is vertically parallel to a tree trunk or other upright structure.
3. Sight across the fold in the direction of hill slope you want to measure.
4. Compare the angle of the fold with the slope of the hill.

https://truckmanualshub.com/

Husqvarna

WARRANTY STATEMENT

SECTION 1: LIMITED WARRANTY

Husqvarna Forest & Garden Company ("Husqvarna") warrants Husqvarna product to the original purchaser to be free from defects in material and workmanship from the date of purchase for the "Warranty Period" of the product as set forth below:

Lifetime Warranty: All tiller tines against breakage, trimmer shafts, ignition coils and modules on hand held product.

3 Year Warranty: Spindles (on Zero Turn Riders and Commercial Walk-Behinds)

2 Year COMMERCIAL-Warranty: Husqvarna Commercial Turf Equipment—zero turn riders, wide area walks, and ground engaging commercial equipment.

2 Year NON-COMMERCIAL Warranty: Automatic Mower, Riding lawn mowers, yard and garden tractors, walk behind mowers, tillers, chain saws, trimmers, brushcutters, clearing saws, snow blowers, handheld blowers, backpack blowers, hedge trimmers, electrical products and power-assist collection systems for noncommercial, nonprofessional, noninstitutional or nonincome producing use, except as herein stated.

Emission control system components necessary to comply with CARB-TIER-II and EPA regulations, except for those components which are part of engine systems manufactured by third party engine manufacturers for which the purchaser has received a separate warranty with product information supplied at time of purchase.

1 Year Warranty: Power cutters, stump grinder, pole pruners and pole saws for non-commercial, non-professional, non-institutional or non-income producing use. All trimmers, brushcutters, clearing saws, hovering trimmers, stick edgers, backpack blowers, hand held blowers, hedge trimmers, power-assist collection systems used for commercial, institutional, professional or income producing purposes or use.

Batteries have a one-year prorated limited warranty with 100% replacement during the first 6 months.

90 Day Warranty: Automatic Mower, Chain saws, power cutters, stump grinders, pole saws, pole pruners, snow throwers, model series 580 & 600 walk-behind mowers and commercial turf equipment or any Husqvarna product used for commercial, institutional, professional, or income producing purposes or use except as otherwise provided herein.

Husqvarna Safety Apparel carries a 90-day warranty from the date of the customer's original purchase for defects in material and workmanship. Normal wear, tear or abuse is not covered under warranty. Product must be returned to Charlotte with a warranty claim form. All care and maintenance instructions must be followed as stated by the manufacturer on the care label. The fit of the protective apparel/boot is not covered under warranty.

30 Day Warranty: Replacement parts, accessories including bars and chains, tools and display items.

SECTION 2: HUSQVARNA'S OBLIGATIONS UNDER THE WARRANTY

Husqvarna will repair or replace defective components without charge for parts or labor if a component fails because of a defect in material or workmanship during the warranty period.

SECTION 3: ITEMS NOT COVERED BY THIS WARRANTY

The following items are not covered by this warranty:
(1)Normal customer maintenance items which become worn through normal regular use, including, but not limited to, belts, blades, blade adapters, bulbs, filters, guide bars, lubricants, rewind springs, saw chain, spark plugs, starter ropes and tines;
(2)Natural discoloration of material due to ultraviolet light;
(3)Engine and drive systems not manufactured by Husqvarna; these items are covered by the respective manufacturer's warranty as provided in writing with the product information supplied at the time of purchase; all claims must be sent to the appropriate manufacturer;
(4)Lawn and garden attachments are covered by a third party which gives a warranty, all claims for warranty should be sent to the manufacturer; and
(5)Emission Control System components necessary to comply with CARB-TIER-II and EPA regulations which are manufactured by third party engine manufacturer.

SECTION 4: EXCEPTIONS AND LIMITATIONS

This warranty shall be inapplicable to defects resulting from the following:
(1)Accident, abuse, misuse, negligence and neglect, including stale fuel, dirt, abrasives, moisture, rust, corrosion, or any adverse reaction due to incorrect storage or use habits;
(2)Failure to operate or maintain the unit in accordance with the Owner's/Operator's manual or instruction sheet furnished by Husqvarna;
(3)Alterations or modifications that change the intended use of the product or affects the product's performance, operation, safety, or durability, or causes the product to fail to comply with any applicable laws; or:
(4)Additional damage to parts or components due to continued use occurring after any of the above.

REPAIR OR REPLACEMENT AS PROVIDED UNDER THIS WARRANTY IS THE EXCLUSIVE REMEDY OF THE PURCHASER. HUSQVARNA SHALL NOT BE LIABLE FOR ANY INCIDENTAL OR CONSEQUENTIAL DAMAGES FOR BREACH OF ANY EXPRESS OR IMPLIED WARRANTY ON THESE PRODUCTS EXCEPT TO THE EXTENT PROHIBITED BY APPLICABLE LAW. ANY IMPLIED WARRANTY OF MERCHANTABILITY OR FITNESS FOR A PARTICULAR PURPOSE ON THESE PRODUCTS IS LIMITED IN DURATION TO THE WARRANTY PERIOD AS DEFINED IN THE LIMITED WARRANTY STATEMENT. HUSQVARNA RESERVES THE RIGHT TO CHANGE OR IMPROVE THE DESIGN OF THE PRODUCT WITHOUT NOTICE, AND DOES NOT ASSUME OBLIGATION TO UPDATE PREVIOUSLY MANUFACTURED PRODUCTS.

Some states do not allow the exclusion of incidental or consequential damages, or limitations on how long an implied warranty lasts, so the above limitations or exclusions may not apply to you. This warranty gives you specific legal rights, and you may also have other rights which vary from state to state.

SECTION 5: CUSTOMER RESPONSIBILITIES

The product must exhibit reasonable care, maintenance, operation, storage and general upkeep as written in the maintenance section of the Owner's/Operator's manual. Should an operational problem or failure occur, the product should not be used, but delivered as is to an authorized Husqvarna dealer for evaluation. Proof of purchase, as explained in section 6, rests solely with the customer.

SECTION 6: PROCEDURE TO OBTAIN WARRANTY CONSIDERATION

It is the Owner's and Dealer's responsibility to make certain that the Warranty Registration Card is properly filled out and mailed to Husqvarna Forest & Garden Company. This card should be mailed within ten (10) days from the date of purchase in order to confirm the warranty and to facilitate post-sale service.

Proof of purchase must be presented to the authorized Husqvarna dealer in order to obtain warranty service. This proof must include date purchased, model number, serial number, and complete name and address of the selling dealer.

To obtain the benefit of this warranty, the product believed to be defective must be delivered to an authorized Husqvarna dealer in a timely manner, no later than thirty (30) days from date of the operational problem or failure. The product must be delivered at the owner's expense. Pick-up and delivery charges are not covered by this warranty. An authorized Husqvarna dealer can be normally located through the "Yellow Pages" of the local telephone directory or by calling 1-800-HUSKY62 for a dealer in your area.

HUSQVARNA
7349 Statesville Road
Charlotte, NC 28269

531 83 81-23 2002

https://truckmanualshub.com/

532 19 65-04 Rev. 6 06.10.05 TR

Husqvarna

Printed in U.S.A.