https://truckmanualshub.com/

Technical data
Hydraulic lift crane

LR 1200 SX
Litronic®

Complies with ANSI B 30.5

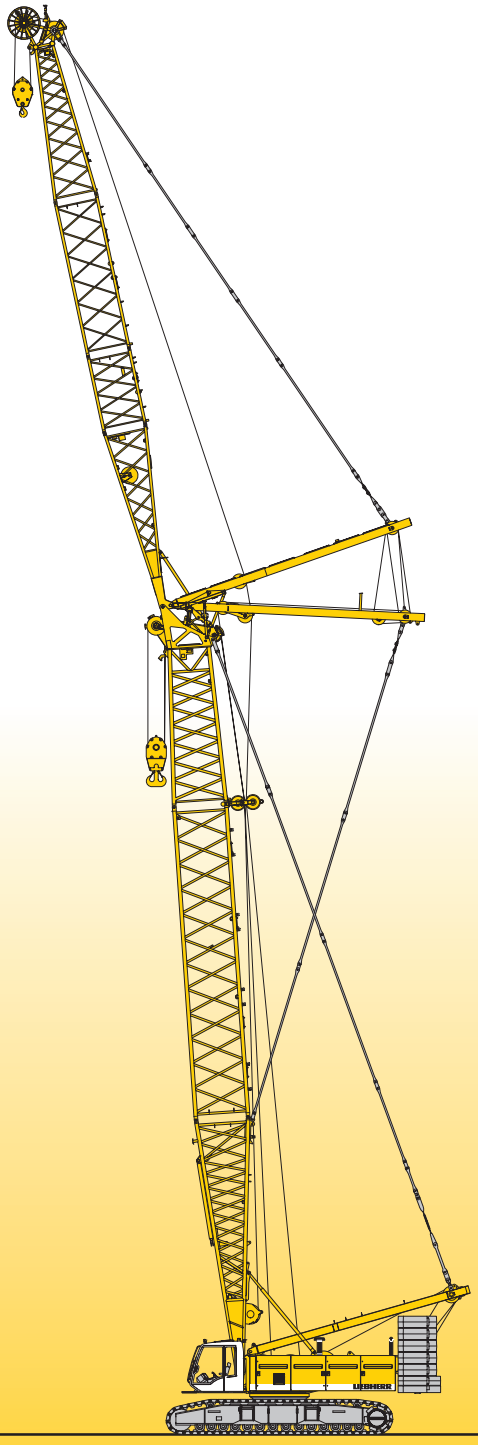

LIEBHERR

https://truckmanualshub.com/

Dimensions

Basic machine with undercarriage

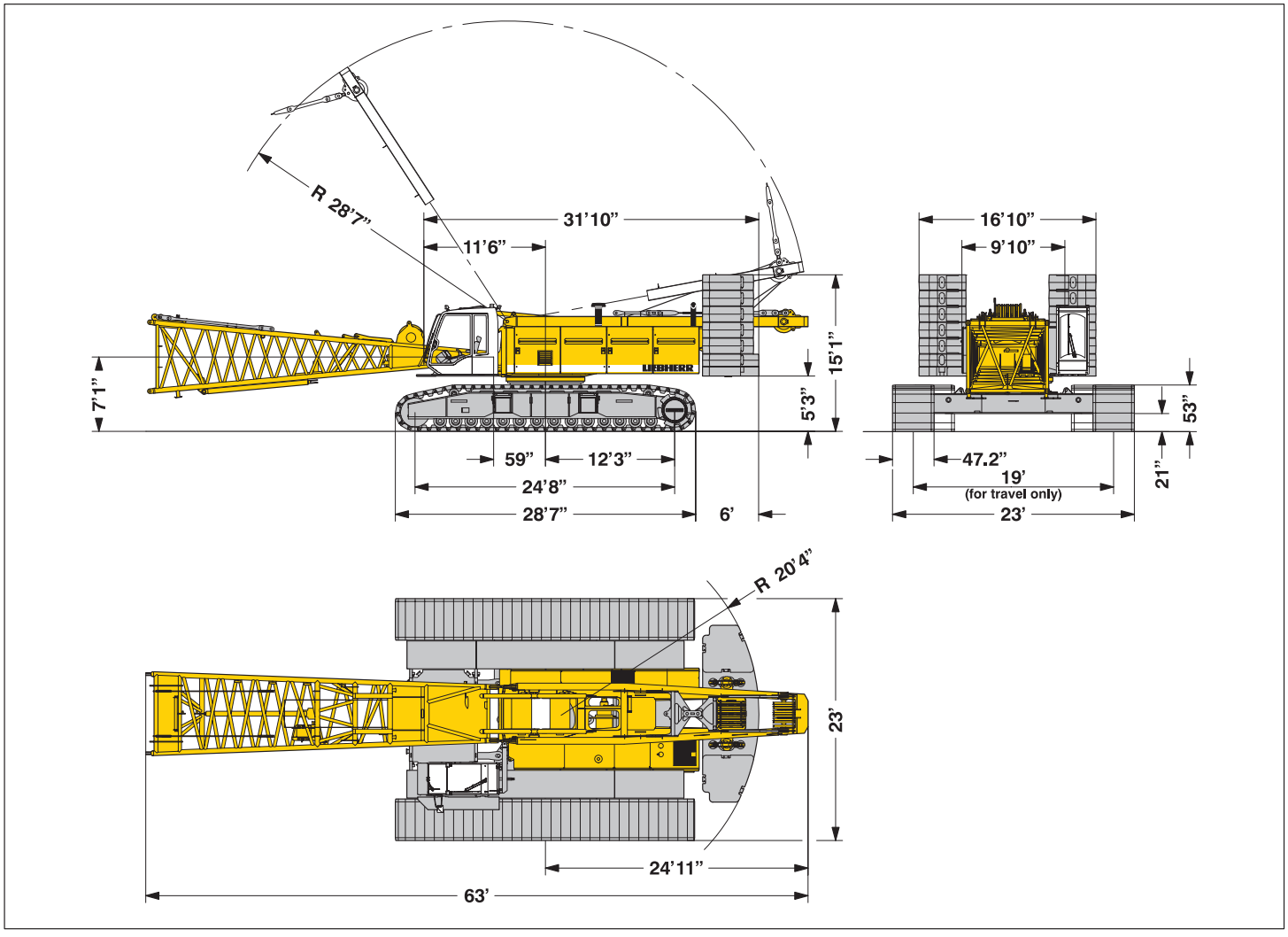

Operating weight

The operating weight includes the basic machine with crawlers, 2 main winches 26,500 lbs including wire ropes (853 ft and 1624 ft) and 66 ft main boom, consisting of A–frame, boom foot (33 ft), boom head (23 ft), boom extension (10 ft), 178,600 lbs basic counterweight, 79,400 lbs carbody counterweight and 551,100 lbs hook block.

Total weight ——— approx. 463,000 lbs

Ground pressure

Ground bearing pressure ——— 16.5 PSI

Equipment

Main boom (No. 2320.xx) max. length ——— 282 ft
High reach (No. 2320.xx and 1916.xx) ——— 384 ft
Luffing jib (No. 1916.xx) max. length ——— 312 ft
Max. combination ——— boom 174 ft and luffing jib 312 ft
Fixed jib (No. 1008.xx) ——— 36 ft – 85 ft
Auxiliary jib 53,000 lbs lifting capacity (optional 79,100 lbs)

Remarks

1. The lifting capacities stated are valid for lifting operation only (corres–ponds with crane classification according to F.E.M. 1.001, crane group A1)
2. Crane standing on firm, horizontal ground.
3. The weight of the lifting device (hoisting ropes, hook block, shackle etc.) must be deducted from the gross lifting capacity to obtain a net lifting value.
4. Additional equipment on boom (e.g. boom walkways, auxiliary jib) must be deducted to get the net lifting capacity.
5. For max. wind speed please refer to lift chart in operator's cab or manual.
6. Working radii are measured from centre of swing and under load.
7. The lifting capacities are valid for 360 degrees of swing.
8. Calculation of stability under load is based on 75% tipping load, ANSI B 30.5 and ISO 4305 Table 2.
9. The structures are calculated according to F.E.M. 1.001 – 1998 (EN 13001–2 / 2004) and tested according to SAE J 987.

https://truckmanualshub.com/

Transport dimensions and weights

Basic machine and boom (No. 2320.xx)

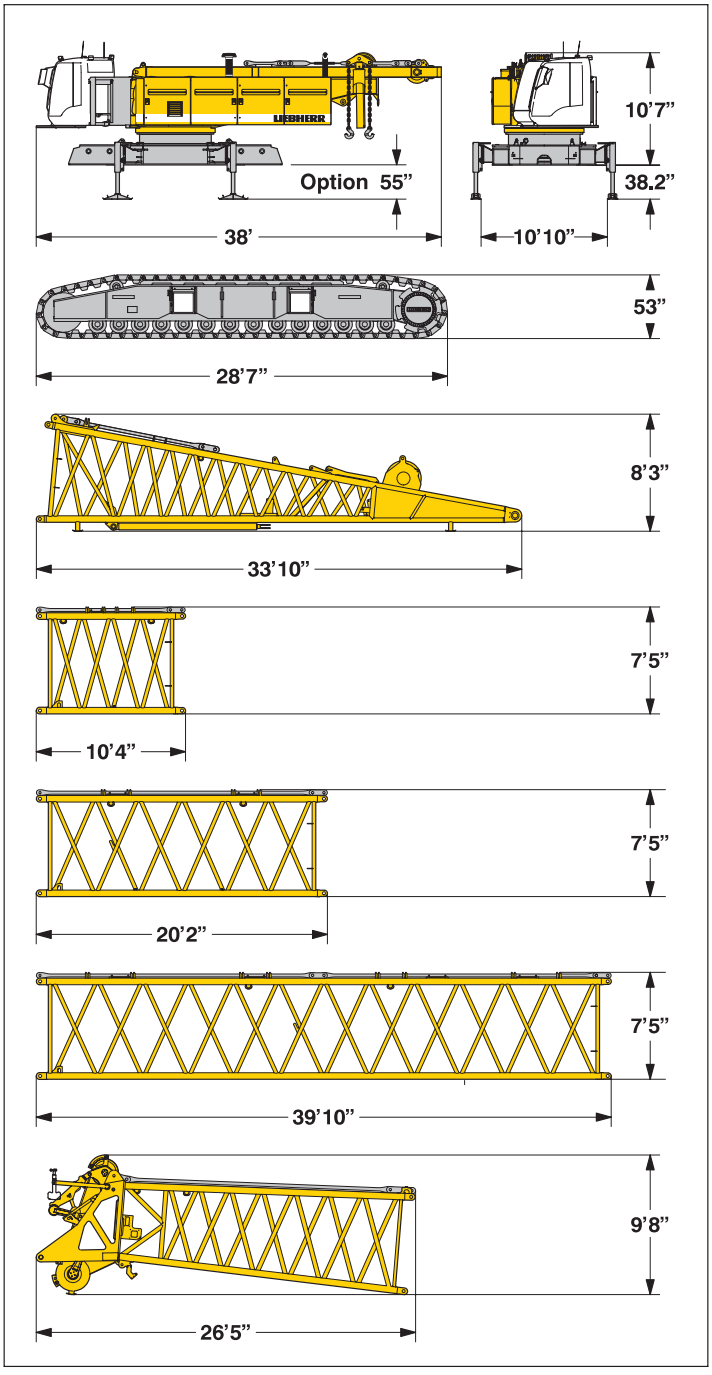

Transport option

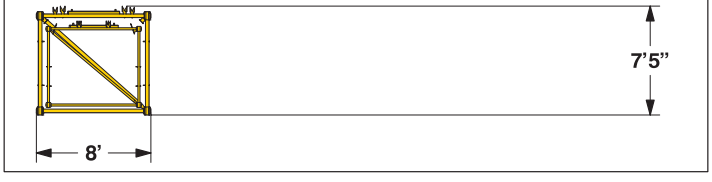

*) Including pendant straps, numbers in brackets include also the luffing jib pendant staps

Basic machine

with A–frame, 2x 26,500 lbs crane winches including wire ropes (total hoist ropes 2447 ft), without crawlers, boom foot, basic counterweight and carbody counterweight

Width	10’
Weight in lbs	89,950

Crawler 2x

Flat track shoes	47.2”
Width	47.2”
Weight in lbs	43,650

Boom foot (No. 2320.25)

Width	8’
Weight in lbs*	11,700

Boom section (No. 2320.23) 10 ft

Width		8’
Weight in lbs*	(2,030)	1,830

Boom section (No. 2320.23) 20 ft

Width		8’
Weight in lbs*	(3,200)	2,850

Boom section (No. 2320.23) 40 ft

Width		8’
Weight in lbs*	(5,926)	5,220

Boom head (No. 2320.23)

Width	8’
Weight in lbs*	9,500

Boom transport option

No. 2320.xx/1916.xxx	40’ /40’	20’ / 20’	10’ /10’
Length	40’2”	20’6”	10’8”
Weight in lbs*	7,960	4,350	3,240

https://truckmanualshub.com/

Transport dimensions and weights

Luffing jib (No. 1916.xx)

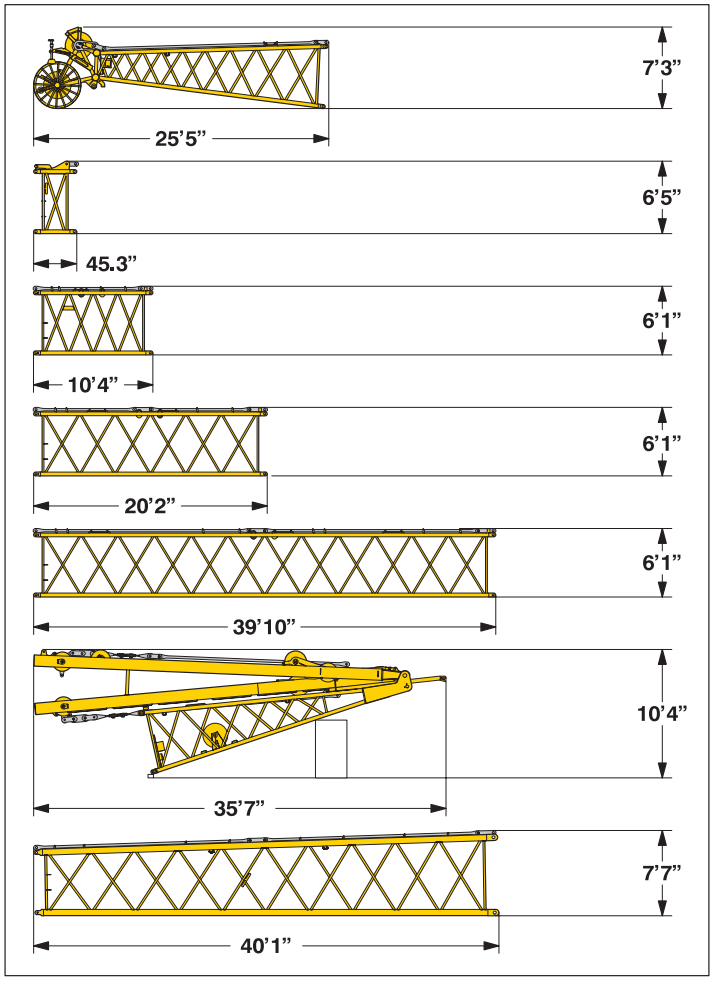

Luffing jib head (No. 1916.21)

Width	6’9”
Weight in lbs*	3,400

L – boom jib section (No. 1916.22) 3 ft

Width	6’9”
Weight in lbs*	1,000

Luffing jib section (No. 1916.18) 10 ft

Width	6’9”
Weight in lbs*	1,210

Luffing jib section (No. 1916.18) 20 ft

Width	6’9”
Weight in lbs*	1,520

Luffing jib section (No. 1916.18) 40 ft

Width	6’9”
Weight in lbs*	2,760

Luffing jib foot with A–frames (No. 1916.22)

Width	6’9”
Weight in lbs*	14,110

L – boom section tapered (No. 2320/1916.20) 40 ft

Width	7’11”
Weight in lbs*	5,810

Fixed jib (No. 1008.xx)

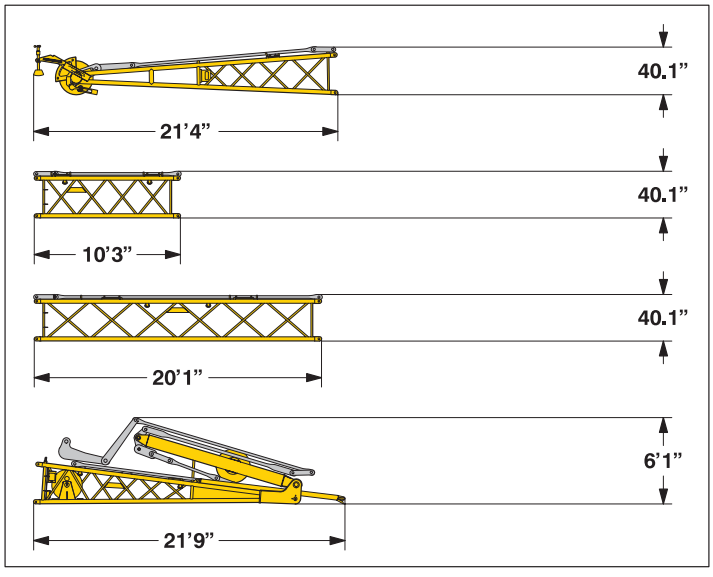

*) Including pendant straps

Fixed jib head (No. 1008.20)

Width	45”
Weight in lbs*	2,060

Fixed jib section (No. 1008.17) 10 ft

Width	43.3”
Weight in lbs*	660

Fixed jib section (No. 1008.17) 20 ft

Width	43.3”
Weight in lbs*	1,010

Fixed jib foot with A–frame (No. 1008.20)

Width	59”
Weight in lbs*	4,300

https://truckmanualshub.com/

Transport dimensions and weights

Counterweights

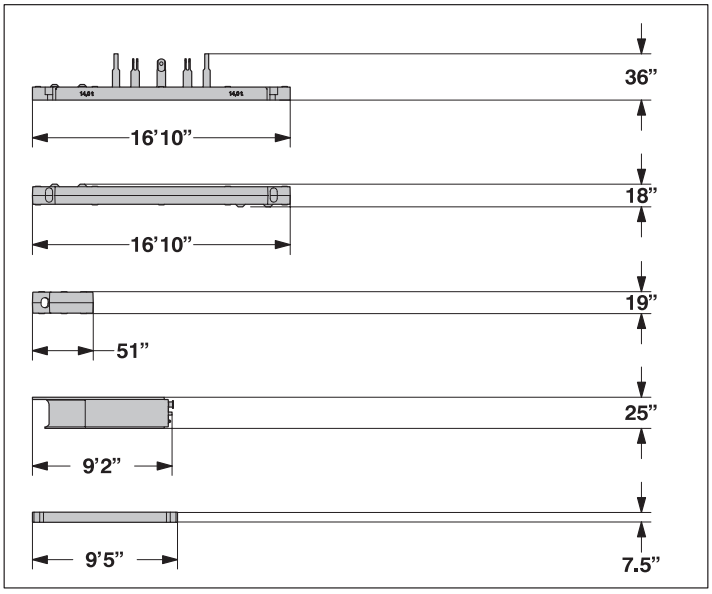

Counterweight	1x
Width	5’5”
Weight in lbs	31,970

Counterweight	1x
Width	5’5”
Weight in lbs	35,940

Counterweight	10x
Width	54”
Weight in lbs	11,250

Carbody counterweight	2x
Width	11’
Weight in lbs	21,600

Carbody counterweight	2x
Width	6’9”
Weight in lbs	18,300

Hooks

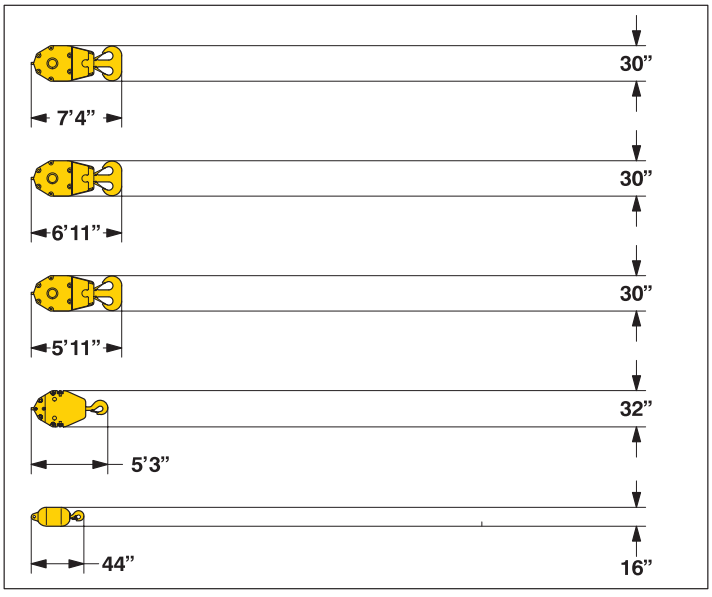

551,200 lbs hook block – 11 sheaves		
Width	41”	49”
Weight in lbs	5,070	7,050

353,000 lbs hook block – 7 sheaves			
Width	25”	30”	35”
Weight in lbs	3,300	4,960	6,610

220,500 lbs hook block – 5 sheaves			
Width	21”	25”	30”
Weight in lbs	2,900	4,000	5,070

88,200 lbs hook block – 1 sheave			
Width	12”	16”	20”
Weight in lbs	1,500	2,450	3,300

27,600 lbs single hook	
Width	16”
Weight in lbs	1,300

https://truckmanualshub.com/

Technical description

Engine

Power rating according to ISO 9249, 362 hp at 2000 rpm
Engine type — Liebherr D 936 L A6
Fuel tank — 211 gal capacity with continuous level indicator and reserve warning
Engine complies with NRMM exhaust certification EPA / CARB Tier 3 and 97/68 EC Stage III

Hydraulic system

A double axial displacement pump supplies the open loop hydraulic system, allowing all functions to be operated simultaneously. To minimize peak pressure an automatic working pressure cut–off is integrated in the pump. All filters are electronically monitored.
The use of synthetic environmentally friendly (biodegradable) oils is possible.
Working pressure — max. 5076 PSI
Oil tank capacity — 172 gal

Luffing jib winch

Line pull — max. 23,150 lbs
Rope diameter — 20 mm
Jib luffing — 51 sec. from 15° to 78°

Boom winch

Line pull — max. 47,850 lbs
Rope diameter — 24 mm
Boom up — 130 sec. from 15° to 86°

Swing

Consists of rollerbearing with external teeth, swing drive with fixed axial piston hydraulic motor, spring loaded and hydraulically released multi–disc holding brake, planetary gearbox and pinion.
Free swing with hydraulic moment control reduces wear to a minimum. Alternatively the swing control can be changed to simulate closed loop speed control. Then a multi–disc holding brake acts automatically at zero swing motion.
Swing speed from 0 – 3 rpm continuously variable.

Main winches

Line pull (1st layer) — max. 38,600 lbs
Line pull (7th layer) — 26,500 lbs
Rope diameter — 26 mm
Drum diameter — 23 inch
Rope speed ft/min — 0 – 446
Rope capacity in 7 layers — 1600 ft
The winches are outstanding in their compact design and easy assembly. Propulsion is via a planetary gearbox in an oil bath.
Load support by the hydraulic system; additional safety factor provided by a spring loaded, multi–disc holding brake.
The main winches use pressure controlled, variable flow hydraulic motors. This system features sensors that automatically adjust oil flow to provide max. winch speed depending on load.
Option – winch with freefall system:
Clutch and braking functions on the freefall system are provided by a compact designed, low wear and maintenance free multi–disc brake.

Crawlers

Propulsion through axial piston motor, hydraulically released spring loaded multi–disc brake, crawler tracks, hydraulic chain tensioning device.
Flat track shoes — 47.2 inch
Drive speed — 0 – 1 mph

Control

The control system – developed and manufactured by Liebherr – is designed to withstand extreme environmental conditions such as temperature, vibration and electromagnetic interference and to meet all requirements that are needed in heavy duty crane operation.
Complete machine operating data are shown on a high resolution display. Standard operational information is displayed by means of graphical symbols, fault indications are displayed in plain text (more than 15 languages available).
The cranes are equipped with proportional control for all main movements, which can be carried out simultaneously.
The crane is operated with 2 multi–directional joysticks, the right for winch I and boom, the left for winch II and swing control.
Option:
Bi–directional double T–levers for simultaneous boom and luffing jib operation.
The crawlers are activated by the two central foot pedals. Additionally, hand levers can be attached to the pedals.

Noise emission

Noise emissions correspond with 2000/14/EC directive on noise emission by equipment used outdoors.

https://truckmanualshub.com/

Boom combinations

Main boom inserts (No. 2320.23)

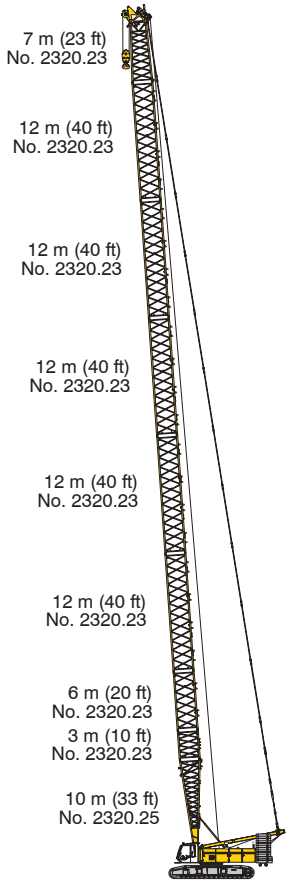

Main boom No. 2320.xx	282 ft

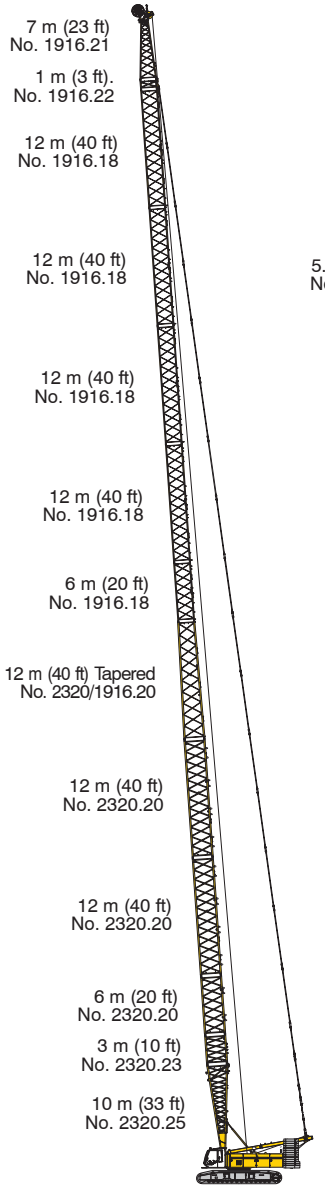

Max. combination	384 ft
Main boom No. 2320.xx	141 ft
Tapered No. 2320/1916.xx	40 ft
Luffing jib No. 1916.xx	203 ft

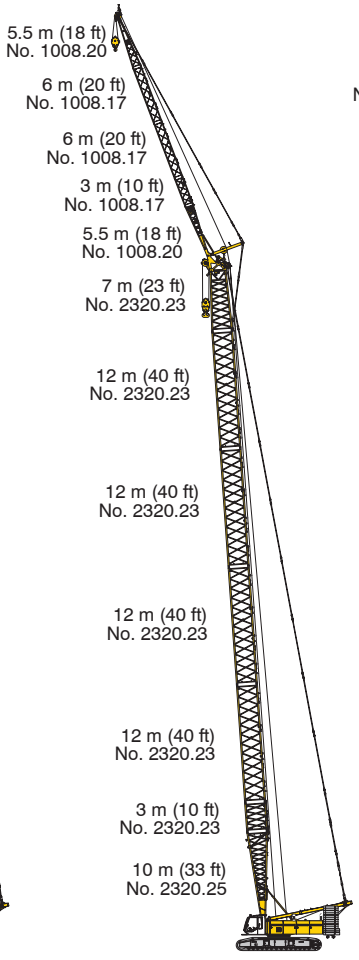

Max. combination	318 ft
Main boom No. 2320.xx	233 ft
Fixed jib No. 1008.xx	85 ft

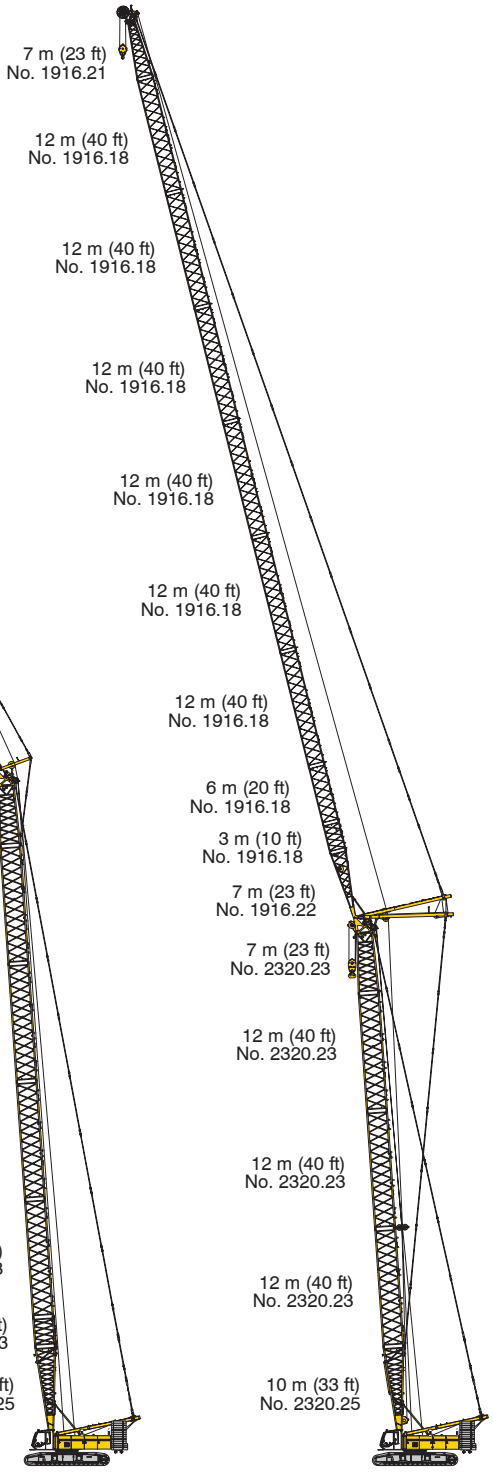

Max. combination	486 ft
Main boom No. 2320.xx	174 ft
Luffing jib No. 1916.xx	312 ft
Main boom No. 2320.xx	194 ft
Luffing jib No. 1916.xx	174 ft

https://truckmanualshub.com/

Self assembly system

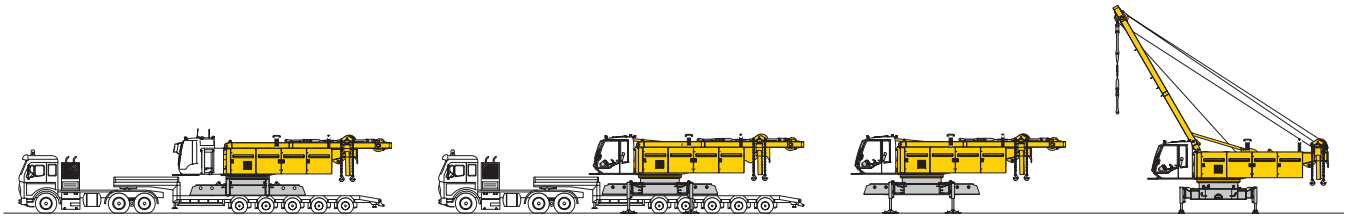

Unloading of basic machine

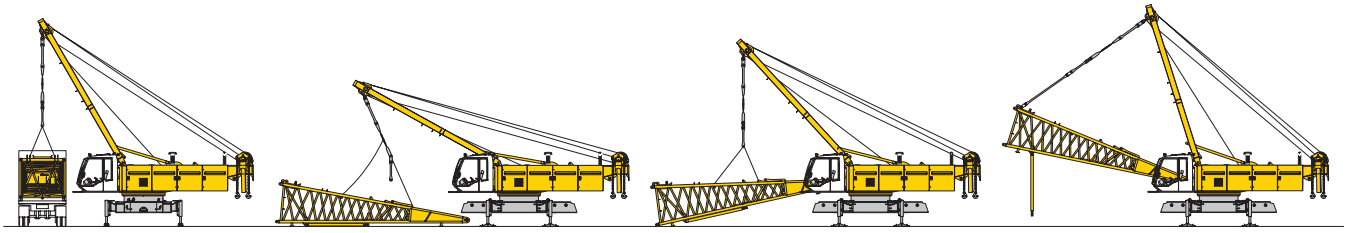

Unloading and assembly of boom foot

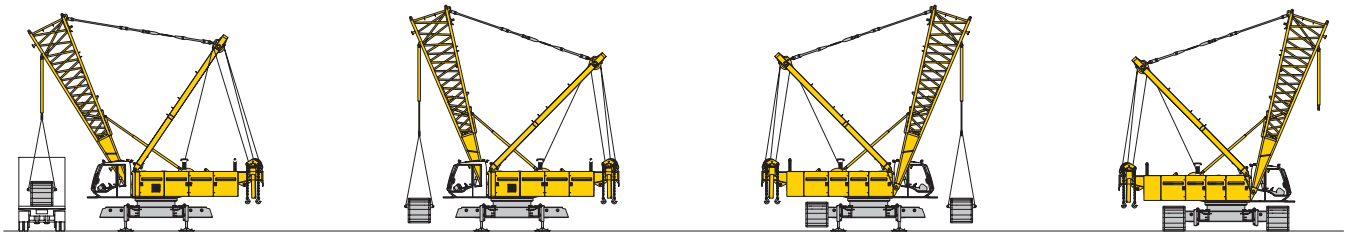

Unloading and assembly of crawlers

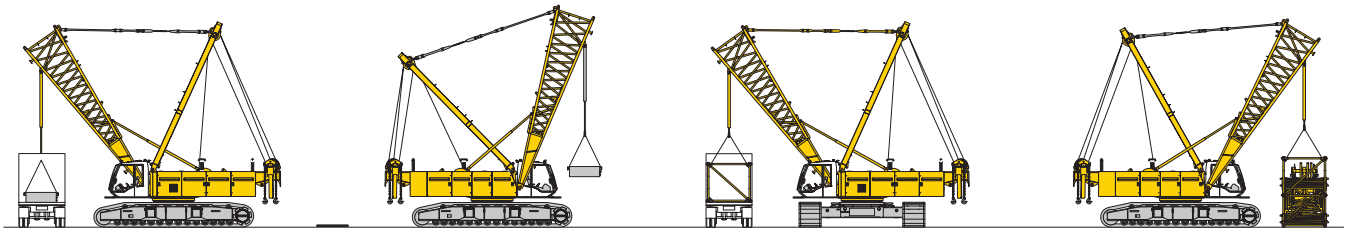

Unloading and assembly of carbody counterweight

Unloading and assembly of boom

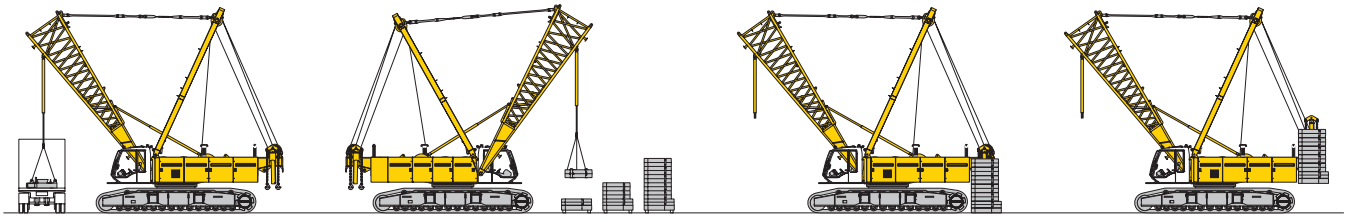

Unloading and assembly of counterweight

https://truckmanualshub.com/

Erecting of main boom to working position

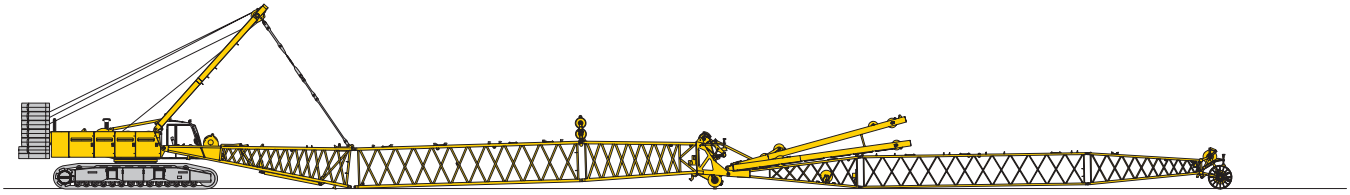

Assembly of boom

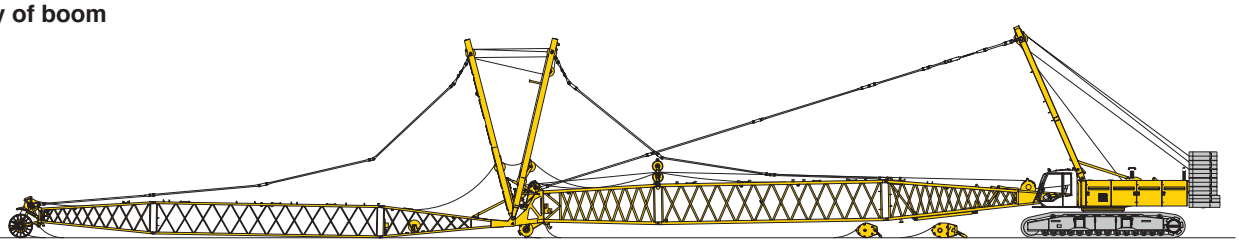

Reeving of hoist and luffing jib ropes

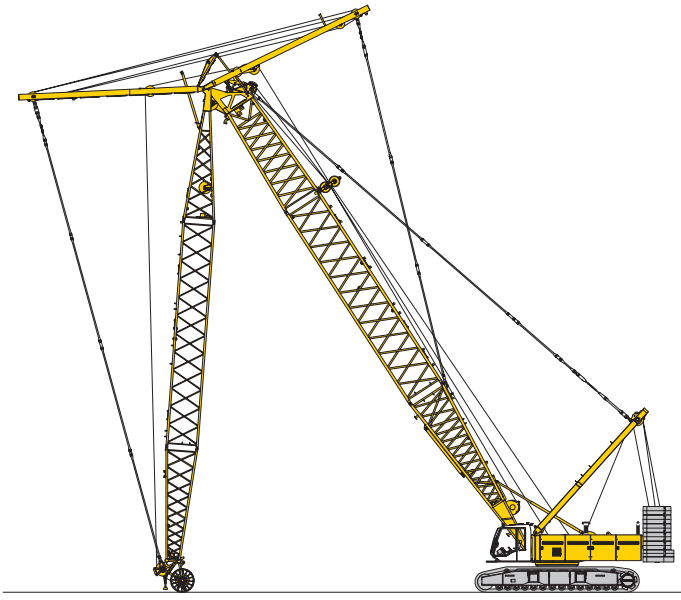

Erecting of main boom and luffing jib

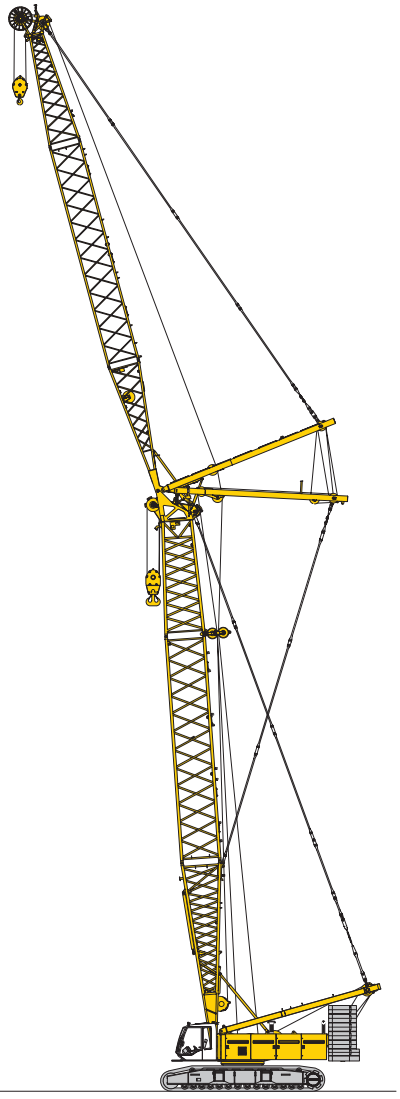

Working position

https://truckmanualshub.com/

Working range – main boom (No. 2320.xx) 86° – 15°

178,600 lbs counterweight and 79,400 lbs carbody counterweight

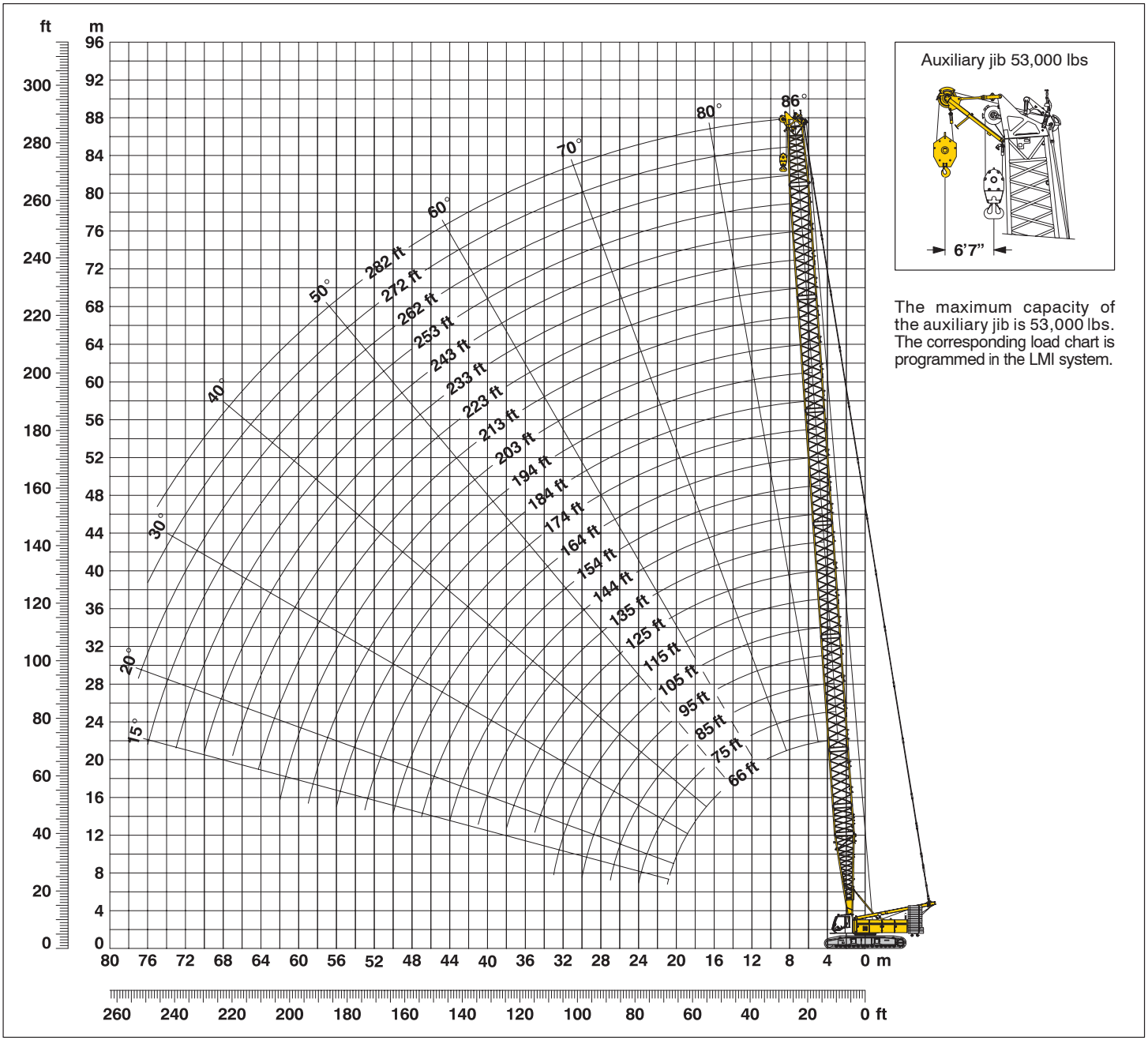

The maximum capacity of the auxiliary jib is 53,000 lbs. The corresponding load chart is programmed in the LMI system.

Main boom configuration (Table1 – No. 2320.xx)

Configuration for boom lengths (66 ft – 292 ft)

	Length	Amount of boom extensions																						
Boom foot	33 ft	1	1	1	1	1	1	1	1	1	1	1	1	1	1	1	1	1	1	1	1	1	1	1
Boom insert	10 ft*	1		1		1		1		1		1		1		1		1		1		1		1
Boom insert	20 ft*		1	1			1	1			1	1			1	1			1	1			1	1
Boom insert	40 ft*				1	1	1	1	2	2	2	2	3	3	3	3	4	4	4	4	5	5	5	5
Boom head	23 ft	1	1	1	1	1	1	1	1	1	1	1	1	1	1	1	1	1	1	1	1	1	1	1
Boom length in (ft)		66	75	85	95	105	115	125	135	144	154	164	174	184	194	203	213	223	233	243	253	262	272	282

*Actual lengths of boom sections are metric (e.g. 3 m, 6 m, 12 m). The figures shown above are approximate conversions to feet.

https://truckmanualshub.com/

Lift chart for main boom (No. 2320.23)

178,600 lbs counterweight and 79,400 lbs carbody counterweight

Capacities in 1000 lbs for boom lengths (66 ft – 282 ft) – with 26,500 lbs winches

	Boom length in (ft)												
	66	85	105	125	144	164	184	203	223	243	262	282	
Radius (ft)	lbs	lbs	lbs	lbs	lbs	lbs	lbs	lbs	lbs	lbs	lbs	lbs	Radius (ft)
20					279.9								23
25			309.2	291.8	270.2	234.9	202.4	174.4	148.3				25
30	264.2	264.8	263.5	262.1	240.5	223.9	195.4	170.1	147.0	127.7	111.4	94.4	30
40	176.5	176.5	176.4	176.0	172.3	175.2	174.7	161.6	142.2	123.5	108.3	93.0	40
50	129.7	129.6	129.5	128.4	128.5	128.0	124.8	126.8	126.2	119.4	103.3	90.4	50
60	101.4	101.5	101.3	100.8	100.3	99.6	99.0	98.3	97.7	97.0	95.2	87.9	60
65	91.0	91.2	91.0	90.5	90.0	89.3	88.7	88.0	87.3	86.6	85.8	83.3	65
85		63.5	63.5	63.0	62.5	61.8	61.1	60.3	59.6	58.8	58.1	57.3	85
105			26.6	46.9	46.4	45.7	45.0	44.2	43.5	42.6	41.9	41.0	105
120				38.5	38.2	37.5	36.8	36.0	35.2	34.4	33.6	32.7	120
140					30.0	29.4	28.8	28.0	27.2	26.6	25.8	24.9	140
160						23.6	23.0	22.3	21.5	20.7	19.9	19.0	160
180							18.4	17.7	17.0	16.1	15.3	14.4	180
200								14.0	13.3	12.5	11.7	10.8	200
210									11.7	10.9	10.1	9.3	210
215									11.0	10.2	9.4	8.5	215
230										8.2	7.5	6.6	230
235										7.6	6.9	6.0	235
250											5.2	4.3	250
255											4.7	3.8	255
260												3.3	260
270												2.4	270

Lift chart for main boom (No. 2320.23)

156,100 lbs counterweight and 79,400 lbs carbody counterweight

Capacities in 1000 lbs for boom lengths (66 ft – 262 ft) – with 26,500 lbs winches

	Boom length in (ft)												
	66	85	105	125	144	164	184	203	223	243	262	272	
Radius (ft)	lbs	lbs	lbs	lbs	lbs	lbs	lbs	lbs	lbs	lbs	lbs	lbs	Radius (ft)
13.4	550.0*												13.4
15	500.0*	434.1											15
20	410.7	379.2	362.6	318.0	279.9	240.3							20
25	319.0	333.0	309.2	291.8	270.2	234.9	202.4	174.4	148.3				25
30	247.0	247.2	245.2	247.1	240.5	223.9	195.4	170.1	147.0	127.7	111.4	101.9	30
40	161.2	161.2	161.1	160.7	160.4	159.9	159.5	155.3	142.2	123.5	108.3	99.9	40
50	118.2	118.2	118.0	117.5	117.1	116.5	116.0	115.4	114.4	111.2	103.3	96.9	50
60	92.2	92.3	92.1	91.6	91.1	90.5	89.9	89.2	88.5	87.8	85.5	84.2	60
65	82.7	82.9	82.7	82.2	81.6	81.0	80.4	79.6	79.0	78.3	76.9	75.7	65
85		57.4	57.4	56.9	56.4	55.7	55.0	54.2	53.5	52.6	51.9	51.5	85
105			26.6	42.0	41.6	40.8	40.2	39.4	38.6	37.8	37.0	36.6	105
120				34.4	34.0	33.3	32.6	31.8	31.1	30.2	29.4	29.0	120
140					26.6	26.1	25.5	24.7	23.9	23.1	22.3	21.9	140
160						20.6	20.0	19.2	18.5	17.6	16.8	16.4	160
180							15.7	15.0	14.3	13.4	12.6	12.2	180
200								11.6	10.9	10.1	9.3	8.9	200
210									9.5	8.6	7.9	7.4	210
215									8.8	8.0	7.2	6.8	215
230										6.1	5.4	5.0	230
235										5.6	4.8	4.4	235
250											3.3	2.9	250
255											2.8	2.4	255

Above lift chart is for reference only. For actual lift duty please refer to lift chart in operator's cab or manual.
*) Requires special boom

https://truckmanualshub.com/

L – boom high reach (No.2320 / 1916.xx) 217 ft – 384 ft

Working range 84° – 15°

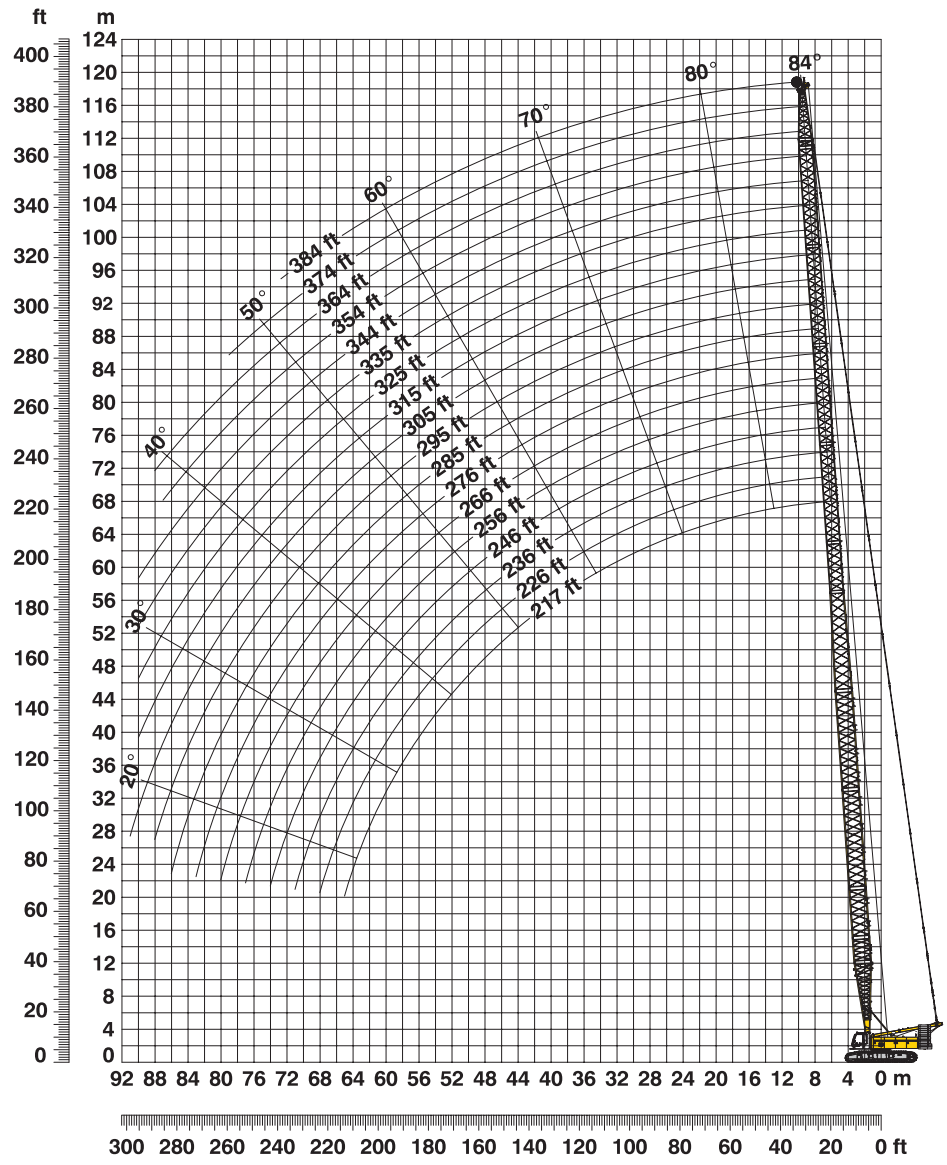

L – boom configuration with 141 ft main boom (No. 2320.xx / No. 1916.xx)

Configuration for L – boom lengths (217 ft – 384 ft)

	Length	Amount of boom and luffing jib extensions																	
Boom foot	33 ft	1	1	1	1	1	1	1	1	1	1	1	1	1	1	1	1	1	1
Boom insert	10 ft*	1	1	1	1	1	1	1	1	1	1	1	1	1	1	1	1	1	1
Boom insert	20 ft*	1	1	1	1	1	1	1	1	1	1	1	1	1	1	1	1	1	1
Boom insert	40 ft*	2	2	2	2	2	2	2	2	2	2	2	2	2	2	2	2	2	2
Tapered	40 ft*	1	1	1	1	1	1	1	1	1	1	1	1	1	1	1	1	1	1
Luffing insert	10 ft*	1		1		1		1		1		1		1		1		1	
Luffing insert	20 ft*		1	1			1	1			1	1			1	1			1
Luffing insert	40 ft*				1	1	1	1	2	2	2	2	3	3	3	3	4	4	4
Luffing jib head	26 ft*	1	1	1	1	1	1	1	1	1	1	1	1	1	1	1	1	1	1
Max. L – boom length (ft)		217	226	236	246	256	266	276	285	295	305	315	325	335	344	354	364	374	384

*Actual lengths of boom sections are metric (e.g. 3 m, 6 m, 8 m, 10 m, 12 m). The figures shown above are approximate conversions to feet.

https://truckmanualshub.com/

Lift chart for L – boom (No. 2320 /1916.xx)

Main boom inserts (No. 2320.23)

Main boom length 141 ft

Capacities in 1000 lbs
178,600 lbs counterweight and 79,400 lbs carbody counterweight

	Boom length in (ft)					
	217	246	295	325	354	384
Radius (ft)	lbs	lbs	lbs	lbs	lbs	lbs
30	139.8					
35	139.3	99.9				
40	127.4	97.2	61.6			
45	121.7	94.0	59.4	45.0	35.4	
50	108.0	91.1	56.6	43.3	34.1	24.0
60	89.5	84.0	51.3	39.9	31.4	22.6
70	75.3	72.0	47.0	36.5	29.2	21.4
80	65.6	65.7	43.3	33.9	26.8	19.8
90	58.1	56.7	40.1	31.3	24.1	18.6
100	48.7	49.6	37.5	29.2	22.5	17.4
110	45.1	44.7	34.9	27.4	21.3	16.3
120	39.9	39.8	33.0	24.6	20.1	15.4
130	35.6	35.5	30.7	23.6	18.9	14.5
140	32.0	31.9	28.6	22.5	18.0	13.7
150	28.8	28.8	26.9	21.2	17.1	13.0
160	26.2	26.2	25.4	20.2	16.2	12.4
170	23.8	23.8	23.0	19.4	15.3	11.7
180	21.7	21.7	20.9	18.0	14.7	11.1
190	19.8	19.8	19.0	16.8	13.9	10.5
200	18.1	18.1	17.3	15.8	13.0	10.1
210	16.6	16.6	15.8	14.9	12.2	9.4
220		15.2	14.4	13.7	11.5	8.7
230		13.9	13.1	12.6	10.9	8.2
240		12.7	12.0	11.6	9.7	7.7
260			10.0	9.6	7.7	6.0
280			8.0	7.6	5.9	4.2
285			7.5	7.2	5.3	3.8
300				5.8	3.8	2.8
310				4.9	2.9	2.4
315				4.4	2.5	2.1
320					2.2	
325					2.0	

Main boom length 180 ft

Capacities in 1000 lbs
178,600 lbs counterweight and 79,400 lbs carbody counterweight

	Boom length in (ft)					
	256	295	315	335	354	374
Radius (ft)	lbs	lbs	lbs	lbs	lbs	lbs
35	108.4					
40	106.7	75.1	65.5			
45	102.0	73.3	63.6	51.2	43.7	
50	100.2	71.0	61.7	49.9	42.1	35.3
60	86.1	67.6	57.9	46.0	39.0	32.7
70	72.2	64.4	53.5	42.6	36.4	30.6
80	62.7	58.2	49.6	39.5	33.6	28.3
90	54.4	49.6	46.2	36.9	31.5	25.4
100	46.4	45.9	43.7	34.6	29.4	24.1
110	42.5	40.1	39.2	32.8	27.8	22.8
120	37.5	35.8	34.6	30.5	25.7	21.8
130	33.7	31.8	31.2	28.7	24.2	20.6
140	30.3	28.2	27.6	27.2	23.0	19.5
150	27.2	25.4	23.4	23.7	21.8	18.6
160	24.6	24.1	22.1	21.3	19.4	17.3
170	22.2	21.9	20.7	19.4	17.4	15.3
180	20.1	19.8	19.0	17.8	15.8	13.7
190	18.2	17.9	17.5	16.4	14.4	12.4
200	16.5	16.2	15.9	15.1	13.3	11.3
210	15.0	14.7	14.4	14.1	12.2	10.2
220	13.6	13.3	13.0	12.8	11.4	9.3
230	12.4	12.0	11.6	11.3	10.6	8.6
240	11.2	10.9	10.4	9.9	9.0	7.9
250	10.1	9.8	9.2	8.7	7.6	6.5
260		8.7	7.9	7.6	6.3	5.2
280		6.4	5.9	5.2	4.3	3.1
285		5.8	5.4	4.6	3.8	2.7
290			5.0	4.1	3.3	2.4
300			4.1	3.3	2.4	2.0
305			3.7	2.9		
310				2.5		
315				2.2		

Above lift chart is for reference only. For actual lift duty please refer to lift chart in operator's cab or manual.

L – boom configuration with 180 ft main boom (No. 2320.xx / No. 1916.xx)

Configuration for L – boom lengths (256 ft – 374 ft)

	Length	Amount of boom and luffing jib extensions												
Boom foot	33 ft	1	1	1	1	1	1	1	1	1	1	1	1	1
Boom insert	10 ft*	1	1	1	1	1	1	1	1	1	1	1	1	1
Boom insert	20 ft*	1	1	1	1	1	1	1	1	1	1	1	1	1
Boom insert	40 ft*	3	3	3	3	3	3	3	3	3	3	3	3	3
Tapered	40 ft*	1	1	1	1	1	1	1	1	1	1	1	1	1
Luffing insert	10 ft*	1		1		1		1		1		1		1
Luffing insert	20 ft*		1	1			1	1			1	1		
Luffing insert	40 ft*				1	1	1	1	2	2	2	2	3	3
Luffing jib head	26 ft*	1	1	1	1	1	1	1	1	1	1	1	1	1
Max. L – boom length (ft)		256	266	276	285	295	305	315	325	335	344	354	364	374

*Actual lengths of boom sections are metric (e.g. 3 m, 6 m, 8 m, 10 m, 12 m). The figures shown above are approximate conversions to feet.

https://truckmanualshub.com/

Working range – luffing jib (No. 1916.xx) 78° - 15°

Main boom 88° – 45°

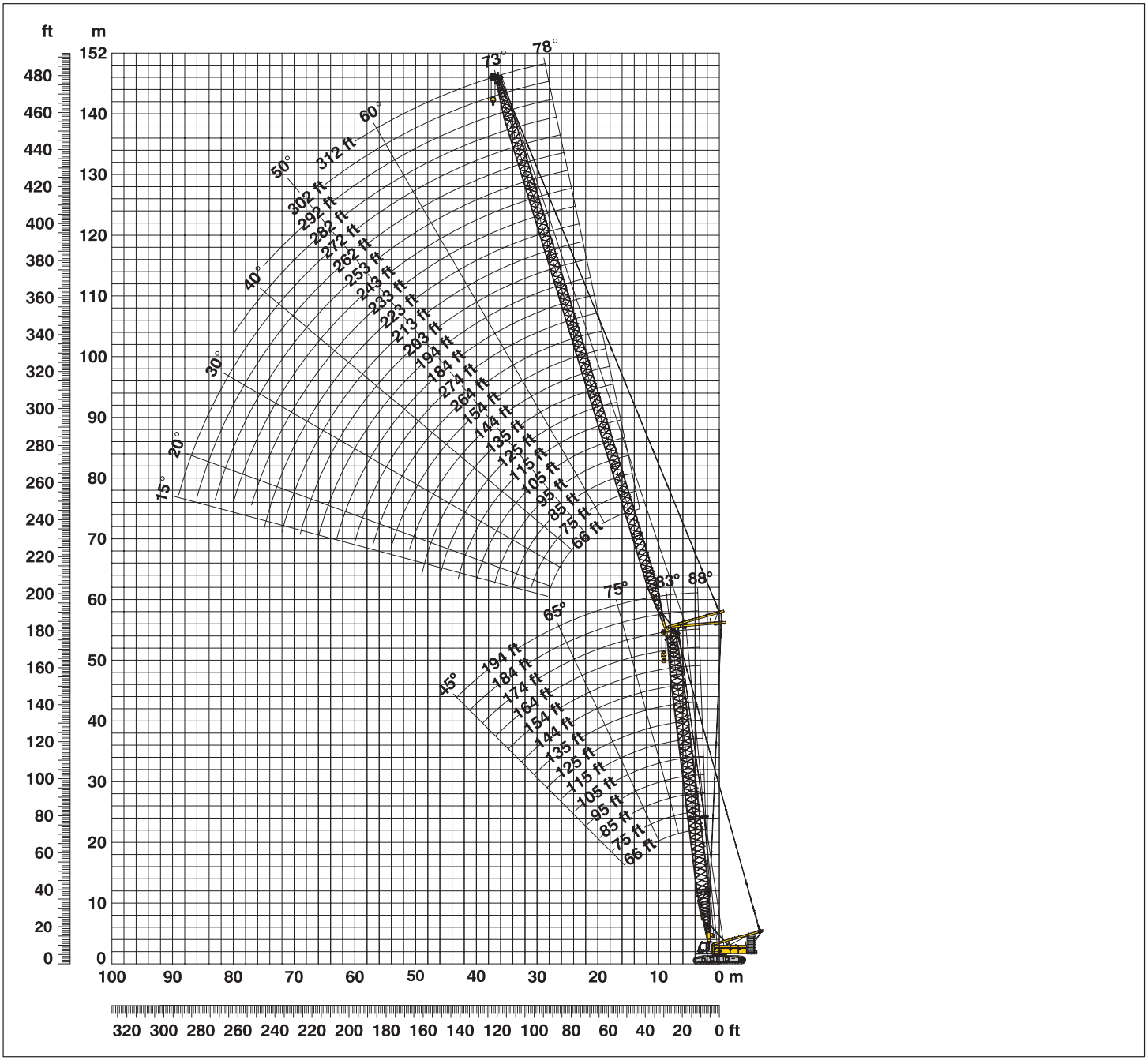

Boom configuration for main boom lengths (66 ft – 194 ft) – see table 1 on page 10

Jib configuration for jib lengths (66 ft – 312 ft)

	Length	Amount of luffing jib extensions																									
Luffing jib foot	23 ft	1	1	1	1	1	1	1	1	1	1	1	1	1	1	1	1	1	1	1	1	1	1	1	1	1	1
Luffing jib insert	10 ft*		1		1		1		1		1		1		1		1		1		1		1		1		1
Luffing jib insert	20 ft*	1	1			1	1			1	1			1	1			1	1			1	1			1	1
Luffing jib insert	40 ft*			1	1	1	1	2	2	2	2	3	3	3	3	4	4	4	4	5	5	5	5	6	6	6	6
Luffing jib head	23 ft	1	1	1	1	1	1	1	1	1	1	1	1	1	1	1	1	1	1	1	1	1	1	1	1	1	1
Luffing jib length (ft)		66	75	85	95	105	115	125	135	144	154	164	174	184	194	203	213	223	233	243	253	262	272	282	292	302	312

*Actual lengths of boom sections are metric (e.g. 3 m, 6 m, 12 m). The figures shown above are approximate conversions to feet.

https://truckmanualshub.com/

Lift chart – luffing jib (No. 1916.xx)

Main boom angle 88° – main boom inserts (No. 2320.23)

Main boom 75 ft

	Jib length in (ft)							
	66	95	135	174	203	233	272	312
Radius (ft)	lbs	lbs	lbs	lbs	lbs	lbs	lbs	lbs
30	155.8							
35	155.8	148.7						
45	142.2	132.3	97.0					
50	124.0	121.5	93.5	69.2				
55	118.7	112.6	89.2	67.9	51.9			
65	100.1	95.3	81.8	65.0	50.2	38.9		
70	85.5	90.4	75.0	63.6	49.2	38.2	26.7	
75	26.6	83.8	73.5	62.6	48.1	37.8	25.2	
100		54.5	56.7	56.1	43.9	34.6	22.9	15.8
140			26.6	37.7	37.1	30.2	19.9	13.1
175				24.0	27.6	25.4	17.8	11.4
205					19.9	21.5	16.4	10.0
235						15.0	15.3	8.7
270							10.3	7.4
290								6.3
310								5.3

Main boom 115 ft

	Jib length in (ft)							
	66	95	135	174	203	233	272	312
Radius (ft)	lbs	lbs	lbs	lbs	lbs	lbs	lbs	lbs
27.4	155.8							
35	155.8	130.6						
45	151.2	124.3	89.1					
50	139.7	120.0	86.6	61.3				
60	110.8	110.3	81.3	60.2	46.0			
65	100.3	100.0	77.1	59.3	45.5	35.1		
75	74.4	83.9	72.2	57.7	44.4	34.3	23.5	
80		77.5	69.7	56.7	43.8	33.9	23.1	16.0
100		59.0	58.3	53.0	41.3	32.2	21.6	14.8
140			37.4	37.8	36.7	28.6	19.0	12.5
180				25.5	26.6	24.7	16.9	10.7
205					22.0	21.5	15.9	9.7
235						16.8	14.8	8.5
275							10.7	7.2
290								6.6
310								5.9

Main boom 144 ft

	Jib length in (ft)							
	66	95	135	174	203	233	272	312
Radius (ft)	lbs	lbs	lbs	lbs	lbs	lbs	lbs	lbs
30	143.2							
35	141.9	112.1						
45	132.0	107.4	77.1					
55	119.5	100.2	73.9	53.8				
60	110.8	97.6	72.3	53.0	41.1			
65	100.3	93.3	70.6	51.8	40.6	32.1		
75	82.8	83.9	66.6	50.1	39.5	31.4	21.9	
80		77.3	65.1	49.2	38.9	31.1	21.8	15.4
100		59.0	56.7	45.6	36.5	29.6	20.5	14.1
140			38.4	37.7	31.9	25.6	18.3	12.0
180				27.1	26.6	23.0	16.4	10.2
205					22.2	21.5	15.4	9.2
235						17.1	14.4	8.2
275							11.2	6.9
290								6.4
310								5.7

Main boom 174 ft

	Jib length in (ft)							
	66	95	135	174	203	233	272	312
Radius (ft)	lbs	lbs	lbs	lbs	lbs	lbs	lbs	lbs
30	118.8							
40	111.2	89.2						
45	107.0	86.5	64.3					
55	97.9	81.0	61.9	46.2				
60	94.2	78.0	60.4	45.5	36.5			
65	90.4	75.5	59.2	44.8	36.3	28.7		
75	80.8	70.3	55.9	43.1	35.1	28.2	19.9	
85		65.3	51.6	41.4	34.0	27.4	19.6	13.7
100		58.8	48.3	39.1	32.2	25.9	18.9	13.0
140			38.0	32.3	27.8	22.9	17.0	11.3
180				27.0	23.6	20.1	15.3	9.7
205					21.3	18.6	14.3	8.8
235						16.3	13.2	7.8
275							11.1	6.6
290								6.1
310								5.5

Main boom 184 ft

	Jib length in (ft)							
	66	95	115	135	174	203	233	
Radius (ft)	lbs	lbs	lbs	lbs	lbs	lbs	lbs	
30	109.1							
40	102.4	83.6	71.5					
45	98.3	81.1	70.4	60.8				
55	90.7	75.8	66.9	58.6	44.1			
60	87.4	73.5	65.0	57.1	43.5	34.8		
65	83.9	71.0	62.9	56.0	42.9	34.6	27.6	
70	81.0	68.3	61.4	54.3	41.9	34.0	27.6	
75	76.2	66.2	59.3	51.8	41.1	33.5	27.2	
100		56.2	49.8	45.8	37.3	30.6	25.0	
120			45.1	40.6	33.7	28.5	23.4	
140				36.7	30.7	25.7	22.0	
180					25.4	22.4	19.3	
190						21.6	18.6	
205						20.5	17.7	
220							17.0	
235							16.1	

Main boom 194 ft

	Jib length in (ft)							
	66	95	115	135	174			
Radius (ft)	lbs	lbs	lbs	lbs	lbs			
30.1	101.0							
40	95.4	77.4						
45	91.6	75.2	65.9	57.0				
55	84.7	70.5	62.5	55.1	41.7			
60	81.8	68.4	60.8	53.6	41.2			
70	75.9	63.6	57.4	50.7	39.7			
75	74.3	61.7	55.5	49.3	38.9			
90		55.6	50.4	45.3	36.5			
100		52.1	47.0	42.9	35.2			
110			44.4	40.5	33.4			
120			42.6	38.2	31.8			
130				36.5	30.5			
140				35.0	29.0			
160					26.3			
170					25.5			
180					24.5			

Capacities in 1000 lbs with luffing jib (No. 1916.xx) 178,600 lbs counterweight + 79,400 lbs carbody counterweight. Above lift chart is for reference only. For actual lift duty and complete chart with all available configurations please refer to lift chart in operator's cab or manual.

https://truckmanualshub.com/

Lift chart – luffing jib (No. 1916.xx)

Main boom angle 83° – main boom inserts (No. 2320.23)

Main boom 75 ft

	Jib length in (ft)							
	66	95	135	174	203	233	272	312
Radius (ft)	lbs	lbs	lbs	lbs	lbs	lbs	lbs	lbs
38.2	155.8							
50	136.2	135.6						
60	108.1	107.6	91.1					
70	89.2	88.8	84.4	64.9				
80	26.6	75.4	74.6	62.9	48.5			
90		65.3	64.6	60.6	46.8	36.0		
100		57.4	56.8	55.8	45.2	34.5	23.4	
105		54.1	53.5	52.4	44.3	34.0	23.2	
115			47.8	46.9	43.0	32.9	22.3	15.2
145			35.7	34.9	34.3	30.1	20.0	13.3
180				25.5	25.7	24.9	17.9	11.5
210					20.6	19.9	16.6	10.1
240						16.1	15.2	8.8
275							11.2	7.6
290								6.8
315								5.4

Main boom 115 ft

	Jib length in (ft)							
	66	95	135	174	203	233	272	312
Radius (ft)	lbs	lbs	lbs	lbs	lbs	lbs	lbs	lbs
43	155.8							
55	118.8	118.1						
65	96.4	95.8	84.5					
75	80.8	80.3	79.4	59.9				
85	69.1	68.9	68.0	58.4	44.9			
95		60.2	59.4	56.4	43.7	34.1		
105		53.2	52.5	51.5	42.4	33.0	21.8	
110		50.2	49.5	48.6	41.7	32.6	21.7	
115			46.9	46.0	41.1	32.1	21.4	14.7
150			33.5	32.7	32.1	28.9	19.1	12.5
190				23.9	23.3	22.5	17.0	10.7
215					19.4	18.7	16.0	9.8
245						15.2	14.2	8.6
285							10.7	7.3
300								6.8
320								6.1

Main boom 144 ft

	Jib length in (ft)							
	66	95	135	174	203	233	272	312
Radius (ft)	lbs	lbs	lbs	lbs	lbs	lbs	lbs	lbs
46.6	141.6							
60	104.9	104.2						
70	86.7	86.0	75.9					
80	73.6	73.1	72.1	53.9				
85	68.3	67.9	66.9	53.5				
90		63.3	62.4	52.2	40.8			
100		55.7	54.8	50.7	40.0	31.5		
110		49.5	48.7	47.7	38.9	30.8	20.6	
115		26.6	46.1	45.1	38.3	30.4	20.5	
120			43.7	42.8	37.8	30.0	20.2	13.4
150			32.9	32.1	31.4	27.7	18.5	12.1
190				23.4	22.8	22.0	16.6	10.4
220					18.4	17.6	15.5	9.3
245						14.8	13.8	8.4
285							10.4	7.1
325								5.9

Main boom 174 ft

	Jib length in (ft)							
	66	95	135	174	203	233	272	312
Radius (ft)	lbs	lbs	lbs	lbs	lbs	lbs	lbs	lbs
50.2	115.1							
60	103.2	89.4						
75	78.3	77.6	63.5					
85	67.2	66.6	60.9	45.9				
90	62.6	62.1	59.5	45.4				
95		58.2	57.2	44.8	36.1			
100		54.7	53.7	44.1	35.7	28.2		
115		46.0	45.2	42.0	34.3	27.6	18.9	
120		43.6	42.9	41.0	33.8	27.3	18.7	
125			40.7	39.7	33.4	26.9	18.5	12.4
160			26.6	28.8	28.1	24.0	16.9	11.1
195				22.0	21.4	20.6	15.5	9.8
225					17.3	16.5	14.5	8.8
250						13.8	12.9	7.9
290							9.6	6.8
330								5.6

Main boom 184 ft

	Jib length in (ft)							
	66	95	115	135	174	203	233	
Radius (ft)	lbs	lbs	lbs	lbs	lbs	lbs	lbs	
51.4	106.3							
65	92.8	82.2						
70	84.7	80.0	70.0					
75	77.8	77.0	68.5	59.9				
85	66.8	66.2	65.1	57.7	43.7			
95	26.6	57.8	57.3	55.1	42.7	34.3		
105		51.1	50.6	50.2	41.2	33.6	27.1	
120		43.3	42.9	42.5	39.1	32.1	25.6	
140			35.4	35.0	34.1	30.2	24.4	
160				29.5	28.6	27.9	23.2	
180					24.4	23.8	22.1	
195					21.8	21.2	20.4	
210						19.0	18.2	
225						17.1	16.3	
240							14.7	
255							13.2	

Main boom 194 ft

	Jib length in (ft)							
	66	95	115	135	174			
Radius (ft)	lbs	lbs	lbs	lbs	lbs			
52.6	99.0							
65	92.2	76.2						
70	84.2	74.3	65.4					
75	77.3	72.1	64.0	56.1				
80	71.4	70.3	62.4	55.2				
85	66.3	65.7	60.8	54.2	41.3			
95	57.7	57.4	56.9	51.2	40.4			
110		47.9	47.5	47.0	38.3			
120		43.0	42.6	42.2	37.0			
130			38.5	38.2	35.3			
140			35.0	34.8	33.8			
150				31.8	30.9			
160				29.2	28.3			
180					24.2			
190					22.5			
200					20.8			

Capacities in 1000 lbs with luffing jib (No. 1916.xx) 178,600 lbs counterweight + 79,400 lbs carbody counterweight. Above lift chart is for reference only. For actual lift duty and complete chart with all available configurations please refer to lift chart in operator's cab or manual.

https://truckmanualshub.com/

Lift chart – luffing jib (No. 1916.xx)

Main boom angle 75° – main boom inserts (No. 2320.23)

Main boom 75 ft

	Jib length in (ft)							
	66	95	135	174	203	233	272	312
Radius (ft)	lbs	lbs	lbs	lbs	lbs	lbs	lbs	lbs
60	103.8							
70	85.8	85.1						
90	26.6	62.6	61.6					
105		51.8	50.9	49.9				
115		46.3	45.5	44.5				
120			43.2	42.2	41.4			
130			39.1	38.1	37.4	32.5		
145			34.0	33.1	32.4	31.3	20.9	
155			31.2	30.3	29.6	28.8	19.9	
165				27.9	27.2	26.4	19.2	12.1
195				22.2	21.6	20.8	17.6	10.7
220					18.1	17.3	16.3	9.8
250						14.0	13.1	8.8
290							9.7	7.5
310								6.6
325								6.0

Main boom 115 ft

	Jib length in (ft)							
	66	95	135	174	203	233	272	312
Radius (ft)	lbs	lbs	lbs	lbs	lbs	lbs	lbs	lbs
70	82.1							
80	69.8	68.9						
100	53.0	52.5	51.4					
115		44.2	43.2	42.1				
130		26.6	37.1	36.0	35.2			
140			33.7	32.7	31.9	30.4		
155			29.6	28.6	27.8	26.9	19.6	
165			27.2	26.4	25.6	24.7	18.8	
175				24.3	23.6	22.7	18.2	11.4
205				19.4	18.8	17.9	16.8	10.3
230					15.7	14.9	13.8	9.4
260						12.0	11.0	8.5
280							9.5	8.0
300							8.1	7.1
320								5.9
335								5.1

Main boom 144 ft

	Jib length in (ft)							
	66	95	135	174	203	233	272	312
Radius (ft)	lbs	lbs	lbs	lbs	lbs	lbs	lbs	lbs
80	67.0							
90	58.0	57.1						
105	47.9	47.3	46.1					
125		38.1	37.1	35.9				
135		34.6	33.6	32.5	31.7			
150			29.4	28.3	27.5	26.5		
165			26.0	24.9	24.1	23.1	18.1	
175			23.9	23.0	22.2	21.2	17.9	
180				22.1	21.4	20.4	17.6	11.4
210				17.7	17.0	16.1	14.9	9.9
240					13.7	12.8	11.7	9.0
265						10.7	9.7	8.1
280							8.6	7.1
305							7.0	5.7
320								5.0
345								3.9

Main boom 174 ft

	Jib length in (ft)							
	66	95	135	174	203	233	272	312
Radius (ft)	lbs	lbs	lbs	lbs	lbs	lbs	lbs	lbs
85	59.3							
100	48.6	47.7						
115	26.6	40.1	38.9					
130		34.4	33.3	32.1				
140		31.3	30.3	29.1				
145			28.9	27.7	26.9			
155			26.6	25.4	24.6	22.9		
170			23.5	22.4	21.6	20.2	17.2	
180			21.7	20.7	19.9	18.6	16.4	
190				19.1	18.3	17.2	15.1	10.1
215				15.9	15.2	14.2	12.2	9.4
245					12.2	11.3	9.6	7.7
275						9.0	7.6	5.7
310							5.8	4.0
330								3.2
350								2.5

Main boom 184 ft

	Jib length in (ft)							
	66	95	115	135	174	203	233	
Radius (ft)	lbs	lbs	lbs	lbs	lbs	lbs	lbs	
90	54.3							
100	47.7	46.8						
110	42.4	41.6	40.9					
115	40.0	39.3	38.7	38.1				
135		32.1	31.6	31.0	29.8			
145		29.3	28.8	28.3	27.1	26.0		
160			25.4	24.9	23.7	22.9	21.0	
165			24.3	23.9	22.8	21.9	20.1	
185				20.4	19.4	18.6	17.0	
220					14.9	14.2	13.1	
240						12.2	11.3	
250						11.4	10.5	
270							9.0	
280							8.3	

Main boom 194 ft

	Jib length in (ft)							
	66	95	115	135	174			
Radius (ft)	lbs	lbs	lbs	lbs	lbs			
90	53.3							
105	44.1	43.1						
110	41.6	40.7	40.0					
120	37.3	36.5	35.9	35.3				
135		31.5	30.9	30.3	29.0			
140		30.0	29.5	28.9	27.7			
150		26.6	26.9	26.5	25.3			
160			24.8	24.3	23.1			
170			22.8	22.4	21.3			
180				20.7	19.6			
185				19.9	18.8			
200					16.8			
220					14.5			
225					13.9			

Capacities in 1000 lbs with luffing jib (No. 1916.xx) 178,600 lbs counterweight + 79,400 lbs carbody counterweight. Above lift chart is for reference only. For actual lift duty and complete chart with all available configurations please refer to lift chart in operator's cab or manual.

https://truckmanualshub.com/

Lift chart – luffing jib (No. 1916.xx)

Main boom angle 65° – main boom inserts (No. 2320.23)

Main boom 75 ft

	Jib length in (ft)							
	66	95	135	174	203	233	272	312
Radius (ft)	lbs	lbs	lbs	lbs	lbs	lbs	lbs	lbs
80	69.2							
100	52.6	52.0						
120		41.6	40.6					
130		37.5	36.7					
145			31.9	30.9				
160			28.1	27.1	26.4			
170			25.9	25.0	24.3			
180				23.1	22.4	21.5		
200				19.9	19.2	18.3	17.2	
205				19.2	18.5	17.6	16.5	
225					16.1	15.2	14.1	10.2
235					15.0	14.1	13.1	9.9
265						11.4	10.4	8.7
300							7.9	6.9
320								5.8
340								4.7

Main boom 115 ft

	Jib length in (ft)							
	66	95	135	174	203	233	272	312
Radius (ft)	lbs	lbs	lbs	lbs	lbs	lbs	lbs	lbs
95.8	51.2							
115	40.8	40.1						
120	26.6	38.0						
140		31.2	30.2					
145		29.8	28.8					
160			25.4	24.2				
175			22.5	21.4	20.5			
185			20.8	19.8	19.0			
195				18.3	17.5	16.5		
215				15.8	15.1	14.1	12.8	
225				14.7	14.0	13.0	11.8	
240					12.5	11.6	10.5	8.8
250					11.7	10.8	9.6	8.0
280						8.5	7.5	6.0
320							5.2	4.0
355								2.6

Main boom 144 ft

	Jib length in (ft)							
	66	95	135	174	203	233	272	312
Radius (ft)	lbs	lbs	lbs	lbs	lbs	lbs	lbs	lbs
108.3	40.7							
130	32.2	31.5						
150		26.2	25.0					
160		24.0	23.0					
175			20.3	19.1				
190			18.1	16.9	16.1			
200			16.7	15.6	14.8			
205				15.1	14.2	13.1		
230				12.5	11.7	10.7	8.9	
235				12.0	11.3	10.3	8.5	
250					10.1	9.1	7.4	5.4
265					9.0	8.0	6.5	4.6
295						6.2	4.9	3.0
320							3.8	2.0
330							3.4	

Main boom 174 ft

	Jib length in (ft)							
	66	95	144	174	203	233	272	
Radius (ft)	lbs	lbs	lbs	lbs	lbs	lbs	lbs	
120.8	32.2							
140	26.6	25.7						
170		19.8	18.4					
185			16.2	15.2				
200			14.4	13.4	12.3			
215			12.9	11.9	11.0			
220				11.5	10.6	8.8		
240				9.8	9.0	7.4	5.3	
245				9.4	8.7	7.1	5.1	
260					7.6	6.2	4.2	
270					7.0	5.7	3.7	
275					6.7	5.5	3.5	
290						4.8	2.8	
305						4.2	2.3	
310							2.1	

Main boom 184 ft

	Jib length in (ft)							
	66	95	115	135	174	203	233	
Radius (ft)	lbs	lbs	lbs	lbs	lbs	lbs	lbs	
124.9	29.6							
145	24.5	23.5						
150	23.3	22.5						
155		21.5	20.8					
165		19.7	19.1	18.4				
175		18.2	17.6	17.0				
190			15.5	15.0	13.7			
195			14.9	14.5	13.2			
205				13.4	12.1	10.7		
215				12.3	11.2	9.9		
225					10.3	9.2	7.4	
250					8.4	7.5	5.8	
280						5.9	4.4	
300							3.6	
310							3.2	

Main boom 194 ft

	Jib length in (ft)							
	66	95	115	135	174			
Radius (ft)	lbs	lbs	lbs	lbs	lbs			
129.1	27.3							
135	25.8							
150	22.4	21.5						
160		19.7	18.9					
170		18.1	17.4	16.7				
180		16.6	16.0	15.4				
190			14.8	14.2				
195			14.2	13.7	12.1			
200			13.6	13.1	11.6			
210				12.1	10.7			
215				11.6	10.3			
230					9.2			
240					8.5			
250					7.8			
255					7.5			

Capacities in 1000 lbs with luffing jib (No. 1916.xx) 178,600 lbs counterweight + 79,400 lbs carbody counterweight. Above lift chart is for reference only. For actual lift duty and complete chart with all available configurations please refer to lift chart in operator's cab or manual.

https://truckmanualshub.com/

Lift chart – luffing jib (No. 1916.xx)

Main boom angle 45° – main boom inserts (No. 2320.23)

Main boom 75 ft

	Jib length in (ft)							
	66	95	135	174	203	233	272	312
Radius (ft)	lbs	lbs	lbs	lbs	lbs	lbs	lbs	lbs
116	39.8							
120	38.1							
141		30.5						
150		28.0						
175			22.0					
190			19.6					
205				16.5				
225				14.3				
230					13.0			
255					10.9	10.0		
285						7.9		
290							6.5	
320							4.9	3.8
360								2.1

Main boom 115 ft

	Jib length in (ft)							
	66	95	135	174	203	233	272	312
Radius (ft)	lbs	lbs	lbs	lbs	lbs	lbs	lbs	lbs
143.9	25.6							
150	24.2							
168		19.9						
180		18.1						
205			13.9					
215			12.9					
235				10.0				
255				8.5				
270					6.8			
285					6.0	5.0		
300						4.3		
310						3.8		
315							2.2	
320							2.0	

Main boom 144 ft

	Jib length in (ft)							
	66	95	135	174	203			
Radius (ft)	lbs	lbs	lbs	lbs	lbs			
164.7	17.7							
170	17.0							
190		13.5						
200		12.4						
223			9.3					
235			8.4					
255				5.9				
275				4.9				
280					3.8			
305					2.8			

Main boom 174 ft

	Jib length in (ft)							
	66	95	135					
Radius (ft)	lbs	lbs	lbs					
185.6	11.3							
190	11.0							
210		8.2						
215		7.9						
220		7.6						
242			4.9					
245			4.8					
250			4.6					
255			4.4					
260			4.1					

Main boom 184 ft

	Jib length in (ft)							
	66	95	115	135				
Radius (ft)	lbs	lbs	lbs	lbs				
192.6	9.4							
200	8.8							
220		6.4						
225		6.1						
235			4.9					
245			4.4					
249				3.4				
265				2.9				

Main boom 194 ft

	Jib length in (ft)							
	66	95	115					
Radius (ft)	lbs	lbs	lbs					
199.5	7.6							
205	7.3							
225		5.0						
230		4.8						
235		4.5						
240			3.3					
250			3.0					
255			2.8					

Capacities in 1000 lbs with luffing jib (No. 1916.xx) 178,600 lbs counterweight + 79,400 lbs carbody counterweight. Above lift chart is for reference only. For actual lift duty and complete chart with all available configurations please refer to lift chart in operator's cab or manual.

https://truckmanualshub.com/

Working range – fixed jib (No. 1008.xx) 15° and 30°

Main boom 88°– 30°

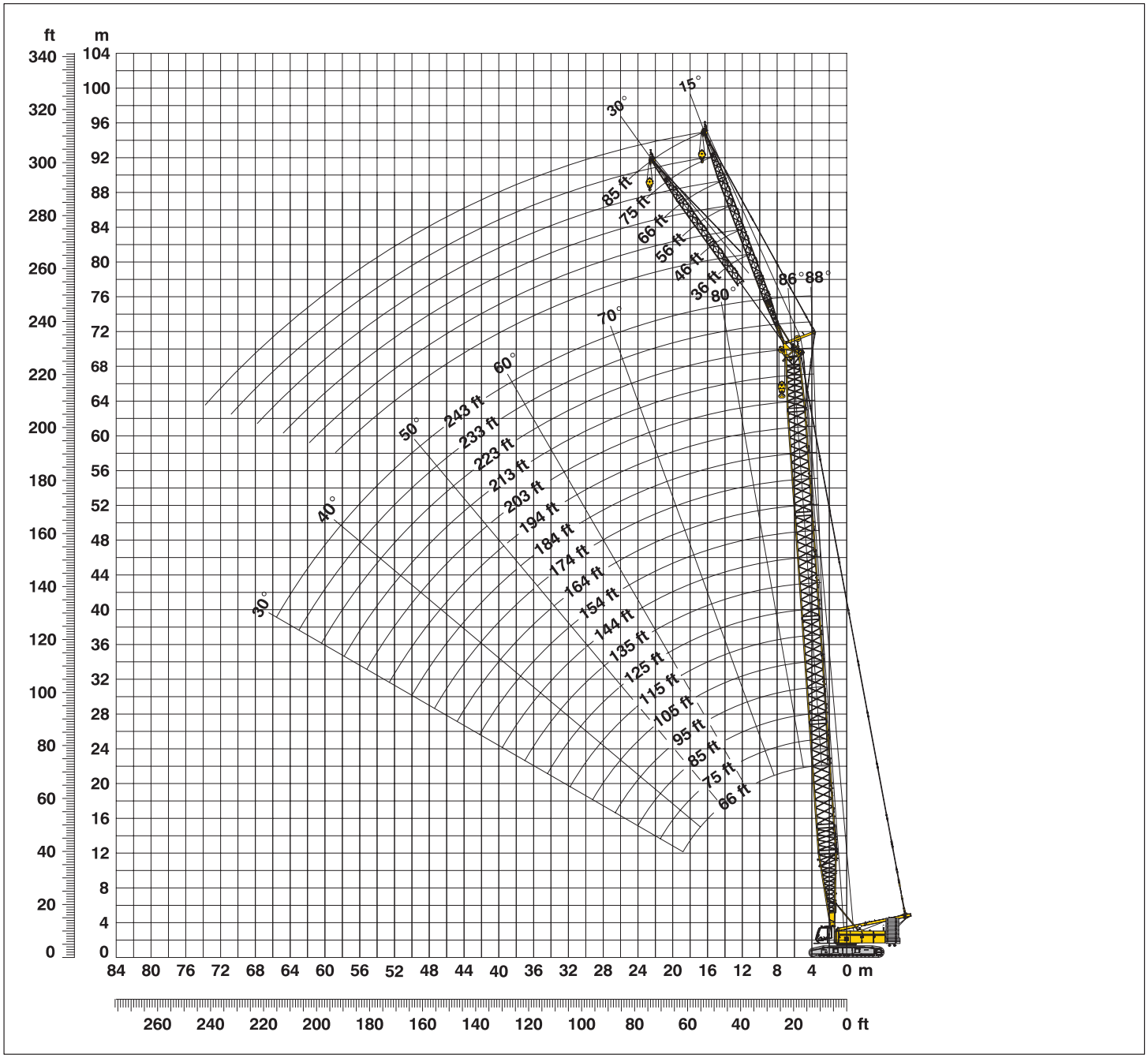

Boom configuration for boom lengths (66 ft – 243 ft) – see table 1 on page 10

Fixed jib configuration for fixed jib lengths (36 ft – 85 ft)

	Length	Amount of fixed jib extensions					
Fixed jib foot	18 ft	1	1	1	1	1	1
Fixed jib insert	10 ft*		1		1		1
Fixed jib insert	20 ft*			1	1	2	2
Fixed jib head	18 ft	1	1	1	1	1	1
Fixed jib length (ft)		36	46	56	66	75	85

*Actual lengths of boom sections are metric (e.g. 3 m, 6 m). The figures shown above are approximate conversions to feet.

https://truckmanualshub.com/

Lift chart – fixed jib (No. 1008.xx)

Offset 15° – main boom inserts (No. 2320.23)

Main boom 66 ft

	Fixed jib length in (ft)			
	36	46	66	85
Radius (ft)	lbs	lbs	lbs	lbs
30	79.1			
35	79.1	77.3		
40	79.1	75.1	67.3	53.4
50	78.9	69.2	58.0	47.6
60	77.9	64.2	49.7	41.6
70	71.6	59.9	45.8	36.6
80	63.4	53.7	40.4	32.7
90	57.4	49.5	36.6	29.4
95	54.8	48.0	34.8	28.0
105		43.9	31.8	26.2
125			27.5	22.8
145				19.9

Main boom 95 ft

	Fixed jib length in (ft)			
	36	46	66	85
Radius (ft)	lbs	lbs	lbs	lbs
25	79.1			
30	79.1	79.1		
35	79.1	79.1	70.3	
40	79.1	77.0	68.3	51.2
60	78.9	68.4	55.0	43.8
80	69.7	60.8	45.7	35.5
100	51.5	50.7	37.9	29.7
110	45.1	45.7	35.1	27.4
120	39.8	40.4	32.5	26.3
130		35.9	30.6	24.6
150			27.4	22.1
170				19.9

Main boom 125 ft

	Fixed jib length in (ft)			
	36	46	66	85
Radius (ft)	lbs	lbs	lbs	lbs
25	79.1	79.1		
35	79.1	79.1	70.8	
40	79.1	79.1	69.9	51.7
60	79.1	72.3	59.2	45.6
80	68.4	65.9	48.8	38.0
100	50.3	51.0	42.7	32.3
120	38.6	39.2	37.2	27.9
140	30.4	30.9	32.0	25.6
150	27.1	27.7	28.7	24.2
160		24.8	25.8	23.0
180			21.0	21.1
200				17.9

Main boom 154 ft

	Fixed jib length in (ft)			
	36	46	66	85
Radius (ft)	lbs	lbs	lbs	lbs
25	79.1			
30	79.1	79.1		
35	79.1	79.1	68.9	
45	79.1	78.7	66.9	48.6
60	79.1	73.7	60.7	45.3
80	67.4	67.6	50.6	39.5
100	49.2	49.9	45.6	34.1
140	29.2	29.8	30.9	26.7
170	20.7	21.2	22.2	23.0
180		19.0	20.0	20.7
200			16.1	16.9
220				13.7

Main boom 184 ft

	Fixed jib length in (ft)			
	36	46	66	85
Radius (ft)	lbs	lbs	lbs	lbs
25	79.1			
30	79.1	79.1		
35	79.1	79.1	68.5	
45	79.1	79.0	66.9	47.4
60	79.1	75.4	63.6	44.7
80	66.2	67.2	54.9	40.3
120	36.2	36.8	38.1	31.8
160	22.0	22.5	23.5	24.4
200	13.6	14.0	14.9	15.7
205		13.2	14.1	14.9
225			11.1	11.9
245				9.3

Main boom 203 ft

	Fixed jib length in (ft)			
	36	46	66	85
Radius (ft)	lbs	lbs	lbs	lbs
25	79.1			
30	79.1	79.1		
35	79.1	79.0	66.9	
45	79.1	78.2	65.6	46.1
60	79.1	75.5	63.1	44.0
100	47.1	47.9	49.1	36.8
140	27.1	27.7	28.9	29.5
180	16.4	16.9	17.9	18.7
215	10.4	10.8	11.7	12.5
225		9.4	10.3	11.0
245			7.8	8.5
265				6.3

Main boom 223 ft

	Fixed jib length in (ft)			
	36	46	66	85
Radius (ft)	lbs	lbs	lbs	lbs
24	79.1			
30	79.1	78.4		
40	79.1	77.5	64.3	
45	79.1	76.9	63.4	44.5
60	79.1	75.1	61.0	43.0
100	46.4	47.2	48.8	37.4
140	26.3	26.9	28.1	29.1
180	15.6	16.1	17.1	18.0
235	6.9	7.3	8.2	8.9
245		6.2	7.0	7.7
265			4.8	5.5
285				3.6

Main boom 233 ft

	Fixed jib length in (ft)			
	36	46	66	85
Radius (ft)	lbs	lbs	lbs	lbs
25	79.1			
30	79.1	77.1		
40	79.1	76.2	62.0	
45	79.1	75.6	61.1	43.9
60	79.1	74.1	59.0	42.5
100	46.0	46.8	48.4	37.5
140	25.9	26.5	27.7	28.8
180	15.2	15.7	16.7	17.6
240	5.9	6.3	7.2	7.9
250		5.2	6.0	6.7
270			3.9	4.6
290				2.8

Main boom 243 ft

	Fixed jib length in (ft)			
	36	46	56	
Radius (ft)	lbs	lbs	lbs	
25	79.1			
30	79.1	75.9		
35	79.1	75.6	71.7	
60	79.1	73.4	68.0	
100	45.6	46.4	47.3	
140	25.4	26.1	26.7	
180	14.7	15.2	15.8	
220	8.0	8.4	8.9	
240	5.5	5.9	6.3	
250	4.3	4.7	5.2	
260		3.7	4.1	
270			3.2	

Capacities in 1000 lbs with fixed jib (No. 1008.xx) 178,600 lbs counterweight + 79,400 lbs carbody counterweight. Above lift chart is for reference only. For actual lift duty and complete chart with all available configurations please refer to lift chart in operator's cab or manual.

https://truckmanualshub.com/

Lift chart – fixed jib (No. 1008.xx)

Offset 30° – main boom inserts (No. 2320.23)

Main boom 66 ft

	Fixed jib length in (ft)			
	36	46	66	85
Radius (ft)	lbs	lbs	lbs	lbs
40	74.4	62.0		
50	65.4	55.0	41.3	
60	58.3	49.8	36.3	29.2
70	53.0	45.8	32.7	26.6
80	49.8	41.9	29.9	24.8
90	47.1	38.6	27.4	22.7
100	45.0	36.4	26.3	21.0
110		35.1	24.9	19.4
120			24.0	18.2
130			23.2	17.1
140				16.5
150				16.1

Main boom 95 ft

	Fixed jib length in (ft)			
	36	46	66	85
Radius (ft)	lbs	lbs	lbs	lbs
35	79.1			
40	78.7	62.8		
50	71.0	58.1	41.7	
60	63.9	52.5	37.9	29.5
80	54.2	46.2	31.8	25.6
90	51.8	42.9	29.8	24.1
100	49.1	40.4	27.8	22.4
110	45.5	38.2	26.6	21.0
120	40.0	36.6	25.8	19.7
130		35.5	24.7	18.7
150			23.5	17.0
170				16.2

Main boom 125 ft

	Fixed jib length in (ft)			
	36	46	66	85
Radius (ft)	lbs	lbs	lbs	lbs
30	79.1			
40	79.1	65.0		
50	74.1	62.2	43.2	
60	68.4	56.8	39.4	28.8
80	59.1	50.0	34.2	26.3
100	51.1	44.9	30.2	23.5
120	39.1	39.9	27.2	21.0
140	30.6	31.4	25.7	18.9
150	27.2	28.0	25.0	18.2
160		25.0	24.5	17.5
180			21.2	16.5
200				16.1

Main boom 154 ft

	Fixed jib length in (ft)			
	36	46	66	85
Radius (ft)	lbs	lbs	lbs	lbs
30	79.1			
40	79.1	63.7		
50	77.4	61.0	42.3	
65	69.3	55.2	38.0	28.8
80	62.4	50.8	34.5	26.6
100	50.2	46.6	30.9	24.4
120	38.1	39.0	28.2	21.9
140	29.7	30.5	26.6	20.0
175	19.8	20.4	21.6	17.6
185		18.2	19.4	17.1
200			16.4	16.5
225				13.2

Main boom 184 ft

	Fixed jib length in (ft)			
	36	46	66	85
Radius (ft)	lbs	lbs	lbs	lbs
35	79.1			
40	79.1	65.3		
50	78.3	63.1	41.8	
65	71.4	58.5	39.4	29.0
80	65.6	53.9	36.2	26.6
100	49.1	50.0	32.8	24.9
120	37.0	37.9	30.1	22.7
160	22.4	23.1	24.4	19.4
200	13.7	14.3	15.4	16.5
210		12.6	13.7	14.7
230			10.6	11.6
250				8.9

Main boom 203 ft

	Fixed jib length in (ft)			
	36	46	66	85
Radius (ft)	lbs	lbs	lbs	lbs
35	79.1			
40	79.1	65.1		
55	77.3	62.0	42.1	
65	72.4	59.3	39.6	28.8
80	66.8	54.6	36.6	26.6
120	36.3	37.2	30.6	23.1
160	21.6	22.3	23.7	19.8
200	13.0	13.6	14.7	15.8
215	10.5	11.1	12.2	13.2
225		9.6	10.7	11.7
245			7.9	8.9
265				6.5

Main boom 223 ft

	Fixed jib length in (ft)			
	36	46	66	85
Radius (ft)	lbs	lbs	lbs	lbs
35	79.1			
40	79.1	64.4		
55	76.7	61.9	42.0	
65	73.1	59.7	39.8	28.5
80	66.6	55.0	37.0	26.7
120	35.6	36.5	31.0	23.5
160	20.9	21.6	23.1	20.2
200	12.3	12.8	14.0	15.1
235	7.1	7.6	8.6	9.6
245		6.3	7.3	8.3
265			5.0	5.9
285				3.8

Main boom 233 ft

	Fixed jib length in (ft)			
	36	46	66	85
Radius (ft)	lbs	lbs	lbs	lbs
35	78.9			
40	78.9	62.3		
55	76.5	60.2	41.0	
65	73.5	58.0	39.2	28.4
80	66.3	53.8	36.4	26.8
120	35.2	36.2	30.7	23.6
160	20.5	21.2	22.7	20.5
200	11.9	12.5	13.7	14.8
245	5.5	6.0	7.0	7.9
255		4.8	5.8	6.7
275			3.6	4.5
295				2.5

Main boom 243 ft

	Fixed jib length in (ft)			
	36	46	56	
Radius (ft)	lbs	lbs	lbs	
35	75.6			
40	75.4	60.7		
50	75.1	59.7	50.0	
60	74.8	58.3	47.6	
80	66.0	54.0	43.1	
120	34.8	35.8	36.6	
160	20.1	20.8	21.7	
200	11.4	12.0	12.7	
240	5.7	6.2	6.7	
250	4.5	5.0	5.5	
260		3.8	4.4	
270			3.3	

Capacities in 1000 lbs with fixed jib (No. 1008.xx) 178,600 lbs counterweight + 79,400 lbs carbody counterweight. Above lift chart is for reference only. For actual lift duty and complete chart with all available configurations please refer to lift chart in operator's cab or manual.

https://truckmanualshub.com/

Notice

https://truckmanualshub.com/

LR 1200 SX—10520267—05/2009 Subject to change without notice.

Liebherr-Werk Nenzing GmbH
P.O. Box 10, A-6710 Nenzing/Austria
Tel.: +43 50809 41–473
Fax: +43 50809 41–499
crawler.crane@liebherr.com
www.liebherr.com

Liebherr Nenzing Crane Co.
7075 Bennington Street, Houston, TX 77028-5812
Phone: +1 713 636 4050
Fax: +1 713 636 4051
crawler.crane@lnc.liebherr.com
www.liebherr.com